2001

Oldsmobile

BRAVADA

Downloaded from www.Manualslib.com manuals search engine

24-hour Roadside Assistance

Every 2001 Bravada under warranty is backed with the following services:

Courtesy Transportation

Trip Routing

1-800-442-OLDS

(For vehicles purchased in Canada, call 1-800-268-6800)

that provides in an emergency:

- ***Free*** **lockout assistance**
- ***Free*** **dead-battery assistance**
- ***Free*** **out-of-fuel assistance**
- ***Free*** **flat-tire change**
- ***Emergency*** **towing**

Downloaded from www.Manualslib.com manuals search engine

2001 Oldsmobile Bravada
Owner's Manual

Litho in U.S.A.
Part Number S2132 A First Edition

© Copyright General Motors Corporation 2000
All Rights Reserved

Downloaded from www.Manualslib.com manuals search engine

Table of Contents

Section 1

Seats and Restraint Systems

- Seats and Seat Controls
- Safety Belts
- Air Bag Systems
- Restraint Systems for Children

Section 2

Features and Controls

- Windows
- Keys and Door Locks
- Remote Keyless Entry System
- Liftgate
- Automatic Transmission
- All-Wheel Drive
- Parking Brake
- Tilt Wheel
- Turn Signal/Multifunction Lever
- Windshield Wipers
- Cruise Control
- Exterior and Interior Lamps
- Mirrors
- Storage Compartments
- Luggage Carrier
- Accessory Power Outlets
- OnStar® System (If Equipped)
- Sunroof (If Equipped)
- HomeLink® Transmitter
- Instrument Panel, Warning Lights and Gages

Downloaded from www.Manualslib.com manuals search engine

Table of Contents (cont'd)

Section 3

Comfort Controls and Audio Systems

- Heating and Air Conditioning
- Setting the Radio Clock
- Radio/Cassette Player/CD Player
- Radio Theft-Deterrent Feature
- Steering Wheel Controls (If Equipped)

Section 4

Your Driving and the Road

- Your Driving, the Road and Your Vehicle
- Defensive Driving
- Drunken Driving
- Control of a Vehicle
- Braking
- Steering
- Driving Tips for Various Road Conditions
- Operating Your Vehicle Off Paved Roads
- Recreational Vehicle Towing
- Loading Your Vehicle
- Towing a Trailer

Section 5

Problems on the Road

- Hazard Warning Flashers
- Jump Starting
- Towing Your Vehicle
- Engine Overheating
- Changing a Flat Tire
- If You're Stuck

Downloaded from www.Manualslib.com manuals search engine

Table of Contents (cont'd)

Section 6

Service and Appearance Care

- Fuel
- Checking Fluids and Lubricants
- Engine Air Cleaner/Filter
- Brakes
- Bulb Replacement
- Windshield Wiper Blade Replacement
- Tires and Wheels
- Appearance Care
- Electrical System/Fuses and Circuit Breakers
- Capacities and Specifications
- Normal Maintenance Replacement Parts

Section 7

Maintenance Schedule

- Scheduled Maintenance
- Owner Checks and Services
- Periodic Maintenance Inspections
- Recommended Fluids and Lubricants
- Maintenance Records

Downloaded from www.Manualslib.com manuals search engine

Table of Contents (cont'd)

Section 8

Customer Assistance Information

- Customer Satisfaction Procedures
- Customer Assistance Offices
- Roadside Assistance and Courtesy Transportation
- Warranty Information (See Warranty Manual)
- Reporting Safety Defects on page 8-9
- Service Publications

Please refer to the last page of this manual for your ***Service Station Guide***

Downloaded from www.Manualslib.com manuals search engine

GENERAL MOTORS, GM, the GM Emblem, OLDSMOBILE, the OLDSMOBILE Rocket Emblem and the name BRAVADA are registered trademarks of General Motors Corporation.

This manual includes the latest information at the time it was printed. We reserve the right to make changes after that time without further notice.

Please keep this manual in your vehicle, so it will be there if you ever need it when you're on the road. If you sell the vehicle, please leave this manual in it so the new owner can use it.

WE SUPPORT VOLUNTARY TECHNICIAN CERTIFICATION THROUGH

National Institute for AUTOMOTIVE SERVICE EXCELLENCE

We support voluntary technician certification.

Downloaded from www.Manualslib.com manuals search engine

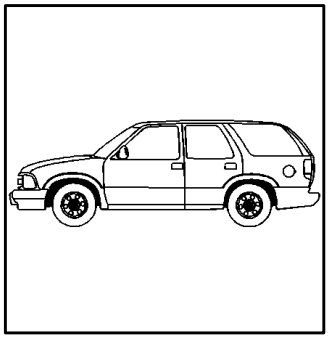

4-Door Utility

About Driving Your Vehicle

As with other vehicles of this type, failure to operate this vehicle correctly may result in loss of control or an accident. Be sure to read the “on-pavement” and “off-road” driving guidelines in this manual. (See “Your Driving, the Road and Your Vehicle” and “Operating Your Vehicle Off Paved Roads” in the Index.)

How to Use this Manual

Many people read their owner’s manual from beginning to end when they first receive their new vehicle. If you do this, it will help you learn about the features and controls for your vehicle. In this manual, you’ll find that pictures and words work together to explain things quickly.

Downloaded from www.Manualslib.com manuals search engine

Safety Warnings and Symbols

You will find a number of safety cautions in this book. We use a box and the word CAUTION to tell you about things that could hurt you if you were to ignore the warning.

⚠ CAUTION:

These mean there is something that could hurt you or other people.

In the caution area, we tell you what the hazard is. Then we tell you what to do to help avoid or reduce the hazard. Please read these cautions. If you don't, you or others could be hurt.

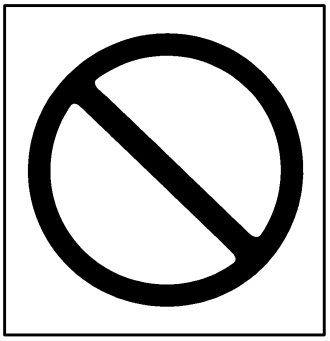

You will also find a circle with a slash through it in this book. This safety symbol means "Don't," "Don't do this" or "Don't let this happen."

Downloaded from www.Manualslib.com manuals search engine

Vehicle Damage Warnings

Also in this book you will find these notices:

NOTICE:
These mean there is something that could damage your vehicle.

In the notice area, we tell you about something that can damage your vehicle. Many times, this damage would not be covered by your warranty, and it could be costly. But the notice will tell you what to do to help avoid the damage.

When you read other manuals, you might see CAUTION and NOTICE warnings in different colors or in different words.

You'll also see warning labels on your vehicle. They use the same words, CAUTION or NOTICE.

Downloaded from www.Manualslib.com manuals search engine

Vehicle Symbols

These are some of the symbols you may find on your vehicle. Also see “Warning Lights and Gages” in the Index.

For example, these symbols are used on an original battery:

CAUTION POSSIBLE INJURY

PROTECT EYES BY SHIELDING

CAUSTIC BATTERY ACID COULD CAUSE BURNS

AVOID SPARKS OR FLAMES

SPARK OR FLAME COULD EXPLODE BATTERY

These symbols are important for you and your passengers whenever your vehicle is driven:

CHILD RESTRAINT TOP STRAP ANCHOR

DOOR LOCK UNLOCK

FASTEN SEAT BELTS

POWER WINDOW

AIR BAG

These symbols have to do with your lamps:

MASTER LIGHTING SWITCH

TURN SIGNALS

PARKING LAMPS

HAZARD WARNING FLASHER

DAYTIME RUNNING LAMPS

FOG LAMPS

These symbols are on some of your controls:

WINDSHIELD WIPER

WINDSHIELD WASHER

WINDSHIELD DEFROSTER

REAR WINDOW DEFOGGER

VENTILATING FAN

These symbols are used on warning and indicator lights:

ENGINE COOLANT TEMP

BATTERY CHARGING SYSTEM

BRAKE

COOLANT

ENGINE OIL PRESSURE

ANTI-LOCK BRAKES

Here are some other symbols you may see:

FUSE

LIGHTER

HORN

FUEL

OWNER'S MANUAL

SERVICE MANUAL

Downloaded from www.Manualslib.com manuals search engine

Service Station Guide

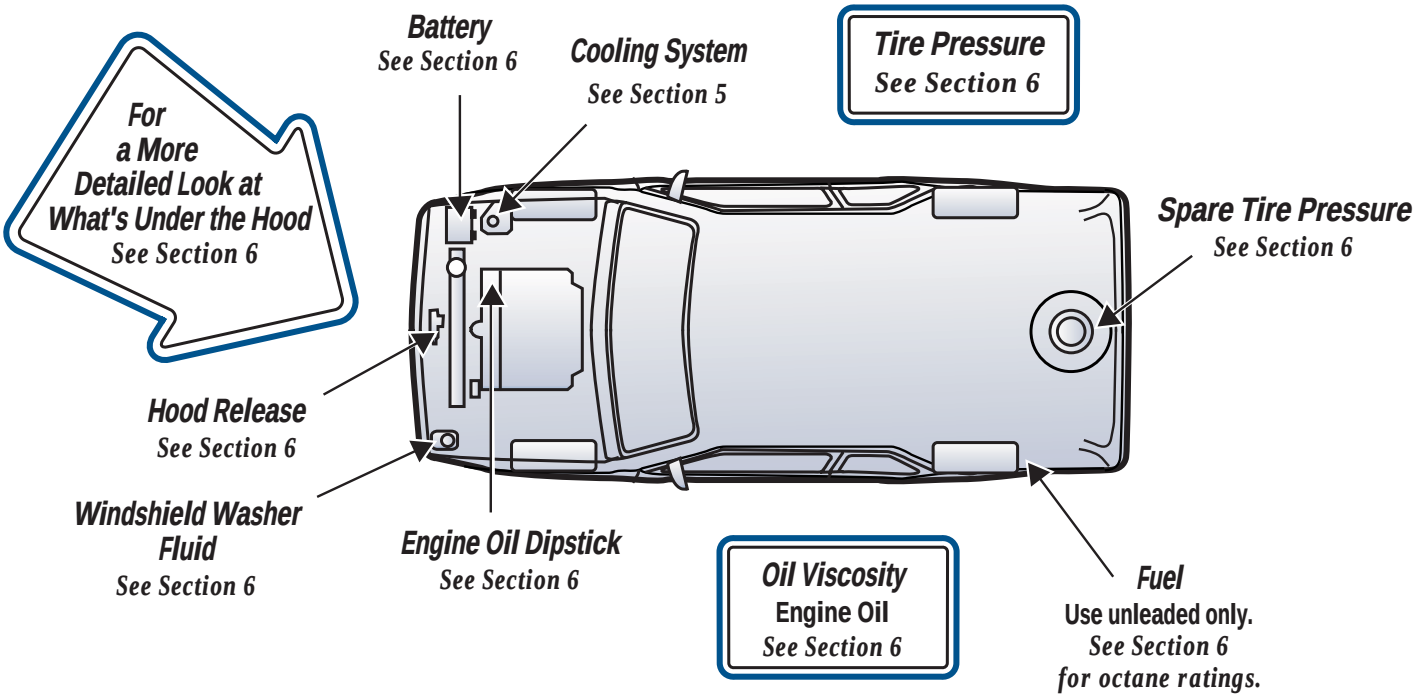

Downloaded from www.Manualslib.com manuals search engine

Section 1 Seats and Restraint Systems

Here you'll find information about the seats in your vehicle and how to use your safety belts properly. You can also learn about some things you should *not* do with air bags and safety belts.

1-2 Seats and Seat Controls
1-8 Safety Belts: They're for Everyone
1-13 Here Are Questions Many People Ask About Safety Belts -- and the Answers
1-14 How to Wear Safety Belts Properly
1-14 Driver Position
1-20 Safety Belt Use During Pregnancy
1-21 Right Front Passenger Position
1-21 Air Bag System
1-27 Rear Seat Passengers
1-31 Rear Safety Belt Comfort Guides for Children and Small Adults
1-34 Center Rear Passenger Position
1-35 Children
1-38 Restraint Systems for Children
1-49 Older Children
1-52 Safety Belt Extender
1-52 Checking Your Restraint Systems
1-52 Replacing Restraint System Parts After a Crash

Downloaded from www.Manualslib.com manuals search engine

Seats and Seat Controls

This section tells you about the seats -- how to adjust them and fold them up and down.

Manual Passenger Seat

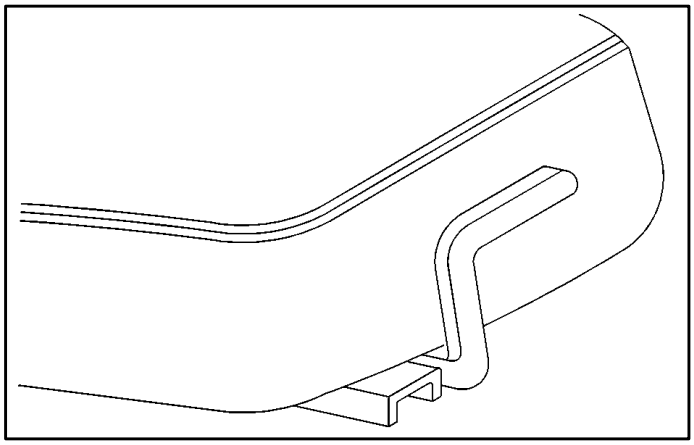

Pull the lever located under the front of the manual seat up to unlock it. Slide the seat to where you want it. Then release the lever and try to move the seat with your body to make sure the seat is locked into place.

Power Seat(s) (If Equipped)

The control is on the outboard side of the seat.

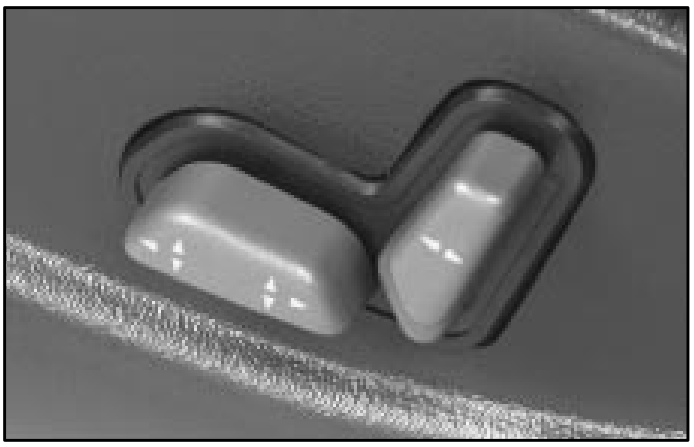

Downloaded from www.Manualslib.com manuals search engine

Horizontal Control: Raise or lower the front of the seat cushion by raising or lowering the forward edge of the control.

Raise or lower the rear of the seat cushion by raising or lowering the rear edge of the control. Move the seat forward or rearward by moving the whole control forward or rearward.

Moving the whole control up or down raises or lowers the whole seat.

Vertical Control: Move the reclining front seatback rearward or forward by moving the control toward the rear or toward the front of the vehicle.

Power Lumbar Control

The control is on the outboard side of the driver's and passenger's seat.

Press and hold the front of the control until you have the desired lumbar support. To decrease lumbar support, press the rear of the control.

Downloaded from www.Manualslib.com manuals search engine

Memory Seat (If Equipped)

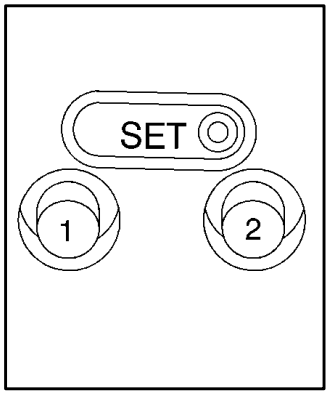

If your vehicle has this feature, the memory seat control on the outboard side of the driver's seat looks like this.

You can use this memory function to save your seat cushion and seatback settings by using the following procedure:

1. Adjust the driver's seat to a safe and comfortable driving position.
2. Press the SET button and then one of the two numbered memory buttons. You will hear a chime for each button pushed to confirm that your settings have been placed in memory.
3. To program your remote keyless entry transmitter, press the UNLOCK button within five seconds of programming the memory button. You will hear a chime to confirm programming of the transmitter.

When your vehicle is in PARK (P), push and release the numbered memory button you just stored. The seat will move to the set position. You will hear one chime.

Pressing the unlock button of a remote keyless entry transmitter will adjust the seat to the corresponding stored memory position. You will hear one chime.

To store a new position, repeat Steps 1 and 2 to readjust the seat. The remote keyless entry transmitter need not be programmed unless it needs to correspond to the other numbered memory button.

Downloaded from www.Manualslib.com manuals search engine

To set the seat for a second driver, follow the previous steps, but use the other numbered button and the other keyless entry transmitter.

If there is a third driver, use the seat adjuster switch to adjust the seat.

Pressing any of the seat adjuster switches, the SET button or the desired memory button twice will cause the seat to stop moving.

If you push the numbered button to adjust the seat and start the vehicle while the seat is still adjusting, adjustment will pause while the ignition is in START. Adjustment will resume after the ignition is in RUN.

Heated Front Seats (Option)

If you have this feature, the control is located on the outboard side of the seat(s). This feature will quickly heat the lower cushion and lower back of the driver's and front passenger's seats for added comfort.

Press the lower part of the switch to turn the heater on low. Press the upper part of the switch to turn the heater on high. Move the switch to the center position to turn the heater off.

The passenger's safety belt must be engaged for the heated seat feature to work on the passenger's seat.

Downloaded from www.Manualslib.com manuals search engine

Reclining Front Seatbacks

The vertical power seat control allows the seatback to recline.

But don't have a seatback reclined if your vehicle is moving.

⚠ CAUTION:

Sitting in a reclined position when your vehicle is in motion can be dangerous. Even if you buckle up, your safety belts can't do their job when you're reclined like this.

The shoulder belt can't do its job because it won't be against your body. Instead, it will be in front of you. In a crash you could go into it, receiving neck or other injuries.

The lap belt can't do its job either. In a crash the belt could go up over your abdomen. The belt forces would be there, not at your pelvic bones. This could cause serious internal injuries.

For proper protection when the vehicle is in motion, have the seatback upright. Then sit well back in the seat and wear your safety belt properly.

Downloaded from www.Manualslib.com manuals search engine

Head Restraints

Slide the head restraint up or down so that the top of the restraint is closest to the top of your ears. This position reduces the chance of a neck injury in a crash.

The head restraints tilt forward and rearward also.

Rear Seats

Your vehicle has a folding rear seat which lets you fold the seatbacks down for more cargo space.

The rear seatback release handles are on the rear of the seatbacks. Push back on the seatbacks as you pull up on the handles. The head restraint will automatically fold out of the way when the seatback is folded down.

To raise the seatbacks, lift up the seatbacks and push until they lock in the upright position. Push and pull on the seatbacks to check that the latches have locked in the upright position. If they haven't, see your dealer for service.

Downloaded from www.Manualslib.com manuals search engine

To return the head restraints to the upright position, reach behind the seats and pull the head restraint up until it locks into position.

Push and pull on the head restraints to check that they have locked in the upright position. If they haven't, see your dealer for service.

Safety Belts: They're for Everyone

This part of the manual tells you how to use safety belts properly. It also tells you some things you should not do with safety belts.

And it explains the air bag system.

⚠ CAUTION:

Don't let anyone ride where he or she can't wear a safety belt properly. If you are in a crash and you're not wearing a safety belt, your injuries can be much worse. You can hit things inside the vehicle or be ejected from it. You can be seriously injured or killed. In the same crash, you might not be if you are buckled up. Always fasten your safety belt, and check that your passengers' belts are fastened properly too.

Downloaded from www.Manualslib.com manuals search engine

⚠ CAUTION:

It is extremely dangerous to ride in a cargo area, inside or outside of a vehicle. In a collision, people riding in these areas are more likely to be seriously injured or killed. Do not allow people to ride in any area of your vehicle that is not equipped with seats and safety belts. Be sure everyone in your vehicle is in a seat and using a safety belt properly.

Your vehicle has a light that comes on as a reminder to buckle up. See “Safety Belt Reminder Light” in the Index.

In most states and Canadian provinces, the law says to wear safety belts. Here’s why: *They work.*

You never know if you’ll be in a crash. If you do have a crash, you don’t know if it will be a bad one.

A few crashes are mild, and some crashes can be so serious that even buckled up a person wouldn’t survive. But most crashes are in between. In many of them, people who buckle up can survive and sometimes walk away. Without belts they could have been badly hurt or killed.

After more than 30 years of safety belts in vehicles, the facts are clear. In most crashes buckling up does matter ... a lot!

Downloaded from www.Manualslib.com manuals search engine

Why Safety Belts Work

When you ride in or on anything, you go as fast as it goes.

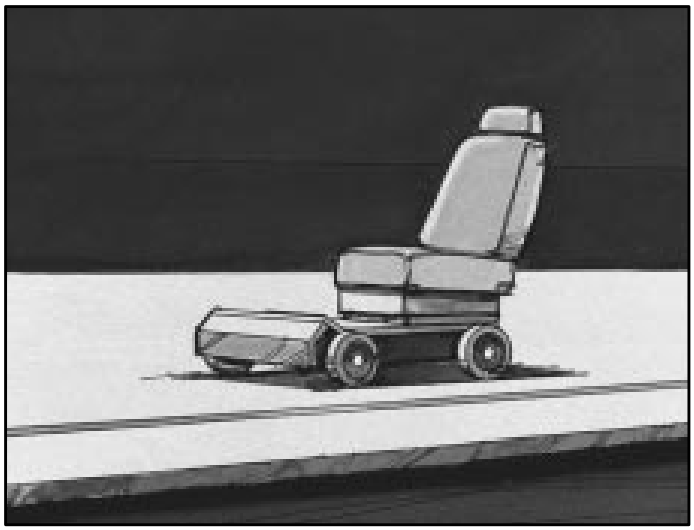

Take the simplest vehicle. Suppose it's just a seat on wheels.

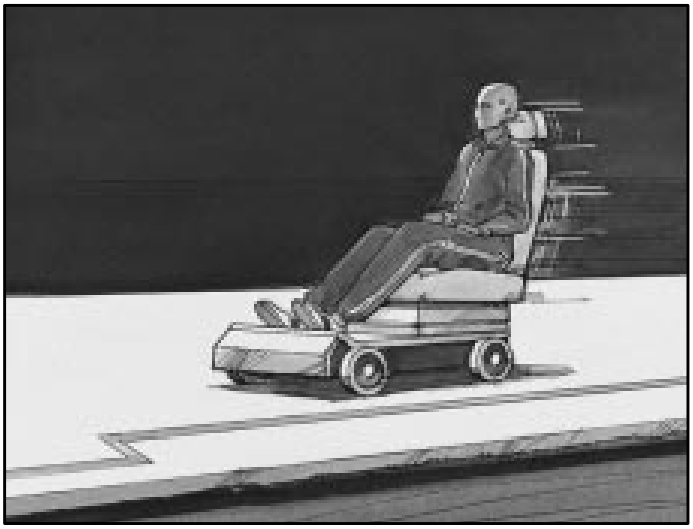

Put someone on it.

Downloaded from www.Manualslib.com manuals search engine

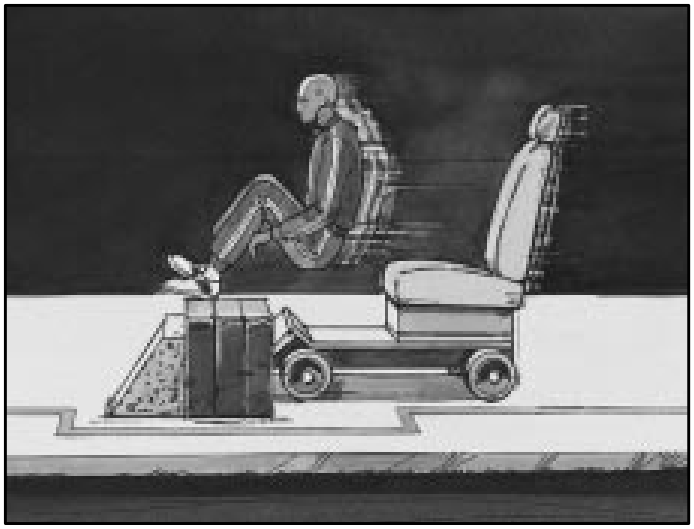

Get it up to speed. Then stop the vehicle. The rider doesn’t stop.

The person keeps going until stopped by something.

In a real vehicle, it could be the windshield ...

Downloaded from www.Manualslib.com manuals search engine

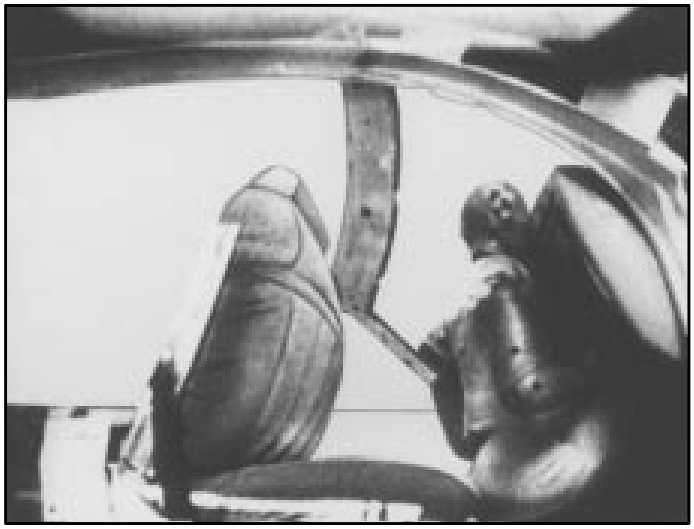

or the instrument panel ...

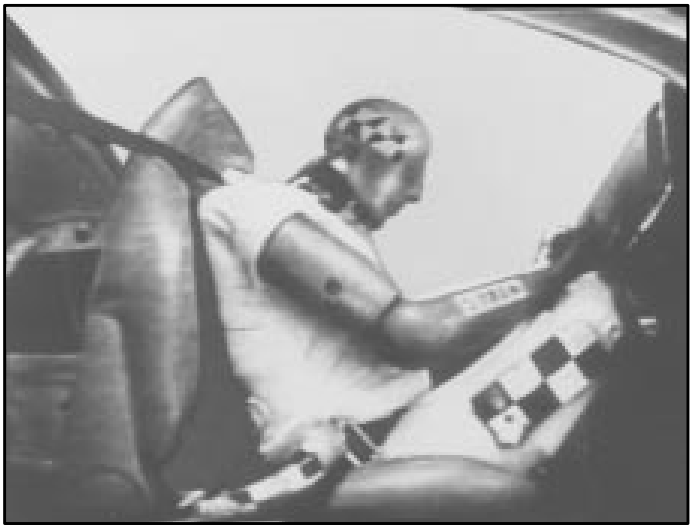

or the safety belts!

With safety belts, you slow down as the vehicle does. You get more time to stop. You stop over more distance, and your strongest bones take the forces. That's why safety belts make such good sense.

Downloaded from www.Manualslib.com manuals search engine

Here Are Questions Many People Ask About Safety Belts -- and the Answers

Q: **Won't I be trapped in the vehicle after an accident if I'm wearing a safety belt?**

A: You *could* be -- whether you're wearing a safety belt or not. But you can unbuckle a safety belt, even if you're upside down. And your chance of being conscious during and after an accident, so you *can* unbuckle and get out, is *much* greater if you are belted.

Q: **If my vehicle has air bags, why should I have to wear safety belts?**

A: Air bags are in many vehicles today and will be in most of them in the future. But they are supplemental systems only; so they work *with* safety belts -- not instead of them. Every air bag system ever offered for sale has required the use of safety belts. Even if you're in a vehicle that has air bags, you still have to buckle up to get the most protection. That's true not only in frontal collisions, but especially in side and other collisions.

Q: **If I'm a good driver, and I never drive far from home, why should I wear safety belts?**

A: You may be an excellent driver, but if you're in an accident -- even one that isn't your fault -- you and your passengers can be hurt. Being a good driver doesn't protect you from things beyond your control, such as bad drivers.

Most accidents occur within 25 miles (40 km) of home. And the greatest number of serious injuries and deaths occur at speeds of less than 40 mph (65 km/h).

Safety belts are for everyone.

Downloaded from www.Manualslib.com manuals search engine

How to Wear Safety Belts Properly

Adults

This part is only for people of adult size.

Be aware that there are special things to know about safety belts and children. And there are different rules for smaller children and babies. If a child will be riding in your vehicle, see the part of this manual called "Children." Follow those rules for everyone's protection.

First, you'll want to know which restraint systems your vehicle has.

We'll start with the driver position.

Driver Position

This part describes the driver's restraint system.

Lap-Shoulder Belt

The driver has a lap-shoulder belt. Here's how to wear it properly.

1. Close and lock the door.
2. Adjust the seat so you can sit up straight. To see how, see "Seats" in the Index.

3. Pick up the latch plate and pull the belt across you. Don't let it get twisted.

   The shoulder belt may lock if you pull the belt across you very quickly. If this happens, let the belt go back slightly to unlock it. Then pull the belt across you more slowly.

Downloaded from www.Manualslib.com manuals search engine

4. Push the latch plate into the buckle until it clicks.

   Pull up on the latch plate to make sure it is secure. If the belt isn't long enough, see "Safety Belt Extender" at the end of this section.

   Make sure the release button on the buckle is positioned so you would be able to unbuckle the safety belt quickly if you ever had to.

5. To make the lap part tight, pull down on the buckle end of the belt as you pull up on the shoulder belt.

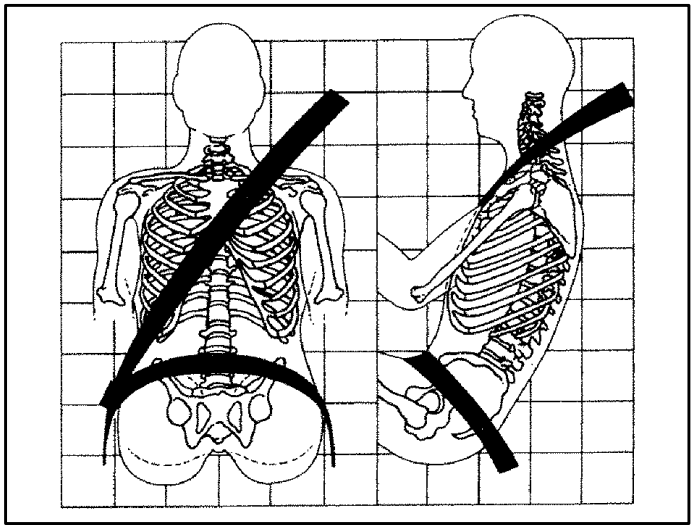

The lap part of the belt should be worn low and snug on the hips, just touching the thighs. In a crash, this applies force to the strong pelvic bones. And you'd be less likely to slide under the lap belt. If you slid under it, the belt would apply force at your abdomen. This could cause serious or even fatal injuries. The shoulder belt should go over the shoulder and across the chest. These parts of the body are best able to take belt restraining forces.

The safety belt locks if there's a sudden stop or crash, or if you pull the belt very quickly out of the retractor.

Downloaded from www.Manualslib.com manuals search engine

Q: **What's wrong with this?**

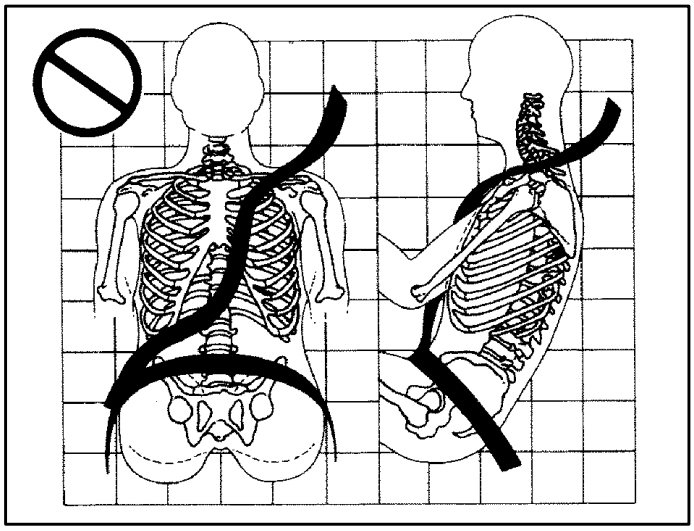

A: The shoulder belt is too loose. It won't give nearly as much protection this way.

⚠ CAUTION:

You can be seriously hurt if your shoulder belt is too loose. In a crash, you would move forward too much, which could increase injury. The shoulder belt should fit against your body.

Downloaded from www.Manualslib.com manuals search engine

Q: **What's wrong with this?**

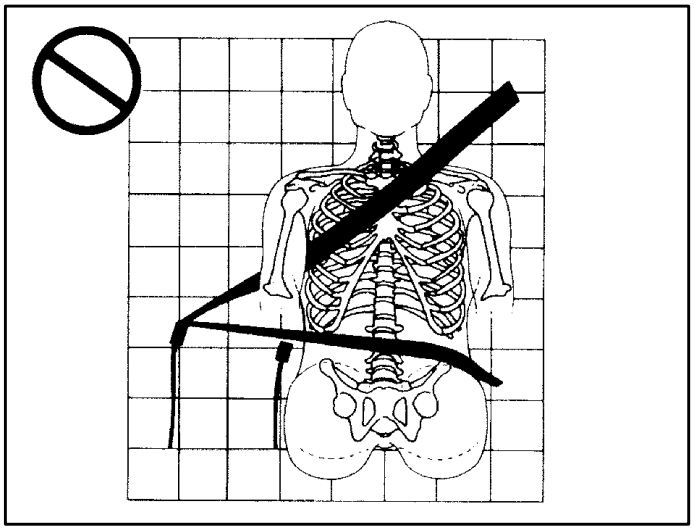

A: The belt is buckled in the wrong place.

⚠ CAUTION:

You can be seriously injured if your belt is buckled in the wrong place like this. In a crash, the belt would go up over your abdomen. The belt forces would be there, not at the pelvic bones. This could cause serious internal injuries. Always buckle your belt into the buckle nearest you.

Downloaded from www.Manualslib.com manuals search engine

Q: **What's wrong with this?**

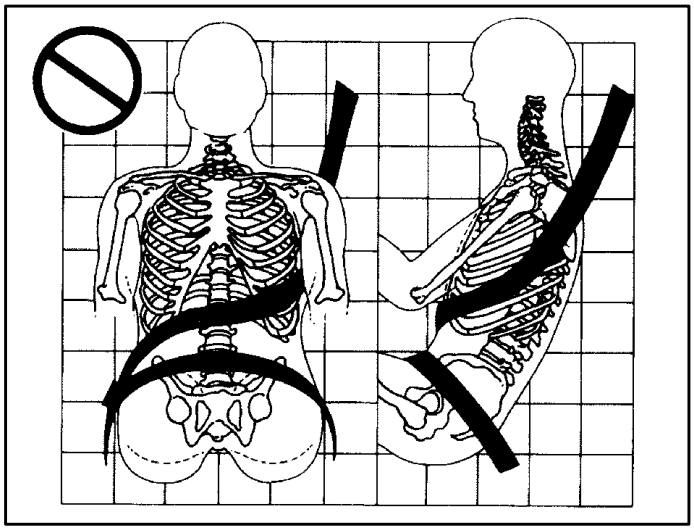

A: The shoulder belt is worn under the arm. It should be worn over the shoulder at all times.

⚠ CAUTION:

You can be seriously injured if you wear the shoulder belt under your arm. In a crash, your body would move too far forward, which would increase the chance of head and neck injury. Also, the belt would apply too much force to the ribs, which aren't as strong as shoulder bones. You could also severely injure internal organs like your liver or spleen.

Downloaded from www.Manualslib.com manuals search engine

Q: **What's wrong with this?**

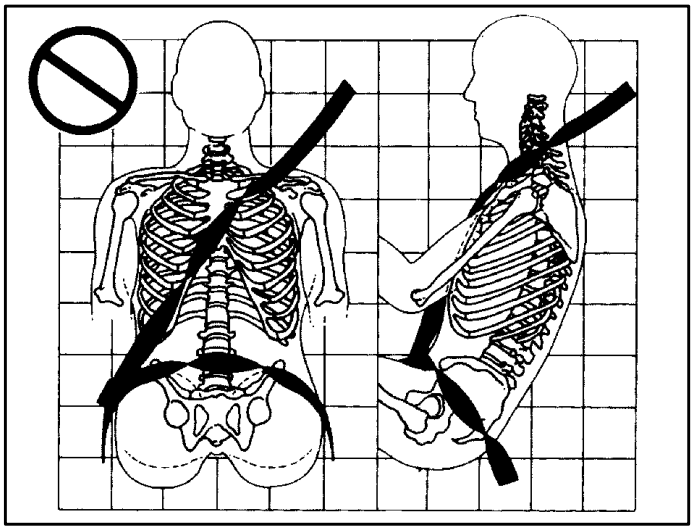

A: The belt is twisted across the body.

⚠ CAUTION:

You can be seriously injured by a twisted belt. In a crash, you wouldn't have the full width of the belt to spread impact forces. If a belt is twisted, make it straight so it can work properly, or ask your dealer to fix it.

Downloaded from www.Manualslib.com manuals search engine

To unlatch the belt, just push the button on the buckle. The belt should go back out of the way.

Before you close the door, be sure the belt is out of the way. If you slam the door on it, you can damage both the belt and your vehicle.

Safety Belt Use During Pregnancy

Safety belts work for everyone, including pregnant women. Like all occupants, they are more likely to be seriously injured if they don't wear safety belts.

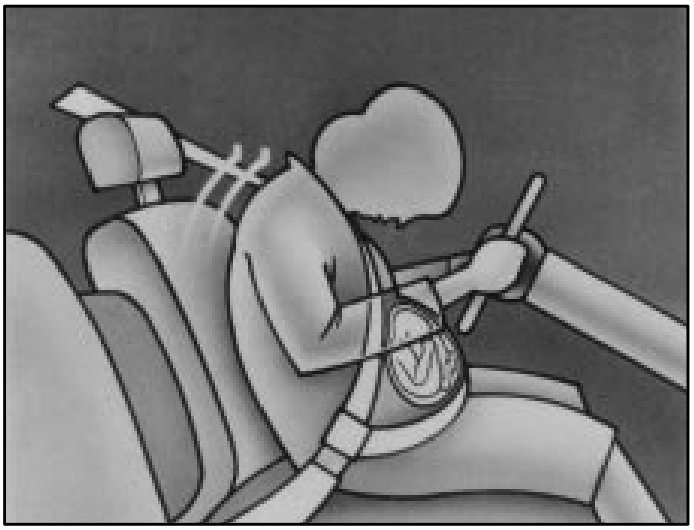

A pregnant woman should wear a lap-shoulder belt, and the lap portion should be worn as low as possible, below the rounding, throughout the pregnancy.

Downloaded from www.Manualslib.com manuals search engine

The best way to protect the fetus is to protect the mother. When a safety belt is worn properly, it's more likely that the fetus won't be hurt in a crash. For pregnant women, as for anyone, the key to making safety belts effective is wearing them properly.

Right Front Passenger Position

To learn how to wear the right front passenger's safety belt properly, see "Driver Position" earlier in this section.

The right front passenger's safety belt works the same way as the driver's safety belt -- except for one thing. If you ever pull the shoulder portion of the belt out all the way, you will engage the child restraint locking feature. If this happens, just let the belt go back all the way and start again.

Air Bag System

This part explains the air bag system.

Your vehicle has air bags -- one air bag for the driver and another air bag for the right front passenger.

Frontal air bags are designed to help reduce the risk of injury from the force of an inflating air bag. But these air bags must inflate very quickly to do their job and comply with federal regulations.

Here are the most important things to know about the air bag system:

⚠ CAUTION:

You can be severely injured or killed in a crash if you aren't wearing your safety belt -- even if you have air bags. Wearing your safety belt during a crash helps reduce your chance of hitting things inside the vehicle or being ejected from it. Air bags are "supplemental restraints" to the safety belts. All air bags are designed to work with safety belts, but don't replace them. Air bags are designed to work only in moderate to severe crashes where the front of your vehicle hits something. They aren't designed to inflate at all in rollover, rear, side or low-speed frontal crashes. And, for unrestrained occupants, air bags may provide less protection in frontal crashes than more forceful air bags have provided in the past. Everyone in your vehicle should wear a safety belt properly -- whether or not there's an air bag for that person.

Downloaded from www.Manualslib.com manuals search engine

⚠ CAUTION:

Air bags inflate with great force, faster than the blink of an eye. If you're too close to an inflating air bag, as you would be if you were leaning forward, it could seriously injure you. Safety belts help keep you in position before and during a crash. Always wear your safety belt, even with air bags. The driver should sit as far back as possible while still maintaining control of the vehicle.

⚠ CAUTION:

Anyone who is up against, or very close to, any air bag when it inflates can be seriously injured or killed. Air bags plus lap-shoulder belts offer the best protection for adults, but not for young

CAUTION: (Continued)

CAUTION: (Continued)

children and infants. Neither the vehicle's safety belt system nor its air bag system is designed for them. Young children and infants need the protection that a child restraint system can provide. Always secure children properly in your vehicle. To read how, see the part of this manual called "Children."

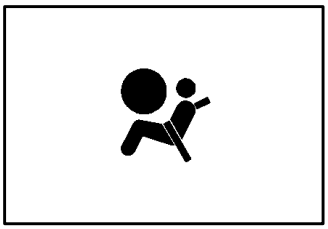

There is an air bag readiness light on the instrument panel, which shows the air bag symbol.

The system checks the air bag electrical system for malfunctions. The light tells you if there is an electrical problem. See "Air Bag Readiness Light" in the Index for more information.

Downloaded from www.Manualslib.com manuals search engine

How the Air Bag System Works

Where are the air bags?

The driver's air bag is in the middle of the steering wheel.

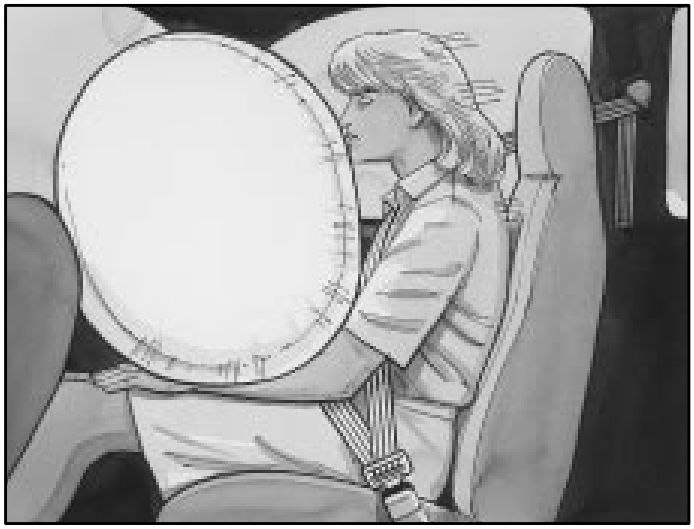

The right front passenger's air bag is in the instrument panel on the passenger's side.

Downloaded from www.Manualslib.com manuals search engine

⚠ CAUTION:

If something is between an occupant and an air bag, the bag might not inflate properly or it might force the object into that person. The path of an inflating air bag must be kept clear. Don't put anything between an occupant and an air bag, and don't attach or put anything on the steering wheel hub or on or near any other air bag covering.

When should an air bag inflate?

An air bag is designed to inflate in a moderate to severe frontal or near-frontal crash. The air bag will inflate only if the impact speed is above the system's designed "threshold level." If your vehicle goes straight into a wall that doesn't move or deform, the threshold level is about 9 to 16 mph (14 to 26 km/h). The threshold level can vary, however, with specific vehicle design, so that it can be somewhat above or below this range. If your vehicle strikes something that will move or deform, such as a parked car, the threshold level will be higher.

The air bag is not designed to inflate in rollovers, side impacts or rear impacts, because inflation would not help the occupant.

In any particular crash, no one can say whether an air bag should have inflated simply because of the damage to a vehicle or because of what the repair costs were. Inflation is determined by the angle of the impact and how quickly the vehicle slows down in frontal or near-frontal impacts.

The air bag system is designed to work properly under a wide range of conditions, including off-road usage. Observe safe driving speeds, especially on rough terrain. As always, wear your safety belt. See "Off-Road Driving" in the Index for more tips on off-road driving.

What makes an air bag inflate?

In an impact of sufficient severity, the air bag sensing system detects that the vehicle is in a crash. The sensing system triggers a release of gas from the inflator, which inflates the air bag. The inflator, air bag and related hardware are all part of the air bag modules inside the steering wheel and in the instrument panel in front of the right front passenger.

Downloaded from www.Manualslib.com manuals search engine

How does an air bag restrain?

In moderate to severe frontal or near-frontal collisions, even belted occupants can contact the steering wheel or the instrument panel. Air bags supplement the protection provided by safety belts. Air bags distribute the force of the impact more evenly over the occupant's upper body, stopping the occupant more gradually. But air bags would not help you in many types of collisions, including rollovers, rear impacts and side impacts, primarily because an occupant's motion is not toward those air bags. Air bags should never be regarded as anything more than a supplement to safety belts, and then only in moderate to severe frontal or near-frontal collisions.

What will you see after an air bag inflates?

After an air bag inflates, it quickly deflates, so quickly that some people may not even realize the air bag inflated. Some components of the air bag module -- the steering wheel hub for the driver's air bag, or the instrument panel for the right front passenger's bag -- will be hot for a short time.

The parts of the bag that come into contact with you may be warm, but not too hot to touch. There will be some smoke and dust coming from vents in the deflated air bags. Air bag inflation doesn't prevent the driver from seeing or from being able to steer the vehicle, nor does it stop people from leaving the vehicle.

⚠ CAUTION:

When an air bag inflates, there is dust in the air. This dust could cause breathing problems for people with a history of asthma or other breathing trouble. To avoid this, everyone in the vehicle should get out as soon as it is safe to do so. If you have breathing problems but can't get out of the vehicle after an air bag inflates, then get fresh air by opening a window or door.

Downloaded from www.Manualslib.com manuals search engine

- Air bags are designed to inflate only once. After they inflate, you'll need some new parts for your air bag system. If you don't get them, the air bag system won't be there to help protect you in another crash. A new system will include air bag modules and possibly other parts. The service manual for your vehicle covers the need to replace other parts.
- Your vehicle is equipped with a diagnostic module, which records information about the air bag system. The module records information about the readiness of the system, when the system commands air bag inflation and driver's safety belt usage at deployment.
- Let only qualified technicians work on your air bag system. Improper service can mean that your air bag system won't work properly. See your dealer for service.

NOTICE:

If you damage the covering for the driver's or the right front passenger's air bag, the bag may not work properly. You may have to replace the air bag module in the steering wheel or both the air bag module and the instrument panel for the right front passenger's air bag. Do not open or break the air bag coverings.

Servicing Your Air Bag-Equipped Vehicle

Air bags affect how your vehicle should be serviced. There are parts of the air bag system in several places around your vehicle. You don't want the system to inflate while someone is working on your vehicle. Your dealer and the service manual have information about servicing your vehicle and the air bag system. To purchase a service manual, see "Service and Owner Publications" in the Index.

⚠ CAUTION:

For up to 10 minutes after the ignition key is turned off and the battery is disconnected, an air bag can still inflate during improper service. You can be injured if you are close to an air bag when it inflates. Avoid wires wrapped with yellow tape or yellow connectors. They are probably part of the air bag system. Be sure to follow proper service procedures, and make sure the person performing work for you is qualified to do so.

The air bag system does not need regular maintenance.

Downloaded from www.Manualslib.com manuals search engine

Adding Equipment to Your Air Bag-Equipped Vehicle

Q: **If I add a push bumper or a bicycle rack to the front of my vehicle, will it keep the air bags from working properly?**

A: As long as the push bumper or bicycle rack is attached to your vehicle so that the vehicle's basic structure isn't changed, it's not likely to keep the air bags from working properly in a crash.

Q: **Is there anything I might add to the front of the vehicle that could keep the air bags from working properly?**

A: Yes. If you add things that change your vehicle's frame, bumper system, front end sheet metal or height, they may keep the air bag system from working properly. Also, the air bag system may not work properly if you relocate any of the air bag sensors. If you have any questions about this, you should contact Customer Assistance before you modify your vehicle. The phone numbers and addresses for Customer Assistance are in Step Two of the Customer Satisfaction Procedure in this manual. See "Customer Satisfaction Procedure" in the Index.

Rear Seat Passengers

It's very important for rear seat passengers to buckle up! Accident statistics show that unbelted people in the rear seat are hurt more often in crashes than those who are wearing safety belts.

Rear passengers who aren't safety belted can be thrown out of the vehicle in a crash. And they can strike others in the vehicle who are wearing safety belts.

Rear Seat Outside Passenger Positions

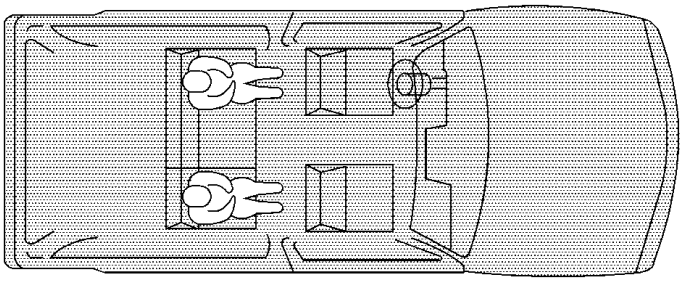

Downloaded from www.Manualslib.com manuals search engine

Lap-Shoulder Belt

The positions next to the windows have lap-shoulder belts. Here's how to wear one properly.

1. Pick up the latch plate and pull the belt across you. Don't let it get twisted. The shoulder belt may lock if you pull the belt across you very quickly. If this happens, let the belt go back slightly to unlock it. Then pull the belt across you more slowly.
2. Push the latch plate into the buckle until it clicks.

   Pull up on the latch plate to make sure it is secure.

   When the shoulder belt is pulled out all the way, it will lock. If it does, let it go back all the way and start again.

   If the belt is not long enough, see "Safety Belt Extender" at the end of this section.

   Make sure the release button on the buckle is positioned so you would be able to unbuckle the safety belt quickly if you ever had to.

Downloaded from www.Manualslib.com manuals search engine

3. To make the lap part tight, pull down on the buckle end of the belt as you pull up on the shoulder part.

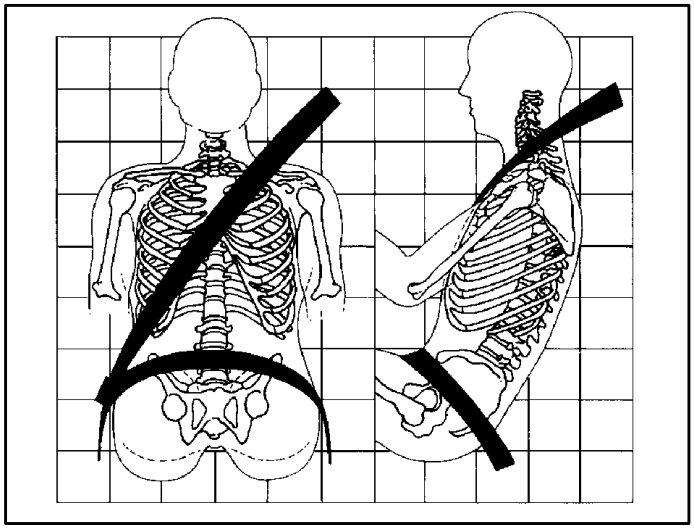

The lap part of the belt should be worn low and snug on the hips, just touching the thighs. In a crash, this applies force to the strong pelvic bones. And you'd be less likely to slide under the lap belt. If you slid under it, the belt would apply force at your abdomen. This could cause serious or even fatal injuries. The shoulder belt should go over the shoulder and across the chest. These parts of the body are best able to take belt restraining forces.

Downloaded from www.Manualslib.com manuals search engine

The safety belt locks if there's a sudden stop or a crash.

The safety belt also locks if you pull the belt very quickly out of the retractor.

⚠ CAUTION:

You can be seriously hurt if your shoulder belt is too loose. In a crash, you would move forward too much, which could increase injury. The shoulder belt should fit against your body.

To unlatch the belt, just push the button on the buckle.

Downloaded from www.Manualslib.com manuals search engine

Rear Safety Belt Comfort Guides for Children and Small Adults

Rear shoulder belt comfort guides will provide added safety belt comfort for older children who have outgrown booster seats and for small adults. When installed on a shoulder belt, the comfort guide better positions the belt away from the neck and head.

There is one guide for each outside passenger position in the rear seat. To provide added safety belt comfort for children who have outgrown child restraints and for smaller adults, the comfort guides may be installed on the shoulder belts. Here's how to install a comfort guide and use the safety belt:

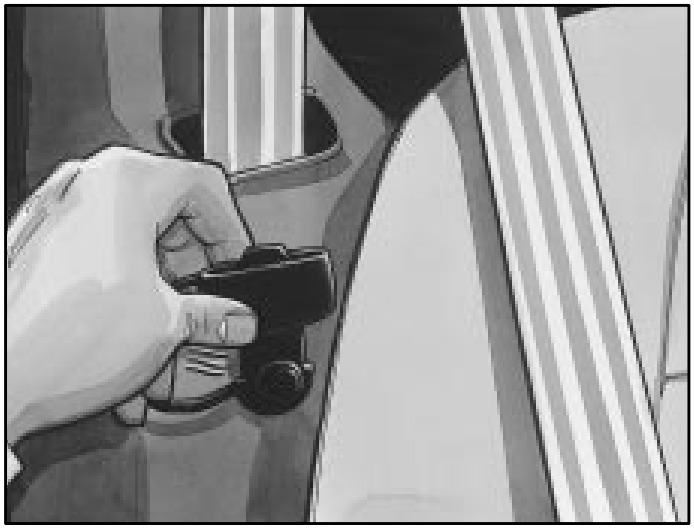

1. Pull the elastic cord out from between the edge of the seatback and the interior body to remove the guide from its storage clip.

Downloaded from www.Manualslib.com manuals search engine

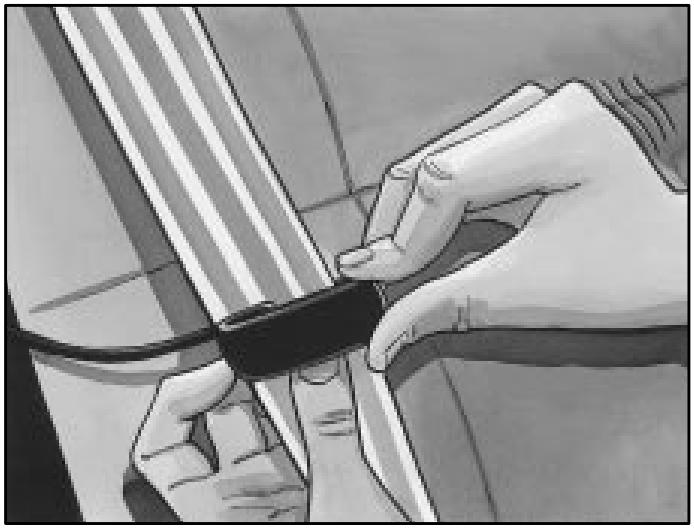

2. Slide the guide under and past the belt. The elastic cord must be under the belt. Then, place the guide over the belt, and insert the two edges of the belt into the slots of the guide.

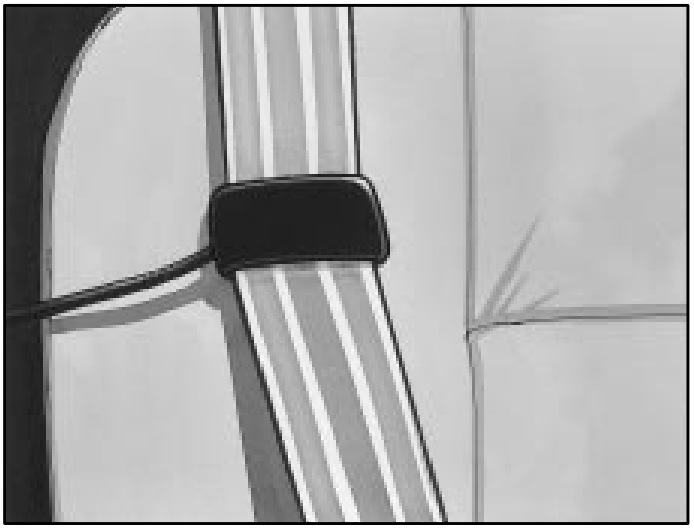

3. Be sure that the belt is not twisted and it lies flat. The elastic cord must be under the belt and the guide on top.

Downloaded from www.Manualslib.com manuals search engine

4. Buckle, position and release the safety belt as described in “Rear Seat Outside Passenger Positions” earlier in this section. Make sure that the shoulder belt crosses the shoulder.

To remove and store the comfort guides, squeeze the belt edges together so that you can take them out from the guides. Pull the guide upward to expose its storage clip, and then slide the guide onto the clip. Turn the guide and clip inward and in between the seatback and the interior body, leaving only the loop of elastic cord exposed.

Downloaded from www.Manualslib.com manuals search engine

Center Rear Passenger Position

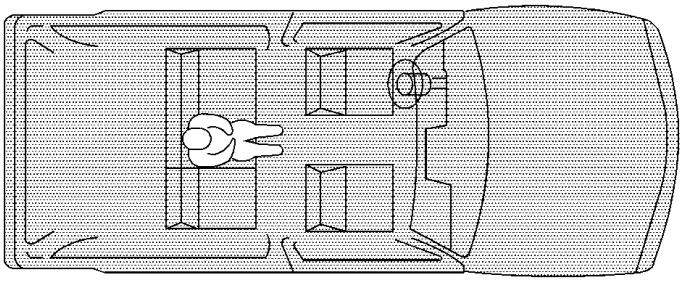

Lap Belt

When you sit in the center rear seating position, you have a lap safety belt which has a retractor.

1. Pick up the latch plate and pull the belt across you. Don't let it get twisted.
2. Push the latch plate into the buckle until it clicks. Pull up on the latch plate to make sure it is secure.
3. Feed the lap belt into the retractor to tighten it.

Downloaded from www.Manualslib.com manuals search engine

4. Position and release it the same way as the lap part of a lap-shoulder belt.

   If the belt isn't long enough, see "Safety Belt Extender" at the end of this section. Make sure the release button on the buckle is positioned so you would be able to unbuckle the safety belt quickly if you ever had to.

Children

Everyone in a vehicle needs protection! This includes infants and all other children. Neither the distance traveled nor the age and size of the traveler changes the need, for everyone, to use safety restraints. In fact, the law in every state in the United States and in every Canadian province says children up to some age must be restrained while in a vehicle.

Infants and Young Children

Every time infants and young children ride in vehicles, they should have the protection provided by the appropriate restraint. Young children should not use the vehicle's safety belts, unless there is no other choice.

Downloaded from www.Manualslib.com manuals search engine

⚠ CAUTION:

People should never hold a baby in their arms while riding in a vehicle. A baby doesn't weigh much -- until a crash. During a crash a baby will become so heavy it is not possible to hold it.

CAUTION: (Continued)

CAUTION: (Continued)

For example, in a crash at only 25 mph (40 km/h), a 12-lb. (5.5 kg) baby will suddenly become a 240-lb. (110 kg) force on a person's arms. A baby should be secured in an appropriate restraint.

Downloaded from www.Manualslib.com manuals search engine

⚠ CAUTION:

Children who are up against, or very close to, any air bag when it inflates can be seriously injured or killed. Air bags plus lap-shoulder belts offer outstanding protection for adults and older children, but not for young children and infants. Neither the vehicle's safety belt system nor its air bag system is designed for them. Young children and infants need the protection that a child restraint system can provide.

Q: **What are the different types of add-on child restraints?**

A: Add-on child restraints, which are purchased by the vehicle's owner, are available in four basic types. Selection of a particular restraint should take into consideration not only the child's weight, height and age but also whether or not the restraint will be compatible with the motor vehicle in which it will be used.

For most basic types of child restraints, there are many different models available. When purchasing a child restraint, be sure it is designed to be used in a motor vehicle. If it is, the restraint will have a label saying that it meets federal motor vehicle safety standards.

The restraint manufacturer's instructions that come with the restraint state the weight and height limitations for a particular child restraint. In addition, there are many kinds of restraints available for children with special needs.

⚠ CAUTION:

Newborn infants need complete support, including support for the head and neck. This is necessary because a newborn infant's neck is weak and its head weighs so much compared with the rest of its body. In a crash, an infant in a rear-facing seat settles into the restraint, so the crash forces can be distributed across the strongest part of an infant's body, the back and shoulders. Infants always should be secured in appropriate infant restraints.

Downloaded from www.Manualslib.com manuals search engine

⚠ CAUTION:

The body structure of a young child is quite unlike that of an adult or older child, for whom the safety belts are designed. A young child's hip bones are still so small that vehicle's regular safety belt may not remain low on the hip bones, as it should. Instead, it may settle up around the child's abdomen. In a crash, the belt would apply force on a body area that's unprotected by any bony structure. This alone could cause serious or fatal injuries. Young children always should be secured in appropriate child restraints.

Restraint Systems for Children

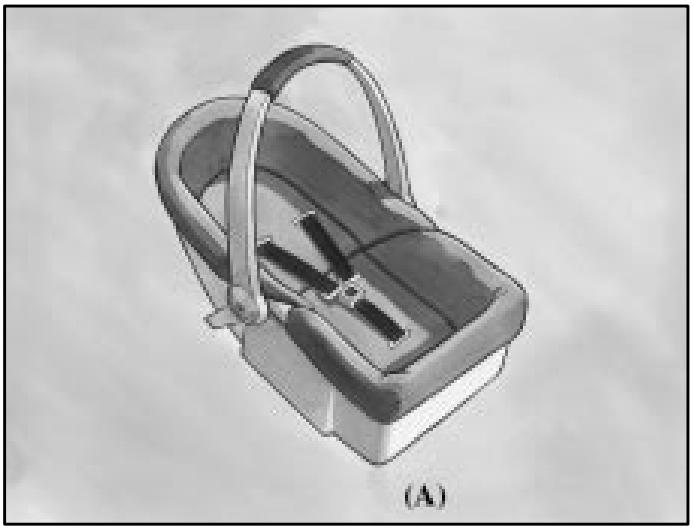

An infant car bed (A), a special bed made for use in a motor vehicle, is an infant restraint system designed to restrain or position a child on a continuous flat surface. Make sure that the infant's head rests toward the center of the vehicle.

Downloaded from www.Manualslib.com manuals search engine

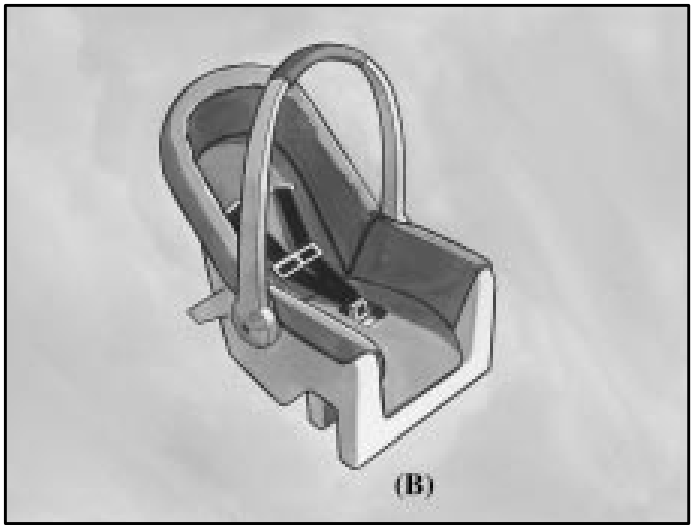

A rear-facing infant seat (B) provides restraint with the seating surface against the back of the infant. The harness system holds the infant in place and, in a crash, acts to keep the infant positioned in the restraint.

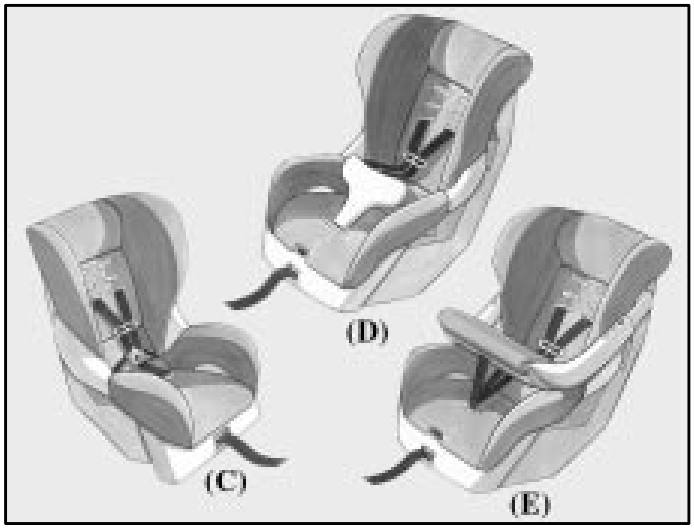

A forward-facing child seat (C-E) provides restraint for the child's body with the harness and also sometimes with surfaces such as T-shaped or shelf-like shields.

Downloaded from www.Manualslib.com manuals search engine

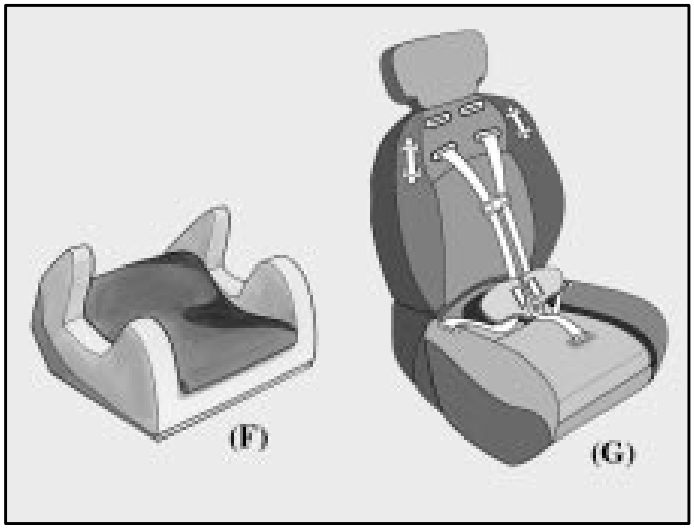

A booster seat (F-G) is a child restraint designed to improve the fit of the vehicle's safety belt system. Some booster seats have a shoulder belt positioner, and some high-back booster seats have a five-point harness. A booster seat can also help a child to see out the window.

Q: How do child restraints work?

A: A child restraint system is any device designed for use in a motor vehicle to restrain, seat, or position children. A built-in child restraint system is a permanent part of the motor vehicle. An add-on child restraint system is a portable one, which is purchased by the vehicle's owner.

For many years, add-on child restraints have used the adult belt system in the vehicle. To help reduce the chance of injury, the child also has to be secured within the restraint. The vehicle's belt system secures the add-on child restraint in the vehicle, and the add-on child restraint's harness system holds the child in place within the restraint.

One system, the three-point harness, has straps that come down over each of the infant's shoulders and buckle together at the crotch. The five-point harness system has two shoulder straps, two hip straps and a crotch strap. A shield may take the place of hip straps. A T-shaped shield has shoulder straps that are attached to a flat pad which rests low against the child's body. A shelf- or armrest-type shield has straps that are attached to a wide, shelf-like shield that swings up or to the side.

Downloaded from www.Manualslib.com manuals search engine

When choosing a child restraint, be sure the child restraint is designed to be used in a vehicle. If it is, it will have a label saying that it meets federal motor vehicle safety standards.

Then follow the instructions for the restraint. You may find these instructions on the restraint itself or in a booklet, or both. These restraints use the belt system in your vehicle, but the child also has to be secured within the restraint to help reduce the chance of personal injury. When securing an add-on child restraint, refer to the instructions that come with the restraint which may be on the restraint itself or in a booklet, or both, and to this manual. The child restraint instructions are important, so if they are not available, obtain a replacement copy from the manufacturer.

Where to Put the Restraint

Accident statistics show that children are safer if they are restrained in the rear rather than the front seat. General Motors, therefore, recommends that child restraints be secured in a rear seat outside position including an infant riding in a rear-facing infant seat, a child riding in a forward-facing child seat and an older child riding in a booster seat. *Never* put a rear-facing child restraint in the front passenger seat. Here's why:

⚠ CAUTION:

A child in a rear-facing child restraint can be seriously injured or killed if the right front passenger's air bag inflates. This is because the back of the rear-facing child restraint would be very close to the inflating air bag. Always secure a rear-facing child restraint in a rear seat outside position.

You may secure a forward-facing child restraint in the right front seat, but before you do, always move the front passenger seat as far back as it will go. It's better to secure the child restraint in a rear seat outside position.

Wherever you install it, be sure to secure the child restraint properly.

Keep in mind that an unsecured child restraint can move around in a collision or sudden stop and injure people in the vehicle. Be sure to properly secure any child restraint in your vehicle -- even when no child is in it.

Downloaded from www.Manualslib.com manuals search engine

Top Strap

Some child restraints have a top strap, or “top tether.” It can help restrain the child restraint during a collision. For it to work, a top strap must be properly anchored to the vehicle.

If the child restraint does not have a top strap, one can be obtained, in kit form, for many child restraints. Ask the child restraint manufacturer whether or not a kit is available.

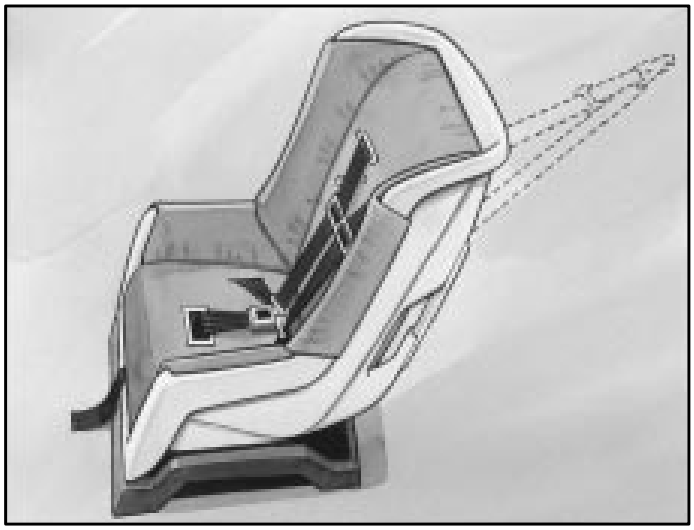

In Canada, the law requires that forward-facing child restraints have a top strap, and that the strap be anchored. In the United States, some child restraints also have a top strap. If your child restraint has a top strap, it should be anchored.

Anchor brackets for the rear outside seat positions are located on the floor in the cargo area of your vehicle. If your vehicle is equipped with the rear convenience system, then you will have to remove the anchor bracket plugs before you can access the anchor brackets.

Downloaded from www.Manualslib.com manuals search engine

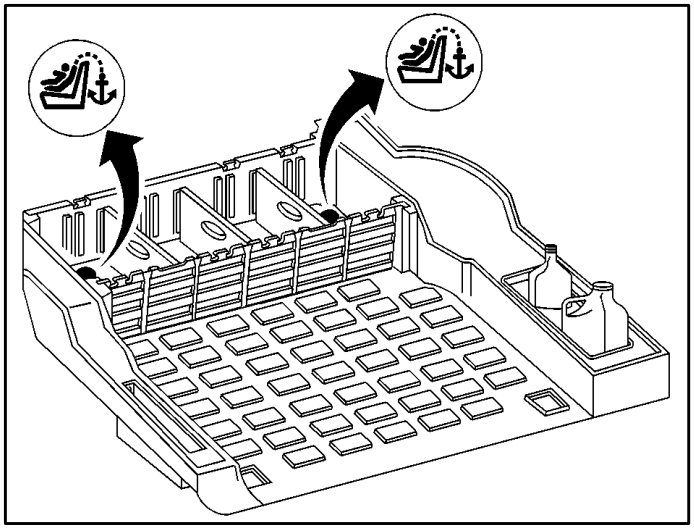

Pull up on the edges of the anchor bracket plugs to remove them. See “Rear Convenience System” in the Index for more information. Don’t use the rear set of tie-down brackets near the liftgate or the center tie-down near the rear seats.

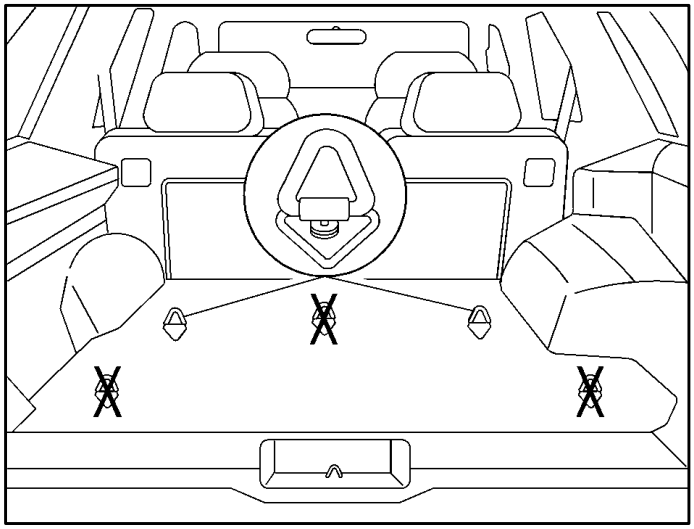

Anchor the top strap to one of these anchor points. Be sure to use an anchor point located on the same side of the vehicle as the seating position where the child restraint will be placed.

Once you have the top strap anchored, you’ll be ready to secure the child restraint itself. Tighten the top strap when and as the child restraint manufacturer’s instructions say.

Downloaded from www.Manualslib.com manuals search engine

Securing a Child Restraint in a Rear Outside Seat Position

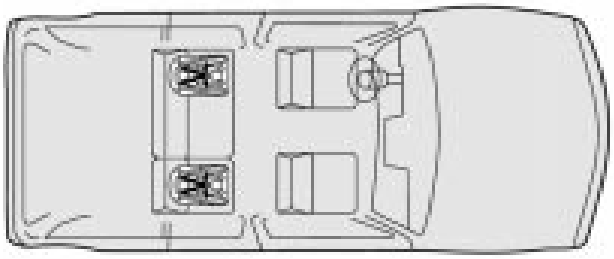

You'll be using the lap-shoulder belt. See the earlier part about the top strap if the child restraint has one. Be sure to follow the instructions that came with the child restraint. Secure the child in the child restraint when and as the instructions say.

1. Put the restraint on the seat.
2. Pick up the latch plate, and run the lap and shoulder portions of the vehicle's safety belt through or around the restraint. The child restraint instructions will show you how.

   If the shoulder belt goes in front of the child's face or neck, put it behind the child restraint.

3. Buckle the belt. Make sure the release button is positioned so you would be able to unbuckle the safety belt quickly if you ever had to.

Downloaded from www.Manualslib.com manuals search engine

4. Pull the rest of the shoulder belt all the way out of the retractor to set the lock.

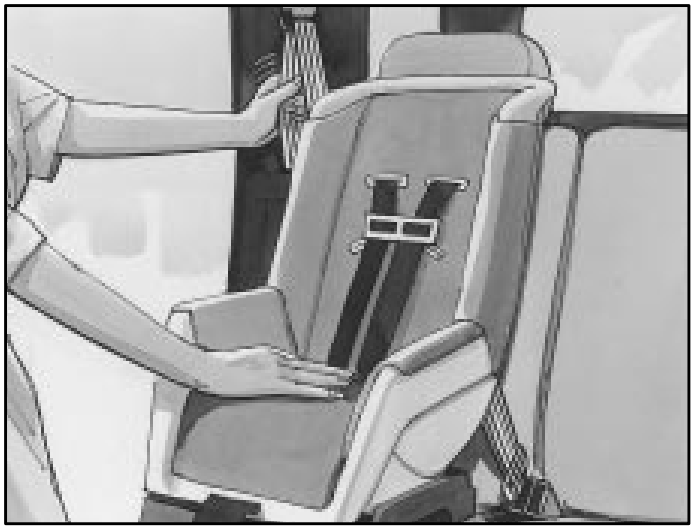

5. To tighten the belt, feed the shoulder belt back into the retractor while you push down on the child restraint. If you're using a forward-facing child restraint, you may find it helpful to use your knee to push down on the child restraint as you tighten the belt.
6. Push and pull the child restraint in different directions to be sure it is secure.

To remove the child restraint, just unbuckle the vehicle's safety belt and let it go back all the way. The safety belt will move freely again and be ready to work for an adult or larger child passenger.

Downloaded from www.Manualslib.com manuals search engine

Center Seat Position

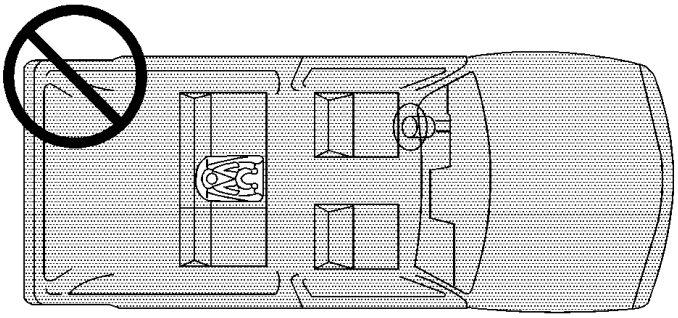

Don’t use child restraints in this position. The restraints won’t work properly.

Securing a Child Restraint in the Right Front Seat Position

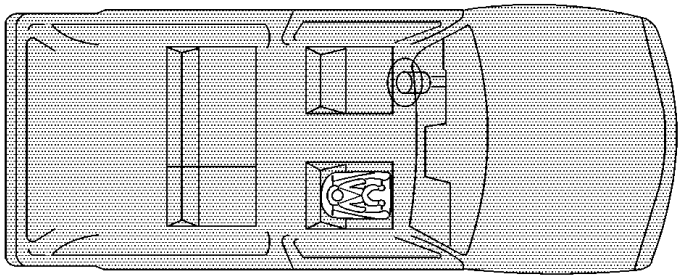

Your vehicle has a right front passenger air bag. *Never* put a rear-facing child restraint in this seat. Here’s why:

⚠ CAUTION:

A child in a rear-facing child restraint can be seriously injured or killed if the right front passenger’s air bag inflates. This is because the back of the rear-facing child restraint would be very close to the inflating air bag. Always secure a rear-facing child restraint in the rear seat.

Downloaded from www.Manualslib.com manuals search engine

Although a rear seat is a safer place, you can secure a forward-facing child restraint in the right front seat.

You'll be using the lap-shoulder belt. See the earlier part about the top strap if the child restraint has one. Be sure to follow the instructions that came with the child restraint. Secure the child in the child restraint when and as the instructions say.

1. Because your vehicle has a right front passenger air bag, always move the seat as far back as it will go before securing a forward-facing child restraint. See "Seats" in the Index.
2. Put the restraint on the seat.
3. Pick up the latch plate, and run the lap and shoulder portions of the vehicle's safety belt through or around the restraint. The child restraint instructions will show you how.

   If the shoulder belt goes in front of the child's face or neck, put it behind the child restraint.

4. Buckle the belt. Make sure the release button is positioned so you would be able to unbuckle the safety belt quickly if you ever had to.

Downloaded from www.Manualslib.com manuals search engine

5. Pull the rest of the shoulder belt all the way out of the retractor to set the lock.

6. To tighten the belt, feed the shoulder belt back into the retractor while you push down on the child restraint. You may find it helpful to use your knee to push down on the child restraint as you tighten the belt.
7. Push and pull the child restraint in different directions to be sure it is secure.

To remove the child restraint, just unbuckle the vehicle's safety belt and let it go back all the way. The safety belt will move freely again and be ready to work for an adult or larger child passenger.

Downloaded from www.Manualslib.com manuals search engine

Older Children

Older children who have outgrown booster seats should wear the vehicle's safety belts.

If you have the choice, a child should sit next to a window so the child can wear a lap-shoulder belt and get the additional restraint a shoulder belt can provide.

Q: **What is the proper way to wear safety belts?**

A: If possible, an older child should wear a lap-shoulder belt and get the additional restraint a shoulder belt can provide. The shoulder belt should not cross the face or neck. The lap belt should fit snugly below the hips, just touching the top of the thighs. It should never be worn over the abdomen, which could cause severe or even fatal internal injuries in a crash.

Accident statistics show that children are safer if they are restrained in the rear seat.

In a crash, children who are not buckled up can strike other people who are buckled up, or can be thrown out of the vehicle. Older children need to use safety belts properly.

Downloaded from www.Manualslib.com manuals search engine

⚠ CAUTION:

Never do this.

Here two children are wearing the same belt. The belt can't properly spread the impact forces. In a crash, the two children can be crushed together and seriously injured. A belt must be used by only one person at a time.

Q: **What if a child is wearing a lap-shoulder belt, but the child is so small that the shoulder belt is very close to the child's face or neck?**

A: Move the child toward the center of the vehicle, but be sure that the shoulder belt still is on the child's shoulder, so that in a crash the child's upper body would have the restraint that belts provide. If the child is sitting in a rear seat outside position, see "Rear Safety Belt Comfort Guides" in the Index. If the child is so small that the shoulder belt is still very close to the child's face or neck, you might want to place the child in a seat that has a lap belt, if your vehicle has one.

Downloaded from www.Manualslib.com manuals search engine

⚠ CAUTION:

Never do this.

Here a child is sitting in a seat that has a lap-shoulder belt, but the shoulder part is behind the child. If the child wears the belt in this way, in a crash the child might slide under the belt. The belt's force would then be applied right on the child's abdomen. That could cause serious or fatal injuries.

Wherever the child sits, the lap portion of the belt should be worn low and snug on the hips, just touching the child's thighs. This applies belt force to the child's pelvic bones in a crash.

Downloaded from www.Manualslib.com manuals search engine

Safety Belt Extender

If the vehicle's safety belt will fasten around you, you should use it.

But if a safety belt isn't long enough to fasten, your dealer will order you an extender. It's free. When you go in to order it, take the heaviest coat you will wear, so the extender will be long enough for you. The extender will be just for you, and just for the seat in your vehicle that you choose. Don't let someone else use it, and use it only for the seat it is made to fit. To wear it, just attach it to the regular safety belt.

Checking Your Restraint Systems

Now and then, make sure the safety belt reminder light and all your belts, buckles, latch plates, retractors and anchorages are working properly. Look for any other loose or damaged safety belt system parts. If you see anything that might keep a safety belt system from doing its job, have it repaired.

Torn or frayed safety belts may not protect you in a crash. They can rip apart under impact forces. If a belt is torn or frayed, get a new one right away.

Also look for any opened or broken air bag covers, and have them repaired or replaced. (The air bag system does not need regular maintenance.)

Replacing Restraint System Parts After a Crash

If you've had a crash, do you need new belts?

After a very minor collision, nothing may be necessary. But if the belts were stretched, as they would be if worn during a more severe crash, then you need new belts.

If you ever see a label on the driver's or the right front passenger's safety belt that says to replace the belt, be sure to do so. Then the new belt will be there to help protect you in a collision. You would see this label on the belt near the door opening.

If belts are cut or damaged, replace them. Collision damage also may mean you will need to have safety belt or seat parts repaired or replaced. New parts and repairs may be necessary even if the belt wasn't being used at the time of the collision.

If an air bag inflates, you'll need to replace air bag system parts. See the part on the air bag system earlier in this section.

Downloaded from www.Manualslib.com manuals search engine

Section 2 Features and Controls

Here you can learn about the many standard and optional features on your vehicle, and information on starting, shifting and braking. Also explained are the instrument panel and the warning systems that tell you if everything is working properly -- and what to do if you have a problem.

2-2 Windows
2-4 Keys
2-6 Door Locks
2-10 Keyless Entry System
2-13 Liftgate/Liftglass
2-14 Theft
2-16 Content Theft-Deterrent
2-17 Passlock®
2-18 New Vehicle “Break-In”
2-18 Ignition Positions
2-20 Starting Your Engine
2-21 Engine Coolant Heater (If Equipped)
2-22 Automatic Transmission Operation
2-25 Parking Brake
2-26 Shifting Into PARK (P)
2-28 Shifting Out of PARK (P)
2-29 Parking Over Things That Burn
2-29 Engine Exhaust
2-30 Running Your Engine While You’re Parked
2-31 Locking Rear Axle
2-31 All-Wheel Drive
2-31 Horn
2-31 Tilt Wheel
2-32 Turn Signal/Multifunction Lever
2-38 Exterior Lamps
2-41 Interior Lamps
2-43 Mirrors
2-46 Storage Compartments
2-54 Ashtrays and Cigarette Lighter
2-55 Accessory Power Outlets
2-55 OnStar® System (If Equipped)
2-59 Sunroof (If Equipped)
2-60 HomeLink® Transmitter
2-64 The Instrument Panel--Your Information System
2-65 Instrument Panel Cluster
2-67 Warning Lights, Gages and Indicators

Downloaded from www.Manualslib.com manuals search engine

Windows

⚠ CAUTION:

Leaving children in a vehicle with the windows closed is dangerous. A child can be overcome by the extreme heat and can suffer permanent injuries or even death from heat stroke. Never leave a child alone in a vehicle, especially with the windows closed in warm or hot weather.

Downloaded from www.Manualslib.com manuals search engine

Power Windows

The controls for the power windows are located on the armrest on each of the side doors. With power windows, the switches operate the windows when the ignition is in RUN, ACCESSORY or when Retained Accessory Power (RAP) is active. (See “Retained Accessory Power” in the Index.) The driver’s door has a switch for the passenger windows as well.

Press the side of the switch with the down arrow to lower a window. Press the side of the switch with the up arrow to raise a window.

Express-Down Window

The driver’s window has an express-down feature that allows you to lower it without holding the window switch. Press the driver’s window switch down briefly to activate the express-down feature. Lightly tap the switch to open the window slightly. The express-down feature can be interrupted at any time by pressing the up arrow end of the switch.

Lockout Switch

Your vehicle has a lockout feature to prevent passengers from operating the power windows. Press LOCK to activate this feature. Press NORM and the windows return to normal operation.

Downloaded from www.Manualslib.com manuals search engine

Keys

⚠ CAUTION:

Leaving children in a vehicle with the ignition key is dangerous for many reasons. A child or others could be badly injured or even killed.

They could operate the power windows or other controls or even make the vehicle move. Don't leave the keys in a vehicle with children.

Downloaded from www.Manualslib.com manuals search engine

This vehicle has one double-sided key for the ignition, liftgate and door locks. It will fit with either side up.

When a new vehicle is delivered, the dealer provides the owner with a pair of identical keys and a key code number.

The key code number tells your dealer or a qualified locksmith how to make extra keys. Keep this number in a safe place. If you lose your keys, you'll be able to have new ones made easily using this number. Your selling dealer should also have this number.

NOTICE:

Your vehicle has a number of new features that can help prevent theft. But you can have a lot of trouble getting into your vehicle if you ever lock your key inside. You may even have to damage your vehicle to get in. So be sure you have an extra key.

If you ever do get locked out of your vehicle, contact Roadside Assistance for help. See "Roadside Assistance" in the Index for more information.

Downloaded from www.Manualslib.com manuals search engine

Door Locks

⚠ CAUTION:

Unlocked doors can be dangerous.

- **Passengers -- especially children -- can easily open the doors and fall out of a moving vehicle. When a door is locked, the handle won't open it. You increase the chance of being thrown out of the vehicle in a crash if the doors aren't locked. So, wear safety belts properly and lock the doors whenever you drive.**
- **Young children who get into unlocked vehicles may be unable to get out. A child can be overcome by extreme heat and can suffer permanent injuries or even death from heat stroke. Always lock your vehicle whenever you leave it.**
- **Outsiders can easily enter through an unlocked door when you slow down or stop your vehicle. Locking your doors can help prevent this from happening.**

There are several ways to lock and unlock your vehicle:

- You can use the remote keyless entry system.
- You can use the power door locks switches to lock or unlock the doors.
- You can use the key to unlock the door from the outside.
- You can manually slide the levers on the inside doors down or up to lock/unlock the doors from the inside.

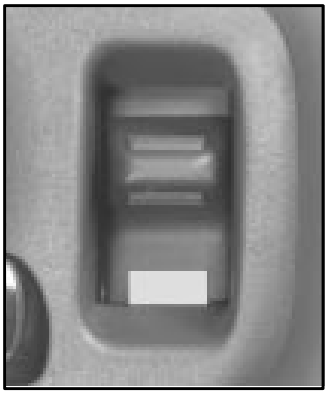

To manually unlock a door from the inside, slide the lever on the door up. You will see a shaded area on the lever when the door is unlocked.

Downloaded from www.Manualslib.com manuals search engine

Power Door Locks

The power door lock switches are located on the driver's and passenger's armrests. Remove the ignition key and press LOCK to lock all the doors at once. To unlock the doors, press the raised area to the right of the key symbol.

The manual door lock/unlock lever on each rear door works only that door's lock.

Programmable Automatic Door Locks

Your vehicle is equipped with an auto lock/unlock feature which enables you to program your vehicle's power door locks.

The following is the list of available programming options:

- **All doors lock/Driver's door unlocks only:** Press the lock side of the power lock switch on the door panel once and then the unlock side once. This option is not available on most vehicles not equipped with keyless entry.
- **All doors lock/All doors unlock:** Press the lock side of the power lock switch on the door panel once, and then press the unlock side twice.
- **All doors lock/None of the doors unlock:** Press the lock side of the power lock switch on the door panel once, and then press the unlock side of the switch three times.
- **No doors lock/None of the doors unlock:** Press the lock side of the power lock switch on the door panel twice. This turns off the automatic lock feature (this is the factory setting).

Downloaded from www.Manualslib.com manuals search engine

Your vehicle left the factory to have no doors lock and none of the doors unlock. You can set the automatic door lock feature to lock all the doors when the vehicle speed is greater than 15 mph (24 km/h) for two seconds, and then unlock the doors you select once the key is removed from the ignition. The following instructions detail how to program your door locks.

To enter the program mode you need to do the following:

1. Begin with the ignition in OFF. Then pull the turn signal/multifunction lever all the way toward you and hold it there while you perform the next step.
2. Turn the key to RUN and OFF twice. Then, with the key in OFF, release the turn signal/multifunction lever. Once you do this, you will hear the lock switch lock and unlock.
3. You are now ready to program the automatic door locks. Select one of the four programming options listed above, and follow the instructions. You will have 30 seconds to begin programming. If you exceed the 30 second limit, the locks will automatically lock and unlock to indicate that you have left the program mode. If this occurs, repeat the procedure beginning with Step 1.

   You can exit the program mode any time by turning the ignition to RUN (the locks will automatically lock and unlock to indicate that you are leaving the program mode). If the lock/unlock switches are not pressed while in the programming mode, the current auto lock/unlock setting will not be modified.

See your dealer for more information.

Downloaded from www.Manualslib.com manuals search engine

Rear Door Security Lock

With this feature, you can lock the rear doors so they can't be opened from the inside by passengers.
To use one of these locks:

1. Open one of the rear doors.
2. You will find a security lock lever located on the inside edge of the rear door. Move the lever up to engage the safety lock. Move the lever down to disengage the safety lock.
3. Close the door.
4. Do the same thing to the other rear door.

The rear doors of your vehicle cannot be opened from the inside when this feature is in use. If you want to open the rear door when the security lock is on, unlock the door and open the door from the outside.

Lockout Prevention

This feature stops the power door locks from locking when the key is in the ignition and a door is open, to help protect you from locking your key in the vehicle.

If the power lock switch is pressed when a door is open and the key is in the ignition, all the doors will lock, and the driver's door will unlock.

Leaving Your Vehicle

If you are leaving the vehicle, take your key, open your door and set the locks from inside. Then get out and close the door.

Downloaded from www.Manualslib.com manuals search engine

Keyless Entry System

If your vehicle has this feature, you can lock and unlock your doors from about 3 feet (1 m) up to 30 feet (9 m) away using the remote keyless entry transmitter supplied with your vehicle.

Your keyless entry system operates on a radio frequency subject to Federal Communications Commission (FCC) Rules and with Industry Canada.

This device complies with Part 15 of the FCC Rules. Operation is subject to the following two conditions: (1) this device may not cause harmful interference, and (2) this device must accept any interference received, including interference that may cause undesired operation.

This device complies with RSS-210 of Industry Canada. Operation is subject to the following two conditions: (1) this device may not cause interference, and (2) this device must accept any interference received, including interference that may cause undesired operation of the device.

Changes or modifications to this system by other than an authorized service facility could void authorization to use this equipment.

At times you may notice a decrease in range. This is normal for any remote keyless entry system. If the transmitter does not work or if you have to stand closer to your vehicle for the transmitter to work, try this:

- Check the distance. You may be too far from your vehicle. You may need to stand closer during rainy or snowy weather.
- Check the location. Other vehicles or objects may be blocking the signal. Take a few steps to the left or right, hold the transmitter higher, and try again.
- Check to determine if battery replacement or resynchronization is necessary. See the instructions that follow.
- If you're still having trouble, see your dealer or a qualified technician for service.

Downloaded from www.Manualslib.com manuals search engine

Operation

UNLOCK: When you press UNLOCK, the driver's door will unlock automatically, the parking lamps will flash and the interior lights will go on. Pressing this button once also unlocks the rear liftglass. If you press UNLOCK again within three seconds, the remaining doors, including the liftgate, will unlock, the parking lamps will flash and the interior lights will go on.

LOCK: Press LOCK to lock all the doors and the liftgate. Press LOCK again within three seconds and the horn will chirp.

REAR: Press the REAR button twice within three seconds to release the liftglass. The parking lamps will flash and the interior lights will go on. The transmission must be in PARK (P) or NEUTRAL (N).

Remote Panic Alarm

When the button with the horn symbol on the keyless entry transmitter is pressed, the horn will sound and the headlamps and taillamps will flash for up to 30 seconds. This can be turned off by pressing the horn button again, waiting for 30 seconds, or starting the vehicle.

Matching Transmitter(s) to Your Vehicle

Each remote keyless entry transmitter is coded to prevent another transmitter from unlocking your vehicle. If a transmitter is lost or stolen, a replacement can be purchased through your dealer. Remember to bring any remaining transmitters with you when you go to your dealer. When the dealer matches the replacement transmitter to your vehicle, any remaining transmitters must also be matched. Once your dealer has coded the new transmitter, the lost transmitter will not unlock your vehicle. Each vehicle can have only four transmitters matched to it.

Downloaded from www.Manualslib.com manuals search engine

Battery Replacement

Under normal use, the battery in your remote keyless entry transmitter should last about two years.

You can tell the battery is weak if the transmitter won't work at the normal range in any location. If you have to get close to your vehicle before the transmitter works, it's probably time to change the battery.

NOTICE:

When replacing the battery, use care not to touch any of the circuitry. Static from your body transferred to these surfaces may damage the transmitter.

To replace the battery in the keyless entry transmitter:

1. Insert a dime in the slot between the covers of the transmitter housing near the key ring hole. Remove the bottom by twisting the dime.
2. Remove and replace the battery with a three-volt CR2032 or equivalent battery, positive (+) side up.
3. Align the covers and snap them together.
4. Resynchronize the transmitter.
5. Check the operation of the transmitter.

Downloaded from www.Manualslib.com manuals search engine

Resynchronization

Resynchronization may be necessary due to the security method used by this system. The transmitter does not send the same signal twice to the receiver. The receiver will not respond to a signal it has been sent previously. This prevents anyone from recording and playing back the signal from the transmitter.

To resynchronize your transmitter, stand close to your vehicle and press and hold the LOCK and UNLOCK buttons on the transmitter at the same time for seven seconds. The door locks should cycle to confirm synchronization. If the locks do not cycle, see your dealer for service.

Liftgate/Liftglass

⚠ CAUTION:

It can be dangerous to drive with the liftgate or liftglass open because carbon monoxide (CO) gas can come into your vehicle. You can't see or smell CO. It can cause unconsciousness and even death.

If you must drive with the liftgate or liftglass open or if electrical wiring or other cable connections must pass through the seal between the body and the liftgate or liftglass:

- **Make sure all other windows are shut.**
- **Turn the fan on your heating or cooling system to its highest speed with the setting on OUTSIDE AIR. That will force outside air into your vehicle. See "Comfort Controls" in the Index.**
- **If you have air outlets on or under the instrument panel, open them all the way.**

See "Engine Exhaust" in the Index.

Downloaded from www.Manualslib.com manuals search engine

Liftgate Release

You may use the keyless entry system or your power door locks to release the liftgate or liftglass.

The liftglass can be opened using the pushbutton on the liftgate after the driver's door has been opened using either the power lock system or the remote keyless entry system.

To open the entire liftgate, unlock the doors using either the power door lock system or the remote keyless entry system and lift the handle located in the center of the liftgate.

Remote Liftglass Release

This button is located to the right of the steering wheel on the instrument panel. It allows you to release the liftglass from inside the vehicle.

Your shift lever must be in PARK (P) or NEUTRAL (N) for the release to work.

Theft

Vehicle theft is big business, especially in some cities. Although your vehicle has a number of theft-deterrent features, we know that nothing we put on it can make it impossible to steal. However, there are ways you can help.

Downloaded from www.Manualslib.com manuals search engine

Key in the Ignition

If you leave your vehicle with the keys inside, it's an easy target for joy riders or professional thieves -- so don't do it.

When you park your vehicle and open the driver's door, you'll hear a tone reminding you to remove your key from the ignition and take it with you. Always do this. Your steering wheel will be locked, and so will your ignition and transmission. Also remember to lock the doors.

Parking at Night

Park in a lighted spot, close all windows and lock your vehicle. Remember to keep your valuables out of sight. Put them in a storage area, or take them with you.

Parking Lots

Even if you park in a lot where someone will be watching your vehicle, it's still best to lock it up and take your keys. But what if you have to leave your ignition key? What if you have to leave something valuable in your vehicle?

- Put your valuables in a storage area, like your glove box.
- If your vehicle has a remote keyless entry system, take the transmitter with you.
- Lock all the doors except the driver's.
- Then take the door key with you.

Downloaded from www.Manualslib.com manuals search engine

Content Theft-Deterrent

Your vehicle is equipped with a content theft-deterrent alarm system.

SECURITY

With this system, the SECURITY light will flash as you open the door (if your ignition is off).

This light reminds you to activate the theft-deterrent system. Here's how to do it:

1. Lock the door with the power door lock switch (with the door open), or the remote keyless entry transmitter (door can be open or closed). The SECURITY light should come on and stay on.
2. The SECURITY light should go off after approximately 30 seconds. The alarm is not armed until the SECURITY light goes off.

If a door is opened without the key or the remote keyless entry transmitter, the alarm will go off. Your vehicle's headlamps will flash and the horn will sound for 110 seconds, then will turn off to save the battery power.

Remember, the theft-deterrent system won't activate if you lock the doors with a key or use the manual door lock. It activates only if you use a power door lock switch (with the door open), or with the remote keyless entry transmitter (door can be open or closed).
You should also remember that you can start your vehicle with the correct ignition key if the alarm has been set off.

Here's how to avoid setting off the alarm by accident:

- If you don't want to activate the theft-deterrent system, the vehicle should be locked with the door key *after* the doors are closed.
- Always unlock a door with a key, or use the remote keyless entry transmitter. Unlocking a door any other way will set off the alarm.

If you set off the alarm by accident, unlock any door with the key. You can also turn off the alarm by pressing UNLOCK on the remote keyless transmitter. The alarm won't stop if you try to unlock a door any other way.

Downloaded from www.Manualslib.com manuals search engine

Testing the Alarm

The alarm can be tested by following these steps:

1. From inside the vehicle, lower the driver's window and open the driver's door.
2. Activate the system by locking the doors with the power door lock switch (with the door open), or with the remote keyless entry transmitter (door can be open or closed).
3. Wait for the SECURITY light to go out.
4. Then reach in through the window, unlock the door with the manual door lock and open the door. This should set off the alarm.

If the alarm does not sound when it should but the vehicle's headlamps flash, check to see if the horn works. The horn fuse may be blown. To replace the fuse, see "Fuses and Circuit Breakers" in the Index.

If the alarm does not sound or the vehicle's headlamps do not flash, the vehicle should be serviced by an authorized service center.

Passlock®

Your vehicle is equipped with the Passlock theft-deterrent system.

Passlock is a passive theft-deterrent system. Passlock enables fuel if the ignition lock cylinder is turned with a valid key. If a correct key is not used or the ignition lock cylinder is tampered with, fuel is disabled.

During normal operation, the SECURITY light will go off approximately five seconds after the key is turned to RUN.

If the engine stalls and the SECURITY light flashes, wait about 10 minutes until the light stops flashing before trying to restart the engine. Remember to release the key from START as soon as the engine starts.

If the engine does not start after three tries, the vehicle needs service.

If the engine is running and the SECURITY light comes on, you will be able to restart the engine if you turn the engine off. However, your Passlock system is not working properly and must be serviced by your dealer. Your vehicle is not protected by Passlock at this time. You may also want to check the fuse (see "Fuses and Circuit Breakers" in the Index). See your dealer for service.

In an emergency, call the Roadside Assistance Center. See "Roadside Assistance" in the Index.

Downloaded from www.Manualslib.com manuals search engine

New Vehicle “Break-In”

NOTICE:

Your vehicle doesn’t need an elaborate “break-in.” But it will perform better in the long run if you follow these guidelines:

- **Keep your speed at 55 mph (88 km/h) or less for the first 500 miles (805 km).**
- **Don’t drive at any one speed -- fast or slow -- for the first 500 miles (805 km). Don’t make full-throttle starts.**
- **Avoid making hard stops for the first 200 miles (322 km) or so. During this time your new brake linings aren’t yet broken in. Hard stops with new linings can mean premature wear and earlier replacement. Follow this breaking-in guideline every time you get new brake linings.**
- **Don’t tow a trailer during break-in. See “Towing a Trailer” in the Index for more information.**

Ignition Positions

Use the key to turn the ignition switch to five different positions.

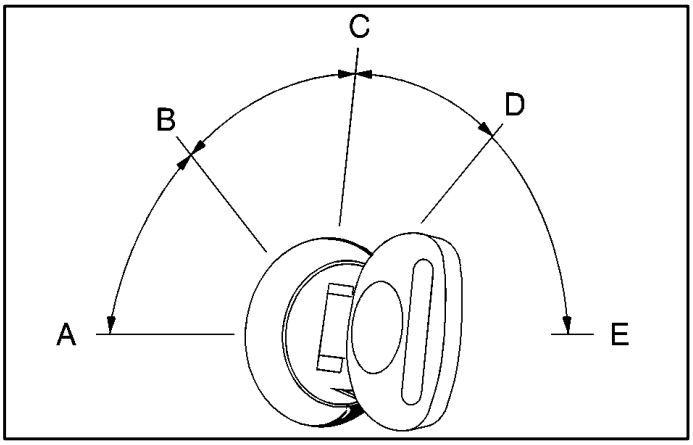

Downloaded from www.Manualslib.com manuals search engine

ACCESSORY (A): This position lets you use things like the radio and the windshield wipers when the engine is off. Push in the key and turn it toward you. Your steering wheel will remain locked, just as it was before you inserted the key.

NOTICE:

Don't operate accessories in the ACCESSORY position for long periods of time. Prolonged operation of accessories in the ACCESSORY position could drain your battery and prevent you from starting your vehicle.

LOCK (B): This position locks your ignition, steering wheel and transmission. It's a theft-deterrent feature. You will only be able to remove your key when the ignition is turned to LOCK.

NOTICE:

If your key seems stuck in LOCK and you can't turn it, be sure you are using the correct key; if so, is it all the way in? If it is, then turn the steering wheel left and right while you turn the key hard. But turn the key only with your hand. Using a tool to force it could break the key or the ignition switch. If none of this works, then your vehicle needs service.

OFF (C): This position lets you turn off the engine but still turn the steering wheel. Use OFF if you must have your vehicle in motion while the engine is off (for example, if your vehicle is being towed).

RUN (D): This is the position for driving.

START (E): This position starts your engine.

Downloaded from www.Manualslib.com manuals search engine

Retained Accessory Power (RAP)

Your vehicle is equipped with a Retained Accessory Power (RAP) feature which will allow certain features of your vehicle to continue to work up to 20 minutes after the ignition key is turned to OFF.

Your radio, power windows, sunroof and overhead console will work when the ignition key is in RUN or ACCESSORY. Once the key is turned from RUN to OFF, these features will continue to work for up to 20 minutes or until a door is opened.

Starting Your Engine

Move your shift lever to PARK (P) or NEUTRAL (N). Your engine won't start in any other position -- that's a safety feature. To restart when you're already moving, use NEUTRAL (N) only.

NOTICE:

Don't try to shift to PARK (P) if your vehicle is moving. If you do, you could damage the transmission. Shift to PARK (P) only when your vehicle is stopped.

1. With your foot off the accelerator pedal, turn your ignition key to START. When the engine starts, let go of the key. The idle speed will go down as your engine gets warm.

NOTICE:

Holding your key in START for longer than 15 seconds at a time will cause your battery to be drained much sooner. And the excessive heat can damage your starter motor. Wait about 15 seconds between each try to help avoid draining your battery or damaging your starter.

2. If it doesn't start within 10 seconds, hold your key in START for not more than 10 seconds. Then, push the accelerator pedal all the way down for five more seconds, unless it starts sooner.

Downloaded from www.Manualslib.com manuals search engine

3. If your engine still won't start (or starts but then stops), wait 15 seconds and start over.

   When the engine starts, let go of the key and the accelerator pedal.

NOTICE:

Your engine is designed to work with the electronics in your vehicle. If you add electrical parts or accessories, you could change the way the engine operates. Before adding electrical equipment, check with your dealer. If you don't, your engine might not perform properly.

Engine Coolant Heater (If Equipped)

In very cold weather, 0°F (-18°C) or colder, the engine coolant heater can help. You'll get easier starting and better fuel economy during engine warm-up. Usually, the coolant heater should be plugged in a minimum of four hours prior to starting your vehicle.

To Use the Engine Coolant Heater

1. Turn off the engine.
2. Open the hood and unwrap the electrical cord. The cord is located on the driver's side of the engine compartment, behind the underhood fuse block.
3. Plug it into a normal, grounded 110-volt AC outlet.

⚠ CAUTION:

Plugging the cord into an ungrounded outlet could cause an electrical shock. Also, the wrong kind of extension cord could overheat and cause a fire. You could be seriously injured. Plug the cord into a properly grounded three-prong 110-volt AC outlet. If the cord won't reach, use a heavy-duty three-prong extension cord rated for at least 15 amps.

4. Before starting the engine, be sure to unplug and store the cord as it was before to keep it away from moving engine parts. If you don't, it could be damaged.

Downloaded from www.Manualslib.com manuals search engine

How long should you keep the coolant heater plugged in? The answer depends on the outside temperature, the kind of oil you have, and some other things. Instead of trying to list everything here, we ask that you contact your dealer in the area where you'll be parking your vehicle. The dealer can give you the best advice for that particular area.

Automatic Transmission Operation

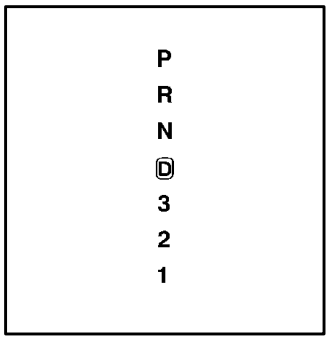

There are several different positions for your shift lever.

PARK (P): This position locks your wheels. It's the best position to use when you start your engine because your vehicle can't move easily.

⚠ CAUTION:

It is dangerous to get out of your vehicle if the shift lever is not fully in PARK (P) with the parking brake firmly set. Your vehicle can roll.

Don't leave your vehicle when the engine is running unless you have to. If you have left the engine running, the vehicle can move suddenly. You or others could be injured. To be sure your vehicle won't move, even when you're on fairly level ground, always set your parking brake and move the shift lever to PARK (P).

See "Shifting Into PARK (P)" in the Index.
If you're pulling a trailer, see "Towing a Trailer" in the Index.

Downloaded from www.Manualslib.com manuals search engine

Ensure the shift lever is fully in PARK (P) before starting the engine. Your vehicle has an automatic transmission shift lock control system. You have to fully apply your regular brakes before you can shift from PARK (P) when the ignition key is in RUN. If you cannot shift out of PARK (P), ease pressure on the shift lever -- press the button on the shift lever and push the shift lever all the way into PARK (P) as you maintain brake application. Then move the shift lever into the gear you wish. See “Shifting Out of PARK (P)” in the Index.

REVERSE (R): Use this gear to back up.

NOTICE:

Shifting to REVERSE (R) while your vehicle is moving forward could damage your transmission. Shift to REVERSE (R) only after your vehicle is stopped.

To rock your vehicle back and forth to get out of snow, ice or sand without damaging your transmission, see “Stuck In Sand, Mud, Ice or Snow” in the Index.

NEUTRAL (N): In this position, your engine doesn’t connect with the wheels. To restart when you’re already moving, use NEUTRAL (N) only.

⚠ CAUTION:

Shifting out of PARK (P) or NEUTRAL (N) while your engine is “racing” (running at high speed) is dangerous. Unless your foot is firmly on the brake pedal, your vehicle could move very rapidly. You could lose control and hit people or objects. Don’t shift out of PARK (P) or NEUTRAL (N) while your engine is racing.

NOTICE:

Damage to your transmission caused by shifting out of PARK (P) or NEUTRAL (N) with the engine racing isn’t covered by your warranty.

Downloaded from www.Manualslib.com manuals search engine

DRIVE (D): This position is for normal driving. If you need more power for passing, and you're:

- Going less than about 35 mph (55 km/h), push your accelerator pedal about halfway down.
- Going about 35 mph (55 km/h) or more, push the accelerator all the way down.

You'll shift down to the next gear and have more power.

DRIVE (D) should not be used when towing a trailer, carrying a heavy load, driving on steep hills or for off-road driving. Select THIRD (3) when operating the vehicle under any of these conditions.

THIRD (3): This position is also used for normal driving, however it offers more power but lower fuel economy than DRIVE (D). You should use THIRD (3) when towing a trailer, carrying a heavy load, driving on steep hills or winding roads or for off-road driving.

SECOND (2): This position gives you more power but lower fuel economy than THIRD (3). You can use SECOND (2) on hills. It can help control your speed as you go down steep mountain roads, but then you would also want to use your brakes off and on.

You can also use SECOND (2) for starting your vehicle from a stop on slippery road surfaces.

FIRST (1): This position gives you even more power but lower fuel economy than SECOND (2). You can use it on very steep hills, or in deep snow or mud. If the selector lever is put in FIRST (1) while the vehicle is moving forward, the transmission won't shift into first gear until the vehicle is going slowly enough.

NOTICE:

If your wheels can't rotate, don't try to drive. This might happen if you were stuck in very deep sand or mud or were up against a solid object. You could damage your transmission.

Also, if you stop when going uphill, don't hold your vehicle there with only the accelerator pedal. This could overheat and damage the transmission. Use your brakes or shift into PARK (P) to hold your vehicle in position on a hill.

Downloaded from www.Manualslib.com manuals search engine

Parking Brake

To set the parking brake, hold the regular brake pedal down with your right foot. Push down the parking brake pedal with your left foot. If the ignition is on, the brake system warning light will come on.

To release the parking brake, hold the regular brake pedal down.

Pull the BRAKE RELEASE lever fully. It is located on the bottom of the instrument panel on the driver's side.

NOTICE:

Driving with the parking brake on can cause your rear brakes to overheat. You may have to replace them, and you could also damage other parts of your vehicle.

If you are towing a trailer and you must park on a hill, see "Towing a Trailer" in the Index. That section shows what to do first to keep the trailer from moving.

Downloaded from www.Manualslib.com manuals search engine

Shifting Into PARK (P)

⚠ CAUTION:

It can be dangerous to get out of your vehicle if the shift lever is not fully in PARK (P) with the parking brake firmly set. Your vehicle can roll. If you have left the engine running, the vehicle can move suddenly. You or others could be injured. To be sure your vehicle won't move, even when you're on fairly level ground, use the steps that follow. If you're pulling a trailer, see "Towing a Trailer" in the Index.

1. Hold the brake pedal down with your right foot and set the parking brake.
2. Move the shift lever into PARK (P) position like this:

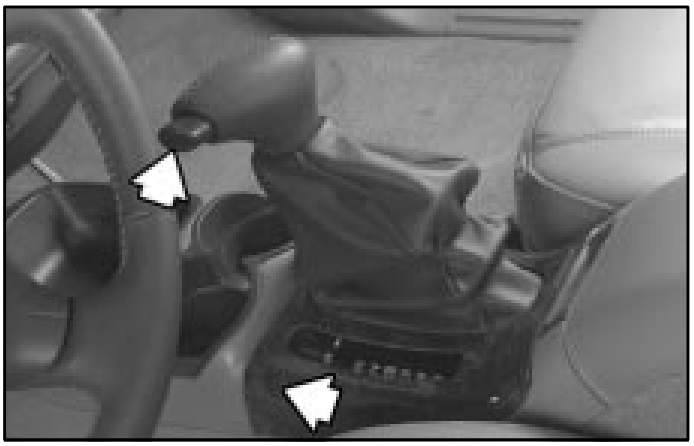

   - Hold in the button on the lever.
   - Push the lever all the way toward the front of the vehicle.
3. Turn the ignition key to LOCK.
4. Remove the key and take it with you. If you can leave your vehicle with the key, your vehicle is in PARK (P).

Downloaded from www.Manualslib.com manuals search engine

Leaving Your Vehicle With the Engine Running

⚠ CAUTION:

It can be dangerous to leave your vehicle with the engine running. Your vehicle could move suddenly if the shift lever is not fully in PARK (P) with the parking brake firmly set. And, if you leave the vehicle with the engine running, it could overheat and even catch fire. You or others could be injured. Don't leave your vehicle with the engine running unless you have to.

If you have to leave your vehicle with the engine running, be sure your vehicle is in PARK (P) and your parking brake is firmly set before you leave it. After you've moved the shift lever into PARK (P), hold the regular brake pedal down. Then, see if you can move the shift lever away from PARK (P) without first pressing the button on the console shift lever. If you can, it means that the shift lever wasn't fully locked into PARK (P).

Downloaded from www.Manualslib.com manuals search engine

Torque Lock

If you are parking on a hill and you don't shift your transmission into PARK (P) properly, the weight of the vehicle may put too much force on the parking pawl in the transmission. You may find it difficult to pull the shift lever out of PARK (P). This is called "torque lock." To prevent torque lock, set the parking brake and then shift into PARK (P) properly before you leave the driver's seat. To find out how, see "Shifting Into PARK (P)" in the Index.

When you are ready to drive, move the shift lever out of PARK (P) *before* you release the parking brake.

If torque lock does occur, you may need to have another vehicle push yours a little uphill to take some of the pressure from the parking pawl in the transmission, so you can pull the shift lever out of PARK (P).

Shifting Out of PARK (P)

Your vehicle has an automatic transmission shift lock control system. You have to fully apply your regular brake before you can shift from PARK (P) when the ignition is in RUN. See "Automatic Transmission Operation" in the Index.

If you cannot shift out of PARK (P), ease pressure on the shift lever -- push the shift lever all the way into PARK (P) as you maintain brake application. Then press the shift lever button and move the shift lever into the gear you want.

If you ever hold the brake pedal down but still can't shift out of PARK (P), try this:

1. Turn the key to OFF.
2. Apply and hold the brake until the end of Step 4.
3. Shift to NEUTRAL (N).
4. Start the vehicle and then shift to the drive gear you want.
5. Have the vehicle fixed as soon as possible.

Downloaded from www.Manualslib.com manuals search engine

Parking Over Things That Burn

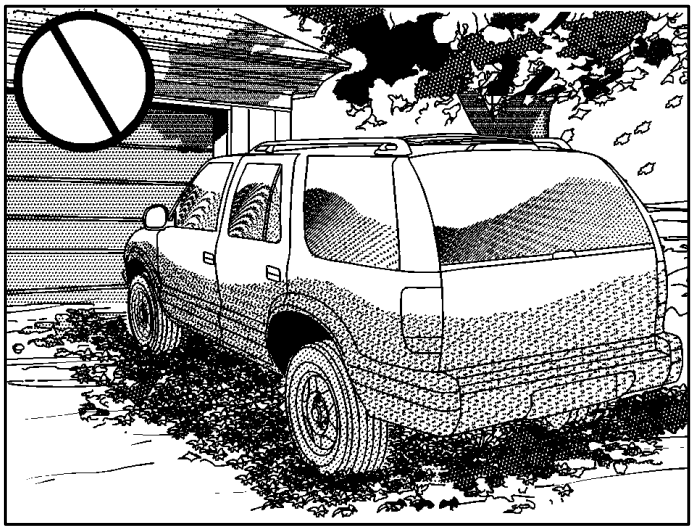

⚠ CAUTION:

Things that can burn could touch hot exhaust parts under your vehicle and ignite. Don't park over papers, leaves, dry grass or other things that can burn.

Engine Exhaust

⚠ CAUTION:

Engine exhaust can kill. It contains the gas carbon monoxide (CO), which you can't see or smell. It can cause unconsciousness and death.

You might have exhaust coming in if:

- **Your exhaust system sounds strange or different.**
- **Your vehicle gets rusty underneath.**
- **Your vehicle was damaged in a collision.**
- **Your vehicle was damaged when driving over high points on the road or over road debris.**
- **Repairs weren't done correctly.**
- **Your vehicle or exhaust system had been modified improperly.**

If you ever suspect exhaust is coming into your vehicle:

- **Drive it only with all the windows down to blow out any CO; and**
- **Have your vehicle fixed immediately.**

Downloaded from www.Manualslib.com manuals search engine

Running Your Engine While You're Parked

It's better not to park with the engine running. But if ever you have to, here are some things to know.

⚠ CAUTION:

Idling the engine with the climate control system off could allow dangerous exhaust into your vehicle. See the earlier Caution under "Engine Exhaust."

Also, idling in a closed-in place can let deadly carbon monoxide (CO) into your vehicle even if the fan switch is at the highest setting. One place this can happen is a garage. Exhaust -- with CO -- can come in easily. NEVER park in a garage with the engine running.

Another closed-in place can be a blizzard. See "Blizzard" in the Index.

⚠ CAUTION:

It can be dangerous to get out of your vehicle if the shift lever is not fully in PARK (P) with the parking brake firmly set. Your vehicle can roll. Don't leave your vehicle when the engine is running unless you have to. If you've left the engine running, the vehicle can move suddenly. You or others could be injured. To be sure your vehicle won't move, even when you're on fairly level ground, always set your parking brake and move the shift lever to PARK (P).

Follow the proper steps to be sure your vehicle won't move. See "Shifting Into PARK (P)" in the Index.

If you're pulling a trailer, see "Towing a Trailer" in the Index.

Downloaded from www.Manualslib.com manuals search engine

Locking Rear Axle

Your locking rear axle can give you additional traction on snow, mud, ice, sand or gravel. It works like a standard axle most of the time, but when one of the rear wheels has no traction and the other does, this feature will allow the wheel with traction to move the vehicle.

All-Wheel Drive

There is no lever or switch to engage or disengage the front axle. It is fully automatic and adjusts as needed for road conditions. Your vehicle has an active transfer case allowing two-wheel-drive operation on dry roads. The transfer case will shift automatically into all-wheel drive on slippery surfaces. You may feel an extra shift when the all-wheel drive engages.

Horn

To sound the horn, press the center pad on the steering wheel.

Tilt Wheel

You should adjust the steering wheel before you drive. The tilt lever is located on the driver's side of the steering column, under the turn signal lever.

You can raise it to the highest level to give your legs more room when you enter and exit the vehicle.

To tilt the wheel, hold the steering wheel and pull the lever toward you. Move the steering wheel to a comfortable level, then release the lever to lock the wheel in place.

Do not adjust the steering wheel while driving.

Downloaded from www.Manualslib.com manuals search engine

Turn Signal/Multifunction Lever

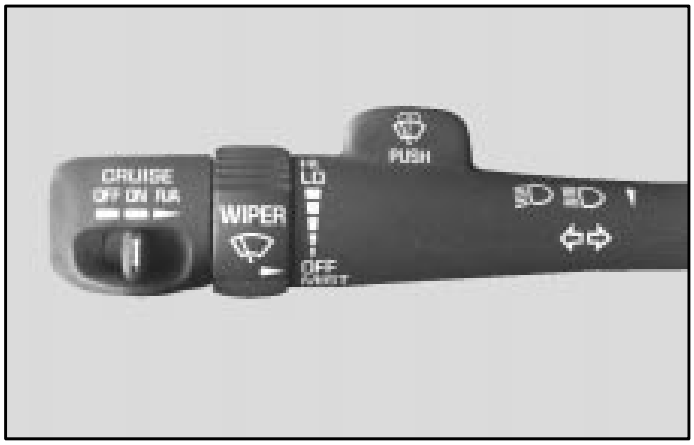

The lever on the left side of the steering column includes the following:

- Turn and Lane Change Signals
- Headlamp High/Low-Beam Changer
- Flash-to-Pass
- Windshield Wipers
- Windshield Washer
- Cruise Control

Turn and Lane Change Signals

The turn signal has two upward (for right) and two downward (for left) positions. These positions allow you to signal a turn or a lane change.

To signal a turn, move the lever all the way up or down. When the turn is finished, the lever will return automatically.

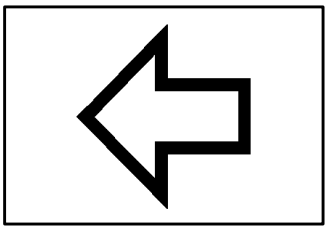

An arrow on the instrument panel cluster will flash in the direction of the turn or lane change.

To signal a lane change, just raise or lower the lever until the arrow starts to flash. Hold it there until you complete your lane change. The lever will return by itself when you release it.

As you signal a turn or a lane change, if the arrows flash more quickly than normal, a signal bulb may be burned out and other drivers won't see your turn signal.

If a bulb is burned out, replace it to help avoid an accident. If the arrows don't go on at all when you signal a turn, check the fuse (see "Fuses and Circuit Breakers" in the Index) and for burned-out bulbs.

Downloaded from www.Manualslib.com manuals search engine

If you have a trailer towing option with added wiring for the trailer lamps, a different turn signal flasher is used. With this flasher installed, the signal indicator will flash even if a turn signal bulb is burned out. Check the front and rear turn signal lamps regularly to make sure they are working.

Turn Signal On Chime

If your turn signal is left on for more than 3/4 of a mile (1.2 km), a chime will sound at each flash of the turn signal. To turn off the chime, move the turn signal lever to the center.

Headlamp High/Low-Beam Changer

To change the headlamps from low to high beam or high to low beam, pull the multifunction lever all the way toward you. Then release it.

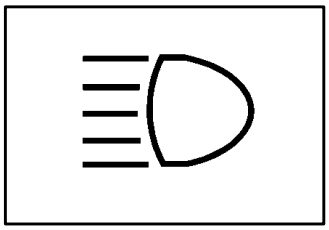

When the high beams are on, this indicator light on the instrument panel cluster will also be on.

Flash-to-Pass Feature

This feature lets you use your high-beam headlamps to signal a driver in front of you that you want to pass. It works even if your headlamps are in the automatic position.

To use it, pull the turn signal lever toward you, but not so far that you hear a click.

If your headlamps are in the automatic position or on low beam, your high-beam headlamps will turn on. They'll stay on as long as you hold the lever toward you. The high-beam indicator on the instrument panel cluster will come on. Release the lever to return to normal operation.

Windshield Wipers

You control the windshield wipers by turning the band with the wiper symbol on it.

For a single wiping cycle, turn the band to MIST. Hold it there until the wipers start. Then let go. The wipers will stop after one wipe. If you want more wipes, hold the band on MIST longer.

You can set the wiper speed for a long or short delay between wipes. This can be very useful in light rain or snow. Turn the band to choose the delay time. The closer to LO, the shorter the delay.

Downloaded from www.Manualslib.com manuals search engine

For steady wiping at low speed, turn the band away from you to LO. For high-speed wiping, turn the band further, to HI. To stop the wipers, move the band to OFF.

Be sure to clear ice and snow from the wiper blades before using them. If they're frozen to the windshield, carefully loosen or thaw them. If your blades do become worn or damaged, get new blades or blade inserts.

Windshield Washer

There's a paddle marked with the windshield washer symbol on the top of the multifunction lever. To spray washer fluid on the windshield, push the paddle. The wipers will clear the window and then either stop or return to your preset speed.

⚠ CAUTION:

In freezing weather, don't use your washer until the windshield is warmed. Otherwise the washer fluid can form ice on the windshield, blocking your vision.

Rear Window Washer/Wiper

This switch is located to the right of the steering wheel on the instrument panel.

To turn the rear wiper on, slide the switch to either LO or HI. For delayed wiping, slide the switch to LO. For steady wiping, slide the switch to HI. To turn the wiper off, slide the switch to OFF.

To wash the window, press the wash button located on the switch. The switch must be in either the HI or LO position.

The rear window washer uses the same fluid bottle as the windshield washer. However, the rear window washer will run out of fluid before the windshield washer. If you can wash your windshield but not your rear window, check your fluid level.

Downloaded from www.Manualslib.com manuals search engine

Cruise Control

With cruise control, you can maintain a speed of about 25 mph (40 km/h) or more without keeping your foot on the accelerator. This can really help on long trips. Cruise control does not work at speeds below about 25 mph (40 km/h).

If you apply your brakes, the cruise control will shut off.

⚠ CAUTION:

- **Cruise control can be dangerous where you can't drive safely at a steady speed. So, don't use your cruise control on winding roads or in heavy traffic.**
- **Cruise control can be dangerous on slippery roads. On such roads, fast changes in tire traction can cause needless wheel spinning, and you could lose control. Don't use cruise control on slippery roads.**

Downloaded from www.Manualslib.com manuals search engine

Setting Cruise Control

⚠ CAUTION:

If you leave your cruise control switch on when you're not using cruise, you might hit a button and go into cruise when you don't want to. You could be startled and even lose control. Keep the cruise control switch off until you want to use cruise control.

1. Move the cruise control switch to ON.
2. Get up to the speed you want.
3. Press in the SET button at the end of the lever and release it.
4. Take your foot off the accelerator pedal.

Resuming a Set Speed

Suppose you set your cruise control at a desired speed and then you apply the brake. This, of course, shuts off the cruise control. But you don't need to reset it.

Once you're going about 25 mph (40 km/h) or more, you can move the cruise control switch briefly from ON to R/A.

You'll go right back up to your chosen speed and stay there.

If you hold the switch at R/A the vehicle will keep going faster until you release the switch or apply the brake. So unless you want to go faster, don't hold the switch at R/A.

Downloaded from www.Manualslib.com manuals search engine

Increasing Speed While Using Cruise Control

There are two ways to go to a higher speed:

- Use the accelerator pedal to get to the higher speed. Press the button at the end of the lever, then release the button and the accelerator pedal. You'll now cruise at the higher speed.
- Move the cruise switch from ON to R/A. Hold it there until you get up to the speed you want, and then release the switch. To increase your speed in very small amounts, move the switch briefly to R/A. Each time you do this, your vehicle will go about 1 mph (1.6 km/h) faster.

Reducing Speed While Using Cruise Control

- Press in the button at the end of the lever until you reach the lower speed you want, then release it.
- To slow down in very small amounts, briefly press the SET button. Each time you do this, you'll go about 1 mph (1.6 km/h) slower.

Passing Another Vehicle While Using Cruise Control

Use the accelerator pedal to increase your speed. When you take your foot off the pedal, your vehicle will slow down to the cruise control speed you set earlier.

Using Cruise Control on Hills

How well your cruise control will work on hills depends upon your speed, load and the steepness of the hills. When going up steep hills, you may want to step on the accelerator pedal to maintain your speed. When going downhill, you may have to brake or shift to a lower gear to keep your speed down. Of course, applying the brake takes you out of cruise control. Many drivers find this to be too much trouble and don't use cruise control on steep hills.

Ending Cruise Control

There are two ways to turn off the cruise control:

- Step lightly on the brake pedal.
- Move the cruise switch to OFF.

Erasing Speed Memory

When you turn off the cruise control or the ignition, your cruise control set speed memory is erased.

Downloaded from www.Manualslib.com manuals search engine

Exterior Lamps

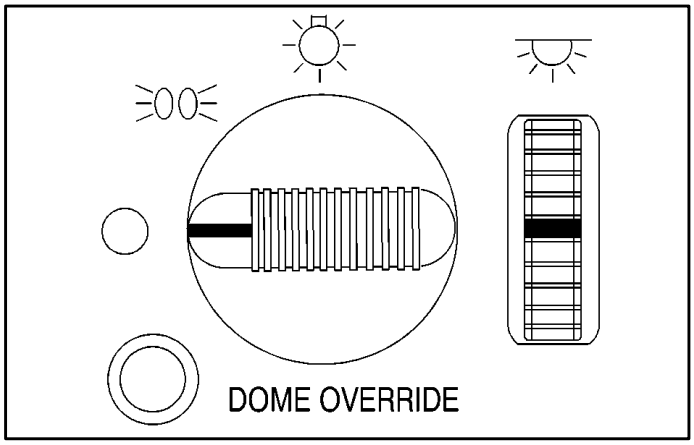

Your parking lamp and headlamp knob is on the driver's side of the instrument panel.

Turn the knob clockwise to the parking lamps symbol to manually turn on the following:

- Parking Lamps
- Sidemarker Lamps
- Taillamps
- License Plate Lamps
- Instrument Panel Lights

Turn the knob clockwise to the master lamp symbol to turn on all the lamps listed as well as the headlamps.

Turn the knob all the way counterclockwise to turn off the lamps and put the system in the auto headlamp mode.

Downloaded from www.Manualslib.com manuals search engine

Automatic Headlamp System

When it is dark enough outside, your automatic headlamp system will turn on your headlamps at the normal brightness along with other lamps such as the taillamps, sidemarker, parking lamps and the instrument panel lights. The radio lights will also be dim.

Your vehicle is equipped with a light sensor on the top of the instrument panel under the radio speaker grille. Be sure it is not covered or the system will be on whenever the ignition is on.

The system may also turn on your lights when driving through a parking garage, heavy overcast weather or a tunnel. This is normal.

There is a delay in the transition between the daytime and nighttime operation of the Daytime Running Lamps (DRL) and the automatic headlamp systems so that driving under bridges or bright overhead street lights does not affect the system. The DRL and automatic headlamp system will only be affected when the light sensor sees a change in lighting lasting longer than the delay.

To idle your vehicle with the automatic headlamp system off, set the parking brake while the ignition is off. Then start your vehicle. The automatic headlamp system will stay off until you release the parking brake.

You may be able to turn off your automatic headlamp system. See “Daytime Running Lamps (DRL)” later in this section for more information.

As with any vehicle, you should turn on the regular headlamp system when you need it.

Lamps On Reminder

A reminder tone will sound when your headlamps or parking lamps are manually turned on, the driver’s door is open and your ignition is in OFF, LOCK or ACCESSORY. To turn the tone off, turn the knob all the way counterclockwise. In the automatic mode, the headlamps turn off once the ignition key is in OFF.

Downloaded from www.Manualslib.com manuals search engine

Daytime Running Lamps

Daytime Running Lamps (DRL) can make it easier for others to see the front of your vehicle during the day. DRL can be helpful in many different driving conditions, but they can be especially helpful in the short periods after dawn and before sunset. Fully functional daytime running lights are required on all vehicles first sold in Canada.

The DRL system will make your headlamps come on at reduced brightness when the following conditions are met:

- The ignition is on,
- the headlamp switch is in automatic headlamp mode,
- the light sensor detects daytime light,
- the transmission is not in PARK (P), and
- the parking brake is released.

When the DRL are on, only your headlamps will be on. The taillamps, sidemarker and other lamps won't be on. The instrument panel won't be lit up either.

When it begins to get dark, the headlamps will automatically switch from DRL to the regular headlamps.

The DRL system will turn off temporarily while the turn signals are activated.

To idle your vehicle with the DRL off, put your vehicle's transmission in PARK (P). The DRL will stay off until you shift out of PARK (P).

The following does not apply to vehicles sold in Canada.

When necessary, you may turn off the automatic headlamp system and the Daytime Running Lamps (DRL) feature by following the steps below:

1. Turn the ignition to RUN.
2. Press the DOME OVERRIDE button four times within six seconds. After the fourth press of the button, a chime will sound informing you that the system is off.
3. To return to the automatic mode, push the DOME OVERRIDE button four times within six seconds (the chime will sound), or turn the ignition to OFF and then to RUN again.

As with any vehicle, you should turn on the regular headlamp system when you need it.

Downloaded from www.Manualslib.com manuals search engine

Fog Lamps

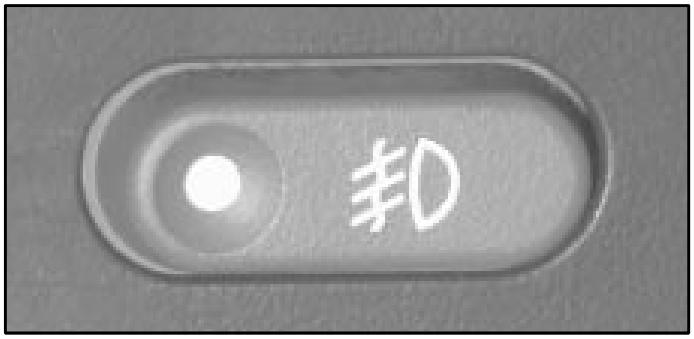

Use your fog lamps for better vision in foggy or misty conditions. Your low-beam headlamps must be on for your fog lamps to work.

The fog lamp switch is on the instrument panel under the lamps switch. Press the switch to turn the fog lamps on. Press the switch again to turn them off. A light will glow in the switch when the fog lamps are on.

Fog lamps will go off whenever your high-beam headlamps come on. When the high beams go off, the fog lamps will come on again.

Interior Lamps

Brightness Control

Turn the thumbwheel next to the headlamp switch up to make your instrument panel lights brighter. Turn the thumbwheel all the way up to turn on the interior lamps.

Illuminated Entry

Your vehicle is equipped with an illuminated entry feature.

When a door is opened, the dome lamps will come on if the DOME OVERRIDE button is in the “out” position. When all the doors are closed, or the front door handles are lifted and released, the lamps will stay on for a short period of time and will then turn off automatically.
If you use your keyless entry transmitter to unlock the vehicle, the interior lamps will come on for a short time whether or not the DOME OVERRIDE button is in the “out” position.

Downloaded from www.Manualslib.com manuals search engine

Exit Lighting

With exit lighting, the interior lamps will come on when you remove the key from the ignition to help you see while exiting the vehicle. With the DOME OVERRIDE button in the “out” position, these lamps will stay on for a short period of time and then will go out.

Front Reading Lamps

Press the button near each lamp on the overhead console to turn the reading lamps on and off. The lamps can be swiveled to point in the desired direction.

If you have the mini console, press the lens on each lamp to turn it on or off.

Dome Lamps

The dome lamps will come on when you open a door.

You can also turn the dome lamps on by turning the thumbwheel, located next to the parking/headlamps knob, all the way up to the second notch. In this position, the dome lamps will remain on until they are turned off.

You can use the DOME OVERRIDE button, located below the parking/headlamp knob, to set the dome lamps to come on automatically when a door is opened, or to remain off. To turn the lamps off, press the button into the “in” position. With the button in this position, the dome lamps will remain off when a door is open. To return the lamps to automatic operation, press the button again and return it to the “out” position.
With the button in this position, the dome lamps will come on when you open a door. This will override the illuminated entry feature unless you use your keyless entry transmitter to unlock the vehicle.

Battery Run-Down Protection

This feature shuts off the dome, courtesy, vanity, reading, glove box and underhood lamps if they are left on for more than 20 minutes when the ignition is off. This will keep your battery from running down.

If the battery run-down protection shuts off the interior lamps, it may be necessary to do one of the following to return to normal operation:

- Shut off all lamps and close all doors, or
- turn the ignition key to RUN.

Downloaded from www.Manualslib.com manuals search engine

Mirrors

Electrochromic Day/Night Inside Rearview Mirror

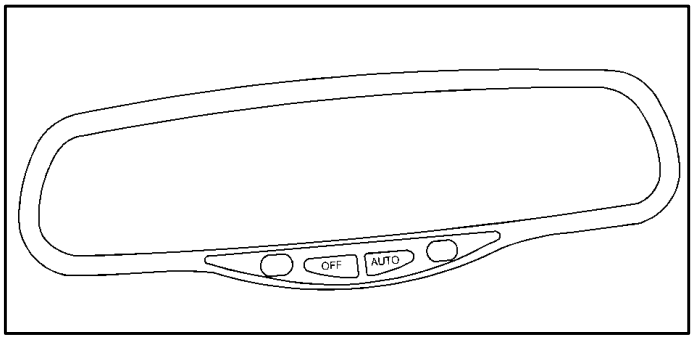

This mirror automatically changes to reduce glare from headlamps behind you. A photocell on the back of the mirror senses when it is becoming dark outside. Another photocell built into the mirror surface senses when headlamps are behind you.

At night, when the glare is too high, the mirror will gradually darken to reduce glare (this change may take a few seconds). The mirror will return to its clear daytime state when the glare is reduced. The mirror will also return to its clear daytime state when the vehicle is put into REVERSE (R).

Press the AUTO button at the base of the mirror to turn on the automatic feature. The button has an indicator light to show it is on. Press the OFF button to turn the automatic feature off.

Time Delay

The automatic mirror has a time delay feature which prevents unnecessary switching from the night back to the day position. This delay prevents rapid changing of the mirror as you drive under lights and through traffic.

Cleaning the Photocells

Use a cotton swab and glass cleaner to clean the photocells when necessary.

Downloaded from www.Manualslib.com manuals search engine

Electrochromic Day/Night Inside Rearview Mirror with OnStar® (If Equipped)

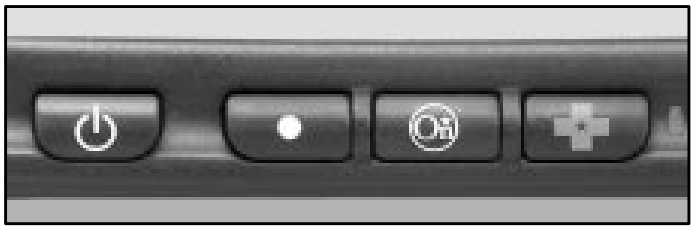

Your vehicle may be equipped with an electrochromic day/night rearview mirror with the OnStar system.

The automatic dimming feature is turned on or off by pressing the far left button, located on the lower part of the mirror face, for up to three seconds. When turned on this mirror functions exactly like the electrochromic mirror described previously.

You will also find three OnStar buttons located at the bottom of the mirror face. See your dealer for more information on the system and how to subscribe to OnStar. See “OnStar® System” in the Index for more information on using OnStar and the services it provides.

Power Remote Control Mirrors

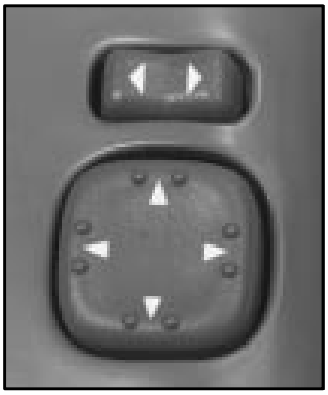

The controls for the mirrors are located on the driver’s door armrest.

Move the top control to the left or right to choose the mirror, then press the arrows on the lower control to adjust the mirror in the direction that you want it to go.

Downloaded from www.Manualslib.com manuals search engine

Convex Outside Mirror

A convex mirror's surface is curved so you can see more from the driver's seat.

⚠ CAUTION:

A convex mirror can make things (like other vehicles) look farther away than they really are. If you cut too sharply into the right or left lane, you could hit a vehicle. Check your inside mirror or glance over your shoulder before changing lanes.

Heated Outside Rearview Mirrors

When you operate the rear window defogger, a defogger also warms the heated driver's and passenger's outside rearview mirrors to help clear them of ice, snow and condensation. See "Rear Window Defogger" in the Index for more information.

Electrochromic Rearview Outside Mirror

The driver's side outside mirror will adjust for the glare of the headlamps behind you. See "Electrochromic Day/Night Inside Rearview Mirror" earlier in this section.

Downloaded from www.Manualslib.com manuals search engine

Storage Compartments

Glove Box

To open your glove box, lift the lever on the front of the glove box and lower the door. The glove box should not be open while driving.

Overhead Console

The overhead console includes reading lamps, a driver information system, a storage compartment for sunglasses and a HomeLink® transmitter.

Reading Lamps

Press the button located near each lamp to turn a reading lamp on or off.

The lamps can also be swiveled to point in the desired direction.

Downloaded from www.Manualslib.com manuals search engine

Driver Information System

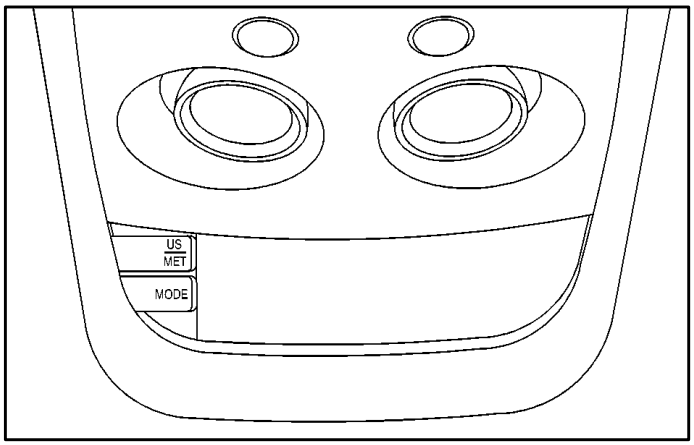

This system displays the outside air temperature, compass direction and trip information in the overhead console.

US/MET: The US/MET (United States/metric) button allows you to switch the display between the English and metric system.

MODE: The MODE button can be used to toggle between three modes of operation: OFF, COMP/TEMP and TRIP.

COMP/TEMP: This display provides the outside temperature and one of eight compass readings to indicate the direction the vehicle is facing.

Before you turn on the ignition and move the vehicle, the temperature indicated will be the last outside temperature recorded with the ignition on. If the outside temperature is 37°F (3°C) or lower, the display will toggle between the word “ICE” and the current temperature every eight seconds. This is a warning to the driver that road conditions may be icy, and that appropriate precautions should be taken.

The compass is self-calibrating, so it does not need to be manually set. However, if “C” (Calibration) is displayed, the compass will need to be calibrated. You may also place the compass in a non-calibrated mode by pressing and holding the MODE and US/MET buttons simultaneously while in the COMP/TEMP mode. After about 10 seconds, the compass will display “C” and you can release the buttons. Drive the vehicle in a complete 360 degree circle three times at a speed of less than 5 mph (8 km/h), and the compass will function normally. Once the calibration is complete, the display will return to a compass reading.

Downloaded from www.Manualslib.com manuals search engine

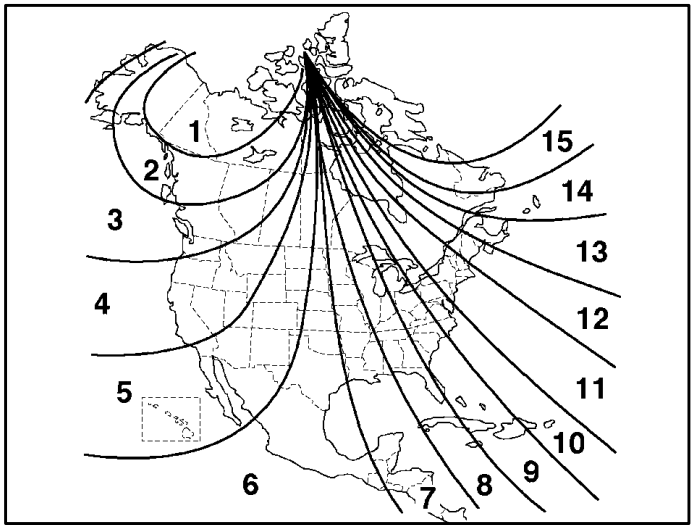

Variance is the difference between magnetic north and geographic north. In some areas, the difference between the two can be great enough to cause false compass readings. If this happens, follow these instructions to set the variance for your particular location:

1. Find your location on the zone map. Record your zone number.
2. Press and hold both the MODE and the US/MET buttons in the COMP/TEMP mode.
3. After five seconds, the compass will acknowledge the variation mode by displaying the current zone number. When it does, release both buttons.
4. Press US/MET until your zone number appears on the display.
5. Press MODE to enter your zone number. Your variance is now set and the display will return to the COMP/TEMP mode.

TRIP: Pressing the MODE button will step you through the following TRIP functions:

- **AVG ECON:** The average fuel economy since the last reset is displayed.
- **INST ECON:** Instantaneous fuel economy for the last second of driving is displayed.
- **RANGE:** The display indicates the estimated distance that can be travelled with the remaining fuel in the tank, based on the fuel economy for the last few hours of driving.
- **FUEL USED:** The fuel used since the last reset is displayed.
- **AVG SPEED:** The average speed since the last reset is displayed.

Downloaded from www.Manualslib.com manuals search engine

To reset the trip computer, press the MODE and US/MET buttons simultaneously for at least two seconds. All functions will be displayed briefly once the system is reset. Reset can only be performed in the AVG ECON, FUEL USED and AVG SPEED modes. All three modes are reset simultaneously.

Sunglasses Storage Compartment

To open the sunglasses storage compartment in the overhead console, press the release button. Then pull the compartment down.

Door Storage

You will find a storage compartment on each of the doors. Cupholders are also located on the doors.

Front Storage Area

Lift the armrest cover of the console compartment to reveal a coinholder and additional storage. Ribs have been provided for convenient storage of cassette tapes and compact discs.

Downloaded from www.Manualslib.com manuals search engine

Convenience Net

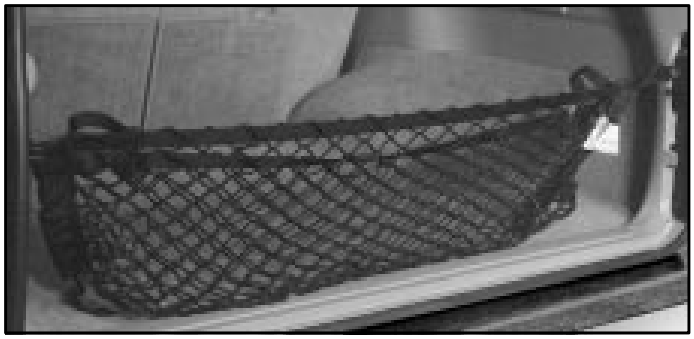

A convenience net in the rear of your vehicle helps keep small items, like gloves and light clothing in place during sharp turns or quick stops and starts.

The net is not designed to retain these items during off-road use. The net is not for larger, heavier items.

Attach the upper loops to the retainers on either side of the liftgate opening (the label should be in the upper passenger's side corner, visible from the rear of vehicle). Attach the lower hooks to the rear cargo tie downs on the floor.

Cargo Security Shade

You can use the cargo security shade to cover items in the cargo area of your vehicle.

Grasp the handle and unroll the cover. Latch the posts into the sockets on the inside of the vehicle to secure it.

⚠ CAUTION:

An improperly stored cargo cover could be thrown about the vehicle during a collision or sudden maneuver. You or others could be injured. If you remove the cover, always store it outside of the vehicle. When you put it back, always be sure that it is securely reattached.

Downloaded from www.Manualslib.com manuals search engine

Cargo Tie Downs

There are five cargo tie downs in the rear that allow you to strap cargo in and keep it from moving inside the vehicle.

Rear Convenience System (If Equipped)

⚠ CAUTION:

If the convenience system isn't secured properly, it can move around in a collision or sudden stop. People in the vehicle could be injured. Be sure to secure the convenience system properly.

The convenience system, located in the rear of your vehicle, provides a place to store loose items in your vehicle.

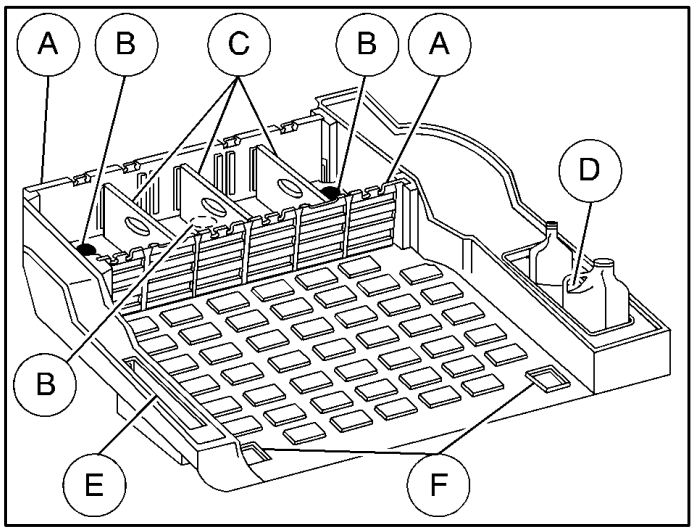

A. Collapsible Dividers
B. Anchor Bracket/Cargo Tie-Down Plugs
C. Partitions
D. Soda Pop/Gallon Jug Holder
E. Partition Storage
F. Cargo Tie-Down Cutouts

Downloaded from www.Manualslib.com manuals search engine

To increase the space in the convenience system, do the following:

1. Remove the individual partitions (C) by pulling upward on the partitions. Storage for the partitions is located in area (F).
2. Then fold the collapsible dividers (A) by pulling upward and folding the dividers toward each other.

To reinstall or rearrange the partitions, push down gently on the partitions making sure both sides fit into the appropriate slots of the collapsible dividers (A).

Located on the top of each collapsible divider (A) are T-pins designed to hold grocery bags, etc., in an upright position.

The anchor bracket/cargo tie down plugs (B), located in the center and on each side of the convenience system nearest the passenger compartment, are used to help seal the convenience system. However, the plugs also cover the anchor bracket /cargo tie-downs. To remove the plugs, grasp the edges of the plugs and pull straight out. See “Child Restraints” and “Top Strap” in the Index for more information on using anchor brackets.

There are two cutouts (E) for the rear cargo tie-downs located near the liftgate/endgate sill. In order to access the rear cargo tie-downs, the cutouts must be removed.

You will also find a soda pop/gallon jug holder (D) on the passenger side of the convenience system. OnStar® equipped vehicles do not have this feature, but instead include a smaller storage area.

To remove the entire convenience system, do the following:

1. Remove the convenience net if it is in place. See “Convenience Net” in the Index for more information. You may also want to remove the partitions (C) and fold the collapsible dividers (A) to make the convenience system easier to handle.
2. Grasp the sides of the convenience system and push the sides together while sliding the unit out until it clears the sides of the liftgate/endgate opening.

To reinstall the convenience system, reverse the removal procedure.

Downloaded from www.Manualslib.com manuals search engine

Luggage Carrier

⚠ CAUTION:

If you try to carry something on top of your vehicle that is longer or wider than the luggage carrier -- like paneling, plywood, a mattress, and so forth -- the wind can catch it as you drive along. This can cause you to lose control. What you are carrying could be violently torn off, and this could cause you or other drivers to have a collision, and of course damage your vehicle. You may be able to carry something like this inside. But, never carry something longer or wider than the luggage carrier on top of your vehicle.

A luggage carrier allows you to load things on top of your vehicle. The luggage carrier has slats and side rails attached to the roof, sliding crossrails and places to use for tying things down. These let you load some other things on top of your vehicle, as long as they are not wider or longer than the luggage carrier.

To slide the crossrails to where you want them, push up on the lever under each side of the crossrail. This will release the crossrail and allow you to slide it. When the crossrail is where you want it, push down on the lever to lock it into place.

NOTICE:

Loading cargo that weighs more than 200 lbs. (91 kg) on the luggage carrier may damage your vehicle.

When you carry cargo on the luggage carrier of a proper size and weight, put it on the slats, as far forward as you can. Then slide the crossrail up against the rear of the load, to help keep it from moving. You can then tie it down.

Don’t exceed the maximum vehicle capacity when loading your vehicle. For more information on vehicle capacity and loading, see “Loading Your Vehicle” in the Index.

To prevent damage or loss of cargo as you’re driving, check now and then to make sure the luggage carrier is locked and cargo is still securely fastened.

Downloaded from www.Manualslib.com manuals search engine

Ashtrays and Cigarette Lighter

Pull the front ashtray door down to open it.

NOTICE:

Don't put papers and other things that burn into your ashtray. If you do, cigarettes or other smoking materials could set them on fire causing damage.

To remove the front ashtray, pull the bin upward.

To use the lighter, press it in all the way, and let go. When it's ready, it will pop back out by itself.

NOTICE:

Don't hold a cigarette lighter in with your hand while it is heating. If you do, it won't be able to back away from the heating element when it's ready. That can make it overload, damaging the lighter and the heating element.

Sun Visors

You can move down your visor to block out glare. You can also move the visor from side-to-side.

Visor Vanity Mirror

Pull the sun visor down and lift the cover to expose the vanity mirror.

Illuminated Visor Vanity Mirror

Pull the sun visor down and lift the mirror cover to turn on the lamps.

Downloaded from www.Manualslib.com manuals search engine

Accessory Power Outlets

With the accessory power outlets, you can plug in auxiliary electrical equipment. The accessory power outlets are located near the center of the vehicle on the lower part of the instrument panel. Just remove the plug from the outlet and follow the proper installation instructions that are included with any electrical equipment you install.

Certain accessory power plugs may not be compatible to the accessory power outlets and could result in blown vehicle or adaptor fuses. If you experience a problem see your dealer for additional information on the power accessory plugs.

These circuits are protected by a fuse and have maximum current levels.

NOTICE:

Adding some electrical equipment to your vehicle can damage it or keep other things from working as they should. This wouldn't be covered by your warranty. Check with your dealer before adding electrical equipment, and never use anything that exceeds the fuse rating.

OnStar® System (If Equipped)

OnStar is a vehicle communications system that offers a variety of services and provides a hands-free communication link between you and the OnStar Center. A service subscription agreement and fee are required in order to receive OnStar service. Services are available 24 hours a day, 7 days a week. For more information, call 1-888-ONSTAR-7 (1-888-667-8277).

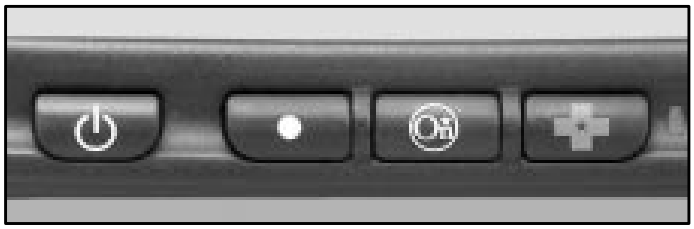

OnStar Services Button: Press this button once to contact an advisor who will be able to assist you with these services. If you are not quickly connected, the system will automatically reset and redial. This ensures connection to the center; there is no additional action required. Press the Call Answer/End button to cancel the automatic redial.

Downloaded from www.Manualslib.com manuals search engine

Emergency Button: In an emergency situation, press the emergency service button. Upon receiving the call, an advisor at the center will locate your vehicle and assess the situation. If necessary, the advisor will alert the nearest emergency service provider.

Call ANSWER/END Button: Use this button to answer a call. (If you are receiving a call, the audio system will mute, and the ring will be heard). Press this button at the end of a call to disconnect and return the audio system to its previous settings. This button will also cancel a call if one of the buttons is accidentally pressed or if the automatic redial function is activated.

Volume Control: You can control the volume of the OnStar System using either the volume control knob on the radio or using the steering wheel volume control (if equipped).

Telltale Light: This light will indicate the status of the system. A solid green light will come on when you start the vehicle to let you know that the system is on and is ready to make or receive calls.

If the light blinks green it means that an incoming or outgoing call is in progress. Press the Call ANSWER/END button if you notice the light blinking and you are not on a call.

The light will be red in the event of an OnStar system malfunction. If this occurs press the OnStar button to attempt to contact an advisor. If the connection is made, the advisor will assist you with steps to take to make sure that the system is functioning properly. If you cannot contact the advisor, take your vehicle to your dealership as soon as possible for assistance.

Downloaded from www.Manualslib.com manuals search engine

Safety and Security Services

- **Automatic Notification of Air Bag Deployment --** If an air bag deploys, a priority emergency signal is automatically sent to the center. An advisor will locate your vehicle's position, try to contact you and assist you in the situation. If the center is unable to contact you, an emergency service provider will be contacted.
- **Stolen Vehicle Tracking --** Call the center at 1-888-4-ONSTAR (1-888-466-7827) to report your vehicle stolen. The system can then locate and track your vehicle and the advisor will be able to notify the proper authorities.
- **Roadside Assistance with Location --** For vehicle breakdowns, press the OnStar button. An advisor will contact the appropriate help.
- **Remote Diagnostics --** If an instrument panel light comes on, the center can perform a check of the engine on-board computer. An advisor can then recommend what action needs to be taken.
- **OnStar MED-NET --** Med-Net can store your personal medical history and provide it to emergency personnel if necessary.
- **Accident Assist --** An advisor can provide step-by-step guidance following an accident.
- **Remote Door Unlock --** To contact the center, call 1-888-4-ONSTAR. You will be required to provide your security information. An advisor will send a command to your vehicle to unlock itself. The advisor can delay unlocking your vehicle. Remote Door Unlock is disabled 48 hours after the vehicle is parked to maintain the battery charge.
- **Vehicle Locator Service --** To contact the center, call 1-888-4-ONSTAR. You will be required to provide your security information. An advisor will send a command to your vehicle to sound the horn and/or flash the lamps.

In order to provide you with excellent service, calls with the OnStar Center may be monitored or recorded.

Downloaded from www.Manualslib.com manuals search engine

Premium Services (Includes Safety and Security Services)

- **Route Support --** An advisor can provide directions or guidance to anywhere you want to go. In addition, they can help you locate gas stations, rest areas, ATMs, hospitals, hotels, stores, eateries and more.
- **Concierge Services --** The concierge advisor can obtain tickets, reservations, or help with vacation/trip planning and other unique items and services.
- **Ride Assist --** An advisor can locate transportation in the event that you are unable to drive.

OnStar System Limitations

Complete limitations can be found on the Subscriber Services Agreement.

OnStar Service is:

- available in the 48 contiguous United States, Alaska, Hawaii and Canada;
- available when the vehicle is within the operating range of a cellular provider;
- subject to limitations caused by atmospheric conditions, such as severe weather or topographical conditions, such as mountainous terrain;
- subject to cellular carrier equipment limitations.

Global positioning capabilities used to deliver OnStar Service will not be available if satellite signals are obstructed.

OnStar will not function if the vehicle's battery is discharged or disconnected. It may also be inoperative if the vehicle is in an accident and the OnStar or vehicle electrical system components are damaged.

Safety and security services are provided by existing governmental emergency service providers. OnStar will use reasonable efforts to contact the appropriate emergency service provider and request assistance but cannot promise that they will respond to the call in a timely manner or at all.

Downloaded from www.Manualslib.com manuals search engine

Sunroof (If Equipped)

Your vehicle may be equipped with a power sliding sunroof. To open or close your sunroof, the ignition needs to be in RUN or ACCESSORY or Retained Accessory Power (RAP) needs to be active.
See “Retained Accessory Power” in the Index.

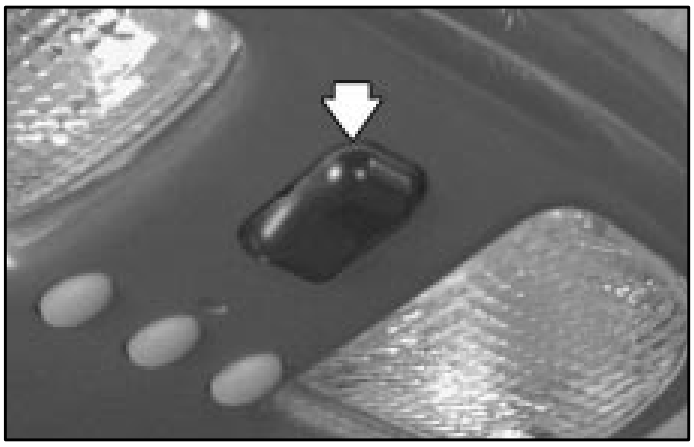

Press and release the rear side of the button in the mini console to open the sunroof. You can press the forward side of the button to close the sunroof. Once the sunroof is closed, press the forward side of the button to open the sunroof to the vent position.

The sunroof is also equipped with a sunshade which you can pull forward to block sun rays.

Downloaded from www.Manualslib.com manuals search engine

HomeLink® Transmitter

Mini Console

Full-Size Console

This device complies with Part 15 of the FCC Rules. Operation is subject to the following two conditions: (1) this device may not cause harmful interference, and (2) this device must accept any interference received, including interference that may cause undesired operation.

This device complies with RSS-210 of Industry Canada. Operation is subject to the following two conditions: (1) this device may not cause interference, and (2) this device must accept any interference, including interference that may cause undesired operation of the device.

Changes and modifications to this system by other than an authorized service facility could void authorization to use this equipment.

Downloaded from www.Manualslib.com manuals search engine

Programming the Transmitter

Do not use the HomeLink Transmitter with any garage door opener that does not have the “stop and reverse” feature. This includes any garage door opener model manufactured before April 1, 1982.

Be sure that people and objects are clear of the garage door you are programming.

Your vehicle’s engine should be turned off while programming the transmitter. Follow these steps to program up to three channels:

1. If you have previously programmed a transmitter channel, proceed to Step 2. Otherwise, hold down the two outside buttons on the HomeLink Transmitter until the indicator light begins to flash rapidly (after 20 seconds). Then release the buttons. This procedure initializes the memory and erases any previous settings for all three channels.
2. Decide which one of the three channels you want to program. Hold the end of the hand-held transmitter about 1 to 3 inches (3 to 8 cm) away from the surface of the HomeLink Transmitter so that you can still see the indicator light.
3. Using both hands, press the hand-held transmitter button and the desired button on the HomeLink Transmitter. Continue to press both buttons through Step 4.
4. Hold down both buttons until you see the red light on the HomeLink Transmitter flash rapidly. The rapid flashing indicates that the HomeLink Transmitter has been programmed. Release both buttons once the light starts to flash rapidly.

If you have trouble programming the HomeLink Transmitter, make sure that you have followed the directions exactly as described and that the battery in the hand-held transmitter is not dead. If you still cannot program it, flip the hand-held transmitter end over end and try again. The HomeLink Transmitter may not work with older garage door openers that do not meet current Federal Consumer Safety Standards. If you cannot program the transmitter after repeated attempts, refer to “Training a Garage Door Opener with Rolling Codes” later in this section or contact the manufacturer of the unit at 1-800-355-3515.

Be sure to keep the original hand-held transmitter in case you need to erase and reprogram the HomeLink Transmitter.

Downloaded from www.Manualslib.com manuals search engine

Canadian Owners: During programming, the hand-held transmitter may automatically stop transmitting after one or two seconds. In this case, you should press and re-press the button on the hand-held transmitter every two seconds without ever releasing the button on the HomeLink Transmitter. Release both buttons when the indicator light on the HomeLink Transmitter begins to flash rapidly.

Operating the Transmitter

Press and hold the appropriate button on the HomeLink Transmitter. The indicator light comes on while the signal is being transmitted.

If the hand-held transmitter appears to program the HomeLink Transmitter but does not open your garage door, and if the garage door opener was manufactured after 1996, the garage door opener may have a “rolling code” system. A rolling code system changes the code of the garage door opener every time you open or close the garage door.

To determine if you have this system, press the button on the HomeLink Transmitter that you have programmed already. If the indicator light flashes rapidly for one or two seconds, then turns solid, the garage door opener has a rolling code system. In a rolling code system, the garage door motor head unit must be trained to the HomeLink Transmitter.

Training a Garage Door Opener with a “Rolling Code” Feature (If Equipped)

If you have not previously programmed the hand-held transmitter to the HomeLink Transmitter, see “Programming the Transmitter” listed previously. If you have completed this programming already, you now need to train the garage door opener motor head unit to recognize the HomeLink Transmitter. Refer to your garage door opener owner’s manual for the proper transmitter training procedure for your garage door opener brand.

1. Find the training button on the garage door opener motor head unit. The exact location and color will vary by garage door opener brand. If you have difficulty finding the training button, refer to your garage door opener owner’s manual.

   Because of the steps involved, it may be helpful to have another person available to assist you in programming the transmitter.

2. Press the training button on the garage door opener motor head unit. An indicator light will begin to flash when the motor head unit enters the training mode.

   Following this step, you have 30 seconds to start Step 3.

Downloaded from www.Manualslib.com manuals search engine

3. Return to the HomeLink Transmitter in your vehicle and firmly press and release the HomeLink Transmitter button you have already programmed for two or three seconds. Press and release the button again (you may need to do this step up to three times) to make sure that the HomeLink Transmitter has been trained to the garage door opener motor head unit. Check that the training was successful. The motor head unit indicator light should no longer be flashing.

The garage door opener should now recognize the HomeLink Transmitter. You may either use the HomeLink Transmitter or the hand-held transmitter to open the garage door.

If after following these instructions, you still have problems training the garage door opener, call the manufacturer of the unit at 1-800-355-3515.

Erasing Channels

To erase all three programmed channels, hold down the two outside buttons until the indicator light begins to flash (after 20 seconds). Release both buttons.

Accessories

Accessories for the HomeLink Transmitter are available from the manufacturer of the unit. If you would like additional information, please call 1-800-355-3515.

Downloaded from www.Manualslib.com manuals search engine

The Instrument Panel--Your Information System

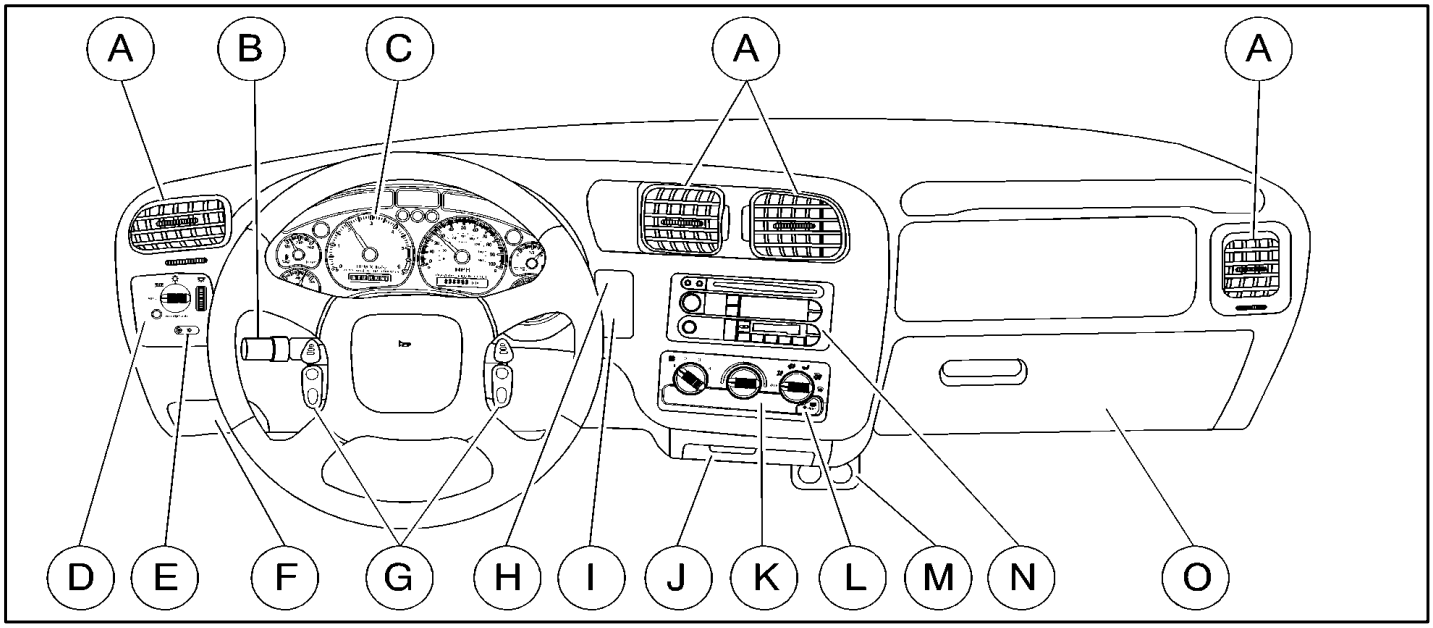

The main components of your instrument panel are the following:

A. Air Vents
B. Turn Signal/Multifunction Lever
C. Instrument Panel Cluster
D. Lamp Controls
E. Fog Lamps
F. Brake Release
G. Audio Steering Wheel Controls (If Equipped)
H. Rear Window Washer/Wiper
I. Rear Liftgate Glass Release
J. Ashtray
K. Comfort Controls
L. Rear Window and Mirror Defogger
M. Accessory Power Outlets
N. Audio System
O. Glove Box

Downloaded from www.Manualslib.com manuals search engine

Instrument Panel Cluster

Your instrument panel cluster is designed to let you know at a glance how your vehicle is running. You'll know how fast you're going, about how much fuel you've used, and many other things you'll need to know to drive safely and economically.

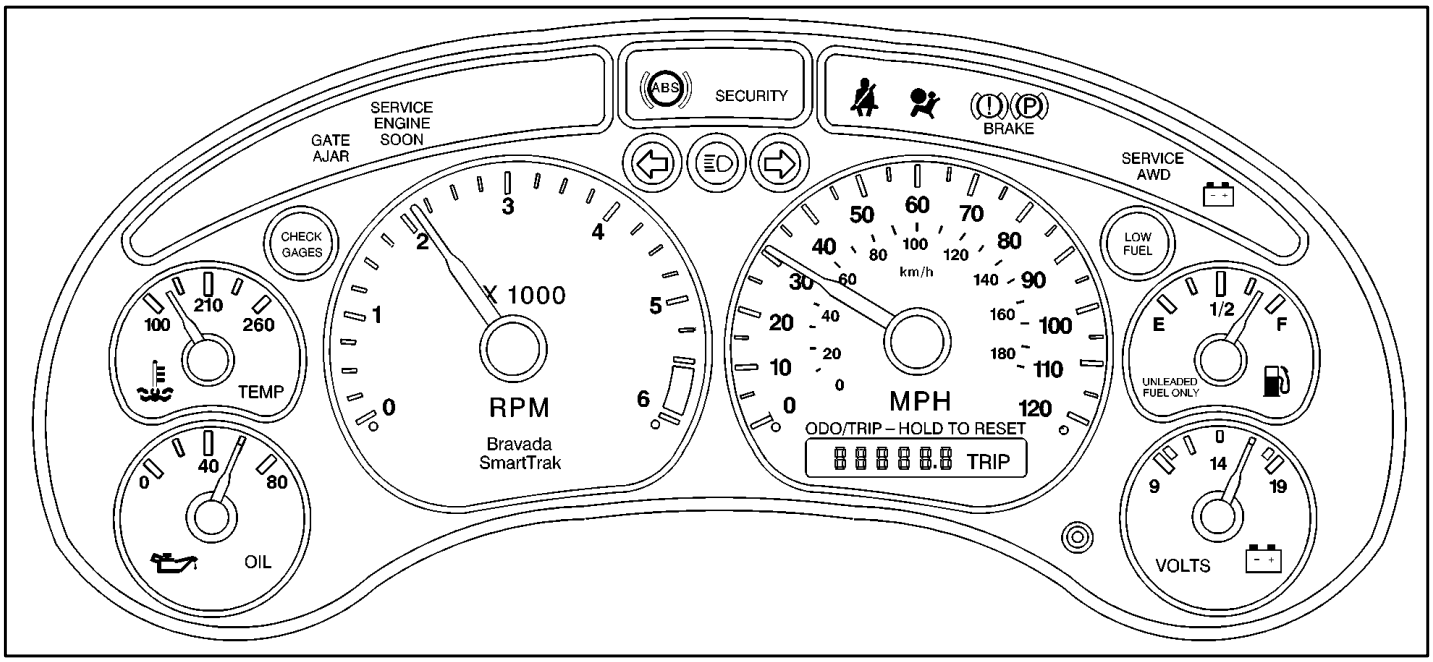

Downloaded from www.Manualslib.com manuals search engine

Speedometer and Odometer

Your speedometer lets you see your speed in both miles per hour (mph) and kilometers per hour (km/h).

Your odometer shows how far your vehicle has been driven, in miles.

The odometer mileage can be checked without the vehicle running. Simply press the trip odometer button.

You may wonder what happens if your vehicle needs a new odometer installed. If the new one can be set to the mileage total of the old odometer, then it must be. But if it can't, then it's set at zero, and a label must be put on the driver's door to show the old mileage reading when the new odometer was installed.

Trip Odometer

The trip odometer can tell you how far your vehicle has been driven since you last set the trip odometer to zero.

To view the trip odometer, press the button near the readout. To reset the trip odometer, press the button until it clears.

Tachometer

The tachometer displays the engine speed in revolutions per minute (rpm).

NOTICE:

Do not operate the engine with the tachometer in the shaded warning area, or engine damage will occur.

Downloaded from www.Manualslib.com manuals search engine

Warning Lights, Gages and Indicators

This part describes the warning lights and gages that may be on your vehicle. The pictures will help you locate them.

Warning lights and gages can signal that something is wrong before it becomes serious enough to cause an expensive repair or replacement. Paying attention to your warning lights and gages could also save you or others from injury.

Warning lights come on when there may be or is a problem with one of your vehicle's functions. As you will see in the details on the next few pages, some warning lights come on briefly when you start the engine just to let you know they're working. If you are familiar with this section, you should not be alarmed when this happens.

Gages can indicate when there may be or is a problem with one of your vehicle's functions. Often gages and warning lights work together to let you know when there's a problem with your vehicle.

When one of the warning lights comes on and stays on when you are driving, or when one of the gages shows there may be a problem, check the section that tells you what to do about it. Please follow this manual's advice. Waiting to do repairs can be costly -- and even dangerous. So please get to know your warning lights and gages. They're a big help.

Safety Belt Reminder Light

When the key is turned to RUN or START, a chime will come on for about eight seconds to remind people to fasten their safety belts, unless the driver's safety belt is already buckled.

The safety belt light will also come on and stay on for about 20 seconds, then it will flash for about 55 seconds.

If the driver's belt is already buckled, neither the chime nor the light will come on.

Downloaded from www.Manualslib.com manuals search engine

Air Bag Readiness Light

There is an air bag readiness light on the instrument panel, which shows the air bag symbol. The system checks the air bag's electrical system for malfunctions. The light tells you if there is an electrical problem. The system check includes the air bag sensors, the air bag modules, the wiring and the crash sensing and diagnostic module. For more information on the air bag system, see "Air Bag" in the Index.

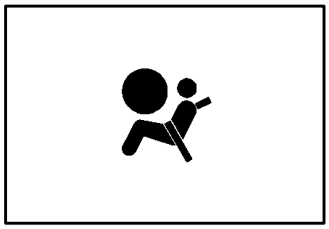

This light will come on when you start your vehicle, and it will flash for a few seconds. Then the light should go out. This means the system is ready.

If the air bag readiness light stays on after you start the vehicle or comes on when you are driving, your air bag system may not work properly. Have your vehicle serviced right away.

⚠ CAUTION:

If the air bag readiness light stays on after you start your vehicle, it means the air bag system may not be working properly. The air bags in your vehicle may not inflate in a crash, or they could even inflate without a crash. To help avoid injury to yourself or others, have your vehicle serviced right away if the air bag readiness light stays on after you start your vehicle.

The air bag readiness light should flash for a few seconds when you turn the ignition key to RUN. If the light doesn't come on then, have it fixed so it will be ready to warn you if there is a problem.

Downloaded from www.Manualslib.com manuals search engine

Charging System Indicator Light

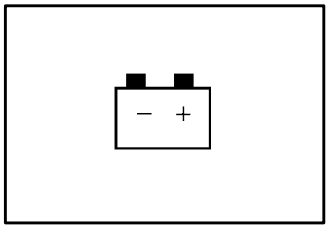

The charging system light will come on briefly when you turn on the ignition, but the engine is not running, as a check to show you it is working.

It should go out once the engine is running. If it stays on, or comes on while you are driving, you may have a problem with the charging system. It could indicate that you have problems with a generator drive belt, or another electrical problem. Have it checked right away. Driving while this light is on could drain your battery.

If you must drive a short distance with the light on, be certain to turn off all your accessories, such as the radio and air conditioner.

Voltmeter Gage

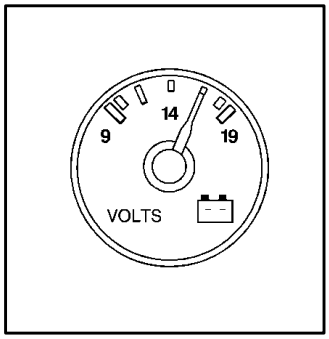

When your engine is not running, but the ignition is on (in RUN), this gage shows your battery's state of charge in DC volts.

When the engine is running, the gage shows the condition of the charging system. Readings between the low and high warning zones indicate the normal operating range.

Readings in the low warning zone may occur when a large number of electrical accessories are operating in the vehicle and the engine is left at an idle for an extended period. This condition is normal since the charging system is not able to provide full power at engine idle. As engine speeds are increased, this condition should correct itself as higher engine speeds allow the charging system to create maximum power.

Downloaded from www.Manualslib.com manuals search engine

You can only drive for a short time with the reading in either warning zone. If you must drive, turn off all unnecessary accessories.

Readings in either warning zone indicate a possible problem in the electrical system. Have the vehicle serviced as soon as possible.

Brake System Warning Light

When the ignition is on, the brake system warning light will come on when you set your parking brake. The light will stay on if your parking brake doesn't release fully. If it stays on after your parking brake is fully released, it means you have a brake problem.

Your vehicle's hydraulic brake system is divided into two parts. If one part isn't working, the other part can still work and stop you. For good braking, though, you need both parts working well.

If the warning light comes on, there could be a brake problem. Have your brake system inspected right away.

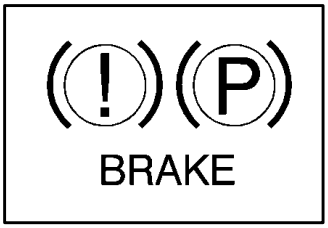

This light should come on briefly when you turn the ignition key to RUN. If it doesn't come on then, have it fixed so it will be ready to warn you if there's a problem.

If the light comes on while you are driving, pull off the road and stop carefully. You may notice that the pedal is harder to push. Or, the pedal may go closer to the floor. It may take longer to stop. If the light is still on, have the vehicle towed for service. See "Towing Your Vehicle" in the Index.

⚠ CAUTION:

Your brake system may not be working properly if the brake system warning light is on. Driving with the brake system warning light on can lead to an accident. If the light is still on after you've pulled off the road and stopped carefully, have the vehicle towed for service.

Downloaded from www.Manualslib.com manuals search engine

Anti-Lock Brake System Warning Light

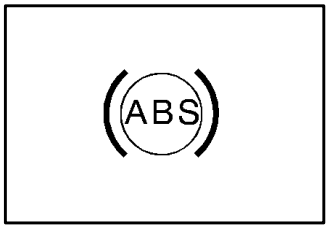

With the anti-lock brake system, this light will come on when you start your engine and may stay on for several seconds. That's normal.

If the light stays on, or comes on when you're driving, your vehicle needs service. If the regular brake system warning light isn't on, you still have brakes, but you don't have anti-lock brakes. If the regular brake system warning light is also on, you don't have anti-lock brakes and there's a problem with your regular brakes. See "Brake System Warning Light" earlier in this section.

The anti-lock brake system warning light should come on briefly when you turn the ignition key to RUN. If the light doesn't come on then, have it fixed so it will be ready to warn you if there is a problem.

Engine Coolant Temperature Gage

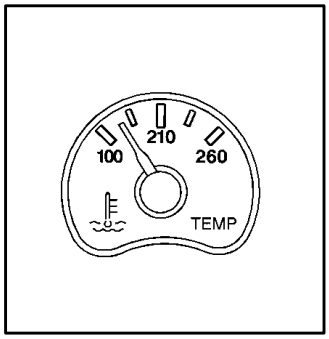

This gage shows the engine coolant temperature. If the gage pointer moves into the red area, your engine is too hot!

It means that your engine coolant has overheated. If you have been operating your vehicle under normal driving conditions, you should pull off the road, stop your vehicle and turn off the engine as soon as possible.

See "Engine Overheating" in the Index.

Downloaded from www.Manualslib.com manuals search engine

Malfunction Indicator Lamp (Service Engine Soon Light)

SERVICE
ENGINE
SOON

Your vehicle is equipped with a computer which monitors operation of the fuel, ignition and emission control systems.

This system is called OBD II (On-Board Diagnostics-Second Generation) and is intended to assure that emissions are at acceptable levels for the life of the vehicle, helping to produce a cleaner environment. The SERVICE ENGINE SOON light comes on to indicate that there is a problem and service is required. Malfunctions often will be indicated by the system before any problem is apparent. This may prevent more serious damage to your vehicle. This system is also designed to assist your service technician in correctly diagnosing any malfunction.

NOTICE:

If you keep driving your vehicle with this light on, after a while, your emission controls may not work as well, your fuel economy may not be as good and your engine may not run as smoothly. This could lead to costly repairs that may not be covered by your warranty.

NOTICE:

Modifications made to the engine, transmission, exhaust, intake or fuel system of your vehicle or the replacement of the original tires with other than those of the same Tire Performance Criteria (TPC) can affect your vehicle's emission controls and may cause the SERVICE ENGINE SOON light to come on. Modifications to these systems could lead to costly repairs not covered by your warranty. This may also result in a failure to pass a required Emission Inspection/Maintenance test.

Downloaded from www.Manualslib.com manuals search engine

This light should come on, as a check to show you it is working, when the ignition is on and the engine is not running. If the light doesn't come on, have it repaired. This light will also come on during a malfunction in one of two ways:

- **Light Flashing --** A misfire condition has been detected. A misfire increases vehicle emissions and may damage the emission control system on your vehicle. Dealer or qualified service center diagnosis and service may be required.
- **Light On Steady --** An emission control system malfunction has been detected on your vehicle. Dealer or qualified service center diagnosis and service may be required.

If the Light Is Flashing

The following may prevent more serious damage to your vehicle:

- Reducing vehicle speed.
- Avoiding hard accelerations.
- Avoiding steep uphill grades.
- If you are towing a trailer, reduce the amount of cargo being hauled as soon as it is possible.

If the light stops flashing and remains on steady, see "If the Light Is On Steady" following.

If the light continues to flash, when it is safe to do so, *stop the vehicle*. Find a safe place to park your vehicle. Turn the key off, wait at least 10 seconds and restart the engine. If the light remains on steady, see "If the Light Is On Steady" following. If the light is still flashing, follow the previous steps, and drive the vehicle to your dealer or qualified service center for service.

If the Light Is On Steady

You may be able to correct the emission system malfunction by considering the following:

Did you recently put fuel into your vehicle?

If so, reinstall the fuel cap, making sure to fully install the cap. See "Filling Your Tank" in the Index. The diagnostic system can determine if the fuel cap has been left off or improperly installed. A loose or missing fuel cap will allow fuel to evaporate into the atmosphere. A few driving trips with the cap properly installed should turn the light off.

Did you just drive through a deep puddle of water?

If so, your electrical system may be wet. The condition will usually be corrected when the electrical system dries out. A few driving trips should turn the light off.

Downloaded from www.Manualslib.com manuals search engine

Have you recently changed brands of fuel?

If so, be sure to fuel your vehicle with quality fuel. See “Fuel” in the Index. Poor fuel quality will cause your engine not to run as efficiently as designed. You may notice this as stalling after start-up, stalling when you put the vehicle into gear, misfiring, hesitation on acceleration or stumbling on acceleration. (These conditions may go away once the engine is warmed up.) This will be detected by the system and cause the light to turn on.

If you experience one or more of these conditions, change the fuel brand you use. It will require at least one full tank of the proper fuel to turn the light off.

If none of the above steps have made the light turn off, have your dealer or qualified service center check the vehicle. Your dealer has the proper test equipment and diagnostic tools to fix any mechanical or electrical problems that may have developed.

Emissions Inspection and Maintenance Programs

Some state/provincial and local governments have or may begin programs to inspect the emission control equipment on your vehicle. Failure to pass this inspection could prevent you from getting a vehicle registration.

Here are some things you need to know in order to help your vehicle pass an inspection:

Your vehicle will not pass this inspection if the SERVICE ENGINE SOON light is on or not working properly.

Your vehicle will not pass this inspection if the OBD (on-board diagnostic) system determines that critical emission control systems have not been completely diagnosed by the system. The vehicle would be considered not ready for inspection. This can happen if you have recently replaced your battery or if your battery has run down. The diagnostic system is designed to evaluate critical emission control systems during normal driving. This may take several days of routine driving. If you have done this and your vehicle still does not pass the inspection for lack of OBD system readiness, see your dealer or qualified service center to prepare the vehicle for inspection.

Downloaded from www.Manualslib.com manuals search engine

Oil Pressure Gage

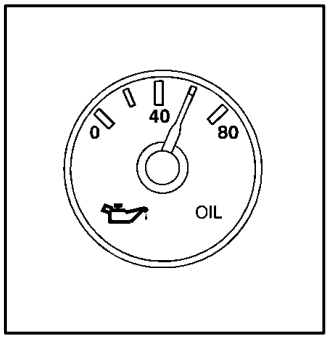

The oil pressure gage shows the engine oil pressure in psi (pounds per square inch) when the engine is running.

Oil pressure may vary with engine speed, outside temperature and oil viscosity, but readings above the low pressure zone indicate the normal operating range.

A reading in the low pressure zone may be caused by a dangerously low oil level or other problems causing low oil pressure.

⚠ CAUTION:

Don't keep driving if the oil pressure is low. If you do, your engine can become so hot that it catches fire. You or others could be burned. Check your oil as soon as possible and have your vehicle serviced.

NOTICE:

Damage to your engine from neglected oil problems can be costly and is not covered by your warranty.

Downloaded from www.Manualslib.com manuals search engine

Security Warning Light

SECURITY

This light will come on briefly when you turn the key toward START. The light will stay on until the engine starts.

If the light flashes, the Passlock® system has entered a tamper mode. If the vehicle fails to start, see “Passlock” in the Index.

If the light comes on continuously while driving and stays on, there may be a problem with the Passlock system. Your vehicle will not be protected by Passlock, and you should see your dealer.

Also, see “Content Theft-Deterrent” in the Index for additional information regarding the SECURITY light.

Service AWD Light

SERVICE AWD

This light should come on briefly when you turn on the ignition, as a check to show you it is working.

The SERVICE AWD light comes on to indicate that there may be a problem with the drive system and service is required. Malfunctions can be indicated by the system before any problem is apparent, which may prevent serious damage to the vehicle. This system is also designed to assist your service technician in correctly diagnosing a malfunction.

Downloaded from www.Manualslib.com manuals search engine

Check Gages Light

CHECK
GAGES

The CHECK GAGES light will come on briefly when you are starting the engine.

If the light comes on and stays on while you are driving, check your coolant temperature and engine oil pressure gages to see if they are in the warning zones.

Gate Ajar Light

GATE
AJAR

If this light comes on, your liftgate or liftglass is ajar. Try closing the liftgate or liftglass again. Never drive with the liftgate or liftglass even partially open.

Downloaded from www.Manualslib.com manuals search engine

Fuel Gage

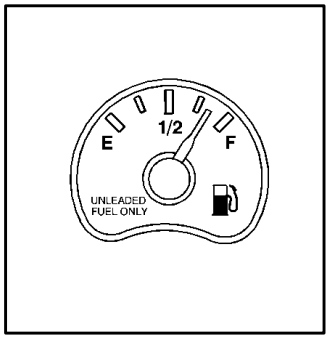

When the ignition is on, the fuel gage tells you about how much fuel you have remaining.

Here are four things that some owners ask about. None of these show a problem with your fuel gage:

- At the gas station, the gas pump shuts off before the gage reads F (Full).
- It takes a little more or less fuel to fill up than the gage indicated. For example, the gage may have indicated the tank was half full, but it actually took a little more or less than half the tank's capacity to fill the tank.
- The gage moves a little when you turn a corner or speed up.
- The gage doesn't go back to E (Empty) when you turn off the ignition.

Low Fuel Light

This light comes on briefly when you start your engine.

This light comes on when the fuel tank is low on fuel. To turn it off, add fuel to the fuel tank. See "Fuel" in the Index.

Downloaded from www.Manualslib.com manuals search engine

Section 3 Comfort Controls and Audio Systems

In this section, you'll find out how to operate the comfort control and audio systems offered with your vehicle. Be sure to read about the particular systems supplied with your vehicle.

3-2 Comfort Controls
3-2 Electronic Climate Control
3-5 Air Conditioning
3-5 Heating
3-5 Defogging and Defrosting
3-6 Rear Window Defogger
3-7 Ventilation System
3-8 Audio Systems
3-8 Setting the Clock
3-8 AM-FM Stereo with Cassette Tape and Compact Disc Player with Automatic Tone Control
3-15 Console-Mounted CD Changer (If Equipped)
3-18 Theft-Deterrent Feature
3-20 Audio Steering Wheel Controls (If Equipped)
3-21 Understanding Radio Reception
3-21 Tips About Your Audio System
3-22 Care of Your Cassette Tape Player
3-23 Care of Your Compact Discs
3-23 Care of Your Compact Disc Player
3-23 Fixed Mast Antenna

Downloaded from www.Manualslib.com manuals search engine

Comfort Controls

With this system, you can control the heating, cooling and ventilation in your vehicle.

Electronic Climate Control

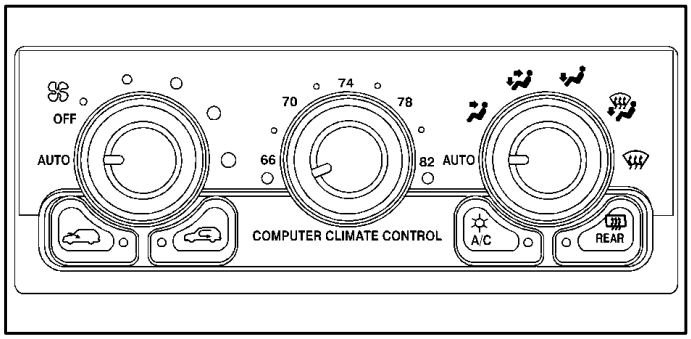

Fan Control

The knob on the left side of the electronic climate control panel controls the fan speed. To manually increase airflow, turn the knob clockwise. To manually decrease airflow, turn it counterclockwise.

OFF: If the knob is in OFF, outside air will still enter the vehicle, and will be directed based on the position of the mode knob.

AUTO: If the knob is in AUTO, the fan speed will vary as the system maintains the selected temperature.

Temperature Knob

The middle knob on the control panel lets you select the desired air temperature in your vehicle. This knob will allow you to adjust the interior air temperature independently of the function knob setting. Turn the knob clockwise toward 82 for warmer air. Turn the knob counterclockwise toward 66 for cooler air.

Full Hot: If you turn the temperature knob past 82°F (28°C), the system will go into the “full hot” mode. The system will remain at that maximum heating setting and the fan will blow at the speed the fan knob is set to. If the fan is in AUTO, it will run at full speed.

Full Cold: If you turn the temperature knob past 66°F (19°C), the system will go into the “full cold” mode. The system will remain at that maximum cooling setting and the fan will blow at the speed the fan knob is set to. If the fan is in AUTO, it will run at full speed.

Choosing either maximum setting will not cause the system to heat or cool any faster.

Downloaded from www.Manualslib.com manuals search engine

Mode Knob - Automatic Operation

The right knob on the control panel allows you to choose the direction of air delivery. When the system is set for automatic operation, sensors will control the air delivery mode. Air will come primarily from the floor or instrument panel outlets, with some air directed to the windshield to prevent fogging.

When the system is in AUTO mode, the air conditioning light will turn on, and the recirculation and outside air lights turn off. With the system in full auto control (both the fan and mode knobs in AUTO), you still have the ability to override any function. However, continually overriding the outside air or the A/C compressor will limit the ability of the system to cool the vehicle quickly.

If you push a button for a function which is not available, the light next to that button will flash three times to alert you that it's not available.

To find your comfort zone, start with the 74°F (23°C) setting and allow about 20 minutes for the system to adjust the temperature if necessary.

With the automatic setting, the air conditioning compressor automatically cycles when needed to cool the air. In cold weather, when the system senses the need for heat, the airflow will be directed out of the floor outlets. As the interior temperature approaches a desired setting, the fan speed will decrease. To maintain interior comfort, the airflow will adjust between the instrument panel air outlets and floor outlets. On bright sunny days in cool weather, the airflow may come out of the air conditioning and floor outlets (bi-level mode) to maintain comfort and prevent stuffiness.

To avoid blowing cold air in cold weather, the system will delay turning on the fan until warm air is available. The length of delay depends on the outside air temperature, engine coolant temperature or the time since the engine was last started. As the coolant warms up, the fan speed will gradually increase and air will flow from the heater outlets, with some airflow to the windshield to prevent fogging under most normal conditions.

If your vehicle is sitting out on a warm day and you have the fan set on AUTO, the air will first flow out of the floor air outlets for a few seconds. That is normal. This is to expel hot air from the air outlets. As the air is cooled, the airflow will move through the air conditioning outlets.

Be careful not to put anything over the solar sensor located around the center of the instrument panel. This sensor is used by the automatic system to regulate temperature.

Downloaded from www.Manualslib.com manuals search engine

Mode Knob - Manual Operation

The right knob on the control panel allows you to choose the direction of air delivery.

You can choose to set the climate control system operations yourself, or let the system work for you by placing the system in AUTO mode. See “Mode Knob - Automatic Operation” earlier in this section.

PANEL: This setting directs most of the air through the instrument panel outlets and a small amount through the floor outlets.

BI-LEVEL: Air is delivered through the heater floor outlets as well as the instrument panel outlets.

HEATER: This setting directs most of the warmed air through the heater floor outlets and some air through the windshield defroster outlets.

BLEND: Airflow is divided equally between the heater floor outlet and the windshield defroster outlets. The air conditioning compressor may run to dehumidify the air to prevent window fogging.

DEFROST: This setting directs most air through the windshield defroster outlets and some through the heater outlets. The air conditioning compressor may run to dehumidify the air to prevent window fogging.

OUTSIDE AIR: Press this button to force the system to use outside air. Press it again to close off the outside air.

Pressing the OUTSIDE AIR button will cancel the RECIRCULATION button.

RECIRCULATION: Press this button to limit the amount of outside air entering your vehicle. This is helpful when you are trying to limit odors entering your vehicle. In the AUTO mode, the system will use recirculation as necessary to cool the air. Pressing the recirculation button will change the operation to a manual mode. Press this button again to turn off the recirculation feature.

RECIRCULATION may be selected with the fan control in OFF to limit odors, outside air and dust from entering your vehicle.

Pressing the RECIRCULATION button will cancel the OUTSIDE AIR button.

Downloaded from www.Manualslib.com manuals search engine

A/C: Press this button to turn the air conditioning on and off. The system will cool and dehumidify the air inside the vehicle.

Air conditioning will be automatically disabled when the outside temperature drops below a level at which air conditioning is effective.

Remember that in order for the automatic system to perform well, it needs A/C to provide cooling performance.

Air Conditioning

On hot days, open the windows long enough to let hot inside air escape. This reduces the time it takes for your vehicle to cool down. Then keep your windows closed for the air conditioner to work its best.

For quick cool-down on very hot days, the A/C button should be on and the OUTSIDE AIR button should not be active.

On cool but sunny days, use BI-LEVEL A/C to deliver warm air to the floor and cooler air to the instrument panel outlets.

When the air conditioner is on, you may sometimes notice slight changes in your vehicle's engine speed and power. This is normal because the system is designed to cycle the compressor on and off to keep the desired temperature.

Heating

The heater works best if you keep your windows closed while using it. On cold days, use HEATER with the temperature knob turned to the right. BLEND is useful in cool weather when you have fog or ice on the windshield or side windows.

If you use the optional engine coolant heater before starting your engine, your heating system will produce warmer air faster to heat the passenger compartment in cold weather. See "Engine Coolant Heater" in the Index.

Defogging and Defrosting

On cool, humid days, use BLEND to keep the windshield and side windows clear.

Use DEFROST to remove fog or ice from the windshield quickly in extreme humid or cold conditions. Turn the temperature knob to the right and turn the fan control toward high.

Downloaded from www.Manualslib.com manuals search engine

Rear Window Defogger

The rear window has lines that warm the glass. For best results, clear the window of as much snow or ice as possible before using the rear window defogger.

To turn on the rear window defogger, find the switch marked REAR with the defog symbol on the lower right corner of your climate control system.

Press the switch until the light in the switch comes on, then release it. It will only work if the ignition switch is turned to RUN.

The rear window defogger will stay on for five to seven minutes, then turn off. If you need additional warming time, turn it on again. You can turn the defogger off at any time by pressing the switch.

Pressing the REAR button on your climate control system will also activate your heated outside mirrors (if equipped). This will help to keep ice, snow and condensation from collecting on your mirror surfaces.

Do not attach a temporary vehicle license, tape or decals across the defogger grid on the rear window.

NOTICE:

Don't use a razor blade or something else sharp on the inside of the rear window. If you do, you could cut or damage the warming grid, and the repairs wouldn't be covered by your warranty.

Downloaded from www.Manualslib.com manuals search engine

Ventilation System

For mild outside temperatures when little heating or cooling is needed, use PANEL to direct outside air through your vehicle. Airflow is through the instrument panel outlets.

Your vehicle's ventilation system supplies outside air to the inside of your vehicle when it is moving. When the vehicle is not moving, you can get outside air to flow through by selecting any mode and any fan speed.

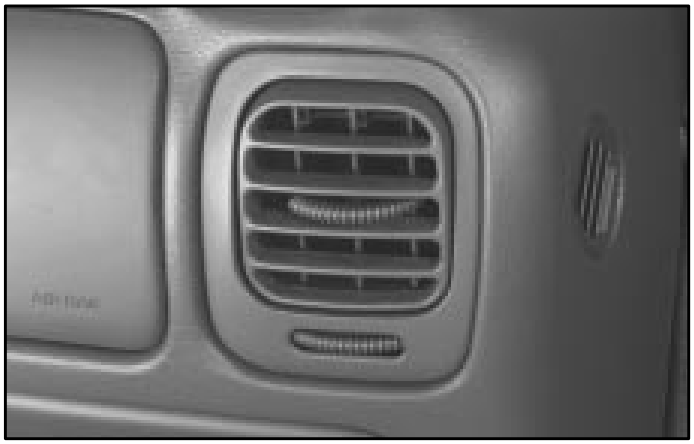

You will find air outlets in the center and on the sides of your instrument panel.

You can direct the airflow side-to-side by turning the thumbwheel located in the center of the vent. The vent can be tilted up and down also. To control the amount of airflow through the outlets, turn the thumbwheel below the vent.

Ventilation Tips

- Keep the hood and front air inlet free of ice, snow or any other obstruction (such as leaves). The heater and defroster will work far better, reducing the chance of fogging the inside of your windows.
- When you enter a vehicle in cold weather, turn the fan control to high for a few moments before driving off. This helps clear the intake ducts of snow and moisture, and reduces the chance of fogging the inside of your windows.
- Keep the air path under the front seats clear of objects. This helps air to circulate throughout your vehicle.

Downloaded from www.Manualslib.com manuals search engine

Audio Systems

Your audio system has been designed to operate easily and give years of listening pleasure. You will get the most enjoyment out of it if you acquaint yourself with it first. Find out what your audio system can do and how to operate all its controls, to be sure you're getting the most out of the advanced engineering that went into it.

Your vehicle has a feature called Retained Accessory Power (RAP). With RAP, you can play your audio system even after the ignition is off. See "Retained Accessory Power" in the Index.

Setting the Clock

Press and hold HR until the correct hour appears. The letter "A" or "P" may appear on the display for AM or PM. Then, press and hold MN until the correct minute appears. The clock may be set with the ignition on or off.

AM-FM Stereo with Cassette Tape and Compact Disc Player with Automatic Tone Control

Standard radio--Bose® not shown

If your vehicle is equipped with the Bose® AM-FM Stereo with Cassette Tape and Compact Disc Player (not shown), automatic tone control is not available. Your radio will have a MUTE button rather than a TONE button.

Downloaded from www.Manualslib.com manuals search engine

Playing the Radio

PWR VOL: Press this knob to turn the system on and off. To increase volume, turn the knob clockwise. Turn it counterclockwise to decrease volume.

RCL: Press this button briefly to recall the station being played or to display the clock. To change what is normally shown on the display (station or time), press the RCL button until you see the display you want, then hold the RCL button until the display flashes. If you press the button when the ignition is off, the clock will show for a few seconds.

MUTE: Press this button to silence the system. Press it again to turn on the sound. (This button is available on the Bose® radio only.)

Finding a Station

AM FM: Press this button to switch between AM, FM1 and FM2. The display shows your selection.

TUNE: Press this knob lightly so it extends. Turn it to choose radio stations. Push the knob back into its stored position when you’re not using it.

SEEK: Press the up or down arrow to go to the next higher or lower station and stay there. The sound will mute while seeking.

SCAN: Press this button and release it to listen to stations for a few seconds. The radio will go to a station, stop for a few seconds, then go on to the next station. Press the button again to stop scanning. The sound will mute while scanning, and SCAN will appear on the display. If you press SCAN for more than two seconds, the radio will change to P SCAN mode. P SCAN will appear on the display.

PUSHBUTTONS: The five numbered pushbuttons let you return to your favorite stations. You can set up to 15 stations (five AM, five FM1 and five FM2). Just:

1. Turn the radio on.
2. Press AM FM to select the band.
3. Tune in the desired station.
4. Press TONE to select the equalization that best suits the type of station selected. (This function is not available on the Bose radio.)
5. Press and hold one of the five numbered buttons. The sound will mute. When it returns, release the button. Whenever you press that numbered button, the station you set will return and the tone that you selected will also be automatically selected for that button. (The tone will not automatically return on the Bose radio.)
6. Repeat the steps for each pushbutton.

Downloaded from www.Manualslib.com manuals search engine

P SCAN: Press SCAN for more than two seconds, and P SCAN will appear on the display. The radio will go to the first preset station stored on your pushbuttons, stop for a few seconds, then go on to the next preset station. Press SCAN again to stop scanning.

Setting the Tone

BASS: Press this knob lightly so it extends. Turn the knob to increase or decrease bass. When you use this control, the radio's tone setting will switch to manual. (The radio's tone setting will not switch to manual on the Bose radio.)

TREB: Press this knob lightly so it extends. Then pull the knob all the way out. Turn the knob to increase or decrease treble. When you use this control, the radio's tone setting will switch to manual. (The radio's tone setting will not switch to manual on the Bose radio.) If a station is weak or noisy, you may want to decrease the treble.

Push the knob back into its stored position when you're not using it.

TONE: This feature allows you to choose preset bass and treble equalization settings designed for jazz, vocal, pop, rock and classical stations. JAZZ will appear on the display when you first press TONE. Each time you press it, another setting will appear on the display. Press it again after CLASSIC appears and MANUAL will appear. Tone control will return to the BASS and TREB knobs. Also, if you use the BASS and TREB knobs, control will return to them and MANUAL will appear. (This button is not available on the Bose radio.)

Adjusting the Speakers

BAL: Press this knob lightly so it extends. Turn the knob to move the sound to the left or right speakers. The middle position balances the sound between the speakers.

FADE: Press the knob lightly so it extends. Then pull the knob all the way out. Turn it to move the sound to the front or rear speakers. The middle position balances the sound between the speakers.

Push the knob back into its stored position when you're not using it.

Downloaded from www.Manualslib.com manuals search engine

Playing a Cassette Tape

Your tape player is built to work best with tapes that are up to 30 to 45 minutes long on each side. Tapes longer than that are so thin they may not work well in this player.

The longer side with the tape visible should face to the right. If the ignition is on, but the radio is off, the tape can be inserted and will begin playing. If you hear nothing but a garbled sound, the tape may not be in squarely. Press EJECT to remove the tape and start over.

While the tape is playing, use the VOL, FADE, BAL, TREB, BASS, TONE, SEEK and SCAN controls just as you do for the radio. (The TONE control is not available on the Bose radio.) Other controls may have different functions when a tape is inserted. The display will show TP with a box around it and an arrow to show which side of the tape is playing.

Your tape bias is set automatically. When a metal or chrome tape is inserted, HI-BIAS appears on the display. If you want to insert a tape when the ignition is off, first press EJECT or RCL.

If “E” and a number appear on the radio display and the tape won’t play because of an error, it could be one of the following:

- **E10:** The tape is tight and the player can’t turn the tape hubs. Remove the tape. Hold the tape with the open end down and try to turn the right hub counterclockwise with a pencil. Turn the tape over and repeat. If the hubs do not turn easily, your tape may be damaged and should not be used in the player. Try a new tape to make sure your player is working properly.
- **E11:** The tape is broken. Try a new tape.

If any error occurs repeatedly or if an error can’t be corrected, please contact your dealer. If your radio displays an error number, write it down and provide it to your dealer when reporting the problem.

REV (1): Press this button to reverse the tape rapidly. Press it again to return to playing speed. The radio will play the last selected station while the tape reverses. You may select stations during REV operation by using TUNE.

Downloaded from www.Manualslib.com manuals search engine

FWD (2): Press this button to advance quickly to another part of the tape. Press the button again to return to playing speed. The radio will play the last selected station while the tape advances. You may select stations during FWD operation by using TUNE.

PROG (3): Press this button to play the other side of the tape.

DD (4): Press this button to reduce background noise. The double-D symbol will appear on the display.

Dolby Noise Reduction is manufactured under a license from Dolby Laboratories Licensing Corporation. Dolby and the double-D symbol are trademarks of Dolby Laboratories Licensing Corporation.

TONE: Press this button to select a tone while playing a cassette. The tone that you set will be activated each time you play a cassette tape. (This button is not available on the Bose radio.)

SEEK: Press the up or down arrow to search for the next or previous selection on the tape. Your tape must have at least three seconds of silence between each selection for SEEK to work.

SCAN: Press this button to listen to each selection for a few seconds. The tape will go to the next selection, stop for a few seconds, then go on to the next selection. Press this button again to stop scanning. The sound will mute while scanning, SCAN will appear on the display and the tape direction arrow will blink while scanning.

AM FM: Press this button to play the radio when a tape is in the player. The tape will stop but remain in the player.

TAPE CD: Press this button if you have a disc loaded in the CD player and the radio is playing, to play a compact disc. Press AM FM to return to the radio when a compact disc is playing. Press TAPE CD to switch between the tape and compact disc if both are loaded. The inactive tape or CD will remain safely inside the radio for future listening. The display will show TP and CD.

EJECT: Press this button to remove the tape. The radio will play. EJECT may be activated with either the ignition or radio off. Cassettes may be loaded with the radio and ignition off if this button is pressed first.

CLN: If this message appears on the display, the cassette tape player needs to be cleaned. It will still play tapes, but you should clean it as soon as possible to prevent damage to the tapes and player. See “Care of Your Cassette Tape Player” in the Index. After you clean the player, press and hold EJECT for five seconds to reset the CLN indicator. The radio will display --- to show the indicator was reset.

Downloaded from www.Manualslib.com manuals search engine

Playing a Compact Disc

With the ignition on, insert a disc partway into the slot, label side up. The player will pull it in and the disc should begin playing. If you want to insert a CD when the ignition is off, first press EJECT or RCL.

The CD player will play either normal-size discs or the smaller 8 cm discs with an adapter.

When the disc is inserted, CD will be displayed. When the disc is playing, a box will appear around CD on the display. If you select a tone setting for your CD, it will be activated each time you play a CD. (The tone setting function is not available on the Bose radio.)

As each new track starts to play, the track number will appear in the display.

If “E” (error) and a number appear on the radio display and the disc comes out, it could be one of the following:

- **E20:** The road is too rough. The disc should play when the road is smoother.
- **E20:** The disc is dirty, scratched, wet or upside down.
- **E20:** The air is very humid. If so, wait about an hour and try again.

If any error occurs repeatedly or if an error can’t be corrected, please contact your dealer. If your radio displays an error number, write it down and provide it to your dealer when reporting the problem.

REV (1): Press and hold this button to quickly reverse within a track. You will hear sound at a reduced volume. The display will show elapsed time.

FWD (2): Press and hold this button to quickly advance within a track. You will hear sound at a reduced volume. The display will show elapsed time.

RDM (5): Press this button to hear the tracks in random, rather than sequential, order. RDM will appear on the display when you press this button.

TONE: Press this button to select a tone while playing a compact disc. The tone that you set will be activated each time you play a compact disc. (This button is not available on the Bose radio.)

SEEK: Press the down arrow to go to the start of the current track if more than eight seconds have played. Press the up arrow to go to the next track. If you hold the button or press it more than once, the player will continue moving rearward or forward through the disc.

Downloaded from www.Manualslib.com manuals search engine

SCAN: Press this button to listen to each selection for a few seconds. The disc will go to the next selection, stop for a few seconds, then go on to the next selection. Press this button again to stop scanning. The sound will mute while scanning, SCAN will appear on the display.

RCL: Press this button to see which track is playing. Press it again within five seconds to see how long it has been playing. To change what is normally shown on the display (track or elapsed time), press the button until you see the display you want, then hold the button until the display flashes. While elapsed time is showing, EL TM will appear on the display.

AM FM: Press this button to play the radio when a disc is in the player.

TAPE CD: Press this button to change to the tape or disc function when the radio is on and either a tape or CD is inserted. Press AM FM to return to the radio while a CD or tape is playing. The inactive tape or CD will remain safely inside the radio for future listening. If you have the optional CD changer and the CD changer is loaded, the TAPE CD button will activate the changer and a box will be lighted around CDC in the display.

EJECT: Press this button to remove the compact disc or cassette tape. The icon with the box around it on the display will eject and the radio will play. EJECT may be activated with either the ignition or radio off. Cassettes and compact discs may be loaded with the radio and ignition off if this button is pressed first.

Downloaded from www.Manualslib.com manuals search engine

Console-Mounted CD Changer (If Equipped)

With the compact disc changer, you can play up to six discs continuously. Normal size discs may be played using the slots supplied in the magazine.

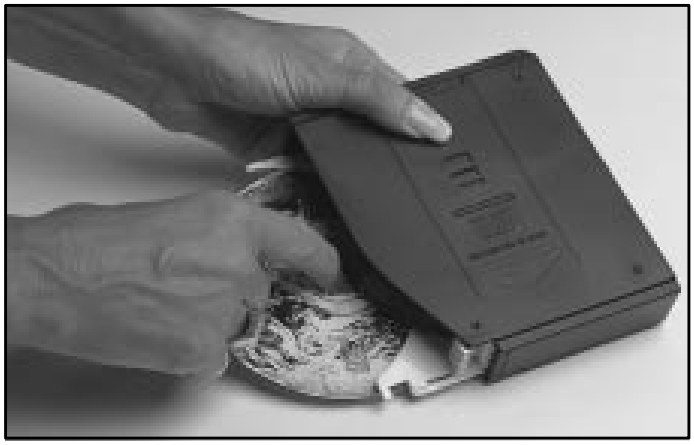

You must first load the magazine with discs before you can play a compact disc. Load the CDs from bottom to top, placing the discs in the magazine label side up. If you load a disc label side down, the disc will not play and an error will occur. Repeat this procedure for loading up to six discs in the magazine.

Downloaded from www.Manualslib.com manuals search engine

Once you have loaded the discs in the magazine, slide open the door of the compact disc (CD) changer. Push the magazine into the changer in the direction of the arrow marked on top of the magazine.

Close the door by sliding it all the way forward. When the CD magazine is loaded, the changer will begin checking for discs in the magazine. This will continue for up to one and a half minutes, depending on the number of discs loaded.

To eject the magazine from the player, slide the CD changer door all the way open, then press EJECT. Remember to keep the door closed whenever possible to keep dirt and dust from getting inside the changer.

All of the CD functions are controlled by the radio buttons except for ejecting the magazine. Whenever a CD magazine with discs is loaded in the changer, the compact disc symbol (CDC) will appear on the radio display. If the CD changer is checking the magazine for CDs, the (CDC) symbol will flash on the display until the changer is ready to play. When a CD begins playing, a disc and track number will be displayed. The disc numbers are listed on the front of the magazine.

Compact Disc Errors

If “E” and a number appear on the display, an error has occurred and the compact disc temporarily cannot play.

The CD changer will send an error message to the receiver to indicate:

- **E34:** CD Changer Door Open
- **E35:** CD Changer Cartridge Empty

If the error occurred while trying to play a CD in the compact disc player or changer, the following conditions may have caused the error:

- The road is too rough. The disc should play when the road is smoother.
- The disc is dirty, scratched, wet or upside down.
- The air is very humid. If so, wait about an hour and try again.
- The CD changer door is open. Completely close the door to restore normal operation.
- An empty magazine is inserted in the CD changer. Try the magazine again with a disc loaded in one of the slots.

If any error occurs repeatedly or if an error cannot be corrected, please contact your dealer. If your radio displays an error number, write it down and provide it to your dealer when reporting the problem.

Downloaded from www.Manualslib.com manuals search engine

Playing a Compact Disc

REV (1): Press and hold this button to quickly reverse within a track. As the CD reverses, elapsed time will be displayed to help you find the correct passage.

FWD (2): Press and hold this button to quickly advance within a track. As the CD advances, elapsed time will be displayed to help you find the correct passage.

PROG (3): Press this button to select the next disc in the magazine. Each time you press PROG, the disc number on the radio display will go to that of the next available CD. If a CD cannot be played, its number will be skipped when selecting discs while using the PROG button.

RDM (5): Press this button to enter the random play mode. RDM will appear on the display. While in this mode, the tracks on the discs will be played in random order. If you press PROG or SEEK while in the random mode, discs and tracks will be scanned randomly. Press this button again to turn off the random feature and return to normal operation.

RCL: Press this button to see what track is currently playing. Press RCL again within five seconds to see how long the track has been playing. EL TM will appear on the display when in elapsed time mode. When a new track starts to play, the track number will also appear. Press RCL a third time and the time of day will be displayed.

SEEK: Press the SEEK down arrow while playing a CD to go back to the start of the current track if more than eight seconds have played. If you press it again, the changer will go to previous tracks. Press the SEEK up arrow and it will go to the next higher track on the disc.

SCAN: Press this button and release to listen to each selection for a few seconds. The first few seconds of each selection on the current disc will be played. The sound will mute while scanning and SCAN will appear on the display. Press this button again to stop scanning.

P SCAN: Press and hold the SCAN button for two seconds to hear the first selection of each loaded disc for a few seconds. The sound will mute while scanning and P SCAN will appear on the display. Press SCAN again to stop scanning.

TAPE CD: Press this button to play a CD if you have a magazine loaded in the changer and the radio is playing. To return to the radio while a CD is playing, press AM FM. You can also press this button to switch between a cassette tape, CD or the CD changer if all three are loaded.

Downloaded from www.Manualslib.com manuals search engine

Theft-Deterrent Feature

THEFTLOCK® is designed to discourage theft of your radio. It works by using a secret code to disable all radio functions whenever battery power is removed.

The THEFTLOCK feature for the radio may be used or ignored. If ignored, the system plays normally and the radio is not protected by the feature. If THEFTLOCK is activated, your radio will not operate if stolen.

When THEFTLOCK is activated, the radio will display LOC to indicate a locked condition anytime battery power has been interrupted. If your battery loses power for any reason, you must unlock the radio with the secret code before it will operate.

Activating the Theft-Deterrent Feature

The instructions which follow explain how to enter your secret code to activate the THEFTLOCK system. It is recommended that you read through all nine steps before starting the procedure.

If you allow more than 15 seconds to elapse between any steps, the radio automatically reverts to time and you must start the procedure over at Step 4.

1. Write down any three or four-digit number from 000 to 1999 and keep it in a safe place separate from the vehicle.
2. Turn the ignition to ACCESSORY or RUN.
3. Turn the radio off.
4. Press the 1 and 4 buttons together. Hold them down until --- shows on the display. Next you will use the secret code number which you have written down.
5. Press MN and 000 will appear on the display.
6. Press MN again to make the last two digits agree with your code.
7. Press HR to make the first one or two digits agree with your code.
8. Press AM FM after you have confirmed that the code matches the secret code you have written down. The display will show REP to let you know that you need to repeat Steps 5 through 7 to confirm your secret code.
9. Press AM FM and this time the display will show SEC to let you know that your radio is secure. The LED indicator by the volume control will begin flashing when the ignition is turned off.

Downloaded from www.Manualslib.com manuals search engine

Unlocking the Theft-Deterrent Feature After a Power Loss

Enter your secret code as follows; pause no more than 15 seconds between steps:

1. Turn the ignition on. LOC will appear on the display.
2. Press MN and 000 will appear on the display.
3. Press MN again to make the last two digits agree with your code.
4. Press HR to make the first one or two digits agree with your code.
5. Press AM FM after you have confirmed that the code matches the secret code you have written down. The display will show SEC, indicating the radio is now operable and secure.

If you enter the wrong code eight times, INOP will appear on the display. You will have to wait an hour with the ignition on before you can try again. When you try again, you will only have three chances to enter the correct code before INOP appears.

If you lose or forget your code, contact your dealer.

Disabling the Theft-Deterrent Feature

Enter your secret code as follows; pause no more than 15 seconds between steps:

1. Turn the radio off.
2. Press the 1 and 4 buttons together. Hold them down until SEC shows on the display.
3. Press MN and 000 will appear on the display.
4. Press MN again to make the last two digits agree with your code.
5. Press HR to make the first one or two digits agree with your code.
6. Press AM FM after you have confirmed that the code matches the secret code you have written down. The display will show ---, indicating that the radio is no longer secured.

If the code entered is incorrect, SEC will appear on the display. The radio will remain secured until the correct code is entered.

When battery power is removed and later applied to a secured radio, the radio won't turn on and LOC will appear on the display.

To unlock a secured radio, see "Unlocking the Theft-Deterrent Feature After a Power Loss" earlier in this section.

Downloaded from www.Manualslib.com manuals search engine

Audio Steering Wheel Controls (If Equipped)

If your vehicle has this feature, you can control certain radio functions using the buttons on your steering wheel.

PROG: Press this button to play a station you have programmed on the radio preset buttons on the selected band.

If a cassette tape is playing, press this button to play the other side of the tape. If a compact disc is playing in the console-mounted CD changer, press this button to go to the next available CD.

SEEK: Press the up arrow to tune to the next radio station and the down arrow to tune to the previous radio station.

If a cassette tape or compact disc is playing, the player will advance with the up arrow and reverse with the down arrow.

MUTE: Press this button to silence the system. Press it again to turn on the sound.

VOL: Press the up or down arrow to increase or decrease volume.

Downloaded from www.Manualslib.com manuals search engine

Understanding Radio Reception

AM

The range for most AM stations is greater than for FM, especially at night. The longer range, however, can cause stations to interfere with each other. AM can pick up noise from things like storms and power lines. Try reducing the treble to reduce this noise if you ever get it.

FM Stereo

FM stereo will give you the best sound, but FM signals will reach only about 10 to 40 miles (16 to 65 km). Tall buildings or hills can interfere with FM signals, causing the sound to come and go.

Tips About Your Audio System

Hearing damage from loud noise is almost undetectable until it is too late. Your hearing can adapt to higher volumes of sound. Sound that seems normal can be loud and harmful to your hearing. Take precautions by adjusting the volume control on your radio to a safe sound level before your hearing adapts to it.

To help avoid hearing loss or damage:

- Adjust the volume control to the lowest setting.
- Increase volume slowly until you hear comfortably and clearly.

NOTICE:

Before you add any sound equipment to your vehicle -- like a tape player, CB radio, mobile telephone or two-way radio -- be sure you can add what you want. If you can, it's very important to do it properly. Added sound equipment may interfere with the operation of your vehicle's engine, Delphi Delco Electronics radio or other systems, and even damage them. Your vehicle's systems may interfere with the operation of sound equipment that has been added improperly.

So, before adding sound equipment, check with your dealer and be sure to check Federal rules covering mobile radio and telephone units.

Downloaded from www.Manualslib.com manuals search engine

Care of Your Cassette Tape Player

A tape player that is not cleaned regularly can cause reduced sound quality, ruined cassettes or a damaged mechanism. Cassette tapes should be stored in their cases away from contaminants, direct sunlight and extreme heat. If they aren't, they may not operate properly or may cause failure of the tape player.

Your tape player should be cleaned regularly after every 50 hours of use. Your radio may display CLN to indicate that you have used your tape player for 50 hours without resetting the tape clean timer. If this message appears on the display, your cassette tape player needs to be cleaned. It will still play tapes, but you should clean it as soon as possible to prevent damage to your tapes and player. If you notice a reduction in sound quality, try a known good cassette to see if it is the tape or the tape player at fault. If this other cassette has no improvement in sound quality, clean the tape player.

The recommended cleaning method for your cassette tape player is the use of a scrubbing action, non-abrasive cleaning cassette with pads which scrub the tape head as the hubs of the cleaner cassette turn. The recommended cleaning cassette is available through your dealer (GM Part No. 12344789).

When using a scrubbing action, non-abrasive cleaning cassette, it is normal for the cassette to eject because your unit is equipped with a broken tape detection feature and a cleaning cassette may appear as a broken tape. If the cleaning cassette ejects, insert the cassette at least three times to ensure thorough cleaning.

You may also choose a non-scrubbing action, wet-type cleaner which uses a cassette with a fabric belt to clean the tape head. This type of cleaning cassette will not eject on its own. A non-scrubbing action cleaner may not clean as thoroughly as the scrubbing type cleaner. The use of a non-scrubbing action, dry-type cleaning cassette is not recommended.

After you clean the player, press and hold EJECT for five seconds to reset the CLN indicator. The radio will display --- to show the indicator was reset.

Cassettes are subject to wear and the sound quality may degrade over time. Always make sure the cassette tape is in good condition before you have your tape player serviced.

Downloaded from www.Manualslib.com manuals search engine

Care of Your Compact Discs

Handle discs carefully. Store them in their original cases or other protective cases and away from direct sunlight and dust. If the surface of a disc is soiled, dampen a clean, soft cloth in a mild, neutral detergent solution and clean it, wiping from the center to the edge.

Be sure never to touch the signal surface when handling discs. Pick up discs by grasping the outer edges or the edge of the hole and the outer edge.

Care of Your Compact Disc Player

The use of CD lens cleaner discs is not advised, due to the risk of contaminating the lens of the CD optics with lubricants internal to the CD mechanism.

Fixed Mast Antenna

The fixed mast antenna can withstand most car washes without being damaged. If the mast should ever become slightly bent, you can straighten it out by hand. If the mast is badly bent, as it might be by vandals, you should replace it.

Check every once in a while to be sure the mast is still tightened to the fender. If tightening is required, tighten by hand, then with a wrench one quarter turn.

Downloaded from www.Manualslib.com manuals search engine

Section 4 Your Driving and the Road

Here you'll find information about driving on different kinds of roads and in varying weather conditions. We've also included many other useful tips on driving.

4-2 Your Driving, the Road and Your Vehicle
4-3 Defensive Driving
4-4 Drunken Driving
4-7 Control of a Vehicle
4-7 Braking
4-10 Steering
4-12 Off-Road Recovery
4-13 Passing
4-14 Loss of Control
4-15 Operating Your Vehicle Off Paved Roads
4-28 Driving at Night
4-29 Driving in Rain and on Wet Roads
4-32 City Driving
4-33 Freeway Driving
4-34 Before Leaving on a Long Trip
4-35 Highway Hypnosis
4-35 Hill and Mountain Roads
4-37 Winter Driving
4-40 Recreational Vehicle Towing
4-41 Loading Your Vehicle
4-43 Towing a Trailer

Downloaded from www.Manualslib.com manuals search engine

Your Driving, the Road and Your Vehicle

Whenever we drive, we're taking on an important responsibility. This is true for any motor vehicle -- passenger car, van, truck or sport utility. Driver behavior, the driving environment, and the vehicle's design all affect how well a vehicle performs.But statistics show that the most important factor,by far, is how we drive. Knowing how these three factors work together can help you understand how your vehicle handles and what you can do to avoid many types of crashes, including a rollover crash.

Driver Behavior

The single most important thing is this: everyone in the vehicle, including the driver, should buckle up. See "Safety Belts" in the Index. In fact, most serious injuries and fatalities to unbelted occupants can be reduced or prevented by the use of safety belts. In a rollover crash, an unbelted person is significantly more likely to die than a person wearing a seat belt. In addition, avoiding excessive speed, sudden or abrupt turns and drunken or aggressive driving can help make trips safer and avoid the possibility of a crash, especially a rollover crash. This section provides many useful tips to help you drive more safely.

Driving Environment

You can also help avoid a rollover or other type of crash by being prepared for driving in inclement weather, at night, or during other times where visibility or traction may be limited (such as on curves, slippery roads or hilly terrain). Unfamiliar surroundings can also have hidden hazards. To help you learn more about driving in different conditions, this section contains information about city, freeway, and off-road driving, as well as other hints for driving in various weather conditions.

Downloaded from www.Manualslib.com manuals search engine

Vehicle Design

According to the U.S. Department of Transportation, utility vehicles have a significantly higher rollover rate than other types of vehicles. Utility vehicles do have a higher ground clearance and a narrower track or shorter wheelbase than passenger cars to make them more capable for off-road driving. Specific design characteristics like these give the driver a better view of the road, but also give utility vehicles a higher center of gravity than other types of vehicles. This means that you shouldn't expect a utility vehicle to handle the same way a vehicle with a lower center of gravity, like a car, would in similar situations. But driver behavior factors are far more often the cause of a utility vehicle rollover than are environmental or vehicle factors. Safe driver behavior and understanding the environment in which you'll be driving can help avoid a rollover crash in any type of vehicle, including utility vehicles.

Defensive Driving

The best advice anyone can give about driving is: Drive defensively.

Please start with a very important safety device in your vehicle: Buckle up. See "Safety Belts" in the Index.

Defensive driving really means "be ready for anything." On city streets, rural roads or freeways, it means "always expect the unexpected."

Assume that pedestrians or other drivers are going to be careless and make mistakes. Anticipate what they might do. Be ready for their mistakes.

Rear-end collisions are about the most preventable of accidents. Yet they are common. Allow enough following distance. It's the best defensive driving maneuver, in both city and rural driving. You never know when the vehicle in front of you is going to brake or turn suddenly.

Defensive driving requires that a driver concentrate on the driving task. Anything that distracts from the driving task -- such as concentrating on a cellular telephone call, reading, or reaching for something on the floor -- makes proper defensive driving more difficult and can even cause a collision, with resulting injury. Ask a passenger to help do things like this, or pull off the road in a safe place to do them yourself. These simple defensive driving techniques could save your life.

Downloaded from www.Manualslib.com manuals search engine

Drunken Driving

Death and injury associated with drinking and driving is a national tragedy. It's the number one contributor to the highway death toll, claiming thousands of victims every year.

Alcohol affects four things that anyone needs to drive a vehicle:

- Judgment
- Muscular Coordination
- Vision
- Attentiveness.

Police records show that almost half of all motor vehicle-related deaths involve alcohol. In most cases, these deaths are the result of someone who was drinking and driving. In recent years, about 16,000 annual motor vehicle-related deaths have been associated with the use of alcohol, with more than 300,000 people injured.

Many adults -- by some estimates, nearly half the adult population -- choose never to drink alcohol, so they never drive after drinking. For persons under 21, it's against the law in every U.S. state to drink alcohol. There are good medical, psychological and developmental reasons for these laws.

The obvious way to solve the leading highway safety problem is for people never to drink alcohol and then drive. But what if people do? How much is "too much" if the driver plans to drive? It's a lot less than many might think. Although it depends on each person and situation, here is some general information on the problem.

The Blood Alcohol Concentration (BAC) of someone who is drinking depends upon four things:

- The amount of alcohol consumed
- The drinker's body weight
- The amount of food that is consumed before and during drinking
- The length of time it has taken the drinker to consume the alcohol.

Downloaded from www.Manualslib.com manuals search engine

According to the American Medical Association, a 180-lb. (82 kg) person who drinks three 12-ounce (355 ml) bottles of beer in an hour will end up with a BAC of about 0.06 percent. The person would reach the same BAC by drinking three 4-ounce (120 ml) glasses of wine or three mixed drinks if each had 1-1/2 ounces (45 ml) of a liquor like whiskey, gin or vodka.

It's the amount of alcohol that counts. For example, if the same person drank three double martinis (3 ounces or 90 ml of liquor each) within an hour, the person's BAC would be close to 0.12 percent. A person who consumes food just before or during drinking will have a somewhat lower BAC level.

There is a gender difference, too. Women generally have a lower relative percentage of body water than men. Since alcohol is carried in body water, this means that a woman generally will reach a higher BAC level than a man of her same body weight when each has the same number of drinks.

The law in many U.S. states sets the legal limit at a BAC of 0.10 percent. In a growing number of U.S. states, and throughout Canada, the limit is 0.08 percent. In some other countries, it's even lower. The BAC limit for all commercial drivers in the United States is 0.04 percent.

The BAC will be over 0.10 percent after three to six drinks (in one hour). Of course, as we've seen, it depends on how much alcohol is in the drinks, and how quickly the person drinks them.

Downloaded from www.Manualslib.com manuals search engine

But the ability to drive is affected well below a BAC of 0.10 percent. Research shows that the driving skills of many people are impaired at a BAC approaching 0.05 percent, and that the effects are worse at night. All drivers are impaired at BAC levels above 0.05 percent. Statistics show that the chance of being in a collision increases sharply for drivers who have a BAC of 0.05 percent or above. A driver with a BAC level of 0.06 percent has doubled his or her chance of having a collision. At a BAC level of 0.10 percent, the chance of this driver having a collision is 12 times greater; at a level of 0.15 percent, the chance is 25 times greater!

The body takes about an hour to rid itself of the alcohol in one drink. No amount of coffee or number of cold showers will speed that up. “I’ll be careful” isn’t the right answer. What if there’s an emergency, a need to take sudden action, as when a child darts into the street? A person with even a moderate BAC might not be able to react quickly enough to avoid the collision.

There’s something else about drinking and driving that many people don’t know. Medical research shows that alcohol in a person’s system can make crash injuries worse, especially injuries to the brain, spinal cord or heart. This means that when anyone who has been drinking -- driver or passenger -- is in a crash, that person’s chance of being killed or permanently disabled is higher than if the person had not been drinking.

⚠ CAUTION:

Drinking and then driving is very dangerous. Your reflexes, perceptions, attentiveness and judgment can be affected by even a small amount of alcohol. You can have a serious -- or even fatal -- collision if you drive after drinking. Please don’t drink and drive or ride with a driver who has been drinking. Ride home in a cab; or if you’re with a group, designate a driver who will not drink.

Downloaded from www.Manualslib.com manuals search engine

Control of a Vehicle

You have three systems that make your vehicle go where you want it to go. They are the brakes, the steering and the accelerator. All three systems have to do their work at the places where the tires meet the road.

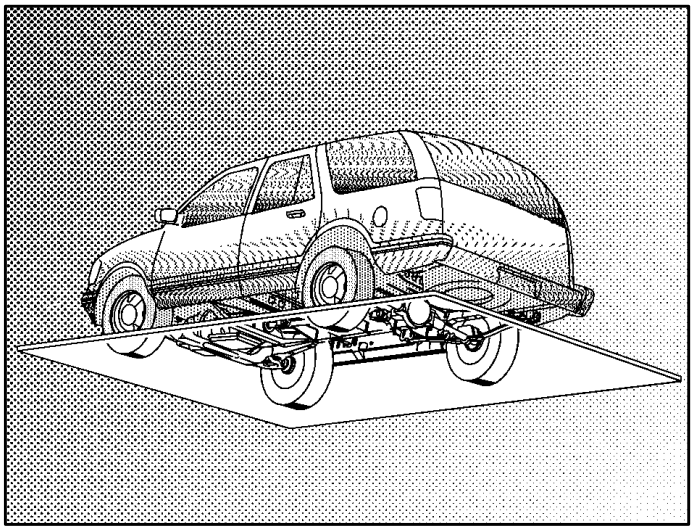

Sometimes, as when you're driving on snow or ice, it's easy to ask more of those control systems than the tires and road can provide. That means you can lose control of your vehicle.

Braking

Braking action involves *perception time* and *reaction time.*

First, you have to decide to push on the brake pedal. That's *perception time.* Then you have to bring up your foot and do it. That's *reaction time.*

Average *reaction time* is about 3/4 of a second. But that's only an average. It might be less with one driver and as long as two or three seconds or more with another. Age, physical condition, alertness, coordination and eyesight all play a part. So do alcohol, drugs and frustration. But even in 3/4 of a second, a vehicle moving at 60 mph (100 km/h) travels 66 feet (20 m). That could be a lot of distance in an emergency, so keeping enough space between your vehicle and others is important.

And, of course, actual stopping distances vary greatly with the surface of the road (whether it's pavement or gravel); the condition of the road (wet, dry, icy); tire tread; the condition of your brakes; the weight of the vehicle and the amount of brake force applied.

Downloaded from www.Manualslib.com manuals search engine

Avoid needless heavy braking. Some people drive in spurts -- heavy acceleration followed by heavy braking -- rather than keeping pace with traffic. This is a mistake. Your brakes may not have time to cool between hard stops. Your brakes will wear out much faster if you do a lot of heavy braking. If you keep pace with the traffic and allow realistic following distances, you will eliminate a lot of unnecessary braking. That means better braking and longer brake life.

If your engine ever stops while you're driving, brake normally but don't pump your brakes. If you do, the pedal may get harder to push down. If your engine stops, you will still have some power brake assist. But you will use it when you brake. Once the power assist is used up, it may take longer to stop and the brake pedal will be harder to push.

Anti-Lock Brakes (ABS)

Your vehicle has anti-lock brakes (ABS). ABS is an advanced electronic braking system that will help prevent a braking skid.

When you start your engine and begin to drive away, your anti-lock brake system will check itself. You may hear a momentary motor or clicking noise while this test is going on. This is normal.

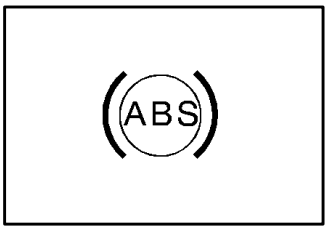

If there's a problem with the anti-lock brake system, this warning light will stay on. See "Anti-Lock Brake System Warning Light" in the Index.

Downloaded from www.Manualslib.com manuals search engine

Here's how anti-lock works. Let's say the road is wet. You're driving safely. Suddenly an animal jumps out in front of you.

You slam on the brakes and continue braking. Here's what happens with ABS.

A computer senses that wheels are slowing down. If one of the wheels is about to stop rolling, the computer will separately work the brakes at each front wheel and at both rear wheels.

The anti-lock system can change the brake pressure faster than any driver could. The computer is programmed to make the most of available tire and road conditions. This can help you steer around the obstacle while braking hard.

As you brake, your computer keeps receiving updates on wheel speed and controls braking pressure accordingly.

Downloaded from www.Manualslib.com manuals search engine

Remember: Anti-lock doesn't change the time you need to get your foot up to the brake pedal or always decrease stopping distance. If you get too close to the vehicle in front of you, you won't have time to apply your brakes if that vehicle suddenly slows or stops. Always leave enough room up ahead to stop, even though you have anti-lock brakes.

Using Anti-Lock

Don't pump the brakes. Just hold the brake pedal down firmly and let anti-lock work for you. You may feel the brakes vibrate, or you may notice some noise, but this is normal.

Braking in Emergencies

With anti-lock, you can steer and brake at the same time. In many emergencies, steering can help you more than even the very best braking.

Steering

Power Steering

If you lose power steering assist because the engine stops or the system is not functioning, you can steer but it will take much more effort.

Steering Tips

Driving on Curves

It's important to take curves at a reasonable speed.

A lot of the "driver lost control" accidents mentioned on the news happen on curves. Here's why:

Experienced driver or beginner, each of us is subject to the same laws of physics when driving on curves. The traction of the tires against the road surface makes it possible for the vehicle to change its path when you turn the front wheels. If there's no traction, inertia will keep the vehicle going in the same direction. If you've ever tried to steer a vehicle on wet ice, you'll understand this.

The traction you can get in a curve depends on the condition of your tires and the road surface, the angle at which the curve is banked, and your speed. While you're in a curve, speed is the one factor you can control.

Downloaded from www.Manualslib.com manuals search engine

Suppose you're steering through a sharp curve. Then you suddenly accelerate. Both control systems -- steering and acceleration -- have to do their work where the tires meet the road. Adding the sudden acceleration can demand too much of those places. You can lose control.

What should you do if this ever happens? Ease up on the accelerator pedal, steer the vehicle the way you want it to go, and slow down.

Speed limit signs near curves warn that you should adjust your speed. Of course, the posted speeds are based on good weather and road conditions. Under less favorable conditions you'll want to go slower.

If you need to reduce your speed as you approach a curve, do it before you enter the curve, while your front wheels are straight ahead.

Try to adjust your speed so you can "drive" through the curve. Maintain a reasonable, steady speed. Wait to accelerate until you are out of the curve, and then accelerate gently into the straightaway.

Steering in Emergencies

There are times when steering can be more effective than braking. For example, you come over a hill and find a truck stopped in your lane, or a car suddenly pulls out from nowhere, or a child darts out from between parked cars and stops right in front of you. You can avoid these problems by braking -- if you can stop in time. But sometimes you can't; there isn't room. That's the time for evasive action -- steering around the problem.

Your vehicle can perform very well in emergencies like these. First apply your brakes. See "Braking in Emergencies" earlier in this section. It is better to remove as much speed as you can from a possible collision. Then steer around the problem, to the left or right depending on the space available.

Downloaded from www.Manualslib.com manuals search engine

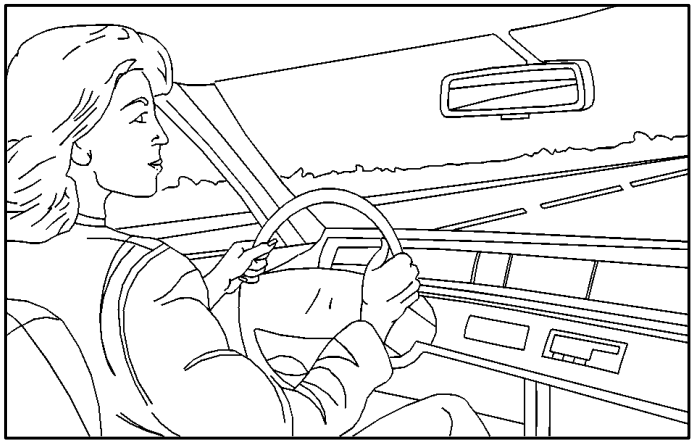

An emergency like this requires close attention and a quick decision. If you are holding the steering wheel at the recommended 9 and 3 o'clock positions, you can turn it a full 180 degrees very quickly without removing either hand. But you have to act fast, steer quickly, and just as quickly straighten the wheel once you have avoided the object.

The fact that such emergency situations are always possible is a good reason to practice defensive driving at all times and wear safety belts properly.

Off-Road Recovery

You may find that your right wheels have dropped off the edge of a road onto the shoulder while you're driving.

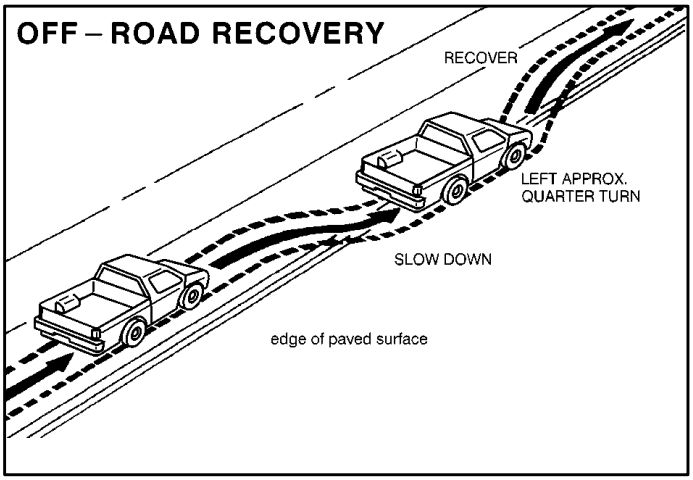

If the level of the shoulder is only slightly below the pavement, recovery should be fairly easy. Ease off the accelerator and then, if there is nothing in the way, steer so that your vehicle straddles the edge of the pavement. You can turn the steering wheel up to one-quarter turn until the right front tire contacts the pavement edge. Then turn your steering wheel to go straight down the roadway.

Downloaded from www.Manualslib.com manuals search engine

Passing

The driver of a vehicle about to pass another on a two-lane highway waits for just the right moment, accelerates, moves around the vehicle ahead, then goes back into the right lane again. A simple maneuver?

Not necessarily! Passing another vehicle on a two-lane highway is a potentially dangerous move, since the passing vehicle occupies the same lane as oncoming traffic for several seconds. A miscalculation, an error in judgment, or a brief surrender to frustration or anger can suddenly put the passing driver face to face with the worst of all traffic accidents -- the head-on collision.

So here are some tips for passing:

- "Drive ahead." Look down the road, to the sides and to crossroads for situations that might affect your passing patterns. If you have any doubt whatsoever about making a successful pass, wait for a better time.
- Watch for traffic signs, pavement markings and lines. If you can see a sign up ahead that might indicate a turn or an intersection, delay your pass. A broken center line usually indicates it's all right to pass (providing the road ahead is clear). Never cross a solid line on your side of the lane or a double solid line, even if the road seems empty of approaching traffic.
- Do not get too close to the vehicle you want to pass while you're awaiting an opportunity. For one thing, following too closely reduces your area of vision, especially if you're following a larger vehicle. Also, you won't have adequate space if the vehicle ahead suddenly slows or stops. Keep back a reasonable distance.
- When it looks like a chance to pass is coming up, start to accelerate but stay in the right lane and don't get too close. Time your move so you will be increasing speed as the time comes to move into the other lane. If the way is clear to pass, you will have a "running start" that more than makes up for the distance you would lose by dropping back. And if something happens to cause you to cancel your pass, you need only slow down and drop back again and wait for another opportunity.
- If other cars are lined up to pass a slow vehicle, wait your turn. But take care that someone isn't trying to pass you as you pull out to pass the slow vehicle. Remember to glance over your shoulder and check the blind spot.

Downloaded from www.Manualslib.com manuals search engine

- Check your mirrors, glance over your shoulder and start your left lane change signal before moving out of the right lane to pass. When you are far enough ahead of the passed vehicle to see its front in your inside mirror, activate your right lane change signal and move back into the right lane. (Remember that your right outside mirror is convex. The vehicle you just passed may seem to be farther away from you than it really is.)
- Try not to pass more than one vehicle at a time on two-lane roads. Reconsider before passing the next vehicle.
- Don't overtake a slowly moving vehicle too rapidly. Even though the brake lamps are not flashing, it may be slowing down or starting to turn.
- If you're being passed, make it easy for the following driver to get ahead of you. Perhaps you can ease a little to the right.

Loss of Control

Let's review what driving experts say about what happens when the three control systems (brakes, steering and acceleration) don't have enough friction where the tires meet the road to do what the driver has asked.

In any emergency, don't give up. Keep trying to steer and constantly seek an escape route or area of less danger.

Skidding

In a skid, a driver can lose control of the vehicle. Defensive drivers avoid most skids by taking reasonable care suited to existing conditions, and by not "overdriving" those conditions. But skids are always possible.

The three types of skids correspond to your vehicle's three control systems. In the braking skid, your wheels aren't rolling. In the steering or cornering skid, too much speed or steering in a curve causes tires to slip and lose cornering force. And in the acceleration skid, too much throttle causes the driving wheels to spin.

Downloaded from www.Manualslib.com manuals search engine

A cornering skid and an acceleration skid are best handled by easing your foot off the accelerator pedal.

If your vehicle starts to slide, ease your foot off the accelerator pedal and quickly steer the way you want the vehicle to go. If you start steering quickly enough, your vehicle may straighten out. Always be ready for a second skid if it occurs.

Of course, traction is reduced when water, snow, ice, gravel or other material is on the road. For safety, you'll want to slow down and adjust your driving to these conditions. It is important to slow down on slippery surfaces because stopping distance will be longer and vehicle control more limited.

While driving on a surface with reduced traction, try your best to avoid sudden steering, acceleration or braking (including engine braking by shifting to a lower gear). Any sudden changes could cause the tires to slide. You may not realize the surface is slippery until your vehicle is skidding. Learn to recognize warning clues -- such as enough water, ice or packed snow on the road to make a "mirrored surface" -- and slow down when you have any doubt.

Remember: Any anti-lock brake system (ABS) helps avoid only the braking skid.

Operating Your Vehicle Off Paved Roads

Many of the same design features that help make your vehicle responsive on paved roads during poor weather conditions -- features like the locking rear axle and all-wheel drive -- help make it much better suited for off-road use than a conventional passenger car. Its higher ground clearance also helps your vehicle step over some off-road obstacles. But your vehicle doesn't have features like special underbody shielding and a transfer case low gear range, things that are usually thought necessary for extended or severe off-road service. This guide is for operating your vehicle off paved roads.

Also, see "Anti-Lock Brakes" in the Index.

Off-road driving can be great fun. But it does have some definite hazards. The greatest of these is the terrain itself.

"Off-roading" means you've left the great North American road system behind. Traffic lanes aren't marked. Curves aren't banked. There are no road signs. Surfaces can be slippery, rough, uphill or downhill. In short, you've gone right back to nature.

Off-road driving involves some new skills. And that's why it's very important that you read this guide. You'll find many driving tips and suggestions. These will help make your off-road driving safer and more enjoyable.

Downloaded from www.Manualslib.com manuals search engine

Before You Go Off-Roading

There are some things to do before you go out. For example, be sure to have all necessary maintenance and service work done. Check to make sure all underbody shields (if so equipped) are properly attached. Is there enough fuel? Is the spare tire fully inflated? Are the fluid levels up where they should be? What are the local laws that apply to off-roading where you'll be driving? If you don't know, you should check with law enforcement people in the area. Will you be on someone's private land? If so, be sure to get the necessary permission.

Loading Your Vehicle for Off-Road Driving

There are some important things to remember about how to load your vehicle.

- The heaviest things should be on the load floor and forward of your rear axle. Put heavier items as far forward as you can.
- Be sure the load is secured properly, so driving on the off-road terrain doesn't toss things around.

⚠ CAUTION:

- **Cargo on the load floor piled higher than the seatbacks can be thrown forward during a sudden stop. You or your passengers could be injured. Keep cargo below the top of the seatbacks.**
- **Unsecured cargo on the load floor can be tossed about when driving over rough terrain. You or your passengers can be struck by flying objects. Secure the cargo properly.**
- **Heavy loads on the roof raise the vehicle's center of gravity, making it more likely to roll over. You can be seriously or fatally injured if the vehicle rolls over. Put heavy loads inside the cargo area, not on the roof. Keep cargo in the cargo area as far forward and low as possible.**

You'll find other important information in this manual. See "Vehicle Loading," "Luggage Carrier" and "Tires" in the Index.

Downloaded from www.Manualslib.com manuals search engine

Environmental Concerns

Off-road driving can provide wholesome and satisfying recreation. However, it also raises environmental concerns. Oldsmobile recognizes these concerns and urges every off-roader to follow these basic rules for protecting the environment:

- Always use established trails, roads and areas that have been specially set aside for public off-road recreational driving; obey all posted regulations.
- Avoid any driving practice that could damage the environment -- shrubs, flowers, trees, grasses -- or disturb wildlife (this includes wheel-spinning, breaking down trees or unnecessary driving through streams or over soft ground).
- Always carry a litter bag . . . make sure all refuse is removed from any campsite before leaving.
- Take extreme care with open fires (where permitted), camp stoves and lanterns.
- Never park your vehicle over dry grass or other combustible materials that could catch fire from the heat of the vehicle's exhaust system.

Traveling to Remote Areas

It makes sense to plan your trip, especially when going to a remote area. Know the terrain and plan your route. You are much less likely to get bad surprises. Get accurate maps of trails and terrain. Try to learn of any blocked or closed roads.

It's also a good idea to travel with at least one other vehicle. If something happens to one of them, the other can help quickly.

Getting Familiar with Off-Road Driving

It's a good idea to practice in an area that's safe and close to home before you go into the wilderness. Off-road driving does require some new and different driving skills. Here's what we mean.

Tune your senses to different kinds of signals. Your eyes, for example, need to constantly sweep the terrain for unexpected obstacles. Your ears need to listen for unusual tire or engine sounds. With your arms, hands, feet and body, you'll need to respond to vibrations and vehicle bounce.

Downloaded from www.Manualslib.com manuals search engine

Controlling your vehicle is the key to successful off-road driving. One of the best ways to control your vehicle is to control your speed. Here are some things to keep in mind. At higher speeds:

- you approach things faster and you have less time to scan the terrain for obstacles.
- you have less time to react.
- you have more vehicle bounce when you drive over obstacles.
- you'll need more distance for braking, especially since you're on an unpaved surface.

⚠ CAUTION:

When you're driving off-road, bouncing and quick changes in direction can easily throw you out of position. This could cause you to lose control and crash. So, whether you're driving on or off the road, you and your passengers should wear safety belts.

Scanning the Terrain

Off-road driving can take you over many different kinds of terrain. You need to be familiar with the terrain and its many different features. Here are some things to consider.

Surface Conditions. Off-roading can take you over hard-packed dirt, gravel, rocks, grass, sand, mud, snow or ice. Each of these surfaces affects the steering, acceleration and braking of your vehicle in different ways. Depending upon the kind of surface you are on, you may experience slipping, sliding, wheel spinning, delayed acceleration, poor traction and longer braking distances.

Surface Obstacles. Unseen or hidden obstacles can be hazardous. A rock, log, hole, rut or bump can startle you if you're not prepared for them. Often these obstacles are hidden by grass, bushes, snow or even the rise and fall of the terrain itself. Here are some things to consider:

- Is the path ahead clear?
- Will the surface texture change abruptly up ahead?
- Does the travel take you uphill or downhill? (There's more discussion of these subjects later.)
- Will you have to stop suddenly or change direction quickly?

Downloaded from www.Manualslib.com manuals search engine

When you drive over obstacles or rough terrain, keep a firm grip on the steering wheel. Ruts, troughs or other surface features can jerk the wheel out of your hands if you're not prepared.

When you drive over bumps, rocks, or other obstacles, your wheels can leave the ground. If this happens, even with one or two wheels, you can't control the vehicle as well or at all.

Because you will be on an unpaved surface, it's especially important to avoid sudden acceleration, sudden turns or sudden braking.

In a way, off-road driving requires a different kind of alertness from driving on paved roads and highways. There are no road signs, posted speed limits or signal lights. You have to use your own good judgment about what is safe and what isn't.

Drinking and driving can be very dangerous on any road. And this is certainly true for off-road driving. At the very time you need special alertness and driving skills, your reflexes, perceptions and judgment can be affected by even a small amount of alcohol. You could have a serious -- or even fatal -- accident if you drink and drive or ride with a driver who has been drinking. See "Drunken Driving" in the Index.

Driving on Off-Road Hills

Off-road driving often takes you up, down or across a hill. Driving safely on hills requires good judgment and an understanding of what your vehicle can and can't do. There are some hills that simply can't be driven, no matter how well built the vehicle.

⚠ CAUTION:

Many hills are simply too steep for any vehicle. If you drive up them, you will stall. If you drive down them, you can't control your speed. If you drive across them, you will roll over. You could be seriously injured or killed. If you have any doubt about the steepness, don't drive the hill.

Downloaded from www.Manualslib.com manuals search engine

Approaching a Hill

When you approach a hill, you need to decide if it's one of those hills that's just too steep to climb, descend or cross. Steepness can be hard to judge. On a very small hill, for example, there may be a smooth, constant incline with only a small change in elevation where you can easily see all the way to the top. On a large hill, the incline may get steeper as you near the top, but you may not see this because the crest of the hill is hidden by bushes, grass or shrubs.

Here are some other things to consider as you approach a hill.

- Is there a constant incline, or does the hill get sharply steeper in places?
- Is there good traction on the hillside, or will the surface cause tire slipping?
- Is there a straight path up or down the hill so you won't have to make turning maneuvers?
- Are there obstructions on the hill that can block your path (boulders, trees, logs or ruts)?
- What's beyond the hill? Is there a cliff, an embankment, a drop-off, a fence? Get out and walk the hill if you don't know. It's the smart way to find out.
- Is the hill simply too rough? Steep hills often have ruts, gullies, troughs and exposed rocks because they are more susceptible to the effects of erosion.

Driving Uphill

Once you decide you can safely drive up the hill, you need to take some special steps.

- Use a low gear and get a firm grip on the steering wheel.
- Get a smooth start up the hill and try to maintain your speed. Don't use more power than you need, because you don't want your wheels to start spinning or sliding.
- Try to drive straight up the hill if at all possible. If the path twists and turns, you might want to find another route.

Downloaded from www.Manualslib.com manuals search engine

⚠ CAUTION:

Turning or driving across steep hills can be dangerous. You could lose traction, slide sideways, and possibly roll over. You could be seriously injured or killed. When driving up hills, always try to go straight up.

- Ease up on your speed as you approach the top of the hill.
- Attach a flag to the vehicle to make you more visible to approaching traffic on trails or hills.
- Sound the horn as you approach the top of the hill to let opposing traffic know you're there.
- Use your headlamps even during the day. They make you more visible to oncoming traffic.

⚠ CAUTION:

Driving to the top (crest) of a hill at full speed can cause an accident. There could be a drop-off, embankment, cliff, or even another vehicle. You could be seriously injured or killed. As you near the top of a hill, slow down and stay alert.

Q: **What should I do if my vehicle stalls, or is about to stall, and I can't make it up the hill?**

A: If this happens, there are some things you should do, and there are some things you must not do. First, here's what you *should* do:

- Push the brake pedal to stop the vehicle and keep it from rolling backwards. Also, apply the parking brake.
- If your engine is still running, shift the transmission to REVERSE (R), release the parking brake, and slowly back down the hill in REVERSE (R).

Downloaded from www.Manualslib.com manuals search engine

- If your engine has stopped running, you'll need to restart it. With the brake pedal pressed and the parking brake still applied, shift the transmission to PARK (P) and restart the engine. Then, shift to REVERSE (R), release the parking brake, and slowly back down the hill as straight as possible in REVERSE (R).
- As you are backing down the hill, put your left hand on the steering wheel at the 12 o'clock position. This way, you'll be able to tell if your wheels are straight and maneuver as you back down. It's best that you back down the hill with your wheels straight rather than in the left or right direction. Turning the wheel too far to the left or right will increase the possibility of a rollover.

Here are some things you *must not* do if you stall, or are about to stall, when going up a hill.

- Never attempt to prevent a stall by shifting into NEUTRAL (N) to "rev-up" the engine and regain forward momentum. This won't work. Your vehicle will roll backwards very quickly and you could go out of control. Instead, apply the regular brake to stop the vehicle. Then apply the parking brake. Shift to REVERSE (R), release the parking brake, and slowly back straight down.
- Never attempt to turn around if you are about to stall when going up a hill. If the hill is steep enough to stall your vehicle, it's steep enough to cause you to roll over if you turn around. If you can't make it up the hill, you must back straight down the hill.

Q: **Suppose, after stalling, I try to back down the hill and decide I just can't do it. What should I do?**

A: Set the parking brake, put your transmission in PARK (P) and turn off the engine. Leave the vehicle and go get some help. Exit on the uphill side and stay clear of the path the vehicle would take if it rolled downhill.

Downloaded from www.Manualslib.com manuals search engine

Driving Downhill

When off-roading takes you downhill, you'll want to consider a number of things:

- How steep is the downhill? Will I be able to maintain vehicle control?
- What's the surface like? Smooth? Rough? Slippery? Hard-packed dirt? Gravel?
- Are there hidden surface obstacles? Ruts? Logs? Boulders?
- What's at the bottom of the hill? Is there a hidden creek bank or even a river bottom with large rocks?

If you decide you can go down a hill safely, then try to keep your vehicle headed straight down, and use a low gear. This way, engine drag can help your brakes and they won't have to do all the work. Descend slowly, keeping your vehicle under control at all times.

⚠ CAUTION:

Heavy braking when going down a hill can cause your brakes to overheat and fade. This could cause loss of control and a serious accident. Apply the brakes lightly when descending a hill and use a low gear to keep vehicle speed under control.

Q: **Are there some things I should not do when driving down a hill?**

A: Yes! These are important because if you ignore them you could lose control and have a serious accident.

- When driving downhill, avoid turns that take you across the incline of the hill. A hill that's not too steep to drive down may be too steep to drive across. You could roll over if you don't drive straight down.
- Never go downhill with the transmission in NEUTRAL (N). This is called "free-wheeling." Your brakes will have to do all the work and could overheat and fade.

Q: **Am I likely to stall when going downhill?**

A: It's much more likely to happen going uphill. But if it happens going downhill, here's what to do.

- Stop your vehicle by applying the regular brakes. Apply the parking brake.
- Shift to PARK (P) and, while still braking, restart the engine.
- Shift back to a low gear, release the parking brake, and drive straight down.
- If the engine won't start, get out and get help.

Downloaded from www.Manualslib.com manuals search engine

Driving Across an Incline

Sooner or later, an off-road trail will probably go across the incline of a hill. If this happens, you have to decide whether to try to drive across the incline. Here are some things to consider:

- A hill that can be driven straight up or down may be too steep to drive across. When you go straight up or down a hill, the length of the wheel base (the distance from the front wheels to the rear wheels) reduces the likelihood the vehicle will tumble end over end. But when you drive across an incline, the much more narrow track width (the distance between the left and right wheels) may not prevent the vehicle from tilting and rolling over. Also, driving across an incline puts more weight on the downhill wheels. This could cause a downhill slide or a rollover.
- Surface conditions can be a problem when you drive across a hill. Loose gravel, muddy spots, or even wet grass can cause your tires to slip sideways, downhill. If the vehicle slips sideways, it can hit something that will trip it (a rock, a rut, etc.) and roll over.
- Hidden obstacles can make the steepness of the incline even worse. If you drive across a rock with the uphill wheels, or if the downhill wheels drop into a rut or depression, your vehicle can tilt even more.

For reasons like these, you need to decide carefully whether to try to drive across an incline. Just because the trail goes across the incline doesn't mean you have to drive it. The last vehicle to try it might have rolled over.

⚠ CAUTION:

Driving across an incline that's too steep will make your vehicle roll over. You could be seriously injured or killed. If you have any doubt about the steepness of the incline, don't drive across it. Find another route instead.

Q: **What if I'm driving across an incline that's not too steep, but I hit some loose gravel and start to slide downhill. What should I do?**

A: If you feel your vehicle starting to slide sideways, turn downhill. This should help straighten out the vehicle and prevent the side slipping. However, a much better way to prevent this is to get out and "walk the course" so you know what the surface is like before you drive it.

Downloaded from www.Manualslib.com manuals search engine

Stalling on an Incline

If your vehicle stalls when you're crossing an incline, be sure you (and your passengers) get out on the uphill side, even if the door there is harder to open. If you get out on the downhill side and the vehicle starts to roll over, you'll be right in its path.

If you have to walk down the slope, stay out of the path the vehicle will take if it does roll over.

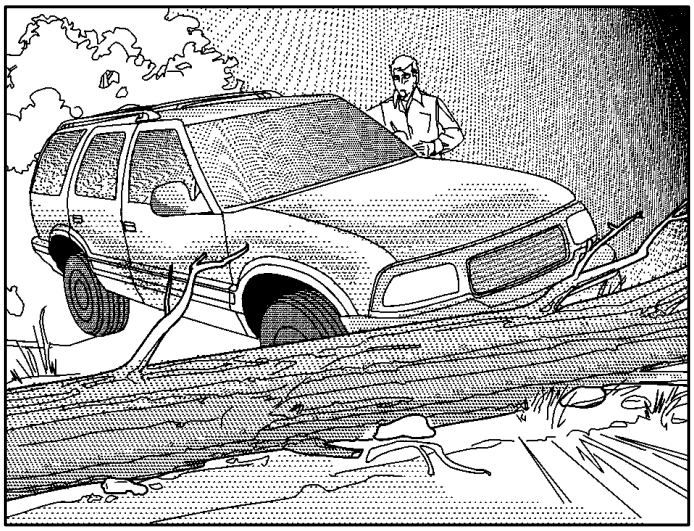

⚠ CAUTION:

Getting out on the downhill (low) side of a vehicle stopped across an incline is dangerous. If the vehicle rolls over, you could be crushed or killed. Always get out on the uphill (high) side of the vehicle and stay well clear of the rollover path.

Driving in Mud, Sand, Snow or Ice

When you drive in mud, snow or sand, your wheels won't get good traction. You can't accelerate as quickly, turning is more difficult, and you'll need longer braking distances.

It's best to use a low gear when you're in mud -- the deeper the mud, the lower the gear. In really deep mud, the idea is to keep your vehicle moving so you don't get stuck.

Downloaded from www.Manualslib.com manuals search engine

When you drive on sand, you'll sense a change in wheel traction. But it will depend upon how loosely packed the sand is. On loosely packed sand (as on beaches or sand dunes) your tires will tend to sink into the sand. This has an effect on steering, accelerating and braking. You may want to reduce the air pressure in your tires slightly when driving on sand. This will improve traction.

Hard packed snow and ice offer the worst tire traction. On these surfaces, it's very easy to lose control. On wet ice, for example, the traction is so poor that you will have difficulty accelerating. And if you do get moving, poor steering and difficult braking can cause you to slide out of control.

⚠ CAUTION:

Driving on frozen lakes, ponds or rivers can be dangerous. Underwater springs, currents under the ice, or sudden thaws can weaken the ice. Your vehicle could fall through the ice and you and your passengers could drown. Drive your vehicle on safe surfaces only.

Driving in Water

Light rain causes no special off-road driving problems. But heavy rain can mean flash flooding, and flood waters demand extreme caution.

Find out how deep the water is before you drive through it. If it's deep enough to cover your wheel hubs, axles or exhaust pipe, don't try it -- you probably won't get through. Also, water that deep can damage your axle and other vehicle parts.

If the water isn't too deep, then drive through it slowly. At fast speeds, water splashes on your ignition system and your vehicle can stall. Stalling can also occur if you get your tailpipe under water. And, as long as your tailpipe is under water, you'll never be able to start your engine. When you go through water, remember that when your brakes get wet, it may take you longer to stop.

Downloaded from www.Manualslib.com manuals search engine

⚠ CAUTION:

Driving through rushing water can be dangerous. Deep water can sweep your vehicle downstream and you and your passengers could drown. If it's only shallow water, it can still wash away the ground from under your tires, and you could lose traction and roll the vehicle over. Don't drive through rushing water.

See "Driving Through Water" in the Index for more information on driving through water.

After Off-Road Driving

Remove any brush or debris that has collected on the underbody, chassis or under the hood. These accumulations can be a fire hazard.

After operation in mud or sand, have the brake linings cleaned and checked. These substances can cause glazing and uneven braking. Check the body structure, steering, suspension, wheels, tires and exhaust system for damage. Also, check the fuel lines and cooling system for any leakage.

Your vehicle will require more frequent service due to off-road use. Refer to the Maintenance Schedule for additional information.

Downloaded from www.Manualslib.com manuals search engine

Driving at Night

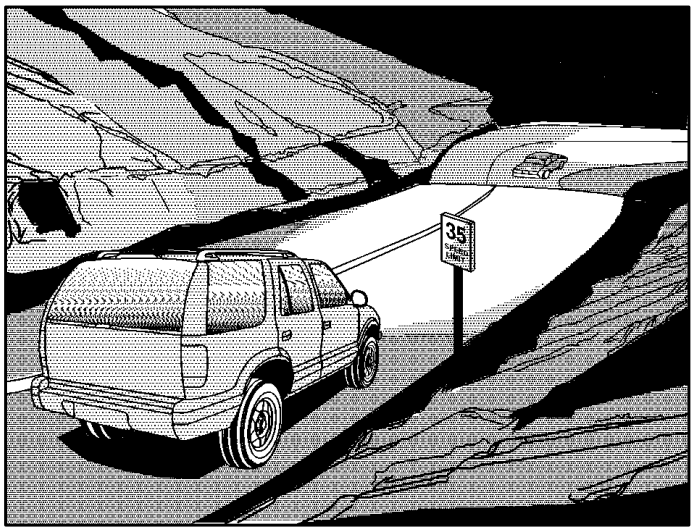

Night driving is more dangerous than day driving. One reason is that some drivers are likely to be impaired -- by alcohol or drugs, with night vision problems, or by fatigue.

Here are some tips on night driving.

- Drive defensively.
- Don't drink and drive.
- Adjust your inside rearview mirror to reduce the glare from headlamps behind you.
- Since you can't see as well, you may need to slow down and keep more space between you and other vehicles.
- Slow down, especially on higher speed roads. Your headlamps can light up only so much road ahead.
- In remote areas, watch for animals.
- If you're tired, pull off the road in a safe place and rest.

No one can see as well at night as in the daytime. But as we get older these differences increase. A 50-year-old driver may require at least twice as much light to see the same thing at night as a 20-year-old.

What you do in the daytime can also affect your night vision. For example, if you spend the day in bright sunshine you are wise to wear sunglasses. Your eyes will have less trouble adjusting to night. But if you're driving, don't wear sunglasses at night. They may cut down on glare from headlamps, but they also make a lot of things invisible.

Downloaded from www.Manualslib.com manuals search engine

You can be temporarily blinded by approaching headlamps. It can take a second or two, or even several seconds, for your eyes to readjust to the dark. When you are faced with severe glare (as from a driver who doesn't lower the high beams, or a vehicle with misaimed headlamps), slow down a little. Avoid staring directly into the approaching headlamps.

Keep your windshield and all the glass on your vehicle clean -- inside and out. Glare at night is made much worse by dirt on the glass. Even the inside of the glass can build up a film caused by dust. Dirty glass makes lights dazzle and flash more than clean glass would, making the pupils of your eyes contract repeatedly.

Remember that your headlamps light up far less of a roadway when you are in a turn or curve. Keep your eyes moving; that way, it's easier to pick out dimly lighted objects. Just as your headlamps should be checked regularly for proper aim, so should your eyes be examined regularly. Some drivers suffer from night blindness -- the inability to see in dim light -- and aren't even aware of it.

Driving in Rain and on Wet Roads

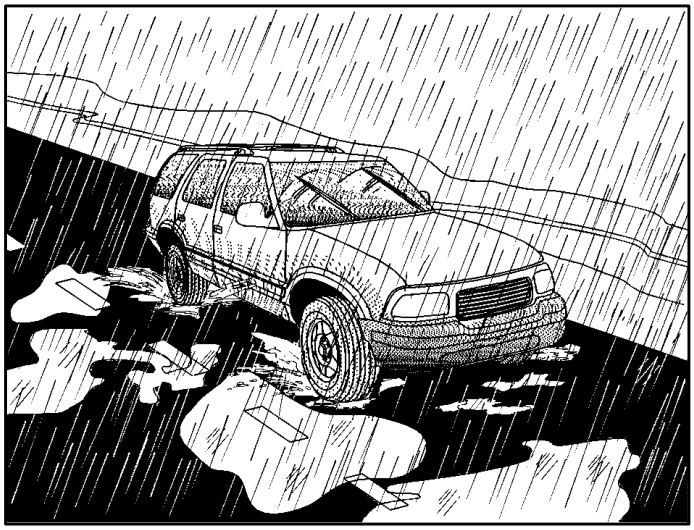

Rain and wet roads can mean driving trouble. On a wet road, you can't stop, accelerate or turn as well because your tire-to-road traction isn't as good as on dry roads. And, if your tires don't have much tread left, you'll get even less traction. It's always wise to go slower and be cautious if rain starts to fall while you are driving. The surface may get wet suddenly when your reflexes are tuned for driving on dry pavement.

Downloaded from www.Manualslib.com manuals search engine

The heavier the rain, the harder it is to see. Even if your windshield wiper blades are in good shape, a heavy rain can make it harder to see road signs and traffic signals, pavement markings, the edge of the road and even people walking.

It's wise to keep your wiping equipment in good shape and keep your windshield washer tank filled with washer fluid. Replace your windshield wiper inserts when they show signs of streaking or missing areas on the windshield, or when strips of rubber start to separate from the inserts.

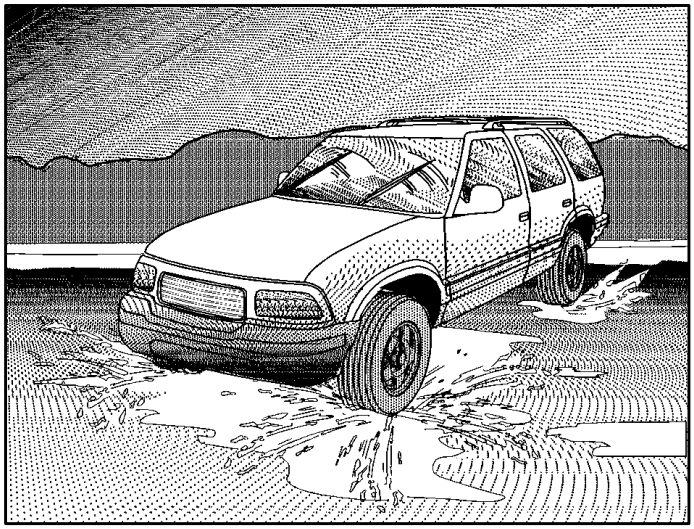

Driving too fast through large water puddles or even going through some car washes can cause problems, too. The water may affect your brakes. Try to avoid puddles. But if you can't, try to slow down before you hit them.

⚠ CAUTION:

Wet brakes can cause accidents. They won't work as well in a quick stop and may cause pulling to one side. You could lose control of the vehicle.

After driving through a large puddle of water or a car wash, apply your brake pedal lightly until your brakes work normally.

Hydroplaning

Hydroplaning is dangerous. So much water can build up under your tires that they can actually ride on the water. This can happen if the road is wet enough and you're going fast enough. When your vehicle is hydroplaning, it has little or no contact with the road.

Downloaded from www.Manualslib.com manuals search engine

Hydroplaning doesn't happen often. But it can if your tires do not have much tread or if the pressure in one or more is low. It can happen if a lot of water is standing on the road. If you can see reflections from trees, telephone poles or other vehicles, and raindrops "dimple" the water's surface, there could be hydroplaning.

Hydroplaning usually happens at higher speeds. There just isn't a hard and fast rule about hydroplaning. The best advice is to slow down when it is raining.

Driving Through Deep Standing Water

NOTICE:

If you drive too quickly through deep puddles or standing water, water can come in through your engine's air intake and badly damage your engine. Never drive through water that is slightly lower than the underbody of your vehicle. If you can't avoid deep puddles or standing water, drive through them very slowly.

Driving Through Flowing Water

⚠ CAUTION:

Flowing or rushing water creates strong forces. If you try to drive through flowing water, as you might at a low water crossing, your vehicle can be carried away. As little as six inches of flowing water can carry away a smaller vehicle. If this happens, you and the other vehicle occupants could drown. Don't ignore police warning signs, and otherwise be very cautious about trying to drive through flowing water.

Some Other Rainy Weather Tips

- Besides slowing down, allow some extra following distance. And be especially careful when you pass another vehicle. Allow yourself more clear room ahead, and be prepared to have your view restricted by road spray.
- Have good tires with proper tread depth. See "Tires" in the Index.

Downloaded from www.Manualslib.com manuals search engine

City Driving

One of the biggest problems with city streets is the amount of traffic on them. You'll want to watch out for what the other drivers are doing and pay attention to traffic signals.

Here are ways to increase your safety in city driving:

- Know the best way to get to where you are going. Get a city map and plan your trip into an unknown part of the city just as you would for a cross-country trip.
- Try to use the freeways that rim and crisscross most large cities. You'll save time and energy. See the next part, "Freeway Driving."
- Treat a green light as a warning signal. A traffic light is there because the corner is busy enough to need it. When a light turns green, and just before you start to move, check both ways for vehicles that have not cleared the intersection or may be running the red light.

Downloaded from www.Manualslib.com manuals search engine

Freeway Driving

Mile for mile, freeways (also called thruways, parkways, expressways, turnpikes or superhighways) are the safest of all roads. But they have their own special rules.

The most important advice on freeway driving is: Keep up with traffic and keep to the right. Drive at the same speed most of the other drivers are driving. Too-fast or too-slow driving breaks a smooth traffic flow. Treat the left lane on a freeway as a passing lane.

At the entrance, there is usually a ramp that leads to the freeway. If you have a clear view of the freeway as you drive along the entrance ramp, you should begin to check traffic. Try to determine where you expect to blend with the flow. Try to merge into the gap at close to the prevailing speed. Switch on your turn signal, check your mirrors and glance over your shoulder as often as necessary. Try to blend smoothly with the traffic flow.

Once you are on the freeway, adjust your speed to the posted limit or to the prevailing rate if it's slower. Stay in the right lane unless you want to pass.

Before changing lanes, check your mirrors. Then use your turn signal.

Just before you leave the lane, glance quickly over your shoulder to make sure there isn't another vehicle in your "blind" spot.

Downloaded from www.Manualslib.com manuals search engine

Once you are moving on the freeway, make certain you allow a reasonable following distance. Expect to move slightly slower at night.

When you want to leave the freeway, move to the proper lane well in advance. If you miss your exit, do not, under any circumstances, stop and back up. Drive on to the next exit.

The exit ramp can be curved, sometimes quite sharply.

The exit speed is usually posted.

Reduce your speed according to your speedometer, not to your sense of motion. After driving for any distance at higher speeds, you may tend to think you are going slower than you actually are.

Before Leaving on a Long Trip

Make sure you're ready. Try to be well rested. If you must start when you're not fresh -- such as after a day's work -- don't plan to make too many miles that first part of the journey. Wear comfortable clothing and shoes you can easily drive in.

Is your vehicle ready for a long trip? If you keep it serviced and maintained, it's ready to go. If it needs service, have it done before starting out. Of course, you'll find experienced and able service experts in Oldsmobile dealerships all across North America. They'll be ready and willing to help if you need it.

Here are some things you can check before a trip:

- *Windshield Washer Fluid:* Is the reservoir full? Are all windows clean inside and outside?
- *Wiper Blades:* Are they in good shape?
- *Fuel, Engine Oil, Other Fluids:* Have you checked all levels?
- *Lamps:* Are they all working? Are the lenses clean?
- *Tires:* They are vitally important to a safe, trouble-free trip. Is the tread good enough for long-distance driving? Are the tires all inflated to the recommended pressure?
- *Weather Forecasts:* What's the weather outlook along your route? Should you delay your trip a short time to avoid a major storm system?
- *Maps:* Do you have up-to-date maps?

Downloaded from www.Manualslib.com manuals search engine

Highway Hypnosis

Is there actually such a condition as “highway hypnosis”? Or is it just plain falling asleep at the wheel? Call it highway hypnosis, lack of awareness, or whatever.

There is something about an easy stretch of road with the same scenery, along with the hum of the tires on the road, the drone of the engine, and the rush of the wind against the vehicle that can make you sleepy. Don’t let it happen to you! If it does, your vehicle can leave the road in *less than a second*, and you could crash and be injured.

What can you do about highway hypnosis?
First, be aware that it can happen.

Then here are some tips:

- Make sure your vehicle is well ventilated, with a comfortably cool interior.
- Keep your eyes moving. Scan the road ahead and to the sides. Check your mirrors and your instruments frequently.
- If you get sleepy, pull off the road into a rest, service or parking area and take a nap, get some exercise, or both. For safety, treat drowsiness on the highway as an emergency.

Hill and Mountain Roads

Driving on steep hills or mountains is different from driving in flat or rolling terrain.

Downloaded from www.Manualslib.com manuals search engine

If you drive regularly in steep country, or if you're planning to visit there, here are some tips that can make your trips safer and more enjoyable. See "Off-Road Driving" in the Index for information about driving off-road. See "Operating Your Vehicle Off Paved Roads" in the Index for information about driving off-road.

- Keep your vehicle in good shape. Check all fluid levels and also the brakes, tires, cooling system and transmission. These parts can work hard on mountain roads.
- Know how to go down hills. The most important thing to know is this: let your engine do some of the slowing down. Shift to a lower gear when you go down a steep or long hill.

⚠ CAUTION:

If you don't shift down, your brakes could get so hot that they wouldn't work well. You would then have poor braking or even none going down a hill. You could crash. Shift down to let your engine assist your brakes on a steep downhill slope.

⚠ CAUTION:

Coasting downhill in NEUTRAL (N) or with the ignition off is dangerous. Your brakes will have to do all the work of slowing down. They could get so hot that they wouldn't work well. You would then have poor braking or even none going down a hill. You could crash. Always have your engine running and your vehicle in gear when you go downhill.

- Know how to go uphill. You may want to shift down to a lower gear. The lower gears help cool your engine and transmission, and you can climb the hill better.
- Stay in your own lane when driving on two-lane roads in hills or mountains. Don't swing wide or cut across the center of the road. Drive at speeds that let you stay in your own lane.
- As you go over the top of a hill, be alert. There could be something in your lane, like a stalled car or an accident.
- You may see highway signs on mountains that warn of special problems. Examples are long grades, passing or no-passing zones, a falling rocks area or winding roads. Be alert to these and take appropriate action.

Downloaded from www.Manualslib.com manuals search engine

Winter Driving

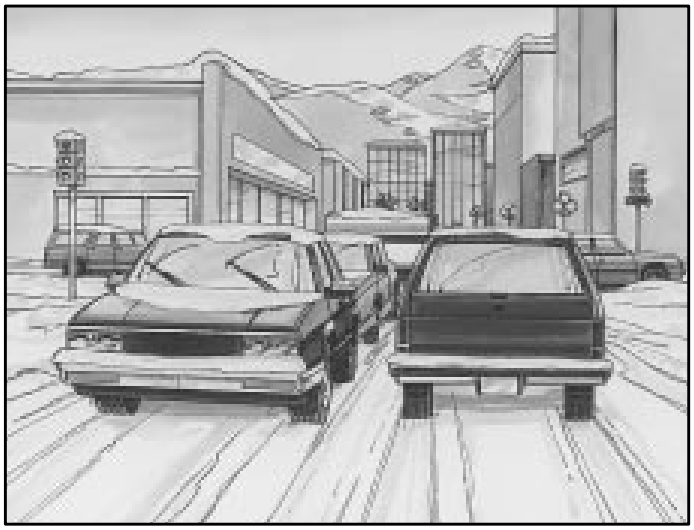

Here are some tips for winter driving:

- Have your vehicle in good shape for winter.
- You may want to put winter emergency supplies in your vehicle.

Include an ice scraper, a small brush or broom, a supply of windshield washer fluid, a rag, some winter outer clothing, a small shovel, a flashlight, a red cloth and reflective warning triangles. And, if you will be driving under severe conditions, include a small bag of sand, a piece of old carpet or a couple of burlap bags to help provide traction. Be sure you properly secure these items in your vehicle.

Driving on Snow or Ice

Most of the time, those places where your tires meet the road probably have good traction.

However, if there is snow or ice between your tires and the road, you can have a very slippery situation. You'll have a lot less traction or "grip" and will need to be very careful.

Downloaded from www.Manualslib.com manuals search engine

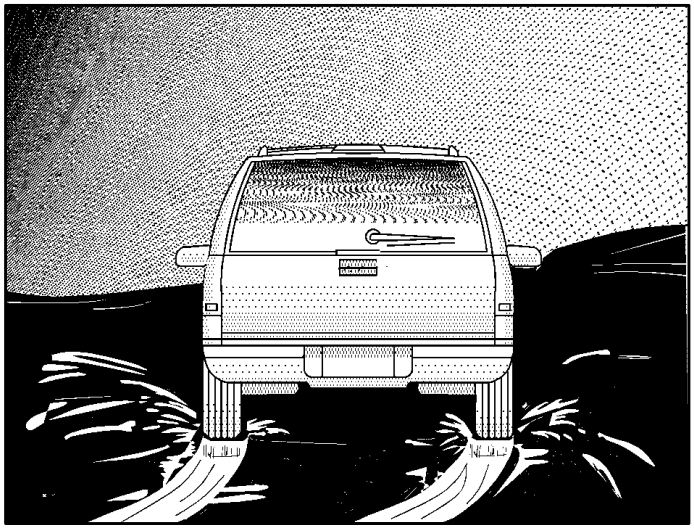

What's the worst time for this? "Wet ice." Very cold snow or ice can be slick and hard to drive on. But wet ice can be even more trouble because it may offer the least traction of all. You can get wet ice when it's about freezing (32°F; 0°C) and freezing rain begins to fall. Try to avoid driving on wet ice until salt and sand crews can get there.

Whatever the condition -- smooth ice, packed, blowing or loose snow -- drive with caution.

Accelerate gently. Try not to break the fragile traction. If you accelerate too fast, the drive wheels will spin and polish the surface under the tires even more.

Your anti-lock brakes improve your vehicle's stability when you make a hard stop on a slippery road. Even though you have an anti-lock braking system, you'll want to begin stopping sooner than you would on dry pavement. See "Anti-Lock" in the Index.

- Allow greater following distance on any slippery road.
- Watch for slippery spots. The road might be fine until you hit a spot that's covered with ice. On an otherwise clear road, ice patches may appear in shaded areas where the sun can't reach: around clumps of trees, behind buildings or under bridges. Sometimes the surface of a curve or an overpass may remain icy when the surrounding roads are clear. If you see a patch of ice ahead of you, brake before you are on it. Try not to brake while you're actually on the ice, and avoid sudden steering maneuvers.

Downloaded from www.Manualslib.com manuals search engine

If You're Caught in a Blizzard

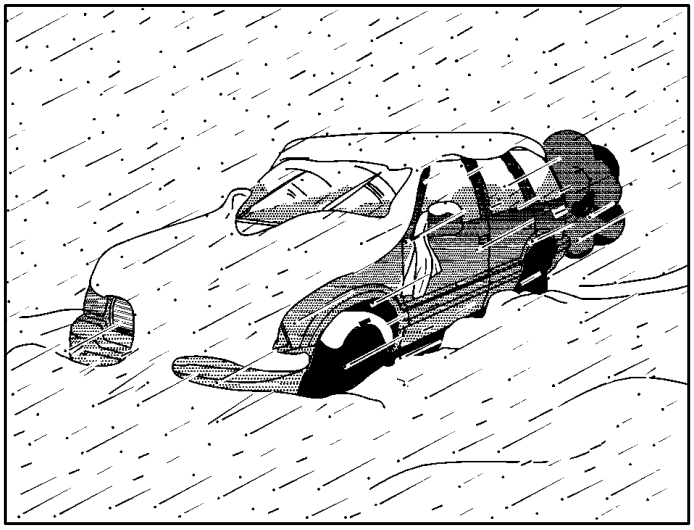

If you are stopped by heavy snow, you could be in a serious situation. You should probably stay with your vehicle unless you know for sure that you are near help and you can hike through the snow. Here are some things to do to summon help and keep yourself and your passengers safe:

- Turn on your hazard flashers.
- Tie a red cloth to your vehicle to alert police that you've been stopped by the snow.
- Put on extra clothing or wrap a blanket around you. If you have no blankets or extra clothing, make body insulators from newspapers, burlap bags, rags, floor mats -- anything you can wrap around yourself or tuck under your clothing to keep warm.

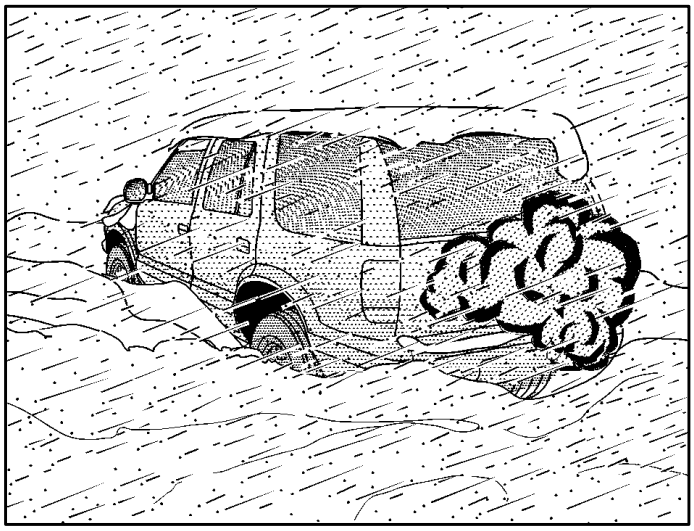

You can run the engine to keep warm, but be careful.

Downloaded from www.Manualslib.com manuals search engine

⚠ CAUTION:

Snow can trap exhaust gases under your vehicle. This can cause deadly CO (carbon monoxide) gas to get inside. CO could overcome you and kill you. You can't see it or smell it, so you might not know it is in your vehicle. Clear away snow from around the base of your vehicle, especially any that is blocking your exhaust pipe. And check around again from time to time to be sure snow doesn't collect there.

Open a window just a little on the side of the vehicle that's away from the wind. This will help keep CO out.

Run your engine only as long as you must. This saves fuel. When you run the engine, make it go a little faster than just idle. That is, push the accelerator slightly. This uses less fuel for the heat that you get and it keeps the battery charged. You will need a well-charged battery to restart the vehicle, and possibly for signaling later on with your headlamps. Let the heater run for a while. Then, shut the engine off and close the window almost all the way to preserve the heat. Start the engine again and repeat this only when you feel really uncomfortable from the cold. But do it as little as possible. Preserve the fuel as long as you can. To help keep warm, you can get out of the vehicle and do some fairly vigorous exercises every half hour or so until help comes.

Recreational Vehicle Towing

Your vehicle was not designed to be towed with all four wheels on the ground, nor was it designed to be towed with only two wheels on the ground. If your vehicle must be towed, see "Towing Your Vehicle" in the Index.

NOTICE:

Towing your vehicle with all four wheels on the ground will damage drivetrain components. And, since your vehicle has all-wheel drive, towing with only two wheels on the ground will also damage drivetrain components.

Downloaded from www.Manualslib.com manuals search engine

Loading Your Vehicle

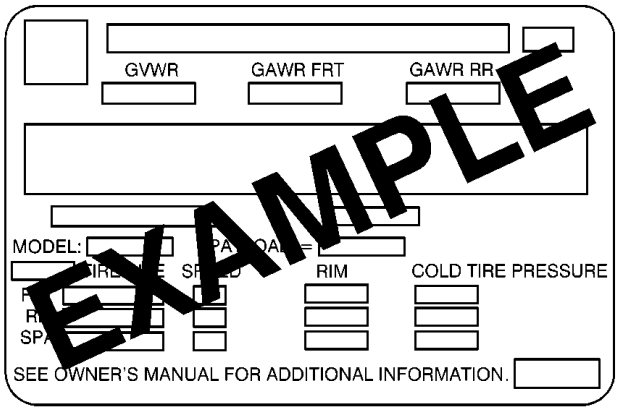

The Certification/Tire label is found on the driver's door edge, above the door latch. The label shows the size of your original tires and the inflation pressures needed to obtain the gross weight capacity of your vehicle. This is called the Gross Vehicle Weight Rating (GVWR). The GVWR includes the weight of the vehicle, all occupants, fuel, cargo and trailer tongue weight, if pulling a trailer.

The Certification/Tire label also tells you the maximum weights for the front and rear axles, called Gross Axle Weight Rating (GAWR).

To find out the actual loads on your front and rear axles, you need to go to a weigh station and weigh your vehicle. Your dealer can help you with this. Be sure to spread out your load equally on both sides of the centerline.

Never exceed the GVWR for your vehicle, or the GAWR for either the front or rear axle.

If you do have a heavy load, you should spread it out.

Similar appearing vehicles may have different GVWR's and payloads. Please note your vehicle's Certification/Tire label or consult your dealer for additional details.

⚠ CAUTION:

Do not load your vehicle any heavier than the GVWR, or either the maximum front or rear GAWR. If you do, parts on your vehicle can break, and it can change the way your vehicle handles. These could cause you to lose control and crash. Also, overloading can shorten the life of your vehicle.

Downloaded from www.Manualslib.com manuals search engine

Using heavier suspension components to get added durability might not change your weight ratings. Ask your dealer to help you load your vehicle the right way.

NOTICE:

Your warranty does not cover parts or components that fail because of overloading.

If you put things inside your vehicle -- like suitcases, tools, packages or anything else -- they will go as fast as the vehicle goes. If you have to stop or turn quickly, or if there is a crash, they'll keep going.

⚠ CAUTION:

Things you put inside your vehicle can strike and injure people in a sudden stop or turn, or in a crash.

- **Put things in the cargo area of your vehicle. Try to spread the weight evenly.**
- **Never stack heavier things, like suitcases, inside the vehicle so that some of them are above the tops of the seats.**
- **Don't leave an unsecured child restraint in your vehicle.**
- **When you carry something inside the vehicle, secure it whenever you can.**
- **Don't leave a seat folded down unless you need to.**

There's also important loading information for off-road driving in this manual. See "Loading Your Vehicle for Off-Road Driving" in the Index.

Downloaded from www.Manualslib.com manuals search engine

Payload

The payload capacity is shown on the Certification/Tire label. This is the maximum load capacity that your vehicle can carry. Be sure to include the weight of the occupants as part of your load. If you added any accessories or equipment after your vehicle left the factory, remember to subtract the weight of these things from the payload. Your dealer can help you with this.

Add-On Equipment

When you carry removable items, you may need to put a limit on how many people you carry inside your vehicle. Be sure to weigh your vehicle before you buy and install the new equipment.

NOTICE:

Your warranty doesn't cover parts or components that fail because of overloading.

Towing a Trailer

⚠ CAUTION:

If you don't use the correct equipment and drive properly, you can lose control when you pull a trailer. For example, if the trailer is too heavy, the brakes may not work well -- or even at all. You and your passengers could be seriously injured. Pull a trailer only if you have followed all the steps in this section. Ask your dealer for advice and information about towing a trailer with your vehicle.

Downloaded from www.Manualslib.com manuals search engine

NOTICE:

Pulling a trailer improperly can damage your vehicle and result in costly repairs not covered by your warranty. To pull a trailer correctly, follow the advice in this part, and see your dealer for important information about towing a trailer with your vehicle. Additional rear axle maintenance is required for a vehicle used to tow a trailer. See "Scheduled Maintenance Services" in the Index.

To identify what the vehicle trailering capacity is for your vehicle, you should read the information in "Weight of the Trailer" that appears later in this section.

If yours was built with trailering options, as many are, it's ready for heavier trailers. But trailering is different than just driving your vehicle by itself. Trailering means changes in handling, durability and fuel economy. Successful, safe trailering takes correct equipment, and it has to be used properly.

That's the reason for this part. In it are many time-tested, important trailering tips and safety rules. Many of these are important for your safety and that of your passengers. So please read this section carefully before you pull a trailer.

If You Do Decide To Pull A Trailer

If you do, here are some important points:

- There are many different laws, including speed limit restrictions, having to do with trailering. Make sure your rig will be legal, not only where you live but also where you'll be driving. A good source for this information can be state or provincial police.
- Consider using a sway control if your trailer will weigh 2,000 lbs. (900 kg) or less. You should always use a sway control if your trailer will weigh more than 2,000 lbs. (900 kg). You can ask a hitch dealer about sway controls.
- Don't tow a trailer at all during the first 500 miles (800 km) your new vehicle is driven. Your engine, axle or other parts could be damaged.
- Then, during the first 500 miles (800 km) that you tow a trailer, don't drive over 50 mph (80 km/h) and don't make starts at full throttle. This helps your engine and other parts of your vehicle wear in at the heavier loads.
- You should use THIRD (3) (or, as you need to, a lower gear) when towing a trailer. Operating your vehicle in THIRD (3) when towing a trailer will minimize heat buildup and extend the life of your transmission.

Downloaded from www.Manualslib.com manuals search engine

Three important considerations have to do with weight:

- the weight of the trailer,
- the weight of the trailer tongue
- and the weight on your vehicle's tires.

Weight of the Trailer

How heavy can a trailer safely be?

It should never weigh more than 5,100 lbs. (2 315 kg). But even that can be too heavy.

It depends on how you plan to use your rig. For example, speed, altitude, road grades, outside temperature and how much your vehicle is used to pull a trailer are all important. And, it can also depend on any special equipment that you have on your vehicle.

You can ask your dealer for our trailering information or advice, or you can write us at:

Customer Assistance Representative
Oldsmobile Customer Assistance Network
P.O. Box 33171
Detroit, MI 48232-5171

In Canada, write to:

General Motors of Canada Limited
Customer Communication Centre, 163-005
1908 Colonel Sam Drive
Oshawa, Ontario L1H 8P7

Weight of the Trailer Tongue

The tongue load (A) of any trailer is an important weight to measure because it affects the total or gross weight of your vehicle. The Gross Vehicle Weight (GVW) includes the curb weight of the vehicle, any cargo you may carry in it, and the people who will be riding in the vehicle. And if you will tow a trailer, you must add the tongue load to the GVW because your vehicle will be carrying that weight, too. See "Loading Your Vehicle" in the Index for more information about your vehicle's maximum load capacity.

Downloaded from www.Manualslib.com manuals search engine

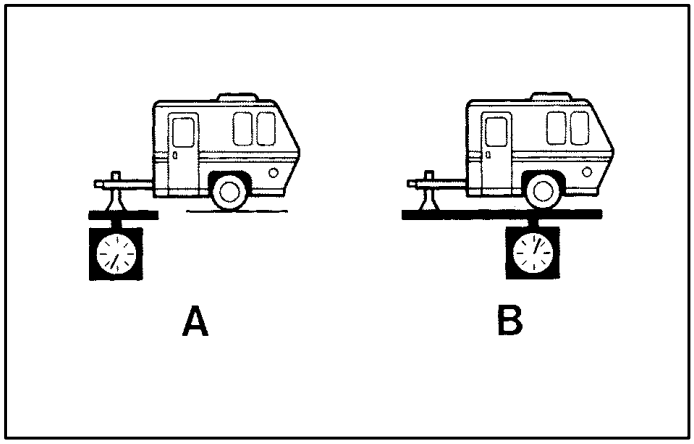

If you're using a weight-carrying hitch, the trailer tongue (A) should weigh 10 percent of the total loaded trailer weight (B). If you're using a weight-distributing hitch, the trailer tongue (A) should weigh 12 percent of the total loaded trailer weight (B).

After you've loaded your trailer, weigh the trailer and then the tongue, separately, to see if the weights are proper. If they aren't, you may be able to get them right simply by moving some items around in the trailer.

Total Weight on Your Vehicle's Tires

Be sure your vehicle's tires are inflated to the upper limit for cold tires. You'll find these numbers on the Certification label at the rear edge of the driver's door or see "Tire Loading" in the Index. Then be sure you don't go over the GVW limit for your vehicle, including the weight of the trailer tongue.

Hitches

It's important to have the correct hitch equipment. Crosswinds, large trucks going by and rough roads are a few reasons why you'll need the right hitch. Here are some rules to follow:

- If you'll be pulling a trailer that, when loaded, will weigh more than 3,500 lbs. (1 589 kg), be sure to use a properly mounted, weight-distributing hitch and sway control of the proper size. This equipment is very important for proper vehicle loading and good handling when you're driving.
- Will you have to make any holes in the body of your vehicle when you install a trailer hitch?

  If you do, then be sure to seal the holes later when you remove the hitch. If you don't seal them, deadly carbon monoxide (CO) from your exhaust can get into your vehicle. See "Carbon Monoxide" in the Index. Dirt and water can, too.

Downloaded from www.Manualslib.com manuals search engine

Safety Chains

You should always attach chains between your vehicle and your trailer. Cross the safety chains under the tongue of the trailer to help prevent the tongue from contacting the road if it becomes separated from the hitch. Instructions about safety chains may be provided by the hitch manufacturer or by the trailer manufacturer. Follow the manufacturer's recommendation for attaching safety chains and do not attach them to the bumper. Always leave just enough slack so you can turn with your rig. Never allow safety chains to drag on the ground.

Trailer Brakes

If your trailer weighs more than 1,000 lbs. (450 kg) loaded, then it needs its own brakes -- and they must be adequate. Be sure to read and follow the instructions for the trailer brakes so you'll be able to install, adjust and maintain them properly.

Your trailer's brake system can tap into the vehicle's hydraulic brake system only if:

- The trailer parts can withstand 3,000 psi (20 650 kPa) of pressure.
- The trailer's brake system will use less than 0.02 cubic inch (0.3 cc) of fluid from your vehicle's master cylinder. Otherwise, both braking systems won't work well. You could even lose your brakes.

If everything checks out this far, then make the brake fluid tap at the port on the master cylinder that sends fluid to the rear brakes. But don't use copper tubing for this. If you do, it will bend and finally break off. Use steel brake tubing.

Downloaded from www.Manualslib.com manuals search engine

Driving with a Trailer

⚠ CAUTION:

If you have a rear-most window open and you pull a trailer with your vehicle, carbon monoxide (CO) could come into your vehicle. You can't see or smell CO. It can cause unconsciousness or death. See "Engine Exhaust" in the Index. To maximize your safety when towing a trailer:

- **Have your exhaust system inspected for leaks, and make necessary repairs before starting on your trip.**
- **Keep the rear-most windows closed.**
- **If exhaust does come into your vehicle through a window in the rear or another opening, drive with your front, main heating or cooling system on and with the fan on any speed. This will bring fresh, outside air into your vehicle. Do not use RECIRCULATION because it only recirculates the air inside your vehicle. See "Comfort Controls" in the Index.**

Towing a trailer requires a certain amount of experience. Before setting out for the open road, you'll want to get to know your rig. Acquaint yourself with the feel of handling and braking with the added weight of the trailer. And always keep in mind that the vehicle you are driving is now a good deal longer and not nearly as responsive as your vehicle is by itself.

Before you start, check the trailer hitch and platform (and attachments), safety chains, electrical connector, lamps, tires and mirror adjustment. If the trailer has electric brakes, start your vehicle and trailer moving and then apply the trailer brake controller by hand to be sure the brakes are working. This lets you check your electrical connection at the same time.

During your trip, check occasionally to be sure that the load is secure, and that the lamps and any trailer brakes are still working.

Following Distance

Stay at least twice as far behind the vehicle ahead as you would when driving your vehicle without a trailer. This can help you avoid situations that require heavy braking and sudden turns.

Downloaded from www.Manualslib.com manuals search engine

Passing

You'll need more passing distance up ahead when you're towing a trailer. And, because you're a good deal longer, you'll need to go much farther beyond the passed vehicle before you can return to your lane.

Backing Up

Hold the bottom of the steering wheel with one hand. Then, to move the trailer to the left, just move that hand to the left. To move the trailer to the right, move your hand to the right. Always back up slowly and, if possible, have someone guide you.

Making Turns

NOTICE:

Making very sharp turns while trailering could cause the trailer to come in contact with the vehicle. Your vehicle could be damaged. Avoid making very sharp turns while trailering.

When you're turning with a trailer, make wider turns than normal. Do this so your trailer won't strike soft shoulders, curbs, road signs, trees or other objects. Avoid jerky or sudden maneuvers. Signal well in advance.

Turn Signals When Towing a Trailer

When you tow a trailer, your vehicle has to have extra wiring and a heavy-duty turn signal flasher.

The arrows on your instrument panel will flash whenever you signal a turn or lane change. Properly hooked up, the trailer lamps will also flash, telling other drivers you're about to turn, change lanes or stop.

When towing a trailer, the arrows on your instrument panel will flash for turns even if the bulbs on the trailer are burned out. Thus, you may think drivers behind you are seeing your signal when they are not. It's important to check occasionally to be sure the trailer bulbs are still working.

Downloaded from www.Manualslib.com manuals search engine

Driving On Grades

Reduce speed and shift to a lower gear *before* you start down a long or steep downgrade. If you don't shift down, you might have to use your brakes so much that they would get hot and no longer work well.

You should use THIRD (3) when towing a trailer. Operating your vehicle in THIRD (3) when towing a trailer will minimize heat buildup and extend the life of your transmission.

Parking on Hills

⚠ CAUTION:

You really should not park your vehicle, with a trailer attached, on a hill. If something goes wrong, your rig could start to move. People can be injured, and both your vehicle and the trailer can be damaged.

But if you ever have to park your rig on a hill, here's how to do it:

1. Apply your regular brakes, but don't shift into PARK (P) yet. Then turn your wheels into the curb if facing downhill or into traffic if facing uphill.
2. Have someone place chocks under the trailer wheels.
3. When the wheel chocks are in place, release the regular brakes until the chocks absorb the load.
4. Reapply the regular brakes. Then apply your parking brake and shift into PARK (P).
5. Release the regular brakes.

When You Are Ready to Leave After Parking on a Hill

1. Apply your regular brakes and hold the pedal down while you:
   - Start your engine;
   - Shift into a gear; and
   - Release the parking brake.
2. Let up on the brake pedal.
3. Drive slowly until the trailer is clear of the chocks.
4. Stop and have someone pick up and store the chocks.

Downloaded from www.Manualslib.com manuals search engine

Maintenance When Trailer Towing

Your vehicle will need service more often when you're pulling a trailer. See the Maintenance Schedule for more on this. Things that are especially important in trailer operation are automatic transmission fluid (don't overfill), engine oil, axle lubricant, belt, cooling system and brake system. Each of these is covered in this manual, and the Index will help you find them quickly. If you're trailering, it's a good idea to review these sections before you start your trip.

Check periodically to see that all hitch nuts and bolts are tight.

Trailer Wiring Harness

The trailer wiring harness is an eight-wire harness assembly. The harness is stored under the vehicle, on the driver's side corner frame crossmember. The harness is fused in the engine compartment fuse block. See "Fuses and Circuit Breakers" in the Index. The harness does not have a connector and should be wired by a qualified electrical technician.

The technician can use the following color code chart when connecting the wiring harness to your trailer.

- Dark Blue: Use for electric trailer brakes or auxiliary wiring.
- Red: Use for battery charging; it connects to the starter solenoid.
- Light Green: Back-up lamps.
- Brown: Taillamps and parking lamps.
- Yellow: Left stoplamp and turn signal.
- Dark Green: Right stoplamp and turn signal.
- White: Ground wire.
- Light Blue: Auxiliary stoplamp.

Securely attach the harness to the trailer, then tape or strap it to your vehicle's frame rail. Be sure you leave it loose enough so the wiring doesn't bend or break, but not so loose that it drags on the ground. Store the harness in its original place. Wrap the harness together and tie it neatly so it won't be damaged.

Downloaded from www.Manualslib.com manuals search engine

Section 5 Problems on the Road

Here you'll find what to do about some problems that can occur on the road.

5-2 Hazard Warning Flashers
5-2 Other Warning Devices
5-3 Jump Starting
5-7 Towing Your Vehicle
5-8 Engine Overheating
5-10 Cooling System
5-17 Engine Fan Noise
5-17 If a Tire Goes Flat
5-18 Changing a Flat Tire
5-27 If You're Stuck In Sand, Mud, Ice or Snow

Downloaded from www.Manualslib.com manuals search engine

Hazard Warning Flashers

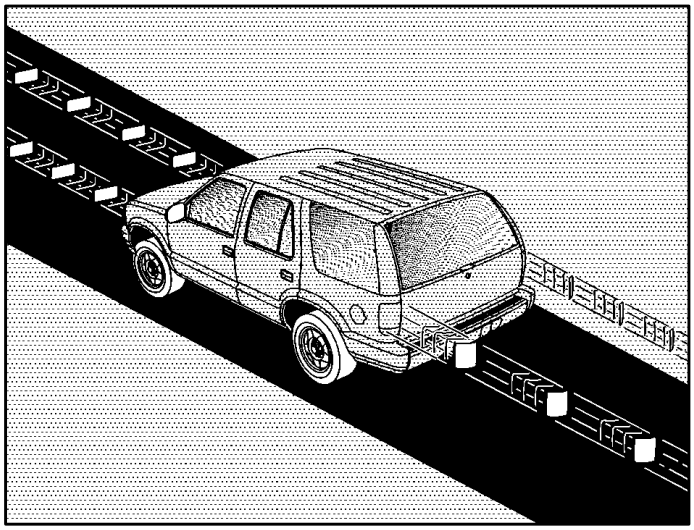

Your hazard warning flashers let you warn others. They also let police know you have a problem. Your front and rear turn signal lamps will flash on and off.

Press the button located on top of the steering column all the way down to make your front and rear turn signal lamps flash on and off.

Your hazard warning flashers work no matter what position your key is in, and even if the key isn't in.

To turn off the flashers, press the button until the first click and release.

When the hazard warning flashers are on, your turn signals won't work. The flashers will stop if you step on the brake.

Other Warning Devices

If you carry reflective triangles, you can set one up at the side of the road about 300 feet (100 m) behind your vehicle.

Downloaded from www.Manualslib.com manuals search engine

Jump Starting

If your battery has run down, you may want to use another vehicle and some jumper cables to start your vehicle. But please use the following steps to do it safely.

⚠ CAUTION:

Batteries can hurt you. They can be dangerous because:

- **They contain acid that can burn you.**
- **They contain gas that can explode or ignite.**
- **They contain enough electricity to burn you.**

If you don't follow these steps exactly, some or all of these things can hurt you.

NOTICE:

Ignoring these steps could result in costly damage to your vehicle that wouldn't be covered by your warranty.

The ACDelco® battery in your vehicle has a built-in hydrometer. Do not charge, test or jump start the battery if the hydrometer looks clear or light yellow. Replace the battery when there is a clear or light yellow hydrometer and a cranking complaint.

Trying to start your vehicle by pushing or pulling it won't work, and it could damage your vehicle.

1. Check the other vehicle. It must have a 12-volt battery with a negative ground system.

NOTICE:

If the other system isn't a 12-volt system with a negative ground, both vehicles can be damaged.

Downloaded from www.Manualslib.com manuals search engine

2. Get the vehicles close enough so the jumper cables can reach, but be sure the vehicles aren't touching each other. If they are, it could cause a ground connection you don't want. You wouldn't be able to start your vehicle, and the bad grounding could damage the electrical systems.

   To avoid the possibility of the vehicles rolling, set the parking brake firmly on both vehicles involved in the procedure. Put an automatic transmission vehicle in PARK (P) and a manual transmission vehicle in NEUTRAL.

3. Turn off the ignition on both vehicles. Unplug unnecessary accessories plugged into the cigarette lighter, or accessory power outlets, if you have this option. Turn off all lamps that aren't needed as well as radios. This will avoid sparks and help to save both batteries. In addition, it could save your radio!

NOTICE:

If you leave your radio on, it could be badly damaged. The repair wouldn't be covered by your warranty.

4. Open both hoods and locate the batteries. (Your vehicle's battery is located towards the front of the vehicle, on the passenger side of the engine compartment. See "Engine Compartment Overview" in the Index for more information on location.) Find the positive (+) and negative (-) terminals on each battery.

⚠ CAUTION:

Using a match near a battery can cause battery gas to explode. People have been hurt doing this, and some have been blinded. Use a flashlight if you need more light.

Be sure the battery has enough water. You don't need to add water to the ACDelco® battery installed in every new GM vehicle. But if a battery has filler caps, be sure the right amount of fluid is there. If it is low, add water to take care of that first. If you don't, explosive gas could be present.

Battery fluid contains acid that can burn you. Don't get it on you. If you accidentally get it in your eyes or on your skin, flush the place with water and get medical help immediately.

Downloaded from www.Manualslib.com manuals search engine

⚠ CAUTION:

Fans or other moving engine parts can injure you badly. Keep your hands away from moving parts once the engine is running.

5. Check that the jumper cables don't have loose or missing insulation. If they do, you could get a shock. The vehicles could be damaged too.

   Before you connect the cables, here are some basic things you should know. Positive (+) will go to positive (+) and negative (-) will go to a heavy, unpainted metal engine part. Don't connect positive (+) to negative (-) or you'll get a short that would damage the battery and maybe other parts too. And don't connect the negative (-) to negative (-).

6. Connect the red positive (+) cable to the positive (+) terminal of the vehicle with the dead battery.

7. Don't let the other end touch metal. Connect it to the positive (+) terminal of the good battery.

Downloaded from www.Manualslib.com manuals search engine

8. Now connect the black negative (-) cable to the good battery's negative (-) terminal.

9. Attach the cable at least 18 inches (45 cm) away from the dead battery, but not near engine parts that move. The electrical connection is just as good there, but the chance of sparks getting back to the battery is much less.

Don't let the other end touch anything until the next step. The other end of the negative (-) cable doesn't go to the dead battery. It goes to a heavy, unpainted metal part on the engine of the vehicle with the dead battery.

10. Now start the vehicle with the good battery and run the engine for a while.

11. Try to start the vehicle with the dead battery. If it won't start after a few tries, make sure all connections are good. If it still won't start, it probably needs service.

Downloaded from www.Manualslib.com manuals search engine

12. Remove the cables in reverse order following the diagram and instructions below to prevent electrical shorting. Take care that they don't touch each other or any other metal.

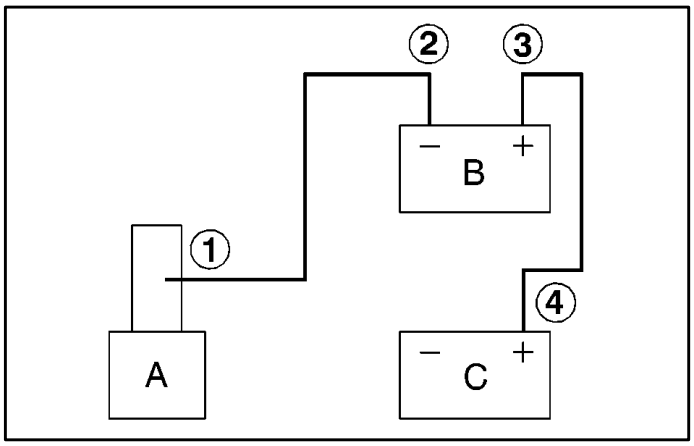

Jumper Cable Removal

A. Heavy, Unpainted Metal Engine Part

B. Good Battery

C. Dead Battery

To disconnect the jumper cables from both vehicles, do the following:

1. Disconnect the black negative (-) cable from the heavy, unpainted metal engine part on the vehicle with the dead battery.
2. Disconnect the black negative (-) cable from the negative (-) battery terminal on the vehicle with the good battery.
3. Disconnect the red positive (+) cable from the positive (+) battery terminal on the vehicle with the good battery.
4. Disconnect the red positive (+) cable from the positive battery terminal of the other vehicle.

Towing Your Vehicle

Consult your dealer or a professional towing service if you need to have your vehicle towed. See "Roadside Assistance" and "Recreational Vehicle Towing" in the Index.

Downloaded from www.Manualslib.com manuals search engine

Engine Overheating

You will find a coolant temperature gage on your vehicle's instrument panel. See "Gages" in the Index.

If Steam Is Coming From Your Engine

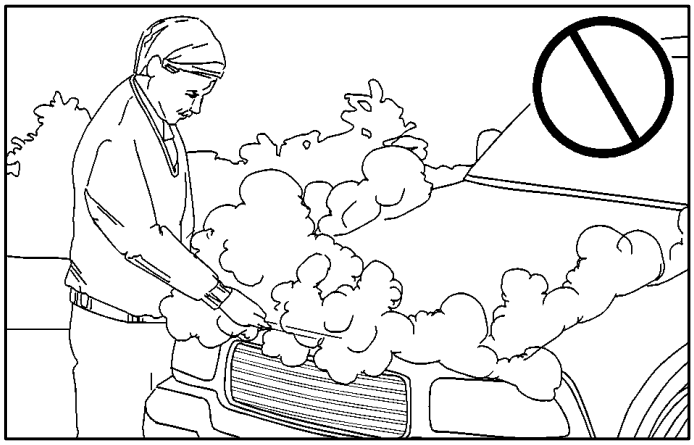

⚠ CAUTION:

Steam from an overheated engine can burn you badly, even if you just open the hood. Stay away from the engine if you see or hear steam coming from it. Just turn it off and get everyone away from the vehicle until it cools down. Wait until there is no sign of steam or coolant before you open the hood.

If you keep driving when your engine is overheated, the liquids in it can catch fire. You or others could be badly burned. Stop your engine if it overheats, and get out of the vehicle until the engine is cool.

NOTICE:

If your engine catches fire because you keep driving with no coolant, your vehicle can be badly damaged. The costly repairs would not be covered by your warranty.

Downloaded from www.Manualslib.com manuals search engine

If No Steam Is Coming From Your Engine

If you get an engine overheat warning but see or hear no steam, the problem may not be too serious. Sometimes the engine can get a little too hot when you:

- Climb a long hill on a hot day.
- Stop after high-speed driving.
- Idle for long periods in traffic.
- Tow a trailer.

If you get the overheat warning with no sign of steam, try this for a minute or so:

1. If your air conditioner is on, turn it off.
2. Turn on your heater to full hot at the highest fan speed and open the window as necessary.
3. If you're in a traffic jam, shift to NEUTRAL (N); otherwise, shift to the highest gear while driving -- DRIVE (D) or THIRD (3).

If you no longer have the overheat warning, you can drive. Just to be safe, drive slower for about 10 minutes. If the warning doesn't come back on, you can drive normally.

If the warning continues, pull over, stop, and park your vehicle right away.

If there's still no sign of steam, push down the accelerator until the engine speed is about twice as fast as normal idle speed for at least three minutes while you're parked. If you still have the warning, *turn off the engine and get everyone out of the vehicle* until it cools down.

You may decide not to lift the hood but to get service help right away.

Downloaded from www.Manualslib.com manuals search engine

Cooling System

When you decide it's safe to lift the hood, here's what you'll see:

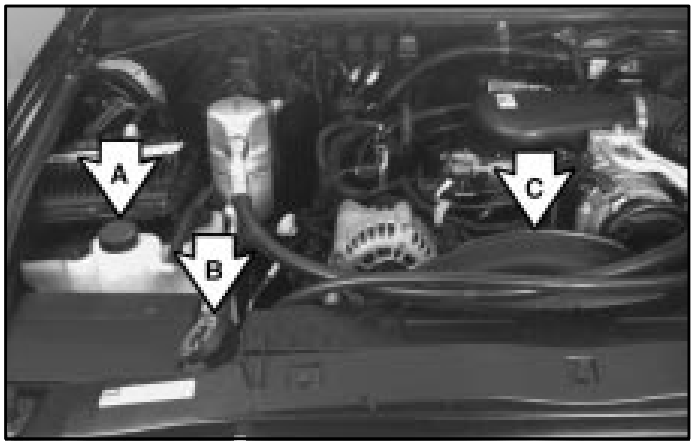

A. Coolant Recovery Tank

B. Radiator Pressure Cap

C. Engine Cooling Fan

If the coolant inside the coolant recovery tank is boiling, don't do anything else until it cools down.

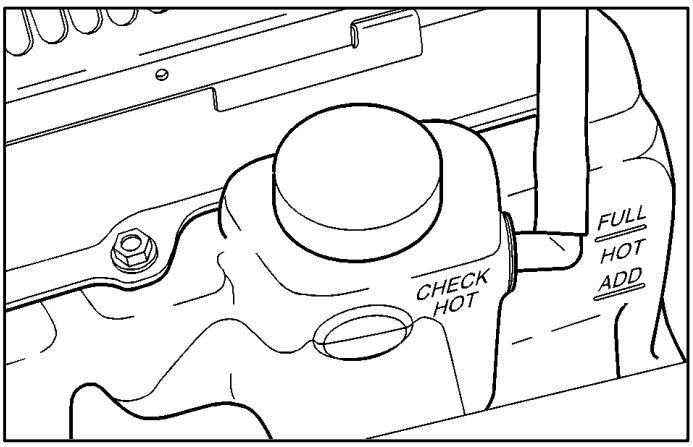

When the engine is cold, the coolant level should be at least up to the ADD mark. If it isn't, you may have a leak in the radiator hoses, heater hoses, radiator, water pump or somewhere else in the cooling system.

Downloaded from www.Manualslib.com manuals search engine

⚠ CAUTION:

Heater and radiator hoses, and other engine parts, can be very hot. Don't touch them. If you do, you can be burned.

Don't run the engine if there is a leak. If you run the engine, it could lose all coolant. That could cause an engine fire, and you could be burned. Get any leak fixed before you drive the vehicle.

NOTICE:

Engine damage from running your engine without coolant isn't covered by your warranty.

NOTICE:

When adding coolant, it is important that you use only DEX-COOL® (silicate-free) coolant.

If coolant other than DEX-COOL is added to the system, premature engine, heater core or radiator corrosion may result. In addition, the engine coolant will require change sooner -- at 30,000 miles (50 000 km) or 24 months, whichever occurs first. Damage caused by the use of coolant other than DEX-COOL® is not covered by your new vehicle warranty.

If there seems to be no leak, start the engine again. See if the engine cooling fan speed increases when idle speed is doubled by pushing the accelerator pedal down. If it doesn't, your vehicle needs service. Turn off the engine.

Downloaded from www.Manualslib.com manuals search engine

How to Add Coolant to the Coolant Recovery Tank

If you haven't found a problem yet, but the coolant level isn't at the ADD mark, add a 50/50 mixture of *clean, drinkable water* and DEX-COOL® engine coolant at the coolant recovery tank. See "Engine Coolant" in the Index for more information.

⚠ CAUTION:

Adding only plain water to your cooling system can be dangerous. Plain water, or some other liquid like alcohol, can boil before the proper coolant mixture will. Your vehicle's coolant warning system is set for the proper coolant mixture. With plain water or the wrong mixture, your engine could get too hot but you wouldn't get the overheat warning. Your engine could catch fire and you or others could be burned. Use a 50/50 mixture of clean, drinkable water and DEX-COOL® coolant.

NOTICE:

In cold weather, water can freeze and crack the engine, radiator, heater core and other parts. Use the recommended coolant and the proper coolant mixture.

Downloaded from www.Manualslib.com manuals search engine

⚠ CAUTION:

You can be burned if you spill coolant on hot engine parts. Coolant contains ethylene glycol and it will burn if the engine parts are hot enough. Don't spill coolant on a hot engine.

When the coolant in the coolant recovery tank is at the ADD mark, start your vehicle.

If the overheat warning continues, there's one more thing you can try. You can add the proper coolant mixture directly to the radiator, but be sure the cooling system is cool before you do it.

⚠ CAUTION:

Steam and scalding liquids from a hot cooling system can blow out and burn you badly. They are under pressure, and if you turn the radiator

CAUTION: (Continued)

CAUTION: (Continued)

pressure cap -- even a little -- they can come out at high speed. Never turn the cap when the cooling system, including the radiator pressure cap, is hot. Wait for the cooling system and radiator pressure cap to cool if you ever have to turn the pressure cap.

Downloaded from www.Manualslib.com manuals search engine

How to Add Coolant to the Radiator

1. You can remove the radiator pressure cap when the cooling system, including the radiator pressure cap and upper radiator hose, is no longer hot. Turn the pressure cap slowly counterclockwise until it first stops. (Don't press down while turning the pressure cap.)

   If you hear a hiss, wait for that to stop. A hiss means there is still some pressure left.

2. Then keep turning the pressure cap, but now push down as you turn it. Remove the pressure cap.

Downloaded from www.Manualslib.com manuals search engine

3. Fill the radiator with the proper DEX-COOL® coolant mixture, up to the base of the filler neck. See “Engine Coolant” in the Index for more information about the proper coolant mixture.
4. Then fill the coolant recovery tank to the ADD mark.
5. Put the cap back on the coolant recovery tank, but leave the radiator pressure cap off.

Downloaded from www.Manualslib.com manuals search engine

6. Start the engine and let it run until you can feel the upper radiator hose getting hot. Watch out for the engine cooling fan.
7. By this time, the coolant level inside the radiator filler neck may be lower. If the level is lower, add more of the proper DEX-COOL® coolant mixture through the filler neck until the level reaches the base of the filler neck.
8. Then replace the pressure cap. At any time during this procedure if coolant begins to flow out of the filler neck, reinstall the pressure cap. Be sure the arrows on the pressure cap line up like this.

Downloaded from www.Manualslib.com manuals search engine

Engine Fan Noise

This vehicle has a clutched engine cooling fan. When the clutch is engaged, the fan spins faster to provide more air to cool the engine. In most everyday driving conditions, the clutch is not engaged. This improves fuel economy and reduces fan noise. Under heavy vehicle loading, trailer towing and/or high outside temperatures, the fan speed increases when the clutch engages. So you may hear an increase in fan noise. This is normal and should not be mistaken as the transmission slipping or making extra shifts. It is merely the cooling system functioning properly. The fan will slow down when additional cooling is not required and the clutch disengages.

You may also hear this fan noise when you start the engine. It will go away as the fan clutch disengages.

If a Tire Goes Flat

It's unusual for a tire to "blow out" while you're driving, especially if you maintain your tires properly. If air goes out of a tire, it's much more likely to leak out slowly. But if you should ever have a "blowout," here are a few tips about what to expect and what to do:

If a front tire fails, the flat tire will create a drag that pulls the vehicle toward that side. Take your foot off the accelerator pedal and grip the steering wheel firmly. Steer to maintain lane position, and then gently brake to a stop well out of the traffic lane.

A rear blowout, particularly on a curve, acts much like a skid and may require the same correction you'd use in a skid. In any rear blowout, remove your foot from the accelerator pedal. Get the vehicle under control by steering the way you want the vehicle to go. It may be very bumpy and noisy, but you can still steer. Gently brake to a stop -- well off the road if possible.

If a tire goes flat, the next part shows how to use your jacking equipment to change a flat tire safely.

Downloaded from www.Manualslib.com manuals search engine

Changing a Flat Tire

If a tire goes flat, avoid further tire and wheel damage by driving slowly to a level place. Turn on your hazard warning flashers.

⚠ CAUTION:

Changing a tire can cause an injury. The vehicle can slip off the jack and roll over you or other people. You and they could be badly injured. Find a level place to change your tire. To help prevent the vehicle from moving:

1. **Set the parking brake firmly.**
2. **Put the shift lever in PARK (P).**
3. **Turn off the engine.**

To be even more certain the vehicle won't move, you can put blocks at the front and rear of the tire farthest away from the one being changed. That would be the tire on the other side of the vehicle, at the opposite end.

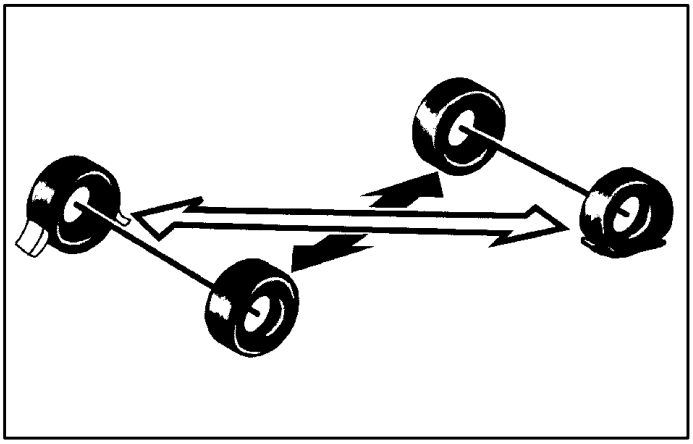

The following steps will tell you how to use the jack and change a tire.

Downloaded from www.Manualslib.com manuals search engine

Removing the Spare Tire and Tools

The jacking equipment you'll need is stored along the driver's side inner rear quarter panel. Your vehicle is also equipped with work gloves and a plastic ground mat to assist in the changing of a flat tire.

1. To remove the jack cover, pull up on the latch(es) located on the cover. Remove the wheel blocks, jack and wheel wrench.

The spare tire is stored underneath the vehicle.

NOTICE:

Never remove or restow a tire from/to a stowage position under the vehicle while the vehicle is supported by a jack. Always tighten the tire fully against the underside of the vehicle when restowing.

2. To remove the spare, insert the chisel end of the wheel wrench, on an angle, into the hole in the rear bumper. Be sure the chisel end of the wheel wrench connects into the hoist shaft.

Downloaded from www.Manualslib.com manuals search engine

Turn the wheel wrench counterclockwise to lower the spare tire. Keep turning the wheel wrench until the spare tire can be pulled out from under the vehicle.

3. When the tire has been completely lowered, tilt the retainer at the end of the cable and pull it through the wheel opening. Pull the tire out from under the vehicle.

NOTICE:

To help avoid vehicle damage, do not drive the vehicle before the cable is restored.

Put the spare tire near the flat tire.

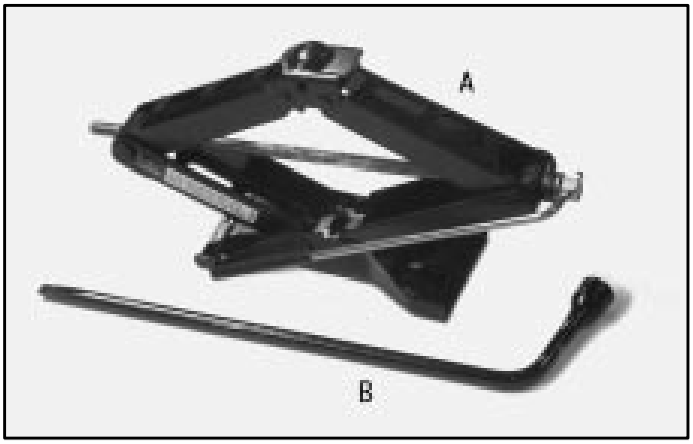

The tools you'll be using include the jack (A), and the wheel wrench (B).

Downloaded from www.Manualslib.com manuals search engine

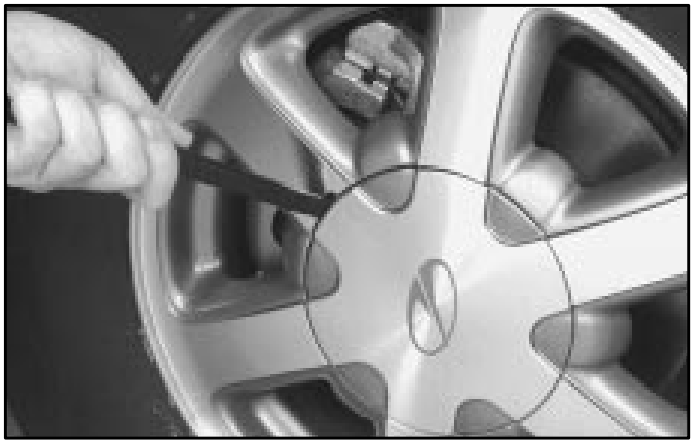

Position the chisel end of your wheel wrench in the notch of the hub cap and pry off the hub cap.

Removing the Flat Tire and Installing the Spare Tire

1. Using the wheel wrench, loosen all the wheel nuts. Don’t remove them yet.
2. Turn the jack handle clockwise to raise the jack lift head.

Downloaded from www.Manualslib.com manuals search engine

3. Fit the jack into the appropriate hole nearest the flat tire.

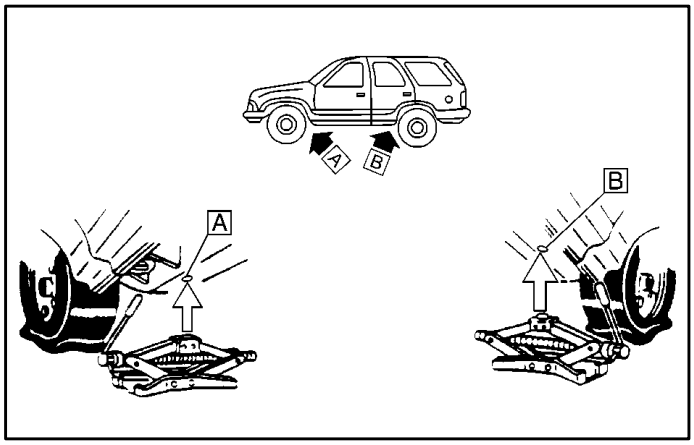

A. Front Frame Hole

B. Spring Hanger Hole

⚠ CAUTION:

Getting under a vehicle when it is jacked up is dangerous. If the vehicle slips off the jack, you could be badly injured or killed. Never get under a vehicle when it is supported only by a jack.

⚠ CAUTION:

Raising your vehicle with the jack improperly positioned can damage the vehicle and even make the vehicle fall. To help avoid personal injury and vehicle damage, be sure to fit the jack lift head into the proper location before raising the vehicle.

Downloaded from www.Manualslib.com manuals search engine

4. Raise the vehicle by turning the jack handle clockwise. Raise the vehicle far enough off the ground so there is enough room for the spare tire to fit.
5. Remove all the wheel nuts and take off the flat tire.

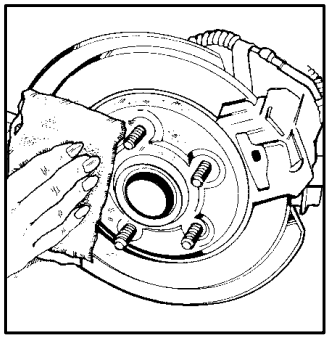

6. Remove any rust or dirt from the wheel bolts, mounting surfaces and spare wheel.

⚠ CAUTION:

Rust or dirt on the wheel, or on the parts to which it is fastened, can make the wheel nuts become loose after a time. The wheel could come off and cause an accident. When you change a wheel, remove any rust or dirt from the places where the wheel attaches to the vehicle. In an emergency, you can use a cloth or a paper towel to do this; but be sure to use a scraper or wire brush later, if you need to, to get all the rust or dirt off.

Downloaded from www.Manualslib.com manuals search engine

⚠ CAUTION:

Never use oil or grease on studs or nuts. If you do, the nuts might come loose. Your wheel could fall off, causing a serious accident.

7. Place the spare on the wheel mounting surface.

8. Put the nuts on by hand. Make sure the rounded end is toward the wheel.

   Tighten each nut by hand until the wheel is held against the hub. If a nut can't be turned by hand, use the wheel wrench and see your dealer as soon as possible.

9. Lower the vehicle by turning the jack handle counterclockwise. Lower the jack completely.

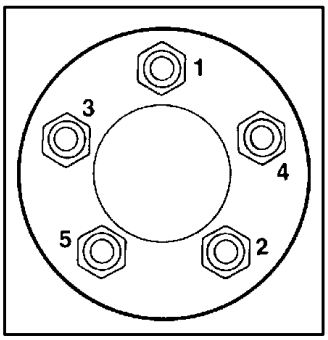

10. Use the wrench to tighten the wheel nuts firmly in a crisscross sequence as shown.

Downloaded from www.Manualslib.com manuals search engine

⚠ CAUTION:

Incorrect wheel nuts or improperly tightened wheel nuts can cause the wheel to become loose and even come off. This could lead to an accident. Be sure to use the correct wheel nuts. If you have to replace them, be sure to get new GM original equipment wheel nuts.

Stop somewhere as soon as you can and have the nuts tightened with a torque wrench to 100 lb-ft (140 N·m).

NOTICE:

Improperly tightened wheel nuts can lead to brake pulsation and rotor damage. To avoid expensive brake repairs, evenly tighten the wheel nuts in the proper sequence and to the proper torque specification.

Storing a Flat or Spare Tire and Tools

⚠ CAUTION:

Storing a jack, a tire or other equipment in the passenger compartment of the vehicle could cause injury. In a sudden stop or collision, loose equipment could strike someone. Store all these in the proper place.

NOTICE:

An aluminum wheel with a flat tire should always be stored under the vehicle with the hoist. However, storing it that way for an extended period could damage the wheel. To avoid this, have the wheel repaired as soon as possible.

Downloaded from www.Manualslib.com manuals search engine

Follow this diagram to store the spare or flat tire.

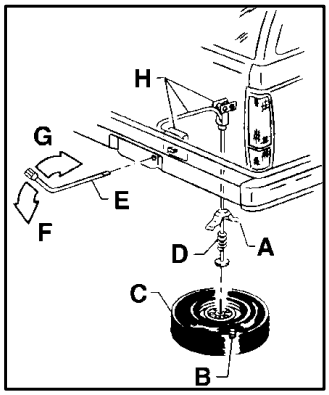

A. Retainer
B. Valve Stem (Pointed Down)
C. Spare Tire or Flat Tire
D. Spring
E. Wheel Wrench
F. Lower
G. Raise
H. Hoist Arm

1. Put the tire on the ground at the rear of the vehicle, with the valve stem pointed down and to the rear.
2. Pull the retainer through the wheel.
3. Put the chisel end of the wheel wrench, on an angle, through the hole in the rear bumper and into the hoist shaft.
4. Raise the tire fully against the underside of the vehicle. Continue turning the wheel wrench until the tire is secure and the cable is tight. The spare tire hoist cannot be overtightened.

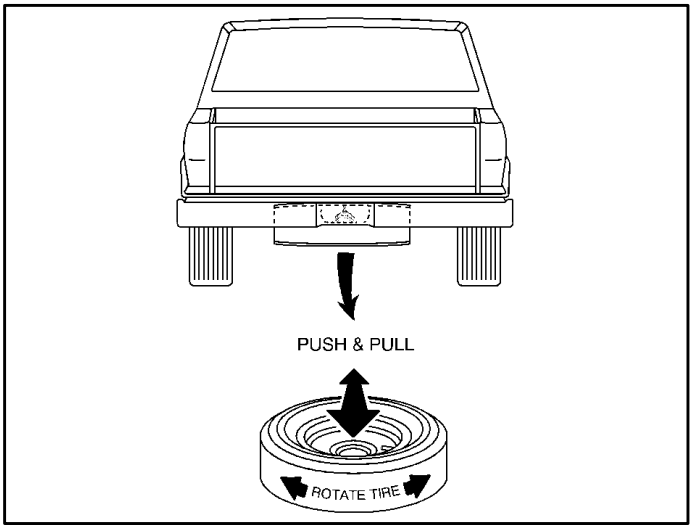

5. Make sure the tire is stored securely. Push, pull, and then try to rotate or turn the tire. If the tire moves, use the wheel wrench to tighten the cable.

⚠ CAUTION:

Make sure the tire and carrier are secure. Driving with the tire or carrier unlatched could injure pedestrians or damage the vehicle.

Downloaded from www.Manualslib.com manuals search engine

Return the jack, wheel wrench and wheel blocks to the proper location in your vehicle's rear area. Secure the items and replace the jack cover.

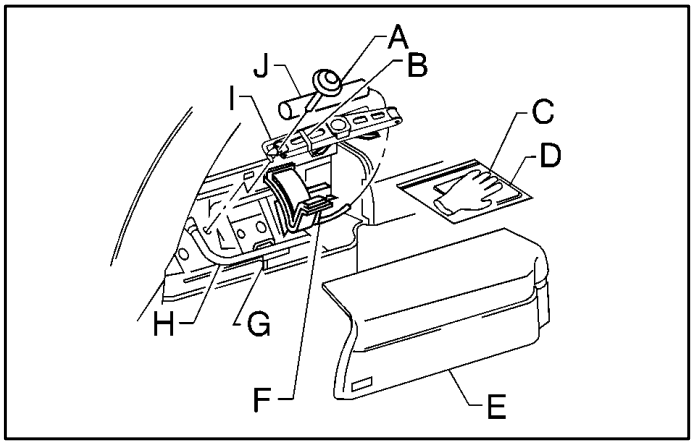

A. Retainer
B. Rubber Band (Some Models)
C. Work Gloves
D. Mat
E. Jack Storage Cover
F. Wheel Blocks
G. Hub Cap Removal Tool (Some Models)
H. Wheel Wrench
I. Jack
J. Jacking Instructions

If You're Stuck: In Sand, Mud, Ice or Snow

In order to free your vehicle when it is stuck, you will need to spin the wheels, but you don't want to spin your wheels too fast. The method known as "rocking" can help you get out when you're stuck, but you must use caution.

⚠ CAUTION:

If you let your tires spin at high speed, they can explode, and you or others could be injured. And, the transmission or other parts of the vehicle can overheat. That could cause an engine compartment fire or other damage. When you're stuck, spin the wheels as little as possible. Don't spin the wheels above 35 mph (55 km/h) as shown on the speedometer.

Downloaded from www.Manualslib.com manuals search engine

NOTICE:

Spinning your wheels can destroy parts of your vehicle as well as the tires. If you spin the wheels too fast while shifting your transmission back and forth, you can destroy your transmission.

For information about using tire chains on your vehicle, see “Tire Chains” in the Index.

Rocking Your Vehicle To Get It Out

First, turn your steering wheel left and right. That will clear the area around your front wheels. Then shift back and forth between REVERSE (R) and a forward gear, spinning the wheels as little as possible. Release the accelerator pedal while you shift, and press lightly on the accelerator pedal when the transmission is in gear. By slowly spinning your wheels in the forward and reverse directions, you will cause a rocking motion that may free your vehicle. If that doesn’t get you out after a few tries, you may need to be towed out. Or, you can use your recovery hooks if your vehicle has them. If you do need to be towed out, see “Towing Your Vehicle” in the Index.

Using the Recovery Hooks

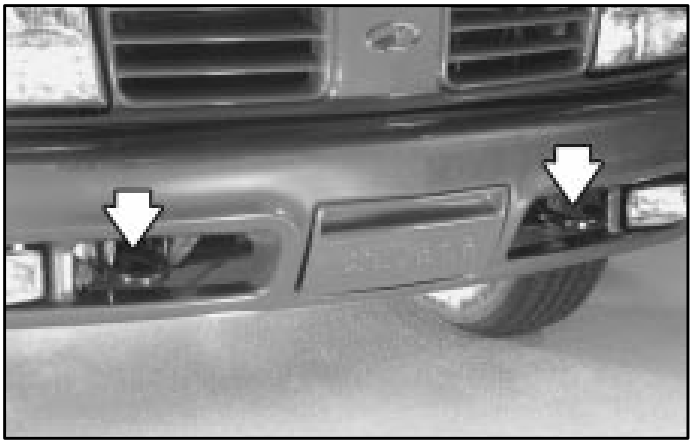

Your vehicle is equipped with recovery hooks. The recovery hooks are provided at the front of your vehicle. You may need to use them if you’re stuck off-road and need to be pulled to some place where you can continue driving.

Downloaded from www.Manualslib.com manuals search engine

⚠ CAUTION:

The recovery hooks, when used, are under a lot of force. Always pull the vehicle straight out. Never pull on the hooks at a sideways angle. The hooks could break off and you or others could be injured from the chain or cable snapping back.

NOTICE:

Never use the recovery hooks to tow the vehicle. Your vehicle could be damaged and it would not be covered by warranty.

Downloaded from www.Manualslib.com manuals search engine

Section 6 Service and Appearance Care

Here you will find information about the care of your vehicle. This section begins with service and fuel information, and then it shows how to check important fluid and lubricant levels. There is also technical information about your vehicle, and a part devoted to its appearance care.

6-2 Service
6-3 Fuel
6-5 Fuels in Foreign Countries
6-5 Filling Your Tank
6-7 Filling a Portable Fuel Container
6-8 Checking Things Under the Hood
6-10 Engine Oil
6-15 Engine Air Cleaner/Filter
6-16 Automatic Transmission Fluid
6-19 All-Wheel Drive
6-21 Rear Axle
6-21 Engine Coolant
6-25 Radiator Pressure Cap
6-25 Power Steering Fluid
6-26 Windshield Washer Fluid
6-27 Brakes
6-31 Battery
6-32 Bulb Replacement
6-35 Windshield Wiper Blade Replacement
6-37 Tires
6-44 Appearance Care
6-45 Cleaning the Inside of Your Vehicle
6-47 Care of Safety Belts
6-48 Cleaning the Outside of Your Vehicle
6-52 GM Vehicle Care/Appearance Materials
6-53 Vehicle Identification Number (VIN)
6-53 Service Parts Identification Label
6-54 Electrical System
6-60 Replacement Bulbs
6-60 Capacities and Specifications
6-61 Normal Maintenance Replacement Parts

Downloaded from www.Manualslib.com manuals search engine

Service

Your dealer knows your vehicle best and wants you to be happy with it. We hope you'll go to your dealer for all your service needs. You'll get genuine GM parts and GM-trained and supported service people.

We hope you'll want to keep your GM vehicle all GM. Genuine GM parts have one of these marks:

Doing Your Own Service Work

If you want to do some of your own service work, you'll want to use the proper service manual. It tells you much more about how to service your vehicle than this manual can. To order the proper service manual, see "Service and Owner Publications" in the Index.

Your vehicle has an air bag system. Before attempting to do your own service work, see "Servicing Your Air Bag-Equipped Vehicle" in the Index.

You should keep a record with all parts receipts and list the mileage and the date of any service work you perform. See "Maintenance Record" in the Index.

Downloaded from www.Manualslib.com manuals search engine

⚠ CAUTION:

You can be injured and your vehicle could be damaged if you try to do service work on a vehicle without knowing enough about it.

- **Be sure you have sufficient knowledge, experience, the proper replacement parts and tools before you attempt any vehicle maintenance task.**
- **Be sure to use the proper nuts, bolts and other fasteners. "English" and "metric" fasteners can be easily confused. If you use the wrong fasteners, parts can later break or fall off. You could be hurt.**

Adding Equipment to the Outside of Your Vehicle

Things you might add to the outside of your vehicle can affect the airflow around it. This may cause wind noise and affect windshield washer performance. Check with your dealer before adding equipment to the outside of your vehicle.

Fuel

Use regular unleaded gasoline rated at 87 octane or higher. It is recommended that the gasoline meet specifications which were developed by the American Automobile Manufacturers Association (AAMA) and endorsed by the Canadian Motor Vehicle Manufacturers Association for better vehicle performance and engine protection. Gasolines meeting the AAMA specification could provide improved driveability and emission control system performance compared to other gasolines.

Canada Only

In Canada, look for the "Auto Makers' Choice" label on the fuel pump.

Downloaded from www.Manualslib.com manuals search engine

Be sure the posted octane is at least 87. If the octane is less than 87, you may get a heavy knocking noise when you drive. If it's bad enough, it can damage your engine.

If you're using fuel rated at 87 octane or higher and you hear heavy knocking, your engine needs service. But don't worry if you hear a little pinging noise when you're accelerating or driving up a hill. That's normal, and you don't have to buy a higher octane fuel to get rid of pinging. It's the heavy, constant knock that means you have a problem.

If your vehicle is certified to meet California Emission Standards (indicated on the underhood emission control label), it is designed to operate on fuels that meet California specifications. If such fuels are not available in states adopting California emissions standards, your vehicle will operate satisfactorily on fuels meeting federal specifications, but emission control system performance may be affected. The malfunction indicator lamp on your instrument panel may turn on and/or your vehicle may fail a smog-check test. See "Malfunction Indicator Lamp" in the Index. If this occurs, return to your authorized Oldsmobile dealer for diagnosis to determine the cause of failure. In the event it is determined that the cause of the condition is the type of fuels used, repairs may not be covered by your warranty.

Some gasolines that are not reformulated for low emissions may contain an octane-enhancing additive called methylcyclopentadienyl manganese tricarbonyl (MMT); ask your service station operator whether or not the fuel contains MMT. General Motors does not recommend the use of such gasolines. If fuels containing MMT are used, spark plug life may be reduced and your emission control system performance may be affected. The malfunction indicator lamp on your instrument panel may turn on. If this occurs, return to your authorized Oldsmobile dealer for service.

To provide cleaner air, all gasolines in the United States are now required to contain additives that will help prevent deposits from forming in your engine and fuel system, allowing your emission control system to function properly. Therefore, you should not have to add anything to the fuel. In addition, gasolines containing oxygenates, such as ethers and ethanol, and reformulated gasolines may be available in your area to contribute to clean air. General Motors recommends that you use these gasolines, particularly if they comply with the specifications described earlier.

Downloaded from www.Manualslib.com manuals search engine

NOTICE:

Your vehicle was not designed for fuel that contains methanol. Don't use it. It can corrode metal parts in your fuel system and also damage plastic and rubber parts. That damage wouldn't be covered under your warranty.

Fuels in Foreign Countries

If you plan on driving in another country outside the United States or Canada, the proper fuel may be hard to find. Never use leaded gasoline or any other fuel not recommended in the previous text on fuel. Costly repairs caused by use of improper fuel wouldn't be covered by your warranty.

To check on fuel availability, ask an auto club, or contact a major oil company that does business in the country where you'll be driving.

Filling Your Tank

⚠ CAUTION:

Gasoline vapor is highly flammable. It burns violently, and that can cause very bad injuries. Don't smoke if you're near gasoline or refueling your vehicle. Keep sparks, flames and smoking materials away from gasoline.

The fuel cap is located behind a hinged door on the driver's side of your vehicle.

Downloaded from www.Manualslib.com manuals search engine

While refueling, hang the cap by the tether from the hook on the filler door.

To remove the cap, turn it slowly to the left (counterclockwise). The cap has a spring in it; if you let go of the cap too soon, it will spring back to the right.

⚠ CAUTION:

If you get gasoline on yourself and then something ignites it, you could be badly burned. Gasoline can spray out on you if you open the fuel filler cap too quickly. This spray can happen if your tank is nearly full, and is more likely in hot weather. Open the fuel filler cap slowly and wait for any "hiss" noise to stop. Then unscrew the cap all the way.

Be careful not to spill gasoline. Clean gasoline from painted surfaces as soon as possible. See "Cleaning the Outside of Your Vehicle" in the Index.

When you put the cap back on, turn it to the right (clockwise) until you hear a clicking sound. Make sure you fully install the cap. The diagnostic system can determine if the fuel cap has been left off or improperly installed. This would allow fuel to evaporate into the atmosphere. See "Malfunction Indicator Lamp" in the Index.

Downloaded from www.Manualslib.com manuals search engine

NOTICE:

If you need a new cap, be sure to get the right type. Your dealer can get one for you. If you get the wrong type, it may not fit properly. This may cause your malfunction indicator lamp to light and your fuel tank and emissions system may be damaged. See "Malfunction Indicator Lamp" in the Index.

Filling a Portable Fuel Container

⚠ CAUTION:

Never fill a portable fuel container while it is in your vehicle. Static electricity discharge from the container can ignite the gasoline vapor. You can be badly burned and your vehicle damaged if this occurs. To help avoid injury to you and others:

- **Dispense gasoline only into approved containers.**
- **Do not fill a container while it is inside a vehicle, in a vehicle's trunk, pickup bed or on any surface other than the ground.**
- **Bring the fill nozzle in contact with the inside of the fill opening before operating the nozzle. Contact should be maintained until the filling is complete.**
- **Don't smoke while pumping gasoline.**

Downloaded from www.Manualslib.com manuals search engine

Checking Things Under the Hood

⚠ CAUTION:

Things that burn can get on hot engine parts and start a fire. These include liquids like fuel, oil, coolant, brake fluid, windshield washer and other fluids, and plastic or rubber. You or others could be burned. Be careful not to drop or spill things that will burn onto a hot engine.

Hood Release

To open the hood, first pull the handle located inside the vehicle on the lower driver's side of the instrument panel.

Then go to the front of the vehicle and release the secondary hood release.

Lift the hood, release the hood prop from its retainer and put the hood prop into the slot in the hood. Your vehicle may have a lamp that comes on when you lift the hood.

Downloaded from www.Manualslib.com manuals search engine

Engine Compartment Overview

When you lift the hood, you'll see these items:

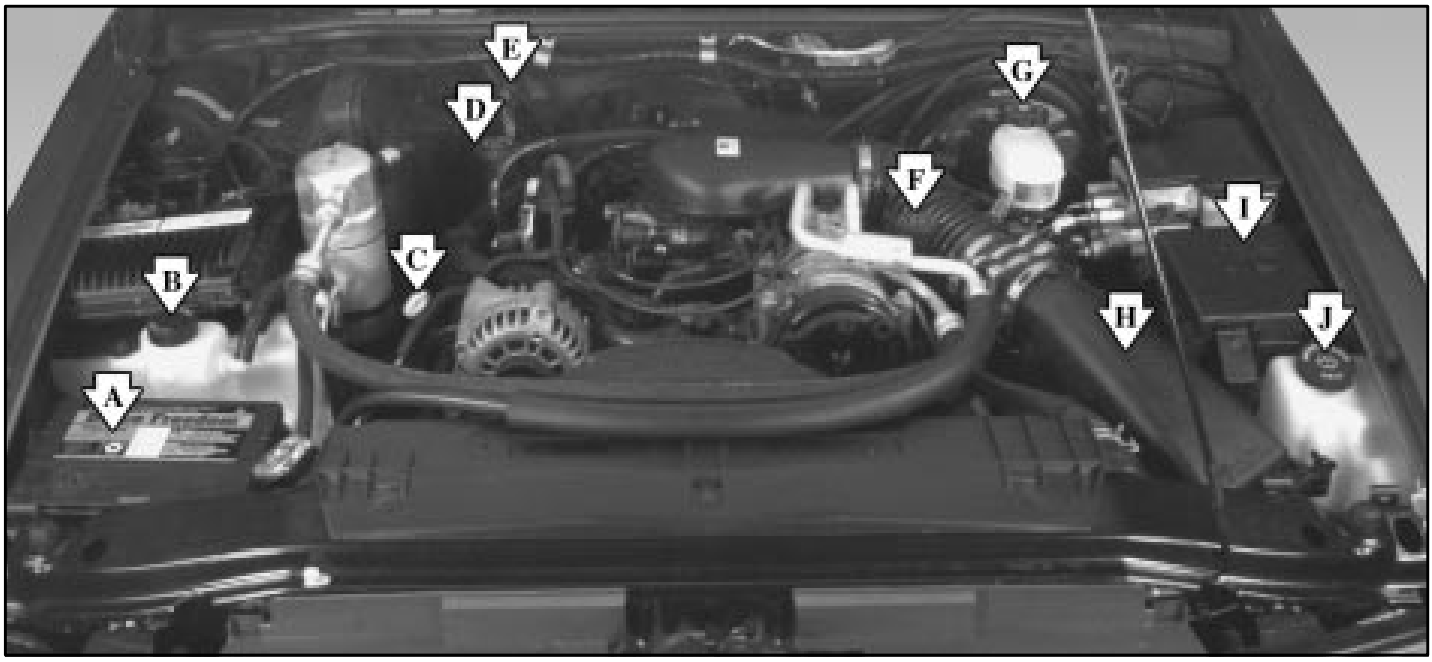

A. Battery
B. Coolant Recovery Tank
C. Engine Oil Dipstick
D. Engine Oil Fill
E. Transmission Dipstick
F. Power Steering Reservoir
G. Brake Master Cylinder
H. Engine Air Cleaner/Filter
I. Engine Compartment Fuse Block
J. Windshield Washer Fluid Reservoir

Downloaded from www.Manualslib.com manuals search engine

Before closing the hood, be sure all the filler caps are on properly. Then lift the hood to relieve pressure on the hood prop.

Remove the hood prop from the slot in the hood and return the prop to its retainer.

Then just pull the hood down firmly to close. It will latch when dropped from 10 to 12 inches (25 to 30 cm) without pressing on the hood.

Engine Oil

Checking Engine Oil

It's a good idea to check your engine oil every time you get fuel. In order to get an accurate reading, the oil must be warm and the vehicle must be on level ground.

The oil dipstick is a yellow ring located toward the front of vehicle in the engine compartment. See "Engine Compartment Overview" in the Index for more information on location.

Turn off the engine and give the oil several minutes to drain back into the oil pan. If you don't, the oil dipstick might not show the actual level.

Downloaded from www.Manualslib.com manuals search engine

Pull out the dipstick and clean it with a paper towel or cloth, then push it back in all the way. Remove it again, keeping the tip down, and check the level.

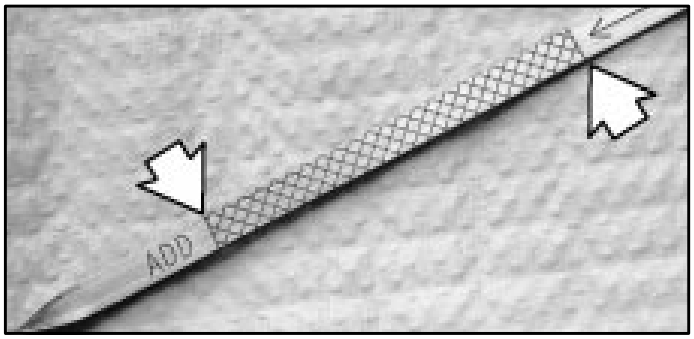

When to Add Engine Oil

If the oil is at or below the ADD line, then you'll need to add at least one quart of oil. But you must use the right kind. This part explains what kind of oil to use. For crankcase capacity, see "Capacities and Specifications" in the Index.

NOTICE:

Don't add too much oil. If your engine has so much oil that the oil level gets above the cross-hatched area that shows the proper operating range, your engine could be damaged.

Remove the engine oil fill cap to add oil to your vehicle's engine. You can locate the engine oil fill cap on the passenger side of the engine in the engine compartment. For more information on location, see "Engine Compartment Overview" in the Index.

Be sure to fill it enough to put the level somewhere in the proper operating range. Push the dipstick all the way back in when you're through.

Downloaded from www.Manualslib.com manuals search engine

What Kind of Engine Oil to Use

Oils recommended for your vehicle can be identified by looking for the starburst symbol.

This symbol indicates that the oil has been certified by the American Petroleum Institute (API). Do not use any oil which does not carry this starburst symbol.

If you change your own oil, be sure you use oil that has the starburst symbol on the front of the oil container. If you have your oil changed for you, be sure the oil put into your engine is American Petroleum Institute certified for gasoline engines.

You should also use the proper viscosity oil for your vehicle, as shown in the following chart:

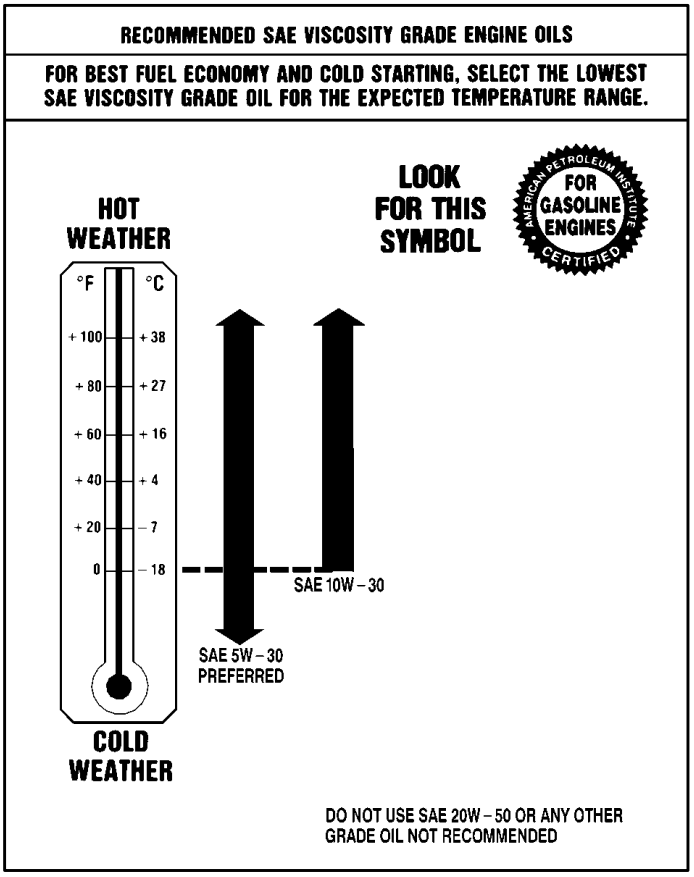

Downloaded from www.Manualslib.com manuals search engine

As in the chart shown previously, SAE 5W-30 is best for your vehicle. However, you can use SAE 10W-30 if it's going to be 0°F (-18°C) or above. These numbers on an oil container show its viscosity, or thickness. Do not use other viscosity oils, such as SAE 20W-50.

NOTICE:

Use only engine oil with the American Petroleum Institute Certified For Gasoline Engines starburst symbol. Failure to use the recommended oil can result in engine damage not covered by your warranty.

GM Goodwrench® oil meets all the requirements for your vehicle.

If you are in an area where the temperature falls below -20°F (-29°C), consider using either an SAE 5W-30 synthetic oil or an SAE 0W-30 oil. Both will provide easier cold starting and better protection for your engine at extremely low temperatures.

Engine Oil Additives

Don't add anything to your oil. The recommended oils with the starburst symbol are all you will need for good performance and engine protection.

When to Change Engine Oil

If any one of these is true for you, use the short trip/city maintenance schedule:

- Most trips are less than 5 to 10 miles (8 to 16 km). This is particularly important when outside temperatures are below freezing.
- Most trips include extensive idling (such as frequent driving in stop-and-go traffic).
- You operate your vehicle in dusty areas or off-road frequently.
- You frequently tow a trailer or use a carrier on top of your vehicle.
- The vehicle is used for delivery service, police, taxi or other commercial application.

Driving under these conditions causes engine oil to break down sooner. If any one of these is true for your vehicle, then you need to change your oil and filter every 3,000 miles (5 000 km) or 3 months -- whichever occurs first.

Downloaded from www.Manualslib.com manuals search engine

If none of them is true, use the long trip/highway maintenance schedule. Change the oil and filter every 7,500 miles (12 500 km) or 12 months -- whichever occurs first. Driving a vehicle with a fully warmed engine under highway conditions causes engine oil to break down slower.

Remote Oil Filter

The access door for the remote oil filter is in the steering linkage shield assembly located under the radiator support. Turn the screw to unlock or lock the door. If you open the door, make sure it is securely closed when you are finished.

What to Do with Used Oil

Did you know that used engine oil contains certain elements that may be unhealthy for your skin and could even cause cancer? Don't let used oil stay on your skin for very long. Clean your skin and nails with soap and water, or a good hand cleaner. Wash or properly throw away clothing or rags containing used engine oil. See the manufacturer's warnings about the use and disposal of oil products.

Used oil can be a real threat to the environment. If you change your own oil, be sure to drain all free-flowing oil from the filter before disposal. Don't ever dispose of oil by putting it in the trash, pouring it on the ground, into sewers, or into streams or bodies of water. Instead, recycle it by taking it to a place that collects used oil. If you have a problem properly disposing of your used oil, ask your dealer, a service station or a local recycling center for help.

Downloaded from www.Manualslib.com manuals search engine

Engine Air Cleaner/Filter

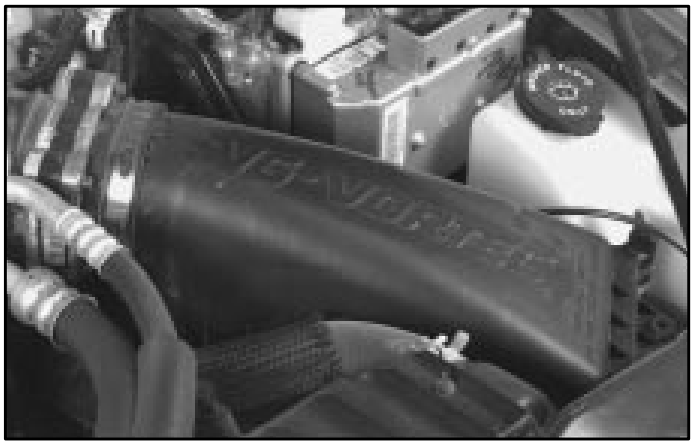

The engine air cleaner/filter is located in the engine compartment on the driver's side, near the front of the engine compartment. See "Engine Compartment Overview" in the Index for more information on location.

1. To remove the engine air cleaner/filter, remove the fasteners that hold the cover on.
2. Remove the cover and lift out the engine air cleaner/filter.
3. Insert a new engine air cleaner/filter, then reinstall the engine air cleaner/filter cover.
4. Tighten the fasteners to hold the cover in place.

Refer to the Maintenance Schedule to determine when to replace the engine air cleaner/filter.

See "Scheduled Maintenance Services" in the Index.

⚠ CAUTION:

Operating the engine with the air cleaner/filter off can cause you or others to be burned. The air cleaner not only cleans the air, it stops flame if the engine backfires. If it isn't there, and the engine backfires, you could be burned. Don't drive with it off, and be careful working on the engine with the air cleaner/filter off.

NOTICE:

If the air cleaner/filter is off, a backfire can cause a damaging engine fire. And, dirt can easily get into your engine, which will damage it. Always have the air cleaner/filter in place when you're driving.

Downloaded from www.Manualslib.com manuals search engine

Automatic Transmission Fluid

When to Check and Change

A good time to check your automatic transmission fluid level is when the engine oil is changed.

Change both the fluid and filter every 15,000 miles (25 000 km) if the vehicle is mainly driven under one or more of these conditions:

- In heavy city traffic where the outside temperature regularly reaches 90°F (32°C) or higher.
- In hilly or mountainous terrain.
- When doing frequent trailer towing.
- Uses such as found in taxi, police or delivery service.

If you do not use your vehicle under any of these conditions, change the fluid and filter every 50,000 miles (83 000 km).

See “Scheduled Maintenance Services” in the Index.

How to Check

Because this operation can be a little difficult, you may choose to have this done at the dealership service department.

If you do it yourself, be sure to follow all the instructions here, or you could get a false reading on the dipstick.

NOTICE:

Too much or too little fluid can damage your transmission. Too much can mean that some of the fluid could come out and fall on hot engine parts or exhaust system parts, starting a fire. Be sure to get an accurate reading if you check your transmission fluid.

Wait at least 30 minutes before checking the transmission fluid level if you have been driving:

- When outside temperatures are above 90°F (32°C).
- At high speed for quite a while.
- In heavy traffic -- especially in hot weather.
- While pulling a trailer.

Downloaded from www.Manualslib.com manuals search engine

To get the right reading, the fluid should be at normal operating temperature, which is 180°F to 200°F (82°C to 93°C).

Get the vehicle warmed up by driving about 15 miles (24 km) when outside temperatures are above 50°F (10°C). If it's colder than 50°F (10°C), drive the vehicle in THIRD (3) until the engine temperature gage moves and then remains steady for 10 minutes.

A cold fluid check can be made after the vehicle has been sitting for eight hours or more with the engine off, but this is used only as a reference. Let the engine run at idle for five minutes if outside temperatures are 50°F (10°C) or more. If it's colder than 50°F (10°C), you may have to idle the engine longer. Should the fluid level be low during this cold check, you *must* check the fluid hot before adding fluid. Checking the fluid hot will give you a more accurate reading of the fluid level.

Checking the Fluid Level

Prepare your vehicle as follows:

- Park your vehicle on a level place. Keep the engine running.
- With the parking brake applied, place the shift lever in PARK (P).
- With your foot on the brake pedal, move the shift lever through each gear range, pausing for about three seconds in each range. Then, position the shift lever in PARK (P).
- Let the engine run at idle for three minutes or more.

Downloaded from www.Manualslib.com manuals search engine

Then, without shutting off the engine, follow these steps:

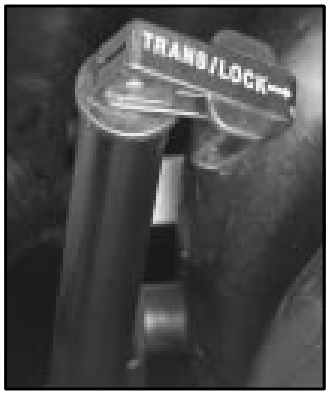

The dipstick is located toward the rear of the engine compartment. See “Engine Compartment Overview” in the Index for more information on location.

1. Flip the handle up and then pull out the dipstick and wipe it with a clean rag or paper towel.
2. Push it back in all the way, wait three seconds and then pull it back out again.

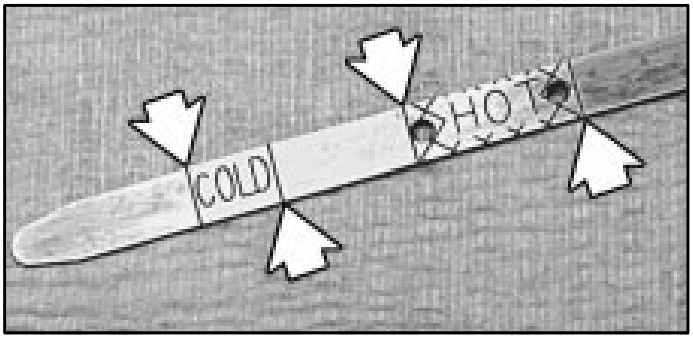

3. Check both sides of the dipstick, and read the lower level. The fluid level must be in the COLD area, below the cross-hatched area, for a cold check or in the HOT area or cross-hatched area for a hot check.
4. If the fluid level is in the acceptable range, push the dipstick back in all the way; then flip the handle down to lock the dipstick in place.

Downloaded from www.Manualslib.com manuals search engine

How to Add Fluid

Refer to the Maintenance Schedule to determine what kind of transmission fluid to use. See “Recommended Fluids and Lubricants” in the Index.

Add fluid only after checking the transmission fluid while it is hot. (A cold check is used only as a reference.) If the fluid level is low, add only enough of the proper fluid to bring the level up to the HOT area for a hot check. It doesn’t take much fluid, generally less than one pint (0.5 L). *Don’t overfill.*

NOTICE:

We recommend you use only fluid labeled DEXRON®-III, because fluid with that label is made especially for your automatic transmission. Damage caused by fluid other than DEXRON®-III is not covered by your new vehicle warranty.

- After adding fluid, recheck the fluid level as described under “How to Check.”
- When the correct fluid level is obtained, push the dipstick back in all the way; then flip the handle down to lock the dipstick in place.

All-Wheel Drive

Transfer Case

When to Check Lubricant

Refer to the Maintenance Schedule to determine how often to check the lubricant. See “Periodic Maintenance Inspections” in the Index.

How to Check Lubricant

If the level is below the bottom of the filler plug hole, you’ll need to add some lubricant. Add enough lubricant to raise the level to the bottom of the filler plug hole.

Downloaded from www.Manualslib.com manuals search engine

What to Use

Refer to the Maintenance Schedule to determine what kind of lubricant to use. See “Recommended Fluids and Lubricants” in the Index.

Front Axle

When to Check and Change Lubricant

Refer to the Maintenance Schedule to determine how often to check the lubricant and when to change it. See “Scheduled Maintenance Services” in the Index.

How to Check Lubricant

If the level is below the bottom of the filler plug hole, you’ll need to add some lubricant. Add enough lubricant to raise the level to the bottom of the filler plug hole. A fluid loss could indicate a problem; check and have it repaired, if needed.

What to Use

Refer to the Maintenance Schedule to determine what kind of lubricant to use. See “Recommended Fluids and Lubricants” in the Index.

Downloaded from www.Manualslib.com manuals search engine

Rear Axle

When to Check and Change Lubricant

Refer to the Maintenance Schedule to determine how often to check the lubricant and when to change it. See “Scheduled Maintenance Services” in the Index.

How to Check Lubricant

If the level is below the bottom of the filler plug hole, you’ll need to add some lubricant. Add enough lubricant to raise the level to the bottom of the filler plug hole.

What to Use

Refer to the Maintenance Schedule to determine what kind of lubricant to use. See “Recommended Fluids and Lubricants” in the Index.

Engine Coolant

The cooling system in your vehicle is filled with DEX-COOL® engine coolant. This coolant is designed to remain in your vehicle for 5 years or 150,000 miles (240 000 km), whichever occurs first, if you add only DEX-COOL® extended life coolant.

The following explains your cooling system and how to add coolant when it is low. If you have a problem with engine overheating, see “Engine Overheating” in the Index.

A 50/50 mixture of clean, drinkable water and DEX-COOL® coolant will:

- Give freezing protection down to -34°F (-37°C).
- Give boiling protection up to 265°F (129°C).
- Protect against rust and corrosion.
- Help keep the proper engine temperature.
- Let the warning lights and gages work as they should.

Downloaded from www.Manualslib.com manuals search engine

NOTICE:

When adding coolant, it is important that you use only DEX-COOL® (silicate-free) coolant.

If coolant other than DEX-COOL is added to the system, premature engine, heater core or radiator corrosion may result. In addition, the engine coolant will require change sooner -- at 30,000 miles (50 000 km) or 24 months, whichever occurs first. Damage caused by the use of coolant other than DEX-COOL® is not covered by your new vehicle warranty.

What to Use

Use a mixture of one-half *clean, drinkable water* and one-half DEX-COOL® coolant which won't damage aluminum parts. If you use this coolant mixture, you don't need to add anything else.

⚠ CAUTION:

Adding only plain water to your cooling system can be dangerous. Plain water, or some other liquid like alcohol, can boil before the proper coolant mixture will. Your vehicle's coolant warning system is set for the proper coolant mixture. With plain water or the wrong mixture, your engine could get too hot but you wouldn't get the overheat warning. Your engine could catch fire and you or others could be burned. Use a 50/50 mixture of clean, drinkable water and DEX-COOL® coolant.

Downloaded from www.Manualslib.com manuals search engine

NOTICE:

If you use an improper coolant mixture, your engine could overheat and be badly damaged. The repair cost wouldn't be covered by your warranty. Too much water in the mixture can freeze and crack the engine, radiator, heater core and other parts.

If you have to add coolant more than four times a year, have your dealer check your cooling system.

NOTICE:

If you use the proper coolant, you don't have to add extra inhibitors or additives which claim to improve the system. These can be harmful.

Checking Coolant

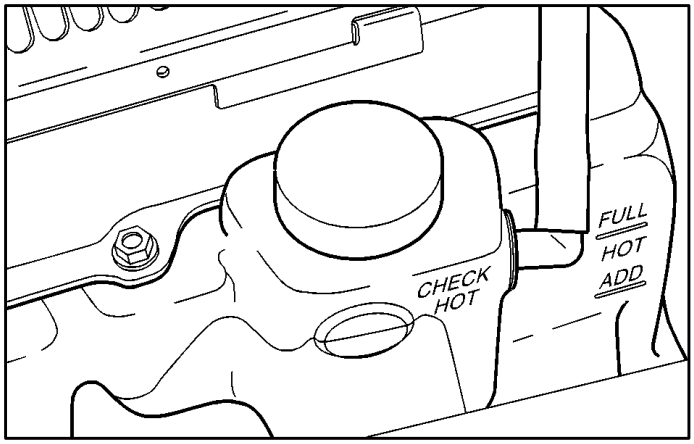

To check the vehicle's coolant level, locate the coolant recovery tank in the engine compartment on the passenger side of the vehicle. See "Engine Compartment Overview" in the Index for more information on location.

The vehicle must be on a level surface. When your engine is cold, the coolant level should be at ADD, or a little higher. When your engine is warm, the level should be up to FULL HOT, or a little higher.

Downloaded from www.Manualslib.com manuals search engine

Adding Coolant

If you need more coolant, add the proper DEX-COOL® coolant mixture *at the coolant recovery tank.*

⚠ CAUTION:

Turning the radiator pressure cap when the engine and radiator are hot can allow steam and scalding liquids to blow out and burn you badly. With the coolant recovery tank, you will almost never have to add coolant at the radiator. Never turn the radiator pressure cap -- even a little -- when the engine and radiator are hot.

Add coolant mixture at the recovery tank, but be careful not to spill it.

⚠ CAUTION:

You can be burned if you spill coolant on hot engine parts. Coolant contains ethylene glycol, and it will burn if the engine parts are hot enough. Don't spill coolant on a hot engine.

Occasionally check the coolant level in the radiator. For information on how to add coolant to the radiator, see "Cooling System" in the Index.

Downloaded from www.Manualslib.com manuals search engine

Radiator Pressure Cap

NOTICE:

Your radiator cap is a 15 psi (105 kPa) pressure-type cap and must be tightly installed to prevent coolant loss and possible engine damage from overheating. Be sure the arrows on the cap line up with the overflow tube on the radiator filler neck.

Power Steering Fluid

When to Check Power Steering Fluid

It is not necessary to regularly check power steering fluid unless you suspect there is a leak in the system or you hear an unusual noise. A fluid loss in this system could indicate a problem. Have the system inspected and repaired.

You can locate the power steering fluid reservoir near the driver's side of the engine compartment. See "Engine Compartment Overview" in the Index for more information on power steering reservoir location.

Downloaded from www.Manualslib.com manuals search engine

How to Check Power Steering Fluid

Turn the key off, let the engine compartment cool down, wipe the cap and the top of the reservoir clean, then unscrew the cap and wipe the dipstick with a clean rag. Replace the cap and completely tighten it. Then remove the cap again and look at the fluid level on the dipstick.

The level should be between the ADD and FULL marks. If necessary, add only enough fluid to bring the level up to the proper range.

What to Use

To determine what kind of fluid to use, see "Recommended Fluids and Lubricants" in the Index. Always use the proper fluid. Failure to use the proper fluid can cause leaks and damage hoses and seals.

Windshield Washer Fluid

What to Use

When you need windshield washer fluid, be sure to read the manufacturer's instructions before use. If you will be operating your vehicle in an area where the temperature may fall below freezing, use a fluid that has sufficient protection against freezing.

Adding Washer Fluid

The washer fluid tank is located near the front of the vehicle on the driver's side of the engine compartment. See "Engine Compartment Overview" in the Index for more information on washer fluid tank location.

Open the cap labeled WASHER FLUID ONLY with the washer symbol on it. Add washer fluid until the tank is full.

Downloaded from www.Manualslib.com manuals search engine

NOTICE:

- **When using concentrated washer fluid, follow the manufacturer's instructions for adding water.**
- **Don't mix water with ready-to-use washer fluid. Water can cause the solution to freeze and damage your washer fluid tank and other parts of the washer system. Also, water doesn't clean as well as washer fluid.**
- **Fill your washer fluid tank only three-quarters full when it's very cold. This allows for expansion if freezing occurs, which could damage the tank if it is completely full.**
- **Don't use engine coolant (antifreeze) in your windshield washer. It can damage your washer system and paint.**

Brakes

Brake Fluid

Your brake master cylinder reservoir is filled with DOT-3 brake fluid. See "Engine Compartment Overview" in the Index for the location of the reservoir.

There are only two reasons why the brake fluid level in the reservoir might go down. The first is that the brake fluid goes down to an acceptable level during normal brake lining wear. When new linings are put in, the fluid level goes back up.

Downloaded from www.Manualslib.com manuals search engine

The other reason is that fluid is leaking out of the brake system. If it is, you should have your brake system fixed, since a leak means that sooner or later your brakes won't work well, or won't work at all.

So, it isn't a good idea to "top off" your brake fluid. Adding brake fluid won't correct a leak. If you add fluid when your linings are worn, then you'll have too much fluid when you get new brake linings. You should add (or remove) brake fluid, as necessary, only when work is done on the brake hydraulic system.

⚠ CAUTION:

If you have too much brake fluid, it can spill on the engine. The fluid will burn if the engine is hot enough. You or others could be burned, and your vehicle could be damaged. Add brake fluid only when work is done on the brake hydraulic system. See "Checking Brake Fluid" in this section.

Refer to the Maintenance Schedule to determine when to check your brake fluid. See "Periodic Maintenance Inspections" in the Index.

Checking Brake Fluid

You can check the brake fluid without taking off the cap.

Just look at the brake fluid reservoir. The fluid level should be above MIN. If it isn't, have your brake system checked to see if there is a leak.

After work is done on the brake hydraulic system, make sure the level is above the MIN but not over the MAX mark.

Downloaded from www.Manualslib.com manuals search engine

What to Add

When you do need brake fluid, use only DOT-3 brake fluid. Refer to “Recommended Fluids and Lubricants” in the Index. Use new brake fluid from a sealed container only.

Always clean the brake fluid reservoir cap and the area around the cap before removing it. This will help keep dirt from entering the reservoir.

⚠ CAUTION:

With the wrong kind of fluid in your brake system, your brakes may not work well, or they may not even work at all. This could cause a crash. Always use the proper brake fluid.

NOTICE:

- **Using the wrong fluid can badly damage brake system parts. For example, just a few drops of mineral-based oil, such as engine oil, in your brake system can damage brake system parts so badly that they’ll have to be replaced. Don’t let someone put in the wrong kind of fluid.**
- **If you spill brake fluid on your vehicle’s painted surfaces, the paint finish can be damaged. Be careful not to spill brake fluid on your vehicle. If you do, wash it off immediately. See “Appearance Care” in the Index.**

Downloaded from www.Manualslib.com manuals search engine

Brake Wear

Your vehicle has four-wheel disc brakes.

Disc brake pads have built-in wear indicators that make a high-pitched warning sound when the brake pads are worn and new pads are needed. The sound may come and go or be heard all the time your vehicle is moving (except when you are pushing on the brake pedal firmly).

⚠ CAUTION:

The brake wear warning sound means that soon your brakes won't work well. That could lead to an accident. When you hear the brake wear warning sound, have your vehicle serviced.

NOTICE:

Continuing to drive with worn-out brake pads could result in costly brake repair.

Some driving conditions or climates may cause a brake squeal when the brakes are first applied or lightly applied. This does not mean something is wrong with your brakes.

Properly torqued wheel nuts are necessary to help prevent brake pulsation. When tires are rotated, inspect brake pads for wear and evenly tighten wheel nuts in the proper sequence to GM torque specifications.

Brake linings should always be replaced as complete axle sets.

See "Brake System Inspection" in Section 7 of this manual under Part C "Periodic Maintenance Inspections."

Brake Pedal Travel

See your dealer if the brake pedal does not return to normal height, or if there is a rapid increase in pedal travel. This could be a sign of brake trouble.

Brake Adjustment

Every time you make a brake stop, your disc brakes adjust for wear.

Downloaded from www.Manualslib.com manuals search engine

Replacing Brake System Parts

The braking system on a vehicle is complex. Its many parts have to be of top quality and work well together if the vehicle is to have really good braking. Your vehicle was designed and tested with top-quality GM brake parts. When you replace parts of your braking system -- for example, when your brake linings wear down and you have to have new ones put in -- be sure you get new approved GM replacement parts. If you don't, your brakes may no longer work properly. For example, if someone puts in brake linings that are wrong for your vehicle, the balance between your front and rear brakes can change -- for the worse. The braking performance you've come to expect can change in many other ways if someone puts in the wrong replacement brake parts.

Battery

Your new vehicle comes with a maintenance free ACDelco® battery. When it's time for a new battery, get one that has the replacement number shown on the original battery's label. We recommend an ACDelco battery. See "Engine Compartment Overview" in the Index for battery location.

WARNING: Battery posts, terminals and related accessories contain lead and lead compounds, chemicals known to the State of California to cause cancer and reproductive harm. Wash hands after handling.

Vehicle Storage

If you're not going to drive your vehicle for 25 days or more, remove the black, negative (-) cable from the battery. This will help keep your battery from running down.

⚠ CAUTION:

Batteries have acid that can burn you and gas that can explode. You can be badly hurt if you aren't careful. See "Jump Starting" in the Index for tips on working around a battery without getting hurt.

Contact your dealer to learn how to prepare your vehicle for longer storage periods.

Also, for your audio system, see "Theft-Deterrent Feature" in the Index.

Downloaded from www.Manualslib.com manuals search engine

Bulb Replacement

Before you replace any bulbs, be sure that all the lamps are off and the engine isn't running. See "Replacement Bulbs" in the Index.

For any bulb changing procedure not listed in this section, contact your Oldsmobile dealer's service department.

Halogen Bulbs

⚠ CAUTION:

Halogen bulbs have pressurized gas inside and can burst if you drop or scratch the bulb. You or others could be injured. Be sure to read and follow the instructions on the bulb package.

Headlamps

1. Open the hood.

2. Remove the black retainer clips by lifting them up.
3. Pull the headlamp assembly out.
4. Unplug the electrical connector.

Downloaded from www.Manualslib.com manuals search engine

5. Turn the bulb/socket assembly counterclockwise to remove it.
6. Put the new bulb/socket assembly into the headlamp assembly and turn it clockwise until it is tight.
7. Plug in the electrical connector.
8. Put the headlamp assembly back into the vehicle. Install the two retaining clips.

Front Turn Signal Lamps

1. Remove the headlamp assembly as shown earlier in this section.

2. Turn the bulb socket counterclockwise to remove it from the headlamp assembly.
3. Pull the bulb straight out to remove it from the socket.
4. Push the new bulb into the socket until it snaps into place.
5. Put the bulb socket into the lamp assembly and turn it clockwise until it is tight.
6. Put the headlamp assembly back into the vehicle. Install the two retaining clips.

Downloaded from www.Manualslib.com manuals search engine

Taillamps

1. Open the liftgate.

2. Remove the two screws from the lamp assembly.

3. Pull the assembly away from the vehicle.

4. Turn the socket counterclockwise to remove it. Push the tab in while you turn the socket counterclockwise.
5. Holding the base of the bulb, pull the bulb straight out of the socket.
6. Push the new bulb straight into the socket until it clicks.
7. Put the socket into the lamp assembly and turn the socket clockwise until it locks into place.
8. Install the lamp assembly and screws.
9. Close the liftgate.

Downloaded from www.Manualslib.com manuals search engine

Windshield Wiper Blade Replacement

Windshield wiper blades should be inspected at least twice a year for wear or cracking. See “Wiper Blade Check” in the Index.

See “Normal Maintenance Replacement Parts” in the Index for the proper type of replacement blades.

NOTICE:

Use care when removing or installing a blade assembly. Accidental bumping can cause the arm to fall back and strike the windshield.

1. To remove the old wiper blades, lift the wiper arm until it locks into a vertical position.

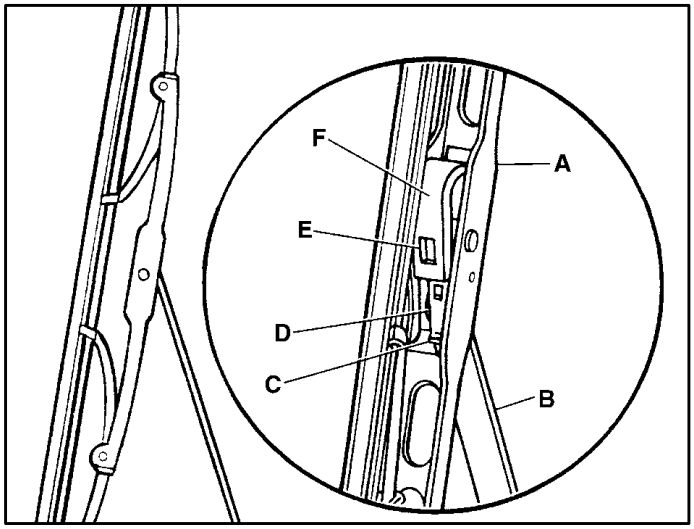

A. Blade Assembly
B. Arm Assembly
C. Locking Tab
D. Blade Pivot
E. Hook Slot
F. Arm Hook

2. Press down on the blade assembly pivot locking tab. Pull down on the blade assembly to release it from the wiper arm hook.

Downloaded from www.Manualslib.com manuals search engine

3. Remove the insert from the blade assembly. The insert has two notches at one end that are locked by the bottom claws of the blade assembly. At the notched end, pull the insert from the blade assembly.

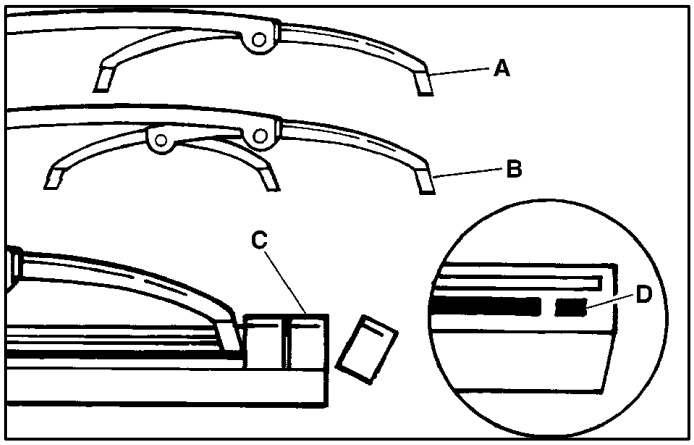

4. To install the new wiper insert, slide the insert (D), notched end last, into the end with two blade claws (A). Slide the insert all the way through the blade claws at the opposite end (B). The plastic caps (C) will be forced off as the insert is fully inserted.

5. Be sure that the notches are locked by the bottom claws. Make sure that all other claws are properly locked on both sides of the insert slots.

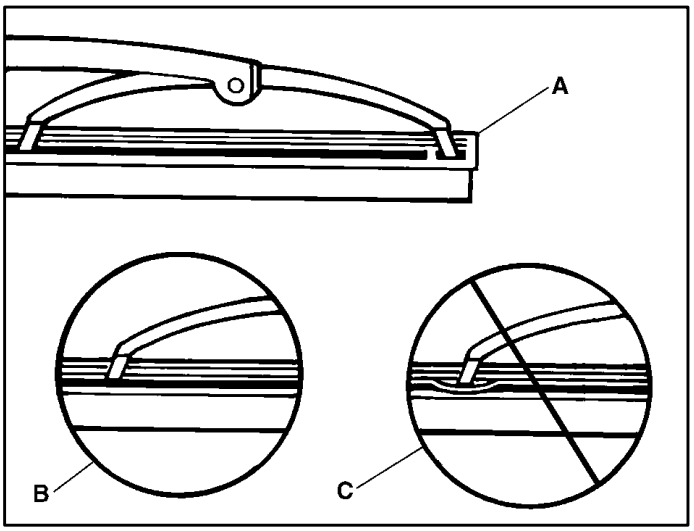

A. Claw in Notch

B. Correct Installation

C. Incorrect Installation

Downloaded from www.Manualslib.com manuals search engine

6. Put the blade assembly pivot in the wiper arm hook. Pull up until the pivot locking tab locks in the hook slot.
7. Carefully lower the wiper arm and blade assembly onto the windshield.

Backglass Wiper Blade Replacement

See “Windshield Wiper Blade Replacement” in this section for instructions on how to change the backglass wiper blade. The backglass wiper blade will not lock in a vertical position like the windshield wiper blade, so care should be used when pulling it away from the vehicle.

Tires

Your new vehicle comes with high-quality tires made by a leading tire manufacturer. If you ever have questions about your tire warranty and where to obtain service, see your Oldsmobile Warranty booklet for details.

⚠ CAUTION:

Poorly maintained and improperly used tires are dangerous.

- **Overloading your tires can cause overheating as a result of too much friction. You could have an air-out and a serious accident. See “Loading Your Vehicle” in the Index.**
- **Underinflated tires pose the same danger as overloaded tires. The resulting accident could cause serious injury. Check all tires frequently to maintain the recommended pressure. Tire pressure should be checked when your tires are cold.**
- **Overinflated tires are more likely to be cut, punctured or broken by a sudden impact -- such as when you hit a pothole. Keep tires at the recommended pressure.**
- **Worn, old tires can cause accidents. If your tread is badly worn, or if your tires have been damaged, replace them.**

Downloaded from www.Manualslib.com manuals search engine

Inflation -- Tire Pressure

The Certification/Tire label, which is on the driver's door edge, above the door latch, shows the correct inflation pressures for your tires when they're cold. "Cold" means your vehicle has been sitting for at least three hours or driven no more than 1 mile (1.6 km).

NOTICE:

Don't let anyone tell you that underinflation or overinflation is all right. It's not. If your tires don't have enough air (underinflation), you can get the following:

- **Too much flexing**
- **Too much heat**
- **Tire overloading**
- **Bad wear**
- **Bad handling**
- **Bad fuel economy.**

NOTICE: (Continued)

NOTICE: (Continued)

If your tires have too much air (overinflation), you can get the following:

- **Unusual wear**
- **Bad handling**
- **Rough ride**
- **Needless damage from road hazards.**

When to Check

Check your tires once a month or more. Also, check the tire pressure of the spare tire.

How to Check

Use a good quality pocket-type gage to check tire pressure. You can't tell if your tires are properly inflated simply by looking at them. Radial tires may look properly inflated even when they're underinflated.

Be sure to put the valve caps back on the valve stems. They help prevent leaks by keeping out dirt and moisture.

Downloaded from www.Manualslib.com manuals search engine

Tire Inspection and Rotation

Tires should be rotated every 6,000 to 8,000 miles (10 000 to 13 000 km). Any time you notice unusual wear, rotate your tires as soon as possible and check wheel alignment. Also check for damaged tires or wheels. See “When It’s Time for New Tires” and “Wheel Replacement” later in this section for more information. Make sure the spare tire is stored securely. Push, pull, and then try to rotate or turn the tire. If it moves, use the wheel wrench to tighten the cable. See “Storing a Flat or Spare Tire and Tools” in the Index.

The purpose of regular rotation is to achieve more uniform wear for all tires on the vehicle. The first rotation is the most important. See “Scheduled Maintenance Services” in the Index for scheduled rotation intervals.

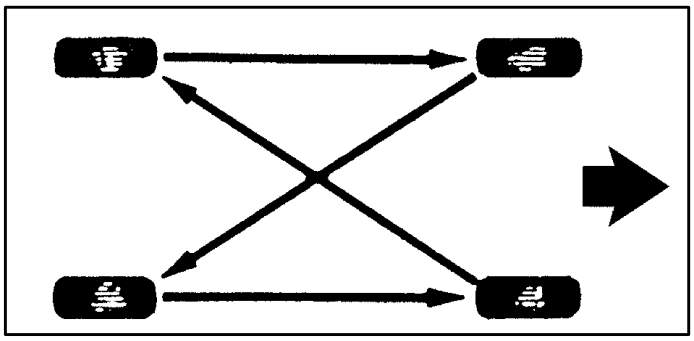

When rotating your tires, always use the correct rotation pattern shown here.

After the tires have been rotated, adjust the front and rear inflation pressures as shown on the Certification/Tire label. Make certain that all wheel nuts are properly tightened. See “Wheel Nut Torque” in the Index.

⚠ CAUTION:

Rust or dirt on a wheel, or on the parts to which it is fastened, can make wheel nuts become loose after a time. The wheel could come off and cause an accident. When you change a wheel, remove any rust or dirt from places where the wheel attaches to the vehicle. In an emergency, you can use a cloth or a paper towel to do this; but be sure to use a scraper or wire brush later, if you need to, to get all the rust or dirt off. See “Changing a Flat Tire” in the Index.

Downloaded from www.Manualslib.com manuals search engine

When It's Time for New Tires

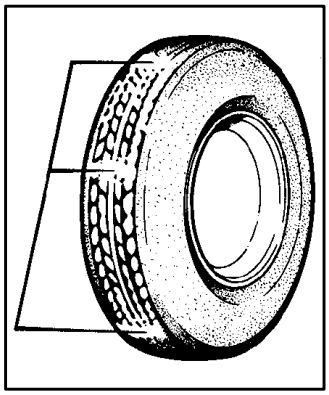

One way to tell when it's time for new tires is to check the treadwear indicators, which will appear when your tires have only 1/16 inch (1.6 mm) or less of tread remaining.

You need a new tire if any of the following statements are true:

- You can see the indicators at three or more places around the tire.
- You can see cord or fabric showing through the tire's rubber.
- The tread or sidewall is cracked, cut or snagged deep enough to show cord or fabric.
- The tire has a bump, bulge or split.
- The tire has a puncture, cut or other damage that can't be repaired well because of the size or location of the damage.

Buying New Tires

To find out what kind and size of tires you need, look at the Certification/Tire label.

The tires installed on your vehicle when it was new had a Tire Performance Criteria Specification (TPC Spec) number on each tire's sidewall. When you get new tires, get ones with that same TPC Spec number. That way your vehicle will continue to have tires that are designed to give proper endurance, handling, speed rating, traction, ride and other things during normal service on your vehicle. If your tires have an all-season tread design, the TPC number will be followed by an "MS" (for mud and snow).

If you ever replace your tires with those not having a TPC Spec number, make sure they are the same size, load range, speed rating and construction type (bias, bias-belted or radial) as your original tires.

Downloaded from www.Manualslib.com manuals search engine

⚠ CAUTION:

Mixing tires could cause you to lose control while driving. If you mix tires of different sizes or types (radial and bias-belted tires), the vehicle may not handle properly, and you could have a crash. Using tires of different sizes may also cause damage to your vehicle. Be sure to use the same size and type tires on all wheels.

⚠ CAUTION:

If you use bias-ply tires on your vehicle, the wheel rim flanges could develop cracks after many miles of driving. A tire and/or wheel could fail suddenly, causing a crash. Use only radial-ply tires with the wheels on your vehicle.

Uniform Tire Quality Grading

Quality grades can be found where applicable on the tire sidewall between tread shoulder and maximum section width. For example:

Treadwear 200 Traction AA Temperature A

The following information relates to the system developed by the United States National Highway Traffic Safety Administration, which grades tires by treadwear, traction and temperature performance. (This applies only to vehicles sold in the United States.) The grades are molded on the sidewalls of most passenger car tires. The Uniform Tire Quality Grading system does not apply to deep tread, winter-type snow tires, space-saver or temporary use spare tires, tires with nominal rim diameters of 10 to 12 inches (25 to 30 cm), or to some limited-production tires.

While the tires available on General Motors passenger cars and light trucks may vary with respect to these grades, they must also conform to federal safety requirements and additional General Motors Tire Performance Criteria (TPC) standards.

Downloaded from www.Manualslib.com manuals search engine

Treadwear

The treadwear grade is a comparative rating based on the wear rate of the tire when tested under controlled conditions on a specified government test course. For example, a tire graded 150 would wear one and a half (1 1/2) times as well on the government course as a tire graded 100. The relative performance of tires depends upon the actual conditions of their use, however, and may depart significantly from the norm due to variations in driving habits, service practices and differences in road characteristics and climate.

Traction -- AA, A, B, C

The traction grades, from highest to lowest, are AA, A, B, and C. Those grades represent the tire's ability to stop on wet pavement as measured under controlled conditions on specified government test surfaces of asphalt and concrete. A tire marked C may have poor traction performance. Warning: The traction grade assigned to this tire is based on straight-ahead braking traction tests, and does not include acceleration, cornering, hydroplaning, or peak traction characteristics.

Temperature -- A, B, C

The temperature grades are A (the highest), B, and C, representing the tire's resistance to the generation of heat and its ability to dissipate heat when tested under controlled conditions on a specified indoor laboratory test wheel. Sustained high temperature can cause the material of the tire to degenerate and reduce tire life, and excessive temperature can lead to sudden tire failure. The grade C corresponds to a level of performance which all passenger car tires must meet under the Federal Motor Vehicle Safety Standard No. 109. Grades B and A represent higher levels of performance on the laboratory test wheel than the minimum required by law.

Warning: The temperature grade for this tire is established for a tire that is properly inflated and not overloaded. Excessive speed, underinflation, or excessive loading, either separately or in combination, can cause heat buildup and possible tire failure.

Downloaded from www.Manualslib.com manuals search engine

Wheel Alignment and Tire Balance

The wheels on your vehicle were aligned and balanced carefully at the factory to give you the longest tire life and best overall performance.

Scheduled wheel alignment and wheel balancing are not needed. However, if you notice unusual tire wear or your vehicle pulling one way or the other, the alignment may need to be reset. If you notice your vehicle vibrating when driving on a smooth road, your wheels may need to be rebalanced.

Wheel Replacement

Replace any wheel that is bent, cracked, or badly rusted or corroded. If wheel nuts keep coming loose, the wheel, wheel bolts and wheel nuts should be replaced. If the wheel leaks air, replace it (except some aluminum wheels, which can sometimes be repaired). See your dealer if any of these conditions exist.

Your dealer will know the kind of wheel you need.

Each new wheel should have the same load-carrying capacity, diameter, width, offset and be mounted the same way as the one it replaces.

If you need to replace any of your wheels, wheel bolts or wheel nuts, replace them only with new GM original equipment parts. This way, you will be sure to have the right wheel, wheel bolts and wheel nuts for your vehicle.

⚠ CAUTION:

Using the wrong replacement wheels, wheel bolts or wheel nuts on your vehicle can be dangerous. It could affect the braking and handling of your vehicle, make your tires lose air and make you lose control. You could have a collision in which you or others could be injured. Always use the correct wheel, wheel bolts and wheel nuts for replacement.

NOTICE:

The wrong wheel can also cause problems with bearing life, brake cooling, speedometer or odometer calibration, headlamp aim, bumper height, vehicle ground clearance and tire clearance to the body and chassis.

See “Changing a Flat Tire” in the Index for more information.

Downloaded from www.Manualslib.com manuals search engine

Used Replacement Wheels

⚠ CAUTION:

Putting a used wheel on your vehicle is dangerous. You can't know how it's been used or how far it's been driven. It could fail suddenly and cause an accident. If you have to replace a wheel, use a new GM original equipment wheel.

Tire Chains

NOTICE:

Don't use tire chains. They can damage your vehicle because there's not enough clearance.

Use another type of traction device only if its manufacturer recommends it for use on your vehicle and tire size combination and road conditions. Follow that manufacturer's instructions. To help avoid damage to your vehicle, drive slowly, readjust or remove the device if it's contacting your vehicle, and don't spin your wheels.

Appearance Care

Remember, cleaning products can be hazardous. Some are toxic. Others can burst into flame if you strike a match or get them on a hot part of the vehicle. Some are dangerous if you breathe their fumes in a closed space. When you use anything from a container to clean your vehicle, be sure to follow the manufacturer's warnings and instructions. And always open your doors or windows when you're cleaning the inside.

Never use these to clean your vehicle:

- Gasoline
- Benzene
- Naphtha
- Carbon Tetrachloride
- Acetone
- Paint Thinner
- Turpentine
- Lacquer Thinner
- Nail Polish Remover

They can all be hazardous -- some more than others -- and they can all damage your vehicle, too.

Downloaded from www.Manualslib.com manuals search engine

Don't use any of these unless this manual says you can. In many uses, these will damage your vehicle:

- Alcohol
- Laundry Soap
- Bleach
- Reducing Agents

Cleaning the Inside of Your Vehicle

Use a vacuum cleaner often to get rid of dust and loose dirt. Wipe vinyl, leather, plastic and painted surfaces with a clean, damp cloth.

Cleaning of Fabric/Carpet

Your dealer has two cleaners, Multi-Purpose Interior Cleaner and Capture Non-Solvent Dry Spot and Soil Remover for cleaning fabric and carpet. They will clean normal spots and stains very well. You can get GM-approved cleaning products from your dealer. See "Appearance Care and Materials" in the Index.

Here are some cleaning tips:

- Always read the instructions on the cleaner label.
- Clean up stains as soon as you can -- before they set.
- Carefully scrape off any excess stain.
- Use a clean cloth or sponge, and change to a clean area often. A soft brush may be used if stains are stubborn.
- If a ring forms on fabric after spot cleaning, clean the entire area immediately or it will set.

Using Multi-Purpose Interior Cleaner on Fabric

1. Vacuum and brush the area to remove any loose dirt.
2. Always clean a whole trim panel or section. Mask surrounding trim along stitch or welt lines.
3. Mix powdered cleaner following the directions on the container label to form thick suds.
4. Use suds only and apply with a clean sponge. Don't saturate the material and don't rub it roughly.
5. As soon as you've cleaned the section, use a sponge to remove the suds.
6. Wipe cleaned area with a clean, damp towel or cloth.
7. Wipe with a clean cloth and let dry.

Downloaded from www.Manualslib.com manuals search engine

Special Fabric Cleaning Problems

Stains caused by such things as catsup, coffee (black), egg, fruit, fruit juice, milk, soft drinks, vomit, urine and blood can be removed as follows:

1. Carefully scrape off excess stain, then sponge the soiled area with cool water.
2. If a stain remains, follow the Multi-Purpose Interior Cleaner instructions described earlier.
3. If an odor lingers after cleaning vomit or urine, treat the area with a water/baking soda solution: 1 teaspoon (5 ml) of baking soda to 1 cup (250 ml) of lukewarm water.
4. Let dry.

Stains caused by candy, ice cream, mayonnaise, chili sauce and unknown stains can be removed as follows:

1. Carefully scrape off excess stain.
2. First, clean with cool water and allow to dry completely.
3. If a stain remains, follow instructions for Multi-Purpose Interior Cleaner.

Cleaning Vinyl

Use warm water and a clean cloth.

- Rub with a clean, damp cloth to remove dirt. You may have to do it more than once.
- Things like tar, asphalt and shoe polish will stain if you don't get them off quickly. Use a clean cloth and a vinyl/leather cleaner. See your dealer for this product.

Cleaning Leather

Use a soft cloth with lukewarm water and a mild soap or saddle soap and wipe dry with a soft cloth. Then, let the leather dry naturally. Do not use heat to dry.

- For stubborn stains, use a leather cleaner. See your dealer for this product.
- *Never* use oils, varnishes, solvent-based or abrasive cleaners, furniture polish or shoe polish on leather.
- Soiled or stained leather should be cleaned immediately. If dirt is allowed to work into the finish, it can harm the leather.

Downloaded from www.Manualslib.com manuals search engine

Cleaning the Top of the Instrument Panel

Use only mild soap and water to clean the top surfaces of the instrument panel. Sprays containing silicones or waxes may cause annoying reflections in the windshield and even make it difficult to see through the windshield under certain conditions.

Cleaning Interior Plastic Components

Use only a mild soap and water solution on a soft cloth or sponge. Commercial cleaners may affect the surface finish.

Care of Safety Belts

Keep belts clean and dry.

⚠ CAUTION:

Do not bleach or dye safety belts. If you do, it may severely weaken them. In a crash, they might not be able to provide adequate protection. Clean safety belts only with mild soap and lukewarm water.

Cleaning Glass Surfaces

Glass should be cleaned often. GM Glass Cleaner or a liquid household glass cleaner will remove normal tobacco smoke and dust films on interior glass. See “Appearance Care and Materials” in the Index.

Don’t use abrasive cleaners on glass, because they may cause scratches. Avoid placing decals on the inside rear window, since they may have to be scraped off later. If abrasive cleaners are used on the inside of the rear window, an electric defogger element may be damaged. Any temporary license should not be attached across the defogger grid.

Cleaning the Outside of the Windshield, Backglass and Wiper Blades

If the windshield is not clear after using the windshield washer, or if the wiper blade chatters when running, wax, sap or other material may be on the blade or windshield.

Clean the outside of the windshield with GM Windshield Cleaner, Bon Ami® Powder (non-scratching glass cleaning powder), GM Part No. 1050011. The windshield is clean if beads do not form when you rinse it with water.

Downloaded from www.Manualslib.com manuals search engine

Grime from the windshield will stick to the wiper blades and affect their performance. Clean the blade by wiping vigorously with a cloth soaked in full-strength windshield washer solvent. Then rinse the blade with water.

Check the wiper blades and clean them as necessary; replace blades that look worn.

Weatherstrips

Silicone grease on weatherstrips will make them last longer, seal better, and not stick or squeak. Apply silicone grease with a clean cloth at least every six months. During very cold, damp weather more frequent application may be required. See "Recommended Fluids and Lubricants" in the Index.

Cleaning the Outside of Your Vehicle

The paint finish on your vehicle provides beauty, depth of color, gloss retention and durability.

Washing Your Vehicle

The best way to preserve your vehicle's finish is to keep it clean by washing it often with lukewarm or cold water.

Don't wash your vehicle in the direct rays of the sun. Use a car washing soap. Don't use strong soaps or chemical detergents. Be sure to rinse the vehicle well, removing all soap residue completely. You can get GM-approved cleaning products from your dealer. See "Appearance Care and Materials" in the Index. Don't use cleaning agents that are petroleum based, or that contain acid or abrasives. All cleaning agents should be flushed promptly and not allowed to dry on the surface, or they could stain. Dry the finish with a soft, clean chamois or an all-cotton towel to avoid surface scratches and water spotting.

High pressure car washes may cause water to enter your vehicle.

Cleaning Exterior Lamps/Lenses

Use only lukewarm or cold water, a soft cloth and a car washing soap to clean exterior lamps and lenses. Follow instructions under "Washing Your Vehicle."

Downloaded from www.Manualslib.com manuals search engine

Finish Care

Occasional waxing or mild polishing of your vehicle by hand may be necessary to remove residue from the paint finish. You can get GM-approved cleaning products from your dealer. See “Appearance Care and Materials” in the Index.

Your vehicle has a “basecoat/clearcoat” paint finish. The clearcoat gives more depth and gloss to the colored basecoat. Always use waxes and polishes that are non-abrasive and made for a basecoat/clearcoat paint finish.

NOTICE:

Machine compounding or aggressive polishing on a basecoat/clearcoat paint finish may dull the finish or leave swirl marks.

Foreign materials such as calcium chloride and other salts, ice melting agents, road oil and tar, tree sap, bird droppings, chemicals from industrial chimneys, etc., can damage your vehicle’s finish if they remain on painted surfaces. Wash the vehicle as soon as possible. If necessary, use non-abrasive cleaners that are marked safe for painted surfaces to remove foreign matter.

Exterior painted surfaces are subject to aging, weather and chemical fallout that can take their toll over a period of years. You can help to keep the paint finish looking new by keeping your vehicle garaged or covered whenever possible.

Protecting Exterior Bright Metal Parts

Bright metal parts should be cleaned regularly to keep their luster. Washing with water is all that is usually needed. However, you may use chrome polish on chrome or stainless steel trim, if necessary.

Use special care with aluminum trim. To avoid damaging protective trim, never use auto or chrome polish, steam or caustic soap to clean aluminum. A coating of wax, rubbed to high polish, is recommended for all bright metal parts.

Downloaded from www.Manualslib.com manuals search engine

Cleaning Aluminum Wheels

Keep your wheels clean using a soft clean cloth with mild soap and water. Rinse with clean water. After rinsing thoroughly, dry with a soft clean towel. A wax may then be applied.

The surface of these wheels is similar to the painted surface of your vehicle. Don't use strong soaps, chemicals, abrasive polishes, abrasive cleaners, cleaners with acid or abrasive cleaning brushes on them because you could damage the surface. Do not use chrome polish on aluminum wheels.

Don't take your vehicle through an automatic car wash that has silicon carbide tire cleaning brushes. These brushes can also damage the surface of these wheels.

Cleaning Tires

To clean your tires, use a stiff brush with a tire cleaner.

NOTICE:

When applying a tire dressing always take care to wipe off any overspray or splash from all painted surfaces on the body or wheels of the vehicle. Petroleum-based products may damage the paint finish and tires.

Sheet Metal Damage

If your vehicle is damaged and requires sheet metal repair or replacement, make sure the body repair shop applies anti-corrosion material to the parts repaired or replaced to restore corrosion protection.

Original manufacturer replacement parts will provide the corrosion protection while maintaining the warranty.

Downloaded from www.Manualslib.com manuals search engine

Finish Damage

Any stone chips, fractures or deep scratches in the finish should be repaired right away. Bare metal will corrode quickly and may develop into a major repair expense.

Minor chips and scratches can be repaired with touch-up materials available from your dealer or other service outlets. Larger areas of finish damage can be corrected in your dealer's body and paint shop.

Underbody Maintenance

Chemicals used for ice and snow removal and dust control can collect on the underbody. If these are not removed, accelerated corrosion (rust) can occur on the underbody parts such as fuel lines, frame, floor pan and exhaust system even though they have corrosion protection.

At least every spring, flush these materials from the underbody with plain water. Clean any areas where mud and other debris can collect. Dirt packed in closed areas of the frame should be loosened before being flushed. Your dealer or an underbody car washing system can do this for you.

Chemical Paint Spotting

Some weather and atmospheric conditions can create a chemical fallout. Airborne pollutants can fall upon and attack painted surfaces on your vehicle. This damage can take two forms: blotchy, ringlet-shaped discolorations, and small irregular dark spots etched into the paint surface.

Although no defect in the paint job causes this, Oldsmobile will repair, at no charge to the owner, the surfaces of new vehicles damaged by this fallout condition within 12 months or 12,000 miles (20 000 km) of purchase, whichever occurs first.

Downloaded from www.Manualslib.com manuals search engine

GM Vehicle Care/Appearance Materials

PART NUMBER	SIZE	DESCRIPTION	USAGE
994954	23 in. x 25 in.	Polishing Cloth – Wax Treated	Exterior polishing cloth
1050172	16 oz. (0.473 L)	Tar and Road Oil Remover	Removes tar, road oil and asphalt
1050173	16 oz. (0.473 L)	Chrome Cleaner and Polish	Use on chrome, stainless steel, nickel, copper and brass
1050174	16 oz. (0.473 L)	White Sidewall Tire Cleaner	Removes soil and black marks from whitewalls
1050214	32 oz. (0.946 L)	Vinyl Cleaner	Cleans vinyl tops, upholstery and convertible tops
1050427	23 oz. (0.680 L)	Glass Cleaner	Removes dirt, grime, smoke and fingerprints
1052918**	8 oz. (0.237 L)	Armor All™ Protectant	Protects leather, wood, acrylics, Plexiglas™, plastic, rubber and vinyl
1052925	16 oz. (0.473 L)	Multi-Purpose Interior Cleaner	Cleans carpets, seats, interior trim, door panels and floor mats
1052929	16 oz. (0.473 L)	Wheel Cleaner	Spray on and rinse with water
1052930	8 oz. (0.237 L)	Capture Dry Spot Remover	Attracts, absorbs and removes soils on fabric
12345721	2.5 sq. ft.	Synthetic Chamois	Shines vehicle without scratching
12345725	12 oz. (0.354 L)	Silicone Tire Shine	Spray on tire shine
12377964*	16 oz. (0.473 L)	Finish Enhancer	Removes dust, fingerprints and surface contaminants
12377966*	16 oz. (0.473 L)	Cleaner Wax	Removes light scratches and oxidation and protects finish
12377984*	16 oz. (0.473 L)	Surface Cleaner	Removes contaminants, blemishes and swirl marks

See your General Motors Parts Department for these products.
See “Recommended Fluids and Lubricants” in the Index.

* For exterior use only.
** Not recommended for use on instrument panels.

Downloaded from www.Manualslib.com manuals search engine

Vehicle Identification Number (VIN)

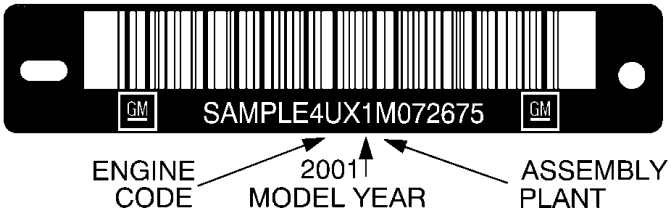

This is the legal identifier for your vehicle. It appears on a plate in the front corner of the instrument panel, on the driver's side. You can see it if you look through the windshield from outside your vehicle. The VIN also appears on the Vehicle Certification and Service Parts labels and the certificates of title and registration.

Engine Identification

The 8th character in your VIN is the engine code. This code will help you identify your engine, specifications and replacement parts.

Service Parts Identification Label

You'll find this label on the inside of the glove box. It's very helpful if you ever need to order parts. On this label is:

- your VIN,
- the model designation,
- paint information and
- a list of all production options and special equipment.

Be sure that this label is not removed from the vehicle.

Downloaded from www.Manualslib.com manuals search engine

Electrical System

Add-On Electrical Equipment

NOTICE:

Don't add anything electrical to your vehicle unless you check with your dealer first. Some electrical equipment can damage your vehicle and the damage wouldn't be covered by your warranty. Some add-on electrical equipment can keep other components from working as they should.

Your vehicle has an air bag system. Before attempting to add anything electrical to your vehicle, see "Servicing Your Air Bag-Equipped Vehicle" in the Index.

Headlamps

The headlamp wiring is protected by an internal circuit breaker. An electrical overload will cause the lamps to go on and off, or in some cases to remain off. If this happens, have your headlamp wiring checked right away.

Windshield Wipers

The windshield wiper motor is protected by a circuit breaker and a fuse. If the motor overheats due to heavy snow or ice the wiper will stop until the motor cools. If the overload is caused by some electrical problem, be sure to get it fixed.

Power Windows and Other Power Options

Circuit breakers protect the power windows and other power accessories. When the current load is too heavy, the circuit breaker opens and closes, protecting the circuit until the problem is fixed or goes away.

Downloaded from www.Manualslib.com manuals search engine

Fuses and Circuit Breakers

The wiring circuits in your vehicle are protected from short circuits by a combination of fuses and circuit breakers. This greatly reduces the chance of fires caused by electrical problems.

Look at the silver-colored band inside the fuse. If the band is broken or melted, replace the fuse. Be sure you replace a bad fuse with a new one of the identical size and rating.

If you ever have a problem on the road and don't have a spare fuse, you can borrow one that has the same amperage. Just pick some feature of your vehicle that you can get along without -- like the radio or cigarette lighter -- and use its fuse, if it is the correct amperage. Replace it as soon as you can.

Instrument Panel Fuse Block

The fuse block is located at the driver's end of the instrument panel.

Remove the cover by turning the fastener counterclockwise. Extra fuses and the fuse extractor are provided in the cover. To reinstall the fuse panel cover, push in and turn the fastener clockwise.

Downloaded from www.Manualslib.com manuals search engine

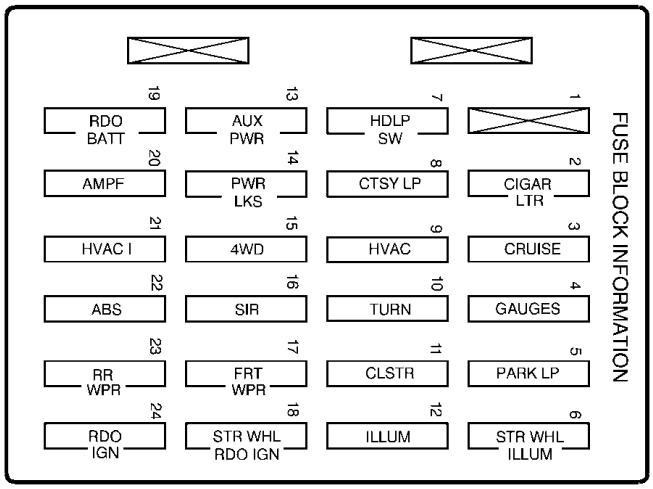

Fuse/Circuit Breaker	Usage
A	Not Used
B	Not Used
1	Not Used
2	Cigarette Lighter, Data Link Connector
3	Cruise Control Module and Switch, Body Control Module, Heated Seats
4	Gages, Body Control Module, Instrument Panel Cluster
5	Parking Lamps, Power Window Switch, Body Control Module, Ashtray Lamp
6	Steering Wheel Radio Controls
7	Headlamp Switch, Body Control Module, Headlamp Relay
8	Courtesy Lamps, Battery Run-Down Protection
9	Not Used
10	Turn Signal
11	Cluster, Engine Control Module
12	Interior Lights
13	Auxiliary Power
14	Power Locks Motor

Downloaded from www.Manualslib.com manuals search engine

Fuse/Circuit Breaker	Usage
15	4WD Switch, Engine Controls (VCM, PCM, Transmission)
16	Supplemental Inflatable Restraint
17	Front Wiper
18	Steering Wheel Radio Controls
19	Radio, Battery
20	Amplifier
21	HVAC I (Automatic), HVAC Sensors (Automatic)
22	Anti-Lock Brakes
23	Rear Wiper
24	Radio, Ignition

Engine Compartment Fuse Block

The fuse block is located under the hood on the driver's side of the engine compartment. See "Engine Compartment Overview" in the Index for more information on location.

Remove the cover by turning the fastener counterclockwise. To reinstall the fuse panel cover, push in and turn the fastener clockwise.

Downloaded from www.Manualslib.com manuals search engine

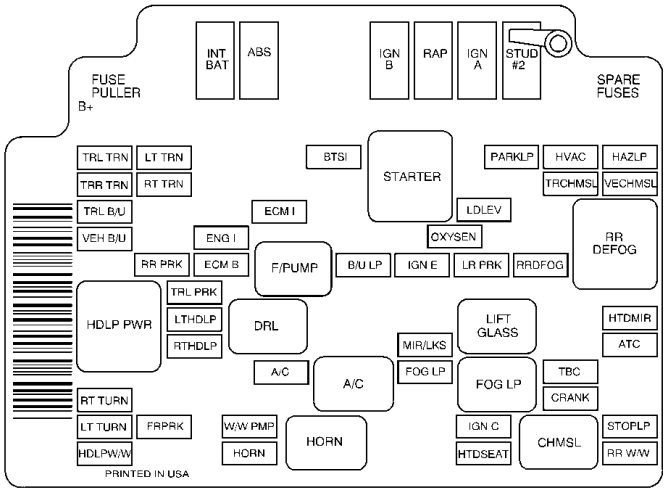

Name	Usage
TRL TRN	Trailer Left Turn
TRR TRN	Trailer Right Turn
TRL B/U	Trailer Back-Up Lamps
VEH B/U	Vehicle Back-Up Lamps
RT TURN	Right Turn Signal Front

Name	Usage
LT TURN	Left Turn Signal Front
HDLP W/W	Not Used
LT TRN	Left Turn Signal Rear
RT TRN	Right Turn Signal Rear
RR PRK	Right Rear Parking Lamps
TRL PRK	Trailer Parking Lamps
LT HDLP	Left Headlamp
RT HDLP	Right Headlamp
FR PRK	Front Parking Lamps
INT BAT	I/P Fuse Block Feed
ENG I	Engine Sensors/Solenoids, MAF, CAM, PURGE, VENT
ECM B	Engine Control Module, Fuel Pump Module, Oil Pressure
ABS	Anti-Lock Brake System
ECM I	Engine Control Module Injectors
A/C	Air Conditioning
W/W PMP	Not Used
HORN	Horn

Downloaded from www.Manualslib.com manuals search engine

Name	Usage
BTSI	Automatic Transmission Shift Lock Control System
B/U LP	Back-Up Lamps
IGN B	Column Feed, IGN 2, 3, 4
RAP	Retained Accessory Power
LD LEV	Not Used
OXYSEN	Oxygen Sensor
IGN E	Engine
MIR/LKS	Mirrors, Door Locks
FOG LP	Fog Lamps
IGN A	Starting and Charging IGN 1
STUD #2	Accessory Feeds, Electric Brake
PARKLP	Parking Lamps
LR PRK	Left Rear Parking Lamps
IGN C	Starter Solenoid, Fuel Pump, PRNDL

Name	Usage
HTDSEAT	Heated Seat
HVAC	HVAC System
TRCHMSL	Trailer Center High-Mounted Stop Light
RRDFOG	Rear Defogger
TBC	Truck Body Computer
CRANK	Clutch Switch, NSBU Switch
HAZLP	Hazard Lamps
VECHMSL	Vehicle Center High Mounted Stoplamp
HTDMIR	Heated Mirror
ATC	Active Transfer Case
STOPLP	Stoplamps
RR W/W	Rear Window Wiper

Downloaded from www.Manualslib.com manuals search engine

Replacement Bulbs

Lamps	Quantity	Number
Halogen Headlamps, Composite Low Beam	2	9006 HB4 or 9006 LL
Halogen Headlamps, Composite High Beam	2	9005 HB3
Tail and Stoplamps	4	3057
Front Sidemarker Lamps	2	194
Front Turn Signal Lamps	2	3457 A

Capacities and Specifications

Engine Description . . . . . "VORTEC" 4300 V6
Type V6
VIN Code . . . . . W
Firing Order 1-6-5-4-3-2
Horsepower . . . . . 190 at 4,400 rpm
Thermostat Specification . . . . . 195°F (91°C)
Spark Plug Gap . . . . . 0.060 inches (1.52 mm)

Wheels and Tires

Wheel Nut Torque . . . . . 100 lb-ft (140 N·m)
Tire Pressure . . . . . See the Certification/Tire label. See "Loading Your Vehicle" in the Index.

Capacities

Please refer to "Recommended Fluids and Lubricants" in the Index for more information.

Cooling System* . . . . . 11.7 quarts (11.1 L)
Crankcase with Filter* . . . . . 4.5 quarts (4.3 L)
Automatic Transmission (Drain and Refill)* . . . . . 5.0 quarts (4.7 L)
Differential Fluid (Rear) . . . . . 4.0 pints (1.9 L)
Differential Fluid (Front) . . . . . 2.6 pints (1.2 L)
Fuel Tank . . . . . 18.0 gallons (68.0 L)
A/C Refrigerant . . . . . See refrigerant charge label under the hood.

All capacities are approximate, After refill, the level *must* be checked.

Downloaded from www.Manualslib.com manuals search engine

Normal Maintenance Replacement Parts

Replacement part numbers listed in this section are based on the latest information available at the time of printing, and are subject to change. If a part listed in this manual is not the same as the part used in your vehicle when it was built, or if you have any questions, please contact your dealer.

Oil Filter*	PF52
Air Cleaner Filter*	A1163C
PCV Valve*	CV769C
Automatic Transmission Filter Kit**	24200796
Spark Plugs*	41-932
Fuel Filter*	GF481
Windshield Wiper Blade	Trico 20 inches (50.8 cm)
Backglass Wiper Blade	Trico 14 inches (35.6 cm)

*ACDelco® Part No.
**GM Part No.

Vehicle Dimensions*

Wheelbase	107.0 inches (271.8 cm)
Length	180.9 inches (459.5 cm)
Height	63.2 inches (160.5 cm)
Width	67.6 inches (171.7 cm)
Front Tread	57.3 inches (145.4 cm)
Rear Tread	55.1 inches (139.9 cm)

*Figures reflect base equipment only.

Downloaded from www.Manualslib.com manuals search engine

Section 7 Maintenance Schedule

This section covers the maintenance required for your vehicle. Your vehicle needs these services to retain its safety, dependability and emission control performance.

7-2 Introduction
7-4 Part A: Scheduled Maintenance Services
7-8 Short Trip/City Scheduled Maintenance
7-30 Long Trip/Highway Scheduled Maintenance
7-43 Part B: Owner Checks and Services
7-47 Part C: Periodic Maintenance Inspections
7-49 Part D: Recommended Fluids and Lubricants
7-51 Part E: Maintenance Record

Downloaded from www.Manualslib.com manuals search engine

IMPORTANT:
KEEP ENGINE OIL AT THE PROPER LEVEL AND CHANGE AS RECOMMENDED

GM Protection Plan

Have you purchased the GM Protection Plan? The Plan supplements your new vehicle warranties. See your Warranty and Owner Assistance booklet or your dealer for details.

Introduction

Your Vehicle and the Environment

Proper vehicle maintenance not only helps to keep your vehicle in good working condition, but also helps the environment. All recommended maintenance procedures are important. Improper vehicle maintenance can even affect the quality of the air we breathe. Improper fluid levels or the wrong tire inflation can increase the level of emissions from your vehicle. To help protect our environment, and to keep your vehicle in good condition, please maintain your vehicle properly.

Maintenance Requirements

Maintenance intervals, checks, inspections and recommended fluids and lubricants as prescribed in this manual are necessary to keep your vehicle in good working condition. Any damage caused by failure to follow recommended maintenance may not be covered by warranty.

Downloaded from www.Manualslib.com manuals search engine

How This Section is Organized

This maintenance schedule is divided into five parts:

"Part A: Scheduled Maintenance Services" shows what to have done and how often. Some of these services can be complex, so unless you are technically qualified and have the necessary equipment, you should let your dealer's service department or another qualified service center do these jobs.

⚠ CAUTION:

Performing maintenance work on a vehicle can be dangerous. In trying to do some jobs, you can be seriously injured. Do your own maintenance work only if you have the required know-how and the proper tools and equipment for the job. If you have any doubt, have a qualified technician do the work.

If you want to get the service information, see "Service and Owner Publications" in the Index.

"Part B: Owner Checks and Services" tells you what should be checked and when. It also explains what you can easily do to help keep your vehicle in good condition.

"Part C: Periodic Maintenance Inspections" explains important inspections that your dealer's service department or another qualified service center should perform.

"Part D: Recommended Fluids and Lubricants" lists some recommended products necessary to help keep your vehicle properly maintained. These products, or their equivalents, should be used whether you do the work yourself or have it done.

"Part E: Maintenance Record" is a place for you to record and keep track of the maintenance performed on your vehicle. Keep your maintenance receipts. They may be needed to qualify your vehicle for warranty repairs.

Downloaded from www.Manualslib.com manuals search engine

Part A: Scheduled Maintenance Services

Using Your Maintenance Schedule

We at General Motors want to help you keep your vehicle in good working condition. But we don't know exactly how you'll drive it. You may drive very short distances only a few times a week. Or you may drive long distances all the time in very hot, dusty weather. You may use your vehicle in making deliveries. Or you may drive it to work, to do errands or in many other ways.

Because of all the different ways people use their vehicles, maintenance needs vary. You may need more frequent checks and replacements. So please read the following and note how you drive. If you have any questions on how to keep your vehicle in good condition, see your dealer.

This part tells you the maintenance services you should have done and when you should schedule them. If you go to your dealer for your service needs, you'll know that GM-trained and supported service people will perform the work using genuine GM parts.

The proper fluids and lubricants to use are listed in Part D. Make sure whoever services your vehicle uses these. All parts should be replaced and all necessary repairs done before you or anyone else drives the vehicle.

These schedules are for vehicles that:

- carry passengers and cargo within recommended limits. You will find these limits on your vehicle's Certification/Tire label. See "Loading Your Vehicle" in the Index.
- are driven on reasonable road surfaces within legal driving limits.
- are driven off-road in the recommended manner. See "Operating Your Vehicle Off Paved Roads" in the Index.
- use the recommended fuel. See "Fuel" in the Index.

Selecting the Right Schedule

First you'll need to decide which of the two schedules is right for your vehicle. Here's how to decide which schedule to follow:

Downloaded from www.Manualslib.com manuals search engine

Scheduled Maintenance

Short Trip/City Definition

Follow the Short Trip/City Scheduled Maintenance if any one of these conditions is true for your vehicle:

- Most trips are less than 5 to 10 miles (8 to 16 km). This is particularly important when outside temperatures are below freezing.
- Most trips include extensive idling (such as frequent driving in stop-and-go traffic).
- You operate your vehicle in dusty areas or off-road frequently.
- You frequently tow a trailer or use a carrier on top of your vehicle.
- If the vehicle is used for delivery service, police, taxi or other commercial application.

One of the reasons you should follow this schedule if you operate your vehicle under any of these conditions is that these conditions cause engine oil to break down sooner.

Short Trip/City Intervals

Every 3,000 Miles (5 000 km): Engine Oil and Filter Change (or 3 months, whichever occurs first). Chassis Lubrication (or 3 months, whichever occurs first). Drive Axle Service (or 3 months, whichever occurs first).

Every 6,000 Miles (10 000 km): Tire Rotation.

Every 15,000 Miles (25 000 km): Engine Air Cleaner Filter Inspection, if driving in dusty conditions. Automatic Transmission Service (severe conditions only).

Every 30,000 Miles (50 000 km): Engine Air Cleaner Filter Replacement. Fuel Filter Replacement.

Every 50,000 Miles (83 000 km): Automatic Transmission Service (normal conditions). Transfer Case Fluid Change.

(Continued)

Downloaded from www.Manualslib.com manuals search engine

Scheduled Maintenance

Short Trip/City Intervals

Every 60,000 Miles (100 000 km): Engine Accessory Drive Belt Inspection.

Every 100,000 Miles (166 000 km): Spark Plug Wire Inspection. Spark Plug Replacement. Positive Crankcase Ventilation (PCV) Valve Inspection.

Every 150,000 Miles (240 000 km): Cooling System Service (or every 60 months, whichever occurs first).

These intervals only summarize maintenance services. Be sure to follow the complete scheduled maintenance on the following pages.

Long Trip/Highway Definition

Follow this scheduled maintenance *only* if none of the conditions from the Short Trip/City Scheduled Maintenance are true. Do not use this schedule if the vehicle is used for trailer towing, driven in a dusty area or used off paved roads. Use the Short Trip/City schedule for these conditions.

Driving a vehicle with a fully warmed engine under highway conditions causes engine oil to break down slower.

Downloaded from www.Manualslib.com manuals search engine

Scheduled Maintenance

Long Trip/Highway Intervals

Every 7,500 Miles (12 500 km): Engine Oil and Filter Change (or every 12 months, whichever occurs first). Chassis Lubrication (or every 12 months, whichever occurs first). Drive Axle Service. Tire Rotation.

Every 15,000 Miles (25 000 km): Automatic Transmission Service (severe conditions only).

Every 30,000 Miles (50 000 km): Fuel Filter Replacement. Engine Air Cleaner Filter Replacement.

Every 50,000 Miles (83 000 km): Automatic Transmission Service (normal conditions). Transfer Case Fluid Change.

Long Trip/Highway Intervals

Every 60,000 Miles (100 000 km): Engine Accessory Drive Belt Inspection.

Every 100,000 Miles (166 000 km): Spark Plug Wire Inspection. Spark Plug Replacement. Positive Crankcase Ventilation (PCV) Valve Inspection.

Every 150,000 Miles (240 000 km): Cooling System Service (or every 60 months, whichever occurs first).

These intervals only summarize maintenance services. Be sure to follow the complete scheduled maintenance on the following pages.

Downloaded from www.Manualslib.com manuals search engine

Short Trip/City Scheduled Maintenance

The services shown in this schedule up to 100,000 miles (166 000 km) should be performed after 100,000 miles (166 000 km) at the same intervals. The services shown at 150,000 miles (240 000 km) should be performed at the same interval after 150,000 miles (240 000 km).

See “Owner Checks and Services” and “Periodic Maintenance Inspections” following.

Footnotes

† The U.S. Environmental Protection Agency or the California Air Resources Board has determined that the failure to perform this maintenance item will not nullify the emission warranty or limit recall liability prior to the completion of the vehicle’s useful life. We, however, urge that all recommended maintenance services be performed at the indicated intervals and the maintenance be recorded.

 # Lubricate the front suspension, ball joints, steering linkage, parking brake cable guides, propshaft splines, universal joints and brake pedal springs.

+ A good time to check your brakes is during tire rotation. See “Brake System Inspection” under “Periodic Maintenance Inspections” in Part C of this schedule.

*** Drive axle service. See “Recommended Fluids and Lubricants” in the Index for proper lubricant to use:*

- *Drain and refill at first oil change. At subsequent oil changes, check fluid level and add fluid as needed. If driving in dusty areas or towing a trailer, drain fluid and refill every 15,000 miles (25 000 km).*
- *More frequent lubrication may be required for off-paved-road use.*

Downloaded from www.Manualslib.com manuals search engine

Short Trip/City Scheduled Maintenance

3,000 Miles (5 000 km)

DATE	
ACTUAL MILEAGE	SERVICED BY:

- ☐ Change engine oil and filter (or every 3 months, whichever occurs first). *An Emission Control Service.*
- ☐ Lubricate chassis components (or every 3 months, whichever occurs first). *(See footnote #.)*
- ☐ Check rear/front axle fluid level and add fluid as needed. Check constant velocity joints and axle seals for leaking. *(See footnote **.)*

6,000 Miles (10 000 km)

DATE	
ACTUAL MILEAGE	SERVICED BY:

- ☐ Change engine oil and filter (or every 3 months, whichever occurs first). *An Emission Control Service.*
- ☐ Lubricate chassis components (or every 3 months, whichever occurs first). *(See footnote #.)*
- ☐ Check rear/front axle fluid level and add fluid as needed. Check constant velocity joints and axle seals for leaking. *(See footnote **.)*
- ☐ Rotate tires. See “Tire Inspection and Rotation” in the Index for proper rotation pattern and additional information. *(See footnote +.)*

Downloaded from www.Manualslib.com manuals search engine

Short Trip/City Scheduled Maintenance

9,000 Miles (15 000 km)

DATE	
ACTUAL MILEAGE	SERVICED BY:

- ☐ Change engine oil and filter (or every 3 months, whichever occurs first). *An Emission Control Service.*
- ☐ Lubricate chassis components (or every 3 months, whichever occurs first). *(See footnote #.)*
- ☐ Check rear/front axle fluid level and add fluid as needed. Check constant velocity joints and axle seals for leaking. *(See footnote **.)*

12,000 Miles (20 000 km)

DATE	
ACTUAL MILEAGE	SERVICED BY:

- ☐ Change engine oil and filter (or every 3 months, whichever occurs first). *An Emission Control Service.*
- ☐ Lubricate chassis components (or every 3 months, whichever occurs first). *(See footnote #.)*
- ☐ Check rear/front axle fluid level and add fluid as needed. Check constant velocity joints and axle seals for leaking. *(See footnote **.)*
- ☐ Rotate tires. See “Tire Inspection and Rotation” in the Index for proper rotation pattern and additional information. *(See footnote +.)*

Downloaded from www.Manualslib.com manuals search engine

Short Trip/City Scheduled Maintenance

15,000 Miles (25 000 km)

DATE	
ACTUAL MILEAGE	SERVICED BY:

☐ Change engine oil and filter (or every 3 months, whichever occurs first).
An Emission Control Service.

☐ Lubricate chassis components (or every 3 months, whichever occurs first).
(See footnote #.)

☐ Inspect engine air cleaner filter if you are driving in dusty conditions. Replace filter if necessary.
An Emission Control Service. (See footnote †.)

☐ Check rear/front axle fluid level and add fluid as needed. Check constant velocity joints and axle seals for leaking. *(See footnote **.)*

☐ Change automatic transmission fluid and filter if the vehicle is mainly driven under one or more of these conditions:

- In heavy city traffic where the outside temperature regularly reaches 90°F (32°C) or higher.
- In hilly or mountainous terrain.
- When doing frequent trailer towing.
- Uses such as found in taxi, police or delivery service.

If you do not use your vehicle under any of these conditions, change the fluid and filter every 50,000 miles (83 000 km).

Downloaded from www.Manualslib.com manuals search engine

Short Trip/City Scheduled Maintenance

18,000 Miles (30 000 km)

DATE	
ACTUAL MILEAGE	SERVICED BY:

- ☐ Change engine oil and filter (or every 3 months, whichever occurs first). *An Emission Control Service.*
- ☐ Lubricate chassis components (or every 3 months, whichever occurs first). *(See footnote #.)*
- ☐ Check rear/front axle fluid level and add fluid as needed. Check constant velocity joints and axle seals for leaking. *(See footnote **.)*
- ☐ Rotate tires. See “Tire Inspection and Rotation” in the Index for proper rotation pattern and additional information. *(See footnote +.)*

21,000 Miles (35 000 km)

DATE	
ACTUAL MILEAGE	SERVICED BY:

- ☐ Change engine oil and filter (or every 3 months, whichever occurs first). *An Emission Control Service.*
- ☐ Lubricate chassis components (or every 3 months, whichever occurs first). *(See footnote #.)*
- ☐ Check rear/front axle fluid level and add fluid as needed. Check constant velocity joints and axle seals for leaking. *(See footnote **.)*

Downloaded from www.Manualslib.com manuals search engine

Short Trip/City Scheduled Maintenance

24,000 Miles (40 000 km)

DATE	
ACTUAL MILEAGE	SERVICED BY:

- ☐ Change engine oil and filter (or every 3 months, whichever occurs first). *An Emission Control Service.*
- ☐ Lubricate chassis components (or every 3 months, whichever occurs first). *(See footnote #.)*
- ☐ Check rear/front axle fluid level and add fluid as needed. Check constant velocity joints and axle seals for leaking. *(See footnote **.)*
- ☐ Rotate tires. See "Tire Inspection and Rotation" in the Index for proper rotation pattern and additional information. *(See footnote +.)*

27,000 Miles (45 000 km)

DATE	
ACTUAL MILEAGE	SERVICED BY:

- ☐ Change engine oil and filter (or every 3 months, whichever occurs first). *An Emission Control Service.*
- ☐ Lubricate chassis components (or every 3 months, whichever occurs first). *(See footnote #.)*
- ☐ Check rear/front axle fluid level and add fluid as needed. Check constant velocity joints and axle seals for leaking. *(See footnote **.)*

Downloaded from www.Manualslib.com manuals search engine

Short Trip/City Scheduled Maintenance

30,000 Miles (50 000 km)

DATE	
ACTUAL MILEAGE	SERVICED BY:

- ☐ Change engine oil and filter (or every 3 months, whichever occurs first). *An Emission Control Service.*
- ☐ Lubricate chassis components (or every 3 months, whichever occurs first). *(See footnote #.)*
- ☐ Check rear/front axle fluid level and add fluid as needed. Check constant velocity joints and axle seals for leaking. *(See footnote **.)*
- ☐ Replace fuel filter. *An Emission Control Service. (See footnote†.)*
- ☐ Replace engine air cleaner filter. *An Emission Control Service.*
- ☐ Change automatic transmission fluid and filter if the vehicle is mainly driven under one or more of these conditions:
  - – In heavy city traffic where the outside temperature regularly reaches 90°F (32°C) or higher.
  - – In hilly or mountainous terrain.
  - – When doing frequent trailer towing.
  - – Uses such as found in taxi, police or delivery service.

  If you do not use your vehicle under any of these conditions, change the fluid and filter every 50,000 miles (83 000 km).
- ☐ Rotate tires. See “Tire Inspection and Rotation” in the Index for proper rotation pattern and additional information. *(See footnote +.)*

Downloaded from www.Manualslib.com manuals search engine

Short Trip/City Scheduled Maintenance

33,000 Miles (55 000 km)

DATE	
ACTUAL MILEAGE	SERVICED BY:

- ☐ Change engine oil and filter (or every 3 months, whichever occurs first). *An Emission Control Service.*
- ☐ Lubricate chassis components (or every 3 months, whichever occurs first). *(See footnote #.)*
- ☐ Check rear/front axle fluid level and add fluid as needed. Check constant velocity joints and axle seals for leaking. *(See footnote **.)*

36,000 Miles (60 000 km)

DATE	
ACTUAL MILEAGE	SERVICED BY:

- ☐ Change engine oil and filter (or every 3 months, whichever occurs first). *An Emission Control Service.*
- ☐ Lubricate chassis components (or every 3 months, whichever occurs first). *(See footnote #.)*
- ☐ Rotate tires. See “Tire Inspection and Rotation” in the Index for proper rotation pattern and additional information. *(See footnote +.)*
- ☐ Check rear/front axle fluid level and add fluid as needed. Check constant velocity joints and axle seals for leaking. *(See footnote **.)*

Downloaded from www.Manualslib.com manuals search engine

Short Trip/City Scheduled Maintenance

39,000 Miles (65 000 km)

DATE	
ACTUAL MILEAGE	SERVICED BY:

- ☐ Change engine oil and filter (or every 3 months, whichever occurs first). *An Emission Control Service.*
- ☐ Lubricate chassis components (or every 3 months, whichever occurs first). *(See footnote #.)*
- ☐ Check rear/front axle fluid level and add fluid as needed. Check constant velocity joints and axle seals for leaking. *(See footnote **.)*

42,000 Miles (70 000 km)

DATE	
ACTUAL MILEAGE	SERVICED BY:

- ☐ Change engine oil and filter (or every 3 months, whichever occurs first). *An Emission Control Service.*
- ☐ Lubricate chassis components (or every 3 months, whichever occurs first). *(See footnote #.)*
- ☐ Check rear/front axle fluid level and add fluid as needed. Check constant velocity joints and axle seals for leaking. *(See footnote **.)*
- ☐ Rotate tires. See “Tire Inspection and Rotation” in the Index for proper rotation pattern and additional information. *(See footnote +.)*

Downloaded from www.Manualslib.com manuals search engine

Short Trip/City Scheduled Maintenance

45,000 Miles (75 000 km)

DATE	
ACTUAL MILEAGE	SERVICED BY:

- ☐ Change engine oil and filter (or every 3 months, whichever occurs first). *An Emission Control Service.*
- ☐ Lubricate chassis components (or every 3 months, whichever occurs first). *(See footnote #.)*
- ☐ Check rear/front axle fluid level and add fluid as needed. Check constant velocity joints and axle seals for leaking. *(See footnote **.)*
- ☐ Change automatic transmission fluid and filter if the vehicle is mainly driven under one or more of these conditions:
  - – In heavy city traffic where the outside temperature regularly reaches 90°F (32°C) or higher.
  - – In hilly or mountainous terrain.
  - – When doing frequent trailer towing.
  - – Uses such as found in taxi, police or delivery service.

  If you do not use your vehicle under any of these conditions, change the fluid and filter every 50,000 miles (83 000 km).
- ☐ Inspect engine air cleaner filter if you are driving in dusty conditions. Replace filter if necessary. *An Emission Control Service. (See footnote †.)*

Downloaded from www.Manualslib.com manuals search engine

Short Trip/City Scheduled Maintenance

48,000 Miles (80 000 km)

DATE	
ACTUAL MILEAGE	SERVICED BY:

- ☐ Change engine oil and filter (or every 3 months, whichever occurs first). *An Emission Control Service.*
- ☐ Lubricate chassis components (or every 3 months, whichever occurs first). *(See footnote #.)*
- ☐ Check rear/front axle fluid level and add fluid as needed. Check constant velocity joints and axle seals for leaking. *(See footnote **.)*
- ☐ Rotate tires. See "Tire Inspection and Rotation" in the Index for proper rotation pattern and additional information. *(See footnote +.)*

50,000 Miles (83 000 km)

DATE	
ACTUAL MILEAGE	SERVICED BY:

- ☐ If you haven't used your vehicle under severe service conditions listed previously and, therefore, haven't changed your automatic transmission fluid, change both the fluid and filter.
- ☐ Change transfer case fluid.

51,000 Miles (85 000 km)

DATE	
ACTUAL MILEAGE	SERVICED BY:

- ☐ Change engine oil and filter (or every 3 months, whichever occurs first). *An Emission Control Service.*
- ☐ Lubricate chassis components (or every 3 months, whichever occurs first). *(See footnote #.)*
- ☐ Check rear/front axle fluid level and add fluid as needed. Check constant velocity joints and axle seals for leaking. *(See footnote **.)*

Downloaded from www.Manualslib.com manuals search engine

Short Trip/City Scheduled Maintenance

54,000 Miles (90 000 km)

DATE	
ACTUAL MILEAGE	SERVICED BY:

- ☐ Change engine oil and filter (or every 3 months, whichever occurs first). *An Emission Control Service.*
- ☐ Lubricate chassis components (or every 3 months, whichever occurs first). *(See footnote #.)*
- ☐ Check rear/front axle fluid level and add fluid as needed. Check constant velocity joints and axle seals for leaking. *(See footnote **.)*
- ☐ Rotate tires. See "Tire Inspection and Rotation" in the Index for proper rotation pattern and additional information. *(See footnote +.)*

57,000 Miles (95 000 km)

DATE	
ACTUAL MILEAGE	SERVICED BY:

- ☐ Change engine oil and filter (or every 3 months, whichever occurs first). *An Emission Control Service.*
- ☐ Lubricate chassis components (or every 3 months, whichever occurs first). *(See footnote #.)*
- ☐ Check rear/front axle fluid level and add fluid as needed. Check constant velocity joints and axle seals for leaking. *(See footnote **.)*

Downloaded from www.Manualslib.com manuals search engine

Short Trip/City Scheduled Maintenance

60,000 Miles (100 000 km)

DATE	
ACTUAL MILEAGE	SERVICED BY:

- ☐ Change engine oil and filter (or every 3 months, whichever occurs first).
  An Emission Control Service.
- ☐ Lubricate chassis components (or every 3 months, whichever occurs first).
  (See footnote #.)
- ☐ Check rear/front axle fluid level and add fluid as needed. Check constant velocity joints and axle seals for leaking. *(See footnote **.)*
- ☐ Change automatic transmission fluid and filter if the vehicle is mainly driven under one or more of these conditions:
  - In heavy city traffic where the outside temperature regularly reaches 90°F (32°C) or higher.
  - In hilly or mountainous terrain.
  - When doing frequent trailer towing.
  - Uses such as found in taxi, police or delivery service.

  If you do not use your vehicle under any of these conditions, change the fluid and filter every 50,000 miles (83 000 km).
- ☐ Inspect engine accessory drive belt.
  An Emission Control Service.
- ☐ Replace fuel filter.
  An Emission Control Service. (See footnote†.)

Downloaded from www.Manualslib.com manuals search engine

Short Trip/City Scheduled Maintenance

- ☐ Replace engine air cleaner filter.
  An Emission Control Service.
- ☐ Rotate tires. See “Tire Inspection and Rotation” in the Index for proper rotation pattern and additional information. *(See footnote +.)*

63,000 Miles (105 000 km)

DATE	
ACTUAL MILEAGE	SERVICED BY:

- ☐ Change engine oil and filter (or every 3 months, whichever occurs first).
  An Emission Control Service.
- ☐ Lubricate chassis components (or every 3 months, whichever occurs first).
  (See footnote #.)
- ☐ Check rear/front axle fluid level and add fluid as needed. Check constant velocity joints and axle seals for leaking. *(See footnote **.)*

66,000 Miles (110 000 km)

DATE	
ACTUAL MILEAGE	SERVICED BY:

- ☐ Change engine oil and filter (or every 3 months, whichever occurs first).
  An Emission Control Service.
- ☐ Lubricate chassis components (or every 3 months, whichever occurs first).
  (See footnote #.)
- ☐ Check rear/front axle fluid level and add fluid as needed. Check constant velocity joints and axle seals for leaking. *(See footnote **.)*
- ☐ Rotate tires. See “Tire Inspection and Rotation” in the Index for proper rotation pattern and additional information. *(See footnote +.)*

Downloaded from www.Manualslib.com manuals search engine

Short Trip/City Scheduled Maintenance

69,000 Miles (115 000 km)

DATE	
ACTUAL MILEAGE	SERVICED BY:

- ☐ Change engine oil and filter (or every 3 months, whichever occurs first). *An Emission Control Service.*
- ☐ Lubricate chassis components (or every 3 months, whichever occurs first). *(See footnote #.)*
- ☐ Check rear/front axle fluid level and add fluid as needed. Check constant velocity joints and axle seals for leaking. *(See footnote **.)*

72,000 Miles (120 000 km)

DATE	
ACTUAL MILEAGE	SERVICED BY:

- ☐ Change engine oil and filter (or every 3 months, whichever occurs first). *An Emission Control Service.*
- ☐ Lubricate chassis components (or every 3 months, whichever occurs first). *(See footnote #.)*
- ☐ Check rear/front axle fluid level and add fluid as needed. Check constant velocity joints and axle seals for leaking. *(See footnote **.)*
- ☐ Rotate tires. See “Tire Inspection and Rotation” in the Index for proper rotation pattern and additional information. *(See footnote +.)*

Downloaded from www.Manualslib.com manuals search engine

Short Trip/City Scheduled Maintenance

75,000 Miles (125 000 km)

DATE	
ACTUAL MILEAGE	SERVICED BY:

- ☐ Change engine oil and filter (or every 3 months, whichever occurs first). *An Emission Control Service.*
- ☐ Lubricate chassis components (or every 3 months, whichever occurs first). *(See footnote #.)*
- ☐ Change automatic transmission fluid and filter if the vehicle is mainly driven under one or more of these conditions:
  - – In heavy city traffic where the outside temperature regularly reaches 90°F (32°C) or higher.
  - – In hilly or mountainous terrain.
  - – When doing frequent trailer towing.
  - – Uses such as found in taxi, police or delivery service.

  If you do not use your vehicle under any of these conditions, change the fluid and filter every 50,000 miles (83 000 km).
- ☐ Inspect engine air cleaner filter if you are driving in dusty conditions. Replace filter if necessary. *An Emission Control Service. (See footnote †.)*
- ☐ Check rear/front axle fluid level and add fluid as needed. Check constant velocity joints and axle seals for leaking. *(See footnote **.)*

Downloaded from www.Manualslib.com manuals search engine

Short Trip/City Scheduled Maintenance

78,000 Miles (130 000 km)

DATE	
ACTUAL MILEAGE	SERVICED BY:

- ☐ Change engine oil and filter (or every 3 months, whichever occurs first). *An Emission Control Service.*
- ☐ Lubricate chassis components (or every 3 months, whichever occurs first). *(See footnote #.)*
- ☐ Check rear/front axle fluid level and add fluid as needed. Check constant velocity joints and axle seals for leaking. *(See footnote **.)*
- ☐ Rotate tires. See "Tire Inspection and Rotation" in the Index for proper rotation pattern and additional information. *(See footnote +.)*

81,000 Miles (135 000 km)

DATE	
ACTUAL MILEAGE	SERVICED BY:

- ☐ Change engine oil and filter (or every 3 months, whichever occurs first). *An Emission Control Service.*
- ☐ Lubricate chassis components (or every 3 months, whichever occurs first). *(See footnote #.)*
- ☐ Check rear/front axle fluid level and add fluid as needed. Check constant velocity joints and axle seals for leaking. *(See footnote **.)*

Downloaded from www.Manualslib.com manuals search engine

Short Trip/City Scheduled Maintenance

84,000 Miles (140 000 km)

DATE	
ACTUAL MILEAGE	SERVICED BY:

- ☐ Change engine oil and filter (or every 3 months, whichever occurs first). *An Emission Control Service.*
- ☐ Lubricate chassis components (or every 3 months, whichever occurs first). *(See footnote #.)*
- ☐ Check rear/front axle fluid level and add fluid as needed. Check constant velocity joints and axle seals for leaking. *(See footnote **.)*
- ☐ Rotate tires. See “Tire Inspection and Rotation” in the Index for proper rotation pattern and additional information. *(See footnote +.)*

87,000 Miles (145 000 km)

DATE	
ACTUAL MILEAGE	SERVICED BY:

- ☐ Change engine oil and filter (or every 3 months, whichever occurs first). *An Emission Control Service.*
- ☐ Lubricate chassis components (or every 3 months, whichever occurs first). *(See footnote #.)*
- ☐ Check rear/front axle fluid level and add fluid as needed. Check constant velocity joints and axle seals for leaking. *(See footnote **.)*

Downloaded from www.Manualslib.com manuals search engine

Short Trip/City Scheduled Maintenance

90,000 Miles (150 000 km)

DATE	
ACTUAL MILEAGE	SERVICED BY:

- ☐ Change engine oil and filter (or every 3 months, whichever occurs first). *An Emission Control Service.*
- ☐ Lubricate chassis components (or every 3 months, whichever occurs first). *(See footnote #.)*
- ☐ Check rear/front axle fluid level and add fluid as needed. Check constant velocity joints and axle seals for leaking. *(See footnote **.)*
- ☐ Change automatic transmission fluid and filter if the vehicle is mainly driven under one or more of these conditions:
  - – In heavy city traffic where the outside temperature regularly reaches 90°F (32°C) or higher.
  - – In hilly or mountainous terrain.
  - – When doing frequent trailer towing.
  - – Uses such as found in taxi, police or delivery service.

  If you do not use your vehicle under any of these conditions, change the fluid and filter every 50,000 miles (83 000 km).

Downloaded from www.Manualslib.com manuals search engine

Short Trip/City Scheduled Maintenance

- ☐ Replace fuel filter.
  An Emission Control Service. (See footnote†.)
- ☐ Replace engine air cleaner filter.
  An Emission Control Service.
- ☐ Rotate tires. See "Tire Inspection and Rotation" in the Index for proper rotation pattern and additional information. *(See footnote +.)*

93,000 Miles (155 000 km)

- ☐ Change engine oil and filter (or every 3 months, whichever occurs first).
  An Emission Control Service.
- ☐ Lubricate chassis components (or every 3 months, whichever occurs first).
  (See footnote #.)
- ☐ Check rear/front axle fluid level and add fluid as needed. Check constant velocity joints and axle seals for leaking. *(See footnote **.)*

DATE	
ACTUAL MILEAGE	SERVICED BY:

Downloaded from www.Manualslib.com manuals search engine

Short Trip/City Scheduled Maintenance

96,000 Miles (160 000 km)

DATE	
ACTUAL MILEAGE	SERVICED BY:

- ☐ Change engine oil and filter (or every 3 months, whichever occurs first). *An Emission Control Service.*
- ☐ Lubricate chassis components (or every 3 months, whichever occurs first). *(See footnote #.)*
- ☐ Check rear/front axle fluid level and add fluid as needed. Check constant velocity joints and axle seals for leaking. *(See footnote **.)*
- ☐ Rotate tires. See “Tire Inspection and Rotation” in the Index for proper rotation pattern and additional information. *(See footnote +.)*

99,000 Miles (165 000 km)

DATE	
ACTUAL MILEAGE	SERVICED BY:

- ☐ Change engine oil and filter (or every 3 months, whichever occurs first). *An Emission Control Service.*
- ☐ Lubricate chassis components (or every 3 months, whichever occurs first). *(See footnote #.)*
- ☐ Check rear/front axle fluid level and add fluid as needed. Check constant velocity joints and axle seals for leaking. *(See footnote **.)*

Downloaded from www.Manualslib.com manuals search engine

Short Trip/City Scheduled Maintenance

100,000 Miles (166 000 km)

DATE	
ACTUAL MILEAGE	SERVICED BY:

- ☐ Inspect spark plug wires.
  An Emission Control Service.
- ☐ Replace spark plugs.
  An Emission Control Service.
- ☐ If you haven't used your vehicle under severe service conditions listed previously and, therefore, haven't changed your automatic transmission fluid, change both the fluid and filter.
- ☐ Change transfer case fluid.
- ☐ Inspect Positive Crankcase Ventilation (PCV) valve.
  An Emission Control Service.

150,000 Miles (240 000 km)

DATE	
ACTUAL MILEAGE	SERVICED BY:

- ☐ Drain, flush and refill cooling system (or every 60 months since last service, whichever occurs first). See "Engine Coolant" in the Index for what to use. Inspect hoses. Clean radiator, condenser, pressure cap and neck. Pressure test cooling system and pressure cap.
  An Emission Control Service.

Downloaded from www.Manualslib.com manuals search engine

Long Trip/Highway Scheduled Maintenance

The services shown in this schedule up to 100,000 miles (166 000 km) should be performed after 100,000 miles (166 000 km) at the same intervals. The services shown at 150,000 miles (240 000 km) should be performed at the same interval after 150,000 miles (240 000 km).

See “Owner Checks and Services” and “Periodic Maintenance Inspections” following.

Footnotes

† The U.S. Environmental Protection Agency or the California Air Resources Board has determined that the failure to perform this maintenance item will not nullify the emission warranty or limit recall liability prior to the completion of the vehicle’s useful life. We, however, urge that all recommended maintenance services be performed at the indicated intervals and the maintenance be recorded.

 # Lubricate the front suspension, ball joints, steering linkage, parking brake cable guides, propshaft splines, universal joints and brake pedal springs.

+ A good time to check your brakes is during tire rotation. See “Brake System Inspection” under “Periodic Maintenance Inspections” in Part C of this schedule.

*** Drive axle service. See “Recommended Fluids and Lubricants” in the Index for proper lubricant to use:*

- *Drain and refill at first oil change. At subsequent oil changes, check fluid level and add fluid as needed.*

Downloaded from www.Manualslib.com manuals search engine

Long Trip/Highway Scheduled Maintenance

7,500 Miles (12 500 km)

DATE	
ACTUAL MILEAGE	SERVICED BY:

- ☐ Change engine oil and filter (or every 12 months, whichever occurs first). *An Emission Control Service.*
- ☐ Lubricate chassis components (or every 12 months, whichever occurs first). *(See footnote #.)*
- ☐ Check rear/front axle fluid level and add fluid as needed. Check constant velocity joints and axle seals for leaking. *(See footnote **.)*
- ☐ Rotate tires. See “Tire Inspection and Rotation” in the Index for proper rotation pattern and additional information. *(See footnote +.)*

15,000 Miles (25 000 km)

DATE	
ACTUAL MILEAGE	SERVICED BY:

- ☐ Change engine oil and filter (or every 12 months, whichever occurs first). *An Emission Control Service.*
- ☐ Lubricate chassis components (or every 12 months, whichever occurs first). *(See footnote #.)*
- ☐ Check rear/front axle fluid level and add fluid as needed. Check constant velocity joints and axle seals for leaking. *(See footnote **.)*

(Continued)

Downloaded from www.Manualslib.com manuals search engine

Long Trip/Highway Scheduled Maintenance

15,000 Miles (25 000 km) (Continued)

☐ Change automatic transmission fluid and filter if the vehicle is mainly driven under one or more of these conditions:

- In heavy city traffic where the outside temperature regularly reaches 90°F (32°C) or higher.
- In hilly or mountainous terrain.
- When doing frequent trailer towing.
- Uses such as found in taxi, police or delivery service.

If you do not use your vehicle under any of these conditions, change the fluid and filter every 50,000 miles (83 000 km).

☐ Rotate tires. See "Tire Inspection and Rotation" in the Index for proper rotation pattern and additional information. *(See footnote +.)*

22,500 Miles (37 500 km)

DATE	
ACTUAL MILEAGE	SERVICED BY:

☐ Change engine oil and filter (or every 12 months, whichever occurs first). *An Emission Control Service.*

☐ Lubricate chassis components (or every 12 months, whichever occurs first). *(See footnote #.)*

☐ Check rear/front axle fluid level and add fluid as needed. Check constant velocity joints and axle seals for leaking. *(See footnote **.)*

☐ Rotate tires. See "Tire Inspection and Rotation" in the Index for proper rotation pattern and additional information. *(See footnote +.)*

Downloaded from www.Manualslib.com manuals search engine

Long Trip/Highway Scheduled Maintenance

30,000 Miles (50 000 km)

DATE	
ACTUAL MILEAGE	SERVICED BY:

- ☐ Change engine oil and filter (or every 12 months, whichever occurs first). *An Emission Control Service.*
- ☐ Lubricate chassis components (or every 12 months, whichever occurs first). *(See footnote #.)*
- ☐ Check rear/front axle fluid level and add fluid as needed. Check constant velocity joints and axle seals for leaking. *(See footnote **.)*
- ☐ Change automatic transmission fluid and filter if the vehicle is mainly driven under one or more of these conditions:
  - – In heavy city traffic where the outside temperature regularly reaches 90°F (32°C) or higher.
  - – In hilly or mountainous terrain.
  - – When doing frequent trailer towing.
  - – Uses such as found in taxi, police or delivery service.

  If you do not use your vehicle under any of these conditions, change the fluid and filter every 50,000 miles (83 000 km).
- ☐ Rotate tires. See “Tire Inspection and Rotation” in the Index for proper rotation pattern and additional information. *(See footnote +.)*
- ☐ Replace fuel filter. *An Emission Control Service. (See footnote †.)*
- ☐ Replace engine air cleaner filter. *An Emission Control Service.*

Downloaded from www.Manualslib.com manuals search engine

Long Trip/Highway Scheduled Maintenance

37,500 Miles (62 500 km)

DATE	
ACTUAL MILEAGE	SERVICED BY:

- ☐ Change engine oil and filter (or every 12 months, whichever occurs first). *An Emission Control Service.*
- ☐ Lubricate chassis components (or every 12 months, whichever occurs first). *(See footnote #.)*
- ☐ Check rear/front axle fluid level and add fluid as needed. Check constant velocity joints and axle seals for leaking. *(See footnote **.)*
- ☐ Rotate tires. See “Tire Inspection and Rotation” in the Index for proper rotation pattern and additional information. *(See footnote +.)*

45,000 Miles (75 000 km)

DATE	
ACTUAL MILEAGE	SERVICED BY:

- ☐ Change engine oil and filter (or every 12 months, whichever occurs first). *An Emission Control Service.*
- ☐ Lubricate chassis components (or every 12 months, whichever occurs first). *(See footnote #.)*
- ☐ Check rear/front axle fluid level and add fluid as needed. Check constant velocity joints and axle seals for leaking. *(See footnote **.)*

Downloaded from www.Manualslib.com manuals search engine

Long Trip/Highway Scheduled Maintenance

☐ Change automatic transmission fluid and filter if the vehicle is mainly driven under one or more of these conditions:

- In heavy city traffic where the outside temperature regularly reaches 90°F (32°C) or higher.
- In hilly or mountainous terrain.
- When doing frequent trailer towing.
- Uses such as found in taxi, police or delivery service.

If you do not use your vehicle under any of these conditions, change the fluid and filter every 50,000 miles (83 000 km).

☐ Rotate tires. See "Tire Inspection and Rotation" in the Index for proper rotation pattern and additional information. *(See footnote +.)*

50,000 Miles (83 000 km)

☐ If you haven't used your vehicle under severe conditions listed previously and, therefore, haven't changed your automatic transmission fluid, change both the fluid and filter.

☐ Change transfer case fluid.

DATE	
ACTUAL MILEAGE	SERVICED BY:

Downloaded from www.Manualslib.com manuals search engine

Long Trip/Highway Scheduled Maintenance

52,500 Miles (87 500 km)

DATE	
ACTUAL MILEAGE	SERVICED BY:

- ☐ Change engine oil and filter (or every 12 months, whichever occurs first). *An Emission Control Service.*
- ☐ Lubricate chassis components (or every 12 months, whichever occurs first). *(See footnote #.)*
- ☐ Check rear/front axle fluid level and add fluid as needed. Check constant velocity joints and axle seals for leaking. *(See footnote **.)*
- ☐ Rotate tires. See “Tire Inspection and Rotation” in the Index for proper rotation pattern and additional information. *(See footnote +.)*

60,000 Miles (100 000 km)

DATE	
ACTUAL MILEAGE	SERVICED BY:

- ☐ Change engine oil and filter (or every 12 months, whichever occurs first). *An Emission Control Service.*
- ☐ Lubricate chassis components (or every 12 months, whichever occurs first). *(See footnote #.)*
- ☐ Check rear/front axle fluid level and add fluid as needed. Check constant velocity joints and axle seals for leaking. *(See footnote **.)*

Downloaded from www.Manualslib.com manuals search engine

Long Trip/Highway Scheduled Maintenance

☐ Change automatic transmission fluid and filter if the vehicle is mainly driven under one or more of these conditions:

- In heavy city traffic where the outside temperature regularly reaches 90°F (32°C) or higher.
- In hilly or mountainous terrain.
- When doing frequent trailer towing.
- Uses such as found in taxi, police or delivery service.

If you do not use your vehicle under any of these conditions, change the fluid and filter every 50,000 miles (83 000 km).

☐ Rotate tires. See "Tire Inspection and Rotation" in the Index for proper rotation pattern and additional information. *(See footnote +.)*

☐ Inspect engine accessory drive belt.
An Emission Control Service.

☐ Replace fuel filter.
An Emission Control Service. (See footnote†.)

☐ Replace engine air cleaner filter.
An Emission Control Service.

Downloaded from www.Manualslib.com manuals search engine

Long Trip/Highway Scheduled Maintenance

67,500 Miles (112 500 km)

DATE	
ACTUAL MILEAGE	SERVICED BY:

- ☐ Change engine oil and filter (or every 12 months, whichever occurs first). *An Emission Control Service.*
- ☐ Lubricate chassis components (or every 12 months, whichever occurs first). *(See footnote #.)*
- ☐ Check rear/front axle fluid level and add fluid as needed. Check constant velocity joints and axle seals for leaking. *(See footnote **.)*
- ☐ Rotate tires. See “Tire Inspection and Rotation” in the Index for proper rotation pattern and additional information. *(See footnote +.)*

75,000 Miles (125 000 km)

DATE	
ACTUAL MILEAGE	SERVICED BY:

- ☐ Change engine oil and filter (or every 12 months, whichever occurs first). *An Emission Control Service.*
- ☐ Lubricate chassis components (or every 12 months, whichever occurs first). *(See footnote #.)*
- ☐ Check rear/front axle fluid level and add fluid as needed. Check constant velocity joints and axle seals for leaking. *(See footnote **.)*

Downloaded from www.Manualslib.com manuals search engine

Long Trip/Highway Scheduled Maintenance

☐ Change automatic transmission fluid and filter if the vehicle is mainly driven under one or more of these conditions:

- In heavy city traffic where the outside temperature regularly reaches 90°F (32°C) or higher.
- In hilly or mountainous terrain.
- When doing frequent trailer towing.
- Uses such as found in taxi, police or delivery service.

If you do not use your vehicle under any of these conditions, change the fluid and filter every 50,000 miles (83 000 km).

☐ Rotate tires. See "Tire Inspection and Rotation" in the Index for proper rotation pattern and additional information. *(See footnote +.)*

82,500 Miles (137 500 km)

☐ Change engine oil and filter (or every 12 months, whichever occurs first). *An Emission Control Service.*

☐ Lubricate chassis components (or every 12 months, whichever occurs first). *(See footnote #.)*

☐ Check rear/front axle fluid level and add fluid as needed. Check constant velocity joints and axle seals for leaking. *(See footnote **.)*

☐ Rotate tires. See "Tire Inspection and Rotation" in the Index for proper rotation pattern and additional information. *(See footnote +.)*

DATE	
ACTUAL MILEAGE	SERVICED BY:

Downloaded from www.Manualslib.com manuals search engine

Long Trip/Highway Scheduled Maintenance

90,000 Miles (150 000 km)

DATE	
ACTUAL MILEAGE	SERVICED BY:

- ☐ Change engine oil and filter (or every 12 months, whichever occurs first). *An Emission Control Service.*
- ☐ Lubricate chassis components (or every 12 months, whichever occurs first). *(See footnote #.)*
- ☐ Check rear/front axle fluid level and add fluid as needed. Check constant velocity joints and axle seals for leaking. *(See footnote **.)*
- ☐ Change automatic transmission fluid and filter if the vehicle is mainly driven under one or more of these conditions:
  - – In heavy city traffic where the outside temperature regularly reaches 90°F (32°C) or higher.
  - – In hilly or mountainous terrain.
  - – When doing frequent trailer towing.
  - – Uses such as found in taxi, police or delivery service.

  If you do not use your vehicle under any of these conditions, change the fluid and filter every 50,000 miles (83 000 km).
- ☐ Replace fuel filter. *An Emission Control Service. (See footnote †.)*

Downloaded from www.Manualslib.com manuals search engine

Long Trip/Highway Scheduled Maintenance

- ☐ Replace engine air cleaner filter.
  An Emission Control Service.
- ☐ Rotate tires. See “Tire Inspection and Rotation” in the Index for proper rotation pattern and additional information. *(See footnote +.)*

97,500 Miles (162 500 km)

- ☐ Change engine oil and filter (or every 12 months, whichever occurs first).
  An Emission Control Service.
- ☐ Lubricate chassis components (or every 12 months, whichever occurs first).
  (See footnote #.)
- ☐ Check rear/front axle fluid level and add fluid as needed. Check constant velocity joints and axle seals for leaking. *(See footnote **.)*
- ☐ Rotate tires. See “Tire Inspection and Rotation” in the Index for proper rotation pattern and additional information. *(See footnote +.)*

DATE	
ACTUAL MILEAGE	SERVICED BY:

Downloaded from www.Manualslib.com manuals search engine

Long Trip/Highway Scheduled Maintenance

100,000 Miles (166 000 km)

DATE	
ACTUAL MILEAGE	SERVICED BY:

- ☐ Inspect spark plug wires.
  An Emission Control Service.
- ☐ Replace spark plugs.
  An Emission Control Service.
- ☐ If you haven't used your vehicle under severe service conditions listed previously and, therefore, haven't changed your automatic transmission fluid, change both the fluid and filter.
- ☐ Change transfer case fluid.
- ☐ Inspect Positive Crankcase Ventilation (PCV) valve.
  An Emission Control Service.

150,000 Miles (240 000 km)

DATE	
ACTUAL MILEAGE	SERVICED BY:

- ☐ Drain, flush and refill cooling system (or every 60 months since last service, whichever occurs first). See "Engine Coolant" in the Index for what to use. Inspect hoses. Clean radiator, condenser, pressure cap and neck. Pressure test the cooling system and pressure cap.
  An Emission Control Service.

Downloaded from www.Manualslib.com manuals search engine

Part B: Owner Checks and Services

Listed in this part are owner checks and services which should be performed at the intervals specified to help ensure the safety, dependability and emission control performance of your vehicle.

Be sure any necessary repairs are completed at once. Whenever any fluids or lubricants are added to your vehicle, make sure they are the proper ones, as shown in Part D.

At Each Fuel Fill

It is important for you or a service station attendant to perform these underhood checks at each fuel fill.

Engine Oil Level Check

Check the engine oil level and add the proper oil if necessary. See “Engine Oil” in the Index for further details.

Engine Coolant Level Check

Check the engine coolant level and add DEX-COOL® coolant mixture if necessary. See “Engine Coolant” in the Index for further details.

Windshield Washer Fluid Level Check

Check the windshield washer fluid level in the windshield washer tank and add the proper fluid if necessary. See “Windshield Washer Fluid” in the Index for further details.

At Least Once a Month

Tire Inflation Check

Make sure tires are inflated to the correct pressures. Don’t forget to check your spare tire. See “Tires” in the Index for further details.

Cassette Deck Service

Clean cassette deck. Cleaning should be done every 50 hours of tape play. See “Audio Systems” in the Index for further details.

Downloaded from www.Manualslib.com manuals search engine

At Least Twice a Year

Restraint System Check

Make sure the safety belt reminder light and all your belts, buckles, latch plates, retractors and anchorages are working properly. Look for any other loose or damaged safety belt system parts. If you see anything that might keep a safety belt system from doing its job, have it repaired. Have any torn or frayed safety belts replaced.

Also look for any opened or broken air bag coverings, and have them repaired or replaced. (The air bag system does not need regular maintenance.)

Wiper Blade Check

Inspect wiper blades for wear or cracking. Replace blade inserts that appear worn or damaged or that streak or miss areas of the windshield. Also see “Wiper Blades, Cleaning” in the Index.

Spare Tire Check

At least twice a year, after the monthly inflation check of the spare tire determines that the spare is inflated to the correct tire inflation pressure, make sure that the spare tire is stored securely. Push, pull, and then try to rotate or turn the tire. If it moves, use the wheel wrench to tighten the cable. See “Storing the Spare Tire and Tools” in the Index.

Weatherstrip Lubrication

Silicone grease on weatherstrips will make them last longer, seal better, and not stick or squeak. Apply silicone grease with a clean cloth. During very cold, damp weather more frequent application may be required. See “Recommended Fluids and Lubricants” in the Index.

Automatic Transmission Check

Check the transmission fluid level; add if needed. See “Automatic Transmission Fluid” in the Index. A fluid loss may indicate a problem. Check the system and repair if needed.

At Least Once a Year

Key Lock Cylinders Service

Lubricate the key lock cylinders with the lubricant specified in Part D.

Body Lubrication Service

Lubricate all hood hinges, hood latch assembly, secondary latch, pivots, spring anchor, release pawl, door hinges, fuel door hinge, liftgate hinges, locks, glove box, console doors, moving seat hardware and folding seat hardware. Part D tells you what to use. More frequent lubrication may be required when exposed to a corrosive environment.

Downloaded from www.Manualslib.com manuals search engine

Starter Switch Check

⚠ CAUTION:

When you are doing this check, the vehicle could move suddenly. If it does, you or others could be injured. Follow the steps below.

1. Before you start, be sure you have enough room around the vehicle.
2. Firmly apply both the parking brake and the regular brake. See “Parking Brake” in the Index if necessary.

   NOTE: Do not use the accelerator pedal, and be ready to turn off the engine immediately if it starts.
3. Try to start the engine in each gear. The starter should work only in PARK (P) or NEUTRAL (N). If the starter works in any other position, your vehicle needs service.

Automatic Transmission Shift Lock Control System Check

⚠ CAUTION:

When you are doing this check, the vehicle could move suddenly. If it does, you or others could be injured. Follow the steps below.

1. Before you start, be sure you have enough room around the vehicle. It should be parked on a level surface.
2. Firmly apply the parking brake. See “Parking Brake” in the Index if necessary.

   NOTE: Be ready to apply the regular brake immediately if the vehicle begins to move.
3. With the engine off, turn the key to the RUN position, but don’t start the engine. Without applying the regular brake, try to move the shift lever out of PARK (P) with normal effort. If the shift lever moves out of PARK (P), your vehicle needs service.

Downloaded from www.Manualslib.com manuals search engine

Ignition Transmission Lock Check

While parked, and with the parking brake set, try to turn the ignition key to LOCK in each shift lever position.

- The key should turn to LOCK only when the shift lever is in PARK (P).
- The key should come out only in LOCK.

Parking Brake and Automatic Transmission PARK (P) Mechanism Check

⚠ CAUTION:

When you are doing this check, your vehicle could begin to move. You or others could be injured and property could be damaged. Make sure there is room in front of your vehicle in case it begins to roll. Be ready to apply the regular brake at once should the vehicle begin to move.

Park on a fairly steep hill, with the vehicle facing downhill. Keeping your foot on the regular brake, set the parking brake.

- To check the parking brake's holding ability: With the engine running and transmission in NEUTRAL (N), slowly remove foot pressure from the regular brake pedal. Do this until the vehicle is held by the parking brake only.
- To check the PARK (P) mechanism's holding ability: With the engine running, shift to PARK (P). Then release the parking brake followed by the regular brake.

Underbody Flushing Service

At least every spring, use plain water to flush any corrosive materials from the underbody. Take care to clean thoroughly any areas where mud and other debris can collect.

Downloaded from www.Manualslib.com manuals search engine

Part C: Periodic Maintenance Inspections

Listed in this part are inspections and services which should be performed at least twice a year (for instance, each spring and fall). *You should let your dealer's service department or other qualified service center do these jobs. Make sure any necessary repairs are completed at once.*

Proper procedures to perform these services may be found in a service manual. See "Service and Owner Publications" in the Index.

Steering, Suspension and Front Drive Axle Boot and Seal Inspection

Inspect the front and rear suspension and steering system for damaged, loose or missing parts, signs of wear or lack of lubrication. Inspect the power steering lines and hoses for proper hook-up, binding, leaks, cracks, chafing, etc. Clean and then inspect the drive axle boot seals for damage, tears or leakage. Replace seals if necessary.

Exhaust System Inspection

Inspect the complete exhaust system. Inspect the body near the exhaust system. Look for broken, damaged, missing or out-of-position parts as well as open seams, holes, loose connections or other conditions which could cause a heat build-up in the floor pan or could let exhaust fumes into the vehicle. See "Engine Exhaust" in the Index.

Engine Cooling System Inspection

Inspect the hoses and have them replaced if they are cracked, swollen or deteriorated. Inspect all pipes, fittings and clamps; replace as needed. Clean the outside of the radiator and air conditioning condenser. To help ensure proper operation, a pressure test of the cooling system and pressure cap is recommended at least once a year.

Downloaded from www.Manualslib.com manuals search engine

Throttle System Inspection

Inspect the throttle system for interference or binding, and for damaged or missing parts. Replace parts as needed. Replace any components that have high effort or excessive wear. Do not lubricate accelerator and cruise control cables.

Transfer Case and Front Axle (All-Wheel Drive) Inspection

Every 12 months or at engine oil change intervals, check front axle and transfer case and add lubricant when necessary. A fluid loss could indicate a problem; check and have it repaired, if needed. Check vent hose at transfer case for kinks and proper installation.

Brake System Inspection

Inspect the complete system. Inspect brake lines and hoses for proper hook-up, binding, leaks, cracks, chafing, etc. Inspect disc brake pads for wear and rotors for surface condition. Inspect other brake parts, including calipers, parking brake, etc. Check parking brake adjustment. You may need to have your brakes inspected more often if your driving habits or conditions result in frequent braking.

Downloaded from www.Manualslib.com manuals search engine

Part D: Recommended Fluids and Lubricants

NOTE: Fluids and lubricants identified below by name, part number or specification may be obtained from your dealer.

USAGE	FLUID/LUBRICANT
Engine Oil	Engine oil with the American Petroleum Institute Certified for Gasoline Engines starburst symbol of the proper viscosity. To determine the preferred viscosity for your vehicle's engine, see "Engine Oil" in the Index.
Engine Coolant	50/50 mixture of clean, drinkable water and use only GM Goodwrench® DEX-COOL® or Havoline® DEX-COOL® Coolant. See "Engine Coolant" in the Index.

USAGE	FLUID/LUBRICANT
Hydraulic Brake System	Delco Supreme 11® Brake Fluid (GM Part No. 12377967 or equivalent DOT-3 brake fluid).
Windshield Washer Solvent	GM Optikleen® Washer Solvent (GM Part No. 1051515) or equivalent.
Parking Brake Cable Guides	Chassis Lubricant (GM Part No. 12377985 or equivalent) or lubricant meeting requirements of NLGI # 2, Category LB or GC-LB.
Power Steering System	GM Power Steering Fluid (GM Part No. 1052884 - 1 pint, 1050017 - 1 quart, or equivalent).
Automatic Transmission	DEXRON®-III Automatic Transmission Fluid.
Key Lock Cylinders	Multi-Purpose Lubricant, Superlube® (GM Part No. 12346241 or equivalent).

Downloaded from www.Manualslib.com manuals search engine

USAGE	FLUID/LUBRICANT
Chassis Lubrication	Chassis Lubricant (GM Part No. 12377985 or equivalent) or lubricant meeting requirements of NLGI # 2, Category LB or GC-LB.
Front Axle	SAE 80W-90 Axle Lubricant (GM Part No. 1052271 or equivalent).
Rear Axle (Locking Differential)	Axle Lubricant; use only GM Part No. 1052271. *Do not add friction modifier.*
Automatic Transfer Case	AUTO-TRAK II Fluid (GM Part No. 12378508).
Hood Latch Assembly, Secondary Latch, Pivots, Spring Anchor and Release Pawl	Lubriplate® Lubricant Aerosol (GM Part No. 12346293 or equivalent) or lubricant meeting requirements of NLGI # 2, Category LB or GC-LB.

USAGE	FLUID/LUBRICANT
Hood and Door Hinges	Multi-Purpose Lubricant, Superlube® (GM Part No. 12346241 or equivalent).
Fuel Filler Door and Endgate Hinges, and Rear Folding Seat	Multi-purpose lubricant, Superlube® (GM Part No. 12346241 or equivalent).
Outer Liftgate Handle Pivot Points and Hinges	Multi-Purpose Lubricant, Superlube® (GM Part No. 12346241 or equivalent).
Weatherstrip Conditioning	Dielectric Silicone Grease (GM Part No. 12345579 or equivalent).
Weatherstrip Squeaks	Synthetic Grease with Teflon, Superlube® (GM Part No. 12371287 or equivalent).

Downloaded from www.Manualslib.com manuals search engine

Part E: Maintenance Record

After the scheduled services are performed, record the date, odometer reading and who performed the service in the boxes provided after the maintenance interval. Any additional information from “Owner Checks and Services” or “Periodic Maintenance” can be added on the following record pages. Also, you should retain all maintenance receipts. Your owner information portfolio is a convenient place to store them.

Maintenance Record			
DATE	ODOMETER READING	SERVICED BY	MAINTENANCE PERFORMED

Downloaded from www.Manualslib.com manuals search engine

Maintenance Record			
DATE	ODOMETER READING	SERVICED BY	MAINTENANCE PERFORMED

Downloaded from www.Manualslib.com manuals search engine

Section 8 Customer Assistance Information

Here you will find out how to contact Oldsmobile if you need assistance. This section also tells you how to obtain service publications and how to report any safety defects.

8-2 Customer Satisfaction Procedure
8-4 Customer Assistance for Text Telephone (TTY) Users
8-4 Customer Assistance Offices
8-5 GM Mobility Program for Persons with Disabilities
8-6 Oldsmobile Roadside Assistance Program Features and Benefits
8-7 Courtesy Transportation
8-9 Warranty Information
8-9 Reporting Safety Defects to the United States Government
8-10 Reporting Safety Defects to the Canadian Government
8-10 Reporting Safety Defects to General Motors

Downloaded from www.Manualslib.com manuals search engine

Customer Satisfaction Procedure

Your satisfaction and goodwill are important to your dealer and to Oldsmobile. Normally, any concerns with the sales transaction or the operation of your vehicle will be resolved by your dealer's sales or service departments. Sometimes, however, despite the best intentions of all concerned, misunderstandings can occur. If your concern has not been resolved to your satisfaction, the following steps should be taken:

STEP ONE -- Discuss your concern with a member of dealership management. Normally, concerns can be quickly resolved at that level. If the matter has already been reviewed with the sales, service or parts manager, contact the owner of the dealership or the general manager.

Downloaded from www.Manualslib.com manuals search engine

STEP TWO -- If after contacting a member of dealership management, it appears your concern cannot be resolved by the dealership without further help, contact the Oldsmobile Customer Assistance Center by calling 1-800-442-6537. In Canada, contact GM of Canada Customer Communication Centre in Oshawa by calling 1-800-263-3777 (English) or 1-800-263-7854 (French).

We encourage you to call the toll-free number in order to give your inquiry prompt attention. Please have the following information available to give the Customer Assistance Representative:

- Vehicle Identification Number (This is available from the vehicle registration or title, or the plate at the top left of the instrument panel and visible through the windshield.)
- Dealership name and location
- Vehicle delivery date and present mileage

When contacting Oldsmobile, please remember that your concern will likely be resolved at a dealer's facility. That is why we suggest you follow Step One first if you have a concern.

STEP THREE -- Both General Motors and your dealer are committed to making sure you are completely satisfied with your new vehicle. However, if you continue to remain unsatisfied after following the procedure outlined in Steps One and Two, you should file with the GM/BBB Auto Line Program to enforce any additional rights you may have. Canadian owners refer to your Warranty and Owner Assistance Information booklet for information on the Canadian Motor Vehicle Arbitration Plan (CAMVAP).

Downloaded from www.Manualslib.com manuals search engine

The BBB Auto Line Program is an out of court program administered by the Council of Better Business Bureaus to settle automotive disputes regarding vehicle repairs or the interpretation of the New Vehicle Limited Warranty. Although you may be required to resort to this informal dispute resolution program prior to filing a court action, use of the program is free of charge and your case will generally be heard within 40 days. If you do not agree with the decision given in your case, you may reject it and proceed with any other venue for relief available to you.

You may contact the BBB using the toll-free telephone number or write them at the following address:

BBB Auto Line
Council of Better Business Bureaus, Inc.
4200 Wilson Boulevard
Suite 800
Arlington, VA 22203-1804

Telephone: 1-800-955-5100

This program is available in all 50 states and the District of Columbia. Eligibility is limited by vehicle age, mileage and other factors. General Motors reserves the right to change eligibility limitations and/or discontinue its participation in this program.

Customer Assistance for Text Telephone (TTY) Users

To assist customers who are deaf, hard of hearing, or speech-impaired and who use Text Telephones (TTYs), Oldsmobile has TTY equipment available at its Customer Assistance Center. Any TTY user can communicate with Oldsmobile by dialing: 1-800-833-OLDS (6537). (TTY users in Canada can dial 1-800-263-3830.)

Customer Assistance Offices

Oldsmobile encourages customers to call the toll-free number for assistance. If a U.S. customer wishes to write to Oldsmobile, the letter should be addressed to Oldsmobile's Customer Assistance Center.

United States

Customer Assistance Representative
Oldsmobile Customer Assistance Center
P.O. Box 33171
Detroit, MI 48232-5171

1-800-442-6537
1-800-833-6537 (For Text Telephone devices (TTYs))
Roadside Assistance: 1-800-442-OLDS (6537)

Downloaded from www.Manualslib.com manuals search engine

From:

Puerto Rico:	1-800-496-9992 (English) 1-800-496-9993 (Spanish)
U.S. Virgin Islands:	1-800-496-9994

313-381-0022 (Fax Number)

Canada

General Motors of Canada Limited
Customer Communication Centre, 163-005
1908 Colonel Sam Drive
Oshawa, Ontario L1H 8P7

1-800-263-3777 (English)
1-800-263-7854 (French)
1-800-263-3830 (For Text Telephone devices (TTYs))
Roadside Assistance: 1-800-268-6800

Mexico, Central America and Caribbean Islands/Countries (Except Puerto Rico and U.S. Virgin Islands)

General Motors de Mexico, S. de R.L. de C.V.
Customer Assistance Center
Paseo de la Reforma # 2740
Col. Lomas de Bezares
C.P. 11910, Mexico, D.F.

01-800-508-0000
Long Distance: 011-52 - 53 29 0 800

GM Mobility Program for Persons with Disabilities

This program, available to qualified applicants, can reimburse you up to $1,000 toward aftermarket driver or passenger adaptive equipment you may require for your vehicle (hand controls, wheelchair/scooter lifts, etc.).

This program can also provide you with free resource information, such as area driver assessment centers and mobility equipment installers. The program is available for a limited period of time from the date of vehicle purchase/lease. See your dealer for more details or call the GM Mobility Assistance Center at 1-800-323-9935. Text telephone (TTY) users, call 1-800-833-9935.

GM of Canada also has a Mobility Program. Call 1-800-GM-DRIVE (463-7483) for details. When calling from outside Canada, please dial 1-905-644-3063. All TTY users call 1-800-263-3830.

Downloaded from www.Manualslib.com manuals search engine

Oldsmobile Roadside Assistance Program Features and Benefits

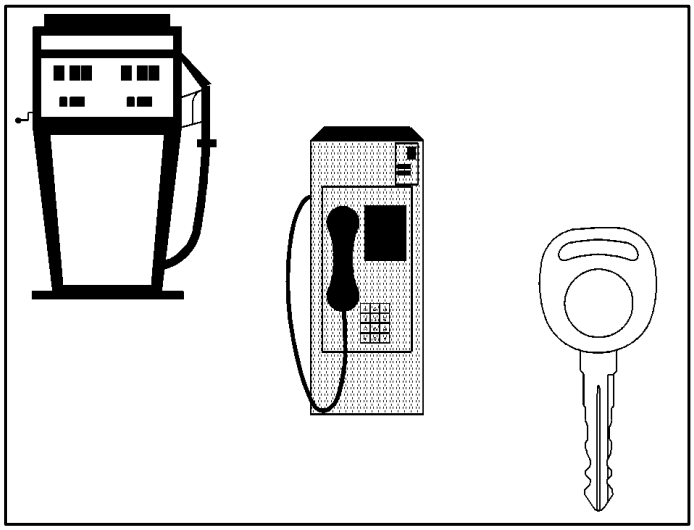

Security While You Travel

1-800-442-OLDS (6537)

As the proud owner of a new Oldsmobile vehicle, you are automatically enrolled in the Oldsmobile Roadside Assistance program. This value-added service is intended to provide you with peace of mind as you drive in the city or travel the open road.

Oldsmobile's Roadside Assistance toll-free number is staffed by courteous and capable Roadside Assistance Representatives who are available 24 hours a day, 365 days a year.

We will provide the following services during the Bumper-to-Bumper warranty period, at no expense to you:

- Fuel delivery
- Lock-out service (identification required)
- Tow to the nearest dealership for warranty service or in the event of a vehicle-disabling accident
- Flat tire change
- Jump starts
- Minor repairs to disabled vehicles
- Assistance when vehicle is mired in sand, mud or snow
- Trip routing
- Trip interruption expense benefits
- Dealership locator service

Oldsmobile Roadside Assistance specifically excludes coverage for mounting, dismounting or changing of snow tires, chains or other traction devices.

In some cases, where service is impractical, the driver may be authorized to obtain other service for which reimbursement is provided.

Downloaded from www.Manualslib.com manuals search engine

In many instances, mechanical failures are covered under Oldsmobile's comprehensive warranty. However, when other services are utilized, our Roadside Assistance Representatives will explain any payment obligations you might incur.

For prompt and efficient assistance when calling, please provide the following to the Roadside Assistance Representative:

- Location of vehicle
- Telephone number of your location
- Vehicle model, year and color
- Mileage of vehicle
- Vehicle Identification Number (VIN)
- Vehicle license plate number

Oldsmobile reserves the right to limit services or reimbursement to an owner or driver when, in Oldsmobile's judgement, the claims become excessive in frequency or type of occurrence.

While we hope you never have the occasion to use our service, it is added security while traveling for you and your family. Remember, we're only a phone call away. Oldsmobile Roadside Assistance -- 1-800-442-OLDS (6537), text telephone (TTY) users, call 1-888-889-2438.

Courtesy Transportation

Oldsmobile has always exemplified quality and value in its offering of motor vehicles. To enhance your ownership experience, we and our participating dealers are proud to offer Courtesy Transportation, a customer support program for new vehicles.

The Courtesy Transportation program is offered to retail purchase/lease customers in conjunction with the Bumper-to-Bumper coverage provided by the New Vehicle Limited Warranty. Several transportation options are available when warranty repairs are required. This will reduce your inconvenience during warranty repairs.

Plan Ahead When Possible

When your vehicle requires warranty service, you should contact your dealer and request an appointment. By scheduling a service appointment and advising your service consultant of your transportation needs, your dealer can help minimize your inconvenience. If your vehicle cannot be scheduled into the service department immediately, keep driving it until it can be scheduled for service, unless, of course, the problem is safety-related. If it is, please call your dealership, let them know this, and ask for instructions.

Downloaded from www.Manualslib.com manuals search engine

If the dealer requests that you simply drop the vehicle off for service, you are urged to do so as early in the work day as possible to allow for same day repair.

Transportation Options

Warranty service can generally be completed while you wait. However, if you are unable to wait Oldsmobile helps minimize your inconvenience by providing several transportation options. Depending on the circumstances, your dealer can offer you one of the following:

Shuttle Service

Participating dealers can provide you with shuttle service to get you to your destination with minimal interruption of your daily schedule. This includes a one way shuttle ride to a destination up to 10 miles from the dealership.

Public Transportation or Fuel Reimbursement

If your vehicle requires overnight warranty repairs, reimbursement up to $30 per day (five days maximum) may be available for the use of public transportation such as taxi or bus. In addition, should you arrange transportation through a friend or relative, reimbursement for reasonable fuel expenses up to $10 per day (five day maximum) may be available. Claim amounts should reflect actual costs and be supported by original receipts.

Courtesy Rental Vehicle

When your vehicle is unavailable due to overnight warranty repairs, your dealer may arrange to provide you with a courtesy rental vehicle or reimburse you for a rental vehicle you obtained, at actual cost, up to a maximum of $30.00 per day supported by receipts. This requires that you sign and complete a rental agreement and meet state, local and rental vehicle provider requirements. Requirements vary and may include minimum age requirements, insurance coverage, credit card, etc. You are responsible for fuel usage charges and may also be responsible for taxes, levies, usage fees, excessive mileage or rental usage beyond the completion of the repair.

Generally it is not possible to provide a like-vehicle as a courtesy rental.

Additional Program Information

Courtesy Transportation is available during the Bumper-to-Bumper warranty coverage period, but it *is not* part of the New Vehicle Limited Warranty. A separate booklet entitled “Warranty and Owner Assistance Information” furnished with each new vehicle provides detailed warranty coverage information.

Downloaded from www.Manualslib.com manuals search engine

Courtesy Transportation is available only at participating dealers and all program options, such as shuttle service, may not be available at every dealer. Please contact your dealer for specific information about availability. All Courtesy Transportation arrangements will be administered by appropriate dealer personnel.

Canadian Vehicles: For warranty repairs during the Complete Vehicle Coverage period of the General Motors of Canada New Vehicle Limited Warranty, alternative transportation may be available under the Courtesy Transportation Program. Please consult your dealer for details.

General Motors reserves the right to unilaterally modify, change or discontinue Courtesy Transportation at any time and to resolve all questions of claim eligibility pursuant to the terms and conditions described herein at its sole discretion.

Warranty Information

Your vehicle comes with a separate warranty booklet that contains detailed warranty information.

REPORTING SAFETY DEFECTS TO THE UNITED STATES GOVERNMENT

If you believe that your vehicle has a defect which could cause a crash or could cause injury or death, you should immediately inform the National Highway Traffic Safety Administration (NHTSA), in addition to notifying General Motors.

If NHTSA receives similar complaints, it may open an investigation, and if it finds that a safety defect exists in a group of vehicles, it may order a recall and remedy campaign. However, NHTSA cannot become involved in individual problems between you, your dealer or General Motors.

To contact NHTSA, you may either call the Auto Safety Hotline toll-free at 1-800-424-9393 (or 366-0123 in the Washington, D.C. area) or write to:

NHTSA, U.S. Department of Transportation
Washington, D.C. 20590

You can also obtain other information about motor vehicle safety from the hotline.

Downloaded from www.Manualslib.com manuals search engine

REPORTING SAFETY DEFECTS TO THE CANADIAN GOVERNMENT

If you live in Canada, and you believe that your vehicle has a safety defect, you should immediately notify Transport Canada, in addition to notifying General Motors of Canada Limited. You may write to:

Transport Canada
330 Sparks Street
Tower C
Ottawa, Ontario K1A 0N5

REPORTING SAFETY DEFECTS TO GENERAL MOTORS

In addition to notifying NHTSA (or Transport Canada) in a situation like this, we certainly hope you'll notify us. Please call us at 1-800-442-6537, or write:

Oldsmobile Customer Assistance Center
P.O. Box 33171
Detroit, MI 48232-5171

In Canada, please call us at 1-800-263-3777 (English) or 1-800-263-7854 (French). Or, write:

General Motors of Canada Limited
Customer Communication Centre, 163-005
1908 Colonel Sam Drive
Oshawa, Ontario L1H 8P7

Downloaded from www.Manualslib.com manuals search engine

2001 OLDSMOBILE SERVICE PUBLICATIONS ORDERING INFORMATION

The following publications covering the operation and servicing of your vehicle can be purchased by filling out the Service Publication Order Form in this book and mailing it in with your check, money order, or credit card information to Helm, Incorporated (address below.)

CURRENT PUBLICATIONS FOR 2001 OLDSMOBILE

SERVICE MANUALS

Service Manuals have the diagnosis and repair information on engines, transmission, axle, suspension, brakes, electrical, steering, body, etc.
RETAIL SELL PRICE: $120.00

TRANSMISSION, TRANSAXLE, TRANSFER CASE UNIT REPAIR MANUAL

This manual provides information on unit repair service procedures, adjustments and specifications for the 2001 GM transmissions, transaxles and transfer cases.
RETAIL SELL PRICE: $50.00

SERVICE BULLETINS

Service Bulletins give technical service information needed to knowledgeably service General Motors cars and trucks. Each bulletin contains instructions to assist in the diagnosis and service of your vehicle.

OWNER'S INFORMATION

Owner publications are written directly for Owners and intended to provide basic operational information about the vehicle. The owner's manual will include the Maintenance Schedule for all models.

In-Portfolio: Includes a Portfolio, Owner's Manual and Warranty Booklet.
RETAIL SELL PRICE: $20.00

Without Portfolio: Owner's Manual only.
RETAIL SELL PRICE: $15.00

CURRENT & PAST MODEL ORDER FORMS

Service Publications are available for current and past model GM vehicles. To request an order form, please specify year and model name of the vehicle.

PLEASE COMPLETE THE ORDER FORM SHOWN ON THE FOLLOWING PAGE AND MAIL TO:

Helm, Incorporated • P.O. Box 07130 • Detroit, MI 48207

OR ORDER TOLL FREE: 1-800-551-4123

Monday-Friday 8:00 AM – 6:00 PM Eastern Time

Visit Helm, Inc. on the World Wide Web at: www.helminc.com

For Credit Card Orders Only (VISA–MasterCard–Discover)

Downloaded from www.Manualslib.com manuals search engine

ORDER TOLL FREE
(NOTE: For Credit Card Holders Only)
1-800-551-4123
(Monday-Friday 8:00 AM – 6:00 PM EST)
FAX Orders Only 1-313-865-5927

Orders will be mailed within 10 days of receipt. Please allow adequate time for postal service. If further information is needed, write to the address shown below or call 1-800-551-4123. Material cannot be returned for credit without packing slip with return information within 30 days of delivery. On returns, a re-stocking fee may be applied against the original order.

2001 GM

PUBLICATION FORM NUMBER	ITEM DESCRIPTION	VEHICLE MODEL NAME	VEHICLE MODEL YEAR	QTY.	PRICE EACH*	TOTAL PRICE
	Service Manual		2001		$120.00	
	Car & Light Truck Transmission Unit Repair		2001		$50.00	
	Owner's Manual In Portfolio		2001		$20.00	
	Owner's Manual Without Portfolio		2001		$15.00	

SHIP TO

NOTE: Dealers and Companies please provide dealer or company name, and also the name of the person to whose attention the shipment should be sent.
Mail completed order form to:
HELM, INCORPORATED • P.O. Box 07130 • Detroit, MI 48207
For purchases outside U.S.A. please write to the above address for quotation.

(CUSTOMER'S NAME) **(ATTENTION)**

(STREET ADDRESS—NO P.O. BOX NUMBERS)

(CITY) **(STATE)** **(ZIP CODE)**

DAYTIME TELEPHONE NO. ( ) _____
AREA CODE

PAYMENT

☐ **Check or Money Order payable to Helm, Inc. (USA funds only — *do not send cash.)***
☐ MasterCard
☐ VISA
☐ Discover

TOTAL MATERIAL	
Michigan Purchasers add 6% sales tax	
U.S. Order Processing	**$6.00**
Canadian Postage	
GRAND TOTAL	

Account Number: ☐☐☐☐ ☐☐☐☐ ☐☐☐☐ ☐☐☐☐

Expiration Date mo/yr: ☐☐ ☐☐

Check here if your billing address is different from your shipping address shown. ☐

CUSTOMER SIGNATURE

GM-OLD-ORD99

*(Prices are subject to change without notice and without incurring obligation. Allow ample time for delivery.)

Note to Canadian Customers: All listed prices are quoted in U.S. funds. Canadian residents are to make checks payable in U.S. funds.

Downloaded from www.Manualslib.com manuals search engine