2015 LEAF

Roadside Assistance Guide

Zero Emission

Foreword

This manual describes roadside assistance operations and related warnings for this vehicle.

This vehicle is an electrically driven car equipped with a high voltage battery pack. **Failure to follow recommended practices during emergency responses will cause death or serious personal injury.**

Please read this manual in advance in order to understand the features of this vehicle and to help you deal with roadside assistance operations involving this vehicle. Follow the procedures in order to help assure a safe and successful roadside assistance operation.

This manual is periodically updated. If you are not viewing this manual on the Nissan web site, we urge you to go to www.nissanusa.com or www.nissan-techinfo.com to make sure you have the most recent version of this manual.

NISSAN EMERGENCY CONTACT INFORMATION

- Nissan EV Customer Support: 1-877-664-2738 (Hours of operation are Monday-Friday 7am - 7pm, Saturday 8am - 4:30pm Central time zone)
- Nissan Consumer Affairs: 1-800-647-7261 (US) or 1-800-387-0122 (Canada) (Hours of operation are 8am - 5pm (Monday-Friday) Eastern, Central and Pacific time zones)

IMPORTANT INFORMATION ABOUT THIS MANUAL

You may see various symbols in this manual. They have the following meanings:

⚠ DANGER

This symbol is used to inform you of an operation which will result in death or serious personal injury if instructions are not followed.

Example: Touching high voltage components without using the appropriate protective equipment will result in electrocution.

⚠ WARNING

This symbol is used to inform you of an operation which may cause death or serious personal injury if instructions are not followed.

⚠ CAUTION

This symbol is used to inform you of an operation which may cause personal injury or component damage if instructions are not followed.

Please note that there may be differences between this manual and the vehicle specification due to specification changes.

Table of Contents

FOREWORD RAG–2

NISSAN EMERGENCY CONTACT INFORMATION RAG–2

IMPORTANT INFORMATION ABOUT THIS MANUAL RAG–2

1. ABOUT THE NISSAN LEAF® RAG–5

1-1 LEAF IDENTIFICATION RAG–6

1-1.1 EXTERIOR RAG–6

1-1.2 INTERIOR COMPONENT LOCATION RAG–7

1-1.3 VEHICLE IDENTIFICATION NUMBER (VIN) LAYOUT RAG–8

1-1.4 WARNING AND INDICATOR LAMP INFORMATION RAG–8

2. BASIC HIGH VOLTAGE INFORMATION RAG–9

2-1 HIGH VOLTAGE-RELATED AND 12V-RELATED COMPONENT LOCATIONS AND DESCRIPTIONS RAG–9

2-1.1 LI-ION BATTERY PACK SPECIFICATIONS RAG–11

2-2 HIGH VOLTAGE SAFETY MEASURES RAG–11

2-2.1 WARNING LABEL RAG–11

3. ROADSIDE ASSISTANCE RESPONSE STEPS RAG–12

3-1 INDICATIONS THE HIGH VOLTAGE SYSTEM IS ON RAG–12

3-2 VEHICLE IMMOBILIZATION AND STABILIZATION RAG–13

3-3 TURNING OFF THE POWER SWITCH RAG–14

3-4 WATER SUBMERSION RAG–14

3-5 VEHICLE FIRE RAG–15

3-6 LI-ION BATTERY DAMAGE AND FLUID LEAKS RAG–16

4. ROADSIDE ASSISTANCE RAG–17

4-1 JUMP STARTING RAG–17

4-1.1 JUMP STARTING PROCEDURES RAG–18

4-2 P (PARK) POSITION RELEASE PROCEDURE RAG–19

4-2.1 RESET PROCEDURE RAG–21

4-3 TOWING RAG–22

4-3.1 VEHICLE SPECIFICATIONS RAG–22

4-3.2 TOWING GUIDELINES RAG–22

4-3.3 USE OF VEHICLE EQUIPPED HOOKS FOR RECOVERY OPERATIONS RAG–24

4-4 STORING THE VEHICLE RAG–26

4-5 JACKING UP THE VEHICLE AND CHANGING A TIRE RAG–26

4-6 REPAIRING A FLAT TIRE WITH NISSAN EMERGENCY TIRE PUNCTURE REPAIR KIT RAG–28
4-6.1 BEFORE USING EMERGENCY TIRE PUNCTURE REPAIR KIT RAG–29
4-6.2 REPAIRING THE TIRE RAG–30
4-6.3 AFTER REPAIRING THE TIRE RAG–32
5. STORING THE VEHICLE RAG–33
5-1 DANGER SIGN EXAMPLE RAG–34
5-2 PREPARATION ITEMS RAG–35
5-2.1 PERSONAL PROTECTIVE EQUIPMENT (PPE) PROTECTIVE WEAR CONTROL RAG–35
5-2.2 DAILY INSPECTION RAG–35
5-2.3 INSULATED TOOLS RAG–36
5-3 REMOVING THE SERVICE PLUG RAG–36

1. About The Nissan LEAF®

This vehicle uses two types of batteries. One is a 12V battery that is the same as the battery in vehicles powered by internal combustion engines, and the other is the Lithium-ion (Li-ion) battery (high voltage) for the traction motor which propels the vehicle. The Li-ion battery is encased in steel and mounted underneath the vehicle.

The vehicle must be plugged-in in order for the Li-ion battery to be recharged. Additionally, the vehicle system can recharge the Li-ion battery by converting driving force into electricity while the vehicle is decelerating or being driven downhill. This is called regenerative charging. This vehicle is considered to be an environmentally friendly vehicle because it does not emit exhaust gases.

1-1 LEAF Identification

1-1.1 Exterior

The specific exterior identification features are indicated as follows:

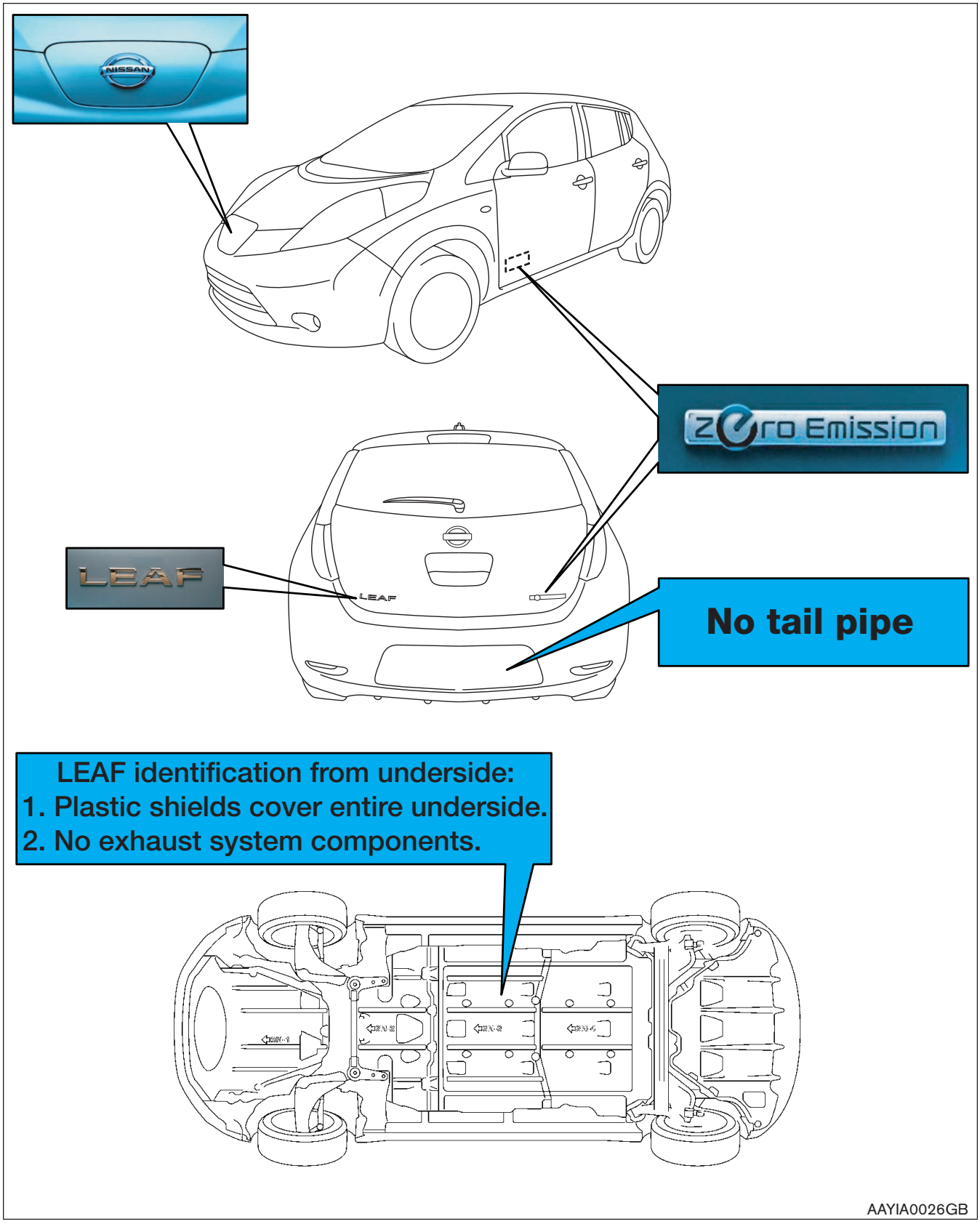

1-1.2 Interior Component Location

Interior components referenced in this manual are as follows:

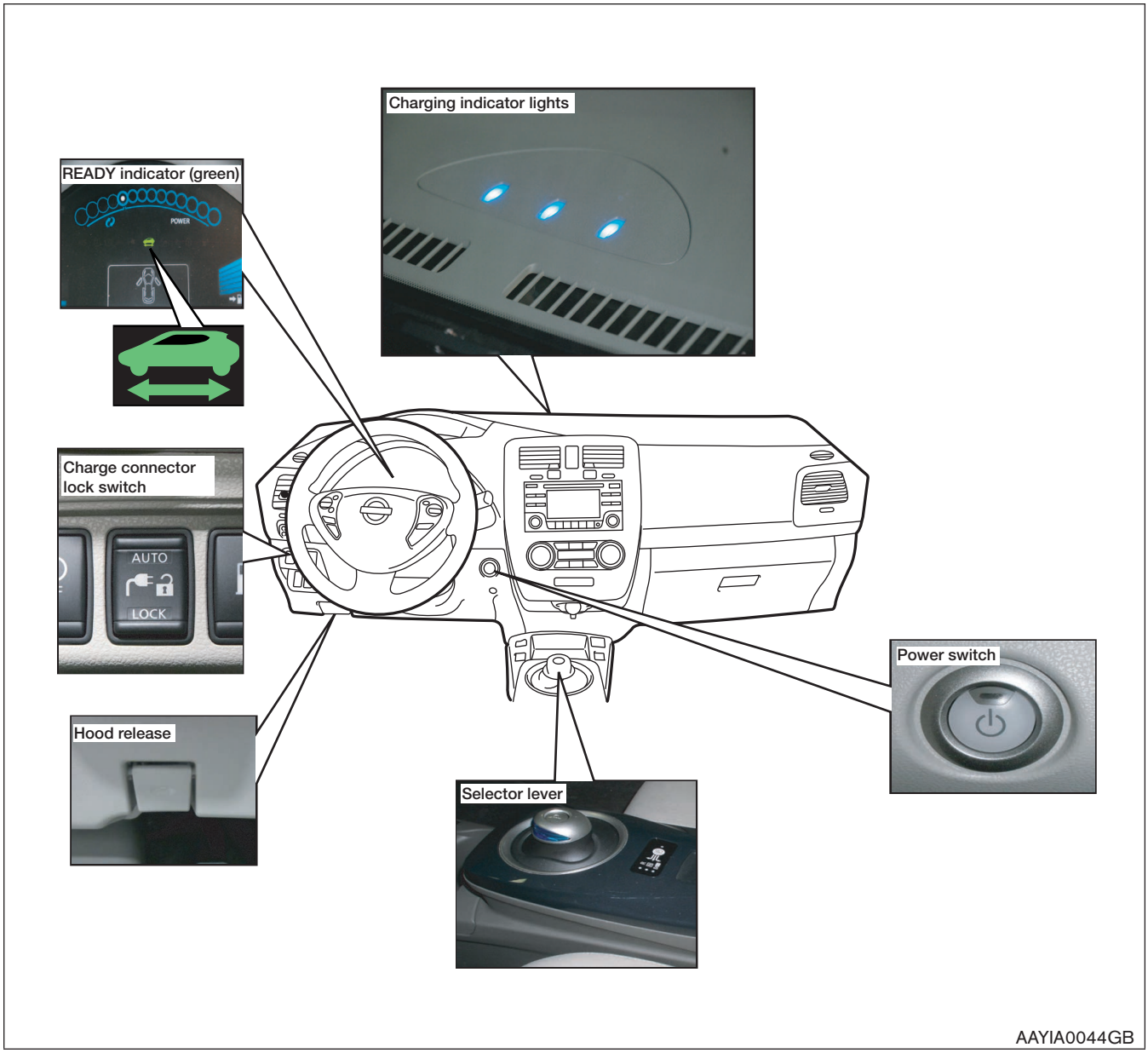

1-1.3 Vehicle Identification Number (VIN) Layout

The vehicle identification number can be located as follows: Example VIN : 1N4A **Z**0CPXFC053500

The LEAF is identified by the 5 th alphanumeric character: **Z**

Z = Electric vehicle

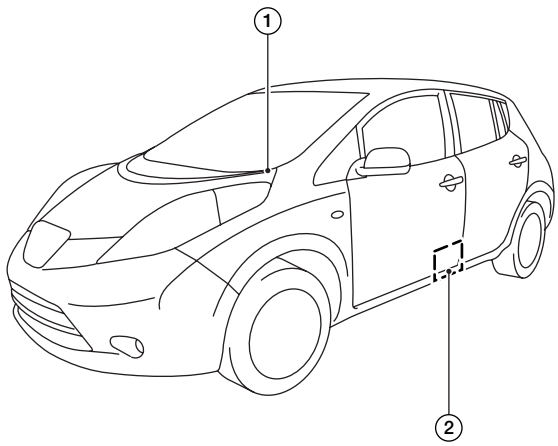

AAYIA0090ZZ

1. VIN plate (visible through windshield)
2. Vehicle certification plate (lower center pillar)

1-1.4 Warning and Indicator Lamp Information

The following warning and indicator lamps are located in the instrument cluster.

Lamp Name	Icon	Description
READY Indicator		This lamp is on when the EV system is powered up and the vehicle is ready to drive.
EV System Warning Lamp *1		▪ Malfunction has occurred in the EV system and/or ▪ Emergency shut-off system has been activated. The shut-off system activates in the following conditions: – Front and side collisions in which the air bags are deployed. – Certain rear collisions. – Certain EV system malfunctions.
Master Warning Lamp (RED)		This lamp is on when another red warning lamp is displayed in the instrument cluster or a warning is displayed on the dot matrix LCD.
Master Warning Lamp (YELLOW)		This lamp is on when: ▪ Li-ion battery is getting low on charge. ▪ A yellow warning lamp is displayed in the instrument cluster or a message is displayed on the dot matrix LCD.

*1: When this lamp is ON, the ready lamp will turn OFF.

2. Basic High Voltage Information

2-1 High Voltage-Related and 12V-Related Component Locations and Descriptions

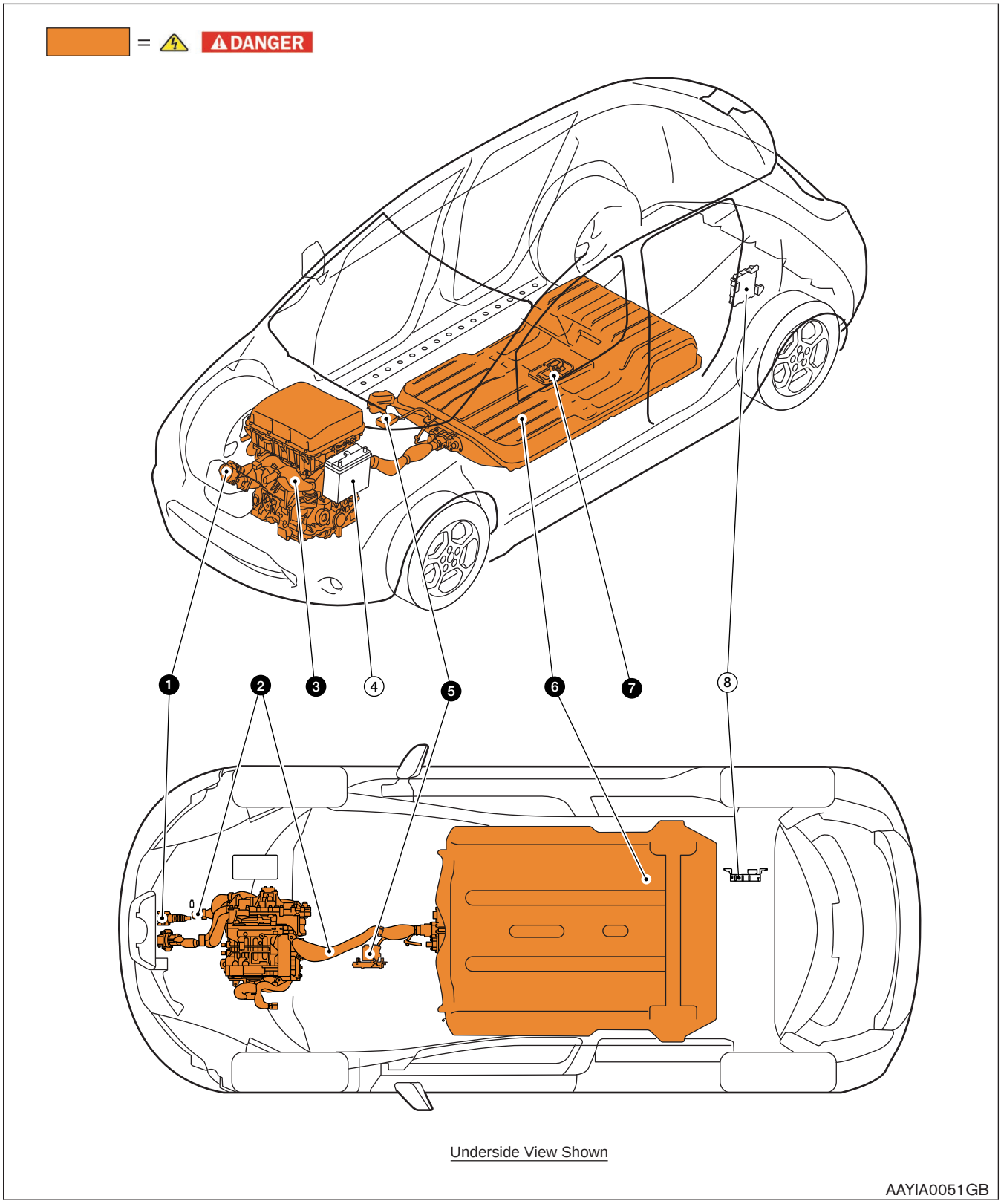

NOTE:

Components with white number in black background are high voltage components.

No.	Component	Location	Description
❶	Charge port	Under hood	Connecting port for EVSE (Electric Vehicle Supply Equipment). Two ports are available: Normal charge and quick charge (if so equipped).
❷	High voltage cables	Under hood and undercarriage	Orange-colored power cables carry high voltage current between each of the high voltage components.
❸	Traction Motor	Under hood	Converts three-phase AC power to drive power (torque) which propels the vehicle.
	Inverter	Under hood	Converts the DC power stored in the Li-ion battery to three-phase AC power and controls motor torque (revolution) by regulating the motor current.
	Electric air conditioner compressor	Under hood	Air conditioner compressor
	Power Delivery Module (PDM) ▪ On Board Charger ▪ DC/DC Converter ▪ High voltage junction box (J/B)	Under hood	The PDM includes an On Board Charger, DC/DC converter and high voltage junction box (J/B). The On Board Charger converts single-phase AC power from a home power outlet to DC power and increases the voltage in order to charge the Li-ion battery. The DC/DC converter reduces the voltage of the Li-ion battery to provide power to the 12V battery in order to operate the vehicle's electric components (headlights, audio system, etc.). The J/B provides electric power from the Li-ion battery to all high voltage parts of the vehicle.
④	12V Battery	Under hood	A lead-acid battery that supplies power to the low voltage devices.
❺	Cabin heater	Interior (This unit is installed behind the instrument panel)	This is the electric heat source for the cabin heater. It heats the interior of the vehicle.
❻	Li-ion (Lithium ion) battery	Undercarriage	Stores and outputs DC power (Maximum voltage 398.4V) needed to propel the vehicle.
❼	High voltage battery service disconnect	Rear seat floor	Isolates the battery from the rest of the high voltage electrical system.
⑧	Brake power supply backup unit	Cargo area (This unit is installed behind a trim panel to prevent access)	Power supply backup unit for the brake system. It supplies power to the brake system if a malfunction occurs in the 12V battery.

2-1.1 Li-ion Battery Pack Specifications

Li-ion battery voltage	360V nominal (240V - 398.4V usable range)
Number of Li-ion battery modules in the pack	48
Li-ion battery dimensions	60.91 x 46.77 x 10.39 in. (1547 x 1188 x 264 mm)
Li-ion battery weight	606 lbs (275 kg)

2-2 High Voltage Safety Measures

Circuit insulation	The high voltage positive (+) and negative (-) circuits are insulated from the metal chassis.
Reducing the risk of electrocution	The high voltage components and harnesses have insulated cases or orange-colored coverings which provide insulation and easy identification. The high voltage battery case is electrically connected to the vehicle ground. This connection helps protect the vehicle occupants and emergency responders from high voltage electrical shock.
Identification	The high voltage components are labeled “WARNING” similar to label shown below. All high voltage harnesses are coated in orange.

2-2.1 Warning Label

AAYIA0147ZZ

3. Roadside Assistance Response Steps

⚠WARNING

- **NEVER assume the LEAF is shut OFF simply because it is quiet.**
- **If the vehicle is damaged and you are not sure about the condition of the electric vehicle system, contact first responders immediately. If the vehicle is damaged, the high voltage system should be shut down by first responders while following the procedures in the First Responders Guide and while wearing appropriate Personal Protective Equipment (PPE).**
- **If the READY indicator or charging indicator are ON, the high voltage system is active.**
- **If possible, be sure to verify that the READY indicator on the instrument cluster is OFF and the high voltage system is stopped.**
- **Some of the under hood parts get hot and may cause serious burns. Use caution when working on or around these parts.**

3-1 Indications the High Voltage System is ON

1. If the READY indicator is ON, the high voltage system is active.
2. The high voltage system is active if any charge indicator is ON (blue LEDs on top of the instrument panel).

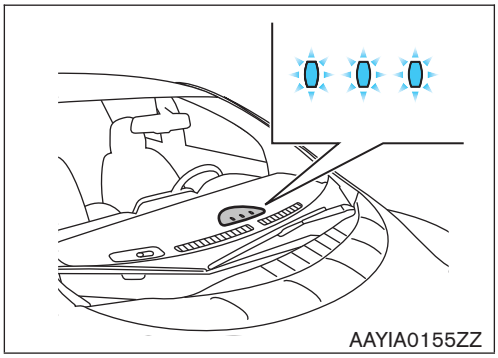

Before disconnecting the 12V battery terminal, if necessary, lower the windows, unlock the doors, and open the rear hatch as required. Once 12V battery is disconnected, power controls will not operate.

3-2 Vehicle Immobilization and Stabilization

If possible, immobilize the vehicle by turning the 12V system OFF and stabilize it with a wheel chock(s). Stabilize the vehicle with wooden blocks or by removing air from the tires.

⚠WARNING

- **Do not stabilize the vehicle with wooden blocks under the Li-ion battery.**
- **To avoid electrical shock, do not put wooden blocks or wheel chock(s) under the high voltage components and harnesses as shown following.**

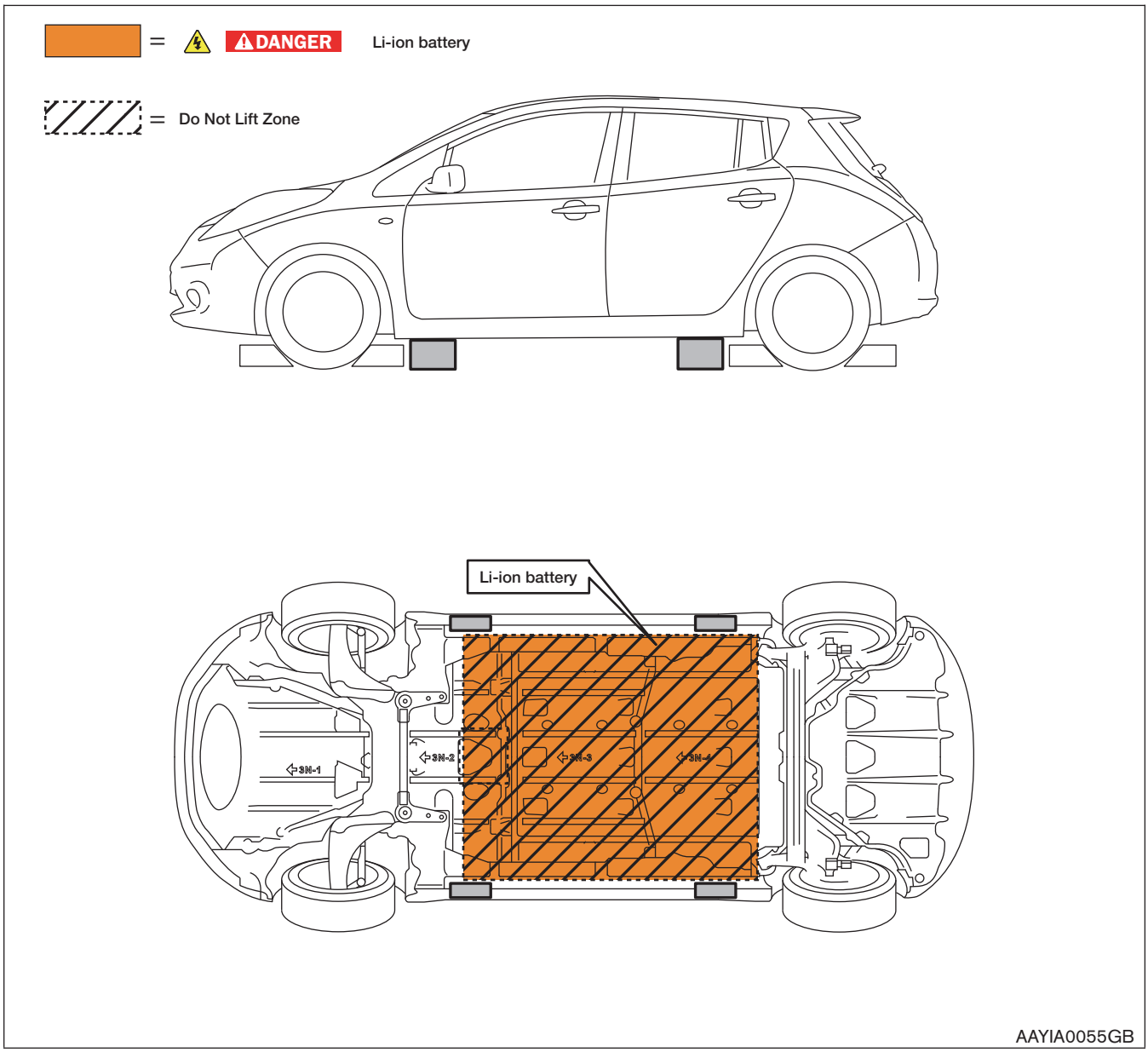

3-3 Turning OFF the Power Switch

1. Check the READY indicator status. If it is ON, the high voltage system is active.
2. Press the power switch once to turn OFF the high voltage system. Then verify whether the READY indicator is OFF.

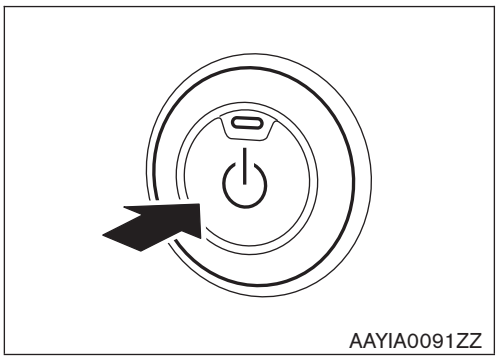

3. If possible, keep the Nissan Intelligent Key® at least 5 meters (16 feet) away from the vehicle to prevent accidentally turning ON the EV system while the roadside assistance is in progress.

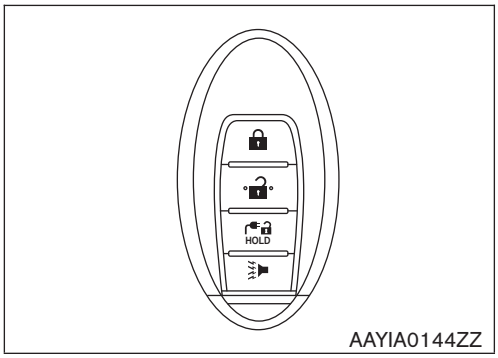

3-4 Water Submersion

DANGER

Damage level of submerged vehicle may not be apparent. Handling a submerged vehicle without appropriate Personal Protective Equipment (PPE) will result in serious injury or death from electrical shock.

WARNING

- **The power switch of the submerged vehicle must be turned OFF first, if possible. Then the vehicle must be completely out of the water and drained to avoid electrical shock.**
- **If the vehicle is in the water, to avoid electrical shock NEVER touch the high voltage components, harnesses or service plug. PPE must always be worn when touching or working on high voltage components.**

Only first responders wearing appropriate Personal Protective Equipment (PPE) should shut down the vehicle. After shut down, standard towing/recovery procedures can be used. Refer to 4-3 Towing (RAG–22) .

3-5 Vehicle Fire

⚠WARNING

- **Always utilize full Personal Protective Equipment (PPE) and self-contained breathing apparatus during fire fighting operations. Smoke from a LEAF vehicle fire is similar to smoke from a conventional vehicle fire.**
- **In the case of extinguishing a fire with water, large amounts of water from a fire hydrant (if possible) must be used. DO NOT extinguish fire with a small amount of water.**

⚠CAUTION

In the event of a small fire, a Type ABC fire extinguisher may be used for an electrical fire caused by wiring harnesses, electrical components, etc. or oil fire.

In case of vehicle fire, contact fire department immediately and extinguish the fire if possible. If you must walk away from the vehicle, notify an appropriate responder or a rescue person of the fact that the vehicle is an electric car and contains a high voltage system and warn all others.

3-6 Li-ion Battery Damage and Fluid Leaks

⚠WARNING

The Li-ion battery contains electrolyte solution. To avoid exposure to electrolyte solution and serious personal injury, always wear appropriate solvent resistant Personal Protective Equipment (PPE) and read the following precautions:

- **Electrolyte solution is a skin irritant.**
- **Electrolyte solution is an eye irritant – If contact with eyes, rinse with plenty of water and see a doctor immediately.**
- **If electrolyte leak occurs, wear appropriate solvent resistant PPE and use a dry cloth to clean up the spilled electrolyte. Be sure to adequately ventilate the area.**
- **Electrolyte solution is highly flammable**
- **Electrolyte liquid or fumes that have come into contact with water vapors in the air will create an oxidized substance. This substance may irritate skin and eyes. In these cases, rinse with plenty of water and see a doctor immediately.**
- **Electrolyte fumes (when inhaled) can cause respiratory irritation and acute intoxication. Move to fresh air and wash mouth with water. See a doctor immediately.**

In cases of battery case breach or electrolyte leakage, contact the fire department immediately. If you must walk away from the vehicle, notify an appropriate responder of the fact that the vehicle is an electric car and contains a high voltage system and warn all others.

Li-ion Battery Electrolyte Solution Characteristics:

- Clear in color
- Sweet odor
- Similar viscosity to water
- Since the Li-ion battery is made up of many small sealed battery modules, electrolyte solution leakage should be minimal.

NOTE:

Other fluids in the vehicle are the same as those in a conventional internal combustion vehicle.

4. Roadside Assistance

4-1 Jump Starting

To start the EV system with a booster battery, the instructions and precautions below must be followed.

⚠WARNING

If done incorrectly, jump starting can lead to a 12V battery explosion, resulting in severe personal injury or death. It could also damage your vehicle.

Discharged 12V battery may cause the following issues:

- The instrument cluster cannot be displayed while the power switch is turned ON. The start-up sound is not audible. (The electric car system cannot start.)
- The Li-ion battery cannot be charged.
- The vehicle cannot be shifted out of PARK normally.

⚠WARNING

- **To avoid electrical shock, the high voltage Li-ion battery CANNOT be jump started.**
- **Explosive hydrogen gas is always present in the vicinity of the 12V battery. Keep all sparks and flames away from the 12V battery. Make sure the vent tube is correctly installed.**
- **Do not allow battery fluid to come into contact with eyes, skin, clothing or painted surfaces. Battery fluid is a corrosive sulfuric acid solution that can cause severe burns. If the fluid comes into contact with anything, immediately flush the contacted area with water.**
- **The booster battery must be rated at 12 volts. Use of an improperly rated battery can damage the vehicle.**
- **Whenever working on or near a 12V battery, always wear suitable eye protectors (for example, goggles or industrial safety spectacles) and remove rings, metal bands, or any other jewelry. Do not lean over the 12V battery when jump starting.**
- **Do not attempt to jump start a frozen battery. It could explode and cause serious injury.**
- **LEAF is equipped with an automatic cooling fan. It could come on at any time. Keep hands and other objects away from it.**
- **Always follow the jump starting instructions below. Failure to do so could result in damage to the charging system and cause personal injury.**

⚠CAUTION

- **Do not use LEAF to jump start another vehicle.**
- **Do not attempt to perform a jump start on the 12V battery at the same time that the Li-ion battery is being charged. Doing so may damage the vehicle or charging equipment and could cause an injury.**

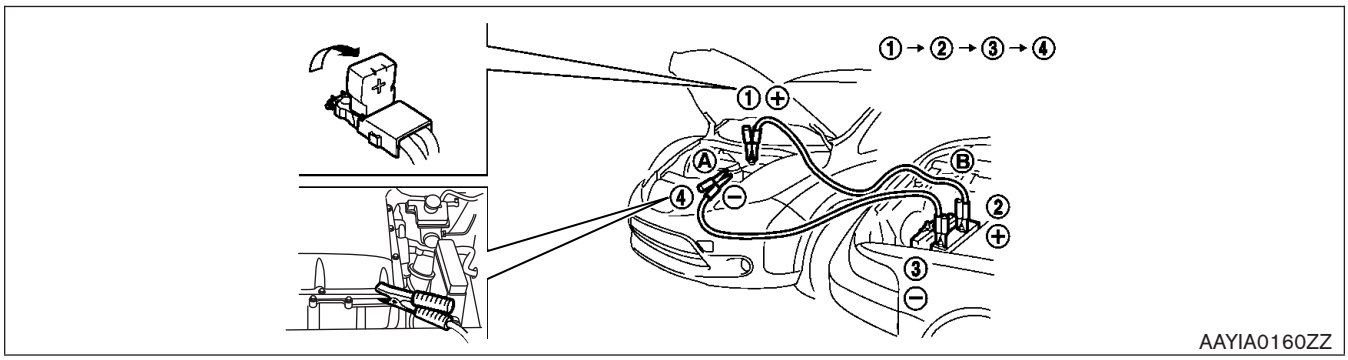

1. If the booster battery is in another vehicle (B), position the two vehicles (A and B) to bring their 12V batteries into close proximity to each other.

   DO NOT allow the two vehicles to touch.
2. Apply the parking brake.
3. Push the P (Park) position switch to place the vehicle in the P (Park) position.
4. Switch off all unnecessary electrical systems (headlights, heater, air conditioner, etc.).
5. Place the power switch in the OFF position (if possible).

   If the 12V battery is discharged, the power switch cannot be moved from the OFF position. Connect the jumper cables to the booster vehicle (B) before pushing the power switch.
6. Remove the vent caps on the 12V battery (if so equipped). Cover the battery with a firmly wrung out moist cloth to reduce the hazard of an explosion.
7. Connect jumper cables in the sequence as illustrated (①→②→③→④).

⚠CAUTION

- **Always connect positive (+) to positive (+) and negative (-) to body ground (for example, as illustrated), not to the 12V battery**
- **Make sure the jumper cables do not touch moving parts in the motor compartment and that the cable clamps do not contact any other metal.**

8. Start the engine of the booster vehicle (B).
9. While the booster vehicle (B) engine is running, turn the power switch ON while pressing the brake pedal in order to place the LEAF in READY mode.

⚠CAUTION

If the system does not start right away, push the power switch to the OFF position and wait at least 10 seconds before trying again.

10. After starting the EV system, carefully disconnect the negative cable and then the positive cable (④→③→②→①). Keep the EV system on for over twenty (20) minutes to charge the 12V battery.
11. Replace the vent caps (if so equipped). Be sure to properly dispose of the cloth used to cover the vent holes because it may be contaminated with corrosive acid.

12. If necessary, connect the vehicle to a charging station or EVSE (Electric Vehicle Supply Equipment) to charge the Li-ion battery. The vehicle cannot be driven unless the Li-ion battery is charged.

    NOTE:

    If it is not possible to turn the LEAF system ON by following this procedure, contact a NISSAN certified LEAF dealer immediately.

4-2 P (Park) Position Release Procedure

If you need to release the vehicle from the P (Park) position, proceed as follows. When power switch is turned OFF or 12V battery is low, LEAF automatically shifts to P position.

NOTE:

This procedure requires two (2) people.

1. To start the EV system with a booster battery, refer to 4-1 Jump Starting (RAG–17).
2. Turn power switch ON by pushing the power switch 2 times without pressing brake pedal.
3. Confirm parking brake is applied.
4. Close all doors and press and hold the brake pedal.
5. Place the selector lever in the N (Neutral) position.
6. Remove the following 2 fuses:
   - F/L 40A PBW MTR (under hood fuse and relay box)
   - METER 1 10A (in the cabin fuse box)

Under Hood Fuse and Relay Box Location

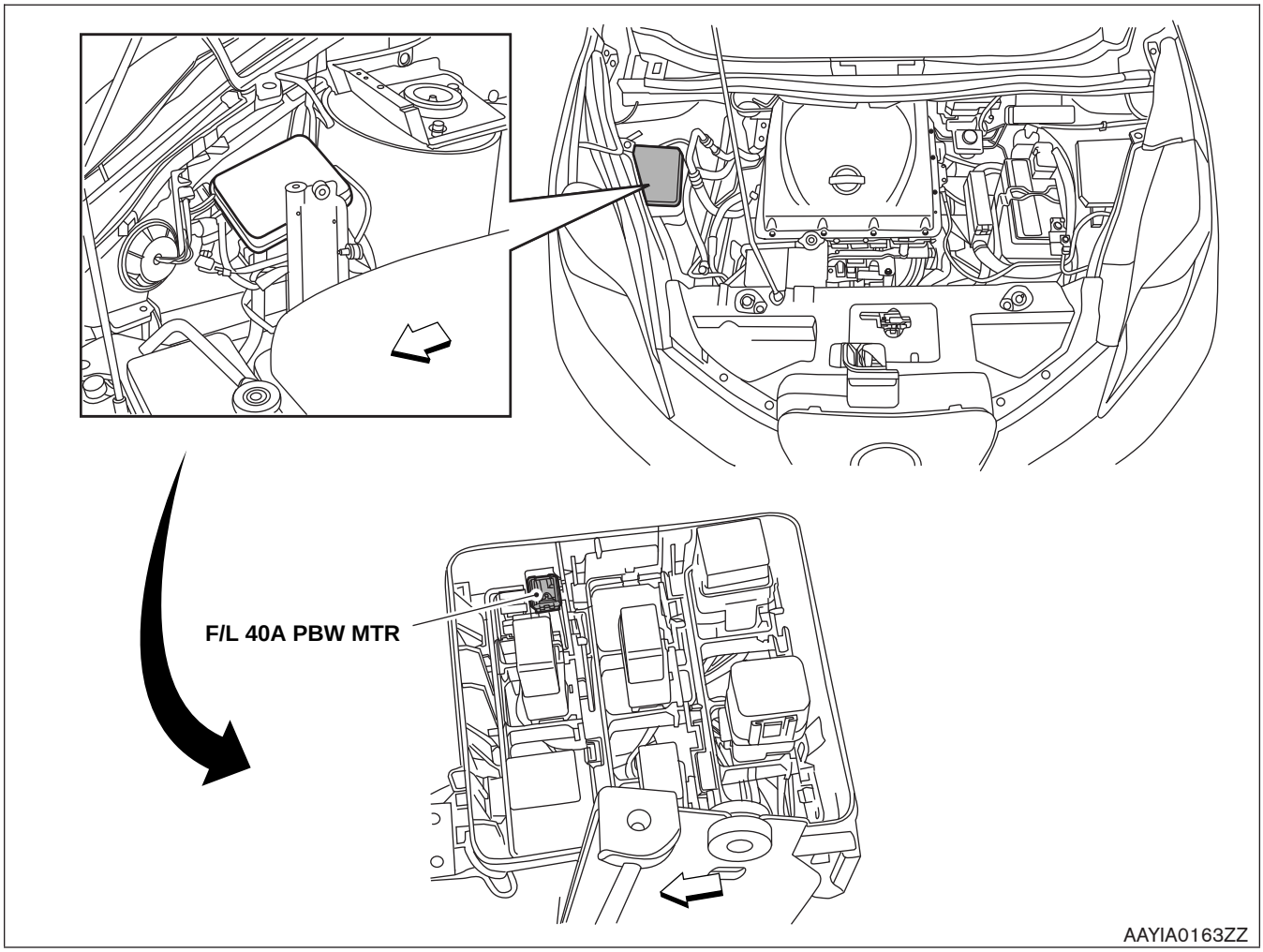

NOTE:

⇦ : Arrow in illustration depicts vehicle front direction.

Cabin Fuse Box Location

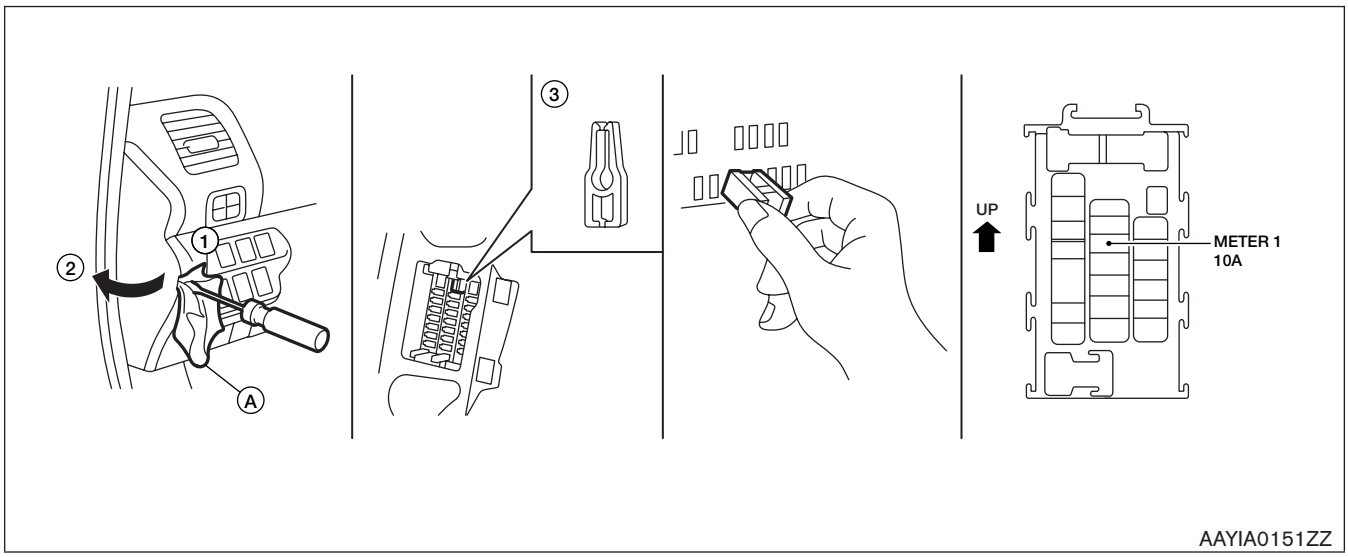

NOTE:

Insert a screwdriver wrapped with a protective cloth (A) into the slit (1). Pull to remove the fuse box cover (2). Remove the fuse with the fuse puller (3).

7. Release the parking brake.
8. Turn the power switch OFF.
9. Release brake pedal.

⚠WARNING

To avoid possible personal injury or vehicle damage, use wheel chocks or take appropriate steps to prevent the vehicle from rolling freely.

Be sure to firmly position wheel chocks when P (Park) position is manually released.

4-2.1 Reset Procedure

1. Install the 2 fuses removed previously.
2. Turn the power switch ON and wait 5 seconds without pressing the brake pedal. Ensure selector lever is in the N (neutral) position.
3. If 12V battery is low voltage, please charge with battery charger.
4. Turn the power switch OFF and wait 5 seconds.

4-3 Towing

4-3.1 Vehicle Specifications

Length	175 in. (4,445 mm)
Width	69.7 in. (1,770 mm)
Overall Height	61.0 in. (1,550 mm)
Wheel Base	106.3 in. (2,700 mm)
Minimum ground clearance	6.3 in. (160 mm)
Overall vehicle weight	3,256-3,346 lbs. (1,477-1,518 kg) (Weight varies by equipment and trim level.)
Front approach angle	17°
Rear departure angle	26°

4-3.2 Towing Guidelines

Nissan strongly recommends that LEAF be towed with the driving (front) wheels off the ground or that the vehicle be placed on a flatbed truck.

⚠ CAUTION

- **Never tow with the front wheels on the ground or four (4) wheels on the ground (forward or backward), as this may cause serious and expensive damage to the motor.**
- **Transport the vehicle only after turning the power switch OFF.**
- **When towing this vehicle with the rear wheels on the ground (if you do not use towing dollies), always release the parking brake.**
- **Safety chains or cables must be attached only to the vehicle recovery hook or main structural members of the vehicle. Otherwise, the vehicle body will be damaged.**
- **Do not use the vehicle tie down hook to free a vehicle stuck in sand, snow, mud, etc.**
- **Never tow a vehicle using the vehicle tie down hook or recovery hook.**
- **Always pull the cable straight out from the front of the vehicle. Never pull on the vehicle at an angle.**
- **Pulling devices should be routed so they do not touch any part of the suspension, steering, brake, high voltage or cooling systems.**
- **Pulling devices such as ropes or canvas straps are not recommended for use in vehicle towing or recovery.**

Perform vehicle towing by holding up drive (front) wheels or on flatbed in order to prevent secondary damage from voltage generated by the motor. In addition, turn the power switch OFF when towing the vehicle. Refer to the following illustration:

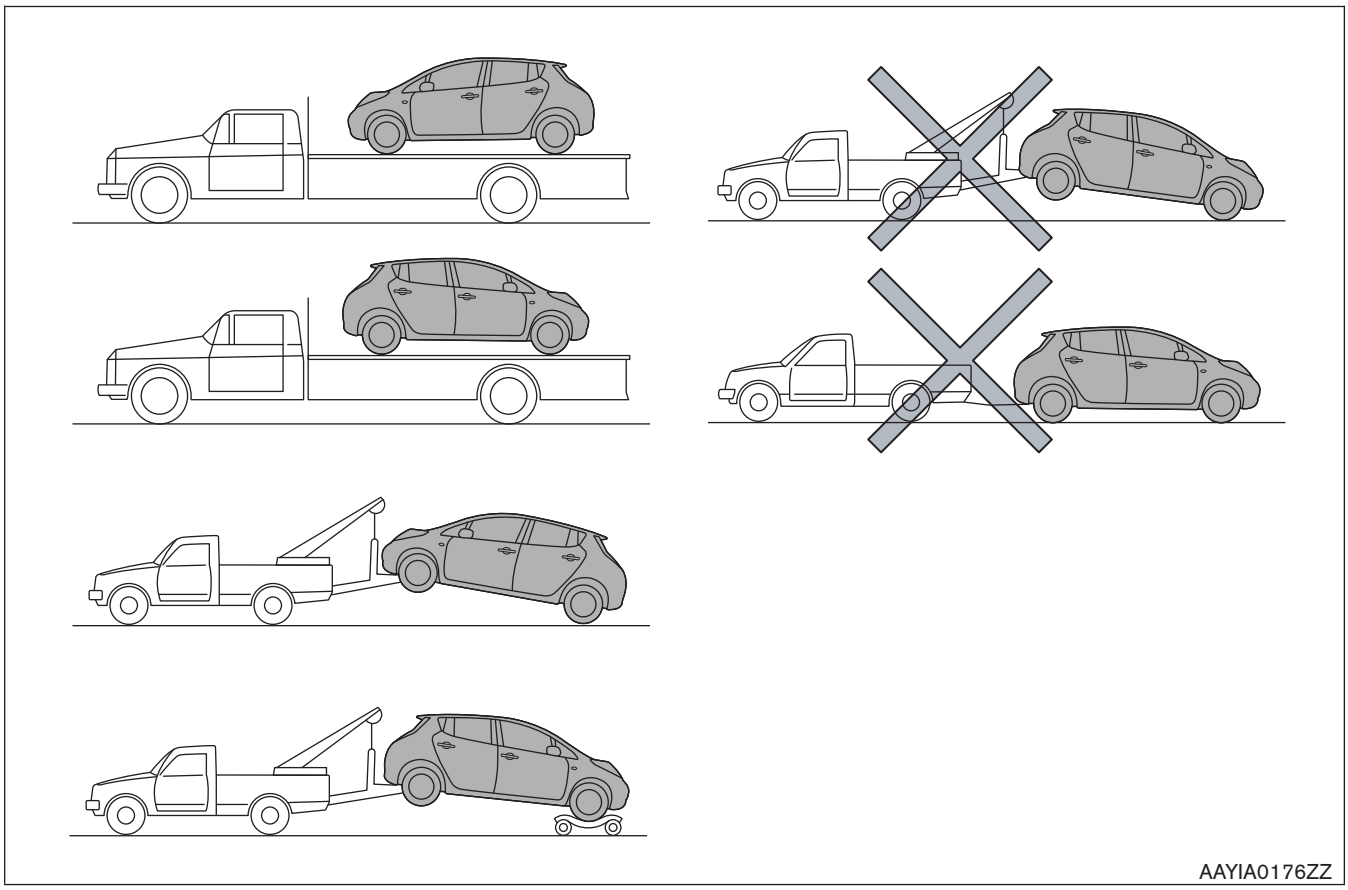

NOTE:

It is also permissible to transport the LEAF facing rearward on a flatbed.

NOTE:

If the vehicle cannot be placed in Neutral, a P (Park) release procedure may be required. Refer to 4-2 P (Park) Position Release Procedure (RAG–19).

4-3.3 Use of Vehicle Equipped Hooks for Recovery Operations

Front:

1. Using a suitable tool wrapped with a protective cloth, remove the recovery hook cover from the bumper.

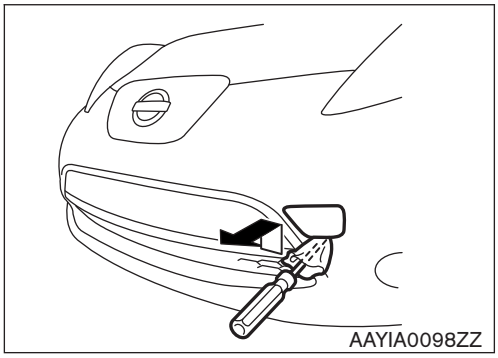

2. Securely install the recovery hook as illustrated.

⚠WARNING

Failure to securely install the recovery hook may result in serious personal injury or death and/or vehicle damage.

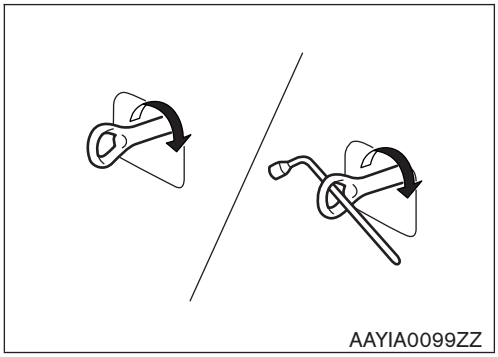

3. Attach the winch cable securely to the recovery hook.

⚠WARNING

Failure to securely attach the winch cable to the recovery hook may result in serious personal injury or death and/or vehicle damage.

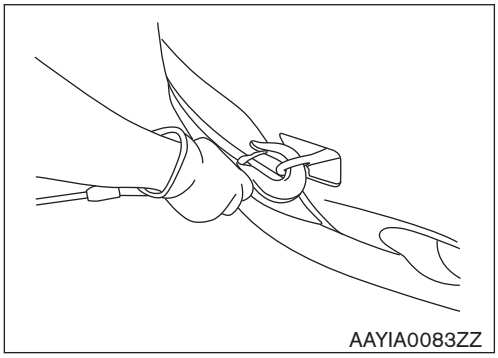

4. Make sure the winch cable remains fully connected to the recovery hook and does not interfere with surrounding area, take up the slack from the cable.

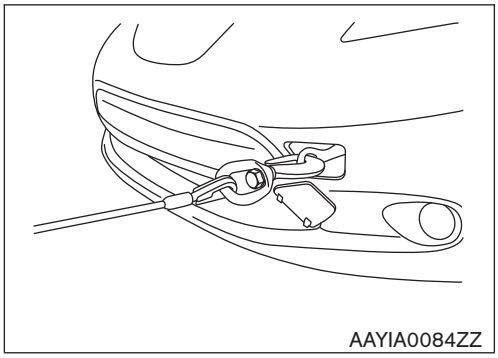

5. Release the parking brake.
6. Place the selector lever in the N (Neutral) position.

NOTE:
If the vehicle cannot be placed in Neutral, a P (Park) release procedure may be required. Refer to 4-2 P (Park) Position Release Procedure (RAG–19).

7. Carefully pull the vehicle onto the flatbed.

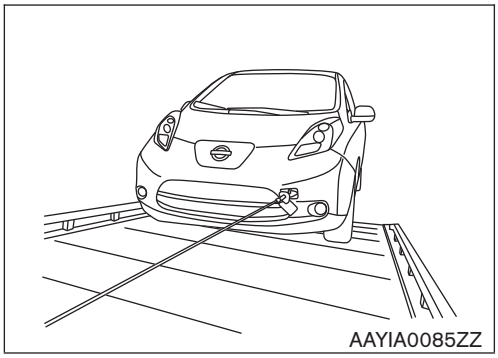
AAYIA0085ZZ

8. Be careful not to pull the vehicle too close to the winch. Doing so will cause excessive downward force being applied to the recovery hook. Too much downward force may result in vehicle damage. Lower the flatbed and finish rolling the vehicle forward if necessary.

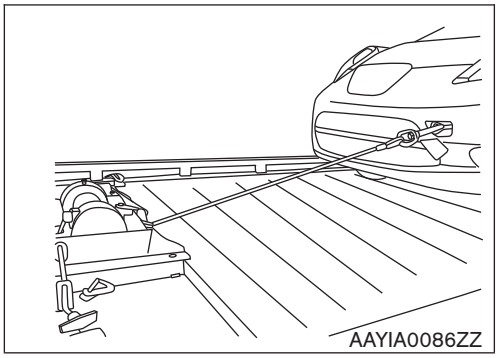
AAYIA0086ZZ

9. Secure the vehicle to the flatbed by using wheel baskets at all 4 wheel positions.

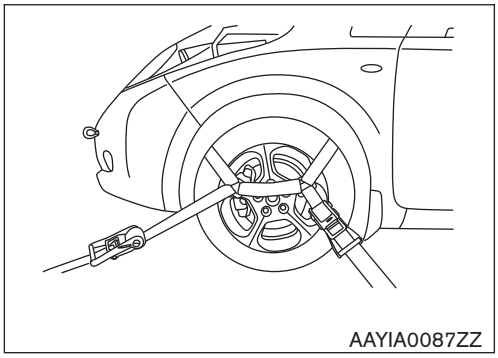
AAYIA0087ZZ

10. Make sure that the vehicle recovery hook is properly secured in its original position after use and the recovery hook cover has been reinstalled properly.

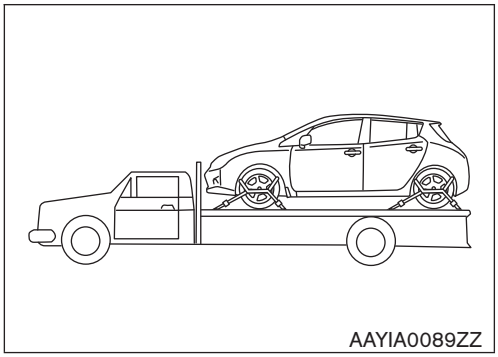
AAYIA0089ZZ

Rear Tie Down Hook:

- Do not use the rear tie down hook for towing or vehicle recovery.

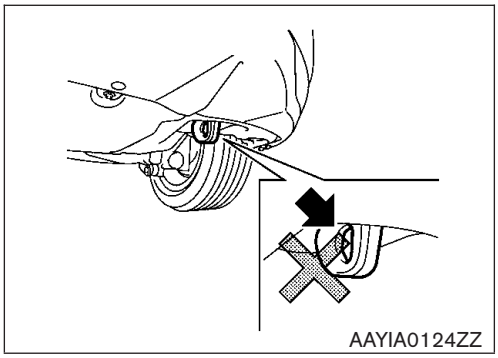

- The rear tie down hook is designed for use as illustrated.

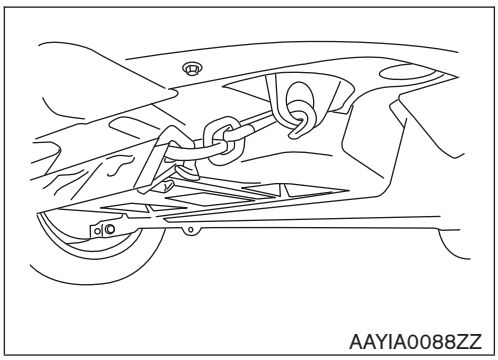

4-4 Storing the Vehicle

If LEAF needs to be stored or left unattended, the high voltage system must be shut down and a sign put on the vehicle indicating it is an electric vehicle with high voltage dangers. Refer to 5. Storing the Vehicle (RAG–33)

4-5 Jacking Up the Vehicle and Changing a Tire

LEAF is not equipped with a jack or spare tire as standard equipment. However, the following jacking instructions apply when using the optional Nissan jack.

1. Place the jack directly under the jack-up point as illustrated so the top of the jack contacts the vehicle at the jack-up point. Align the jack head between the two notches in the front or the rear as shown. Also fit the groove of the jack head between the notches as shown. The jack should be used on level firm ground.

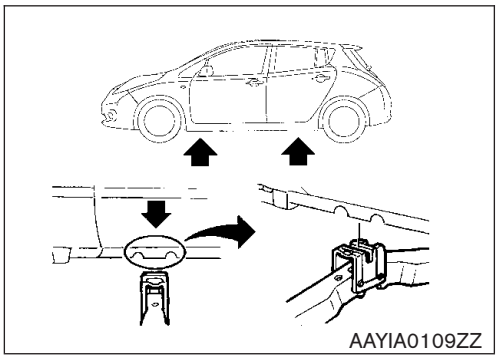

2. Loosen each wheel nut one or two turns by turning it counterclockwise with the wheel nut wrench. Do not remove the wheel nuts until the tire is off the ground.
3. To lift the vehicle, securely hold the jack lever and rod with both hands as shown. Carefully raise the vehicle until the tire clears the ground. Remove the wheel nuts, and then remove the tire.

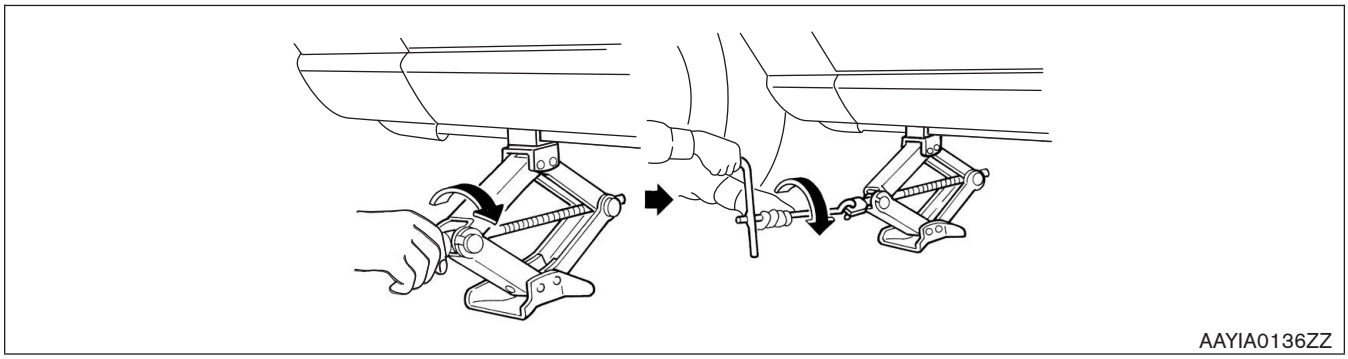

4. Install new or repaired tire and hand-tighten the wheel nuts with the wheel nut wrench in an alternating pattern.

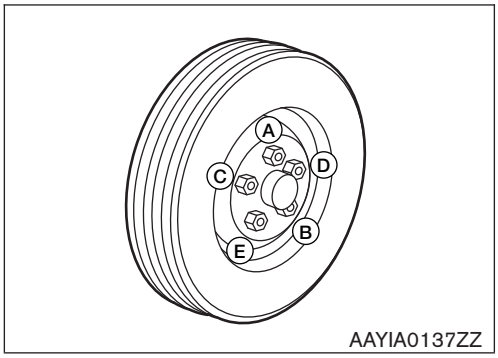

5. Securely torque the wheel nuts in an alternating pattern to 83 ft-lbs (113 Nm).

4-6 Repairing a Flat Tire with Nissan Emergency Tire Puncture Repair Kit

LEAF is equipped with a tire repair kit as standard equipment. It is intended to be used to temporarily repair minor tire punctures.

⚠WARNING

- **After using the Emergency Tire Sealant to repair a minor tire puncture, do not drive the vehicle at speeds faster than 50 MPH (80 km/h).**
- **Immediately after using the Emergency Tire Sealant to repair a minor tire puncture, take the vehicle to a NISSAN certified LEAF dealer to inspect, and repair or replace the tire. The Emergency Tire Sealant cannot permanently seal a punctured tire. Continuing operation of the vehicle without a permanent tire repair can lead to a crash.**
- **If you used the Emergency Tire Sealant to repair a minor tire puncture, a NISSAN certified LEAF dealer will also need to replace the TPMS sensor in addition to repairing or replacing the tire.**
- **Nissan recommends using only NISSAN Genuine Emergency Tire Sealant provided with the vehicle. Other tire sealants may damage the valve stem seal which can cause the tire to lose air pressure.**
- **Make sure the parking brake is applied.**
- **Turn the power switch OFF while using the Emergency Tire Sealant to repair a flat tire.**
- **Have all passengers get out of the vehicle and stand in a safe place away from traffic and clear of the vehicle.**
- **Make sure the vehicle is located safely away from oncoming traffic and other hazards.**
- **Observe the following precautions when using the tire repair compound:**
  - **Swallowing the compound is dangerous. Immediately drink as much water as possible and seek prompt medical assistance.**
  - **Rinse well with lots of water if the compound comes into contact with skin or eyes. If irritation persists, seek prompt medical attention.**
  - **Keep the repair compound out of the reach of children.**
  - **The emergency repair compound may cause a malfunction of the tire pressure sensors and cause the low tire pressure warning light to illuminate. Have the tire pressure sensor replaced as soon as possible.**

⚠CAUTION

- **To avoid the Emergency Tire Puncture Repair Kit from being damaged during storage or use:**
  - **Only use the Emergency Tire Puncture Repair Kit on the LEAF vehicle. Do not use it on other vehicles.**
  - **Only use the kit to inflate the tires of the LEAF and to check the vehicle's tire pressure.**
  - **Only plug the compressor into a 12V DC car power point.**
  - **Keep the kit free of dirt and water.**
  - **Do not disassemble or modify the kit.**
  - **Do not drop the kit or allow hard impacts to the kit.**
- **Do not use the Emergency Tire Puncture Repair Kit under the following conditions. Contact a NISSAN certified LEAF dealer or professional road assistance:**
  - **when the sealant has passed its expiration date (shown on the label attached to the bottle).**
  - **when the cut or the puncture in the tire is approximately 0.25 in (6 mm) or longer.**
  - **when the tire sidewall is damaged.**
  - **when the vehicle has been driven with extremely low tire pressure.**
  - **when the tire has come off the inside or the outside of the wheel.**
  - **when the wheel is damaged.**
  - **when two (2) or more tires are flat.**

Remove the emergency tire puncture repair kit from the left side of the cargo area. The kit consists of the following items:

1. NISSAN Genuine Emergency Tire Sealant bottle
2. Air compressor*
3. Speed restriction sticker

*: The compressor shape may differ depending on the models.

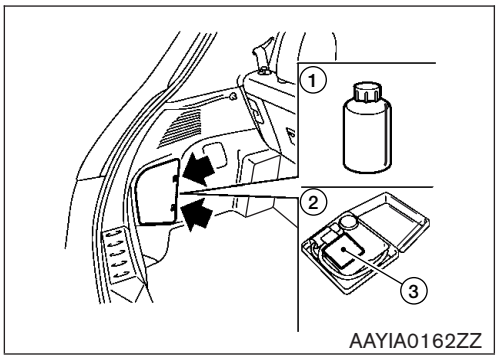

4-6.1 Before Using Emergency Tire Puncture Repair Kit

- If any foreign object (for example, a screw or nail) is embedded in the tire, do not remove it.
- Check the expiration date of the sealant (shown on the label attached to the bottle). Never use a sealant if the expiration date has passed.

4-6.2 Repairing the Tire

1. Take out the speed restriction sticker from the air compressor, then put it in a location where the driver can see it while driving.

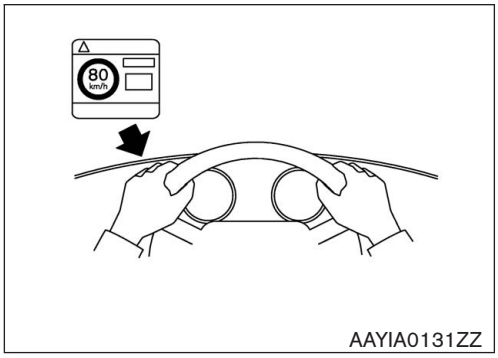

⚠CAUTION Do not obstruct the view of gauges or warning lights with the sticker. Do not put the sticker on the steering wheel pad.

2. Take the hose (1) and power plug (2) out of the air compressor. Remove the cap of the bottle holder from the air compressor.

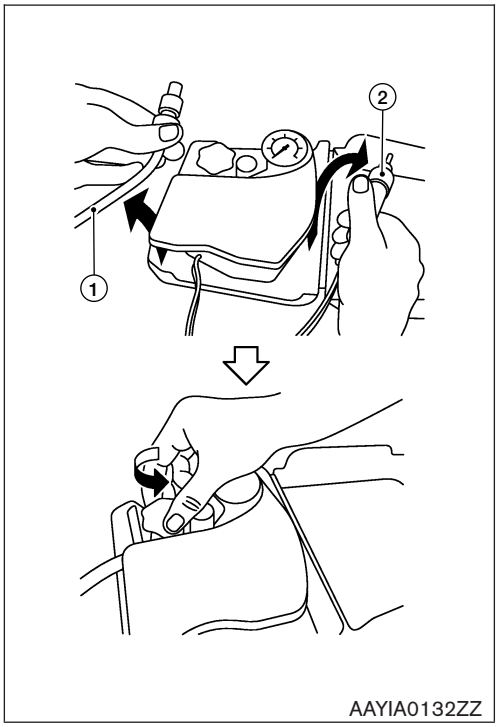

3. Remove the cap from the tire sealant bottle and screw the bottle clockwise onto the bottle holder. Leave the bottle seal intact. Screwing the bottle onto the bottle holder will pierce the seal of the bottle.

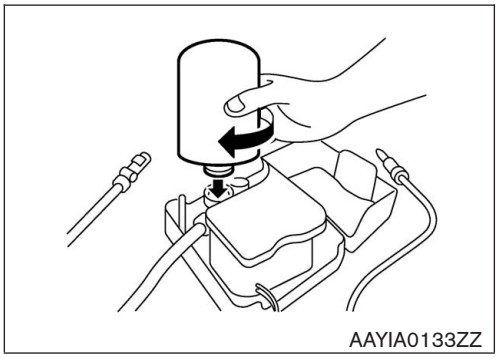

4. Remove the cap from the tire valve on the flat tire.

5. Remove the protective cap (A) of the hose and screw the hose securely onto the tire valve. Make sure that the pressure release valve (B) is securely tightened. Make sure that the air compressor switch is in the OFF (O) position and then insert the power plug into the power outlet in the vehicle.

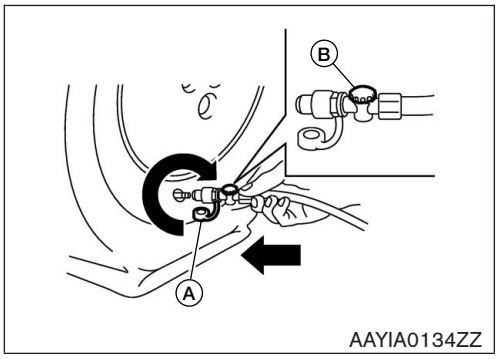

6. Push the vehicle power switch to the ACC position.
7. Turn the air compressor switch to the ON (-) position and inflate the tire up to the pressure that is specified on the tire and loading information label affixed to the driver's side center pillar if possible or to the minimum of 26 psi (180 kPa). Turn the air compressor off briefly in order to check the tire pressure with the pressure gauge. If the tire is inflated to higher than the specified pressure, lower the tire pressure by releasing air with the pressure release valve.

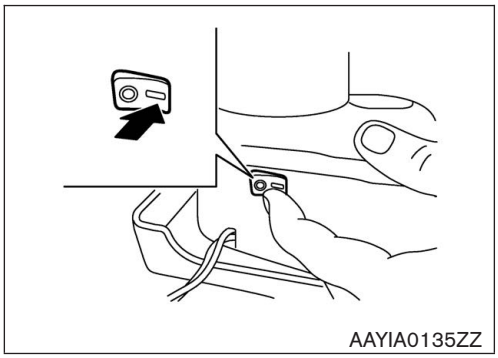

NOTE:
The compressor tire gauge may show a pressure reading of 87 psi (600 kPa) for about 30 seconds while inflating the tire. The pressure gauge is indicating the pressure inside the sealant bottle. When the sealant has been injected into the tire the pressure gauge will drop and indicate actual tire pressure.

⚠WARNING

- **To avoid serious personal injury while using the emergency tire puncture repair kit:**
  - **Securely tighten the compressor hose to the tire valve. Failure to do so can cause the sealant to spray into the air and get into your eyes or on your skin.**
  - **Do not stand directly beside the damaged tire while it is being inflated because of the risk of rupture. If there are any cracks or bumps in the tire, turn the compressor OFF immediately.**

If the tire pressure does not increase to 26 psi (180 kPa) **within ten (10) minutes**, the tire may be seriously damaged and **the tire cannot be repaired with this tire repair kit**.

Contact a NISSAN certified LEAF dealer.

8. When the tire pressure is at the specified amount, turn the air compressor OFF. If the tire cannot be inflated to the specified amount, the air compressor can be turned OFF at the minimum of 26 psi (180 kPa). Remove the power plug from the power outlet and quickly remove the hose from the tire valve. Attach the protective cap and the valve cap. Securely stow the emergency tire puncture repair kit in the cargo area.

⚠WARNING

To avoid serious personal injury when stowing the emergency tire puncture repair kit keep the sealant bottle screwed into the compressor. Failure to do so can cause the sealant to spray into the air and get into your eyes or on your skin.

9. Immediately drive the vehicle for ten (10) minutes or 2 miles (3 km) at a speed below 50 MPH (80 km/h).
10. After driving, make sure the air compressor switch is in the OFF position. Then screw the hose securely onto the tire valve. Check the tire pressure with the pressure gauge. Temporary repair is completed if the tire pressure does not drop. Make sure the pressure is adjusted to the pressure specified on the tire and loading information label before driving.
11. If the tire pressure drops, repeat the steps from 5 to 10. If the pressure drops again or under 19 psi (130 kPa), **the tire cannot be repaired with this tire repair kit**. Contact a NISSAN certified LEAF dealer. The sealant bottle and hose cannot be reused to repair another punctured tire. Contact a NISSAN certified LEAF dealer to purchase replacements.

4-6.3 After Repairing the Tire

See a NISSAN certified LEAF dealer for tire repair/replacement as soon as possible.

⚠WARNING

- **After using Emergency Tire Sealant to repair a minor puncture, do not drive the vehicle at speeds faster than 50 MPH (80 km/h).**
- **Immediately after using Emergency Tire Sealant to repair a minor tire puncture, take the vehicle to a NISSAN certified LEAF dealer to inspect and repair or replace the tire. The Emergency Tire Sealant cannot permanently seal a punctured tire. Continuing operation of the vehicle without a permanent tire repair can lead to a crash.**
- **Do not inject any tire liquid or aerosol tire sealant into the tires as this may cause a malfunction of the tire pressure sensors.**
- **If you used the Emergency Tire Sealant to repair a minor tire puncture, a NISSAN certified LEAF dealer will also need to replace the TPMS sensor in addition to repairing or replacing the tire.**
- **Nissan recommends using only NISSAN Genuine Emergency Tire Sealant provided with the vehicle. Other tire sealants may damage the valve stem seal which can cause the tire to lose air pressure.**

5. Storing the Vehicle

⚠WARNING

The service plug must be removed to shut down the high voltage system for storage.

Do not store a vehicle inside a structure. Keep the vehicle away from other vehicles if the li-ion battery is severely damaged. There is possibility of delayed fire from a severely damaged li-ion battery.

5-1 Danger Sign Example

If LEAF needs to be stored or left unattended, the high voltage system must be shut down by removing the service plug (refer to 5-3 Removing the Service Plug (RAG–36)), and a sign put on the vehicle indicating it is an electric vehicle with high voltage dangers. For example:

DANGER:
HIGH VOLTAGE REPAIR
IN PROGRESS.
DO NOT TOUCH!

Person in charge:_____

DANGER:
HIGH VOLTAGE REPAIR
IN PROGRESS.
DO NOT TOUCH!

Person in charge:_____

Copy this page and put it after folding on the roof of the vehicle in service.

AAYIA0020GB

5-2 Preparation Items

Preparation Items	Specification	Purpose
Personal Protective Equipment (PPE): Insulated gloves	Up to 1,000V	For protection from high voltage electrical shock
Insulated shoes	–	
Safety shield	–	
Wrenches	Size:10mm	To remove the service plug access cover bolts. To remove the 12V battery terminal bolt.
Solvent resistant protection gloves	–	To utilize in the event of a Li-ion battery electrolytic solution leak.
Solvent resistant protection shoes	–	
Absorbent pad	The same pad used for internal combustion engine fluids can be used.	To absorb any Li-ion battery electrolytic solution leakage.
Standard fire fighting equipment	Standard fire fighting equipment Depending on type of fire (vehicle or battery) use standard fire fighting equipment (water or extinguisher).	To extinguish a fire.
Insulated tape	Insulating	To cover any damaged harnesses to protect from and prevent electrical shock. Tape should cover all bare or damaged wire.

5-2.1 Personal Protective Equipment (PPE) Protective Wear Control

Perform an inspection of the Personal Protective Equipment (PPE) items before beginning work. Do not use any damaged PPE items.

5-2.2 Daily Inspection

This inspection is performed before and after use. The worker who will be using the items should perform the inspection and check for deterioration and damage.

- Insulated rubber gloves should be inspected for scratches, holes and tears. (Visual check and air leakage test)
- Insulated safety boots should be inspected for holes, damage, nails, metal pieces, wear or other problems on the soles. (Visual check)
- Insulated rubber sheet should be inspected for tears. (Visual check)

5-2.3 Insulated Tools

When performing work at locations where high voltage is applied (such as terminals), use insulated tools meeting 1,000V/300A specifications.

5-3 Removing the Service Plug

DANGER

- **Do not remove the service plug without always wearing appropriate Personal Protective Equipment (PPE) to help protect the responder from serious injury or death by electrical shock.**
- **Immediately cover the service plug socket with insulated tape. The Li-ion battery retains high voltage power even when the service plug is removed. To avoid electric shock, NEVER touch the terminals inside the socket.**

WARNING

To avoid unintended reinstallation and risk of electrical shock and severe personal injury or death, the service plug should be securely stored away from the vehicle while the vehicle is in storage.

1. Check the READY indicator status. If it is ON, the high voltage system is active.
2. Place the selector lever in the Park (P) position.
3. Press the power switch once to turn OFF the high voltage system. Then verify whether the READY indicator is OFF.

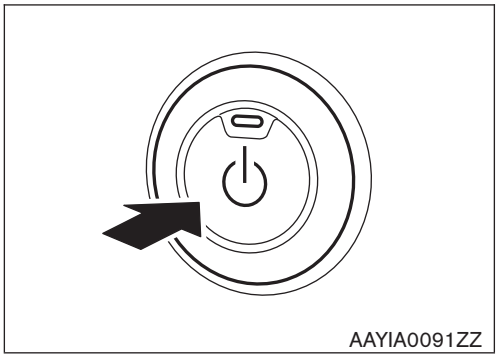

4. Insert a suitable tool (1) under the RH rear corner of the access trim cover located on the floor behind the center console. Pry up (2) and remove.

   NOTE:

   ⇦ : Arrow in illustration depicts vehicle front direction.

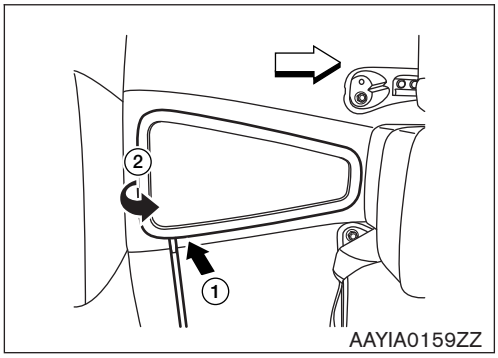

5. Remove the 10 mm access cover bolts (1) and remove the cover (2).

   NOTE:

   ⇦ : Arrow in illustration depicts vehicle front direction.

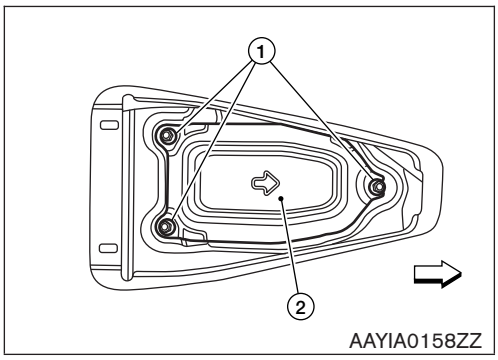

6. Remove the service plug using the following steps: (1) pull up and release the green lever, (2) press the locking tab to release and rotate fully upward, (3) pull the service plug completely out of its socket.

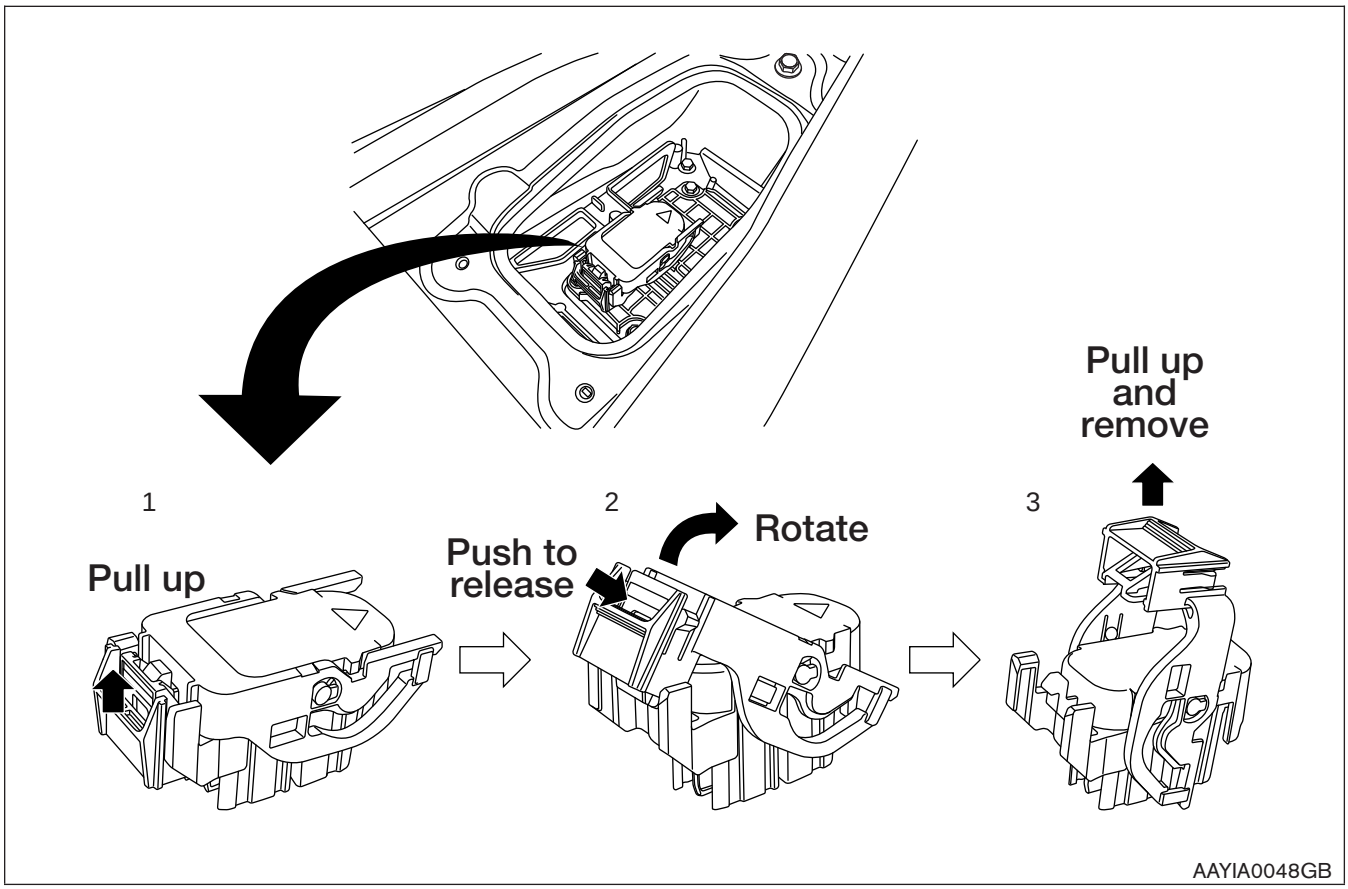

7. **Wait at least ten (10) minutes for complete discharge** of the high voltage capacitor after the service plug has been removed.
8. Open the hood.

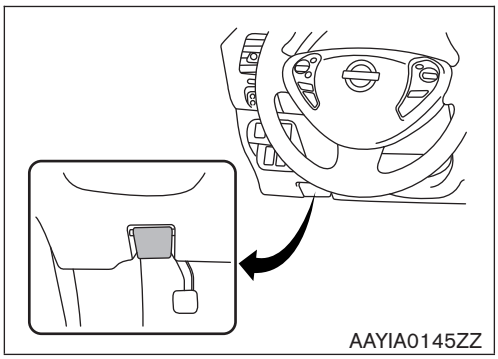

9. Disconnect the negative (-) 12V battery cable (1). Insulate the negative (-) battery cable terminal with insulated tape.

   NOTE:

   ⇦ : Arrow in illustration depicts vehicle front direction.

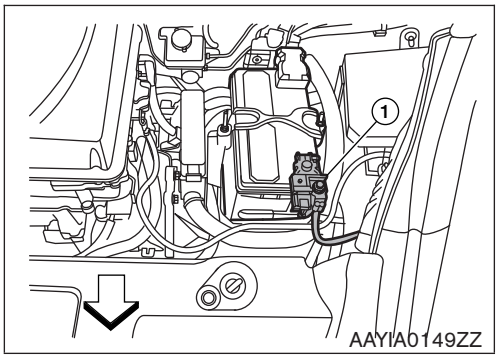

10. The vehicle is now ready for storage.

Zero Emission

© 2014 Nissan North America, Inc.
All rights reserved.
This document may not be altered without the written permission of Nissan North America, Inc.
Pub. No. RG15EA0ZE0U0