OPEL CORSA

Owner's Manual

Wir leben Autos.

Contents

Introduction 2
In brief 6
Keys, doors and windows 20
Seats, restraints 35
Storage 52
Instruments and controls 69
Lighting 96
Climate control 104
Driving and operating 112
Vehicle care 142
Service and maintenance 185
Technical data 189
Customer information 217
Index 220

Introduction

Fuel	Designation			
Engine oil	Grade			
	Viscosity			
Tyre pressure		Tyre size	Front	Rear
	Summer tyres			
	Winter tyres			
Weights				
	Gross vehicle weight rating			
	- Kerb weight, basic model			
	= Loading			

Vehicle specific data

Please enter your vehicle's data on the previous page to keep it easily accessible. This information is available under the sections "Service and Maintenance" and "Technical data" as well as on the identification plate.

Introduction

Your vehicle is a designed combination of advanced technology, safety, environmental friendliness and economy.

This Owner's Manual provides you with all the necessary information to enable you to drive your vehicle safely and efficiently.

Make sure your passengers are aware of the possible risk of accident and injury which may result from improper use of the vehicle.

You must always comply with the specific laws and regulations of the country that you are in. These laws may differ from the information in this Owner's Manual.

When this Owner's Manual refers to a workshop visit, we recommend your Opel Service Partner. For gas vehicles we recommend an Opel Repairer authorised for servicing gas vehicles.

All Opel Service Partners provide first-class service at reasonable prices. Experienced mechanics trained by Opel work according to specific Opel instructions.

The customer literature pack should always be kept ready to hand in the vehicle.

Using this manual

- This manual describes all options and features available for this model. **Certain descriptions, including those for display and menu functions, may not apply to your vehicle due to model variant, country specifications, special equipment or accessories.**
- The "In brief" section will give you an initial overview.
- The table of contents at the beginning of this manual and within each section shows where the information is located.
- The index will enable you to search for specific information.
- This Owner's Manual depicts left-hand drive vehicles. Operation is similar for right-hand drive vehicles.
- The Owner's Manual uses the factory engine designations. The corresponding sales designations can be found in the section "Technical data".
- Directional data, e.g. left or right, or front or back, always relate to the direction of travel.
- The vehicle display screens may not support your specific language.
- In this manual all display messages and interior labellings are written in **bold** type.

Danger, Warnings and Cautions

⚠ Danger

Text marked ⚠ **Danger** provides information on risk of fatal injury. Disregarding this information may endanger life.

⚠ Warning

Text marked ⚠ **Warning** provides information on risk of accident or injury. Disregarding this information may lead to injury.

Caution

Text marked **Caution** provides information on possible damage to the vehicle. Disregarding this information may lead to vehicle damage.

Symbols

Page references are indicated with ⇨.
⇨ means "see page".

We wish you many hours of pleasurable driving.

Adam Opel AG

In brief

Initial drive information

Vehicle unlocking

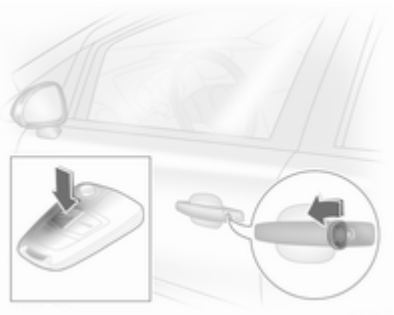

Turn the key in the driver's door lock to the front or press button ⊼ to unlock the doors and load compartment. Open the doors by pulling the handles. To open the tailgate, pull the button under the tailgate moulding.

Radio remote control ⇨ 20, Central locking system ⇨ 22, Load compartment ⇨ 25.

Seat adjustment

Seat positioning

Pull handle, slide seat, release handle.

Seat adjustment ⇨ 37, Seat position ⇨ 36.

⚠ Danger

Do not sit nearer than 25 cm from the steering wheel, to permit safe airbag deployment.

Seat backrests

Turn handwheel. Do not lean on seat when adjusting.

Seat adjustment ⇨ 37, Seat position ⇨ 36, Folding front passenger seat backrest ⇨ 38.

Seat height

Lever pumping motion

up = higher
down = lower

Seats ⇨ 37, Seat position ⇨ 36.

Head restraint adjustment

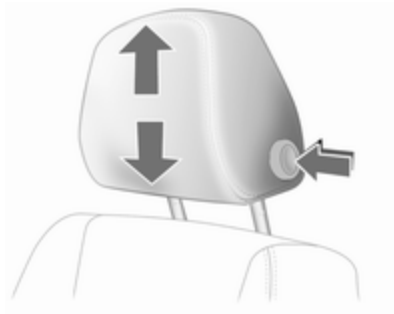

Press release button, adjust height, engage.

Head restraints ⇨ 35.

Seat belt

Pull out the seat belt and engage in belt buckle. The seat belt must not be twisted and must fit close against the body. The backrest must not be tilted back too far (maximum approx. 25 °).

To release belt, press red button on belt buckle.

Seat belts ⇨ 39, Airbag system ⇨ 42, Seat position ⇨ 36.

Mirror adjustment

Interior mirror

Swivel the lever on the underside to reduce dazzle.

Interior mirror ⇨ 30, Automatic anti-dazzle interior mirror ⇨ 30.

Exterior mirrors

Setting with four-way switch in version with manual window operation

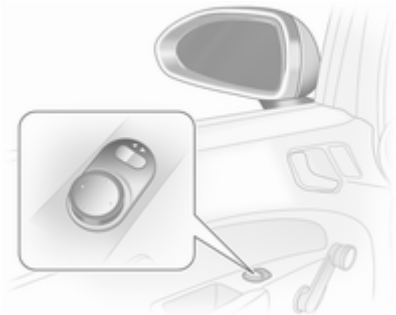

First select the relevant exterior mirror then use the control to adjust.

Setting with four-way switch in version with electronic window operation

First select the relevant exterior mirror then use the control to adjust.

Electric adjustment ⇨ 28, Convex exterior mirrors ⇨ 28, Folding exterior mirrors ⇨ 28, Heated exterior mirrors ⇨ 29.

Steering wheel adjustment

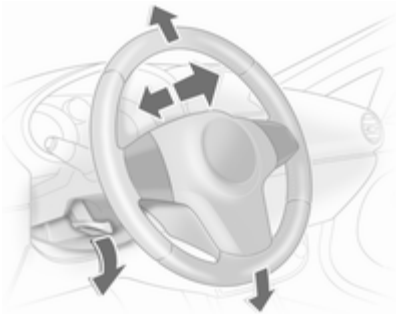

Unlock lever, adjust steering wheel, then engage lever and ensure it is fully locked. Do not adjust steering wheel unless vehicle is stationary and steering wheel lock has been released.

Airbag system ⇨ 42, Ignition positions ⇨ 113.

Instrument panel overview

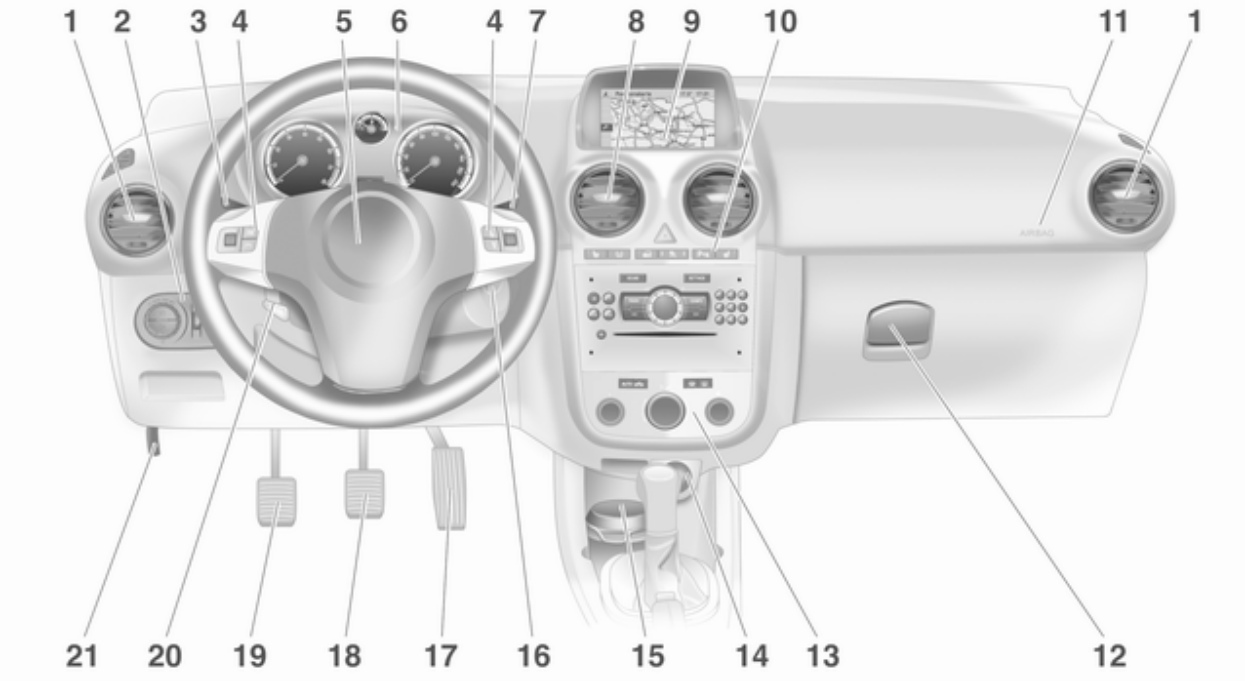

1 Side air vents 110
2 Light switch 96
Instrument illumination 101
Rear fog light 100
Front fog lights 100
Headlight range adjustment 97
3 Turn and lane-change signals, headlight flash, low beam and high beam 99
Exit lighting 103
Parking lights 100
Cruise control 84
4 Steering wheel controls 69
5 Horn 70
Driver airbag 42
6 Instruments 75
7 Windscreen wiper, windscreen washer system ... 71
Trip computer 90
8 Centre air vents 110
9 Info-Display 85
Trip computer 90
Electronic climate control system 106
10 Left heated seat 39
Heated steering wheel 70
Tyre deflation detection system 169
Parking assist 130
Hazard warning flashers 99
Central locking system 22
Electronic stability program . 128
Airbag deactivation 44
Right heated seat 39
Eco button 114
Fuel selector 76
11 Front passenger airbag 42
12 Glovebox 52
13 Climate control system 104
14 Cigarette lighter 74
Power outlet 74
15 Ashtray 74
16 Ignition switch with steering wheel lock 113
17 Accelerator pedal 112
18 Brake pedal 126
19 Clutch pedal 112
20 Steering wheel adjustment . . . 69
21 Bonnet release lever 144

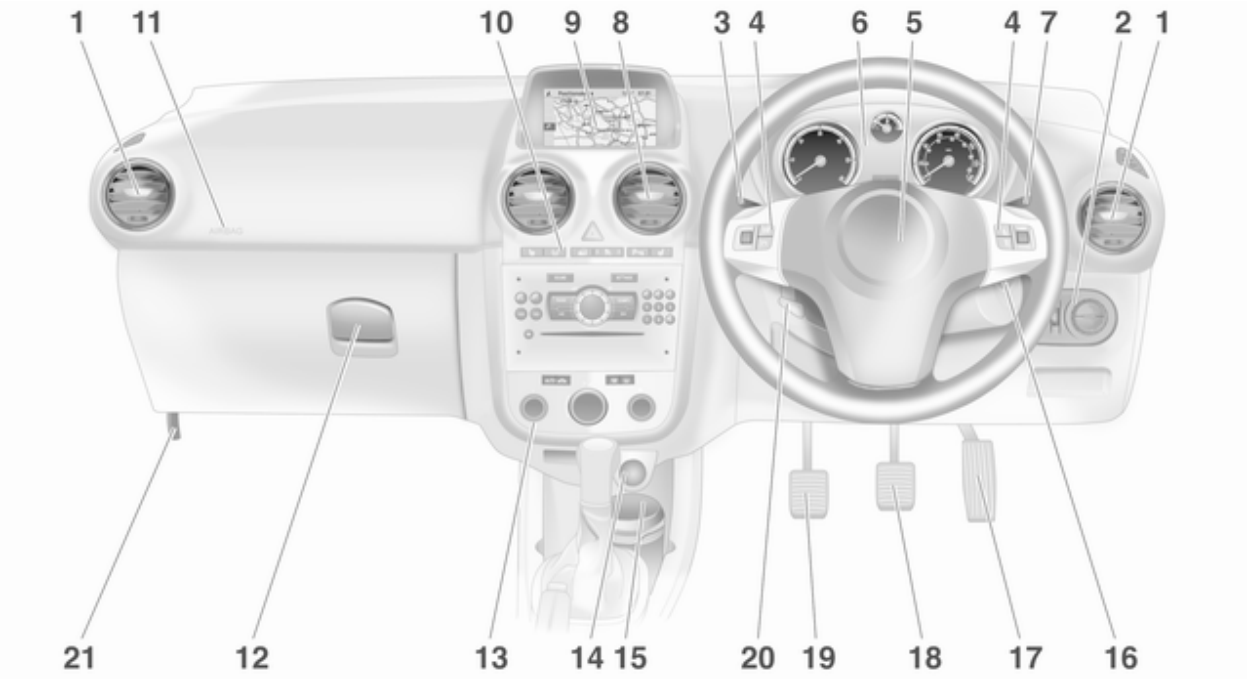
1
11
10
9
8
3
4
6
5
4
7
2
1
21
12
13
14
15
20
19
18
17
16

Exterior lighting

Turn light switch

AUTO	=	Automatic light control: Exterior lighting is switched on and off automatically
⏻	=	Activation or deactivation of the automatic light control
≣D	=	sidelights
≣D	=	low beam

Press light switch

≣D	=	Front fog lights
D≣	=	Rear fog lights

Lighting ⇨ 96.

Headlight flash, high beam and low beam

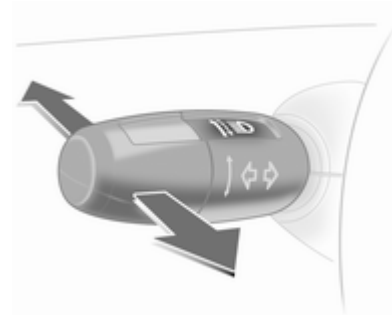

headlight flash	=	pull lever
high beam	=	push lever
low beam	=	push or pull lever

High beam ⇨ 97, Headlight flash ⇨ 97, Automatic light control ⇨ 96.

Turn and lane-change signals

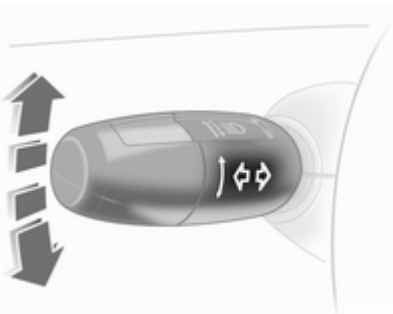

right = lever up
left = lever down

Turn and lane-change signals ⇨ 99, Parking lights ⇨ 100.

Hazard warning flashers

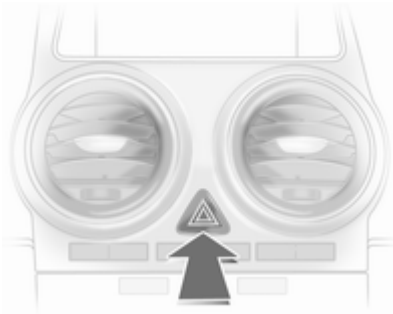

Operated with the ⚠ button.
Hazard warning flashers ⇨ 99.

Horn

Press 📯.

Washer and wiper systems

Windscreen wiper

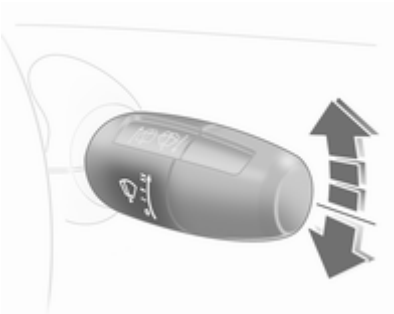

= = fast
— = slow
– – = timed interval wipe or automatic wiping with rain sensor
O = off

For a single wipe when the windscreen wiper is off, press the lever down.

Windscreen wiper ⇨ 71, Wiper blade replacement ⇨ 149.

Windscreen and headlight washer systems

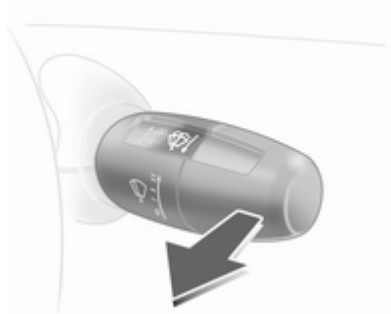

Pull lever.

Windscreen and headlight washer system ⇨ 71, Washer fluid ⇨ 146.

Rear window wiper and washer system

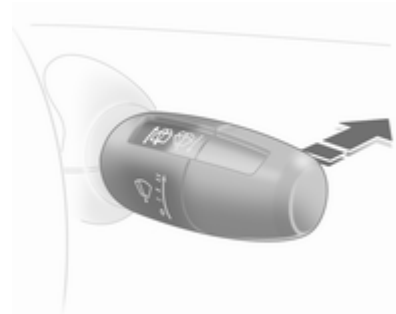

Wiper on = push lever
Wiper off = push lever again
Wash = push lever and hold

Rear window wiper and washer system ⇨ 72, Wiper blade replacement ⇨ 149, Washer fluid ⇨ 146.

Climate control

Heated rear window, heated exterior mirrors

Heating is operated by pressing the button.

Heated rear window ⇨ 32.

Demisting and defrosting the windows

Air distribution to .

Set temperature control to warmest level.

Set fan speed to highest level.

Cooling on.

Press button .

Climate control system ⇨ 104.

Transmission

Manual transmission

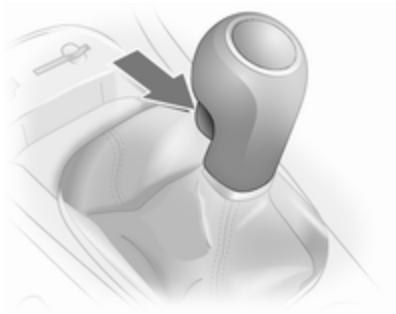

Reverse: with the vehicle stationary, wait 3 seconds after depressing clutch pedal and then press the release button on the selector lever and engage the gear.

If the gear does not engage, set the lever to neutral, release the clutch pedal and depress again; then repeat gear selection.

Manual transmission ⇨ 121.

Manual transmission automated

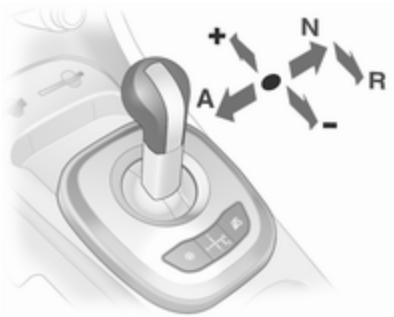

N = neutral position
● = drive position
+ = higher gear
- = lower gear
A = switch between automatic and manual mode
R = reverse gear (with selector lever lock)

Manual transmission automated ⇨ 122.

Automatic transmission

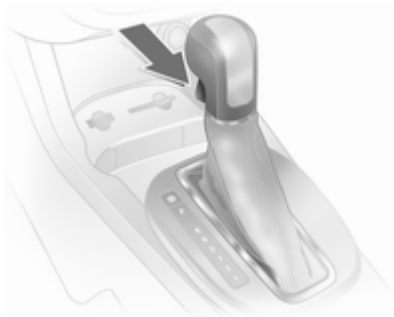

P = park position
R = reverse gear
N = neutral position
D = drive position

The selector lever can only be moved out of **P** or **N** when the ignition is on and the foot brake is depressed (selector lever lock). To engage **P** or **R**, press the release button on the selector lever.

The automatic transmission is available in two versions ⇨ 118.

Starting off

Check before starting off

- Tyre pressure and condition ⇨ 168, ⇨ 209.
- Engine oil level and fluid levels ⇨ 145.
- All windows, mirrors, exterior lighting and number plates are free from dirt, snow and ice and are operational.
- Proper position of mirrors, seats, and seat belts ⇨ 28, ⇨ 36, ⇨ 40.
- Brake function at low speed, particularly if the brakes are wet.

Starting the engine

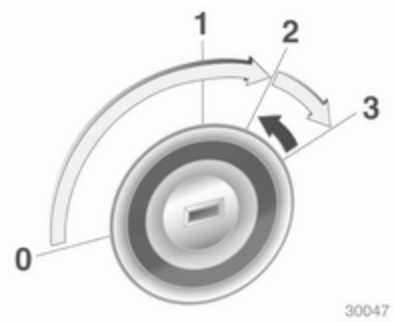

- Turn key to position 1
- move the steering wheel slightly to release the steering wheel lock
- operate clutch and brake, if the clutch pedel is not operated the engine might not start and the control indicator ⚒ could illuminate
- automatic transmission in **P** or **N**
- do not operate accelerator pedal
- diesel engines, turn the key to position 2 for preheating and wait until control indicator ⚒ extinguishes
- turn key to position 3 and release

Starting the engine ⇨ 113.

Stop-start system

If the vehicle is at a low speed or at a standstill and certain conditions are fulfilled, activate an Autostop as follows:

- Depress the clutch pedal
- shift the selector lever to neutral
- release the clutch pedal

An Autostop is indicated by the needle at the **AUTOSTOP** position in the tachometer.

To restart the engine, depress the clutch pedal again.

Stop-start system ⇨ 114.

Parking

- Always apply the parking brake without pressing the release button. Apply as firmly as possible on a downhill slope or uphill slope. Depress the foot brake at the same time to reduce operating force.
- Switch off the engine. Turn the ignition key to 0 and remove it. Turn the steering wheel until the steering wheel lock is felt to engage.

  For vehicles with automatic transmission, the key can only be removed when the selector lever is in the **P** position.
- If the vehicle is on a level surface or uphill slope, engage first gear or set the selector lever to **P** before switching off the ignition. On an uphill slope, turn the front wheels away from the kerb.

  If the vehicle is on a downhill slope, engage reverse gear or set the selector lever to **P** before switching off the ignition. Turn the front wheels towards the kerb.
- Lock the vehicle with button ⚌ on the radio remote control.

  Activate the anti-theft alarm system ⇨ 26.
- Do not park the vehicle on an easily ignitable surface. The high temperature of the exhaust system could ignite the surface.
- Close windows and sunroof.
- The engine cooling fans may run after the engine has been switched off ⇨ 143.
- After running at high engine speeds or with high engine loads, operate the engine briefly at a low load or run in neutral for approx.
  30 seconds before switching off, in order to protect the turbocharger.

Keys, locks ⇨ 20.

Laying the vehicle up for a long period of time ⇨ 142.

Keys, doors and windows

Keys, locks 20
Doors 25
Vehicle security 26
Exterior mirrors 28
Interior mirrors 30
Windows 30
Roof 33

Keys, locks

Keys

Replacement keys

The key number is specified in the Car Pass or on a detachable tag.

The key number must be quoted when ordering replacement keys as it is a component of the immobiliser system.

Locks ⇨ 181.

Key with foldaway key section

Press button to extend. To fold the key, first press the button.

Car Pass

The Car Pass contains security related vehicle data and should therefore be kept in a safe place.

When the car is taken to a workshop, this vehicle data is needed in order to perform certain operations.

Radio remote control

Used to operate:

- Central locking system,
- Anti-theft locking system,
- Anti-theft alarm system,
- Power windows.

The radio remote control has an approximate range of up to 5 metres. This range can be affected by outside influences. The hazard warning flashers confirm operation.

Handle with care, protect from moisture and high temperatures and avoid unnecessary operation.

Fault

If the central locking system cannot be operated with the radio remote control, it may be due to the following:

- Range exceeded,
- Battery voltage too low,
- Frequent, repeated operation of the radio remote control while not in range, which will require re-synchronisation,
- Overload of the central locking system by operating at frequent intervals, the power supply is interrupted for a short time,
- Interference from higher-power radio waves from other sources.

Unlocking ⇨ 22.

Radio remote control battery replacement

Replace the battery as soon as the range is noticeably diminished.

Batteries do not belong in household waste. They must be disposed of at an appropriate recycling collection point.

Key with foldaway key section

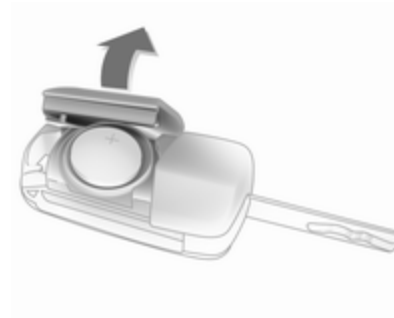

Extend the key and open the unit. Replace the battery (battery type CR 2032), paying attention to the installation position. Close the unit and synchronise.

Key with fixed key section

Have the battery replaced by a workshop.

Radio remote control synchronisation

After replacing the battery, unlock the door with the key in the driver's door lock. The radio remote control will be synchronised when you switch on the ignition.

Memorised settings

Whenever the vehicle is locked, the following settings are automatically memorised by the key being used:

- Electronic climate control,
- Info-Display,
- Infotainment system,
- Instrument panel illumination.

The saved settings are automatically used next time that key is used for unlocking.

Central locking system

Unlocks and locks doors, load compartment and fuel filler flap.

A pull on an interior door handle unlocks the entire vehicle and opens the door.

Note
In the event of an accident of a certain severity, the vehicle unlocks automatically.

Note
A short time after unlocking with the remote control the doors are locked automatically if no door has been opened.

Unlocking

Central locking system with key activation

Turn the key in the driver's door lock to the front.

Central locking system with radio remote control

Press button ⊻.

Two settings are possible:

- To unlock only the driver's door, press button ⊻ once, to unlock the entire vehicle, press button ⊻ twice.
- To unlock the entire vehicle, press button ⊻ once.

Settings can be changed in the Driver Information Centre.

Vehicle personalisation ⇨ 94.

Locking

Close doors, load compartment and fuel filler flap. If the driver's door is not closed properly, the central locking system will not work.

Central locking system with key activation

Turn the key in the driver's door lock rearwards.

Central locking system with radio remote control

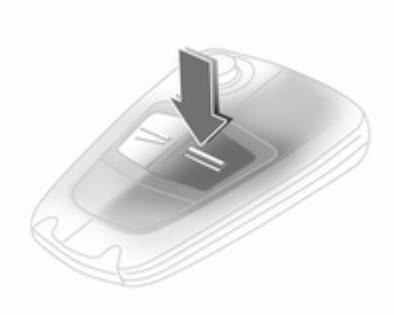

Press button ⊼.

Central locking button

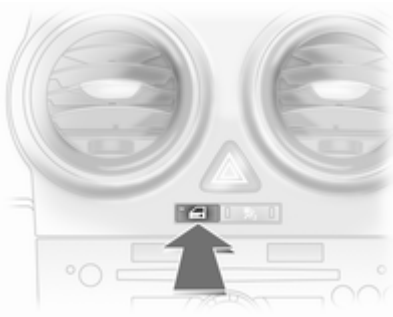

Press button 🚗: the doors are locked or unlocked.

The LED in the button 🚗 illuminates for approx. 2 minutes after locking with the radio remote control.

If the doors are locked from the inside whilst driving, the LED remains lit.

Fault in radio remote control

Unlocking

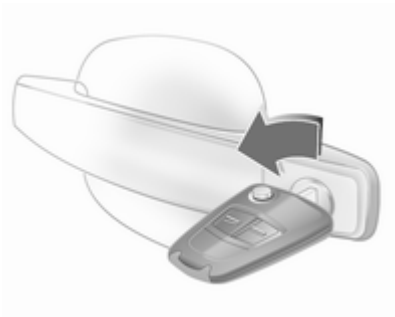

Turn the key in the driver's door lock as far as it will go. The entire vehicle is unlocked when the driver's door is opened. To unlock the other doors, switch on the ignition and press the central locking button.

Locking

Close the driver's door, open the passenger door, press central locking button 🚗. The vehicle is locked. Close the passenger door.

Fault in central locking system

Unlocking

Turn the key in the driver's door lock as far as it will go. The other doors can be opened by pulling the interior handle (not possible if the anti-theft locking system is active). The load compartment and fuel filler flap remain locked. To deactivate the anti-theft locking system, switch on the ignition ⇨ 26.

Locking

Insert the key into the opening above the lock on the inside of the door and operate the lock by lifting until it clicks. Then close the door. The procedure must be carried out for each door. The driver's door can also be locked from the outside with the key. The fuel filler flap and tailgate cannot be locked.

Automatic locking

This security feature can be configured to automatically lock all doors, load compartment and fuel filler flap as soon as the vehicle is driven. Vehicle personalisation ⇨ 94.

Child locks

⚠ Warning

Use the child locks whenever children are occupying the rear seats.

Using a key or suitable screwdriver, turn button on rear door lock to the horizontal position. The door cannot be opened from inside.

Doors

Load compartment

Opening

Pull the button underneath the moulding.

⚠ Warning

Do not drive with the tailgate open or ajar, e.g. when transporting bulky objects, as toxic exhaust gases could enter the vehicle.

Note
The installation of certain heavy accessories onto the tailgate may affect its ability to remain open.

Closing

Use the interior handle.

Do not press the button under the moulding while closing as this will unlock the tailgate again.

Vehicle security

Anti-theft locking system

⚠ Warning

Do not use the system if there are people in the vehicle! The doors cannot be unlocked from the inside.

The system deadlocks all the doors. All doors must be closed or the system cannot be activated.

If the ignition was on, the driver's door must be opened and closed once so that the vehicle can be secured.

Unlocking the vehicle disables the mechanical anti-theft locking system. This is not possible with the central locking button.

Activating with the remote control

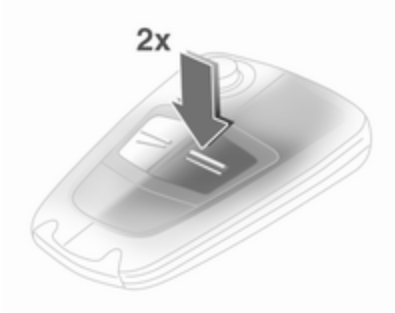

Press ⚌ again at the latest 10 seconds after locking.

Anti-theft alarm system

The anti-theft alarm system incorporates and is operated in conjunction with the anti-theft locking system.

It monitors:

- Doors, load compartment, bonnet,
- Ignition.

Unlocking the vehicle deactivates both systems simultaneously.

Light-emitting diode (LED)

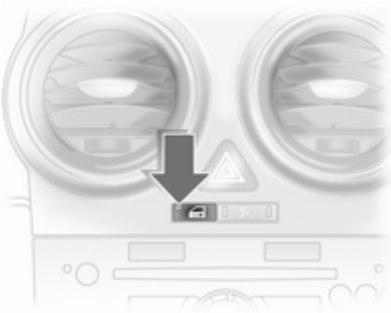

During the first 10 seconds of anti-theft alarm system activation:

LED illuminates	=	Test, ignition delay,
LED flashes quickly	=	Door, load compartment or bonnet open, or system fault.

After the first 10 seconds of anti-theft alarm system activation:

LED flashes slowly	=	System active.

Seek the assistance of a workshop in the event of faults.

Alarm

When triggered, the alarm gives off an acoustic signal (horn) and a visual signal (hazard warning flashers). The number and duration of which are stipulated by legislation.

The alarm siren can be silenced by pressing any button of the radio remote control or by switching on the ignition. The anti-theft alarm system is deactivated at the same time.

Immobiliser

The system checks whether the vehicle is allowed to start with the key being used. If the transponder in the key is recognised, the engine can be started.

The immobiliser activates itself automatically after the key has been removed from the ignition switch.

If the control indicator flashes when the ignition is on, there is a fault in the system; the engine cannot be started. Switch off the ignition and then repeat the start attempt.

If the control indicator continues flashing, attempt to start the engine using the spare key and seek the assistance of a workshop.

If control indicator illuminates after the engine has started, there is a fault in the engine electronics or transmission electronics ⇨ 80, ⇨ 120, ⇨ 125, or there is water in the diesel fuel filter ⇨ 89.

Note
The immobiliser does not lock the doors. You should always lock the vehicle after leaving it and switch on the anti-theft alarm system ⇨ 22, ⇨ 26.

Exterior mirrors

Convex shape

The convex exterior mirror contains an aspherical area and reduces blind spots. The shape of the mirror makes objects appear smaller, which will affect the ability to estimate distances.

Electric adjustment

Setting with four-way switch in version with manual window operation

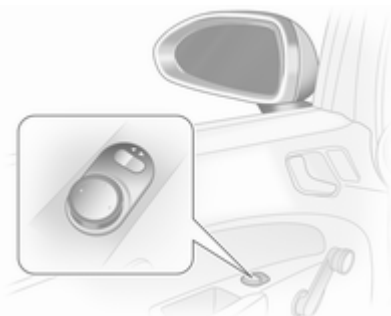

First select the relevant exterior mirror then use the control to adjust.

Setting with four-way switch in version with electronic window operation

First select the relevant exterior mirror then use the control to adjust.

Folding

For pedestrian safety, the exterior mirrors will swing out of their normal mounting position if they are struck with sufficient force. Reposition the mirror by applying slight pressure to the mirror housing.

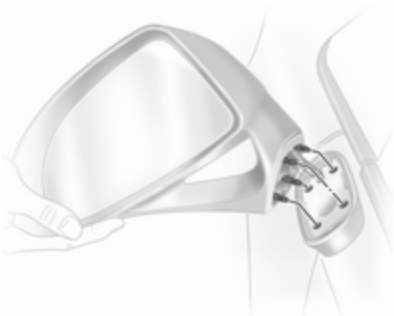

Corsa OPC: For pedestrians safety, the exterior mirrors of the Corsa OPC are released from the holder if they are bumped. Fit mirror housing to holder with latching lugs and engage by striking gently.

Manual

The exterior mirrors can be folded in by pressing gently on the outer edge of the housing.

Heated

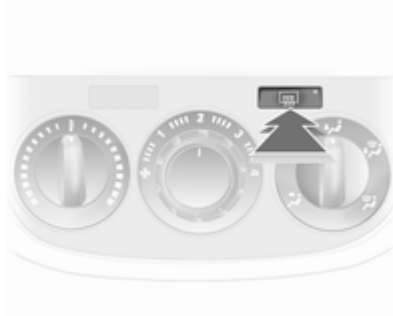

Operated by pressing the button.

Heating works with the engine running. It is switched off automatically after a short time.

Interior mirrors

Manual anti-dazzle

To reduce dazzle, adjust the lever on the underside of the mirror housing.

Automatic anti-dazzle

Dazzle from following vehicles at night is automatically reduced.

Windows

Windscreen

Heat-reflecting windscreen

The heat-reflecting windscreen has a coating which reflects solar radiation. Also data signals, e.g. from toll stations, might be reflected.

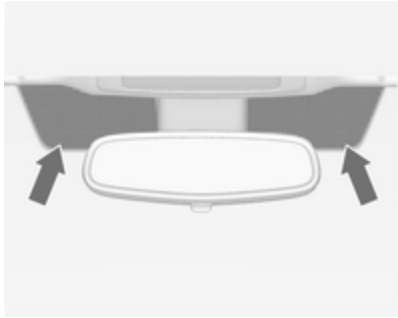

The marked areas on the windscreen are not covered with the coating. Devices for electronic data recording and fee payment must be attached in these areas. Otherwise data recording malfunctions may occur.

Vignettes

Do not attach vignettes or similar on the windscreen in the area of the interior mirror. Otherwise the detection zone of the sensor and the view area of the camera in the mirror housing could be restricted.

Manual windows

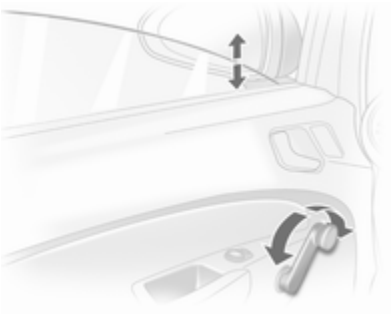

The door windows can be opened or closed with the window winders.

Power windows

⚠ Warning

Take care when operating the power windows. Risk of injury, particularly to children.

Keep a close watch on the windows when closing them. Ensure that nothing becomes trapped in them as they move.

Power windows can be operated:

- with the ignition on,
- within 5 minutes of switching the ignition off,
- within 5 minutes of turning the ignition key to position 1.

After switching off the ignition, the window operation is disabled, when the driver's door is opened, then closed and locked.

Operate the control to open or close the window.

For vehicles with automatic feature, pull or press the switch again to stop window movement.

Safety function

If the window glass encounters resistance during automatic closing, it is immediately stopped and opened again.

In the event of closing difficulties due to frost or the like, operate the switch several times to close the window in stages.

Operating windows from outside

Depending on the equipment level, the windows can be operated remotely from outside the vehicle.

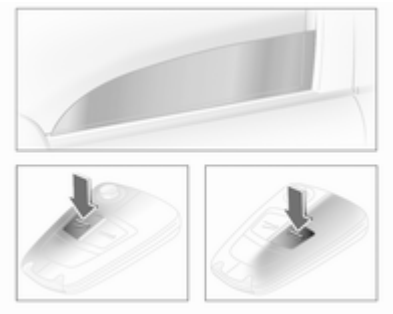

Press ⊼ or ⊼ until all windows have opened or closed.

Overload

If the windows are repeatedly operated at short intervals, the window operation is disabled for some time.

Fault

If the windows cannot be opened or closed automatically, activate the window electronics as follows:

1. Close doors.
2. Switch on ignition.
3. Close the window completely and operate the button for 5 more seconds.
4. Open the window completely and operate the button for 1 more second.
5. Repeat this for each window.

Heated rear window

Operated by pressing the button.

Heating functions with the engine running and is switched off automatically after a short time.

Depending on the engine type, the heated rear window comes on automatically when the diesel particle filter is being cleaned.

Sun visors

The sun visors can be folded down or swivelled to the side to prevent dazzling.

If the sun visors have integral mirrors, the mirror covers should be closed when driving.

Roof

Sunroof

⚠ Warning

Take care when operating the sunroof. Risk of injury, particularly to children.

Keep a close watch on the movable parts when operating them. Ensure that nothing becomes trapped in them as they move.

Sunroof can be operated with ignition on.

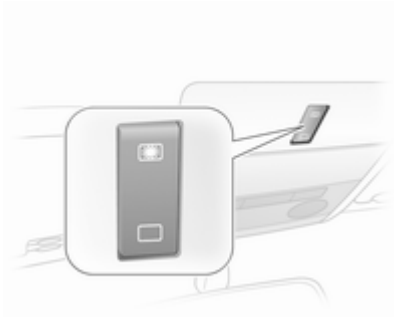

Operated via a rocker switch in the roof console.

Press the button briefly for activation in steps. Hold down the button for longer for automatic opening.

Raise

With the sunroof closed, press ⊠. The sunroof is raised at the rear.

Open

Press ⊠ again with the sunroof in the raised position. The sunroof opens automatically until it reaches its end position.

To close: press ▭.

Caution

When using a roof rack, check the free movement of the sunroof in order to avoid damage. It is only permitted to raise the sunroof.

Note
If the top of the roof is wet, tilt sunroof, allow water to run off and then open sunroof.

Do not affix any stickers to sunroof.

Close

Hold down ▢ until the sunroof is completely closed.

Sunblind

The sunblind is manually operated.

Close or open the sunblind by sliding. When the sunroof is open, the sunblind is always open.

Overload

If the system is overloaded, the power supply is automatically cut off for a short time. The system is protected by fuses in the fuse box ⇨ 162

Initialising the sun roof

If the sunroof cannot be operated, activate the electronics as follows: with ignition on, close the sunroof and hold ▢ depressed for at least 10 seconds.

Seek the assistance of a workshop to have the cause of the fault remedied.

Seats, restraints

Head restraints 35
Front seats 36
Seat belts 39
Airbag system 42
Child restraints 46

Head restraints

Position

⚠Warning

Only drive with the head restraint set to the proper position.

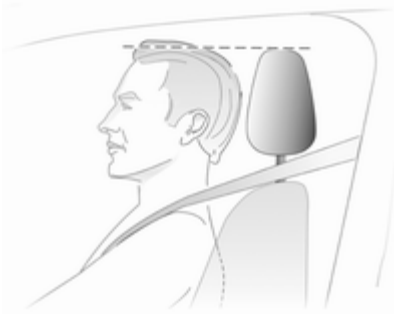

The upper edge of the head restraint should be at upper head level. If this is not possible for extremely tall people, set to highest position, and set to lowest position for small people.

Adjustment

Head restraints on front seats

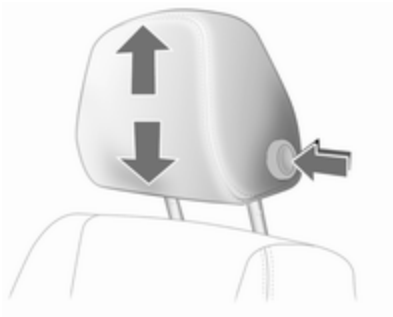

Press the button, adjust height and engage.

Head restraints on rear seats

The height of the head restraints can be set in two positions. To set in the first position, pull the head restraint upwards, in the second position press the spring marked in the illustration and push the head restraint right up to the top. To adjust downwards, press the spring marked in the illustration and push the head restraint downwards.

Active head restraints

In the event of a rear-end impact, the active head restraints tilt slightly forwards. The head is more effectively supported so the risk of whiplash injury is reduced.

Note
Approved accessories may only be attached to the front passenger seat head restraint if the seat is not in use.

Front seats

Seat position

⚠ Warning

Only drive with the seat correctly adjusted.

- Sit with buttocks as far back against the backrest as possible. Adjust the distance between the seat and the pedals so that legs are slightly angled when pressing the pedals. Slide the front passenger seat as far back as possible.

- Sit with shoulders as far back against the backrest as possible. Set the backrest to an angle so that it is possible to reach the steering wheel with arms slightly bent. Maintain contact between shoulders and the backrest when turning the steering wheel. Do not tilt the backrest too far back. We recommend a maximum angle of approx. 25°.
- Adjust the steering wheel ⇨ 69.
- Set the seat high enough to have a clear field of vision on all sides and on all display instruments. There should be at least one hand of clearance between head and the roof frame. Thighs should rest lightly on the seat without pressing into it.
- Adjust the head restraint ⇨ 35.
- Adjust the height of the seat belt ⇨ 40.

Seat adjustment

⚠ Danger

Do not sit nearer than 25 cm from the steering wheel, to permit safe airbag deployment.

⚠ Warning

Never adjust seats while driving as they could move uncontrollably.

Seat positioning

Pull handle, slide seat, release handle.

Seat backrests

Turn handwheel. Do not lean on backrest when adjusting.

Seat height

Lever pumping motion

up = higher
down = lower

Seat folding

Lift release lever and tilt backrest forwards. Lower release lever and backrest engages in lowered position. Slide seat forwards.

To push the seat back to upright, it engages in its original position. Lift the release lever, move the backrest back to upright, lower lever, backrest engages.

Folding the backrest forwards is possible only when the backrest is in an upright position.

Do not operate handwheel to adjust backrest with backrest tilted forward.

Corsa OPC

Remove seat belt from belt mount on backrest.

Pull release lever on rear of backrest, tilt backrest forwards and release lever. Slide seat forwards.

To move the backrest upright, slide seat back, pull release lever and move backrest upright. Release lever, backrest engages.

Folding the backrest forwards is possible only when the backrest is in an upright position.

Do not operate handwheel to adjust backrest with backrest tilted forward.

Heating

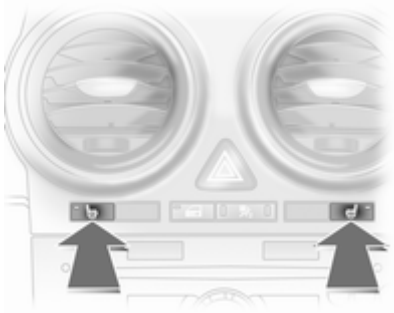

Activate heating by pressing button for the seat with the ignition on.

LED in button on: relevant front seat heating on.

Seat heating is operational when the engine is running and during an Autostop.

Seat belts

The belts are locked during heavy acceleration or deceleration of the vehicle for the safety of the occupants.

⚠ Warning

Fasten seat belt before each trip.

In the event of an accident, people not wearing seat belts endanger their fellow occupants and themselves.

Seat belts are designed to be used by only one person at a time. Child restraint system ⇨ 46.

Periodically check all parts of the belt system for damage, pollution and proper functionality.

Have damaged components replaced. After an accident, have the belts and triggered belt tensioners replaced by a workshop.

Note
Make sure that the belts are not damaged by shoes or sharp-edged objects or trapped. Prevent dirt from getting into the belt retractors.

Seat belt reminder ⇨ 79.

Belt force limiters

In the front seats, stress on the body is reduced by the gradual release of the belt during a collision.

Belt tensioners

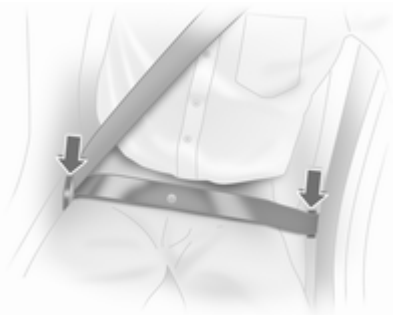

In the event of a head-on or rear-end collision of a certain severity, the front seat belts are tightened.

⚠ Warning

Incorrect handling (e.g. removal or fitting of belts) can trigger the belt tensioners with risk of injury.

Deployment of the belt tensioners is indicated by illumination of control indicator ⇨ 79.

Triggered belt tensioners must be replaced by a workshop. Belt tensioners can only be triggered once.

Note

Do not affix or install accessories or other objects that may interfere with the operation of the belt tensioners. Do not make any modifications to belt tensioner components as this will invalidate the vehicle type approval.

Three-point seat belt

Fastening seat belt

Withdraw belt from retractor, guide it untwisted across the body and insert the latch plate in the buckle. Tension the lap belt regularly whilst driving by tugging the shoulder belt.

With the Corsa OPC: Feed seat belt through belt mount on backrest when fastening seat belt.

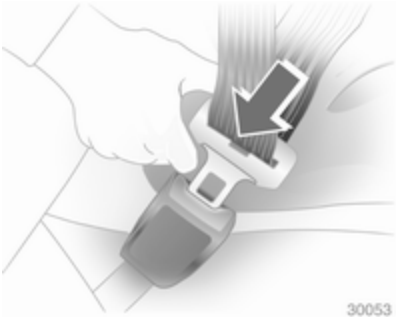

Loose or bulky clothing prevents the belt from fitting snugly. Do not place objects such as handbags or mobile phones between the belt and your body.

⚠Warning

The belt must not rest against hard or fragile objects in the pockets of your clothing.

Height adjustment

1. Pull belt out slightly.
2. Press button.
3. Adjust height and engage audibly.

Adjust the height so that the belt lies across the shoulder. It must not lie across the throat or upper arm.

Do not adjust while driving.

Removing seat belt

To release belt, press red button on belt buckle.

Seat belts on the rear outer seats

When not in use or to fold forward the rear backrests, feed seat belts through belt mount.

Using the seat belt while pregnant

⚠Warning

The lap belt must be positioned as low as possible across the pelvis to prevent pressure on the abdomen.

Airbag system

The airbag system consists of a number of individual systems.

When triggered the airbags inflate within milliseconds. They also deflate so quickly that it is often unnoticeable during the collision.

⚠ Warning

If handled improperly the airbag systems can be triggered in an explosive manner.

Note
The airbag systems and belt pretensioner control electronics are located in the centre console area. Do not put any magnetic objects in this area.

Do not stick anything on the airbag covers and do not cover them with other materials.

Each airbag is triggered only once. Have deployed airbags replaced by a workshop. Furthermore, it might be necessary to have the steering wheel, the instrument panel, parts of the panelling, the door seals, handles and the seats replaced.

Do not make any modifications to the airbag system as this will invalidate the vehicle type approval.

When the airbags inflate, escaping hot gases may cause burns.

Control indicator for airbag systems ⇨ 79.

Front airbag system

The front airbag system consists of one airbag in the steering wheel and one in the instrument panel on the front passenger side. These can be identified by the word **AIRBAG**.

Additionally there is a warning label on the side of the instrument panel, visible when the front passenger door is open, or on the passenger's sun visor.

The front airbag system is triggered in the event of an accident of a certain severity. The ignition must be on.

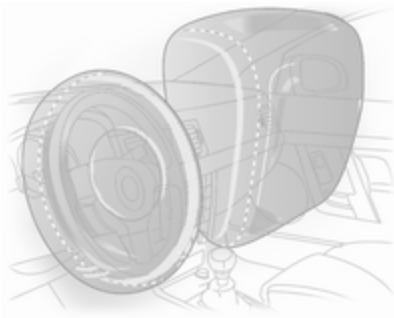

The forward movement of the front seat occupants is decelerated, thereby considerably reducing the risk of injury to the upper body and head.

⚠Warning

Optimum protection is only provided when the seat is in the proper position ⇨ 36.

Keep the area in which the airbag inflates clear of obstructions.

Fit the seat belt correctly and engage securely. Only then the airbag is able to protect.

Side airbag system

The side airbag system consists of an airbag in each front seat backrest. This can be identified by the word AIRBAG.

The side airbag system is triggered in the event of an accident of a certain severity. The ignition must be on.

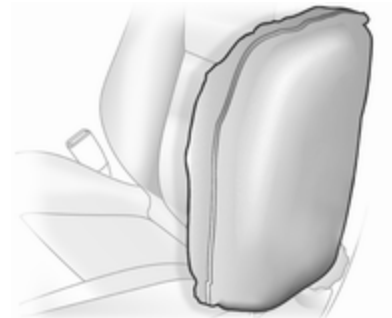

The risk of injury to the upper body and pelvis in the event of a side-on collision is considerably reduced.

⚠Warning

Keep the area in which the airbag inflates clear of obstructions.

Note

Only use protective seat covers that have been approved for the vehicle. Be careful not to cover the airbags.

Curtain airbag system

The curtain airbag system consists of an airbag in the roof frame on each side. This can be identified by the word **AIRBAG** on the roof pillars.

The curtain airbag system is triggered in the event of an accident of a certain severity. The ignition must be on.

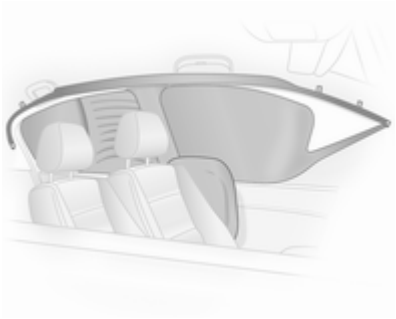

The risk of injury to the head in the event of a side impact is considerably reduced.

⚠ Warning

Keep the area in which the airbag inflates clear of obstructions.

The hooks on the handles in the roof frame are only suitable for hanging up light articles of clothing, without coat hangers. Do not keep any items in these clothes.

Airbag deactivation

Front airbag and side airbag systems for the front passenger seat have to be deactivated if a child restraint system is to be fitted on this seat. The curtain airbag system, the belt tensioners and all driver airbag systems will remain active.

There is a warning label on the side of the instrument panel, visible when the front passenger door is open.

Control indicator and LEDs in the button not on:

Airbag systems for the front passenger are active. No child restraint systems can be installed.

Control indicator and LEDs in button on:

Front passenger airbags are deactivated and will not inflate in the event of a collision. A child restraint system according to the chart **Child restraint installation locations** can be installed ⇨ 48.

⚠ Danger

Risk of fatal injury for a child using a child restraint system on a seat with activated front passenger airbag.

Risk of fatal injury for an adult person on a seat with deactivated front passenger airbag.

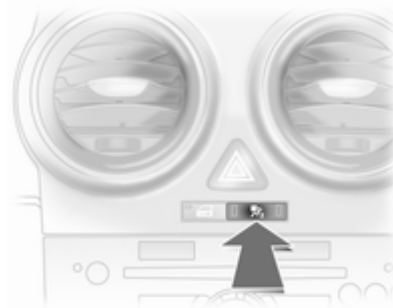

Deactivation:

- switch on ignition, control indicator flashes,
- press button within 15 seconds and hold down,
- after about 2 seconds, you will hear a confirmation buzzer. Release button after another 4 seconds at the latest.

Activation:

- switch on ignition, control indicator flashes,
- press button within 15 seconds and hold down,
- after about 2 seconds, you will hear a confirmation buzzer. Release button after another 4 seconds at the latest.

Only if control indicator does not light up, the airbag systems for front passenger seat will inflate in the event of a collision.

Change status only when the vehicle is stopped with the ignition off.

Status remains up to the next change.

Control indicator for airbag deactivation ⇨ 79.

Starting the engine terminates changing of the setting.

The setting can then only be changed once the ignition has been switched off and then back on again.

Child restraints

Child restraint systems

When a child restraint system is being used, pay attention to the following usage and installation instructions and also those supplied with the child restraint system.

Always comply with local or national regulations. In some countries, the use of child restraint systems is forbidden on certain seats.

⚠ Warning

When using a child restraint system on the front passenger seat, the airbag systems for the front passenger seat must be deactivated; if not, the triggering of the airbags poses a risk of fatal injury to the child.

This is especially the case if rear-facing child restraint systems are used on the front passenger seat.

Selecting the right system

The rear seats are the most convenient location to fasten a child restraint system.

Children should travel facing rearwards in the vehicle as long as possible. This makes sure that the child's backbone, which is still very weak, is under less strain in the event of an accident.

Suitable are restraint systems that comply with ECE 44-03 or ECE 44-04. Check local laws and regulations for mandatory use of child restraint systems.

Ensure that the child restraint system to be installed is compatible with the vehicle type.

Ensure that the mounting location of the child restraint system within the vehicle is correct.

Allow children to enter and exit the vehicle only on the side facing away from the traffic.

When the child restraint system is not in use, secure the seat with a seat belt or remove it from the vehicle.

Note
Do not stick anything on the child restraint systems and do not cover them with any other materials.

A child restraint system which has been subjected to stress in an accident must be replaced.

Child restraint installation locations

Permissible options for fitting a child restraint system

Weight and age class	On front passenger seat activated airbag	On front passenger seat deactivated airbag	On rear outboard seats	On rear centre seat
Group 0: up to 10 kg or approx. 10 months	X	U[1]	U[2]	X
Group 0+: up to 13 kg or approx. 2 years	X	U[1, 2]	U[2]	X
Group I: 9 to 18 kg or approx. 8 months to 4 years	X	U[1, 2]	U[2]	X
Group II: 15 to 25 kg or approx. 3 to 7 years	X	X	U	X
Group III: 22 to 36 kg or approx. 6 to 12 years	X	X	U	X

[1] = Only if front passenger seat airbag systems are deactivated. If the child restraint system is being secured using a three-point seat belt, move seat height adjustment to uppermost position and ensure that vehicle safety belt runs forwards from the upper anchorage point.

[2] = Seat available with ISOFIX and Top-tether mounting brackets (Not available on the front passenger seat in the Corsa OPC).

U = Universal suitability in conjunction with three-point seat belt.

X = No child restraint system permitted in this weight class.

Permissible options for fitting an ISOFIX child restraint system

Weight class	Size class	Fixture	On front passenger seat	On rear outboard seats	On rear centre seat
Group 0: up to 10 kg	E	ISO/R1	IL	IL	X
Group 0+: up to 13 kg	E	ISO/R1	IL	IL	X
	D	ISO/R2	X	X	X
	C	ISO/R3	X	X	X
Group I: 9 to 18 kg	D	ISO/R2	X	X	X
	C	ISO/R3	X	X	X
	B	ISO/F2	IL, IUF	IL, IUF	X
	B1	ISO/F2X	IL, IUF	IL, IUF	X
	A	ISO/F3	X	X	X

IL = Suitable for particular ISOFIX restraint systems of the 'specific-vehicle', 'restricted' or 'semi-universal' categories. The ISOFIX restraint system must be approved for the specific vehicle type.
IUF = Suitable for ISOFIX forward-facing child restraint systems of universal category approved for use in this mass group.
X = No ISOFIX child restraint system approved in this weight class.

ISOFIX size class and seat device

A – ISO/F3 = Forward-facing child restraint system for children of maximum size in the weight class 9 to 18 kg.
B – ISO/F2 = Forward-facing child restraint system for smaller children in the weight class 9 to 18 kg.
B1 – ISO/F2X = Forward-facing child restraint system for smaller children in the weight class 9 to 18 kg.
C – ISO/R3 = Rear-facing child restraint system for children of maximum size in the weight class up to 13 kg.
D – ISO/R2 = Rear-facing child restraint system for smaller children in the weight class up to 13 kg.
E – ISO/R1 = Rear-facing child restraint system for young children in the weight class up to 13 kg.

U = Universal suitability in conjunction with three-point seat belt.
X = No child restraint system permitted in this weight class.

Isofix child restraint systems

Fasten vehicle-approved ISOFIX child restraint systems to the mounting brackets.

When using ISOFIX mounting brackets for seat mounting, universally approved child restraint systems for ISOFIX may be used.

ISOFIX mounting brackets are indicated by a label on the backrest.

Closely follow the installation instructions accompanying the ISOFIX child restraint system.

Top-tether child restraint systems

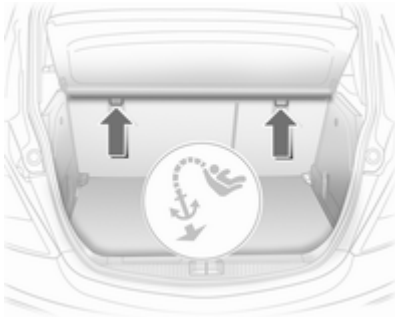

Depending on country-specific equipment, the vehicle might have two or three fastening eyes.

Fasten Top-tether child restraint systems to the fastening eyes on the back of the rear seat and to the passenger seat rail in the rear foot well. The strap must run between the two guide rods of the head restraint.

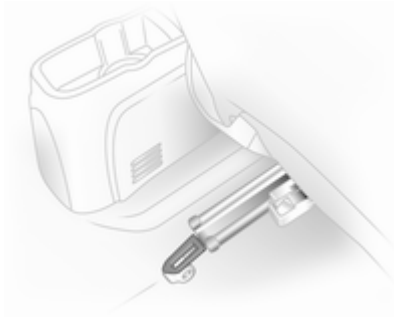

On the pillar trim of the rear roof and on the attachment points are symbols indicating the attachement eyes on which to mount the child restraint system.

When using Top-tether for seat mounting, universally approved child restraint systems for Top-tether may be used.

Closely follow the installation instructions accompanying the Top-tether child restraint system.

Storage

Storage compartments 52
Load compartment 62
Roof rack system 66
Loading information 67

Storage compartments

Glovebox

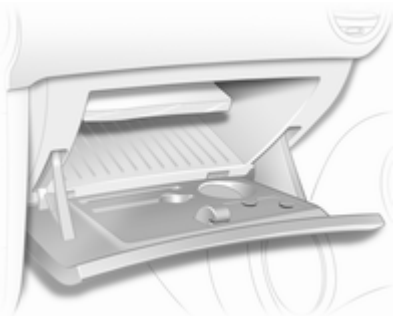

The glovebox features:

- a card holder in cheque card format
- a pen holder
- pocket torch holder.

The glovebox should be closed whilst driving.

Cupholders

A cupholder is located in the front of the centre console.

In the 3-door passenger vehicle, also located at the side of the rear seat.

Underseat storage

Lift at recessed edge and pull out. Maximum load: 1.5 kg. To close, push in and engage.

Rear carrier system

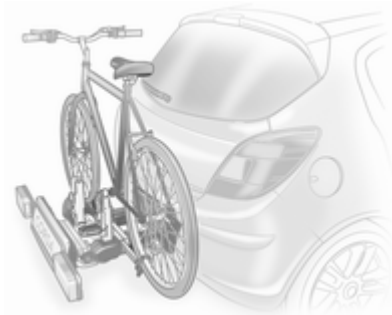

The rear carrier system (Flex-Fix system) allows bicycles to be attached to a pull-out carrier integrated into the vehicle floor. The transportation of other objects is not permitted.

The maximum load of the rear carrier system is 40 kg.The maximum load per bicycle is 20 kg.

If not in use, the carrier system can be slid back into the vehicle floor.

There must not be any objects on the bicycles that could become loose during transportation.

Caution

Do not attach bicycles with carbon pedal cranks to bicycle carriers. The bicycles might get damaged.

Extending

Open the tailgate.

⚠Warning

No persons may remain in the extension zone of the rear carrier system, risk of injury.

Pull release lever up. The system disengages and travels quickly out of the bumper.

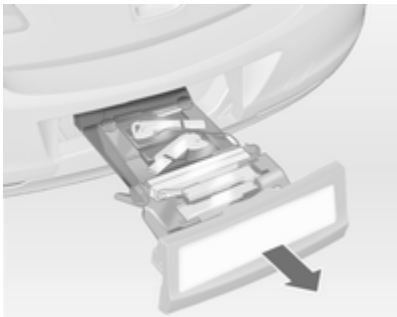

Completely pull out the rear carrier system until you hear it engage.

Ensure that it is not possible to push in the rear carrier system without pulling the release lever again.

⚠Warning

It is only permissible to fit objects to the rear carrier system if the system has been correctly engaged. If the rear carrier system will not engage correctly, do not fit objects to the system and slide the system back. Seek the assistance of a workshop.

Install the tail lamps

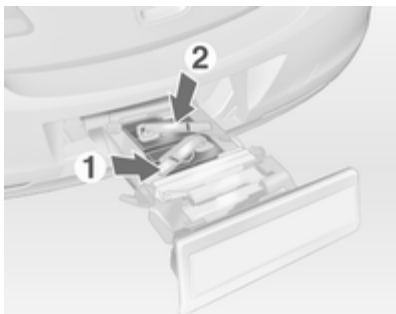

First remove the rear (**1**), then the front (**2**) tail lamp from the recesses.

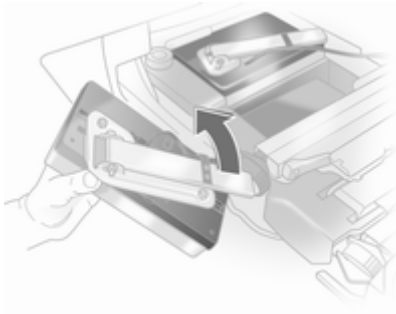

Open out the lamp support on the back of the tail lamp completely until it engages.

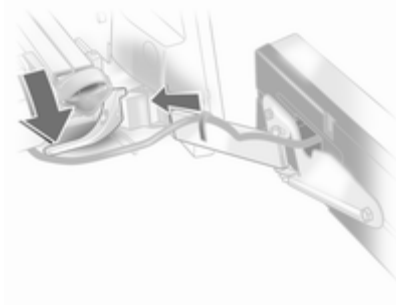

Push the clamping lever down and push the lamp support into the retainer until it engages.

Perform this procedure for both tail lamps.

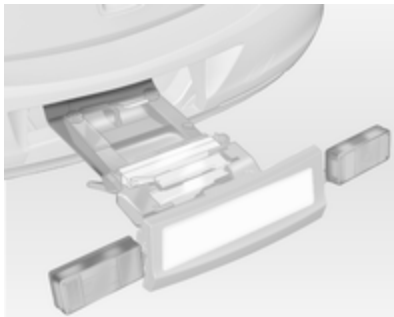

Check the cable and lamp position to make sure these are correctly installed and are securely located.

Lock the rear carrier system

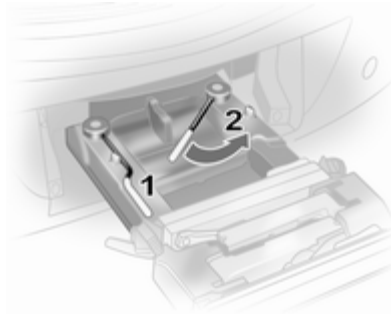

Swivel the left clamping lever (**1**) first, followed by the right clamping lever (**2**) until they stop. Both clamping levers must point backwards, otherwise safe functionality is not guaranteed.

Note
Close the tailgate.

Unfold pedal crank recesses

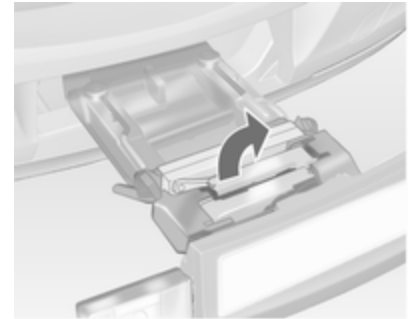

Fold one or both pedal crank recesses upwards until the diagonal support engages.

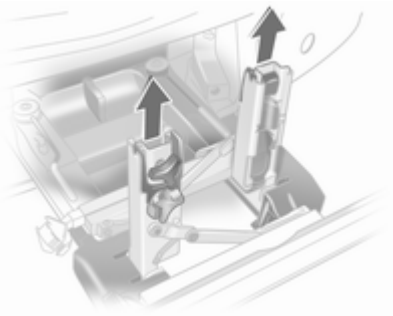

Remove the pedal crank mounts from the pedal crank recesses.

Adapting the rear carrier system to a bicycle

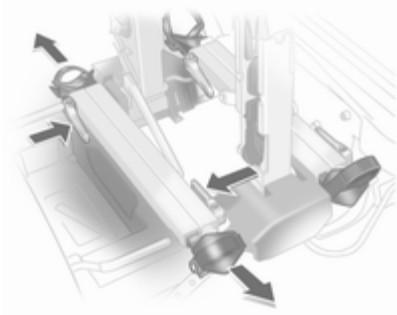

Press the release lever and withdraw the wheel recesses.

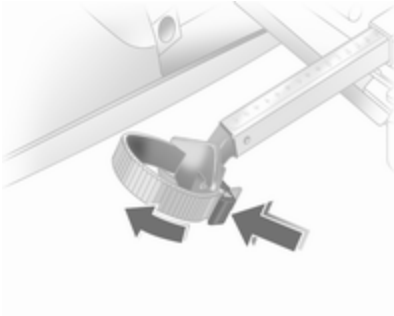

Push the release lever on the strap retainer and remove the strap retainer.

Prepare the bicycle for attachment

Note
The maximum width for the pedal crank is 38.3 mm and the maximum depth is 14.4 mm.

Rotate the left pedal (without a chain cog) vertically downwards. The pedal on the left pedal crank must be horizontal.

The front bicycle must have its front wheel facing left.

The rear bicycle must have its front wheel facing right.

Attaching a bicycle to the rear carrier system

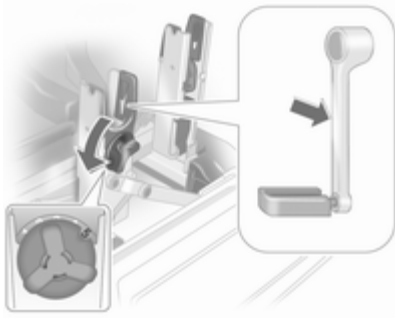

With the rotary lever on the pedal crank recess, roughly adapt the adjustable pedal crank unit to the protrusion of the pedal crank.

If the bicycle has straight pedal cranks, unscrew the pedal crank unit completely (position **5**).

If the bicycle has curved pedal cranks, screw in the pedal crank unit all the way (position **1**).

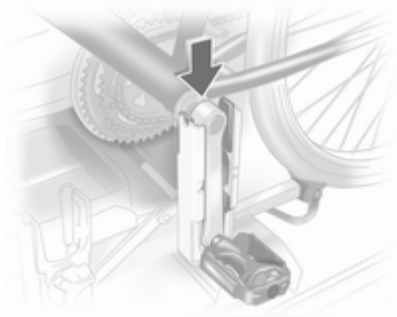

Put on the bicycle. The pedal crank here must be placed in the pedal crank recess opening as shown in the illustration.

Caution
Make sure that the pedal does not touch the surface of the rear end carrier. Otherwise the crankset might be damaged during the transport.

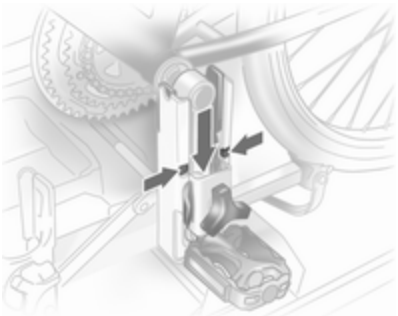

Insert pedal crank mount into outer rail of each pedal crank recess from above and slide downwards until at least underneath the notching.

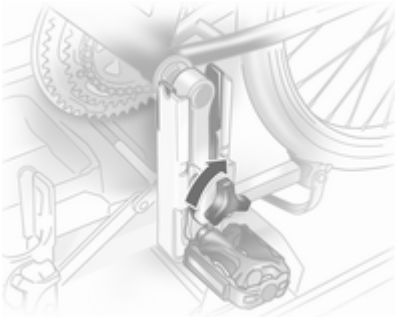

Attach the pedal crank by rotating the attachment screw on the pedal crank mount.

Place the wheel recesses such that the bicycle is more or less horizontal. Here, the distance between the pedals and the tailgate should be at least 5 cm.

Both bicycle tyres must be in the wheel recesses.

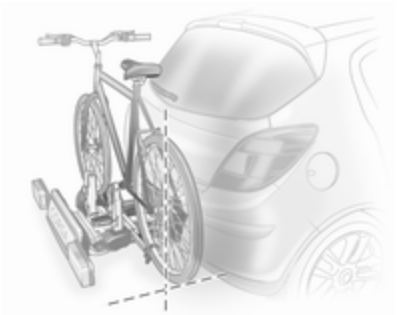

Align the bicycle in the longitudinal direction of the vehicle: Slightly loosen the pedal mount.

Place the bicycle upright using the rotary lever on the pedal crank recess.

If the two bicycles obstruct one another, the relative positions of the bicycles can be adapted by adjusting the wheel recesses and the rotary lever on the pedal crank recess until the bicycles no longer touch one another. Make sure there is sufficient clearance from the vehicle.

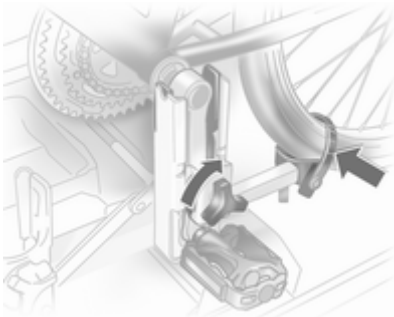

Tighten the attachment screw for the pedal bearing mount to its maximum point by hand.

Secure both bicycle wheels to wheel recesses using strap retainers.

Check the bicycle to make sure it is secure.

Caution

Ensure gap between bicycle and vehicle is at least 5 cm.

The settings for the wheel recesses and on the rotary lever on the pedal crank recess should be noted and saved for each bicycle. Correct presetting will facilitate refitting of the bicycle.

Note
It is recommended to attach a warning sign at the rearmost bicycle to increase visibility.

Removing a bicycle from the rear carrier system

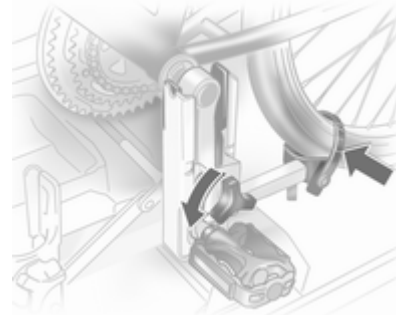

Undo strap retainers on both bicycle tyres.

Hold on to the bicycle, loosen the attachment screw for the pedal bearing mount, then lift the pedal bearing mount to remove it.

Retracting the rear carrier system

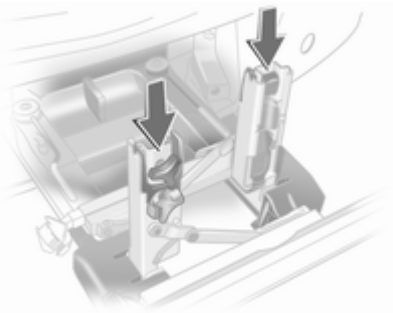

Push the pedal crank mounts into the pedal crank recess as shown in the illustration.

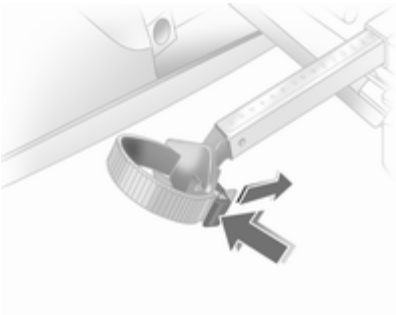

Insert the strap retainer and pull tightly downwards as far as possible.

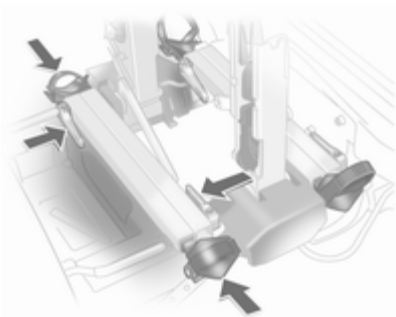

Press release lever and slide in wheel recesses all the way as far as they will go.

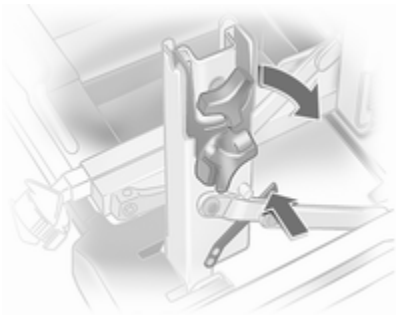

Disengage the locking lever on the diagonal support and fold both pedal crank recesses down.

⚠ Warning
Risk of pinching.

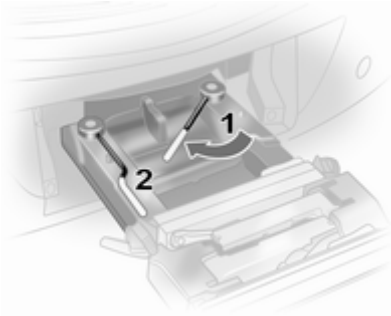

Swivel first the right clamping lever (**1**) forwards, followed by the left clamping lever (**2**), until they can be engaged in their respective recesses.

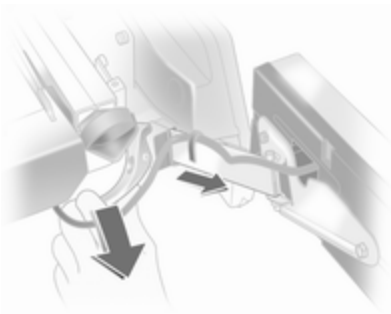

Push the clamping lever down and pull both lamp supports out of the recesses.

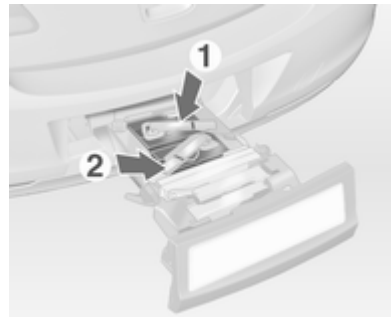

Fold in the lamp supports on the backs of the tail lamps.

First place the front tail lamp (**1**), then the rear tail lamp (**2**) in the recesses and push down as far as possible. Push cables all the way into all guides in order to prevent damage.

Open the tailgate.

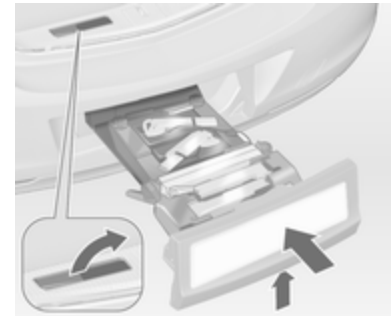

Push the release lever up and hold. Lift the system slightly and push it into the bumper until it engages.

Release lever must return to original position.

⚠ Warning

If the system cannot be correctly engaged, please seek the assistance of a workshop.

Load compartment

Load compartment extension

The rear backrest, in a single unit or split, can be locked in an upright position for transporting bulky items.

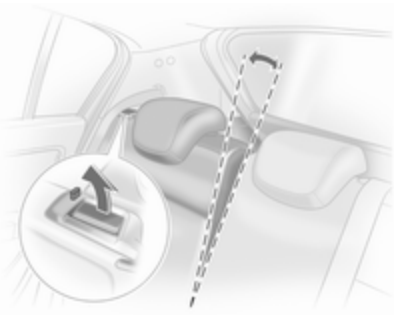

Pull the release handle, pull the backrest forwards to the vertical position and engage.

When unlocking, a red marking appears next to the release lever. The backrest is only engaged correctly when the red bolt is no longer protruding.

If the backrest is split, unlock the relevant side, and unlock at both sides if it is a single unit.

Folding down rear backrests

Remove load compartment cover as necessary.

Push head restraints down by pressing the catch.

Guide the seat belts through side supports to protect them against damage. When folding the backrests, pull the seat belts along with them.

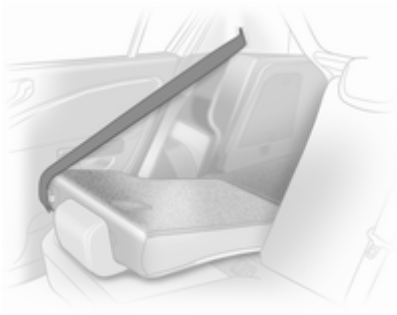

Disengage the backrest (single or split) using the release lever and fold it down onto the seat cushion.

If the backrest is split, unlock the relevant side, and unlock at both sides if it is a single unit.

If the vehicle is to be loaded via a rear door, take the seat belt out of the seat backrest guide, roll it up and insert the latch plate into the side shade retainer.

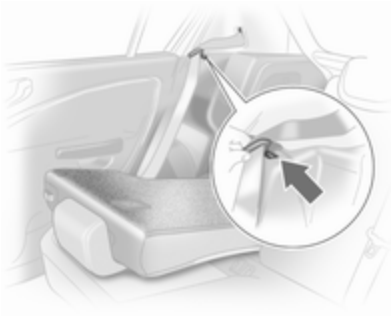

Move rear seat backrests upright and allow locking mechanisms to engage audibly at both sides. Once the backrests are locked the red mark must no longer protrude.

The rear seat backrests can be locked in two positions.

Do not trap the seat belt when moving the backrest to the upright position.

Install the load compartment cover.

⚠ Warning

Only drive the vehicle if the backrests are securely locked into position. Otherwise there is a risk of personal injury or damage to the load or vehicle in the event of heavy braking or a collision.

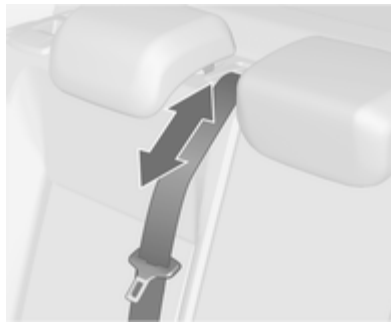

The seat belt of the centre seat could be blocked when the backrest is folded up too quickly. To unlock the retractor, push in the seat belt or pull it out by approximately
20 millimetres and then let go.

Load compartment cover

Do not place any objects on the cover.

5-door passenger vehicle

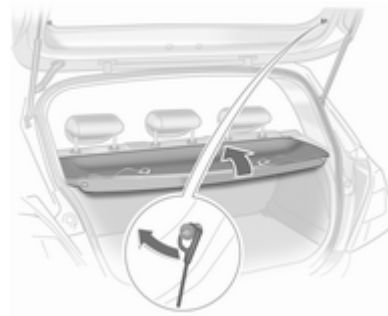

Lift the cover backwards, until it unlatches, then remove.

Fit in reverse order.

3-door passenger vehicle

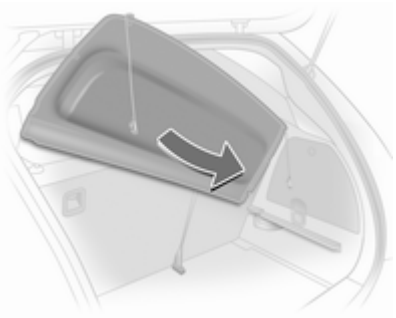

Lift the cover backwards until it unlatches, set at an angle, then remove.

Fit in reverse order.

Stowing

When the load compartment is fully loaded, stow the load compartment cover behind the rear seat backrests:

Lift the cover backwards until it unlatches, then slide down in guides behind the seat backrests.

Van

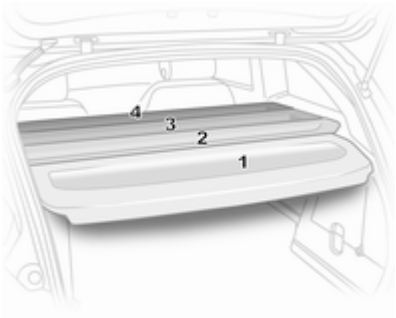

The load compartment cover consists of four segments which can be individually removed and inserted.

The rear segment (1) has identical functionality (removal and installation) to that of the 3-door passenger vehicle ⇨ 63.

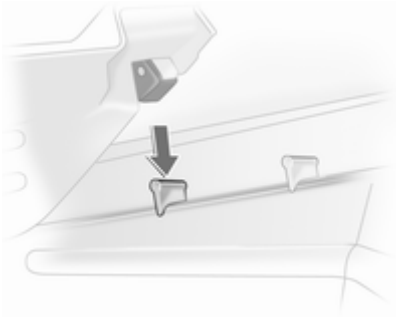

To remove the three other segments (order 2 to 4) lift at the rear, disengage, twist and remove.

Install the segments in the order 4 to 1. Engage segments in recesses at the side.

The segments overlap at the connecting points when they are closed.

Rear floor storage cover

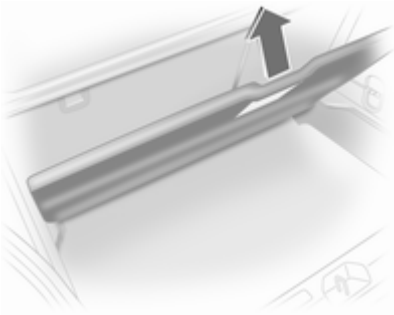

The double load-bay floor can be inserted in the load compartment in two positions:

- directly beneath the cover for the spare wheel recess or the floor cover,
- or in the upper openings in the load compartment.

To remove, lift the load-bay floor using the lever and pull backwards.

To insert, push the load-bay floor forwards in the corresponding guide, then lower.

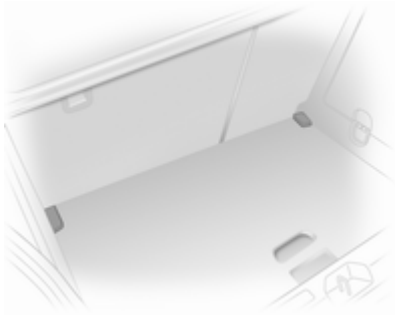

If mounted in the upper position, the space between the load-bay floor and the spare wheel well cover can be used as a stowage compartment.

In this position, if the rear seat backrests are folded forwards, an almost completely flat load bay is created.

The double load-bay floor is able to withstand a load of no more than 100 kg.

In models with a tyre repair kit, the spare wheel recess may be used as an additional stowage compartment.

Lashing eyes

The lashing eyes are designed to secure items against slippage, e.g. using lashing straps or luggage net.

Warning triangle

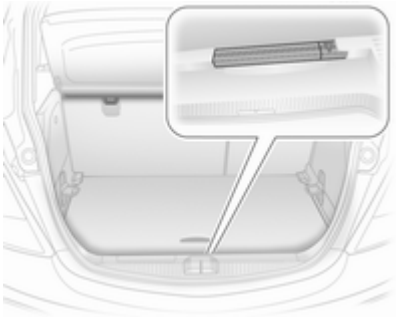

Store warning triangle in rear load compartment wall: first fit warning triangle into recess on left and then insert in guide on right.

To remove the warning triangle, lift to the right and pull out to the right.

First aid kit

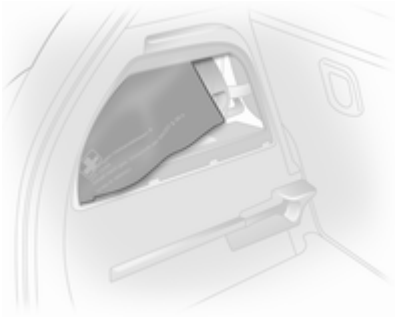

Stow the first-aid kit (cushion) in the compartment in the left wall of the load compartment.

To open the compartment, disengage cover and open it.

Roof rack system

Roof rack

For safety reasons and to avoid damage to the roof, the vehicle approved roof rack system is recommended.

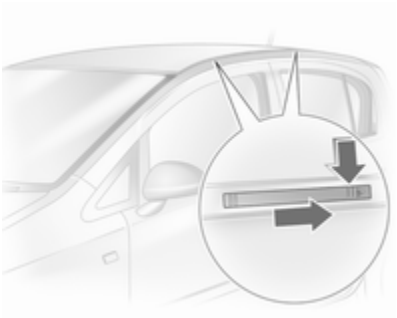

Follow the installation instructions and remove the roof rack when not in use.

Fitting on model without sun roof

Push covers for concealing roof rack mounts down and push backwards with a valve cap key ⇨ 166.

Fitting on model with sun roof

Disengage covers concealing roof rack mounts by pushing sliders in direction of arrow (e.g. with coin) and remove upwards. To close roof rack mounts, first insert covers at front and engage sliders at rear.

Attach roof rack at appropriate points, see enclosed roof rack system instructions.

Loading information

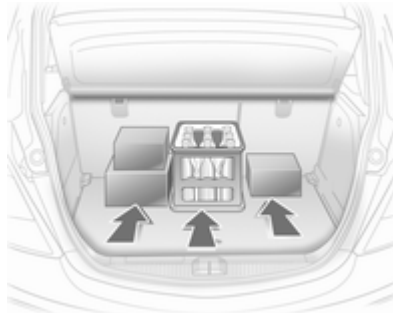

- Heavy objects in the load compartment should be placed against the seat backrests. Ensure the backrests are securely engaged. If objects can be stacked, the heavier objects should be placed at the bottom.
- Secure objects with lashing straps attached to lashing eyes.
- Secure loose objects in load compartment to prevent sliding.
- When transporting objects in the load compartment, the backrests of the rear seats must not be angled forward.
- Do not allow the load to protrude above the upper edge of the backrests.
- Do not place any objects on the load compartment cover or the instrument panel, and do not cover the sensor on top of the instrument panel.
- The load must not obstruct the operation of the pedals, parking brake and gear selector, or hinder the freedom of movement of the driver. Do not place any unsecured objects in the interior.
- Do not drive with an open load compartment.

⚠ Warning

Always make sure that the load in the vehicle is securely stowed. Otherwise objects can be thrown

around inside the vehicle and cause personal injury or damage to the load or car.

- The payload is the difference between the permitted gross vehicle weight (see identification plate ⇨ 189) and the EC kerb weight.

  To calculate the payload weight, enter the data for your vehicle in the Weights table at the front of this manual.

  The EC kerb weight includes weights for the driver (68 kg), luggage (7 kg) and all fluids (tank 90 % full).

  Optional equipment and accessories increase the kerb weight.
- Driving with a roof load increases the sensitivity of the vehicle to cross-winds and has a detrimental effect on vehicle handling due to the vehicle's higher centre of gravity. Distribute the load evenly and secure it properly with retaining straps. Adjust the tyre pressure and vehicle speed according to the load conditions. Check and retighten the straps frequently.

  Do not drive faster than 120 km/h.

  The permissible roof load is 75 kg. The roof load is the combined weight of the roof rack and the load.

Instruments and controls

Controls 69
Warning lights, gauges and indicators 75
Information displays 84
Vehicle messages 88
Trip computer 90
Vehicle personalisation 94

Controls

Steering wheel adjustment

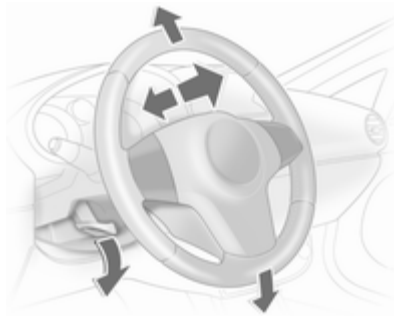

Unlock lever, adjust steering wheel, then engage lever and ensure it is fully locked.

Do not adjust steering wheel unless vehicle is stationary and steering wheel lock has been released.

Steering wheel controls

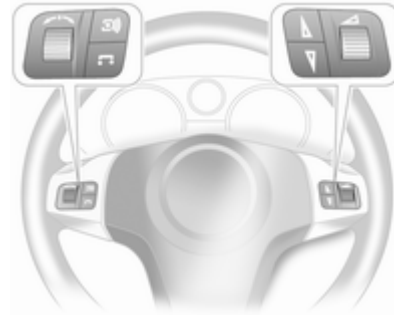

The Infotainment system and the Info-Display can be operated via the controls on the steering wheel.

Further information is available in the Infotainment system manual.

Heated steering wheel

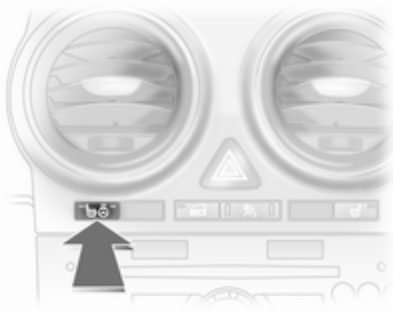

Activate heating in combination with the seat heating by pressing button once or several times with the ignition on.

LED on: driver seat heating on.

LED and on: driver seat heating and steering wheel heating on.

LED on: steering wheel heating on.

The steering wheel is heated in the areas shown in the illustration when the engine is running and during an Autostop.

Horn

Press .

Windscreen wiper/washer

Windscreen wiper

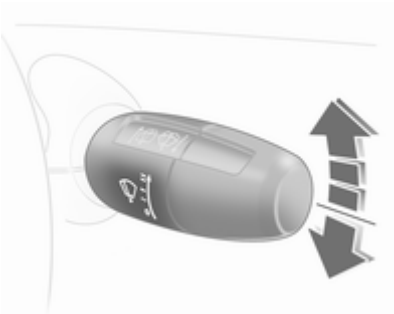

The lever always springs back to its original position.

═ = fast
— = slow
– – = interval wiping
O = off

For a single wipe when the windscreen wiper is off, press the lever down.

Run through the windscreen wiper stages by pushing the lever past the resistance point and holding it. An acoustic signal sounds at O.

Do not use if the windscreen is frozen.

Switch off in car washes.

Adjustable wiper interval

To set the wiper interval to a value between 2 and 15 seconds: Switch on ignition, move lever down from position O, wait desired time interval and raise lever to – –.

After turning on the ignition and setting the lever to – –, the interval is set to 6 seconds.

Automatic wiping with rain sensor

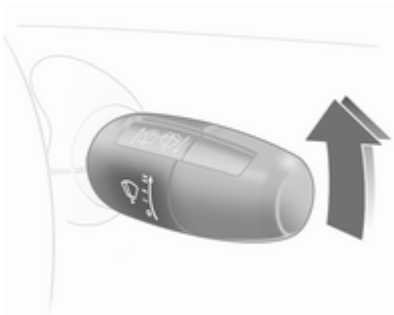

– – = Automatic wiping with rain sensor

The rain sensor detects the amount of water on the windscreen and automatically regulates the frequency of the windscreen wiper.

Keep the sensor free from dust, dirt and ice.

Windscreen washer

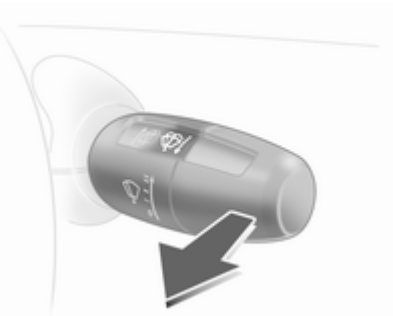

Pull lever. Washer fluid is sprayed onto the windscreen and the wiper wipes a few times.

Rear window wiper/washer

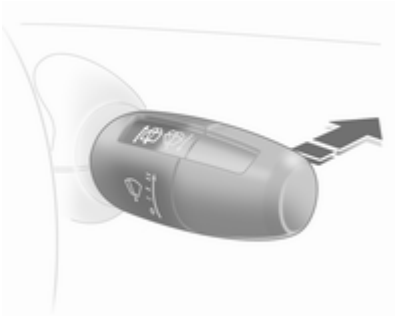

Push lever forwards. The rear window wiper wipes in interval mode. Switch off by pushing lever forwards again.

Do not use if the rear window is frozen.

Switch off in car washes.

If the lever is held forwards, washer fluid is sprayed onto the rear window.

The rear windscreen wiper comes on automatically when the windscreen wiper is switched on and reverse gear is engaged. Activation or deactivation of this function can be changed. Vehicle personalisation ⇨ 94.

Outside temperature

A drop in temperature is indicated immediately and a rise in temperature after a time delay.

If the outside temperature drops to 3 °C, the symbol ❄ illuminates in the Triple-Info-Display or the Board-Info-Display as a warning for

icy road conditions. ❄ remains illuminated until the temperature reaches at least 5 °C.

In vehicles with Graphic-Info-Display or Color-Info-Display, a warning message appears in the display as a warning for icy road conditions. There is no message below -5 °C.

⚠Warning

The road surface may already be icy even though the display indicates a few degrees above 0 °C.

Clock

Date and time are shown in the Info-Display.

Graphic-Info-Display, Color-Info-Display ⇨ 85.

Set date and time in Triple-Info-Display

The Infotainment system must be off. Activate setting mode by holding the ◴ button depressed for approx. 2 seconds. The flashing value is adjusted using the ⊙ button. The ◴ button is used to switch to the next mode and to exit setting mode.

Automatic time synchronisation

The RDS signal of most VHF transmitters automatically sets the time, identified by ◴ in the display.

Some transmitters do not send a correct time signal. In such cases, it is recommend to switch off automatic time synchronisation.

Activate setting mode and set it to year setting. Hold the ◴ button depressed for approx. 3 seconds until ◴ flashes in the display and "RDS TIME" appears. The function is activated (RDS TIME 1) or deactivated (RDS TIME 0) with the ⊙ button. Exit setting mode using the ◴ button.

Power outlets

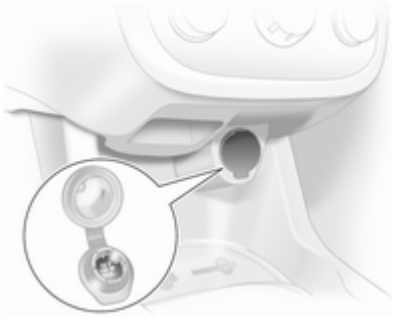

The power outlet is located in the centre console.

Caution
Do not damage the outlet by using unsuitable plugs.

Connecting electrical accessories while the engine is off will discharge the battery. Do not exceed the maximum power consumption of 120 Watts. Do not connect any current-delivering accessories, e.g. electrical charging devices or batteries.

Electrical accessories that are connected must comply with the electromagnetic compatibility requirements laid down in DIN VDE 40 839.

If the tyre repair set is in operation, no consumers may be connected to the auxiliary outlet.

Stop-start system ⇨ 114.

Cigarette lighter

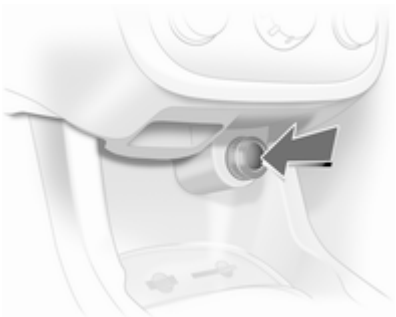

The cigarette lighter is located in the centre console.

Press in cigarette lighter. It switches off automatically once the element is glowing. Pull out lighter.

Ashtrays

Caution
To be used only for ash and not for combustible rubbish.

Portable ashtray

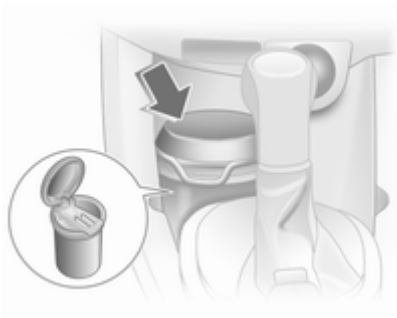

The portable ashtray can be placed in the cupholders. Open cover to use.

Warning lights, gauges and indicators

Instrument cluster

In some versions, the needles of the instruments briefly rotate to the end position when the ignition is switched on.

Speedometer

Indicates vehicle speed.

Speed warning

With the "Personalised key" function, **P6** a particular top speed can be assigned to each vehicle key. When this speed is exceeded, a warning buzzer sounds. Vehicle personalisation ⇨ 94.

Odometer

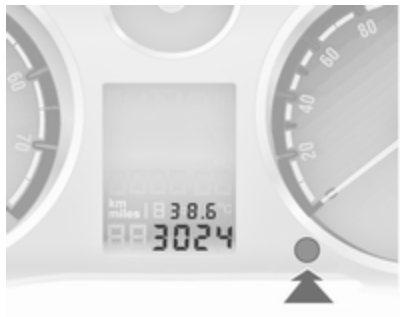

The bottom line displays the recorded distance.

Trip odometer

The top line displays the recorded distance since the last reset.

To reset, hold the reset knob depressed for a few seconds with the ignition on.

Tachometer

Displays the engine speed.

Drive in a low engine speed range for each gear as much as possible.

Upshift when indicated by the control indicator ⬆ SHIFT ⇨ 81.

Caution

If the needle is in the red warning zone, the maximum permitted engine speed is exceeded. Engine at risk.

Fuel gauge

Displays the fuel level or gas level in the tank depending on the operation mode.

Control indicator ⛽ illuminates if the level in the tank is low. Refuel immediately if it flashes.

During liquid gas operation, the system automatically switches over to petrol operation when gas tanks are empty ⇨ 76.

Never run the tank dry.

Because of the fuel remaining in the tank, the top-up quantity may be less than the specified tank capacity.

Fuel selector

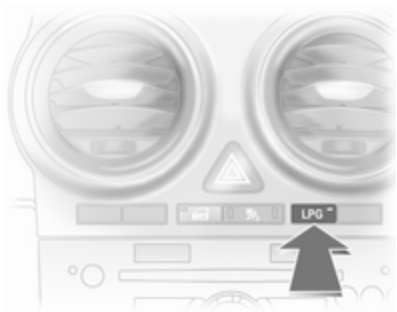

Pressing button **LPG** switches between petrol and liquid gas operation. The LED ▬ status shows the current operating mode.

- off = petrol operation
- illuminates = liquid gas operation
- flashes = no switching is possible, one type of fuel is empty

As soon as the liquid gas tanks are empty, petrol operation is automatically engaged until the ignition is switched off.

Fuel for liquid gas operation ⇨ 131.

Service display

The message **InSP** appears when it is time for servicing. Further information ⇨ 185.

Transmission display

The mode or selected gear is shown in the transmission display.

P	=	Automatic transmission park position
R	=	Reverse gear
N	=	Neutral position
A	=	Manual transmission automated automatic mode
D	=	Drive position
1, 2, 3	=	Selected gear, automatic transmission
1 - 5	=	Current gear, manual transmission automated, manual mode

Control indicators

The control indicators described are not present in all vehicles. The description applies to all instrument versions. When the ignition is switched on, most control indicators will illuminate briefly as a functionality test.

The control indicator colours mean:

red	=	danger, important reminder
yellow	=	warning, information, fault
green	=	confirmation of activation
blue	=	confirmation of activation

Control indicators in the instrument

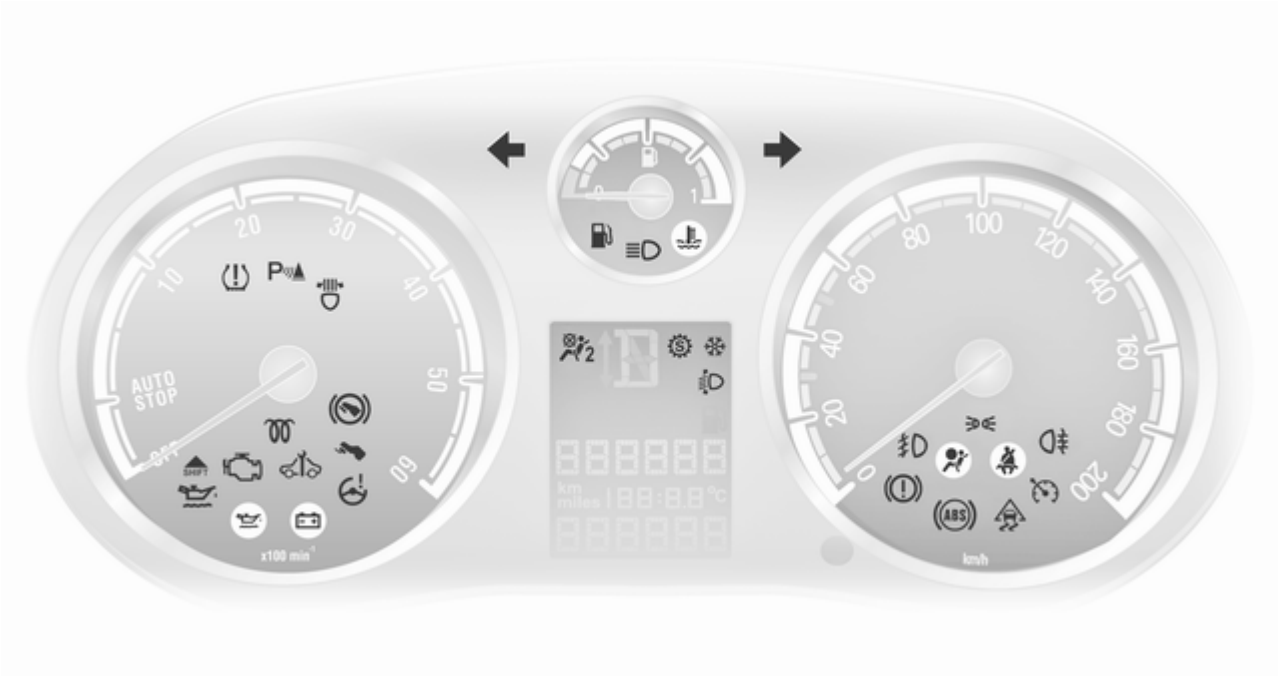

Turn signal

⇦⇨ illuminates or flashes green.

Illuminates

The control indicator illuminates briefly when the parking lights are switched on.

Flashes

The control indicator flashes if a turn signal or the hazard warning flashers are activated.

Rapid flashing: failure of a turn signal light or associated fuse, failure of turn signal light on trailer.

Bulb replacement ⇨ 150. Fuses ⇨ 162. Turn signals ⇨ 99.

Seat belt reminder

illuminates or flashes red.

Illuminates

After the ignition is switched on until the seat belt is fastened.

Flashes

After starting off until the seat belt is fastened.

Fastening the seat belt ⇨ 40.

Airbag and belt tensioners

illuminates red.

When the ignition is switched on, the control indicator illuminates for approx. 4 seconds. If it does not illuminate, does not go out after 4 seconds or illuminates whilst driving, there is a fault in the belt tensioner or the airbags. In this case the LEDs in the button will also flash.The airbags and belt tensioners may fail to trigger in the event of an accident.

Deployment of the belt tensioners or airbags is indicated by continuous illumination of .

⚠Warning

Have the cause of the fault remedied immediately by a workshop.

Airbag system, belt tensioners ⇨ 42, ⇨ 39.

Airbag deactivation

illuminates together with the LEDs in the button : airbag deactivated ⇨ 44.

flashes: the system can be activated or deactivated within 15 seconds of switching on the ignition ⇨ 44.

Charging system

illuminates or flashes red.

Illuminates when the ignition is switched on and extinguishes shortly after the engine starts.

Illuminates when the engine is running

Stop, switch off engine. Battery is not charging. Engine cooling may be interrupted. In diesel engines, power to the brake servo unit may be cut. Seek the assistance of a workshop.

Flashes during or after engine start

Battery voltage too low. Have electrical system tested by a workshop.

Malfunction indicator light

illuminates or flashes yellow.

Illuminates when the ignition is switched on and extinguishes shortly after the engine starts.

Illuminates when the engine is running

Fault in the emission control system. The permitted emission limits may be exceeded. Immediately seek the assistance of a workshop.

Flashes when the engine is running

Fault that could lead to catalytic converter damage. Ease up on the accelerator until the flashing stops. Seek the assistance of a workshop immediately.

Service vehicle soon

illuminates or flashes yellow.

Illuminates when the engine is running

Fault in engine or transmission electronics. The electronics switch to an emergency running programme. Fuel consumption may be increased and the vehicle handling may be impaired.

If the fault persists after restarting the vehicle, consult a workshop.

Illuminates together with InSP4 in the service display

Seek the assistance of a workshop for draining the diesel fuel filter.

Flashes with switched on ignition

Fault in the immobiliser system. The engine cannot be started ⇨ 27.

Brake and clutch system

Brake and clutch fluid level

illuminates red.

Illuminates when the parking brake is released if the brake and clutch fluid level is too low ⇨ 147.

⚠ Warning
Stop. Do not continue your journey. Consult a workshop.

Illuminates after the ignition is switched on if the parking brake is applied ⇨ 127.

Apply parking brake

flashes red.

On vehicle with automated manual transmission, ⓘ flashes for a few seconds when the ignition is switched off if the parking brake is not applied.

On vehicles with automated manual transmission, ⓘ flashes when the driver's door is opened if no gear is engaged and the parking brake is not applied.

Apply clutch pedal

illuminates yellow.

Clutch pedal needs to be operated to start the engine.

Stop-start system ⇨ 114.

Antilock brake system (ABS)

(ABS) illuminates red.

Illuminates for a few seconds after the ignition is turned on. The system is ready for operation when the control indicator extinguishes.

If the control indicator does not go out after a few seconds, or if it illuminates while driving, there is a fault in the ABS. The brake system remains operational but without ABS regulation.

Anti-lock Braking System ⇨ 126.

Upshift

SHIFT illuminates green when upshifting is recommended for fuel saving reasons.

Sport mode

illuminates yellow.

The symbol is illuminated when Sport mode is on ⇨ 123.

Winter mode

illuminates yellow.

The symbol is illuminated when Winter mode is on ⇨ 119, ⇨ 123.

Power steering

illuminates yellow.

Fault in power steering system. The power steering may have failed. The vehicle can be steered but considerably more force is required. Contact a workshop.

Ultrasonic parking assist

P illuminates or flashes yellow.

Illuminates

Fault in system. Have the cause of the fault remedied by a workshop.

Flashes

Fault due to sensors that are dirty or covered by ice or snow.

or

Interference due to external sources of ultrasound. Once the source of interference is removed, the system will operate normally.

Ultrasonic parking assist ⇨ 130.

Electronic Stability Program

flashes or illuminates yellow.

Illuminates for a few seconds when the ignition is switched on.

Flashing during driving

The system is actively engaged. Engine output may be reduced and the vehicle may be braked automatically to a small degree ⇨ 128.

Illuminates while driving

The system is switched off or a fault is present. Continued driving is possible. Driving stability, however, may deteriorate depending on road surface conditions.

Have the cause of the fault remedied by a workshop.

Electronic stability program ⇨ 128.

Engine coolant temperature

illuminates red.

Illuminates when the engine is running

Stop, switch off engine.

Caution
Coolant temperature too high.

Check coolant level immediately ⇨ 146.

If there is sufficient coolant, consult a workshop.

Preheating and diesel particle filter

illuminates or flashes yellow.

Illuminates

Preheating activated. Only activates when outside temperature is low.

Flashes

(in vehicles fitted with a diesel particle filter).

Control indicator flashes if the filter requires cleaning and previous driving conditions did not permit automatic cleaning. Continue driving and if possible do not allow engine speed to drop below 2000 rpm.

The control indicator extinguishes as soon as the self-cleaning operation is complete.

Diesel particle filter ⇨ 116, Stop-start system ⇨ 114.

Deflation detection system

illuminates red or yellow.

Illuminates red

Deflation detected. Stop immediately and check tyre pressure.

Illuminates yellow

Fault in system. Consult a workshop.

Deflation detection system ⇨ 169.

Engine oil pressure

illuminates red.

Illuminates for a few seconds after the ignition is switched on.

Illuminates when the engine is running

Caution

Engine lubrication may be interrupted. This may result in damage to the engine and/or locking of the drive wheels.

1. Depress clutch.
2. Select neutral gear, set selector lever to **N**.
3. Move out of the flow of traffic as quickly as possible without impeding other vehicles.
4. Switch off ignition.

⚠Warning

When the engine is off (except during an Autostop), considerably more force is needed to brake and steer.

Do not remove key until vehicle is stationary, otherwise the steering wheel lock could engage unexpectedly.

Check oil level before seeking the assistance of a workshop ⇨ 145.

Low engine oil level

illuminates yellow.

Engine oil level is checked automatically.

Illuminates when the engine is running

Low engine oil level. Check engine oil level and top up as necessary ⇨ 145.

Low fuel

illuminates or flashes yellow.

Illuminates

Level in fuel tank too low.

Flashes

Fuel used up. Refuel immediately. Never run the tank dry.

Erratic fuel supply can cause catalytic converter to overheat ⇨ 117.

Bleeding the diesel fuel system ⇨ 149.

Apply footbrake

illuminates yellow.

The engine with manual transmission automated can only be started if the foot brake is depressed. If the foot brake is not depressed, the control indicator illuminates ⇨ 122.

Exterior light

illuminates green.

Illuminated when the exterior lights are on ⇨ 96.

High beam

illuminates blue.

Illuminated when high beam is on and during headlight flash ⇨ 97.

Adaptive forward lighting

illuminates yellow.

Illuminates when the engine is running

Fault in system.

Seek the assistance of a workshop.

Illuminates after ignition is switched on

Control indicator illuminates for approx. 4 seconds as a functionality test.

Control indicator illuminates for approx. 8 seconds as a reminder that the headlights have been set to symmetrical low beam ⇨ 98.

Fog light

illuminates green.

Illuminated when the front fog lights are on ⇨ 100.

Rear fog light

illuminates yellow.

Illuminated when the rear fog light is on ⇨ 100.

Cruise control

illuminates or flashes green.

Illuminates

Illuminates when the system is on ⇨ 129.

Flashes

Cruise control was enabled without depressing the brake pedal beforehand.

Information displays

Triple-Info-Display

Displays time, outside temperature and date or Infotainment system (when it is on).

When the ignition is off, the time, date and outside temperature can be displayed by briefly pressing one of the two buttons below the display.

Graphic-Info-Display, Colour-Info-Display

Displays time, outside temperature, date or Infotainment system (when it is on) and electronic climate control system.

The Color-Info-Display displays the information in colour.

The type of information and how it is displayed depends on the equipment of the vehicle and the settings made.

Selecting functions

Functions and settings of the Infotainment system and electronic climate control system are accessed via the display.

Selections are made via the menus and buttons or the left adjuster wheel of the steering wheel.

Selecting with the Infotainment system buttons

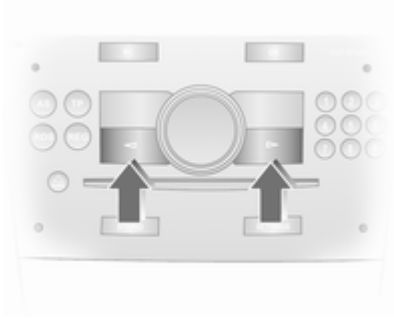

Select menu items via the menus and by using the Infotainment system buttons. The OK button is used to select the highlighted item or confirm a command.

To exit a menu, press the right or left arrow button until **Return** or **Main** appear and select.

Selecting with the left adjuster wheel on the steering wheel

Rotate to select a menu item.

Press the adjuster wheel to select the highlighted item or confirm a command.

Function areas

For each function area there is a main page (Main), which is selected at the top edge of the display (only with trip computer and Mobile Phone Portal):

- Audio,
- Telephone,
- Trip computer.

System settings

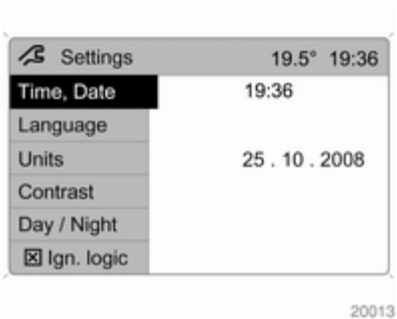

Press the **Settings** button on the Infotainment system. For Infotainment system CD 30, no menu may be selected.

Setting date and time

Select menu item **Time, Date** from the **Settings** menu.

Select the required menu items and make settings.

Changing the time setting will also change the time setting of the navigation system.

Automatic time synchronisation

The RDS signal of most VHF transmitters automatically sets the time.

Some transmitters do not send a correct time signal. In such cases, we recommend to switch off automatic time synchronisation.

The function is activated by highlighting the field in front of **Synchron. clock automatical.** in the **Time, Date** menu.

Language selection

The display language for some functions can be selected.

Select menu item **Language** from the **Settings** menu.

Select the desired language.

Selection is indicated by a ▶ in front of the menu item.

When the language setting of the display is changed, the system will ask whether the announcement language of the Mobile Phone Portal should also be changed - see Infotainment system manual.

Setting units of measure

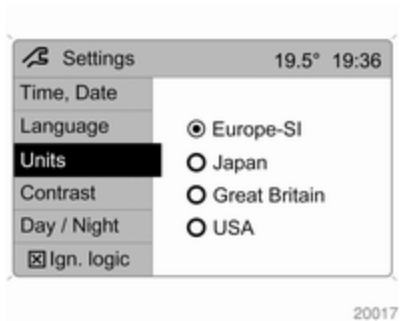

Select menu item **Units** from the **Settings** menu.

Select the desired unit.

Selections are indicated by a ● in front of the menu item.

Adjusting contrast (Graphic-Info-Display)

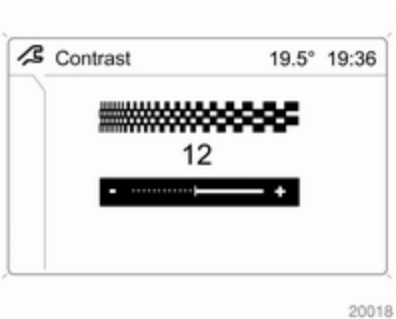

Select menu item **Contrast** from the **Settings** menu.

Confirm the required setting.

Setting display mode

Display brightness is dependent on vehicle lighting. Additional settings can be made as follows:

Select menu item **Day / Night** from the **Settings** menu.

Automatic The colours are adapted to the exterior lights.

Always day design black or coloured text on light background.

Always night design white or coloured text on dark background.

Selection is indicated by a ● in front of the menu item.

Ignition logic

See Infotainment system manual.

Smartphone controller

The smartphone controller allows a smartphone to access vehicle data via WLAN or Bluetooth connection. This data can then be displayed and analysed on the smartphone.

Vehicle messages

Messages are given via the instrument panel display or as warning and signal buzzers. Check control messages appear on the Info-Display. Some appear in an abbreviated form. Confirm warning messages with the multifunction knob ⇨ 85.

Warning chimes

When starting the engine or whilst driving

- If seat belt is not fastened.
- If a door or the tailgate is not fully closed when starting off.
- If a certain speed is exceeded with the parking brake applied.
- If the speed programmed at the factory is exceeded.
- If the vehicle has automated manual transmission and the driver's door is opened when the

engine is running, a gear is engaged and the foot brake is not depressed.

- Warning signal sounds three times if the rear carrier system is extended and reverse gear is selected.

When the vehicle is parked and the driver's door is opened

- When the key is in the ignition switch.
- With exterior lights on.
- For automated manual transmission, if the parking brake is not applied and no gear is engaged when the engine is switched off.

During an Autostop

- If the driver's door is opened.

Battery voltage

Low battery voltage in the radio remote control. On vehicles without check control, the message **InSP3** appears in the instrument panel display. Replace the battery ⇨ 20.

Brake light switch

Brake light does not come on during braking. Have the cause of the fault remedied immediately by a workshop.

Drain diesel fuel filter

If there is water in the diesel fuel filter, the message **InSP4** appears in the instrument panel. In some models **InSP4** illuminates together with in the instrument. Consult a workshop.

Lighting

Important exterior lighting lamps, including cables and fuses, are monitored. In trailer mode, trailer lighting is also monitored. Trailers with LED lighting must have an adapter that enables lamp monitoring as with conventional bulbs.

The failed lighting will be indicated in the information display or the message **InSP2** will appear in the instrument panel display.

Trip computer

The trip computer provides information on driving data, which is continually recorded and evaluated electronically.

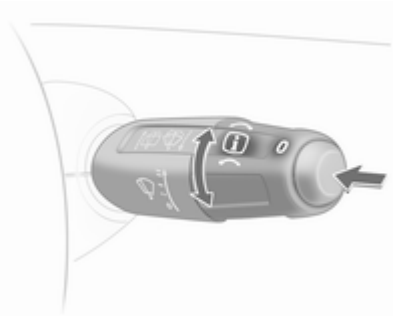

The functions can be selected via the buttons on the wiper lever.

Turn the adjuster wheel to select:

- Range
- Instantaneous consumption
- Distance travelled
- Average speed
- Absolute consumption
- Average consumption
- Stop watch

Range

Range is calculated from current fuel tank content and current consumption. The display shows average values.

After refuelling, the range is updated automatically after a brief delay.

When the fuel level in the tank is low, a message appears on the display. Confirm the warning message by pressing **O** on the wiper lever.

Instantaneous consumption

Display of the instantaneous consumption. At low speeds, consumption per hour is displayed.

Distance travelled

Display of distance travelled.

Average speed

Display of average speed. The measurement can be reset at any time.

Absolute consumption

Display of fuel consumed.

Average consumption

Display of average consumption. The measurement can be reset at any time.

Stop watch

Measurement of the time from activation to deactivation.

Press the **O** button to start and stop the measurement.

Reset trip computer

The measurement or calculation of the following trip computer information can be restarted:

- Distance,
- Average speed,
- Absolute consumption,
- Average consumption.

Select the desired function. To reset a value to zero, hold down the button **O** for more than three seconds.

To reset all functions, hold down the button **O** for more than 6 seconds.

Trip computer in Graphic-Info-Display or Colour-Info-Display

The main page of the trip computer provides information on range, current consumption and average consumption of **BC 1**.

To display other trip computer data, press the **BC** button on the Infotainment system, select the trip computer menu from the display or press the left adjuster wheel on the steering wheel.

Select **BC 1** or **BC 2** from the trip computer menu.

Range

Range is calculated from current fuel tank content and current consumption. The display shows average values.

After refuelling, the range is updated automatically after a brief delay.

When the fuel level in the tank is low, the message **Range** appears in the display.

When the fuel tank is nearly empty, the message **Please refuel!** appears in the display.

Instantaneous consumption

Displays the instantaneous consumption. At low speeds, consumption per hour is displayed.

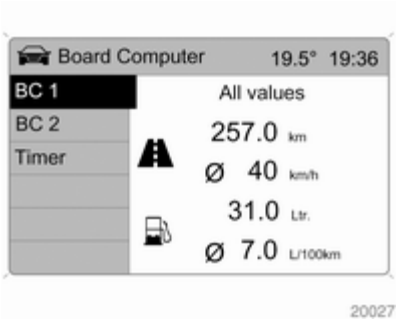

Distance

Display of distance travelled. The measurement can be reset at any time.

Average speed

Display of average speed. The measurement can be reset at any time.

Stoppages in the journey with the ignition off are not included in the calculations.

Absolute consumption

Displays fuel consumed. The measurement can be reset at any time.

Average consumption

Displays average consumption. The measurement can be reset at any time.

Restart trip computer

The measurement or calculation of the following trip computer information can be restarted:

- Distance,
- Average speed,
- Absolute consumption,
- Average consumption.

Select **BC 1** or **BC 2** from the **Board Computer** menu.

The information of the two trip computers can be reset separately, making it possible to evaluate data from different time periods.

Select the required trip computer information and confirm.

To reset all information of a trip computer, select menu item **All values**.

Stop watch

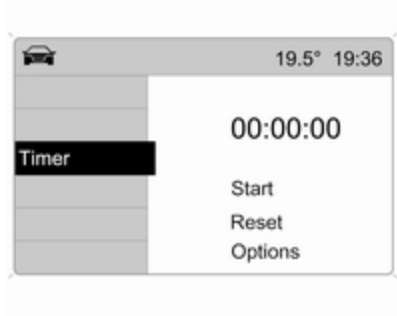

Select menu item **Stop Watch** from the **Board Computer** menu.

To start, select menu item **Start**. To stop, select menu item **Stop**.

To reset, select menu item **Reset**.

The relevant stop watch display can be selected in the **Options** menu:

Driving Time excl. Stops

The time the vehicle is in motion is recorded. Stationary time is not included.

Driving Time incl. Stops

The time the vehicle is in motion is recorded. The time the vehicle is stationary with the ignition switched on is included.

Travel Time

Measurement of the time from manual activation via **Start** to manual deactivation via **Reset**.

Vehicle personalisation

The vehicle-specific functions **P1** to **P7** can be activated and deactivated.

The setting selected is automatically stored depending on the vehicle key used.

Different settings are stored for each vehicle key. Use of a specific vehicle key will activate the settings associated with it.

A total of up to five vehicle keys can be programmed separately.

Programming permits the technical prerequisite of the relevant function. To activate and deactivate the functions and set the functions, please see the relevant sections.

Programming

- Turn the ignition off, the key must be in the ignition switch.

- Pull turn signal stalk and wiper stalk simultaneously to the steering wheel until you hear a confirmation signal (approx. 3 seconds).
- The kilometre display shows **P1**.

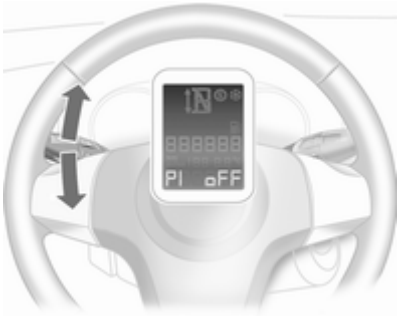

- Push the turn signal stalk (left) up or down and select the desired function **P1** - **P7**.

- Push the wiper stalk (right) up or down and select status **On** or **OFF**, or input a value for speed (**P6**) or value for volume (**P7**).
- Pull turn signal stalk (left) and wiper stalk (right) simultaneously to the steering wheel until you hear a confirmation signal (approx. 3 seconds).

The selected settings are now stored for the key in the ignition switch. To activate and deactivate the functions and set the functions selected, please see the relevant sections.

Repeat the procedure to programme additional keys.

Programmable functions

P1: Switch on the external lighting using the remote control (Entry lighting). Entry lighting ⇨ 103.

P2: Automatic rear windscreen wiper when reverse gear is selected. Rear window wiperwasher ⇨ 72.

P3: Lane change indication: three flashes when the lever is moved slightly. Turn and lane-change signals ⇨ 99.

P4: Automatic locking ⇨ 25.

P5: Selective unlocking ⇨ 22.

P6: Speed warning ⇨ 75.

P7: Volume of the acoustic turn signal ⇨ 99.

Lighting

Exterior lighting 96
Interior lighting 101
Lighting features 103

Exterior lighting

Light switch

Turn light switch:

AUTO = Automatic light control: Exterior lighting is switched on and off automatically depending on external lighting conditions.

⏻ = Activation or deactivation of the automatic light control. Switch turns back to **AUTO**

⇛ = sidelights

≣D = low beam

When switching on the ignition, automatic light control is active.

Control indicator ⇛ ⇨ 83.

Tail lights

Tail lights are illuminated together with low beam and sidelights.

Automatic light control

Automatic light control function

When the automatic light control function is switched on and the engine is running, the system switches between daytime running light and low beam in dependence of lighting conditions.

Daytime running light

Daytime running light increases visibility of the vehicle during daylight.

Tail lights are not on.

Automatic low beam activation

During poor lighting conditions the low beam is switched on.

Tunnel detection

When a tunnel is entered the low beam is switched on.

Adaptive forward lighting ⇨ 98.

High beam

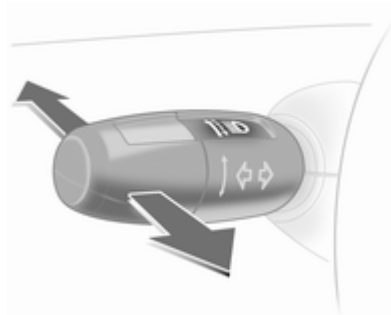

To switch from low to high beam, push lever.

To switch to low beam, push lever again or pull.

Headlight flash

To activate the headlight flash, pull lever.

Headlight range adjustment

Manual headlight range adjustment

To adapt headlight range to the vehicle load to prevent dazzling: Turn thumb wheel until the required setting is displayed on the kilometre display.

0 = Front seats occupied
1 = All seats occupied
2 = All seats occupied and load compartment laden
3 = Driver's seat occupied and load compartment laden

Headlights when driving abroad

The asymmetrical headlight beam extends visibility at the edge of the road at the passenger side.

However, when driving in countries where traffic drives on the opposite side of the road, adjust the headlights to prevent dazzling of oncoming traffic.

Vehicles with halogen headlight system

Have the headlights adjusted by a workshop.

Vehicles with adaptive forward lighting

Adapting the aim of the headlight beam:

1. Pull headlight flash lever.
2. Switch on ignition.
3. Hold headlight flash lever. After approx. 5 seconds the control indicator starts flashing and an acoustic signal sounds.

Control indicator ⇨ 84.

Every time the ignition is switched on, illuminates for approx. 8 seconds.

For deactivation operate the same procedure as described above. will illuminates for approx. 4 seconds when the function is deactivated.

Adaptive forward lighting

Adaptive forward lighting ensures better illumination of bends, crossings and narrow bends.

Dynamic curve lighting

The light beam pivots based on steering wheel angle and speed, improving lighting in curves.

Corner lighting

On tight bends or when turning off, depending on the steering angle or the indicator light signal, an additional left or right reflector is switched on which illuminates the road in the direction of travel. It is activated up to a speed of 40 km/h.

Reversing function

If the lights are on, reverse gear is engaged, and the turn signal is activated, the cornering light on the appropriate side is switched on. The cornering light stays on for 15 seconds once the turn signal has been switched off.

Control indicator ⇨ 84.

Hazard warning flashers

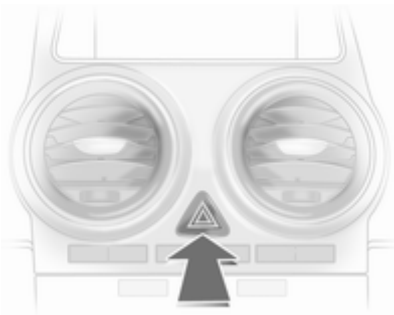

Operated with the button.

The hazard warning flashers activate automatically if the airbags deploy.

Turn and lane-change signals

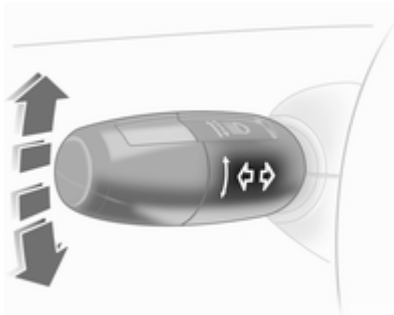

Lever up = right turn signal
Lever down = left turn signal

The lever always springs back to its original position.

If the lever is moved past the resistance point, the turn signal is switched on constantly. When the steering wheel moves back, the turn signal is automatically deactivated.

For three flashes, e.g. when changing lanes, press the lever until resistance is felt and then release. This function can be activated or deactivated depending on the key used ⇨ 94.

Move the lever to the resistance point and hold for longer indication.

Switch the turn signal off manually by moving the lever slightly.

Acoustic turn signal

The volume of the acoustic turn signal can be adjusted. This function can be programmed depending on the key used ⇨ 94.

Front fog lights

Operated with the button.

Light switch in position **AUTO**: switching on front fog lights will switch the low beam on automatically.

Rear fog lights

Operated with the button.

Light switch in position **AUTO**: switching on front fog lights will switch the low beam on automatically.

The rear fog light can only be switched on when both the ignition and the low beam or sidelights (with front fog lights) are on.

The vehicle rear fog light is deactivated when towing.

Parking lights

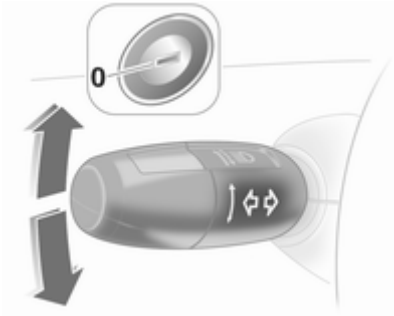

When parked, the parking lights on one side can be activated:

1. Set light switch to ⏻ or **AUTO**.
2. Ignition off.
3. Move turn signal lever all the way up (right parking lights) or down (left parking lights).

Confirmed by a signal and the corresponding turn signal control indicator.

To switch it off, switch on the ignition or move the turn signal lever in the opposite direction.

Reversing lights

The reversing lights come on when the ignition is on and reverse gear is selected.

Misted light covers

The inside of the light covers may mist up briefly in poor, wet and cold weather conditions, in heavy rain or after washing. The mist disappears quickly by itself; to help, switch on the exterior lights.

Interior lighting

Instrument panel illumination control

Brightness of the following lights can be adjusted when the exterior lights are on:

- Instrument panel illumination
- Info-Display
- Illuminated switches and operation elements

Turn thumb wheel until the required brightness is obtained.

Interior lights

During entry and exit of the vehicle, the front and centre courtesy lights automatically come on and then switch off after a delay.

Front courtesy light

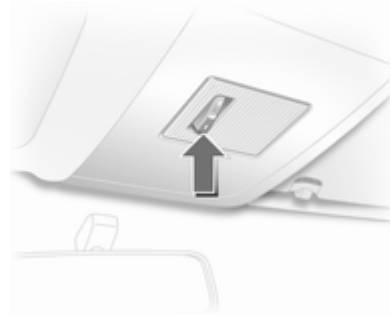

Centre switch position: automatic interior light.

To operate manually when the doors are closed:

On = Switch position I
Off = Switch position 0

Front courtesy light with reading lights

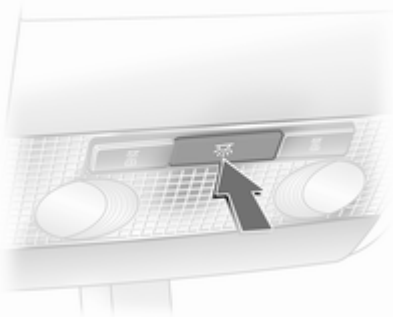

Operated with the button when the doors are closed.

Rear courtesy lights

Operated with switch.

I	=	On
0	=	Off
centre	=	automatic

Load compartment lighting

The lighting switches on when opened.

Reading lights

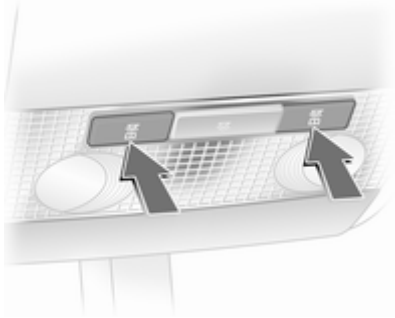

Operated with buttons with ignition on.

Lighting features

Centre console lighting

Spotlight in interior mirror housing. Daylight-dependent, automatically regulated centre console lighting.

Entry lighting

After unlocking the vehicle, the instrument panel lighting, the front and rear foot well lighting and the information display come on for a few seconds.

Starting off ⇨ 17.

Peripheral lighting

The exterior lights come on for approx. 30 seconds.

To activate, press button ⊻ on the radio remote control twice when the vehicle is locked.

Country-specific application: To switch on the function, press button ⊻ on the radio remote control once when the vehicle is locked.

Switching on the ignition or pressing button ⊻ on the radio remote control will deactivate the function.

This function can be activated and deactivated depending on the key being used. Vehicle personalisation ⇨ 94.

Exit lighting

The exterior lights come on for approx. 30 seconds after the system is activated and the driver's door is closed.

Activating

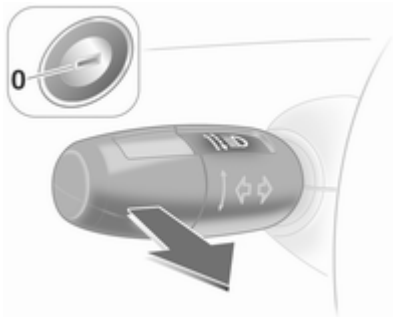

1. Switch off ignition.
2. Remove ignition key.
3. Open driver's door.
4. Pull turn signal lever.
5. Close driver's door.

If the driver's door is not closed the lights switch off after two minutes.

The lighting is switched off immediately if inserting the key into the ignition switch or pulling the turn signal lever while the driver's door is open.

Battery discharge protection

To prevent the battery from becoming discharged, all the interior lighting is switched off automatically after 5 minutes, when the ignition is switched off.

Climate control

Climate control systems 104
Air vents 110
Maintenance 111

Climate control systems

Heating and ventilation system

Controls for:

- Temperature
- Fan speed
- Air distribution

Heated rear window ⇨ 32.

Temperature

red = warm
blue = cold

Heating will not be fully effective until engine has reached normal operating temperature.

Fan speed

Adjust the air flow by switching the fan to the desired speed.

Air distribution

= to head area
= to head area and foot well
= to foot well
= to windscreen, front door windows and foot well
= to windscreen and front door windows

Intermediate settings are possible.

Demisting and defrosting the windows

- Set temperature control to warmest level.
- Set fan speed to highest level.
- Set air distribution control to .
- Switch on heated rear window .

- Open side air vents as required and direct them towards door windows.
- For simultaneous warming of the foot well, set air distribution control to .

Note
If the settings for demisting and defrosting are selected, an Autostop will be inhibited.

If the settings for demisting and defrosting are selected while the engine is in an Autostop, the engine will restart automatically.

Stop-start system ⇨ 114.

Air conditioning system

In addition to the heating and ventilation system, the air conditioning system has:

= cooling
= air recirculation

Heated seats ⇨ 39, Heated steering wheel ⇨ 70.

Cooling

Operated with the button and is functional only when the engine and fan are running.

The air conditioning system cools and dehumidifies (dries) as soon as the outside temperature is slightly above the freezing point. Therefore condensation may form and drip from under the vehicle.

If no cooling or drying is required, switch the cooling system off to save fuel. When the cooling system is switched off, no engine restart will be requested by the climate control system during an Autostop.

Note
If the climate control is set to maximal cooling while the ambient temperature is high, an Autostop may be inhibited until the requested temperature in the passenger compartment has been reached.

If the climate control is set to maximal cooling while the engine is in an Autostop, the engine may restart automatically.

Stop-start system ⇨ 114.

Air recirculation system

The air recirculation mode is operated with the button.

⚠Warning

The exchange of fresh air is reduced in air recirculation mode. In operation without cooling the air humidity increases, so the windows may mist up from inside. The quality of the passenger compartment air deteriorates, which may cause the vehicle occupants to feel drowsy.

Air distribution to : Air recirculation is deactivated.

In warm and very humid ambient air conditions, the windscreen might mist up from outside, when cold air is directed to it. If windscreen mists up from outside, activate windscreen wiper and deactivate .

Maximum cooling

Briefly open the windows so that hot air can disperse quickly.

- Cooling on.
- Air circulation system on.
- Set temperature control to coldest level.
- Set fan speed to highest level.
- Set air distribution control to .
- Open all vents.

Demisting and defrosting the windows

- Cooling on.
- Set temperature control to warmest level.
- Set fan speed to highest level.
- Set air distribution control to .
- Switch on heated rear window .
- Open side air vents as required and direct them towards the door windows.

Note

If the settings for demisting and defrosting are selected, an Autostop will be inhibited.

If the settings for demisting and defrosting are selected while the engine is in an Autostop, the engine will restart automatically.

Electronic climate control system

Controls for:

- Temperature
- Air distribution and menu selection
- Fan speed

AUTO = Automatic mode
= Air recirculating
= Demisting and defrosting

Heated rear window ⇨ 32.

The preselected temperature is automatically regulated. In automatic mode, the fan speed and air distribution automatically regulate the air flow.

The system can be manually adapted with the air distribution and air flow controls.

Data is shown on the Info-Display. Setting modifications are briefly shown in the Info-Display, superimposed over the currently displayed menu.

The electronic climate control system is only fully operational when the engine is running.

Automatic mode

Basic setting for maximum comfort:

- Press **AUTO** button.
- Open all air vents.
- **Air conditioning** on.
- Set desired temperature.

Temperature preselection

Temperatures can be set to the desired value.

For reasons of comfort, change temperature only in small increments.

If the minimum temperature is set, **Lo** appears in the display and the electronic climate control system runs at maximum cooling.

If the maximum temperature is set, **Hi** appears in the display and the electronic climate control system runs at maximum heating.

Note
If the temperature is set to **Lo** or **Hi**, an Autostop will be inhibited.

If the temperature is set to **Lo** or **Hi** while the engine is in an Autostop, the engine will restart automatically.

Stop-start system ⇨ 114.

Fan speed

The selected fan speed is indicated with ✠ and the number in the display.

If the fan is switched off the air conditioning is also deactivated.

To return to automatic mode: Press **AUTO** button.

Demisting and defrosting the windows

Press the button. appears in the display.

Temperature and air distribution are set automatically and the fan runs at a high speed.

To return to automatic mode: Press button or **AUTO**.

Switch on heated rear window .

Note

If the button is pressed with fan switched on while the engine is running, an Autostop will be inhibited until the button is pressed again.

If the button is pressed with fan switched on while the engine is in an Autostop, the engine will restart automatically.

Stop-start system ⇨ 114.

Manual settings in climate menu

Climate control system settings can be changed via the centre control, the buttons and the menus shown on the display.

To view the menu, press the centre control. The **Climate** menu appears in the display.

Individual menu items are marked by turning the centre control and selected by pressing it.

To exit a menu, turn the centre control until **Return** or **Main** appear and select.

Air distribution

Turn the centre control. The **Air distribut.** menu is activated, showing the possible air distribution settings:

Top	=	to windscreen and front door windows.
Centre	=	to vehicle occupants.
Bottom	=	to foot well.

The **Air distribut.** menu can also be called up via the **Climate** menu.

Return to automatic air distribution: Deactivate corresponding setting or press button **AUTO**.

Cooling

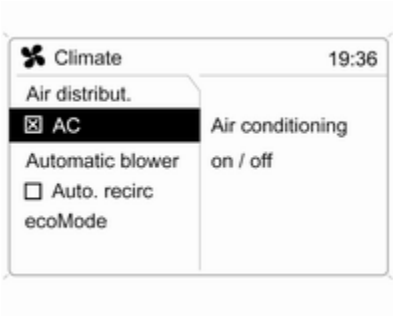

In the **Climate** menu, select menu item **AC** and activate or deactivate cooling.

The air conditioning system cools and dehumidifies (dries) when outside temperature is above a specific level. Therefore condensation may form and drip from under the vehicle.

If no cooling or drying is required, deactivate **AC** to save fuel. When the cooling system is switched off, no engine restart will be requested by the climate control system during an Autostop.

Depending on the vehicle equipment, the display will indicate **AC** when cooling is activated or **Eco** when the cooling is deactivated.

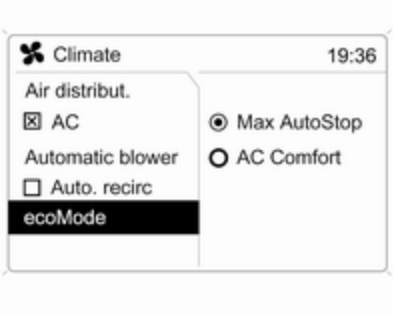

On vehicles with stop-start system, two settings for the operation of the climate control system during an Autostop are available.

Select menu item **ecoMode**.

Select the desired setting:

- **Max AutoStop**: In this mode the electronic climate control is operated with focus on fuel efficiency. The duration of an Autostop is not limited.
- **AC Comfort**: In this mode the electronic climate control is operated with focus on climate condition. The duration of an Autostop might be limited to maintain the requested climate condition.

Setting modifications are briefly shown as pop-ups.

Selections are indicated by a ● in front of the menu item.

In either mode, an Autostop will be available after the temperature in the passenger compartment has sufficiently cooled down.

Stop-start system ⇨ 114.

Fan regulation in automatic mode

Fan regulation in automatic mode can be adapted.

Select menu item **Automatic blower** from the **Climate** menu and select the desired fan regulation.

Manual air recirculating mode

The manual air recirculating mode is operated with the button.

⚠Warning

The exchange of fresh air is reduced in air recirculation mode. In operation without cooling the air humidity increases, so the windows may mist up from inside. The quality of the passenger compartment air deteriorates, which may cause the vehicle occupants to feel drowsy.

In warm and very humid ambient air conditions, the windscreen might mist up from outside, when cold air is directed to it. If windscreen mists up from outside, activate windscreen wiper and deactivate .

Auxiliary heater

Air heater

Quickheat is an electric auxiliary air heater which automatically warms up the passenger compartment more quickly.

Coolant heater

Diesel-engined vehicles have a fuel-powered auxiliary heater.

Air vents

Adjustable air vents

At least one air vent must be open while cooling is on in order to prevent the evaporator from icing up due to lack of air movement.

Set the direction of the air flow by turning the adjuster wheel from right to left and raise or lower the horizontal slats.

To close the vent, turn the adjuster wheel to left or right to its stop.

⚠ Warning

Do not attach any objects to the slats of the air vents. Risk of damage and injury in case of an accident.

Fixed air vents

Additional air vents are located beneath the windscreen and door windows and in the foot wells.

Maintenance

Air intake

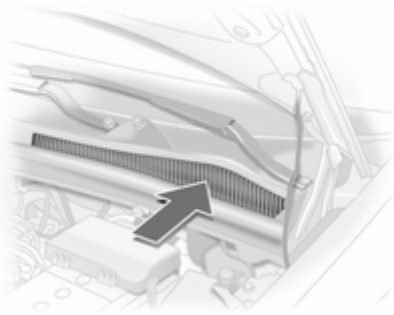

The air intake in front of the windscreen in the engine compartment must be kept clear to allow air intake. Remove any leaves, dirt or snow.

Pollen filter

The pollen filter cleans dust, soot, pollen and spores from the air entering the vehicle through the air intake.

Air conditioning regular operation

In order to ensure continuously efficient performance, cooling must be operated for a few minutes once a month, irrespective of the weather and time of year. Operation with cooling is not possible when outside temperature is too low.

Service

For optimal cooling performance, it is recommended to annually check the climate control system, starting three years after initial vehicle registration, including:

- Functionality and pressure test
- Heating functionality
- Leakage check
- Check of drive belts
- Cleaning of condenser and evaporator drainage
- Performance check

Driving and operating

Driving hints 112
Starting and operating 112
Engine exhaust 116
Automatic transmission 118
Manual transmission 121
Manual transmission automated 122
Brakes 126
Ride control systems 128
Cruise control 129
Object detection systems 130
Fuel 131
Towing 137

Driving hints

Control of the vehicle

Never coast with engine not running (except during an Autostop)

Many systems will not function in this situation (e.g. brake servo unit, power steering). Driving in this manner is a danger to yourself and others. All systems function during an Autostop, but there will be a controlled reduction in power steering assist and vehicle speed is reduced.

Stop-start system ⇨ 114.

Pedals

To ensure the pedal travel is uninhibited, there must be no mats in the area of the pedals.

Starting and operating

New vehicle running-in

Do not brake unnecessarily hard for the first few journeys.

During the first drive, smoke may occur because of wax and oil evaporating off the exhaust system. Park the vehicle in the open for a while after the first drive and avoid inhaling the fumes.

During the running-in period fuel and engine oil consumption may be higher and the cleaning process of the diesel particle filter may take place more often. Autostop may be inhibited to allow for charging the battery.

Diesel particle filter ⇨ 116.

Ignition switch positions

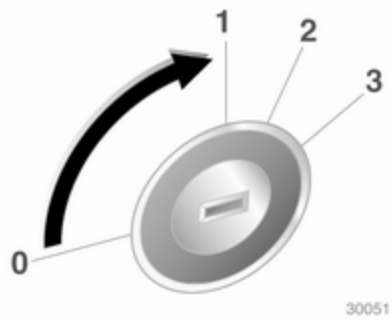

0 = Ignition off
1 = Steering wheel lock released, ignition off
2 = Ignition on, for diesel engine: preheating
3 = Starting

Starting the engine

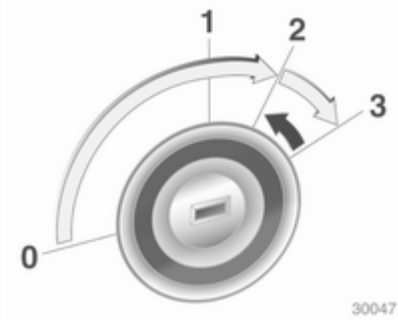

Operate clutch and brake, if the clutch pedel is not operated the engine might not start and the control indicator ⚒ could illuminate.

Automatic transmission in **P** or **N**.

Do not operate accelerator pedal.

Diesel engine: turn the key to position **2** for preheating and wait until control indicator ➿ extinguishes.

Turn key briefly to position **3** and release.

Before restarting or to switch off the engine, turn key back to **0**.

During an Autostop, the engine can be started by depressing the clutch pedal.

Starting the vehicle at low temperatures

The start of the engine without additional heaters is possible down to -25 °C for diesel engines and -30 °C for petrol engines. Required is an engine oil with the correct viscosity, the correct fuel, performed services and a sufficiently charged battery. With temperatures below -30 °C the automatic transmission need a warming phase of approx. 5 minutes. The selector lever must be in position **P**.

Turbo engine warm-up

Upon start-up, engine available torque may be limited for a short time, especially when the engine temperature is cold. The limitation is to allow the lubrication system to fully protect the engine.

Overrun cut-off

The fuel supply is automatically cut off during overrun, i.e. when the vehicle is driven with a gear engaged but accelerator is released. Overrun cut-off is deactivated if catalytic converter temperature is high.

Stop-start system

The stop-start system helps to save fuel and to reduce the exhaust emissions. When conditions allow, it switches off the engine as soon as the vehicle is at a low speed or at a standstill, e.g. at a traffic light or in a traffic jam. It starts the engine automatically as soon as the clutch is depressed. A battery sensor ensures that an Autostop is only performed if the battery is sufficiently charged for a restart.

Activation

The stop-start system is available as soon as the engine is started, the vehicle starts-off and the conditions as stated below in this section are fulfilled.

Deactivation

Deactivate the stop-start system manually by pressing the **eco** button. The deactivation is indicated by the LED in the button going off.

Autostop

If the vehicle is at a low speed or at a standstill, activate an Autostop as follows:

- Depress the clutch pedal
- shift the selector lever to neutral
- release the clutch pedal

The engine will be switched off while the ignition stays on.

An Autostop is indicated by the needle at the **AUTOSTOP** position in the tachometer.

During an Autostop, the heating performance, power steering and brake performance will be maintained.

Conditions for an Autostop

The stop-start system checks if each of the following conditions is fulfilled.

- The stop-start system is not manually deactivated
- the bonnet is fully closed
- the driver's door is closed or the driver's seat belt is fastened

- the battery is sufficiently charged and in good condition
- the engine is warmed up
- the engine coolant temperature is not too high
- the engine exhaust temperature is not too high, e.g. after driving with high engine load
- the ambient temperature is not too low
- the defrosting function is not activated
- the climate control system allows an Autostop
- the brake vacuum is sufficient
- the self-cleaning function of the diesel particle filter is not active
- the vehicle has moved since the last Autostop

Otherwise an Autostop will be inhibited.

An Autostop may become less available as the ambient temperature approaches the freezing point.

Certain settings of the climate control system may inhibit an Autostop. See climate control chapter for more details.

Immediately after motorway driving an Autostop may be inhibited.

New vehicle running-in ⇨ 112.

Battery discharge protection

To ensure reliable engine restarts, several battery discharge protection features are implemented as part of the stop-start system.

Power saving measures

During an Autostop, several electrical features such as rear window heating are disabled or switched into a power saving mode. The fan speed of the climate control system may be reduced to save power.

Restart of the engine by the driver

Depress the clutch pedal to restart the engine.

The engine start is indicated by the needle at the idle speed position in the tachometer.

If the selector lever is shifted out of neutral before depressing the clutch first, control indicator illuminates.

Control indicator ⇨ 80.

Restart of the engine by the stop-start system

The selector lever has to be in **N** to enable an automatic restart.

If one of the following conditions occurs during an Autostop, the engine will be restarted automatically by the stop-start system.

- The stop-start system is manually deactivated
- the bonnet is opened
- the driver's seat belt is unfastened and the driver's door is opened
- the engine temperature is too low
- the battery is discharged
- the brake vacuum is not sufficient
- the vehicle starts to move
- the defrosting function is activated

- the climate control system requests an engine start
- the air conditioning is manually switched on

If the bonnet is not fully closed, a warning message is displayed in the Driver Information Centre.

If an electrical accessory, e.g. a portable CD player, is connected to the power outlet, a brief power drop during restart might be noticeable.

Parking

- Do not park the vehicle on an easily ignitable surface. The high temperature of the exhaust system could ignite the surface.
- Always apply parking brake without pressing release button. Apply as firmly as possible on downhill or uphill slopes. Depress the foot brake at the same time to reduce operating force.
- Switch off the engine and ignition. Turn the steering wheel until the steering wheel lock engages.
- If the vehicle is on a level surface or uphill slope, engage first gear or set the selector lever to **P** before switching off the ignition. On an uphill slope, turn the front wheels away from the kerb.

  If the vehicle is on a downhill slope, engage reverse gear or set the selector lever to **P** before switching off the ignition. Turn the front wheels towards the kerb.
- Lock the vehicle and activate the anti-theft locking system and the anti-theft alarm system.

Engine exhaust

⚠ Danger

Engine exhaust gases contain poisonous carbon monoxide, which is colourless and odourless and could be fatal if inhaled.

If exhaust gases enter the interior of the vehicle, open the windows. Have the cause of the fault rectified by a workshop.

Avoid driving with an open load compartment, otherwise exhaust gases could enter the vehicle.

Diesel particle filter

The diesel particle filter system filters harmful soot particles out of the exhaust gases. The system includes a self-cleaning function that runs automatically during driving. The filter is cleaned by burning off the soot particles at high temperature. This process takes place automatically under set driving conditions and may take up to 25 minutes. Fuel

consumption may be higher during this period. The emission of smells and smoke during this process is normal.

Under certain driving conditions, e.g. short distances, the system cannot clean itself automatically.

If the filter requires cleaning and previous driving conditions did not enable automatic cleaning, control indicator flashes. Continue driving, keeping engine speed above 2000 rpm. Shift down if necessary. Diesel particle filter cleaning is then started.

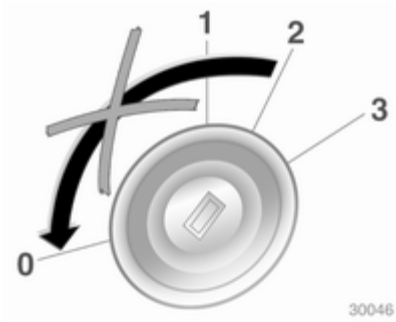

Stopping the journey or switching off the engine during cleaning is not recommended.

Caution
If the cleaning process is interrupted more than once, there is a great risk of provoking severe engine damage.

Cleaning takes place quickest at high engine speeds and loads.

The control indicator extinguishes as soon as the self-cleaning operation is complete.

If illuminates additionally, cleaning is not possible, seek the assistance of a workshop.

Catalytic converter

The catalytic converter reduces the amount of harmful substances in the exhaust gases.

Caution

Fuel grades other than those listed on pages ⇨ 131, ⇨ 194 could damage the catalytic converter or electronic components.

Unburnt petrol will overheat and damage the catalytic converter. Therefore avoid excessive use of the starter, running the fuel tank dry and starting the engine by pushing or towing.

In the event of misfiring, uneven engine running, a reduction in engine performance or other unusual problems, have the cause of the fault rectified by a workshop as soon as possible. In an emergency, driving can be continued for a short period, keeping vehicle speed and engine speed low.

Automatic transmission

The automatic transmission permits automatic gearshifting.

Transmission display

The mode or selected gear is shown in the transmission display.

Selector lever

P = park position, wheels are locked, engage only when the vehicle is stationary and the parking brake is applied
R = reverse gear, engage only when vehicle is stationary
N = neutral position
D = automatic mode with all gears.

The selector lever is locked in **P** and can only be moved when the ignition is on and the brake pedal is applied.

To engage **P** or **R**, press the release button on selector lever.

The engine can only be started with lever in position **P** or **N**. When position **N** is selected, press brake pedal or apply parking brake before starting.

Do not accelerate while engaging a gear. Never depress the accelerator pedal and brake pedal at the same time.

When a gear is engaged, the vehicle slowly begins to creep when the brake is released.

Gears 3, 2, 1

3, 2, 1 = Transmission does not shift above the selected gear.

Press button on selector lever to engage **3** or **1**.

Only select **3**, **2** or **1** to prevent automatic upshifting or as an aid in engine braking.

Engine braking

To utilise the engine braking effect, select a lower gear in good time when driving downhill.

Rocking the vehicle

Rocking the vehicle is only permissible if the vehicle is stuck in sand, mud or snow. Move the selector lever between **D** and **R** in a repeat pattern. Do not race the engine and avoid sudden acceleration.

Parking

Apply the parking brake and engage **P**.

The ignition key can only be removed when the selector lever is in position **P**.

Electronic driving programmes

- Following a cold start, the operating temperature programme increases engine speed to quickly bring the catalytic converter to the required temperature.
- The automatic neutral shift function automatically shifts to idling when the vehicle is stopped with a forward gear engaged.
- The adaptive programme tailors gearshifting to the driving conditions, e.g. greater load or gradients.

Winter programme ❄

Activate the Winter programme to assist starting off on a slippery road surface.

Activation

Press the ❄ button with **P**, **R**, **N**, **D** or **3** engaged. The vehicle starts off in 3rd gear.

Deactivation

The Winter programme is switched off by:

- pressing the ❄ button again,
- manually selecting **2** or **1**,
- turning off the ignition,
- or if the transmission oil temperature is too high.

Kickdown

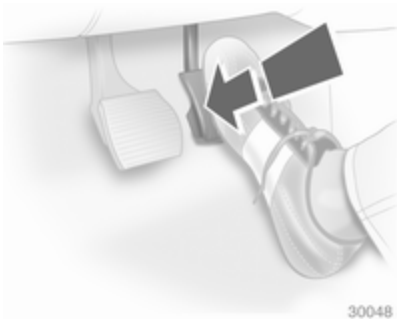

If the accelerator pedal is pressed past the pressure point, the transmission shifts to a lower gear depending on engine speed.

Fault

In the event of a fault, illuminates. The transmission no longer shifts automatically. Continued travel is possible with manual shifting.

2nd gear is not available. Manual shifting:

1 = 1st gear
2 = 3rd gear
3, D = 4th gear

Have the cause of the fault remedied by a workshop.

Interruption of power supply

In the event of an interruption of power supply, the selector lever cannot be moved out of the **P** position.

If the battery is discharged, start the vehicle using jump leads ⇨ 177.

If the battery is not the cause of the fault, release selector lever:

1. Apply parking brake.

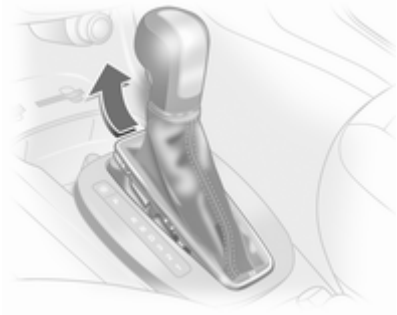

2. Release selector lever trim from centre console at front, fold upwards and rotate to the left.

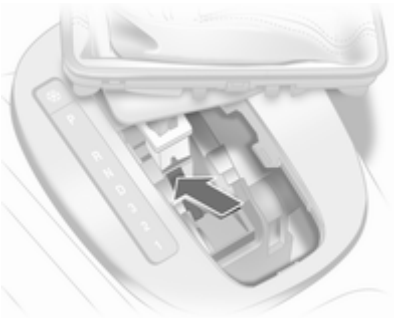

3. Push the yellow catch forward with a screwdriver and move the selector lever out of **P**. If **P** is engaged again, the selector lever will be locked in position again. Have the cause of the power supply interruption remedied by a workshop.
4. Mount selector lever trim on centre console and refit.

Manual transmission

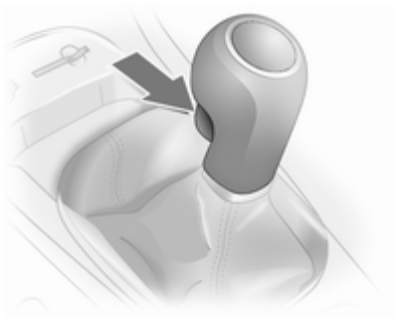

To engage reverse, with the vehicle stationary wait 3 seconds after depressing the clutch pedal and then press the release button on the selector lever and engage the gear.

If the gear does not engage, set the lever to neutral, release the clutch pedal and depress again; then repeat gear selection.

Do not grind the clutch unnecessarily.

When operating, depress the clutch pedal completely. Do not use the pedal as a foot rest.

Caution
It is not advisable to drive with the hand resting on the selector lever.

Manual transmission automated

The Easytronic transmission permits manual (manual mode) or automatic gear shifting (automatic mode), both with automatic clutch control.

Transmission display

Shows the mode and current gear.

The display flashes for a few seconds when **A**, **M** or **R** is selected with the engine running and the foot brake not activated.

Starting the engine

Depress the foot brake when starting the engine. If the foot brake is not depressed, ⊘ illuminates in the instrument, "N" flashes in the transmission display and the engine cannot be started.

Starting is not possible if all brake lights fail.

When the foot brake is depressed, the transmission automatically shifts to **N** upon start. There may be a slight delay.

Selector lever

Always move the selector lever in the appropriate direction as far as it will go. Upon release, it automatically returns to the centre position.

N = Neutral position.
A = Switch between automatic and manual mode. The transmission display shows **A** or **M**.
R = Reverse gear. Engage only when vehicle is stationary.
+ = Shift to a higher gear.
- = Shift to a lower gear.

Starting off

Depress the foot brake and move the selector lever to **A**, **+** or **-**. The transmission is in automatic mode and first gear is engaged. If **R** is selected, reverse gear is engaged.

The vehicle starts to move when the brake is released.

To start off without depressing the foot brake, accelerate immediately after engaging a gear.

If neither the accelerator nor the brake pedal are depressed, no gear is engaged and **A** or **R** flashes for a brief time in the display.

Stopping the vehicle

In **A**, first gear is engaged and the clutch is released when the vehicle is stopped. In **R**, reverse gear remains engaged.

Engine braking

Automatic mode

When driving downhill, the manual transmission automated does not shift into higher gears until a fairly high engine speed has been reached. It shifts down in good time when braking.

Manual mode

To utilise the engine braking effect, select a lower gear in good time when driving downhill.

Rocking the vehicle

Rocking the vehicle is only permissible if the vehicle is stuck in sand, mud or snow. Move the selector lever between **R** and **A** (or **+** or **-**) in a repeat pattern. Do not race the engine and avoid sudden acceleration.

Parking

Apply the parking brake. The most recently engaged gear (see transmission display) remains engaged. With **N**, no gear is engaged.

When the ignition is switched off the transmission no longer responds to movement of the selector lever.

Manual mode

If a higher gear is selected when the engine speed is too low, or a lower gear when the speed is too high, the shift is not executed. This prevents the engine from running at too low or too high an engine speed.

If engine speed is too low, the transmission automatically shifts to a lower gear.

If engine speed is too high, the transmission only switches to a higher gear via kickdown.

When **+** or **-** is selected in automatic mode, the transmission switches to manual mode and shifts accordingly.

Electronic driving programmes

- Following a cold start, the operating temperature programme increases engine speed to quickly bring the catalytic converter to the required temperature.
- The adaptive programme tailors gearshifting to the driving conditions, e.g. greater load or gradients.

Sport mode

Shift times are reduced when the Sport mode is enabled, and the gears are shifted at higher engine speeds, although not when cruise control is activated.

Activation

Press the **S** button.

Control indicator ⚙ ⇨ 81.

Deactivation

The Sport mode is switched off by:

- pressing the **S** button again
- turning off the ignition,
- activating the winter mode ❄.

Winter mode ❄

Activate the Winter mode if you have problems starting off on a slippery road surface.

Activation

Press the ❄ button. The transmission switches to automatic mode. The vehicle starts off in 2nd gear. Sport mode is deactivated.

Deactivation

The Winter mode is switched off by:

- pressing the ❄ button again
- turning off the ignition,
- switching to manual mode (when switched back to automatic mode, the Winter programme is again active)
- when clutch temperature is too high

Kickdown

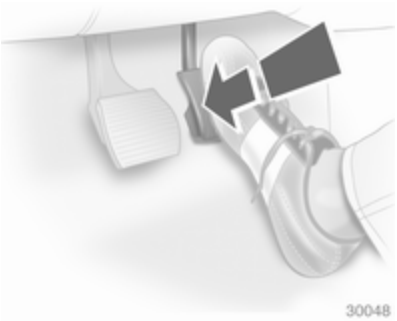

If the accelerator pedal is pressed past the pressure point, the transmission shifts to a lower gear depending on engine speed.

Fault

To prevent damage to the manual transmission automated, the clutch is engaged automatically at high clutch temperatures.

illuminates in the event of a fault. Continued driving is possible. Manual mode cannot be used for shifting.

If **F** appears in the transmission display, continued driving is not possible.

Have the cause of the fault remedied by a workshop.

Interruption of power supply

The clutch is not disengaged if there is an interruption of the power supply when a gear is engaged. The vehicle cannot move.

If the battery is discharged, start the vehicle using jump leads ⇨ 177.

If the cause of the fault is not a discharged battery, seek the assistance of a workshop.

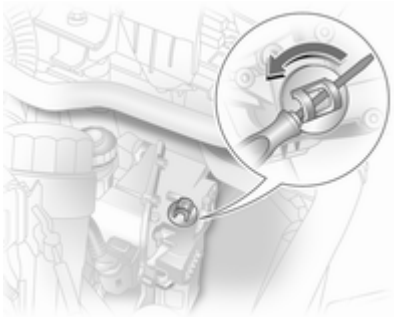

If the vehicle must be moved out of the flow of traffic, disengage the clutch as follows:

1. Apply parking brake and switch off ignition.
2. Open the bonnet ⇨ 144.
3. Clean the transmission around the cap so that no dirt can get into the opening when the cap is removed.
4. Rotate cap to slacken and remove by lifting upwards.

5. Using a flat-head screwdriver, turn the adjusting screw under the cap clockwise until clear resistance can be felt. The clutch has now been disengaged.
6. Refit cleaned cap. The cap must be in full contact with the housing.

Caution
Do not turn beyond the resistance since this could damage the transmission.

Caution
Towing the vehicle and starting the engine is not permitted when the clutch has been disengaged in this way, although the vehicle can be moved a short distance.

Seek the immediate assistance of a workshop.

Brakes

The brake system comprises two independent brake circuits.

If a brake circuit fails, the vehicle can still be braked using the other brake circuit. However, braking effect is achieved only when you depress the brake pedal firmly. You need to use considerably more force for this. The braking distance is extended. Seek the assistance of a workshop before continuing your journey.

When the engine is not running, the support of the brake servo unit disappears once the brake pedal has been depressed once or twice. Braking effect is not reduced, but braking requires significantly greater force. It is especially important to bear this in mind when being towed.

Control indicator ⓘ ⇨ 80.

Antilock brake system

Antilock brake system (ABS) prevents the wheels from locking.

ABS starts to regulate brake pressure as soon as a wheel shows a tendency to lock. The vehicle remains steerable, even during hard braking.

ABS control is made apparent though a pulse in the brake pedal and the noise of the regulation process.

For optimum braking, keep the brake pedal fully depressed throughout the braking process, despite the fact that the pedal is pulsating. Do not reduce the pressure on the pedal.

After starting off the system performs a self-test which may be audible.

Control indicator ABS ⇨ 81.

Adaptive brake light

During full braking, all three brake lamps flash for the duration of ABS control.

Fault

⚠ Warning

If there is a fault in the ABS, the wheels may be liable to lock due to braking that is heavier than normal. The advantages of ABS are no longer available. During hard braking, the vehicle can no longer be steered and may swerve.

Have the cause of the fault remedied by a workshop.

Parking brake

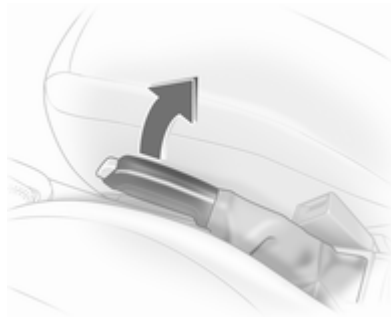

Always apply parking brake firmly without operating the release button, and apply as firmly as possible on a downhill or uphill slope.

To release the parking brake, pull the lever up slightly, press the release button and fully lower the lever.

To reduce the operating forces of the parking brake, depress the foot brake at the same time.

Control indicator ⓘ ⇨ 80.

Brake assist

If the brake pedal is depressed quickly and forcefully, maximum brake force is automatically applied (full braking).

Maintain steady pressure on the brake pedal for as long as full braking is required. Maximum brake force is automatically reduced when the brake pedal is released.

Hill start assist

The system helps prevent unintended movement when driving away on inclines.

When releasing the foot brake after stopping on an incline, the brakes remain on for a further two seconds. The brakes release automatically as soon as the vehicle begins to accelerate.

The hill start assist is not active during an Autostop.

Ride control systems

Electronic stability program

Electronic stability program (ESP®Plus) improves driving stability when necessary, regardless of the type of road surface or tyre grip. It also prevents the drive wheels from spinning.

As soon as the vehicle starts to swerve (understeer/oversteer), engine output is reduced and the wheels are braked individually. This considerably improves the driving stability of the vehicle on slippery road surfaces.

ESP®Plus is operational as soon as control indicator extinguishes.

When ESP®Plus comes into action flashes.

⚠Warning

Do not let this special safety feature tempt you into taking risks when driving.

Adapt speed to the road conditions.

Control indicator ⇨ 81.

Deactivation

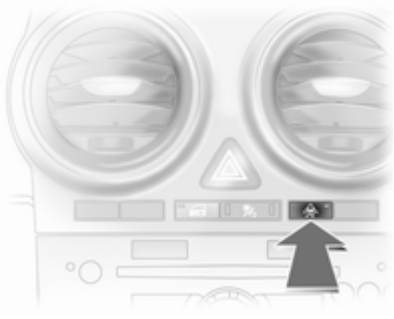

ESP®Plus can be deactivated by pressing the button.

When ESP®Plus is deactivated the control indicator illuminates. **ESPoff** also appears in the service display.

⚠Warning

Do not deactivate ESP®Plus if a run-flat tyre has lost pressure.

ESP®Plus is reactivated by pressing the button. **ESPon** appears in the service display. ESP®Plus is also reactivated the next time the ignition is switched on.

Cruise control

The cruise control can store and maintain speeds of approx. 30 to 200 km/h.

Deviations from the stored speeds may occur when driving uphill or downhill.

For safety reasons the cruise control cannot be activated until the foot brake has been operated once.

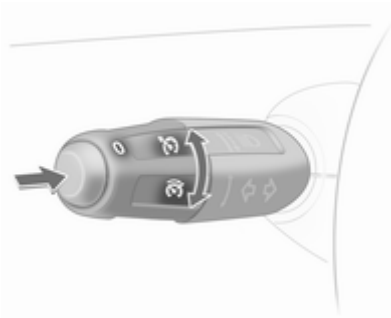

Do not use the cruise control if it is not advisable to maintain a constant speed.

With automatic transmission or manual transmission automated, only activate cruise control in automatic mode.

Control indicator ⇨ 84.

Activation

Turn switch up and release: the current speed is stored and maintained.

Vehicle speed can be increased by depressing the accelerator pedal. When the accelerator pedal is released, the previously stored speed is resumed.

The speed is saved until the ignition is switched off.

To resume the saved speed, turn switch downwards at a speed above 30 km/h.

Increase speed

With cruise control active, turn switch upwards and hold, or turn briefly several times: speed is increased continuously or in small increments.

When switch is released the current speed is stored and maintained.

Reduce speed

With cruise control active, turn switch downwards and hold, or turn briefly several times: speed is reduced continuously or in small increments.

When switch is released the current speed is stored and maintained.

Deactivation

Briefly press the O button: cruise control is deactivated.

Automatic deactivation:

- Vehicle speed below approx. 30 km/h
- The brake pedal is depressed
- The clutch pedal is depressed
- Selector lever in **N**.

To reset the saved speed, turn switch downwards.

Object detection systems

Parking assist

The parking assist makes parking easier by measuring the distance between the vehicle and obstacles. It is the driver, however, who bears full responsibility for parking.

The system consists of four ultrasonic parking sensors bumper mounted.

Control indicator P⁄⁄▲ ⇨ 81.

Note
Attached parts in the detection area cause system malfunction.

Activation

When reverse gear is engaged, the system switches itself on automatically.

An obstacle is indicated by buzzers. The interval between the buzzers becomes shorter as the vehicle gets closer to the obstacle. When the distance is less than 30 cm, the buzzer is continuous.

⚠Warning

Under certain circumstances, various reflective surfaces on objects or clothing as well as external noise sources may cause the system to fail to detect obstacles.

Deactivation

The system automatically switches itself off when reverse gear is disengaged.

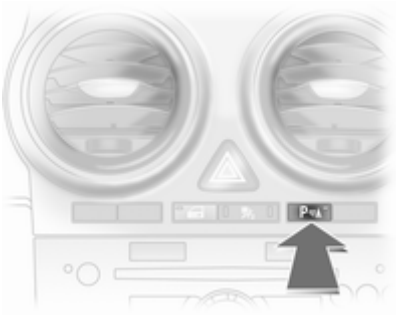

If the vehicle is equipped with the P⁄⁄▲ button, the system can be deactivated by pressing the button.

Towing equipment

The system automatically detects factory-fitted towing equipment.

The rear parking sensors are deactivated when towing.

Fuel

Fuel for petrol engines

Only use unleaded fuel that complies with European standard EN 228 or E DIN 51626-1 or equivalent.

Your engine is capable to run with E10 fuel that fulfills these standards. E10 fuel contains up to 10 % bioethanol.

Use fuel with the recommended octane rating ⇨ 194. Use of fuel with too low an octane rating can reduce engine power and torque and slightly increases fuel consumption.

Caution

Do not use fuel or fuel additives that contain metallic compounds such as manganese-based additives. This may cause engine damage.

Caution

Use of fuel that does not comply to EN 228 or E DIN 51626-1 or equivalent can lead to deposits or engine damage and may affect your warranty.

Caution

Use of fuel with too low an octane rating could lead to uncontrolled combustion and engine damage.

Fuel for diesel engines

Only use diesel fuel that complies with EN 590.

In countries outside the European Union use Euro-Diesel fuel with a sulfur concentration below 50 ppm.

Caution

Use of fuel that does not comply to EN 590 or similar can lead to engine powerloss, increased wear or engine damage and may affect your warranty.

Do not use marine diesel oils, heating oils, Aquazole and similar diesel-water emulsions. Diesel fuels must not be diluted with fuels for petrol engines.

Fuel for liquid gas operation

Liquid gas is known as LPG (Liquefied Petroleum Gas) or under its French name GPL (Gaz de Pétrole Liquéfié). LPG is also known as Autogas.

LPG consists mainly of propane and butane. The octane rating is between 105 and 115, depending on the butane proportion. LPG is stored liquid at around 5 - 10 bar pressure.

The boiling point depends on the pressure and mixing ratio. At ambient pressure, it is between -42 °C (pure propane) and -0.5 °C (pure butane).

Caution
The system works at an ambient temperature of approx. -8 °C to 100 °C.

Full function of the LPG system can only be guaranteed with liquid gas which complies with the minimum requirements of DIN EN 589.

Fuel selector

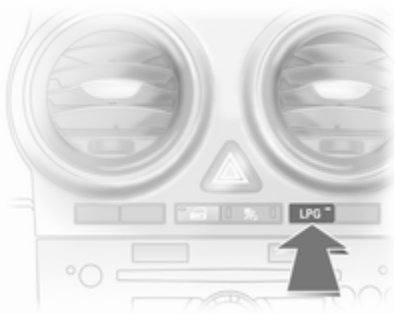

Pressing the **LPG** button switches between petrol and liquid gas operation as soon as the required parameters (coolant temperature, gas temperature and minimum engine speed) have been reached. The requirements are usually fulfilled after around 60 seconds (depending on exterior temperature) and the first firm press on the accelerator. The LED status shows the current operating mode.

off	=	petrol operation
illuminates	=	liquid gas operation
flashes	=	no switching is possible, one type of fuel is empty

As soon as the liquid gas tanks are empty, petrol operation is automatically engaged until the ignition is switched off.

Every six months, run the petrol tank down until control indicator ⛽ illuminates, then refuel. This helps maintain fuel quality and system function for petrol operation.

Fill the tank completely at regular intervals to prevent corrosion in the tank.

Faults and remedies

If gas mode is not possible, check the following:

- Is there enough liquid gas present?
- Is there enough petrol present for starting?

Due to extreme temperatures in combination with the gas composition, it may take slightly longer before the system switches from petrol to gas mode.

In extreme situations, the system may also switch back to petrol mode if the minimum requirements are not fulfilled.

Seek the assistance of a workshop in the event of all other faults.

Caution

Repairs and adjustments may only be made by trained specialists in order to maintain the safety and warranty on the LPG system.

Liquid gas is given a particular odour (odorised) so that any leaks can be detected easily.

⚠ Warning

If you smell gas in the vehicle or in the immediate vicinity, switch to petrol mode immediately. No smoking. No naked flames or ignition sources.

If possible, close the manual shut-off valve on the multivalve. The multivalve is located on the liquid gas tank in the load compartment, underneath the rear floor cover.

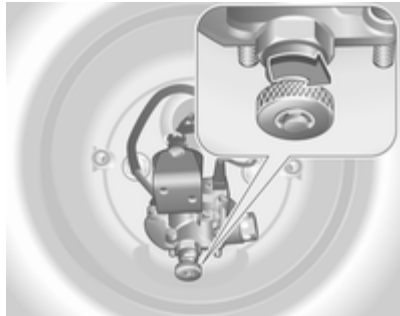

Turn the thumb wheel clockwise.

If no further gas odour is perceptible when the manual shut-off valve is closed, the vehicle can be used in petrol mode. If the gas odour persists, do not start the engine. Have the cause of the fault remedied by a workshop.

When using underground car parks, follow the instructions of the operator and local laws.

Note
In the event of an accident, switch off the ignition and lights. Close the manual shut-off valve on multivalve.

Refuelling

⚠ Danger

Before refuelling, switch off engine and any external heaters with combustion chambers (identified by sticker on fuel filler flap). Switch off any mobile phones.

Follow the operating and safety instructions of the filling station when refuelling.

⚠ Danger

Fuel is flammable and explosive. No smoking. No naked flames or sparks.

If you can smell fuel in your vehicle, have the cause of this remedied immediately by a workshop.

Caution

In case of misfuelling, do not switch on ignition.

Fuel filler flap is located at right rear side of vehicle.

With a central locking system with remote control, the tank flap is unlocked at the same time as the doors.

Open tank flap.

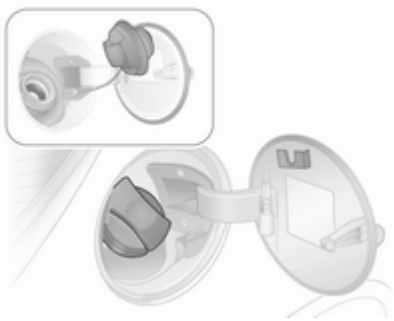

Unlock the fuel filler cap with the ignition key. To open, turn the cap slowly to the left. The fuel filler cap can be retained in the bracket on the fuel filler flap.

For refuelling, fully insert the pump nozzle and switch it on.

After automatic cut-off, it can be topped up with max. two doses of fuel.

Caution

Wipe off any overflowing fuel immediately.

To close, turn the fuel filler cap to the right until it clicks.

Close the flap and let engage.

Liquid gas refuelling

Follow the operating and safety instructions of the filling station when refuelling.

The filling valve for the liquid gas is behind the fuel filler cap.

Unscrew protective cap from the filler neck.

Fit the required adapter.

ACME Adapter: Screw the nut of the filling nozzle onto the adapter. Press locking lever on filler nozzle down.

DISH (Italy) filler neck: Place the filler nozzle into the adapter. Press locking lever on filler nozzle down.

Bayonet filler neck: Place filler nozzle on the adapter and turn to the left or right through one quarter turn. Pull locking lever of filler nozzle fully.

EURO filler neck: Press the filler nozzle onto the adapter until it engages.

Press the button of the liquid gas supply point. The filling system stops or begins to run slowly when 80% ofthe tank volume is reached (maximum fill level).

Release button on filling system and the filling process stops. Release the locking lever and remove the filler nozzle. A small quantity of liquid gas can escape.

Remove adapter and stow in vehicle.

Fit protective cap to prevent the penetration of foreign bodies into the filler opening and the system.

⚠Warning

Due to the system design, an escape of liquid gas after releasing the locking lever is unavoidable. Avoid inhaling.

⚠Warning

The liquid gas tank may only be filled to 80% for safety reasons.

The multivalve on the liquid gas tank automatically limits the fill quantity. If a larger quantity is added, we recommend not exposing the vehicle to the sun until the excess amount has been used up.

Filling adapter

As filling systems are not standardised, different adapters are required which are available from Opel Distributors and from Opel Authorised Repairers.

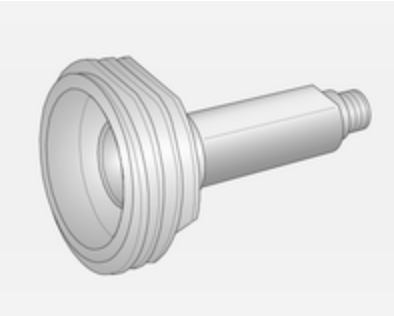

ACME adapter: Belgium, Germany, Ireland, Luxembourg, Switzerland

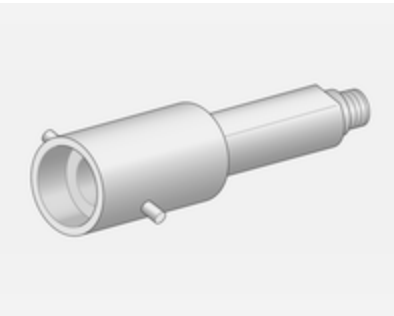

Bayonet adapter: Netherlands, Norway, Spain, United Kingdom

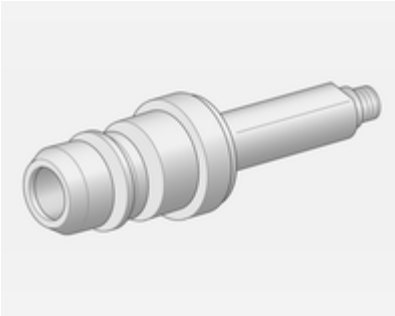

EURO adapter: Spain

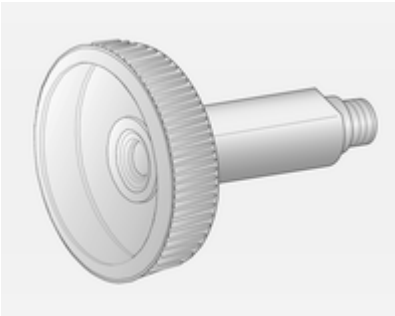

DISH (Italy) adapter: Bosnia-Herzegovina, Bulgaria, Denmark, Estonia, France, Greece, Italy, Croatia, Latvia, Lithuania, Macedonia, Austria, Poland, Portugal, Romania, Sweden, Switzerland, Serbia, Slovakia, Slovenia, Czech Republic, Turkey, Ukraine, Hungary

Fuel filler cap

Only use genuine fuel filler caps. Diesel-engined vehicles have special fuel filler caps.

Fuel consumption - CO_2-Emissions

The fuel consumption (combined) of the model Opel Corsa is within a range of 3.3 to 7.6 l/100 km.

The CO_2 emission (combined) is within a range of 88 to 178 g/km.

For the values specific for your vehicle, refer to the EEC Certificate of Conformity provided with your vehicle or other national registration documents.

General information

The official fuel consumption and specific CO_2 emission figures quoted relate to the EU base model with standard equipment.

Fuel consumption data and CO_2 emission data are determined according to regulation R (EC) No. 715/2007 (in the version respectively applicable), taking into consideration the vehicle weight in running order, as specified by the regulation.

The figures are provided only for the purpose of comparison between different vehicle variants and must not be taken as a guarantee for the actual fuel consumption of a particular vehicle. Additional equipment may result in slightly higher results than the stated consumption and CO_2 figures.

Furthermore, fuel consumption is dependent on personal driving style as well as road and traffic conditions.

Towing

General information

Only use towing equipment that has been approved for your vehicle. Entrust retrofitting of towing equipment to a workshop. It may be necessary to make changes that affect the cooling system, heat shields or other equipment.

Fitting of towing equipment could cover the opening of the towing eye. If this is the case use the coupling ball bar for towing. Always keep the coupling ball bar in the vehicle.

Installation dimensions of factory-fitted towing equipment ⇨ 216.

Driving characteristics and towing tips

Before attaching a trailer, lubricate the coupling ball. However, do not do so if a stabiliser, which acts on the coupling ball, is being used to reduce snaking movements.

For trailers with low driving stability and caravan trailers with a permitted gross vehicle weight of more than 1000 kg a speed of 80 km/h must not be exceeded; the use of a stabiliser is recommended.

If the trailer starts snaking, drive more slowly, do not attempt to correct the steering and brake sharply if necessary.

When driving downhill, drive in the same gear as if driving uphill and drive at a similar speed.

Adjust tyre pressure to the value specified for full load ⇨ 209.

Trailer towing

Trailer loads

The permissible trailer loads are vehicle and engine-dependent maximum values which must not be exceeded. The actual trailer load is the difference between the actual gross weight of the trailer and the actual coupling socket load with the trailer coupled.

The permissible trailer loads are specified in the vehicle documents. In general, they are valid for gradients up to max. 12 %

The permitted trailer loads apply up to the specified incline and up to an altitude of 1000 metres above sea level. Since engine power decreases as altitude increases due to the air becoming thinner, therefore reducing climbing ability, the permissible gross train weight also decreases by 10 % for every 1000 metres of additional altitude. The gross train weight does not have to be reduced when driving on roads with slight inclines (less than 8 %, e.g. motorways).

The permissible gross train weight must not be exceeded. This weight is specified on the identification plate ⇨ 189.

Vertical coupling load

The vertical coupling load is the load exerted by the trailer on the coupling ball. It can be varied by changing the weight distribution when loading the trailer.

The maximum permissible vertical coupling load (vehicles with 1.2 engine: 45 kg, other engines: 55 kg) is specified on the towing equipment identification plate and in the vehicle documents. Always aim for the maximum load, especially in the case of heavy trailers. The vertical coupling load should never fall below 25 kg.

Rear axle load

When the trailer is coupled and the towing vehicle fully loaded, the permissible rear axle load (see identification plate or vehicle documents) for passenger vehicles may be exceeded by 45 kg and the gross vehicle weight rating by 50 kg (on vehicles with 1.2 engine and specific rear axle application: 30 kg).

For vans the permitted rear axle load may be exceeded by 25 kg. The permitted total load may be exceeded by the following amounts with the engines specified below:

A10XEP	=	30 kg
A12XEL, A12XER, Z12XEP	=	25 kg
Z13DTH, A13DTR	=	40 kg
Z13DTJ, Z13DTE, A13DTE, A13DTC	=	35 kg

Trailer operation is not permitted for vans with tyre size 215/45 R 17.

If the permitted rear axle load is exceeded a maximum speed of 100 km/h applies. If lower national maximum speeds are specified for trailer operation, they must be complied with.

Towing equipment

Caution

When operating without a trailer, remove the coupling ball bar.

Stowage of coupling ball bar

The coupling ball bar is stowed in a bag in the spare wheel well and secured to the lashing eyes in the load compartment.

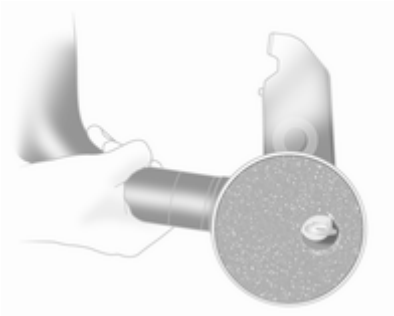

When inserting, fit protective cap over rotary knob with key.

Fitting the coupling ball bar

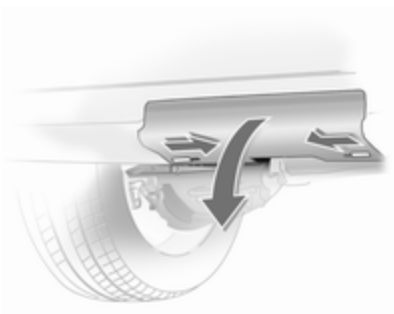

Push both bolts inwards and remove the cover on the bumper.

Disengage and fold down the socket. Remove the sealing plug from the opening for the coupling ball bar and stow it.

Checking the tensioning of the coupling ball bar

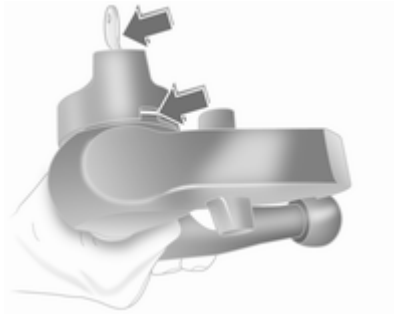

- The rotary knob rests on the coupling ball bar.
- Green marking on the rotary knob is not visible.
- Locking pin at the top of the coupling ball bar is set inwards.
- The key is in the lock.

Otherwise, the coupling ball bar must be tensioned before it is inserted into the coupling housing:

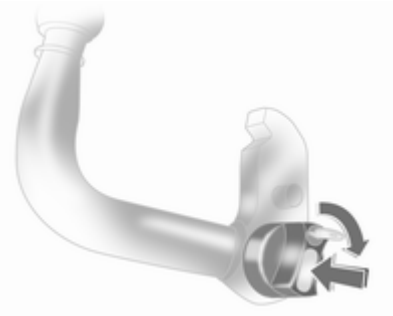

- Place the key in the lock and unlock the coupling ball bar.
- Push the rotary knob onto the coupling ball bar and rotate right while pressed down until it engages. The key remains in the lock.

Inserting the coupling ball bar

Insert the tensioned coupling ball bar in the opening and push firmly upwards until it audibly engages.

The rotary knob snaps back into its original position resting against the coupling ball bar without a gap.

⚠ Warning
Do not touch rotary knob during insertion.

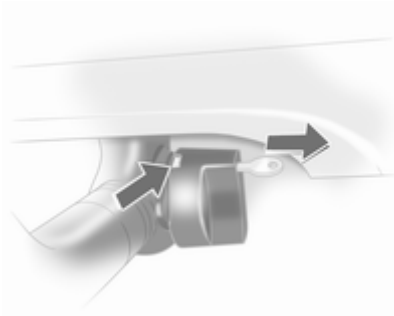

Green marking on the rotary knob is visible.

Lock coupling ball bar and remove key.

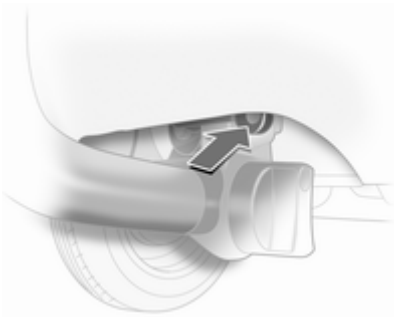

Eye for break-away stopping cable
Attach breakaway stopping cable to eye.

Check that the coupling ball bar is correctly installed

- Green marking on rotary knob is visible.
- There must be no gap between the rotary knob and the coupling ball bar.
- The coupling ball bar must be firmly engaged in the opening.
- The coupling ball bar must be locked and the key removed.

⚠ Warning

Towing a trailer is permitted only when a coupling ball bar is fitted correctly. If the coupling ball bar does not engage correctly, seek the assistance of a workshop.

Dismounting the coupling ball bar

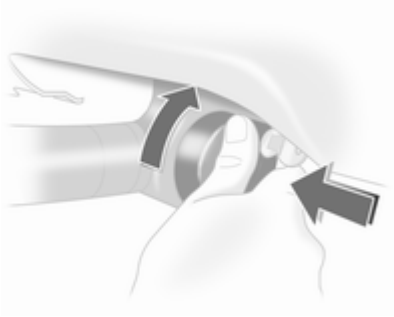

Insert the key in the lock and unlock the coupling ball bar.

Push the rotary knob onto the coupling ball bar and rotate right while pressed down until it engages. Pull out the ball bar downwards.

Insert sealing plug in opening for coupling ball bar. Fold away socket. Place cover on bumper and push both bolts outwards.

Vehicle care

General Information 142
Vehicle checks 143
Bulb replacement 150
Electrical system 162
Vehicle tools 166
Wheels and tyres 168
Jump starting 177
Towing 179
Appearance care 181

General Information

Accessories and vehicle modifications

We recommend to use genuine parts and accessories and factory approved parts specific for your vehicle type. We cannot assess or guarantee reliability of other products - even if they have a regulatory or otherwise granted approval.

Do not make any modifications to the electrical system, e.g. changes of electronic control units (chip tuning).

Caution
When transporting the vehicle on a train or on a recovery vehicle, the mud flaps might be damaged.

Vehicle storage

Storage for a long period of time

Following must be done if the vehicle should be stored for several months:

- Wash and wax the vehicle.
- Have the wax in the engine compartment and underbody checked.
- Clean and preserve rubber seals.
- Fill up fuel tank completely.
- Change engine oil.
- Drain washer fluid reservoir.
- Check coolant antifreeze and corrosion protection.
- Adjust tyre pressure to the value specified for full load.
- Park vehicle in dry, well ventilated place. Engage first or reverse gear or set selector lever to **P**. Prevent the vehicle from rolling.
- Do not apply parking brake.

- Open bonnet, close all doors and lock the vehicle.
- Disconnect the clamp from the negative terminal of the vehicle battery. Beware that all systems are not functional, e.g. anti-theft alarm system.

Putting back into operation

Following must be done if the vehicle is putting back into operation:

- Connect the clamp to the negative terminal of the vehicle battery. Activate the electronics of the power windows.
- Check tyre pressure.
- Fill up the washer fluid reservoir.
- Check the engine oil level.
- Check the coolant level.
- Fit the number plate if necessary.

End-of-life vehicle recovery

Information on end-of-life vehicle recovery centres and the recycling of end-of-life vehicles is available on our website. Only entrust this work to an authorised recycling centre.

Gas vehicles must be recycled by a service centre authorised for gas vehicles.

Vehicle checks

Performing work

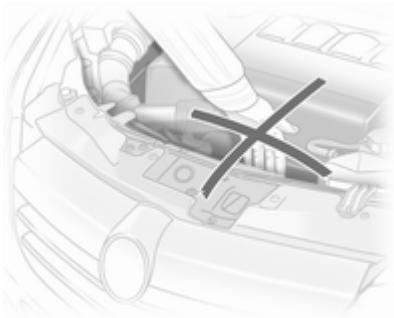

⚠ Warning

Only perform engine compartment checks when the ignition is off.

The cooling fan may start operating even if the ignition is off.

⚠ Danger

The ignition system and Xenon headlights use extremely high voltage. Do not touch.

The caps for topping up the engine oil, the coolant, the washing fluid and the oil dipstick handle are yellow for ease of identification.

Bonnet

Opening

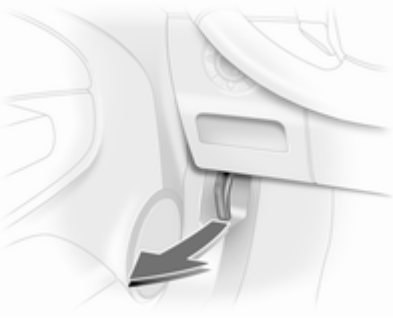

Pull the release lever and return it to its original position.

Lift the safety catch upwards and open the bonnet.

Air intake ⇨ 111.

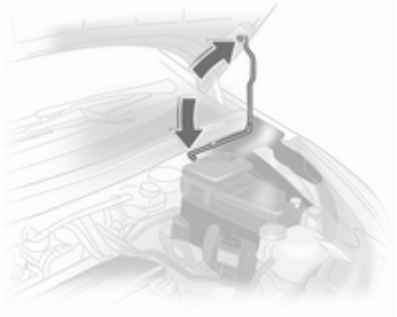

Secure the bonnet support.

If the bonnet is opened during an Autostop, the engine will be restarted automatically for safety reasons.

Closing

Before closing the bonnet, press the support into the holder.

Lower the bonnet and allow it to drop into the catch. Check that the bonnet is engaged.

Engine oil

Check the engine oil level manually on a regular basis to prevent damage to the engine. Ensure that the correct specification of oil is used. Recommended fluids and lubricants ⇨ 186.

Check with the vehicle on a level surface. The engine must be at operating temperature and switched off for at least 5 minutes.

Pull out the dipstick, wipe it clean, insert it to the stop on the handle, pull out and read the engine oil level.

Insert dipstick to the stop on the handle and make half a turn.

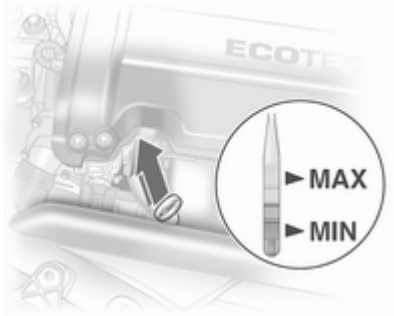

Different dipsticks are used depending on engine variant.

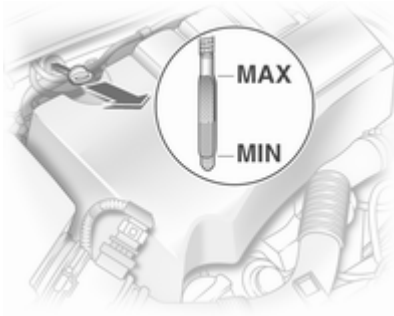

When the engine oil level has dropped to the **MIN** mark, top up engine oil.

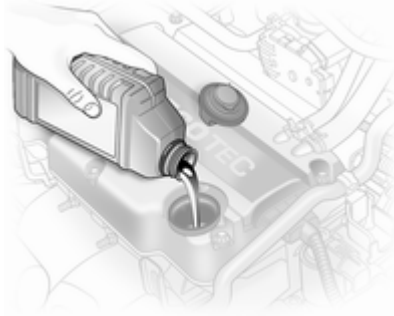

We recommend to use the same engine oil that is filled in.

The engine oil level must not exceed the **MAX** mark on the dipstick.

Caution
Overfilled engine oil must be drained or suctioned out.

Capacities ⇨ 207.

Fit the cap on straight and tighten it.

Engine coolant

The coolant provides freeze protection down to approx. -28 °C.

Caution
Only use approved antifreeze.

Coolant level

Caution
Too low a coolant level can cause engine damage.

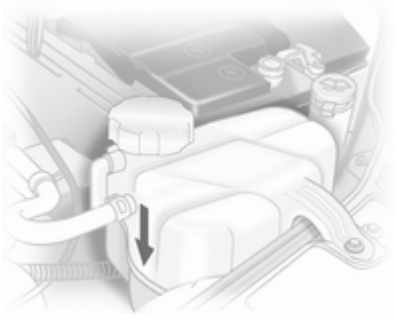

If the cooling system is cold, the coolant level should be above the **KALT/COLD** mark. Top up if the level is low.

⚠ Warning
Allow the engine to cool before opening the cap. Carefully open the cap, relieving the pressure slowly.

Top up with antifreeze. If no antifreeze is available, use clean tap water or distilled water. Install the cap tightly. Have the antifreeze concentration checked and have the cause of the coolant loss remedied by a workshop.

Washer fluid

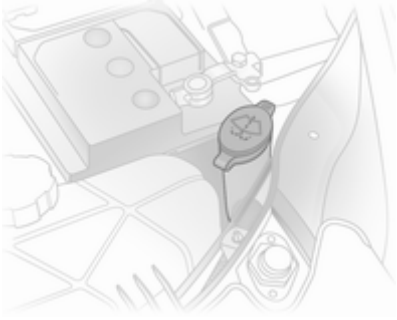

Fill with clean water mixed with a suitable quantity of washer fluid which contains antifreeze. For the correct mixing ratio refer to the washer fluid container.

Caution
Only washer fluid with a sufficient antifreeze concentration provides protection at low temperatures or a sudden drop in temperature.

Brakes

A squealing noise indicates that the brake lining is at its minimum thickness. Continued driving is possible but have the brake lining replaced as soon as possible.

Once new brake linings are installed, do not brake unnecessarily hard for the first few journeys.

Brake fluid

⚠Warning

Brake fluid is poisonous and corrosive. Avoid contact with eyes, skin, fabrics and painted surfaces.

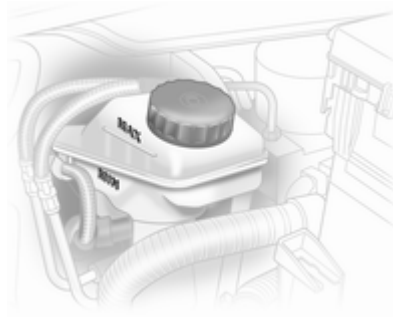

The brake fluid level must be between the **MIN** and the **MAX** marks.

When topping up, ensure maximum cleanliness as contamination of the brake fluid can lead to brake system malfunctions. Have the cause of the loss of brake fluid remedied by a workshop.

Only use high-performance brake fluid approved for the vehicle, Brake and clutch fluid ⇨ 186.

Battery

The vehicle battery is maintenance-free provided that the driving profile allows sufficient charging of the battery. Short distance driving and frequent engine starts can discharge the battery. Avoid the use of unnecessary electrical consumers.

Batteries do not belong in household waste. They must be disposed of at an appropriate recycling collection point.

Laying up the vehicle for more than 4 weeks can lead to battery discharge. Disconnect the clamp from the negative terminal of the vehicle battery.

Ensure the ignition is switched off before connecting or disconnecting the vehicle battery.

Warning label

Meaning of symbols:

- No sparks, naked flames or smoking.
- Always shield eyes. Explosive gases can cause blindness or injury.
- Keep the battery out of reach of children.
- The battery contains sulfuric acid which could cause blindness or serious burn injuries.
- See the Owner's Manual for further information.
- Explosive gas may be present in the vicinity of the battery.

Replacing the battery

Note
Any deviation from the instructions given in this paragraph may lead to a temporary deactivation of the stop-start system.

When the battery is being replaced, please ensure that there are no open ventilation holes in the vicinity of the positive terminal. If a ventilation hole is open in this area, it must be closed off with a dummy cap, and the ventilation in the vicinity of the negative terminal must be opened.

Only use batteries that allow the fuse box to be mounted above the battery.

In vehicles with an AGM (Absorptive Glass Mat) battery, ensure to have the battery replaced with an AGM battery.

An AGM battery can be identified by the label on the battery. We recommend the use of an original Opel battery.

Note
Using an AGM battery different from the original Opel battery might result in a lower performance of the stop-start system.

We recommend that you have the battery replaced by a workshop.

Stop-start system ⇨ 114.

Charging the battery

⚠ Warning

On vehicles with an AGM battery, ensure that the charging potential does not exceed 14.6 volts when using a battery charger. Otherwise the battery might be damaged.

Jump starting ⇨ 177.

Diesel fuel system bleeding

If the tank has been run dry, the diesel fuel system must be bled. Switch on the ignition three times for 15 seconds at a time. Then crank the engine for a maximum of 40 seconds (For technical reasons only 30 seconds are possible on engines A 17 DTS). Repeat this process after no less than 5 seconds. If the engine fails to start, seek the assistance of a workshop.

Wiper blade replacement

Service setting for front windscreen wipers

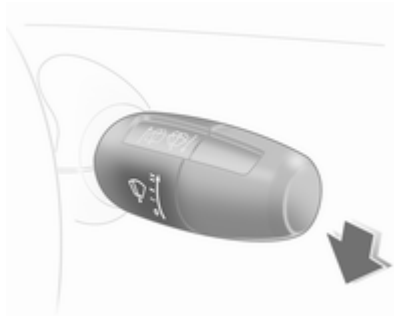

Switch off the ignition but do not remove ignition key or open driver's door.

Within 4 seconds, push the wiper lever down and release as soon as the wipers are vertical.

Wiper blades on the windscreen

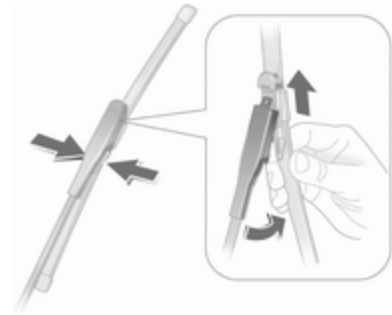

Lift the wiper arm, tilt wiper blade at a 90° to the wiper arm and remove to the side.

Wiper blade on the rear window

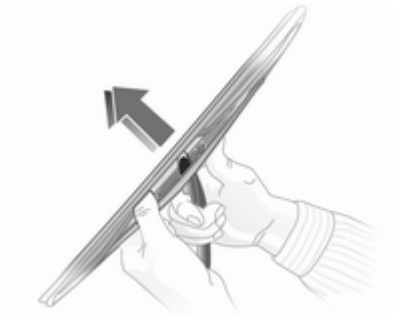

Lift wiper arm. Disengage wiper blade as shown in illustration and remove.

Attach the wiper blade slightly angled to the wiper arm and push until it engages.

Lower wiper arm carefully.

Bulb replacement

Switch off the ignition and switch off the relevant switch or close the doors.

Only hold a new bulb at the base! Do not touch the bulb glass with bare hands.

Use only the same bulb type for replacement.

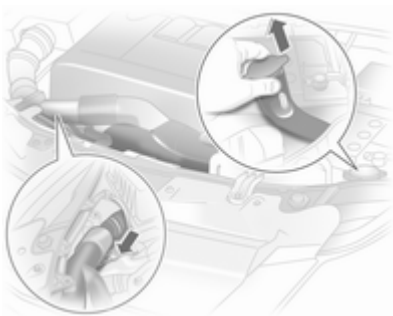

To replace bulbs on the right side of the engine compartment, detach the air hose from the air filter.

On OPC it is recommended to have the bulbs replaced by a workshop.

To replace the bulb on the left-hand side, remove fuse box cover ⇨ 164, and also remove windscreen washer system reservoir filler neck from above. Washer fluid may escape if the reservoir is full to the top.

Halogen headlights

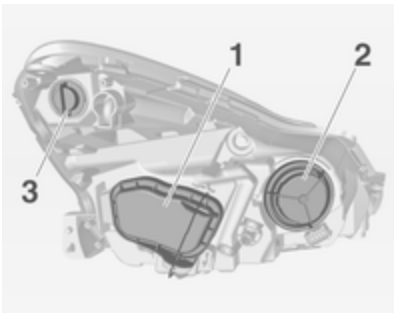

Headlights have separate systems for low beam **1** (outer bulb), high beam **2** (inner bulb) and daytime running light/side light **3**.

Low beam

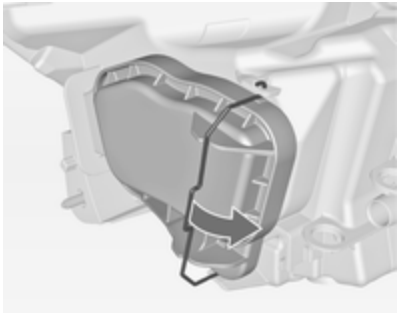

1. Disengage wire clip and remove protective cover **1**.

2. Press base to the side and remove bulb from reflector.

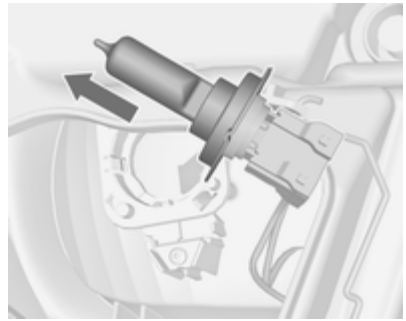

3. Detach plug connector from bulb.
4. Insert new bulb in reflector so that the locating tab of the bulb holder aligns with the reflector recess.
5. Engage bulb.
6. Attach connector to bulb.
7. Put on protective cover and engage wire clip.

High beam

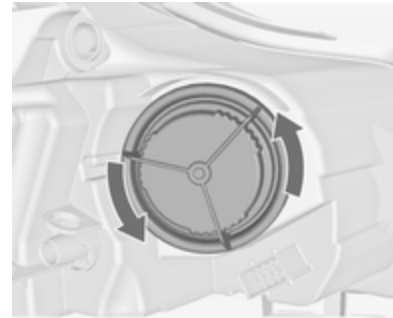

1. Rotate protective cover **2** anticlockwise and remove.
2. Detach wiring plug from bulb.

3. Disengage spring clip from retainer by moving and swivelling to the side.

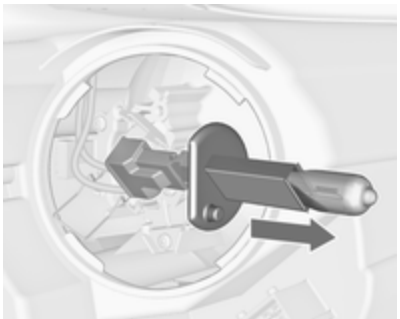

4. Remove bulb from reflector housing.
5. When installing the new bulb, insert lugs in the reflector recesses.
6. Install spring clip, plug connector onto bulb.
7. Install protective cover.

Daytime running light/Side light

1. Rotate bulb holder **3** anticlockwise to disengage.

   Withdraw sidelight bulb holder from reflector.

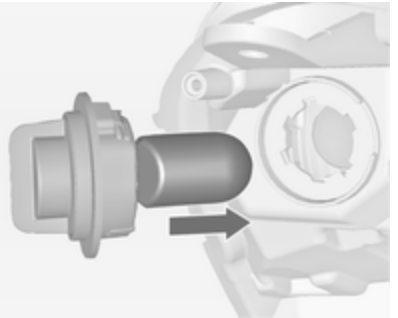

2. Remove bulb from socket, insert new bulb.
3. Insert bulb holder in reflector so that the locating tab of the bulb holder aligns with the reflector recess.
4. Rotate clockwise to engage.

Front turn signal light

Front turn signal lights are equipped with longlife bulbs. In case of change have bulb replaced by a workshop.

Adaptive forward lighting

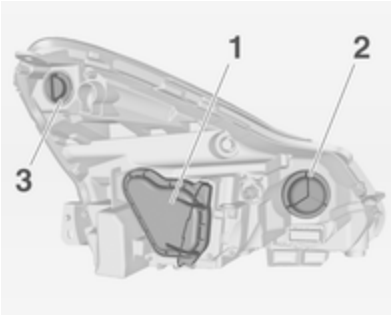

Headlights have separate systems for low and high beam **1** (outer bulb), cornering light **2** (inner bulb) and daytime running light/side light **3**.

Low/high beam

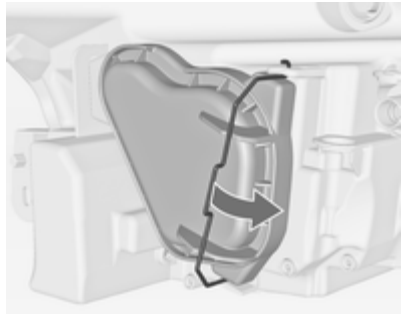

1. Disengage wire clip and remove protective cover **1**.

2. Rotate bulb holder anticlockwise to disengage.

   Withdraw bulb holder from reflector.

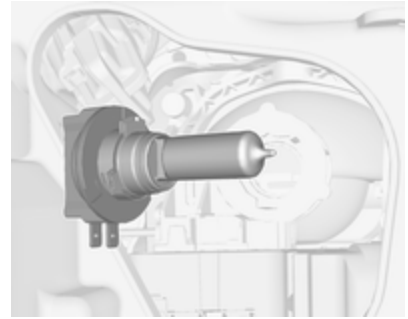

3. Insert new bulb in reflector so that the locating tab of the bulb holder aligns with the reflector recess.
4. Engage bulb holder by turning clockwise.
5. Put on protective cover and engage wire clip.

Daytime running light/Side light

1. Rotate bulb holder **3** anticlockwise to disengage.

   Withdraw bulb holder from reflector.

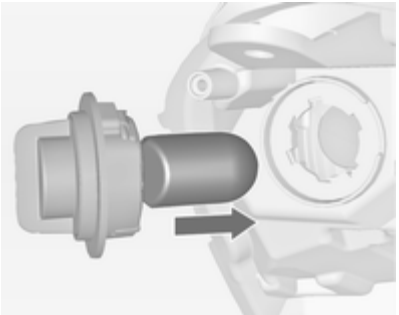

2. Remove bulb from socket, insert new bulb.
3. Insert bulb holder in reflector so that the locating tab of the bulb holder aligns with the reflector recess.
4. Rotate clockwise to engage.

Cornering light

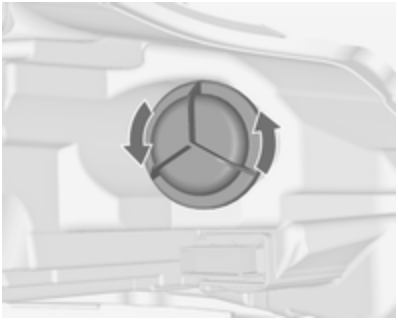

1. Rotate protective cover **2** anticlockwise and remove.

2. Detach wiring plug from bulb.

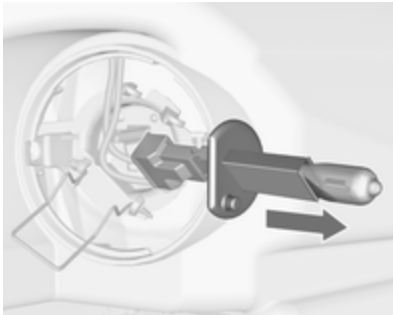

3. Disengage spring clip from retainer by moving and swivelling to the side.
4. Remove bulb from reflector housing.
5. When installing the new bulb, insert lugs in the reflector recesses.
6. Install spring clip, plug connector onto bulb.
7. Install protective cover.

Front turn signal light

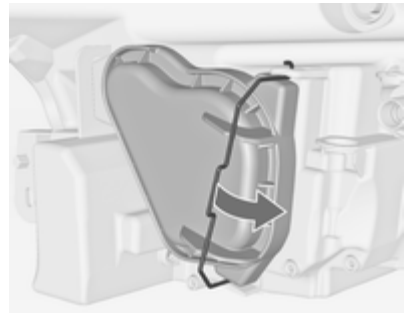

1. Disengage wire clip and remove protective cover **1**.

2. Rotate bulb holder anticlockwise to disengage.

   Withdraw bulb holder from reflector.

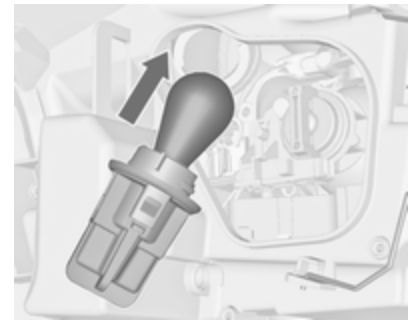

3. Push bulb into socket slightly, rotate anti-clockwise and remove.
4. Insert new bulb by slightly pressing and rotating.
5. Insert bulb holder in reflector and engage by turning clockwise.
6. Put on protective cover and engage wire clip.

Fog lights

The bulbs are accessible from the underside of the vehicle.

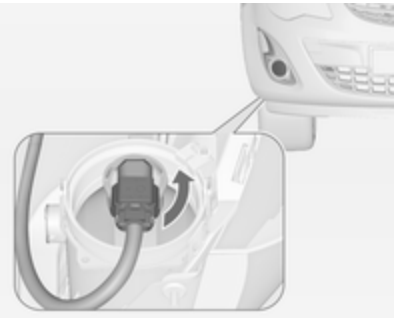

1. Turn the bulb holder anticlockwise and remove it from the reflector.

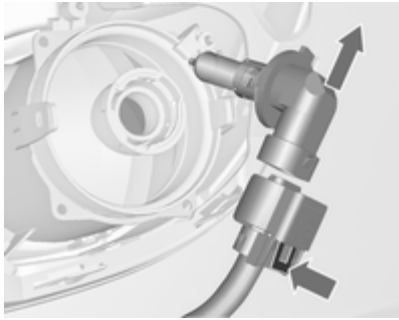

2. Disengage the bulb holder from the plug connector by pressing the retaining lug.
3. Remove and replace the bulb holder with bulb.
4. Attach the plug connector.
5. Insert the bulb holder into the reflector.
6. Turn the bulb holder clockwise and engage.

Tail lights

5-door passenger vehicle

1. Open side cover.

   When replacing bulbs on the right hand side, first remove the tools and the jack or the tyre repair kit, then remove the tool box.

2. Remove plug connector by pressing on bulb holder tab.
3. Hold bulb housing from the outside; unscrew two retaining nuts.

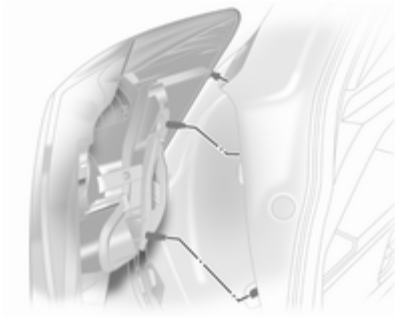

4. Detach bulb housing towards the rear.

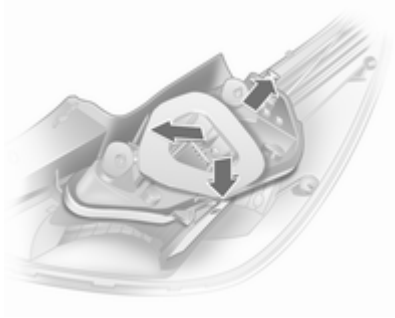

5. Gently press the three locking lugs on the outside of the bulb holder outwards and remove bulb holder.

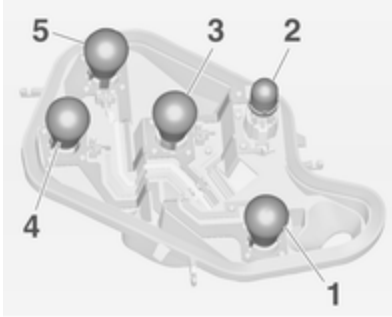

6. Push bulb into socket slightly, rotate anti-clockwise, remove and renew bulb.

   Rear fog light, may be only on one side (**1**)

   Reverse light (**2**)

   Turn signal light (**3**)

   Tail light/side light (**4**)

   Tail light/brake light (**5**)

7. Engage bulb holder in bulb housing, ensuring that it properly engages.

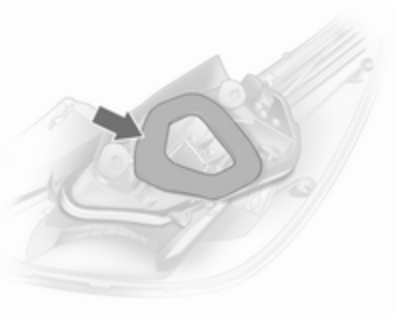

8. Ensure that the bulb holder seal is positioned as illustrated.

9. Insert bulb housing in vehicle body, tighten securing nuts by hand. Engage plug connector. Close cover.

After bulb replacement, check the tail lights for proper functionality: switch on the ignition, operate the brake, switch on the sidelights.

3-door passenger vehicle, van

1. Open side cover.

   When replacing bulbs on the right hand side, first remove the tools and the jack or the tyre repair kit, then remove the tool box.

2. Remove plug connector by pressing on bulb holder tab.
3. Hold bulb housing from the outside; unscrew two retaining nuts.

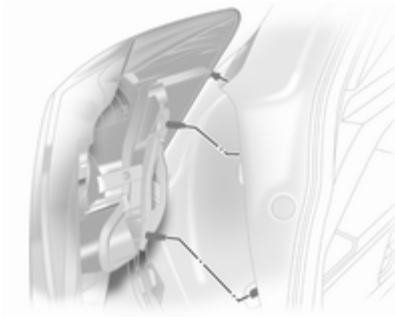

4. Remove tail light assembly.

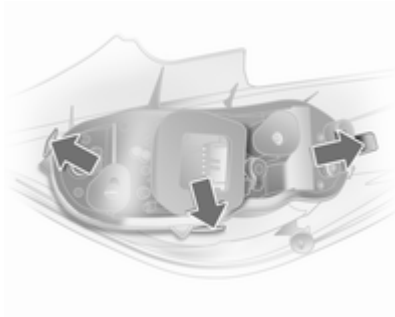

5. Gently press the three locking lugs on the outside of the bulb holder outwards and remove bulb holder.

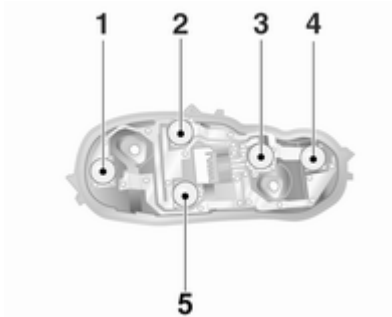

6. Push bulb into socket slightly, rotate anti-clockwise, remove and renew bulb.

   Reverse light (right side), rear fog light (left side) (**1**)

   Tail light (**2**)

   Turn signal light (**3**)

   Tail light/brake light (**4**)

   Tail light (**5**)

7. Engage bulb holder in bulb housing, ensuring that it properly engages.

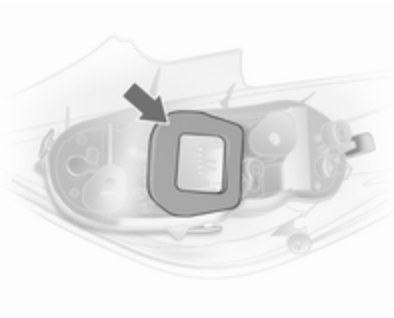

8. Ensure that the bulb holder seal is positioned as illustrated. Fit the round seal on the fastening bolt.
9. Insert bulb housing in vehicle body, and tighten securing nuts by hand. Engage plug connector. Close and lock cover.

After bulb replacement, check the tail lights for proper functionality: switch on the ignition, operate the brake, switch on the sidelights.

Side turn signal lights

Have bulbs replaced by a workshop.

Number plate light

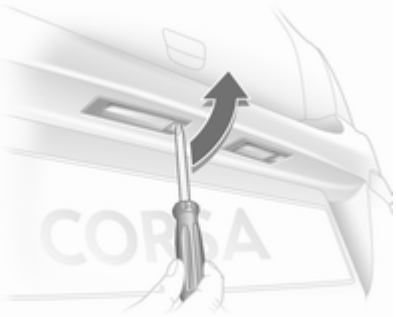

1. Insert screwdriver in bulb housing, press to the side and release spring.

2. Remove bulb housing downwards, taking care not to pull on the cable.
3. Lift flap and disconnect wiring plug from bulb holder.

4. Rotate bulb holder anti-clockwise to disengage.
5. Remove bulb from holder and renew bulb.
6. Insert bulb holder in bulb housing and rotate clockwise.
7. Connect wiring plug to bulb holder.
8. Insert and engage bulb housing.

Interior lights

Front courtesy light

1. Disengage and remove lens at the position located in the illustration using a screwdriver.
2. Remove bulb from socket.
3. Insert new bulb.
4. Mount lens and engage in position.

Front courtesy light, reading lights

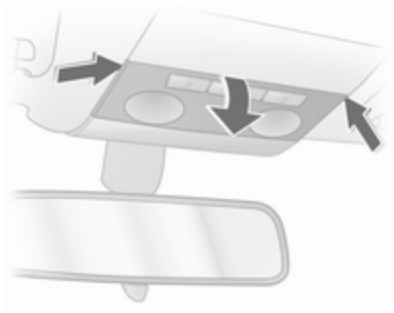

1. Disengage lens, press it downward slightly and remove at a downward angle.
2. Remove bulb and renew.
3. Engage lens.

Rear courtesy light and reading lights

Have bulbs replaced by a workshop.

Glovebox light, foot well light

1. Prise the lamp out with a screwdriver.

2. Press bulb slightly towards spring clip and remove.
3. Insert new bulb.
4. Install lamp.

Electrical system

Fuses

Data on the replacement fuse must match the data on the defective fuse.

There are three fuse boxes in the vehicle:

- in the front left of the engine compartment,
- in the interior behind the light switch, or, in right-hand drive vehicles, behind the glovebox,
- behind a cover on the left side of the load compartment.

Before replacing a fuse, turn off the respective switch and the ignition.

A blown fuse can be recognised by its melted wire. Do not replace the fuse until the cause of the fault has been remedied.

Some functions are protected by several fuses.

Fuses may also be inserted without existence of a function.

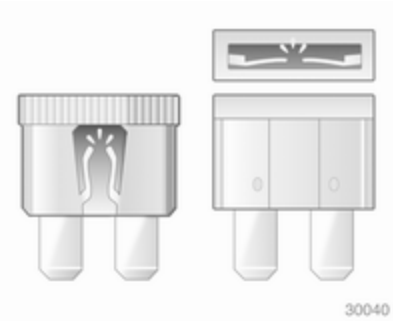

Engine compartment fuse box

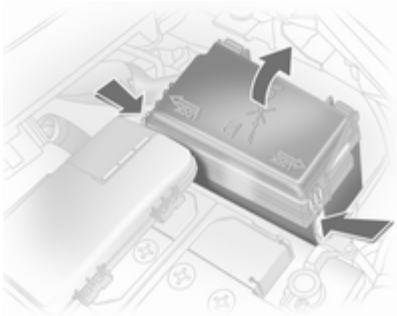

The fuse box is in the front left of the engine compartment.

Disengage the cover, lift it upwards and remove.

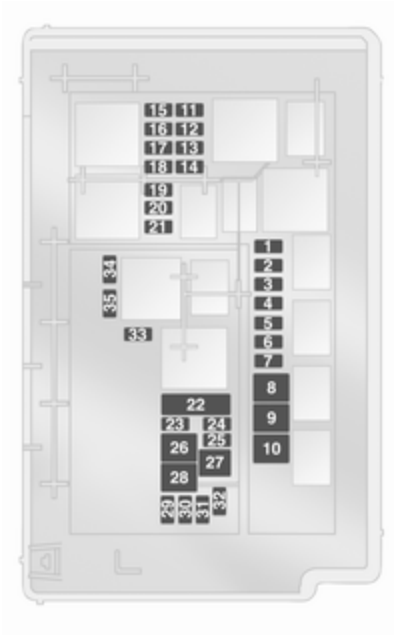

No.	Circuit
1	Starter
2	Air conditioning system
3	Diesel fuel filter heater
4	Horn
5	Manual transmission automated, automatic transmission
6	Engine control unit
7	Fog lights
8	Engine cooling
9	Engine cooling
10	Automated manual transmission
11	Glow plugs, ignition system
12	Headlight range adjustment, Adaptive forward lighting
13	Air conditioning system
14	Automated manual transmission
15	High beam (right)
16	High beam (left)
17	Main relay
18	Engine control unit
19	Airbags
20	Main relay
21	Main relay
22	Central control unit
23	Tyre repair kit
24	Fuel pump
25	ABS
26	Heated rear window
27	ABS
28	Interior fan
29	Cigarette lighter
30	Air conditioning system
31	Power window (left)
32	Power window (right)
33	Heated exterior mirrors
34	–
35	–

Instrument panel fuse box

The fuse box is behind the the light switch. Pull the top edge of the panel and fold down.

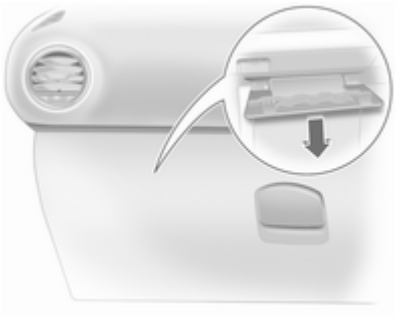

In right-hand drive vehicles, the fuse box is located behind a cover in the glovebox. Open the glovebox and remove the cover. To close, first put on the cover, then lock it into position.

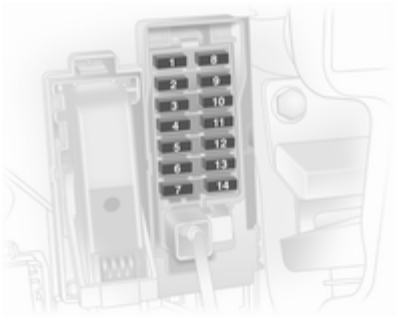

No.	Circuit
1	–
2	Instruments, info display
3	Radio
4	Ignition switch
5	Windscreen washer system
6	Central locking system, tailgate
7	Central locking system
8	–
9	Courtesy light
10	Electrical power steering
11	Light switch, brake light
12	ABS, brake light
13	Heated steering wheel
14	Park assist, rain sensor, interior mirror

Load compartment fuse box

The fuse box is on the left side of the load compartment behind a cover. Remove the cover.

No.	Circuit
1	Adaptive forward lighting
2	–
3	Seat heater (left)
4	Seat heater (right)
5	–
6	–
7	–
8	Rear carrier system, towing equipment
9	–
10	–
11	–
12	–
13	–
14	–
15	Rear carrier system, towing equipment
16	–
17	Sunroof

Vehicle tools

Tools

To open the compartment, disengage the cover and open it.

Vehicles with spare wheel

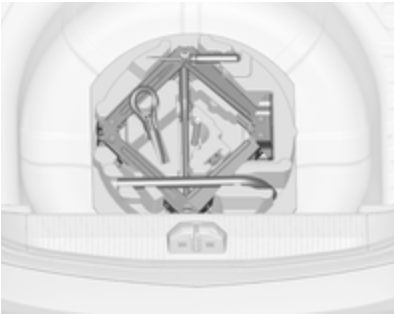

Variant 1: The jack and the vehicle tools are in the load compartment underneath the spare wheel. A label on the jack indicates the vehicles for which the jack can be used.

Variant 2: The jack and the vehicle tools are in the right-hand compartment in the load compartment.

Vehicles with tyre repair kit

The vehicle tools are in the right-hand compartment in the load compartment, together with the tyre repair kit.

Wheels and tyres

Tyre condition, wheel condition

Drive over edges slowly and at right angles if possible. Driving over sharp edges can cause tyre and wheel damage. Do not trap tyres on the kerb when parking.

Regularly check the wheels for damage. Seek the assistance of a workshop in the event of damage or unusual wear.

Tyres

Tyres of size 185/60 R 15 are only approved as winter tyres.

Tyres of size 185/65 R 15 are only approved as winter tyres on vehicles with a sports chassis. We recommend that you contact a workshop in order to find out whether your vehicle is equipped with a sports chassis.

Winter tyres

Winter tyres improve driving safety at temperatures below 7 °C and should therefore be fitted on all wheels.

Tyres of size 185/60 R 15, 185/65 R 15, 185/70 R 14, 195/55 R 16 and 205/50 R 16 are permitted as winter tyres.

Tyres of size 195/60 R 15, 215/45 R 17[1] and 225/35 R 18 must not be used as winter tyres.

Run-flat winter tyres may only be used on factory approved alloy wheels.

In accordance with country-specific regulations, affix the speed sticker in the driver's field of view.

Tyre designations

E.g. **185/65 R 15 88 T**

185 = Tyre width, mm
65 = Cross-section ratio (tyre height to tyre width), %
R = Belt type: Radial
RF = Type: RunFlat
15 = Wheel diameter, inches
88 = Load index e.g. 88 is equivalent to 567 kg
T = Speed code letter

Speed code letter:

Q = up to 160 km/h
S = up to 180 km/h
T = up to 190 km/h
H = up to 210 km/h
V = up to 240 km/h
W = up to 270 km/h

Tyre pressure

Check the pressure of cold tyres at least every 14 days and before any long journey. Do not forget the spare wheel. This also applies to vehicles with tyre pressure monitoring system.

Remove the valve cap key from the fuel filler flap and use it to unscrew the valve cap.

[1] Corsa OPC: Permitted as winter tyres without tyre chains.

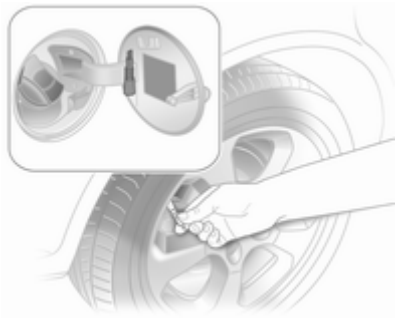

Tyre pressure ⇨ 209 and on the label on the inside of the fuel filler flap or on the front right door frame.

The tyre pressure data refers to cold tyres. It applies to summer and winter tyres.

Always inflate the spare tyre to the pressure specified for full load.

The ECO tyre pressure serves to achieve the smallest amount of fuel consumption possible.

Incorrect tyre pressures will impair safety, vehicle handling, comfort and fuel economy and will increase tyre wear.

⚠ Warning

If the pressure is too low, this can result in considerable tyre warm-up and internal damage, leading to tread separation and even to tyre blow-out at high speeds.

Tyre deflation detection system

The tyre deflation detection system continually checks the rotation speed of all four tyres.

If a tyre loses pressure the control indicator (!) illuminates red. Stop immediately and check tyre pressure.

Control indicator (!) ⇨ 82.

System initialisation

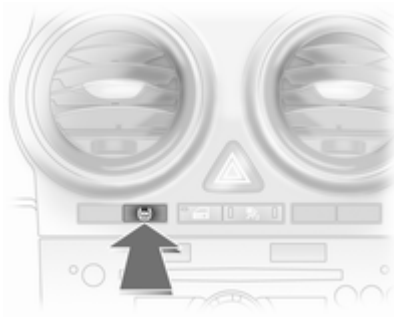

After tyre pressure correction or wheel change, the system must be initiated: Switch on the ignition, press and hold the **DDS** button for approx. 4 seconds, control indicator (!) flashes three times.

Tread depth

Check tread depth at regular intervals.

Tyres should be replaced for safety reasons at a tread depth of 2-3 mm (4 mm for winter tyres).

For safety reasons it is recommended that the tread depth of the wheels on one axle should not vary by more than 2 mm.

The legally permissible minimum tread depth (1.6 mm) has been reached when the tread has worn down as far as one of the tread wear indicators (TWI). Their position is indicated by markings on the sidewall.

If there is more wear at the front than the rear, swap round front wheels and rear wheels periodically. Ensure that the direction of rotation of the wheels remains the same.

Tyres age, even if they are not used. We recommend tyre replacement every 6 years.

Changing tyre and wheel size

If tyres of a different size than those fitted at the factory are used, it may be necessary to reprogram the speedometer and make other vehicle modifications.

After converting to a different tyre size, have the label with tyre pressures replaced.

⚠ Warning

Use of unsuitable tyres or wheels may lead to accidents and will invalidate the vehicle type approval.

Wheel covers

Wheel covers and tyres that are factory approved for the respective vehicle and comply with all of the relevant wheel and tyre combination requirements must be used.

If the wheel covers and tyres used are not factory approved, the tyres must not have a rim protection ridge.

Wheel covers must not impair brake cooling.

⚠ Warning

Use of unsuitable tyres or wheel covers could lead to sudden pressure loss and thereby accidents.

Tyre chains

Tyre chains are only permitted on the front wheels.

Always use fine mesh chains that add no more than 10 mm to the tyre tread and the inboard sides (including chain lock).

⚠Warning
Damage may lead to tyre blowout.

Tyre chains are just permitted on tyre sizes 175/70 R 14, 185/60 R 15, 185/65 R 15[2], 185/70 R 14, 195/55 R 16[2] and 205/50 R16.

Tyre chains are only approved on tyres of size 185/60 R 15 on vehicles with a sports chassis. We recommend that you contact a workshop in order to find out whether your vehicle is equipped with a sports chassis.

Tyre chains are not permitted on tyres sizes 195/60 R 15, 215/45 R 17 and 225/35 R18.

The use of tyre chains is not permitted on the temporary spare wheel.

Tyre repair kit

Minor damage to the tyre tread can be repaired with the tyre repair kit.

Do not remove foreign bodies from the tyres.

Tyre damage exceeding 4 mm or that is at tyre's side wall near the rim cannot be repaired with the tyre repair kit.

⚠Warning
Do not drive faster than 80 km/h. Do not use for a lengthy period. Steering and handling may be affected.

If you have a flat tyre:

Apply the parking brake and engage first gear, reverse gear or **P**.

The tyre repair kit is in the stowage compartment in the load compartment.

[2] Not permitted when used as winter tyres.

To open the compartment, disengage the cover and open it.

1. Take the sealant bottle and bracket with air hose from the insert.

2. Detach air hose from bracket and screw onto sealant bottle connection.

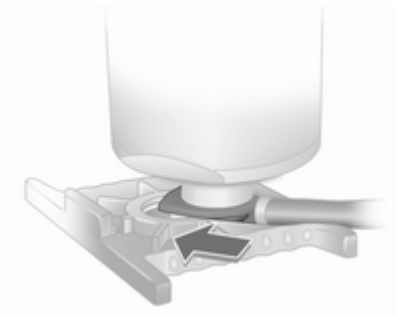

3. Position the sealant bottle on the bracket. Make sure that the bottle does not fall.

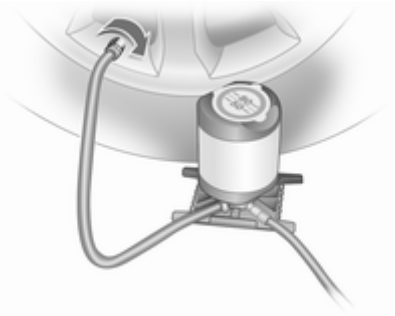

4. Unscrew valve cap from defective tyre.
5. Screw tyre inflation hose to valve.
6. Screw air hose onto compressor connection.
7. Switch on ignition.

   To avoid discharging the battery, we recommend running the engine.

8. Press on/off switch on the compressor. The tyre is filled with sealant.
9. The compressor pressure gauge briefly indicates up to 6 bar whilst the sealant bottle is emptying (approx. 30 seconds). Then the pressure starts to drop.
10. All of the sealant is pumped into the tyre. Then the tyre is inflated.
11. The prescribed tyre pressure should be obtained within 10 minutes. Tyre pressure ⇨ 209. When the correct pressure is obtained, switch off the compressor by pressing the on/off switch again.

    If the prescribed tyre pressure is not obtained within 10 minutes, remove the tyre repair kit. Move the vehicle one tyre rotation. Reattach the tyre repair kit and continue the filling procedure for 10 minutes. If the prescribed tyre pressure is still not obtained, the tyre is too badly damaged. Seek the assistance of a workshop.

    Release excess tyre pressure using the ━ button.

    Do not run the compressor longer than 10 minutes.
12. Push catch on bracket to remove sealant bottle from bracket. Screw the tyre inflation hose to the free connection of the sealant bottle. This prevents sealant from escaping. Stow tyre repair kit in load compartment.
13. Remove any excess sealant using a cloth.
14. Take the label indicating maximum permitted speed from the sealant bottle and affix in the driver's field of view.
15. Continue driving immediately so that sealant is evenly distributed in the tyre. After driving approx. 10 km (but no more than 10 minutes), stop and check tyre pressure. Screw compressor air hose directly onto tyre valve and compressor when doing this.

    If tyre pressure is more than 1.3 bar, set it to the correct value. Repeat the procedure until there is no more loss of pressure.

    If the tyre pressure has fallen below 1.3 bar, the vehicle must not be used. Seek the assistance of a workshop.
16. Stow away tyre repair kit in load compartment.

Note
The driving characteristics of the repaired tyre is severely affected, therefore have this tyre replaced.

If unusual noise is heard or the compressor becomes hot, turn compressor off for at least 30 minutes.

The built-in safety valve opens at a pressure of 7 bar.

Note the expiry date of the kit. After this date its sealing capability is no longer guaranteed. Pay attention to storage information on sealant bottle.

Replace the used sealant bottle. Dispose of the bottle as prescribed by applicable laws.

The compressor and sealant can be used from approx. -30 °C.

The adapters supplied can be used to pump up other items e.g. footballs, air mattresses, inflatable dinghies etc. They are located on the underside of the compressor. To remove, screw on compressor air hose and withdraw adapter.

Wheel changing

Some vehicles are equipped with a tyre repair kit instead of a spare wheel ⇨ 171.

Make the following preparations and observe the following information:

- Park the vehicle on a level, firm and non-skid surface. The front wheels must be in the straight-ahead position.
- Apply the parking brake and engage first gear, reverse gear or **P**.
- Remove the spare wheel ⇨ 176.
- Never change more than one wheel at once.
- Use the jack only to change wheels in case of puncture, not for seasonal winter or summer tyre change.
- If the ground on which the vehicle is standing is soft, a solid board (max. 1 cm thick) should be placed under the jack.
- No people or animals may be in the vehicle when it is jacked-up.
- Never crawl under a jacked-up vehicle.
- Do not start the vehicle when it is raised on the jack.
- Before screwing in the wheel bolts, clean them and lightly coat the taper of each wheel bolt with commercially available grease.

1. Pull off the wheel cover with the hook. Vehicle tools ⇨ 166.

   For wheel covers with visible wheel bolts: The cover can remain on the wheel. Do not remove the retaining rings on the wheel bolts.

Alloy wheels: Disengage wheel bolt caps with a screwdriver and remove. To protect the wheel, place a soft cloth between the screwdriver and the alloy wheel.

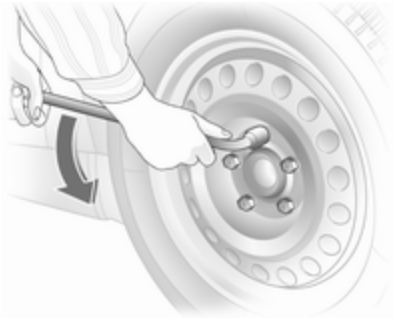

2. Install the wheel wrench ensuring that it locates securely and slacken each bolt by half a turn.

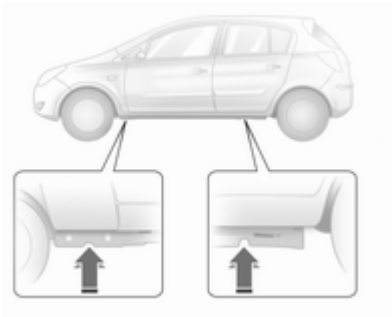

3. Ensure the jack is positioned correctly with the vehicle jacking points.

   With versions of the Corsa OPC with sill panelling or retrofitted sill panelling no jack must be used. The vehicle may be damaged.

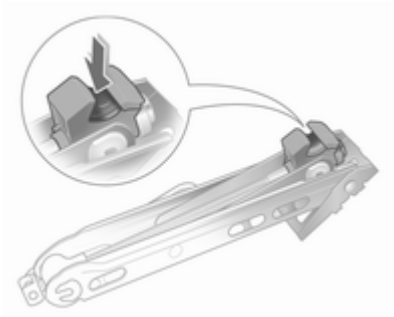

4. Set the jack to the necessary height. Position it directly below the jacking point in a manner that prevents it from slipping.

   Variant 1:

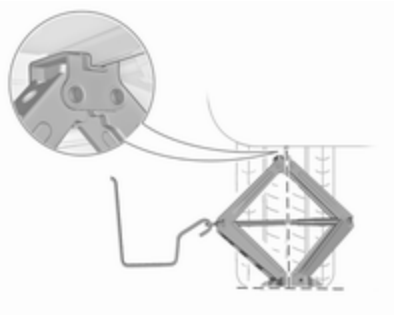

Variant 2:

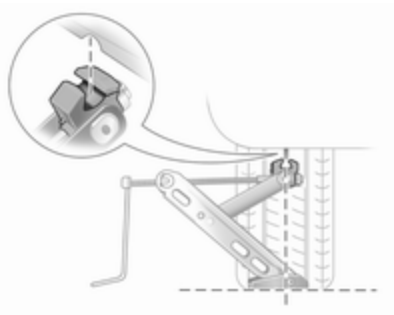

Attach jack handle and with the jack correctly aligned rotate handle until wheel is clear of the ground.

5. Unscrew the wheel bolts.
6. Change the wheel.
7. Screw in the wheel bolts.
8. Lower vehicle.
9. Install the wheel wrench ensuring that it locates securely and tighten each bolt in a crosswise sequence. Tightening torque is 110 Nm.
10. Align the valve hole in the wheel cover with the tyre valve before installing.

    Install wheel bolt caps.
11. Stow the replaced wheel ⇨ 171 and the vehicle tools ⇨ 166.
12. Check the tyre pressure of the installed tyre and also the wheel bolt torque as soon as possible.

Have the defective tyre renewed or repaired.

Spare wheel

Some vehicles are equipped with a tyre repair kit instead of a spare wheel.

The spare wheel can be classified as a temporary spare wheel depending on the size compared to the other mounted wheels and country regulations.

The spare wheel has a steel rim.

Use of a spare wheel that is smaller than the other wheels or together with winter tyres could affect driveability. Have the defective tyre replaced as soon as possible.

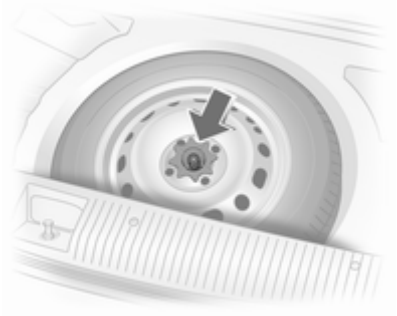

The spare wheel is located in the load compartment beneath the floor covering. It is secured with a wing nut.

In the Corsa van the spare wheel is screwed down together with the floor cover. To lift the cover, undo the plastic nut. There is a spacer between the spare wheel and the floor cover.

The spare wheel well is not designed for all permitted tyre sizes. If a wheel wider than the spare must be stowed in the spare wheel well after changing wheels, the floor cover will be resting against the protruding wheel. In vans the spacer can be omitted if necessary, or the wheel can be bolted down without the floor cover.

Fitting a double load-bay floor in this case in the upper position ⇨ 65.

To remove, lift spare wheel, move to a vertical position and remove from above.

Temporary spare wheel

Use of the temporary spare wheel could affect driveability. Have the defective tyre renewed or repaired as soon as possible.

Only mount one temporary spare wheel. Do not drive faster than 80 km/h. Take curves slowly. Do not use for a long period of time.

If your vehicle gets a flat tyre on the rear while towing another vehicle, mount the temporary spare wheel in the front and the full tyre in the rear.

Tyre chains ⇨ 171.

Directional tyres

Fit directional tyres such that they roll in the direction of travel. The rolling direction is indicated by a symbol (e.g. an arrow) on the sidewall.

The following applies to tyres fitted opposing the rolling direction:

- Driveability may be affected. Have the defective tyre renewed or repaired as soon as possible.
- Drive particularly carefully on wet and snow-covered road surfaces.

Jump starting

Do not start with quick charger.

A vehicle with a discharged battery can be started using jump leads and the battery of another vehicle.

⚠ Warning

Be extremely careful when starting with jump leads. Any deviation from the following instructions can lead to injuries or damage caused by battery explosion or damage to the electrical systems of both vehicles.

⚠ Warning

Avoid contact of the battery with eyes, skin, fabrics and painted surfaces. The fluid contains sulphuric acid which can cause injuries and damage in the event of direct contact.

Note
Any deviation from the instructions given in this paragraph may lead to a temporary deactivation of the stop-start system.

- Never expose the battery to naked flames or sparks.
- A discharged battery can already freeze at temperatures of 0 °C. Defrost the frozen battery before connecting jump leads.
- Avoid contact with eyes, skin, fabrics and painted surfaces. The fluid contains sulphuric acid which can cause injuries and damage in the event of direct contact.
- Wear eye protection and protective clothing when handling a battery.
- Use a booster battery with the same voltage (12 Volts). Its capacity (Ah) must not be much less than that of the discharged battery.
- Use jump leads with insulated terminals and a cross section of at least 16 mm^2 (25 mm^2 for diesel engines).
- Do not disconnect the discharged battery from the vehicle.
- Switch off all unnecessary electrical consumers.
- Do not lean over the battery during jump starting.
- Do not allow the terminals of one lead to touch those of the other lead.
- The vehicles must not come into contact with each other during the jump starting process.
- Apply the parking brake, transmission in neutral, automatic transmission in **P**.

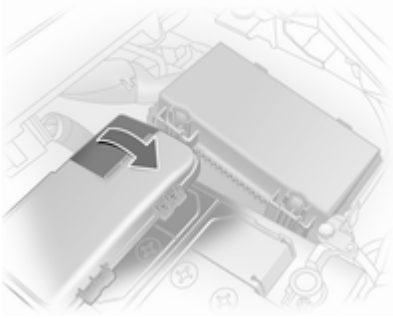

Lead connection order:

1. Connect the red lead to the positive terminal of the booster battery.
2. Connect the other end of the red lead to the positive terminal of the discharged battery. The positive terminal has a cover cap on it. Undo the cap to access the positive terminal.
3. Connect the black lead to the negative terminal of the booster battery.
4. Connect the other end of the black lead to a vehicle grounding point, such as the engine block or an engine mounting bolt. Connect as far away from the discharged battery as possible, however at least 60 cm.

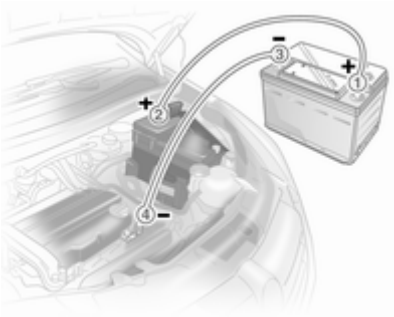

Position the leads so that they cannot catch on rotating parts in the engine compartment.

To start the engine:

1. Start the engine of the vehicle providing the jump.
2. After 5 minutes, start the other engine. Start attempts should be made for no longer than 15 seconds at an interval of 1 minute.
3. Allow both engines to idle for approx. 3 minutes with the leads connected.
4. Switch on electrical consumers (e.g. headlights, heated rear window) of the vehicle receiving the jump start.
5. Reverse above sequence exactly when removing leads.
6. Close the cover over the positive pole.

Towing

Towing the vehicle

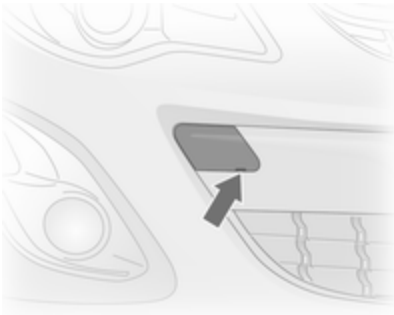

Insert a screwdriver in the slot at the lower bend of the cap. Release the cap by carefully moving the screwdriver downwards.

Corsa OPC: Disengage and remove cap by pressing on the lower part of the cap.

The towing eye is stowed with the vehicle tools ⇨ 166. The towing eye is located in a recess.

Screw in the towing eye as far as it will go until it stops in a horizontal position.

Attach a tow rope – or better still a tow rod – to the towing eye.

The towing eye must only be used for towing and not recovering the vehicle.

Switch on ignition to release steering wheel lock and to permit operation of brake lights, horn and windscreen wiper.

Transmission in neutral.

Caution
Drive slowly. Do not drive jerkily. Excessive tractive force can damage the vehicle.

When the engine is not running, considerably more force is needed to brake and steer.

To prevent the entry of exhaust gases from the towing vehicle, switch on the air recirculation and close the windows.

Vehicles with automatic transmission must be towed facing forwards, not faster than 80 km/h nor further than 100 km. In all other cases and when the transmission is defective, the front axle must be raised off the ground.

Seek the assistance of a workshop.

Manual transmission automated ⇨ 122.

After towing, unscrew the towing eye and refit the cover.

Switch on the hazard warning flashers on both vehicles.

Towing another vehicle

Disengage cap at bottom and remove downwards.

The towing eye is stowed with the vehicle tools ⇨ 166.

Screw in the towing eye as far as it will go until it stops in a horizontal position.

The lashing eye at the rear underneath the vehicle must never be used as a towing eye.

Attach a tow rope – or better still a tow rod – to the towing eye.

The towing eye must only be used for towing and not recovering a vehicle.

Caution
Drive slowly. Do not drive jerkily. Excessive tractive force can damage the vehicle.

After towing, unscrew the towing eye and refit the cover.

Appearance care

Exterior care

Locks

The locks are lubricated at the factory using a high quality lock cylinder grease. Use de-icing agent only when absolutely necessary, as this has a degreasing effect and impairs lock function. After using de-icing agent, have the locks regreased by a workshop.

Washing

The paintwork of your vehicle is exposed to environmental influences. Wash and wax your vehicle regularly. When using automatic car washes, select a programme that includes waxing.

Bird droppings, dead insects, resin, pollen and the like should be cleaned off immediately, as they contain aggressive constituents which can cause paint damage.

If using a car wash, comply with the car wash manufacturer's instructions. The windscreen wipers and rear window wiper must be switched off. Remove antenna and external accessories such as roof racks etc.

If you wash your vehicle by hand, make sure that the insides of the wheel housings are also thoroughly rinsed out.

Clean edges and folds on opened doors and the bonnet as well as the areas they cover.

Caution
Always use a cleaning agent with a pH value of 4 to 9. Do not use cleaning agents on hot surfaces.

Have the door hinges of all doors greased by a workshop.

Do not clean the engine compartment with a steam-jet or high-pressure jet cleaner.

Thoroughly rinse and leather-off the vehicle. Rinse leather frequently. Use separate leathers for painted and glass surfaces: remnants of wax on the windows will impair vision.

Do not use hard objects to remove spots of tar. Use tar removal spray on painted surfaces.

Exterior lights

Headlight and other light covers are made of plastic. Do not use any abrasive or caustic agents, do not use an ice scraper, and do not clean them dry.

Polishing and waxing

Wax the vehicle regularly (at the latest when water no longer beads). Otherwise, the paintwork will dry out.

Polishing is necessary only if the paint has become dull or if solid deposits have become attached to it.

Paintwork polish with silicone forms a protective film, making waxing unnecessary.

Plastic body parts must not be treated with wax or polishing agents.

Windows and windscreen wiper blades

Use a soft lint-free cloth or chamois leather together with window cleaner and insect remover.

When cleaning the rear window, make sure the heating element inside is not damaged.

For mechanical removal of ice, use a sharp-edged ice scraper. Press the scraper firmly against the glass so that no dirt can get under it and scratch the glass.

Clean smearing wiper blades with a soft cloth and window cleaner.

Sunroof

Never clean with solvents or abrasive agents, fuels, aggressive media (e.g. paint cleaner, acetone-containing solutions etc.), acidic or highly alkaline media or abrasive pads. Do not apply wax or polishing agents to the sunroof.

Wheels and tyres

Do not use high-pressure jet cleaners.

Clean rims with a pH-neutral wheel cleaner.

Rims are painted and can be treated with the same agents as the body.

Paintwork damage

Rectify minor paintwork damage with a touch-up pen before rust forms. Have more extensive damage or rust areas repaired by a workshop.

Underbody

Some areas of the vehicle underbody have a PVC undercoating while other critical areas have a durable protective wax coating.

After the underbody is washed, check the underbody and have it waxed if necessary.

Bitumen/rubber materials could damage the PVC coating. Have underbody work carried out by a workshop.

Before and after winter, wash the underbody and have the protective wax coating checked.

Liquid gas system

⚠ Danger

Liquid gas is heavier than air and can collect in sink points.

Take care when performing work at the underbody in a pit.

For painting work and when using a drying booth at a temperature above 60 °C, the liquid gas tank must be removed.

Do not make any modifications to the liquid gas system.

Towing equipment

Do not clean the coupling ball bar with a steam-jet or high-pressure jet cleaner.

Rear carrier system

Clean the rear carrier system with a steam-jet or high-pressure jet cleaner at least once a year.

Operate the rear carrier system periodically if not in regular use, in particular during winter.

Interior care

Interior and upholstery

Only clean the vehicle interior, including the instrument panel fascia and panelling, with a dry cloth or interior cleaner.

Clean the leather upholstery with clear water and a soft cloth. In case of heavy soiling, use leather care.

The instrument cluster and the displays should only be cleaned using a soft damp cloth.

Clean fabric upholstery with a vacuum cleaner and brush. Remove stains with an upholstery cleaner.

Clothing fabrics may not be colourfast. This could cause visible discolourations, especially on light-coloured upholstery. Removable stains and discolourations should be cleaned as soon as possible.

Clean seat belts with lukewarm water or interior cleaner.

Caution

Close Velcro fasteners as open Velcro fasteners on clothing could damage seat upholstery.

The same applies to clothing with sharp-edged objects, like zips or belts or studded jeans.

Plastic and rubber parts

Plastic and rubber parts can be cleaned with the same cleaner as used to clean the body. Use interior cleaner if necessary. Do not use any other agent. Avoid solvents and petrol in particular. Do not use high-pressure jet cleaners.

Service and maintenance

General information 185
Recommended fluids, lubricants and parts 186

General information

Service information

In order to ensure economical and safe vehicle operation and to maintain the value of your vehicle, it is of vital importance that all maintenance work is carried out at the proper intervals as specified.

The detailed, up-to-date service schedule for your vehicle is available at the workshop.

European service intervals

Service is due every 30000 km or 1 year, whichever occurs first.

The European schedule is valid for the following countries:

Andorra, Austria, Belgium, Bosnia-Herzegovina, Bulgaria, Croatia, Cyprus, Czech Republic, Denmark, Estonia, Finland, France, Germany, Greece, Greenland, Hungary, Iceland, Ireland, Israel, Italy, Latvia, Lithuania, Luxembourg, Macedonia, Malta, Montenegro, Netherlands, Norway, Poland, Portugal, Romania, Slovakia, Slovenia, Spain, Sweden, Switzerland, United Kingdom.

International service intervals

Service is due every 15000 km or 1 year, whichever occurs first.

The international service intervals are valid for the countries which are not listed at the european service intervals.

Confirmations

Confirmation of service is recorded in the Service and Warranty Booklet. The date and mileage is completed with the stamp and signature of the servicing workshop.

Make sure that the Service and Warranty Booklet is completed correctly as continuous proof of service is essential if any warranty or goodwill claims are to be met, and is also a benefit when selling the vehicle.

Fixed service interval

When service is due, **InSP** appears in the odometer display for approximately 10 seconds when the ignition is switched on. Have the next service performed by a workshop within one week or 500 km (whichever occurs first).

Flexible service interval

The service interval is based on several parameters depending on usage and calculated using these parameters.

If the remaining distance is less than 1500 km, **InSP** is displayed with a remaining distance of 1000 km when the ignition is switched on and off. If less than 1000 km remain, **InSP** is displayed for several seconds. Have the next service performed by a workshop within one week or 500 km (whichever occurs first).

Display of remaining distance:

1. Switch off ignition.
2. Briefly press the trip odometer reset button. The odometer reading is shown.
3. Press and hold the reset button for approx. 2 seconds. **InSP** and the remaining distance are displayed.

Recommended fluids, lubricants and parts

Recommended fluids and lubricants

Only use products that have been tested and approved. Damage resulting from the use of non-approved materials will not be covered by the warranty.

⚠ Warning

Operating materials are hazardous and could be poisonous. Handle with care. Pay attention to information given on the containers.

Engine oil

Engine oil is identified by its quality and its viscosity. Quality is more important than viscosity when selecting which engine oil to use. The oil quality ensures e.g. engine cleanliness, wear protection and oil

aging control, whereas viscosity grade gives information on the oil's thickness over a temperature range.

Dexos is the newest engine oil quality that provides optimum protection for gasoline and diesel engines. If it is unavailable, engine oils of other listed qualities have to be used. Recommendations for gasoline engines are also valid for Compressed Natural Gas (CNG), Liquified Petroleum Gas (LPG) and Ethanol (E85) fuelled engines.

Select the appropriate engine oil based on its quality and on the minimum ambient temperature ⇨ 191.

Topping up engine oil

Engine oils of different manufacturers and brands can be mixed as long as they comply with the required engine oil quality and viscosity.

Use of engine oil with only ACEA A1/B1 or only A5/B5 quality is prohibited, since it can cause long-term engine damage under certain operating conditions.

Select the appropriate engine oil based on its quality and on the minimum ambient temperature ⇨ 191.

Additional engine oil additives

The use of additional engine oil additives could cause damage and invalidate the warranty.

Engine oil viscosity grades

The SAE viscosity grade gives information of the thickness of the oil.

Multigrade oil is indicated by two figures, e.g. SAE 5W-30. The first figure, followed by a W, indicates the low temperature viscosity and the second figure the high temperature viscosity.

Select the appropriate viscosity grade depending on the minimum ambient temperature ⇨ 191.

All of the recommended viscosity grades are suitable for high ambient temperatures.

Coolant and antifreeze

Use only silicate-free long life coolant (LLC) antifreeze.

The system is factory filled with coolant designed for excellent corrosion protection and frost protection down to approx. -28 °C. This concentration should be maintained all year round. The use of additional coolant additives that intend to give additional corrosion protection or seal against minor leaks can cause function problems. Liability for consequences resulting from the use of additional coolant additives will be rejected.

Brake and clutch fluid

Only use high-performance brake fluid approved for the vehicle, consult a workshop.

Over time, brake fluid absorbs moisture which will reduce braking effectiveness. The brake fluid should therefore be replaced at the specified interval.

Brake fluid should be stored in a sealed container to avoid water absorption.

Ensure brake fluid does not become contaminated.

Technical data

Vehicle identification 189
Vehicle data 191

Vehicle identification

Vehicle Identification Number

The Vehicle Identification Number is stamped on the identification plate and on the floor pan, under the floor covering, visible under a cover.

The Vehicle Identification Number may be embossed on the instrument panel visible through the windscreen.

Identification plate

The identification plate is located on the front right door frame.

Information on identification plate:

1 = Manufacturer
2 = Type approval number
3 = Vehicle Identification Number
4 = Permissible gross vehicle weight rating in kg
5 = Permissible gross train weight in kg
6 = Maximum permissible front axle load in kg
7 = Maximum permissible rear axle load in kg
8 = Vehicle-specific or country specific data

The combined total of front and rear axle loads must not exceed the permissible gross vehicle weight. For example, if the front axle is bearing its maximum permissible load, the rear axle can only bear a load that is equal to the gross vehicle weight minus the front axle load.

The technical data is determined in accordance with European Community standards. We reserve the right to make modifications.

Specifications in the vehicle documents always have priority over those given in this manual.

Vehicle data
Recommended fluids and lubricants

European service schedule

Required engine oil quality

	All European countries (except Belarus, Moldova, Russia, Serbia, Turkey)		Only Israel	
Engine oil quality	Petrol engines (including CNG, LPG, E85)	Diesel engines	Petrol engines (including CNG, LPG, E85)	Diesel engines
dexos 1	–	–	✓	–
dexos 2	✓	✓	–	✓

In case dexos quality is unavailable you may use max. 1 litre engine oil quality ACEA C3 once between each oil change.

Engine oil viscosity grades

	All European countries and Israel (except Belarus, Moldova, Russia, Serbia, Turkey)
Ambient temperature	Petrol and diesel engines
down to -25 °C	SAE 5W-30 or SAE 5W-40
below -25 °C	SAE 0W-30 or SAE 0W-40

International service schedule

Required engine oil quality

	All countries outside Europe except Israel		Only Belarus, Moldova, Russia, Serbia, Turkey	
Engine oil quality	Petrol engines (including CNG, LPG, E85)	Diesel engines	Petrol engines (including CNG, LPG, E85)	Diesel engines
dexos 1	✓	–	–	–
dexos 2	–	✓	✓	✓

In case dexos quality is unavailable you may use the oil qualities listed below:

	All countries outside Europe except Israel		Only Belarus, Moldova, Russia, Serbia, Turkey	
Engine oil quality	Petrol engines (including CNG, LPG, E85)	Diesel engines	Petrol engines (including CNG, LPG, E85)	Diesel engines
GM-LL-A-025	✓	–	✓	–
GM-LL-B-025	–	✓	–	✓

	All countries outside Europe except Israel		Only Belarus, Moldova, Russia, Serbia, Turkey	
Engine oil quality	Petrol engines (including CNG, LPG, E85)	Diesel engines	Petrol engines (including CNG, LPG, E85)	Diesel engines
ACEA A3/B3	✓	–	✓	–
ACEA A3/B4	✓	✓	✓	✓
ACEA C3	✓	✓	✓	✓
API SM	✓	–	✓	–
API SN resource conserving	✓	–	✓	–

Engine oil viscosity grades

	All countries outside Europe (except Israel), including Belarus, Moldova, Russia, Serbia, Turkey
Ambient temperature	Petrol and diesel engines
down to -25 °C	SAE 5W-30 or SAE 5W-40
below -25 °C	SAE 0W-30 or SAE 0W-40
down to -20 °C	SAE 10W-30[1)] or SAE 10W-40[1)]

[1)] Permitted, but usage of SAE 5W-30 or SAE 5W-40 with dexos quality is recommended.

Engine data

Sales designation	1.0	1.2	1.2	1.4
Engine identifier code	A10XEP	A12XEL	A12XER	A14XEL
Piston displacement [cm^3]	998	1229	1229	1398
Engine power [kW]	48	51	63	64
at rpm	5300	5600	5600	6000
Torque [Nm]	90	115	115	130
at rpm	4000	4000	4000	4000
Fuel type	Petrol	Petrol	Petrol/LPG	Petrol
Octane rating RON				
recommended	95	95	95	95
possible	98	98	98	98
possible	91	91	91	91
Oil consumption [l/1000 km]	0.6	0.6	0.6	0.6

Sales designation	1.4	1.6 OPC	1.6 OPC Nürburgring Edition	1.4
Engine identifier code	A14NEL	A16LER	A16LES	A14XER
Piston displacement [cm^3]	1364	1598	1598	1398
Engine power [kW]	88	141	155	74
at rpm	4800-6000	5850	5850	6000
Torque [Nm]	175	230	250	130
at rpm	1750-4800	1980-5850	2250-5850	4000
Fuel type	Petrol	Petrol	Petrol	Petrol
Octane rating RON				
recommended	95	98	100	95
possible	98	95	98	98
possible	–	–	–	91
Oil consumption [l/1000 km]	0.6	0.6	0.6	0.6

Sales designation	1.3 CDTI	1.3 CDTI	1.3 CDTI	1.3 CDTI	1.7 CDTI
Engine identifier code	Z13DTJ	A13DTE Eco	A13DTC	A13DTR	A17DTS
Piston displacement [cm^3]	1248	1248	1248	1248	1686
Engine power [kW]	55	70	55	70	96
at rpm	4000	4000	4000	4000	4000
Torque [Nm]	170	190	190	210	300
at rpm	1750-2500	1750-3250	1750-2250	1750-2500	2000-2500
Fuel type	Diesel	Diesel	Diesel	Diesel	Diesel
Oil consumption [l/1000 km]	0.6	0.6	0.6	0.6	0.6

Performance

5-door vehicle

Engine	A10XEP	A12XEL	A12XER	A14XEL	A14XER	A14NEL
Maximum speed[2] [km/h]						
Manual transmission	155	160	172[3][4]	173	180	195
Manual transmission automated	–	–	172	–	–	–
Automatic transmission	–	–	–	–	172	–

Engine	Z13DTJ	A13DTC	A13DTR	A13DTE Eco	A17DTS
Maximum speed [km/h]					
Manual transmission	163	163	173	177	200
Manual transmission automated	–	–	–	–	–
Automatic transmission	–	–	–	–	–

[2] The maximum speed indicated is achievable at kerb weight (without driver) plus 200 kg payload. Optional equipment could reduce the specified maximum speed of the vehicle.
[3] LPG engine in petrol mode: 170.
[4] LPG engine in LPG mode: 168.

3-door vehicle

Engine	A10XEP	A12XEL	A12XER	A14XEL	A14XER
Maximum speed [km/h]					
Manual transmission	155	160	172[3)4)]	173	180
Manual transmission automated	–	–	172	–	–
Automatic transmission	–	–	–	–	172

Engine	A14NEL	A16LER	A16LES	A13DTE Eco
Maximum speed [km/h]				
Manual transmission	195	225	230	177
Manual transmission automated	–	–	–	–
Automatic transmission	–	–	–	–

3) LPG engine in petrol mode: 170.
4) LPG engine in LPG mode: 168.

Engine	Z13DTJ	A13DTC	A13DTR	A17DTS
Maximum speed [km/h]				
Manual transmission	163	163	173	200
Manual transmission automated		–	–	–
Automatic transmission		–	–	–

Van

Engine	A10XEP	A12XEL	A12XER
Maximum speed [km/h]			
Manual transmission	155	160	172
Manual transmission automated	–	–	172
Automatic transmission	–	–	–

Engine	Z13DTJ	A13DTC	A13DTE Eco	A13DTR
Maximum speed [km/h]				
Manual transmission	163	163	177	173
Manual transmission automated	–	–	–	–
Automatic transmission	–	–	–	–

Vehicle weight

Kerb weight, 5-door vehicle, basic model without any optional equipment

Corsa	Engine	Manual transmission	Manual transmission automated	Automatic transmission
without/with air conditioning/climate control [kg]	A10XEP	1145/1165	–	–
	A12XEL	1163/1178	–	–
	A12XER	1163[5)]/1178[5)]	–	–
	A14XEL	1163/1178	–	1188/1208
	A14XER	1163/1178	–	–
	A14NEL	1237/1252	–	–
	A13DTC	1235/1255	–	–
	Z13DTJ	1235/1255	–	–
without/with air conditioning/climate control [kg]	A13DTE ECO	1199/1209	1199/1209	–
	A13DTR	1265/1285	1265/1285	–
	A17DTS	1320/1340	–	–

[5)] With LPG engine weight increased by 36 kg.

Kerb weight, 5-door vehicle, basic model with all optional equipment

Corsa	Engine	Manual transmission	Manual transmission automated	Automatic transmission
without/with air conditioning/climate control [kg]	A10XEP	–/1280	–	–
	A12XEL	–/1278	–	–
	A12XER	–/1278[6)]	–	–
	A14XEL	–/1278[7)]	–	–/1317
	A14XER	–/1278[7)]	–	–
	A14NEL	–/1361	–	–
	A13DTC	–/1365	–	–
	Z13DTJ	–/1365	–	–
without/with air conditioning/climate control [kg]	A13DTE ECO	–/1318	–/1318	–
	A13DTR	–/1396	–/1396	–
	A17DTS	–/1424	–	–

6) With LPG engine weight increased by 40 kg.
7) With rear carrier system weight increased by 40 kg.

Kerb weight, 3-door vehicle, basic model without any optional equipment

Corsa	Engine	Manual transmission	Manual transmission automated	Automatic transmission
without/with air conditioning/climate control [kg]	A10XEP	1100/1120	–	–
	A12XEL	1120/1135	–	–
	A12XER	1120[8)]/1135[8)]	–	–
	A14XEL	1141/1156	–	–
	A14XER	1141/1156	–	1165/1185
	A14NEL	1199/1214	–	–
	A16LER	1278/1293	–	–
	A16LES	1278/1293	–	–
	A13DTC	1163[9)]/1173[10)]	–	–

[8)] With LPG engine weight increased by 43 kg.
[9)] With Stop-start system weight increased by 42 kg.
[10)] With Stop-start system weight increased by 52 kg.

Corsa	Engine	Manual transmission	Manual transmission automated	Automatic transmission
without/with air conditioning/climate control [kg]	Z13DTJ	1205/1225	–	–
	A13DTE ECO	1163/1173	1163/1173	–
	A13DTR	1235/1255	1235/1255	–
	A17DTS	1278/1298	–	–

Kerb weight, 3-door vehicle, basic model with all optional equipment

Corsa	Engine	Manual transmission	Manual transmission automated	Automatic transmission
without/with air conditioning/climate control [kg]	A10XEP	–/1235	–	–
	A12XEL	–/1259	–	–
	A12XER	–/1259[11)]	–	–
	A14XEL	–/1278	–	–
	A14XER	–/1278	–	–/1299
	A14NEL	–/1318	–	–
	A16LER	–/1318	–	–
	A16LES	–/1318	–	–
	A13DTC	–/1318[12)]	–	–
without/with air conditioning/climate control [kg]	Z13DTJ	–/1339	–	–
	A13DTE ECO	–/1278	–/1278	–
	A13DTR	–/1371	–/1371	–
	A17DTS	–/1387	–	–

11) With LPG engine weight increased by 19 kg.
12) With Stop-start system weight increased by 21 kg.

Kerb weight, van, basic model without any optional equipment

Corsa	Engine	Manual transmission	Manual transmission automated	Automatic transmission
without/with air conditioning/climate control [kg]	A10XEP	1125/1145	–	–
	A12XEL	1140[13)]/1160[13)]	–	–
	A12XER	1140[13)]/1160[13)]	1140[13)]/1160[13)]	–
	Z13DTJ	1215[13)]/1235[13)]	–	–
	A13DTC	1215[13)]/1235[13)]	–	–
	A13DTR	1245[13)]/1265[13)]	–	–

[13)] In conjunction with 17" wheels, weight increased by 20 kg.

Kerb weight, van, basic model with all optional equipment

Corsa	Engine	Manual transmission	Manual transmission automated	Automatic transmission
without/with air conditioning/climate control [kg]	A10XEP	–/1230	–	–
	A12XEL	–/1245[14)]	–	–
	A12XER	–/1245[14)]	–/1245[14)]	–
	Z13DTJ	–/1320[14)]	–	–
	A13DTC	–/1320[14)]	–	–
	A13DTR	–/1350[14)]	–	–

Vehicle dimensions

	5-door vehicle	3-door vehicle	OPC	Van
Length [mm]	3999	3999	4040	3999
Width without exterior mirrors [mm]	1737	1713	1713	1713
Width with two exterior mirrors [mm]	1944	1944	1924	1944
Height (without antenna) [mm]	1488	1488	1488	1488
Length of load compartment floor [mm]	703	703	703	1257

[14)] In conjunction with 17" wheels, weight decreased by 15 kg.

	5-door vehicle	3-door vehicle	OPC	Van
Length of load compartment with folded rear seats [mm]	1348	1348	1348	–
Load compartment width [mm]	944	944	944	944
Load compartment height [mm]	538	538	538	538
Wheelbase [mm]	2511	2511	2511	2511
Turning circle diameter [m]	10.2	10.2	10.2	10.2

Capacities

Engine oil

Engine	A10XEP	A12XEL, A12XER	A14XEL, A14XER, A14NEL	A16LER, A16LES	A13DTE, A13DTC	A13DTR, Z13DTJ	A17DTS
including Filter [l]	3.0	4.0	4.0	4,5	3.5	3.5	5.4
between MIN and MAX [l]	1.0	1.0	1.0	1.0	1.0	1.0	1.0

Fuel tank

Engine	A10XEP, A12XEL,	A12XER	A14XEL, A14XER, A14NEL	A16LER, A16LES	Z13DTJ, A17DTS	A13DTE	A13DTC, A13DTR
Petrol/diesel, nominal capacity [l]	45	45	45	45	45	40	45
LPG nominal capacity [l]	–	42[15)]	–	–	–	–	–

[15)] Fillable to 80% percent of its capacity.

Tyre pressures

Engine	Tyres	Comfort with up to 3 people		ECO with up to 3 people[16]		With full load	
		front	rear	front	rear	front	rear
		[kPa/bar] ([psi])	[kPa/bar] ([psi])	[kPa/bar] ([psi])	[kPa/bar] ([psi])	[kPa/bar] ([psi])	[kPa/bar] ([psi])
A10XEP	185/70 R14, 185/65 R15, 185/60 R15[17], 195/60 R15, 195/55 R16[18]	200/2.0 (29)	180/1.8 (26)	270/2.7 (39)	250/2.5 (36)	260/2.6 (38)	320/3.2 (46)

[16] To achieve the smallest amount of fuel consumption possible.
[17] Only permitted as winter tyres.
[18] No ECO pressure in combination with RunFlat tyres.

Engine	Tyres	Comfort with up to 3 people		ECO with up to 3 people[16]		With full load	
		front	rear	front	rear	front	rear
		[kPa/bar] ([psi])	[kPa/bar] ([psi])	[kPa/bar] ([psi])	[kPa/bar] ([psi])	[kPa/bar] ([psi])	[kPa/bar] ([psi])
A12XEL, A12XER, A14XEL, A14XER	185/70 R14, 185/65 R15[19], 185/60 R15[17], 195/60 R15, 195/55 R16[18], 215/45 R17[20]	200/2.0 (29)	180/1.8 (26)	270/2.7 (39)	250/2.5 (36)	260/2.6 (38)	320/3.2 (46)

[19] On vehicles with a specific rear axle application in combination with limited steering angle and sport chassis only permitted as winter tyres. We recommend your workshop.
[17] Only permitted as winter tyres.
[18] No ECO pressure in combination with RunFlat tyres.
[20] On vehicles with a specific rear axle application in combination with limited steering angle and sport chassis. We recommend your workshop.

Engine	Tyres	Comfort with up to 3 people		ECO with up to 3 people[16)]		With full load	
		front	rear	front	rear	front	rear
		[kPa/bar] ([psi])	[kPa/bar] ([psi])	[kPa/bar] ([psi])	[kPa/bar] ([psi])	[kPa/bar] ([psi])	[kPa/bar] ([psi])
A14NEL	195/65 R15, 196/60 R16[21)], 205/55 R16, 225/45 R17	230/2.3 (33)	210/2.1 (30)	280/2.8 (41)	260/2.6 (38)	250/2.5 (36)	320/3.2 (46)
	225/40 R18	250/2.5 (36)	230/2.3 (33)	–	–	270/2.7 (39)	320/3.2 (46)
A16LER	195/55 R16[22)], 205/50 R16[17)], 215/45 R17	240/2.4 (34)	220/2.2 (32)	270/2.7 (39)	250/2.5 (36)	260/2.6 (38)	320/3.2 (46)
	225/35 R18	260/2.6 (38)	240/2.4 (34)	–	–	280/2.8 (41)	320/3.2 (46)
A16LES	205/45 R17[17)]	240/2.4 (34)	220/2.2 (32)	270/2.7 (39)	250/2.5 (36)	260/2.6 (38)	320/3.2 (46)
	225/35 R18	260/2.6 (38)	240/2.4 (34)	–	–	280/2.8 (41)	320/3.2 (46)

21) When used as winter tyres, tyre chains are not permitted.
22) Only permitted as winter tyres. Wheel chains not permitted.
17) Only permitted as winter tyres.

Engine	Tyres	Comfort with up to 3 people		ECO with up to 3 people[16)]		With full load	
		front	rear	front	rear	front	rear
		[kPa/bar] ([psi])	[kPa/bar] ([psi])	[kPa/bar] ([psi])	[kPa/bar] ([psi])	[kPa/bar] ([psi])	[kPa/bar] ([psi])
A13DTC	185/65 R15[21)], 185/70 R14[25)], 215/45 R17[23)], 195/60 R15[23)], 195/55 R16[18)]	200/2.0(29)	180/1.8 (26)	270/2.7 (39)	250/2.5 (36)	260/2.6 (38)	320/3.2 (46)
	185/60 R15[24)],	220/2.2 (32)	180/1.8 (26)	270/2.7 (39)	250/2.5 (36)	260/2.6 (38)	320/3.2 (46)
A13DTE	175/70 R14	270/2.7 (39)	250/2.5 (36)	270/2.7 (39)	250/2.5 (36)	270/2.7 (39)	320/3.2 (46)
	185/60 R15[24)]	270/2.7 (39)	250/2.5 (36)	270/2.7 (39)	250/2.5 (36)	270/2.7 (39)	320/3.2 (46)
	185/65 R15	270/2.7 (39)	250/2.5 (36)	270/2.7 (39)	250/2.5 (36)	270/2.7 (39)	320/3.2 (46)
	185/70 R14	270/2.7 (39)	250/2.5 (36)	270/2.7 (39)	250/2.5 (36)	270/2.7 (39)	320/3.2 (46)

21) When used as winter tyres, tyre chains are not permitted.
25) Not in combination with limited steering angle and sport chassis. Only permitted with certain brake systems. We recommend your workshop.
23) Not permitted as winter tyres. Tyre chains not permitted.
18) No ECO pressure in combination with RunFlat tyres.
24) Only permitted as winter tyres.

Engine	Tyres	Comfort with up to 3 people		ECO with up to 3 people[16)]		With full load	
		front	rear	front	rear	front	rear
		[kPa/bar] ([psi])	[kPa/bar] ([psi])	[kPa/bar] ([psi])	[kPa/bar] ([psi])	[kPa/bar] ([psi])	[kPa/bar] ([psi])
A13DTR	185/60 R15	240/2.4 (34)	200/2.0 (29)	270/2.7 (39)	250/2.5 (36)	260/2.6 (38)	320/3.2 (46)
	185/65 R15	220/2.2 (32)	200/2.0 (29)	270/2.7 (39)	250/2.5 (36)	260/2.6 (38)	320/3.2 (46)
	195/55 R16[18)]	220/2.2 (32)	200/2.0 (29)	270/2.7 (39)	250/2.5 (36)	260/2.6 (38)	320/3.2 (46)
	195/60 R15	220/2.2 (32)	200/2.0 (29)	270/2.7 (39)	250/2.5 (36)	260/2.6 (38)	320/3.2 (46)
	215/45 R17	220/2.2 (32)	200/2.0 (29)	270/2.7 (39)	250/2.5 (36)	260/2.6 (38)	320/3.2 (46)

[18)] No ECO pressure in combination with RunFlat tyres.

Engine	Tyres	Comfort with up to 3 people		ECO with up to 3 people[16]		With full load	
		front	rear	front	rear	front	rear
		[kPa/bar] ([psi])	[kPa/bar] ([psi])	[kPa/bar] ([psi])	[kPa/bar] ([psi])	[kPa/bar] ([psi])	[kPa/bar] ([psi])
Z13DTJ	185/70 R14[25],	200/2.0 (29)	180/1.8 (26)	270/2.7 (39)	250/2.5 (36)	260/2.6 (38)	320/3.2 (46)
	185/65 R15[26],						
	195/60 R15,						
	195/55 R16[18],						
	215/45 R17[27]						
	185/60 R15[17]	220/2.2 (32)	180/1.8 (26)	270/2.7 (39)	250/2.5 (36)	260/2.6 (38)	320/3.2 (46)
A17DTS	185/65 R15[26],	240/2.4 (35)	220/2.2 (32)	270/2.7 (39)	250/2.5 (36)	260/2.6 (38)	320/3.2 (46)
	195/60 R15,						
	195/55 R16[18],						
	215/45 R17[27]						

[25] Not in combination with limited steering angle and sport chassis. Only permitted with certain brake systems. We recommend your workshop.
[26] In combination with limited steering angle or sport chassis only permitted as winter tyres. We recommend your workshop.
[18] No ECO pressure in combination with RunFlat tyres.
[27] In combination with limited steering angle or sport chassis. We recommend your workshop.
[17] Only permitted as winter tyres.

Engine	Tyres	Comfort with up to 3 people		ECO with up to 3 people[16)]		With full load	
		front	rear	front	rear	front	rear
		[kPa/bar] ([psi])	[kPa/bar] ([psi])	[kPa/bar] ([psi])	[kPa/bar] ([psi])	[kPa/bar] ([psi])	[kPa/bar] ([psi])
	185/60 R15[17)]	260/2.6 (38)	220/2.2 (32)	270/2.7 (39)	250/2.5 (36)	260/2.6 (38)	320/3.2 (46)
all	Temporary spare wheel	420/4.2 (61)	420/4.2 (61)	–	–	420/4.2 (61)	420/4.2 (61)

17) Only permitted as winter tyres.

Towing hitch installation dimensions

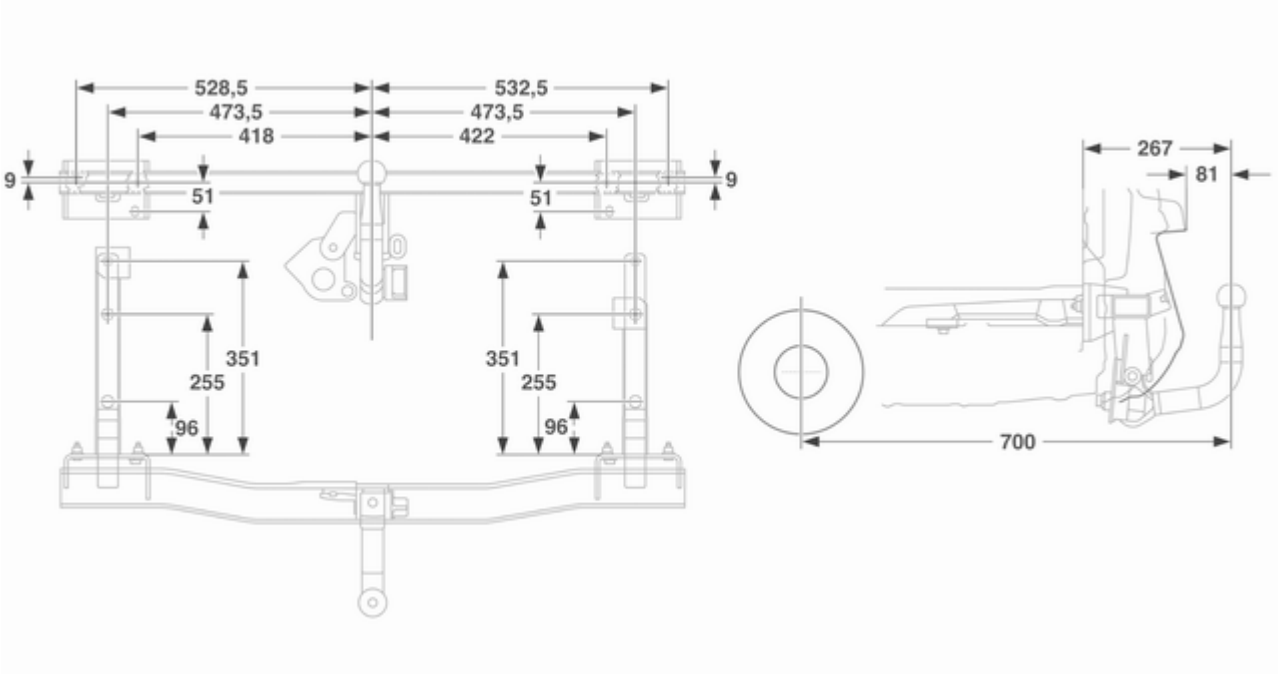

Customer information

Vehicle data recording and privacy 217

Vehicle data recording and privacy

Event data recorders

Data storage modules in the vehicle

A large number of electronic components of your vehicle contain data storage modules temporarily or permanently storing technical data about the condition of the vehicle, events and errors. In general, this technical information documents the condition of parts, modules, systems or the environment:

- Operating conditions of system components (e.g. filling levels)
- Status messages of the vehicle and its single components (e.g. number of wheel revolutions / rotational speed, deceleration, lateral acceleration)
- Dysfunctions and defects in important system components
- Vehicle reactions in particular driving situations (e.g. inflation of an airbag, activation of the stability regulation system)
- Environmental conditions (e.g. temperature)

These data are exclusively technical and help identifying and correcting errors as well as optimizing vehicle functions.

Motion profiles indicating travelled routes cannot be created with these data.

If services are used (e.g. repair works, service processes, warranty cases, quality assurance), employees of the service network (manufacturer included) are able to read out this technical information from the event and error data storage modules applying special diagnostic devices. If required, you will receive further information at these workshops. After an error has been corrected, the data are deleted from the error storage module or they are constantly overwritten.

When using the vehicle, situations may occur in which these technical data related to other information (accident report, damages on the vehicle, witness statements etc.) may be associated with a specific person - possibly, with the assistance of an expert.

Additional functions contractually agreed upon with the client (e.g. vehicle location in emergency cases) allow the transmission of particular vehicle data from the vehicle.

Radio Frequency Identification (RFID)

RFID technology is used in some vehicles for functions such as tyre pressure monitoring and ignition system security. It is also used in connection with conveniences such as radio remote controls for door locking/unlocking and starting, and in-vehicle transmitters for garage door openers. RFID technology in Opel vehicles does not use or record personal information or link with any other Opel system containing personal information.

Index

A

Accessories and vehicle modifications 142
Active head restraints..... 36
Adaptive forward lighting 84, 98, 153
Adjustable air vents 110
Airbag and belt tensioners 79
Airbag deactivation 44, 79
Airbag system 42
Air conditioning regular operation 111
Air conditioning system 105
Air intake 111
Air vents..... 110
Antilock brake system 126
Antilock brake system (ABS) 81
Anti-theft alarm system 26
Anti-theft locking system 26
Appearance care..... 181
Apply footbrake 83
Ashtrays 74
Automatic anti-dazzle 30
Automatic light control 96
Automatic locking 25
Automatic transmission 118
Auxiliary heater..... 110

B

Battery 147
Battery discharge protection 103
Battery voltage 89
Bicycle rack..... 53
Bonnet 144
Brake and clutch fluid..... 186
Brake and clutch system 80
Brake assist 127
Brake fluid 147
Brake light switch 89
Brakes 126, 147
Breakdown..... 179
Bulb replacement 150

C

Capacities 207
Car Pass 20
Catalytic converter 117
Central locking system 22
Centre console lighting 103
Changing tyre and wheel size ... 170
Charging system 79
Child locks 25
Child restraint installation locations 48
Child restraints..... 46
Child restraint systems 46
Cigarette lighter 74

Climate control 16
Climate control systems..... 104
Clock 73
Control indicators..... 77
Control of the vehicle 112
Controls..... 69
Convex shape 28
Coolant and antifreeze..... 186
Cruise control 84, 129
Cupholders 52
Curtain airbag system 44
Curve lighting..... 98

D

Danger, Warnings and Cautions . . . 4
Deflation detection system..... 82
Diesel fuel system bleeding 149
Diesel particle filter 116
Doors..... 25
Drain diesel fuel filter 89
Driving characteristics and towing tips 137
Driving hints..... 112

E

Easytronic..... 122
Electric adjustment 28
Electrical system..... 162
Electronic climate control system 106
Electronic driving programmes 119, 123
Electronic Stability Program 81, 128
End-of-life vehicle recovery 143
Engine compartment fuse box ... 163
Engine coolant 146
Engine coolant temperature 82
Engine data 194
Engine exhaust 116
Engine oil 145, 186, 191
Engine oil pressure 82
Entry lighting 103
Event data recorders..... 217
Exit lighting 103
Exterior care 181
Exterior light 83
Exterior lighting 13, 96
Exterior mirrors..... 28

F

Fault 120, 125
First aid..... 66
First aid kit 66
Fixed air vents 110
Flex-Fix system..... 53
Fog light 84
Fog lights 156
Folding 28
Front airbag system 42
Front fog lights 100
Front seats..... 36
Front turn signal light..... 150, 153
Fuel..... 131
Fuel consumption - CO_2-Emissions 136
Fuel for diesel engines 131
Fuel for liquid gas operation..... 131
Fuel for petrol engines 131
Fuel gauge 76
Fuel selector 76
Fuses 162

G

Gauges..... 75
General information 137
Glovebox 52
Graphic-Info-Display, Colour-Info-Display 85

H

Halogen headlights 150
Hand brake..... 126, 127
Hazard warning flashers 99
Headlight flash 97
Headlight range adjustment 97
Headlights..... 96
Headlights when driving abroad . . 98
Head restraint adjustment 7
Head restraints 35
Heated 29

Heated rear window 32
Heated steering wheel 70
Heating 39
Heating and ventilation system . 104
High beam 83, 97
Hill start assist 127
Horn 14, 70

I
Identification plate 189
Ignition switch positions 113
Immobiliser 27
Indicators..... 75
Information displays..... 84
Instrument cluster 75
Instrument panel fuse box 164
Instrument panel illumination control 101
Instrument panel overview 10
Interior care 183
Interior lighting..... 101
Interior lights 101, 161
Interior mirrors..... 30
Interruption of power supply 120, 125
Introduction 3
Isofix child restraint systems 51

J
Jump starting 177

K
Key, memorised settings..... 22
Keys 20
Keys, locks..... 20

L
Lashing eyes 65
Lighting 89
Lighting features..... 103
Light switch 96
Load compartment 25, 62
Load compartment cover 63
Load compartment fuse box 165
Load compartment lighting..... 102
Loading information 67
Low engine oil level 83
Low fuel 83

M
Malfunction indicator light 80
Manual anti-dazzle 30
Manual mode 123
Manual transmission 121
Manual transmission automated 122
Manual windows 31
Memorised settings..... 22
Mirror adjustment 8
Misted light covers 101

N
New vehicle running-in 112
Number plate light 160

O
Object detection systems..... 130
Odometer 75
Oil, engine..... 186, 191
Outside temperature 72
Overrun cut-off 114

P
Parking 19, 116
Parking assist 130
Parking brake 127
Parking lights 100
Particle filter..... 116
Performance 197
Performing work 143
Pollen filter 111
Power outlets 74
Power steering..... 81
Power windows 31
Preheating and diesel particle filter 82
Puncture..... 174

Q
Quickheat..... 110

R

Radio Frequency Identification (RFID) ... 218
Radio remote control ... 20
Reading lights ... 102
Rear carrier system ... 53
Rear floor storage cover ... 65
Rear fog light ... 84
Rear fog lights ... 100
Rear window wiper/washer ... 72
Recommended fluids and lubricants ... 186, 191
Refuelling ... 133
Reversing lights ... 101
Ride control systems ... 128
Roof ... 33
Roof rack ... 66

S

Seat adjustment ... 6, 37
Seat belt ... 8
Seat belt reminder ... 79
Seat belts ... 39
Seat folding ... 38
Seat position ... 36
Selector lever ... 118, 122
Service ... 111, 185
Service display ... 77
Service information ... 185
Service vehicle soon ... 80
Side airbag system ... 43
Sidelights ... 96
Side turn signal lights ... 160
Smartphone controller ... 88
Spare wheel ... 176
Speedometer ... 75
Sport mode ... 81
Starting and operating ... 112
Starting off ... 17
Starting the engine ... 113, 122
Steering wheel adjustment ... 9, 69
Steering wheel controls ... 69
Stop-start system ... 114
Stop watch ... 93
Storage ... 52
Storage compartments ... 52
Sunroof ... 33
Sun visors ... 32
Symbols ... 4

T

Tachometer ... 76
Tail lights ... 156
Three-point seat belt ... 40
Tools ... 166
Top-tether child restraint systems ... 51
Towing ... 137, 179
Towing another vehicle ... 180
Towing equipment ... 138
Towing hitch installation dimensions ... 216
Towing the vehicle ... 179
Trailer coupling ... 137
Trailer towing ... 137
Transmission ... 16
Transmission display ... 77, 118, 122
Tread depth ... 169
Trip computer ... 90
Trip computer in Graphic-Info-Display or Colour-Info-Display ... 91
Triple-Info-Display ... 84
Trip odometer ... 76
Turn and lane-change signals ... 99
Turn signal ... 79
Tyre chains ... 171
Tyre deflation detection system ... 169
Tyre designations ... 168
Tyre pressure ... 168
Tyre pressures ... 209
Tyre repair kit ... 171
Tyres ... 168

U

Ultrasonic parking assist ... 81, 130
Underseat storage ... 53
Upholstery ... 183
Upshift ... 81
Using this manual ... 3

V

Vehicle checks..... 143
Vehicle data..... 191
Vehicle data recording and privacy..... 217
Vehicle dimensions 206
Vehicle Identification Number 189
Vehicle jack..... 166
Vehicle messages 88
Vehicle personalisation 94
Vehicle security..... 26
Vehicle specific data 3
Vehicle storage..... 142
Vehicle tools..... 166
Vehicle unlocking 6
Vehicle weight 200
Ventilation..... 104

W

Warning chimes 88
Warning lights..... 75
Warning triangle 66
Washer and wiper systems 15
Washer fluid 146
Wheel changing 174
Wheel covers 170
Wheels and tyres 168
Windows..... 30
Windscreen..... 30
Windscreen wiper/washer 71
Winter mode 81
Winter tyres 168
Wiper blade replacement 149

Copyright by ADAM OPEL AG, Rüsselsheim, Germany.

The information contained in this publication is effective as of the date indicated below. Adam Opel AG reserves the right to make changes to the technical specifications, features and design of the vehicles relative to the information in this publication as well as changes to the publication itself.

Edition: June 2012, ADAM OPEL AG, Rüsselsheim.

Printed on chlorine-free bleached paper.

KTA-2656/11-en

June 2012