1. General Description

A: SPECIFICATION

1. HEATER SYSTEM

Item		Specification	On condition
Heating capacity		5.1 kW (4,385 kcal/h, 17,401 BTU/h) or more	• Mode selector switch: HEAT • Temperature control switch: FULL HOT • Temperature difference between hot water and inlet air: 65°C (149°F) • How water flow rate: 360 ℓ (95.1 US gal, 79.2 Imp gal)/h
Air flow rate		320 m^3 (11,301 cu ft)/h	Heat mode (FRESH), FULL HOT at 12.5 V
Max air flow rate		510 m^3 (18.01 cu ft)/h	• Temperature control switch: FULL COLD • Blower fan speed: Auto A/C: 6th position Manual A/C: 4th position • Mode selector lever: RECIRC
Heater core size (height × length × width)		264 × 110 × 27 mm (10.4 × 4.33 × 1.06 in)	—
Blower motor	Type	Magnet motor 220 W or less	12 V
	Fan type and size (diameter × width)	Sirocco fan type 150 × 75 mm (5.91 × 2.95 in)	—

2. A/C SYSTEM

- Auto A/C model

Item		Specification
Type of air conditioner		Reheat air-mix type
Cooling capacity		5.3 kW (4,557 kcal/h, 18,084 BTU/h)
Refrigerant		HFC-134a (CH_2FCF_3) [0.4±0.03 kg (0.88±0.07 lb)]
Compressor	Type	Scroll, constant volume (SCSA 08C)
	Discharge	74.5 cc (4.55 cu in)/rev
	Max. permissible speed	9,000 rpm
Magnet clutch	Type	Dry, single-disc type
	Power consumption	35 W
	Type of belt	2.5 L SOHC Non-turbo and 2.5 L DOHC Turbo model: V-belt 4 PK 3.0 L DOHC Non-turbo model: V-belt 6 PK
	Pulley dia. (effective dia.)	93 mm (3.7 in)
	Pulley ratio	1.43
Condenser	Type	Corrugated fin (Sub cool type)
	Core face area	0.193 m^2 (2.077 sq ft)
	Core thickness	16 mm (0.63 in)
	Radiation area	5.72 m^2 (61.57 sq ft)
Receiver drier	Effective inner capacity	190 cm^3 (11.6 cu in)
Expansion valve	Type	Externally equalizing
Evaporator	Type	Single tank
	Dimensions (W × H × T)	298.6 × 151 × 38 mm (11.76 × 5.94 × 1.50 in)
Blower fan	Fan type	Sirocco fan
	Outer diameter × width	150 × 75 mm (5.91 × 2.95 in)
	Power consumption	220 W

Item			Specification
Condenser fan (Sub fan)		Motor type	Magnet
		Power consumption	2.5 L SOHC Non-turbo model: 90 W 2.5 L DOHC Turbo model: 120 W 3.0 L DOHC Non-turbo model: 160 W
		Fan outer diameter	2.5 L SOHC Non-turbo model: 300 mm (11.8 in) 2.5 L DOHC Turbo and 3.0 L DOHC Non-turbo model: 320 mm (12.6 in)
Radiator fan (Main fan)		Motor type	Magnet
		Power consumption	2.5 L SOHC Non-turbo model: 90 W 2.5 L DOHC Turbo model: 120 W 3.0 L DOHC Non-turbo model: 160 W
		Fan outer diameter	2.5 L SOHC Non-turbo model: 300 mm (11.8 in) 2.5 L DOHC Turbo and 3.0 L DOHC Non-turbo model: 320 mm (12.6 in)
Idle speed		MPFI model	2.5 L Non-turbo MT model (no load): 650±100 rpm 2.5 L Non-turbo MT model (A/C ON): 850±100 rpm 2.5 L Non-turbo AT model (no load): 700±100 rpm 2.5 L Non-turbo AT model (A/C ON): 850±100 rpm 2.5 L turbo MT model (no load): 750±100 rpm 2.5 L turbo MT model (A/C ON): 800±100 rpm 2.5 L turbo AT model (no load): 750±100 rpm 2.5 L turbo AT model (A/C ON): 825±100 rpm 3.0 L model (no load): 650±50 rpm 3.0 L model (A/C ON): 770±50 rpm
Triple switch (Pressure switch)	Low-pressure switch operating pressure	ON → OFF	196±20 kPa (2.00±0.20 kg/cm^2, 28.4±2.9 psi)
		OFF → ON	225^{+25}_{-29} kPa ($2.29^{+0.25}_{-0.30}$ kg/cm^2, $32.6^{+3.6}_{-4.2}$ psi)
	High-pressure switch operating pressure	ON → OFF	$3{,}140^{+50}_{-200}$ kPa ($32.02^{+0.51}_{-2.04}$ kg/cm^2, $455.4^{+7.25}_{-29.0}$ psi)
		OFF → ON	2,550±200 kPa (26.00±2.04 kg/cm^2, 369.8±29.0 psi)
	Middle-pressure switch operating pressure	ON → OFF	1,370±120 kPa (13.97±1.22 kg/cm^2, 198.65±17.35 psi)
		OFF → ON	1,770±80 kPa (18.05±0.82 kg/cm^2, 256.81±11.60 psi)
Thermo-control amplifier working temperature (Evaporator outlet air)		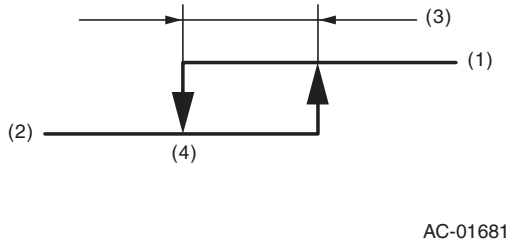 (1) ON (2) OFF (3) 1°C (33.8°F) (4) $4^{+8.0}_{0}$°C ($39.2^{+46.4}_{0}$°F)	

- Manual A/C model

Item			Specification
Type of air conditioner			Reheat air-mix type
Cooling capacity			5.3 kW (4,557 kcal/h, 18,084 BTU/h)
Refrigerant			HFC-134a (CH_2FCF_3) [0.4±0.03 kg (0.88±0.07 lb)]
Compressor		Type	Scroll, constant volume (SCSA 08C)
		Discharge	74.5 cc (4.55 cu in)/rev
		Max. permissible speed	9,000 rpm
Magnet clutch		Type	Dry, single-disc type
		Power consumption	35 W
		Type of belt	V-belt 4 PK
		Pulley dia. (effective dia.)	93 mm (3.7 in)
		Pulley ratio	1.43
Condenser		Type	Corrugated fin (Sub cool type)
		Core face area	0.193 m^2 (2.077 sq ft)
		Core thickness	16 mm (0.63 in)
		Radiation area	5.7 m^2 (61.57 sq ft)
Receiver drier		Effective inner capacity	190 cm^3 (11.6 cu in)
Expansion valve		Type	Externally equalizing
Evaporator		Type	Single tank
		Dimensions (W × H × T)	298.6 × 151 × 38 mm (11.7 × 5.94 × 1.50 in)
Blower fan		Fan type	Sirocco fan
		Outer diameter × width	150 × 75 mm (5.91 × 2.95 in)
		Power consumption	220 W
Condenser fan (Sub fan)		Motor type	Magnet
		Power consumption	90 W
		Fan outer diameter	300 mm (11.8 in)
Radiator fan (Main fan)		Motor type	Magnet
		Power consumption	90 W
		Fan outer diameter	300 mm (11.8 in)
Idle speed		MPFI model	2.5 L Non-turbo MT model (no load): 650±100 rpm 2.5 L Non-turbo MT model (A/C ON): 850±100 rpm 2.5 L Non-turbo AT model (no load): 700±100 rpm 2.5 L Non-turbo AT model (A/C ON): 850±100 rpm
Triple switch (Pressure switch)	Low-pressure switch operating pressure	ON → OFF	196±20 kPa (2.00±0.20 kg/cm^2, 28.4±2.9 psi)
		OFF → ON	225^{+25}_{-29} kPa ($2.29^{+0.25}_{-0.30}$ kg/cm^2, $32.6^{+3.6}_{-4.2}$ psi)
	High-pressure switch operating pressure	ON → OFF	$3{,}140^{+50}_{-200}$ kPa ($32.02^{+0.51}_{-2.04}$ kg/cm^2, $455.4^{+7.25}_{-29.0}$ psi)
		OFF → ON	2,550±200 kPa (26.00±2.04 kg/cm^2, 369.8±29.0 psi)
	Middle-pressure switch operating pressure	ON → OFF	1,370±120 kPa (13.97±1.22 kg/cm^2, 198.65±17.35 psi)
		OFF → ON	1,770±80 kPa (18.05±0.82 kg/cm^2, 256.81±11.60 psi)

Item	Specification
Thermo-control amplifier operating temperature (Evaporator outlet air)	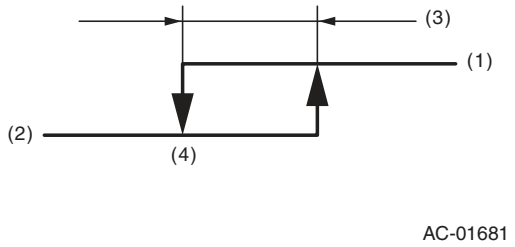 (1) ON (2) OFF (3) 1°C (33.8°F) (4) $4^{+8.0}_{0}$°C ($39.2^{+46.4}_{0}$°F)

B: COMPONENT

1. HEATER COOLING UNIT

- Auto A/C model

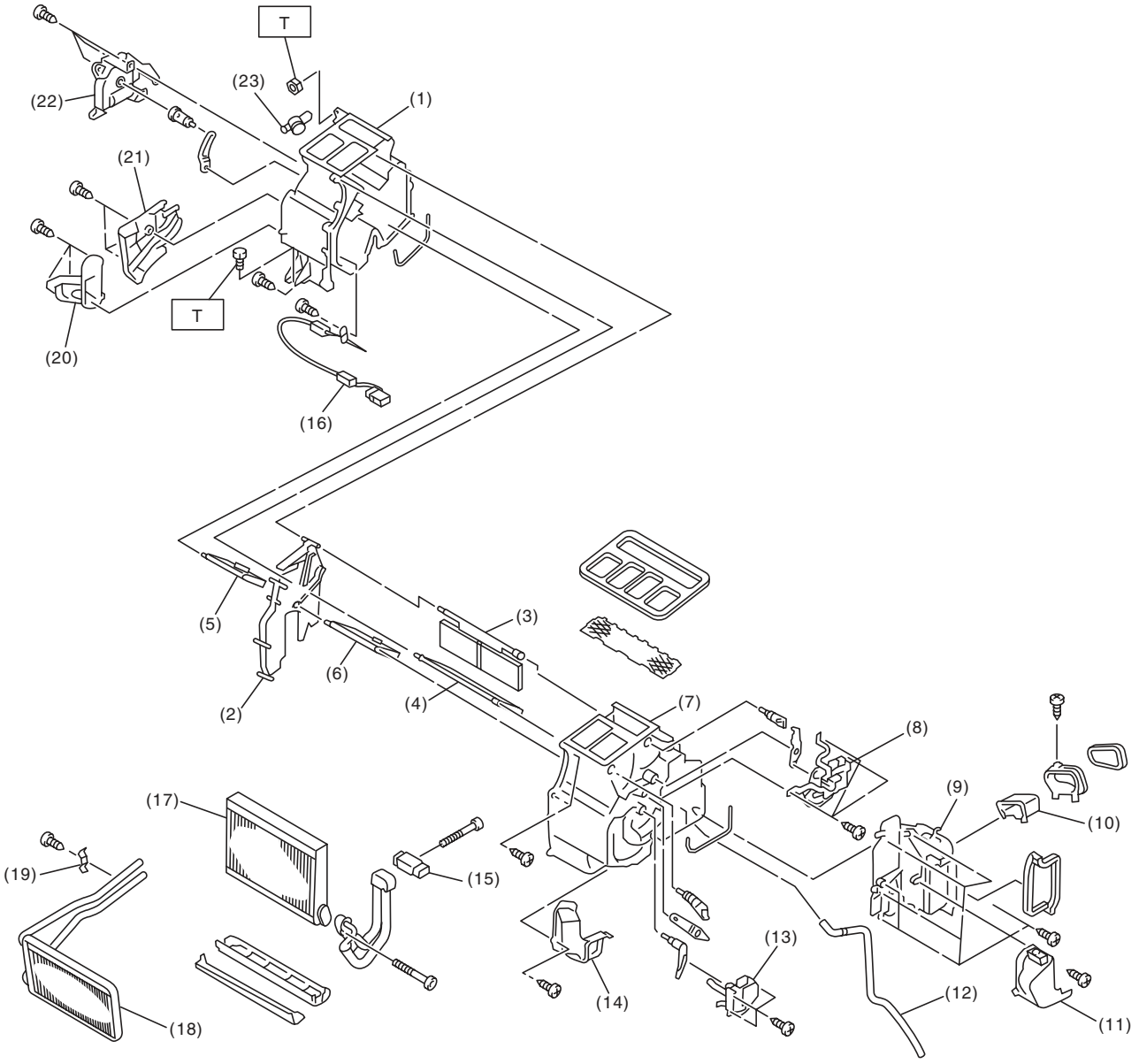

AC-01431

(1) Heater unit case LH
(2) Separator
(3) Mode door RR
(4) Mode door FR
(5) Air mix door LH
(6) Air mix door RH
(7) Heater unit case RH
(8) Mode door actuator
(9) Evaporator cover
(10) Grommet
(11) Pipe cover
(12) Drain hose
(13) Air mix door actuator RH
(14) Foot duct RH
(15) Expansion valve
(16) Evaporator sensor
(17) Evaporator
(18) Heater core
(19) Heater pipe clamp
(20) Foot duct LH
(21) Heater core cover
(22) Air mix door actuator LH
(23) Aspirator

Tightening torque:N·m (kgf-m, ft-lb)
T: 7.5 (0.76, 5.5)

- Manual A/C model

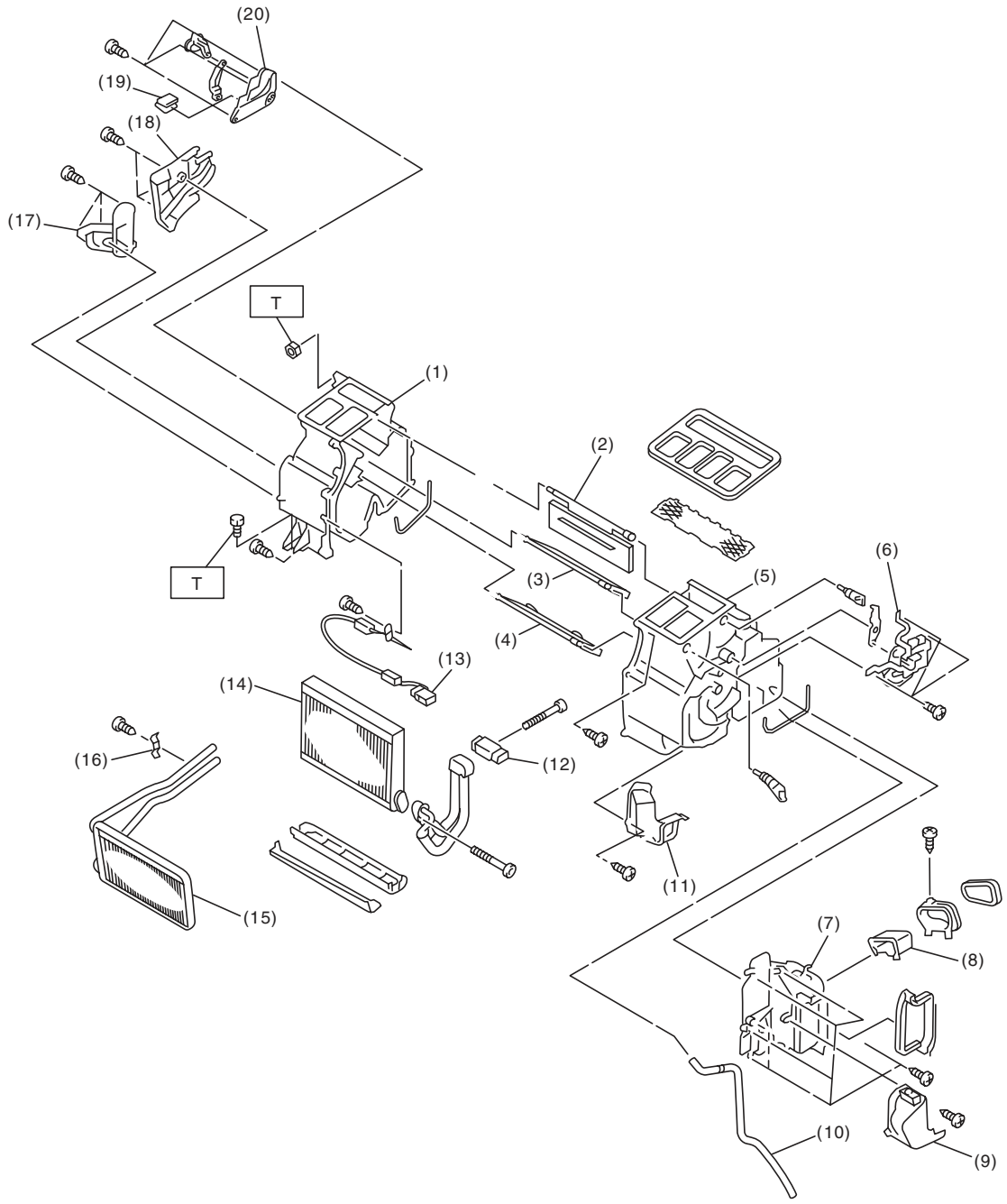

AC-01430

(1) Heater unit case LH
(2) Mode door RR
(3) Mode door FR
(4) Air mix door
(5) Heater unit case RH
(6) Mode door actuator
(7) Evaporator cover
(8) Grommet
(9) Pipe cover
(10) Drain hose
(11) Foot duct RH
(12) Expansion valve
(13) Thermo amplifier
(14) Evaporator
(15) Heater core
(16) Heater pipe clamp
(17) Foot duct LH
(18) Heater core cover
(19) Clip
(20) Air mix door linkage

Tightening torque:N·m (kgf-m, ft-lb)
T: 7.5 (0.76, 5.5)

2. BLOWER MOTOR UNIT

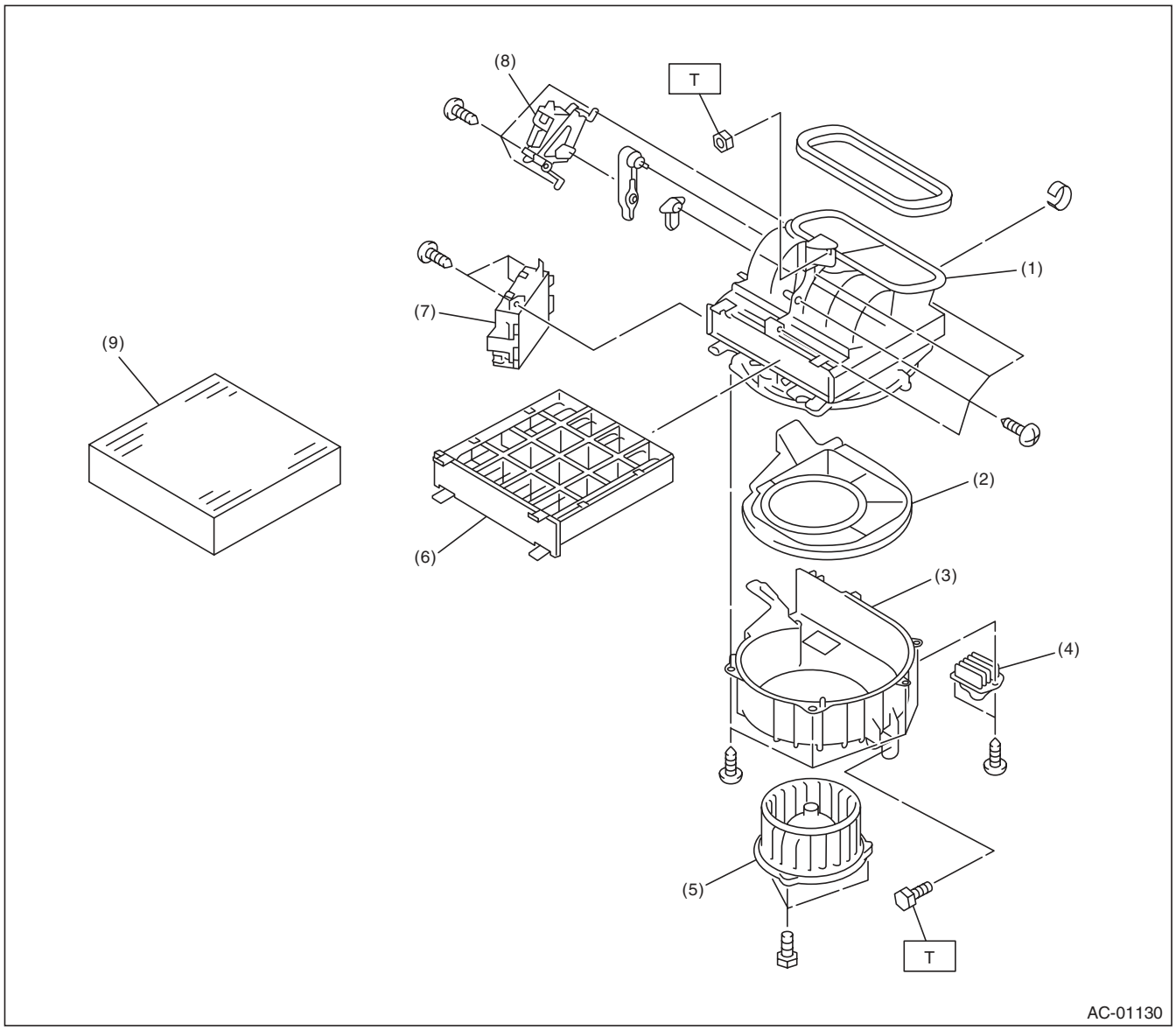

(1) Upper case
(2) Blower plate
(3) Lower case
(4) Power Transistor (Auto A/C model)
Blower Resistor (Manual A/C model)
(5) Blower motor
(6) Filter cover
(7) Control unit (Auto A/C model)
(8) Intake door actuator
(9) Filter

Tightening torque:N·m (kgf-m, ft-lb)
T: 7.5 (0.76, 5.5)

3. CONTROL PANEL

- Auto A/C model

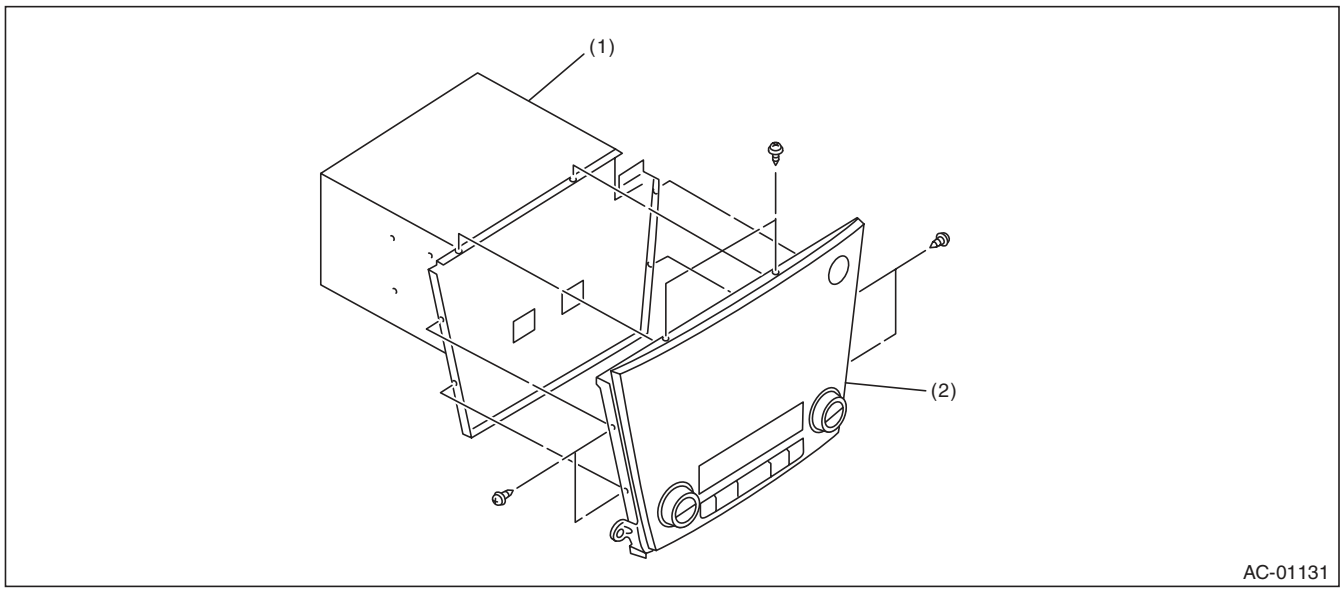

(1) Audio ASSY
(2) Control panel

- Manual A/C model

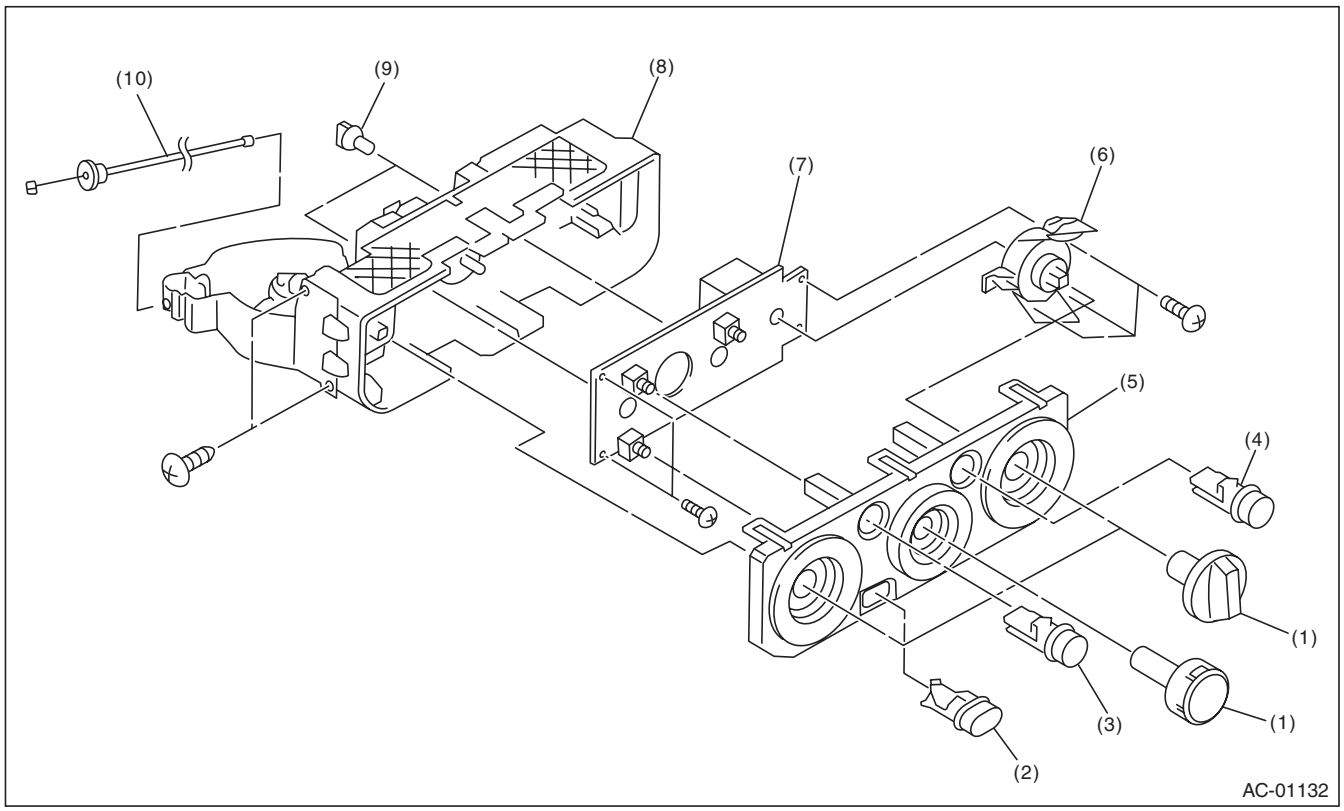

(1) Dial
(2) A/C switch
(3) FRESH/RECIRC switch
(4) Rear window defogger switch
(5) Heater control panel
(6) Mode change switch
(7) Switch board
(8) Heater control base
(9) Valve
(10) Temperature control cable

4. AIR CONDITIONING UNIT

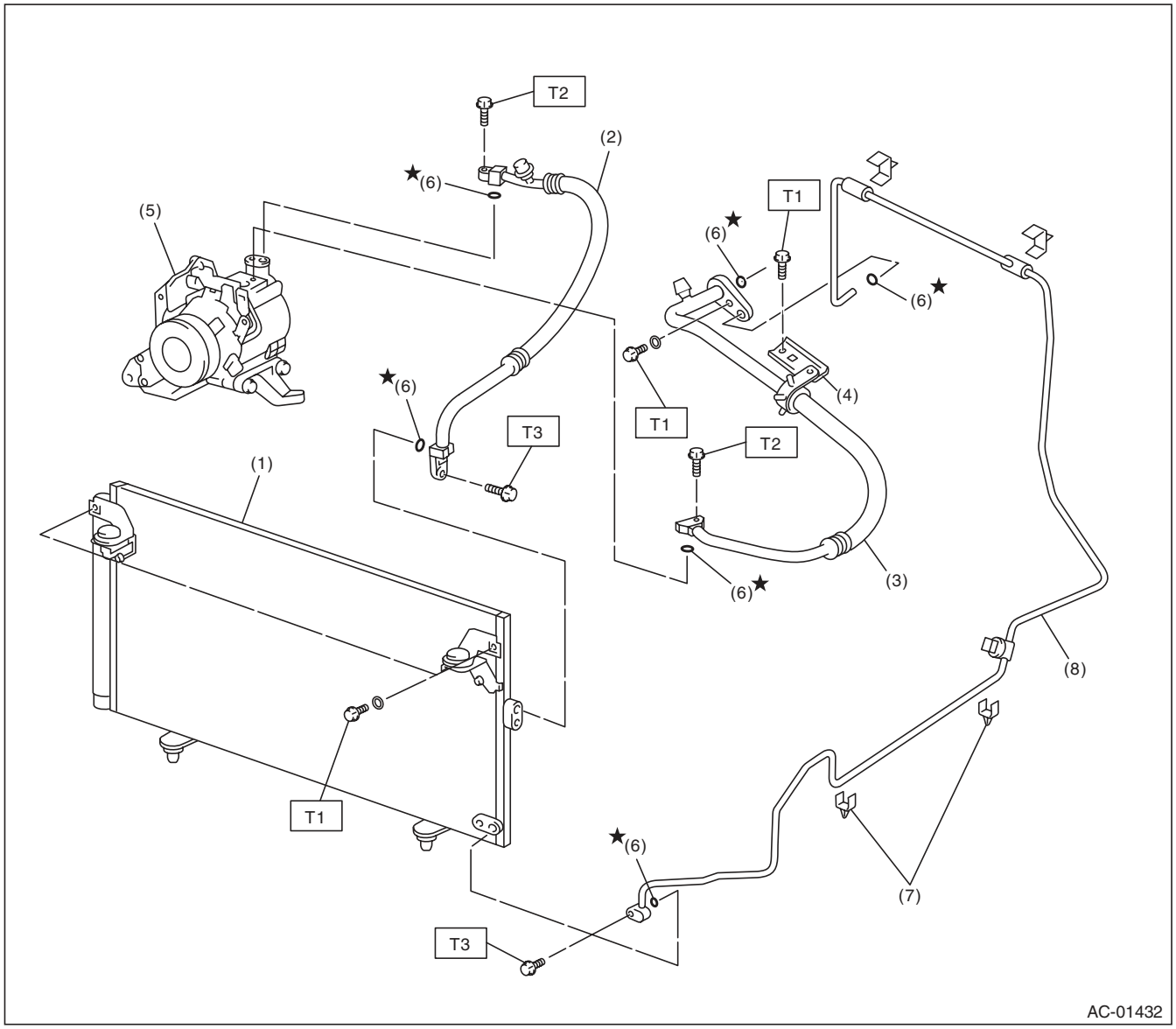

(1)	Condenser	(5)	Compressor	***Tightening torque:N·m (kgf-m, ft-lb)***
(2)	Hose (High-pressure)	(6)	O-ring	***T1: 7.5 (0.76, 5.5)***
(3)	Hose (Low-pressure)	(7)	Clamp	***T2: 10 (1.0, 7.4)***
(4)	Bracket	(8)	Pipe	***T3: 5 (0.5, 3.7)***

5. COMPRESSOR

- H4 model

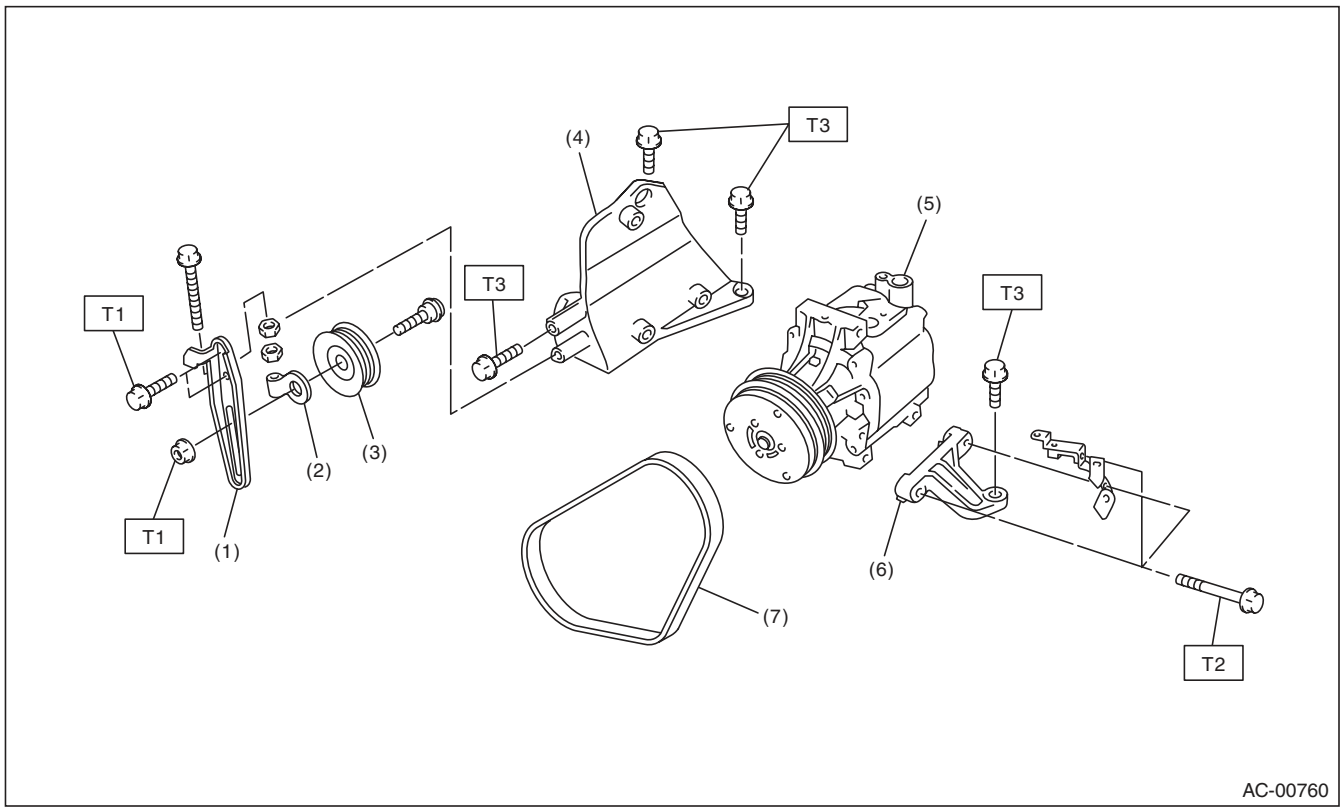

(1)	Idler pulley bracket	(5)	Compressor	***Tightening torque:N·m (kgf-m, ft-lb)***
(2)	Idler pulley adjuster	(6)	Compressor lower bracket	***T1: 23.0 (2.35, 17.0)***
(3)	Idler pulley	(7)	V-belt	***T2: 28.9 (2.95, 21.3)***
(4)	Compressor upper bracket			***T3: 36 (3.7, 26.6)***

- H6 model

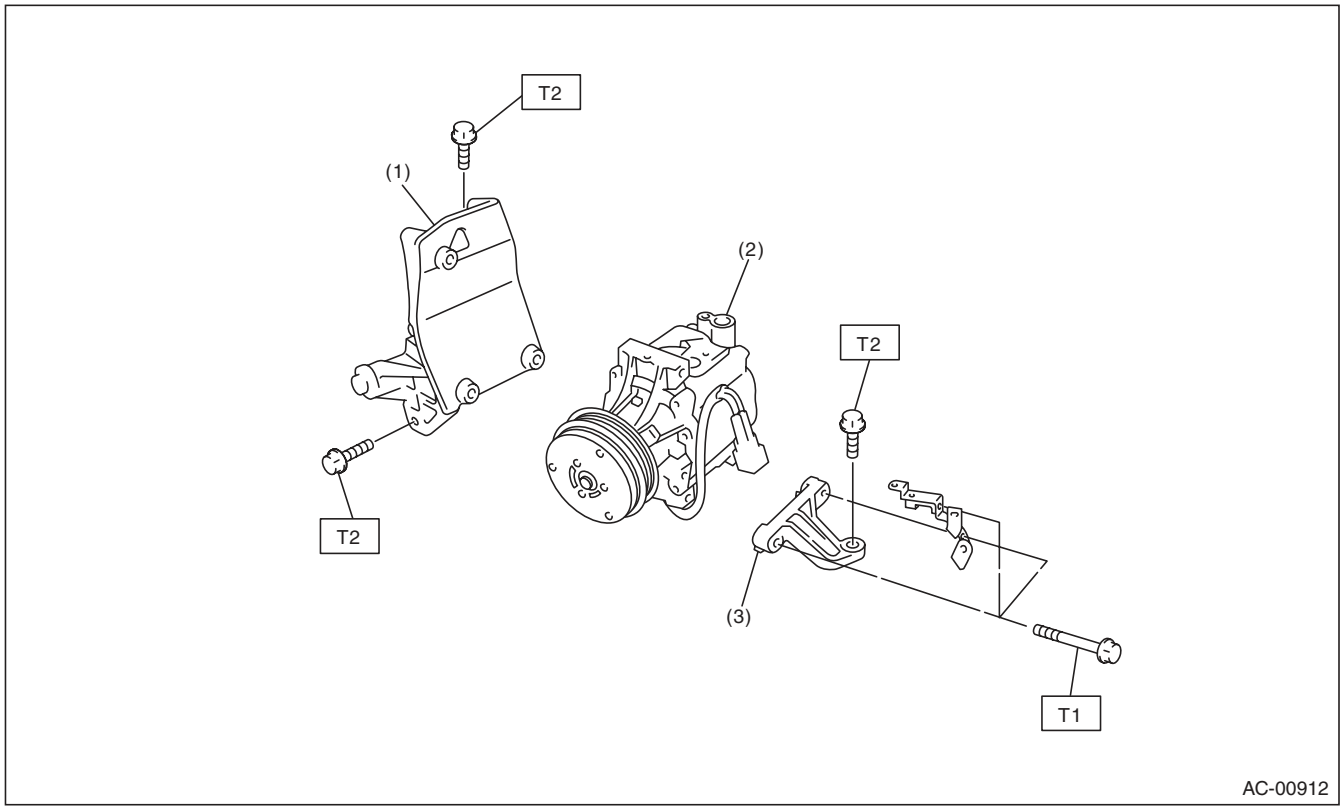

(1) Compressor upper bracket
(2) Compressor
(3) Compressor lower bracket

Tightening torque:N·m (kgf-m, ft-lb)
T1: 28.9 (2.95, 21.3)
T2: 36 (3.7, 26.6)

6. HEATER DUCT

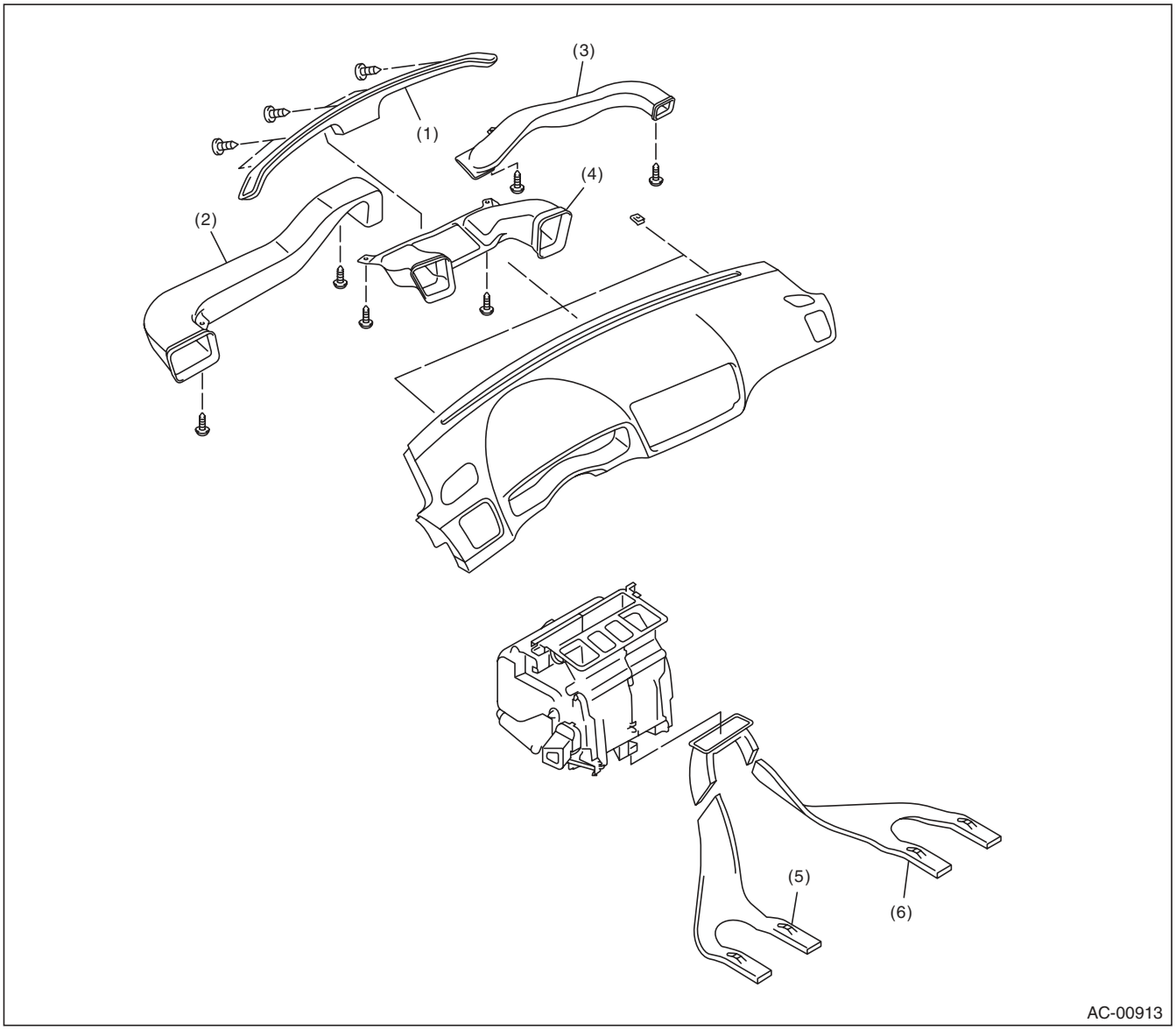

(1)	Front defroster nozzle	(3)	Side ventilation duct (RH)	(5)	Rear heater duct (LH)
(2)	Side ventilation duct (LH)	(4)	Center ventilation duct	(6)	Rear heater duct (RH)

C: CAUTION

1. HFC-134A A/C SYSTEM

• The cooling system components for the HFC-134a system such as the refrigerant and compressor oil are different from the conventional CFC-12 system components and they are incompatible with each other.
• Vehicles with the HFC-134a system can be identified by the label (A) attached to the vehicle.
Before maintenance, check which A/C system is installed to the vehicle.

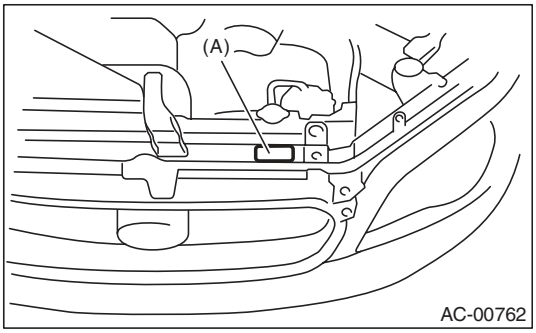

2. COMPRESSOR OIL

• HFC-134a compressor oil has no compatibility with that of CFC-12 system.
• Use only Denso Oil 8, the manufacturer-authorized compressor oil for the HFC-134a system.
• Do not mix multiple compressor oils.
If CFC-12 compressor oil is used in the HFC-134a A/C system, the compressor may become stuck due to poor lubrication, or the refrigerant may leak due to swelling of rubber parts.
On the other hand, if HFC-134a compressor oil is used in a CFC-12 A/C system, the durability of the A/C system will be lowered.
• HFC-134a compressor oil is very hygroscopic. When replacing or installing/removing A/C parts, immediately isolate the oil from atmosphere using a plug or tape. In order to avoid moisture, store the oil in a container with its cap tightly closed.

3. REFRIGERANT

• CFC-12 refrigerant cannot be used in a HFC-134a A/C system. HFC-134a refrigerant, also cannot be used in a CFC-12 A/C system.
• If an incorrect or no refrigerant is used, it will result in poor lubrication and the compressor itself may be damaged.
• In order to prevent global warming, avoid releasing HFC-134a into the atmosphere. Using a refrigerant recovery system, discharge and recycle the gas.

4. HANDLING OF REFRIGERANT

• The refrigerant boils at approx. –30°C (–22°F). When handling it, be sure to wear protective goggles and protective gloves. Direct contact of the refrigerant with skin may cause frostbite.
If the refrigerant gets into your eye, avoid rubbing your eyes with your hands. Wash your eye with plenty of water, and receive medical treatment from an eye doctor.
• Do not heat a service can. If a service can is directly heated, or put into boiling water, the inside pressure will become extremely high. This may cause the can to explode. If a service can must be warmed up, use warm water of 40°C (104°F) or less.
• Do not drop or impact a service can. (Observe the precautions and operation procedure described on the refrigerant can.)
• When the engine is running, do not open the high-pressure valve of the manifold gauge. High-pressure gas can back-flow resulting in an explosion of the can.
• Provide good ventilation and do not work in a closed area.

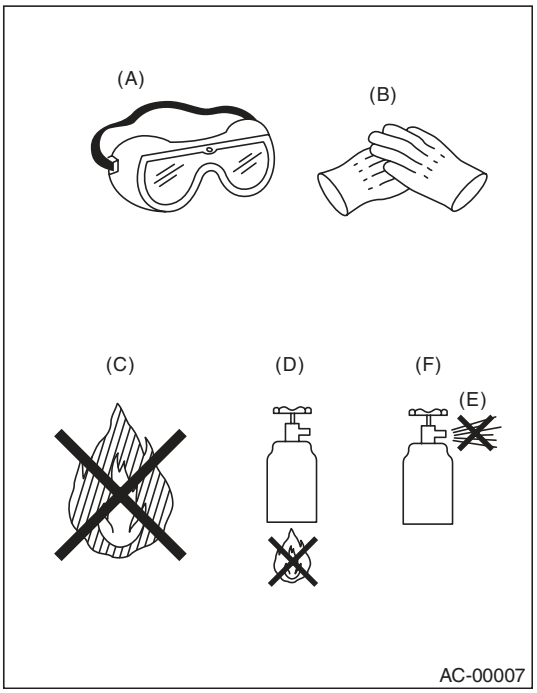

(A) Goggles
(B) Gloves
(C) Avoid open flame
(D) No direct heat on container
(E) Do not discharge
(F) Loosen

5. O-RING CONNECTIONS

- Always use a new O-ring.
- In order to keep the O-rings free of lint which can cause a refrigerant gas leak, perform operations without gloves and cloth.
- Apply compressor oil to O-rings to avoid sticking, before installation.
- Use a torque wrench to tighten the O-ring fittings. Over-tightening will result in damage of the O-ring and deformation of the pipe end.
- If the work is interrupted before completing pipe connections, recap the pipes, components and fittings with a plug or tape to prevent foreign matter from entering.

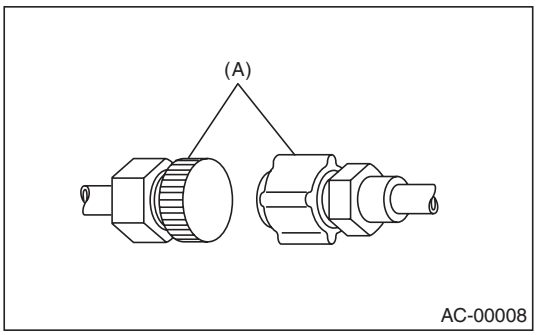

(A) Seal

- Visually check the surfaces and mating surfaces of O-rings, threads and connecting points. If a failure is found, replace the applicable parts.
- Install the O-rings straight against the pipe groove.

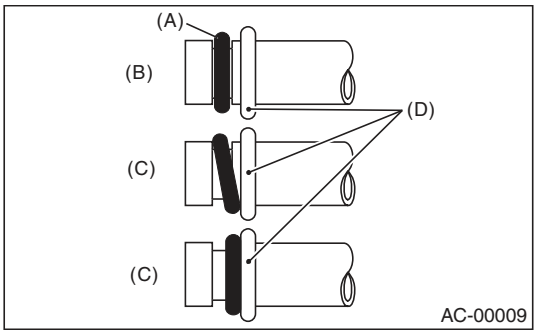

(A) O-ring
(B) OK
(C) NG
(D) Groove

- Use compressor oil specified in the service manual to lubricate the O-rings.

Apply oil to the top and sides of O-rings before installation.
Apply compressor oil to the pipe grooves.

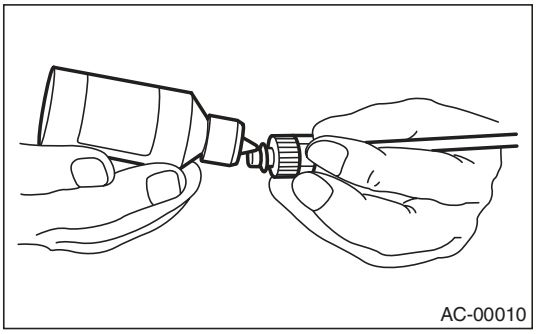

- After tightening, use a clean cloth to remove excess compressor oil from the connections and any oil which may have run on the vehicle body or other parts.
- If any leakage is suspected after tightening, do not tighten the connections further, but disconnect the connections, remove the O-rings, and check the O-rings, threads, and connections.

D: PREPARATION TOOL

CAUTION:
When working on vehicles with a HFC-134a system, only use HFC-134a specified tools and parts. Do not mix CFC-12 tools and parts. If HFC-134a and CFC-12 refrigerant or compressor oil is mixed, it will result in poor lubrication and the compressor itself may be damaged.
In order to prevent the mixture of HFC-134a and CFC-12 parts and liquid, the tool and screw type and the type of service valves used are different. The gas leak detectors for the HFC-134a and CFC-12 systems must also not be interchanged.

	HFC-134a	CFC-12
Tool & screw type	Millimeter size	Inch size
Valve type	Quick joint type	Screw-in type

ILLUSTRATION	Tools and Equipment
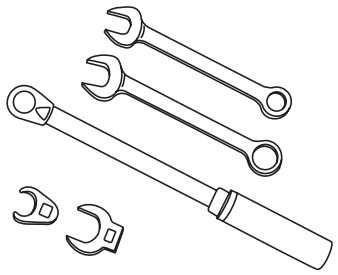 AC-00213	Wrench Various **WRENCHES** will be required to service any A/C system. 7 to 40 N·m (0.7 to 4.1 kgf-m, 5 to 30 ft-lb) torque wrench and various crow-foot wrenches will be needed. Open end or flare nut wrenches will be needed to affix the pipe and hose fittings.
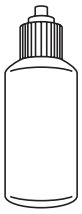 AC-00012	Applicator bottle A small **APPLICATOR BOTTLE** is recommended to apply compressor oil to the various parts. It can be available at a hardware or drug store.
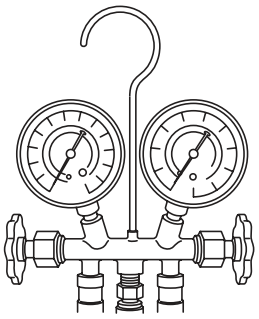 AC-00013	Manifold gauge set A **MANIFOLD GAUGE SET** (with hoses) is available either from a refrigerant supplier or an automotive equipment supplier.

ILLUSTRATION	Tools and Equipment
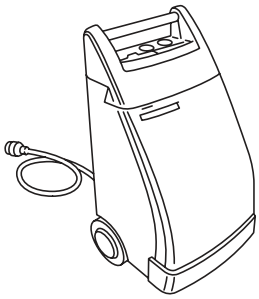 AC-00014	Refrigerant recovery system A **REFRIGERANT RECOVERY SYSTEM** is used for the recovery and recycling of A/C system refrigerant after contaminants and moisture have been removed from the refrigerant.
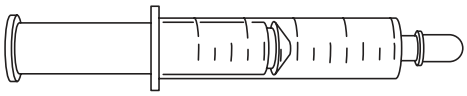 AC-00015	Syringe A graduated plastic **SYRINGE** will be needed to add oil into the system again. A syringe can be available at a pharmacy or drug store.
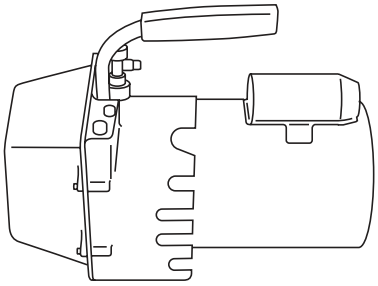 AC-00016	Vacuum pump A **VACUUM PUMP** is necessary (for a good working condition), and is available either at a refrigerant supplier or an automotive equipment supplier.
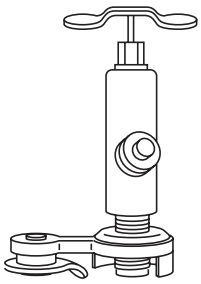 AC-00017	Can tap A **CAN TAP** for the 397 g (14 oz.) can is available at an automotive equipment supplier.
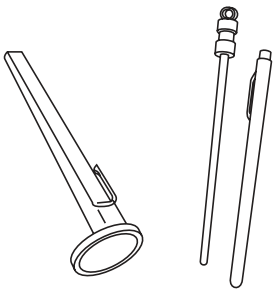 AC-00018	Thermometer A Pocket **THERMOMETER** is available either at a industrial hardware store or a refrigerant supplier.

ILLUSTRATION	Tools and Equipment
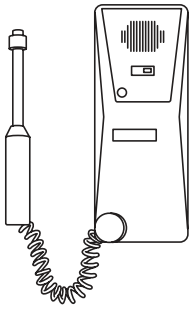 AC-00019	Electronic leak detector An **ELECTRONIC LEAK DETECTOR** can be available either at a specialty tool supplier or an A/C equipment supplier.
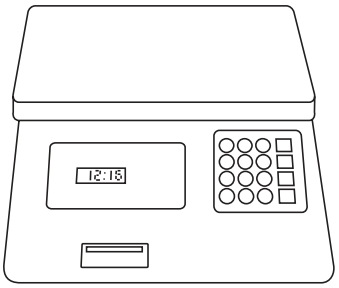 AC-00020	Weight scale A **WEIGHT SCALE** such as an electronic charging scale or a bathroom scale with digital display will be needed, if a 13.6 kg (30 lb) refrigerant container is used.

2. Refrigerant Pressure with Manifold Gauge Set

A: PROCEDURE

1) Place the vehicle in the shade and windless condition.
2) Connect the manifold gauge set.
3) Open the front windows and close all doors.
4) Open the front hood.
5) Increase the engine to 1,500 rpm.
6) Turn on the A/C switch.
7) Turn the temperature control switch to MAX COOL.
8) Put in RECIRC position.
9) Turn the blower control switch to HI.
10) Read the gauge.

Standard:
Low: 127 — 196 kPa (1.3 — 2.0 kg/cm^2, 18 — 28 psi)
High: 1,471 — 1,667 kPa (15 — 17 kg/cm^2, 213 — 242 psi)
Ambient temperature: 30 — 35°C (86 — 95°F)

B: INSPECTION

Symptom	Probable cause	Repair order
High-pressure side is unusually high.	• Defective condenser fan motor • Clogged condenser fin • Too much refrigerant • Air inside the system • Defective receiver dryer	• Replace the fan motor. • Clean the condenser fin. • Discharge refrigerant. • Replace the receiver dryer. • After evacuating again, charge an appropriate amount of refrigerant.
High-pressure side is unusually low.	• Defective compressor • Not enough refrigerant • Clogged expansion valve • Expansion valve frozen temporarily by moisture.	• Replace the compressor. • Check for leaks. • Replace the expansion valve. • Fully evacuate the expansion valve.
Low-pressure side is unusually high.	• Defective compressor • Defective expansion valve • Too much refrigerant	• Replace the compressor. • Replace the expansion valve. • Discharge refrigerant.
Low-pressure side is unusually low.	• Not enough refrigerant • Clogged expansion valve • Expansion valve frozen temporarily by moisture. • Saturated receiver dryer	• Check for leaks. • Replace the expansion valve. • Replace the receiver dryer.

3. Refrigerant Recovery Procedure

A: PROCEDURE

CAUTION:
- **During operation, be sure to wear protective goggles and protective gloves.**
- **Connect the refrigerant recovery system with the manifold gauge set to discharge the refrigerant from the A/C system and recycle the gas.**
- **When recycling the discharged refrigerant, keep service cans on hand. Because the recovery rate with the recovery system is approx. 90%, service cans are necessary to charge the refrigerant.**
- **Follow the detailed operation procedure described in the operation manual attached to the refrigerant recovery system.**

1) Perform compressor oil return operation. <Ref. to AC-27, PROCEDURE, Compressor Oil.>
2) Stop the engine.
3) Make sure the valves on low/high pressure sides of manifold gauge set are fully closed.

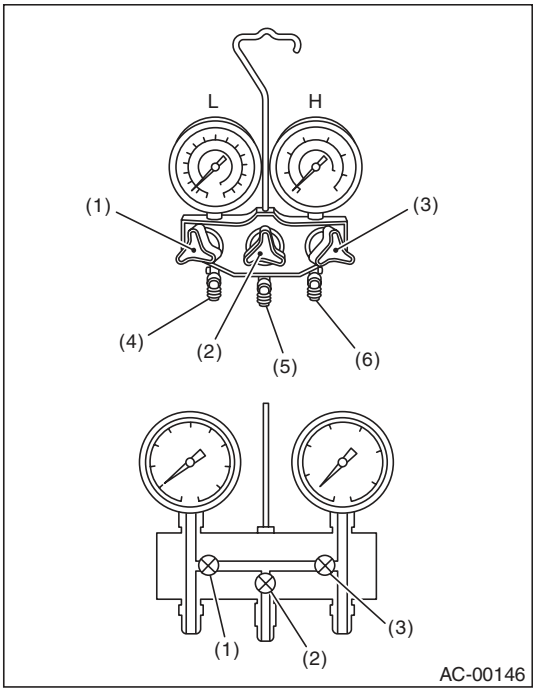

L: Low pressure gauge
H: High-pressure gauge
(1) Low pressure valve
(2) Vacuum pump valve
(3) High pressure valve
(4) For low pressure
(5) For vacuum pump
(6) For high pressure

4) Install the low/high pressure hoses to the service ports on the low/high pressure sides of the vehicle respectively.

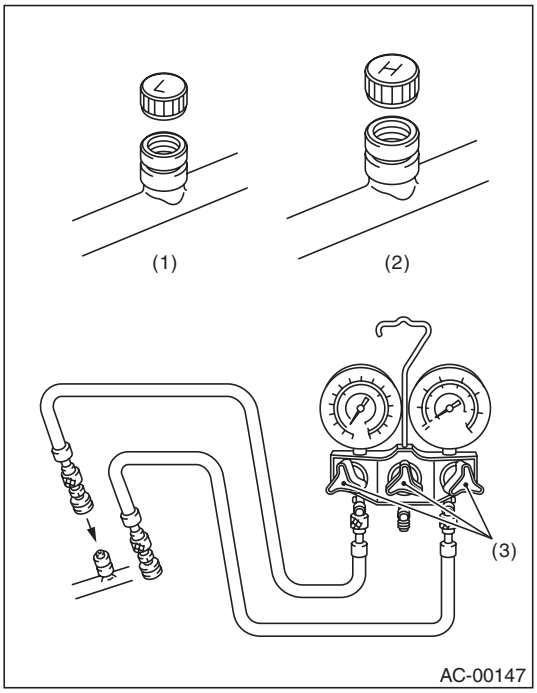

(1) Low-pressure side service port
(2) High-pressure side service port
(3) Close

5) Connect the center hose to the refrigerant recovery system.
6) Follow the operation manual to activate the refrigerant recovery system.

4. Refrigerant Charging Procedure

A: PROCEDURE

CAUTION:
- **While working, make sure to wear protective goggles and gloves.**
- **Air in the cycle can cause insufficient air conditioning, and water in the cycle can cause clogging in the cycle (icing) and rust. To remove this air and water content, use a vacuum pump to perform evacuation of the system before filling with refrigerant. By making the inside of the cycle a vacuum, the water content will evaporate even at atmospheric temperatures, and can be removed.**

1) Close all valves of the manifold gauge.

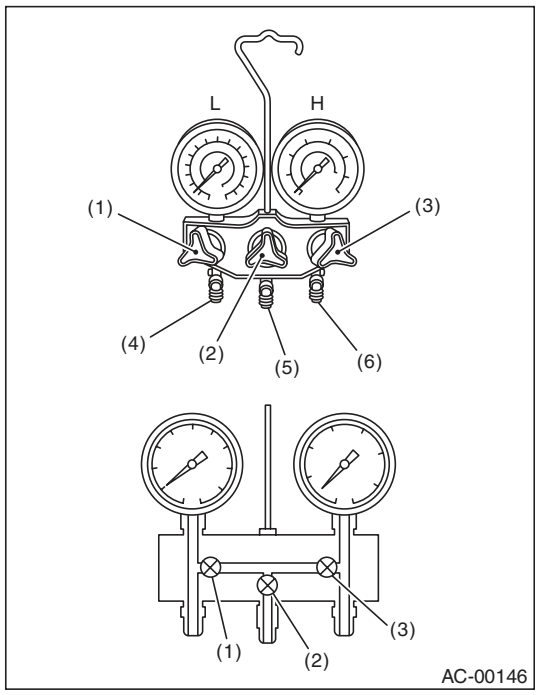

L: Low pressure gauge
H: High-pressure gauge
(1) Low pressure valve
(2) Vacuum pump valve
(3) High pressure valve
(4) For low pressure
(5) For vacuum pump
(6) For high pressure

2) Attach the low pressure side and high pressure side hoses to the vehicle service port.

CAUTION:
Confirm that the connection is secure.

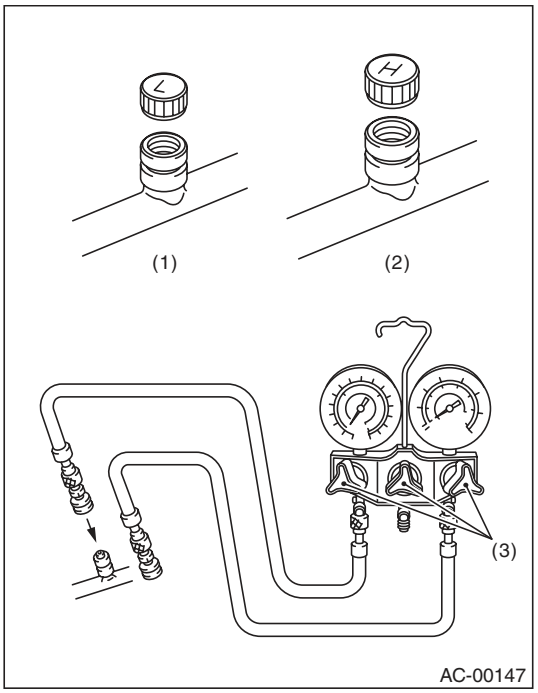

(1) Low-pressure side service port
(2) High-pressure side service port
(3) Close

3) Connect the center manifold hose of the manifold gauge to the vacuum pump.
4) Operate the vacuum pump and open the low pressure and high pressure side valves. Next, open the center manifold hose valve, and begin evacuation.

CAUTION:
Make sure to perform evacuation using a vacuum pump.

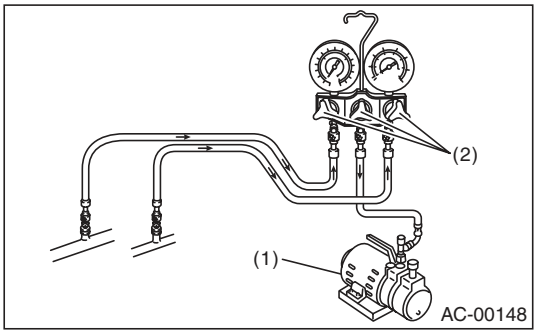

(1) Vacuum pump
(2) Open

5) After performing evacuation for over 5 minutes, when the low pressure gauge needle reaches above –100.0 kPa (–750 mmHg, –29.5 inHg), close the center manifold hose valve, and stop the vacuum pump.
6) Leave alone for 5 to 10 minutes after closing the low pressure side and high pressure side valves, and check whether there is any change in the low pressure gauge needle indication. If there is a change, this indicates a leak. Check the pipe and hose connections, and check the location with the problem. In this case, repeat again from step 1).
7) If there is no leakage, continue evacuation for an additional 20 to 30 minutes.
8) Close all valves, and stop the vacuum pump.
9) Follow the can tap operation manual, and attach the refrigerant can.

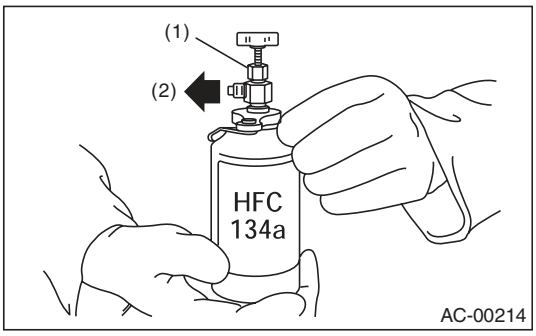

(1) Tap valve
(2) To center manifold hose

10) Disconnect the center manifold hose from the vacuum pump, and connect the hose to the tap valve.
11) When a 13.6 kg (30 lb) refrigerant container is used, measure the amount of refrigerant with a refrigerant charging scale, and connect with the center manifold hose.

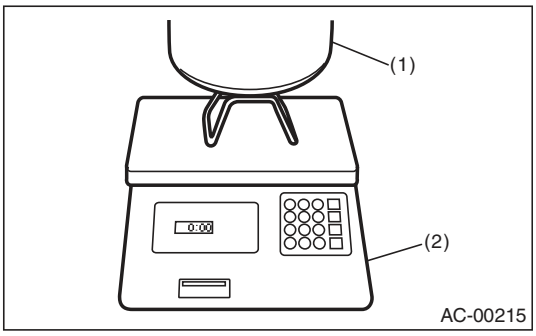

(1) Refrigerant container (HFC-134a)
(2) Weight scale

12) Open the valve on the HFC-134a source.
13) Loosen the center manifold hose connection on the manifold gauge for a few seconds (if there is a purge valve on the manifold gauge push this instead) to allow the air in the center manifold hose to escape using the refrigerant pressure.

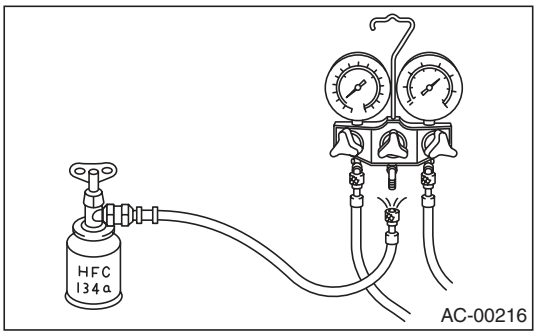

14) Open the high pressure side and low pressure side valves of the manifold gauge to fill with refrigerant.

CAUTION:
When filling with the engine running, do not open the high pressure side valve. Always fill from the low pressure side.

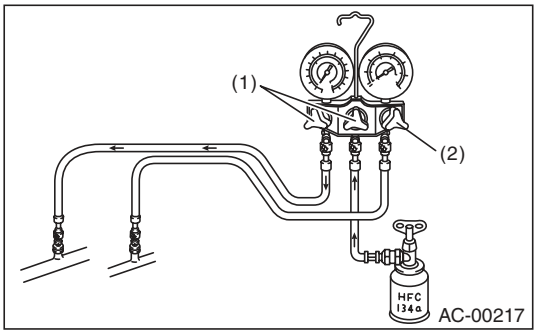

(1) Open
(2) Open

15) When the gauge needle indicates approximately 200 kPa (1,500 mmHg, 59.1 inHg), close all valves.
16) Using a leak tester, check for refrigerant leaks in the system.
17) After checking that there is no refrigerant leaks, fill with refrigerant up to the specified amount.
18) If the HFC-134a supply container becomes empty, close all valves, and close the can tap valve to replace the empty container. After replacing with a new HFC-134a supply container, perform air purge, and resume the filling operation.
19) If the refrigerant filling efficiency drops, close all valves.
20) Check that both the low pressure and high pressure valves are closed. Start the engine with the A/C switch OFF.
21) To prevent damage to the compressor, push the A/C switch ON-OFF quickly a few times.

22) Set up the vehicle to the following status:

CAUTION:
When filling with the engine running, do not open the high pressure side valve.
Always fill from the low pressure side valve.

- A/C switch ON
- Engine running at 1,500 rpm
- Blower speed setting to “HI”
- Temperature setting to “MAX COOL”
- Air inlet setting to “RECIRC”
- Window open

23) Open the low pressure side valve and fill with refrigerant up to the specified amount.
24) After filling with refrigerant, close all valves and disconnect the hose from the service port.
25) Attach the cap of the service port.

5. Refrigerant Leak Check

A: INSPECTION

1) Operate the A/C system for approx. 10 minutes, and check that the high-side pressure shows at least 690 kPa (7.03 kg/cm^2, 100 psi). Then stop the engine to start the leak test.
2) Starting from the connection between high-pressure pipe and evaporator, check the system for leaks along the high-pressure side through the compressor. The following items must be checked thoroughly.
3) Check the joint and seam between pressure switch (dual switch) and high-pressure pipe.
4) Check the connections between condenser and pipes, and welded joints on the condenser.
The leak tester may detect the oil on the condenser fins as a leak.
5) Check the joint between compressor and hoses.
6) Check the machined area of the compressor and other joints on the compressor.
7) Check the compressor shaft seal at the area near the center of compressor clutch pulley.
Shaft seals may show a slight amount of leakage, about 3 g (0.1 oz) per year. This is not a problem.
8) Starting from the connection between low-pressure pipe and evaporator, check the system for leakage along the low-pressure side through the compressor. The following items must be checked thoroughly.

- Connection between 2 parts
- Connection between pipe and plate

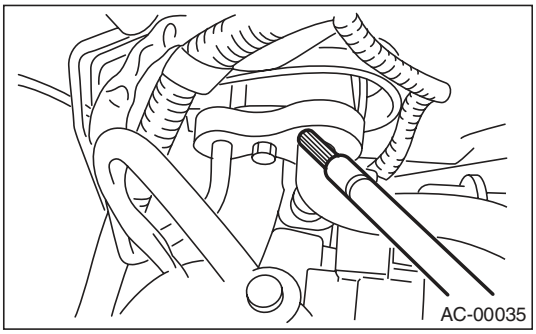

9) Visually check the rubber area of the flexible hose for cracks.
Check the entire length of the flexible hose, especially the connection with the metal hose end.

CAUTION:
Carefully check the external surface of hoses and pipes at approx. 25 mm (0.98 in) per second.

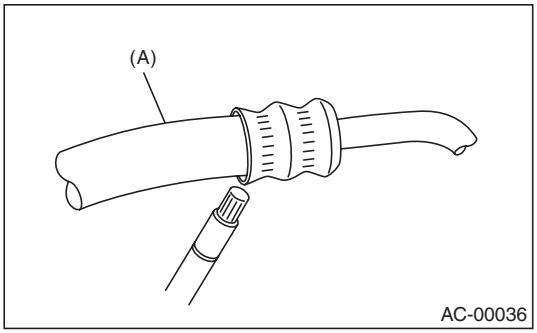

(A) Flexible hose

10) Disconnect the drain hose from the heater case, and check the hose end for at least 10 seconds.
After the test is finished, reconnect the drain hose.
11) Turn the ignition key to the ON position, and run the blower at high speed for approx. 1 minute. Stop the blower and check the ventilation grille on the instrument panel. While moving the tester closer to the grille, run the blower for 1 or 2 seconds, then stop it. Check the grille at that position for at least 10 seconds.

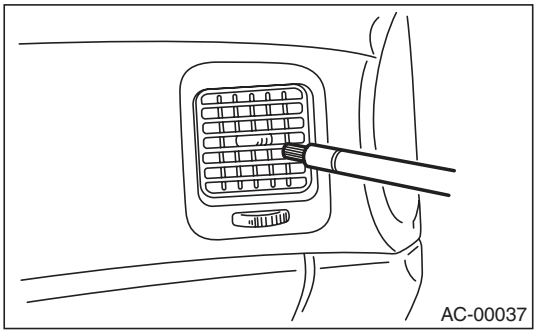

12) Check the valve in the service port.
13) Visually check the rubber seal in the service port cap.

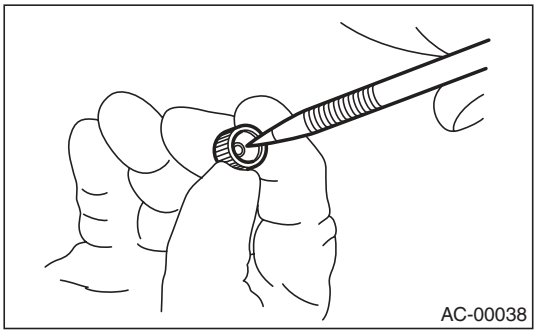

6. Compressor Oil

A: PROCEDURE

NOTE:
Before making repairs, perform the oil return operation to return the compressor oil in circulation with the refrigerant to the compressor.
1) Increase the engine to 1,500 rpm.
2) Turn on the A/C switch.
3) Turn the temperature control switch to MAX COOL.
4) Put in RECIRC position.
5) Turn the blower control switch to HI.
6) Leave in this condition for 10 minutes.

B: REPLACEMENT

NOTE:
• If a component has been replaced, add an appropriate amount of compressor oil (same as the amount of remaining oil in removed component).
• When replacing the compressor, the new compressor will already have the specified amount of oil in it. Adjust the oil amount (so that the amount remains the same as that of the removed compressor) and install the new compressor.
• Since the hygroscopicity of compressor oil is high, perform this series of works quickly.

7. Blower Motor Unit Assembly

A: REMOVAL

1) Disconnect the ground cable from the battery.
2) Remove the glove box. <Ref. to EI-52, REMOVAL, Glove Box.>
3) Disconnect the connectors of the A/C control module, intake door actuator, blower motor, power transistor and blower resistor.
4) Loosen the bolt and nut to remove blower motor unit assembly.

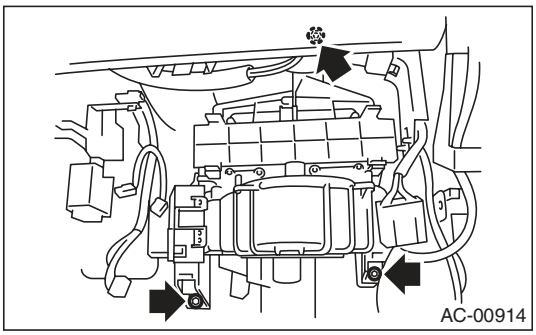

B: INSTALLATION

Install in the reverse order of removal.

Tightening torque:
Refer to "COMPONENT" of "General Description". <Ref. to AC-6, HEATER COOLING UNIT, COMPONENT, General Description.> <Ref. to AC-9, BLOWER MOTOR UNIT, COMPONENT, General Description.>

8. Blower Motor

A: REMOVAL

1) Disconnect the ground cable from the battery.
2) Remove the glove box lower cover. <Ref. to EI-52, REMOVAL, Glove Box.>
3) Disconnect the connector of the blower motor.
4) Loosen the screw to remove the blower motor.

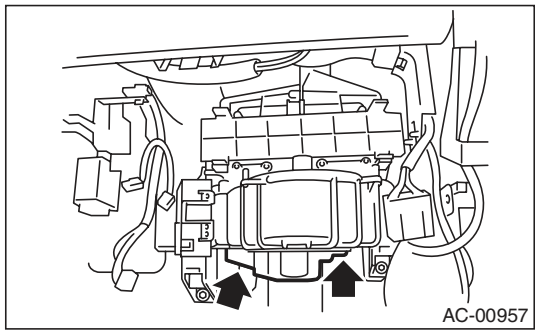

B: INSTALLATION

Install in the reverse order of removal.

C: INSPECTION

Connect the battery positive (+) terminal to terminal No. 2 of blower motor connector, and negative (–) terminal to terminal No. 1. Check the blower motor for smooth rotation.

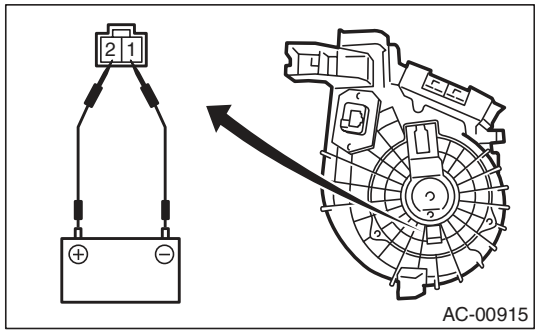

9. Power Transistor (Auto A/C Model)

A: REMOVAL

1) Remove the glove box lower cover. <Ref. to EI-52, REMOVAL, Glove Box.>
2) Disconnect the power transistor connector.
3) Remove the two screws and remove the power transistor.

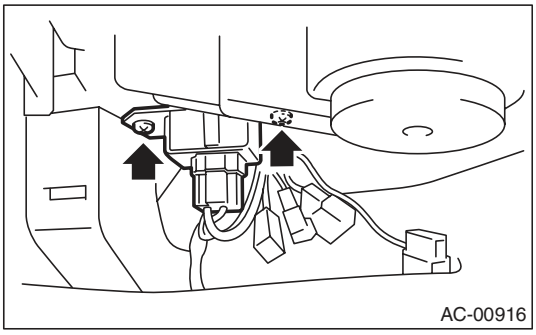

B: INSTALLATION

Install in the reverse order of removal.

10. Blower Resistor (Manual A/C Model)

A: REMOVAL

1) Remove the glove box lower cover. <Ref. to EI-52, REMOVAL, Glove Box.>
2) Disconnect the blower resistor connector.
3) Remove the two screws and remove the blower resistor.

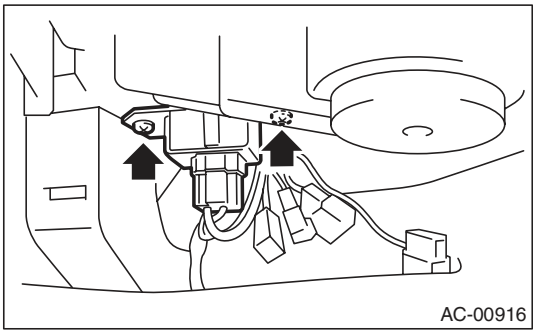

B: INSTALLATION

Install in the reverse order of removal.

C: INSPECTION

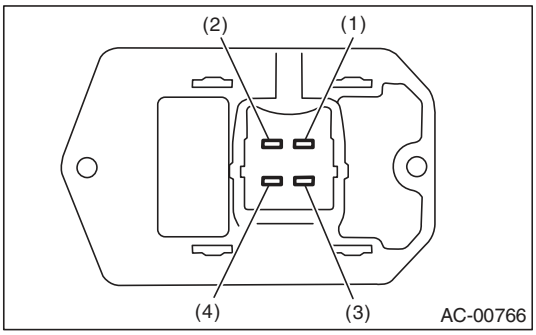

Measure the blower resistor resistance.

Terminal No.	Standard
4 and 2	Approx. 0.44 Ω
4 and 3	Approx. 1.12 Ω
4 and 1	Approx. 2.92 Ω

If NG, replace the blower resistor.

11.Heater Core

A: REMOVAL

1) Remove the heater and cooling unit. <Ref. to AC-38, REMOVAL, Heater and Cooling Unit.>
2) Remove the screws and remove the heater core cover and pipe clamp.

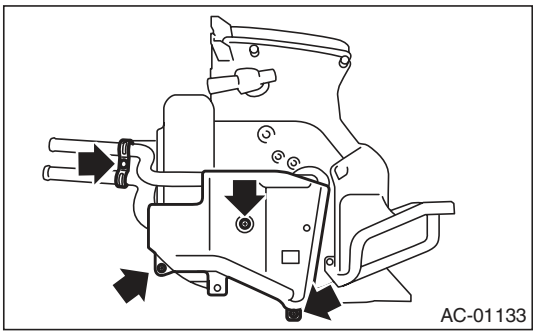

3) Remove the heater core (A).

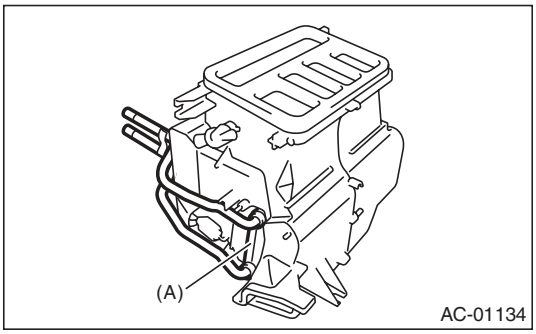

B: INSTALLATION

Install in the reverse order of removal.

12. Control Panel (Auto A/C Model)

A: REMOVAL

1) Remove the audio assembly. <Ref. to ET-4, REMOVAL, Audio.>
2) Remove the six screws.

NOTE:
When working with the removed audio assembly with its back facing down, place wooden blocks between the audio assembly and the workbench to prevent the ground terminal from folding.

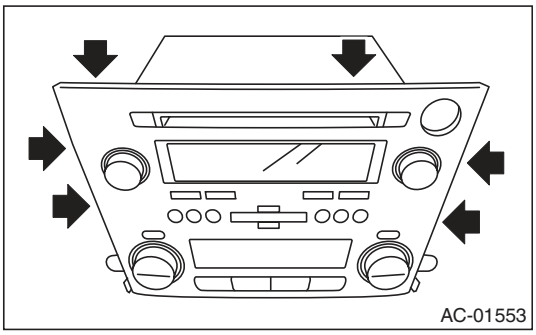

3) Use a fine flat tip screwdriver to lift the hooks in 10 locations gradually. Starting from the sides, proceed to loosen the lower hooks, then the upper hooks, then remove.

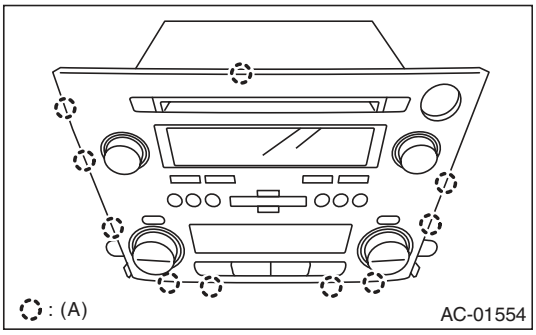

(A) Hook

4) Pull the panel straight out to remove.

CAUTION:
Be careful not to touch the circuit board of the panel to prevent damage by static electricity.

B: INSTALLATION

1) After attaching the hooks, push the center of the panel by hand and secure the connection between the circuit board and the connector.
2) Install in the reverse order of removal.

13. Control Unit (Manual A/C Model)

A: REMOVAL

1) Disconnect the ground cable from the battery.
2) Remove the instrument panel lower cover. <Ref. to EI-51, REMOVAL, Instrument Panel Lower Cover.>
3) Remove the control wires.

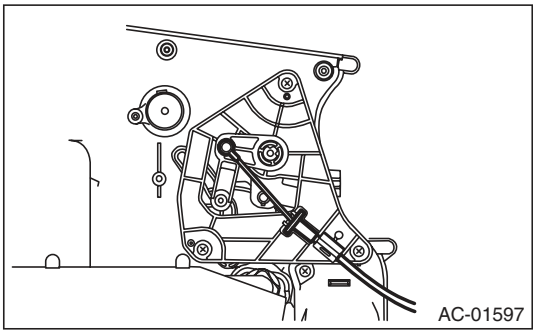

4) Remove the audio assembly. <Ref. to ET-4, REMOVAL, Audio.>
5) Loosen the screw to remove the control unit from the bracket.

B: INSTALLATION

Install in the reverse order of removal.

14. Control Unit (Auto A/C Model)

A: REMOVAL

1) Disconnect the ground cable from the battery.
2) Remove the glove box. <Ref. to EI-52, REMOVAL, Glove Box.>
3) Remove the screw, disconnect the connector and remove the control unit.

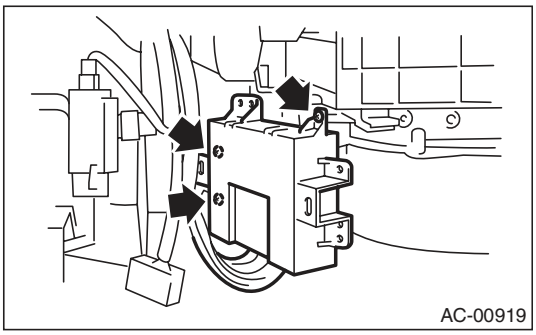

B: INSTALLATION

Install in the reverse order of removal.

15. Compressor

A: INSPECTION

1. MAGNETIC CLUTCH CLEARANCE

Check the clearance of the entire circumference around the drive plate and pulley.

Standard:
0.45±0.15 mm (0.0177±0.0059 in)

2. MAGNETIC CLUTCH OPERATION

1) Disconnect the compressor connector.
2) Connect the battery positive (+) terminal to terminal No. 1 of the compressor connector, and the negative (–) terminal to terminal No. 2.

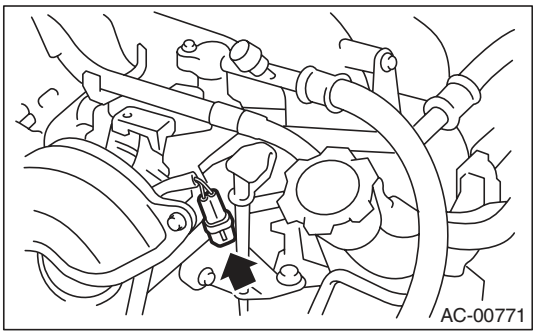

3) Check the magnet clutch engagement.
If there is a problem, replace the compressor.

B: REMOVAL

1) Perform compressor oil return operation. <Ref. to AC-27, PROCEDURE, Compressor Oil.>
2) Turn the A/C switch to OFF and stop the engine.
3) Using the refrigerant recovery system, drain the refrigerant. <Ref. to AC-22, PROCEDURE, Refrigerant Recovery Procedure.>
4) Disconnect the ground cable from the battery.
5) Remove the V-belts. <Ref. to ME(H4SO)-38, REMOVAL, V-belt.> <Ref. to ME(H4DOTC)-41, REMOVAL, V-belt.> <Ref. to ME(H6DO)-42, REMOVAL, V-belt.>
6) Remove the generator. <Ref. to SC(H4SO)-14, REMOVAL, Generator.>
7) Remove the bolt and remove the low-pressure hose and high-pressure hose.

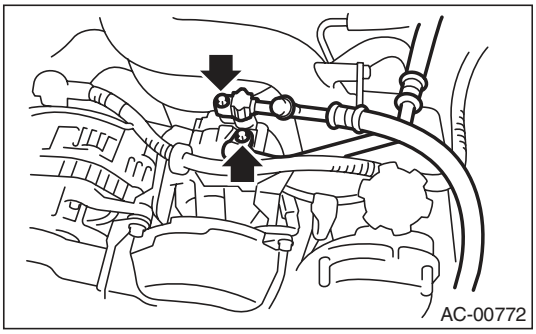

8) Disconnect the compressor harness from the body harness.
9) Remove the bolts and remove the compressor bracket.

- H4 model

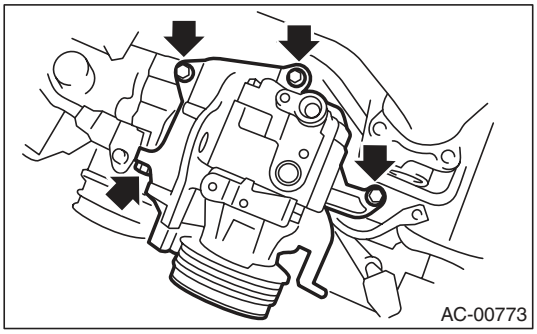

- H6 model

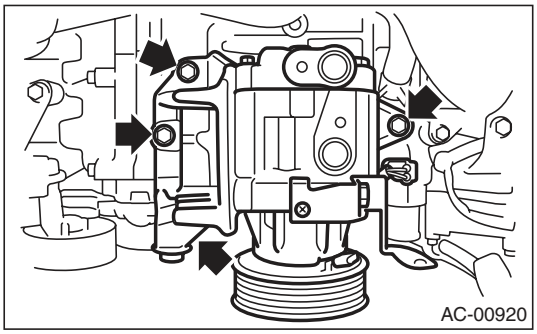

10) Remove the bolts, then remove the bracket from the compressor.

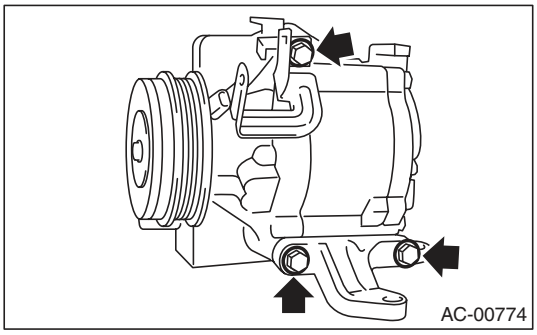

C: INSTALLATION

1) Install in the reverse order of removal.
2) Replace the O-rings on low-/high-pressure hoses with new parts, then apply compressor oil.
3) After replacing the compressor, adjust the amount of compressor oil. <Ref. to AC-27, PROCEDURE, Compressor Oil.>
4) Charge with refrigerant. <Ref. to AC-23, PROCEDURE, Refrigerant Charging Procedure.>

Tightening torque:
Refer to "COMPONENT" of "General Description". <Ref. to AC-11, AIR CONDITIONING UNIT, COMPONENT, General Description.> <Ref. to AC-12, COMPRESSOR, COMPONENT, General Description.>

16. Condenser

A: REMOVAL

1) Using the refrigerant recovery system, drain the refrigerant. <Ref. to AC-22, PROCEDURE, Refrigerant Recovery Procedure.>
2) Disconnect the ground cable from the battery.
3) Disconnect the pressure hose and pipe from the condenser.

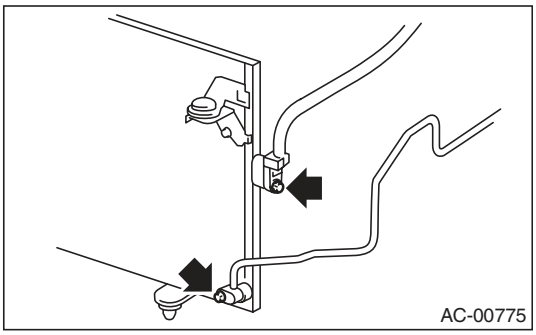

4) Remove the radiator bracket (A) and hood stay (B).

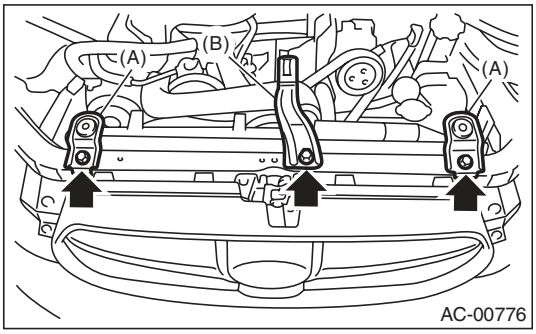

5) Remove the front grille. <Ref. to EI-24, REMOVAL, Front Grille.>
6) Remove two bolts. While lifting the condenser, pull out through space between the radiator and the radiator panel.

CAUTION:
- **Be careful not to damage the condenser fins. If a damaged fin is found, repair it using a thin screwdriver.**
- **When replacing the condenser, add an appropriate amount of compressor oil to the compressor. <Ref. to AC-27, REPLACEMENT, Compressor Oil.>**

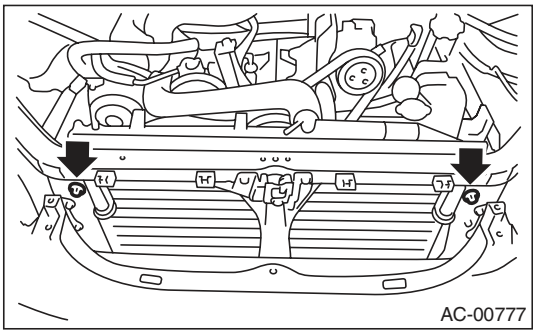

B: INSTALLATION

1) Install in the reverse order of removal.

CAUTION:
Replace the O-rings on hoses or pipes with new parts, and then apply compressor oil. Confirm that lower guide (A) of condenser fits into holes on radiator panel.

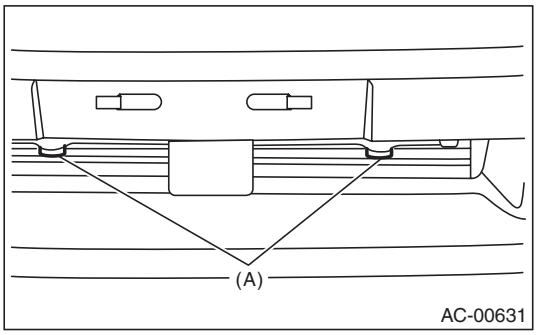

2) Charge with refrigerant. <Ref. to AC-23, PROCEDURE, Refrigerant Charging Procedure.>

Tightening torque:
Refer to "COMPONENT" of "General Description". <Ref. to AC-11, AIR CONDITIONING UNIT, COMPONENT, General Description.> <Ref. to CO(H4SO)-4, RADIATOR & RADIATOR FAN, COMPONENT, General Description.>

C: INSPECTION

1) Check to see that the condenser fins are not clogged with debris or insects. Blow with compressed air or flush fins with water as needed.
2) Inspect for oil leakage from the condenser. If a failure is found, replace the condenser with a new part.

17.Heater and Cooling Unit

A: REMOVAL

1) Disconnect the ground cable from the battery.
2) Using the refrigerant recovery system, drain the refrigerant. <Ref. to AC-22, PROCEDURE, Refrigerant Recovery Procedure.>
3) Drain engine coolant from the radiator.
4) Remove the bolts securing expansion valve and pipe in engine compartment. Release the heater hose clamps in engine compartment to remove the hoses.

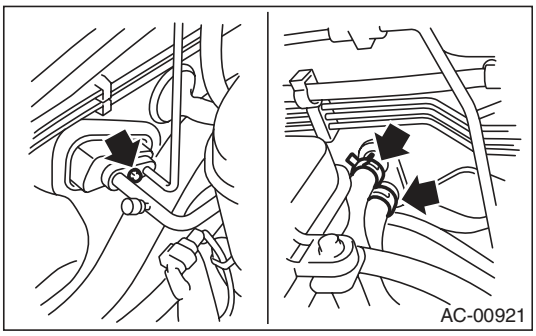

5) Remove the instrument panel. <Ref. to EI-57, REMOVAL, Instrument Panel Assembly.>
6) Remove the support beam.
7) Remove the blower motor unit assembly. <Ref. to AC-28, REMOVAL, Blower Motor Unit Assembly.>
8) Disconnect the actuator connector.
9) Remove the bolt and nuts and remove the heater and cooling unit.

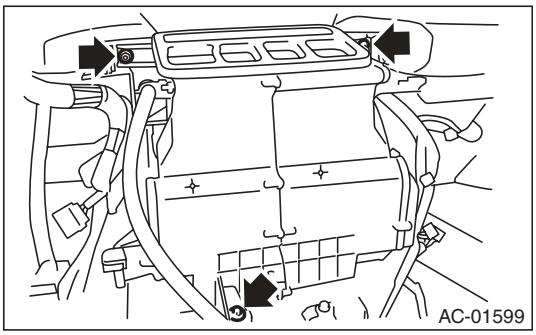

B: INSTALLATION

1) Install in the reverse order of removal.
2) Charge with refrigerant. <Ref. to AC-23, PROCEDURE, Refrigerant Charging Procedure.>

Tightening torque:
Refer to "COMPONENT" of "General Description". <Ref. to AC-6, HEATER COOLING UNIT, COMPONENT, General Description.>

18. Evaporator

A: REMOVAL

1) Using the refrigerant recovery system, drain the refrigerant. <Ref. to AC-22, PROCEDURE, Refrigerant Recovery Procedure.>
2) Disconnect the ground cable from the battery.
3) Remove the blower motor unit assembly. <Ref. to AC-28, REMOVAL, Blower Motor Unit Assembly.>
4) Disconnect the connector, remove the screw and then remove the air-mix door actuator and mode door actuator.

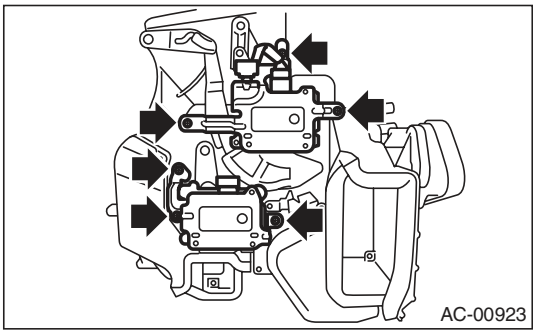

5) Disconnect the connector, remove the pipe cover and evaporator sensor.

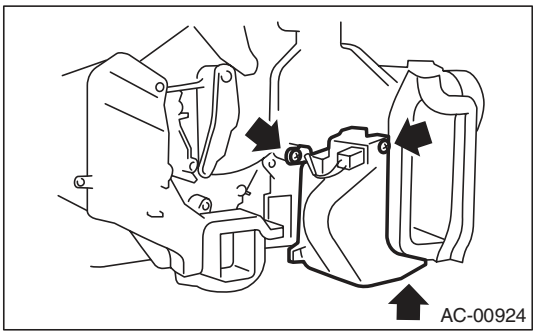

6) Remove the bolts securing expansion valve and pipe in engine compartment.

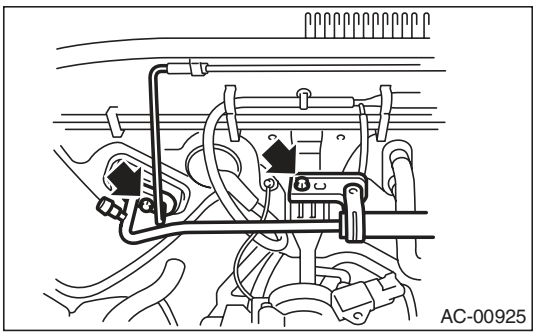

7) Remove the bolt which holds the pipe to the evaporator.

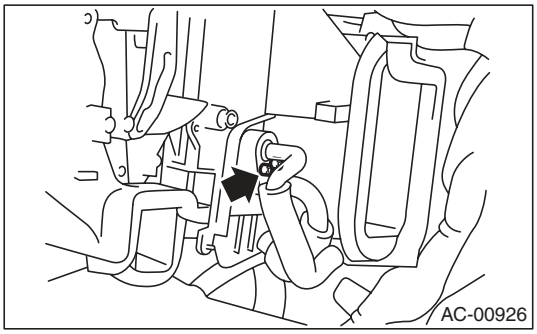

8) Remove the screws and clip to remove the evaporator cover.

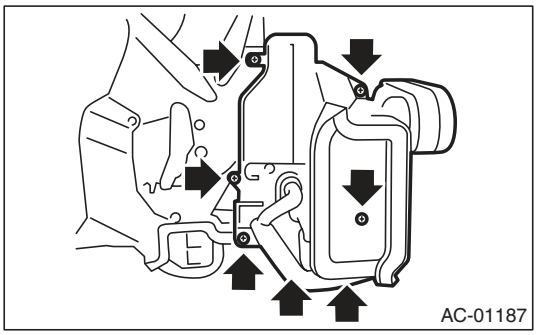

9) Pull out the evaporator (A) in the direction of the arrow.

CAUTION:
If the evaporator is replaced, add an appropriate amount of compressor oil to evaporator. <Ref. to AC-27, REPLACEMENT, Compressor Oil.>

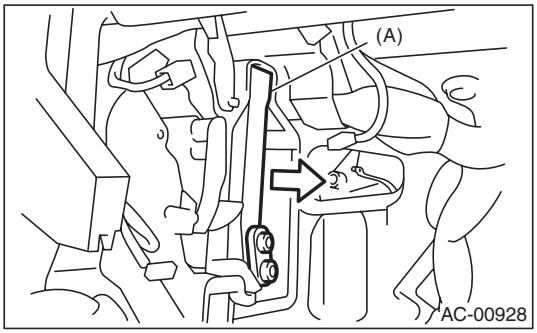

B: INSTALLATION

Install in the reverse order of removal.

19.Hose and Pipe

A: REMOVAL

CAUTION:
- **When disconnecting hoses and pipes, do not apply excessive force. After installing, check that no torsion or excessive tension applied to the hoses.**
- **Seal the disconnected hose with a plug or vinyl tape to prevent foreign matter from entering.**

1) Disconnect the ground cable from the battery.
2) Using the refrigerant recovery system, drain the refrigerant. <Ref. to AC-22, PROCEDURE, Refrigerant Recovery Procedure.>
3) Remove the bolt and detach the hoses and pipes.

B: INSTALLATION

CAUTION:
- **Always replace with new O-rings.**
- **When connecting hoses and pipes, do not apply excessive force. After installing, check that no torsion or excessive tension applied to the hoses.**

1) Install in the reverse order of removal.
2) Charge refrigerant. <Ref. to AC-23, PROCEDURE, Refrigerant Charging Procedure.>

Tightening torque:
Refer to "COMPONENT" of "General Description". <Ref. to AC-11, AIR CONDITIONING UNIT, COMPONENT, General Description.>

C: INSPECTION

Check the hoses for cracks, damage and expansion. If any fault is found, replace with new parts.

20. Relay and Fuse

A: LOCATION

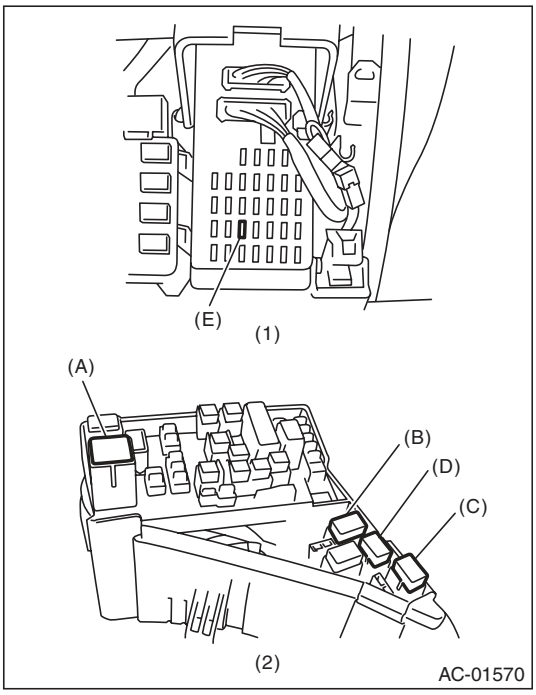

(1) Joint box
(2) Main fuse box

Main fan relay 1	(A)
Main fan relay 2	(B)
Sub fan relay	(C)
A/C relay	(D)
A/C Fuse	(E)

B: INSPECTION

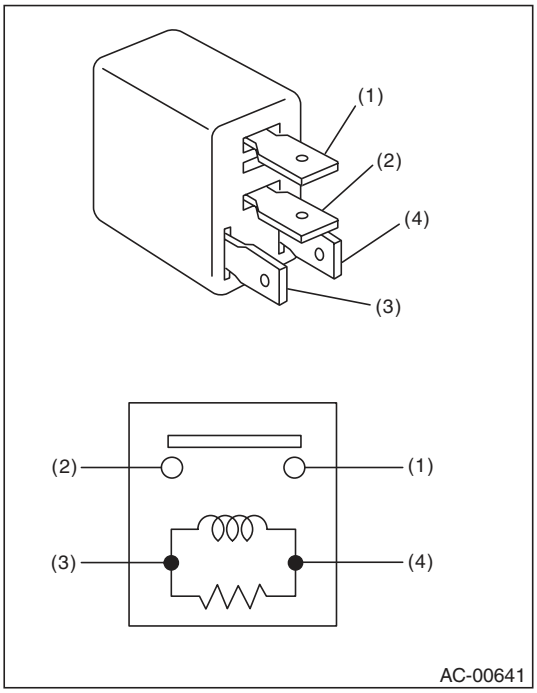

(3) — (4): Continuity exists
(1) — (2): Continuity does not exist

While applying battery voltage to the terminal between (3) and (4), check continuity between (1) and (2).
If no continuity exists, replace the relay with a new part.

21. Pressure Switch (Triple Pressure Switch)

A: INSPECTION

1) Connect the manifold gauge to the service valve on the high-pressure side.
2) Start the air conditioner, and check the operating pressure of switch by turning the compressor (magnet clutch) to ON/OFF. Operation of each switch is as follows.

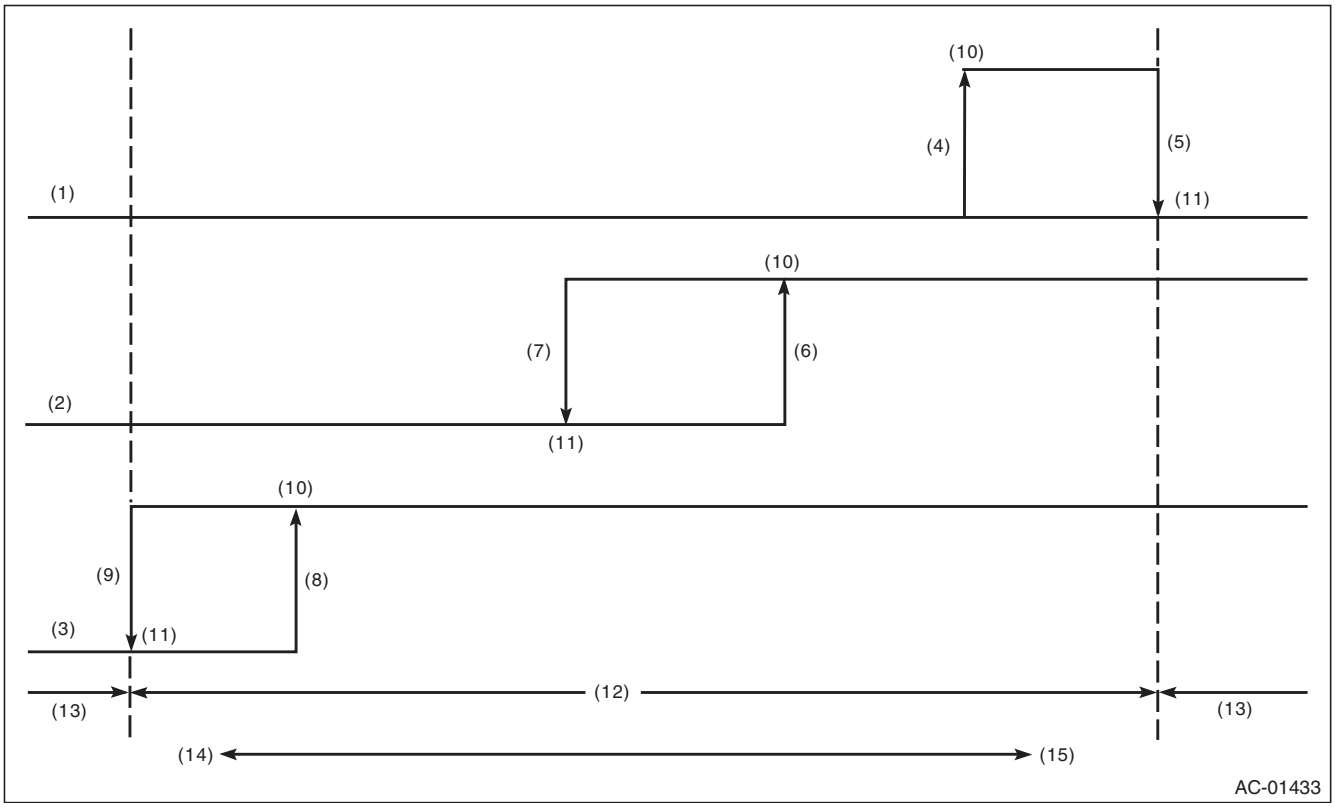

(1) High pressure switch
(2) Middle pressure switch
(3) Low pressure switch
(4) 2550±200 kPa (24±2 kg/cm^2, 341±28 psi)
(5) 3140^{+50}_{-200} kPa ($32.02^{+0.51}_{-2.04}$kg/cm^2, $455.4^{+72.5}_{-29.0}$ psi)
(6) 1770±80 kPa (18.05±0.82 kg/cm^2, 256.81±11.6 psi)
(7) 1370±120 kPa (13.97±1.22 kg/cm^2, 198.65±14.5 psi)
(8) 225^{+25}_{-29} kPa ($2.99^{+0.25}_{-0.3}$kg/cm^2, $3.6^{+32.6}_{-4.2}$ psi)
(9) 196±20 kPa (2.0±0.2 kg/cm^2, 28.4±2.9 psi)
(10) ON
(11) OFF
(12) Operative range of compressor
(13) Inoperative range of compressor
(14) Low pressure
(15) High pressure

NOTE:
• High pressure switch turns the compressor (magnet clutch) to OFF when the refrigerant pressure becomes extremely high to prevent the evaporator, air conditioner piping and expansion valve from getting damaged or frozen.
• Middle pressure switch effectively controls the radiator fan output by judging height load/low load in normal range.
• If the refrigerant pressure is abnormally low, the low pressure switch determines that there is insufficient refrigerant, and turns the compressor (magnetic clutch) OFF since there is a possibility that the compressor will seize if it is continued to run.

22. Actuator

A: REMOVAL

1. MODE DOOR ACTUATOR

Disconnect the connector, remove the screw, and then remove the mode door actuator from the heater and cooling unit.

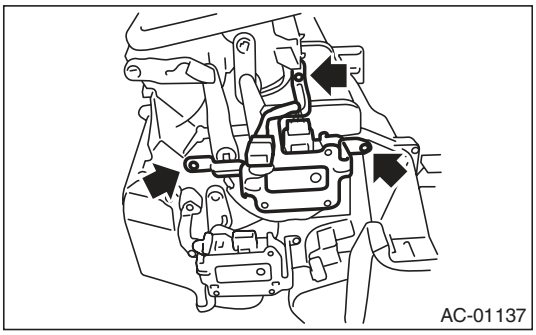

2. INTAKE DOOR ACTUATOR

Disconnect the connector, remove the screw, and then remove the intake door actuator from the blower motor unit.

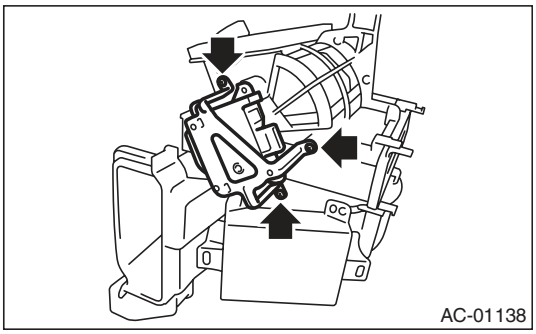

3. AIR MIX DOOR ACTUATOR (AUTO A/C MODEL)

Disconnect the connector, remove the screw, and then remove the air mix door actuator from the heater and cooling unit.

- Driver's side

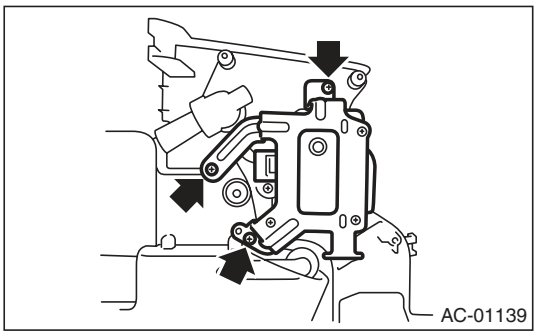

- Passenger's side

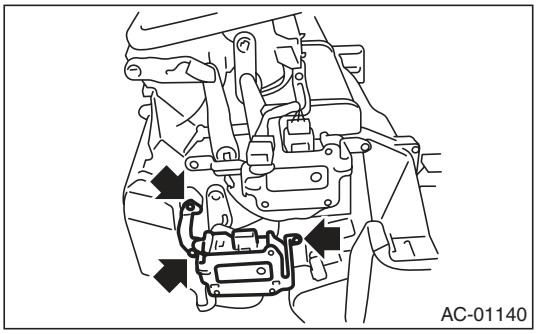

B: INSTALLATION

Install in the reverse order of removal.

23. Ambient Sensor (Auto A/C Model)

A: REMOVAL

1) Open the front hood.
2) Disconnect the ground cable from battery.
3) Disconnect the ambient sensor connector.
4) Remove the ambient sensor from the radiator lower panel.

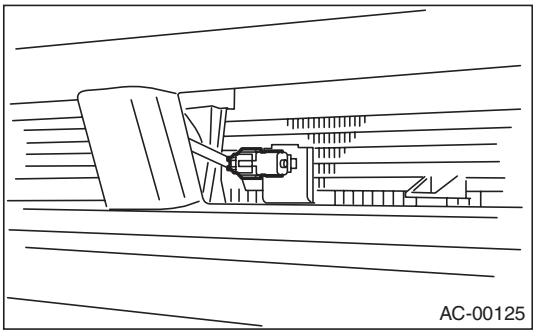

B: INSTALLATION

Install in the reverse order of removal.

C: INSPECTION

<Ref. to AC(diag)-29, AMBIENT SENSOR, Diagnostic Procedure for Sensors.>

24. Sunload Sensor (Auto A/C Model)

A: REMOVAL

1) Disconnect the ground cable from battery.
2) Disconnect the connector and remove the sunload sensor.

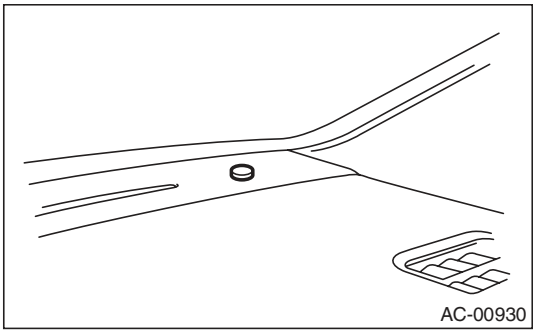

CAUTION:
Be careful not to damage the interior trims when removing the sensor.

B: INSTALLATION

Install in the reverse order of removal.

C: INSPECTION

<Ref. to AC(diag)-35, SUNLOAD SENSOR, Diagnostic Procedure for Sensors.>

25. In-Vehicle Sensor (Auto A/C Model)

A: REMOVAL

1) Disconnect the ground cable from the battery.
2) Remove the console side panel of the driver's side. <Ref. to EI-55, REMOVAL, Center Console.>
3) Disconnect the connector and aspirator hose, remove the claw and remove the in-vehicle sensor from the center console frame.

CAUTION:
Be careful not to damage the sensors and interior trims when removing.

B: INSTALLATION

Install in the reverse order of removal.

C: INSPECTION

<Ref. to AC(diag)-31, IN-VEHICLE SENSOR, Diagnostic Procedure for Sensors.>

26. Air Vent Grille

A: REMOVAL

1. CENTER GRILLE

1) Disconnect the ground cable from battery.
2) Remove the three claws and connector to remove center air vent grill.

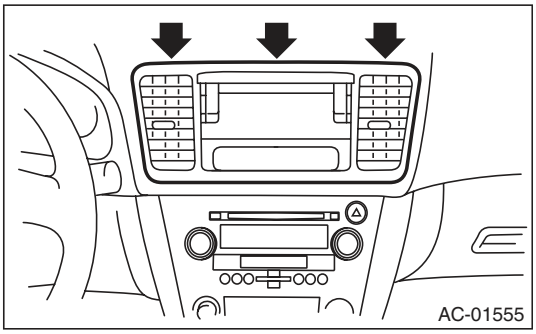

2. SIDE GRILLE

Remove the catch in 2 locations to remove the side air vent grill.

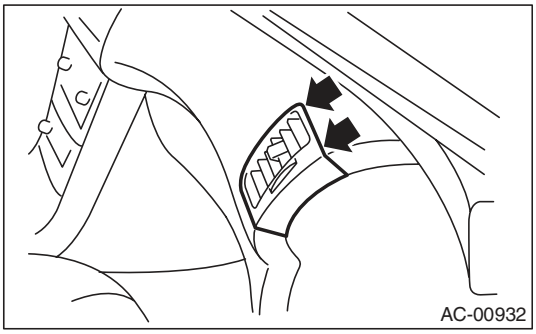

B: INSTALLATION

Install in the reverse order of removal.

C: INSPECTION

1) Check that the direction and amount of air can be adjusted smoothly.
2) Check that the adjustment can be maintained in each position.

27. Heater Duct

A: REMOVAL

1. FRONT HEATER DUCT

1) Remove the instrument panel lower cover. <Ref. to EI-51, REMOVAL, Instrument Panel Lower Cover.>
2) Remove the screws and front heater duct (A).

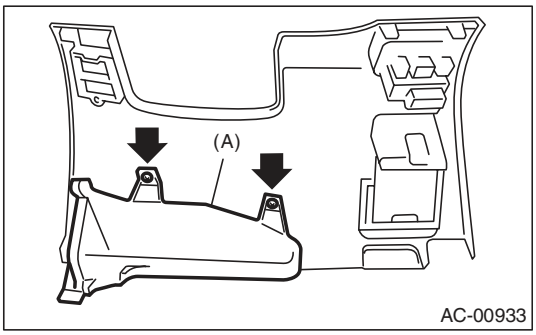

2. REAR HEATER DUCT

1) Remove the heater cooling unit. <Ref. to AC-38, REMOVAL, Heater and Cooling Unit.>
2) Remove the front seats. <Ref. to SE-9, REMOVAL, Front Seat.>
3) Remove the front side sill cover.
4) Pull off the floor mat to remove the rear center heater duct (A) and rear heater duct LH, RH (B).

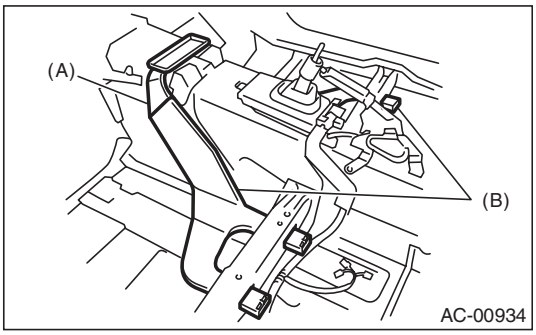

B: INSTALLATION

Install in the reverse order of removal.

28. Heater Vent Duct

A: REMOVAL

1) Remove the instrument panel. <Ref. to EI-51, REMOVAL, Instrument Panel Lower Cover.>
2) Remove the screws and detach the center vent duct (A).
3) Remove the screws and detach the side vent duct (B).
4) Remove the insulator, remove the screws and detach the defroster duct.

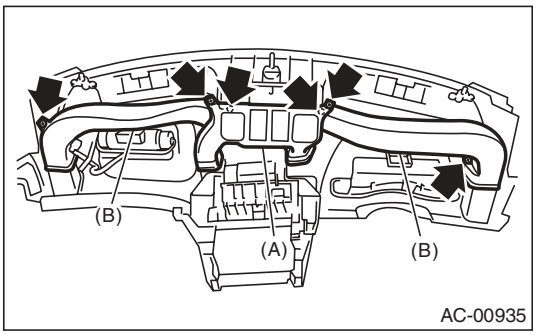

B: INSTALLATION

Install in the reverse order of removal.

29. A/C Filter

A: REPLACEMENT

1) Remove the instrument panel side cover.

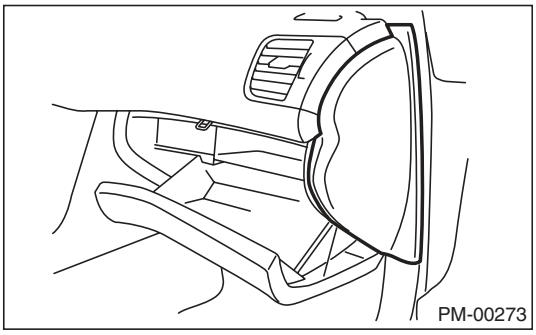

2) Remove the clip and the damper (string).

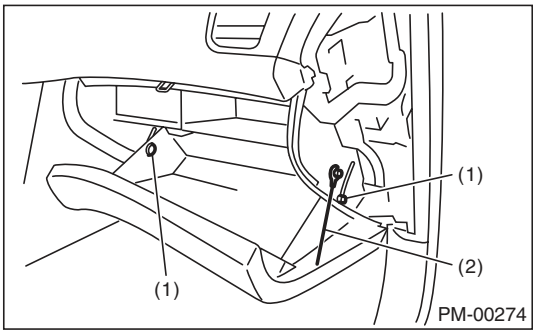

(1) Clip
(2) Damper

3) Remove the upper storage box.

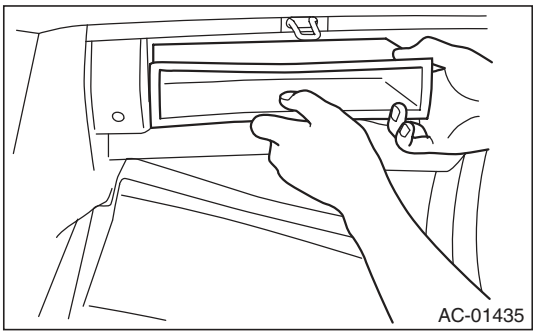

4) Remove the screws, and then remove the cover.

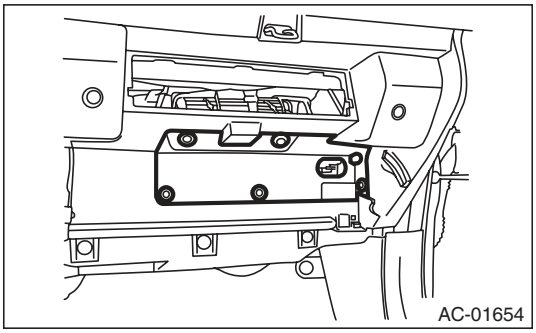

5) Remove the A/C filter.

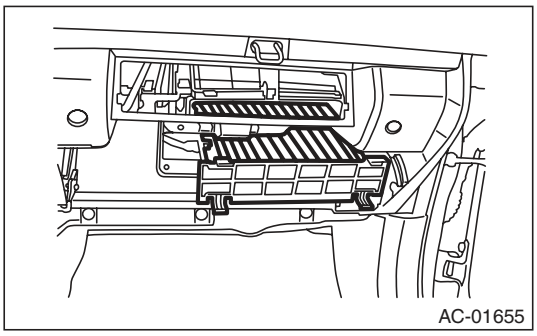

6) Install in the reverse order of removal.

30. General Diagnostic Table

A: INSPECTION

Symptoms		Repair order
Blower motor	Does not operate.	Fuse
		Blower motor relay
		Blower motor
		Blower motor resistor (Manual A/C)
		Blower switch
		Wiring harness
	Strange noise	Blower motor
Compressor	Does not operate.	Refrigerant
		Fuses
		Air conditioning relay
		Magnet clutch
		Compressor
		Pressure switch
		A/C switch
		Blower switch
		Wiring harness
	Strange noise	V-belt
		Magnet clutch
		Compressor
		Belt tension adjuster
Cold air not emitted.		Refrigerant
		V-belt
		Magnet clutch
		Compressor
		Pressure switch
		Aspirator hose (Auto A/C)
		Blower fan relay
		Blower motor
		A/C switch
		Blower switch
		Control module
		Expansion valve
		Evaporator
		Air mix actuator (Auto A/C)
		Temperature control cable (Manual A/C)
		Wiring harness
		Heater duct
		Heater vent duct
Warm air not emitted.		Engine coolant
		Aspirator hose (Auto A/C)
		Air mix actuator (Auto A/C)
		Temperature control cable (Manual A/C)
		Blower switch
		Heater core

General Diagnostic Table

HVAC SYSTEM (HEATER, VENTILATOR AND A/C)

Symptoms	Repair order
Temperature of air from vents does not change.	Engine coolant
	Air mix actuator (Auto A/C)
	Temperature control cable (Manual A/C)
	Temperature control switch (Auto A/C)
	Wiring harness (Auto A/C)
Unable to switch blow vents.	Mode actuator (Auto A/C)
	Mode switch cable (Manual A/C)
	Mode switch (Auto A/C)
	Wiring harness (Auto A/C)
Unable to switch suction vents.	FRESH/RECIRC switch (Auto A/C)
	FRESH/RECIRC actuator (Auto A/C)
	Wiring harness (Auto A/C)

1. Basic Diagnostic Procedure

A: PROCEDURE

Step		Check	Yes	No
1	**START INSPECTIONS.** 1) Perform the pre-inspection. <Ref. to AC(diag)-3, INSPECTION, General Description.> 2) Perform the self-diagnosis. <Ref. to AC(diag)-9, OPERATION, Diagnostic Chart for Self-Diagnosis.>	Does the self-diagnosis operate?	Go to step **2**.	<Ref. to AC(diag)-14, A/C OR SELF-DIAGNOSIS SYSTEMS DO NOT OPERATE, Diagnostics for A/C System Malfunction.>
2	**IDENTIFY MALFUNCTION PART.** Identify the malfunction part with self-diagnosis.	Can the malfunction part be confirmed?	Repair the malfunctioning part in accordance with each diagnostic chart.	Go to step **3**.
3	**CHECK COMPARTMENT TEMPERATURE.** 1) Turn on the A/C switch. 2) Turn the temperature control dial at maximum cool position. 3) Check the compartment temperature change.	Does the compartment temperature change?	Go to step **4**.	<Ref. to AC(diag)-18, COMPARTMENT TEMPERATURE DOES NOT CHANGE, OR A/C SYSTEM DOES NOT RESPOND PROMPTLY, Diagnostics for A/C System Malfunction.>
4	**CHECK A/C SYSTEM RESPONSE.** Change the temperature setting, and check the response of A/C system.	Does the A/C system respond quickly?	A/C system is normal.	<Ref. to AC(diag)-18, COMPARTMENT TEMPERATURE DOES NOT CHANGE, OR A/C SYSTEM DOES NOT RESPOND PROMPTLY, Diagnostics for A/C System Malfunction.>

2. General Description

A: CAUTION

1) Never connect the battery in reverse polarity. Doing so may immediately damage the auto A/C control module.
2) Do not disconnect the battery terminals while the engine is running. A large counter electromotive force will be generated in the generator, and this voltage may damage electronic parts such as auto A/C control module etc.
3) Before disconnecting the connectors of sensors and the auto A/C control module, be sure to turn off the ignition switch. Auto A/C control module may be damaged.
4) Every A/C-related part is a precision part. Do not drop them.
5) Airbag system wiring harness is routed near the A/C control panel and junction box.

CAUTION:
- **Do not use electrical test equipment on wiring harness and connector circuits of the airbag system.**
- **Be careful not to damage the airbag system wiring harness when servicing the A/C control panel and junction box.**

B: INSPECTION

Before performing the diagnosis, check the following items which may cause problems in the A/C system.

1. BATTERY

1) Measure the battery voltage and specific gravity of electrolyte.

Standard voltage: 12 V

Specific gravity: 1.260 or more

2) Check the condition of the fuses for A/C system power supply and other fuses.
3) Check the condition of harness and harness connector connections.

2. ASPIRATOR HOSE

1) Turn the ignition switch to ON, and press the A/C switch.
2) Turn the temperature control dial to maximum hot position.
3) Turn the air flow control dial to “DEF” position.
4) Turn the fan speed control dial to “MAX” position.
5) Put a strip of paper close to the front side of in-vehicle sensor suction port (A) located in the driver’s side console side panel, and check that air is being sucked into the port by seeing the paper moving towards the port.

NOTE:
Be careful not to let the paper get sucked into the port.

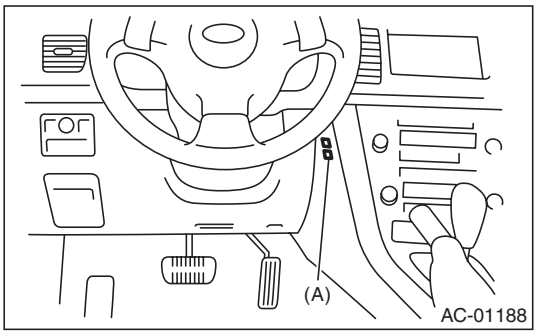

6) If the paper does not move at all, remove the driver’s side console side panel <Ref. to EI-55, REMOVAL, Center Console.> and check for improper connection of the aspirator hose, in-vehicle sensor and heater unit, and repair them if necessary.

3. A/C LINE

Check the connection for A/C line (A) and lower side high-pressure pipe.

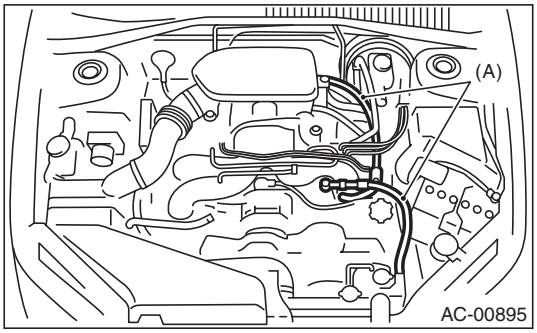

4. CONTROL LINKAGE

1) Check the state of mode door linkage.
2) Check the state of air mix door linkage.
3) Check the state of FRESH/RECIRC door linkage.

5. CONTROL SWITCHES

Start the engine and warm up completely.

1) Inspection using switches

No.	Point to check	Switch operation	Judgement standard
1	OFF switch	Press the OFF switch.	Setting temperature display goes out. • Blower fan: OFF • Inlet opening: FRESH • Compressor: OFF
2	AUTO switch, driver's side temperature control dial and passenger's side temperature control dial	1) Press the AUTO switch. 2) Turn the temperature control dial to the left fully, and set to 18°C (65°F) (maximum cool position).	AUTO display illuminates. • Outlet air temperature: COOL • Blower fan: HI (AUTO) • Outlet opening: FACE • Inlet opening: AUTO • Compressor: AUTO
		3) Turn the temperature control dial to the right slowly, and change the setting from 18°C (65°F) (maximum cool position) to 32°C (85°F).	• Outlet air temperature: COOL → HOT • Blower fan: AUTO • Outlet opening: FACE → B/L → FOOT • Inlet opening: AUTO • Compressor: AUTO
		4) Turn the temperature control dial to the right fully, and set to 32°C (85°F) (maximum hot position).	• Outlet air temperature: HOT • Blower fan: HI (AUTO) • Outlet opening: FOOT • Inlet opening: FRESH (AUTO) • Compressor: AUTO
3	Defroster switch	Press the defroster switch.	Defroster switch indicator illuminates. • Outlet air temperature: AUTO • Blower fan: AUTO • Outlet opening: DEF • Inlet opening: FRESH • Compressor: ON
4	FRESH/RECIRC switch	Press the FRESH/RECIRC switch.	Inlet opening switches RECIRC → FRESH or FRESH → RECIRC each time pressing the switch.
5	MODE switch	Press the MODE switch.	Outlet opening switches FACE → B/L → FOOT → F/D each time pressing the switch.
6	FAN switch	Press the FAN switch (+).	Inlet opening switches LO → M1 → M2 → M3 → M4 → HI each time pressing the switch.

2) Inspection of compressor operation

No.	Point to check	Switch operation	Judgement standard
1	Compressor	1) Turn the A/C switch to ON. 2) Set the FAN switch between LO and HI.	Compressor: ON

3) Inspection of illumination control

No.	Point to check	Switch operation	Judgement standard
1	Illumination	Turn the lighting switch to ON.	Illumination comes on.

3. Electrical Component Location

A: LOCATION

1. ENGINE COMPARTMENT

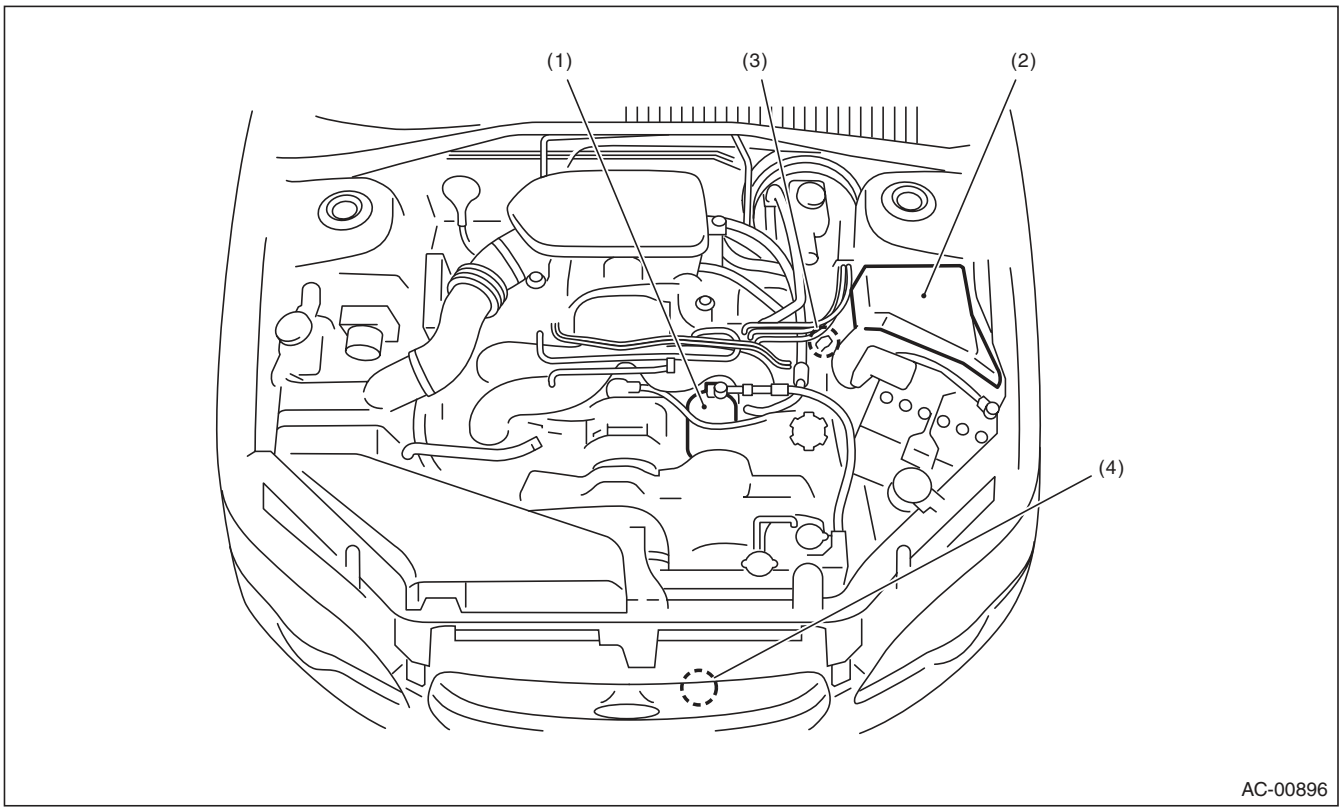

(1) A/C compressor
(2) A/C relay
(3) Pressure switch
(4) Ambient sensor

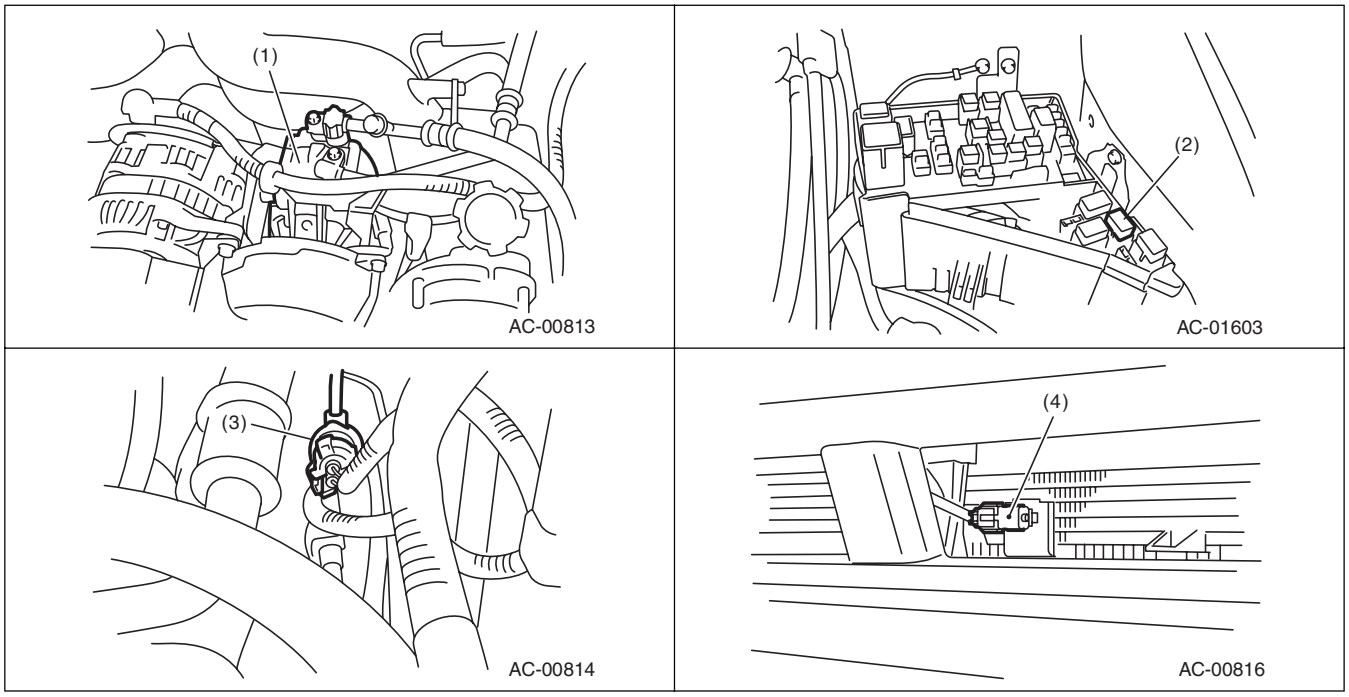

2. PASSENGER COMPARTMENT

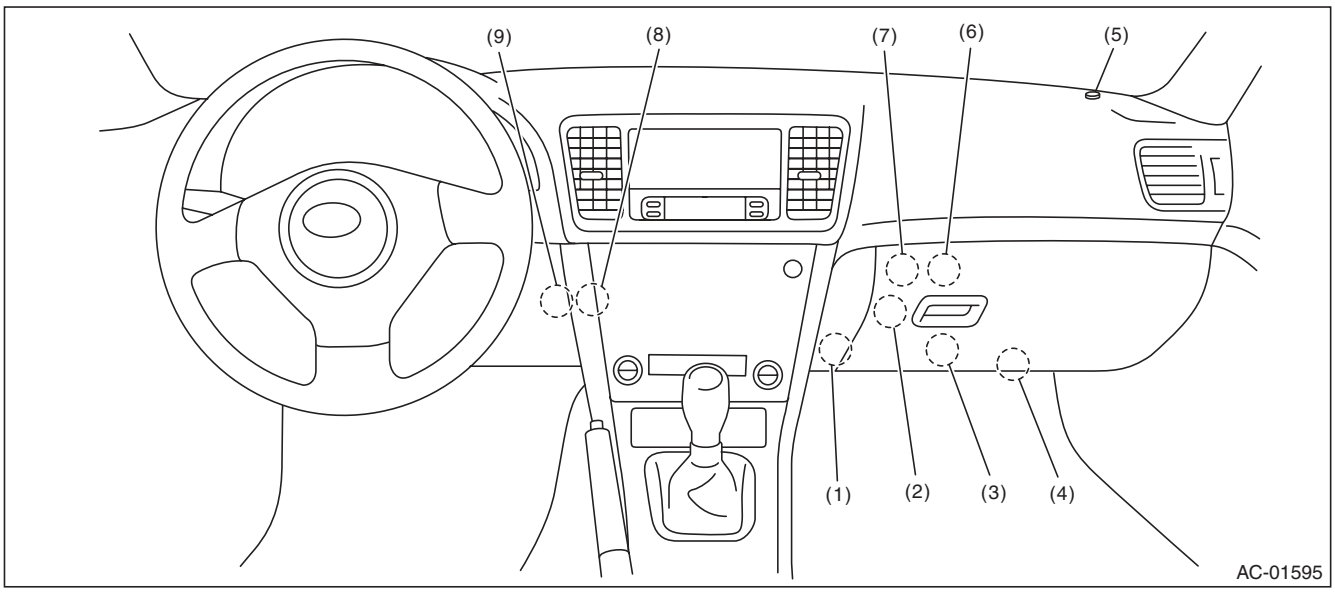

(1) Evaporator sensor
(2) Passenger's side air mix door actuator
(3) Auto A/C control module
(4) Blower motor
(5) Sunload sensor
(6) Intake door actuator
(7) Mode door actuator
(8) In-vehicle sensor
(9) Driver's side air mix door actuator

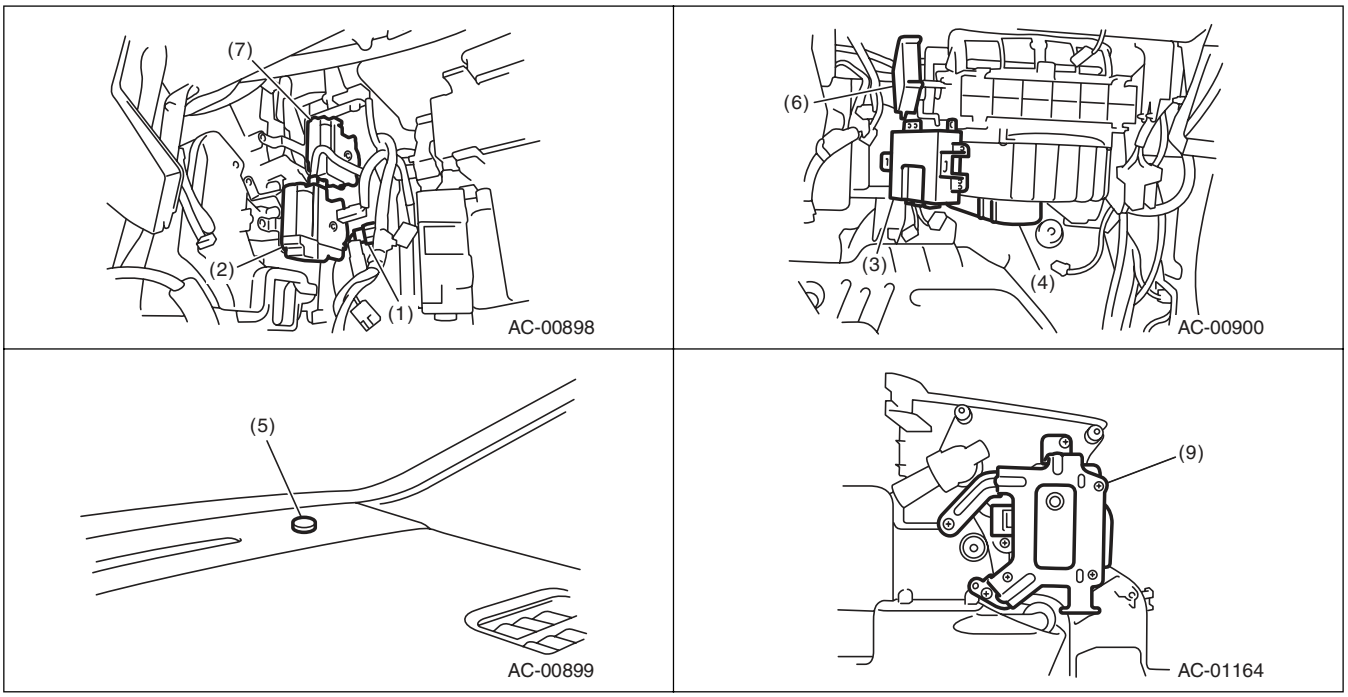

4. Auto A/C Control Module I/O Signal

A: ELECTRICAL SPECIFICATION

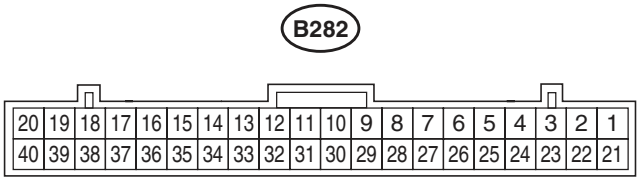

AC-01515

Terminal No.	Remarks	Measuring condition	Standard
1	Battery power supply	Ignition switch: OFF	Battery voltage
3	Mode door actuator position signal	Mode door: FACE position	4 V
		Mode door: DEF position	1 V
4	Air mix door actuator (passenger's side) position signal	Air mix door: Maximum cool position	4 V
		Air mix door: Maximum hot position	1 V
5	In-vehicle sensor	Ignition switch: ON	25°C: 1 — 5 V 40°C: 1 — 5 V
6	Sunload sensor	Ignition switch: ON, With Sunload (No sunload: 0 V)	Sunlight: 3 V Room light: 3 V
8	Each potentiometer and sunload sensor power supply	Ignition switch: ON	5 V
9	CAN LO	—	*1
10	CAN HI	—	*1
11	Blower motor voltage feedback	Ignition switch : ON, Blower switch : ON	0.45 — 10 V
12	Blower motor control signal	Ignition switch : ON, Blower switch : ON	9.05 V
13	RAM monitor Tx	Outputs RAM value when No. 33 (RAMver) terminal is grounded	*1
14	RAM monitor Rx		*1
15	Magnet clutch ON request signal output sensor ground	Ignition switch: ON, Blower switch: ON, A/C switch: ON	HI: 5.5 V
			LO: 2.0 V
16	Mode servo drive signal	When actuator is operating 16(+) — 36(–): Turns towards FACE side 16 (–) — 36 (+): rotate to the DEF side 16-36 short: brake	0 or 12 V
36			
17	Air mix door actuator (passenger's side) drive signal	When actuator is operating 17(+) — 37(–): Turns towards COOL side 17 (–) — 37 (+): rotate to the HOT side 17-37 short: brake	0 or 12 V
37			
18	Air mix door actuator (driver's seat)	When actuator is operating 18(+) — 38(–): Turns towards COOL side 18 (–) — 38 (+): rotate to the HOT side 18-38 short: brake	0 or 12 V
38			

Terminal No.	Remarks	Measuring condition	Standard
20	Intake door actuator drive signal	When intake door actuator is operating	0.7 V or less
40			
21	Ignition power supply	Ignition switch: ON	Battery voltage
22	Pressure switch signal	Ignition switch: ON	Normal: ON Abnormal: OFF
24	Air mix door actuator (driver's side) position signal	Air mix door: Maximum cool position	4 V
		Air mix door: Maximum hot position	1 V
25	After-evaporator sensor signal	Changes by the temperature after the evaporator	1 — 4.5 V
26	VER switching signal (FOOT switch)	When switching FOOT	0 V
27	Sensor ground	Always	0 V
28	Control module ground	Always	0 V
32	Heater main relay drive signal	Ignition switch: ON	Battery voltage
33	RAM monitor ON signal	RAM monitor ON	0 V
34	Heater control panel communication	—	*1
35	Heater control panel communication	—	*1

*1: Battery voltage cannot be measured because of digital signal.

B: WIRING DIAGRAM

1. AIR CONDITIONER AUTO A/C MODEL

<Ref. to WI-111, WIRING DIAGRAM, Air Conditioning System.>

5. Diagnostic Chart for Self-Diagnosis

A: OPERATION

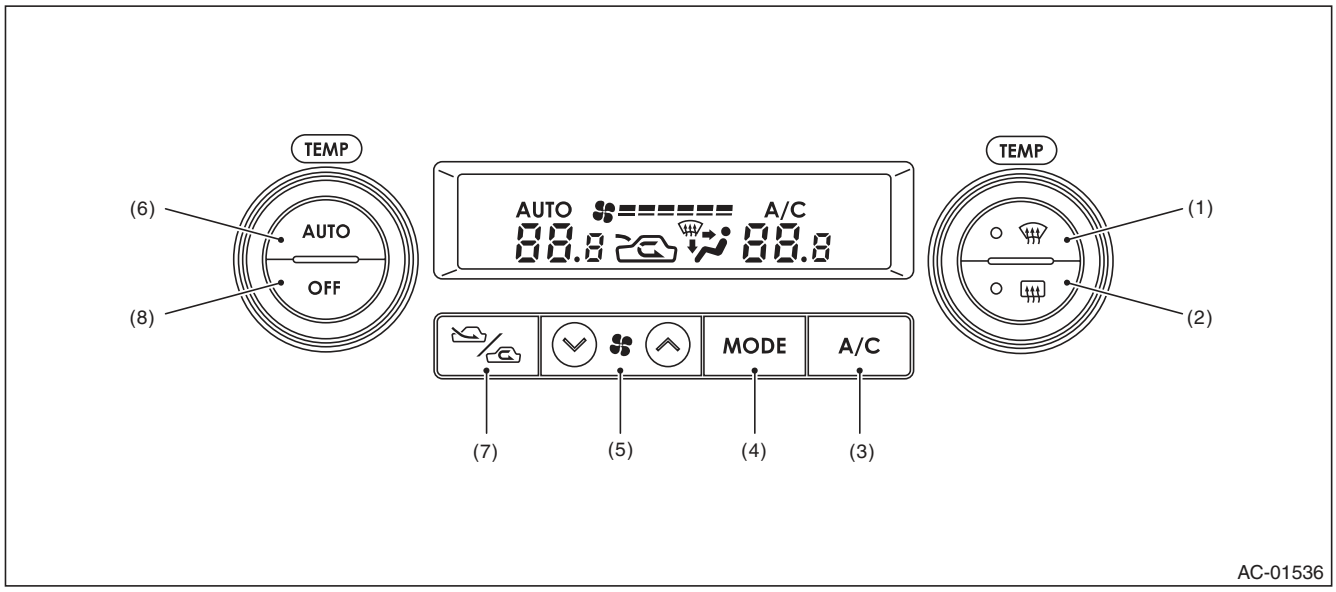

(1)	Front defroster switch	(4)	Air flow control switch	(7)	FRESH/RECIRC switch
(2)	Rear window defogger switch	(5)	FAN switch	(8)	OFF switch
(3)	A/C switch	(6)	AUTO switch		

NOTE:
For A/C system self-diagnosis, there is one that checks the control panel, and the other that checks the whole control system (sensor, actuator, blower motor, etc.). Perform the self-diagnosis for control panel first, and then perform the self-diagnosis for control system.

1. A/C CONTROL PANEL SELF-DIAGNOSIS

	Step	Check	Yes	No
1	**PERFORM A/C CONTROL PANEL SELF-DIAGNOSIS FUNCTION.** 1) Turn the ignition switch to OFF. 2) Turn the ignition switch to ON with the AUTO switch and MODE switch pressed at the same time. 3) All the screen display illuminate (for approx. 5 seconds) and the self-diagnosis mode starts.	Does the self-diagnosis function operate?	Go to step **2**.	<Ref. to AC(diag)-14, A/C OR SELF-DIAGNOSIS SYSTEMS DO NOT OPERATE, Diagnostics for A/C System Malfunction.>
2	**CHECK SCREEN DISPLAY.** Check the illumination condition while the display is illuminated.	Does all the screen display and indicators illuminate?	Go to step **3**.	Replace the A/C control panel.
3	**CHECK SCREEN DISPLAY.** After the illumination ends, check the display.	Are the numbers 11 — 14 displayed at the setting temperature display area?	Go to step **5**.	Go to step **4**.
4	**CHECK SWITCH AND TEMPERATURE CONTROL DIAL INPUT.** 1) Operate each switch or dial according to the switch check table. 2) Check the display or indicator illumination condition when operating the switch or dial. <Ref. to AC(diag)-11, SWITCH CHECK TABLE, OPERATION, Diagnostic Chart for Self-Diagnosis.>	Does the input of each switch or dial correspond to the switch check list?	Go to step **5**.	Replace the heater control panel.
5	**CHECK A/C CONTROL PANEL COMMUNICATION.** 1) Turn the ignition switch to OFF. 2) Disconnect the connector of the auto A/C control module. 3) Using a suitable lead wire, short the terminal No. 34 and No. 35 of auto A/C control module vehicle side connector (B282). 4) Turn the ignition switch to ON with the A/C switch and AUTO switch pressed at the same time. 5) Check the screen display when operating each switch and dial.	Is “CL” displayed on the screen when operating each switch and dial?	Go to step **6**.	Go to step **7**.
6	**CHECK A/C CONTROL PANEL COMMUNICATION.** 1) Turn the ignition switch to OFF. 2) Disconnect the lead wire used to short the terminals. 3) Turn the ignition switch to ON with the A/C switch and AUTO switch pressed at the same time. 4) Check the screen display when operating each switch and dial.	Is “OP” displayed on the screen when operating each switch and dial?	A/C control panel and body harness are normal.	Go to step **7**.
7	**CHECK HARNESS.** 1) Turn the ignition switch to OFF. 2) Disconnect the A/C control panel connector (i88). 3) Measure the resistance between connectors with a tester. ***Connector & terminal*** ***(i88) No. 7 — (B282) No. 34:*** ***(i88) No. 3 — (B282) No. 35:***	Is the resistance less than 10 Ω?	Go to step **8**.	Repair the open circuit of the harness between A/C control panel and auto A/C control module.

Step	Check	Yes	No
8 **CHECK HARNESS.** Measure the resistance between connectors with a tester. ***Connector & terminal*** ***(i88) No. 7 — No. 3:***	Is the resistance less than 10 Ω?	Repair the short circuit of the harness between A/C control panel and auto A/C control module.	Replace the A/C control panel.

2. SWITCH CHECK TABLE

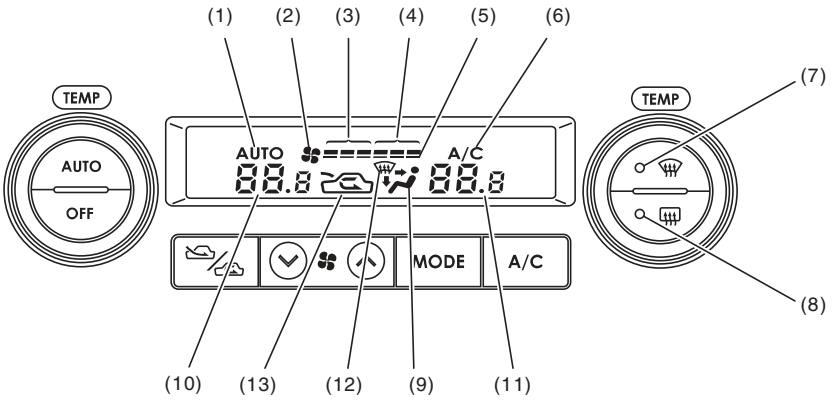

AC-01684

Switch	Display screen	Switch	Display screen
A/C switch	(6)	FAN switch (+)	(4)
AUTO switch	(1)	FAN switch (–)	(3)
Air flow control switch	(9)	Driver's side temperature control dial	(9), (10), (12)
FRESH/RECIRC	(13)	Passenger's side temperature control dial	(9), (11), (12)
Defroster switch	(7), (12)	OFF switch	(2), (5)
Rear defogger switch	(8)		

3. A/C CONTROL SYSTEM SELF-DIAGNOSIS

	Step	Check	Yes	No
1	**SET SELF-DIAGNOSIS MODE BY OPERATING A/C CONTROL PANEL.** 1) Start the engine with the A/C switch and front defroster switch pressed. NOTE: Self-diagnosis can also be performed with ignition switch ON, but start the engine because observing the magnet clutch operation is difficult. 2) All the indicators blink four times.	Does the self-diagnosis function operate?	Go to step **2**.	<Ref. to AC(diag)-14, A/C OR SELF-DIAGNOSIS SYSTEMS DO NOT OPERATE, Diagnostics for A/C System Malfunction.>
2	**CHECK EACH SENSOR AND POTENTIOMETER.** 1) After the indicators stop blinking, automatically change to the Inspection Mode of sensor and potentiometer. NOTE: Display items can be changed each time the A/C switch is pressed. (Step Operation) 2) When malfunction occurs in each sensor and potentiometer, codes are displayed on the screen. When no malfunction occurs in each sensor and potentiometer, code “20” is displayed on the screen. 3) Identify defective sensors according to the sensor check table. <Ref. to AC(diag)-13, SENSOR CHECK TABLE, OPERATION, Diagnostic Chart for Self-Diagnosis.>	Are other codes except “20” displayed?	Repair the defective sensor. <Ref. to AC(diag)-29, Diagnostic Procedure for Sensors.>	Go to step **3**.
3	**CHECK EACH ACTUATOR, BLOWER FAN AND MAGNET CLUTCH.** 1) After completing each sensor and potentiometer inspection, change to the Inspection Mode of actuator, blower fan and magnet clutch by pressing the defroster switch. 2) Each mode will change and operate automatically every four seconds. NOTE: Operation mode items can be changed each time the A/C switch is pressed. (Step Operation) 3) Check the operation of actuator, blower fan and magnet clutch in each mode according to the operating mode table. <Ref. to AC(diag)-13, OPERATING MODE TABLE, OPERATION, Diagnostic Chart for Self-Diagnosis.>	Do the actuator, blower fan and magnet clutch operate as described in the operating mode table?	A/C control system is normal. Press the OFF switch and complete the self-diagnosis function.	Repair the defective part in accordance with each diagnostic chart. <Ref. to AC(diag)-14, Diagnostics for A/C System Malfunction.> or <Ref. to AC(diag)-22, Diagnostic Procedure for Actuators.>

4. SENSOR CHECK TABLE

NOTE:
When the sunload sensor check is performed indoors or in the shade, it could be diagnosed as having an open circuit. Always check the sunload sensor with the sun shining on it.

Display screen (Malfunction at present) *1	Sensor	Trouble contents
21/AUTO Blink	In-vehicle sensor	Open
–21/AUTO Blink		Short
22/AUTO Blink	Ambient sensor	Sensor trouble or communication failure
23/AUTO Blink	Evaporator sensor	Open
–23/AUTO Blink		Short
24/AUTO Blink	Engine coolant temperature sensor	Sensor trouble or communication failure
25 Blink	Sunload sensor	Open *2
–25/AUTO Blink		Short
26/AUTO Blink	Driver's side air mix door actuator potentiometer	COOL
27/AUTO Blink		HOT
–26/AUTO Blink	Passenger's side air mix door actuator potentiometer	COOL
–27/AUTO Blink		HOT
28/AUTO Blink	Mode door actuator potentiometer	FACE
29/AUTO Blink		DEF
20 Blink	When all conditions are normal	

*1: AUTO display does not blink when past malfunction occurred. Past malfunction means that abnormal signals were continuously input for a certain time in the past.
*2: Present malfunction only is displayed for sunload sensor open circuit.

5. OPERATING MODE TABLE

Display screen	FRESH/RECIRC door	Mode door	Air mix door*	Blower fan	A/C compressor (Magnet clutch)
31	FRESH	FACE	Maximum cool	LO	OFF
32	RECIRC	FACE	Maximum cool	LO	ON
33	RECIRC	FACE	Maximum cool	M1	ON
34	FRESH	B/L	50%	M1	ON
35	FRESH	FOOT	50%	M1	ON
36	FRESH	FOOT	Maximum hot	M3	ON
37	FRESH	F/D	Maximum hot	M3	ON
38	FRESH	DEF	Maximum hot	HI	ON

* Same opening angle for both driver's and passenger's side

6. Diagnostics for A/C System Malfunction

A: A/C OR SELF-DIAGNOSIS SYSTEMS DO NOT OPERATE

TROUBLE SYMPTOM:

- Set temperature is not indicated on the display, switch LEDs are faulty and switches do not operate.
- Self-diagnosis system does not operate.

WIRING DIAGRAM:

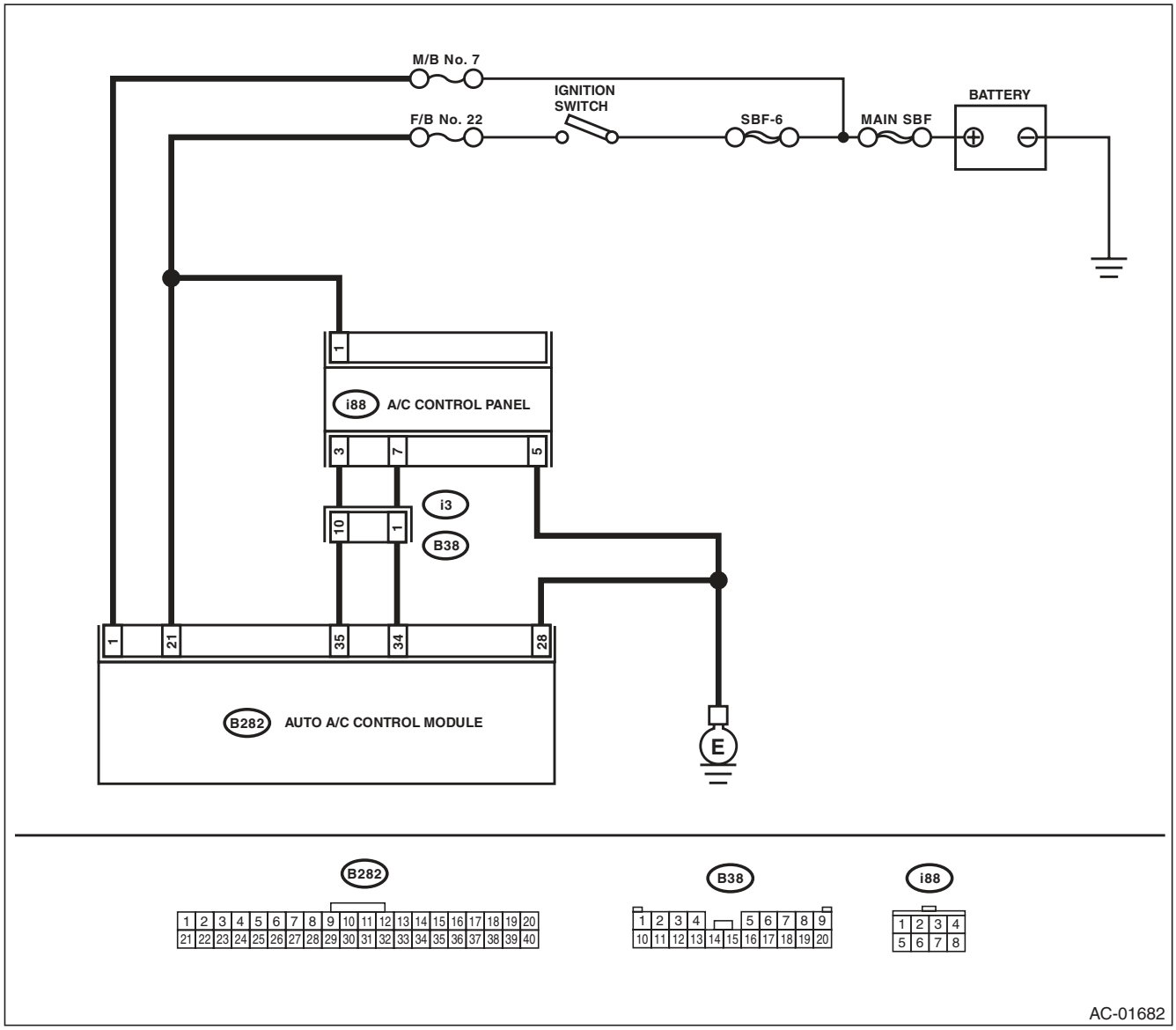

	Step	Check	Yes	No
1	**CHECK FUSE.** 1) Turn the ignition switch to OFF. 2) Remove the fuse No. 7 from main fuse box. 3) Check the condition of fuse.	Is the fuse blown out?	Replace the fuse.	Go to step **2**.
2	**CHECK FUSE.** 1) Turn the ignition switch to OFF. 2) Remove the fuse No. 22 from fuse & relay box. 3) Check the condition of fuse.	Is the fuse blown out?	Replace the fuse.	Go to step **3**.
3	**CHECK A/C CONTROL PANEL POWER CIRCUIT.** Measure the voltage between A/C control panel harness connector terminal and chassis ground after turning the ignition switch to ON. ***Connector & terminal*** ***(i88) No. 1 (+) — Chassis ground (–):***	Is the voltage 10 V or more?	Go to step **4**.	Check for open or short circuit in the harness between A/C control panel and fuse.
4	**CHECK A/C CONTROL PANEL GROUND POWER CIRCUIT.** Measure the resistance of harness between A/C control panel and chassis ground after turning the ignition switch to OFF. ***Connector & terminal*** ***(i88) No. 5 — Chassis ground:***	Is the resistance less than 10 Ω?	Go to step **5**.	Repair the harness for ground line.
5	**CHECK AUTO A/C CONTROL MODULE POWER CIRCUIT.** Measure the voltage between auto A/C control module connector terminal and chassis ground after turning the ignition switch to OFF. ***Connector & terminal*** ***(B282) No. 1 (+) — Chassis ground (–):***	Is the voltage 10 V or more?	Go to step **6**.	Check open or short circuit of harness between auto A/C control module and fuse.
6	**CHECK AUTO A/C CONTROL MODULE POWER CIRCUIT.** Measure the voltage between auto A/C control module connector terminal and chassis ground after turning the ignition switch to the ON position. ***Connector & terminal*** ***(B282) No. 21 (+) — Chassis ground (–):***	Is the voltage 10 V or more?	Go to step **7**.	Check open or short circuit of harness between auto A/C control module and fuse.
7	**CHECK AUTO A/C CONTROL MODULE GROUND CIRCUIT.** Measure the resistance of harness between auto A/C control module and chassis ground. ***Connector & terminal*** ***(B282) No. 28 — Chassis ground:***	Is the resistance less than 5 Ω?	Go to step **8**.	Repair the harness for ground line.
8	**CHECK COMMUNICATION CIRCUIT.** Measure the resistance of harness between A/C control panel and auto A/C control module. ***Connector & terminal*** ***(i88) No. 3 — (B282) No. 35:*** ***(i88) No. 7 — (B282) No. 34:***	Is the resistance less than 1 Ω?	Go to step **9**.	Repair the harness.
9	**CHECK POOR CONTACT.** Check poor contact of auto A/C control module connector.	Is there poor contact in connector?	Repair the connector.	Replace the auto A/C control module.

B: BLOWER MOTOR DOES NOT ROTATE

TROUBLE SYMPTOM:

- Blower motor does not rotate.
- Blower motor does not rotate in “HI”.

WIRING DIAGRAM:

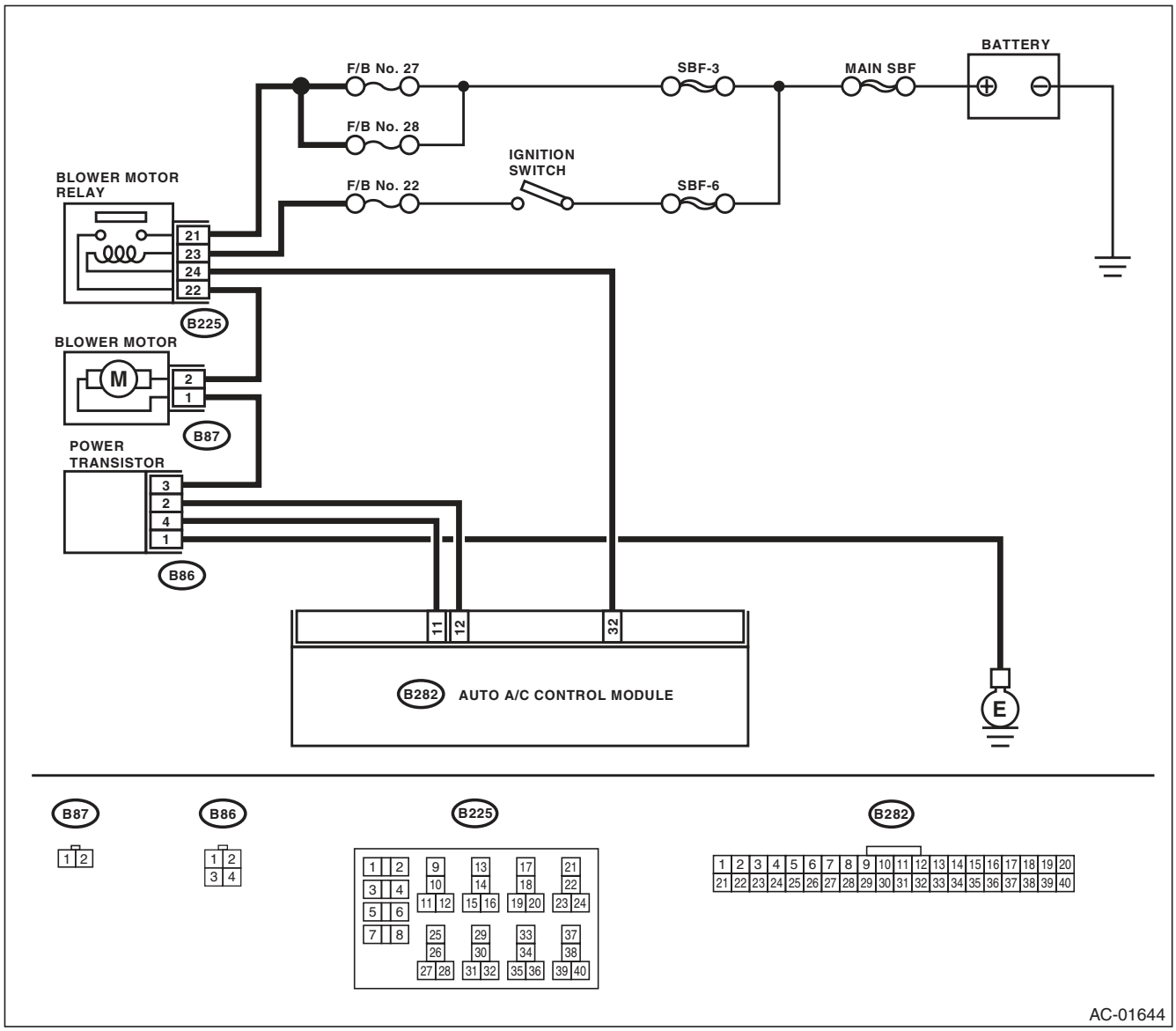

	Step	Check	Yes	No
1	**CHECK FUSE.** 1) Remove fuse No. 22, 27 and 28 from fuse & relay box. 2) Check the condition of fuse.	Is any fuse blown out?	Replace the fuse.	Go to step **2**.
2	**CHECK POWER SUPPLY FOR BLOWER MOTOR.** 1) Turn the ignition switch to ON. 2) Turn the blower switch to ON. 3) Measure the voltage between blower motor and chassis ground. ***Connector & terminal*** ***(B87) No. 2 (+) — Chassis ground (–):***	Is the voltage 10 V or more?	Go to step **3**.	Repair the open circuit of blower motor power supply line harness.
3	**CHECK BLOWER MOTOR RELAY.** 1) Turn the ignition switch to OFF. 2) Remove the blower motor relay. 3) Connect the battery positive (+) terminal to terminal No. 23 of blower motor relay, and negative (–) terminal to terminal No. 24. 4) Measure the resistance between terminals No. 21 and No. 22. ***Terminals*** ***(B225) No. 21 — (B225) No. 22:***	Is the resistance less than 1 Ω?	Go to step **4**.	Replace the blower motor relay.
4	**CHECK BLOWER MOTOR.** 1) Disconnect the connector from blower motor. 2) Connect the battery positive (+) terminal to terminal No. 2 of blower motor connector, and negative (–) terminal to terminal No. 1. 3) Make sure the blower motor runs.	Does the blower motor run?	Go to step **5**.	Replace the blower motor.
5	**CHECK POOR CONTACT.** Check poor contact of auto A/C control module connector.	Is there poor contact in connector?	Repair the connector.	Replace the auto A/C control module.

C: COMPARTMENT TEMPERATURE DOES NOT CHANGE, OR A/C SYSTEM DOES NOT RESPOND PROMPTLY

WIRING DIAGRAM:

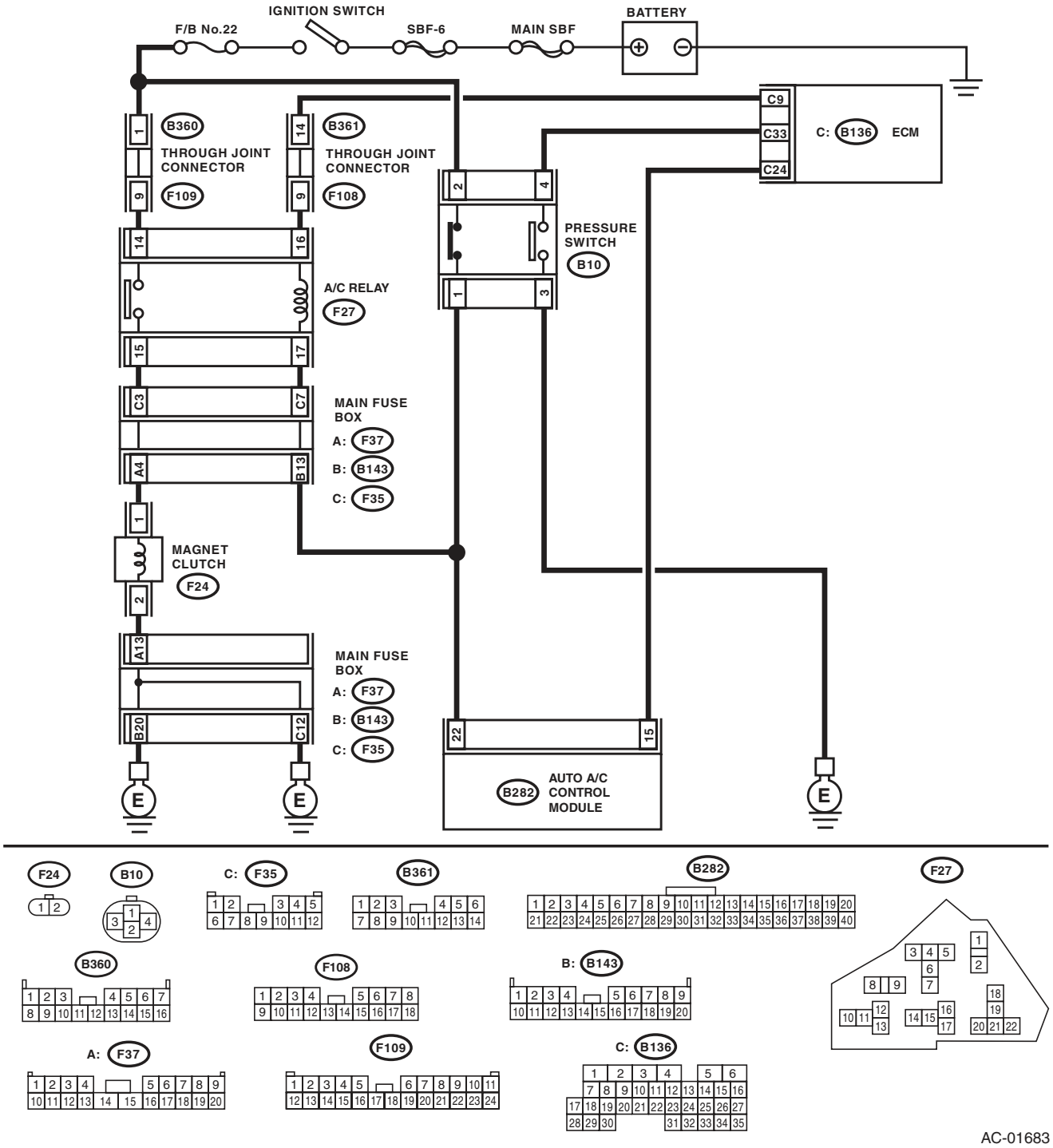

Step		Check	Yes	No
1	**CHECK FUSE.** 1) Turn the ignition switch to OFF. 2) Remove the fuse No. 22 from fuse & relay box. 3) Check the condition of fuse.	Is the fuse blown out?	Replace the fuse.	Go to step **2**.
2	**CHECK POWER SUPPLY TO A/C RELAY AND AUTO A/C CONTROL MODULE.** 1) Disconnect the A/C relay and auto A/C control module harness connector. 2) Turn the ignition switch to ON. 3) Measure the voltage between A/C relay connector terminal and chassis ground. 4) Measure the voltage between auto A/C control module harness connector terminal and chassis ground. ***Connector & terminal*** ***(F27) No. 17 (+) — Chassis ground (–):*** ***(B282) No. 22 (+) — Chassis ground (–):***	Is the voltage 10 V or more?	Go to step **5**.	Go to step **3**.
3	**CHECK POWER SUPPLY FOR PRESSURE SWITCH.** 1) Turn the ignition switch to OFF. 2) Disconnect the pressure switch harness connector. 3) Turn the ignition switch to ON. 4) Measure the voltage between pressure switch harness connector terminal and chassis ground. ***Connector & terminal*** ***(B10) No. 2 (+) — Chassis ground (–):***	Is the voltage 10 V or more?	Go to step **4**.	Check for open or short circuit in the harness between fuse and pressure switch.
4	**CHECK HARNESS BETWEEN PRESSURE SWITCH AND A/C RELAY, AUTO A/C CONTROL MODULE.** 1) Turn the ignition switch to OFF. 2) Measure the resistance of harness between pressure switch connector and A/C relay connector. 3) Measure the resistance of harness between pressure switch connector and auto A/C control module connector. ***Connector & terminal*** ***(B10) No. 1 — (F27) No. 17:*** ***(B10) No. 1 — (B282) No. 22:***	Is the resistance less than 1 Ω?	Check the pressure switch. <Ref. to AC-42, INSPECTION, Pressure Switch (Triple Pressure Switch).>	Repair the harness.
5	**CHECK POWER SUPPLY FOR A/C RELAY.** Measure the voltage between A/C relay connector terminal and chassis ground. ***Connector & terminal*** ***(F27) No. 14 (+) — Chassis ground (–):***	Is the voltage 10 V or more?	Go to step **6**.	Check open or short circuit of harness between fuse and A/C relay.
6	**CHECK A/C RELAY.** Check the A/C relay. <Ref. to AC-41, INSPECTION, Relay and Fuse.>	Is there a malfunction in the A/C relay?	Replace the A/C relay.	Go to step **7**.

Step		Check	Yes	No
7	**CHECK A/C ON SIGNAL.** 1) Turn the ignition switch to OFF. 2) Connect the A/C relay and all disconnected connectors. 3) Start the engine and turn the AUTO switch to ON. 4) Turn the temperature control dial at maximum cool position. 5) Measure the voltage between auto A/C control module harness connector terminal and chassis ground. ***Connector & terminal*** ***(B282) No. 15 (+) — Chassis ground (–):***	Is the voltage 5.5 V or more?	Go to step **9**.	Go to step **8**.
8	**CHECK HARNESS BETWEEN AUTO A/C CONTROL MODULE AND ECM.** 1) Turn the ignition switch to OFF. 2) Disconnect the harness connector of auto A/C control module and ECM. 3) Measure the resistance of harness between auto A/C control module connector and ECM connector. ***Connector & terminal*** ***(B282) No. 15 — (B136) No. 24:***	Is the resistance less than 1 Ω?	Replace the auto A/C control module.	Repair the harness.
9	**CHECK MAGNET CLUTCH ON SIGNAL.** 1) Stop the engine, and turn the AUTO switch to OFF. 2) Turn the ignition switch to ON. 3) Measure the voltage between ECM connector terminal and chassis ground. ***Connector & terminal*** ***(B136) No. 9 (+) — Chassis ground (–):***	Is the voltage 10 V or more?	Go to step **10**.	Check for open or short circuit in the harness between A/C relay and ECM.
10	**CHECK MAGNET CLUTCH ON SIGNAL.** 1) Start the engine and turn the AUTO switch to ON. 2) Turn the temperature control dial at maximum cool position. 3) Measure the voltage between ECM connector terminal and chassis ground. ***Connector & terminal*** ***(B136) No. 9 (+) — Chassis ground (–):***	Is the voltage 0 V?	Go to step **11**.	Replace the ECM.
11	**CHECK POWER SUPPLY FOR MAGNET CLUTCH.** 1) Stop the engine, and turn the AUTO switch to OFF. 2) Disconnect the harness connector of magnet clutch. 3) Start the engine and turn the AUTO switch to ON. 4) Turn the temperature control dial at maximum cool position. 5) Measure the voltage between magnet clutch harness connector terminal and chassis ground. ***Connector & terminal*** ***(F24) No. 1 (+) — Chassis ground (–):***	Is the voltage 10 V or more?	Go to step **12**.	Check for open or short circuit in the harness between A/C relay and magnet clutch.

Step		Check	Yes	No
12	**CHECK HARNESS BETWEEN AUTO A/C CONTROL MODULE AND ECM.** 1) Stop the engine, and turn the AUTO switch to OFF. 2) Measure the resistance between magnet clutch harness connector terminal and chassis ground. ***Connector & terminal*** ***(F24) No. 2 — Chassis ground:***	Is the resistance less than 1 Ω?	Inspect the compressor. <Ref. to AC-36, INSPECTION, Compressor.>	Repair the harness.

7. Diagnostic Procedure for Actuators

A: INTAKE DOOR ACTUATOR

TROUBLE SYMPTOM:
FRESH/RECIRC mode is not changed.
WIRING DIAGRAM:

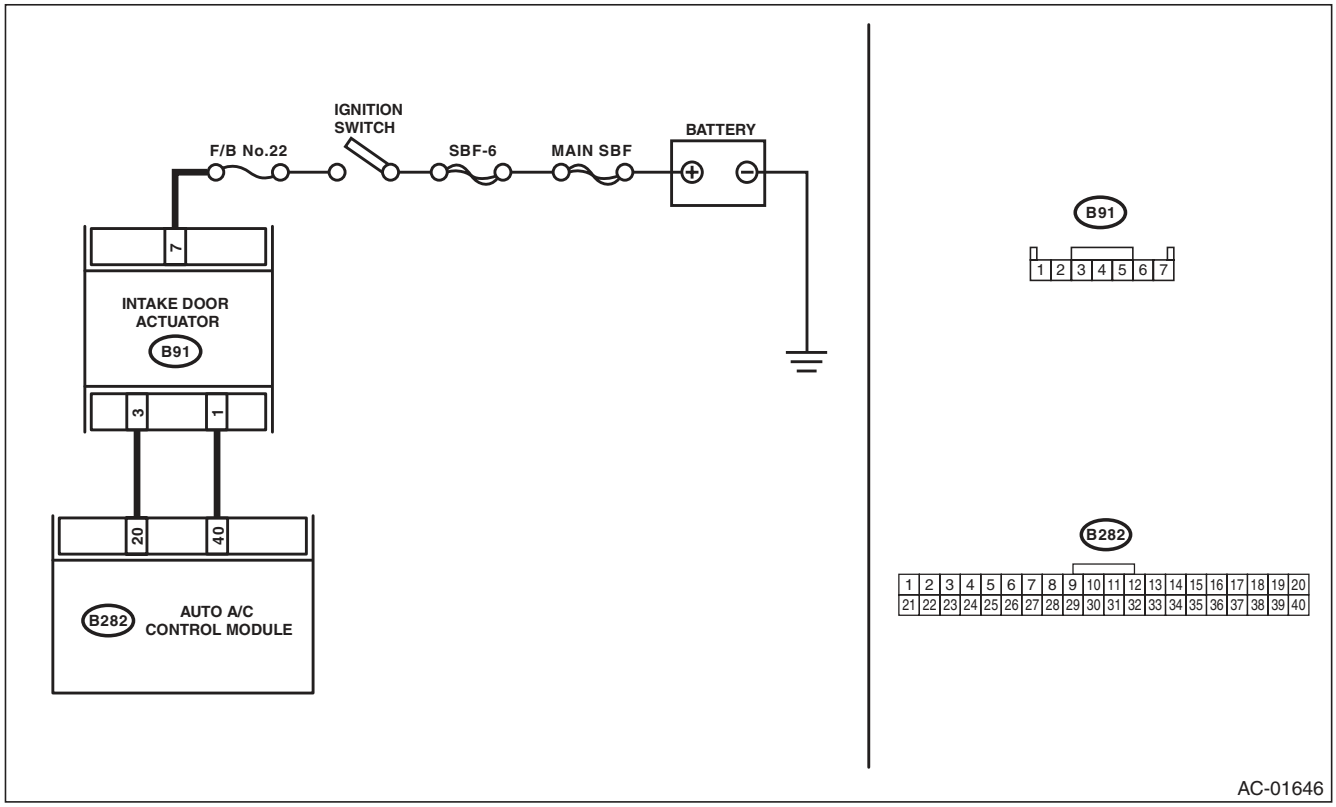

Diagnostic Procedure for Actuators

	Step	Check	Yes	No
1	**CHECK POWER SUPPLY FOR INTAKE DOOR ACTUATOR.** 1) Turn the ignition switch to OFF. 2) Disconnect the intake door actuator connector. 3) Turn the ignition switch to ON. 4) Measure the voltage between intake door actuator connector and chassis ground. ***Connector & terminal*** ***(B91) No. 7 (+) — Chassis ground (–):***	Is the voltage 7 V (at normal temperature)?	Go to step **2**.	Check for open or short circuit in the harness between intake door actuator and fuse.
2	**CHECK HARNESS BETWEEN AUTO A/C CONTROL MODULE AND INTAKE DOOR ACTUATOR.** 1) Turn the ignition switch to OFF. 2) Disconnect the auto A/C control module connector. 3) Measure the resistance between intake door actuator connector and auto A/C control module connector. ***Connector & terminal*** ***(B282) No. 20 — (B91) No. 3:*** ***(B282) No. 40 — (B91) No. 1:***	Is the resistance less than 1 Ω?	Go to step **3**.	Repair the harness between auto A/C control module and intake door actuator.
3	**CHECK OPERATION OF INTAKE DOOR ACTUATOR.** 1) Connect the intake door actuator connector. 2) Ground the auto A/C control module connector with a suitable wire. 3) Turn the ignition switch to ON, and check the operation of intake door actuator. ***Connector & terminal*** ***(B282) No. 20 — Chassis ground:***	Does the actuator move to the FRESH side?	Go to step **4**.	Replace the intake door actuator.
4	**CHECK OPERATION OF INTAKE DOOR ACTUATOR.** 1) Turn the ignition switch to OFF. 2) Ground the auto A/C control module connector with a suitable wire. 3) Turn the ignition switch to ON, and check the operation of intake door actuator. ***Connector & terminal*** ***(B282) No. 40 — Chassis ground:***	Does the actuator move to the RECIRC side?	Replace the auto A/C control module.	Replace the intake door actuator.

B: MODE DOOR ACTUATOR

TROUBLE SYMPTOM:

Air flow outlet is not changed.

WIRING DIAGRAM:

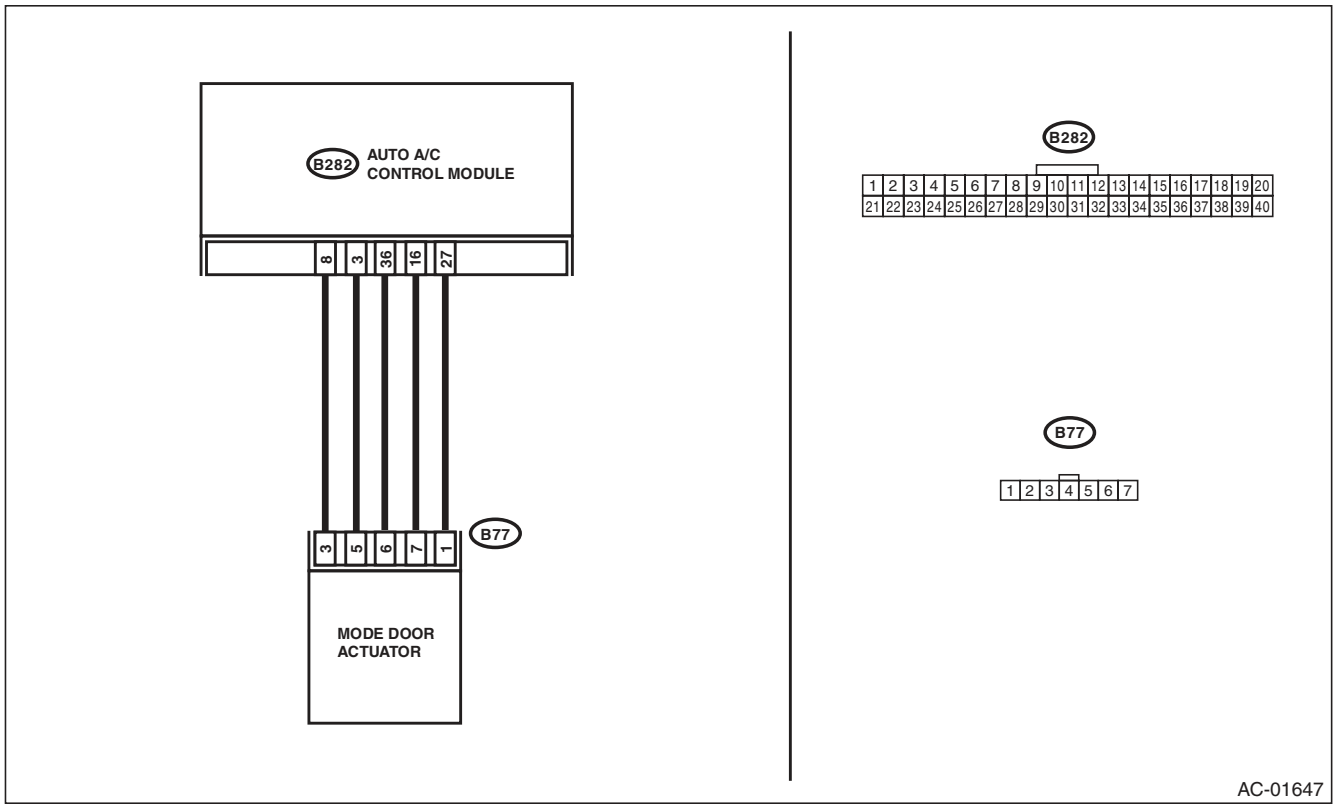

Diagnostic Procedure for Actuators

	Step	Check	Yes	No
1	**CHECK POWER SUPPLY FOR MODE DOOR ACTUATOR POSITION SENSOR.** 1) Turn the ignition switch to OFF. 2) Disconnect the mode door actuator connector. 3) Turn the ignition switch and AUTO switch to ON. 4) Measure the voltage between auto A/C control module connector terminals. ***Connector & terminal*** ***(B282) No. 8 (+) — (B282) No. 27 (–):***	Is the voltage approx. 5 V?	Go to step **2**.	Replace the auto A/C control module.
2	**CHECK POWER SUPPLY FOR MODE DOOR ACTUATOR.** Measure the voltage between auto A/C control module connector and chassis ground after turning the air flow control switch to FACE position. ***Connector & terminal*** ***(B282) No. 16 (+) — Chassis ground (–):***	Is the voltage 7 V (at normal temperature)?	Go to step **3**.	Replace the auto A/C control module.
3	**CHECK POWER SUPPLY FOR MODE DOOR ACTUATOR.** Measure the voltage between auto A/C control module connector and chassis ground after turning the air flow control switch to DEF position. ***Connector & terminal*** ***(B282) No. 36 (+) — Chassis ground (–):***	Is the voltage 7 V (at normal temperature)?	Go to step **4**.	Replace the auto A/C control module.
4	**CHECK HARNESS BETWEEN AUTO A/C CONTROL MODULE AND MODE DOOR ACTUATOR.** 1) Turn the A/C and ignition switch to OFF. 2) Disconnect the auto A/C control module connector. 3) Measure the resistance between auto A/C control module and mode door actuator connector. ***Connector & terminal*** ***(B77) No. 1 — (B282) No. 27:*** ***(B77) No. 3 — (B282) No. 8:*** ***(B77) No. 5 — (B282) No. 3:*** ***(B77) No. 6 — (B282) No. 36:*** ***(B77) No. 7 — (B282) No. 16:***	Is the resistance less than 1 Ω?	Go to step **5**.	Repair the harness between auto A/C control module and mode door actuator.
5	**CHECK MODE DOOR ACTUATOR POSITION SWITCH SIGNAL.** 1) Connect the connector of auto A/C control module and mode door actuator. 2) Turn the ignition switch and AUTO switch to ON. 3) Check the voltage between auto A/C control module connector terminals while changing the mode between DEF and FACE. ***Connector & terminal*** ***(B282) No. 3 (+) — (B282) No. 27 (–):***	Does the voltage change between 1 V (DEF) and 4 V (FACE)?	Go to step **6**.	Replace the mode door actuator.
6	**CHECK POOR CONTACT.** Check poor contact of auto A/C control module and connector.	Is there poor contact in connector?	Repair the connector.	Replace the auto A/C control module.

C: AIR MIX DOOR ACTUATOR

TROUBLE SYMPTOM:

Outlet air temperature does not change.

WIRING DIAGRAM:

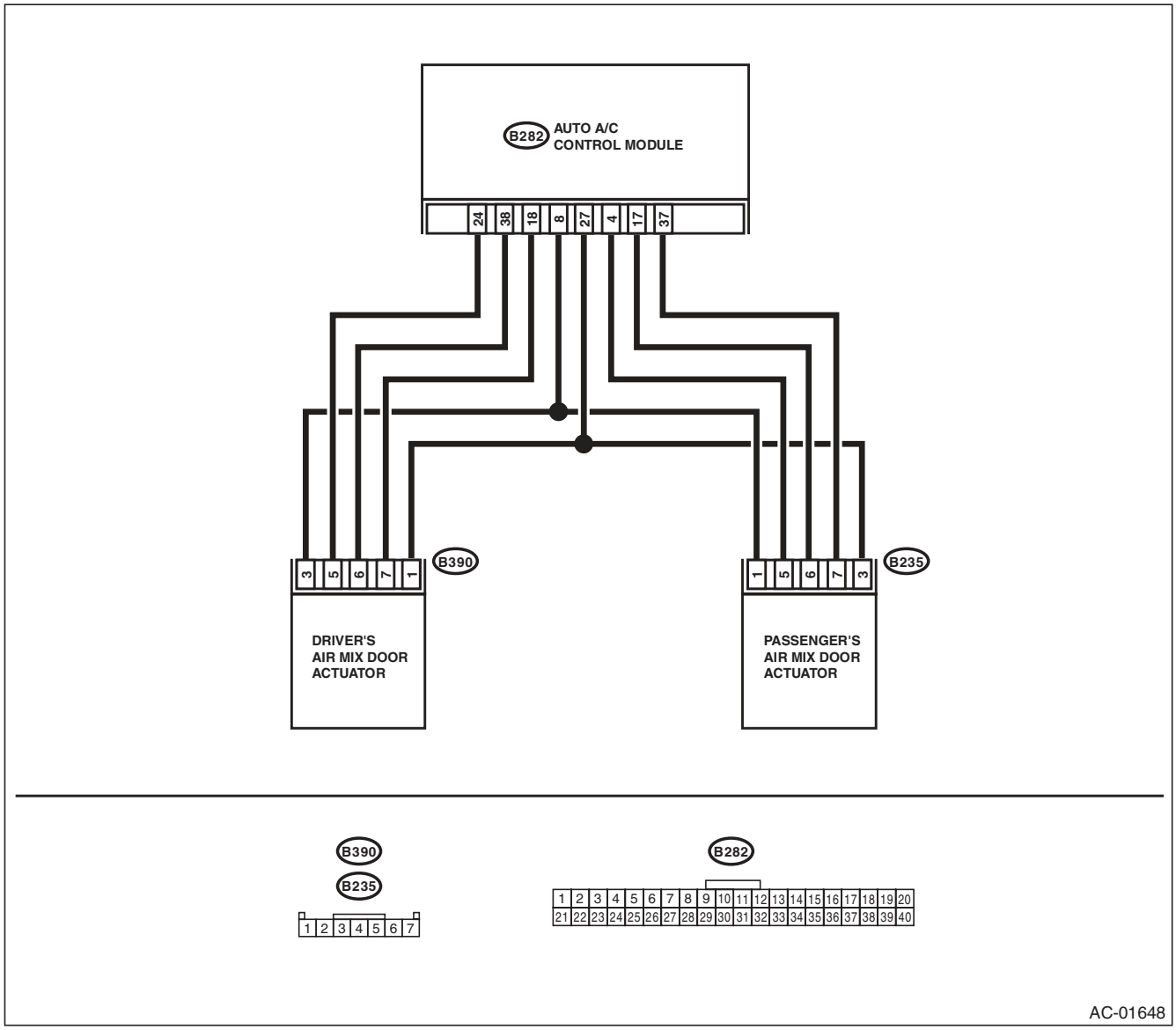

	Step	Check	Yes	No
1	**CHECK POWER SUPPLY FOR AIR MIX DOOR ACTUATOR POSITION SWITCH.** 1) Turn the ignition switch to OFF. 2) Disconnect the air mix door actuator connector. 3) Turn the ignition switch and AUTO switch to ON. 4) Measure the voltage between auto A/C control module connector terminals. ***Connector & terminal*** ***(B282) No. 8 (+) — (B282) No. 27 (–):***	Is the voltage approx. 5 V?	Go to step **2**.	Replace the auto A/C control module.
2	**CHECK POWER SUPPLY FOR AIR MIX DOOR ACTUATOR.** Measure the voltage between auto A/C control module connector and chassis ground after turning the temperature control dial to maximum COOL position. ***Connector & terminal*** ***Driver's side*** ***(B282) No. 18 (+) — Chassis ground (–):*** ***Passenger's side*** ***(B282) No. 17 (+) — Chassis ground (–):***	Is the voltage 7 V (at normal temperature)?	Go to step **3**.	Replace the auto A/C control module.
3	**CHECK POWER SUPPLY FOR AIR MIX DOOR ACTUATOR.** Measure the voltage between auto A/C control module connector and chassis ground after turning the temperature control dial to maximum HOT position. ***Connector & terminal*** ***Driver's side*** ***(B282) No. 38 (+) — Chassis ground (–):*** ***Passenger's side*** ***(B282) No. 37 (+) — Chassis ground (–):***	Is the voltage 7 V (at normal temperature)?	Go to step **4**.	Replace the auto A/C control module.
4	**CHECK HARNESS BETWEEN AUTO A/C CONTROL MODULE AND AIR MIX DOOR ACTUATOR.** 1) Turn the A/C and ignition switch to OFF. 2) Disconnect the auto A/C control module connector. 3) Measure the resistance between auto A/C control module and air mix door actuator connector. ***Connector & terminal*** ***Driver's side*** ***(B390) No. 1 — (B282) No. 27:*** ***(B390) No. 3 — (B282) No. 8:*** ***(B390) No. 5 — (B282) No. 24:*** ***(B390) No. 6 — (B282) No. 38:*** ***(B390) No. 7 — (B282) No. 18:*** ***Passenger's side*** ***(B235) No. 1 — (B282) No. 8:*** ***(B235) No. 3 — (B282) No. 27:*** ***(B235) No. 5 — (B282) No. 4:*** ***(B235) No. 6 — (B282) No. 17:*** ***(B235) No. 7 — (B282) No. 37:***	Is the resistance less than 1 Ω?	Go to step **5**.	Repair the harness between auto A/C control module and air mix door actuator.

Step		Check	Yes	No
5	**CHECK AIR MIX DOOR ACTUATOR POSITION SWITCH SIGNAL.** 1) Connect the connector of auto A/C control module and air mix door actuator. 2) Turn the ignition switch and AUTO switch to ON. 3) Check the voltage between auto A/C control module connector terminals while changing the setting temperature between maximum COOL and maximum HOT. ***Connector & terminal*** ***Driver's side*** ***(B282) No. 24 (+) — (B282) No. 27 (–):*** ***Passenger's side*** ***(B282) No. 4 (+) — (B282) No. 27 (–):***	Does the voltage change between 1 V (Max. HOT) and 4 V (Max. COOL)?	Go to step **6**.	Replace the air mix door actuator.
6	**CHECK POOR CONTACT.** Check poor contact of auto A/C control module and connector.	Is there poor contact in connector?	Repair the connector.	Replace the auto A/C control module.

8. Diagnostic Procedure for Sensors

A: AMBIENT SENSOR

TROUBLE SYMPTOM:

Fan speed is not switched when the fan speed control dial is in AUTO position.

WIRING DIAGRAM:

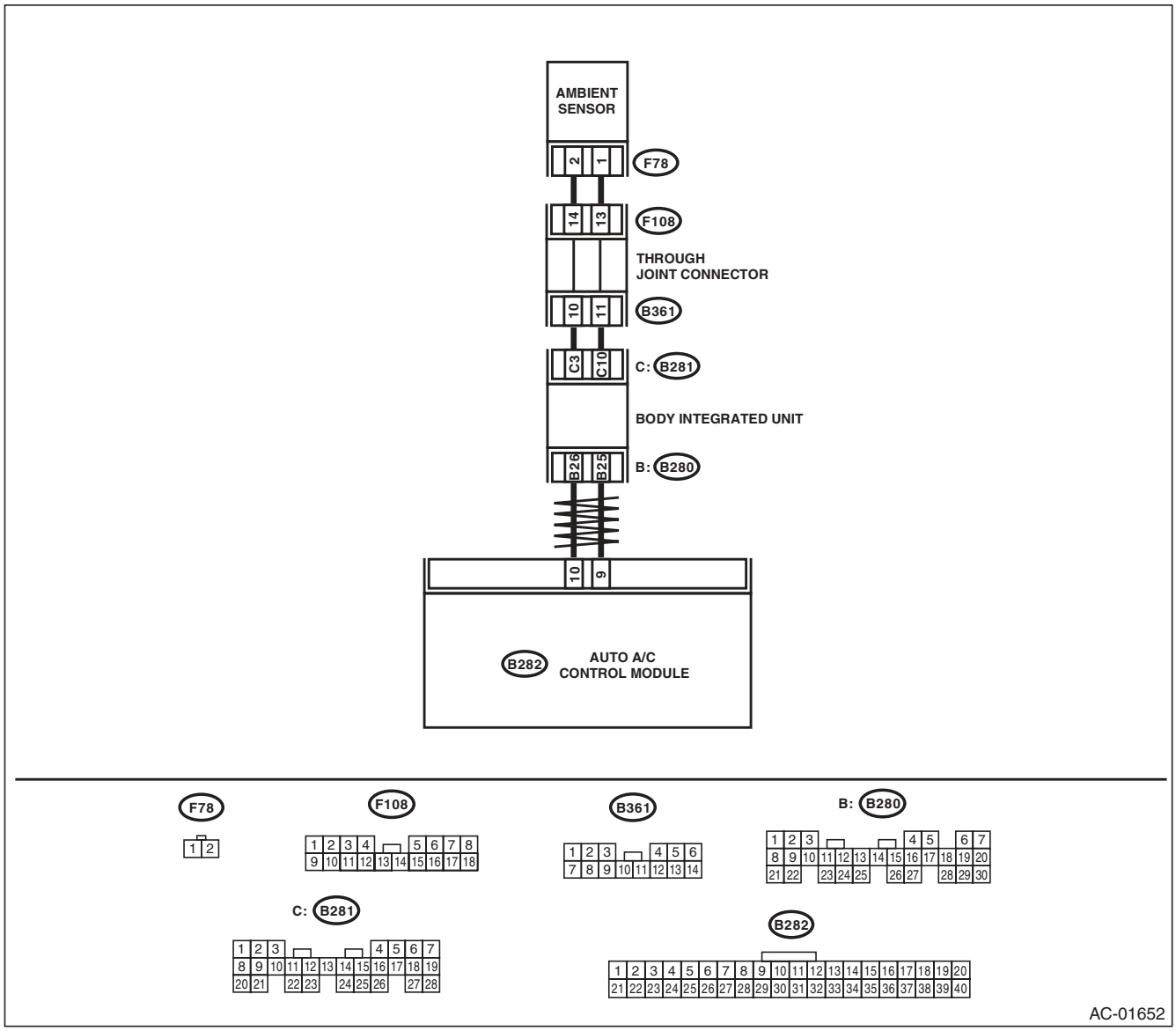

Diagnostic Procedure for Sensors

	Step	Check	Yes	No
1	**CHECK AMBIENT SENSOR.** 1) Turn the ignition switch to OFF. 2) Disconnect the connector from ambient sensor. 3) Measure the resistance between connector terminals of ambient sensor. ***Terminals*** ***No. 1 — No. 2:***	Is the resistance approximately 2.2 kΩ at 25°C (77°F) ?	Go to step **2**.	Replace the ambient sensor.
2	**CHECK INPUT SIGNAL FOR AMBIENT SENSOR.** 1) Turn the ignition to ON. 2) Measure the voltage between connector (F78) terminals. ***Connector & terminal*** ***(F78) No. 2 (+) — No. 1 (–):***	Is the voltage approx. 5 V?	Go to step **6**.	Go to step **3**.
3	**CHECK OUTPUT SIGNAL OF BODY INTEGRATED UNIT.** 1) Turn the ignition switch to OFF. 2) Draw out the body integrated unit. 3) Disconnect the connector from ambient sensor. 4) Turn the ignition switch to ON. 5) Measure the voltage between connector terminals of body integrated unit. ***Connector & terminal*** ***(B281) No. 3 (+) — No. 10 (–):***	Is the voltage approx. 5 V?	Go to step **4**.	Go to step **6**.
4	**CHECK HARNESS CONNECTOR BETWEEN BODY INTEGRATED UNIT AND AMBIENT SENSOR.** 1) Turn the ignition switch to OFF. 2) Disconnect the connector from body integrated unit. 3) Measure the resistance of harness between body integrated unit and ambient sensor. ***Connector & terminal*** ***(F78) No. 1 — (B281) No. 10:***	Is the resistance less than 1 Ω?	Go to step **5**.	Repair the open circuit of harness between body integrated unit and ambient sensor.
5	**CHECK HARNESS CONNECTOR BETWEEN BODY INTEGRATED UNIT AND AMBIENT SENSOR.** Measure the resistance of harness between body integrated unit and ambient sensor. ***Connector & terminal*** ***(F78) No. 2 — (B281) No. 3:***	Is the resistance less than 1 Ω?	Go to step **6**.	Repair the open circuit of harness between body integrated unit and ambient sensor.
6	**CHECK DTC.** 1) Connect the connectors of body integrated unit and ambient sensor as originally connected. 2) Read the DTC of body integrated unit using Subaru Select Monitor.	Is DTC “U xxx” of CAN communication displayed?	Check the communication circuit. <Ref. to LAN(diag)-2, Basic Diagnostic Procedure.>	Go to step **7**.
7	**CHECK POOR CONTACT.** Check poor contact of auto A/C control module connector.	Is there poor contact in connector?	Repair the connector.	Replace the auto A/C control module.

B: IN-VEHICLE SENSOR

TROUBLE SYMPTOM:

Blower fan speed, outlet port and inlet port do not change after turning the AUTO switch to ON.

WIRING DIAGRAM:

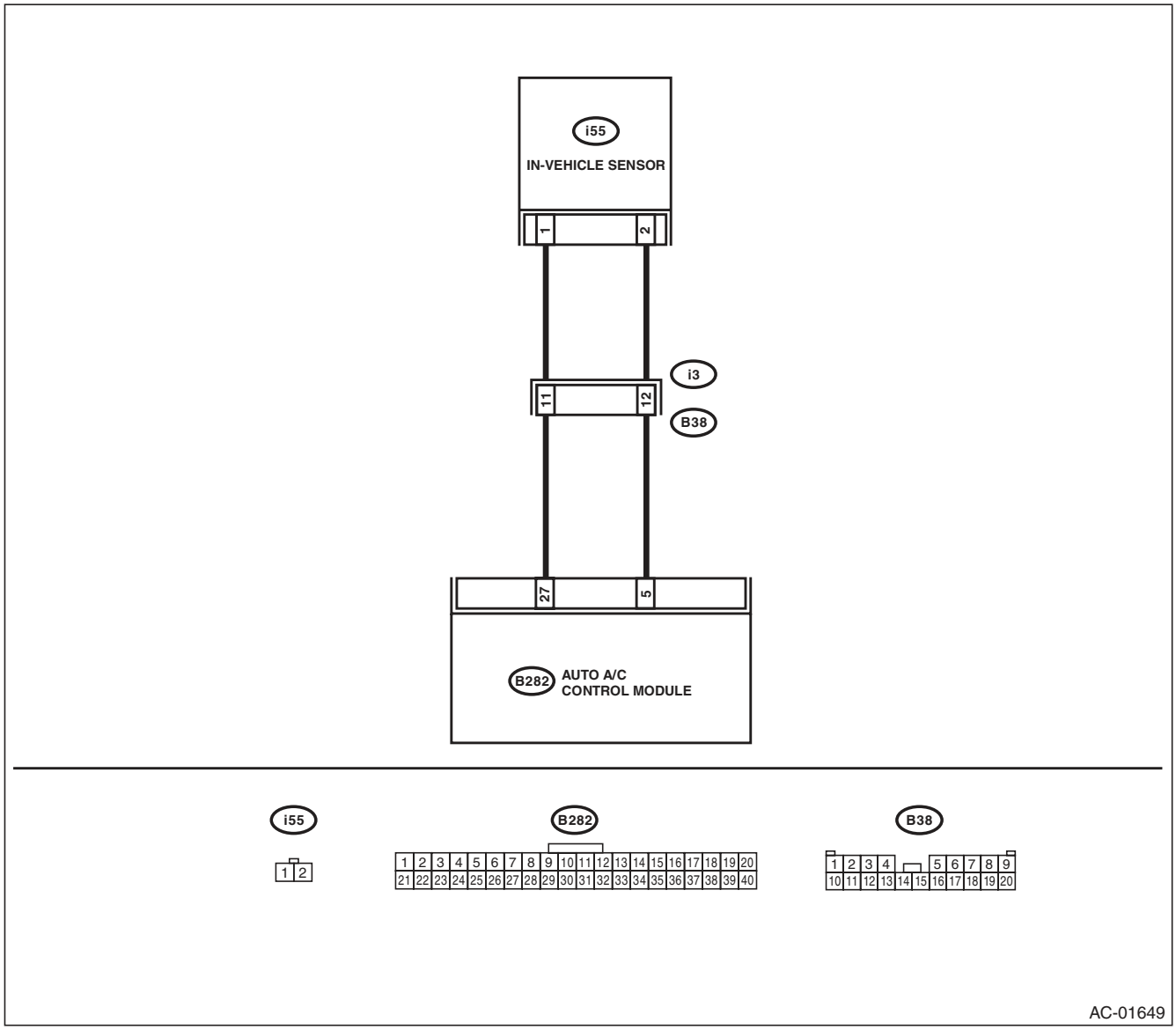

Diagnostic Procedure for Sensors

	Step	Check	Yes	No
1	**CHECK IN-VEHICLE SENSOR.** 1) Turn the ignition switch to OFF. 2) Remove the driver's side lower cover. 3) Disconnect the connector from in-vehicle sensor. 4) Measure the resistance between connector terminals of in-vehicle sensor. ***Terminals*** ***No. 1 — No. 2:***	Is the resistance approximately 2.7 kΩ at 20°C (68°F) ?	Go to step **2**.	Replace the in-vehicle sensor.
2	**CHECK INPUT SIGNAL FOR IN-VEHICLE SENSOR.** 1) Turn the ignition switch to ON. 2) Measure the voltage between in-vehicle sensor harness connector terminal and chassis ground. ***Connector & terminal*** ***(i55) No. 2 (+) — No. 1 (–):***	Is the voltage approx. 5 V?	Go to step **6**.	Go to step **3**.
3	**CHECK AUTO A/C CONTROL MODULE OUTPUT SIGNAL.** 1) Turn the ignition switch to OFF. 2) Remove the auto A/C control module. 3) Turn the ignition switch to ON. 4) Measure the voltage between connector terminals of auto A/C control module. ***Connector & terminal*** ***(B282) No. 5 (+) — (B282) No. 27 (–):***	Is the voltage approx. 5 V?	Go to step **4**.	Go to step **6**.
4	**CHECK HARNESS BETWEEN AUTO A/C CONTROL MODULE AND IN-VEHICLE SENSOR.** 1) Turn the ignition switch to OFF. 2) Disconnect the connector from the auto A/C control module. 3) Measure the resistance of harness between auto A/C control module and in-vehicle sensor. ***Connector & terminal*** ***(i55) No. 2 — (B282) No. 5:***	Is the resistance less than 1 Ω?	Go to step **5**.	Repair the harness between auto A/C control module and in-vehicle sensor.
5	**CHECK HARNESS BETWEEN AUTO A/C CONTROL MODULE AND IN-VEHICLE SENSOR.** Measure the resistance of harness between auto A/C control module and in-vehicle sensor. ***Connector & terminal*** ***(i55) No. 1 — (B282) No. 27:***	Is the resistance less than 1 Ω?	Go to step **6**.	Repair the harness between auto A/C control module and in-vehicle sensor.
6	**CHECK POOR CONTACT.** Check poor contact of auto A/C control module connector.	Is there poor contact in connector?	Repair the connector.	Replace the auto A/C control module.

C: EVAPORATOR SENSOR

WIRING DIAGRAM:

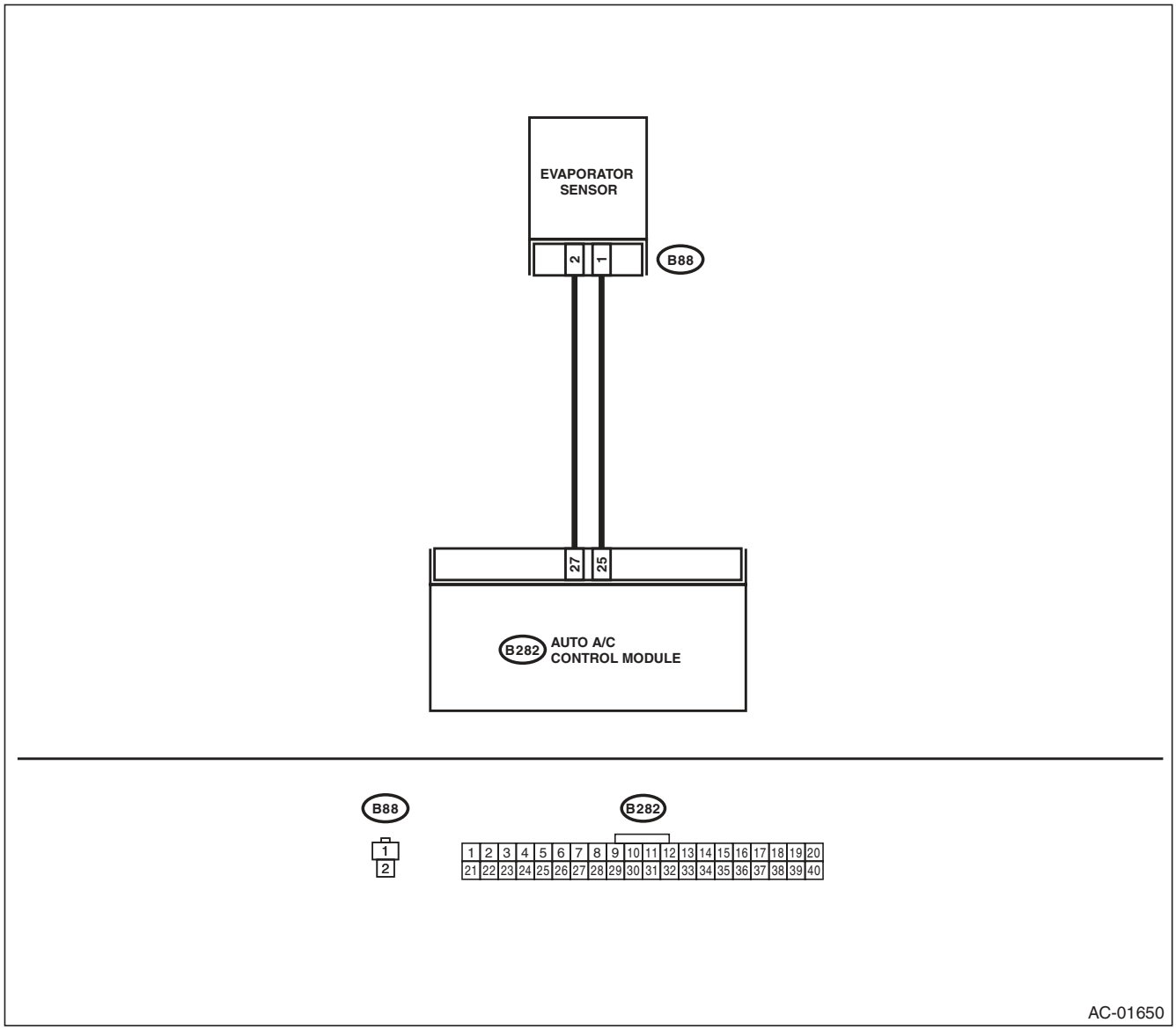

Diagnostic Procedure for Sensors

	Step	Check	Yes	No
1	**CHECK EVAPORATOR SENSOR.** 1) Turn the ignition switch to OFF. 2) Remove the glove box. 3) Disconnect the connector from evaporator sensor. 4) Measure the resistance between connector terminals of the evaporator sensor. ***Terminals*** ***No. 1 — No. 2:***	Is the resistance approximately 3.3 kΩ at 20°C (68°F) ?	Go to step **2**.	Replace the evaporator sensor.
2	**CHECK INPUT SIGNAL FOR EVAPORATOR SENSOR.** 1) Turn the ignition switch to ON. 2) Measure the voltage between connector (B88) terminal and chassis ground. ***Connector & terminal*** ***(B88) No. 1 (+) — No. 2 (–):***	Is the voltage approx. 5 V?	Go to step **6**.	Go to step **3**.
3	**CHECK AUTO A/C CONTROL MODULE OUTPUT SIGNAL.** 1) Turn the ignition switch to OFF. 2) Remove the auto A/C control module. 3) Turn the ignition switch to ON. 4) Measure the voltage between connector terminals of auto A/C control module. ***Connector & terminal*** ***(B282) No. 25 (+) — No. 27 (–):***	Is the voltage approx. 5 V?	Go to step **4**.	Go to step **6**.
4	**CHECK HARNESS CONNECTOR BETWEEN AUTO A/C CONTROL MODULE AND EVAPORATOR SENSOR.** 1) Turn the ignition switch to OFF. 2) Disconnect the connector from the auto A/C control module. 3) Measure the resistance of harness between auto A/C control module and evaporator sensor. ***Connector & terminal*** ***(B88) No. 2 — (B282) No. 27:***	Is the resistance less than 1 Ω?	Go to step **5**.	Repair the open circuit of harness between auto A/C control module and evaporator sensor.
5	**CHECK HARNESS CONNECTOR BETWEEN AUTO A/C CONTROL MODULE AND EVAPORATOR SENSOR.** Measure the resistance of harness between auto A/C control module and evaporator sensor. ***Connector & terminal*** ***(B88) No. 1 — (B282) No. 25:***	Is the resistance less than 1 Ω?	Go to step **6**.	Repair the open circuit of harness between auto A/C control module and evaporator sensor.
6	**CHECK POOR CONTACT.** Check poor contact of auto A/C control module connector.	Is there poor contact in connector?	Repair the connector.	Replace the auto A/C control module.

D: SUNLOAD SENSOR

TROUBLE SYMPTOM:

- Sensor identifies that sunlight is at maximum. Then, A/C system is controlled to COOL side.
- Sensor identifies that sunlight is at minimum. Then, A/C system is controlled to HOT side.

NOTE:
When the sunload sensor check is performed indoors or in the shade, it could be diagnosed as having an open circuit. Always check the sunload sensor with the sun shining on it.

WIRING DIAGRAM:

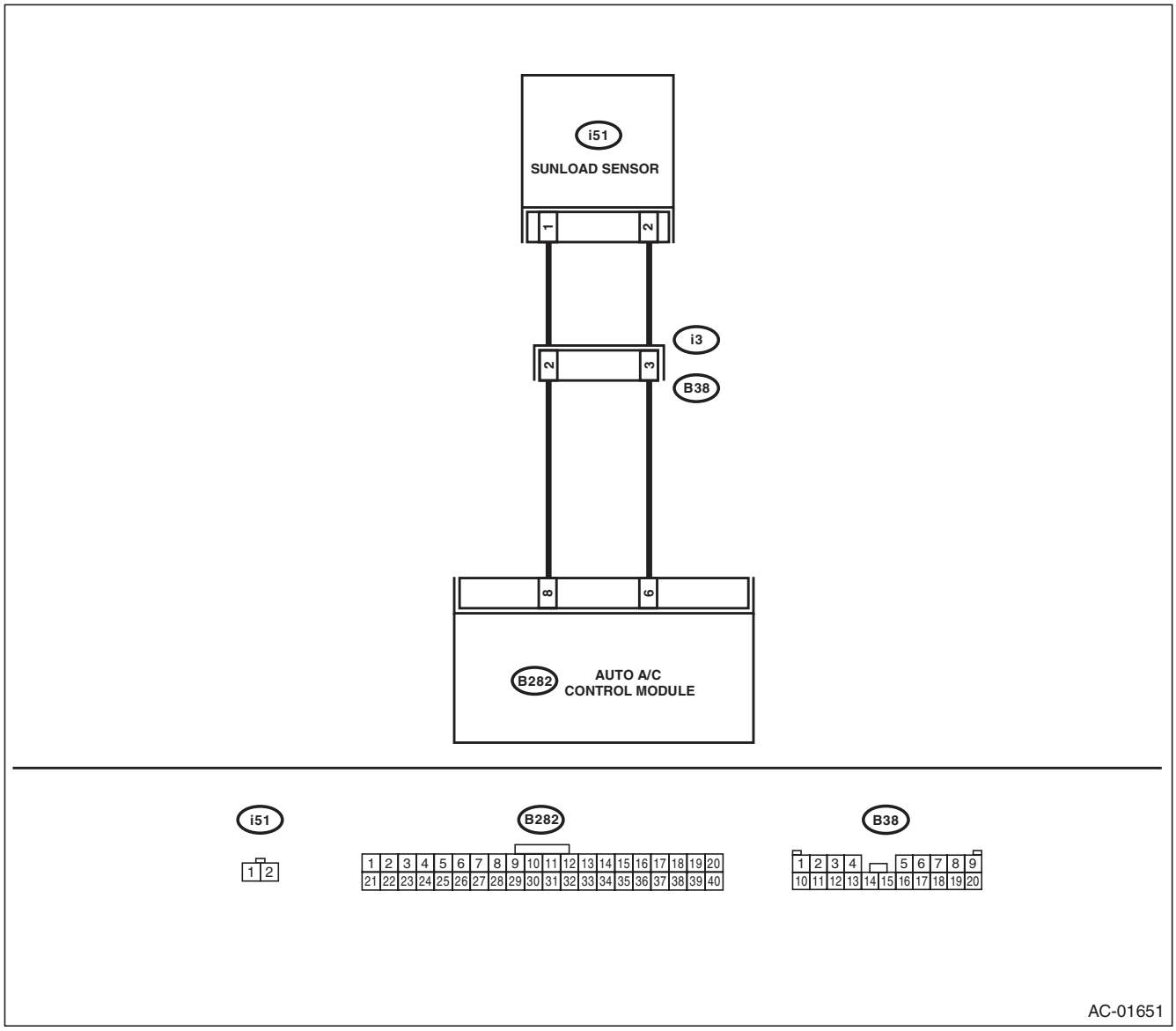

Diagnostic Procedure for Sensors

	Step	Check	Yes	No
1	**CHECK POWER SUPPLY VOLTAGE FOR SUNLOAD SENSOR.** 1) Turn the ignition switch to OFF. 2) Disconnect the connector from sunload sensor. 3) Turn the ignition switch to ON. 4) Measure the power supply voltage for sunload sensor. ***Connector & terminal*** ***(i51) No. 1 (+) — No. 2 (–):***	Is the voltage approx. 5 V?	Go to step **4**.	Go to step **2**.
2	**CHECK HARNESS CONNECTOR BETWEEN AUTO A/C CONTROL MODULE AND SUNLOAD SENSOR.** 1) Turn the ignition switch to OFF. 2) Disconnect the connector from the auto A/C control module. 3) Measure the resistance of the harness between the auto A/C control module and sunload sensor. ***Connector & terminal*** ***(i51) No. 2 — (B282) No. 6:***	Is the resistance less than 1 Ω?	Go to step **3**.	Repair the harness between auto A/C control module and sunload sensor.
3	**CHECK HARNESS CONNECTOR BETWEEN AUTO A/C CONTROL MODULE AND SUNLOAD SENSOR.** Measure the resistance of the harness between the auto A/C control module and sunload sensor. ***Connector & terminal*** ***(i51) No. 1 — (B282) No. 8:***	Is the resistance less than 1 Ω?	Go to step **4**.	Repair the harness between auto A/C control module and sunload sensor.
4	**CHECK INPUT VOLTAGE FOR AUTO A/C CONTROL MODULE.** 1) Connect the connectors of sunload sensor and auto A/C control module. 2) Turn the ignition switch to ON. 3) Measure the voltage between connector terminals of auto A/C control module. ***Connector & terminal*** ***(B282) No. 8 (+) — (B282) No. 6 (–):***	Is the voltage approx. 2.5 V?	Go to step **5**.	Replace the sunload sensor.
5	**CHECK POOR CONTACT.** Check poor contact of auto A/C control module connector.	Is there poor contact in connector?	Repair the connector.	Replace the auto A/C control module.

E: A/C LOCK SENSOR

H6 model

WIRING DIAGRAM:

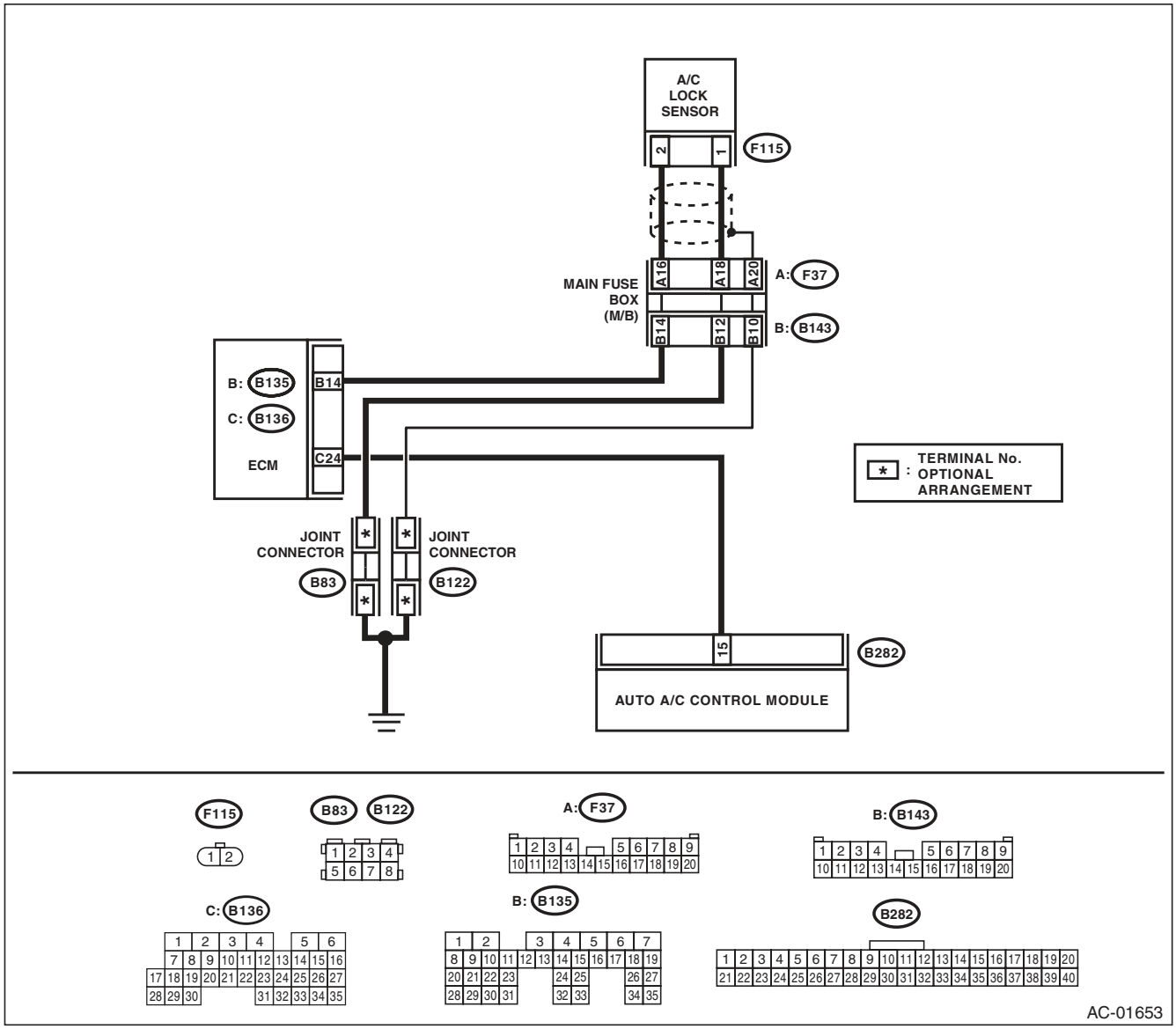

	Step	Check	Yes	No
1	**CHECK A/C LOCK SENSOR SIGNAL.** 1) Turn the ignition switch to OFF. 2) Connect the Subaru Select Monitor to data link connector. 3) Start the engine and turn the A/C switch to ON. 4) Read the data of A/C lock signal using Subaru Select Monitor. NOTE: • Subaru Select Monitor For detailed operation procedure, refer to "READ CURRENT DATA FOR ENGINE". <Ref. to EN(H6DO)(diag)-35, READ CURRENT DATA FOR ENGINE (NORMAL MODE), OPERATION, Subaru Select Monitor.>	Is the A/C lock signal switch ON?	Go to step **4**.	Go to step **2**.
2	**CHECK A/C LOCK SENSOR SIGNAL.** 1) Start the engine and turn the A/C switch to ON. 2) Measure the voltage between auto A/C control module connector and chassis ground. ***Connector & terminal*** ***(B282) No. 15 (+) — Chassis ground (–):***	Is the voltage 7 — 14 V?	Replace the auto A/C control module.	Go to step **3**.
3	**CHECK ECM OUTPUT.** Measure the voltage between ECM and chassis ground. ***Connector & terminal*** ***(B136) No. 24 (+) — Chassis ground (–):***	Is the voltage 7 — 14 V?	Repair the harness between ECM and auto A/C control module.	Replace the ECM.
4	**CHECK A/C LOCK SENSOR.** 1) Turn the ignition switch to OFF. 2) Disconnect the connector from ECM. 3) Measure the resistance between ECM connector and chassis ground. ***Connector & terminal*** ***(B135) No. 14 — Chassis ground:***	Is the resistance between 240 — 290 Ω?	Replace the ECM.	Go to step **5**.
5	**CHECK A/C LOCK SENSOR.** 1) Turn the ignition switch to OFF. 2) Disconnect the main fuse box connector. 3) Measure the resistance between main fuse box terminal. ***Connector & terminal*** ***(F37) No. 16 — No. 18:***	Is the resistance between 240 — 290 Ω?	Go to step **7**.	Go to step **6**.
6	**CHECK A/C LOCK SENSOR.** 1) Turn the ignition switch to OFF. 2) Disconnect the A/C lock sensor connector. 3) Measure the resistance between A/C lock sensor terminals. ***Connector & terminal*** ***(F115) No. 1 — No. 2:***	Is the resistance between 240 — 290 Ω?	Repair or replace the harness between A/C lock sensor and main fuse box.	Replace the A/C compressor assembly. (A/C lock switch malfunction)
7	**CHECK MAIN FUSE BOX.** 1) Turn the ignition switch to OFF. 2) Disconnect the connector and then measure the resistance between main fuse box terminal. ***Connector & terminal*** ***(F37) No. 16 — (B143) No. 14:*** ***(F37) No. 18 — (B143) No. 12:***	Is the resistance less than 10 Ω?	Repair or replace the harness between A/C lock sensor and main fuse box.	Replace the main fuse box.

9. Diagnostics with Phenomenon

A: INSPECTION

Symptom	Problem parts
A/C system fails to operate.	• Fuse (M/B No. 8, F/B No. 22, 31) • Connector (Poor contact) • Ground • Auto A/C control module • Blower fan motor • Blower fan relay • A/C relay • Compressor (Magnet clutch) • Evaporator sensor
Fuse is blown out.	• Fuse (M/B No. 8, F/B No. 22, 31) • Connector (Poor contact)
Illumination cannot dim.	• Fuse (M/B No. 8, F/B No. 22, 31) • Connector (Poor contact) • Auto A/C control module • Body integrated unit
Blower fan does not rotate or fan speed cannot be controlled.	• Fuse (F/B No. 22, 27, 28) • Connector (Poor contact) • Ground • Auto A/C control module • Blower fan motor • Blower fan relay
Unable to switch suction vents.	• Connector (Poor contact) • Auto A/C control module • Intake door actuator
Unable to switch vents.	• Connector (Poor contact) • Auto A/C control module • Mode door actuator
The compartment temperature does not rise. (Warm air does not come out.)	• Connector (Poor contact) • Auto A/C control module • Air mix door actuator • In-vehicle sensor, ambient sensor, evaporator sensor and sunload sensor • In-vehicle sensor aspirator hose
The compartment temperature does not lower. (Cold air does not come out.)	• Connector (Poor contact) • Auto A/C control module • Air mix door actuator • A/C relay • Compressor (Magnet clutch) • Radiator fan motor • Radiator fan relay • In-vehicle sensor, ambient sensor, evaporator sensor and sunload sensor • In-vehicle sensor aspirator hose
Compartment temperature is higher or lower than setting temperature.	• Auto A/C control module • Air mix door actuator • In-vehicle sensor, ambient sensor, evaporator sensor and sunload sensor • In-vehicle sensor aspirator hose
Compartment temperature does not quickly respond to setting temperature.	• Air mix door actuator • In-vehicle sensor, ambient sensor, evaporator sensor and sunload sensor • In-vehicle sensor aspirator hose
Radiator fan does not rotate during A/C operation.	• Radiator fan motor • Radiator fan relay

1. General Description

A: COMPONENT

1. DRIVER'S AIRBAG MODULE

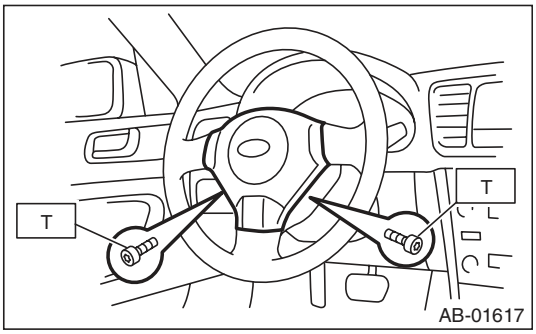

Tightening torque:
10 N·m (1.0 kgf-m, 7.2 ft-lb)

2. PASSENGER'S AIRBAG MODULE

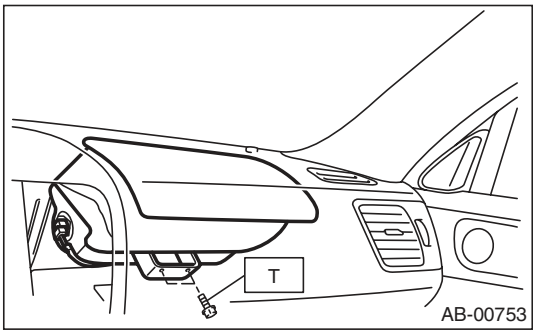

Tightening torque:
7.4 N·m (0.75 kgf-m, 5.5 ft-lb)

3. SIDE AIRBAG MODULE

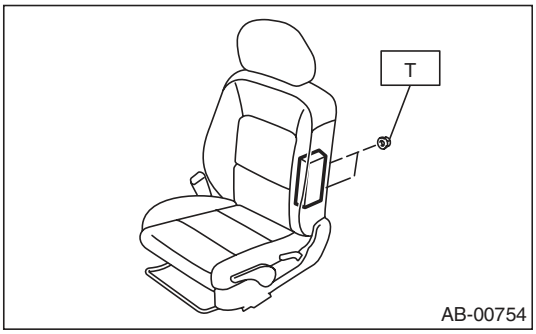

Tightening torque:
6 N·m (0.61 kgf-m, 4.4 ft-lb)

4. AIRBAG CONTROL MODULE

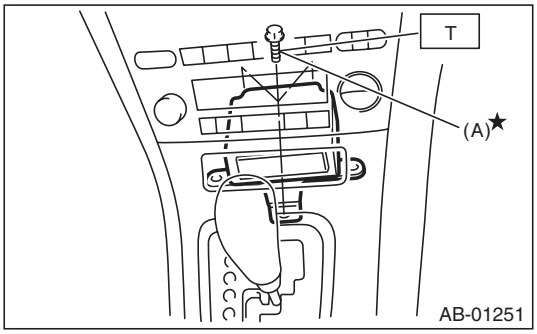

(A) Bolt

CAUTION:
Do not reuse mounting bolts and nuts.

Tightening torque:
25 N·m (2.5 kgf-m, 18.1 ft-lb)

5. FRONT SUB SENSOR

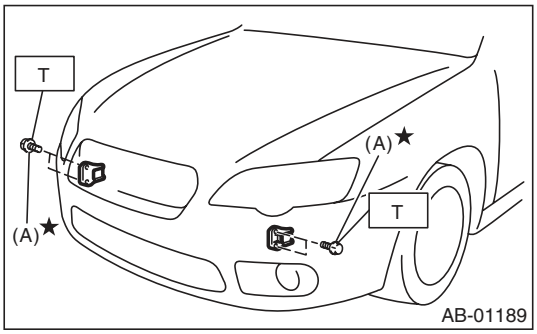

(A) Bolt

CAUTION:
Do not reuse mounting bolts and nuts.

Tightening torque:
13 N·m (1.32 kgf-m, 9.6 ft-lb)

6. SIDE AIRBAG SENSOR

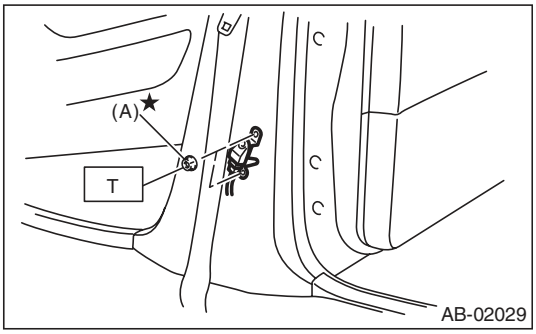

(A) Nut

CAUTION:
Do not reuse mounting bolts and nuts.

Tightening torque:
8.0 N·m (0.82 kgf-m, 5.9 ft-lb)

7. CURTAIN AIRBAG SENSOR

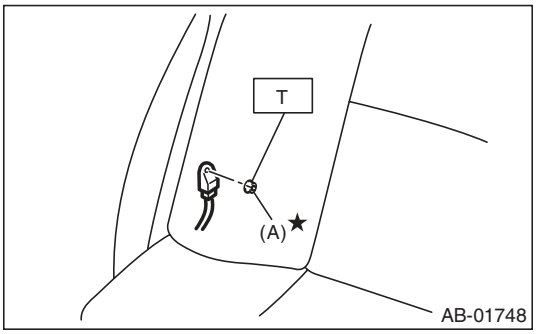

(A) Nut

CAUTION:
Do not reuse mounting bolts and nuts.

Tightening torque:
8.0 N·m (0.82 kgf-m, 5.9 ft-lb)

8. SATELLITE SAFING SENSOR

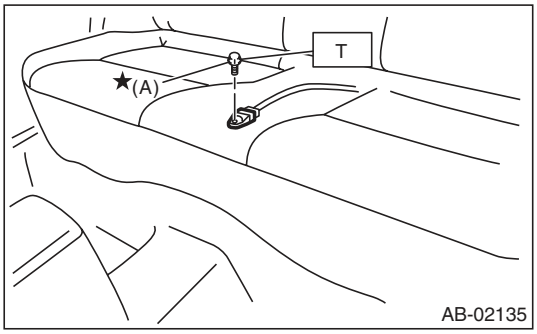

(A) Bolt

CAUTION:
Do not reuse mounting bolts and nuts.

Tightening torque:
8.0 N·m (0.82 kgf-m, 5.9 ft-lb)

9. STEERING ROLL CONNECTOR

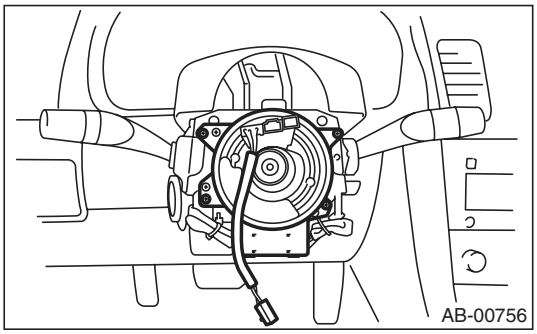

10.CURTAIN AIRBAG MODULE

- Sedan model

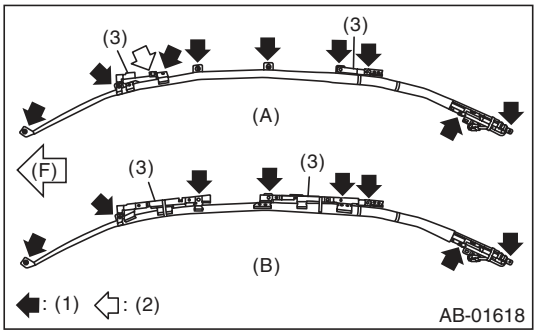

- Wagon model

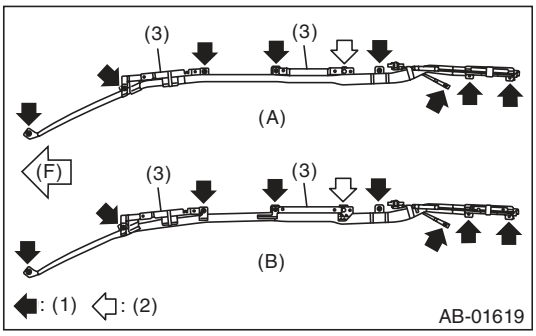

(A)	Model with sunroof	(1)	Bolt
(B)	Model without sunroof	(2)	Clip
(F)	Front side of vehicle	(3)	Plate guard

Tightening torque:
7.5 N·m (0.76 kgf-m, 5.5 ft-lb)

11.AIRBAG HARNESS

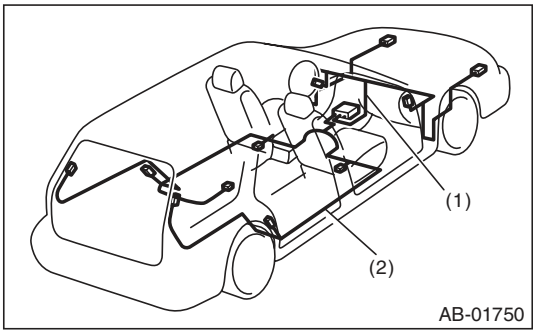

(1) Airbag main harness
(2) Airbag rear harness

B: CAUTION

- When servicing a vehicle, be sure to turn the ignition switch to OFF, disconnect the ground cable from battery, and wait for 20 seconds or more before starting work.
- The airbag system is fitted with a backup power source. After disconnecting the battery ground cable, the airbag may deploy if you do not wait for 20 seconds or more before starting airbag system servicing.

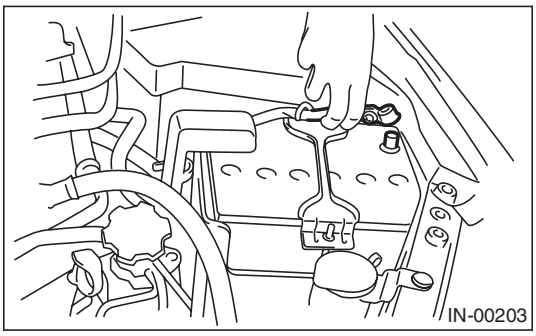

- If the airbag warning light illuminates, repair the vehicle immediately. Otherwise, the airbag or pretensioner may inflate incorrectly, or not inflate in collision.
- If sensors, airbag module, airbag control module, pretensioner, harness or satellite safing sensor cover is deformed or damaged, replace with new part.

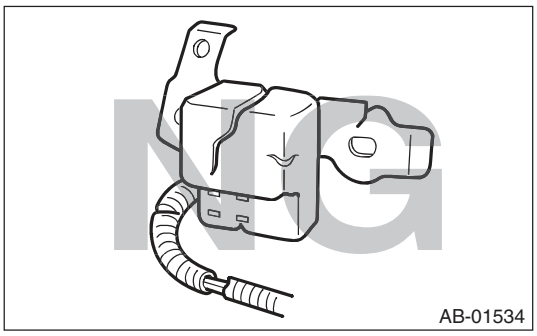

- When checking the airbag system, be sure to use a digital circuit tester. Use of an analog circuit tester may cause the airbag to activate erroneously due to a minimal current inside tester.

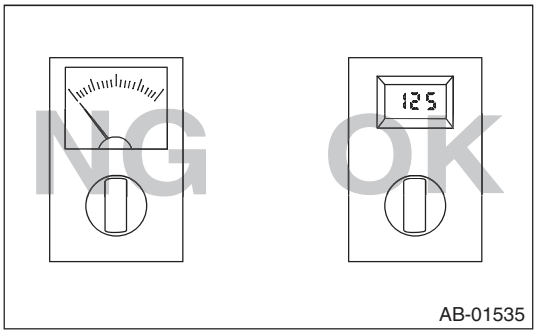

• When checking, use a test harness (1). Damage to connector terminal causes malfunction. Do not directly apply the tester probe to connector terminal of airbag.

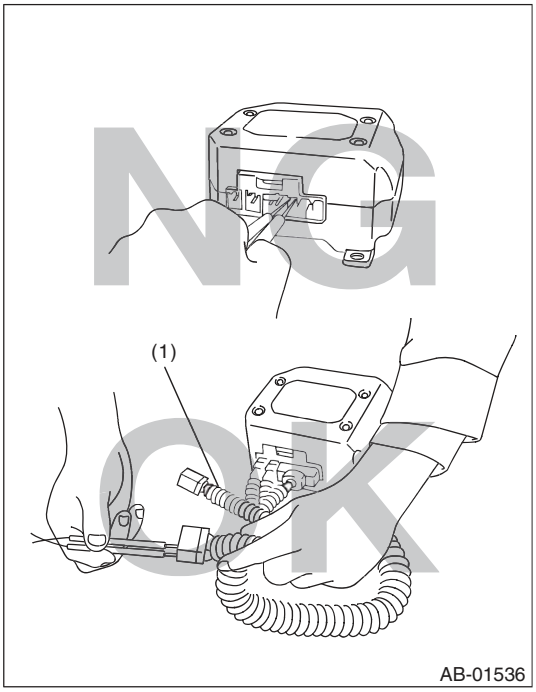

• Do not allow water or oil to come in contact with the connector terminals. Also, do not touch the connector terminals.

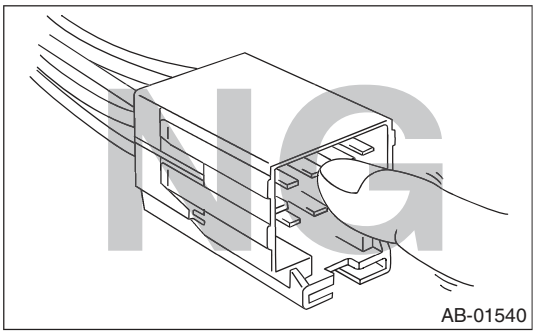

• Do not check continuity of the airbag modules for driver's side, passenger's side and curtain, or the pretensioner.

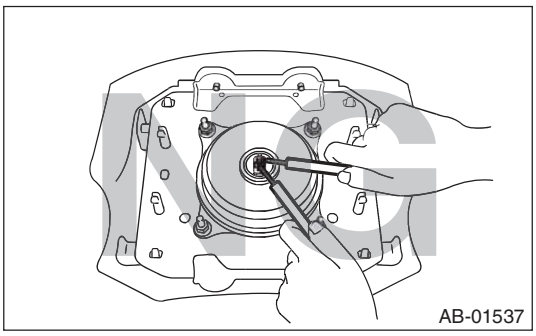

• If damage, open circuit or rust is found on airbag system wiring harness, do not use a soldering equipment to repair. Replace the faulty harness with a new genuine part.

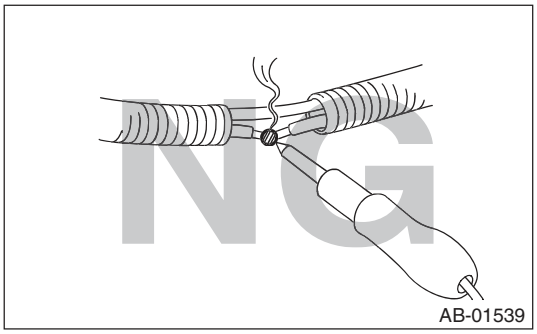

• Install the wiring harness securely with the specified clips to avoid interference or tangled with other parts.

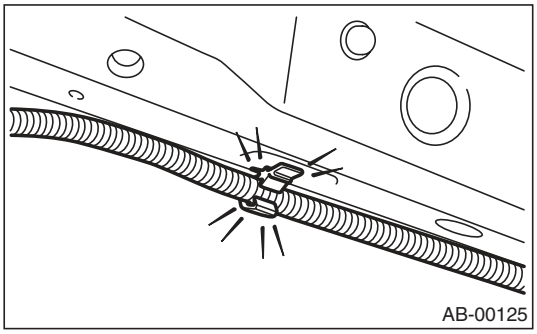

• When painting or performing sheet metal work on the front part of the vehicle, including the front wheel apron, front fender and front side frame, remove the front sub sensors and wiring harness of airbag system.
• When painting or performing sheet metal work on the side of the vehicle or floor pan, around rear crossmember, including the side sill, center pillar and front and rear doors, remove the side airbag sensors, curtain airbag sensor, satellite safing sensor and wiring harness of the airbag system.

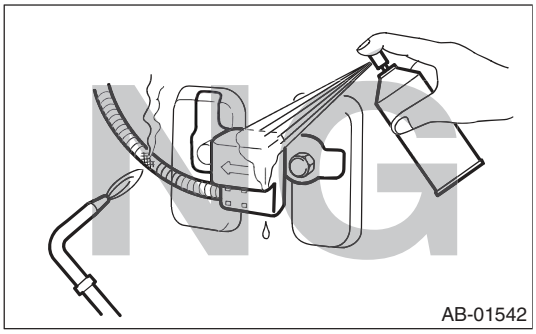

• Do not use the airbag or pretensioner parts from other vehicles. Always replace the defective parts with new parts.
• Never reuse a deployed airbag module and pretensioner.

• Do not discard the uninflated airbag or pretensioner.
• When airbag control module, front sub sensor, side airbag sensor and curtain airbag sensor or satellite safing sensor are removed, do not reuse the bolts and nuts of them. Always use new bolts and nuts for them.
• Do not drop each airbag module, airbag control module and each sensor, or store these parts under high temperature of 85°C (185°F) or more, or let water, oil or grease get on them; the internal parts may be damaged or the reliability may be greatly lowered.

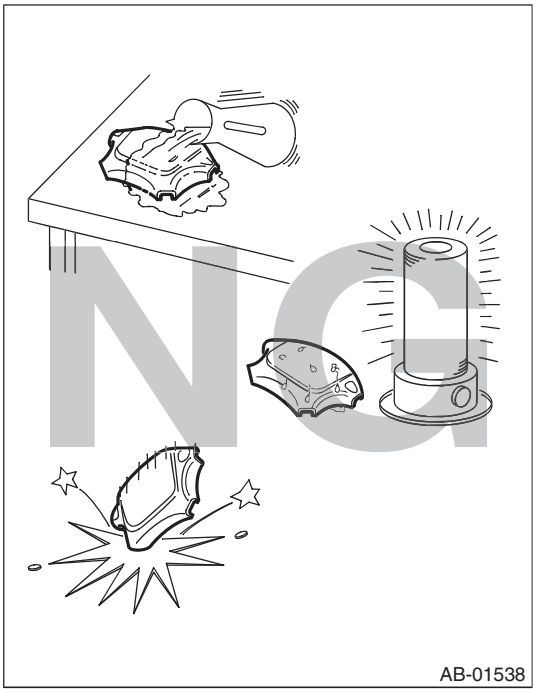

• After removal of each parts for airbag system, keep them with the pad facing upward on a dry, clean and flat surface without heat, light sources, moisture and dust.

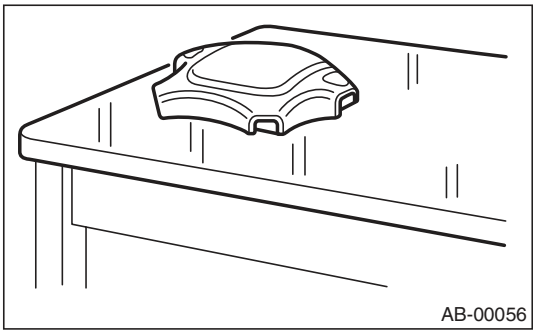

• Do not disassemble driver's airbag module, passenger's airbag module, side or curtain airbag modules, or pretensioner.

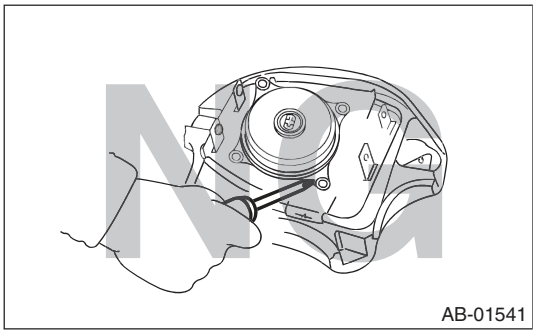

• When performing attachment of the steering wheel and steering roll connector, make sure to perform adjustment of the steering roll connector.
• The removed front seat with airbag module must be kept at least 200 mm (8 in) away from walls and other objects.

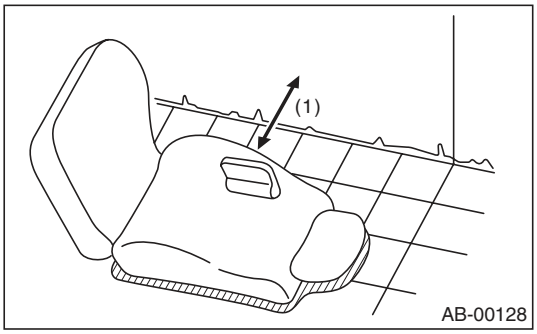

(1) 200 mm (8 in) or more

- When storing a removed airbag module, do not place with its pad side facing down. Do not place any objects on the airbag module. Do not pile up the airbag module. If the airbag inflates for some reason when an airbag module pad is touching other objects, it may cause serious accident.

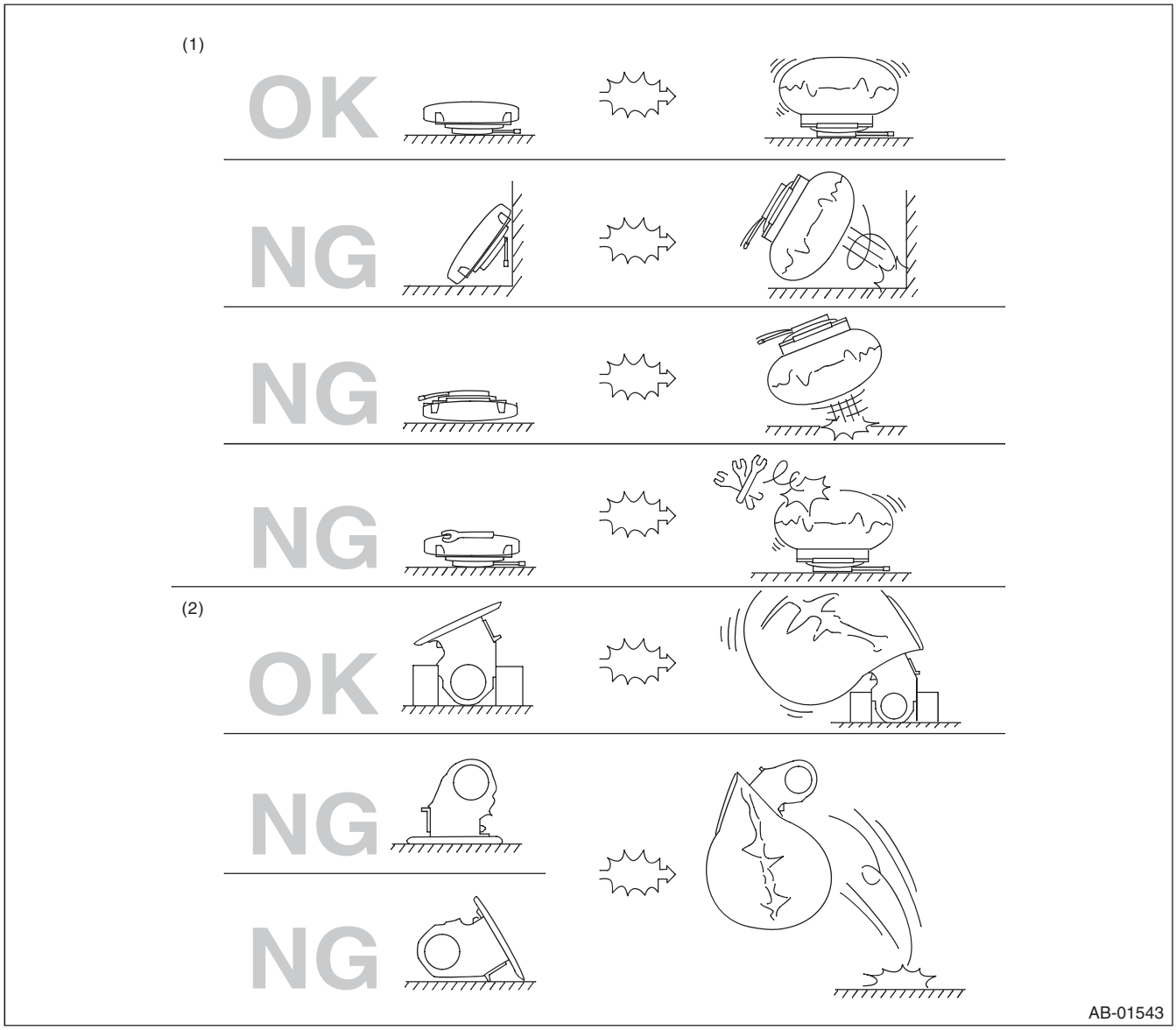

(1) Driver's airbag module (2) Passenger's airbag module

C: PREPARATION TOOL

1. GENERAL TOOL

TOOL NAME	REMARKS
TORX® T30	Used for removing and installing driver's airbag module.

2. Airbag Connector

A: PROCEDURE

1. AIRBAG CONTROL MODULE

1) How to disconnect:
Press the lock lever plate (A) and pull out the lock lever.

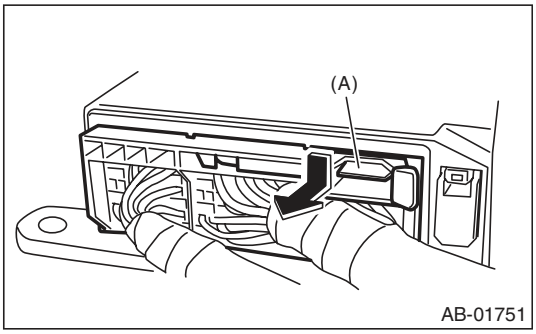

2) How to connect:
Insert the connector, push the lock lever in securely.

CAUTION:
Be sure to insert the connector in until it is locked. Then pull it lightly to make sure that it is locked.

2. DRIVER'S AIRBAG MODULE, PRETENSIONER AND CURTAIN AIRBAG MODULE

1) How to disconnect:
(1) Using a flat tip screwdriver, pry the push lock upward to unlock.

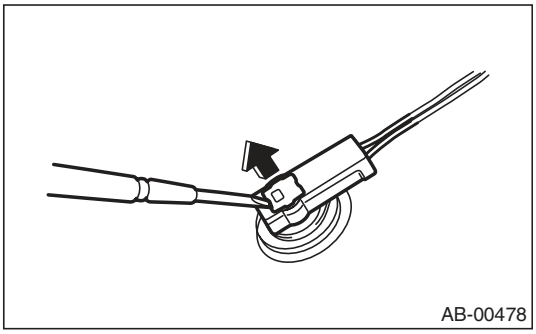

(2) Pull the connector to disconnect from the driver's airbag module assembly or the retractor assembly.

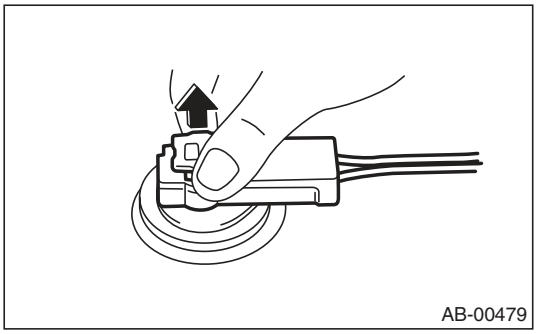

2) How to connect:
Connect the connector in the reverse order of disconnecting. At this time, be sure to insert the push lock until a clicking sound is heard.

CAUTION:
- **Be sure to insert the connector in until it is locked. Then pull it lightly to make sure that it is locked.**
- **Be sure to push the push lock in securely.**

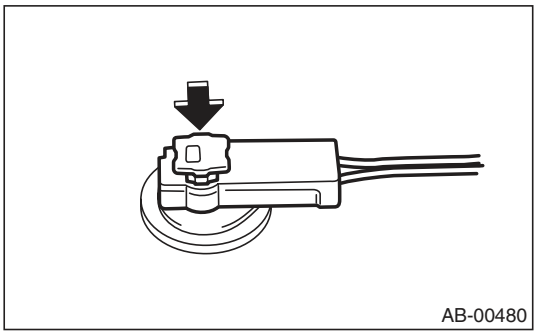

NOTE:
The connector cannot be connected when the push lock is in the lock position. Move the push lock to the release position and connect the connector.

3. DRIVER'S AIRBAG (BETWEEN AIRBAG MAIN HARNESS AND ROLL CONNECTOR) AND SIDE AIRBAG

1) How to disconnect:
   (1) Push the slide lock (A) in the direction of arrow.

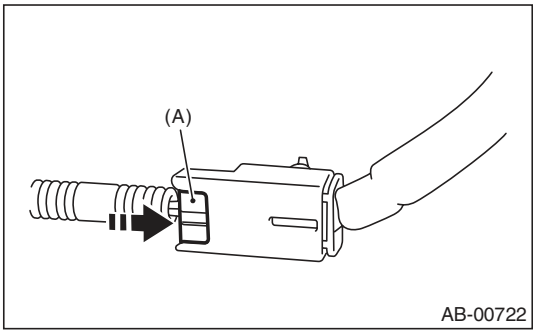

   (2) With the slide lock pushed, disconnect the connector.

CAUTION:
When pulling the slide lock or disconnecting connector, be sure to hold the connector, not the harness.

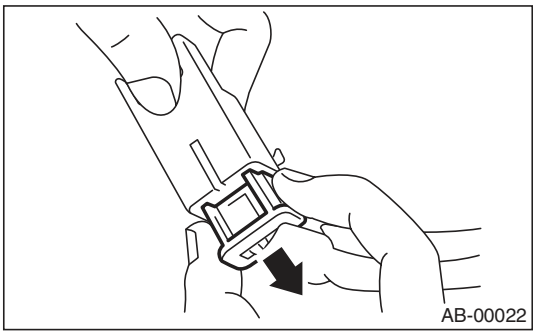

2) How to connect:
Holding the connector, push it in securely until a clicking sound is heard.

CAUTION:
Be sure to insert the connector in until it is locked. Then pull it gently to make sure that it is locked.

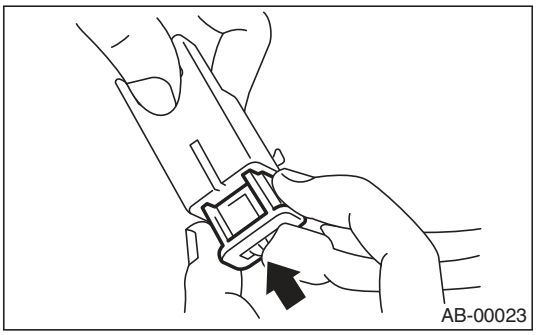

4. SIDE AIRBAG

1) How to disconnect:
   (1) Push the lock arm (A).
   (2) With the lock arm (A) pushed in, move the slide lock (B) in the direction of arrow.

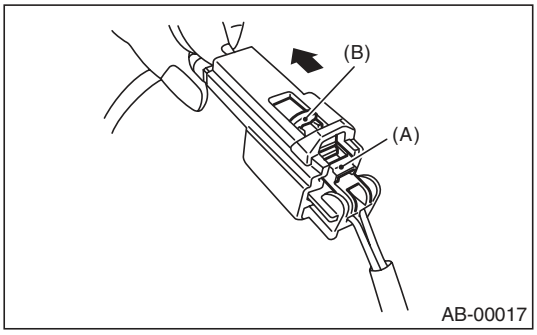

   (3) With the slide lock moved, release the lock arm (return to original position) and disconnect the connector.

CAUTION:
When pulling the slide lock or disconnecting connector, be sure to hold the connector, not the harness.

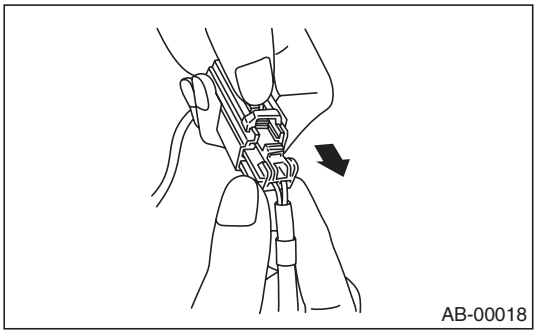

2) How to connect:
Holding the connector, push it in securely until a clicking sound is heard.

CAUTION:
Be sure to insert the connector in until it is locked. Then pull it lightly to make sure that it is locked.

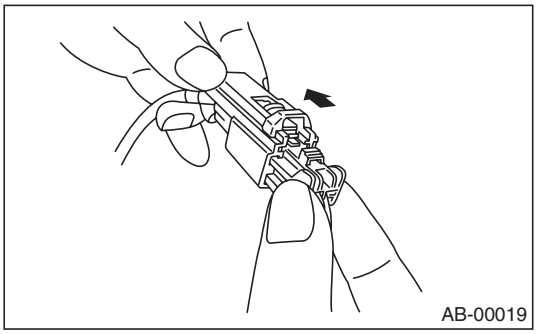

5. FRONT SUB SENSOR, SIDE AIRBAG SENSOR, CURTAIN AIRBAG SENSOR AND SATELLITE SAFING SENSOR

1) How to disconnect:
Holding outer part (A), pull it in the direction of arrow.

CAUTION:
When pulling the slide lock or disconnecting connector, be sure to hold the connector, not the harness.

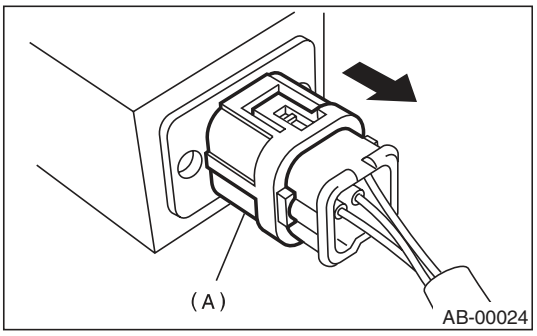

2) How to connect:
Holding the connector, push it in securely until a clicking sound is heard.

CAUTION:
- **Do not touch the outer side section or else the outer side (A) will move back.**
- **Be sure to insert the connector in until it is locked. Then pull it lightly to make sure that it is locked.**

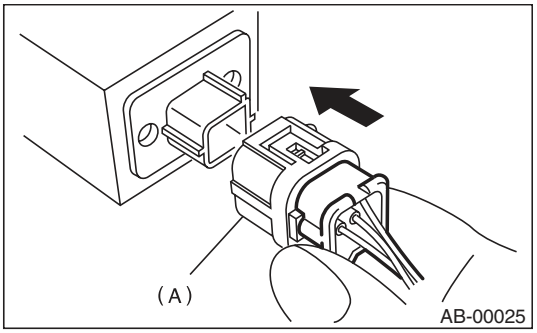

6. PASSENGER DETECTION SYSTEM (BETWEEN AIRBAG REAR HARNESS AND SEAT HARNESS) AND BELT TENSION SENSOR

1) How to disconnect:
Push lock arm (A), then disconnect the connector.

CAUTION:
When pulling the slide lock or disconnecting connector, be sure to hold the connector, not the harness.

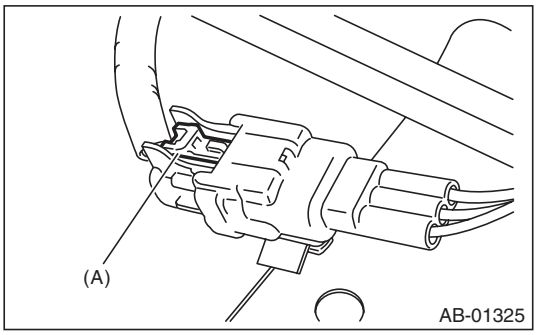

2) How to connect:
Holding the connector, push it in securely until a clicking sound is heard.

CAUTION:
Be sure to insert the connector in until it is locked. Then pull it lightly to make sure that it is locked.

3. Inspection Locations After a Collision

A: REPLACEMENT

Replace the following parts when the airbag is deployed.

1. FRONT COLLISION

1) Driver's airbag module
2) Passenger's airbag module
3) Driver's seat belt (Pretensioner)
4) Passenger's seat belt (Pretensioner)
5) Airbag control module
6) Front sub sensor (L/R)
7) Roll connector
8) Instrument panel (for integrating with passenger's airbag module)
9) Passenger's side seat cushion pad and frame assembly

2. SIDE COLLISION

1) Airbag control module
2) Satellite safing sensor
3) Side airbag module (operating side seat backrest)
4) Side airbag sensor (operating side)
5) Curtain airbag module (operating side)
6) Curtain airbag sensor (operating side)
7) Satellite safing sensor mounting bracket and cover

3. INSPECTION OF OTHER PARTS

Check for the following parts, and replace the damaged parts with new parts.
1) Steering wheel and steering shaft
Check the steering shaft for mounting conditions and deflection of front and rear, upward and downward directions, and deflection of front and rear direction with tilt lever released. (After a collision, absorbing part of steering shaft may have been operated.)
2) Check the direct type connector of drivers airbag module, curtain airbag module and pretensioner, etc. for damage, and also check each harness for pinch and connector damage. Replace the harness as a unit if damage is found.
3) Check the seat cushion frame, backrest, slide rail and headrest for deformation, distortion, crack, and installing condition and play.
4) For the passenger's seat, replace the seat cushion pad and frame assembly with a new part if the seat cushion pad and frame assembly is deformed or cracked.
5) If there are tears or loosening in the passenger side seat cushion cover, it may interfere with the proper operation of the occupant detection system. Replace with a new cushion cover.
6) Be sure to perform the system calibration for the occupant detection system after removing or replacing the passenger seat cushion cover. Failure to do so may cause improper operation of the occupant detection system. <Ref. to OD(diag)-15, SYSTEM CALIBRATION (REZEROING), OPERATION, Subaru Select Monitor.>
7) Use the Subaru Select Monitor to check whether the passenger's seat belt buckle switch is operating normally.

B: INSPECTION

If the vehicle is involved in a collision, even if it is a slight collision, be sure to check the following systems.

1. DRIVER'S AIRBAG MODULE

1) Check for the following, and replace the damaged parts with new parts.
• Airbag module is cracked or deformed.
• Harness and/or connector is cracked, deformed or open. Harness wire is exposed.
• The module surface is fouled with grease, oil, water or cleaning solvent.
2) When installing a new driver's airbag module, check for the following, and replace the damaged parts with new parts.
• The steering wheel is in the way, making it difficult to install the airbag module.
• The clearance between the driver's airbag module and steering wheel is not constant.
• When steering wheel deformation in axial and vertical directions exceed limits.

Specification:
Axial deflection A
Less than 6 mm (0.24 in)
Vertical deflection L
Less than 15 mm (0.59 in)

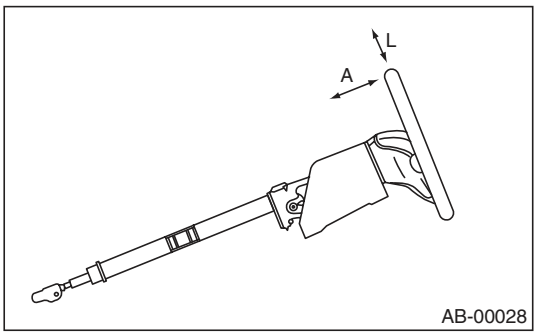

2. PASSENGER'S AIRBAG MODULE

Check for the following, and replace the damaged parts with new parts.
- Airbag module and instrument panel are cracked or deformed.
- Harness and/or connector is cracked, deformed or open. Harness wire is exposed.
- Mounting bracket is cracked or deformed.

3. SIDE AIRBAG MODULE

Check for the following, and replace the damaged parts with new parts.
- Front seat, airbag module and mounting bracket are damaged or deformed.
- Harness and/or connector is cracked, deformed or open. Harness wire is exposed.

4. CURTAIN AIRBAG MODULE

Check for the following, and replace the damaged parts with new parts.
- Airbag cover is scratched or torn.
- Harness and/or connector is cracked, deformed or open. Harness wire is exposed.
- Mounting bracket and securing clip are cracked or deformed.

5. AIRBAG CONTROL MODULE

Check for the following, and replace the damaged parts with new parts.
- Control module is cracked or deformed.
- Mounting bracket is cracked or deformed.
- Connector is scratched, cracked or deformed.
- Airbag is deployed.
- Side airbag is deployed.
- Curtain airbag is deployed.

6. FRONT SUB SENSOR

If the section of vehicle as shown in the figure is damaged, check the following items and replace the damaged parts with new parts.

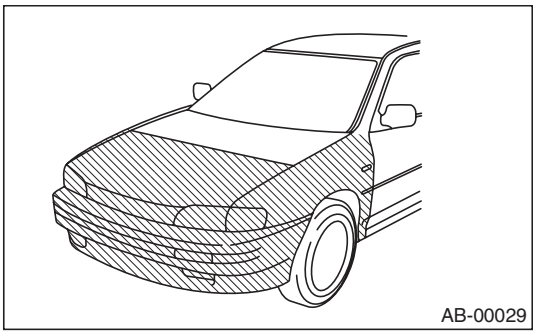

- Front sub sensor is cracked or deformed.
- Connector is scratched, cracked or deformed.
- Airbag is deployed.

7. SATELLITE SAFING SENSOR, SIDE AIRBAG SENSOR AND CURTAIN AIRBAG SENSOR

If the section of vehicle as shown in the figure is damaged, check the following items and replace the damaged parts with new parts.

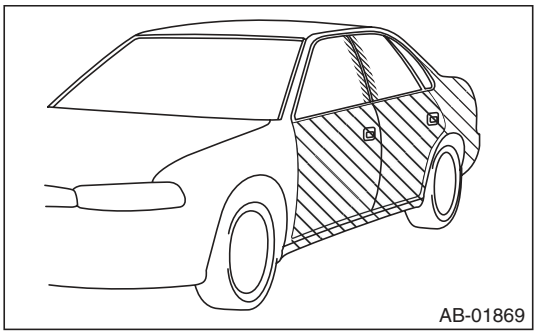

- Satellite safing sensor, side airbag sensor and curtain airbag sensor are cracked or deformed.
- Mounting bracket is cracked or deformed.
- Satellite safing sensor is cracked or deformed.
- Connector is scratched, cracked or deformed.
- Side airbag or curtain airbag is deployed. (operating side)

8. ROLL CONNECTOR

Check for the following, and replace the damaged parts with new parts.
Combination switch or steering roll connector is cracked or deformed.

9. STEERING SHAFT

Check for the following, and replace the damaged parts with new parts.
Overall length of steering column should be within specification.

Specification:

Overall length L

Tilt and telescopic column (measure while minimized)

Except for OUTBACK model

$818.6^{+1.5}_{-1.5}$ ***mm*** ($32.23^{+0.059}_{-0.059}$ ***in)***

OUTBACK model

$810.4^{+1.5}_{-1.5}$ ***mm*** ($31.89^{+0.059}_{-0.059}$ ***in)***

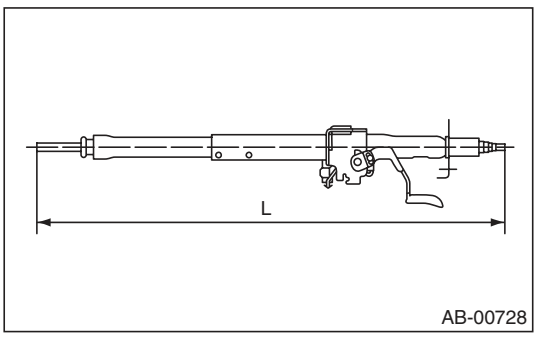

10.DRIVER'S SEAT

Check for the following, and replace the damaged parts with new parts.
• Seat belt buckle body/bracket is cracked or deformed.
• Harness and/or connector is cracked, deformed or open. Harness wire is exposed.

11.PASSENGER'S SEAT

1) Check for the following, and replace the damaged parts with new parts.
• Seat belt buckle body, bracket or connector is scratched, cracked or deformed.
• Backrest frame for crack or deformation
• Headrest for deformation or play
• If the seat cushion cover and seat backrest cover is scratched or coming loose, replace with a new cover and readjust the system. <Ref. to OD(diag)-15, SYSTEM CALIBRATION (REZEROING), OPERATION, Subaru Select Monitor.>

CAUTION:
If any of the following applies, replace the seat cushion pad and frame assembly. Do not disassemble.
• Cracks or deformation found in the seat cushion frame or seat cushion pad.
• Scratches, cracks, or deformation found on the passenger detection system pressure sensor hoses or passenger detection control module, or attachment brackets of the control module.
• Harness and/or connector is cracked, deformed or open. Harness wire is exposed.

2) After checking the installing condition of passenger's seat, perform the system calibration of occupant detection system. <Ref. to OD(diag)-15, SYSTEM CALIBRATION (REZEROING), OPERATION, Subaru Select Monitor.>

12.BELT TENSION SENSOR

Check for the following, and replace the damaged parts with new parts.
• Belt tension sensor is scratched, cracked, or deformed.
• Harness and/or connector is cracked, deformed or open. Harness wire is exposed.

4. Driver's Airbag Module

A: REMOVAL

CAUTION:
Refer to "CAUTION" of "General Description" before handling the airbag module. <Ref. to AB-4, CAUTION, General Description.>

1) Position the front wheels straight ahead. (After moving a vehicle 5 m (16 ft) or more with front wheels positioned straight ahead, make sure that the vehicle moves straight ahead).
2) Turn the ignition switch to OFF.
3) Disconnect the ground cable from battery and wait for at least 20 seconds before starting work.
4) Using TORX® bit T30 (1), remove the two TORX® bolts on the side of steering wheel.

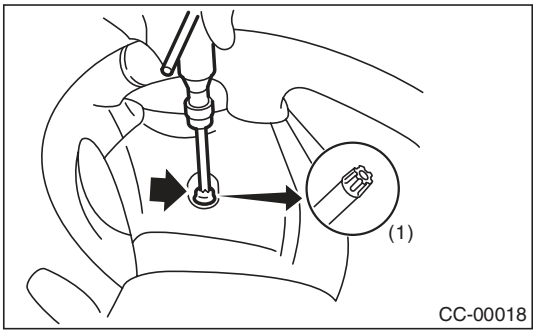

5) Disconnect the horn harness.
6) Disconnect the airbag connector on the back of airbag module, and then remove the airbag module. <Ref. to AB-8, PROCEDURE, Airbag Connector.>

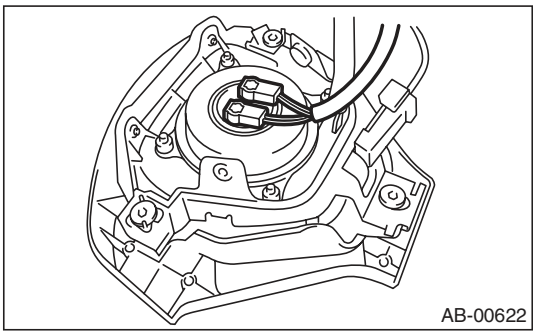

7) Refer to "CAUTION" for handling of a removed airbag module. <Ref. to AB-4, CAUTION, General Description.>

B: INSTALLATION

CAUTION:
- **Refer to "CAUTION" of "General Description" before handling the airbag module. <Ref. to AB-4, CAUTION, General Description.>**
- **To prevent the misconnection, the connector is colored. Connect the harness side connector to the same color of module side connector.**

Install in the reverse order of removal.

Tightening torque:
10 N·m (1.0 kgf-m, 7.2 ft-lb)

C: INSPECTION

CAUTION:
Refer to "CAUTION" of "General Description" before handling the airbag module. <Ref. to AB-4, CAUTION, General Description.>

Check for the following, and replace the damaged parts with new parts.
Airbag module, harness, connector and mounting bracket are damaged. <Ref. to AB-11, DRIVER'S AIRBAG MODULE, INSPECTION, Inspection Locations After a Collision.>

5. Passenger's Airbag Module

A: REMOVAL

CAUTION:
Refer to "CAUTION" of "General Description" before handling the airbag module. <Ref. to AB-4, CAUTION, General Description.>
1) Turn the ignition switch to OFF.
2) Disconnect the ground cable from battery and wait for at least 20 seconds before starting work.
3) Remove the instrument panel. <Ref. to EI-57, INSTRUMENT PANEL (EXCLUDING STEERING SUPPORT BEAM), REMOVAL, Instrument Panel Assembly.>
4) Remove the claw, and remove the passenger's airbag module.

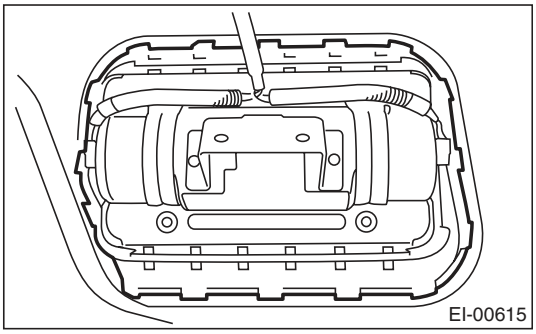

5) Refer to "CAUTION" for handling of a removed airbag module. <Ref. to AB-4, CAUTION, General Description.>

B: INSTALLATION

CAUTION:
Refer to "CAUTION" of "General Description" before handling the airbag module. <Ref. to AB-4, CAUTION, General Description.>
Install in the reverse order of removal.

Tightening torque:
7.4 N·m (0.75 kgf-m, 5.5 ft-lb)

C: INSPECTION

CAUTION:
Refer to "CAUTION" of "General Description" before handling the airbag module. <Ref. to AB-4, CAUTION, General Description.>
Check for the following, and replace the damaged parts with new parts.
Airbag module, harness, connector and mounting bracket are damaged. <Ref. to AB-12, PASSENGER'S AIRBAG MODULE, INSPECTION, Inspection Locations After a Collision.>

6. Side Airbag Module

A: REMOVAL

CAUTION:
Refer to "CAUTION" of "General Description" before handling the airbag module. <Ref. to AB-4, CAUTION, General Description.>

NOTE:
Remove the passenger's side by referring to driver's side.

1) Turn the ignition switch to OFF.
2) Disconnect the ground cable from battery and wait for at least 20 seconds before starting work.
3) Remove the front seats. <Ref. to SE-9, REMOVAL, Front Seat.>
4) Disconnect the connector from the back side of seat cushion assembly, then remove the side airbag harness.
5) Remove the backrest cover. <Ref. to SE-10, DISASSEMBLY, Front Seat.>
6) Remove the nuts, and remove the side airbag module assembly from the back rest frame assembly.

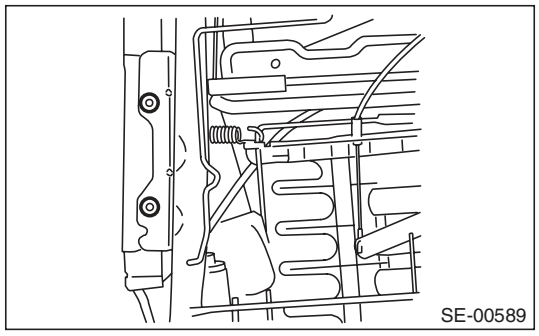

B: INSTALLATION

CAUTION:
- **Refer to "CAUTION" of "General Description" before handling the airbag module. <Ref. to AB-4, CAUTION, General Description.>**
- **Be sure to perform the system calibration for occupant detection system after passenger's seat installation. <Ref. to OD(diag)-15, SYSTEM CALIBRATION (REZEROING), OPERATION, Subaru Select Monitor.>**

1) Make sure that there is no foreign matter on side airbag module.
2) Install the side airbag module to backrest frame assembly.

CAUTION:
When attaching the side airbag module assembly, make sure to sandwich the seat backrest cover between the seat backrest side bracket and side airbag module.

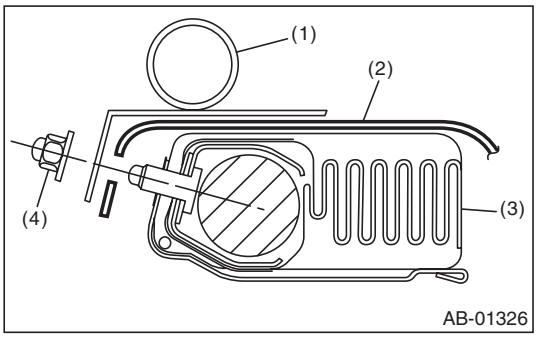

(1) Backrest frame ASSY
(2) Backrest cover
(3) Side airbag module ASSY
(4) Hexagon cap nut

Tightening torque:
6.0 N·m (0.61 kgf-m, 4.4 ft-lb)

3) Install the side airbag harness to backrest frame assembly.

NOTE:
Secure the harness to its original position of seat.

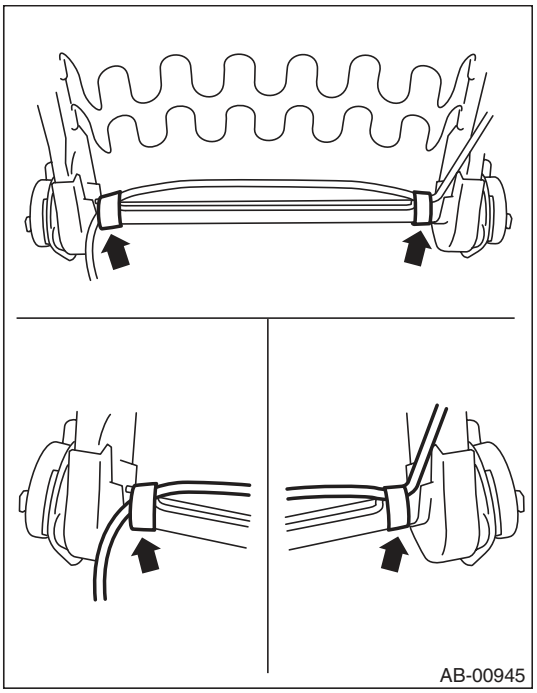

4) Install the backrest cover. <Ref. to SE-16, ASSEMBLY, Front Seat.>
5) Draw the side airbag harness around the back side of seat cushion assembly.
6) Recline the seat or slide it backward and forward, and check there is no contact between the seat backrest assembly, cushion cover assembly and side airbag harness.

C: INSPECTION

CAUTION:
Refer to "CAUTION" of "General Description" before handling the airbag module. <Ref. to AB-4, CAUTION, General Description.>

Check for the following, and replace the damaged parts with new parts. <Ref. to AB-12, SIDE AIRBAG MODULE, INSPECTION, Inspection Locations After a Collision.>

1) With side collision (when side airbag is deployed)
- Side airbag module assembly
- Satellite safing sensor
- Side airbag sensor
- Backrest pad assembly
- Backrest frame assembly
- Backrest cover assembly

2) When damage is found by visual check
- Headrest assembly
- Bushing
- Slide rail OUT (Driver's side)
- Slide rail IN (Driver's side)
- Seat cushion pad and frame assembly
- Seat hinge cover
- Seat lifter lever
- Reclining lever
- Side airbag harness and connector on body side
- Satellite safing sensor cover and mounting bracket

3) With side collision (when side airbag is not deployed)
Check the seat, airbag module and sensor visually, and then replace them with new parts if damaged or cracked.
Specially inspect the damage of airbag module body, mounting bracket and harness connector.

4) Without side collision (dirt and damage of cover)
Replace the corresponding part with a new part.

7. Curtain Airbag Module

A: REMOVAL

CAUTION:
Refer to "CAUTION" of "General Description" before handling the airbag module. <Ref. to AB-4, CAUTION, General Description.>

1) Turn the ignition switch to OFF.
2) Disconnect the ground cable from battery and wait for at least 20 seconds before starting work.
3) Remove the rear quarter trim. (Sedan model) <Ref. to EI-63, SEDAN MODEL, REMOVAL, Rear Quarter Trim.>
4) Remove the quarter rear pillar trim. (Wagon model) <Ref. to EI-63, WAGON MODEL, REMOVAL, Rear Quarter Trim.>
5) Remove the roof trim. <Ref. to EI-67, REMOVAL, Roof Trim.>
6) Disconnect the curtain airbag module connector.
7) Remove bolt (A) and clip (B), and then remove the curtain airbag module.

CAUTION:
- **Be careful not to damage the curtain airbag module during removal.**
- **Never open the curtain airbag module before deploying it. Never reuse the deployed curtain airbag module.**

- Sedan model

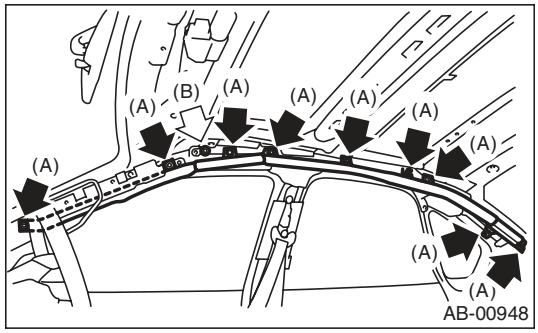

- Wagon model

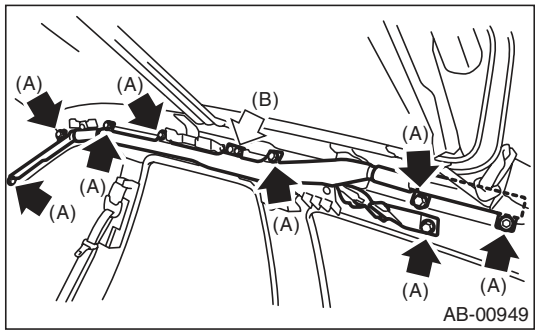

NOTE:
Remove the rear center seat belt retractor on the RH side before servicing.

8) Remove the airbag guide A from the front pillar.

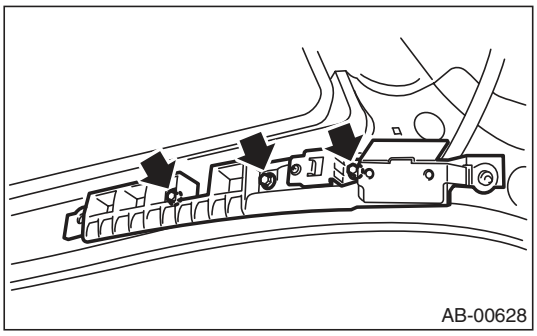

9) Remove the airbag guide B from the center pillar.

- Sedan model

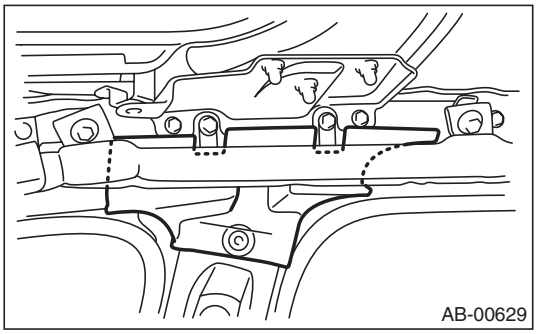

- Wagon model

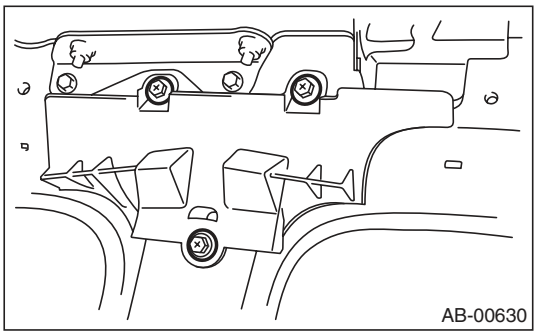

10) Remove airbag guide C from quarter pillar.
- Sedan model

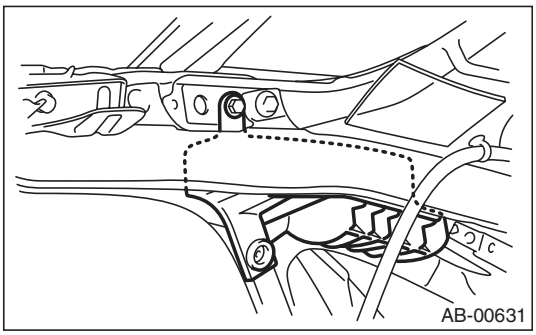

- Wagon model

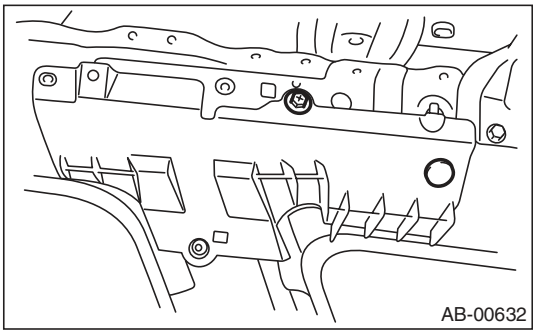

B: INSTALLATION

CAUTION:
- **Refer to "CAUTION" of "General Description" before handling the airbag module. <Ref. to AB-4, CAUTION, General Description.>**
- **When installing the curtain airbag module, install a specified part at specified place.**
- **Be careful not to damage the curtain airbag module during removal.**
- **Never open the curtain airbag module before deploying it. Never reuse the deployed curtain airbag module.**
- **Make sure that there are no foreign matter on airbag module.**

Install in the reverse order of removal.

Tightening torque:
7.5 N·m (0.76 kgf-m, 5.5 ft-lb)

C: INSPECTION

CAUTION:
Refer to "CAUTION" of "General Description" before handling the airbag module. <Ref. to AB-4, CAUTION, General Description.>

Check for the following, and replace the damaged parts with new parts. <Ref. to AB-12, CURTAIN AIRBAG MODULE, INSPECTION, Inspection Locations After a Collision.>

1) With side collision (when curtain airbag is deployed)
- Curtain airbag module assembly
- Satellite safing sensor
- Curtain airbag sensor
- Roof trim
- Front pillar upper trim
- Center pillar upper trim
- Rear quarter pillar trim
- Airbag guide A, B, C

2) When damage is found by visual check
- Assist grip
- Assist grip bracket
- Curtain airbag harness and connector on body side.
- Satellite safing sensor cover and mounting bracket

3) With side collision (when curtain airbag is not deployed)

Check the roof trim, pillar trim and airbag module visually, and then replace them with new parts if damaged or cracked.

Specially inspect the damage of airbag module body, mounting bracket and harness connector.

4) Without side collision (dirt and damage of cover)

Replace the corresponding part with a new part.

8. Airbag Control Module

A: REMOVAL

CAUTION:
- **Do not disassemble the airbag control module.**
- **If the airbag control module is deformed or if the fault occurs by water, replace the airbag control module with a new part.**
- **Do not drop the airbag control module.**
- **After removal, keep the airbag control module on a dry, clean surface away from moisture, heat and dust.**

1) Turn the ignition switch to OFF.
2) Disconnect the ground cable from battery and wait for at least 20 seconds before starting work.
3) Remove the center console. <Ref. to EI-55, REMOVAL, Center Console.>
4) Remove screws and pull out the audio unit assembly, and disconnect the connector for removal.

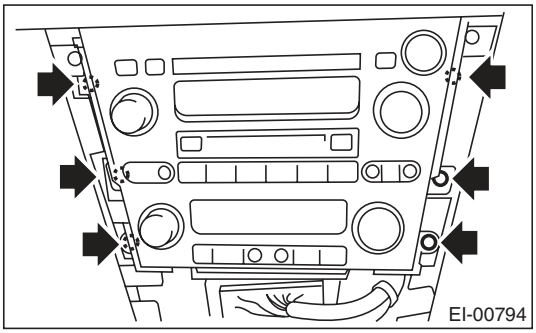

5) Disconnect the connector from airbag control module.
6) Remove the bolts and remove airbag control module.

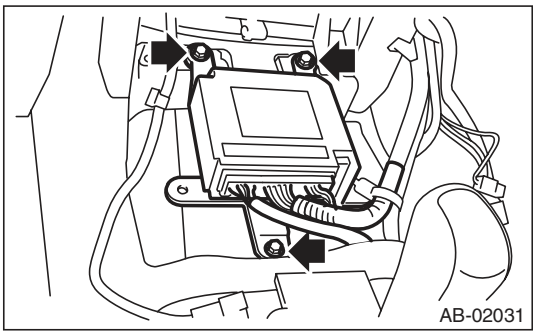

B: INSTALLATION

CAUTION:
- **Do not reuse the bolt and nut.**

Always use new bolts and nuts for them.
- **Be sure to put the water protection cover over the connector.**

Install in the reverse order of removal.

Tightening torque:
25 N·m (2.5 kgf-m, 18.1 ft-lb)

C: INSPECTION

Check for the following, and replace the damaged parts with new parts.
- Control module, connector, and mounting bracket are damaged.
- Airbag is deployed.
- Side airbag is deployed.
- Curtain airbag is deployed.

9. Front Sub Sensor

A: REMOVAL

1) Turn the ignition switch to OFF.
2) Disconnect the ground cable from battery and wait for at least 20 seconds before starting work.
3) Remove the front bumper face. <Ref. to EI-30, FRONT BUMPER FACE, REMOVAL, Front Bumper.>
4) Remove the bolt, and then detach the front sub sensor.

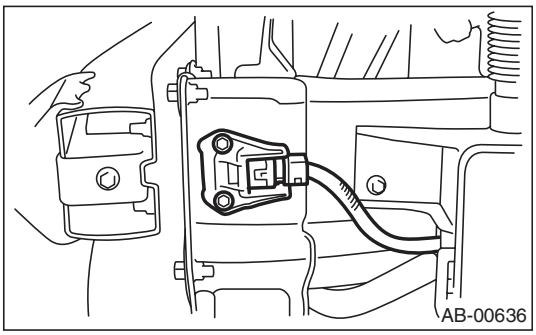

5) Disconnect the connector from front sub sensor.

B: INSTALLATION

CAUTION:
Do not reuse the bolt and nut.
Always use new bolts and nuts for them.
Install in the reverse order of removal.

Tightening torque:
13 N·m (1.32 kgf-m, 9.6 ft-lb)

C: INSPECTION

Check for the following, and replace the damaged parts with new parts.
- The front sub sensor or connector are damaged.
- Airbag is deployed.

10. Side Airbag Sensor

A: REMOVAL

1) Turn the ignition switch to OFF.
2) Disconnect the ground cable from battery and wait for at least 20 seconds before starting work.
3) Remove the center pillar lower trim. <Ref. to EI-61, REMOVAL, Lower Inner Trim.>
4) Remove the center pillar inner protector lower.
5) Remove the front outer seat belt retractor. <Ref. to SB-18, OUTER SEAT BELT ASSEMBLY, REMOVAL, Front Seat Belt.>
6) Remove the nuts to remove the side airbag sensor.

CAUTION:
- **Do not separate the side airbag sensor and bracket. It cause the airbag system malfunction.**
- **If the sensor is removed from the bracket, be sure to replace with a new part.**

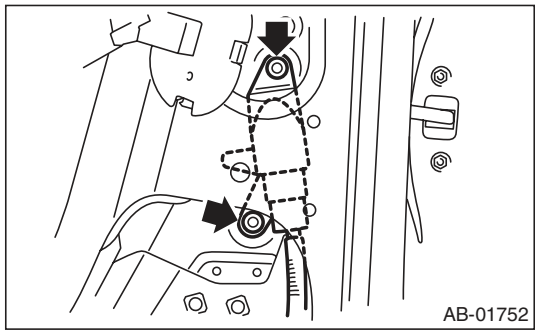

7) Disconnect the airbag connector.

B: INSTALLATION

CAUTION:
Do not reuse the bolt and nut.
Always use new bolts and nuts for them.
Install in the reverse order of removal.

Tightening torque:
8.0 N·m (0.82 kgf-m, 5.9 ft-lb)

C: INSPECTION

Check for the following, and replace the damaged parts with new parts.
- Mounting bracket or connector of side airbag sensor is damaged.
- Side airbag is deployed.

11. Curtain Airbag Sensor

A: REMOVAL

1) Turn the ignition switch to OFF.
2) Disconnect the ground cable from battery and wait for at least 20 seconds before starting work.
3) Remove the rear seat. <Ref. to SE-18, REMOVAL, Rear Seat.>
4) Remove the nuts and then remove the curtain airbag sensor.

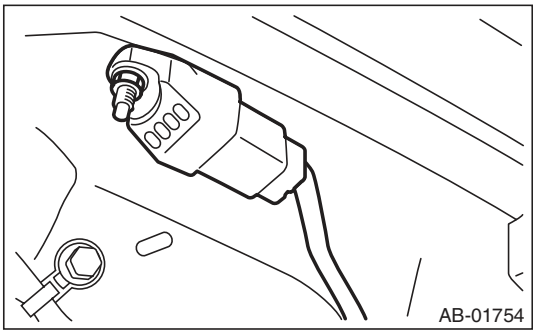

5) Disconnect the airbag connector.

B: INSTALLATION

CAUTION:
- **Do not reuse the bolt and nut.**

Always use new bolts and nuts for them.
- **When installing the sensor, securely insert the arrest pin on the back side of sensor into the body side hole.**

Install in the reverse order of removal.

Tightening torque:
8.0 N·m (0.82 kgf-m, 5.9 ft-lb)

C: INSPECTION

Check for the following, and replace the damaged parts with new parts.
- Curtain airbag sensor connector is damaged.
- Curtain airbag is deployed.

12. Satellite Safing Sensor

A: REMOVAL

1) Turn the ignition switch to OFF.
2) Disconnect the ground cable from battery and wait for at least 20 seconds before starting work.
3) Remove the rear seat cushion. <Ref. to SE-18, REMOVAL, Rear Seat.>
4) Remove the nut and remove the cover.

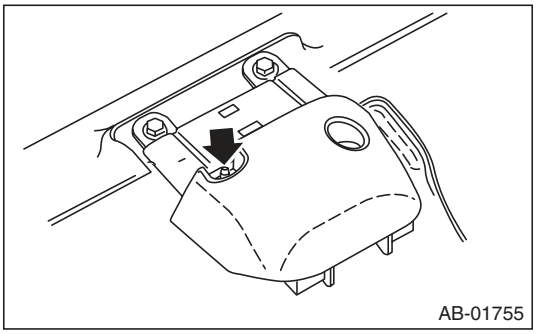

5) Remove the bolt, and then detach the satellite safing sensor.

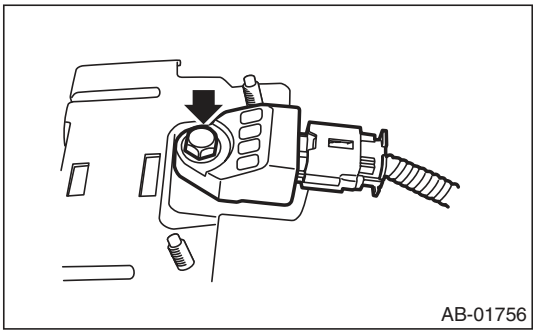

6) Disconnect the airbag connector.

B: INSTALLATION

CAUTION:
- **Do not reuse the bolt and nut.**

Always use new bolts and nuts for them.
- **When installing the sensor, securely insert the arrest pin on the back side of sensor into the mounting hole.**
- **After installing the satellite safing sensor cover, make sure that the sensor harness does not get caught.**

Install in the reverse order of removal.

Tightening torque:
8.0 N·m (0.82 kgf-m, 5.9 ft-lb)

C: INSPECTION

Check for the following, and replace the damaged parts with new parts.
- Mounting bracket or connector of satellite safing sensor is damaged.
- Side airbag or curtain airbag is deployed.

13. Roll Connector

A: REMOVAL

1) Turn the ignition switch to OFF.
2) Disconnect the ground cable from battery and wait for at least 20 seconds before starting work.
3) Remove the driver's airbag module. <Ref. to AB-14, REMOVAL, Driver's Airbag Module.>
4) Remove the steering wheel. <Ref. to PS-13, REMOVAL, Steering Wheel.>
5) Remove the steering column cover.
6) Remove the screws, and then remove the roll connector.

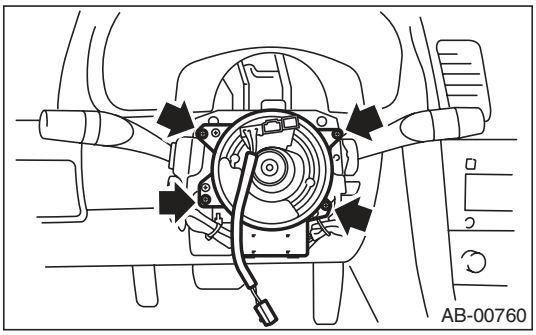

B: INSTALLATION

1) Install in the reverse order of removal.
2) Before installing the steering wheel, be sure to adjust the direction of roll connector with steering. <Ref. to AB-25, ADJUSTMENT, Roll Connector.>

C: INSPECTION

Check for the following, and replace the damaged parts with new parts.
Combination switch and roll connector are cracked or deformed.

D: ADJUSTMENT

1) Check that front wheels are positioned in straight ahead direction.
2) Turn the roll connector pin (A) clockwise until it stops.
3) Turn the roll connector pins (A) approx. 3.25 turns in the counterclockwise direction until "▲" marks are aligned.

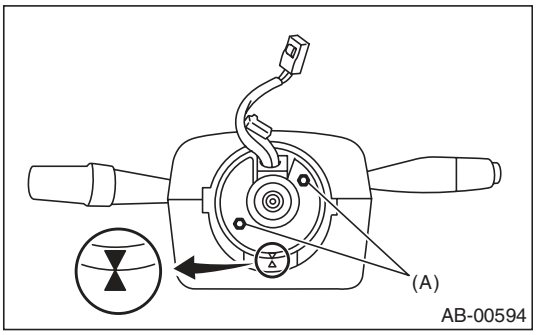

1. Basic Diagnostic Procedure

A: PROCEDURE

Step		Check	Yes	No
1	**CHECK WARNING LIGHT.** Check whether the airbag warning light in the combination meter is lit.	Does the airbag warning light illuminate?	Go to step **2**.	Perform the diagnosis according to phenomenon of the problem.
2	**READ DTC.** 1) Turn the ignition switch to OFF. 2) Connect the Subaru Select Monitor to data link connector. 3) Turn the ignition switch to ON and run the Subaru Select Monitor. 4) Read the DTC. <Ref. to AB(diag)-29, OPERATION, Read Diagnostic Trouble Code (DTC).> NOTE: If the communication function of the Subaru Select Monitor cannot be executed normally, check the communication circuit. <Ref. to AB(diag)-26, COMMUNICATION FOR INITIALIZING IMPOSSIBLE, INSPECTION, Subaru Select Monitor.> 5) Record all DTCs and freeze frame data.	Is DTC displayed?	Go to step **3**.	Go to “Airbag warning light failure”<Ref. to AB(diag)-33, Airbag Warning Light Failure.>.
3	**PERFORM DIAGNOSIS.** 1) Determine the possible cause “List of Diagnostic Trouble Code (DTC)”<Ref. to AB(diag)-38, List of Diagnostic Trouble Code (DTC).>. 2) Inspect the DTC using “List of Diagnostic Trouble Code (DTC)”. 3) Repair the trouble cause. 4) Perform the Clear Memory Mode. <Ref. to AB(diag)-31, Clear Memory Mode.> 5) Perform the Inspection Mode. <Ref. to AB(diag)-30, Inspection Mode.> 6) Read any other DTCs displayed.	Is DTC displayed?	Perform the procedure 1) to 5) in step 3.	Finish the diagnosis.

2. Check List for Interview

A: CHECK

Customer's Name		Inspector's Name	
Date Vehicle Brought in	/ /	Registration No.	
Odometer Reading	km miles	V.I.N.	
Date Problem Occurred	/ /	Registration Year	/ /
Weather	❑ Fine ❑ Cloudy ❑ Rainy ❑ Snowy ❑ Others:		
Temperature	°C (°F)		
Road Condition	❑ Flat road ❑ Uphill ❑ Downhill ❑ Gravel road ❑ Others:		

Vehicle Operation	❑ Starting
	❑ Idling
	❑ Driving
	  ❑ Constant speed
	  ❑ Accelerating
	  ❑ Decelerating
	  ❑ Turning
	  ❑ Others:		

Details of Problem			
Airbag Warning Light Operation	❑ Normal (After turning the ignition switch to ON, lit for approximately 6 seconds and goes off.) ❑ Remains ON ❑ Remains OFF		
DTC output	❑ OK code ❑ DTC: (Code:)		

3. General Description

A: CAUTION

- When servicing a vehicle, be sure to turn the ignition switch to OFF, disconnect the ground cable from battery, and wait for 20 seconds or more before starting work.
- The airbag system is fitted with a backup power source. After disconnecting the battery ground cable, the airbag may deploy if you do not wait for 20 seconds or more before starting airbag system servicing.

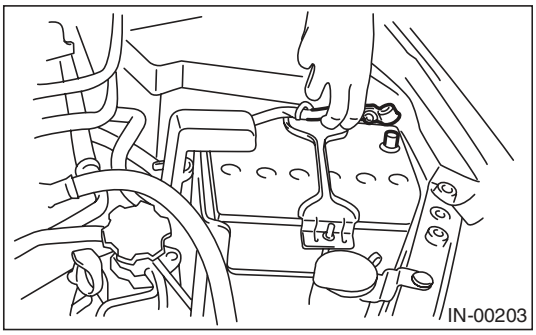

- If sensors, airbag module, airbag control module, pretensioner or harness is deformed or damaged, replace with new parts.

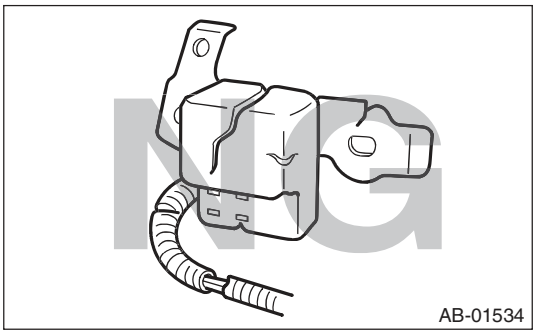

- Do not use the airbag system and pretensioners on other vehicles. When replacing parts, be sure to replace them with new parts.
- When checking the airbag system, be sure to use a digital circuit tester. Use of an analog circuit tester may cause the airbag to activate erroneously due to a minimal current inside tester.

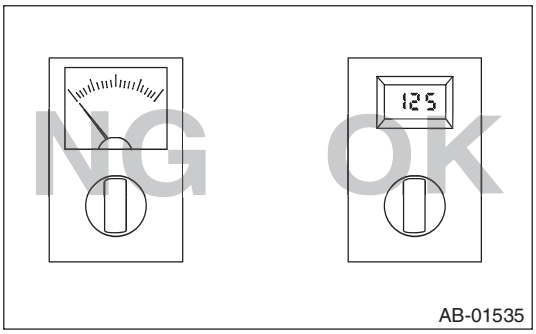

- When checking, use a test harness (1). Damage to connector terminal causes malfunction. Do not directly put the tester probe on airbag connector terminal.

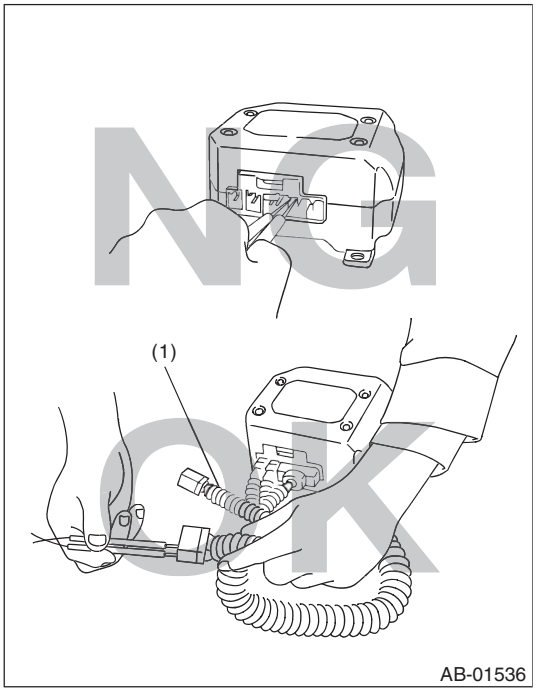

- Do not drop the airbag system parts, or keep them at high temperature of 85°C (153°F) or more, or let water, oil or grease get on them; the internal parts may be damaged and reliability greatly lowered.

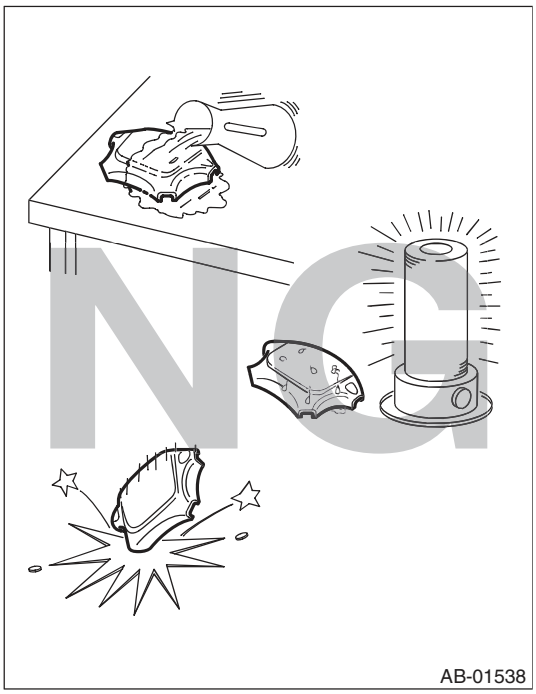

- If damage, open circuit or rust is found on airbag system wiring harness, do not use a soldering equipment to repair. Replace the faulty harness with a new genuine part.

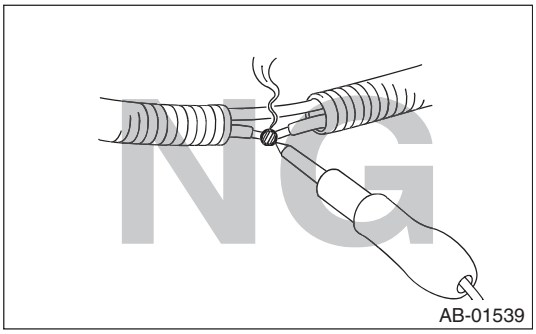

- Install the wiring harness securely with the specified clips to avoid interference or tangled with other parts.

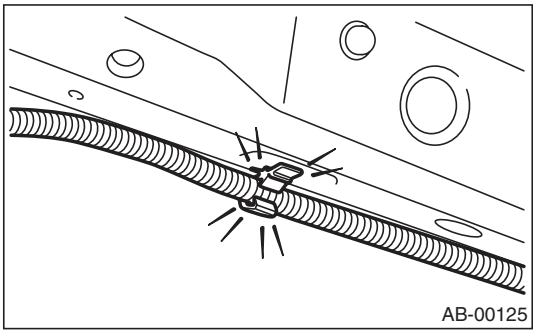

- Do not allow water or oil to come in contact with the connector terminals. Also, do not touch the connector terminals.

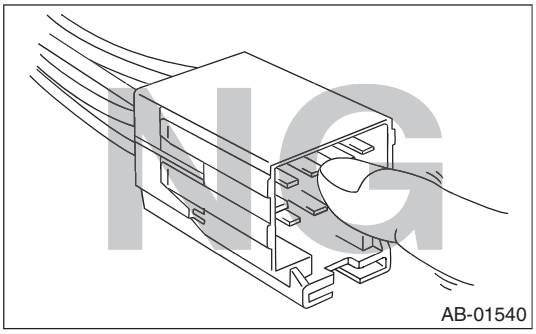

- Do not disassemble driver's airbag module, passenger's airbag module, side or curtain airbag modules, or pretensioner.

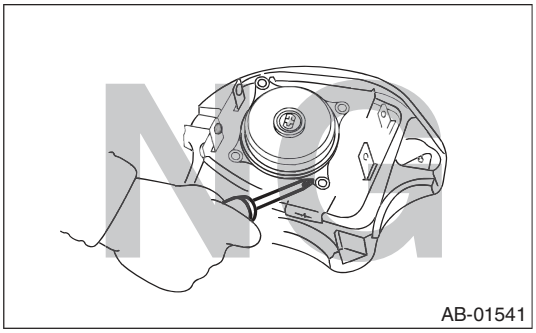

- The airbag module cannot be used again if deployed once.
- After removal, keep the airbag module with the pad side facing upward on a dry, clean and flat surface away from heat, light sources, moisture and dust.

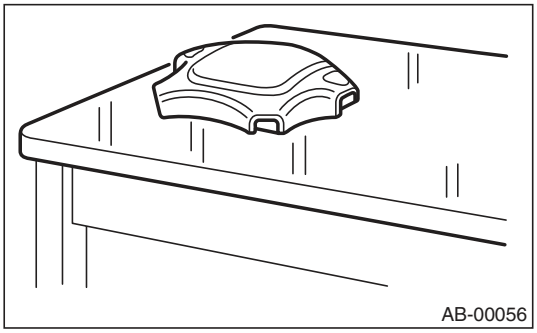

- Do not check continuity of the airbag modules for driver's side, passenger's side and curtain, or the pretensioner.

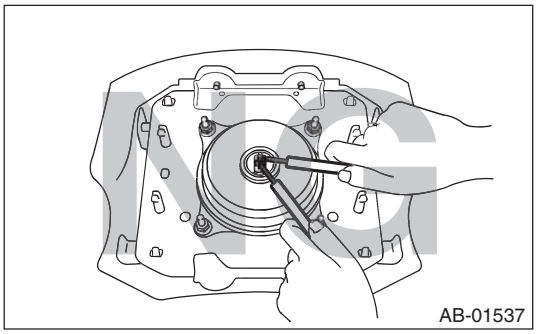

- The removed front seat with airbag module must be kept at least 200 mm (8 in) away from walls and other objects.

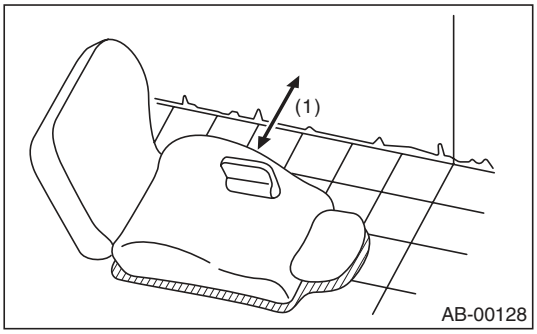

(1) 200 mm (8 in) or more

- When painting or performing sheet metal work on the front part of the vehicle, including the front wheel apron, front fender and front side frame, remove the front sub sensors and wiring harness of airbag system.

• When painting or repairing sheet metal work on the side of the vehicle, including the side sill, center pillar, front and rear doors, rear crossmember and rear floorpan, remove the side airbag sensors, curtain airbag sensor, satellite safing sensor and wiring harness of the airbag system.

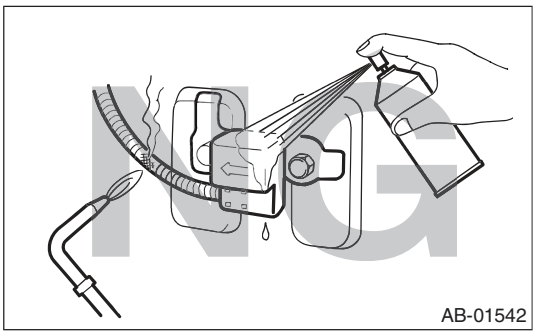

• Do not discard uncoupled airbag module. They could easily cause a serious accident if accidentally deployed.

- When storing a removed airbag module, do not place it with the pad side facing downward. Do not place any objects on the airbag module. Do not pile up the airbag module. If the airbag inflates for some reason when an airbag module pad is touching other objects, it may cause serious accident.

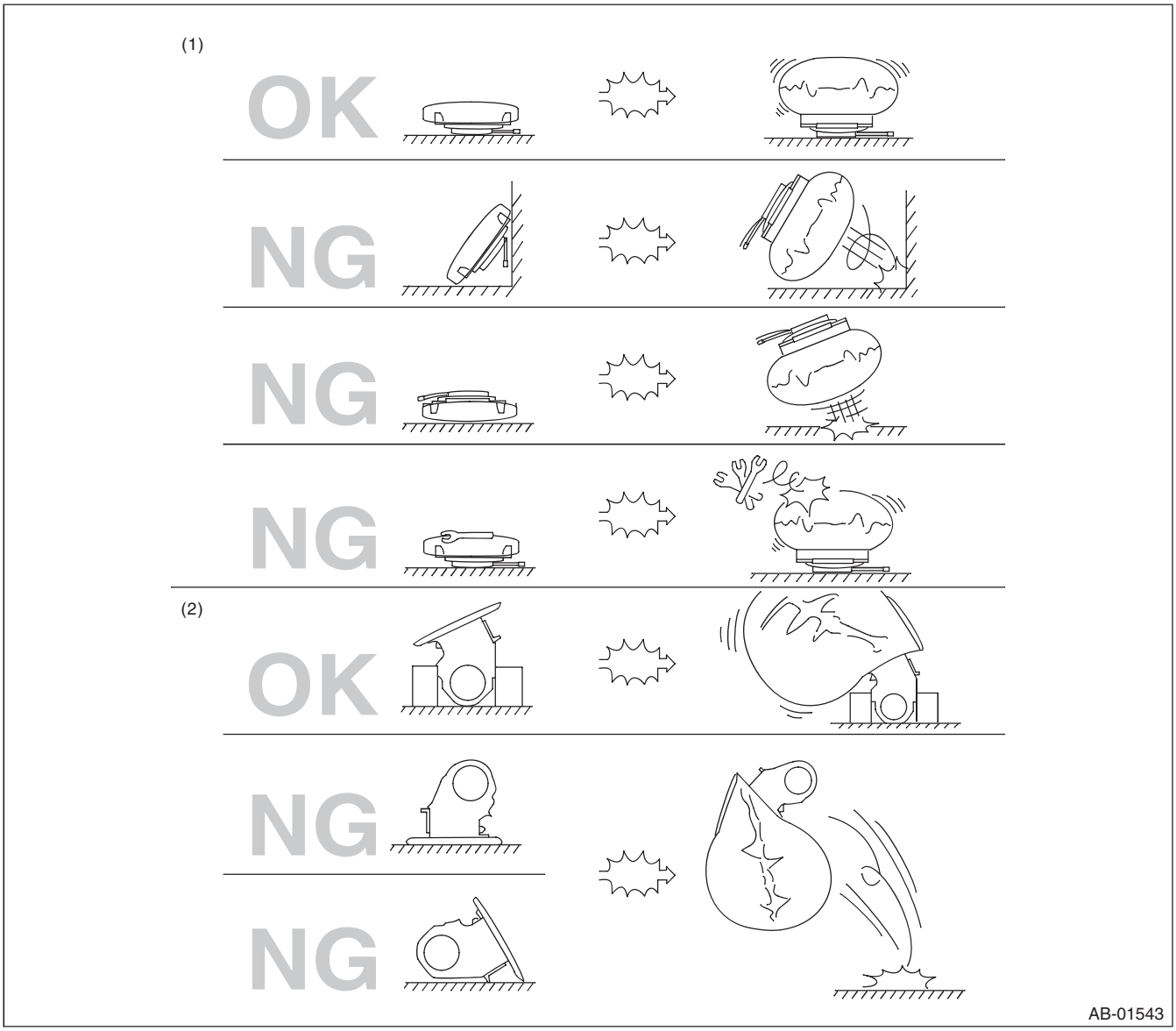

(1) Driver's airbag module (2) Passenger's airbag module

B: INSPECTION

Measure the battery voltage and check electrolyte.

Standard voltage: 12 V

Specific gravity: 1.260 or more

C: PREPARATION TOOL

CAUTION:
To measure the voltage and resistance of airbag system component, be sure to use the specified test harness.

1. SPECIAL TOOL

ILLUSTRATION	TOOL NUMBER	DESCRIPTION	REMARKS
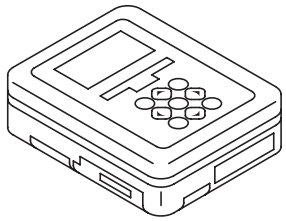 ST1B022XU0	1B022XU0	SUBARU SELECT MONITOR III KIT	Used for troubleshooting the electrical system.

- TEST HARNESS F

ILLUSTRATION	TOOL NUMBER	DESCRIPTION	REMARKS
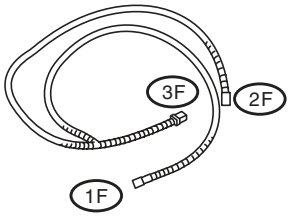 ST98299FC010	98299FC010	TEST HARNESS F	Used when measuring voltage and resistance of airbag module harnesses.

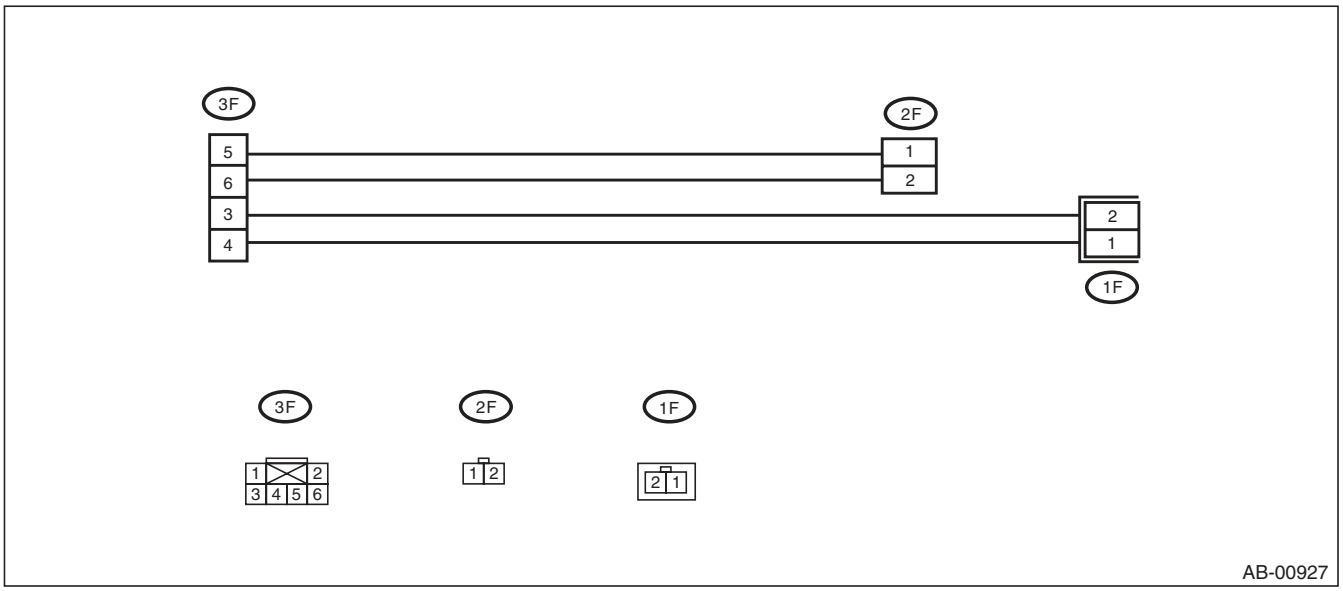

- TEST HARNESS H

ILLUSTRATION	TOOL NUMBER	DESCRIPTION	REMARKS
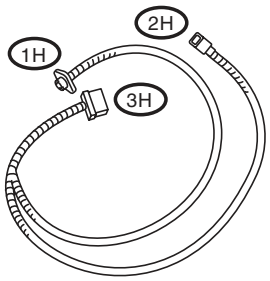 ST98299FA030	98299FA030	TEST HARNESS H	Used when measuring voltage and resistance of front sub sensor and satellite safing sensor.

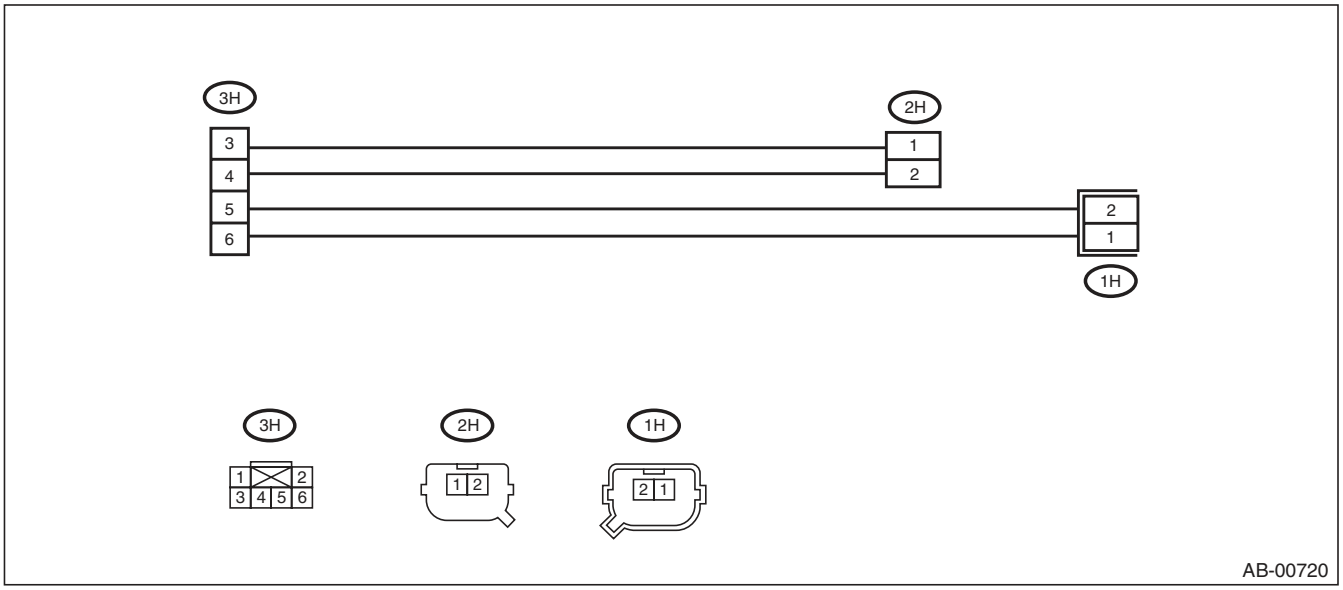

- TEST HARNESS N

ILLUSTRATION	TOOL NUMBER	DESCRIPTION	REMARKS
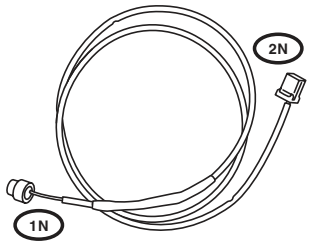 ST98299SA000	98299SA000	TEST HARNESS N	Used when measuring voltage and resistance of driver's airbag module and seat belt pretensioner.

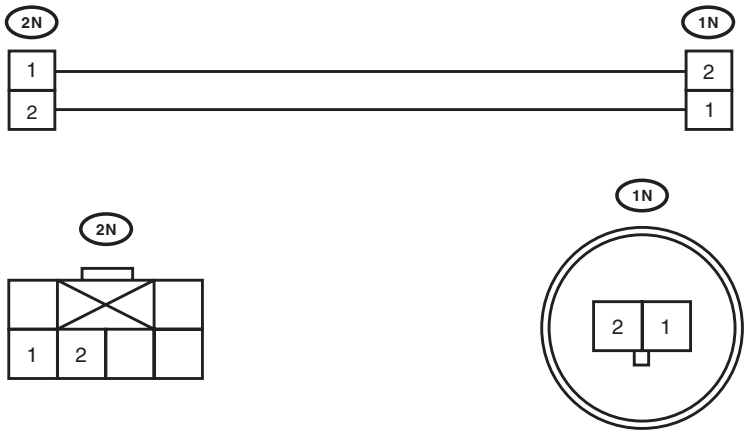

AB-00928

- TEST HARNESS P

ILLUSTRATION	TOOL NUMBER	DESCRIPTION	REMARKS
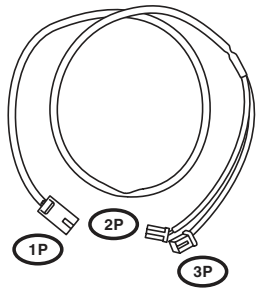 ST98299SA020	98299SA020	TEST HARNESS P	Used when measuring voltage and resistance of driver's airbag module harness and passenger's airbag module harness.

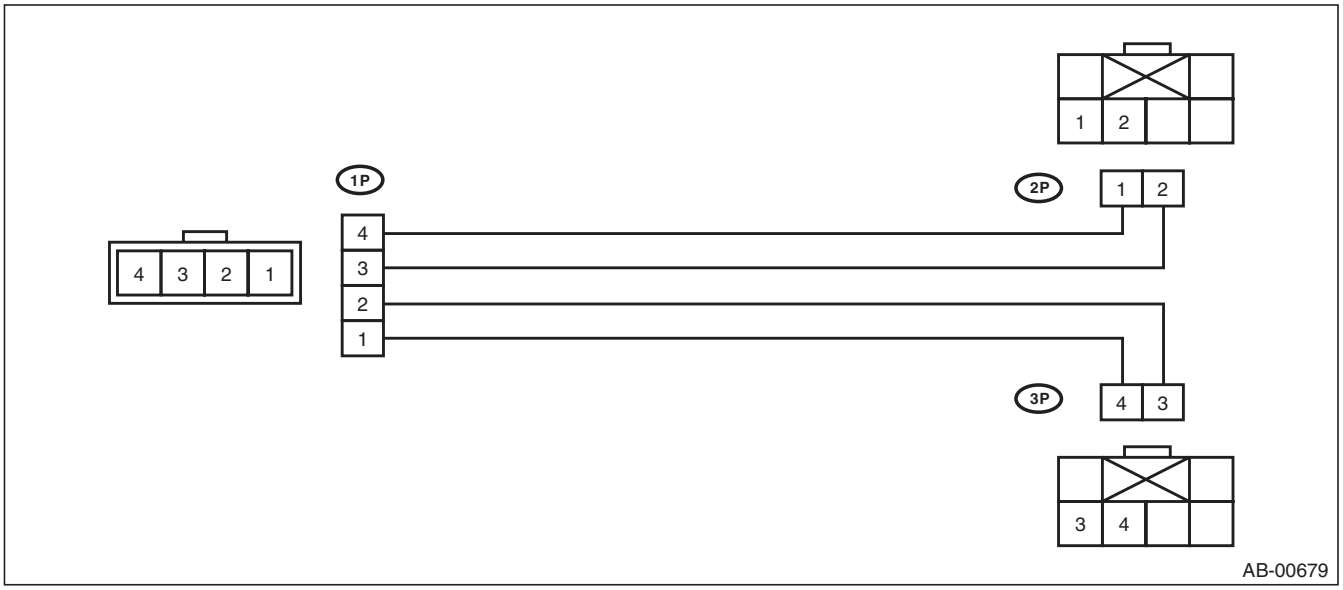

- TEST HARNESS Q

ILLUSTRATION	TOOL NUMBER	DESCRIPTION	REMARKS
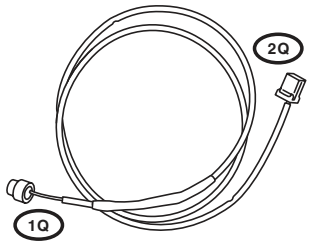 ST98299SA040	98299SA040	TEST HARNESS Q	Used when measuring voltage and resistance of driver's airbag module.

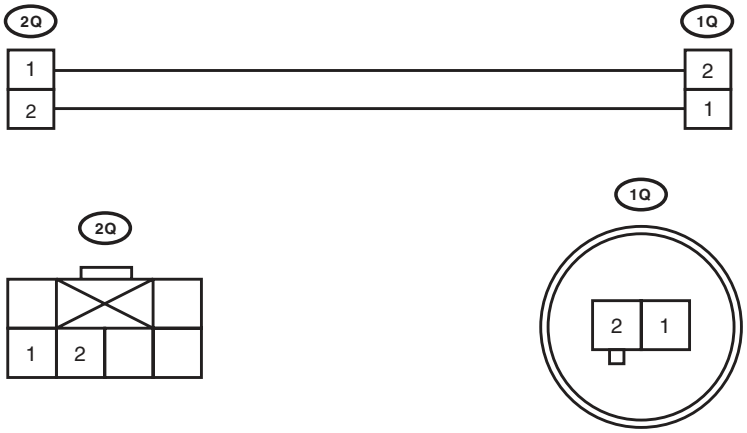

AB-00929

- TEST HARNESS AG

ILLUSTRATION	TOOL NUMBER	DESCRIPTION	REMARKS
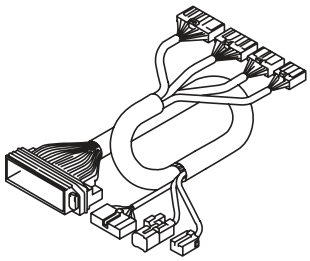 ST98299AG070	98299AG070	TEST HARNESS AG	Used when measuring voltage and resistance of airbag control module.

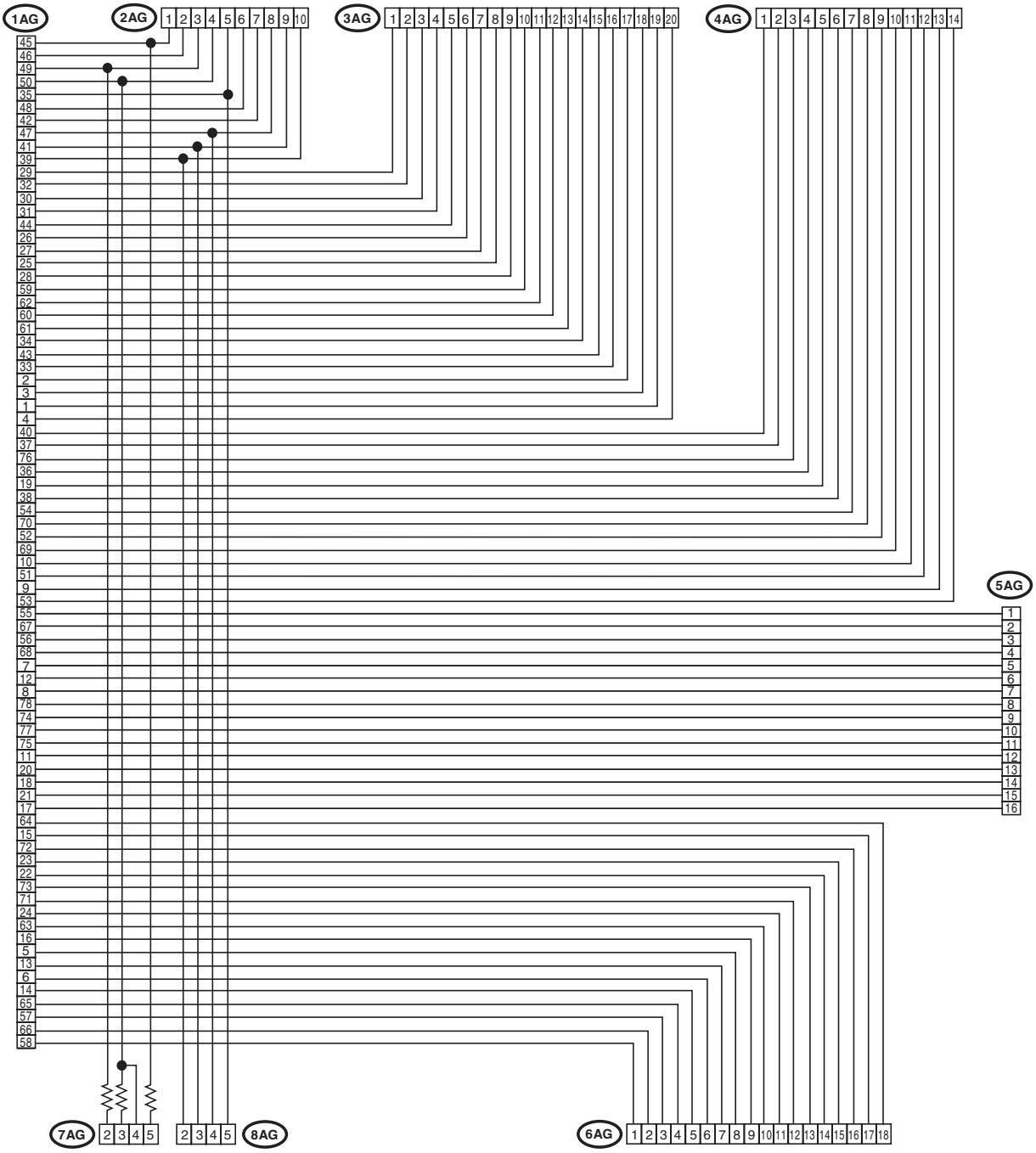

AB-01902

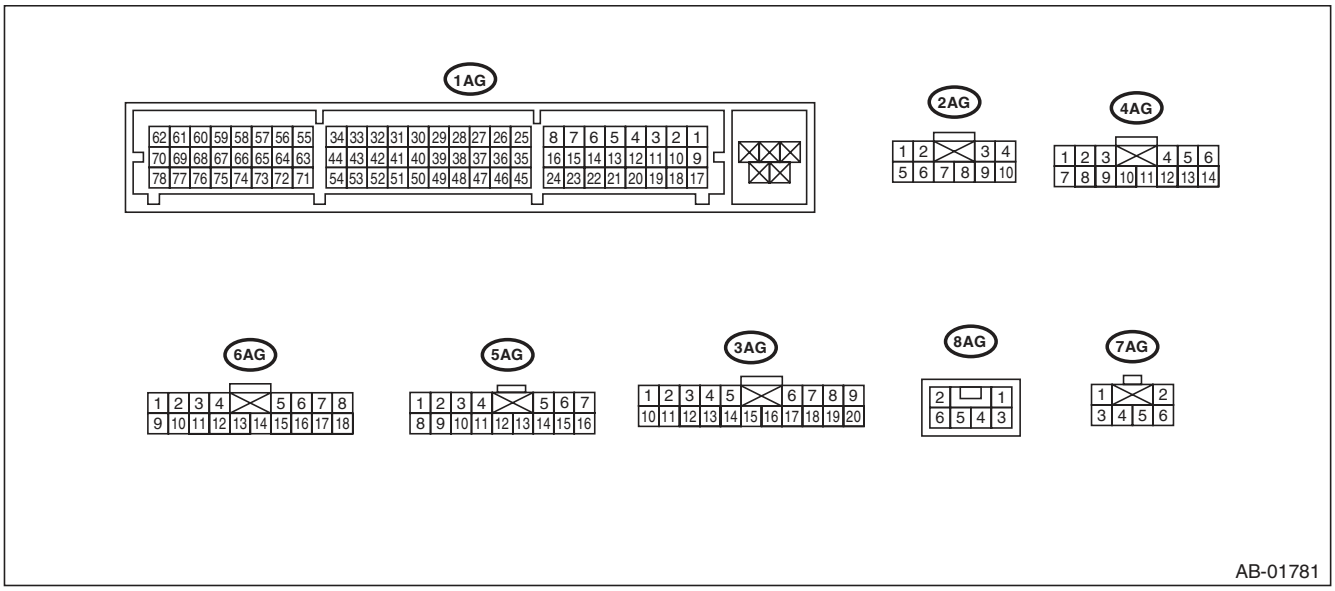

- TEST HARNESS V

ILLUSTRATION	TOOL NUMBER	DESCRIPTION	REMARKS
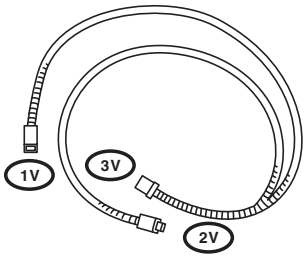 ST98299AG010	98299AG010	TEST HARNESS V	Used when measuring voltage and resistance of side airbag sensor and curtain airbag sensor.

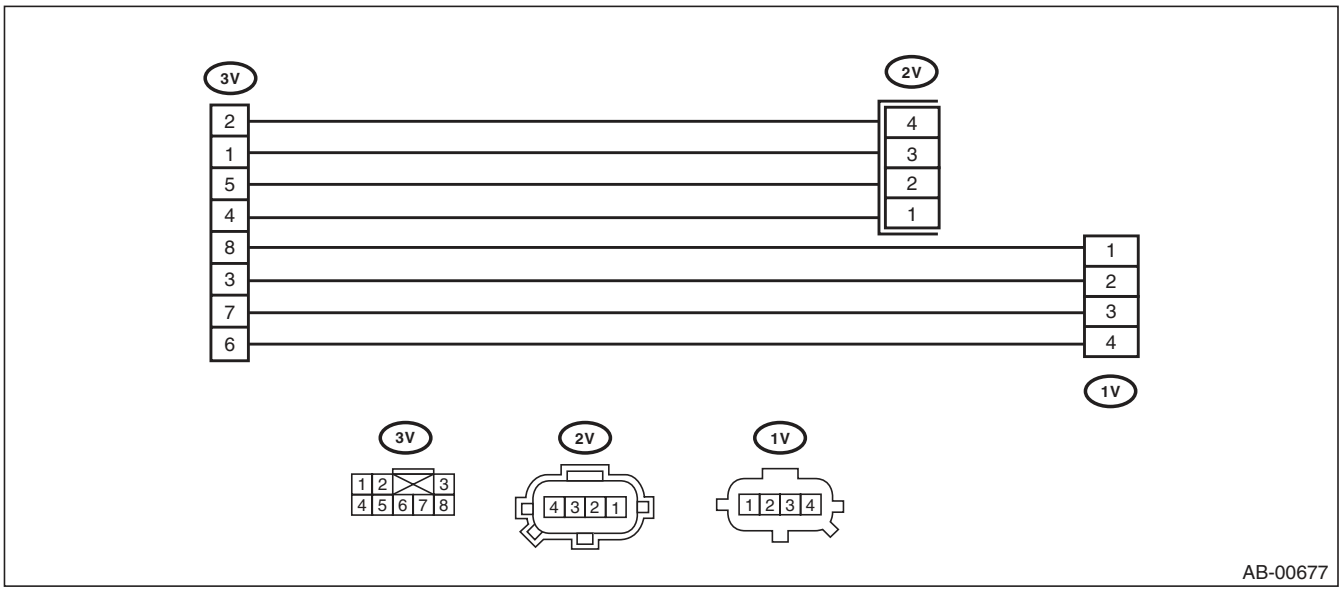

- TEST HARNESS AB

ILLUSTRATION	TOOL NUMBER	DESCRIPTION	REMARKS
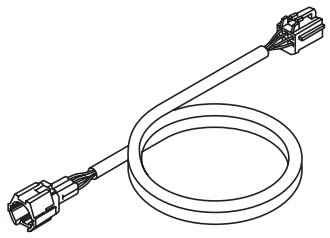 ST98299XA000	98299XA000	TEST HARNESS AB	Used when measuring voltage and resistance of occupant detection system.

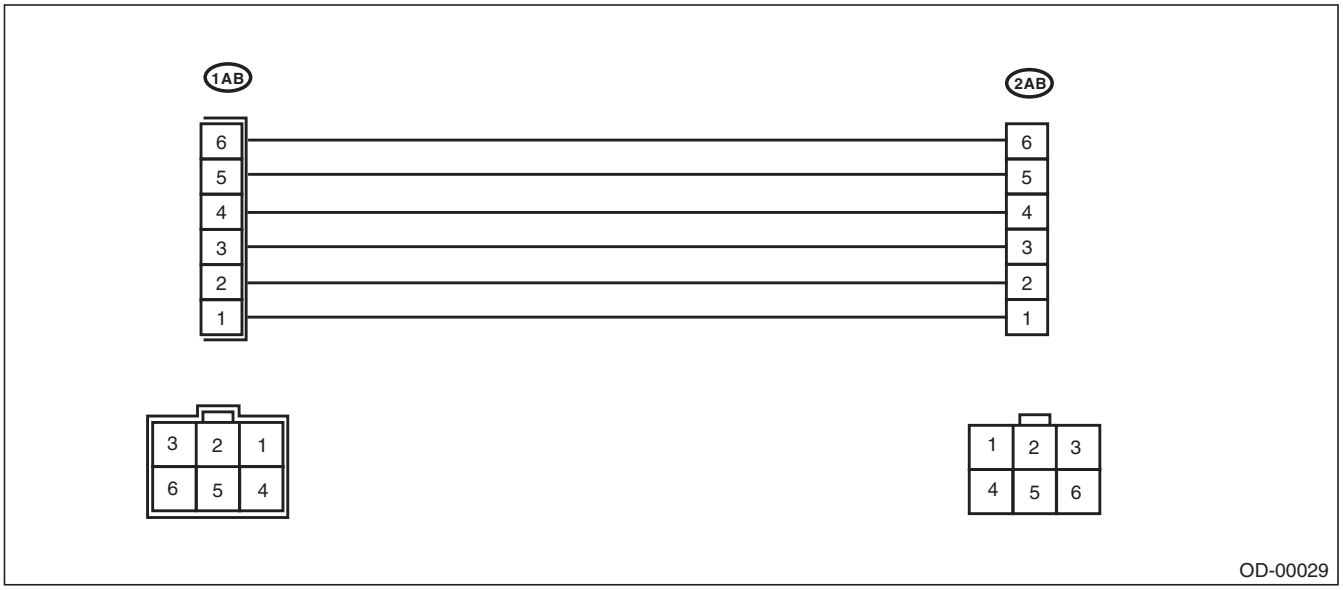

- AIRBAG RESISTOR

ILLUSTRATION	TOOL NUMBER	DESCRIPTION	REMARKS
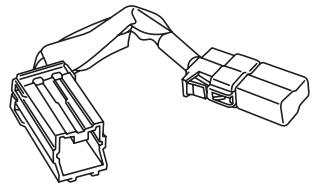 ST98299PA040	98299PA040	AIRBAG RESISTOR	Used in replacement of airbag module for which resistance value is same as airbag module. Two ST are required for diagnosis of two-stage inflator type airbag module.

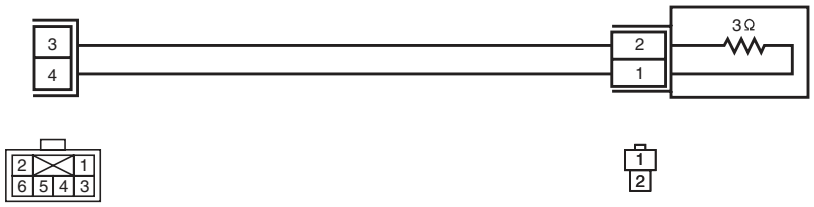

AB-00433

- TEST HARNESS AI

ILLUSTRATION	TOOL NUMBER	DESCRIPTION	REMARKS
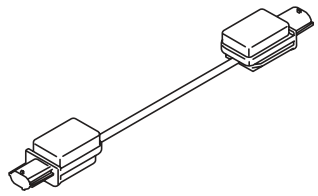 ST98299AG090	98299AG090	TEST HARNESS AI	• Used when diagnosing the side airbag sensor and curtain airbag sensor. • Used together with the test harness V.

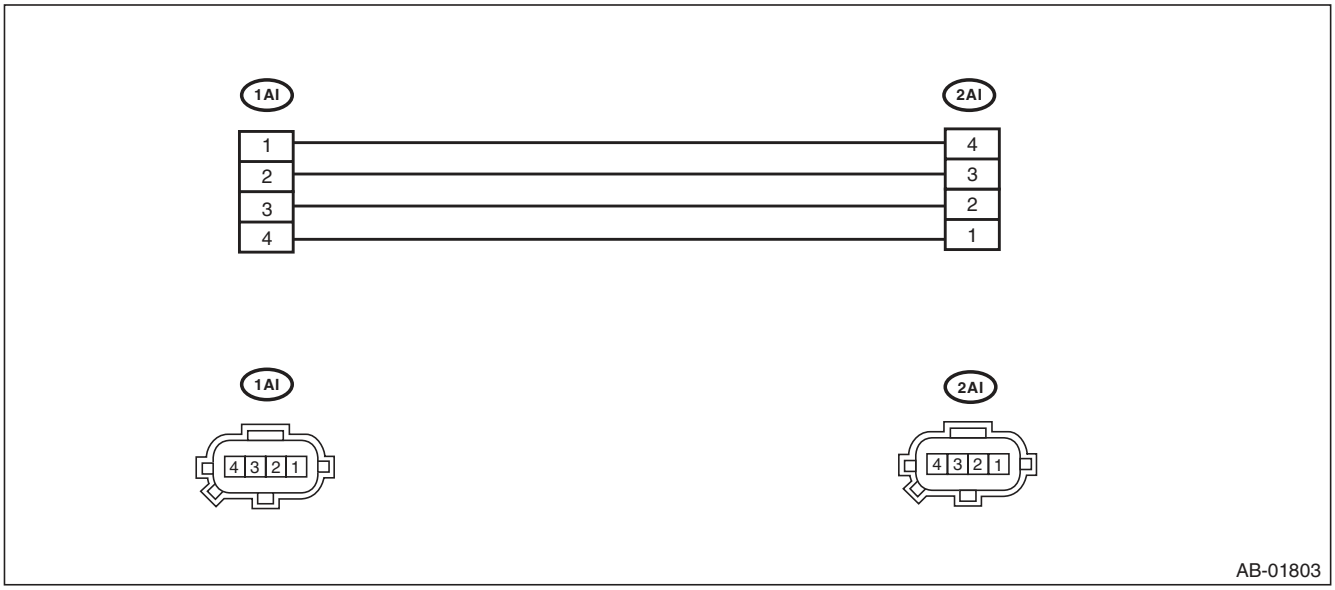

2. GENERAL TOOL

TOOL NAME	REMARKS
Circuit tester	Used for measuring resistance, voltage and current.
Oscilloscope	Used for measuring the sensor.

4. Electrical Component Location

A: LOCATION

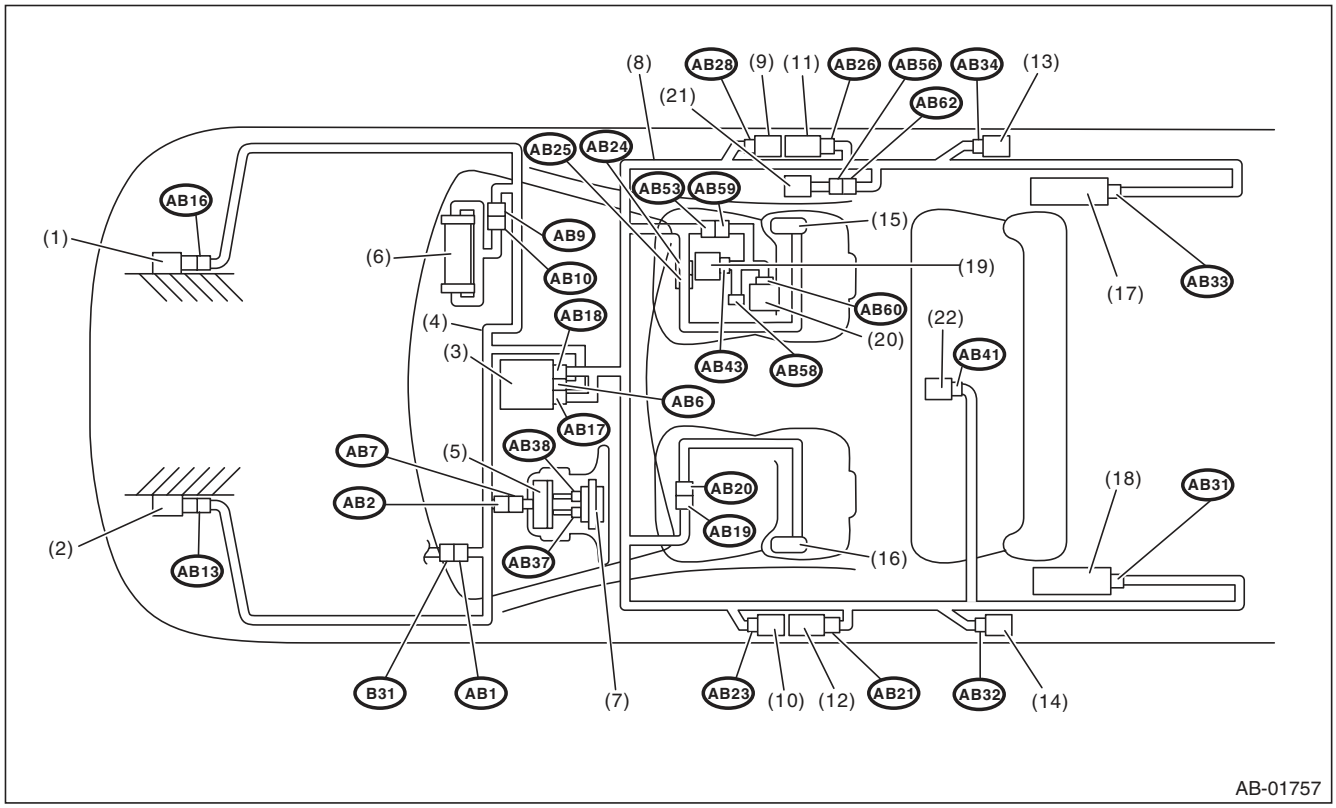

(1)	Front sub sensor (RH)	(9)	Side airbag sensor (RH)	(17)	Curtain airbag inflator (RH)
(2)	Front sub sensor (LH)	(10)	Side airbag sensor (LH)	(18)	Curtain airbag inflator (LH)
(3)	Airbag control module	(11)	Seat belt pretensioner (RH)	(19)	Occupant detection control module
(4)	Airbag main harness	(12)	Seat belt pretensioner (LH)		
(5)	Roll connector	(13)	Curtain airbag sensor (RH)	(20)	Buckle switch (RH)
(6)	Passenger's airbag inflator	(14)	Curtain airbag sensor (LH)	(21)	Belt tension sensor
(7)	Driver's airbag inflator	(15)	Side airbag inflator (RH)	(22)	Satellite safing sensor
(8)	Airbag rear harness	(16)	Side airbag inflator (LH)		

Connector No.	(AB1)	(AB2)	(AB6)	(AB7)	(AB9)	(AB10)	(AB13)	(AB16)	(AB17)	(AB18)	(AB19)	(AB20)
Pin	10	4	30	4	4	4	2	2	24	24	2	2
Color	Yellow	Yellow	Yellow	Yellow	Yellow	Yellow	Yellow	Yellow	Yellow	Yellow	Yellow	Yellow
Male/Female	Female	Female	Female	Male	Female	Male	Female	Female	Female	Female	Female	Male
Connector No.	(AB21)	(AB23)	(AB24)	(AB25)	(AB26)	(AB28)	(AB31)	(AB32)	(AB33)	(AB34)	(AB37)	(AB38)
Pin	2	4	2	2	2	4	2	4	2	4	2	2
Color	Black	Yellow	Yellow	Yellow	Black	Yellow	Black	Yellow	Black	Yellow	Orange	Black
Male/Female	Female	Female	Female	Male	Female	Female	Female	Female	Female	Female	Female	Female
Connector No.	(AB41)	(AB43)	(AB53)	(AB56)	(AB58)	(AB59)	(AB60)	(AB62)				
Pin	2	18	6	3	3	6	2	3				
Color	Yellow	Black	Gray	Brown	Gray	Gray	Yellow	Brown				
Male/Female	Female	Female	Female	Male	Female	Male	Male	Female				

5. Airbag Connector

A: PROCEDURE

For detailed operation procedure, refer to the “Airbag Connector”. <Ref. to AB-8, Airbag Connector.>

6. Airbag Control Module I/O Signal

A: ELECTRICAL SPECIFICATION

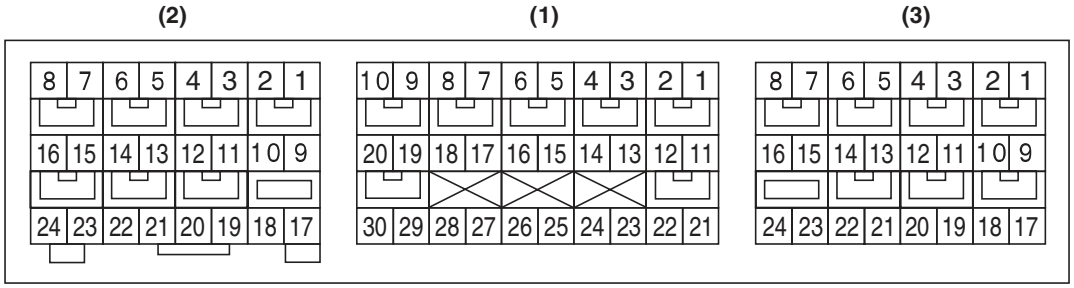

AB-01758

- Terminal numbers in airbag control module connector are shown in the figure.
- Airbag warning light illuminates when the connector is removed from airbag control module.

Item		Control module terminal No.
Data link connector		(1) — 16
Combination meter		(1) — 11
Battery power supply	Dedicated fuse	(1) — 21
Passenger's airbag module level one	+	(1) — 4
	–	(1) — 3
Passenger's airbag module level two	+	(1) — 1
	–	(1) — 2
Driver's airbag module level one	+	(1) — 5
	–	(1) — 6
Driver's airbag module level two	+	(1) — 8
	–	(1) — 7
Front sub sensor LH	+	(1) — 30
	–	(1) — 28
Front sub sensor RH	+	(1) — 29
	–	(1) — 27
Ground line (GND)		(1) — 25
		(1) — 26
Passenger's airbag OFF indicator		(1) — 17
Passenger's airbag ON indicator		(1) — 23
Passenger's seat belt warning light (integrated module)		(1) — 15
Seat belt pretensioner LH	+	(2) — 5
	–	(2) — 6
Side airbag sensor LH Curtain airbag sensor LH	+	(2) — 24
	–	(2) — 23
Side airbag module LH	+	(2) — 1
	–	(2) — 2
Curtain airbag module LH	+	(2) — 4
	–	(2) — 3
Seat belt pretensioner RH	+	(3) — 4
	–	(3) — 3
Side airbag sensor RH Curtain airbag sensor RH	+	(3) — 17
	–	(3) — 18
Side airbag module RH	+	(3) — 8
	–	(3) — 7
Curtain airbag module RH	+	(3) — 5
	–	(3) — 6
Satellite safing sensor	+	(2) — 20
	–	(2) — 21
Occupant detection control module	+	(3) — 16
	–	(3) — 24

B: WIRING DIAGRAM

Refer to the WI section wiring diagram. <Ref. to WI-121, WIRING DIAGRAM, Airbag System.>

7. Subaru Select Monitor

A: OPERATION

1. READ DIAGNOSTIC TROUBLE CODE (DTC)

When malfunction of airbag system occurs, the DTC stored in airbag control module will be read out.

1) Prepare the Subaru Select Monitor kit. <Ref. to AB(diag)-8, SPECIAL TOOL, PREPARATION TOOL, General Description.>

2) Connect the diagnosis cable to Subaru Select Monitor.

3) Connect the Subaru Select Monitor to data link connector.

(1) Data link connector is located in the lower portion of instrument panel (on the driver's side).

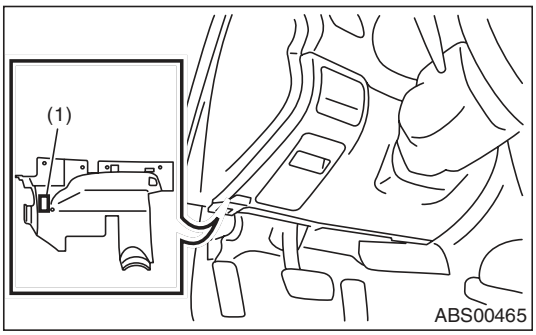

(1) Data link connector

(2) Connect the diagnosis cable to data link connector.

CAUTION:
Do not connect scan tools other than the Subaru Select Monitor.

4) Turn the ignition switch to ON (engine OFF) and run the Subaru Select Monitor.

5) On the «Main Menu» display, select the {Each System Check}.

6) On the «System Selection Menu» display, select the {Airbag System}.

7) After {Airbag System} is displayed, select [OK].

8) Select the {Diagnostic Code(s) Display} in «Airbag System».

NOTE:
- For detailed operation procedure, refer to the "PC application help for Subaru Select Monitor".
- For details concerning DTCs, refer to List of Diagnostic Trouble Code (DTC). <Ref. to AB(diag)-38, List of Diagnostic Trouble Code (DTC).>

2. DISPLAY OF STATUS INFORMATION

Check the operating condition of each sensor in the event of malfunction in the seat belt buckle switch, or when the seat belt buckle switch has been replaced.
1) On the «Main Menu» display, select the {Each System Check}.
2) On the «System Selection Menu» display, select the {Airbag System}.
3) On the «Airbag System» display, select the {Status Data}.
The following table is for support data.

Contents	Display Contents
Seat position sensor LH	—*5
Seat position sensor RH	—*5
Seat belt buckle switch LH	—*9
Seat belt buckle switch RH	Belted *6/Unbelted*7 /Other *8/Initial Setting *4 /—*9
Passenger's airbag control status	ON *10/OFF *11 /Initial Setting *4

*1: The seat position is forward.
*2: The seat position is rearward.
*3: Displayed when data other than before and behind the seat, such as the breakdown etc, is input.
*4: Displayed when it is initial.
*5: Seat position sensor not supported
*6: Seat belt fastened
*7: Seat belt not fastened
*8: Displayed when data other than belt fastened or not fastened, such as breakdowns is input.
*9: Seat belt buckle switch not supported
*10: Passenger's airbag operating state
*11: Passenger's airbag non-operating state

NOTE:
For detailed operation procedure, refer to the "PC application help for Subaru Select Monitor".

3. CLEAR MEMORY MODE

Clear the DTC stored in the airbag control module after repairing the airbag system. (After the breakdown is recovered, the breakdown code for completed recoveries are read out when the next breakdown occurs if the memory clear work is not performed.)
1) On the «Main Menu» display, select the {Each System Check}.
2) On the «System Selection Menu» display, select the {Airbag System}.
3) Select the {Clearing Memory} in «Airbag System».
4) When the "Clear Memory?" is shown on the screen, click the [OK] button.
5) When "Done" is displayed, end the Subaru Select Monitor.

NOTE:
For detailed operation procedure, refer to the "PC application help for Subaru Select Monitor".

B: INSPECTION

1. COMMUNICATION FOR INITIALIZING IMPOSSIBLE

DETECTING CONDITION:
Defective harness connector
TROUBLE SYMPTOM:
Communication is impossible between the airbag control module and the Subaru Select Monitor.
WIRING DIAGRAM:

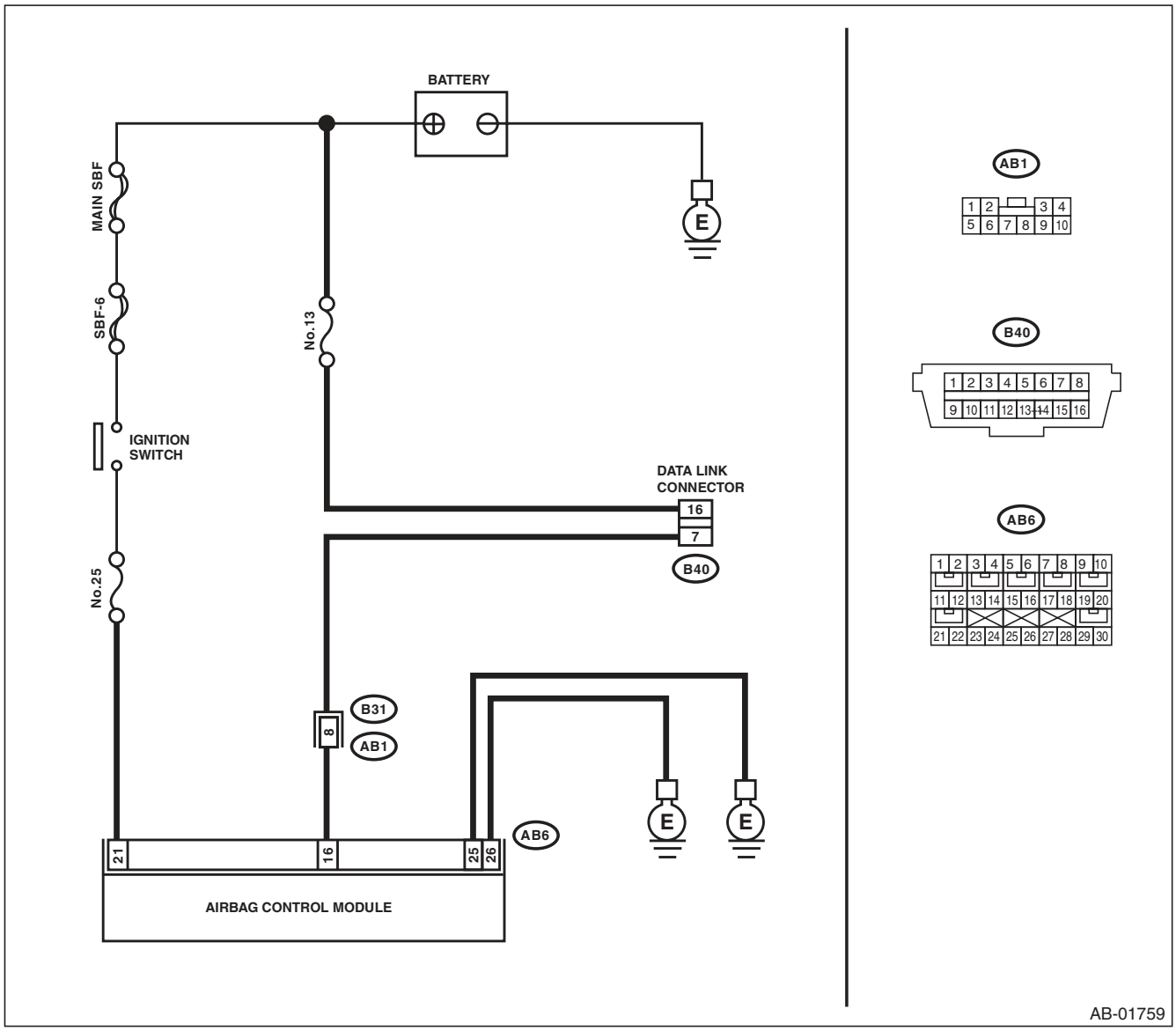

	Step	Check	Yes	No
1	**CHECK IGNITION SWITCH.**	Is the ignition switch ON?	Go to step **2**.	Turn the ignition switch to ON, and select the airbag mode using the Subaru Select Monitor.
2	**CHECK BATTERY.** 1) Turn the ignition switch to OFF. 2) Measure the battery voltage.	Is the voltage 11 V or more?	Go to step **3**.	Charge or replace the battery.
3	**CHECK BATTERY TERMINAL.**	Is there poor contact at battery terminal?	Repair or tighten the battery terminal.	Go to step **4**.
4	**CHECK SUBARU SELECT MONITOR COMMUNICATION.** 1) Turn the ignition switch to ON. 2) Using the Subaru Select Monitor, check whether communication to other systems can be executed normally.	Is the system name displayed on Subaru Select Monitor?	Go to step **10**.	Go to step **5**.
5	**CHECK FUSE NO. 25 (IN FUSE & RELAY BOX).** Remove the fuse No. 25 and perform visual inspection.	Is the fuse No. 25 (in fuse & relay box) blown out?	Replace the fuse No. 25. If fuse No. 25 is blown out again, check the power supply circuit.	Go to step **6**.
6	**CHECK AIRBAG CONTROL MODULE CONNECTOR.** 1) Turn the ignition switch to OFF, disconnect the battery ground cable, and wait for 20 seconds or more. 2) Confirm that the connectors of airbag control module (AB6, AB17, and AB18) are securely connected.	Is the connector of the airbag control module securely connected?	Go to step **7**.	Connect the connector of the airbag control module.
7	**CHECK SUBARU SELECT MONITOR COMMUNICATION.** 1) Turn the ignition switch to OFF. 2) Disconnect the airbag control module connector. 3) Turn the ignition switch to ON. 4) Check whether communication to other systems can be executed normally.	Is the system name displayed on Subaru Select Monitor?	Replace the airbag control module. <Ref. to AB-20, Airbag Control Module.>	Go to step **8**.
8	**CHECK HARNESS CONNECTOR BETWEEN EACH CONTROL MODULE AND DATA LINK CONNECTOR.** 1) Turn the ignition switch to OFF. 2) Disconnect the airbag control module, ABSCM&H/U, ECM and TCM. 3) Measure the resistance between data link connector and chassis ground. ***Connector & terminal*** ***(B40) No. 7 — Chassis ground:***	Is the resistance 1 MΩ or more?	Go to step **9**.	Repair the harness and connector between each control module and data link connector. (Replace the entire harness if repair is necessary for airbag harness.
9	**CHECK OUTPUT SIGNAL TO THE AIRBAG CONTROL MODULE.** 1) Turn the ignition switch to ON in the condition of step 8. 2) Measure the voltage between data link connector and chassis ground. ***Connector & terminal*** ***(B40) No. 7 (+) — Chassis ground (–):***	Is the voltage less than 1 V?	Go to step **10**.	Repair the harness and connector between each control module and data link connector. (Replace the entire harness if repair is necessary for airbag harness.

Step		Check	Yes	No
10	**CHECK HARNESS BETWEEN THE AIRBAG CONTROL MODULE AND DATA LINK CONNECTOR.** 1) Turn the ignition switch to OFF, disconnect the battery ground cable, and wait for 20 seconds or more. 2) Disconnect the connectors (AB6, AB17, AB18) from airbag control module. 3) Connect the test harness AG connector (1AG) to the connectors (AB6, AB17, AB18). 4) Measure the resistance between connector (4AG) in the test harness AG and the data link connector. ***Connector & terminal*** ***(4AG) No. 1 — (B40) No. 7:***	Is the resistance less than 10 Ω?	Go to step **11**.	Repair the harness between the airbag control module and the data link connector. Or replace the airbag main harness along with the bulkhead harness.
11	**CHECK POWER SUPPLY CIRCUIT.** 1) Turn the ignition switch to ON. 2) Measure the voltage between connector (2AG) in the test harness AG and chassis ground. ***Connector & terminal*** ***(2AG) No. 1 — Chassis ground:***	Is the voltage 10 V or more?	Go to step **12**.	Repair the harness between the airbag control module and the battery. Or replace the airbag main harness along with the bulkhead harness.
12	**CHECK BETWEEN THE AIRBAG CONTROL MODULE AND CHASSIS GROUND.** 1) Turn the ignition switch to OFF. 2) Measure the resistance between connector (2AG) in the test harness AG and chassis ground. ***Connector & terminal*** ***(2AG) No. 4 — Chassis ground:*** ***(2AG) No. 3 — Chassis ground:***	Is the resistance less than 10 Ω?	Go to step **13**.	Repair the harness between the airbag control module and the chassis ground. Or replace the airbag main harness along with the bulkhead harness.
13	**CHECK POOR CONTACT IN CONNECTOR.**	Is there poor contact in the control module power supply, ground circuit and data link connector?	Repair the connector. (For airbag system connectors, do not repair but replace the entire harness.)	Replace the airbag control module only. <Ref. to AB-20, REMOVAL, Airbag Control Module.>

2. WITHOUT DTC

DETECTING CONDITION:

- Defective combination meter
- Open circuit in harness

TROUBLE SYMPTOM:

- Airbag warning light remains ON.
- “No diagnostic Code Present” will be displayed on the Subaru Select Monitor.

NOTE:

- For detailed operation procedures, refer to “Airbag Warning Light Failure”. <Ref. to AB(diag)-33, Airbag Warning Light Failure.>
- “No diagnostic Code Present” will be displayed on the Subaru Select Monitor. is displayed on Subaru Select Monitor, the system is operating properly.

8. Read Diagnostic Trouble Code (DTC)

A: OPERATION

For details concerning DTC reading procedure, refer to “Subaru Select Monitor”. <Ref. to AB(diag)-24, Subaru Select Monitor.>

9. Inspection Mode

A: PROCEDURE

Recreate the circumstance by referring to the conditions described in the checklist.

10. Clear Memory Mode

A: OPERATION

- Clear the memory in the following steps after the malfunction is repaired.
- For details concerning DTC clear operation, refer to “Subaru Select Monitor”. <Ref. to AB(diag)-24, Subaru Select Monitor.>

11. Airbag Warning Light Illumination Pattern

A: INSPECTION

Turn the ignition switch to ON, and confirm that the airbag warning light remains on for approx. 6 seconds then turns off afterwards.

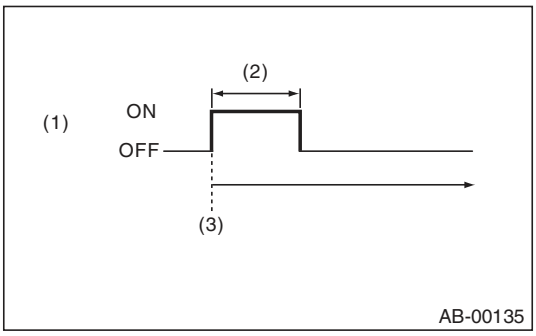

(1) Airbag warning light
(2) Approx. 6 sec.
(3) Ignition switch ON

12. Airbag Warning Light Failure

A: AIRBAG WARNING LIGHT REMAINS ON

DETECTING CONDITION:

- Airbag warning light is faulty.
- Airbag control module to airbag warning light circuit is shorted or open.
- Grounding circuit is faulty.
- Airbag control module is faulty.
- Connection of (AB1) and (B31) is improper.
- Connection of (AB6, AB17, and AB18) to airbag control module is improper.

CAUTION:

- **Before diagnosing the airbag system, be sure to turn the ignition switch to OFF, disconnect the ground cable from the battery, and wait 20 seconds or more before starting to work.**
- **When replacing the airbag module, seat belt pretensioner, roll connector, control module and sensor, reconnect each part and check that the warning light operates properly.**
- **When inspecting the airbag main harness, disconnect the airbag module connectors of the driver's and passenger's seats for safety.**
- **When inspecting the airbag rear harness, disconnect the side airbag module connector, curtain airbag module connector and seat belt pretensioner connector for safety reasons.**

WIRING DIAGRAM:

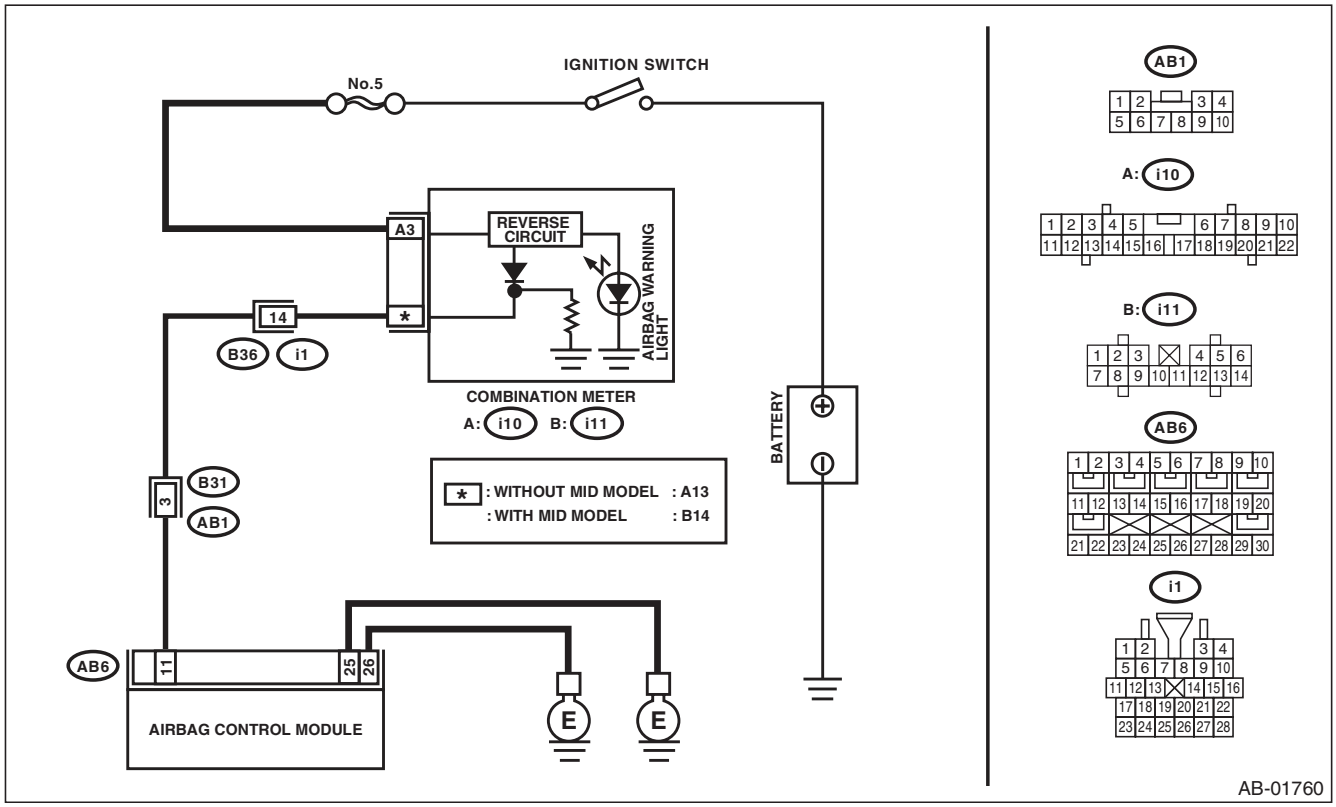

Step		Check	Yes	No
1	**READ DTC.** Read the DTC. <Ref. to AB(diag)-24, READ DIAGNOSTIC TROUBLE CODE (DTC), OPERATION, Subaru Select Monitor.>	Is DTC displayed?	Perform the diagnosis according to DTC.	Go to step **2**.
2	**CHECK POOR CONTACT.** 1) Turn the ignition switch to OFF, disconnect the battery ground cable, and wait for 20 seconds or more. 2) Confirm that the connectors of airbag control module (AB6, AB17, and AB18) are securely connected.	Is there poor contact in connectors (AB6, AB17, and AB18)?	If the poor contact of the connector is not fixed, replace the airbag main harness along with body harness or replace the airbag control module. <Ref. to AB-20, Airbag Control Module.>	Go to step **3**.
3	**CHECK AIRBAG MAIN HARNESS.** 1) Remove the instrument panel lower cover and disconnect the connectors (AB7) and (AB2). 2) Remove the instrument panel side cover on the passenger's side and disconnect the connectors (AB10) and (AB9). 3) Disconnect the connectors (AB6, AB17, AB18) from the airbag control module, and connect the test harness AG connector (1AG). 4) Connect the battery ground terminal and turn the ignition switch to ON. 5) Connect the connectors (7AG) and (8AG) in the test harness AG. NOTE: After the fault has been cleared, disconnect the connectors (7AG) and (8AG).	Does the airbag warning light go off?	Go to step **4**.	Go to step **5**.
4	**CHECK GROUND CIRCUIT.** 1) Turn the ignition switch to OFF, disconnect the battery ground cable, and wait for 20 seconds or more. 2) Disconnect the connectors (AB6, AB17, AB18) from airbag control module. 3) Connect the connector (1AG) in the test harness AG to the chassis harness connector (AB6). 4) Measure the resistance between connector (2AG) in the test harness AG and chassis ground. ***Connector & terminal*** ***(2AG) No. 4 — Chassis ground:*** ***(2AG) No. 3 — Chassis ground:***	Is the resistance less than 10 Ω?	Replace the airbag control module. <Ref. to AB-20, Airbag Control Module.>	Repair the chassis ground circuit.
5	**CHECK AIRBAG MAIN HARNESS AND BULKHEAD HARNESS.** 1) Disconnect the connectors (7AG) and (8AG). 2) Remove the combination meter. 3) Measure the resistance between the combination meter connector and test harness AG connector (2AG). ***Connector & terminal*** ***Model without MID*** ***(2AG) No. 5 — (i10) No. 13:*** ***Model with MID*** ***(2AG) No. 5 — (i11) No. 14:***	Is the resistance less than 10 Ω?	Check the combination meter.	Go to step **6**.

Step		Check	Yes	No
6	**CHECK POOR CONTACT OF CONNECTORS (AB1) AND (B31).** 1) Turn the ignition switch to OFF, disconnect the battery ground terminal, and wait 20 seconds or more. 2) Confirm that there is a firm contact between connectors (AB1) and (B31).	Is there poor contact in connectors (AB1) and (B31)?	Repair the bulkhead harness or replace the airbag main harness along with body harness.	Go to step **7**.
7	**CHECK AIRBAG MAIN HARNESS.** Check the airbag main harness for defect.	Is there any defect in the airbag main harness?	Replace the airbag main harness along with bulkhead harness.	Repair the bulkhead harness.

B: AIRBAG WARNING LIGHT REMAINS OFF

DETECTING CONDITION:

- Fuse No. 5 (in fuse box) is blown out.
- Body harness circuit is open.
- Airbag warning light is faulty.
- Airbag main harness is faulty.
- Airbag control module is faulty.

CAUTION:

- **Before diagnosing the airbag system, be sure to turn the ignition switch to OFF, disconnect the ground cable from the battery, and wait 20 seconds or more before starting to work.**
- **When replacing the airbag module, seat belt pretensioner, roll connector, control module and sensor, reconnect each part and check that the warning light operates properly.**
- **When inspecting the airbag main harness, disconnect the airbag module connectors of the driver's and passenger's seats for safety.**
- **When inspecting the airbag rear harness, disconnect the side airbag module connector, curtain airbag module connector and seat belt pretensioner connector for safety reasons.**

WIRING DIAGRAM:

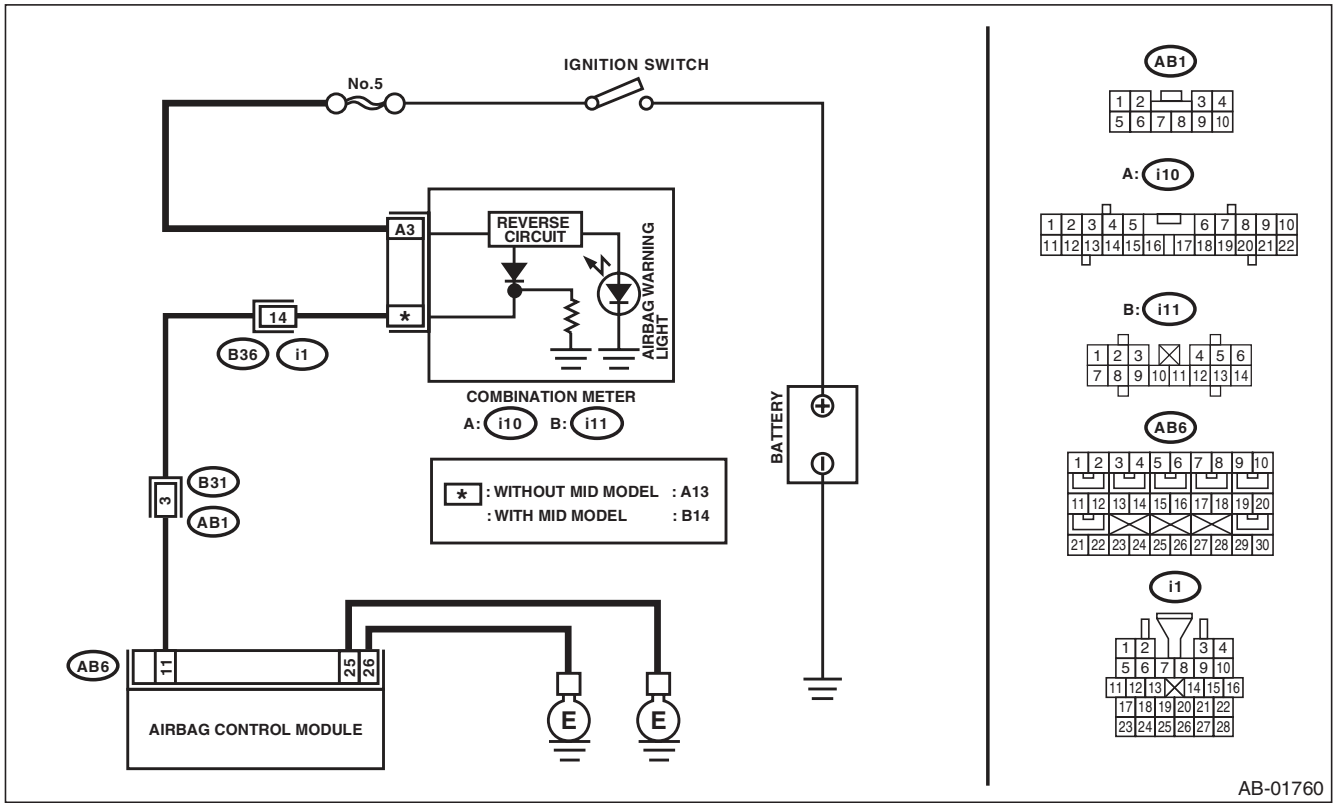

Airbag Warning Light Failure

	Step	Check	Yes	No
1	**CHECK COMBINATION METER.** Turn the ignition switch to ON, and confirm that warning lights of combination meter illuminate.	Do warning lights except for airbag illuminate?	Go to step **2**.	Check the combination meter.
2	**CHECK DTC.** Read the DTC. <Ref. to AB(diag)-24, READ DIAGNOSTIC TROUBLE CODE (DTC), OPERATION, Subaru Select Monitor.>	Is DTC displayed?	Perform the diagnosis according to DTC.	Go to step **3**.
3	**CHECK FUSE NO. 5 (IN MAIN FUSE BOX).** Remove the fuse No. 5 and perform visual inspection.	Is fuse No. 5 (in the main fuse box) blown out?	Replace the fuse No. 5. If the fuse No. 5 is blown out again, go to step 4.	Go to step **4**.
4	**CHECK AIRBAG WARNING LIGHT CIRCUIT (IN COMBINATION METER).** 1) Turn the ignition switch to OFF, disconnect the battery ground cable, and wait for 20 seconds or more. 2) Disconnect the connectors (AB1) and (B31). 3) Connect the battery ground terminal and turn the ignition switch to ON.	Does airbag warning light illuminate?	Go to step **5**.	Check the combination meter.
5	**CHECK AIRBAG MAIN HARNESS.** 1) Turn the ignition switch to OFF, disconnect the battery ground cable, and wait for 20 seconds or more. 2) Connect the connector (AB1) and (B31). 3) Disconnect the connectors (AB6, AB17, AB18) from airbag control module. 4) Connect the battery ground terminal and turn the ignition switch to ON.	Does airbag warning light illuminate?	Replace the airbag control module. <Ref. to AB-20, Airbag Control Module.>	Replace the airbag main harness along with bulkhead harness.

13. List of Diagnostic Trouble Code (DTC)

A: LIST

DTC	Display	Content of diagnosis	Reference
11	Driver's Airbag failure	• Airbag main harness circuit is open, shorted or shorted to ground. • Airbag module harness (Driver's side) circuit is open, shorted or shorted to ground. • Roll connector circuit is open, shorted or shorted to ground. • Airbag control module is faulty. • Driver's airbag module is faulty.	<Ref. to AB(diag)-46, DTC 11 DRIVER'S AIRBAG FAILURE, Diagnostic Chart with Trouble Code.>
12	Passenger's Airbag failure	• Airbag main harness circuit is open, shorted or shorted to ground. • Airbag module harness (Passenger's side) circuit is open, shorted or shorted to ground. • Airbag control module is faulty. • Passenger's airbag module is faulty.	<Ref. to AB(diag)-49, DTC 12 PASSENGER'S AIRBAG FAILURE, Diagnostic Chart with Trouble Code.>
15	Driver's Airbag failure	• Airbag main harness circuit (Driver's side) is shorted to power supply. • Airbag module harness circuit (Driver's side) is shorted to power supply. • Roll connector is shorted to power supply. • Airbag control module is faulty. • Driver's airbag module is faulty.	<Ref. to AB(diag)-51, DTC 15 DRIVER'S AIRBAG FAILURE, Diagnostic Chart with Trouble Code.>
16	Passenger's Airbag failure	• Airbag main harness circuit (Passenger's side) is shorted to power supply. • Airbag module harness circuit (Passenger's side) is shorted to power supply. • Airbag control module is faulty. • Passenger's airbag module is faulty.	<Ref. to AB(diag)-54, DTC 16 PASSENGER'S AIRBAG FAILURE, Diagnostic Chart with Trouble Code.>
21	Airbag ECU failure	Airbag control module is faulty.	<Ref. to AB(diag)-56, DTC 21 AIRBAG ECM FAILURE, Diagnostic Chart with Trouble Code.>
22	Front Airbag: Firing output	Front airbag module and seat belt pretensioner (LH/RH) are inflated.	<Ref. to AB(diag)-57, DTC 22 FRONT AIRBAG FIRING OUTPUT, Diagnostic Chart with Trouble Code.>
26	Passenger's Airbag indicator failure	• Passenger's airbag indicator is faulty. • Airbag control module is faulty. • Airbag main harness circuit is open, shorted or shorted to ground. • Body harness circuit is open.	<Ref. to AB(diag)-58, DTC 26 PASSENGER'S AIRBAG INDICATOR FAILURE, Diagnostic Chart with Trouble Code.>
27	ODS Communication error	• Occupant detection control module communication is faulty. • Airbag rear harness circuit is open, shorted, shorted to ground or shorted to power supply. • Occupant detection harness is faulty. • Airbag control module is faulty. • Occupant detection system is faulty.	<Ref. to AB(diag)-60, DTC 27 ODS COMMUNICATION ERROR, Diagnostic Chart with Trouble Code.>

DTC	Display	Content of diagnosis	Reference
29	ODS failure	• Occupant detection sensor is faulty. • Occupant detection control module is faulty. • Occupant detection harness is faulty. • Fuse No. 25 (in joint box) is blown.	Refer to “Occupant Detection System” for details on DTC 29. <Ref. to OD(diag)-26, DTC 29 ODS FAILURE, Diagnostic Procedure with Diagnostic Trouble Code (DTC).>
2A	ODS Calibration error	System calibration (Rezeroing) of the occupant detection system was not ended normally.	Refer to “Occupant Detection System” for details on DTC 2A. <Ref. to OD(diag)-23, DTC 2A ODS CALIBRATION ERROR, Diagnostic Procedure with Diagnostic Trouble Code (DTC).>
2B	ODS System wrong parts	• Wrong airbag control module was installed. • Wrong occupant detection system was installed. • Occupant detection system is faulty.	Refer to “Occupant Detection System” for details on DTC 2B. <Ref. to OD(diag)-23, DTC 2B ODS SYSTEM WRONG PARTS, Diagnostic Procedure with Diagnostic Trouble Code (DTC).>
2C	Belt tension Sensor failure	• Passenger’s seat belt tension sensor is faulty. • Occupant detection system is faulty. • Airbag rear harness circuit is open, shorted, shorted to ground or shorted to power supply. • Occupant detection harness is faulty.	Refer to “Occupant Detection System” for details on DTC 2C. <Ref. to OD(diag)-24, DTC 2C BELT TENSION SENSOR FAILURE, Diagnostic Procedure with Diagnostic Trouble Code (DTC).>
33	FrontSubSensor RH failure	Front sub sensor (RH) is faulty.	<Ref. to AB(diag)-61, DTC 33 FRONT SUB SENSOR RH FAILURE, Diagnostic Chart with Trouble Code.>
34	FrontSubSensor LH failure	Front sub sensor (LH) is faulty.	<Ref. to AB(diag)-61, DTC 34 FRONT SUB SENSOR LH FAILURE, Diagnostic Chart with Trouble Code.>
37	Buckle Switch RH failure	• Passenger’s buckle switch circuit is open, shorted or shorted to ground. • Occupant detection system is faulty. • Occupant detection harness is faulty.	Refer to “Occupant Detection System” for details on DTC 37. <Ref. to OD(diag)-27, DTC 37 BUCKLE SWITCH RH FAILURE, Diagnostic Procedure with Diagnostic Trouble Code (DTC).>
39	Seatbelt Warning failure	• Airbag control module is faulty. • Body integrated unit is faulty. • Harness circuits between body integrated unit and airbag control module are open, shorted or shorted to ground.	<Ref. to AB(diag)-62, DTC 39 SEAT BELT WARNING FAILURE, Diagnostic Chart with Trouble Code.>

List of Diagnostic Trouble Code (DTC)

DTC	Display	Content of diagnosis	Reference
41	Side Airbag RH failure	• Side airbag harness (RH) circuit is faulty. • Side airbag module (RH) is faulty. • Airbag control module is faulty.	<Ref. to AB(diag)-64, DTC 41 SIDE AIRBAG RH FAILURE, Diagnostic Chart with Trouble Code.>
42	Side Airbag LH failure	• Side airbag harness (LH) circuit is faulty. • Side airbag module (LH) is faulty. • Airbag control module is faulty.	<Ref. to AB(diag)-66, DTC 42 SIDE AIRBAG LH FAILURE, Diagnostic Chart with Trouble Code.>
45	Side Airbag RH failure	• Side airbag harness (RH) is shorted to power supply. • Airbag control module is faulty.	<Ref. to AB(diag)-68, DTC 45 SIDE AIRBAG RH FAILURE, Diagnostic Chart with Trouble Code.>
46	Side Airbag LH failure	• Side airbag harness (LH) is shorted to power supply. • Airbag control module is faulty.	<Ref. to AB(diag)-70, DTC 46 SIDE AIRBAG LH FAILURE, Diagnostic Chart with Trouble Code.>
53	Side Airbag Sensor RH failure	Side airbag sensor (RH) is faulty.	<Ref. to AB(diag)-72, DTC 53 SIDE AIRBAG SENSOR RH FAILURE, Diagnostic Chart with Trouble Code.>
54	Side Airbag Sensor LH failure	Side airbag sensor (LH) is faulty.	<Ref. to AB(diag)-72, DTC 54 SIDE AIRBAG SENSOR LH FAILURE, Diagnostic Chart with Trouble Code.>
55	Side/Curtain Airbag: Firing output	• Side airbag module and curtain airbag module are deployed. • Curtain airbag module is deployed.	<Ref. to AB(diag)-72, DTC 55 SIDE CURTAIN AIRBAG FIRING OUTPUT, Diagnostic Chart with Trouble Code.>
58	Curtain Airbag Sensor RH failure	Curtain airbag sensor (RH) is faulty.	<Ref. to AB(diag)-72, DTC 58 CURTAIN AIRBAG SENSOR RH FAILURE, Diagnostic Chart with Trouble Code.>
59	Curtain Airbag Sensor LH failure	Curtain airbag sensor (LH) is faulty.	<Ref. to AB(diag)-72, DTC 59 CURTAIN AIRBAG SENSOR LH FAILURE, Diagnostic Chart with Trouble Code.>
61	Belt Pretensioner RH failure	• Seat belt pretensioner (RH) circuit is open, shorted or shorted to ground. • Airbag control module is faulty. • Pretensioner is faulty. • Pretensioner harness is faulty.	<Ref. to AB(diag)-73, DTC 61 BELT PRETENSIONER RH FAILURE, Diagnostic Chart with Trouble Code.>
62	Belt Pretensioner LH failure	• Seat belt pretensioner (LH) circuit is open, shorted or shorted to ground. • Airbag control module is faulty. • Pretensioner is faulty. • Pretensioner harness is faulty.	<Ref. to AB(diag)-75, DTC 62 BELT PRETENSIONER LH FAILURE, Diagnostic Chart with Trouble Code.>

List of Diagnostic Trouble Code (DTC)

DTC	Display	Content of diagnosis	Reference
65	Belt Pretensioner RH failure	• Seat belt pretensioner (RH) circuit is shorted to power supply. • Pretensioner is faulty. • Pretensioner harness is faulty. • Airbag control module is faulty.	<Ref. to AB(diag)-77, DTC 65 BELT PRETENSIONER RH FAILURE, Diagnostic Chart with Trouble Code.>
66	Belt Pretensioner LH failure	• Seat belt pretensioner (LH) circuit is shorted to power supply. • Pretensioner is faulty. • Pretensioner harness is faulty. • Airbag control module is faulty.	<Ref. to AB(diag)-79, DTC 66 BELT PRETENSIONER LH FAILURE, Diagnostic Chart with Trouble Code.>
71	Driver's Airbag failure	• Airbag main harness circuit is open, shorted or shorted to ground. • Airbag module harness (Driver's side) circuit is open, shorted or shorted to ground. • Roll connector circuit is open, shorted or shorted to ground. • Airbag control module is faulty. • Driver's airbag module is faulty.	<Ref. to AB(diag)-81, DTC 71 DRIVER'S AIRBAG FAILURE, Diagnostic Chart with Trouble Code.>
72	Passenger's Airbag failure	• Airbag main harness circuit is open, shorted or shorted to ground. • Airbag module harness (Passenger's side) circuit is open, shorted or shorted to ground. • Airbag control module is faulty. • Passenger's airbag module is faulty.	<Ref. to AB(diag)-84, DTC 72 PASSENGER'S AIRBAG FAILURE, Diagnostic Chart with Trouble Code.>
75	Driver's Airbag failure	• Airbag main harness circuit (Driver's side) is shorted to power supply. • Airbag module harness circuit (Driver's side) is shorted to power supply. • Roll connector is shorted to power supply. • Airbag control module is faulty. • Driver's airbag module is faulty.	<Ref. to AB(diag)-86, DTC 75 DRIVER'S AIRBAG FAILURE, Diagnostic Chart with Trouble Code.>
76	Passenger's Airbag failure	• Airbag main harness circuit (Passenger's side) is shorted to power supply. • Airbag module harness circuit (Passenger's side) is shorted to power supply. • Airbag control module is faulty. • Passenger's airbag module is faulty.	<Ref. to AB(diag)-89, DTC 76 PASSENGER'S AIRBAG FAILURE, Diagnostic Chart with Trouble Code.>
91	Curtain Airbag Module RH Failure	• Curtain airbag harness (RH) circuit is faulty. • Curtain airbag module (RH) is faulty. • Airbag control module is faulty.	<Ref. to AB(diag)-91, DTC 91 CURTAIN AIRBAG MODULE RH FAILURE, Diagnostic Chart with Trouble Code.>
92	Curtain Airbag Module LH Failure	• Curtain airbag harness (LH) circuit is faulty. • Curtain airbag module (LH) is faulty. • Airbag control module is faulty.	<Ref. to AB(diag)-93, DTC 92 CURTAIN AIRBAG MODULE LH FAILURE, Diagnostic Chart with Trouble Code.>
95	Curtain Airbag Module RH Failure	• Curtain airbag harness (RH) is shorted to power supply. • Curtain airbag module (RH) is faulty. • Airbag control module is faulty.	<Ref. to AB(diag)-95, DTC 95 CURTAIN AIRBAG MODULE RH FAILURE, Diagnostic Chart with Trouble Code.>
96	Curtain Airbag Module LH Failure	• Curtain airbag harness (LH) is shorted to power supply. • Curtain airbag module (LH) is faulty. • Airbag control module is faulty.	<Ref. to AB(diag)-97, DTC 96 CURTAIN AIRBAG MODULE LH FAILURE, Diagnostic Chart with Trouble Code.>

DTC	Display	Content of diagnosis	Reference
E2 E3 E4	Front Sensor Bus RH Communication error	• Open or short circuit in harness (RH) between airbag control module and front sub sensor. • Front sub sensor (RH) is faulty. • Airbag control module is faulty.	<Ref. to AB(diag)-99, DTC E2 FRONT SENSOR BUS RH COMMUNICATION ERROR, Diagnostic Chart with Trouble Code.> <Ref. to AB(diag)-99, DTC E3 FRONT SENSOR BUS RH COMMUNICATION ERROR, Diagnostic Chart with Trouble Code.> <Ref. to AB(diag)-100, DTC E4 FRONT SENSOR BUS RH COMMUNICATION ERROR, Diagnostic Chart with Trouble Code.>
E6 E7 E8	Front Sensor Bus LH Communication error	• Open or short circuit in harness (LH) between airbag control module and front sub sensor. • Front sub sensor (LH) is faulty. • Airbag control module is faulty.	<Ref. to AB(diag)-102, DTC E6 FRONT SENSOR BUS LH COMMUNICATION ERROR, Diagnostic Chart with Trouble Code.> <Ref. to AB(diag)-102, DTC E7 FRONT SENSOR BUS LH COMMUNICATION ERROR, Diagnostic Chart with Trouble Code.> <Ref. to AB(diag)-103, DTC E8 FRONT SENSOR BUS LH COMMUNICATION ERROR, Diagnostic Chart with Trouble Code.>
E9 EA EB EC	Side Sensor Bus RH Communication error	• Open or short circuit in harness (RH) between airbag control module and side sensor. • Side airbag sensor (RH) or curtain airbag sensor (RH) is faulty. • Airbag control module is faulty.	<Ref. to AB(diag)-105, DTC E9 SIDE SENSOR BUS RH COMMUNICATION ERROR, Diagnostic Chart with Trouble Code.> <Ref. to AB(diag)-105, DTC EA SIDE SENSOR BUS RH COMMUNICATION ERROR, Diagnostic Chart with Trouble Code.> <Ref. to AB(diag)-105, DTC EB SIDE SENSOR BUS RH COMMUNICATION ERROR, Diagnostic Chart with Trouble Code.> <Ref. to AB(diag)-106, DTC EC SIDE SENSOR BUS RH COMMUNICATION ERROR, Diagnostic Chart with Trouble Code.>

DTC	Display	Content of diagnosis	Reference
ED EE	Side Sensor Bus RH Communication error	• Open or short circuit in harness (RH) between airbag control module and side sensor. • Side airbag sensor (RH) or curtain airbag sensor (RH) is faulty. • Airbag control module is faulty.	<Ref. to AB(diag)-108, DTC ED SIDE SENSOR BUS RH COMMUNICATION ERROR, Diagnostic Chart with Trouble Code.> <Ref. to AB(diag)-109, DTC EE SIDE SENSOR BUS RH COMMUNICATION ERROR, Diagnostic Chart with Trouble Code.>
F1 F2 F3 F4	Side Sensor Bus LH Communication error	• Open or short circuit in harness (LH) between airbag control module and side sensor. • Side airbag sensor (LH) or curtain airbag sensor (LH) is faulty. • Airbag control module is faulty.	<Ref. to AB(diag)-112, DTC F1 SIDE SENSOR BUS LH COMMUNICATION ERROR, Diagnostic Chart with Trouble Code.> <Ref. to AB(diag)-112, DTC F2 SIDE SENSOR BUS LH COMMUNICATION ERROR, Diagnostic Chart with Trouble Code.> <Ref. to AB(diag)-112, DTC F3 SIDE SENSOR BUS LH COMMUNICATION ERROR, Diagnostic Chart with Trouble Code.> <Ref. to AB(diag)-113, DTC F4 SIDE SENSOR BUS LH COMMUNICATION ERROR, Diagnostic Chart with Trouble Code.>
F5 F6	Side Sensor Bus LH Communication error	• Open or short circuit in harness (LH) between airbag control module and side sensor. • Side airbag sensor (LH) or curtain airbag sensor (LH) is faulty. • Airbag control module is faulty.	<Ref. to AB(diag)-115, DTC F5 SIDE SENSOR BUS LH COMMUNICATION ERROR, Diagnostic Chart with Trouble Code.> <Ref. to AB(diag)-116, DTC F6 SIDE SENSOR BUS LH COMMUNICATION ERROR, Diagnostic Chart with Trouble Code.>

DTC	Display	Content of diagnosis	Reference
F8 F9 FA	Satellite Sensor Bus Communication error	• Open or short circuit in harness between airbag control module and satellite safing sensor. • Satellite safing sensor is faulty. • Airbag control module is faulty.	<Ref. to AB(diag)-119, DTC F8 SATELLITE SENSOR BUS COMMUNICATION ERROR, Diagnostic Chart with Trouble Code.> <Ref. to AB(diag)-119, DTC F9 SATELLITE SENSOR BUS COMMUNICATION ERROR, Diagnostic Chart with Trouble Code.> <Ref. to AB(diag)-120, DTC FA SATELLITE SENSOR BUS COMMUNICATION ERROR, Diagnostic Chart with Trouble Code.>
3A	Front Sub Sensor RH false installation	• Front sensor (RH) is misinstalled. • Airbag control module is faulty.	<Ref. to AB(diag)-122, DTC 3A FRONT SUB SENSOR RH FALSE INSTALLATION, Diagnostic Chart with Trouble Code.>
3B	Front Sub Sensor LH false installation	• Front sensor (LH) is misinstalled. • Airbag control module is faulty.	<Ref. to AB(diag)-122, DTC 3B FRONT SUB SENSOR LH FALSE INSTALLATION, Diagnostic Chart with Trouble Code.>
3C	Satellite Sensor Bus failure	Satellite safing sensor is faulty.	<Ref. to AB(diag)-122, DTC 3C SATELLITE SENSOR BUS FAILURE, Diagnostic Chart with Trouble Code.>
3D	Satellite Sensor false installation	• Satellite safing sensor is misinstalled. • Airbag control module is faulty.	<Ref. to AB(diag)-122, DTC 3D SATELLITE SENSOR FALSE INSTALLATION, Diagnostic Chart with Trouble Code.>
5A	Side Airbag Sensor RH false installation	• Side A/B sensor is misinstalled. • Airbag control module is faulty.	<Ref. to AB(diag)-123, DTC 5A SIDE AIRBAG SENSOR RH FALSE INSTALLATION, Diagnostic Chart with Trouble Code.>
5B	Side Airbag Sensor LH false installation	• Side A/B sensor is misinstalled. • Airbag control module is faulty.	<Ref. to AB(diag)-123, DTC 5B SIDE AIRBAG SENSOR LH FALSE INSTALLATION, Diagnostic Chart with Trouble Code.>
5C	Curtain Airbag Sensor RH false installation	• Curtain A/B sensor is misinstalled. • Airbag control module is faulty.	<Ref. to AB(diag)-123, DTC 5C CURTAIN AIRBAG SENSOR RH FALSE INSTALLATION, Diagnostic Chart with Trouble Code.>

DTC	Display	Content of diagnosis	Reference
5D	Curtain Airbag Sensor LH false installation	• Curtain A/B sensor is misinstalled. • Airbag control module is faulty.	<Ref. to AB(diag)-123, DTC 5D CURTAIN AIRBAG SENSOR LH FALSE INSTALLATION, Diagnostic Chart with Trouble Code.>

14. Diagnostic Chart with Trouble Code

A: DTC 11 DRIVER'S AIRBAG FAILURE

DTC DETECTING CONDITION:

- Airbag main harness circuit is open, shorted or shorted to ground.
- Airbag module harness (Driver's side) circuit is open, shorted or shorted to ground.
- Roll connector circuit is open, shorted or shorted to ground.
- Driver's airbag module is faulty.
- Airbag control module is faulty.

CAUTION:

- **Before diagnosing the airbag system, be sure to turn the ignition switch to OFF, disconnect the ground cable from the battery, and wait 20 seconds or more before starting to work.**
- **When replacing the airbag module, seat belt pretensioner, roll connector, control module and sensor, reconnect each part and check that the warning light operates properly.**
- **When inspecting the airbag main harness, disconnect the airbag module connectors of the driver's and passenger's seats for safety.**
- **When inspecting the airbag rear harness, disconnect the side airbag module connector, curtain airbag module connector and seat belt pretensioner connector for safety reasons.**

NOTE:
Prior to starting work, prepare two airbag resistors (98299PA040).

WIRING DIAGRAM:

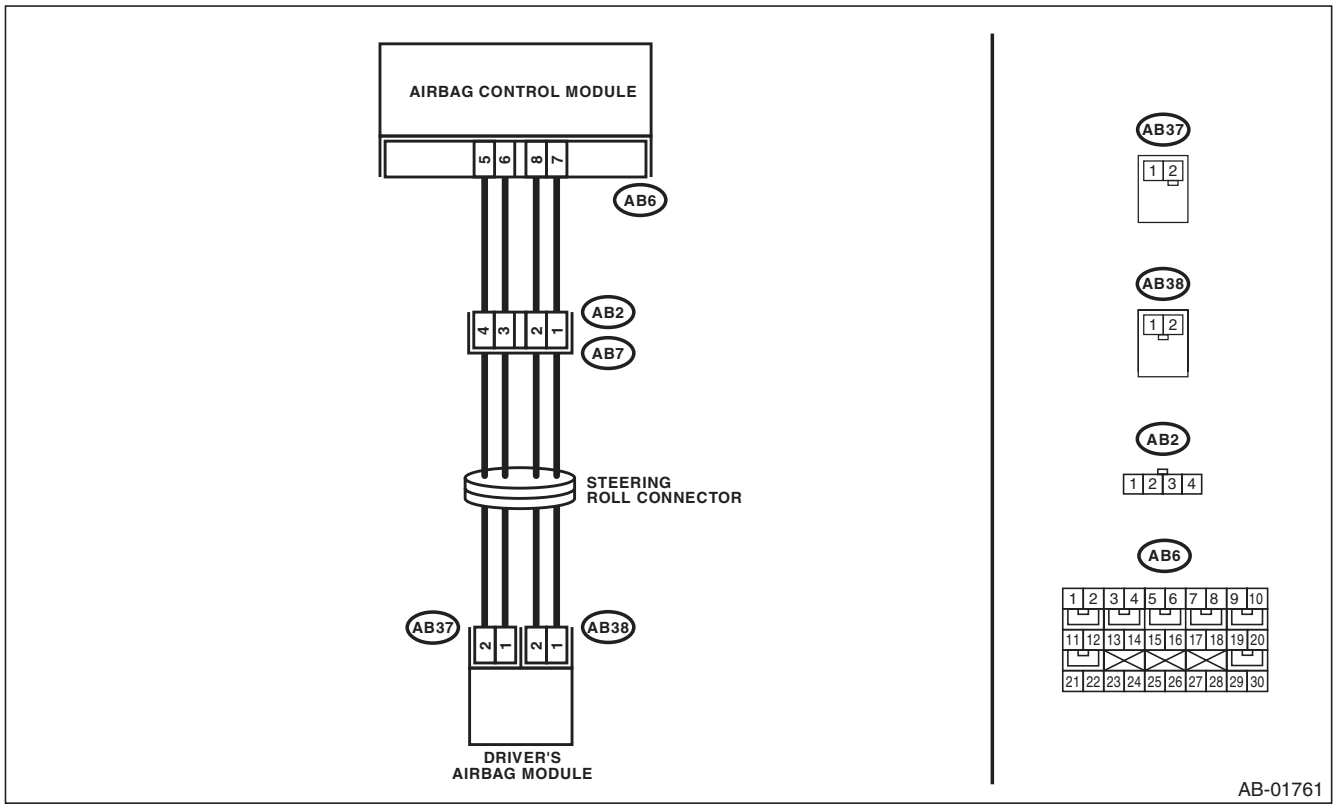

	Step	Check	Yes	No
1	**CHECK POOR CONTACT IN CONNECTORS.** Check for poor contact of the connectors between the airbag control module and the driver's airbag module.	Is there poor contact?	Replace the airbag harness.	Go to step **2**.
2	**CHECK DRIVER'S AIRBAG MODULE.** 1) Turn the ignition switch to OFF, disconnect the battery ground cable, and wait for 20 seconds or more. 2) Remove the driver's airbag module. 3) Connect the connector (1N) in the test harness N to the connector (AB38). 4) Connect the airbag resistor to the connector (2N) of test harness N. 5) Connect the connector (1Q) in the test harness Q to connector (AB37). 6) Connect the airbag resistor to the connector (2Q) in the test harness Q. 7) Connect the battery ground terminal and turn the ignition switch to ON.	Does the airbag warning light illuminate for 6 seconds and go off?	Replace the driver's airbag module. <Ref. to AB-14, Driver's Airbag Module.>	Go to step **3**.
3	**CHECK ROLL CONNECTOR.** 1) Turn the ignition switch to OFF, disconnect the battery ground cable, and wait for 20 seconds or more. 2) Disconnect the test harness N from connector (AB38). 3) Disconnect the test harness Q from connector (AB37). 4) Remove the instrument panel lower cover and disconnect the connector (AB7) from (AB2). 5) Connect the connector (1P) in the test harness P to connector (AB2). 6) Connect the airbag resistor to the connectors (2P) and (3P) of test harness P. 7) Connect the battery ground terminal and turn the ignition switch to ON.	Does the airbag warning light illuminate for 6 seconds and go off?	Replace the roll connector. <Ref. to AB-25, Roll Connector.>	Go to step **4**.
4	**CHECK AIRBAG MAIN HARNESS (DRIVER'S AIRBAG HARNESS).** 1) Turn the ignition switch to OFF, disconnect the battery ground cable, and wait for 20 seconds or more. 2) Disconnect the airbag resistor from the connectors (2P) and (3P) of test harness P. 3) Remove the instrument panel side cover on the passenger's side and disconnect the connectors (AB10) and (AB9). 4) Disconnect the connectors (AB6, AB17, AB18) from the airbag control module, and connect the test harness AG connector (1AG). 5) Measure the resistance between connector (3AG) in the test harness AG and connectors (2P) and (3P) in the test harness P. ***Connector & terminal*** ***(3AG) No. 1 — (2P) No. 1:*** ***(3AG) No. 3 — (2P) No. 2:*** ***(3AG) No. 2 — (3P) No. 3:*** ***(3AG) No. 4 — (3P) No. 4:***	Is the resistance less than 10 Ω?	Go to step **5**.	Replace the airbag main harness along with body harness.

	Step	Check	Yes	No
5	**CHECK AIRBAG MAIN HARNESS (DRIVER'S AIRBAG HARNESS).** Measure the resistance between connector (3AG) terminals in the test harness AG. ***Connector & terminal*** ***(3AG) No. 1 — (3AG) No. 2:*** ***(3AG) No. 1 — (3AG) No. 4:*** ***(3AG) No. 2 — (3AG) No. 3:*** ***(3AG) No. 3 — (3AG) No. 4:*** ***(3AG) No. 1 — (3AG) No. 3:*** ***(3AG) No. 3 — Chassis ground:*** ***(3AG) No. 1 — Chassis ground:*** ***(3AG) No. 2 — (3AG) No. 4:*** ***(3AG) No. 2 — Chassis ground:*** ***(3AG) No. 4 — Chassis ground:***	Is the resistance 1 MΩ or more?	Go to step **6**.	Replace the airbag main harness along with body harness.
6	**CHECK AIRBAG CONTROL MODULE.** 1) Connect all connectors. 2) Clear the memory. 3) Perform the Inspection Mode. 4) Read the DTC.	Is the same DTC displayed?	Replace the airbag control module. <Ref. to AB-20, Airbag Control Module.>	Go to step **7**.
7	**CHECK FOR ANY OTHER DTC ON DISPLAY.**	Is any other DTC displayed?	Check DTC using "List of Diagnostic Trouble Code (DTC)". <Ref. to AB(diag)-38, List of Diagnostic Trouble Code (DTC).>	Finish the diagnosis.

B: DTC 12 PASSENGER'S AIRBAG FAILURE

DTC DETECTING CONDITION:

- Airbag main harness circuit is open, shorted or shorted to ground.
- Airbag module harness (Passenger's side) circuit is open, shorted or shorted to ground.
- Passenger's airbag module is faulty.
- Airbag control module is faulty.

CAUTION:

- **Before diagnosing the airbag system, be sure to turn the ignition switch to OFF, disconnect the ground cable from the battery, and wait 20 seconds or more before starting to work.**
- **When replacing the airbag module, seat belt pretensioner, roll connector, control module and sensor, reconnect each part and check that the warning light operates properly.**
- **When inspecting the airbag main harness, disconnect the airbag module connectors of the driver's and passenger's seats for safety.**
- **When inspecting the airbag rear harness, disconnect the side airbag module connector, curtain airbag module connector and seat belt pretensioner connector for safety reasons.**

NOTE:
Prior to starting work, prepare two airbag resistors (98299PA040).

WIRING DIAGRAM:

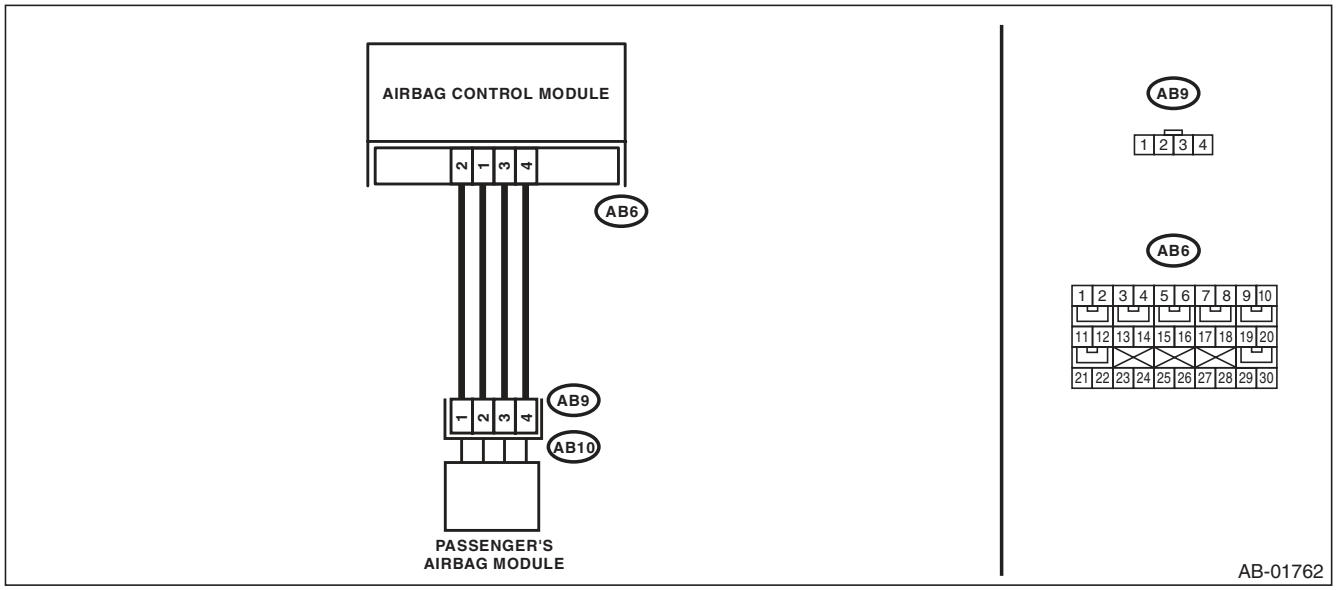

Step		Check	Yes	No
1	**CHECK POOR CONTACT IN CONNECTORS.** Check for poor contact of the connectors between the airbag control module and the passenger's airbag module.	Is there poor contact?	Replace the airbag harness.	Go to step **2**.
2	**CHECK PASSENGER'S AIRBAG MODULE.** 1) Turn the ignition switch to OFF, disconnect the battery ground cable, and wait for 20 seconds or more. 2) Remove the instrument panel side cover on the passenger's side and disconnect the connector (AB10) from (AB9). 3) Connect the connector (1P) in the test harness P to connector (AB9). 4) Connect the airbag resistor to the connectors (2P) and (3P) of test harness P. 5) Connect the battery ground terminal and turn the ignition switch to ON.	Does the airbag warning light illuminate for 6 seconds and go off?	Replace the passenger's airbag module. <Ref. to AB-15, Passenger's Airbag Module.>	Go to step **3**.

	Step	Check	Yes	No
3	**CHECK AIRBAG MAIN HARNESS (PASSENGER'S AIRBAG HARNESS).** 1) Turn the ignition switch to OFF, disconnect the battery ground cable, and wait for 20 seconds or more. 2) Disconnect the airbag resistor from the connectors (2P) and (3P) of test harness P. 3) Remove the instrument panel lower cover and disconnect the connector (AB7) from (AB2). 4) Disconnect the connectors (AB6, AB17, AB18) from the airbag control module, and connect the test harness AG connector (1AG). 5) Measure the resistance between connector (3AG) in the test harness AG and connectors (2P) and (3P) in the test harness P. ***Connector & terminal*** ***(3AG) No. 9 — (2P) No. 1:*** ***(3AG) No. 7 — (2P) No. 2:***	Is the resistance less than 10 Ω?	Go to step **4**.	Replace the airbag main harness along with body harness.
4	**CHECK AIRBAG MAIN HARNESS (PASSENGER'S AIRBAG HARNESS).** Measure the resistance between connectors (3AG) in the test harness AG, and between connector (3AG) and chassis ground. ***Connector & terminal*** ***(3AG) No. 6 — (3AG) No. 7:*** ***(3AG) No. 6 — (3AG) No. 9:*** ***(3AG) No. 7 — (3AG) No. 8:*** ***(3AG) No. 8 — (3AG) No. 9:*** ***(3AG) No. 9 — (3AG) No. 7:*** ***(3AG) No. 9 — Chassis ground:*** ***(3AG) No. 7 — Chassis ground:*** ***(3AG) No. 8 — (3AG) No. 6:*** ***(3AG) No. 8 — Chassis ground:*** ***(3AG) No. 6 — Chassis ground:***	Is the resistance 1 MΩ or more?	Go to step **5**.	Replace the airbag main harness along with body harness.
5	**CHECK AIRBAG CONTROL MODULE.** 1) Connect all connectors. 2) Clear the memory. 3) Perform the Inspection Mode. 4) Read the DTC.	Is the same DTC displayed?	Replace the airbag control module. <Ref. to AB-20, Airbag Control Module.>	Go to step **6**.
6	**CHECK FOR ANY OTHER DTC ON DISPLAY.**	Is any other DTC displayed?	Check DTC using "List of Diagnostic Trouble Code (DTC)". <Ref. to AB(diag)-38, List of Diagnostic Trouble Code (DTC).>	Finish the diagnosis.

C: DTC 15 DRIVER'S AIRBAG FAILURE

DTC DETECTING CONDITION:

- Airbag main harness circuit (Driver's side) is shorted to power supply.
- Airbag module harness circuit (Driver's side) is shorted to power supply.
- Roll connector is shorted to power supply.
- Driver's airbag module is faulty.
- Airbag control module is faulty.

CAUTION:

- **Before diagnosing the airbag system, be sure to turn the ignition switch to OFF, disconnect the ground cable from the battery, and wait 20 seconds or more before starting to work.**
- **When replacing the airbag module, seat belt pretensioner, roll connector, control module and sensor, reconnect each part and check that the warning light operates properly.**
- **When inspecting the airbag main harness, disconnect the airbag module connectors of the driver's and passenger's seats for safety.**
- **When inspecting the airbag rear harness, disconnect the side airbag module connector, curtain airbag module connector and seat belt pretensioner connector for safety reasons.**

NOTE:
Prior to starting work, prepare two airbag resistors (98299PA040).

WIRING DIAGRAM:

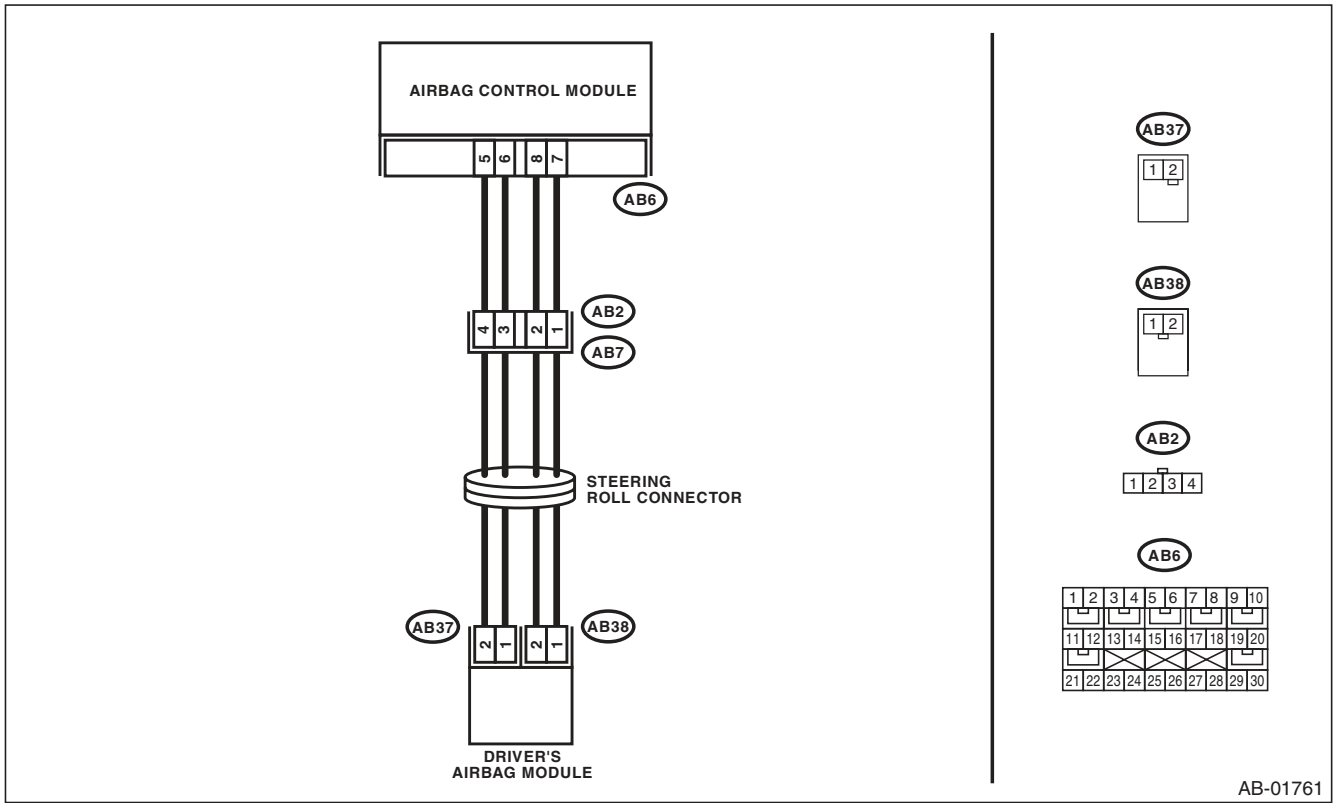

	Step	Check	Yes	No
1	**CHECK POOR CONTACT IN CONNECTORS.** Check for poor contact of the connectors between the airbag control module and the driver's airbag module.	Is there poor contact?	Replace the airbag harness.	Go to step **2**.
2	**CHECK DRIVER'S AIRBAG MODULE.** 1) Turn the ignition switch to OFF, disconnect the battery ground cable, and wait for 20 seconds or more. 2) Remove the driver's airbag module. 3) Connect the connector (AB38) to the connector (1N) in the test harness N. 4) Connect the airbag resistor to the connector (2N) of test harness N. 5) Connect the connector (1Q) in the test harness Q to connector (AB37). 6) Connect the airbag resistor to the connector (2Q) in the test harness Q. 7) Connect the battery ground terminal and turn the ignition switch to ON.	Does the airbag warning light illuminate for 6 seconds and go off?	Replace the driver's airbag module. <Ref. to AB-14, Driver's Airbag Module.>	Go to step **3**.
3	**CHECK ROLL CONNECTOR.** 1) Turn the ignition switch to OFF, disconnect the battery ground cable, and wait for 20 seconds or more. 2) Disconnect the test harness N from connector (AB38). 3) Disconnect the test harness Q from connector (AB37). 4) Remove the instrument panel lower cover and disconnect the connector (AB7) from (AB2). 5) Connect the connector (1P) in the test harness P to connector (AB2). 6) Connect the airbag resistor to the connectors (2P) and (3P) of test harness P. 7) Connect the battery ground terminal and turn the ignition switch to ON.	Does the airbag warning light illuminate for 6 seconds and go off?	Replace the roll connector. <Ref. to AB-25, Roll Connector.>	Go to step **4**.
4	**CHECK AIRBAG MAIN HARNESS (DRIVER'S AIRBAG HARNESS).** 1) Turn the ignition switch to OFF, disconnect the battery ground cable, and wait for 20 seconds or more. 2) Disconnect the airbag resistor from the connectors (2P) and (3P) of test harness P. 3) Remove the instrument panel side cover on the passenger's side and disconnect the connectors (AB10) and (AB9). 4) Disconnect the connectors (AB6, AB17, AB18) from the airbag control module, and connect the test harness AG connector (1AG). 5) Connect the battery ground terminal and turn the ignition switch to ON. (engine OFF) 6) Measure the voltage between connector (3AG) in the test harness AG and chassis ground. ***Connector & terminal*** ***(3AG) No. 3 (+) — Chassis ground (–):*** ***(3AG) No. 1 (+) — Chassis ground (–):***	Is the voltage less than 1 V?	Go to step **5**.	Replace the airbag main harness along with body harness.

Step		Check	Yes	No
5	**CHECK AIRBAG CONTROL MODULE.** 1) Connect all connectors. 2) Clear the memory. 3) Perform the Inspection Mode. 4) Read the DTC.	Is the same DTC displayed?	Replace the airbag control module. <Ref. to AB-20, Airbag Control Module.>	Go to step **6**.
6	**CHECK FOR ANY OTHER DTC ON DISPLAY.**	Is any other DTC displayed?	Check DTC using "List of Diagnostic Trouble Code (DTC)". <Ref. to AB(diag)-38, List of Diagnostic Trouble Code (DTC).>	Finish the diagnosis.

D: DTC 16 PASSENGER'S AIRBAG FAILURE

DTC DETECTING CONDITION:

- Airbag main harness circuit (Passenger's side) is shorted to power supply.
- Airbag module harness circuit (Passenger's side) is shorted to power supply.
- Passenger's airbag module is faulty.
- Airbag control module is faulty.

CAUTION:

- **Before diagnosing the airbag system, be sure to turn the ignition switch to OFF, disconnect the ground cable from the battery, and wait 20 seconds or more before starting to work.**
- **When replacing the airbag module, seat belt pretensioner, roll connector, control module and sensor, reconnect each part and check that the warning light operates properly.**
- **When inspecting the airbag main harness, disconnect the airbag module connectors of the driver's and passenger's seats for safety.**
- **When inspecting the airbag rear harness, disconnect the side airbag module connector, curtain airbag module connector and seat belt pretensioner connector for safety reasons.**

NOTE:
Prior to starting work, prepare two airbag resistors (98299PA040).

WIRING DIAGRAM:

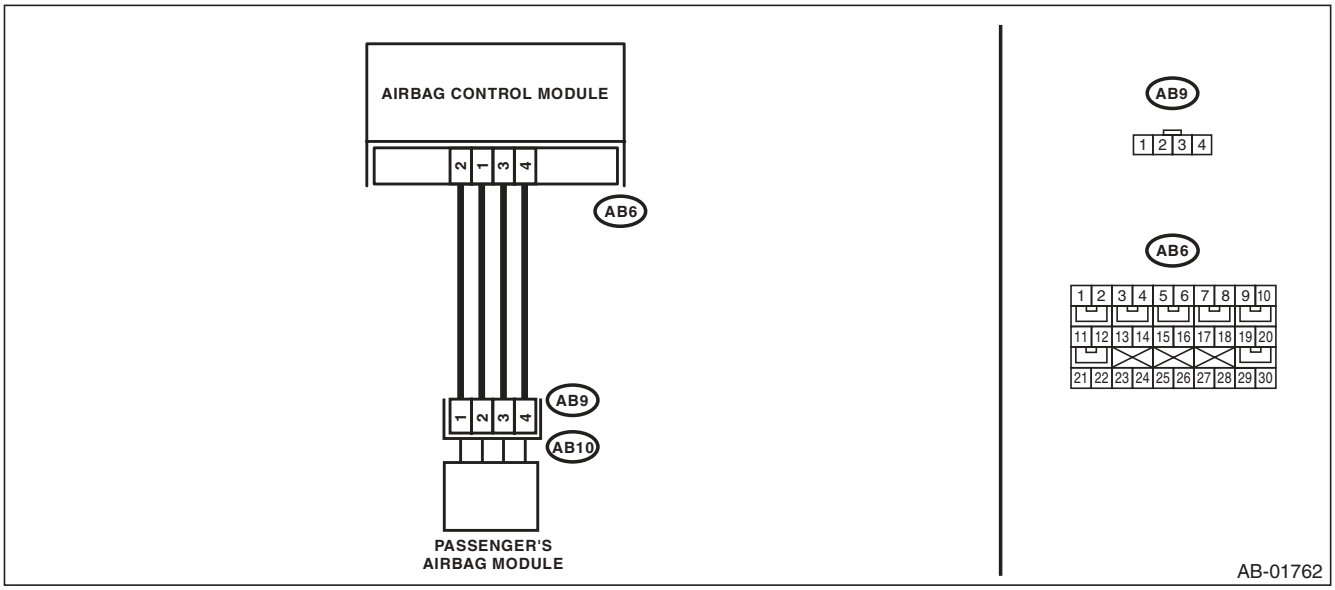

Diagnostic Chart with Trouble Code

	Step	Check	Yes	No
1	**CHECK POOR CONTACT IN CONNECTORS.** Check for poor contact of the connectors between the airbag control module and the passenger's airbag module.	Is there poor contact?	Replace the airbag harness along with chassis harness.	Go to step **2**.
2	**CHECK PASSENGER'S AIRBAG MODULE.** 1) Turn the ignition switch to OFF, disconnect the battery ground cable, and wait for 20 seconds or more. 2) Remove the instrument panel side cover on the passenger's side and disconnect the connector (AB10) from (AB9). 3) Connect the connector (1P) in the test harness P to connector (AB9). 4) Connect the airbag resistor to the connectors (2P) and (3P) of test harness P. 5) Connect the battery ground terminal and turn the ignition switch to ON.	Does the airbag warning light illuminate for 6 seconds and go off?	Replace the passenger's airbag module. <Ref. to AB-15, Passenger's Airbag Module.>	Go to step **3**.
3	**CHECK AIRBAG MAIN HARNESS (PASSENGER'S AIRBAG HARNESS).** 1) Turn the ignition switch to OFF, disconnect the battery ground cable, and wait for 20 seconds or more. 2) Disconnect the airbag resistor from the connectors (2P) and (3P) of test harness P. 3) Remove the instrument panel lower cover and disconnect the connector (AB7) from (AB2). 4) Disconnect the connectors (AB6, AB17, AB18) from the airbag control module, and connect the test harness AG connector (1AG). 5) Connect the battery ground terminal and turn the ignition switch to ON. (engine OFF) 6) Measure the voltage between connector (3AG) in the test harness AG and chassis ground. ***Connector & terminal*** ***(3AG) No. 9 (+) — Chassis ground (–):*** ***(3AG) No. 7 (+) — Chassis ground (–):***	Is the voltage less than 1 V?	Go to step **4**.	Replace the airbag main harness along with body harness.
4	**CHECK AIRBAG CONTROL MODULE.** 1) Connect all connectors. 2) Clear the memory. 3) Perform the Inspection Mode. 4) Read the DTC.	Is the same DTC displayed?	Replace the airbag control module. <Ref. to AB-20, Airbag Control Module.>	Go to step **5**.
5	**CHECK FOR ANY OTHER DTC ON DISPLAY.**	Is any other DTC displayed?	Check DTC using "List of Diagnostic Trouble Code (DTC)". <Ref. to AB(diag)-38, List of Diagnostic Trouble Code (DTC).>	Finish the diagnosis.

E: DTC 21 AIRBAG ECM FAILURE

DTC DETECTING CONDITION:
Airbag control module is faulty.

CAUTION:
- **Before diagnosing the airbag system, be sure to turn the ignition switch to OFF, disconnect the ground cable from the battery, and wait 20 seconds or more before starting to work.**
- **When replacing the airbag module, seat belt pretensioner, roll connector, control module and sensor, reconnect each part and check that the warning light operates properly.**

	Step	Check	Yes	No
1	**CHECK IF DTC 21 IS INDICATED.** Read the DTC. <Ref. to AB(diag)-24, READ DIAGNOSTIC TROUBLE CODE (DTC), OPERATION, Subaru Select Monitor.>	Does the Subaru Select Monitor display DTC21?	Replace the airbag control module. <Ref. to AB-20, Airbag Control Module.>	Perform the Clear Memory Mode. <Ref. to AB(diag)-25, CLEAR MEMORY MODE, OPERATION, Subaru Select Monitor.>

F: DTC 22 FRONT AIRBAG FIRING OUTPUT

WIRING DIAGRAM:

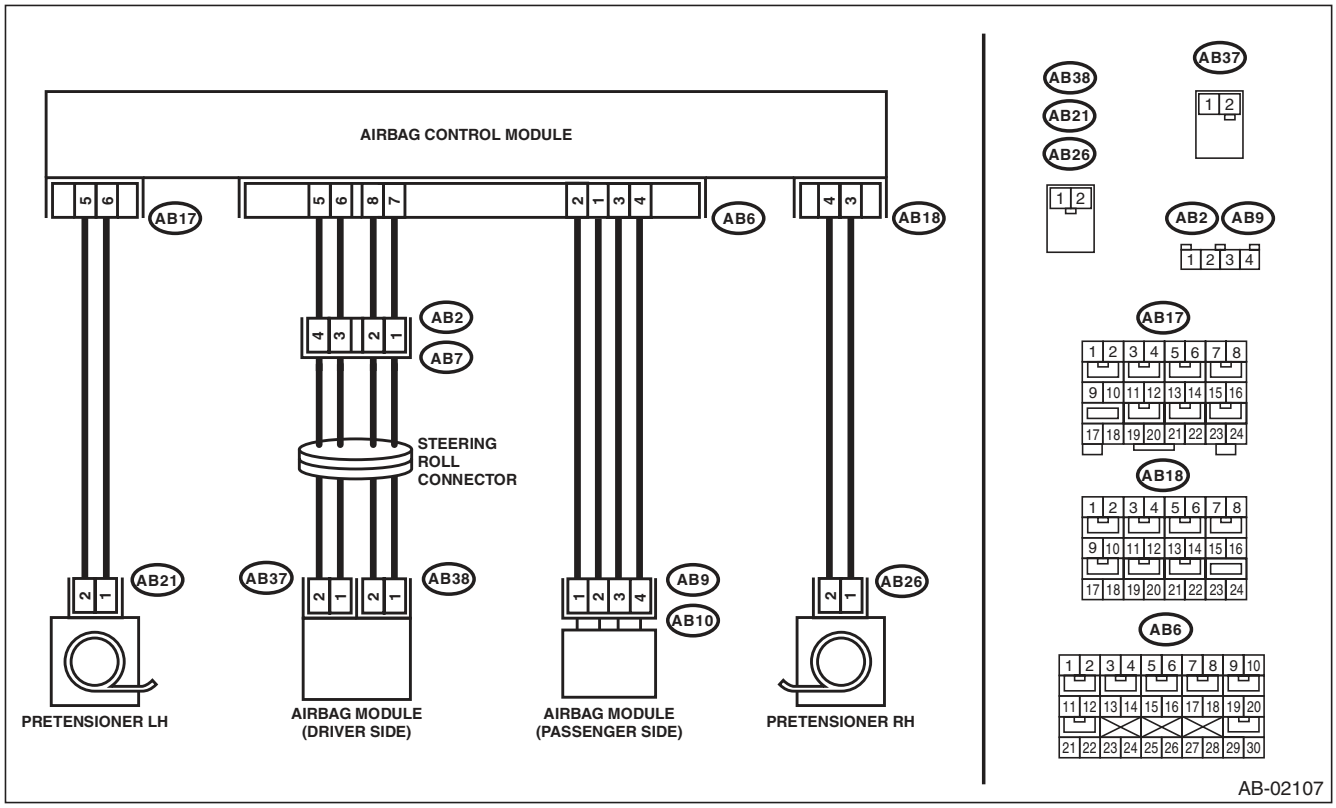

This DTC is indicated when the front airbag module and the pretensioner are deployed.
Once this DTC is displayed, the memory cannot be cleared. Therefore replace the following parts.

- Airbag control module <Ref. to AB-20, Airbag Control Module.>
- Driver's airbag module <Ref. to AB-14, Driver's Airbag Module.>
- Passenger's airbag module <Ref. to AB-15, Passenger's Airbag Module.>
- Front sub sensor of both sides <Ref. to AB-21, Front Sub Sensor.>
- Front outer seat belt with pretensioner of both sides <Ref. to SB-18, Front Seat Belt.>
- Steering roll connector <Ref. to AB-25, Roll Connector.>
- Occupant detection system (passenger's seat cushion & frame assembly) <Ref. to SE-9, Front Seat.>

G: DTC 26 PASSENGER'S AIRBAG INDICATOR FAILURE

DTC DETECTING CONDITION:

- Passenger's airbag indicator is faulty.
- Airbag control module is faulty.
- Airbag main harness circuit is open.
- Body harness circuit is open.

CAUTION:

- **Before diagnosing the airbag system, be sure to turn the ignition switch to OFF, disconnect the ground cable from the battery, and wait 20 seconds or more before starting to work.**
- **When replacing the airbag module, seat belt pretensioner, roll connector, control module and sensor, reconnect each part and check that the warning light operates properly.**
- **When inspecting the airbag main harness, disconnect the airbag module connectors of the driver's and passenger's seats for safety.**
- **When inspecting the airbag rear harness, disconnect the side airbag module connector, curtain airbag module connector and seat belt pretensioner connector for safety reasons.**

WIRING DIAGRAM:

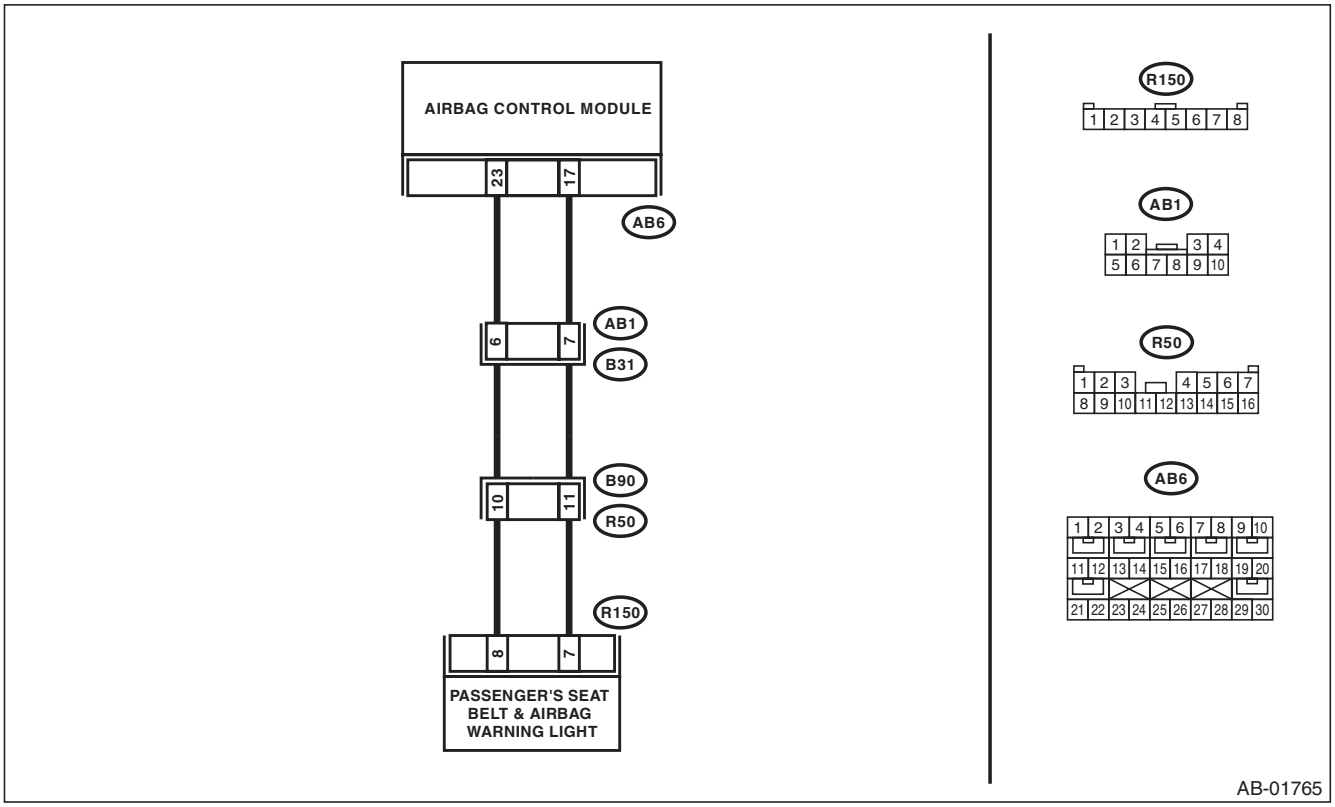

	Step	Check	Yes	No
1	**CHECK POOR CONTACT.** 1) Turn the ignition switch to OFF, disconnect the battery ground cable, and wait for 20 seconds or more. 2) Confirm that firm contact is secured for the connector between the airbag control module and map light.	Is there poor contact in any connector?	Replace the airbag harness connector.	Go to step **2**.
2	**CHECK AIRBAG MAIN HARNESS.** 1) Disconnect the connectors (AB6, AB17, AB18) from airbag control module. 2) Connect the battery ground terminal and turn the ignition switch to ON. NOTE: Neither of ON/OFF illuminates when it is normal.	Does the passenger's airbag indicator illuminate?	Go to step **3**.	Go to step **4**.
3	**CHECK AIRBAG MAIN HARNESS.** 1) Turn the ignition switch to OFF. 2) Remove the map light and disconnect the connector (R150). 3) Connect the test harness AG connector (1AG) to the connectors (AB6, AB17, AB18). 4) Measure the resistance between connector (2AG) in the test harness AG and chassis ground. ***Connector & terminal*** ***(2AG) No. 9 — (2AG) No. 8:*** ***(2AG) No. 9 — Chassis ground:*** ***(2AG) No. 8 — Chassis ground:***	Is the resistance 1 MΩ or more?	Replace the map light. <Ref. to LI-32, REMOVAL, Spot Map Light.>	Repair the bulkhead harness. Or replace the airbag main harness along with body harness.
4	**CHECK AIRBAG HARNESS.** 1) Connect the connectors (7AG) and (8AG) in the test harness AG. 2) Connect the battery ground terminal and turn the ignition switch to ON.	Does the passenger's airbag indicator illuminate?	Replace the airbag control module. <Ref. to AB-20, Airbag Control Module.>	Go to step **5**.
5	**CHECK AIRBAG HARNESS.** 1) Turn the ignition switch to OFF. 2) Connect the test harness AG connector (1AG) to the connectors (AB6, AB17, AB18). 3) Measure the resistance between connector (2AG) in the test harness AG and connector (R150). ***Connector & terminal*** ***(2AG) No. 9 — (R150) No. 7:*** ***(2AG) No. 8 — (R150) No. 8:***	Is the resistance less than 10 Ω?	Go to step **6**.	Repair the bulkhead harness. Or replace the airbag main harness along with body harness.
6	**CHECK BODY HARNESS.** 1) Turn the ignition switch to ON. 2) Measure the voltage between connector (R150) and chassis ground. ***Connector & terminal*** ***(R150) No. 4 — Chassis ground:***	Is the voltage 10 V or more?	Replace the map light. <Ref. to LI-32, REMOVAL, Spot Map Light.>	Repair the map light power supply line.

H: DTC 27 ODS COMMUNICATION ERROR

DTC DETECTING CONDITION:

- Communication to the occupant detection control module is faulty.
- Airbag rear harness circuit is open, shorted, shorted to ground or shorted to power supply.
- Occupant detection harness (seat harness) is faulty.
- Occupant detection system is faulty.
- Airbag control module is faulty.

	Step	Check	Yes	No
1	**CHECK POOR CONTACT IN CONNECTORS.** Check for poor contact of the connectors between the airbag control module and the occupant detection control module.	Is there poor contact?	Reconnect the connector. If defective is not improved, replace the airbag rear harness along with the body harness or the occupant detection harness (seat harness).	Go to step **2**.
2	**CHECK AIRBAG HARNESS.** 1) Turn the ignition switch to OFF, disconnect the battery ground cable, and wait for 20 seconds or more. 2) Disconnect the connectors (AB6, AB17, AB18) from airbag control module. 3) Disconnect the connectors (AB59) and (AB53) under the passenger's seat. 4) Connect the test harness AG connector (1AG) to the connectors (AB6, AB17, AB18). 5) Connect the connector (1AB) in the test harness AB to the connector (AB53). 6) Measure the resistance between connector (6AG) in the test harness AG and connector (2AB) in the test harness AB. ***Connector & terminal*** ***(6AG) No. 9 — (2AB) No. 1:*** ***(6AG) No. 11 — (2AB) No. 2:***	Is the resistance less than 10 Ω?	Go to step **3**.	Replace the airbag rear harness along with body harness.
3	**CHECK AIRBAG HARNESS.** Measure the resistance between connector (3U) in the test harness U and chassis ground. ***Connector & terminal*** ***(6AG) No. 9 — Chassis ground:*** ***(6AG) No. 9 — (6AG) No. 11:***	Is the resistance less than 10 Ω?	Go to step **4**.	Replace the airbag rear harness along with body harness.
4	**CHECK AIRBAG HARNESS.** 1) Turn the ignition switch to ON. 2) Measure the voltage between connector (2AB) in the test harness AB and chassis ground. ***Connector & terminal*** ***(2AB) No. 3 — Chassis ground:***	Is the voltage 9 V or more?	Replace the occupant detection harness (seat harness). If defective is not improved, replace the occupant detection system (seat cushion & frame assembly), and then the airbag control module in this order.	Check the battery voltage and fuse. If there is no fault, replace the airbag rear harness along with body harness or replace the body harness.

I: DTC 29 ODS FAILURE

NOTE:
Refer to “Occupant Detection System” for details on DTC 29. <Ref. to OD(diag)-26, DTC 29 ODS FAILURE, Diagnostic Procedure with Diagnostic Trouble Code (DTC).>

J: DTC 2A ODS CALIBRATION ERROR

NOTE:
Refer to “Occupant Detection System” for details on DTC 2A. <Ref. to OD(diag)-23, DTC 2A ODS CALIBRATION ERROR, Diagnostic Procedure with Diagnostic Trouble Code (DTC).>

K: DTC 2B ODS SYSTEM WRONG PARTS

NOTE:
Refer to “Occupant Detection System” for details on DTC 2B. <Ref. to OD(diag)-23, DTC 2B ODS SYSTEM WRONG PARTS, Diagnostic Procedure with Diagnostic Trouble Code (DTC).>

L: DTC 2C BELT TENSION SENSOR FAILURE

NOTE:
Refer to “Occupant Detection System” for details on DTC 2C. <Ref. to OD(diag)-24, DTC 2C BELT TENSION SENSOR FAILURE, Diagnostic Procedure with Diagnostic Trouble Code (DTC).>

M: DTC 33 FRONT SUB SENSOR RH FAILURE

DTC DETECTING CONDITION:
Front sub sensor (RH) is faulty.
If DTC 33 is displayed, the circuit within the front sub sensor (RH) is faulty.
Replace the front sub sensor (RH). <Ref. to AB-21, Front Sub Sensor.>

N: DTC 34 FRONT SUB SENSOR LH FAILURE

DTC DETECTING CONDITION:
Front sub sensor (LH) is faulty.
If DTC 34 is displayed, the circuit within the front sub sensor (LH) is faulty.
Replace the front sub sensor (LH). <Ref. to AB-21, Front Sub Sensor.>

O: DTC 37 BUCKLE SWITCH RH FAILURE

NOTE:
Refer to “Occupant Detection System” for details on DTC 37. <Ref. to OD(diag)-27, DTC 37 BUCKLE SWITCH RH FAILURE, Diagnostic Procedure with Diagnostic Trouble Code (DTC).>

P: DTC 39 SEAT BELT WARNING FAILURE

DTC DETECTING CONDITION:

- Airbag control module is faulty.
- Body integrated unit is faulty.
- Harness circuits between body integrated unit and airbag control module are open, shorted or shorted to ground.

CAUTION:

- **Before diagnosing the airbag system, be sure to turn the ignition switch to OFF, disconnect the ground cable from the battery, and wait 20 seconds or more before starting to work.**
- **When replacing the airbag module, seat belt pretensioner, roll connector, control module and sensor, reconnect each part and check that the warning light operates properly.**
- **When inspecting the airbag main harness, disconnect the airbag module connectors of the driver's and passenger's seats for safety.**
- **When inspecting the airbag rear harness, disconnect the side airbag module connector, curtain airbag module connector and seat belt pretensioner connector for safety reasons.**

WIRING DIAGRAM:

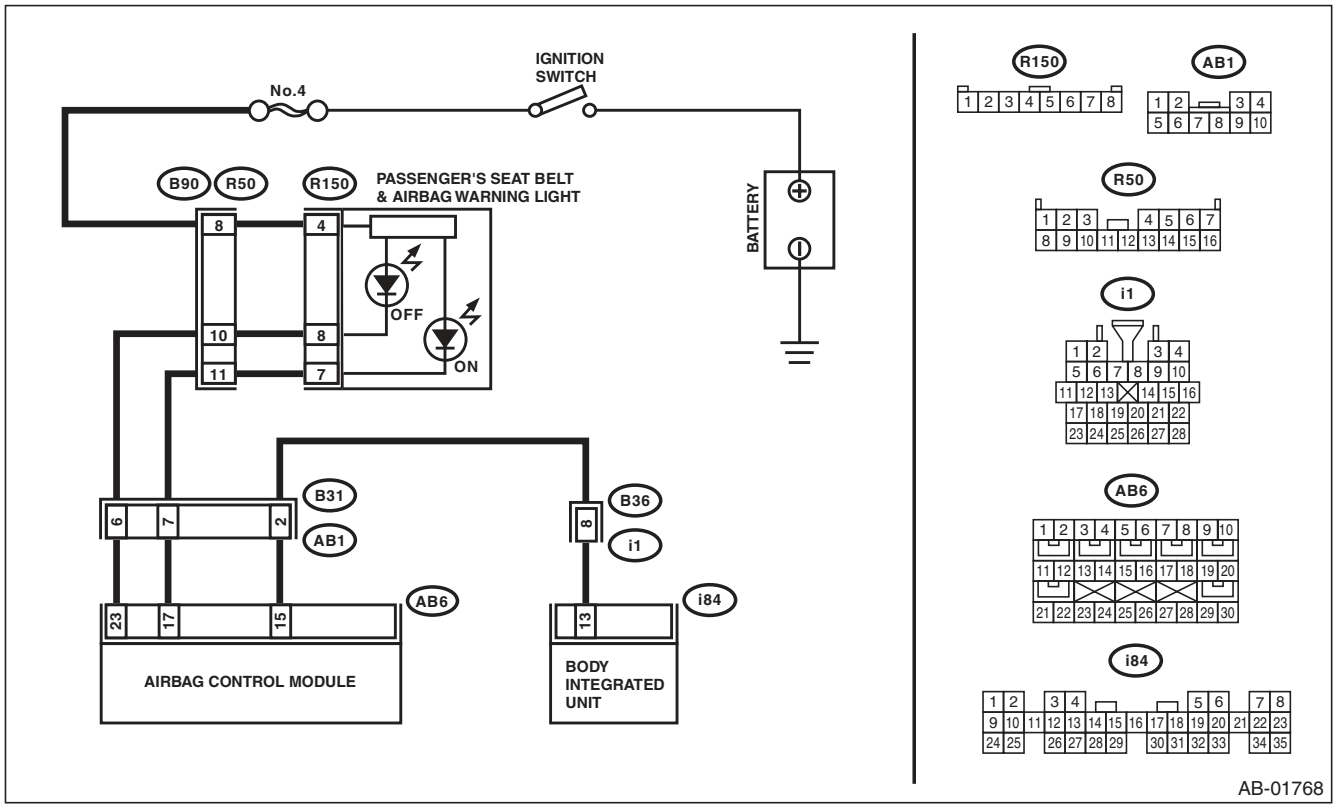

Step		Check	Yes	No
1	**CHECK AIRBAG HARNESS.** 1) Turn the ignition switch to OFF, disconnect the battery ground cable, and wait for 20 seconds or more. 2) Disconnect the connectors (AB6, AB17, AB18) from airbag control module. 3) Connect the battery ground terminal and turn the ignition switch to ON.	Does the passenger's seat belt warning light blink for 6 seconds and go off?	Go to step **3**.	Go to step **2**.
2	**CHECK AIRBAG HARNESS.** 1) Turn the ignition switch to OFF. 2) Connect the test harness AG connector (1AG) to the connectors (AB6, AB17, AB18). 3) Measure the resistance between connector (2AG) in the test harness AG and chassis ground. ***Connector & terminal*** ***(2AG) No. 10 — Chassis ground:***	Is the resistance 1 MΩ or more?	Replace the body integrated unit.	Repair the bulkhead harness. Or replace the airbag main harness along with body harness.
3	**CHECK AIRBAG HARNESS.** 1) Connect the connectors (7AG) and (8AG) in the test harness AG in the condition of step 2. 2) Turn the ignition switch to ON.	Does the passenger's seat belt warning light blink for 6 seconds, then repeatedly light and go off?	Replace the airbag control module. <Ref. to AB-20, Airbag Control Module.>	Go to step **4**.
4	**CHECK AIRBAG HARNESS.** 1) Disconnect the connectors (7AG) and (8AG) in the test harness AG in the condition of step 3. 2) Measure the resistance between connector (2AG) in the test harness AG and connector (i84). ***Connector & terminal*** ***(2AG) No. 10 — (i84) No. 13:***	Is the resistance less than 10 Ω?	Replace the body integrated unit.	Repair the bulkhead harness. Or replace the airbag main harness along with body harness.

Q: DTC 41 SIDE AIRBAG RH FAILURE

DTC DETECTING CONDITION:

- Side airbag harness (RH) is faulty.
- Side airbag module (RH) is faulty.
- Airbag control module is faulty.

CAUTION:

- **Before diagnosing the airbag system, be sure to turn the ignition switch to OFF, disconnect the ground cable from the battery, and wait 20 seconds or more before starting to work.**
- **When replacing the airbag module, seat belt pretensioner, roll connector, control module and sensor, reconnect each part and check that the warning light operates properly.**
- **When inspecting the airbag main harness, disconnect the airbag module connectors of the driver's and passenger's seats for safety.**
- **When inspecting the airbag rear harness, disconnect the side airbag module connector, curtain airbag module connector and seat belt pretensioner connector for safety reasons.**

WIRING DIAGRAM:

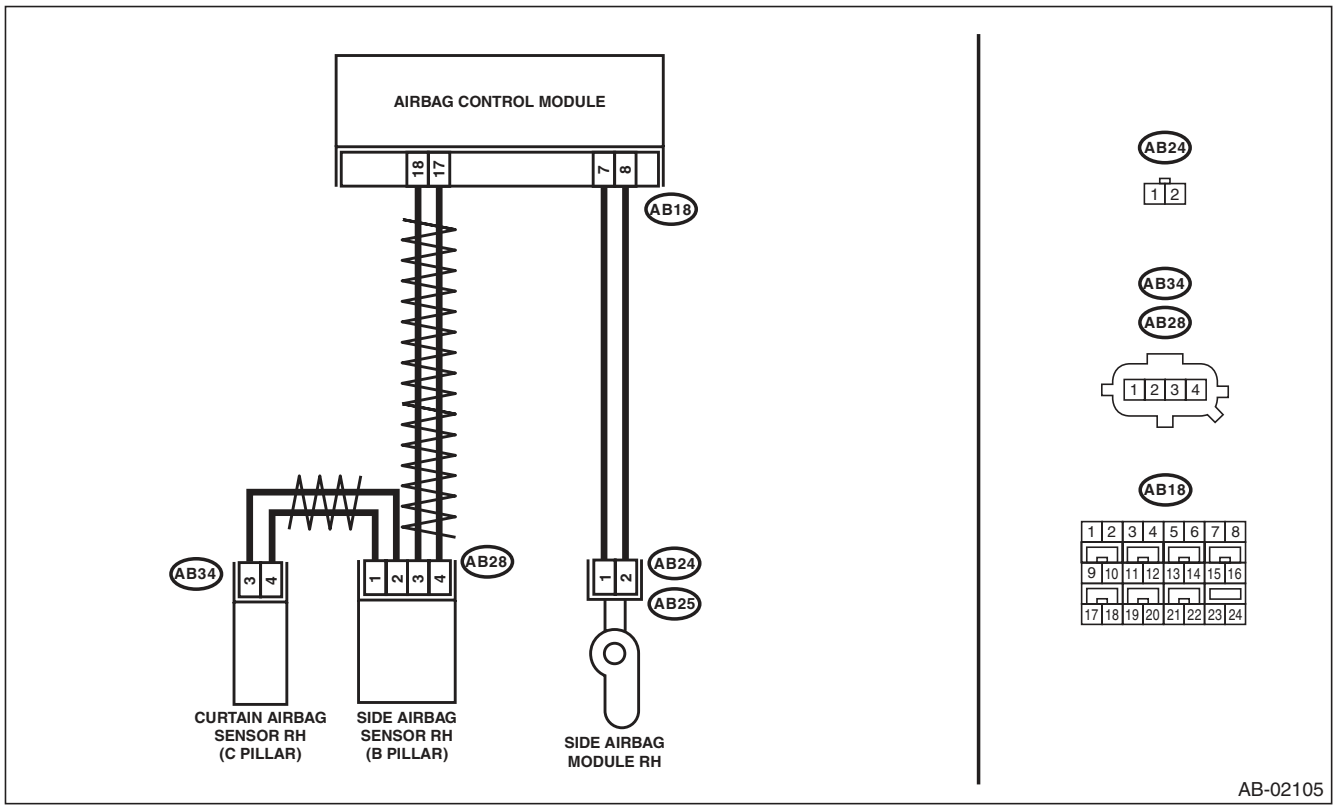

Step		Check	Yes	No
1	**CHECK POOR CONTACT IN CONNECTORS.** Check for poor contact of the connectors between the airbag control module, side airbag module RH and the side airbag sensor RH.	Is there poor contact?	Replace the airbag rear harness along with body harness.	Go to step **2**.

	Step	Check	Yes	No
2	**CHECK SIDE AIRBAG MODULE.** 1) Turn the ignition switch to OFF, disconnect the battery ground cable, and wait for 20 seconds or more. 2) Disconnect the connectors (AB25) and (AB24), and connect the connector (1F) in test harness F to connector (AB24). 3) Connect the airbag resistor to the connector (3F) of test harness F. 4) Connect the battery ground terminal and turn the ignition switch to ON.	Does the airbag warning light illuminate for 6 seconds and go off?	Replace the side airbag module (RH). <Ref. to AB-16, REMOVAL, Side Airbag Module.>	Go to step **3**.
3	**CHECK AIRBAG REAR HARNESS (SIDE AIRBAG MODULE HARNESS RH).** 1) Turn the ignition switch to OFF, disconnect the battery ground cable, and wait for 20 seconds or more. 2) Disconnect the connector (AB26) from seat belt pretensioner (RH). 3) Disconnect the connector (AB33) from curtain airbag module (RH). 4) Disconnect the airbag resistor from test harness F. 5) Disconnect the connectors (AB6, AB17, AB18) from airbag control module. 6) Connect the test harness AG connector (1AG) to the connectors (AB6, AB17, AB18). 7) Measure the resistance between connector (5AG) in the test harness AG and connector (3F) in the test harness F. ***Connector & terminal*** ***(5AG) No. 5 — (3F) No. 4:*** ***(5AG) No. 7 — (3F) No. 3:***	Is the resistance less than 10 Ω?	Go to step **4**.	Replace the airbag rear harness along with body harness.
4	**CHECK AIRBAG REAR HARNESS (SIDE AIRBAG MODULE HARNESS RH).** Measure the resistance between connector (5AG) terminals in the test harness AG. ***Connector & terminal*** ***(5AG) No. 5 — (5AG) No. 7:***	Is the resistance 1 MΩ or more?	Go to step **5**.	Replace the airbag rear harness along with body harness.
5	**CHECK AIRBAG REAR HARNESS (SIDE AIRBAG MODULE HARNESS RH).** Measure the resistance between connector (5AG) in the test harness AG and chassis ground. ***Connector & terminal*** ***(5AG) No. 5 — Chassis ground:*** ***(5AG) No. 7 — Chassis ground:***	Is the resistance 1 MΩ or more?	Go to step **6**.	Replace the airbag rear harness along with body harness.
6	**CHECK AIRBAG CONTROL MODULE.** 1) Connect all connectors. 2) Clear the memory. 3) Perform the Inspection Mode. 4) Read the DTC.	Is the same DTC displayed?	Replace the airbag control module. <Ref. to AB-20, Airbag Control Module.>	Go to step **7**.
7	**CHECK FOR ANY OTHER DTC ON DISPLAY.**	Is any other DTC displayed?	Check DTC using "List of Diagnostic Trouble Code (DTC)". <Ref. to AB(diag)-38, List of Diagnostic Trouble Code (DTC).>	Finish the diagnosis.

R: DTC 42 SIDE AIRBAG LH FAILURE

DTC DETECTING CONDITION:

- Side airbag harness (LH) is faulty.
- Side airbag module (LH) is faulty.
- Airbag control module is faulty.

CAUTION:

- **Before diagnosing the airbag system, be sure to turn the ignition switch to OFF, disconnect the ground cable from the battery, and wait 20 seconds or more before starting to work.**
- **When replacing the airbag module, seat belt pretensioner, roll connector, control module and sensor, reconnect each part and check that the warning light operates properly.**
- **When inspecting the airbag main harness, disconnect the airbag module connectors of the driver's and passenger's seats for safety.**
- **When inspecting the airbag rear harness, disconnect the side airbag module connector, curtain airbag module connector and seat belt pretensioner connector for safety reasons.**

WIRING DIAGRAM:

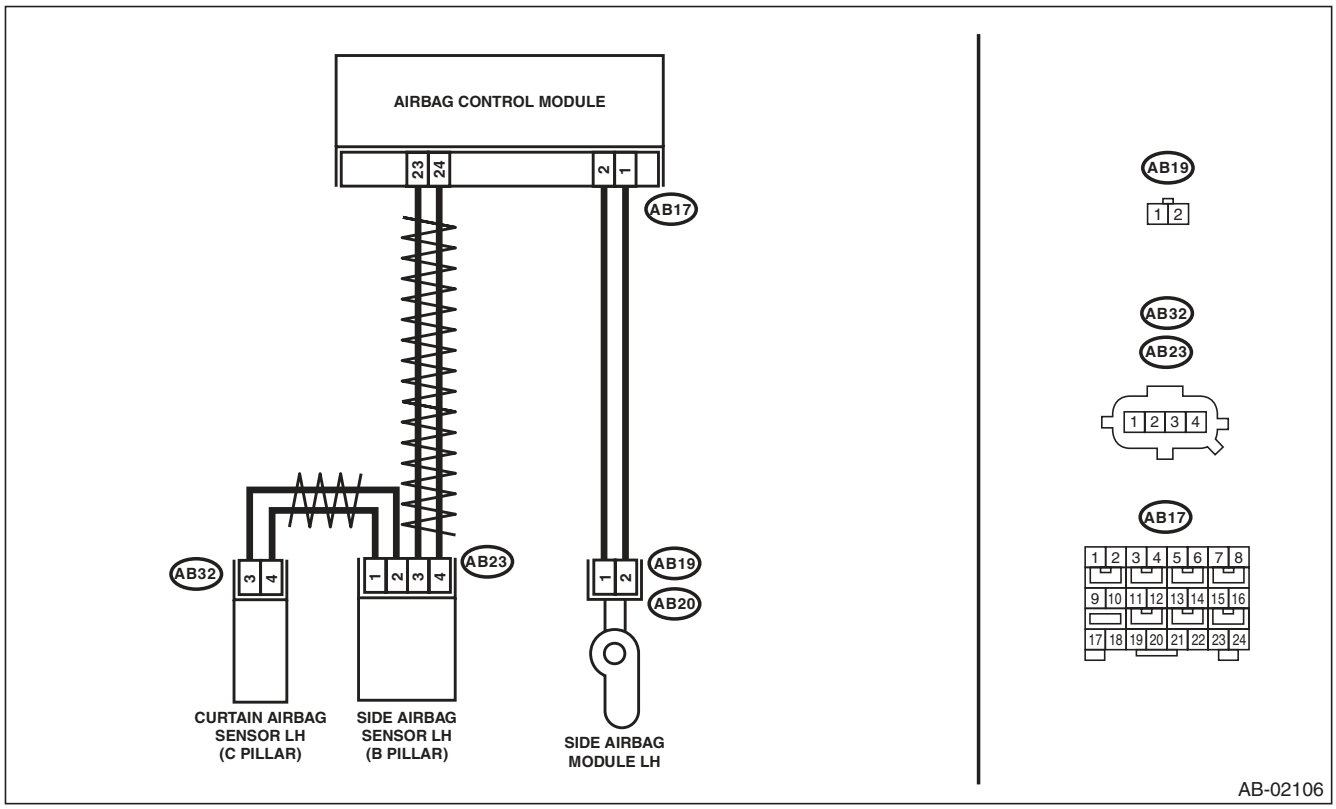

Step		Check	Yes	No
1	**CHECK POOR CONTACT IN CONNECTORS.** Check for poor contact of the connectors between the airbag control module, side airbag module LH and the side airbag sensor LH.	Is there poor contact?	Replace the airbag rear harness along with body harness.	Go to step **2**.

	Step	Check	Yes	No
2	**CHECK SIDE AIRBAG MODULE.** 1) Turn the ignition switch to OFF, disconnect the battery ground cable, and wait for 20 seconds or more. 2) Disconnect the connectors (AB20) and (AB19), and connect the connector (1F) in test harness F to connector (AB19). 3) Connect the airbag resistor to the connector (3F) of test harness F. 4) Connect the battery ground terminal and turn the ignition switch to ON.	Does the airbag warning light illuminate for 6 seconds and go off?	Replace the side airbag module (LH). <Ref. to AB-16, REMOVAL, Side Airbag Module.>	Go to step **3**.
3	**CHECK AIRBAG REAR HARNESS (SIDE AIRBAG MODULE HARNESS LH).** 1) Turn the ignition switch to OFF, disconnect the battery ground cable, and wait for 20 seconds or more. 2) Disconnect the connector (AB21) from seat belt pretensioner (LH). 3) Disconnect the connector (AB31) from curtain airbag module (LH). 4) Disconnect the airbag resistor from test harness. 5) Disconnect the connectors (AB6, AB17, AB18) from airbag control module. 6) Connect the test harness AG connector (1AG) to the connectors (AB6, AB17, AB18). 7) Measure the resistance between connector (5AG) in the test harness AG and connector (3F) in the test harness F. ***Connector & terminal*** ***(5AG) No. 1 — (3F) No. 3:*** ***(5AG) No. 3 — (3F) No. 4:***	Is the resistance less than 10 Ω?	Go to step **4**.	Replace the airbag rear harness along with body harness.
4	**CHECK AIRBAG REAR HARNESS (SIDE AIRBAG MODULE HARNESS LH).** Measure the resistance between connector (5AG) terminals in the test harness AG. ***Connector & terminal*** ***(5AG) No. 1 — (5AG) No. 3:***	Is the resistance 1 MΩ or more?	Go to step **5**.	Replace the airbag rear harness along with body harness.
5	**CHECK AIRBAG REAR HARNESS (SIDE AIRBAG MODULE HARNESS LH).** Measure the resistance between connector (5AG) in the test harness AG and chassis ground. ***Connector & terminal*** ***(5AG) No. 1 — Chassis ground:*** ***(5AG) No. 3 — Chassis ground:***	Is the resistance 1 MΩ or more?	Go to step **6**.	Replace the airbag rear harness along with body harness.
6	**CHECK AIRBAG CONTROL MODULE.** 1) Connect all connectors. 2) Clear the memory. 3) Perform the Inspection Mode. 4) Read the DTC.	Is the same DTC displayed?	Replace the airbag control module. <Ref. to AB-20, Airbag Control Module.>	Go to step **7**.
7	**CHECK FOR ANY OTHER DTC ON DISPLAY.**	Is any other DTC displayed?	Check DTC using "List of Diagnostic Trouble Code (DTC)". <Ref. to AB(diag)-38, List of Diagnostic Trouble Code (DTC).>	Finish the diagnosis.

S: DTC 45 SIDE AIRBAG RH FAILURE

DTC DETECTING CONDITION:

- Side airbag harness (RH) is shorted to power supply.
- Airbag control module is faulty.

CAUTION:

- **Before diagnosing the airbag system, be sure to turn the ignition switch to OFF, disconnect the ground cable from the battery, and wait 20 seconds or more before starting to work.**
- **When replacing the airbag module, seat belt pretensioner, roll connector, control module and sensor, reconnect each part and check that the warning light operates properly.**
- **When inspecting the airbag main harness, disconnect the airbag module connectors of the driver's and passenger's seats for safety.**
- **When inspecting the airbag rear harness, disconnect the side airbag module connector, curtain airbag module connector and seat belt pretensioner connector for safety reasons.**

WIRING DIAGRAM:

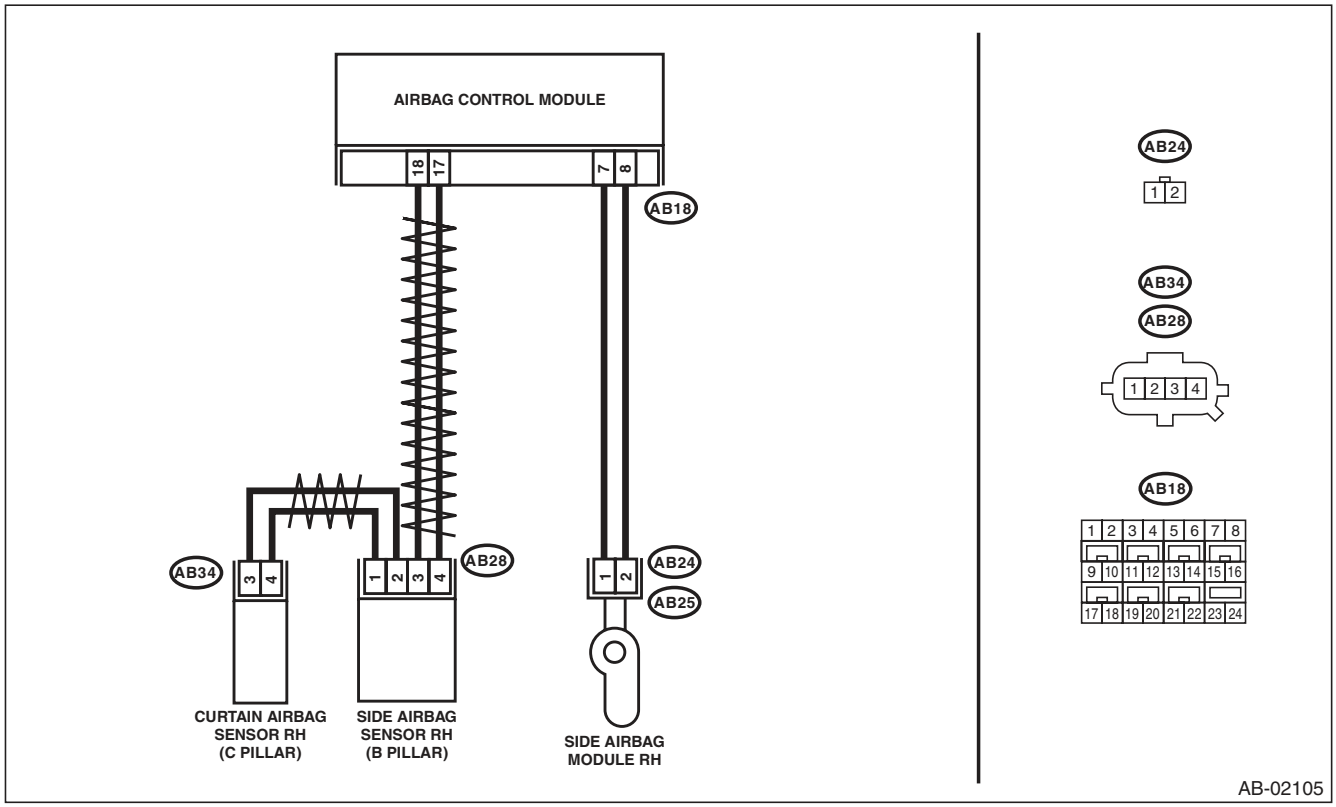

Diagnostic Chart with Trouble Code

	Step	Check	Yes	No
1	**CHECK POOR CONTACT IN CONNECTORS.** Check for poor contact of the connectors between the airbag control module, side airbag module RH and the side airbag sensor RH.	Is there poor contact?	Replace the airbag rear harness along with body harness.	Go to step **2**.
2	**CHECK SIDE AIRBAG MODULE.** 1) Turn the ignition switch to OFF, disconnect the battery ground cable, and wait for 20 seconds or more. 2) Disconnect the connectors (AB25) and (AB24), and connect the connector (1F) in test harness F to connector (AB24). 3) Connect the airbag resistor to the connector (3F) of test harness F. 4) Connect the battery ground terminal and turn the ignition switch to ON.	Does the airbag warning light illuminate for 6 seconds and go off?	Replace the side airbag module (RH). <Ref. to AB-16, REMOVAL, Side Airbag Module.>	Go to step **3**.
3	**CHECK AIRBAG REAR HARNESS (SIDE AIRBAG MODULE HARNESS RH).** 1) Turn the ignition switch to OFF, disconnect the battery ground cable, and wait for 20 seconds or more. 2) Disconnect the connector (AB26) from seat belt pretensioner (RH). 3) Disconnect the connector (AB33) from curtain airbag module (RH). 4) Disconnect the airbag resistor from test harness. 5) Disconnect the connectors (AB6, AB17, AB18) from airbag control module. 6) Connect the test harness AG connector (1AG) to the connectors (AB6, AB17, AB18). 7) Connect the battery ground terminal and turn the ignition switch to ON. 8) Measure the voltage between connector (5AG) in the test harness AG and chassis ground. ***Connector & terminal*** ***(5AG) No. 5 (+) — Chassis ground (–):*** ***(5AG) No. 7 (+) — Chassis ground (–):***	Is the voltage less than 1 V?	Go to step **4**.	Replace the airbag rear harness along with body harness.
4	**CHECK AIRBAG CONTROL MODULE.** 1) Connect all connectors. 2) Clear the memory. 3) Perform the Inspection Mode. 4) Read the DTC.	Is the same DTC displayed?	Replace the airbag control module. <Ref. to AB-20, Airbag Control Module.>	Go to step **5**.
5	**CHECK FOR ANY OTHER DTC ON DISPLAY.**	Is any other DTC displayed?	Check DTC using "List of Diagnostic Trouble Code (DTC)". <Ref. to AB(diag)-38, List of Diagnostic Trouble Code (DTC).>	Finish the diagnosis.

T: DTC 46 SIDE AIRBAG LH FAILURE

DTC DETECTING CONDITION:

- Side airbag harness (LH) is shorted to power supply.
- Airbag control module is faulty.

CAUTION:

- **Before diagnosing the airbag system, be sure to turn the ignition switch to OFF, disconnect the ground cable from the battery, and wait 20 seconds or more before starting to work.**
- **When replacing the airbag module, seat belt pretensioner, roll connector, control module and sensor, reconnect each part and check that the warning light operates properly.**
- **When inspecting the airbag main harness, disconnect the airbag module connectors of the driver's and passenger's seats for safety.**
- **When inspecting the airbag rear harness, disconnect the side airbag module connector, curtain airbag module connector and seat belt pretensioner connector for safety reasons.**

WIRING DIAGRAM:

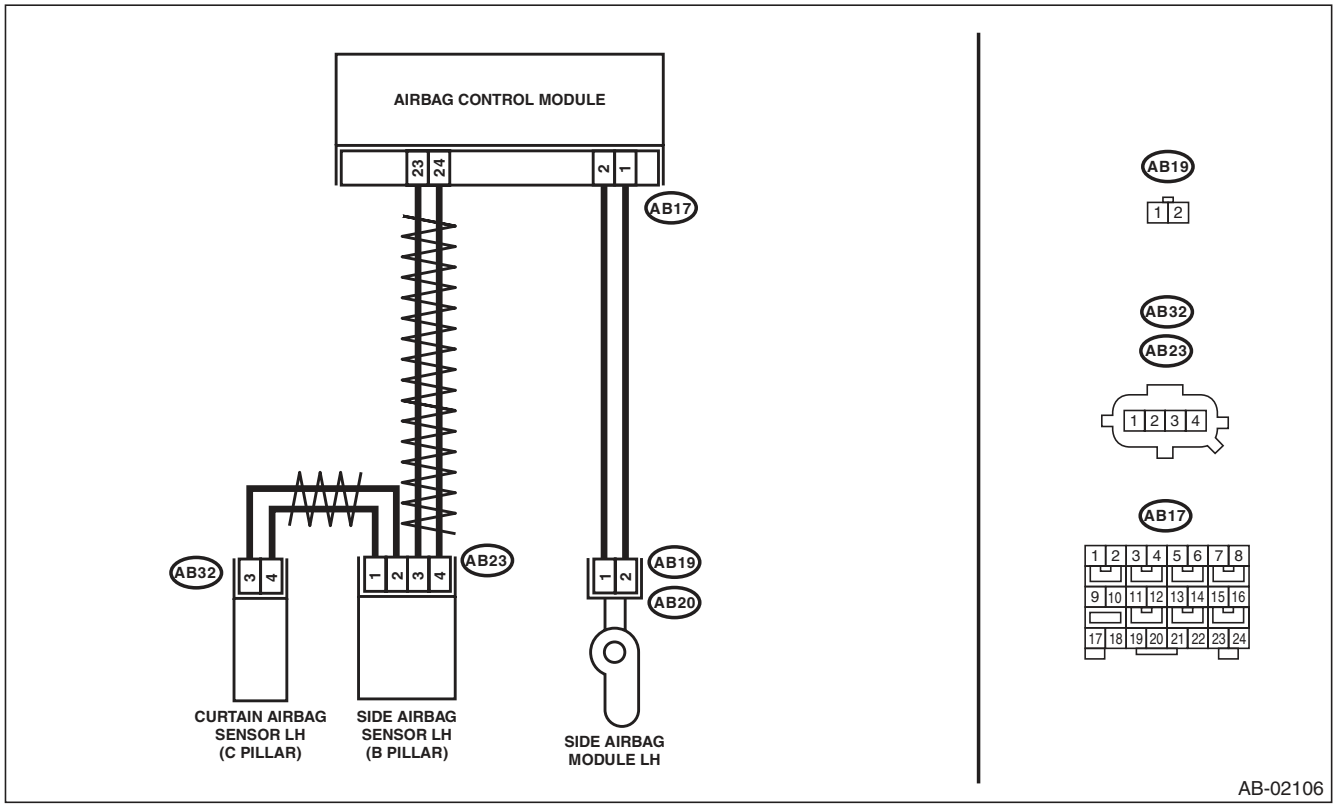

Diagnostic Chart with Trouble Code

	Step	Check	Yes	No
1	**CHECK POOR CONTACT IN CONNECTORS.** Check for poor contact of the connectors between the airbag control module, side airbag module LH and the side airbag sensor LH.	Is there poor contact?	Replace the airbag rear harness along with body harness.	Go to step **2**.
2	**CHECK SIDE AIRBAG MODULE.** 1) Turn the ignition switch to OFF, disconnect the battery ground cable, and wait for 20 seconds or more. 2) Disconnect the connectors (AB20) and (AB19), and connect the connector (1F) in test harness F to connector (AB19). 3) Connect the airbag resistor to the connector (3F) of test harness F. 4) Connect the battery ground terminal and turn the ignition switch to ON.	Does the airbag warning light illuminate for 6 seconds and go off?	Replace the side airbag module (LH). <Ref. to AB-16, REMOVAL, Side Airbag Module.>	Go to step **3**.
3	**CHECK AIRBAG REAR HARNESS (SIDE AIRBAG MODULE HARNESS LH).** 1) Turn the ignition switch to OFF, disconnect the battery ground cable, and wait for 20 seconds or more. 2) Disconnect the connector (AB21) from seat belt pretensioner (LH). 3) Disconnect the connector (AB31) from curtain airbag module (LH). 4) Disconnect the airbag resistor from test harness. 5) Disconnect the connectors (AB6, AB17, AB18) from airbag control module. 6) Connect the test harness AG connector (1AG) to the connectors (AB6, AB17, AB18). 7) Connect the battery ground terminal and turn the ignition switch to ON. 8) Measure the voltage between connector (5AG) in the test harness AG and chassis ground. ***Connector & terminal*** ***(5AG) No. 3 (+) — Chassis ground (–):*** ***(5AG) No. 1 (+) — Chassis ground (–):***	Is the voltage less than 1 V?	Go to step **4**.	Replace the airbag rear harness along with body harness.
4	**CHECK AIRBAG CONTROL MODULE.** 1) Connect all connectors. 2) Clear the memory. 3) Perform the Inspection Mode. 4) Read the DTC.	Is the same DTC displayed?	Replace the airbag control module. <Ref. to AB-20, Airbag Control Module.>	Go to step **5**.
5	**CHECK FOR ANY OTHER DTC ON DISPLAY.**	Is any other DTC displayed?	Check DTC using "List of Diagnostic Trouble Code (DTC)". <Ref. to AB(diag)-38, List of Diagnostic Trouble Code (DTC).>	Finish the diagnosis.

U: DTC 53 SIDE AIRBAG SENSOR RH FAILURE

DTC DETECTING CONDITION:
Side airbag sensor (RH) is faulty.
When DTC 53 is displayed, the circuit within the side airbag sensor (RH) is faulty.
Replace the side airbag sensor (RH). <Ref. to AB-22, Side Airbag Sensor.>

V: DTC 54 SIDE AIRBAG SENSOR LH FAILURE

DTC DETECTING CONDITION:
Side airbag sensor (LH) is faulty.
When DTC 54 is displayed, the circuit within the side airbag sensor (LH) is faulty.
Replace the side airbag sensor (LH). <Ref. to AB-22, Side Airbag Sensor.>

W: DTC 55 SIDE CURTAIN AIRBAG FIRING OUTPUT

This DTC is displayed when the side airbag module and curtain airbag module are deployed.
Once this DTC is displayed, the memory cannot be cleared. Replace the following parts.

- Airbag control module <Ref. to AB-20, Airbag Control Module.>
- Front seat with side airbag module (Operating side) <Ref. to SE-9, Front Seat.>
- Side airbag sensor (Operating side) <Ref. to AB-22, Side Airbag Sensor.>
- Curtain airbag module (Operating side) <Ref. to AB-18, Curtain Airbag Module.>
- Curtain airbag sensor (Operating side) <Ref. to AB-23, Curtain Airbag Sensor.>
- Satellite safing sensor <Ref. to AB-24, Satellite Safing Sensor.>

X: DTC 58 CURTAIN AIRBAG SENSOR RH FAILURE

DTC DETECTING CONDITION:
Curtain airbag sensor (RH) is faulty.
If DTC 58 is displayed, the circuit within the curtain airbag sensor (RH) is faulty.
Replace the curtain airbag sensor (RH). <Ref. to AB-23, Curtain Airbag Sensor.>

Y: DTC 59 CURTAIN AIRBAG SENSOR LH FAILURE

DTC DETECTING CONDITION:
Curtain airbag sensor (LH) is faulty.
If DTC 59 is displayed, the circuit within the curtain airbag sensor (LH) is faulty.
Replace the curtain airbag sensor (LH). <Ref. to AB-23, Curtain Airbag Sensor.>

Z: DTC 61 BELT PRETENSIONER RH FAILURE

DTC DETECTING CONDITION:

- Seat belt pretensioner (RH) circuit is open, shorted or shorted to ground.
- Airbag control module is faulty.
- Pretensioner is faulty.
- Pretensioner harness is faulty.

CAUTION:

- **Before diagnosing the airbag system, be sure to turn the ignition switch to OFF, disconnect the ground cable from the battery, and wait 20 seconds or more before starting to work.**
- **When replacing the airbag module, seat belt pretensioner, roll connector, control module and sensor, reconnect each part and check that the warning light operates properly.**
- **When inspecting the airbag main harness, disconnect the airbag module connectors of the driver's and passenger's seats for safety.**
- **When inspecting the airbag rear harness, disconnect the side airbag module connector, curtain airbag module connector and seat belt pretensioner connector for safety reasons.**

WIRING DIAGRAM:

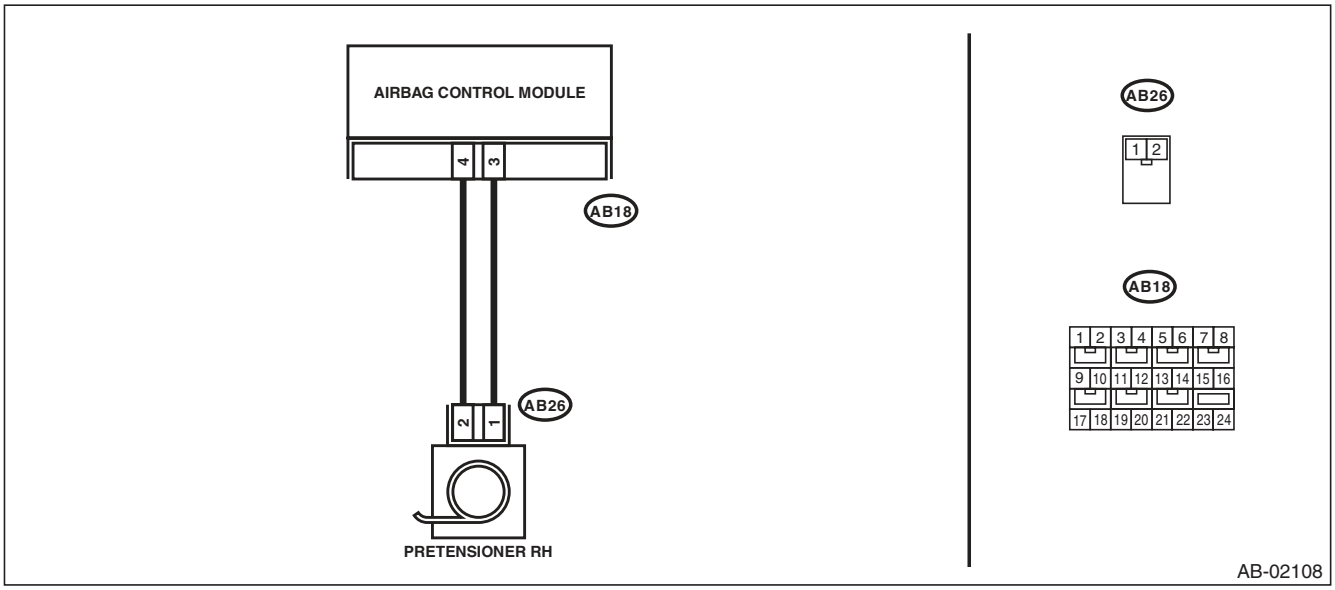

Step		Check	Yes	No
1	**CHECK POOR CONTACT IN CONNECTORS.** Check for poor contact of the connectors between the airbag control module and the seat belt pretensioner RH.	Is there poor contact?	Replace the airbag rear harness along with body harness.	Go to step **2**.
2	**CHECK SEAT BELT PRETENSIONER.** 1) Turn the ignition switch to OFF, disconnect the battery ground cable, and wait for 20 seconds or more. 2) Disconnect the connector (AB26) from seat belt pretensioner (RH). 3) Connect the connector (1N) in the test harness N to the connector (AB26). 4) Connect the airbag resistor to the connector (2N) of test harness N. 5) Connect the battery ground terminal and turn the ignition switch to ON.	Does the airbag warning light illuminate for 6 seconds and go off?	Replace the seat belt pretensioner (RH). <Ref. to SB-18, Front Seat Belt.>	Go to step **3**.

	Step	Check	Yes	No
3	**CHECK AIRBAG REAR HARNESS (PRE-TENSIONER HARNESS RH).** 1) Turn the ignition switch to OFF, disconnect the battery ground cable, and wait for 20 seconds or more. 2) Disconnect the airbag resistor from test harness. 3) Disconnect connector (AB24) from side airbag module (RH). 4) Disconnect the connector (AB33) from curtain airbag module (RH). 5) Disconnect the connectors (AB6, AB17, AB18) from airbag control module. 6) Connect the test harness AG connector (1AG) to the connectors (AB6, AB17, AB18). 7) Measure the resistance between connector (3AG) in the test harness AG and connector (2N) in the test harness N. ***Connector & terminal*** ***(3AG) No. 18 — (2N) No. 1:*** ***(3AG) No. 20 — (2N) No. 2:***	Is the resistance less than 10 Ω?	Go to step **4**.	Replace the airbag rear harness along with body harness.
4	**CHECK AIRBAG REAR HARNESS (PRE-TENSIONER HARNESS RH).** Measure the resistance between connector (3AG) terminals in the test harness AG. ***Connector & terminal*** ***(3AG) No. 18 — (3AG) No. 20:***	Is the resistance 1 MΩ or more?	Go to step **5**.	Replace the airbag rear harness along with body harness.
5	**CHECK AIRBAG REAR HARNESS (PRE-TENSIONER HARNESS RH).** Measure the resistance between connector (3AG) in the test harness AG and chassis ground. ***Connector & terminal*** ***(3AG) No. 18 — Chassis ground:*** ***(3AG) No. 20 — Chassis ground:***	Is the resistance 1 MΩ or more?	Go to step **6**.	Replace the airbag rear harness along with body harness.
6	**CHECK AIRBAG CONTROL MODULE.** 1) Connect all connectors. 2) Clear the memory. 3) Perform the Inspection Mode. 4) Read the DTC.	Is the same DTC displayed?	Replace the airbag control module. <Ref. to AB-20, Airbag Control Module.>	Go to step **7**.
7	**CHECK FOR ANY OTHER DTC ON DISPLAY.**	Is any other DTC displayed?	Check DTC using "List of Diagnostic Trouble Code (DTC)". <Ref. to AB(diag)-38, List of Diagnostic Trouble Code (DTC).>	Finish the diagnosis.

AA:DTC 62 BELT PRETENSIONER LH FAILURE

DTC DETECTING CONDITION:

- Seat belt pretensioner (LH) circuit is open, shorted or shorted to ground.
- Airbag control module is faulty.
- Pretensioner is faulty.
- Pretensioner harness is faulty.

CAUTION:

- **Before diagnosing the airbag system, be sure to turn the ignition switch to OFF, disconnect the ground cable from the battery, and wait 20 seconds or more before starting to work.**
- **When replacing the airbag module, seat belt pretensioner, roll connector, control module and sensor, reconnect each part and check that the warning light operates properly.**
- **When inspecting the airbag main harness, disconnect the airbag module connectors of the driver's and passenger's seats for safety.**
- **When inspecting the airbag rear harness, disconnect the side airbag module connector, curtain airbag module connector and seat belt pretensioner connector for safety reasons.**

WIRING DIAGRAM:

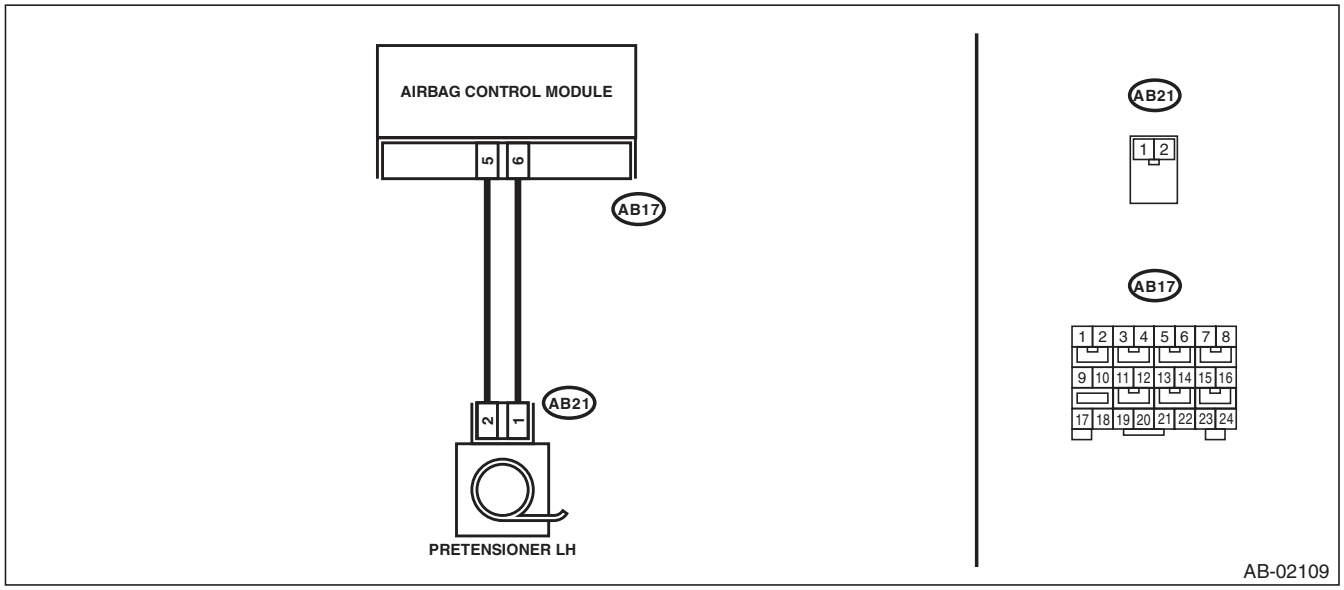

Step		Check	Yes	No
1	**CHECK POOR CONTACT IN CONNECTORS.** Check for poor contact of the connectors between the airbag control module and the seat belt pretensioner LH.	Is there poor contact?	Replace the airbag rear harness along with body harness.	Go to step **2**.
2	**CHECK SEAT BELT PRETENSIONER.** 1) Turn the ignition switch to OFF, disconnect the battery ground cable, and wait for 20 seconds or more. 2) Disconnect the connector (AB21) from seat belt pretensioner (LH). 3) Connect the connector (1N) in the test harness N to the connector (AB21). 4) Connect the airbag resistor to the connector (2N) of test harness N. 5) Connect the battery ground terminal and turn the ignition switch to ON.	Does the airbag warning light illuminate for 6 seconds and go off?	Replace the seat belt pretensioner (LH). <Ref. to SB-18, Front Seat Belt.>	Go to step **3**.

	Step	Check	Yes	No
3	**CHECK AIRBAG REAR HARNESS (PRE-TENSIONER HARNESS LH).** 1) Turn the ignition switch to OFF, disconnect the battery ground cable, and wait for 20 seconds or more. 2) Disconnect the airbag resistor from test harness. 3) Disconnect connector (AB19) from side airbag module (LH). 4) Disconnect the connector (AB31) from curtain airbag module (LH). 5) Disconnect the connectors (AB6, AB17, AB18) from airbag control module. 6) Connect the test harness AG connector (1AG) to the connectors (AB6, AB17, AB18). 7) Measure the resistance between connector (3AG) in the test harness AG and connector (2N) in the test harness N. ***Connector & terminal*** ***(3AG) No. 12 — (2N) No. 1:*** ***(3AG) No. 10 — (2N) No. 2:***	Is the resistance less than 10 Ω?	Go to step **4**.	Replace the airbag rear harness along with body harness.
4	**CHECK AIRBAG REAR HARNESS (PRE-TENSIONER HARNESS LH).** Measure the resistance between connector (3AG) terminals in the test harness AG. ***Connector & terminal*** ***(3AG) No. 10 — (3AG) No. 12:***	Is the resistance 1 MΩ or more?	Go to step **5**.	Replace the airbag rear harness along with body harness.
5	**CHECK AIRBAG REAR HARNESS (PRE-TENSIONER HARNESS LH).** Measure the resistance between connector (3AG) in the test harness AG and chassis ground. ***Connector & terminal*** ***(3AG) No. 10 — Chassis ground:*** ***(3AG) No. 12 — Chassis ground:***	Is the resistance 1 MΩ or more?	Go to step **6**.	Replace the airbag rear harness along with body harness.
6	**CHECK AIRBAG CONTROL MODULE.** 1) Connect all connectors. 2) Clear the memory. 3) Perform the Inspection Mode. 4) Read the DTC.	Is the same DTC displayed?	Replace the airbag control module. <Ref. to AB-20, Airbag Control Module.>	Go to step **7**.
7	**CHECK FOR ANY OTHER DTC ON DISPLAY.**	Is any other DTC displayed?	Check DTC using "List of Diagnostic Trouble Code (DTC)". <Ref. to AB(diag)-38, List of Diagnostic Trouble Code (DTC).>	Finish the diagnosis.

AB:DTC 65 BELT PRETENSIONER RH FAILURE

DTC DETECTING CONDITION:

- Seat belt pretensioner (RH) circuit is shorted to power supply.
- Pretensioner is faulty.
- Pretensioner harness is faulty.
- Airbag control module is faulty.

CAUTION:

- **Before diagnosing the airbag system, be sure to turn the ignition switch to OFF, disconnect the ground cable from the battery, and wait 20 seconds or more before starting to work.**
- **When replacing the airbag module, seat belt pretensioner, roll connector, control module and sensor, reconnect each part and check that the warning light operates properly.**
- **When inspecting the airbag main harness, disconnect the airbag module connectors of the driver's and passenger's seats for safety.**
- **When inspecting the airbag rear harness, disconnect the side airbag module connector, curtain airbag module connector and seat belt pretensioner connector for safety reasons.**

WIRING DIAGRAM:

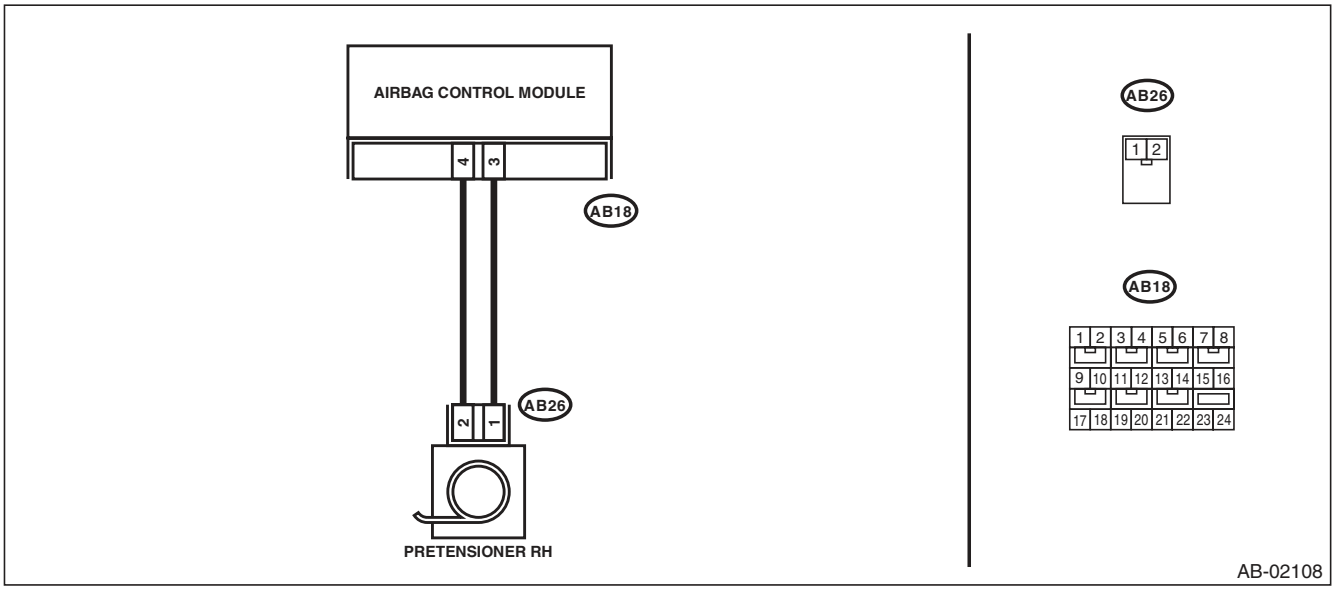

	Step	Check	Yes	No
1	**CHECK POOR CONTACT IN CONNECTORS.** Check for poor contact of the connectors between the airbag control module and the seat belt pretensioner RH.	Is there poor contact?	Replace the airbag rear harness along with body harness.	Go to step **2**.
2	**CHECK SEAT BELT PRETENSIONER.** 1) Turn the ignition switch to OFF, disconnect the battery ground cable, and wait for 20 seconds or more. 2) Disconnect the connector (AB26) from seat belt pretensioner (RH). 3) Connect the connector (1N) in the test harness N to the connector (AB26). 4) Connect the airbag resistor to the connector (2N) of test harness N. 5) Connect the battery ground terminal and turn the ignition switch to ON.	Does the airbag warning light illuminate for 6 seconds and go off?	Replace the seat belt pretensioner (RH). <Ref. to SB-18, Front Seat Belt.>	Go to step **3**.
3	**CHECK AIRBAG REAR HARNESS (PRETENSIONER HARNESS RH).** 1) Turn the ignition switch to OFF, disconnect the battery ground cable, and wait for 20 seconds or more. 2) Disconnect the airbag resistor from test harness. 3) Disconnect connector (AB24) from side airbag module (RH). 4) Disconnect the connector (AB33) from curtain airbag module (RH). 5) Disconnect the connectors (AB6, AB17, AB18) from airbag control module. 6) Connect the test harness AG connector (1AG) to the connectors (AB6, AB17, AB18). 7) Connect the battery ground terminal and turn the ignition switch to ON. 8) Measure the voltage between connector (3AG) in the test harness AG and chassis ground. ***Connector & terminal*** ***(3AG) No. 20 (+) — Chassis ground (–):*** ***(3AG) No. 18 (+) — Chassis ground (–):***	Is the voltage less than 1 V?	Go to step **4**.	Replace the airbag rear harness along with body harness.
4	**CHECK AIRBAG CONTROL MODULE.** 1) Connect all connectors. 2) Clear the memory. 3) Perform the Inspection Mode. 4) Read the DTC.	Is the same DTC displayed?	Replace the airbag control module. <Ref. to AB-20, Airbag Control Module.>	Go to step **5**.
5	**CHECK FOR ANY OTHER DTC ON DISPLAY.**	Is any other DTC displayed?	Check DTC using "List of Diagnostic Trouble Code (DTC)". <Ref. to AB(diag)-38, List of Diagnostic Trouble Code (DTC).>	Finish the diagnosis.

AC:DTC 66 BELT PRETENSIONER LH FAILURE

DTC DETECTING CONDITION:

- Seat belt pretensioner (LH) circuit is shorted to power supply.
- Pretensioner is faulty.
- Pretensioner harness is faulty.
- Airbag control module is faulty.

CAUTION:

- **Before diagnosing the airbag system, be sure to turn the ignition switch to OFF, disconnect the ground cable from the battery, and wait 20 seconds or more before starting to work.**
- **When replacing the airbag module, seat belt pretensioner, roll connector, control module and sensor, reconnect each part and check that the warning light operates properly.**
- **When inspecting the airbag main harness, disconnect the airbag module connectors of the driver's and passenger's seats for safety.**
- **When inspecting the airbag rear harness, disconnect the side airbag module connector, curtain airbag module connector and seat belt pretensioner connector for safety reasons.**

WIRING DIAGRAM:

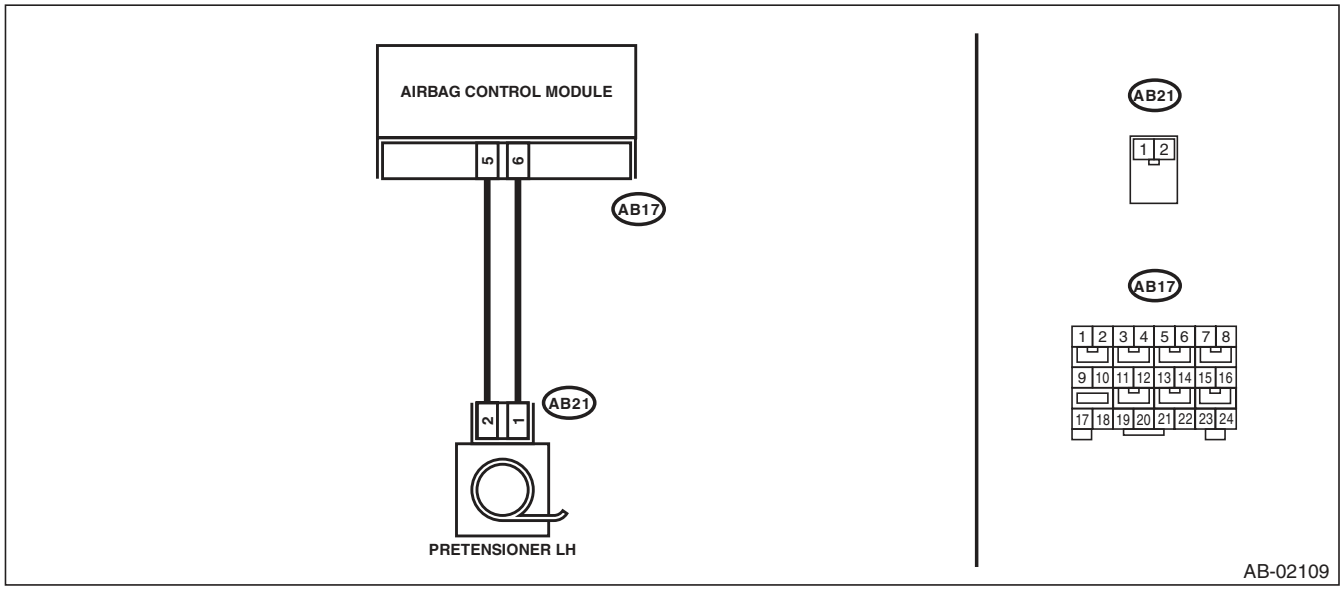

Diagnostic Chart with Trouble Code

	Step	Check	Yes	No
1	**CHECK POOR CONTACT IN CONNECTORS.** Check for poor contact of the connectors between the airbag control module and the seat belt pretensioner LH.	Is there poor contact?	Replace the airbag rear harness along with body harness.	Go to step **2**.
2	**CHECK SEAT BELT PRETENSIONER.** 1) Turn the ignition switch to OFF, disconnect the battery ground cable, and wait for 20 seconds or more. 2) Disconnect the connector (AB21) from seat belt pretensioner (LH). 3) Connect the connector (1N) in the test harness N to the connector (AB21). 4) Connect the airbag resistor to the connector (2N) of test harness N. 5) Connect the battery ground terminal and turn the ignition switch to ON.	Does the airbag warning light illuminate for 6 seconds and go off?	Replace the seat belt pretensioner (LH). <Ref. to SB-18, Front Seat Belt.>	Go to step **3**.
3	**CHECK AIRBAG REAR HARNESS (PRETENSIONER HARNESS LH).** 1) Turn the ignition switch to OFF, disconnect the battery ground cable, and wait for 20 seconds or more. 2) Disconnect the airbag resistor from test harness. 3) Disconnect connector (AB19) from side airbag module (LH). 4) Disconnect the connector (AB31) from curtain airbag module (LH). 5) Disconnect the connectors (AB6, AB17, AB18) from airbag control module. 6) Connect the test harness AG connector (1AG) to the connectors (AB6, AB17, AB18). 7) Connect the battery ground terminal and turn the ignition switch to ON. 8) Measure the voltage between connector (3AG) in the test harness AG and chassis ground. ***Connector & terminal*** ***(3AG) No. 10 (+) — Chassis ground (–):*** ***(3AG) No. 12 (+) — Chassis ground (–):***	Is the voltage less than 1 V?	Go to step **4**.	Replace the airbag rear harness along with body harness.
4	**CHECK AIRBAG CONTROL MODULE.** 1) Connect all connectors. 2) Clear the memory. 3) Perform the Inspection Mode. 4) Read the DTC.	Is the same DTC displayed?	Replace the airbag control module. <Ref. to AB-20, Airbag Control Module.>	Go to step **5**.
5	**CHECK FOR ANY OTHER DTC ON DISPLAY.**	Is any other DTC displayed?	Check DTC using "List of Diagnostic Trouble Code (DTC)". <Ref. to AB(diag)-38, List of Diagnostic Trouble Code (DTC).>	Finish the diagnosis.

AD:DTC 71 DRIVER'S AIRBAG FAILURE

DTC DETECTING CONDITION:

- Airbag main harness circuit is open, shorted or shorted to ground.
- Airbag module harness (Driver's side) circuit is open, shorted or shorted to ground.
- Roll connector circuit is open, shorted or shorted to ground.
- Driver's airbag module is faulty.
- Airbag control module is faulty.

CAUTION:

- **Before diagnosing the airbag system, be sure to turn the ignition switch to OFF, disconnect the ground cable from the battery, and wait 20 seconds or more before starting to work.**
- **When replacing the airbag module, seat belt pretensioner, roll connector, control module and sensor, reconnect each part and check that the warning light operates properly.**
- **When inspecting the airbag main harness, disconnect the airbag module connectors of the driver's and passenger's seats for safety.**
- **When inspecting the airbag rear harness, disconnect the side airbag module connector, curtain airbag module connector and seat belt pretensioner connector for safety reasons.**

NOTE:
Prior to starting work, prepare two airbag resistors (98299PA040).

WIRING DIAGRAM:

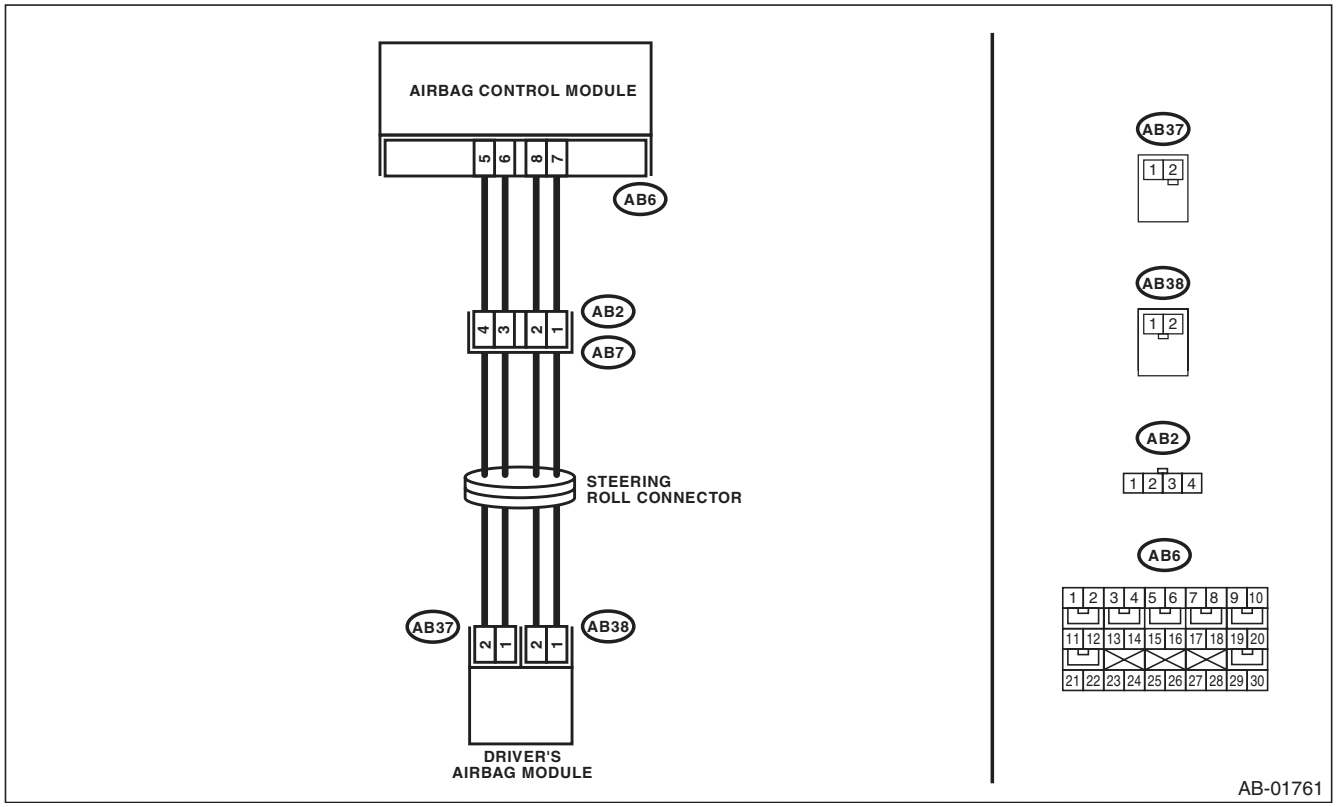

	Step	Check	Yes	No
1	**CHECK POOR CONTACT IN CONNECTORS.** Check for poor contact of the connectors between the airbag control module and the driver's airbag module.	Is there poor contact?	Replace the airbag main harness along with body harness.	Go to step **2**.
2	**CHECK DRIVER'S AIRBAG MODULE.** 1) Turn the ignition switch to OFF, disconnect the battery ground cable, and wait for 20 seconds or more. 2) Remove the driver's airbag module. 3) Connect the connector (1N) in the test harness N to the connector (AB38). 4) Connect the airbag resistor to the connector (2N) of test harness N. 5) Connect the connector (1Q) in the test harness Q to connector (AB37). 6) Connect the airbag resistor to the connector (2Q) in the test harness Q. 7) Connect the battery ground terminal and turn the ignition switch to ON.	Does the airbag warning light illuminate for 6 seconds and go off?	Replace the driver's airbag module. <Ref. to AB-14, Driver's Airbag Module.>	Go to step **3**.
3	**CHECK ROLL CONNECTOR.** 1) Turn the ignition switch to OFF, disconnect the battery ground cable, and wait for 20 seconds or more. 2) Disconnect the test harness N from connector (AB38). 3) Disconnect the test harness Q from connector (AB37). 4) Remove the instrument panel lower cover and disconnect the connector (AB7) from (AB2). 5) Connect the connector (1P) in the test harness P to connector (AB2). 6) Connect the airbag resistor to the connectors (2P) and (3P) of test harness P. 7) Connect the battery ground terminal and turn the ignition switch to ON.	Does the airbag warning light illuminate for 6 seconds and go off?	Replace the roll connector. <Ref. to AB-25, Roll Connector.>	Go to step **4**.
4	**CHECK AIRBAG MAIN HARNESS (DRIVER'S AIRBAG HARNESS).** 1) Turn the ignition switch to OFF, disconnect the battery ground cable, and wait for 20 seconds or more. 2) Disconnect the airbag resistor from the connectors (2P) and (3P) of test harness P. 3) Remove the instrument panel side cover on the passenger's side and disconnect the connectors (AB10) and (AB9). 4) Disconnect the connectors (AB6, AB17, AB18) from the airbag control module, and connect the test harness AG connector (1AG). 5) Measure the resistance between connector (3AG) in the test harness AG and connectors (2P) and (3P) in the test harness P. ***Connector & terminal*** ***(3AG) No. 2 — (3P) No. 3:*** ***(3AG) No. 4 — (3P) No. 4:***	Is the resistance less than 10 Ω?	Go to step **5**.	Replace the airbag main harness along with body harness.

	Step	Check	Yes	No
5	**CHECK AIRBAG MAIN HARNESS (DRIVER'S AIRBAG HARNESS).** Measure the resistance between connectors (3AG) in the test harness AG, and between connector (3AG) and chassis ground. ***Connector & terminal*** ***(3AG) No. 1 — (3AG) No. 2:*** ***(3AG) No. 1 — (3AG) No. 4:*** ***(3AG) No. 2 — (3AG) No. 3:*** ***(3AG) No. 3 — (3AG) No. 4:*** ***(3AG) No. 1 — (3AG) No. 3:*** ***(3AG) No. 3 — Chassis ground:*** ***(3AG) No. 1 — Chassis ground:*** ***(3AG) No. 2 — (3AG) No. 4:*** ***(3AG) No. 2 — Chassis ground:*** ***(3AG) No. 4 — Chassis ground:***	Is the resistance 1 MΩ or more?	Go to step **6**.	Replace the airbag main harness along with body harness.
6	**CHECK AIRBAG CONTROL MODULE.** 1) Connect all connectors. 2) Clear the memory. 3) Perform the Inspection Mode. 4) Read the DTC.	Is the same DTC displayed?	Replace the airbag control module. <Ref. to AB-20, Airbag Control Module.>	Go to step **7**.
7	**CHECK FOR ANY OTHER DTC ON DISPLAY.**	Is any other DTC displayed?	Check DTC using "List of Diagnostic Trouble Code (DTC)". <Ref. to AB(diag)-38, List of Diagnostic Trouble Code (DTC).>	Finish the diagnosis.

AE:DTC 72 PASSENGER'S AIRBAG FAILURE

DTC DETECTING CONDITION:

- Airbag main harness circuit is open, shorted or shorted to ground.
- Airbag module harness (Passenger's side) circuit is open, shorted or shorted to ground.
- Passenger's airbag module is faulty.
- Airbag control module is faulty.

CAUTION:

- **Before diagnosing the airbag system, be sure to turn the ignition switch to OFF, disconnect the ground cable from the battery, and wait 20 seconds or more before starting to work.**
- **When replacing the airbag module, seat belt pretensioner, roll connector, control module and sensor, reconnect each part and check that the warning light operates properly.**
- **When inspecting the airbag main harness, disconnect the airbag module connectors of the driver's and passenger's seats for safety.**
- **When inspecting the airbag rear harness, disconnect the side airbag module connector, curtain airbag module connector and seat belt pretensioner connector for safety reasons.**

NOTE:
Prior to starting work, prepare two airbag resistors (98299PA040).

WIRING DIAGRAM:

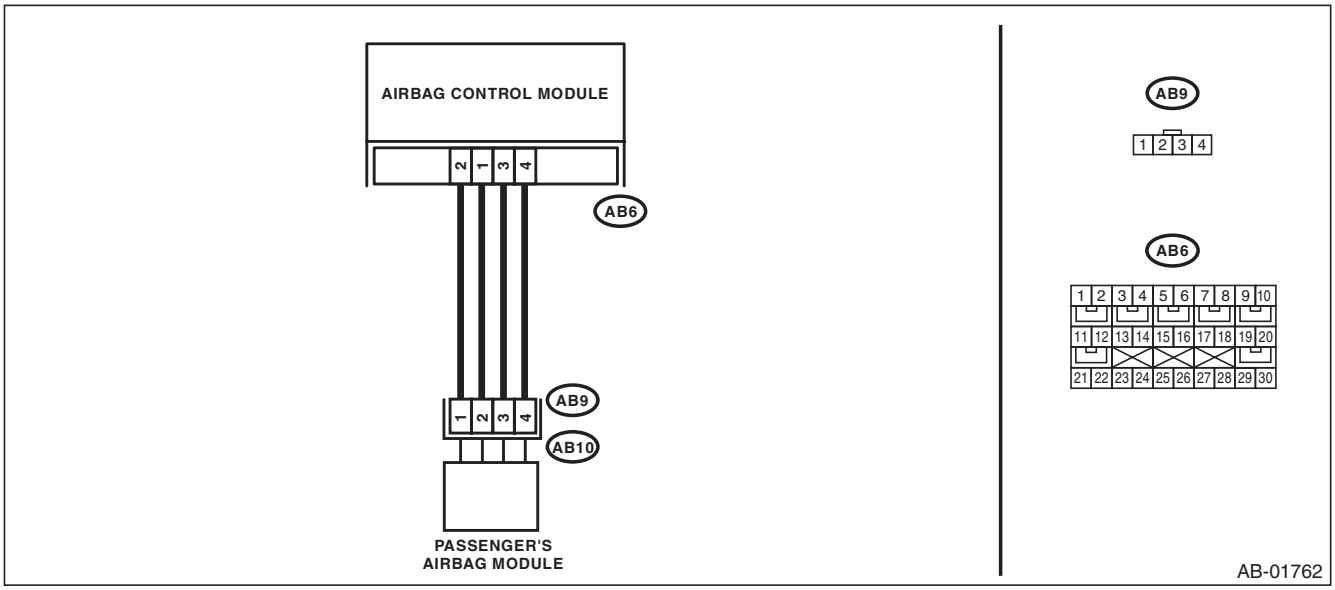

Step		Check	Yes	No
1	**CHECK POOR CONTACT IN CONNECTORS.** Check for poor contact of the connectors between the airbag control module and the passenger's airbag module.	Is there poor contact?	Replace the airbag main harness along with body harness.	Go to step **2**.
2	**CHECK PASSENGER'S AIRBAG MODULE.** 1) Turn the ignition switch to OFF, disconnect the battery ground cable, and wait for 20 seconds or more. 2) Remove the instrument panel side cover on the passenger's side and disconnect the connector (AB10) from (AB9). 3) Connect the connector (1P) in the test harness P to connector (AB9). 4) Connect the airbag resistor to the connectors (2P) and (3P) of test harness P. 5) Connect the battery ground terminal and turn the ignition switch to ON.	Does the airbag warning light illuminate for 6 seconds and go off?	Replace the passenger's airbag module. <Ref. to AB-15, Passenger's Airbag Module.>	Go to step **3**.

	Step	Check	Yes	No
3	**CHECK AIRBAG MAIN HARNESS (PASSENGER'S AIRBAG HARNESS).** 1) Turn the ignition switch to OFF, disconnect the battery ground cable, and wait for 20 seconds or more. 2) Disconnect the airbag resistor from the connectors (2P) and (3P) of test harness P. 3) Remove the instrument panel lower cover and disconnect the connector (AB7) from (AB2). 4) Disconnect the connectors (AB6, AB17, AB18) from the airbag control module, and connect the test harness AG connector (1AG). 5) Measure the resistance between connector (3AG) in the test harness AG and connectors (2P) and (3P) in the test harness P. ***Connector & terminal*** ***(3AG) No. 8 — (3P) No. 3:*** ***(3AG) No. 6 — (3P) No. 4:***	Is the resistance less than 10 Ω?	Go to step **4**.	Replace the airbag main harness along with body harness.
4	**CHECK AIRBAG MAIN HARNESS (PASSENGER'S AIRBAG HARNESS).** Measure the resistance between connectors (3AG) in the test harness AG, and between connector (3AG) and chassis ground. ***Connector & terminal*** ***(3AG) No. 6 — (3AG) No. 7:*** ***(3AG) No. 6 — (3AG) No. 9:*** ***(3AG) No. 7 — (3AG) No. 8:*** ***(3AG) No. 8 — (3AG) No. 9:*** ***(3AG) No. 9 — (3AG) No. 7:*** ***(3AG) No. 9 — Chassis ground:*** ***(3AG) No. 7 — Chassis ground:*** ***(3AG) No. 8 — (3AG) No. 6:*** ***(3AG) No. 8 — Chassis ground:*** ***(3AG) No. 6 — Chassis ground:***	Is the resistance 1 MΩ or more?	Go to step **5**.	Replace the airbag main harness along with body harness.
5	**CHECK AIRBAG CONTROL MODULE.** 1) Connect all connectors. 2) Clear the memory. 3) Perform the Inspection Mode. 4) Read the DTC.	Is the same DTC displayed?	Replace the airbag control module. <Ref. to AB-20, Airbag Control Module.>	Go to step **6**.
6	**CHECK FOR ANY OTHER DTC ON DISPLAY.**	Is any other DTC displayed?	Check DTC using "List of Diagnostic Trouble Code (DTC)". <Ref. to AB(diag)-38, List of Diagnostic Trouble Code (DTC).>	Finish the diagnosis.

AF:DTC 75 DRIVER'S AIRBAG FAILURE

DTC DETECTING CONDITION:

- Airbag main harness circuit (Driver's side) is shorted to power supply.
- Airbag module harness circuit (Driver's side) is shorted to power supply.
- Roll connector is shorted to power supply.
- Driver's airbag module is faulty.
- Airbag control module is faulty.

CAUTION:

- **Before diagnosing the airbag system, be sure to turn the ignition switch to OFF, disconnect the ground cable from the battery, and wait 20 seconds or more before starting to work.**
- **When replacing the airbag module, seat belt pretensioner, roll connector, control module and sensor, reconnect each part and check that the warning light operates properly.**
- **When inspecting the airbag main harness, disconnect the airbag module connectors of the driver's and passenger's seats for safety.**
- **When inspecting the airbag rear harness, disconnect the side airbag module connector, curtain airbag module connector and seat belt pretensioner connector for safety reasons.**

NOTE:
Prior to starting work, prepare two airbag resistors (98299PA040).

WIRING DIAGRAM:

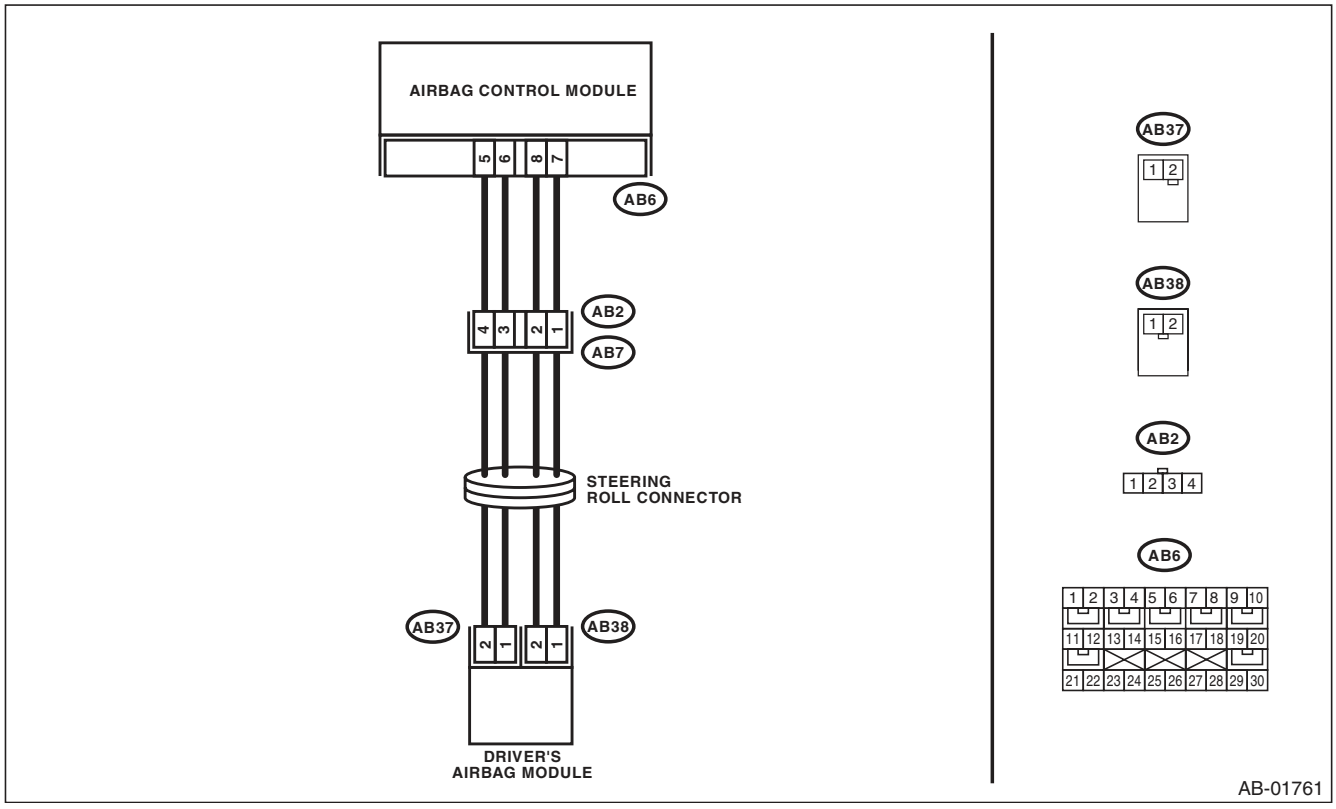

	Step	Check	Yes	No
1	**CHECK POOR CONTACT IN CONNECTORS.** Check for poor contact of the connectors between the airbag control module and the driver's airbag module.	Is there poor contact?	Replace the airbag main harness along with body harness.	Go to step **2**.
2	**CHECK DRIVER'S AIRBAG MODULE.** 1) Turn the ignition switch to OFF, disconnect the battery ground cable, and wait for 20 seconds or more. 2) Remove the driver's airbag module. 3) Connect the connector (AB38) to the connector (1N) in the test harness N. 4) Connect the airbag resistor to the connector (2N) of test harness N. 5) Connect the connector (1Q) in the test harness Q to connector (AB37). 6) Connect the airbag resistor to the connector (2Q) in the test harness Q. 7) Connect the battery ground terminal and turn the ignition switch to ON.	Does the airbag warning light illuminate for 6 seconds and go off?	Replace the driver's airbag module. <Ref. to AB-14, Driver's Airbag Module.>	Go to step **3**.
3	**CHECK ROLL CONNECTOR.** 1) Turn the ignition switch to OFF, disconnect the battery ground cable, and wait for 20 seconds or more. 2) Disconnect the test harness N from connector (AB38). 3) Disconnect the test harness Q from connector (AB37). 4) Remove the instrument panel lower cover and disconnect the connector (AB7) from (AB2). 5) Connect the connector (1P) in the test harness P to connector (AB2). 6) Connect the airbag resistor to the connectors (2P) and (3P) of test harness P. 7) Connect the battery ground terminal and turn the ignition switch to ON.	Does the airbag warning light illuminate for 6 seconds and go off?	Replace the roll connector. <Ref. to AB-25, Roll Connector.>	Go to step **4**.
4	**CHECK AIRBAG MAIN HARNESS (DRIVER'S AIRBAG HARNESS).** 1) Turn the ignition switch to OFF, disconnect the battery ground cable, and wait for 20 seconds or more. 2) Disconnect the airbag resistor from the connectors (2P) and (3P) of test harness P. 3) Remove the instrument panel side cover on the passenger's side and disconnect the connectors (AB10) and (AB9). 4) Disconnect the connectors (AB6, AB17, AB18) from the airbag control module, and connect the test harness AG connector (1AG). 5) Connect the battery ground terminal and turn the ignition switch to ON. (engine OFF) 6) Measure the voltage between connector (3AG) in the test harness AG and chassis ground. ***Connector & terminal*** ***(3AG) No. 2 (+) — Chassis ground (–):*** ***(3AG) No. 4 (+) — Chassis ground (–):***	Is the voltage less than 1 V?	Go to step **5**.	Replace the airbag main harness along with body harness.

Step		Check	Yes	No
5	**CHECK AIRBAG CONTROL MODULE.** 1) Connect all connectors. 2) Clear the memory. 3) Perform the Inspection Mode. 4) Read the DTC.	Is the same DTC displayed?	Replace the airbag control module. <Ref. to AB-20, Airbag Control Module.>	Go to step **6**.
6	**CHECK FOR ANY OTHER DTC ON DISPLAY.**	Is any other DTC displayed?	Check DTC using "List of Diagnostic Trouble Code (DTC)". <Ref. to AB(diag)-38, List of Diagnostic Trouble Code (DTC).>	Finish the diagnosis.

AG:DTC 76 PASSENGER'S AIRBAG FAILURE

DTC DETECTING CONDITION:

- Airbag main harness circuit (Passenger's side) is shorted to power supply.
- Airbag module harness circuit (Passenger's side) is shorted to power supply.
- Passenger's airbag module is faulty.
- Airbag control module is faulty.

CAUTION:

- **Before diagnosing the airbag system, be sure to turn the ignition switch to OFF, disconnect the ground cable from the battery, and wait 20 seconds or more before starting to work.**
- **When replacing the airbag module, seat belt pretensioner, roll connector, control module and sensor, reconnect each part and check that the warning light operates properly.**
- **When inspecting the airbag main harness, disconnect the airbag module connectors of the driver's and passenger's seats for safety.**
- **When inspecting the airbag rear harness, disconnect the side airbag module connector, curtain airbag module connector and seat belt pretensioner connector for safety reasons.**

NOTE:
Prior to starting work, prepare two airbag resistors (98299PA040).

WIRING DIAGRAM:

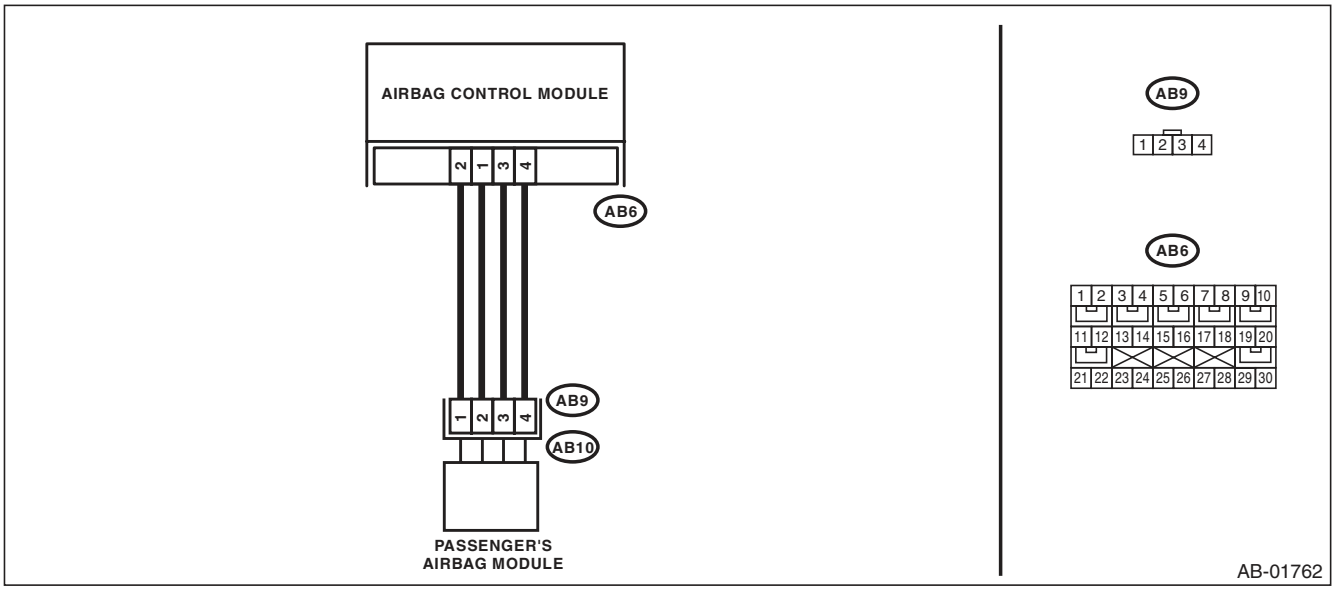

Diagnostic Chart with Trouble Code

	Step	Check	Yes	No
1	**CHECK POOR CONTACT IN CONNECTORS.** Check for poor contact of the connectors between the airbag control module and the passenger's airbag module.	Is there poor contact?	Replace the airbag main harness along with body harness.	Go to step **2**.
2	**CHECK PASSENGER'S AIRBAG MODULE.** 1) Turn the ignition switch to OFF, disconnect the battery ground cable, and wait for 20 seconds or more. 2) Remove the instrument panel side cover on the passenger's side and disconnect the connector (AB10) from (AB9). 3) Connect the connector (1P) in the test harness P to connector (AB9). 4) Connect the airbag resistor to the connectors (2P) and (3P) of test harness P. 5) Connect the battery ground terminal and turn the ignition switch to ON.	Does the airbag warning light illuminate for 6 seconds and go off?	Replace the passenger's airbag module. <Ref. to AB-15, Passenger's Airbag Module.>	Go to step **3**.
3	**CHECK AIRBAG MAIN HARNESS (PASSENGER'S AIRBAG HARNESS).** 1) Turn the ignition switch to OFF, disconnect the battery ground cable, and wait for 20 seconds or more. 2) Disconnect the airbag resistor from the connectors (2P) and (3P) of test harness P. 3) Remove the instrument panel lower cover and disconnect the connector (AB7) from (AB2). 4) Disconnect the connectors (AB6, AB17, AB18) from the airbag control module, and connect the test harness AG connector (1AG). 5) Measure the voltage between connector (3AG) in the test harness AG and chassis ground. ***Connector & terminal*** ***(3AG) No. 8 (+) — Chassis ground (–):*** ***(3AG) No. 6 (+) — Chassis ground (–):***	Is the voltage less than 1 V?	Go to step **4**.	Replace the airbag main harness along with body harness.
4	**CHECK AIRBAG CONTROL MODULE.** 1) Connect all connectors. 2) Clear the memory. 3) Perform the Inspection Mode. 4) Read the DTC.	Is the same DTC displayed?	Replace the airbag control module. <Ref. to AB-20, Airbag Control Module.>	Go to step **5**.
5	**CHECK FOR ANY OTHER DTC ON DISPLAY.**	Is any other DTC displayed?	Check DTC using "List of Diagnostic Trouble Code (DTC)". <Ref. to AB(diag)-38, List of Diagnostic Trouble Code (DTC).>	Finish the diagnosis.

AH:DTC 91 CURTAIN AIRBAG MODULE RH FAILURE

DTC DETECTING CONDITION:

- Curtain airbag harness (RH) is faulty.
- Curtain airbag module (RH) is faulty.
- Airbag control module is faulty.

CAUTION:

- **Before diagnosing the airbag system, be sure to turn the ignition switch to OFF, disconnect the ground cable from the battery, and wait 20 seconds or more before starting to work.**
- **When replacing the airbag module, seat belt pretensioner, roll connector, control module and sensor, reconnect each part and check that the warning light operates properly.**
- **When inspecting the airbag main harness, disconnect the airbag module connectors of the driver's and passenger's seats for safety.**
- **When inspecting the airbag rear harness, disconnect the side airbag module connector, curtain airbag module connector and seat belt pretensioner connector for safety reasons.**

WIRING DIAGRAM:

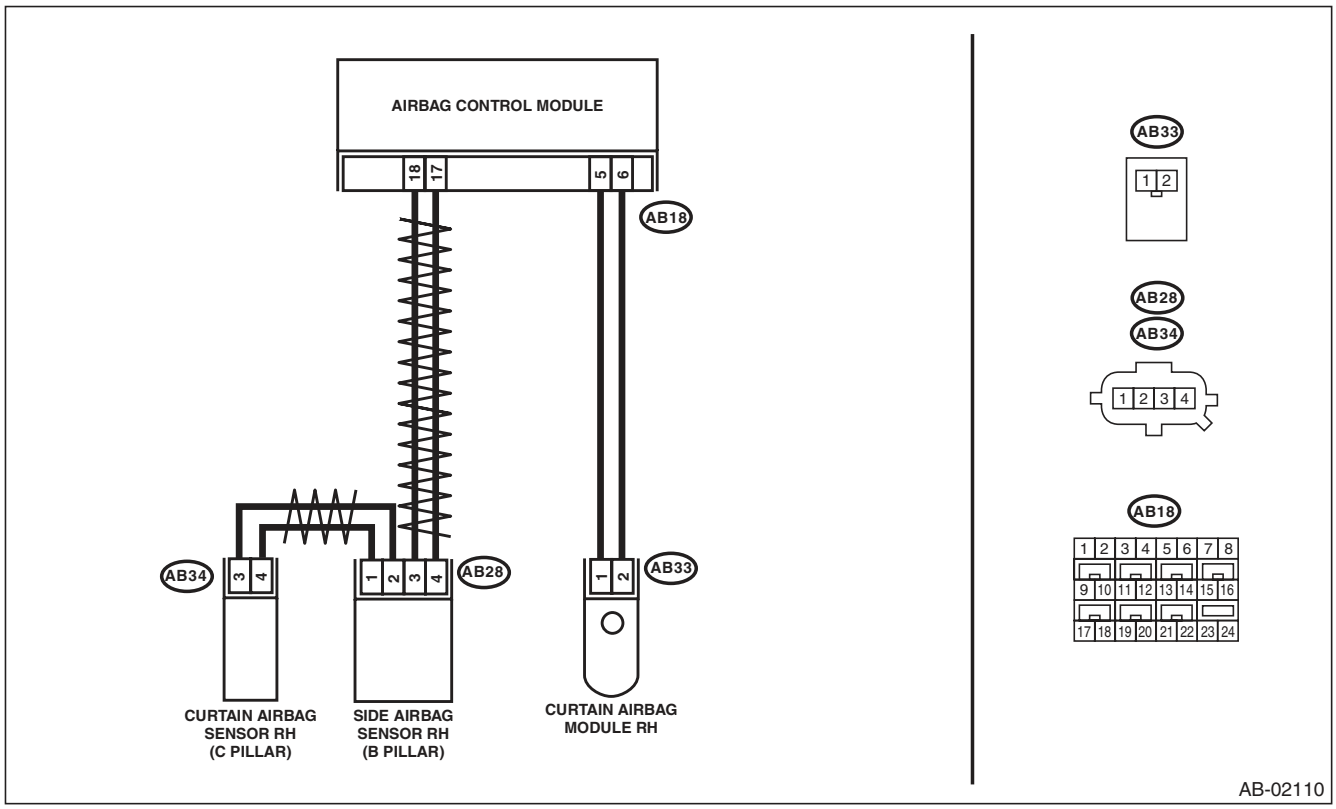

Step		Check	Yes	No
1	**CHECK POOR CONTACT IN CONNECTORS.** Check for poor contact of the connectors between the airbag control module, curtain airbag module RH and the curtain airbag sensor RH.	Is there poor contact?	Replace the airbag rear harness along with body harness.	Go to step **2**.

	Step	Check	Yes	No
2	**CHECK CURTAIN AIRBAG MODULE.** 1) Turn the ignition switch to OFF, disconnect the battery ground cable, and wait for 20 seconds or more. 2) Disconnect the connector (AB33), and connect the connector (1N) in test harness N to connector (AB33). 3) Connect the airbag resistor to the connector (2N) of test harness N. 4) Connect the battery ground terminal and turn the ignition switch to ON.	Does the airbag warning light illuminate for 6 seconds and go off?	Replace the curtain airbag module (RH). <Ref. to AB-18, Curtain Airbag Module.>	Go to step **3**.
3	**CHECK AIRBAG REAR HARNESS (CURTAIN AIRBAG MODULE HARNESS RH).** 1) Turn the ignition switch to OFF, disconnect the battery ground cable, and wait for 20 seconds or more. 2) Disconnect the connector (AB26) from seat belt pretensioner (RH). 3) Disconnect connector (AB24) from side airbag module (RH). 4) Disconnect the airbag resistor from test harness N. 5) Disconnect the connectors (AB6, AB17, AB18) from airbag control module. 6) Connect the test harness AG connector (1AG) to the connectors (AB6, AB17, AB18). 7) Measure the resistance between connector (6AG) in the test harness AG and connector (2N) in the test harness N. ***Connector & terminal*** ***(6AG) No. 6 — (2N) No. 1:*** ***(6AG) No. 8 — (2N) No. 2:***	Is the resistance less than 10 Ω?	Go to step **4**.	Replace the airbag rear harness along with body harness.
4	**CHECK AIRBAG REAR HARNESS (CURTAIN AIRBAG MODULE HARNESS RH).** Measure the resistance between connector (6AG) terminals in the test harness AG. ***Connector & terminal*** ***(6AG) No. 6 — (6AG) No. 8:***	Is the resistance 1 MΩ or more?	Go to step **5**.	Replace the airbag rear harness along with body harness.
5	**CHECK AIRBAG REAR HARNESS (CURTAIN AIRBAG MODULE HARNESS RH).** Measure the resistance between connector (6AG) in the test harness AG and chassis ground. ***Connector & terminal*** ***(6AG) No. 6 — Chassis ground:*** ***(6AG) No. 8 — Chassis ground:***	Is the resistance 1 MΩ or more?	Go to step **6**.	Replace the airbag rear harness along with body harness.
6	**CHECK AIRBAG CONTROL MODULE.** 1) Connect all connectors. 2) Clear the memory. 3) Perform the Inspection Mode. 4) Read the DTC.	Is the same DTC displayed?	Replace the airbag control module. <Ref. to AB-20, Airbag Control Module.>	Go to step **7**.
7	**CHECK FOR ANY OTHER DTC ON DISPLAY.**	Is any other DTC displayed?	Check DTC using "List of Diagnostic Trouble Code (DTC)". <Ref. to AB(diag)-38, List of Diagnostic Trouble Code (DTC).>	Finish the diagnosis.

AI: DTC 92 CURTAIN AIRBAG MODULE LH FAILURE

DTC DETECTING CONDITION:

- Curtain airbag harness (LH) is faulty.
- Curtain airbag module (LH) is faulty.
- Airbag control module is faulty.

CAUTION:

- **Before diagnosing the airbag system, be sure to turn the ignition switch to OFF, disconnect the ground cable from the battery, and wait 20 seconds or more before starting to work.**
- **When replacing the airbag module, seat belt pretensioner, roll connector, control module and sensor, reconnect each part and check that the warning light operates properly.**
- **When inspecting the airbag main harness, disconnect the airbag module connectors of the driver's and passenger's seats for safety.**
- **When inspecting the airbag rear harness, disconnect the side airbag module connector, curtain airbag module connector and seat belt pretensioner connector for safety reasons.**

WIRING DIAGRAM:

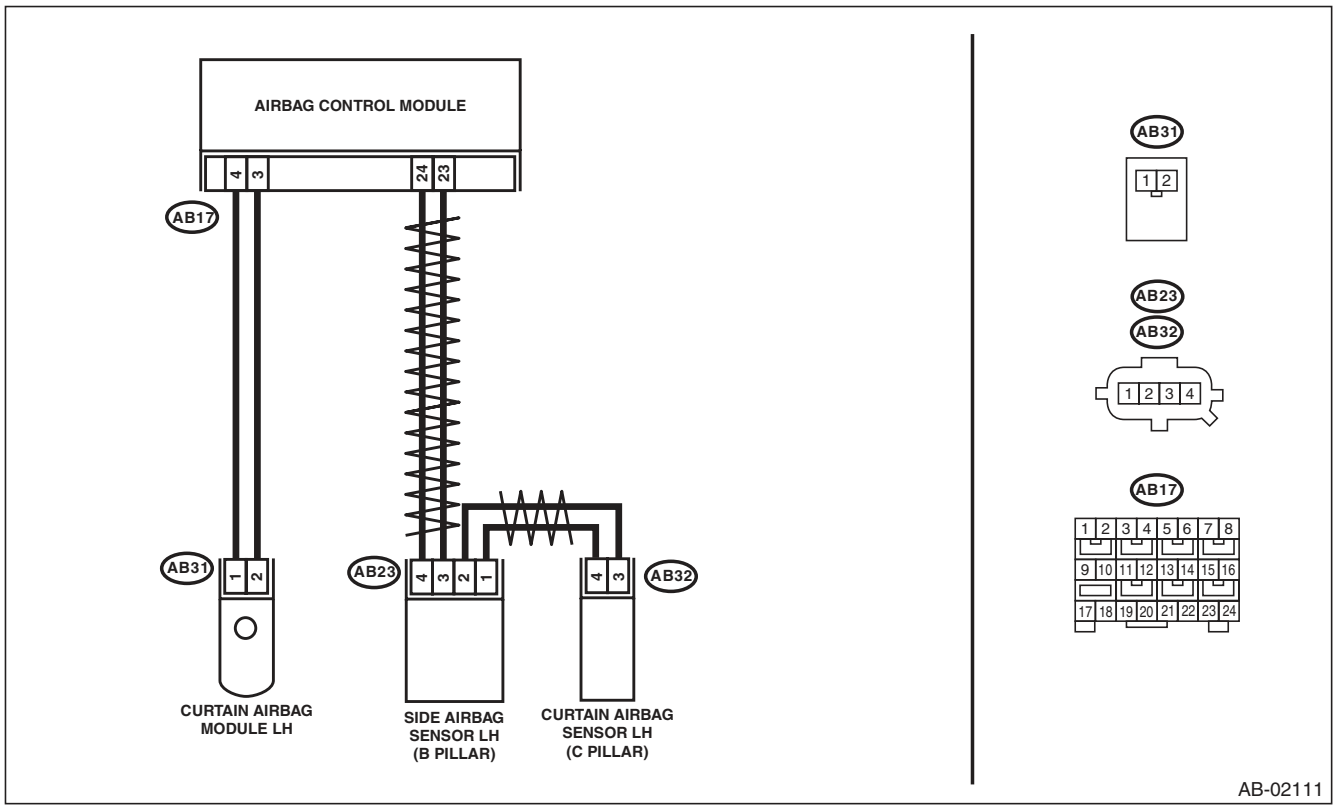

Step		Check	Yes	No
1	**CHECK POOR CONTACT IN CONNECTORS.** Check for poor contact of the connectors between the airbag control module, curtain airbag module LH and the curtain airbag sensor LH.	Is there poor contact?	Replace the airbag rear harness along with body harness.	Go to step **2**.

	Step	Check	Yes	No
2	**CHECK CURTAIN AIRBAG MODULE.** 1) Turn the ignition switch to OFF, disconnect the battery ground cable, and wait for 20 seconds or more. 2) Disconnect the connector (AB31), and connect the connector (1N) in test harness N to connector (AB31). 3) Connect the airbag resistor to the connector (2N) of test harness N. 4) Connect the battery ground terminal and turn the ignition switch to ON.	Does the airbag warning light illuminate for 6 seconds and go off?	Replace the curtain airbag module (LH). <Ref. to AB-18, Curtain Airbag Module.>	Go to step **3**.
3	**CHECK AIRBAG REAR HARNESS (CURTAIN AIRBAG MODULE HARNESS LH).** 1) Turn the ignition switch to OFF, disconnect the battery ground cable, and wait for 20 seconds or more. 2) Disconnect the connector (AB21) from seat belt pretensioner (LH). 3) Disconnect connector (AB19) from side airbag module (LH). 4) Disconnect the airbag resistor from test harness N. 5) Disconnect the connectors (AB6, AB17, AB18) from airbag control module. 6) Connect the test harness AG connector (1AG) to the connectors (AB6, AB17, AB18). 7) Measure the resistance between connector (6AG) in the test harness AG and connector (2N) in the test harness N. ***Connector & terminal*** ***(6AG) No. 1 — (2N) No. 2:*** ***(6AG) No. 3 — (2N) No. 1:***	Is the resistance less than 10 Ω?	Go to step **4**.	Replace the airbag rear harness along with body harness.
4	**CHECK AIRBAG REAR HARNESS (CURTAIN AIRBAG MODULE HARNESS LH).** Measure the resistance between connector (6AG) terminals in the test harness AG. ***Connector & terminal*** ***(6AG) No. 1 — (6AG) No. 3:***	Is the resistance 1 MΩ or more?	Go to step **5**.	Replace the airbag rear harness along with body harness.
5	**CHECK AIRBAG REAR HARNESS (CURTAIN AIRBAG MODULE HARNESS LH).** Measure the resistance between connector (6AG) in the test harness AG and chassis ground. ***Connector & terminal*** ***(6AG) No. 1 — Chassis ground:*** ***(6AG) No. 3 — Chassis ground:***	Is the resistance 1 MΩ or more?	Go to step **6**.	Replace the airbag rear harness along with body harness.
6	**CHECK AIRBAG CONTROL MODULE.** 1) Connect all connectors. 2) Clear the memory. 3) Perform the Inspection Mode. 4) Read the DTC.	Is the same DTC displayed?	Replace the airbag control module. <Ref. to AB-20, Airbag Control Module.>	Go to step **7**.
7	**CHECK FOR ANY OTHER DTC ON DISPLAY.**	Is any other DTC displayed?	Check DTC using "List of Diagnostic Trouble Code (DTC)". <Ref. to AB(diag)-38, List of Diagnostic Trouble Code (DTC).>	Finish the diagnosis.

AJ:DTC 95 CURTAIN AIRBAG MODULE RH FAILURE

DTC DETECTING CONDITION:

- Curtain airbag harness (RH) is shorted to power supply.
- Airbag control module is faulty.

CAUTION:

- **Before diagnosing the airbag system, be sure to turn the ignition switch to OFF, disconnect the ground cable from the battery, and wait 20 seconds or more before starting to work.**
- **When replacing the airbag module, seat belt pretensioner, roll connector, control module and sensor, reconnect each part and check that the warning light operates properly.**
- **When inspecting the airbag main harness, disconnect the airbag module connectors of the driver's and passenger's seats for safety.**
- **When inspecting the airbag rear harness, disconnect the side airbag module connector, curtain airbag module connector and seat belt pretensioner connector for safety reasons.**

WIRING DIAGRAM:

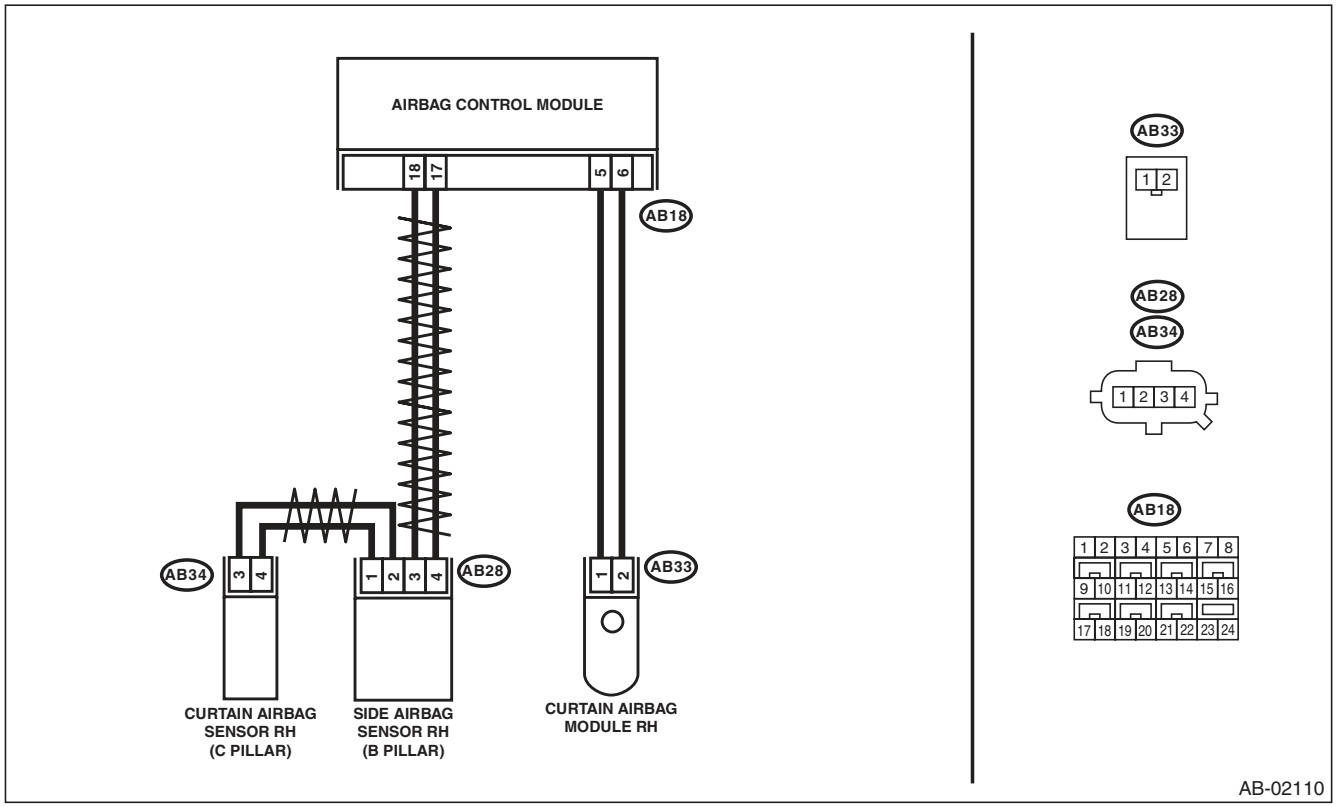

Diagnostic Chart with Trouble Code

	Step	Check	Yes	No
1	**CHECK POOR CONTACT IN CONNECTORS.** Check for poor contact of the connectors between the airbag control module, curtain airbag module RH and the curtain airbag sensor RH.	Is there poor contact?	Replace the airbag rear harness along with body harness.	Go to step **2**.
2	**CHECK CURTAIN AIRBAG MODULE.** 1) Turn the ignition switch to OFF, disconnect the battery ground cable, and wait for 20 seconds or more. 2) Disconnect the connector (AB33), and connect the connector (1N) in test harness N to connector (AB33). 3) Connect the airbag resistor to the connector (2N) of test harness N. 4) Connect the battery ground terminal and turn the ignition switch to ON.	Does the airbag warning light illuminate for 6 seconds and go off?	Replace the curtain airbag module (RH). <Ref. to AB-18, Curtain Airbag Module.>	Go to step **3**.
3	**CHECK AIRBAG REAR HARNESS (CURTAIN AIRBAG MODULE HARNESS RH).** 1) Turn the ignition switch to OFF, disconnect the battery ground cable, and wait for 20 seconds or more. 2) Disconnect the connector (AB26) from seat belt pretensioner (RH). 3) Disconnect connector (AB24) from side airbag module (RH). 4) Disconnect the airbag resistor from test harness N. 5) Disconnect the connectors (AB6, AB17, AB18) from airbag control module. 6) Connect the test harness AG connector (1AG) to the connectors (AB6, AB17, AB18). 7) Connect the battery ground terminal and turn the ignition switch to ON. 8) Measure the voltage between connector (6AG) in the test harness AG and chassis ground. ***Connector & terminal*** ***(6AG) No. 6 (+) — Chassis ground (–):*** ***(6AG) No. 8 (+) — Chassis ground (–):***	Is the voltage less than 1 V?	Go to step **4**.	Replace the airbag rear harness along with body harness.
4	**CHECK AIRBAG CONTROL MODULE.** 1) Connect all connectors. 2) Clear the memory. 3) Perform the Inspection Mode. 4) Read the DTC.	Is the same DTC displayed?	Replace the airbag control module. <Ref. to AB-20, Airbag Control Module.>	Go to step **5**.
5	**CHECK FOR ANY OTHER DTC ON DISPLAY.**	Is any other DTC displayed?	Check DTC using "List of Diagnostic Trouble Code (DTC)". <Ref. to AB(diag)-38, List of Diagnostic Trouble Code (DTC).>	Finish the diagnosis.

AK:DTC 96 CURTAIN AIRBAG MODULE LH FAILURE

DTC DETECTING CONDITION:

- Curtain airbag harness (LH) is shorted to power supply.
- Airbag control module is faulty.

CAUTION:

- **Before diagnosing the airbag system, be sure to turn the ignition switch to OFF, disconnect the ground cable from the battery, and wait 20 seconds or more before starting to work.**
- **When replacing the airbag module, seat belt pretensioner, roll connector, control module and sensor, reconnect each part and check that the warning light operates properly.**
- **When inspecting the airbag main harness, disconnect the airbag module connectors of the driver's and passenger's seats for safety.**
- **When inspecting the airbag rear harness, disconnect the side airbag module connector, curtain airbag module connector and seat belt pretensioner connector for safety reasons.**

WIRING DIAGRAM:

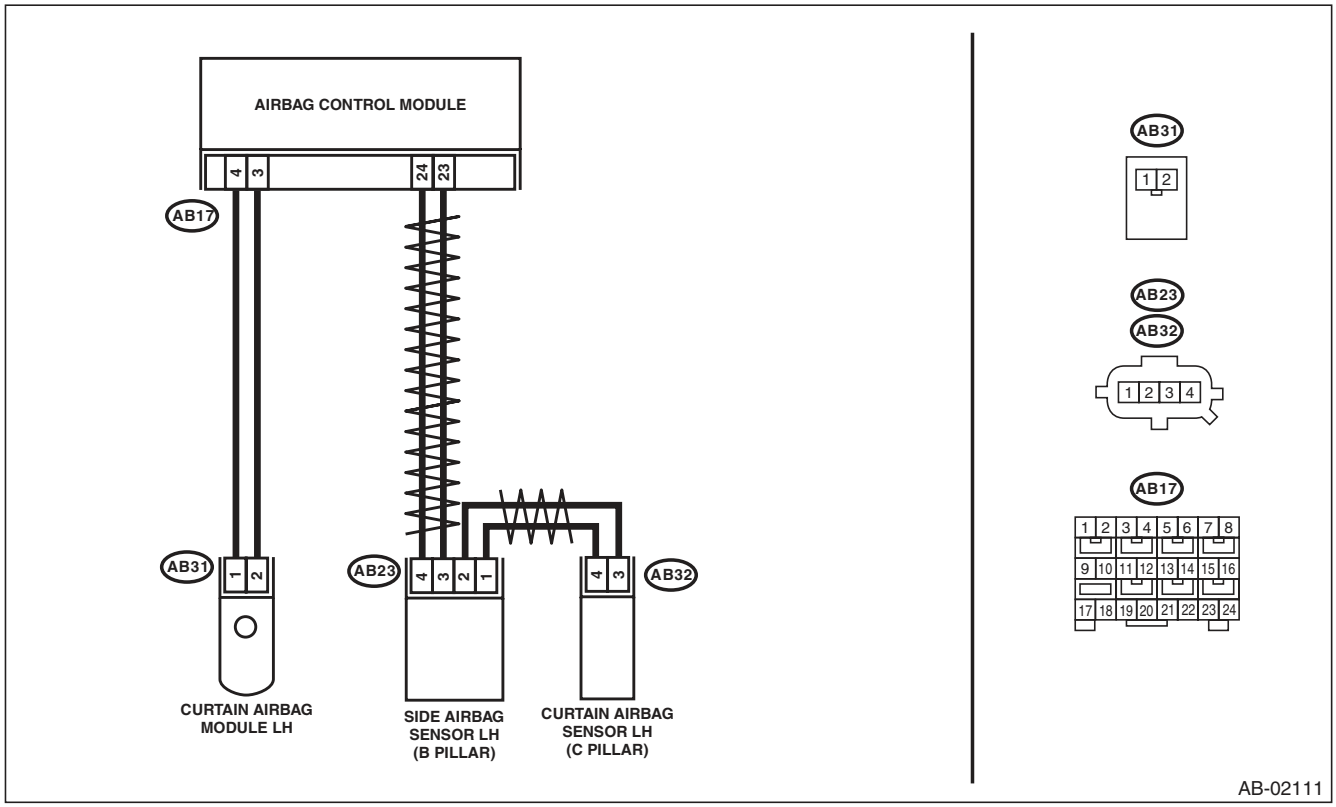

Diagnostic Chart with Trouble Code

	Step	Check	Yes	No
1	**CHECK POOR CONTACT IN CONNECTORS.** Check for poor contact of the connectors between the airbag control module, curtain airbag module LH and the curtain airbag sensor LH.	Is there poor contact?	Replace the airbag rear harness along with body harness.	Go to step **2**.
2	**CHECK SIDE AIRBAG MODULE.** 1) Turn the ignition switch to OFF, disconnect the battery ground cable, and wait for 20 seconds or more. 2) Disconnect the connector (AB31), and connect the connector (1N) in test harness N to connector (AB31). 3) Connect the airbag resistor to the connector (2N) of test harness N. 4) Connect the battery ground terminal and turn the ignition switch to ON.	Does the airbag warning light illuminate for 6 seconds and go off?	Replace the curtain airbag module (LH). <Ref. to AB-18, Curtain Airbag Module.>	Go to step **3**.
3	**CHECK AIRBAG REAR HARNESS (CURTAIN AIRBAG MODULE HARNESS LH).** 1) Turn the ignition switch to OFF, disconnect the battery ground cable, and wait for 20 seconds or more. 2) Disconnect the connector (AB21) from seat belt pretensioner (LH). 3) Disconnect connector (AB19) from side airbag module (LH). 4) Disconnect the airbag resistor from test harness N. 5) Disconnect the connectors (AB6, AB17, AB18) from airbag control module. 6) Connect the test harness AG connector (1AG) to the connectors (AB6, AB17, AB18). 7) Connect the battery ground terminal and turn the ignition switch to ON. 8) Measure the voltage between connector (3AG) in the test harness AG and chassis ground. ***Connector & terminal*** ***(3AG) No. 1 (+) — Chassis ground (–):*** ***(3AG) No. 3 (+) — Chassis ground (–):***	Is the voltage less than 1 V?	Go to step **4**.	Replace the airbag rear harness along with body harness.
4	**CHECK AIRBAG CONTROL MODULE.** 1) Connect all connectors. 2) Clear the memory. 3) Perform the Inspection Mode. 4) Read the DTC.	Is the same DTC displayed?	Replace the airbag control module. <Ref. to AB-20, Airbag Control Module.>	Go to step **5**.
5	**CHECK FOR ANY OTHER DTC ON DISPLAY.**	Is any other DTC displayed?	Check DTC using "List of Diagnostic Trouble Code (DTC)". <Ref. to AB(diag)-38, List of Diagnostic Trouble Code (DTC).>	Finish the diagnosis.

AL:DTC E2 FRONT SENSOR BUS RH COMMUNICATION ERROR

NOTE:
Refer to DTC E4 for details on DTC E2. <Ref. to AB(diag)-100, DTC E4 FRONT SENSOR BUS RH COMMUNICATION ERROR, Diagnostic Chart with Trouble Code.>

AM:DTC E3 FRONT SENSOR BUS RH COMMUNICATION ERROR

NOTE:
Refer to DTC E4 for details on DTC E3. <Ref. to AB(diag)-100, DTC E4 FRONT SENSOR BUS RH COMMUNICATION ERROR, Diagnostic Chart with Trouble Code.>

AN:DTC E4 FRONT SENSOR BUS RH COMMUNICATION ERROR

DTC DETECTING CONDITION:

- **Open or short circuit in harness of front sensor bus (RH).**
- **Front sub sensor (RH) is faulty.**
- **Airbag control module is faulty.**

CAUTION:

- **Before diagnosing the airbag system, be sure to turn the ignition switch to OFF, disconnect the ground cable from battery, and wait 20 seconds or more before starting to work.**
- **When replacing the airbag module, seat belt pretensioner, roll connector, control module and sensor, reconnect each part and check that the warning light operates properly.**
- **When inspecting the airbag main harness, disconnect the airbag module connectors and seat belt pretensioners of the driver's and passenger's seats for safety reasons.**

WIRING DIAGRAM:

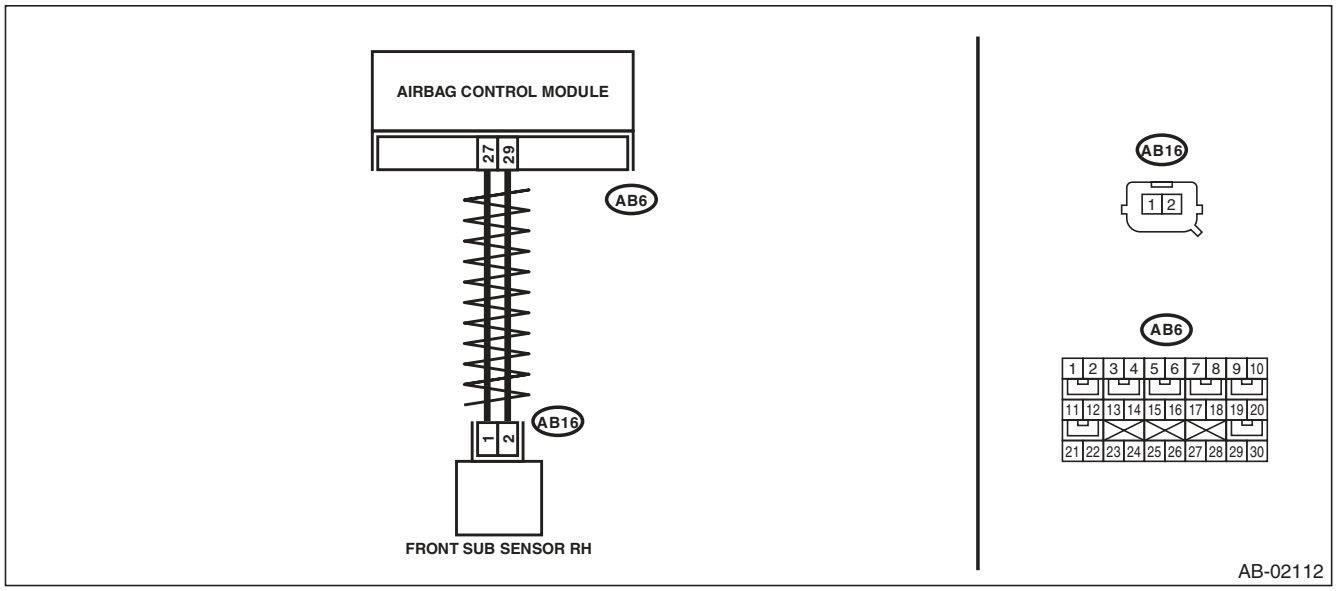

	Step	Check	Yes	No
1	**CHECK POOR CONTACT IN CONNECTORS.** Check for poor contact of the connectors (AB6, AB16) between the airbag control module and the front sub sensor (RH).	Is there poor contact?	Replace the airbag main harness along with body harness.	Go to step **2**.
2	**CHECK AIRBAG MAIN HARNESS (FRONT SENSOR BUS RH).** 1) Turn the ignition switch to OFF, disconnect the battery ground cable, and wait for 20 seconds or more. 2) Remove the instrument panel lower cover and disconnect the connectors (AB7) and (AB2). 3) Remove the instrument panel side cover on the passenger's side and disconnect the connectors (AB10) and (AB9). 4) Disconnect the connectors (AB17, AB6, AB18) from airbag control module. 5) Connect the connector (1AG) in the test harness AG to the connectors (AB17, AB6, AB18). 6) Disconnect the front sub sensor (RH), and then connect the connector (1H) in the test harness H to connector (AB16). 7) Measure the resistance between connector (4AG) in the test harness AG and connector (3H) in the test harness H. ***Connector & terminal*** ***(4AG) No. 14 — (3H) No. 5:*** ***(4AG) No. 12 — (3H) No. 6:***	Is the resistance less than 10 Ω?	Go to step **3**.	Replace the airbag main harness along with body harness.
3	**CHECK AIRBAG MAIN HARNESS (FRONT SENSOR BUS RH).** Measure the resistance between connector (4AG) in the test harness AG and chassis ground, and the resistance between connector (4AG) in the test harness AG and connector (3H) in test harness H. ***Connector & terminal*** ***(4AG) No. 14 — Chassis ground:*** ***(4AG) No. 12 — Chassis ground:***	Is the resistance 1 MΩ or more?	Go to step **4**.	Replace the airbag main harness along with body harness.
4	**CHECK AIRBAG CONTROL MODULE.** 1) Connect all connectors. 2) Clear the memory. 3) Perform the Inspection Mode. 4) Read the DTC.	Is the same DTC displayed?	Replace the front sub sensor (RH). <Ref. to AB-21, REMOVAL, Front Sub Sensor.> Replace the airbag control module if not operating normally even after replacing the sensor. <Ref. to AB-20, REMOVAL, Airbag Control Module.>	Go to step **5**.
5	**CHECK FOR ANY OTHER DTC ON DISPLAY.**	Is any other DTC displayed?	Check DTC using "List of Diagnostic Trouble Code". <Ref. to AB(diag)-38, LIST, List of Diagnostic Trouble Code (DTC).>	Finish the diagnosis.

AO:DTC E6 FRONT SENSOR BUS LH COMMUNICATION ERROR

NOTE:
Refer to DTC E8 for details on DTC E6. <Ref. to AB(diag)-103, DTC E8 FRONT SENSOR BUS LH COMMUNICATION ERROR, Diagnostic Chart with Trouble Code.>

AP:DTC E7 FRONT SENSOR BUS LH COMMUNICATION ERROR

NOTE:
Refer to DTC E8 for details on DTC E7. <Ref. to AB(diag)-103, DTC E8 FRONT SENSOR BUS LH COMMUNICATION ERROR, Diagnostic Chart with Trouble Code.>

AQ:DTC E8 FRONT SENSOR BUS LH COMMUNICATION ERROR

DTC DETECTING CONDITION:

- **Open or short circuit in harness of front sensor bus (LH).**
- **Front sub sensor (LH) is faulty.**
- **Airbag control module is faulty.**

CAUTION:

- **Before diagnosing the airbag system, be sure to turn the ignition switch to OFF, disconnect the ground cable from battery, and wait 20 seconds or more before starting to work.**
- **When replacing the airbag module, seat belt pretensioner, roll connector, control module and sensor, reconnect each part and check that the warning light operates properly.**
- **When inspecting the airbag main harness, disconnect the airbag module connectors and seat belt pretensioners of the driver's and passenger's seats for safety reasons.**

WIRING DIAGRAM:

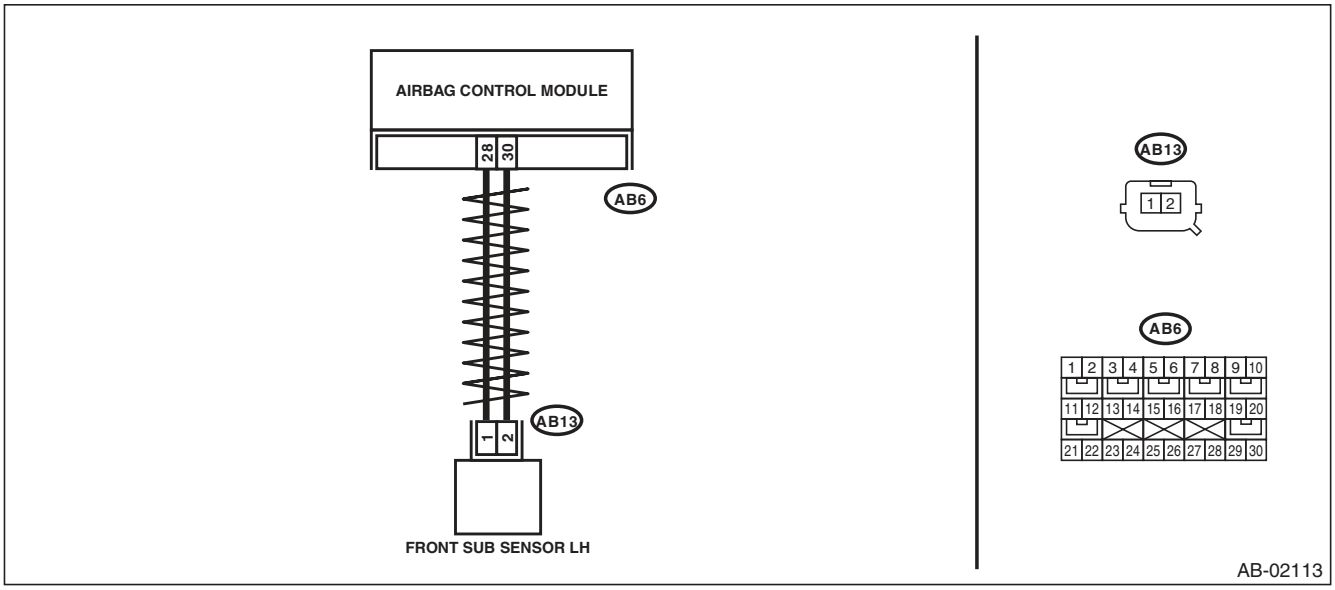

Step		Check	Yes	No
1	**CHECK POOR CONTACT IN CONNECTORS.** Check for poor contact of the connectors (AB6, AB13) between the airbag control module and the front sub sensor (LH).	Is there poor contact?	Replace the airbag main harness along with body harness.	Go to step **2**.

	Step	Check	Yes	No
2	**CHECK AIRBAG MAIN HARNESS (FRONT SENSOR BUS LH).** 1) Turn the ignition switch to OFF, disconnect the battery ground cable, and wait for 20 seconds or more. 2) Remove the instrument panel lower cover and disconnect the connectors (AB7) and (AB2). 3) Remove the instrument panel side cover on the passenger's side and disconnect the connectors (AB9) and (AB10). 4) Disconnect the connectors (AB17, AB6, AB18) from airbag control module. 5) Connect the connector (1AG) in the test harness AG to the connectors (AB17, AB6, AB18). 6) Disconnect the front sub sensor (LH), and then connect the connector (1H) in the test harness H to connector (AB13). 7) Measure the resistance between connector (4AG) in the test harness AG and connector (3H) in the test harness H. ***Connector & terminal*** ***(4AG) No. 7 — (3H) No. 5:*** ***(4AG) No. 9 — (3H) No. 6:***	Is the resistance less than 10 Ω?	Go to step **3**.	Replace the airbag main harness along with body harness.
3	**CHECK AIRBAG MAIN HARNESS (FRONT SENSOR BUS LH).** Measure the resistance between connector (4AG) in the test harness AG and chassis ground, and the resistance between connector (4AG) in the test harness AG and connector (3H) in test harness H. ***Connector & terminal*** ***(4AG) No. 7 — Chassis ground:*** ***(4AG) No. 9 — Chassis ground:*** ***(4AG) No. 7 — (4AG) No. 9:***	Is the resistance 1 MΩ or more?	Go to step **4**.	Replace the airbag main harness along with body harness.
4	**CHECK AIRBAG CONTROL MODULE.** 1) Connect all connectors. 2) Clear the memory. 3) Perform the Inspection Mode. 4) Read the DTC.	Is the same DTC displayed?	Replace the front sub sensor (LH). <Ref. to AB-21, REMOVAL, Front Sub Sensor.> Replace the airbag control module if not operating normally even after replacing the sensor. <Ref. to AB-20, REMOVAL, Airbag Control Module.>	Go to step **5**.
5	**CHECK FOR ANY OTHER DTC ON DISPLAY.**	Is any other DTC displayed?	Check DTC using "List of Diagnostic Trouble Code". <Ref. to AB(diag)-38, LIST, List of Diagnostic Trouble Code (DTC).>	Finish the diagnosis.

AR:DTC E9 SIDE SENSOR BUS RH COMMUNICATION ERROR

NOTE:
Refer to DTC EC for details on DTC E9. <Ref. to AB(diag)-106, DTC EC SIDE SENSOR BUS RH COMMUNICATION ERROR, Diagnostic Chart with Trouble Code.>

AS:DTC EA SIDE SENSOR BUS RH COMMUNICATION ERROR

NOTE:
Refer to DTC EC for details on DTC EA. <Ref. to AB(diag)-106, DTC EC SIDE SENSOR BUS RH COMMUNICATION ERROR, Diagnostic Chart with Trouble Code.>

AT:DTC EB SIDE SENSOR BUS RH COMMUNICATION ERROR

NOTE:
Refer to DTC EC for details on DTC EB. <Ref. to AB(diag)-106, DTC EC SIDE SENSOR BUS RH COMMUNICATION ERROR, Diagnostic Chart with Trouble Code.>

AU:DTC EC SIDE SENSOR BUS RH COMMUNICATION ERROR

DTC DETECTING CONDITION:

- **Open or short circuit in harness of side sensor bus (RH).**
- **Side airbag sensor (RH) and curtain airbag sensor (RH) is faulty.**
- **Airbag control module is faulty.**

CAUTION:

- **Before diagnosing the airbag system, be sure to turn the ignition switch to OFF, disconnect the ground cable from battery, and wait 20 seconds or more before starting to work.**
- **When replacing the airbag module, seat belt pretensioner, roll connector, control module and sensor, reconnect each part and check that the warning light operates properly.**
- **When inspecting the airbag main harness, disconnect the airbag module connectors and seat belt pretensioners of the driver's and passenger's seats for safety reasons.**
- **When inspecting the airbag rear harness, disconnect the side airbag module connector, curtain airbag module connector and seat belt pretensioner connector for safety reasons.**

WIRING DIAGRAM:

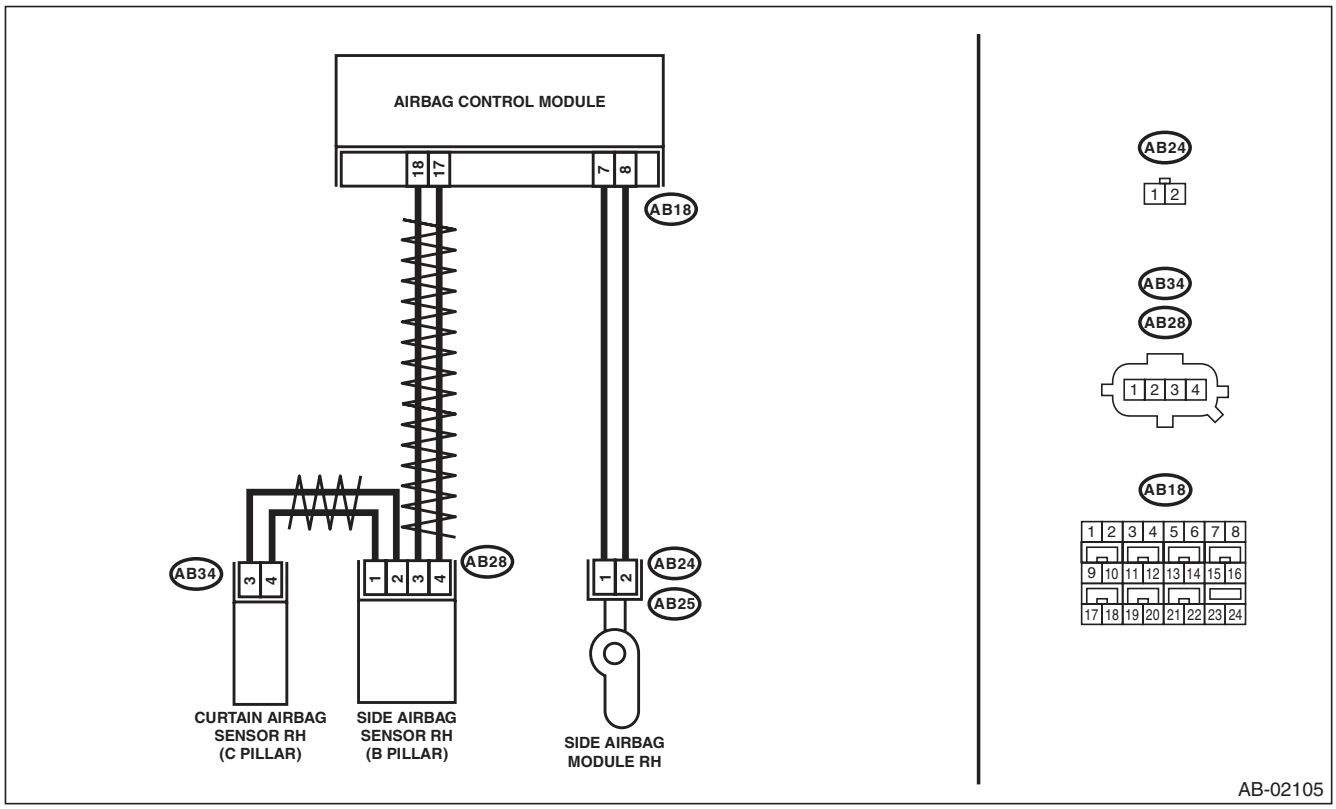

Step		Check	Yes	No
1	**CHECK POOR CONTACT IN CONNECTORS.** Check for poor contact of the connectors (AB18, AB28, AB34) between the airbag control module and the curtain airbag sensor (RH).	Is there poor contact?	Replace the airbag rear harness along with body harness.	Go to step **2**.

	Step	Check	Yes	No
2	**CHECK AIRBAG REAR HARNESS (BETWEEN AIRBAG CONTROL MODULE AND SIDE AIRBAG SENSOR RH).** 1) Turn the ignition switch to OFF, disconnect the battery ground cable, and wait for 20 seconds or more. 2) Disconnect the connector (AB26) from seat belt pretensioner (RH). 3) Disconnect the connector (AB33) from curtain airbag module (RH). 4) Disconnect connectors (AB25) and (AB24) from side airbag module (RH). 5) Disconnect the connectors (AB17, AB6, AB18) from airbag control module. 6) Connect the connector (1AG) in the test harness AG to the connectors (AB17, AB6, AB18). 7) Disconnect the connector (AB28) from side airbag sensor (RH), and connect the connector (2V) in test harness V to connector (AB28). 8) Measure the resistance between connector (5AG) in the test harness AG and connector (3V) in the test harness V. ***Connector & terminal*** ***(5AG) No. 16 — (3V) No. 2:*** ***(5AG) No. 14 — (3V) No. 1:***	Is the resistance less than 10 Ω?	Go to step **3**.	Replace the airbag rear harness along with body harness.
3	**CHECK AIRBAG REAR HARNESS (BETWEEN AIRBAG CONTROL MODULE AND SIDE AIRBAG SENSOR RH).** Measure the resistance between connector (5AG) in the test harness AG and chassis ground, and the resistance between connector (5AG) in the test harness AG and connector (3V) in test harness V. ***Connector & terminal*** ***(5AG) No. 16 — Chassis ground:*** ***(5AG) No. 14 — Chassis ground:*** ***(5AG) No. 14 — (5AG) No. 16:***	Is the resistance 1 MΩ or more?	Go to step **4**.	Replace the airbag rear harness along with body harness.
4	**CHECK AIRBAG REAR HARNESS (BETWEEN SIDE AIRBAG SENSOR AND CURTAIN AIRBAG SENSOR RH).** 1) Disconnect the connector (2V) in the test harness V from the connector (AB28) of side airbag sensor (RH). 2) Connect the connector (AB28) of side airbag sensor (RH) and the connector (1AI) in the test harness AI. 3) Connect the connector (2AI) in the test harness AI and the connector (1V) in the test harness V. 4) Disconnect the connector (AB34) from curtain airbag sensor (RH), and connect the connector (2V) in test harness V to connector (AB34). 5) Measure the resistance between connector (3V) terminals in the test harness V. ***Connector & terminal*** ***(3V) No. 2 — (3V) No. 6:*** ***(3V) No. 1 — (3V) No. 7:***	Is the resistance less than 10 Ω?	Go to step **5**.	Replace the airbag rear harness along with body harness.

	Step	Check	Yes	No
5	**CHECK AIRBAG REAR HARNESS (BETWEEN SIDE AIRBAG SENSOR AND CURTAIN AIRBAG SENSOR RH).** Measure the resistance between connector (3V) in test harness V and chassis ground, and the resistance between connector (3V) in test harness V. ***Connector & terminal*** ***(3V) No. 2 — Chassis ground:*** ***(3V) No. 1 — Chassis ground:*** ***(3V) No. 1 — (3V) No. 2:***	Is the resistance 1 MΩ or more?	Go to step **6**.	Replace the airbag rear harness along with body harness.
6	**CHECK AIRBAG CONTROL MODULE.** 1) Connect all connectors. 2) Clear the memory. 3) Perform the Inspection Mode. 4) Read the DTC.	Is the same DTC displayed?	Go to step **7**.	Go to step **8**.
7	**REPLACE SIDE AIRBAG SENSOR (RH) AND CHECK AIRBAG CONTROL MODULE AFTER REPLACEMENT.** <Ref. to AB-22, REMOVAL, Side Airbag Sensor.> 1) Connect all connectors. 2) Clear the memory. 3) Perform the Inspection Mode. 4) Read the DTC.	Is the system normal?	Go to step **8**.	Replace the curtain airbag sensor (RH). <Ref. to AB-23, REMOVAL, Curtain Airbag Sensor.> Replace the airbag control module if not operating normally even after replacing the sensor. <Ref. to AB-20, REMOVAL, Airbag Control Module.>
8	**CHECK FOR ANY OTHER DTC ON DISPLAY.**	Is any other DTC displayed?	Check DTC using "List of Diagnostic Trouble Code (DTC)". <Ref. to AB(diag)-38, List of Diagnostic Trouble Code (DTC).>	Finish the diagnosis.

AV:DTC ED SIDE SENSOR BUS RH COMMUNICATION ERROR

NOTE:
Refer to DTC EE for details on DTC ED. <Ref. to AB(diag)-109, DTC EE SIDE SENSOR BUS RH COMMUNICATION ERROR, Diagnostic Chart with Trouble Code.>

AW:DTC EE SIDE SENSOR BUS RH COMMUNICATION ERROR

DTC DETECTING CONDITION:

- **Open or short circuit in harness of side sensor bus (RH).**
- **Side airbag sensor (RH) or curtain airbag sensor (RH) is faulty.**
- **Airbag control module is faulty.**

CAUTION:

- **Before diagnosing the airbag system, be sure to turn the ignition switch to OFF, disconnect the ground cable from battery, and wait 20 seconds or more before starting to work.**
- **When replacing the airbag module, seat belt pretensioner, roll connector, control module and sensor, reconnect each part and check that the warning light operates properly.**
- **When inspecting the airbag main harness, disconnect the airbag module connectors and seat belt pretensioners of the driver's and passenger's seats for safety reasons.**
- **When inspecting the airbag rear harness, disconnect the side airbag module connector, curtain airbag module connector and seat belt pretensioner connector for safety reasons.**

WIRING DIAGRAM:

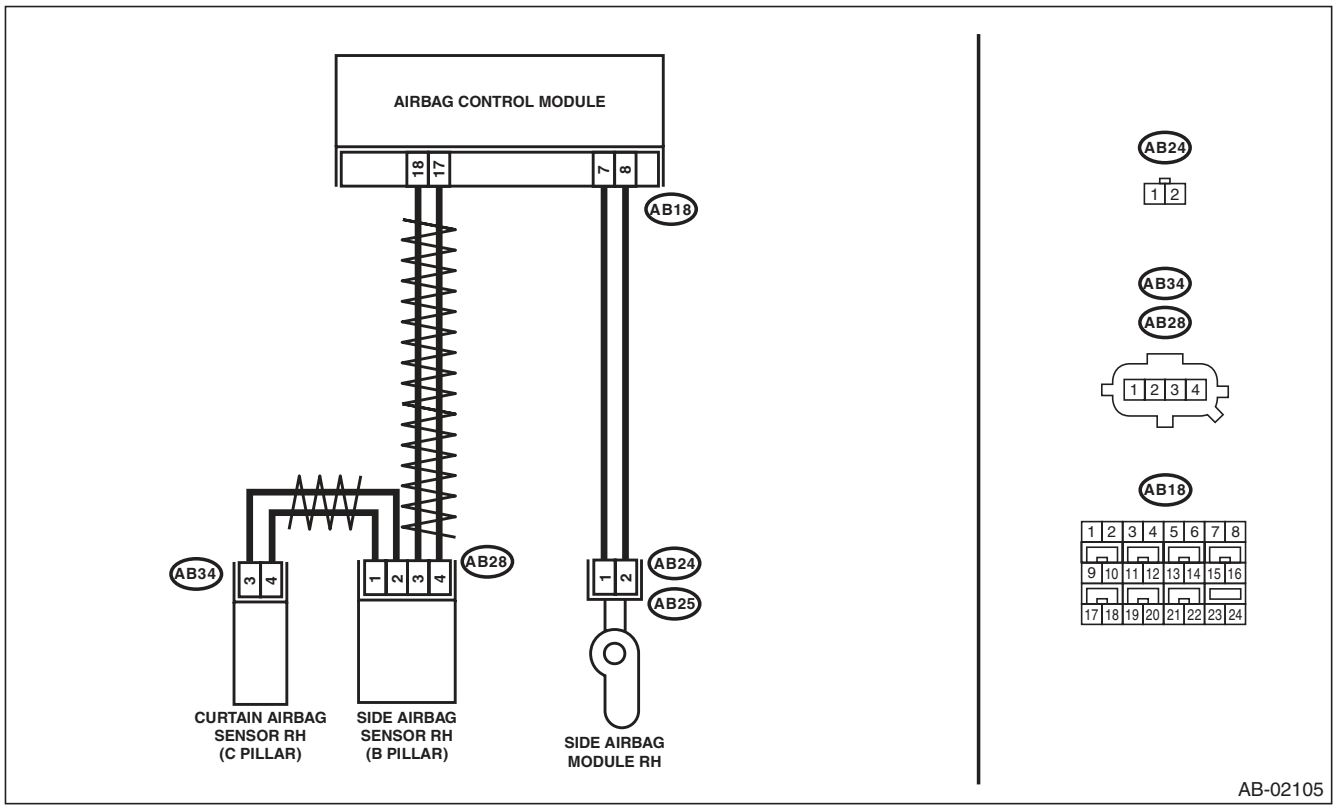

	Step	Check	Yes	No
1	**CHECK POOR CONTACT IN CONNECTORS.** Check for poor contact of the connectors (AB18, AB28, AB34) between the airbag control module and the curtain airbag sensor (RH).	Is there poor contact?	Replace the airbag rear harness along with body harness.	Go to step **2**.
2	**CHECK AIRBAG REAR HARNESS (BETWEEN SIDE AIRBAG SENSOR RH AND CURTAIN AIRBAG SENSOR RH).** 1) Turn the ignition switch to OFF, disconnect the battery ground cable, and wait for 20 seconds or more. 2) Disconnect the connector (AB26) from seat belt pretensioner (RH). 3) Disconnect the connector (AB33) from curtain airbag module (RH). 4) Disconnect connectors (AB25) and (AB24) from side airbag module (RH). 5) Disconnect connector (AB28) from side airbag sensor (RH). 6) Connect the connector (AB28) of side airbag sensor (RH) and the connector (1AI) in the test harness AI. 7) Connect the connector (2AI) in the test harness AI and the connector (1V) in the test harness V. 8) Disconnect the connector (AB34) from curtain airbag sensor (RH), and connect the connector (2V) in test harness V to connector (AB34). 9) Measure the resistance between connector (3V) terminals in the test harness V. ***Connector & terminal*** ***(3V) No. 2 — (3V) No. 6:*** ***(3V) No. 1 — (3V) No. 7:***	Is the resistance less than 10 Ω?	Go to step **3**.	Replace the airbag rear harness along with body harness.
3	**CHECK AIRBAG REAR HARNESS (BETWEEN SIDE AIRBAG SENSOR AND CURTAIN AIRBAG SENSOR RH).** Measure the resistance between connector (3V) in test harness V and chassis ground, and the resistance between connector (3V) in test harness V. ***Connector & terminal*** ***(3V) No. 2 — Chassis ground:*** ***(3V) No. 1 — Chassis ground:*** ***(3V) No. 1 — (3V) No. 2:***	Is the resistance 1 MΩ or more?	Go to step **4**.	Replace the airbag rear harness along with body harness.

	Step	Check	Yes	No
4	**CHECK AIRBAG REAR HARNESS (BETWEEN AIRBAG CONTROL MODULE AND SIDE AIRBAG SENSOR RH).** 1) Disconnect the connectors (AB17, AB6, AB18) from airbag control module. 2) Connect the connector (1AG) in the test harness AG to the connectors (AB17, AB6, AB18). 3) Disconnect the connector (AB28) in the side airbag sensor (RH) from the connector (1AI) in the test harness AI. 4) Disconnect the connector (2AI) in the test harness AI from the connector (1V) in the test harness V. 5) Connect the connector (AB28) of side airbag sensor (RH) and the connector (2V) in the test harness V to the connector (AB28). 6) Measure the resistance between connector (5AG) in the test harness AG and connector (3V) in the test harness V. ***Connector & terminal*** ***(5AG) No. 16 — (3V) No. 2:*** ***(5AG) No. 14 — (3V) No. 1:***	Is the resistance less than 10 Ω?	Go to step **5**.	Replace the airbag rear harness along with body harness.
5	**CHECK AIRBAG REAR HARNESS (BETWEEN AIRBAG CONTROL MODULE AND SIDE AIRBAG SENSOR RH).** Measure the resistance between connector (5AG) in the test harness AG and chassis ground, and the resistance between connector (5AG) in the test harness AG and connector (3V) in test harness V. ***Connector & terminal*** ***(5AG) No. 16 — Chassis ground:*** ***(5AG) No. 14 — Chassis ground:*** ***(5AG) No. 14 — (5AG) No. 16:***	Is the resistance 1 MΩ or more?	Go to step **6**.	Replace the airbag rear harness along with body harness.
6	**CHECK AIRBAG CONTROL MODULE.** 1) Connect all connectors. 2) Clear the memory. 3) Perform the Inspection Mode. 4) Read the DTC.	Is the same DTC displayed?	Go to step **7**.	Go to step **8**.
7	**REPLACE SIDE AIRBAG SENSOR (RH) AND CHECK AIRBAG CONTROL MODULE AFTER REPLACEMENT.** <Ref. to AB-22, REMOVAL, Side Airbag Sensor.> 1) Connect all connectors. 2) Clear the memory. 3) Perform the Inspection Mode. 4) Read the DTC.	Is the system normal?	Go to step **8**.	Replace the curtain airbag sensor (RH). <Ref. to AB-23, REMOVAL, Curtain Airbag Sensor.> Replace the airbag control module if not operating normally even after replacing the sensor. <Ref. to AB-20, REMOVAL, Airbag Control Module.>
8	**CHECK FOR ANY OTHER DTC ON DISPLAY.**	Is any other DTC displayed?	Check DTC using "List of Diagnostic Trouble Code (DTC)". <Ref. to AB(diag)-38, List of Diagnostic Trouble Code (DTC).>	Finish the diagnosis.

AX:DTC F1 SIDE SENSOR BUS LH COMMUNICATION ERROR

NOTE:
Refer to DTC F4 for details on DTC F1. <Ref. to AB(diag)-113, DTC F4 SIDE SENSOR BUS LH COMMUNICATION ERROR, Diagnostic Chart with Trouble Code.>

AY:DTC F2 SIDE SENSOR BUS LH COMMUNICATION ERROR

NOTE:
Refer to DTC F4 for details on DTC F2. <Ref. to AB(diag)-113, DTC F4 SIDE SENSOR BUS LH COMMUNICATION ERROR, Diagnostic Chart with Trouble Code.>

AZ:DTC F3 SIDE SENSOR BUS LH COMMUNICATION ERROR

NOTE:
Refer to DTC F4 for details on DTC F3. <Ref. to AB(diag)-113, DTC F4 SIDE SENSOR BUS LH COMMUNICATION ERROR, Diagnostic Chart with Trouble Code.>

BA:DTC F4 SIDE SENSOR BUS LH COMMUNICATION ERROR

DTC DETECTING CONDITION:

- **Open or short circuit in harness of side sensor bus (LH).**
- **Side airbag sensor (LH) and curtain airbag sensor (LH) is faulty.**
- **Airbag control module is faulty.**

CAUTION:

- **Before diagnosing the airbag system, be sure to turn the ignition switch to OFF, disconnect the ground cable from battery, and wait 20 seconds or more before starting to work.**
- **When replacing the airbag module, seat belt pretensioner, roll connector, control module and sensor, reconnect each part and check that the warning light operates properly.**
- **When inspecting the airbag main harness, disconnect the airbag module connectors and seat belt pretensioners of the driver's and passenger's seats for safety reasons.**
- **When inspecting the airbag rear harness, disconnect the side airbag module connector, curtain airbag module connector and seat belt pretensioner connector for safety reasons.**

WIRING DIAGRAM:

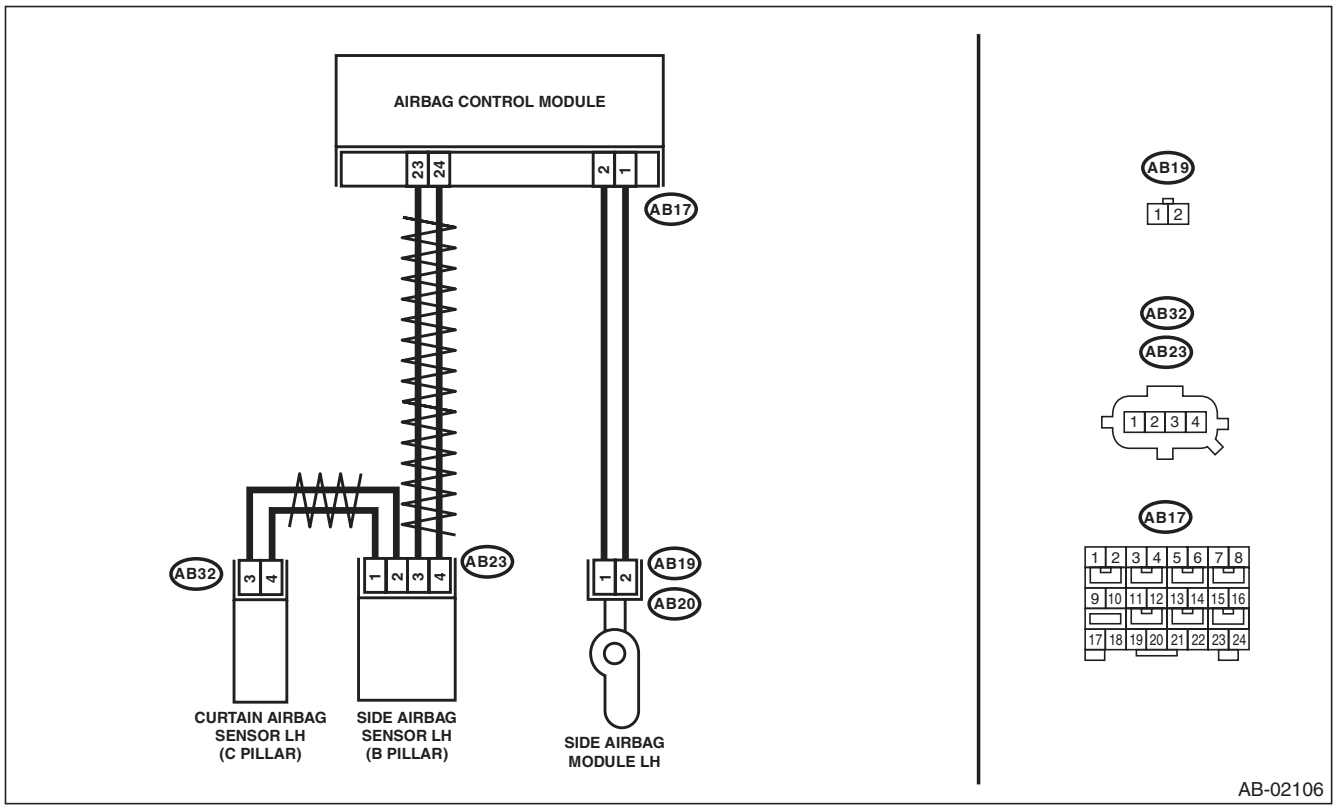

Step		Check	Yes	No
1	**CHECK POOR CONTACT IN CONNECTORS.** Check for poor contact of the connectors (AB17, AB23, AB32) between the airbag control module and the curtain airbag sensor (LH).	Is there poor contact?	Replace the airbag rear harness along with body harness.	Go to step **2**.

Step		Check	Yes	No
2	**CHECK AIRBAG REAR HARNESS (BETWEEN AIRBAG CONTROL MODULE AND SIDE AIRBAG SENSOR LH).** 1) Turn the ignition switch to OFF, disconnect the battery ground cable, and wait for 20 seconds or more. 2) Disconnect the connector (AB21) from seat belt pretensioner (LH). 3) Disconnect the connector (AB31) from curtain airbag module (LH). 4) Disconnect connectors (AB19) and (AB20) from side airbag module (LH). 5) Disconnect the connectors (AB17, AB6, AB18) from airbag control module. 6) Connect the connector (1AG) in the test harness AG to the connectors (AB17, AB6, AB18). 7) Disconnect the connector (AB23) from side airbag sensor (LH), and connect the connector (2V) in test harness V to connector (AB23). 8) Measure the resistance between connector (5AG) in the test harness AG and connector (3V) in the test harness V. ***Connector & terminal*** ***(5AG) No. 10 — (3V) No. 1:*** ***(5AG) No. 8 — (3V) No. 2:***	Is the resistance less than 10 Ω?	Go to step **3**.	Replace the airbag rear harness along with body harness.
3	**CHECK AIRBAG REAR HARNESS (BETWEEN AIRBAG CONTROL MODULE AND SIDE AIRBAG SENSOR LH).** Measure the resistance between connector (5AG) in the test harness AG and chassis ground, and the resistance between connector (5AG) in the test harness AG and connector (3V) in test harness V. ***Connector & terminal*** ***(5AG) No. 10 — Chassis ground:*** ***(5AG) No. 8 — Chassis ground:*** ***(5AG) No. 8 — (5AG) No. 10:***	Is the resistance 1 MΩ or more?	Go to step **4**.	Replace the airbag rear harness along with body harness.
4	**CHECK AIRBAG REAR HARNESS (BETWEEN SIDE AIRBAG SENSOR LH AND CURTAIN AIRBAG SENSOR LH).** 1) Disconnect the connector (2V) in the test harness V from the connector (AB23) of side airbag sensor (LH). 2) Connect the connector (AB23) of side airbag sensor (LH) and the connector (1AI) in the test harness AI. 3) Connect the connector (2AI) in the test harness AI and the connector (1V) in the test harness V. 4) Disconnect the connector (AB32) from curtain airbag sensor (LH), and connect the connector (2V) in test harness V to connector (AB32). 5) Measure the resistance between connector (3V) terminals in the test harness V. ***Connector & terminal*** ***(3V) No. 2 — (3V) No. 6:*** ***(3V) No. 1 — (3V) No. 7:***	Is the resistance less than 10 Ω?	Go to step **5**.	Replace the airbag rear harness along with body harness.

Step		Check	Yes	No
5	**CHECK AIRBAG REAR HARNESS (BETWEEN SIDE AIRBAG SENSOR LH AND CURTAIN AIRBAG SENSOR LH).** Measure the resistance between connector (3V) in test harness V and chassis ground, and the resistance between connector (3V) in test harness V. ***Connector & terminal*** ***(3V) No. 2 — Chassis ground:*** ***(3V) No. 1 — Chassis ground:*** ***(3V) No. 1 — (3V) No. 2:***	Is the resistance 1 MΩ or more?	Go to step **6**.	Replace the airbag rear harness along with body harness.
6	**CHECK AIRBAG CONTROL MODULE.** 1) Connect all connectors. 2) Clear the memory. 3) Perform the Inspection Mode. 4) Read the DTC.	Is the same DTC displayed?	Go to step **7**.	Go to step **8**.
7	**REPLACE SIDE AIRBAG SENSOR (LH) AND CHECK AIRBAG CONTROL MODULE AFTER REPLACEMENT.** <Ref. to AB-22, REMOVAL, Side Airbag Sensor.> 1) Connect all connectors. 2) Clear the memory. 3) Perform the Inspection Mode. 4) Read the DTC.	Is the system normal?	Go to step **8**.	Replace the curtain airbag sensor (LH). <Ref. to AB-23, REMOVAL, Curtain Airbag Sensor.> Replace the airbag control module if not operating normally even after replacing the sensor. <Ref. to AB-20, REMOVAL, Airbag Control Module.>
8	**CHECK FOR ANY OTHER DTC ON DISPLAY.**	Is any other DTC displayed?	Check DTC using "List of Diagnostic Trouble Code (DTC)". <Ref. to AB(diag)-38, List of Diagnostic Trouble Code (DTC).>	Finish the diagnosis.

BB:DTC F5 SIDE SENSOR BUS LH COMMUNICATION ERROR

NOTE:
Refer to DTC F6 for details on DTC F5. <Ref. to AB(diag)-116, DTC F6 SIDE SENSOR BUS LH COMMUNICATION ERROR, Diagnostic Chart with Trouble Code.>

BC:DTC F6 SIDE SENSOR BUS LH COMMUNICATION ERROR

DTC DETECTING CONDITION:

- **Open or short circuit in harness of side sensor bus (LH).**
- **Side airbag sensor (LH) or curtain airbag sensor (LH) is faulty.**
- **Airbag control module is faulty.**

CAUTION:

- **Before diagnosing the airbag system, be sure to turn the ignition switch to OFF, disconnect the ground cable from battery, and wait 20 seconds or more before starting to work.**
- **When replacing the airbag module, seat belt pretensioner, roll connector, control module and sensor, reconnect each part and check that the warning light operates properly.**
- **When inspecting the airbag main harness, disconnect the airbag module connectors and seat belt pretensioners of the driver's and passenger's seats for safety reasons.**
- **When inspecting the airbag rear harness, disconnect the side airbag module connector, curtain airbag module connector and seat belt pretensioner connector for safety reasons.**

WIRING DIAGRAM:

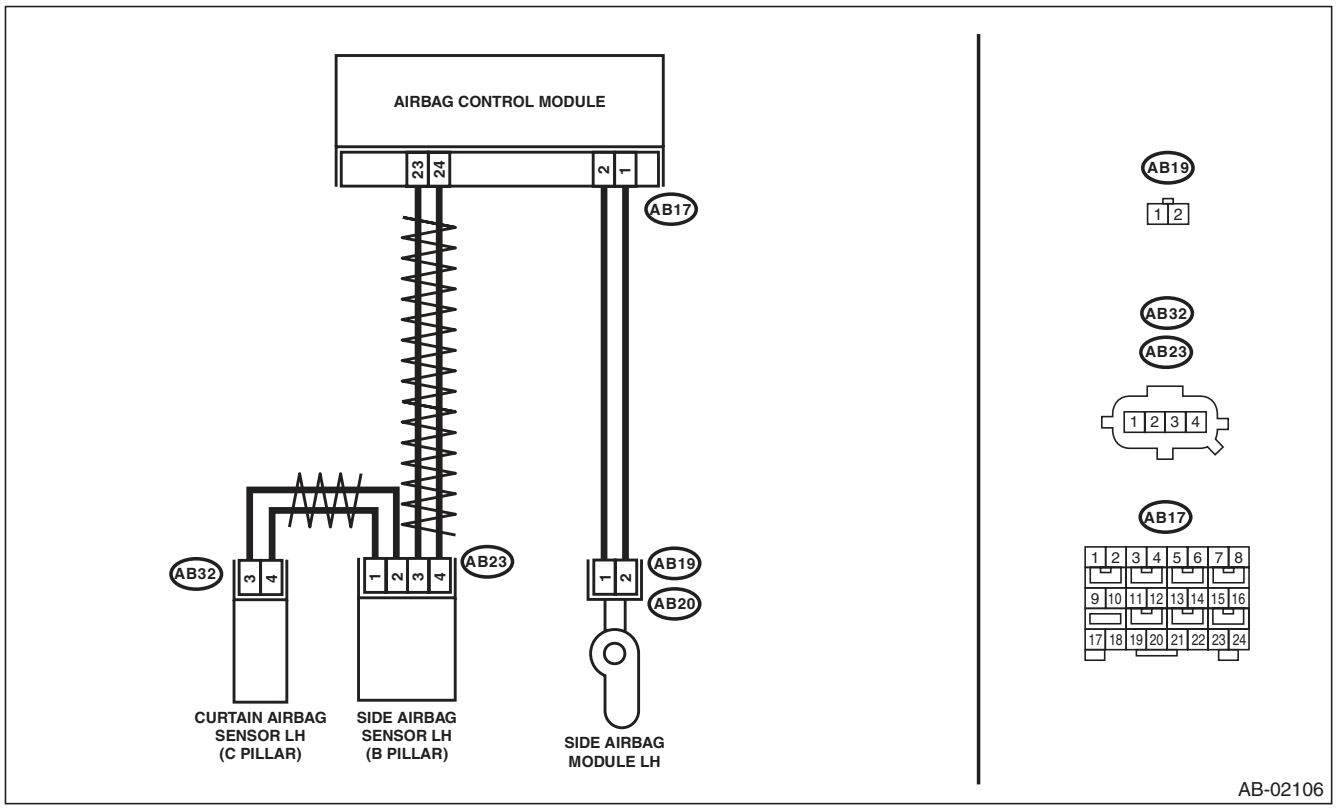

	Step	Check	Yes	No
1	**CHECK POOR CONTACT IN CONNECTORS.** Check for poor contact of the connectors (AB17, AB23, AB32) between the airbag control module and the curtain airbag sensor (LH).	Is there poor contact?	Replace the airbag rear harness along with body harness.	Go to step **2**.
2	**CHECK AIRBAG REAR HARNESS (BETWEEN SIDE AIRBAG SENSOR LH AND CURTAIN AIRBAG SENSOR LH).** 1) Turn the ignition switch to OFF, disconnect the battery ground cable, and wait for 20 seconds or more. 2) Disconnect the connector (AB21) from seat belt pretensioner (LH). 3) Disconnect the connector (AB31) from curtain airbag module (LH). 4) Disconnect connectors (AB19) and (AB20) from side airbag module (LH). 5) Disconnect the connector (AB23) in the side airbag sensor (LH). 6) Connect the connector (AB23) of side airbag sensor (LH) and the connector (1AI) in the test harness AI. 7) Connect the connector (2AI) in the test harness AI and the connector (1V) in the test harness V. 8) Disconnect the connector (AB32) from curtain airbag sensor (LH), and connect the connector (2V) in test harness V to connector (AB32). 9) Measure the resistance between connector (3V) terminals in the test harness V. ***Connector & terminal*** ***(3V) No. 2 — (3V) No. 6:*** ***(3V) No. 1 — (3V) No. 7:***	Is the resistance less than 10 Ω?	Go to step **3**.	Replace the airbag rear harness along with body harness.
3	**CHECK AIRBAG REAR HARNESS (BETWEEN SIDE AIRBAG SENSOR AND CURTAIN AIRBAG SENSOR LH).** Measure the resistance between connector (3V) in test harness V and chassis ground, and the resistance between connector (3V) in test harness V. ***Connector & terminal*** ***(3V) No. 1 — Chassis ground:*** ***(3V) No. 2 — Chassis ground:*** ***(3V) No. 1 — (3V) No. 2:***	Is the resistance 1 MΩ or more?	Go to step **4**.	Replace the airbag rear harness along with body harness.

	Step	Check	Yes	No
4	**CHECK AIRBAG REAR HARNESS (BETWEEN AIRBAG CONTROL MODULE AND SIDE AIRBAG SENSOR LH).** 1) Disconnect the connectors (AB17, AB6, AB18) from airbag control module. 2) Connect the connector (1AG) in the test harness AG to the connectors (AB17, AB6, AB18). 3) Disconnect the connector (AB23) in the side airbag sensor (LH) from the connector (1AI) in the test harness AI. 4) Disconnect the connector (2AI) in the test harness AI from the connector (1V) in the test harness V. 5) Connect the connector (2V) in the test harness V to the connector (AB23). 6) Measure the resistance between connector (5AG) in the test harness AG and connector (3V) in the test harness V. ***Connector & terminal*** ***(5AG) No. 10 — (3V) No. 1:*** ***(5AG) No. 8 — (3V) No. 2:***	Is the resistance less than 10 Ω?	Go to step **5**.	Replace the airbag rear harness along with body harness.
5	**CHECK AIRBAG REAR HARNESS (BETWEEN SIDE AIRBAG SENSOR LH AND CURTAIN AIRBAG SENSOR LH).** Measure the resistance between connector (3V) in the test harness V and chassis ground, and the resistance between connector (5AG) in the test harness AG and connector (3V) in test harness V. ***Connector & terminal*** ***(5AG) No. 8 — Chassis ground:*** ***(5AG) No. 10 — Chassis ground:*** ***(5AG) No. 8 — (5AG) No. 10:***	Is the resistance 1 MΩ or more?	Go to step **6**.	Replace the airbag rear harness along with body harness.
6	**CHECK AIRBAG CONTROL MODULE.** 1) Connect all connectors. 2) Clear the memory. 3) Perform the Inspection Mode. 4) Read the DTC.	Is the same DTC displayed?	Go to step **7**.	Go to step **8**.
7	**REPLACE SIDE AIRBAG SENSOR (LH) AND CHECK AIRBAG CONTROL MODULE AFTER REPLACEMENT.** <Ref. to AB-22, REMOVAL, Side Airbag Sensor.> 1) Connect all connectors. 2) Clear the memory. 3) Perform the Inspection Mode. 4) Read the DTC.	Is the system normal?	Go to step **8**.	Replace the curtain airbag sensor (LH). <Ref. to AB-23, REMOVAL, Curtain Airbag Sensor.> Replace the airbag control module if not operating normally even after replacing the sensor. <Ref. to AB-20, REMOVAL, Airbag Control Module.>
8	**CHECK FOR ANY OTHER DTC ON DISPLAY.**	Is any other DTC displayed?	Check DTC using "List of Diagnostic Trouble Code (DTC)". <Ref. to AB(diag)-38, List of Diagnostic Trouble Code (DTC).>	Finish the diagnosis.

BD:DTC F8 SATELLITE SENSOR BUS COMMUNICATION ERROR

NOTE:
Refer to DTC FA for details on DTC F8. <Ref. to AB(diag)-120, DTC FA SATELLITE SENSOR BUS COMMUNICATION ERROR, Diagnostic Chart with Trouble Code.>

BE:DTC F9 SATELLITE SENSOR BUS COMMUNICATION ERROR

NOTE:
Refer to DTC FA for details on DTC F9. <Ref. to AB(diag)-120, DTC FA SATELLITE SENSOR BUS COMMUNICATION ERROR, Diagnostic Chart with Trouble Code.>

BF:DTC FA SATELLITE SENSOR BUS COMMUNICATION ERROR

DTC DETECTING CONDITION:

- **Open or short circuit in harness of satellite safing sensor.**
- **Satellite safing sensor is faulty.**
- **Airbag control module is faulty.**

CAUTION:

- **Before diagnosing the airbag system, be sure to turn the ignition switch to OFF, disconnect the ground cable from battery, and wait 20 seconds or more before starting to work.**
- **When replacing the airbag module, seat belt pretensioner, roll connector, control module and sensor, reconnect each part and check that the warning light operates properly.**
- **When inspecting the airbag main harness, disconnect the airbag module connectors and seat belt pretensioners of the driver's and passenger's seats for safety reasons.**
- **When inspecting the airbag rear harness, disconnect the side airbag module connector, curtain airbag module connector and seat belt pretensioner connector for safety reasons.**

WIRING DIAGRAM:

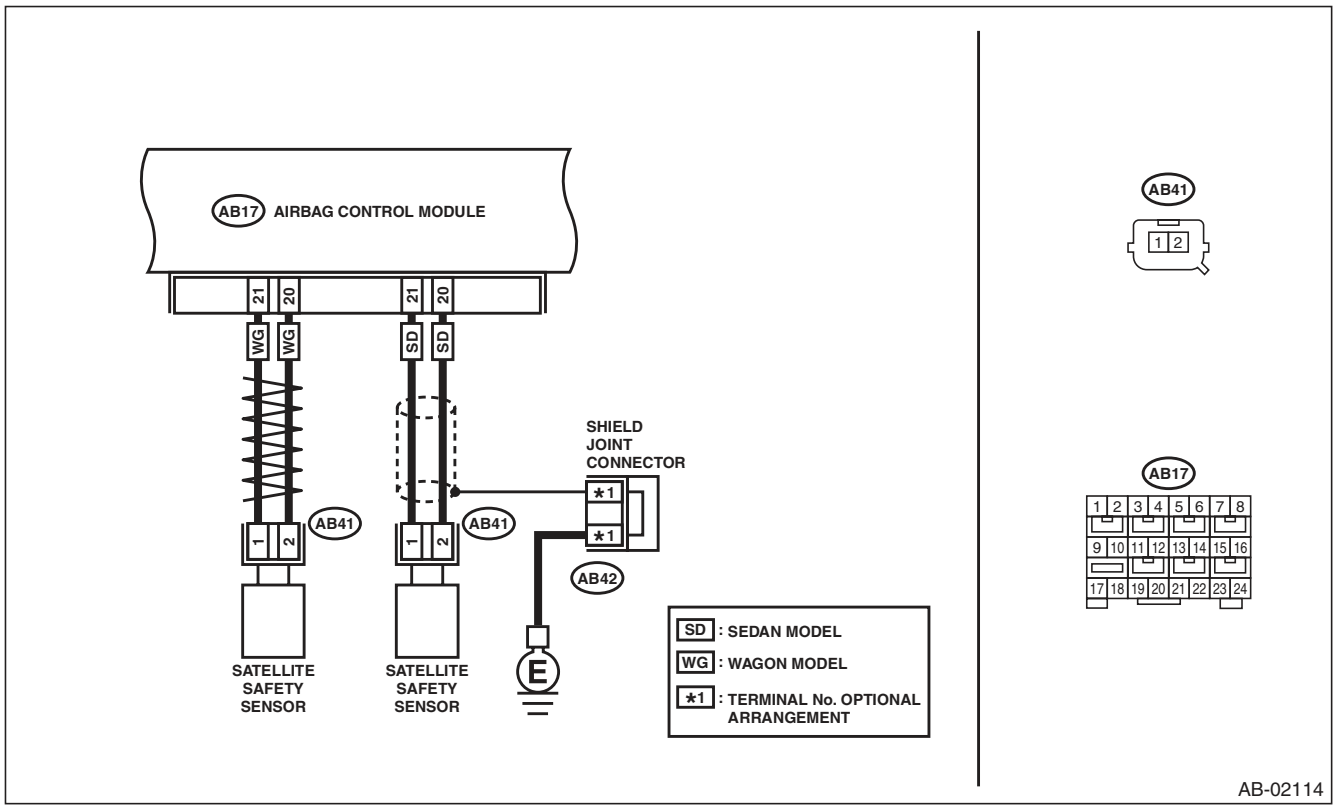

Step		Check	Yes	No
1	**CHECK POOR CONTACT IN CONNECTORS.** Check for poor contact of the connectors (AB17, AB41) between the airbag control module and the satellite safing sensor.	Is there poor contact?	Replace the airbag rear harness along with body harness.	Go to step **2**.

Step		Check	Yes	No
2	**CHECK AIRBAG REAR HARNESS (BETWEEN AIRBAG CONTROL MODULE AND SATELLITE SAFING SENSOR).** 1) Turn the ignition switch to OFF, disconnect the battery ground cable, and wait for 20 seconds or more. 2) Disconnect the connectors (AB21, AB26) from seat belt pretensioner. 3) Disconnect the connectors (AB31, AB33) from curtain airbag module. 4) Disconnect the connectors (AB19), (AB20), (AB24) and (AB25) from the side airbag module. 5) Disconnect the connectors (AB17, AB6, AB18) from airbag control module. 6) Connect the connector (1AG) in the test harness AG to the connectors (AB17, AB6, AB18). 7) Disconnect the connector (AB41) from satellite safing sensor, and then connect the connector (1H) in the test harness H to connector (AB41). 8) Measure the resistance between connector (5AG) in the test harness AG and connector (3H) in the test harness H. ***Connector & terminal*** ***(5AG) No. 9 — (3H) No. 5:*** ***(5AG) No. 11 — (3H) No. 6:***	Is the resistance less than 10 Ω?	Go to step **3**.	Replace the airbag rear harness along with body harness.
3	**CHECK AIRBAG REAR HARNESS (BETWEEN AIRBAG CONTROL MODULE AND SATELLITE SAFING SENSOR).** Measure the resistance between connector (5AG) in the test harness AG and chassis ground, and the resistance between connector (5AG) in the test harness AG and connector (3H) in test harness H. ***Connector & terminal*** ***(5AG) No. 9 — Chassis ground:*** ***(5AG) No. 11 — Chassis ground:*** ***(5AG) No. 9 — (5AG) No. 11:***	Is the resistance 1 MΩ or more?	Go to step **4**.	Replace the airbag rear harness along with body harness.
4	**CHECK AIRBAG CONTROL MODULE.** 1) Connect all connectors. 2) Clear the memory. 3) Perform the Inspection Mode. 4) Read the DTC.	Is the same DTC displayed?	Replace the satellite safing sensor. <Ref. to AB-24, REMOVAL, Satellite Safing Sensor.> Replace the airbag control module if not operating normally even after replacing the sensor. <Ref. to AB-20, REMOVAL, Airbag Control Module.>	Go to step **5**.
5	**CHECK FOR ANY OTHER DTC ON DISPLAY.**	Is any other DTC displayed?	Check DTC using "List of Diagnostic Trouble Code (DTC)". <Ref. to AB(diag)-38, List of Diagnostic Trouble Code (DTC).>	Finish the diagnosis.

BG:DTC 3A FRONT SUB SENSOR RH FALSE INSTALLATION

DTC DETECTING CONDITION:
Front sub sensor (RH) is misinstalled.

	Step	Check	Yes	No
1	**REPLACE THE FRONT SUB SENSOR.** 1) Turn the ignition switch to OFF, disconnect the ground cable from battery, and wait for 20 seconds or more. 2) Replace the front sub sensor (RH) with a genuine sensor. <Ref. to AB-21, REMOVAL, Front Sub Sensor.>	Does the warning light go off?	Finish the diagnosis.	Replace the airbag control module. <Ref. to AB-20, REMOVAL, Airbag Control Module.>

BH:DTC 3B FRONT SUB SENSOR LH FALSE INSTALLATION

DTC DETECTING CONDITION:
Front sub sensor (LH) is misinstalled.

	Step	Check	Yes	No
1	**REPLACE THE FRONT SUB SENSOR.** 1) Turn the ignition switch to OFF, disconnect the battery ground cable, and wait for 20 seconds or more. 2) Replace the front sub sensor (LH) with a genuine sensor. <Ref. to AB-21, REMOVAL, Front Sub Sensor.>	Does the warning light go off?	Finish the diagnosis.	Replace the airbag control module. <Ref. to AB-20, REMOVAL, Airbag Control Module.>

BI: DTC 3C SATELLITE SENSOR BUS FAILURE

DTC DETECTING CONDITION:
Satellite safing sensor is faulty.

	Step	Check	Yes	No
1	**REPLACE SATELLITE SAFING SENSOR.** 1) Turn the ignition switch to OFF, disconnect the ground cable from battery, and wait for 20 seconds or more. 2) Replace the satellite safing sensor with a genuine sensor. <Ref. to AB-24, REMOVAL, Satellite Safing Sensor.>	Does the warning light go off?	Finish the diagnosis.	Replace the airbag control module. <Ref. to AB-20, REMOVAL, Airbag Control Module.>

BJ:DTC 3D SATELLITE SENSOR FALSE INSTALLATION

DTC DETECTING CONDITION:
Satellite safing sensor is misinstalled.

	Step	Check	Yes	No
1	**REPLACE SATELLITE SAFING SENSOR.** 1) Turn the ignition switch to OFF, disconnect the ground cable from battery, and wait for 20 seconds or more. 2) Replace the satellite safing sensor with a genuine sensor. <Ref. to AB-24, REMOVAL, Satellite Safing Sensor.>	Does the warning light go off?	Finish the diagnosis.	Replace the airbag control module. <Ref. to AB-20, REMOVAL, Airbag Control Module.>

BK:DTC 5A SIDE AIRBAG SENSOR RH FALSE INSTALLATION

DTC DETECTING CONDITION:
Side airbag sensor RH is misinstalled.

	Step	Check	Yes	No
1	**REPLACE SIDE AIRBAG SENSOR (RH).** 1) Turn the ignition switch to OFF, disconnect the battery ground cable, and wait for 20 seconds or more. 2) Replace the side airbag sensor (RH) with a genuine sensor. <Ref. to AB-22, REMOVAL, Side Airbag Sensor.>	Does the warning light go off?	Finish the diagnosis.	Replace the airbag control module. <Ref. to AB-20, REMOVAL, Airbag Control Module.>

BL:DTC 5B SIDE AIRBAG SENSOR LH FALSE INSTALLATION

DTC DETECTING CONDITION:
Side airbag sensor LH is misinstalled.

	Step	Check	Yes	No
1	**REPLACE SIDE AIRBAG SENSOR (LH).** 1) Turn the ignition switch to OFF, disconnect the battery ground cable, and wait for 20 seconds or more. 2) Replace the side airbag sensor (LH) with a genuine sensor. <Ref. to AB-22, REMOVAL, Side Airbag Sensor.>	Does the warning light go off?	Finish the diagnosis.	Replace the airbag control module. <Ref. to AB-20, REMOVAL, Airbag Control Module.>

BM:DTC 5C CURTAIN AIRBAG SENSOR RH FALSE INSTALLATION

DTC DETECTING CONDITION:
Curtain side airbag sensor RH is misinstalled.

	Step	Check	Yes	No
1	**REPLACE CURTAIN AIRBAG SENSOR (RH).** 1) Turn the ignition switch to OFF, disconnect the battery ground cable, and wait for 20 seconds or more. 2) Replace the curtain airbag sensor (RH) with a genuine sensor. <Ref. to AB-23, REMOVAL, Curtain Airbag Sensor.>	Does the warning light go off?	Finish the diagnosis.	Replace the airbag control module. <Ref. to AB-20, REMOVAL, Airbag Control Module.>

BN:DTC 5D CURTAIN AIRBAG SENSOR LH FALSE INSTALLATION

DTC DETECTING CONDITION:
Curtain side airbag sensor LH is misinstalled.

	Step	Check	Yes	No
1	**REPLACE CURTAIN AIRBAG SENSOR (LH).** 1) Turn the ignition switch to OFF, disconnect the battery ground cable, and wait for 20 seconds or more. 2) Replace the curtain airbag sensor (LH) with a genuine sensor. <Ref. to AB-23, REMOVAL, Curtain Airbag Sensor.>	Does the warning light go off?	Finish the diagnosis.	Replace the airbag control module. <Ref. to AB-20, REMOVAL, Airbag Control Module.>

1. Basic Diagnostic Procedure

A: PROCEDURE

Step		Check	Yes	No
1	**CHECK WARNING LIGHT.** Check whether the airbag warning light in the combination meter is lit.	Does the airbag warning light illuminate?	Go to step **2**.	Perform the diagnosis according to phenomenon of the problem.
2	**READ DTC.** 1) Turn the ignition switch to OFF. 2) Connect the Subaru Select Monitor to data link connector. 3) Turn the ignition switch to ON and run the Subaru Select Monitor. 4) Read the DTC. <Ref. to OD(diag)-17, OPERATION, Read Diagnostic Trouble Code (DTC).> NOTE: If the communication function of the Subaru Select Monitor cannot be executed normally, check the communication circuit. <Ref. to AB(diag)-26, COMMUNICATION FOR INITIALIZING IMPOSSIBLE, INSPECTION, Subaru Select Monitor.> 5) Record all DTCs and freeze frame data.	Is DTC displayed?	Go to step **3**.	Go to “Airbag Warning Light Failure”<Ref. to AB(diag)-33, Airbag Warning Light Failure.>.
3	**PERFORM DIAGNOSIS.** 1) Determine the possible cause “List of Diagnostic Trouble Code (DTC)”<Ref. to OD(diag)-22, List of Diagnostic Trouble Code (DTC).>. 2) Inspect the DTC using “List of Diagnostic Trouble Code (DTC)”. 3) Repair the trouble cause. 4) Perform the Clear Memory Mode. <Ref. to OD(diag)-19, Clear Memory Mode.> 5) Perform the Inspection Mode. <Ref. to OD(diag)-18, Inspection Mode.> 6) Read any other DTCs displayed.	Is DTC displayed?	Perform the procedure 1) to 5) in step 3.	Finish the diagnosis.

2. Check List for Interview

A: CHECK

Customer's name		Inspector's name	
Date vehicle brought in	/ /	Registration No.	
Odometer reading	km miles	V.I.N.	
Date problem occurred	/ /	Registration year	/ /
Weather	❑ Fine ❑ Cloudy ❑ Rainy ❑ Snowy ❑ Others :		
Temperature	°C (°F)		
Road condition	❑ Flat road ❑ Uphill ❑ Downhill ❑ Gravel road ❑ Others :		
Vehicle operation	❑ Starting ❑ Idling ❑ Driving ❑ Constant speed ❑ Accelerating ❑ Decelerating ❑ Turning ❑ Others :		
Details of problem			
Airbag warning light operation	❑ Normal (After turning the ignition switch to ON, illuminates for 6 seconds then goes off.) ❑ Remains ON ❑ Remains OFF		
Passenger's airbag ON/OFF indicator does not operate.	❑ Normal (After turning the ignition switch to ON, illuminates for 6 seconds then goes off for 2 seconds; Lights ON (adult) or OFF (children/unoccupied).) ❑ Both remain ON ❑ Both remain OFF		
DTC output	❑ OK code ❑ DTC: (Code:)		

3. General Description

A: CAUTION

1) If the seat cushion cover is removed or replaced, make sure to perform passenger detection system adjustment after installing the seat to the vehicle. <Ref. to OD(diag)-15, SYSTEM CALIBRATION (REZEROING), OPERATION, Subaru Select Monitor.>
Failure to do so may cause improper operation of the occupant detection system.
2) The passenger detection system (passenger seat only) control unit and the passenger detection sensor are fixed to the seat cushion frame. Never remove the passenger detection control unit or the pressure sensor from the seat cushion frame.
3) Do not replace the seat cushion pad by itself. Always replace the seat cushion pad and frame assembly as a set. The seat cushion pad and cushion frame are adjusted as a set at the time of manufacture. If cushion pads and cushion frames are combined from those of other vehicles or other sets, the passenger detection system may not operate properly.
4) If the seat cushion cover is removed, make sure to replace the hang wire on the seat cushion side with a new wire.
5) Never connect the battery in reverse polarity.
Occupant detection system may be destroyed instantly.
6) Do not disconnect the battery terminals while the engine is running.
A large counter electromotive force will be generated in the generator, and this voltage may damage electronic parts such as occupant detection control module.
7) Before disconnecting the connectors of each sensor and control module, be sure to turn the ignition switch to OFF and wait for 20 seconds or more.
Occupant detection control module may be damaged.
8) Every occupant detection system-related part is a precision part. Do not drop them.

CAUTION:
- **Do not use electrical test equipment on wiring harness and connector circuits of the airbag system.**
- **Be careful not to damage the airbag system wiring harness when servicing the occupant detection system.**
- **Refer to CAUTION in Airbag System when repairing the occupant detection system. <Ref. to AB(diag)-4, CAUTION, General Description.>**

B: INSPECTION

Measure the battery voltage and check electrolyte.

Standard voltage:
12 V

Specific gravity:
1.260 or more

Fluid level:
Between the upper level and lower level

C: PREPARATION TOOL

CAUTION:
To measure the voltage and resistance of airbag system and occupant detection system components, be sure to use the specified test harness.

1. SPECIAL TOOL

ILLUSTRATION	TOOL NUMBER	DESCRIPTION	REMARKS
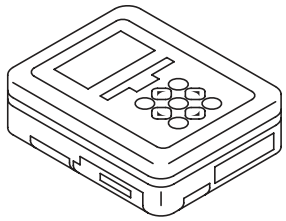 ST1B022XU0	1B022XU0	SUBARU SELECT MONITOR III KIT	Used for troubleshooting the electrical system.

- TEST HARNESS D

ILLUSTRATION	TOOL NUMBER	DESCRIPTION	REMARKS
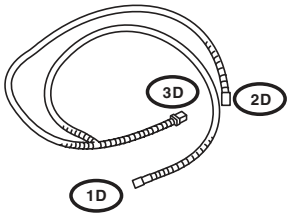 ST98299AG060	98299AG060	TEST HARNESS D	Used when measuring voltage and resistance of the front seat belt buckle switch.

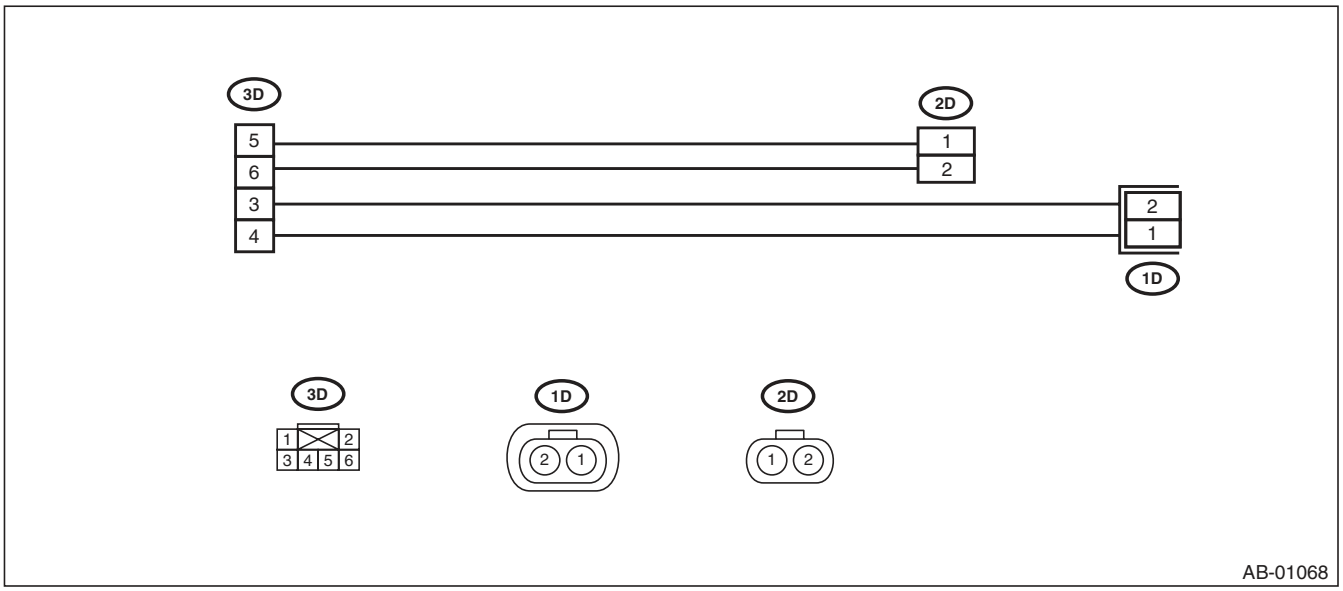

- TEST HARNESS Y

ILLUSTRATION	TOOL NUMBER	DESCRIPTION	REMARKS
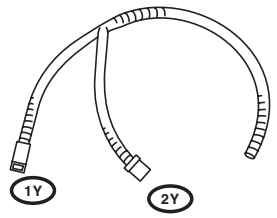 ST98299AG040	98299AG040	TEST HARNESS Y	Used for troubleshooting seat belt buckle switch.

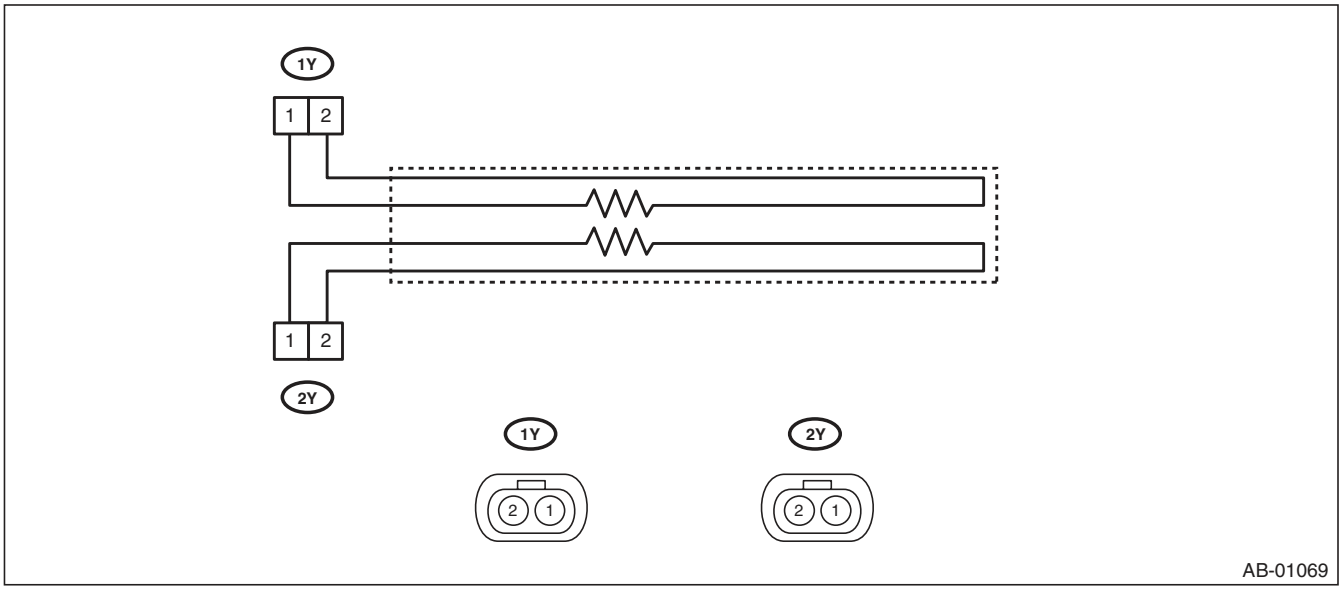

- TEST HARNESS AB

ILLUSTRATION	TOOL NUMBER	DESCRIPTION	REMARKS
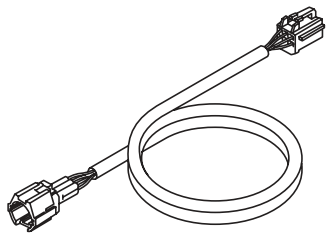 ST98299XA000	98299XA000	TEST HARNESS AB	Used when measuring voltage and resistance of occupant detection system.

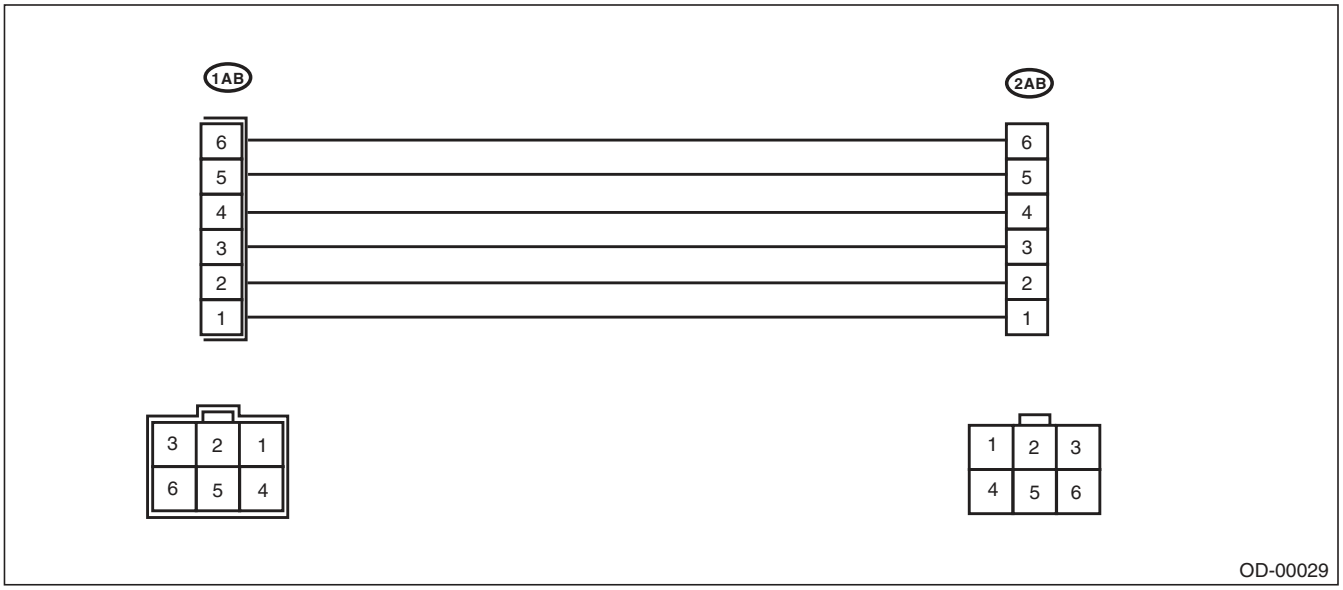

- TEST HARNESS AE

ILLUSTRATION	TOOL NUMBER	DESCRIPTION	REMARKS
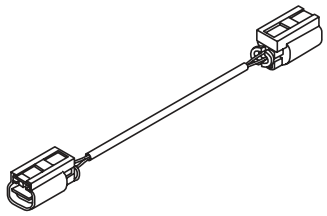 ST98299XA030	98299XA030	TEST HARNESS AE	Test harness Y adapter harness Used for troubleshooting seat belt buckle switch.

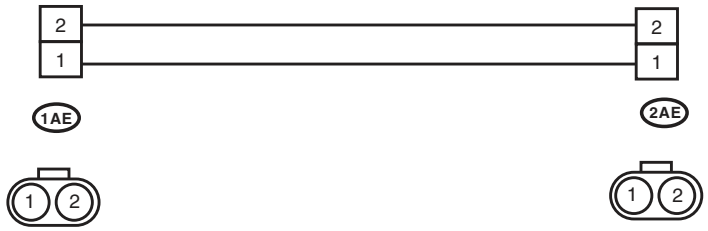

OD-00026

- TEST HARNESS AC

ILLUSTRATION	TOOL NUMBER	DESCRIPTION	REMARKS
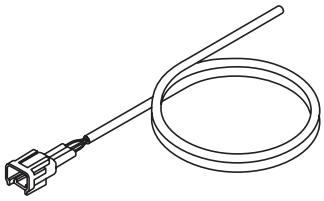 ST98299XA010	98299XA010	TEST HARNESS AC	Used for troubleshooting seat belt tension sensor.

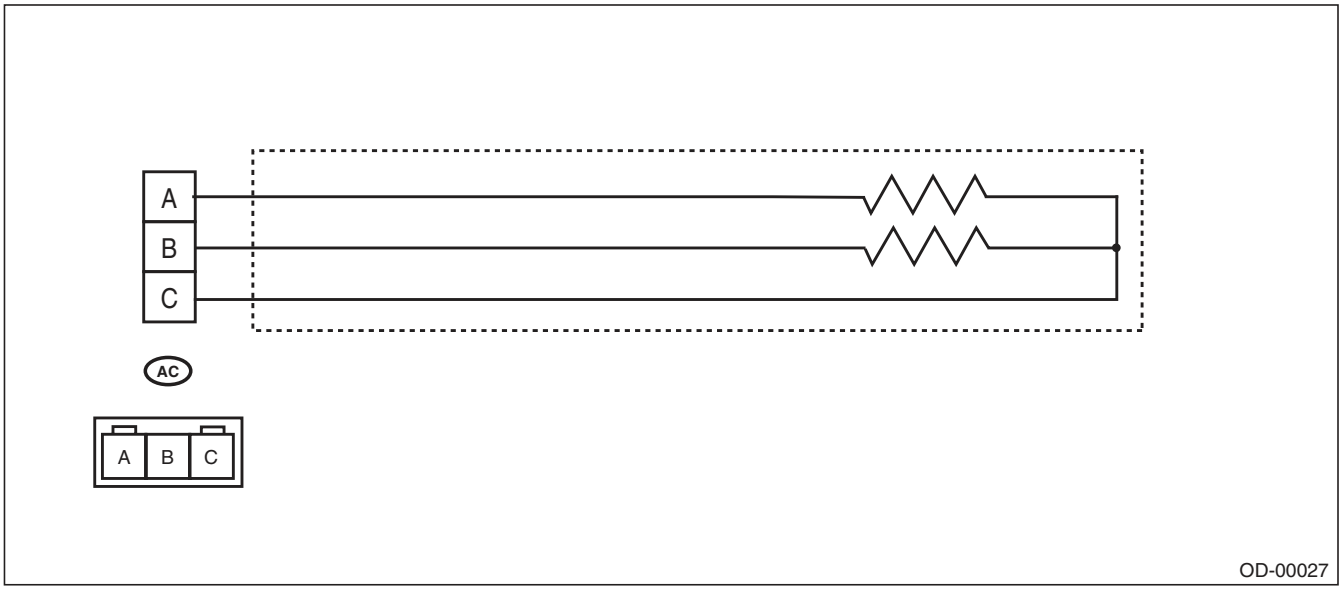

- TEST HARNESS AD

ILLUSTRATION	TOOL NUMBER	DESCRIPTION	REMARKS
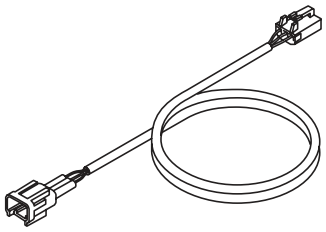 ST98299XA020	98299XA020	TEST HARNESS AD	Used when measuring voltage and resistance of the seat belt tension sensor.

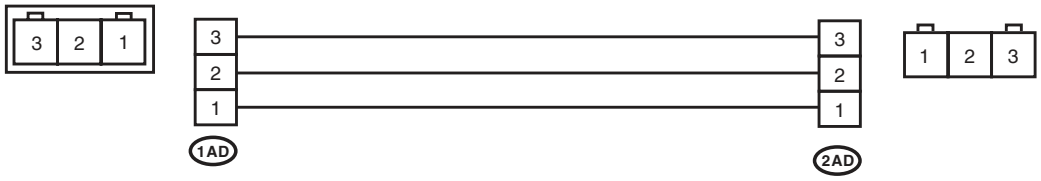

OD-00028

2. GENERAL TOOL

TOOL NAME	REMARKS
Circuit tester	Used for measuring resistance, voltage and current.

4. Electrical Component Location

A: LOCATION

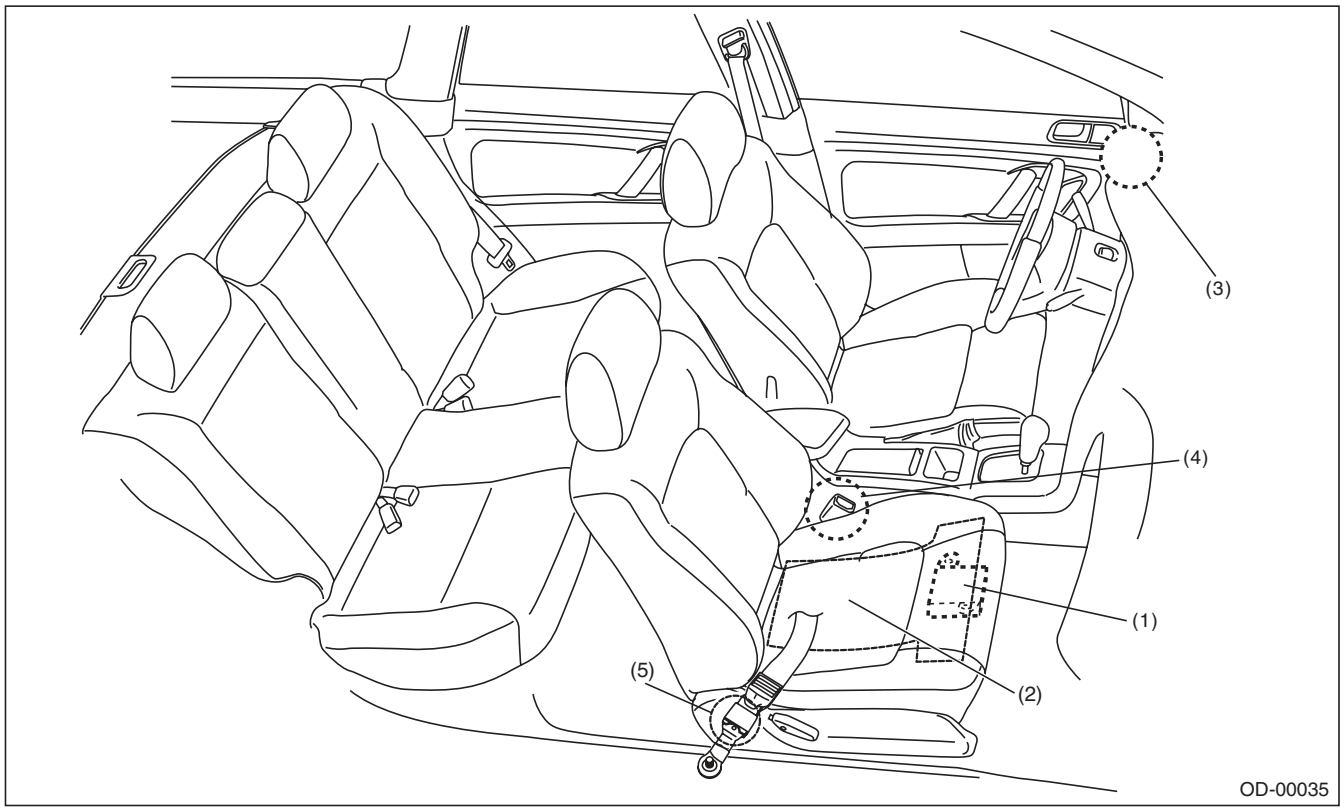

(1)	Occupant detection control module	(3)	Airbag ON/OFF indicator light (Map light)	(5)	Seat belt tension sensor
(2)	Occupant detection sensor	(4)	Buckle switch (Passenger's seat)		

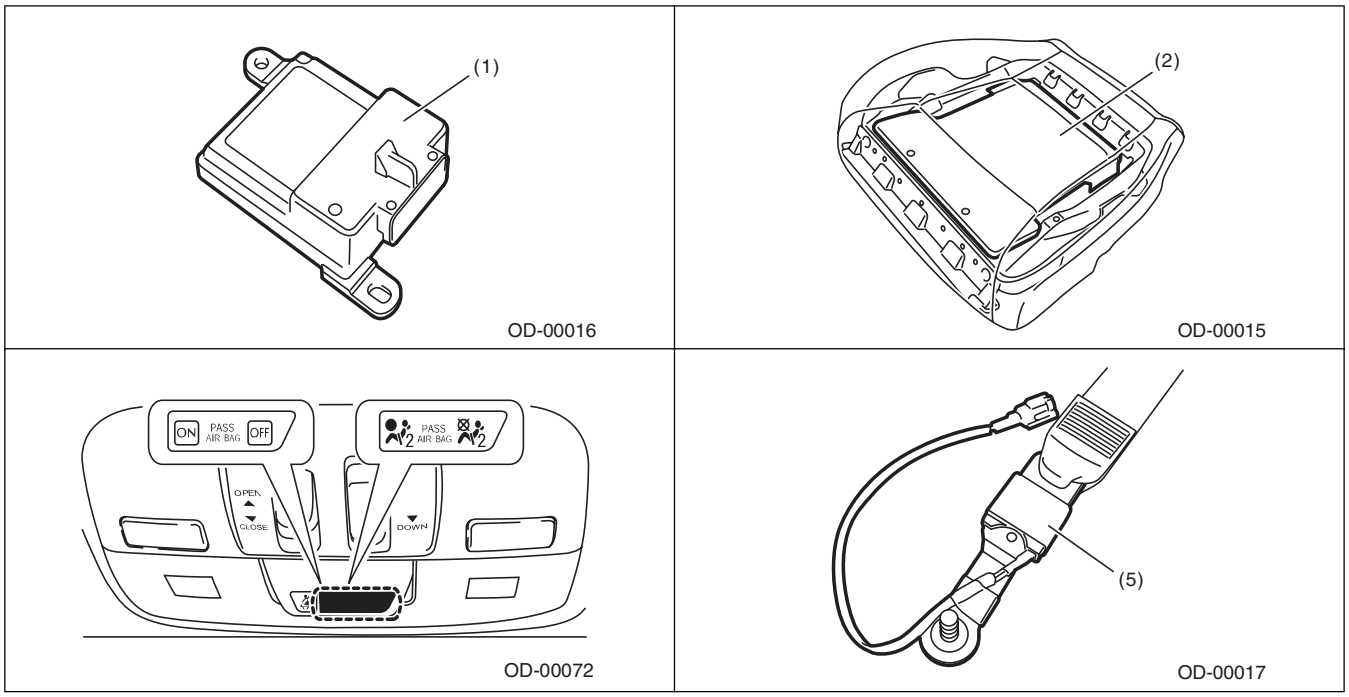

5. Airbag Connector

A: PROCEDURE

For detailed operation procedure, refer to “Airbag connector” in AB section. <Ref. to AB-8, Airbag Connector.>

6. Control Module I/O Signal

A: ELECTRICAL SPECIFICATION

CAUTION:
Never remove the occupant detection control module, occupant detection sensor or seat frame because they are integrated into one unit.

Terminal name		Terminal No.	Input/Output value	Remarks
IG – power supply		9	9 — 16 V	When ignition switch ON
Airbag control module communication	(COM)	10	Open collector terminal	Communication line
Airbag control module communication	(GND)	5	0 V	Ground
Belt tension sensor	(Vcc)	4	0 — 5 V	Belt tension sensor power supply
	(Vout)	16	0.5 — 4.5 V	Sensor output voltage
	(GND)	14	0 V	Sensor ground
Occupant detection sensor	(Vcc)	6	0 — 5 V	Pressure sensor power supply
	(Vout)	7	0.5 — 4.5 V	Sensor output voltage
	(GND)	15	0 V	Sensor ground
Buckle switch		1	0 — IG voltage	Ignition voltage when switch ON
Buckle switch	(GND)	2	0 V	Switch ground

B: WIRING DIAGRAM

Refer to the electrical wiring diagram. <Ref. to WI-126, WIRING DIAGRAM, Occupant Detection System.>

7. Subaru Select Monitor

A: OPERATION

1. READ DIAGNOSTIC TROUBLE CODE (DTC)

When malfunction of the airbag system and the occupant detection system occur, the DTC stored in airbag control module will be read out.
Refer to the READ DIAGNOSTIC TROUBLE CODE (DTC) of the Airbag system (diagnostics). <Ref. to AB(diag)-24, READ DIAGNOSTIC TROUBLE CODE (DTC), OPERATION, Subaru Select Monitor.>

NOTE:
- For detailed operation procedures, refer to the “PC application help for Subaru Select Monitor”.
- For details concerning DTCs, refer to the List of Diagnostic Trouble Code (Airbag system, Occupant detection system). <Ref. to AB(diag)-38, List of Diagnostic Trouble Code (DTC).> <Ref. to OD(diag)-22, List of Diagnostic Trouble Code (DTC).>

2. DISPLAY OF STATUS INFORMATION

Check the operating condition of each sensor in the event of malfunction in seat belt buckle switch and seat position sensor, or when the seat belt buckle switch and seat position sensor has been replaced.
1) On the «Main Menu» display, select the {Each System Check}.
2) On the «System Selection Menu» display, select the {Airbag System}.
3) On the «Airbag System» display, select the {Status Data}.
The following table is for support data.

Item	Display
Seat Position Sensor LH	—*5
Seat Position Sensor RH	—*5
Seat Belt Buckle Switch LH	—*9
Seat Belt Buckle Switch RH	Belted *6/Unbelted*7 /Other *8/Initial Setting *4 /—*9
Passenger’s Airbag control status	ON *10/OFF *11 /Initial Setting *4

*1: The seat position is forward.
*2: The seat position is rearward.
*3: Displayed when data other than before and behind the seat, such as the breakdown etc, is input.
*4: Displayed when it is initial.
*5: Seat position sensor not supported
*6: Seat belt fastened
*7: Seat belt not fastened
*8: Displayed when data other than belt fastened or not fastened, such as breakdowns is input.
*9: Seat belt buckle switch not supported
*10: Passenger’s airbag operating state
*11: Passenger’s airbag non-operating state

NOTE:
For detailed operation procedures, refer to the “PC application help for Subaru Select Monitor”.

3. CLEAR MEMORY MODE

Clear the DTC stored in the airbag control module after repairing the airbag system and occupant detection system. (After the breakdown is recovered, the breakdown code for completed recoveries are read out when the next breakdown occurs if the memory clear work is not performed.)

1) On the «Main Menu» display, select the {Each System Check}.
2) On the «System Selection Menu» display, select the {Airbag System}.
3) Select {Clearing Memory} in «Airbag System» menu screen.
4) When the “Clear Memory?” is shown on the screen, click the [OK] button.
5) When Done is displayed, terminate the Subaru Select Monitor and turn the ignition switch to OFF.

NOTE:
For detailed operation procedures, refer to the “PC application help for Subaru Select Monitor”.

4. SYSTEM CALIBRATION (REZEROING)

NOTE:
When replacing the occupant detection system, or removing and disassembling the passenger’s seat, always perform the system calibration after installing a seat in the vehicle.

CAUTION:
When the trouble occurs in the system during calibration process, “Occupant detection calibration failure” is detected in the DTC 2A of the airbag system and the airbag warning light lights. In this case, after turning the ignition switch to OFF once, redo the system calibration (Rezeroing), or after clearing the cause of the failure, perform the system calibration again.

1) Park empty vehicle on a level surface.
2) On the «Main Menu» display, select the {Each System Check}.
3) On the «System Selection Menu» display, select the {Occupant Detection System}.
4) On the {Occupant Detection System} display, select the {Rezeroing}.
5) «See service manual. And check vehicle condition for successfully completing the rezeroing» is displayed. Check the following to adjust the condition of the vehicle.
• Adjust the seat backrest to be fully upright. (For models with power seats, press the power seat button until the backrest comes to a stop.)
• Adjust the seat slide position all the way back. (For models with power seats, press the power seat button until the seat slide does not move any further.)
• Do not place anything on the top of the seat cushion.
• Sit on the seat cushion to smooth the seat surface.
• Check that the passenger’s seat belt is not inserted into the buckle, not tense or not stuck.
• Check that ambient temperature is in a range from 0 to 40°C.
6) When the «Re-zeroing Adjust the passenger seat to the condition shown in service manual» is displayed, slide the passenger seat all the way to the back, check that the backrest is adjusted to all the way up, and select the [OK].

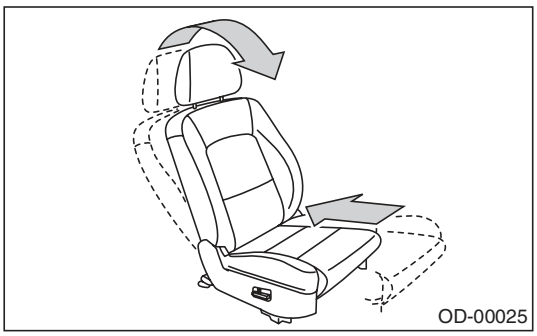

7) When the «Re-zeroing Unbelt the Passenger seatbelt Continue: OK, Quit: NO» is displayed, make sure the passengers seatbelt is disconnected from the buckle and select the [OK].
8) When the «Re-zeroing Empty the passenger seat Continue: OK, Quit: NO» is displayed, make sure that the passengers seat is empty, airbag OFF indicator illuminates and airbag ON indicator does not illuminate, and select the [OK].

NOTE:
• After selecting the [OK], «In process...Please wait for a while..without touching vehicle» is displayed. Do not touch or rock the vehicle while the message is displayed.
• During the system calibration process, if the «Re-zeroing is unsuccessful See service manual Press OK to END» is displayed, go to step 10).

9) When the re-zeroing is ended normally, the «Re-zeroing is successfully completed Press OK to END» is displayed. And then turn the ignition switch to OFF to finish the diagnosis.
10) During the system calibration process, if «Re-zeroing is unsuccessful See service manual Press OK to END» is displayed, turn the ignition switch to OFF once and turn it ON again, then read the DTC of the airbag system. <Ref. to AB(diag)-24, READ DIAGNOSTIC TROUBLE CODE (DTC), OPERATION, Subaru Select Monitor.>
When DTC is input, fix the fault and then perform the system calibration. When DTC is not input, check the seat and vehicle status and then perform the system calibration again. <Ref. to OD(diag)-15, SYSTEM CALIBRATION (REZEROING), OPERATION, Subaru Select Monitor.>

NOTE:
When the re-zeroing is unsuccessful, there could be occupant detection system failure or improper seat and vehicle status. When the airbag warning light illuminates, read the DTC of the airbag system, and perform the diagnosis while referring to List of Diagnostic Trouble Code (DTC). <Ref. to AB(diag)-24, READ DIAGNOSTIC TROUBLE CODE (DTC), OPERATION, Subaru Select Monitor.> <Ref. to AB(diag)-38, LIST, List of Diagnostic Trouble Code (DTC).>

B: INSPECTION

1. COMMUNICATION FOR INITIALIZING IMPOSSIBLE

DETECTING CONDITION:
Defective harness connector
TROUBLE SYMPTOM:
Communication is impossible between the airbag control module and the Subaru Select Monitor.
Refer to “COMMUNICATION FOR INITIALIZING IMPOSSIBLE” in the Airbag system (diagnostics). <Ref. to AB(diag)-26, COMMUNICATION FOR INITIALIZING IMPOSSIBLE, INSPECTION, Subaru Select Monitor.>

2. WITHOUT DTC

DETECTING CONDITION:
- Defective combination meter
- Open circuit in harness

TROUBLE SYMPTOM:
- Airbag warning light remains ON.
- “No diagnostic Code Present” will be displayed on the Subaru Select Monitor.

NOTE:
- For detailed operation procedures, refer to “Airbag Warning Light Failure”. <Ref. to AB(diag)-33, Airbag Warning Light Failure.>
- “No diagnostic Code Present” will be displayed on the Subaru Select Monitor. is displayed on Subaru Select Monitor, the system is operating properly.

8. Read Diagnostic Trouble Code (DTC)

A: OPERATION

For details on reading DTCs, refer to “Airbag System (Diagnostics) Subaru Select Monitor”. <Ref. to AB(diag)-24, Subaru Select Monitor.>

9. Inspection Mode

A: PROCEDURE

Recreate the circumstance by referring to the conditions described in the checklist.

10. Clear Memory Mode

A: OPERATION

- Clear the memory in the following steps after the malfunction is repaired.
- For details to clear the DTC, refer to “Airbag System (Diagnostics) Subaru Select Monitor”. <Ref. to AB(diag)-24, Subaru Select Monitor.>

11. Airbag Warning Light Illumination Pattern

A: INSPECTION

Turn the ignition switch to ON, and confirm that the airbag warning light remains on for approx. 6 seconds and then goes off afterwards.

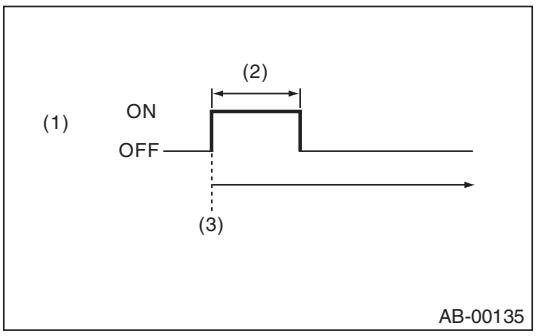

(1) Airbag warning light
(2) Approx. 6 sec.
(3) Ignition switch ON

12. Passenger's Airbag ON/OFF Indicator Light Illumination Pattern

A: INSPECTION

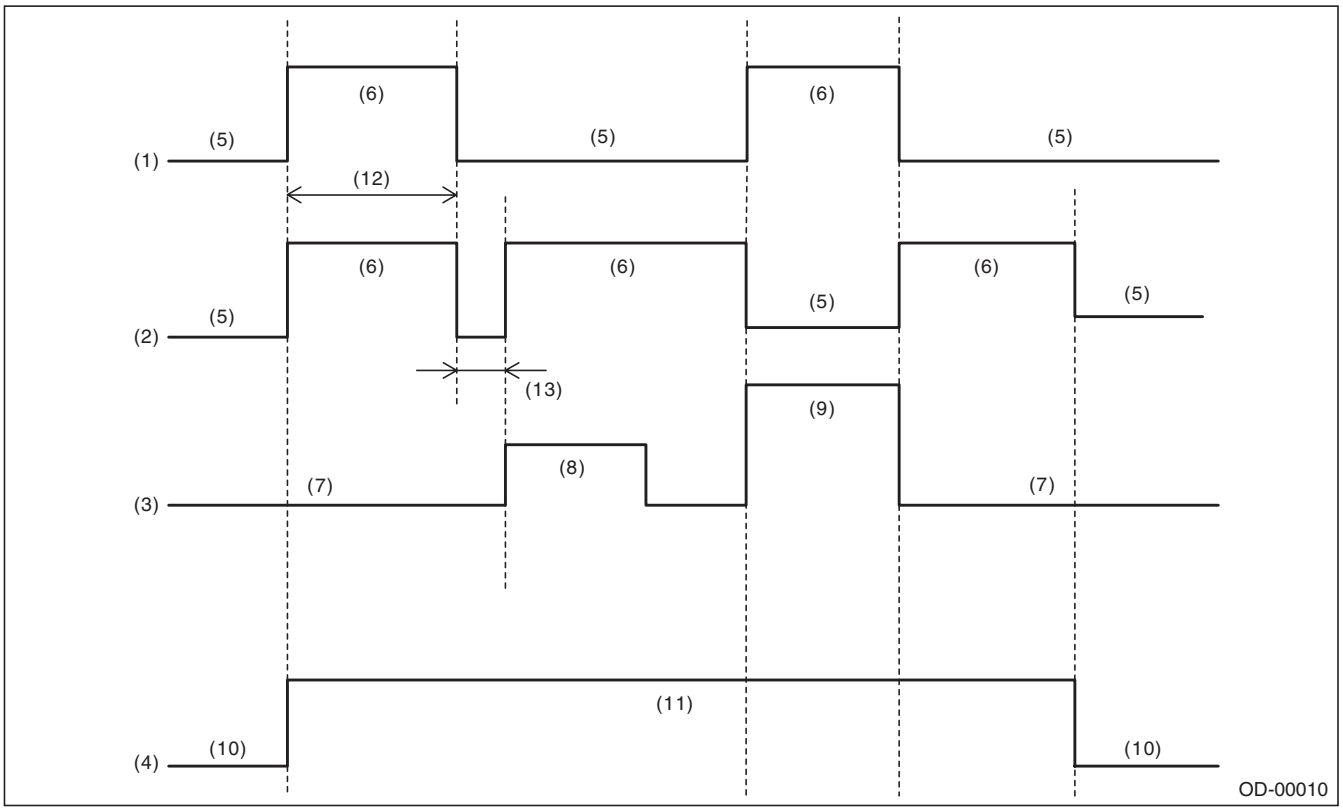

(1)	Passenger's airbag ON indicator light	(4)	Ignition switch	(9)	Adult
(2)	Passenger's airbag OFF indicator light	(5)	Light OFF	(10)	OFF
(3)	Occupant seating	(6)	Light ON	(11)	ON
		(7)	Empty	(12)	Approx. 6 sec.
		(8)	Child	(13)	Approx. 2 sec.

13. List of Diagnostic Trouble Code (DTC)

A: LIST

DTC	Display	Content of diagnosis	Reference
2A	ODS Calibration error	System calibration (Rezeroing) was not completed normally.	<Ref. to OD(diag)-23, DTC 2A ODS CALIBRATION ERROR, Diagnostic Procedure with Diagnostic Trouble Code (DTC).>
2B	ODS System wrong parts	• Wrong airbag control module was installed. • Wrong occupant detection system was installed. • Occupant detection system is faulty.	<Ref. to OD(diag)-23, DTC 2B ODS SYSTEM WRONG PARTS, Diagnostic Procedure with Diagnostic Trouble Code (DTC).>
2C	Belt tension Sensor failure	• Passenger's seat belt tension sensor is faulty. • Airbag main harness circuit is open or shorted. • Occupant detection system is faulty. • Occupant detection harness is faulty.	<Ref. to OD(diag)-24, DTC 2C BELT TENSION SENSOR FAILURE, Diagnostic Procedure with Diagnostic Trouble Code (DTC).>
27	ODS Communication error	• Occupant detection control module and airbag control module communication is faulty. • Airbag rear harness circuit is open, shorted, shorted to ground or shorted to power supply. • Occupant detection harness is faulty. • Occupant detection system is faulty. • Airbag control module is faulty.	<Ref. to OD(diag)-25, DTC 27 ODS COMMUNICATION ERROR, Diagnostic Procedure with Diagnostic Trouble Code (DTC).>
29	ODS failure	• Occupant detection sensor is faulty. • Occupant detection control module is faulty. • Occupant detection harness is faulty. • Fuse No. 25 (in joint box) is blown.	<Ref. to OD(diag)-26, DTC 29 ODS FAILURE, Diagnostic Procedure with Diagnostic Trouble Code (DTC).>
37	Buckle Switch RH failure	• Passenger's buckle switch circuit is open, shorted or shorted to ground. • Occupant detection system is faulty. • Occupant detection harness is faulty.	<Ref. to OD(diag)-27, DTC 37 BUCKLE SWITCH RH FAILURE, Diagnostic Procedure with Diagnostic Trouble Code (DTC).>

14. Diagnostic Procedure with Diagnostic Trouble Code (DTC)

A: DTC 2A ODS CALIBRATION ERROR

DTC DETECTING CONDITION:

System calibration (Rezeroing) was not completed properly.

Step		Check	Yes	No
1	**PERFORM RE-ZEROING.** Perform system calibration using the Subaru Select Monitor. <Ref. to OD(diag)-15, SYSTEM CALIBRATION (REZEROING), OPERATION, Subaru Select Monitor.>	Did the system calibration complete properly?	Finish the diagnosis.	Follow the system calibration procedures. <Ref. to OD(diag)-15, SYSTEM CALIBRATION (REZEROING), OPERATION, Subaru Select Monitor.>

B: DTC 2B ODS SYSTEM WRONG PARTS

DTC DETECTING CONDITION:

- Wrong airbag control module is installed.
- Wrong occupant detection system is installed.

Step		Check	Yes	No
1	**CHECK OCCUPANT DETECTION SYSTEM.** 1) Turn the ignition switch to OFF, disconnect the battery ground cable, and wait for 20 seconds or more. 2) Replace the passenger's seat cushion pad frame assembly. <Ref. to SE-9, REMOVAL, Front Seat.> <Ref. to SE-15, PASSENGER'S SEAT, DISASSEMBLY, Front Seat.> 3) Connect the ground cable to battery. 4) Connect Subaru Select Monitor to the vehicle and perform the system calibration. <Ref. to OD(diag)-15, SYSTEM CALIBRATION (REZEROING), OPERATION, Subaru Select Monitor.>	Did the system calibration complete properly?	Finish the diagnosis.	Go to step **2**.
2	**CHECK AIRBAG CONTROL SYSTEM.** 1) Turn the ignition switch to OFF, disconnect the battery ground cable, and wait for 20 seconds or more. 2) Replace the airbag control module. <Ref. to AB-20, REMOVAL, Airbag Control Module.> 3) Connect the ground cable to battery. 4) Connect Subaru Select Monitor to the vehicle and perform the system calibration. <Ref. to OD(diag)-15, SYSTEM CALIBRATION (REZEROING), OPERATION, Subaru Select Monitor.>	Did the system calibration complete properly?	Finish the diagnosis.	Check between the occupant detection control module and airbag control module.

C: DTC 2C BELT TENSION SENSOR FAILURE

DTC DETECTING CONDITION:

- Passenger's seat belt tension sensor is faulty.
- Airbag main harness circuit is open or shorted.
- Occupant detection control module is faulty.

WIRING DIAGRAM:

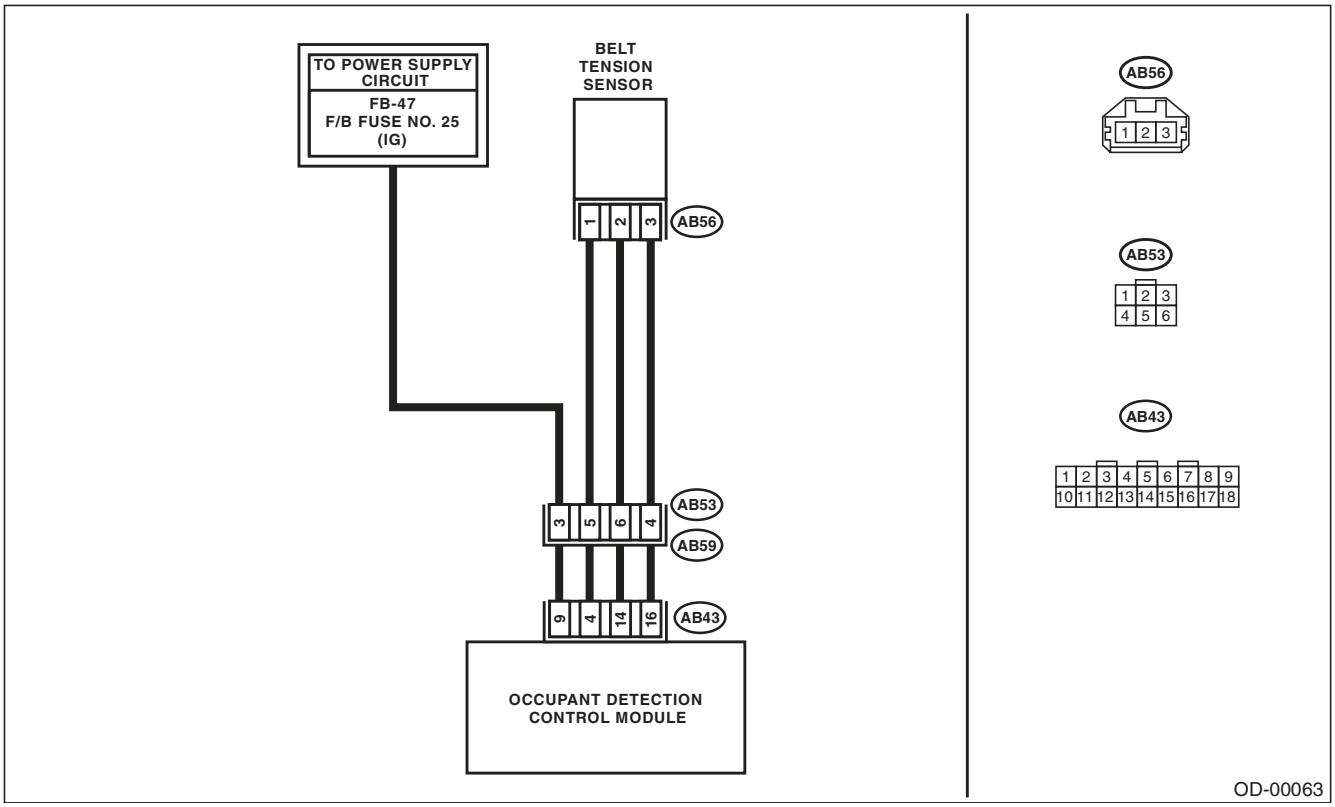

	Step	Check	Yes	No
1	**CHECK POOR CONTACT OF CONNECTORS.** Check for poor contact of the connectors between the occupant detection control module and belt tension sensor.	Is there poor contact?	Reconnect the connector. If the fault is not fixed, replace the airbag harness.	Go to step **2**.
2	**CHECK BELT TENSION SENSOR.** 1) Turn the ignition switch to OFF, disconnect the battery ground cable, and wait for 20 seconds or more. 2) Disconnect the belt tension sensor connector (AB56) from the airbag harness. 3) Connect the test harness AC to the connector (AB56). 4) Connect the battery ground terminal and turn the ignition switch to ON.	Does the airbag warning light illuminate for approximately 6 seconds and go off?	Replace the seat belt outer. <Ref. to SB-18, OUTER SEAT BELT ASSEMBLY, REMOVAL, Front Seat Belt.>	Go to step **3**.
3	**CHECK AIRBAG HARNESS.** 1) Turn the ignition switch to OFF, disconnect the battery ground cable, and wait for 20 seconds or more. 2) Disconnect the test harness AC from the belt tension sensor connector (AB56). 3) Connect the test harness AD (1AD) to the connector (AB56). 4) Disconnect the airbag harness connector (AB53), and connect connector (1AB) of test harness AB. 5) Measure the resistance between test harness terminals. ***Connector & terminal*** ***(2AB) No. 5 — (2AD) No. 1:*** ***(2AB) No. 4 — (2AD) No. 3:*** ***(2AB) No. 6 — (2AD) No. 2:***	Is the resistance less than 10 Ω?	Go to step **4**.	Replace the airbag harness along with chassis harness.
4	**CHECK AIRBAG HARNESS.** Measure the resistance between test harness terminals, and between test harness terminal and chassis ground. ***Connector & terminal*** ***(2AB) No. 4 — (2AD) No. 1:*** ***(2AB) No. 4 — (2AD) No. 2:*** ***(2AB) No. 4 — Chassis ground:*** ***(2AB) No. 5 — (2AD) No. 2:*** ***(2AB) No. 5 — Chassis ground:***	Is the resistance 1 MΩ or more?	Go to step **5**.	Replace the airbag harness along with chassis harness.
5	**CHECK AIRBAG HARNESS.** 1) Connect the battery ground terminal and turn the ignition switch to ON. 2) Measure the voltage between test harness and chassis ground. ***Connector & terminal*** ***(2AD) No. 1 — chassis ground:*** ***(2AD) No. 3 — chassis ground:***	Is the voltage 1 V or less?	Replace the airbag harness along with chassis harness.	Check the seat harness, and if any fault is found, replace the seat harness. If no fault is found in the seat harness, replace the seat cushion frame assembly. <Ref. to SE-15, PASSENGER'S SEAT, DISASSEMBLY, Front Seat.>

D: DTC 27 ODS COMMUNICATION ERROR

Perform the diagnosis following diagnostic procedures for the airbag system. <Ref. to AB(diag)-60, DTC 27 ODS COMMUNICATION ERROR, Diagnostic Chart with Trouble Code.>

E: DTC 29 ODS FAILURE

DTC DETECTING CONDITION:

- Occupant detection sensor is faulty.
- Occupant detection control module is faulty.
- Occupant detection harness is faulty.
- Rear airbag harness is faulty.
- Fuse No. 25 (in joint box) is blown.

Step		Check	Yes	No
1	**CHECK POOR CONTACT OF CONNECTORS.** Check for poor contact of the connectors between the occupant detection control module and airbag control module.	Is there poor contact?	Reconnect the connector. If the fault is not fixed, replace the airbag harness.	Go to step **2**.
2	**CHECK DIAGNOSTIC CODE.** Read diagnostic trouble code (DTC) for the airbag system.	Is “2C Belt Tension Sensor failure or 37 Buckle Switch failure” displayed in the diagnostics code?	Perform the diagnosis according to each DTC.	Check the seat harness, and if any fault is found, replace the seat harness. If the fault is not fixed, replace the occupant detection system. <Ref. to SE-15, PASSENGER’S SEAT, DISASSEMBLY, Front Seat.>

F: DTC 37 BUCKLE SWITCH RH FAILURE

DTC DETECTING CONDITION:

- Passenger's buckle switch circuit is open, shorted or shorted to ground.
- Seat harness circuit is open, shorted or shorted to ground.
- Occupant detection control module is faulty.

WIRING DIAGRAM:

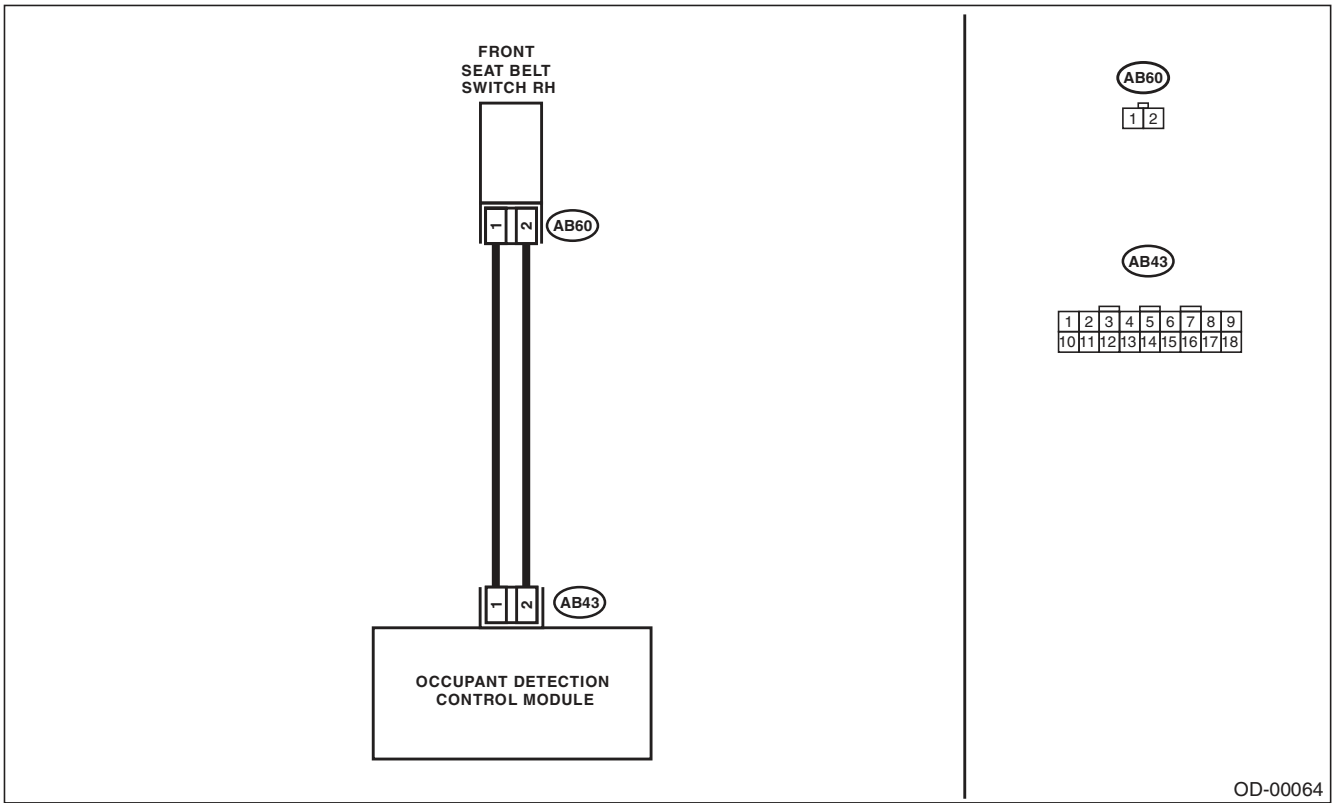

Step		Check	Yes	No
1	**CHECK POOR CONTACT OF CONNECTORS.** Check for poor contact of the connectors between the occupant detection control module and buckle switch.	Is there poor contact?	Reconnect the connector. If the fault is not fixed, replace the airbag harness.	Go to step **2**.
2	**CHECK BUCKLE SWITCH.** 1) Turn the ignition switch to OFF, disconnect the battery ground terminal, and wait for 20 seconds. 2) Disconnect the buckle switch connector (AB60). 3) Connect the test harness AE1 and test harness connector Y to the buckle switch connector (AB60). 4) Connect the battery ground terminal and turn the ignition switch to ON.	Does the airbag warning light illuminate for 6 seconds and go off?	Replace the buckle switch. <Ref. to SB-18, INNER SEAT BELT ASSEMBLY, REMOVAL, Front Seat Belt.>	Check the seat harness, and if any fault is found, replace the seat harness. If the fault is not fixed, replace the occupant detection system.

1. General Description

A: COMPONENT

1. FRONT SEAT BELT

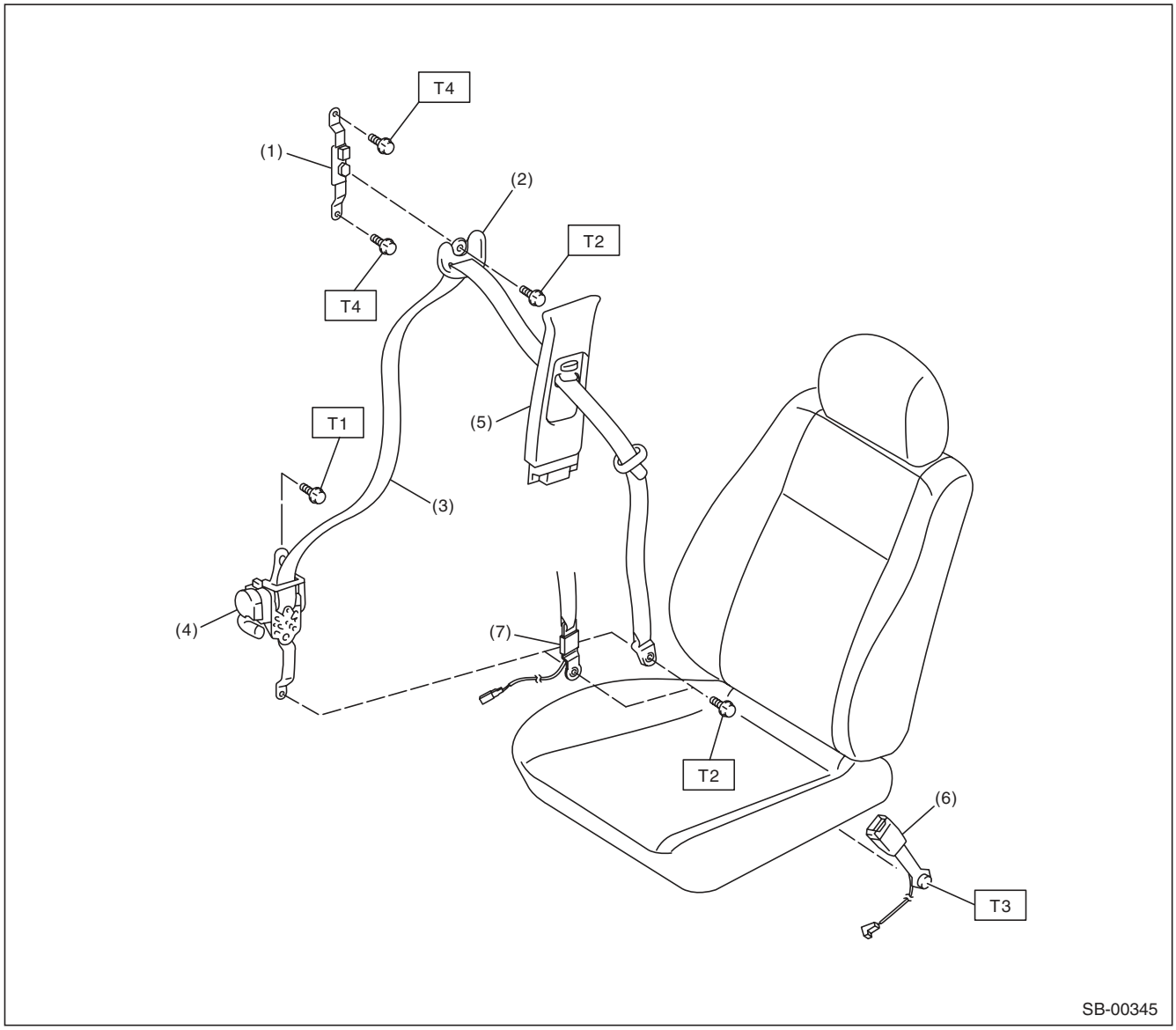

(1) Adjustable anchor ASSY
(2) Shoulder anchor
(3) Outer seat belt ASSY
(4) Seat belt retractor
(5) Center pillar upper trim
(6) Inner seat belt ASSY
(7) Belt tension sensor (Passenger's side only)

Tightening torque:N·m (kgf-m, ft-lb)
T1: 7.5 (0.76, 5.5)
T2: 30 (3.1, 22)
T3: 38 (3.9, 28)
T4: 53 (5.4, 39)

2. REAR SEAT BELT (SEDAN MODEL)

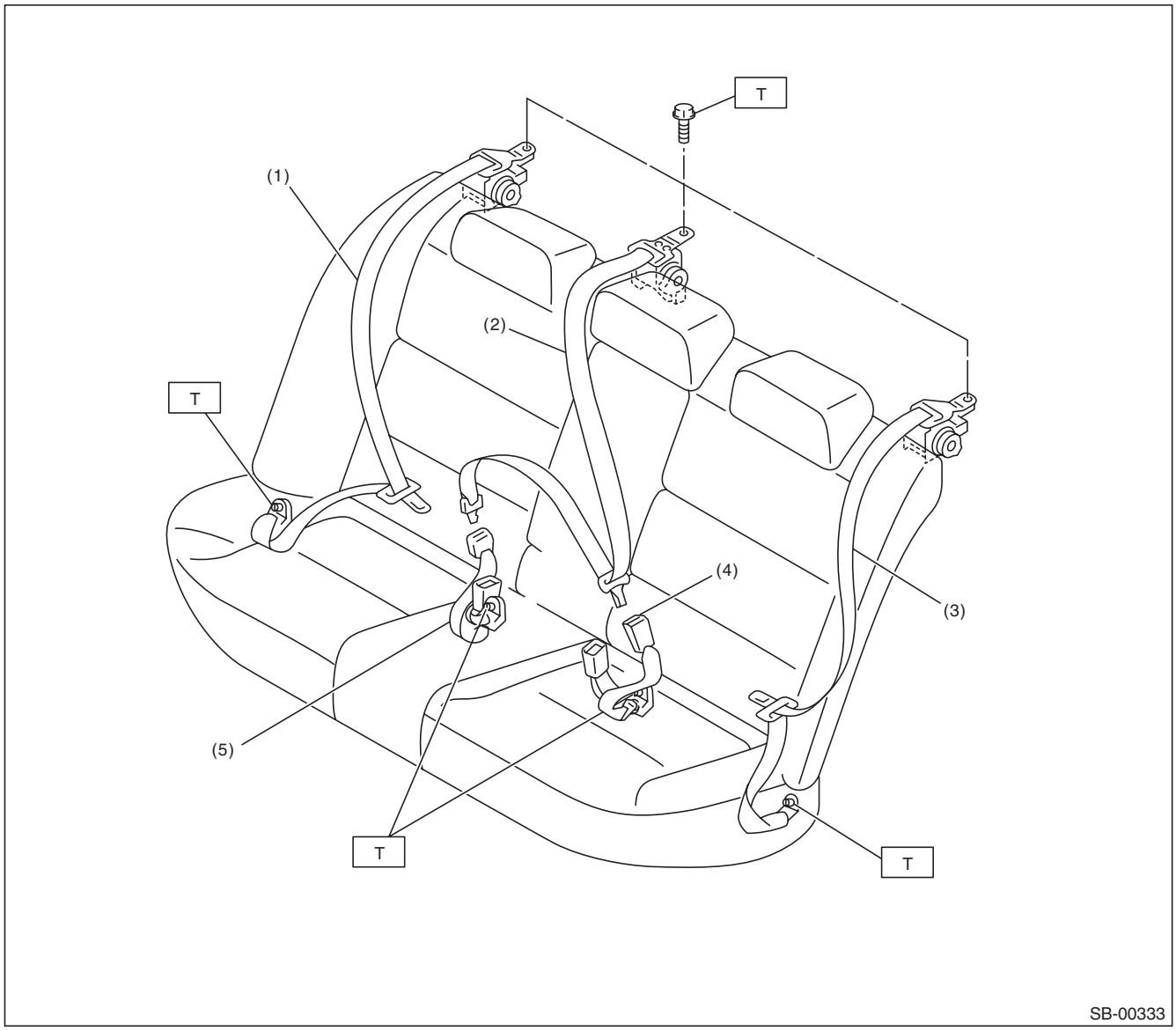

(1) Outer seat belt RH ASSY
(2) Shoulder seat belt center ASSY
(3) Outer seat belt LH ASSY
(4) Center seat belt LH ASSY
(5) Center seat belt RH ASSY

Tightening torque:N·m (kgf-m, ft-lb)
T: 30 (3.1, 22)

3. REAR SEAT BELT (WAGON MODEL)

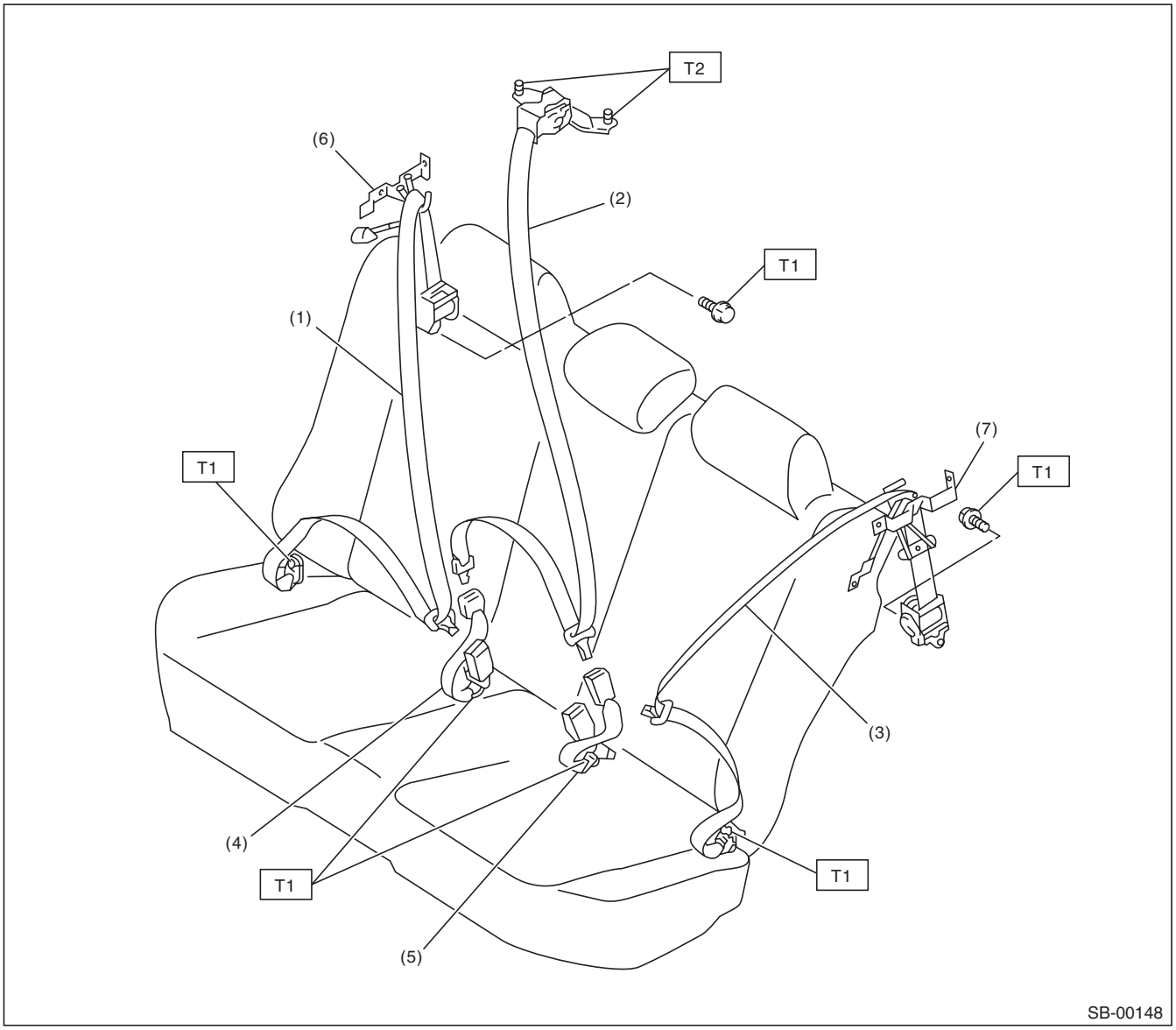

(1) Outer seat belt RH ASSY
(2) Shoulder seat belt center ASSY
(3) Outer seat belt LH ASSY
(4) Center seat belt RH ASSY
(5) Center seat belt LH ASSY
(6) Outer belt guide RH
(7) Outer belt guide LH

Tightening torque:N·m (kgf-m, ft-lb)
T1: 30 (3.1, 22)
T2: 53 (5.4, 39.1)

B: CAUTION

- Before starting the work, turn the ignition switch to OFF, disconnect the battery ground cable and wait for 20 seconds or more.
- The pretensioner system has a backup power source. The pretensioner might deploy if you do not wait for 20 seconds or more before starting work.
- Do not drop or apply any impact to the pretensioner.
- If oil, grease or water gets on the pretensioner, wipe it off immediately with a dry cloth.
- Do not expose the pretensioner to high temperature or flame.
- Do not allow current to flow through or voltage to reach the pretensioner. Do not use a circuit tester to check resistance of the pretensioner.
- Do not disassemble or attempt to repair the pretensioner. If it is dented, cracked or deformed, replace it with a new part.
- Do not use the airbag or pretensioner parts from other vehicles. Always replace parts with new parts.
- When handling a seat belt with deployed pretensioner, wear gloves and goggles. Wash your hands afterwards.
- Do not reuse a seat belt with deployed pretensioner.
- If material from the airbag enters the eyes or contacts skin during deployment, wash it away with clean water, and then consult a doctor.

C: PREPARATION TOOL

1. SPECIAL TOOL

- Subaru Select Monitor

ILLUSTRATION	TOOL NUMBER	DESCRIPTION	REMARKS
ST1B022XU0	1B022XU0	SUBARU SELECT MONITOR III KIT	Used for setting of each function and trouble-shooting for electrical system.

- TEST HARNESS AB

ILLUSTRATION	TOOL NUMBER	DESCRIPTION	REMARKS
ST98299XA000	98299XA000	TEST HARNESS AB	Used when measuring voltage and resistance of occupant detection system.

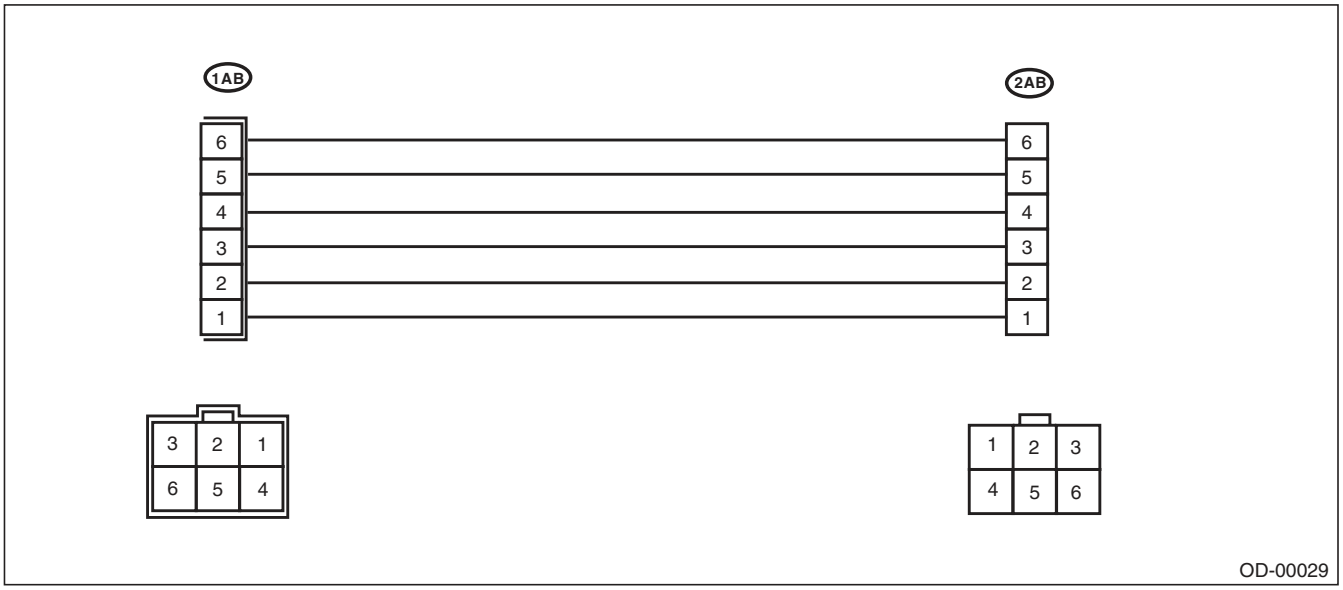

- TEST HARNESS AE

ILLUSTRATION	TOOL NUMBER	DESCRIPTION	REMARKS
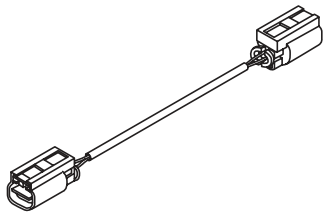 ST98299XA030	98299XA030	TEST HARNESS AE	• Used for diagnosing seat belt tension sensor. • Used together with the test harness Y.

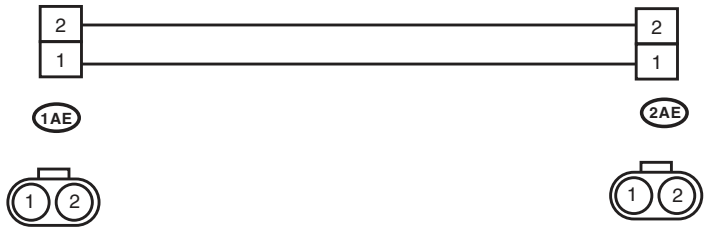

OD-00026

- TEST HARNESS AG

ILLUSTRATION	TOOL NUMBER	DESCRIPTION	REMARKS
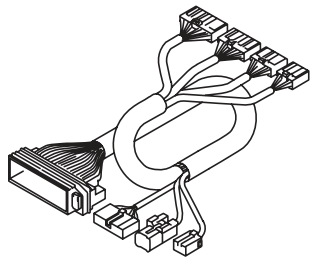 ST98299AG070	98299AG070	TEST HARNESS AG	Used when measuring voltage and resistance of airbag control module.

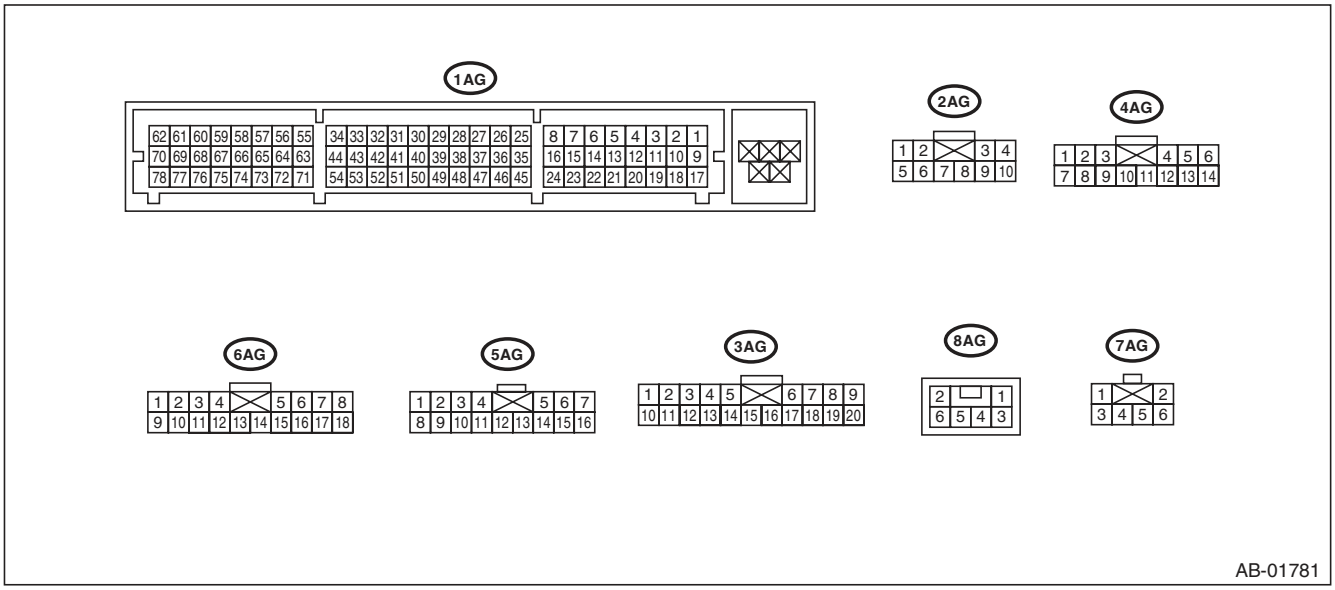

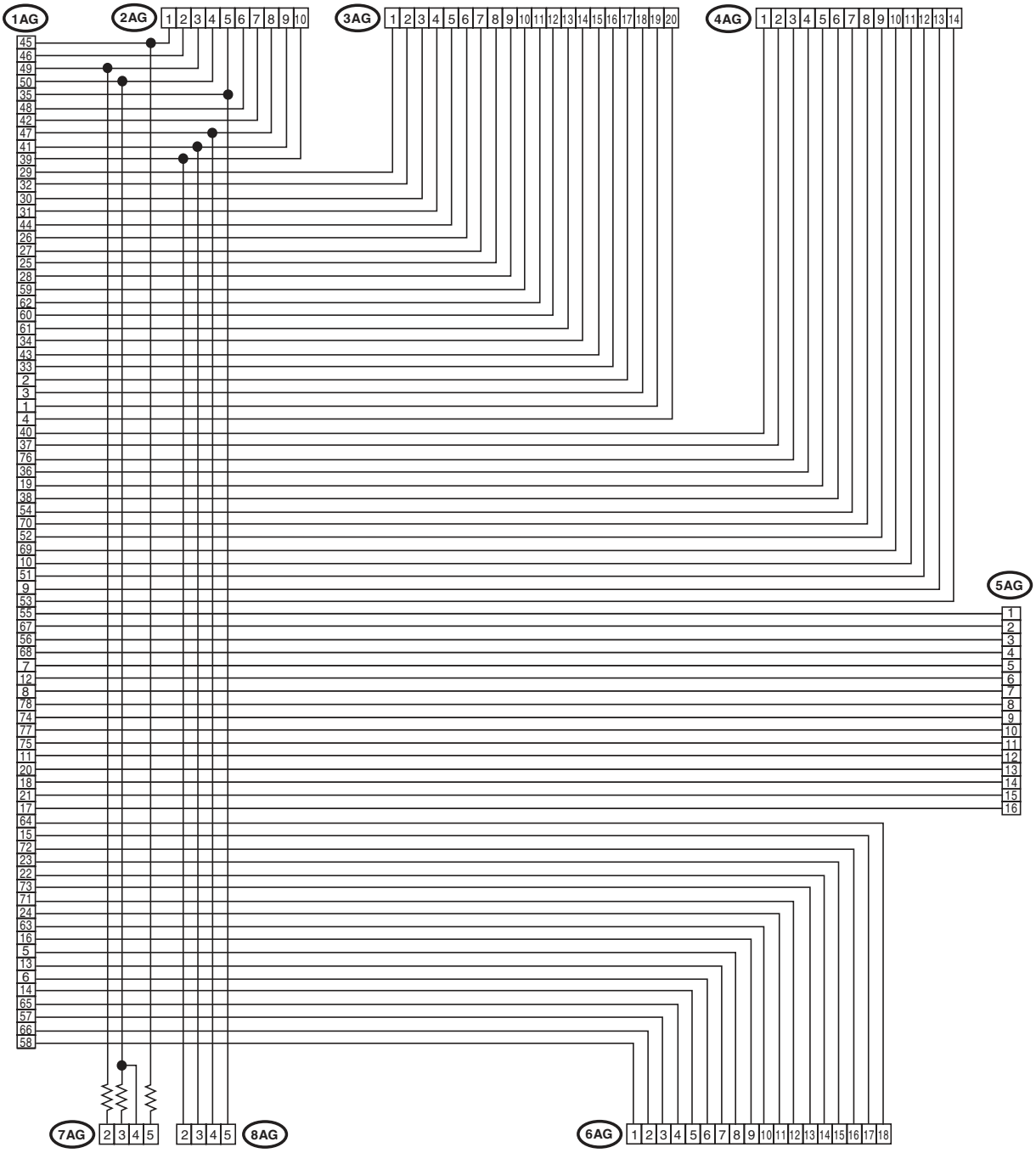

AB-01902

- TEST HARNESS Y

ILLUSTRATION	TOOL NUMBER	DESCRIPTION	REMARKS
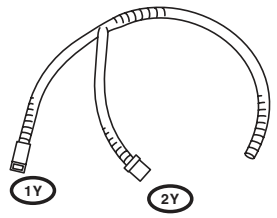 ST98299AG040	98299AG040	TEST HARNESS Y	Used for troubleshooting seat belt buckle switch.

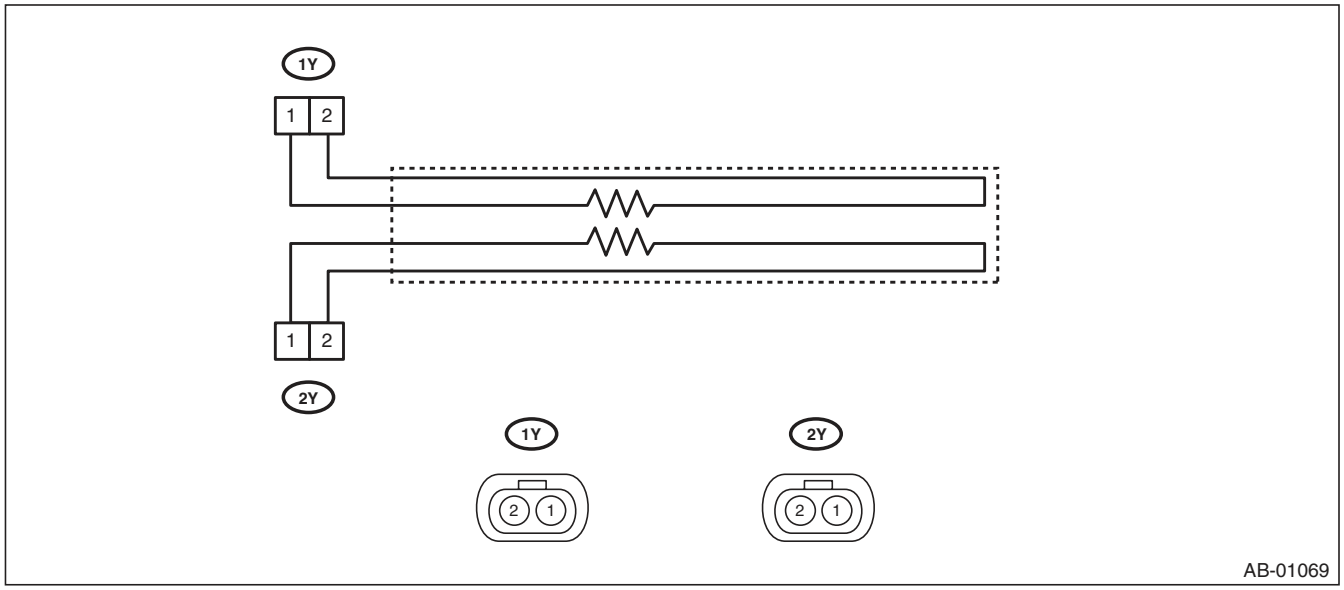

- AIRBAG RESISTOR

ILLUSTRATION	TOOL NUMBER	DESCRIPTION	REMARKS
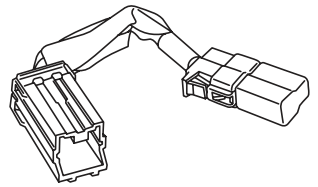 ST98299PA040	98299PA040	AIRBAG RESISTOR	Used in replacement of airbag module for which resistance value is same as airbag module. Two ST are required for diagnosis of two-stage inflator type airbag module.

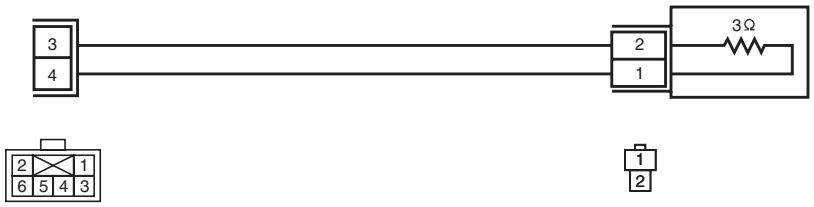

AB-00433

2. GENERAL TOOL

TOOL NAME	REMARKS
TORX® T50	Used for removing and installing the inner seat belt assembly.

2. Pretensioner Connector

A: PROCEDURE

Refer to airbag connectors in the airbag section.
<Ref. to AB-8, PROCEDURE, Airbag Connector.>

3. Inspection Locations After a Collision

A: INSPECTION

Check for the following, and replace with new parts if necessary.

- Center pillar lower trim is discolored or cracked.
- Wiring harness and connector are damaged.

4. Seat Belt Warning System

A: WIRING DIAGRAM

<Ref. to WI-125, WIRING DIAGRAM, Seat Belt Warning System.>

B: INSPECTION

CAUTION:
- **Before diagnosing the airbag system, be sure to turn the ignition switch to OFF, disconnect the ground cable from the battery, and wait 20 seconds or more before starting to work.**
- **When replacing the airbag module, seat belt pretensioner, roll connector, control module and sensor, reconnect each part and check that the warning light operates properly.**
- **When inspecting the airbag main harness, disconnect the airbag module connectors of the driver's and passenger's seats for safety.**
- **When inspecting the airbag rear harness, disconnect the side airbag module connector, curtain airbag module connector and seat belt pretensioner connector for safety reasons.**

TROUBLE SYMPTOM:
- Driver's side seat belt warning light does not turn on or off.
- Warning buzzer does not beep.

	Step	Check	Yes	No
1	**CHECK CURRENT SETTINGS.** 1) Prepare the Subaru Select Monitor. 2) Turn the ignition switch to ON (engine OFF) and run the "PC application for Subaru Select Monitor". 3) Select "Current Data Display" and read the data of "Belt Warning Switch".	Is the belt warning display ON?	Go to step **2**.	Turn the belt warning ON with unit customization.
2	**CHECK CURRENT DATA.** 1) Select "Current Data Display" and read the data of "IG power supply voltage". 2) Turn the ignition switch ON ←→ OFF.	Does the voltage change between 10 V or higher ←→ less than 1.5 V, matching the ignition switch ON ←→ OFF operation?	Go to step **3**.	Check the ignition switch circuit.
3	**CHECK FUNCTION.** 1) Sit in the driver's seat and passenger's seat, and disconnect the seat belts of both seats. 2) Turn the ignition switch to ON (engine OFF). 3) Check the illumination of the driver's seat belt warning light and map light in the combination meter and the passenger's seat belt warning light in the clock unit, and the sounding of the buzzer.	Do the driver's and passenger's warning lights flash, and does the buzzer sound while the warning lights are flashing?	Go to step **4**.	• Malfunction of the driver's seat belt warning light →Go to step **10**. • Malfunction of the passenger's seat belt warning light →Go to step **16**. • The buzzer does not sound. → Go to step **6**.
4	**CHECK FUNCTION.** 1) Wait until the buzzer sound stops in step 3. (Approximately 6 seconds from starting to sound) 2) Fasten and detach the driver's and passenger's seat belts. 3) Check the illumination of the driver's seat belt warning light and map light in the combination meter and the passenger's seat belt warning light in the clock unit, and the sounding of the buzzer.	Do each seat belt warning light illuminate ←→ turn off according to the action?	Go to step **5**.	• Malfunction of the driver's seat belt warning light →Go to step **6**. • Malfunction of the passenger's seat belt warning light →Go to step **12**.

	Step	Check	Yes	No
5	**CHECK FUNCTION.** 1) Wait until the buzzer sound stops in step 3. (Approximately 6 seconds from starting to sound) 2) Start the engine, and set the vehicle speed to 15 km/h (9 MPH) or faster. 3) Check the driver's and passenger's seat belt warning lights, and sounding of the alarm buzzer.	Do the driver's and passenger's warning lights flash, and does the buzzer sound while the warning lights are flashing?	The seat belt warning system is normal.	Go to step **19**.
6	**CHECK CURRENT DATA.** 1) Select "Current Data Display" and read the data of the driver's seat belt switch. 2) Connect and disconnect the seat belt buckle.	Does the seat belt SW display turn ON ←→ OFF according to the operation?	Go to step **10**.	Go to step **7**.
7	**CHECK HARNESS.** 1) Disconnect the negative terminal from the battery, and wait for 20 seconds or more. 2) Disconnect the connectors of the body integrated unit and the seat belt buckle switch. 3) Check for a short circuit to battery, open circuit or short circuit to ground between the body integrated unit and the seat belt buckle switch LH. ***Connector & terminal*** ***(B281) No. 16 — (R108) No. 3:***	Is the harness normal?	Go to step **8**.	Repair or replace the harness.
8	**CHECK HARNESS.** Measure the resistance between the seat belt buckle switch LH and chassis ground. ***Connector & terminal*** ***(R108) No. 1 — Chassis ground:***	Is the resistance less than 10 Ω?	Go to step **9**.	Repair or replace the harness.
9	**CHECK SEAT BELT BUCKLE SWITCH LH.** Measure the resistance between the connector terminals of the driver's seat belt switch when the driver's seat belt is fastened and detached. ***Connector & terminal*** ***(R108) No. 1 — (R108) No. 3:***	Is the resistance when the belt is fastened 1 MΩ or more, and less then 10 Ω when the belt is detached?	Replace the body integrated unit. <Ref. to SL-56, REMOVAL, Body Integrated Unit.>	Replace the inner belt assembly LH. <Ref. to SB-18, INNER SEAT BELT ASSEMBLY, REMOVAL, Front Seat Belt.>
10	**CHECK DTC.** Read the DTC using the Subaru Select Monitor.	Are any body CAN related DTC detected?	Check the CAN according to DTC.	Go to step **11**.
11	**CHECK COMBINATION METER.** Perform the self-diagnosis of combination meter. <Ref. to IDI-5, SELF-DIAGNOSIS, INSPECTION, Combination Meter System.>	At the start of combination meter self diagnosis, did the buzzer sound and the seat belt warning light illuminate?	Replace the body integrated unit or the combination meter. Or, replace both. There may be a communication malfunction of the body integrated unit, or a reception malfunction of the combination meter.	Replace the combination meter. <Ref. to IDI-22, REMOVAL, Combination Meter.>
12	**CHECK CURRENT DATA.** 1) Sit on the passenger's seat. 2) Select "Current Data Display" and display the data of "P seatbelt SW input ". 3) Fasten and detach the passenger's side seat belt buckle, and read the data of the seat belt switch. <Ref. to LAN(diag)-29, OPERATION, Read Current Data.>	Does the seat belt switch display turn ON ←→ OFF according to the operation of the seat belt buckle?	Go to step **16**.	Go to step **13**.

	Step	Check	Yes	No
13	**CHECK AIRBAG SYSTEM AND OCCUPANT DETECTION SYSTEM.** Perform the check in accordance with the diagnostic procedure DTC 27 of the airbag system. <Ref. to AB(diag)-60, DTC 27 ODS COMMUNICATION ERROR, Diagnostic Chart with Trouble Code.>	Is there any problem on the inspection result?	Go to step **14**.	Repair or replace the harness.
14	**CHECK BUCKLE SWITCH RH.** Perform the check in accordance with the diagnostic procedure DTC 37 of the occupant detection system. <Ref. to OD(diag)-27, DTC 37 BUCKLE SWITCH RH FAILURE, Diagnostic Procedure with Diagnostic Trouble Code (DTC).>	Is there any problem on the inspection result?	Go to step **15**.	Repair or replace the harness.
15	**CHECK AIRBAG CONTROL MODULE AND BODY INTEGRATED UNIT.** Check the airbag control module, occupant detection sensor and seat belt buckle switch RH. Perform the check in accordance with the diagnostic procedure DTC 39 of the airbag system. <Ref. to AB(diag)-62, DTC 39 SEAT BELT WARNING FAILURE, Diagnostic Chart with Trouble Code.>	Is there any problem on the inspection result?	Replace the body integrated unit. <Ref. to SL-56, REMOVAL, Body Integrated Unit.>	Repair or replace the harness.
16	**CHECK HARNESS.** 1) Disconnect the connector of map light. 2) Turn the ignition switch to ON. 3) Measure the voltage between the body integrated unit and map light. ***Connector & terminal*** ***(R150) No. 8 (+) — Chassis ground (–):***	Is the voltage 10 V or more?	Go to step **17**.	Repair or replace the harness.
17	**CHECK HARNESS.** 1) Turn the ignition switch to ON. 2) Disconnect the connector of body integrated unit. 3) Check for short circuit to battery, open circuit and short circuit to ground between the body integrated unit and the map light. ***Connector & terminal*** ***(B280) No. 27 — (R150) No. 5:***	Is the harness normal?	Go to step **19**.	Repair or replace the harness.
18	**CHECK MAP LIGHT.** 1) Connect the map light. 2) Turn the ignition switch to ON. 3) Use an appropriate wiring harness to create a short between the body integrated unit and the map light. ***Connector & terminal*** ***(R150) No. 5 — Chassis ground:***	Does passenger's seat belt warning light in the map light illuminate?	Replace the body integrated unit. <Ref. to SL-56, REMOVAL, Body Integrated Unit.>	Replace the map light. <Ref. to IDI-28, REMOVAL, Clock.>
19	**CHECK DTC.** Read the DTCs for all systems using the Subaru Select Monitor.	Is a DTC detected?	Perform a check according to the DTC.	Go to step **20**.

Step		Check	Yes	No

20	**CHECK CURRENT DATA.**
	Select “Current Data Display” and read the data of the “Front Wheel Speed”. <Ref. to LAN(diag)-29, OPERATION, Read Current Data.>
		Does the data indicate the normal vehicle speed?	Go to step **11**.	Check the following items.
				• LAN system <Ref. to LAN(diag)-65, DTC U1223 CAN-HS VDC/ABS NO-RECEIVE DATA, Diagnostic Procedure with Diagnostic Trouble Code (DTC).>
				• Check VDC or ABS.
				  • VDC <Ref. to VDC(diag)-2, Basic Diagnostic Procedure.>
				  • ABS <Ref. to ABS(diag)-2, Basic Diagnostic Procedure.>

5. Front Seat Belt

A: REMOVAL

1. OUTER SEAT BELT ASSEMBLY

CAUTION:
- **Do not drop or subject the pretensioner to any impact.**
- **Since the pretensioner and bracket are integrated as a unit, do not disassemble them.**

1) Fold the backrest all the way forward, and then move the front seat all the way forward.
2) Turn the ignition switch to OFF, disconnect the battery ground cable, and wait 20 seconds or more.
3) Remove the center pillar lower trim. <Ref. to EI-61, REMOVAL, Lower Inner Trim.>
4) Remove the center pillar upper trim. <Ref. to EI-62, REMOVAL, Upper Inner Trim.>
5) Remove the bolt, then remove the center pillar inner protector lower.

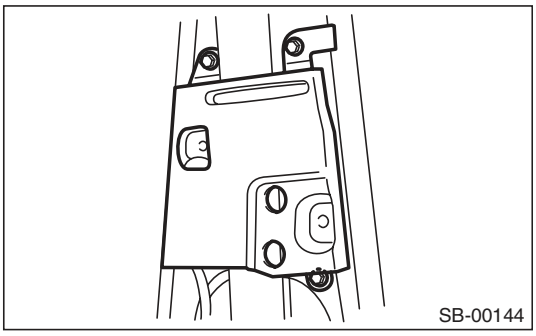

6) Remove the bolt, and then remove the shoulder anchor.

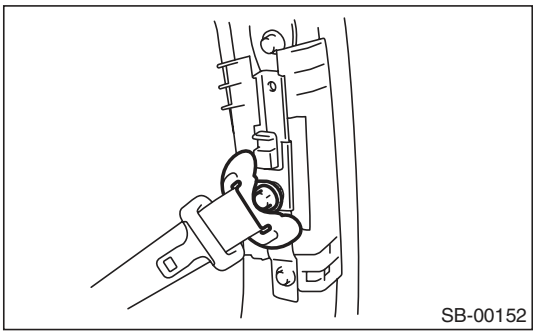

7) Remove the bolt, and then remove the adjustable anchor assembly.

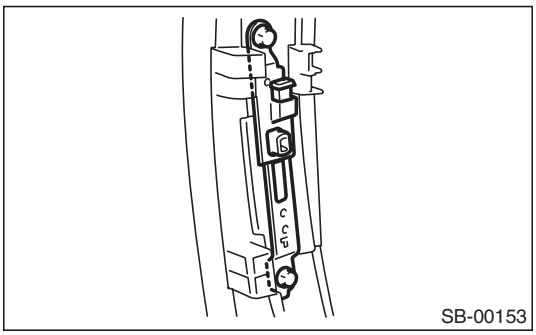

8) Disconnect the pretensioner connector (A), remove the bolt, and remove the seat belt retractor.

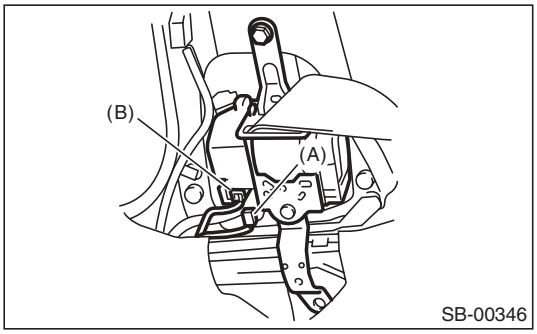

NOTE:
Disconnect the tension reducer connector (B) for the seat belt retractor with a tension reducer function.

9) Disconnect the connector of belt tension sensor on passenger's side.

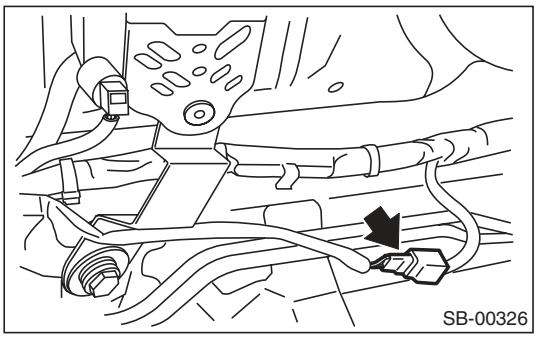

2. INNER SEAT BELT ASSEMBLY

1) Turn the ignition switch to OFF, disconnect the battery ground cable, and wait 20 seconds or more.
2) Remove the front seats. <Ref. to SE-9, REMOVAL, Front Seat.>
3) Disconnect the seat belt warning light connector under the seat.
4) Remove the harness clips.
5) Remove the TORX® bolt, and then remove the inner seat belt assembly.

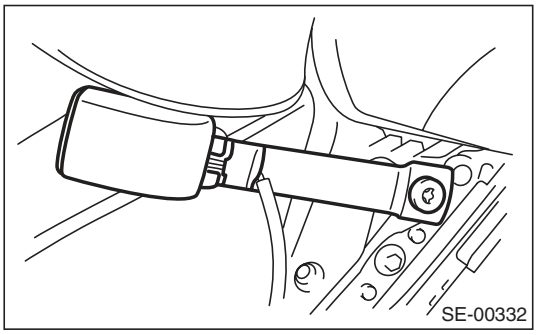

B: INSTALLATION

1. OUTER SEAT BELT ASSEMBLY

CAUTION:
• The parts of driver and passenger sides are not the same. Before installation, make sure that the correct part is used.
• Be careful not to twist the seat belts during installation.
Install in the reverse order of removal.

Tightening torque:
<Ref. to SB-2, FRONT SEAT BELT, COMPONENT, General Description.>

2. INNER SEAT BELT ASSEMBLY

CAUTION:
• After the passenger's inner seat belt assembly installation, check that the seat belt buckle switch operates normally using the Subaru Select Monitor in {Status Data} of "Airbag System". <Ref. to AB(diag)-25, DISPLAY OF STATUS INFORMATION, OPERATION, Subaru Select Monitor.>
Improper buckle switch operation may cause airbag system malfunction.
• Inner seat belt assembly harness (1) must be routed securely as shown in the figure, as it can affect the performance of the occupant detection system.

- **Driver's seat**

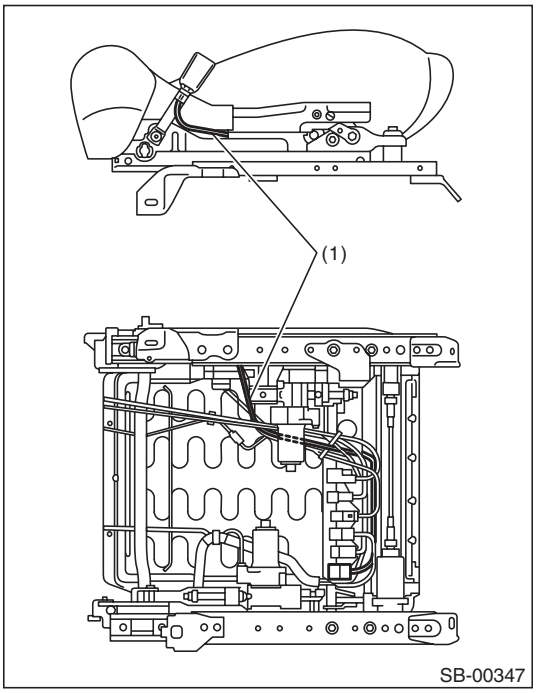

- **Passenger's seat**

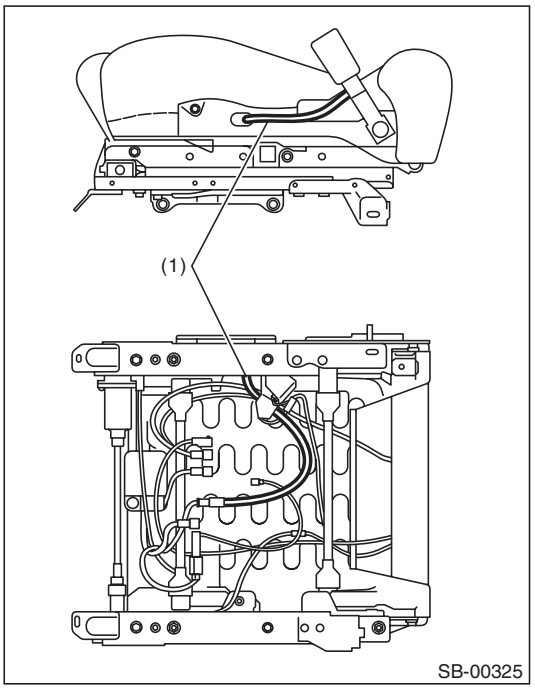

Install in the reverse order of removal.

Tightening torque:
<Ref. to SB-2, FRONT SEAT BELT, COMPONENT, General Description.>

C: INSPECTION

Check for the following, and replace with new parts if necessary.
• Pretensioner is cracked or deformed.
• Belt tension sensor is cracked or deformed.
• Seat belt is slackened, bent or worn. Seat belt is abnormally wound or extended.
• Inner seat belt assembly is deformed or damaged.
• Seat belt buckle cannot be engaged properly.

6. Rear Seat Belt

A: REMOVAL

1. OUTER SEAT BELT RH ASSEMBLY AND LH ASSEMBLY (SEDAN MODEL)

1) Remove the rear seat cushion and backrest shoulder. <Ref. to SE-18, REMOVAL, Rear Seat.>
2) Remove the seat belt lower anchor bolt.

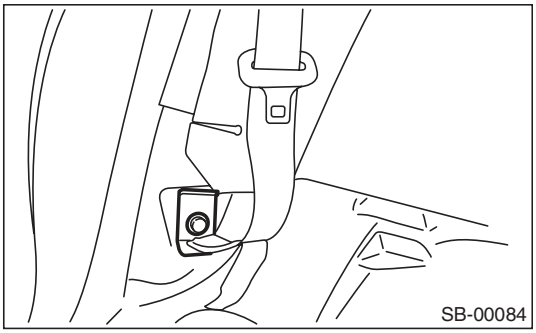

3) Remove the rear quarter trim. <Ref. to EI-63, SEDAN MODEL, REMOVAL, Rear Quarter Trim.>
4) Remove the bolts, and then detach the outer seat belt assembly.

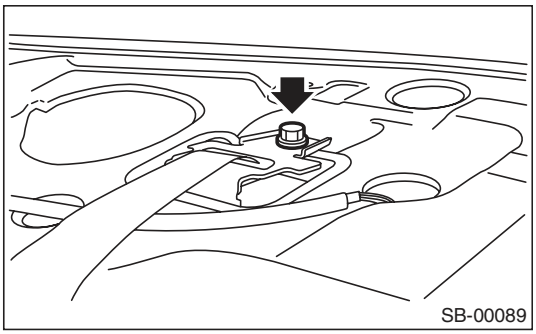

2. SHOULDER SEAT BELT CENTER ASSEMBLY (SEDAN MODEL)

1) Remove the rear seat cushion and backrest shoulder. <Ref. to SE-18, REMOVAL, Rear Seat.>
2) Remove the rear quarter trim. <Ref. to EI-63, REMOVAL, Rear Quarter Trim.>
3) Remove the rear shelf trim. <Ref. to EI-69, REMOVAL, Rear Shelf Trim.>
4) Remove the bolts, then remove the shoulder seat belt assembly.

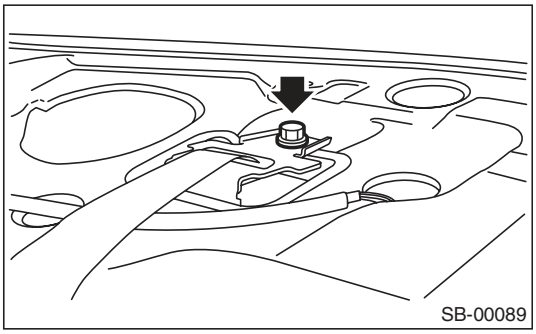

3. CENTER SEAT BELT RH ASSEMBLY AND LH ASSEMBLY (SEDAN MODEL)

1) Remove the rear seat cushion. <Ref. to SE-18, REMOVAL, Rear Seat.>
2) Remove the bolts, then remove the center seat belt LH assembly.

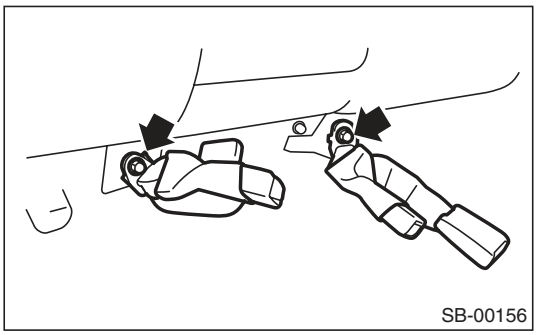

4. OUTER SEAT BELT RH ASSEMBLY AND LH ASSEMBLY (WAGON MODEL)

1) Remove the luggage floor box. <Ref. to EI-73, REMOVAL, Luggage Floor Box.>
2) Remove the rear seat cushion and backrest shoulder. <Ref. to SE-18, SEDAN MODEL, REMOVAL, Rear Seat.>
3) Remove the rear quarter lower trim. <Ref. to EI-63, WAGON MODEL, REMOVAL, Rear Quarter Trim.>
4) Remove the bolt to remove outer seat belt retractor.

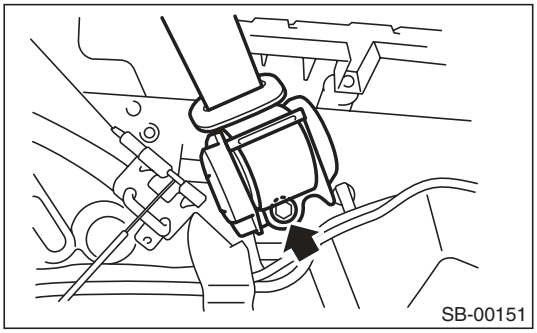

5) Remove the bolt to remove the outer seat belt guide.

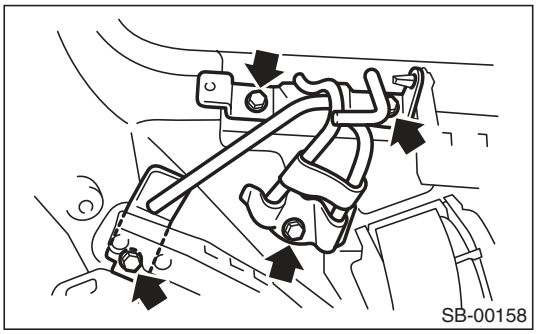

5. SHOULDER SEAT BELT CENTER ASSEMBLY (WAGON MODEL)

1) Remove the quarter rear pillar trim. <Ref. to EI-63, WAGON MODEL, REMOVAL, Rear Quarter Trim.>
2) Remove the cover (A) from roof trim, and then insert it to the inside of roof trim.

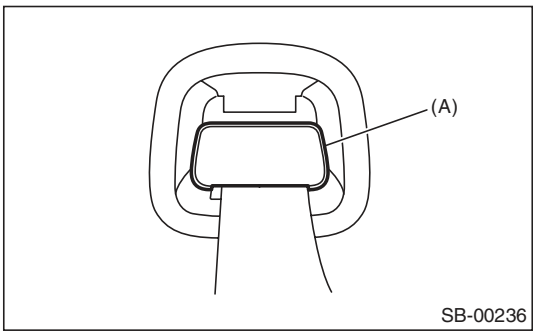

3) Remove the clips, and then lower the roof trim end.

CAUTION:
When removing the roof trim clip, do not pull the roof trim end backward with excessive force. There is the possibility of the roof trim being damaged.

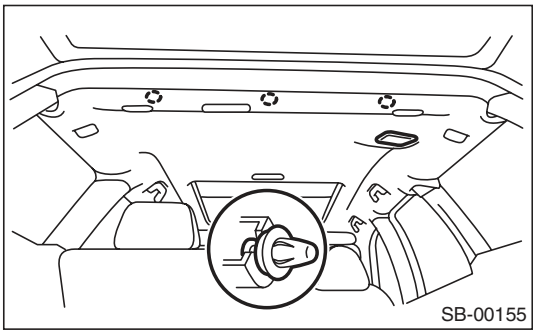

4) Remove the bolt to remove the seat belt retractor.

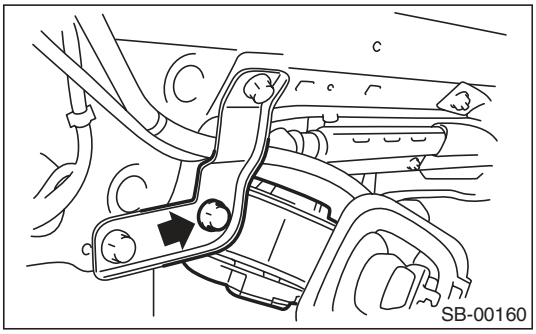

6. CENTER SEAT BELT RH ASSEMBLY AND LH ASSEMBLY (WAGON MODEL)

1) Remove the rear seat cushion. <Ref. to SE-18, SEDAN MODEL, REMOVAL, Rear Seat.>
2) Remove the bolts, then remove the center seat belt assembly.

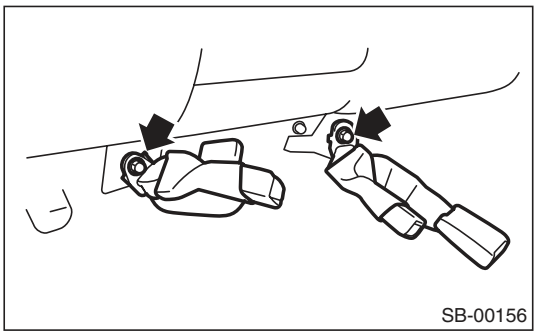

B: INSTALLATION

CAUTION:
- **During installation, make sure that the seat belts are not twisted.**
- **During installation, make sure that the center seat belt assembly (RH & LH) are properly pulled out from the slit of seat cushions.**
- **After installation, make sure that the seat belts are smoothly extended and wound.**
- **If the vehicle is equipped with rear outer seat belts (wagon model), make sure that the seat belts are wound after installing the seat belt guide.**

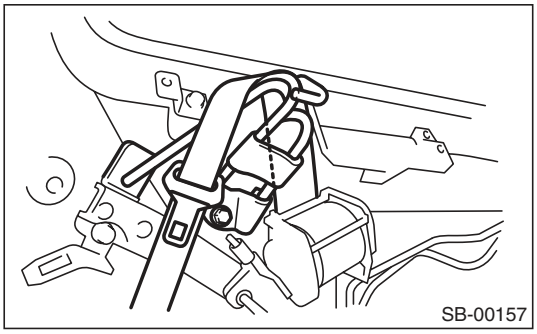

Install in the reverse order of removal.

C: INSPECTION

Check for the following, and replace with new parts if necessary.
- Seat belt is slackened, bent or worn. Seat belt is abnormally wound or extended.
- Inner seat belt assembly is deformed or damaged.
- Seat belt buckle cannot be engaged properly.

1. General Description

A: SPECIFICATION

Headlight	Halogen type low beam		12 V — 55 W
	Halogen type high beam		12 V — 60 W
Front turn signal, parking, front side marker light			12 V — 27/8 W
Front fog light			12 V — 55 W
Side turn signal light			12 V — 2.7 W (LED)
Rear combination light	Stop/tail light		12 V — 21/5 W
	Turn signal light		12 V — 21 W
	Wagon	Rear side marker light	12 V — 5 W
Back-up light	Sedan		12 V — 16 W
	Wagon		12 V — 16 W
License plate light			12 V — 5 W
High-mounted stop light	Sedan		12 V — 21 W
	Wagon		12 V — 1.3 W (LED)
Room light			12 V — 8 W
Spot map light			12 V — 8 W
Luggage room light			12 V — 13 W
Trunk room light			12 V — 5 W
Glove box light			12 V — 1.4 W
Door step light			12 V — 3 W

B: CAUTION

- Before removing or installing parts, always disconnect the battery ground cable from battery. When replacing the audio, control module and other parts provided with memory functions, record the memory contents before disconnecting the battery ground cable. Otherwise, the memory is cleared.
- Reassemble the parts in the reverse order of disassembly procedure unless otherwise indicated.
- Adjust parts to the given specifications.
- Connect the connectors securely during reassembly.
- After reassembly, make sure functional parts operate smoothly.
- The airbag system wiring harness is routed near electrical parts and switches. Airbag system wiring harnesses and connectors are yellow. Do not use the electrical test equipment on these circuits.
- Be careful not to damage the airbag system wiring harness when servicing electrical parts and switches.

C: PREPARATION TOOL

1. GENERAL TOOL

TOOL NAME	REMARKS
Circuit tester	Used for measuring resistance and voltage.

2. Headlight and Tail Light System

A: WIRING DIAGRAM

1. HALOGEN TYPE HEADLIGHT

<Ref. to WI-128, WIRING DIAGRAM, Headlight System.>

2. CLEARANCE LIGHT AND ILLUMINATION LIGHT

<Ref. to WI-134, WIRING DIAGRAM, Clearance Light and Illumination Light System.>

B: INSPECTION

1. HEADLIGHT SWITCH

Measure the resistance between headlight switch terminals.
<Ref. to LI-11, INSPECTION, Combination Switch (Light).>

2. HEADLIGHT RELAY

Measure the headlight relay resistance between terminals when connecting terminal No. 4 to the battery positive terminal and terminal No. 3 to the battery ground terminal.

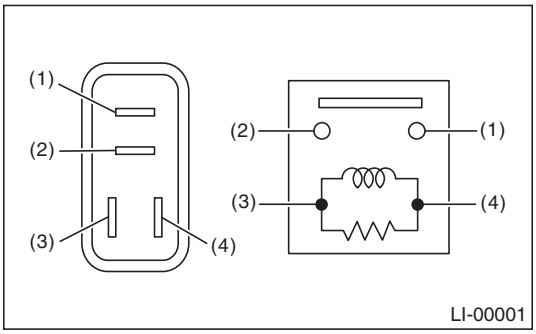

Continuity	Terminal No.	Standard
Yes	1 and 2	Less than 1 Ω
No		1 MΩ or more

3. TAIL AND ILLUMINATION RELAY

Measure the resistance between the tail and illumination relay terminals when connecting terminal No. 4 to the battery positive terminal and terminal No. 3 to the battery ground terminal.

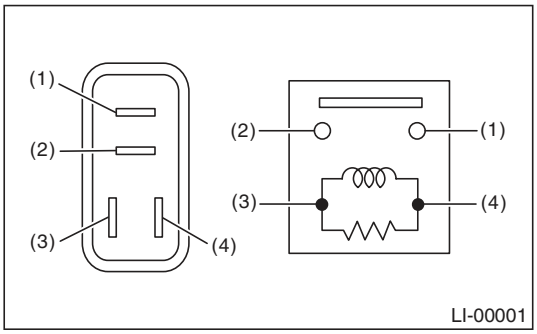

Continuity	Terminal No.	Standard
Yes	1 and 2	Less than 1 Ω
No		1 MΩ or more

3. Day Time Running Light System

A: WIRING DIAGRAM

<Ref. to WI-128, WIRING DIAGRAM, Headlight System.>

B: INSPECTION

1. DAYTIME RUNNING LIGHT MODULE CHECK

	Step	Check	Yes	No
1	**CHECK POWER SUPPLY CIRCUIT.** 1) Turn the ignition switch to ON. 2) Measure the voltage between the daytime running light module terminal and chassis ground. ***Connector & terminal*** ***(B96) No. 2 (+) — Chassis ground (–):*** ***(B242) No. 6 (+) — Chassis ground (–):***	Is the voltage battery voltage?	Go to step **2**.	Check the fuse and the power supply circuit.
2	**CHECK GROUND CIRCUIT.** 1) Disconnect the daytime running light module connector. 2) Measure the resistance between the daytime running light module connector and chassis ground. ***Connector & terminal*** ***(B242) No. 10 (+) — Chassis ground (–):***	Is the resistance less than 1 Ω?	Go to step **3**.	Check the ground circuit.
3	**CHECK THE PARKING SIGNAL.** 1) Connect the daytime running light module connector. 2) Measure the voltage between the terminal and chassis ground when pulling parking brake lever and releasing. ***Connector & terminal*** ***(B96) No. 4 (+) — Chassis ground (–):***	Does the voltage change to 0⇔ battery voltage?	Go to step **4**.	Check the parking brake switch circuit.
4	**CHECK THE STARTER SIGNAL.** Turn the ignition switch to ON ⇔ Starter and measure the voltage of terminal. ***Connector & terminal*** ***(B96) No. 7 (+) — Chassis ground (–):***	Does the voltage change to 0⇔ battery voltage?	Go to step **5**.	Check the starter switch circuit.
5	**CHECK THE HEADLIGHT SWITCH SIGNAL.** Turn the headlight switch to LO ⇔ OFF and measure the voltage of terminal. ***Connector & terminal*** ***(B242) No. 2 (+) — Chassis ground (–):***	Does the voltage change to 0⇔ battery voltage?	Go to step **6**.	Check the combination switch and the headlight LO circuit.
6	**CHECK THE HEADLIGHT SWITCH SIGNAL.** Turn the headlight switch to HI ⇔ OFF and measure the voltage of terminal. ***Connector & terminal*** ***(B96) No. 1 (+) — Chassis ground (–):***	Does the voltage change to 0⇔ battery voltage?	Go to step **7**.	Check the combination switch and the headlight HI circuit.
7	**CHECK THE HEADLIGHT SIGNAL.** 1) Turn the ignition switch to ON. 2) Turn the headlight from HI to ON/OFF and measure the voltage of terminal. ***Connector & terminal*** ***(B242) No. 5 (+) — Chassis ground (–):***	Does the voltage change to 0⇔ battery voltage?	Go to step **8**.	Check the headlight HI circuit.
8	**CHECK THE HEADLIGHT SIGNAL.** 1) Turn the ignition switch to ON. 2) Measure the voltage of terminal on passing of headlight. ***Connector & terminal*** ***(B96) No. 3 (+) — Chassis ground (–):***	Does the voltage change to 0⇔ battery voltage?	If the above test is OK, replace the daytime running light module.	Check the headlight HI circuit.

2. LOW BEAM RELAY

Measure the resistance between the daytime running relay terminals when connecting terminal No. 4 to the battery positive terminal and terminal No. 3 to the battery ground terminal.

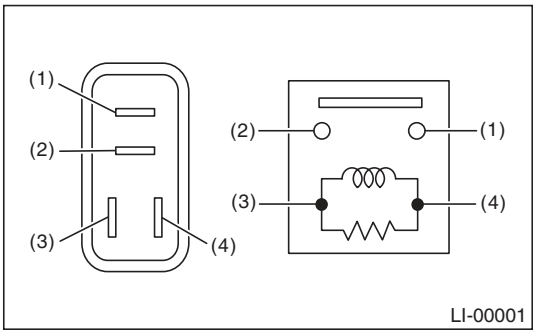

Continuity	Terminal No.	Standard
Yes	1 and 2	Less than 1 Ω
No		1 MΩ or more

4. Front Fog Light System

A: WIRING DIAGRAM

1. FRONT FOG LIGHT

<Ref. to WI-131, WIRING DIAGRAM, Front Fog Light System.>

B: INSPECTION

1. FRONT FOG LIGHT SWITCH

Measure the resistance between front fog light switch terminals. <Ref. to LI-11, INSPECTION, Combination Switch (Light).>

2. FRONT FOG LIGHT RELAY

Connect terminal No. 4 to battery positive terminal and terminal No. 3 to battery ground terminal, and measure the front fog light relay resistance between terminals.

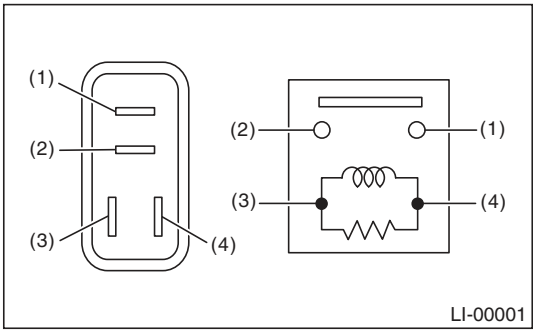

Continuity	Terminal No.	Standard
Yes	1 and 2	Less than 1 Ω
No		1 MΩ or more

5. Turn Signal Light and Hazard Light System

A: WIRING DIAGRAM

1. TURN SIGNAL LIGHT AND HAZARD LIGHT

<Ref. to WI-139, WIRING DIAGRAM, Turn Signal Light and Hazard Light System.>

B: INSPECTION

1. TURN SIGNAL SWITCH

Measure the resistance between turn signal switch terminals. <Ref. to LI-11, INSPECTION, Combination Switch (Light).>

2. HAZARD SWITCH

Measure the resistance between hazard switch terminals.

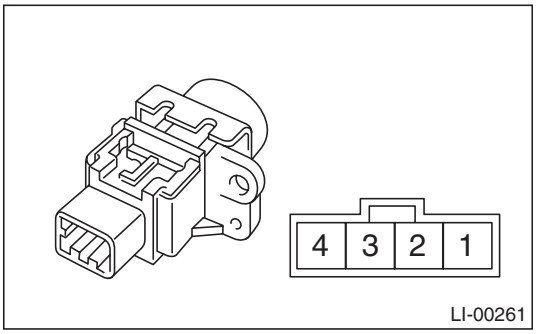

Switch position	Terminal No.	Standard
OFF	2 and 3	1 MΩ or more
ON		Less than 1 Ω

3. TURN SIGNAL AND HAZARD MODULE

Connect the battery and turn signal light bulb to the module. The module is properly functioning if it blinks when power is supplied to the circuit.

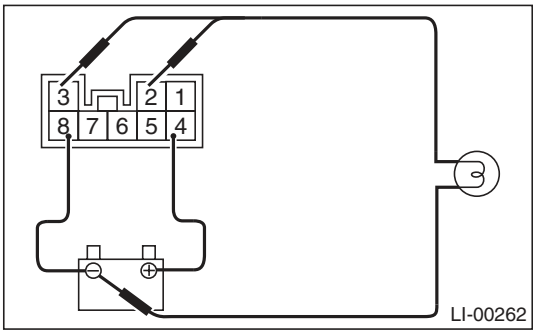

6. Back-up Light System

A: WIRING DIAGRAM

1. BACK-UP LIGHT

<Ref. to WI-132, WIRING DIAGRAM, Back-up Light System.>

B: INSPECTION

1. BACK-UP LIGHT SWITCH (MT MODEL)

Measure the resistance between the back-up light switch terminals.

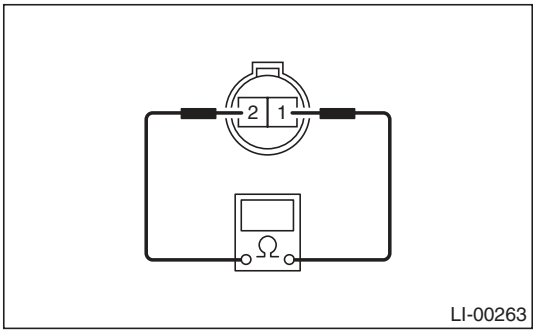

Switch position	Terminal No.	Standard
When shift lever is set in reverse position	1 and 2	Less than 1 Ω
Other positions		1 MΩ or more

2. INHIBITOR SWITCH (4AT MODEL)

Measure the resistance between the inhibitor switch terminals.

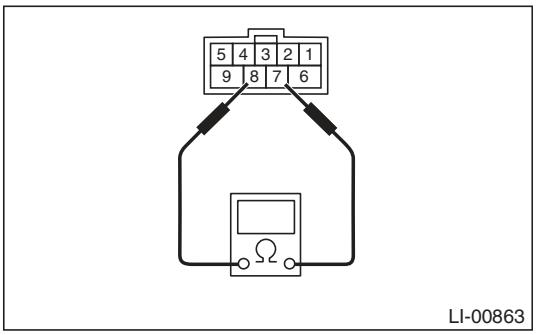

Switch position	Terminal No.	Standard
When the selector lever is in the “R” range	7 and 8	Less than 1 Ω
Other positions		1 MΩ or more

3. BACK-UP LIGHT RELAY (5AT MODEL)

Measure the resistance between headlight relay terminals when connecting terminal No. 4 to the battery positive terminal and terminal No. 3 to the battery ground terminal.

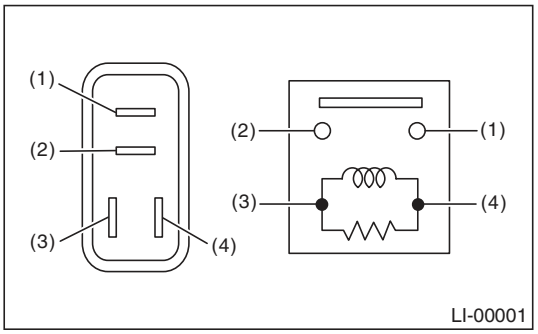

Continuity	Terminal No.	Standard
Yes	1 and 2	Less than 1 Ω
No		1 MΩ or more

NOTE:
Checks other than the back-up light relay. <Ref. to 4AT-46, INSPECTION, Inhibitor Switch.>

7. Stop Light System

A: WIRING DIAGRAM

1. STOP LIGHT

<Ref. to WI-133, WIRING DIAGRAM, Stop Light System.>

B: INSPECTION

1. STOP LIGHT SWITCH

Measure the resistance between stop light switch terminals.

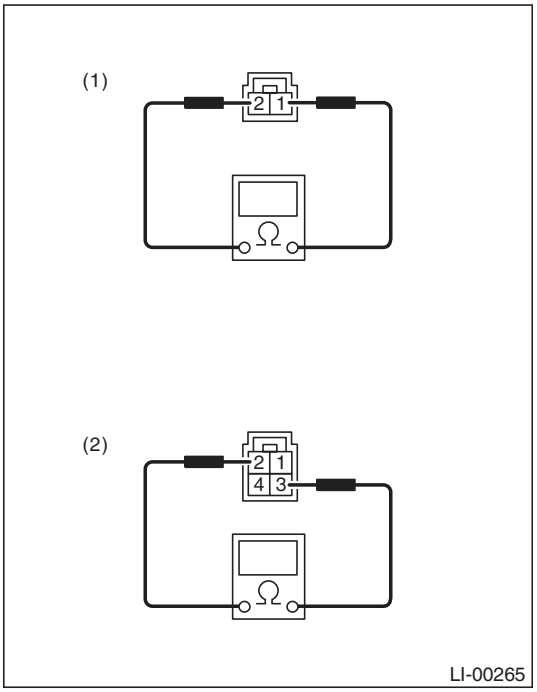

(1) Models without cruise control
(2) Models with cruise control

Switch position	Terminal No.	Standard
When brake pedal is depressed	Models without cruise control: 1 and 2	Less than 1 Ω
When brake pedal is released	Models with cruise control: 2 and 3	1 MΩ or more

8. Room Light System

A: WIRING DIAGRAM

1. ROOM LIGHT

<Ref. to WI-141, WIRING DIAGRAM, Interior Light System.>

B: INSPECTION

1. DOOR SWITCH

Measure the resistance between door switch terminals.

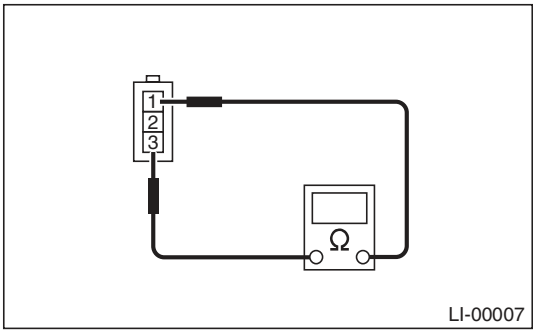

Switch position	Terminal No.	Standard
When door is opened	1 and 3	Less than 1 Ω
When door is closed		1 MΩ or more

2. REAR GATE LATCH SWITCH

Measure the resistance between rear gate latch switch terminals.

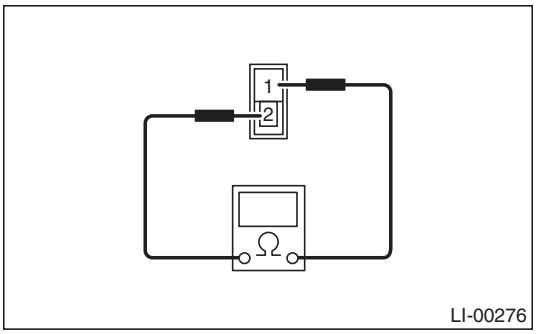

Switch position	Terminal No.	Standard
When rear gate is opened	1 and 2	Less than 1 Ω
When rear gate is closed		1 MΩ or more

3. TRUNK LID SWITCH

Measure the resistance between trunk lid switch terminals.

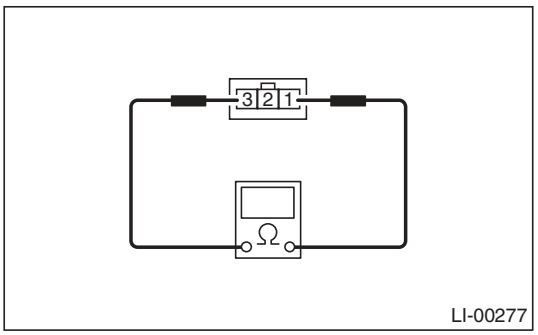

Switch position	Terminal No.	Standard
When trunk lid is opened	1 and 3	Less than 1 Ω
When trunk lid is closed		1 MΩ or more

9. Combination Switch (Light)

A: REMOVAL

1) Disconnect the ground cable from the battery.
2) Remove the screws and remove the steering column lower cover.

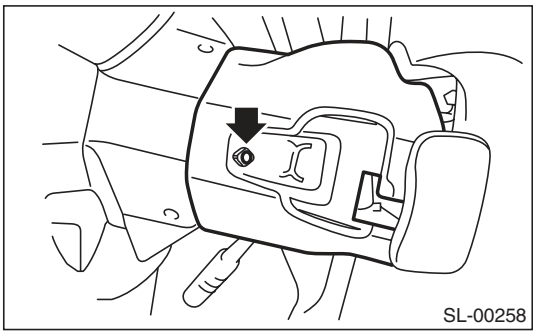

3) Remove the screws and steering column upper cover.
4) Disconnect the connector from combination switch.
5) Remove the screws which secure the switch, then remove the combination switch.

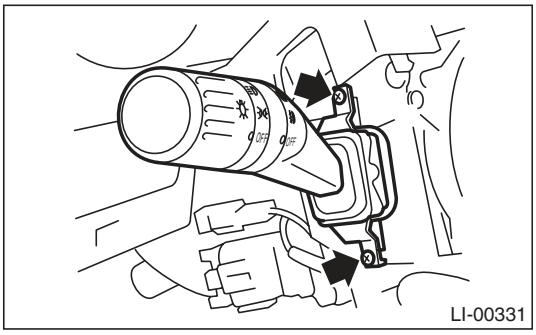

B: INSTALLATION

Install in the reverse order of removal.

C: INSPECTION

Measure the resistance between combination switch terminals.

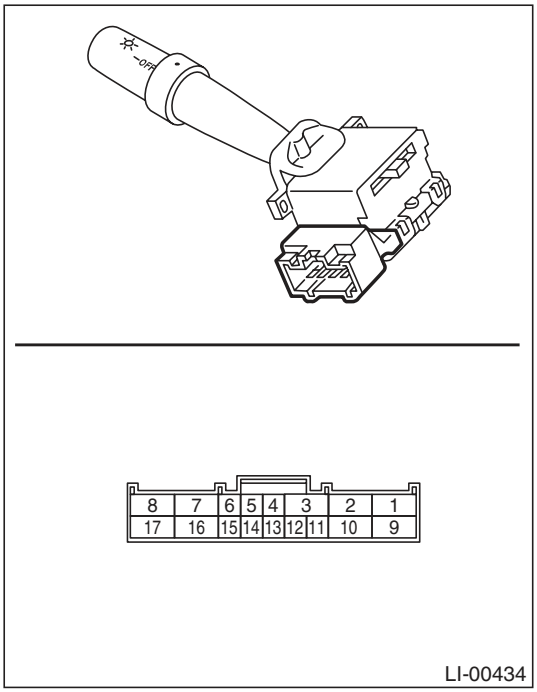

1. LIGHTING SWITCH

Switch position	Terminal No.	Standard
OFF	—	1 MΩ or more
Tail	14 and 16	Less than 1 Ω
Head	13, 14 and 16	Less than 1 Ω

2. DIMMER & PASSING SWITCH

Switch position	Terminal No.	Standard
Passing	7, 8 and 16	Less than 1 Ω
Low beam	17 and 16	Less than 1 Ω
High beam	7 and 16	Less than 1 Ω

3. TURN SIGNAL SWITCH

Switch position	Terminal No.	Standard
Left	1 and 2	Less than 1 Ω
Neutral	—	1 MΩ or more
Right	2 and 3	Less than 1 Ω

4. FRONT FOG LIGHT SWITCH

Switch position	Terminal No.	Standard
OFF	—	1 MΩ or more
ON	10 and 11	Less than 1 Ω

10. Combination Base Switch Assembly

A: REMOVAL

1) Remove the driver's airbag module. <Ref. to AB-14, REMOVAL, Driver's Airbag Module.>
2) Remove the steering wheel. <Ref. to PS-13, REMOVAL, Steering Wheel.>
3) Remove the screws and remove the steering column lower cover.

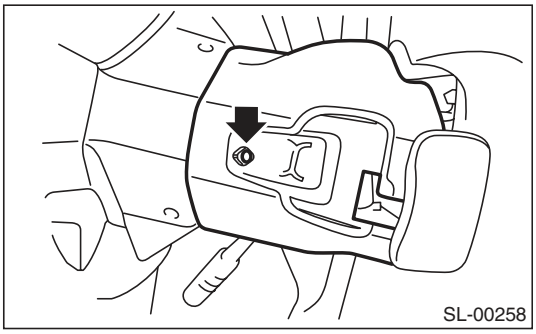

4) Remove the screws and steering column upper cover.
5) On models equipped with paddle shifters, remove the paddle shift assembly. <Ref. to CS-33, REMOVAL, Paddle Shift Assembly.>
6) Remove the combination switch. <Ref. to LI-11, REMOVAL, Combination Switch (Light).> <Ref. to WW-7, REMOVAL, Combination Switch (Wiper).>
7) Remove the four screws and remove the roll connector.
8) Remove the three screws.

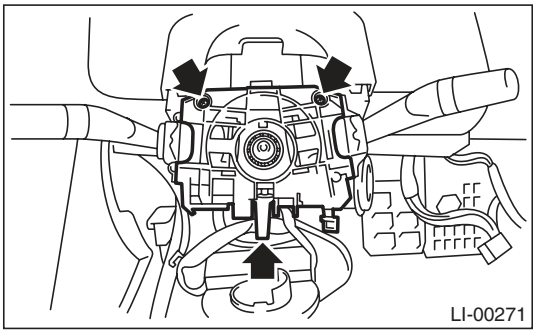

9) Disconnect the connector and remove the combination base switch assembly.

B: INSTALLATION

1) Install in the reverse order of removal.
2) Before installing the steering wheel, be sure to adjust the direction of roll connector with steering. <Ref. to AB-25, ADJUSTMENT, Roll Connector.>

C: INSPECTION

1. COMBINATION BASE SWITCH ASSEMBLY

Inspect the combination base switch assembly and roll connector for cracks or deformation. If any damage is found, replace with a new part.

2. PARKING SWITCH

Measure the resistance between parking switch terminals.

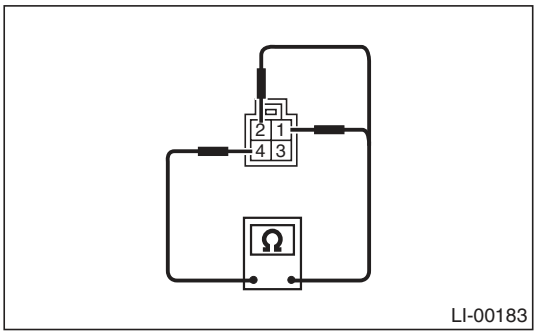

Switch position	Terminal No.	Standard
OFF	2 and 4	Less than 1 Ω
ON	1 and 4	Less than 1 Ω

11. Headlight Assembly

A: REMOVAL

1) Disconnect the ground cable from the battery.
2) Remove the air intake duct. (When removing the headlight RH).

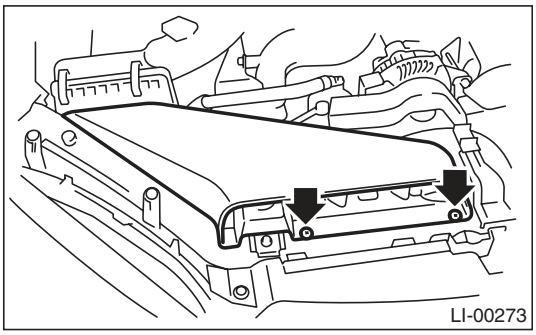

3) Remove the front bumper. <Ref. to EI-30, REMOVAL, Front Bumper.>
4) Disconnect harness connectors.
5) Remove the 7 bolts, disengage 1 clip, then detach the headlight assembly.

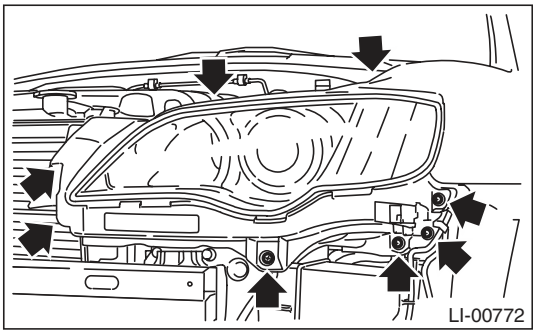

B: INSTALLATION

Install in the reverse order of removal.

Tightening torque:
7.5 N·m (0.76 kgf-m, 5.5 ft-lb)

C: ADJUSTMENT

1. HEADLIGHT BEAM ADJUSTMENT

NOTE:
The headlight can only be adjusted in the vertical direction but not the horizontal direction.

CAUTION:
Turn off the light before adjusting the headlight beam level. If it is necessary to inspect the beam level, do not keep the light on for two minutes or more.

NOTE:
Before checking the headlight beam level, be sure of the following:
- The area around the headlight has not sustained any accident, damage or other type of deformation.
- Vehicle is parked on a level surface.
- The inflation pressure of tires is correct.
- Vehicle's fuel tank is fully filled.

1) Bounce the vehicle several times to normalize the suspension.
2) Make certain that someone is seated in the driver's seat.

3) Turn the headlights on and then adjust the low beam pattern.

NOTE:
Adjust the headlight beam level by turning the adjusting screw (A).

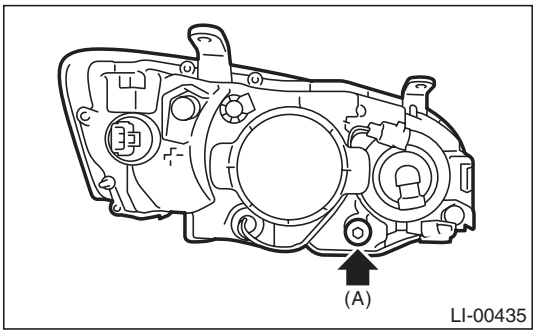

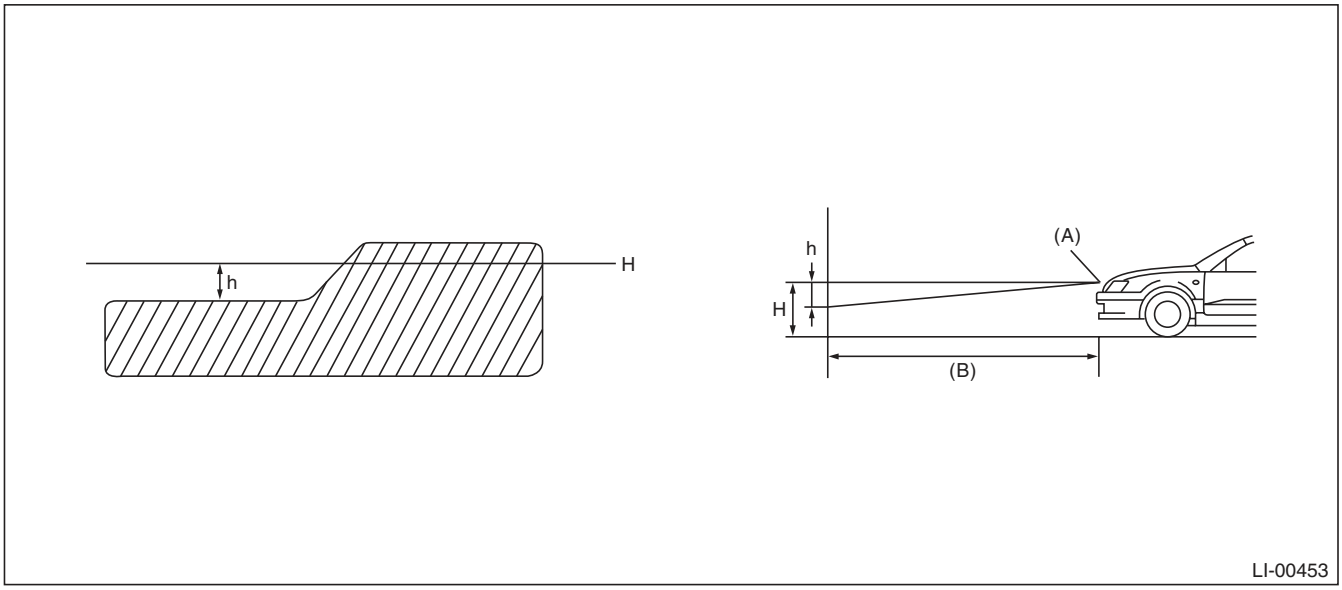

(A) Bulb center marking
(B) 3 m (10 ft)
(H) Height of the headlight LOW beam center

h mm (in) at 3 m (10 ft)
21 (0.83)

NOTE:
Check the bulb center mark on the inner side of the lens.

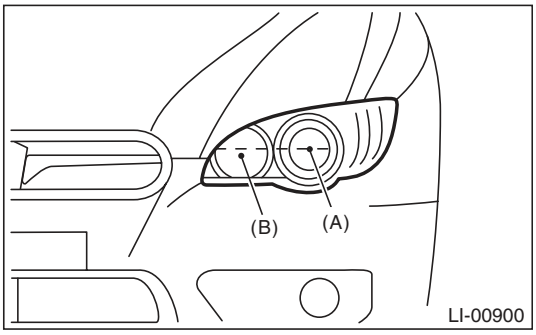

(A) Low beam
(B) High beam

12. Headlight Bulb

A: REMOVAL

1. HIGH BEAM AND LOW BEAM

CAUTION:

- **Because the halogen bulb operates at a high temperature, dirt and oil on the bulb surface reduces the bulb's service life. Hold the flange portion when replacing the bulb. Never touch the glass portion.**
- **Do not leave the headlight without a bulb for a long time. Dust, moisture, etc. entering the headlight may affect its performance.**

1) Disconnect the ground cable from the battery.
2) Remove the air intake duct. (When removing the headlight bulb RH)

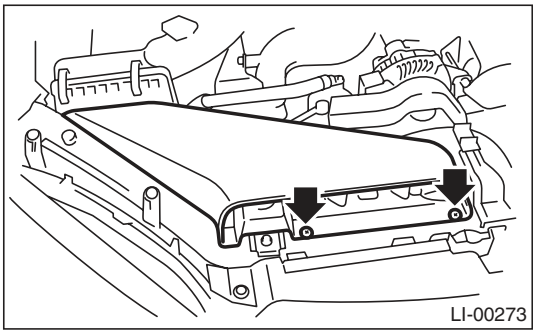

3) Remove the battery cover. (When removing the headlight bulb LH)
4) Tilt the washer tank filler neck. (When removing the headlight bulb LH)
5) Disconnect the harness connector.
6) Remove the bulb assembly (A) then remove the high beam. To remove the low beam, remove the back cover (B), and then go to Step 7.

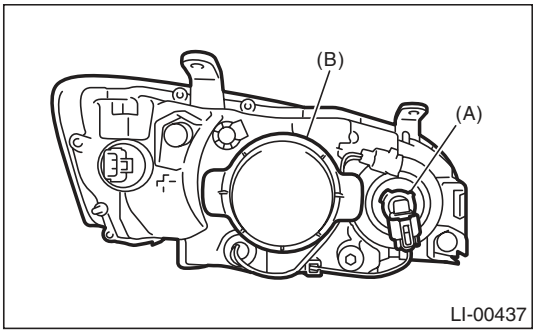

7) Remove the light bulb retaining spring (A) to remove bulb.

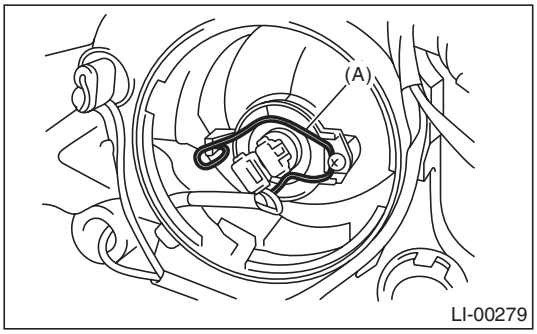

B: INSTALLATION

Install in the reverse order of removal.

C: INSPECTION

1) Visually check the bulb for blow out.
2) Check the bulb specification.
<Ref. to LI-2, SPECIFICATION, General Description.>
3) If NG, replace the bulb with a new part.

13. Front Turn Signal Light Bulb

A: REMOVAL

1) Disconnect the ground cable from the battery.
2) When removing the turn signal light bulb, fully turn the steering wheels to opposite direction from the turn signal light bulb to remove.

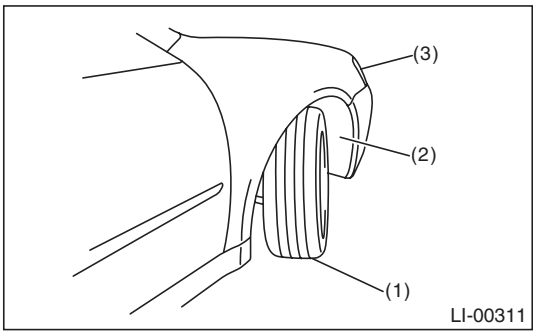

(1) Turn the steering wheel fully.
(2) Mud guard
(3) Front turn signal light

3) Turn the mud guard inward.
4) Turn socket (A) from the wheel arch, and remove the front turn signal light bulb.

CAUTION:
For 5AT model, the turn signal light bulb LH cannot be removed from the wheel arch. Remove the bulb by removing the battery from the engine compartment side.

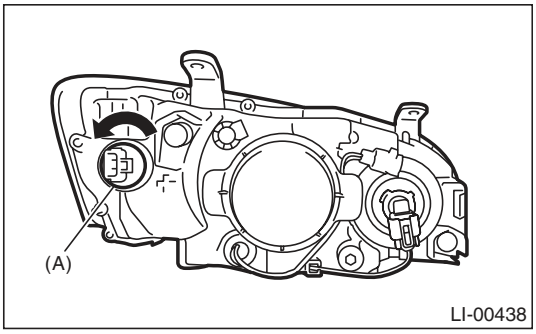

B: INSTALLATION

Install in the reverse order of removal.

C: INSPECTION

1) Visually check the bulb for blow out.
2) Check the bulb specification.
<Ref. to LI-2, SPECIFICATION, General Description.>
3) If NG, replace the bulb with a new part.

14. Parking Light Bulb

A: SPECIFICATION

The parking light bulb is integrated into the front turn signal light bulb as a unit; therefore, refer to “Front Turn Signal Light Bulb” for the removal procedure. <Ref. to LI-16, REMOVAL, Front Turn Signal Light Bulb.>

15. Front Side Marker Light Bulb

A: SPECIFICATION

The front side marker light bulb is integrated into the front turn signal light bulb as a unit; therefore, refer to “Front Turn Signal Light Bulb” for the removal procedures. <Ref. to LI-16, REMOVAL, Front Turn Signal Light Bulb.>

16. Front Fog Light Assembly

A: REMOVAL

1. EXCEPT FOR OUTBACK MODEL

1) Disconnect the ground cable from the battery.
2) Disengage the two clips, and then turn over the lower mud guard.

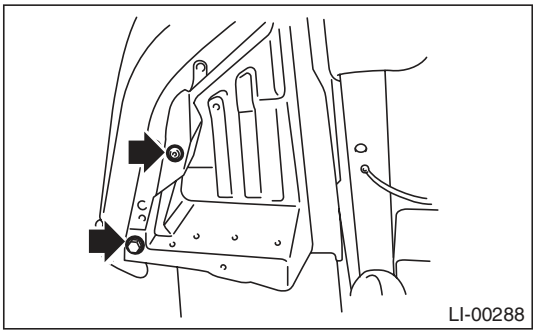

3) Disconnect the harness connector.
4) Remove the mounting bolts and claw (A), and detatch the fog light assembly by pulling it backward.

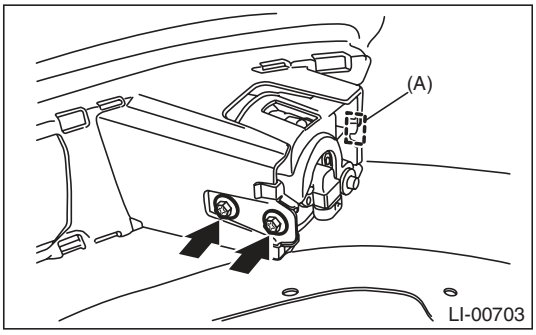

2. OUTBACK MODEL

1) Disconnect the ground cable from the battery.
2) Disengage the two clips, and then turn over the lower mud guard.

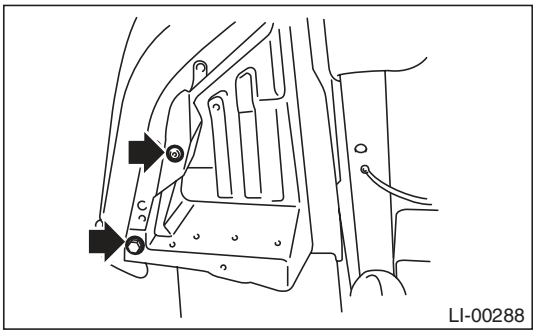

3) Disconnect the harness connector.
4) Remove the mounting nuts and clips, and detach the fog light assembly by pulling it out.

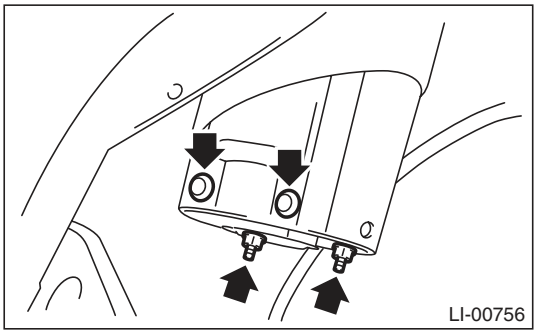

B: INSTALLATION

Install in the reverse order of removal.

Tightening torque:
7.5 N·m (0.76 kgf-m, 5.5 ft-lb)

C: ADJUSTMENT

1. FOG LIGHT AIMING

NOTE:
Before checking the fog light beam level, be sure of the following:
- The area around the fog light has not sustained any accident, damage or other type of deformation.
- Vehicle is parked on a level surface.
- The inflation pressure of tires is correct.
- Vehicle's fuel tank is fully filled.

1) Bounce the vehicle several times to normalize the suspension.
2) Make certain that someone is seated in the driver's seat.
3) Measure the height of the fog light center.
4) Loosen the screws and clips of the mud guard, and then turn over the front mud guard.

5) Adjust the fog light pattern by inserting a Philips screwdriver to the aiming screw hole.

- Except for the OUTBACK model

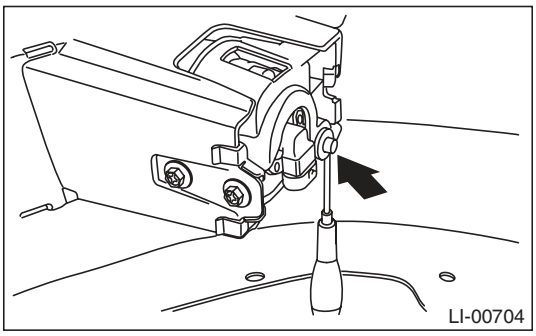

- OUTBACK model

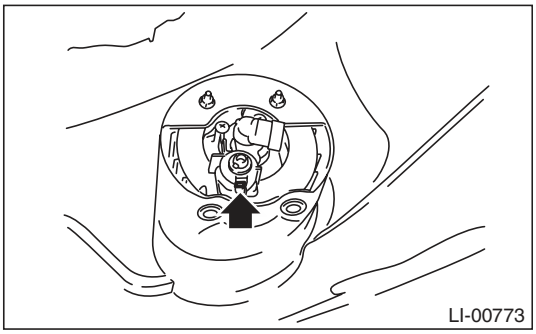

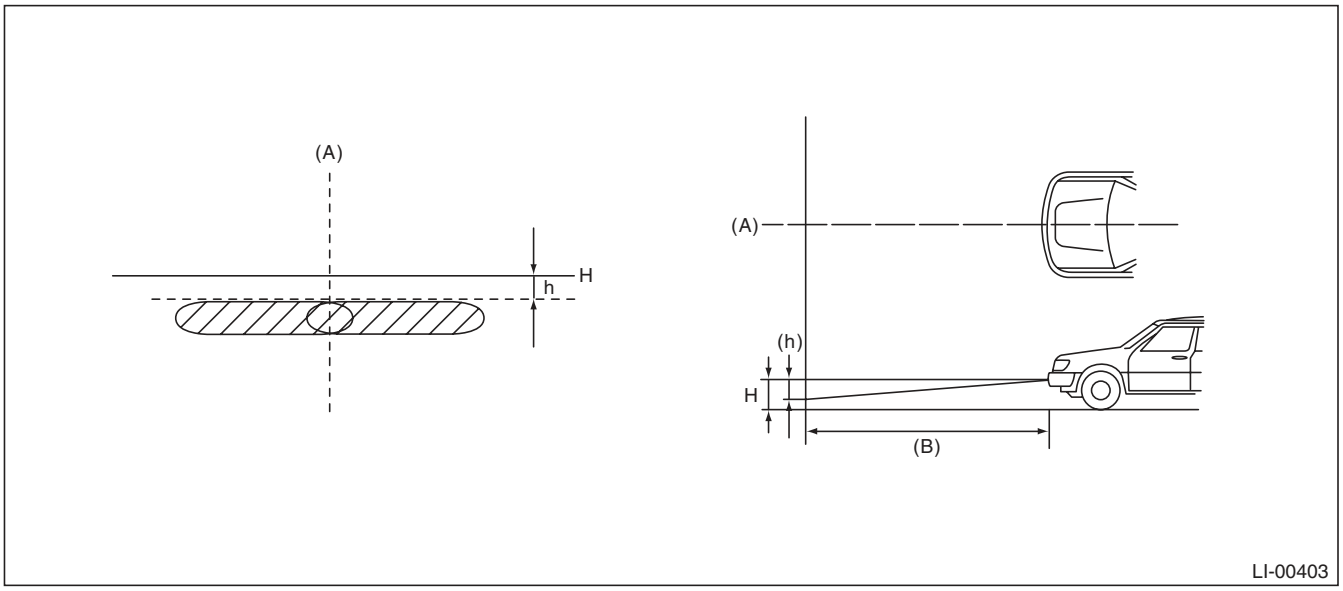

(A) Vehicle center (B) 3 m (10 ft) (H) Height of fog light center

h mm (in) at 3 m (10 ft)
40 (1.58)

17. Front Fog Light Bulb

A: REMOVAL

1. EXCEPT FOR OUTBACK MODEL

1) Disconnect the ground cable from battery.
2) Disengage the two clips, and then turn over the lower mud guard.

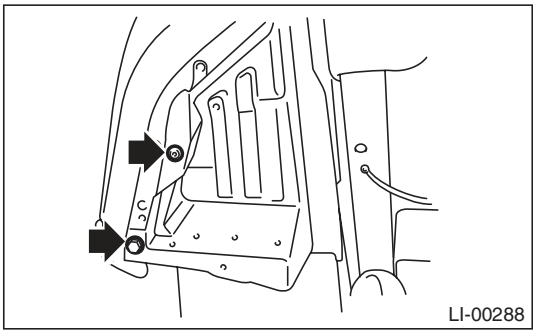

3) Disconnect the harness connector.
4) Retain the bulb then detach the fog light bulb.

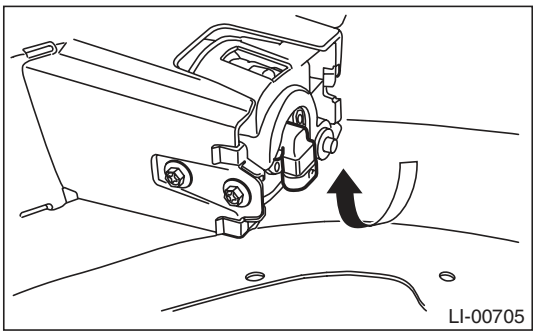

2. OUTBACK MODEL

1) Disconnect the ground cable from the battery.
2) Disengage the two clips, and then turn over the lower mud guard.

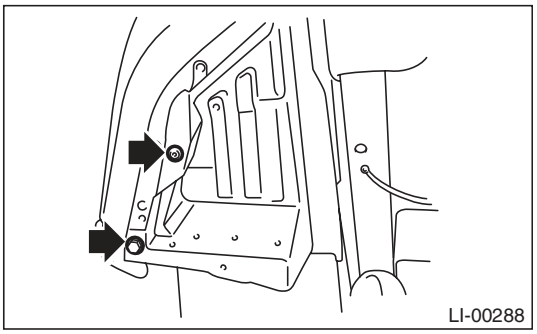

3) Disconnect the harness connector.
4) Remove the back cover.

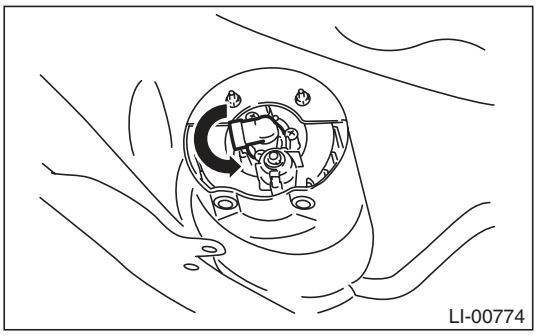

5) Remove the spring retainer then detach the fog light bulb.

B: INSTALLATION

Install in the reverse order of removal.

C: INSPECTION

1) Visually check the bulb for blow out.
2) Check the bulb specification. <Ref. to LI-2, SPECIFICATION, General Description.>
3) If NG, replace the bulb with a new part.

18. Side Turn Signal Light Assembly

A: REMOVAL

1) Disconnect the ground cable from the battery.
2) Remove the scalp cap. <Ref. to GW-19, REPLACEMENT, Scalp Cap.>
3) Remove the mirror. <Ref. to GW-21, REPLACEMENT, Outer Mirror.>
4) Disconnect the harness connector, remove the 2 mounting screws and then remove the side turn signal light assembly.

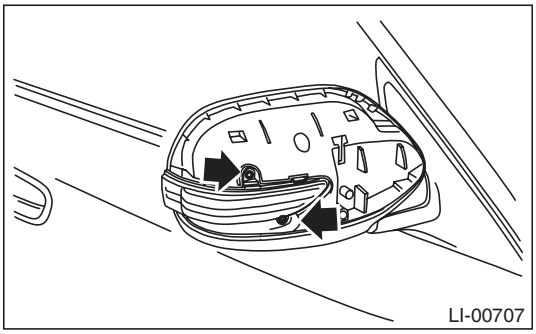

B: INSTALLATION

Install in the reverse order of removal.

Tightening torque:
0.8 N·m (0.08 kgf-m, 0.59 ft-lb)

C: INSPECTION

1) Install the side turn signal light assembly and check that it blinks normally.
2) If it does not blink normally, replace the side turn signal light assembly with a new part.

NOTE:
Since LED (Light Emitting Diode) is used for the side turn signal light, replace the side turn signal light assembly if the LED burns out.

19. Rear Combination Light Assembly

A: REMOVAL

1. SEDAN MODEL

1) Disconnect the ground cable from the battery.
2) Remove the trunk room side trim. <Ref. to EI-70, REMOVAL, Trunk Room Trim.>
3) Remove the four nuts, and then detach the rear combination light after disconnecting the connector.

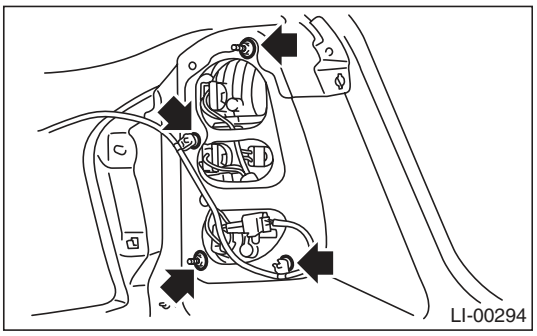

2. WAGON MODEL

1) Disconnect the ground cable from the battery.
2) Remove the clips.

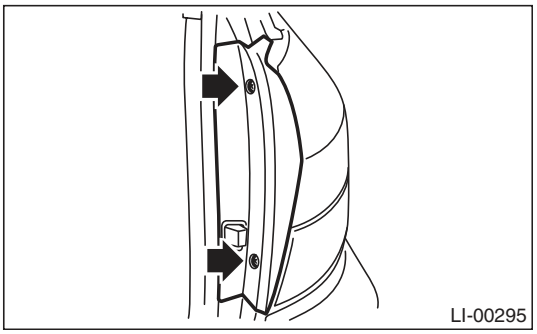

3) While pressing the section (A), insert your finger or a flat tip screwdriver wrapped with tape into the clearance (B) to remove claws in the order of (C), (D), (E), and remove the rear combination cover.

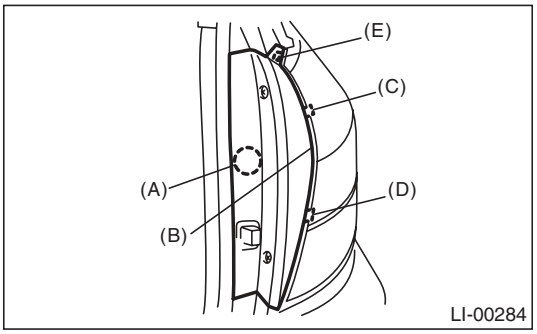

4) Remove the two bolts, and then detach the rear combination light by pulling it to the rear side of vehicle.

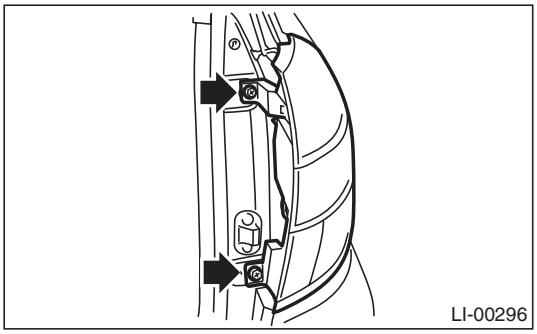

5) After turning the sockets of the tail/stop light bulbs and rear turn signal light bulbs, remove the rear combination light.

B: INSTALLATION

Install in the reverse order of removal.

Tightening torque:
Sedan model:
4.5 N·m (0.46 kgf-m, 3.3 ft-lb)
Wagon model:
7.5 N·m (0.76 kgf-m, 5.5 ft-lb)

20.Tail/Stop Light Bulb

A: REMOVAL

1. SEDAN MODEL

1) Disconnect the ground cable from the battery.
2) Remove the trunk side trim cover.
3) Turn the socket and remove the bulb.

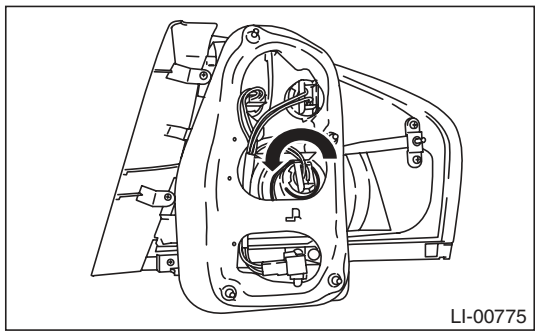

2. WAGON MODEL

1) Remove the rear combination light assembly. <Ref. to LI-23, WAGON MODEL, REMOVAL, Rear Combination Light Assembly.>
2) Turn the socket and remove the bulb.

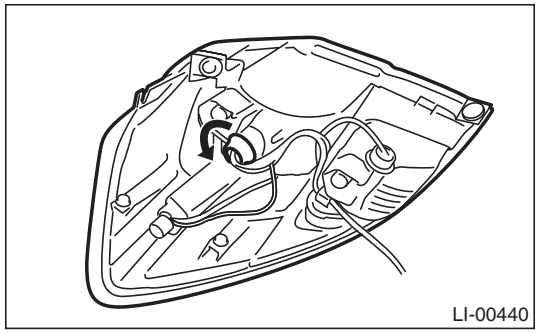

B: INSTALLATION

Install in the reverse order of removal.

C: INSPECTION

1) Visually check the bulb for blow out.
2) Check the bulb specification. <Ref. to LI-2, SPECIFICATION, General Description.>
3) If NG, replace the bulb with a new part.

21. Rear Turn Signal Light Bulb

A: REMOVAL

1. SEDAN MODEL

1) Disconnect the ground cable from the battery.
2) Remove the trunk side trim cover.
3) Turn the socket and remove the bulb.

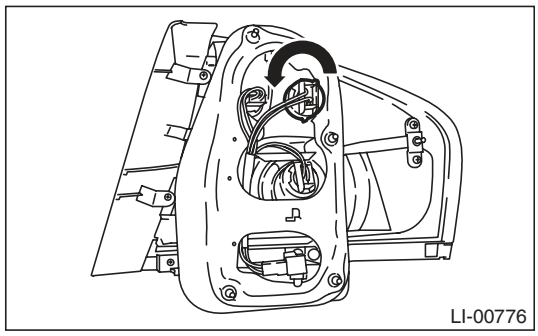

2. WAGON MODEL

1) Remove the rear combination light assembly. <Ref. to LI-23, WAGON MODEL, REMOVAL, Rear Combination Light Assembly.>
2) Turn the socket and remove the bulb.

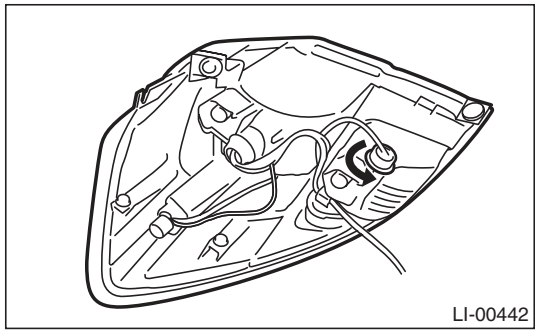

B: INSTALLATION

Install in the reverse order of removal.

C: INSPECTION

1) Visually check the bulb for blow out.
2) Check the bulb specification. <Ref. to LI-2, SPECIFICATION, General Description.>
3) If NG, replace the bulb with a new part.

22. Rear Side Marker Light Bulb

A: REMOVAL

1. SEDAN MODEL

The rear side marker light bulb is integrated into the tail/stop light bulb as a single unit. <Ref. to LI-24, SEDAN MODEL, REMOVAL, Tail/Stop Light Bulb.>

2. WAGON MODEL

1) Remove the rear combination light assembly. <Ref. to LI-23, WAGON MODEL, REMOVAL, Rear Combination Light Assembly.>
2) Turn the socket and remove the bulb.

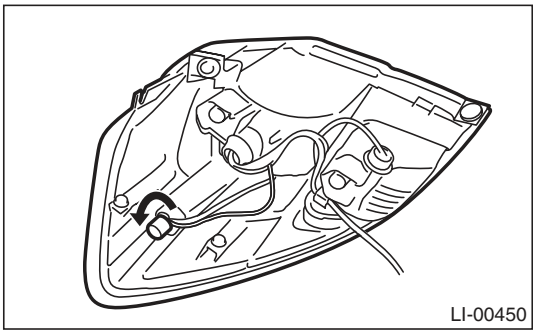

B: INSTALLATION

Install in the reverse order of removal.

C: INSPECTION

1) Visually check the bulb for blow out.
2) Check the bulb specification.
<Ref. to LI-2, SPECIFICATION, General Description.>
3) If NG, replace the bulb with a new part.

23. Back-up Light Assembly

A: REMOVAL

1. SEDAN MODEL

Remove the rear combination light. <Ref. to LI-23, REMOVAL, Rear Combination Light Assembly.>

2. WAGON MODEL

1) Disconnect the ground cable from the battery.
2) Remove the rear gate trim. <Ref. to EI-68, REMOVAL, Rear Gate Trim.>
3) Disconnect the harness connector and remove the rear gate garnish. <Ref. to EI-75, REMOVAL, Rear Gate Garnish.>
4) Remove the attachment nuts and remove the back-up light assembly.

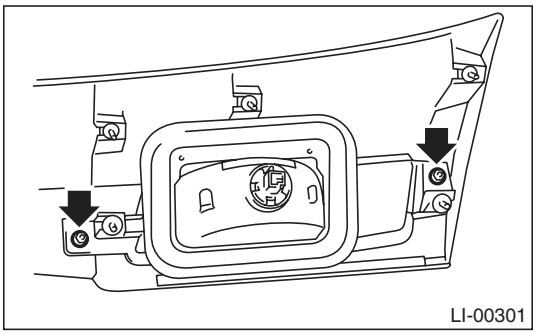

B: INSTALLATION

Install in the reverse order of removal.

Tightening torque:
7.5 N·m (0.76 kgf-m, 5.5 ft-lb)

24. Back-up Light Bulb

A: REMOVAL

1. SEDAN MODEL

1) Disconnect the ground cable from the battery.
2) Remove the trunk side trim cover.
3) Turn the socket and remove the bulb.

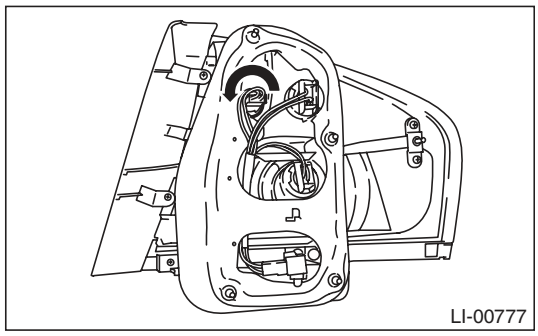

2. WAGON MODEL

1) Disconnect the ground cable from the battery.
2) Remove the bulb inspection cover of the rear gate trim.
3) Turn the socket and remove the bulb.

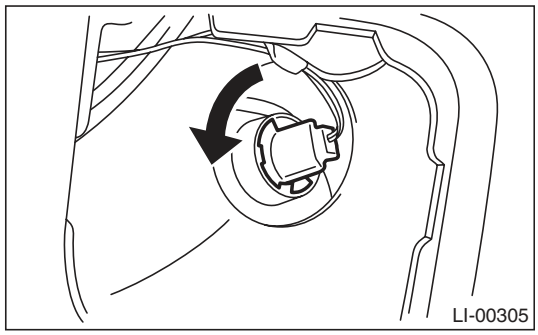

B: INSTALLATION

Install in the reverse order of removal.

C: INSPECTION

1) Visually check the bulb for blow out.
2) Check the bulb specification. <Ref. to LI-2, SPECIFICATION, General Description.>
3) If NG, replace the bulb with a new part.

25. License Plate Light Assembly

A: REMOVAL

1. SEDAN MODEL

1) Disconnect the ground cable from the battery.
2) Remove the trunk lid garnish. <Ref. to EI-74, REMOVAL, Trunk Lid Garnish.>
3) Remove the trunk lid trim. <Ref. to EI-70, TRUNK LID TRIM, REMOVAL, Trunk Room Trim.>
4) Turn and remove the bulb socket (A). Disengage clip (B) and remove the license plate light assembly.

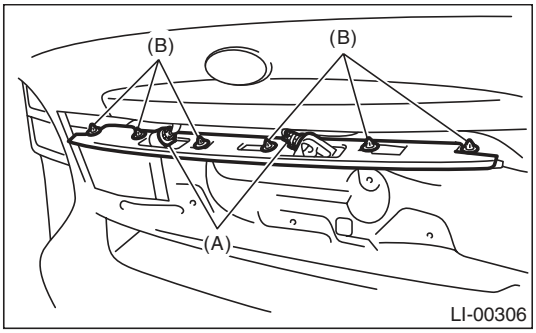

2. WAGON MODEL

1) Disconnect the ground cable from the battery.
2) Remove the rear gate trim. <Ref. to EI-68, REMOVAL, Rear Gate Trim.>
3) Disconnect the harness connector and remove the rear gate garnish. <Ref. to EI-75, REMOVAL, Rear Gate Garnish.>
4) Remove the license plate light from the rear gate garnish.

B: INSTALLATION

Install in the reverse order of removal.

26. License Plate Light

A: REMOVAL

1. SEDAN MODEL

1) Disconnect the ground cable from the battery.
2) Remove the trunk lid trim. <Ref. to EI-70, TRUNK LID TRIM, REMOVAL, Trunk Room Trim.>
3) Turn and remove the bulb socket (A).

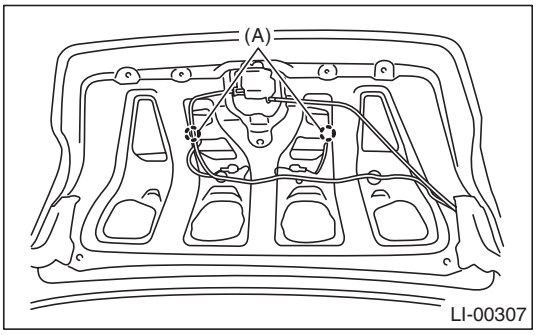

4) Remove the bulb.

2. WAGON MODEL

1) Disconnect the ground cable from the battery.
2) Remove the license plate light mounting screw (A) and then remove the lens (B).

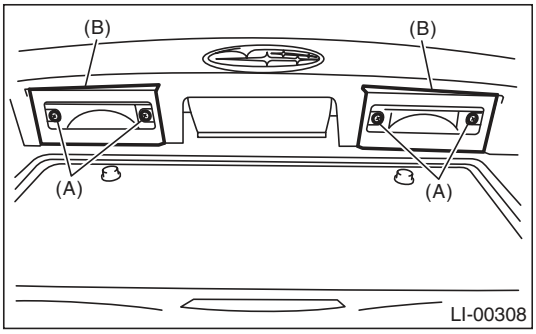

3) Remove the bulb.

B: INSTALLATION

Install in the reverse order of removal.

Tightening torque:
1.5 N·m (0.15 kgf-m, 1.1 ft-lb)

C: INSPECTION

1) Visually check the bulb for blow out.
2) Check the bulb specification. <Ref. to LI-2, SPECIFICATION, General Description.>
3) If NG, replace the bulb with a new part.

27. High-mounted Stop Light

A: REMOVAL

1. SEDAN MODEL

1) Disconnect the ground cable from battery.
2) Push the high-mounted stop light towards the rear of the vehicle (1), raise the rear end (2) and remove the clips to remove the stop light.

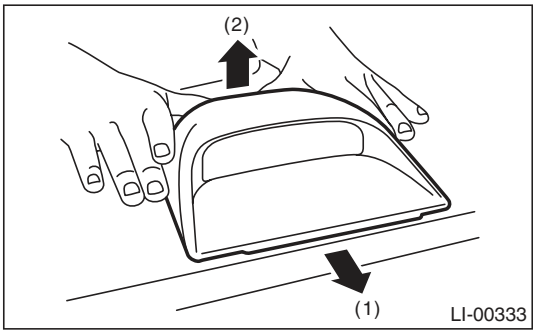

3) Remove the harness from the clamp.

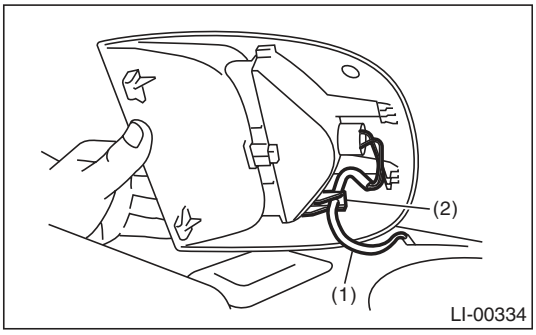

(1) Harness
(2) Clamp

4) Disengage two claws (A), pull out the high-mounted stop light from the cover and remove claw (B).

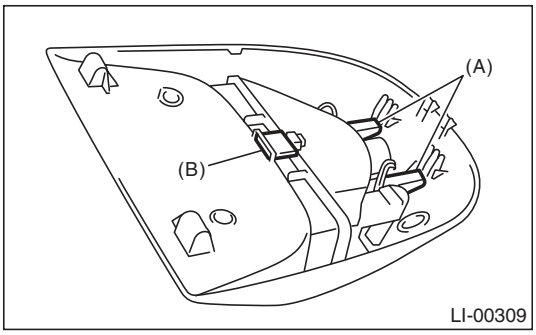

5) Disengage the three claws and remove lens (A).

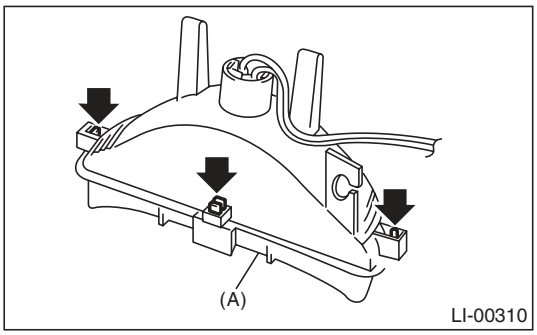

6) Remove the bulb.

2. WAGON MODEL

1) Remove the roof spoiler. <Ref. to EI-41, REMOVAL, Roof Spoiler.>
2) Remove the nuts (A), then detach the high-mounted stop light.

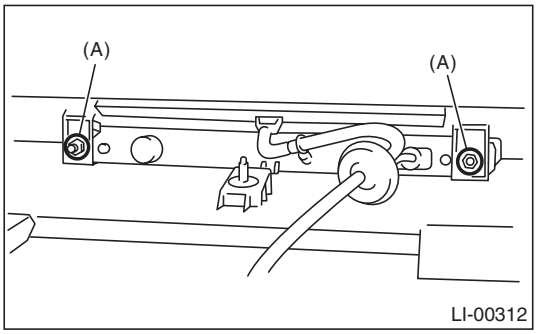

B: INSTALLATION

Install in the reverse order of removal.

Tightening torque:
4.5 N·m (0.46 kgf-m, 3.3 ft-lb)

C: INSPECTION

1. SEDAN MODEL

1) Visually check the bulb for blow out.
2) Check the bulb specification. <Ref. to LI-2, SPECIFICATION, General Description.>
3) If NG, replace the bulb with a new part.

2. WAGON MODEL

1) Install the high-mounted stop light to test if it illuminates normally.
2) If the high-mounted stop light does not illuminate, replace it with a new part.

NOTE:
Since LED (Light Emitting Diodes) is used for the high-mounted stop light of the wagon model, replace the high-mounted stop light as an assembly when the LED burns out.

28. Spot Map Light

A: REMOVAL

1) Disconnect the ground cable from battery.
2) Remove the lens (A) and spot map light mounting screws (B).

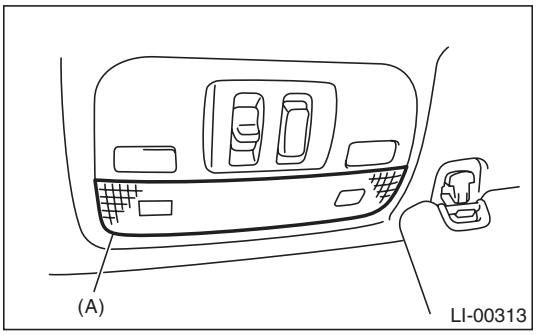

- Model with sunroof

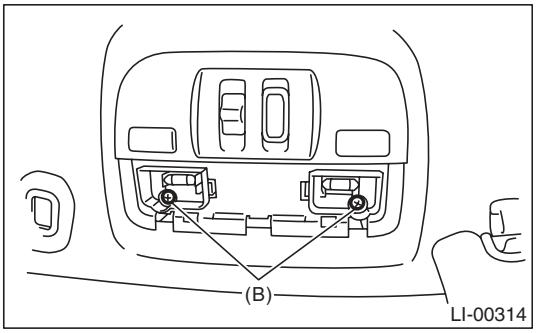

- Model without sunroof

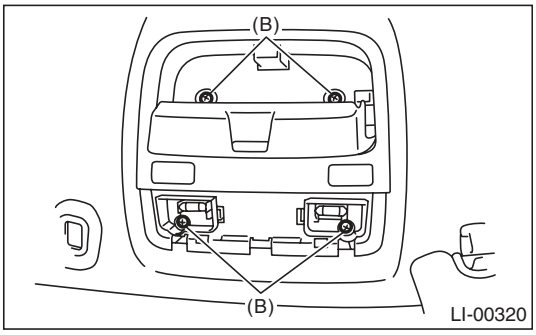

3) Disconnect the harness connectors and remove the spot map light.

B: INSTALLATION

Install in the reverse order of removal.

C: INSPECTION

1. SPOT MAP LIGHT BULB

1) Visually check the bulb for blow out.
2) Check the bulb specification. <Ref. to LI-2, SPECIFICATION, General Description.>
3) If NG, replace the bulb with a new part.

2. SPOT MAP LIGHT SWITCH

Measure the resistance between spot map light switch terminals.

Switch position	Terminal No.	Standard
OFF	—	1 MΩ or more
ON	1 and 2	18±5.4 Ω

29. Room Light

A: REMOVAL

1) Disconnect the ground cable from battery.
2) Remove the lens (A) and mounting screws (B).

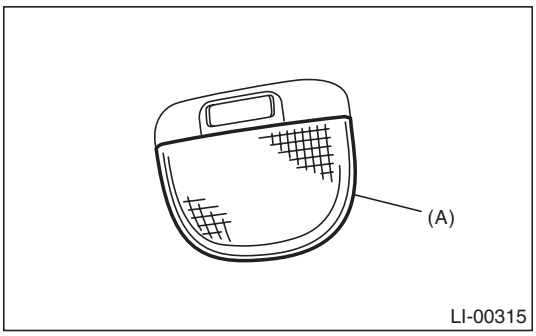

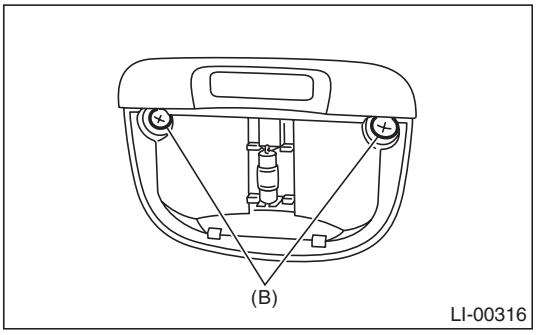

3) Disconnect the harness connector and remove the room light.

B: INSTALLATION

Install in the reverse order of removal.

C: INSPECTION

1. ROOM LIGHT BULB

1) Visually check the bulb for blow out.
2) Check the bulb specification. <Ref. to LI-2, SPECIFICATION, General Description.>
3) If NG, replace the bulb with a new part.

2. ROOM LIGHT SWITCH

Measure the resistance between room light switch terminals.

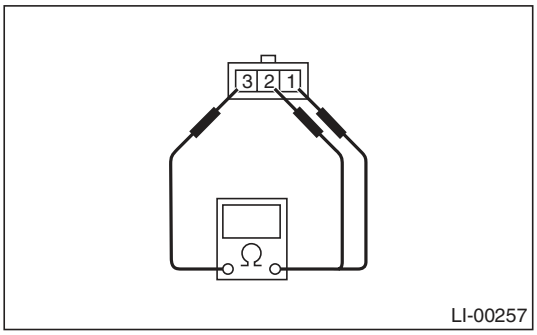

Switch position	Terminal No.	Standard
OFF	—	1 MΩ or more
ON	1 and 3	1.5±0.5 Ω
DOOR	2 and 3	1.5±0.5 Ω

Connect terminal No. 3 to the battery positive terminal and terminal No. 1 and No. 2 to the battery ground terminal, and check room light operation.

Switch position	Light status
OFF	Light OFF
ON	Light ON
DOOR	Light ON

30. Luggage Room Light

A: REMOVAL

1) Disconnect the ground cable from battery.
2) Remove the luggage room light body (A).

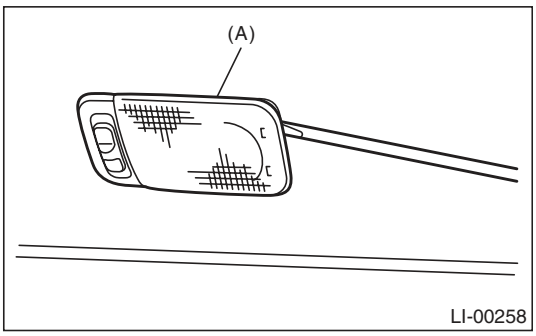

3) Disconnect the harness connector and remove the lens.

B: INSTALLATION

Install in the reverse order of removal.

C: INSPECTION

1. LUGGAGE ROOM LIGHT BULB

1) Visually check the bulb for blow out.
2) Check the bulb specification. <Ref. to LI-2, SPECIFICATION, General Description.>
3) If NG, replace the bulb with a new part.

2. LUGGAGE ROOM LIGHT SWITCH

Measure the resistance between luggage room light switch terminals.

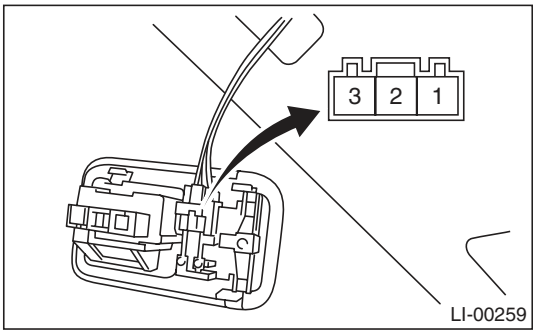

Switch position	Terminal No.	Standard
OFF	—	1 MΩ or more
ON	1 and 2	1.5±0.5 Ω
DOOR	2 and 3	1.5±0.5 Ω

31.Trunk Room Light

A: REMOVAL

1) Disconnect the ground cable from battery.
2) Turn the trunk room light counterclockwise 60° to remove it and disconnect the harness connector.

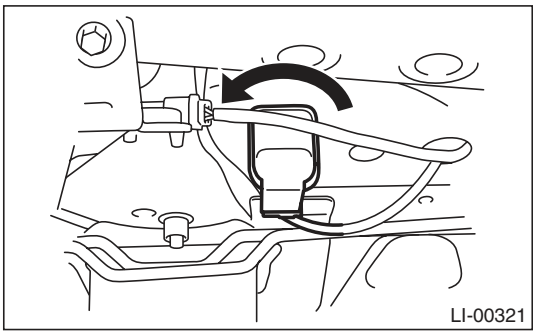

3) Remove bulb (A).

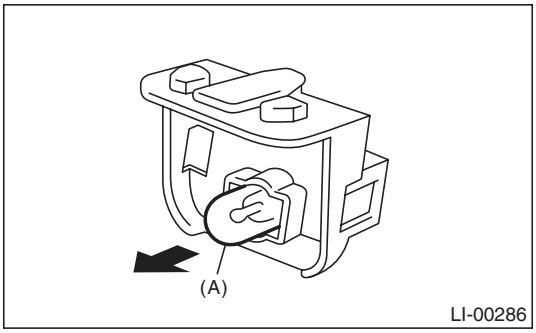

B: INSTALLATION

Install in the reverse order of removal.

C: INSPECTION

1) Visually check the bulb for blow out.
2) Check the bulb specification. <Ref. to LI-2, SPECIFICATION, General Description.>
3) If NG, replace the bulb with a new part.

32. Glove Box Light

A: REMOVAL

1) Remove the glove box. <Ref. to EI-52, REMOVAL, Glove Box.>
2) Disconnect the harness connector.
3) Remove the glove box light.

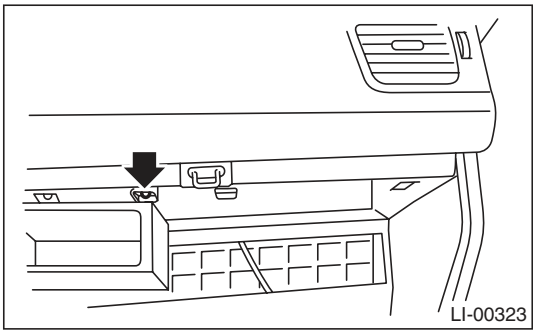

B: INSTALLATION

Install in the reverse order of removal.

C: INSPECTION

1) Visually check the bulb for blow out.
2) Check the bulb specification.
<Ref. to LI-2, SPECIFICATION, General Description.>
3) If NG, replace the bulb with a new part.

33. Door Step Light

A: REMOVAL

1) Disconnect the ground cable from the battery.
2) Remove lens (A), and then remove the door step light bulb.

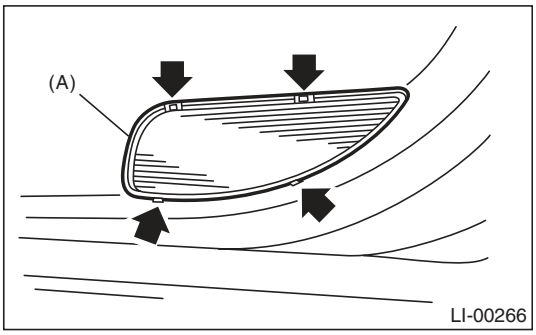

3) Remove the front door trim. <Ref. to EI-49, REMOVAL, Door Trim.>
4) Disconnect the harness connector.
5) Remove the mounting screw from the rear side of trim and remove the door step light.

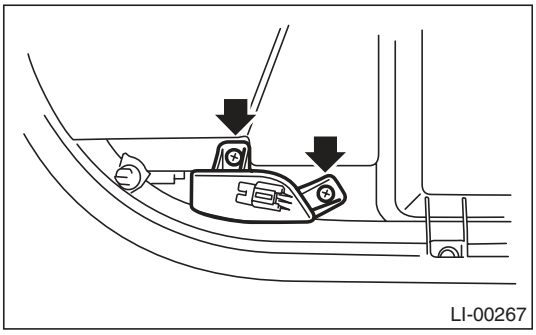

B: INSTALLATION

Install in the reverse order of removal.

C: INSPECTION

1) Visually check the bulb for blow out.
2) Check the bulb specification.
<Ref. to LI-2, SPECIFICATION, General Description.>
3) If NG, replace the bulb with a new part.

34.Ignition Switch Illumination

A: REMOVAL

1) Disconnect the ground cable from the battery.
2) Remove the screws and remove the steering column lower cover.

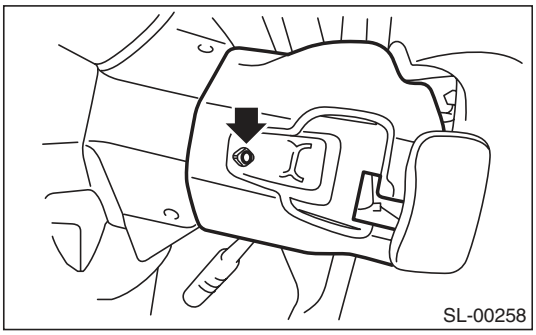

3) Remove the screws and steering column upper cover.
4) Disconnect the ignition switch illumination connector (A).
5) Turn the ignition switch illumination connector to the left and disconnect it.

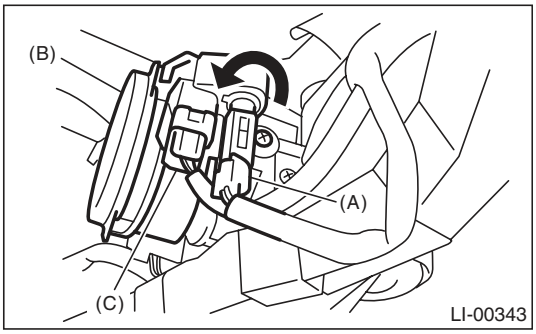

(A) Ignition switch illumination connector
(B) Ignition switch illumination
(C) Immobilizer antenna connector

B: INSTALLATION

Install in the reverse order of removal.

C: INSPECTION

Step		Check	Yes	No
1	**CHECK IGNITION SWITCH ILLUMINATION.** Make sure the ignition switch illumination illuminates when driver's side door is open.	Does the ignition switch illumination illuminate?	Ignition switch illumination is normal.	Go to step **2**.
2	**CHECK IGNITION SWITCH ILLUMINATION.** Make sure the ignition switch illumination blinks when the ignition switch is turned to ON.	Does the ignition switch illumination blink?	Check the function setting of the body integrated unit. <Ref. to LAN(diag)-2, Basic Diagnostic Procedure.>	Check the ignition switch illumination circuit. <Ref. to SL-24, CHECK IGNITION SWITCH ILLUMINATION, INSPECTION, Keyless Entry System.>

35. Day Time Running Light Unit

A: REMOVAL

1) Remove the instrument panel lower cover. <Ref. to EI-51, REMOVAL, Instrument Panel Lower Cover.>
2) Remove the fuse box and disconnect the connector.
3) Remove the mounting nuts, and detach the daytime running light module.

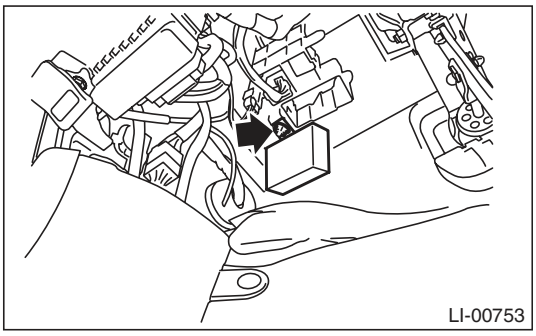

B: INSTALLATION

Install in the reverse order of removal.

Tightening torque:
7.5 N·m (0.76 kgf-m, 5.5 ft-lb)

36. Reflex Reflector

A: REMOVAL

1) Remove the rear bumper. <Ref. to EI-37, REMOVAL, Rear Bumper.>
2) Remove the plastic nuts (A).
3) Remove the reflex reflector by pressing the claw (B) of the reflex reflector.

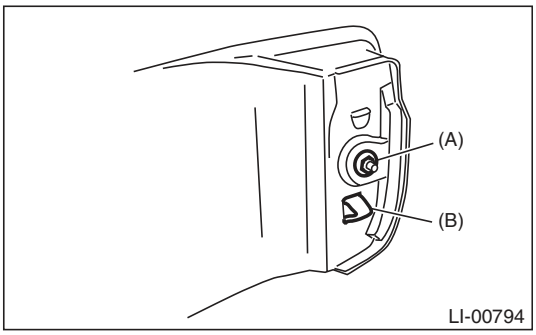

B: INSTALLATION

Install in the reverse order of removal.

Tightening torque:
4.5 N·m (0.46 kgf-m, 3.3 ft-lb)

37. Door Switch

A: REMOVAL

1) Disconnect the ground cable from the battery.
2) Remove the screw, and pull out the door switch.

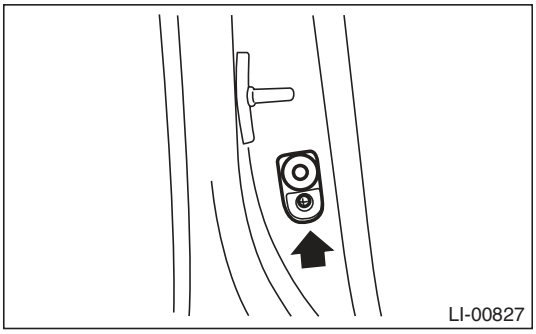

3) Disconnect the harness connector.

B: INSTALLATION

Install in the reverse order of removal.

C: INSPECTION

Refer to the door switch check under the room light system. <Ref. to LI-10, DOOR SWITCH, INSPECTION, Room Light System.>

1. General Description

A: SPECIFICATION

Front wiper motor	Input	12 V — 72 W or less
Rear wiper motor	Input	12 V — 42 W or less
Front washer motor	Pump type	Centrifugal
	Input	12 V — 36 W or less
Rear washer motor	Pump type	Centrifugal
	Input	12 V — 36 W or less

B: COMPONENT

1. FRONT WIPER

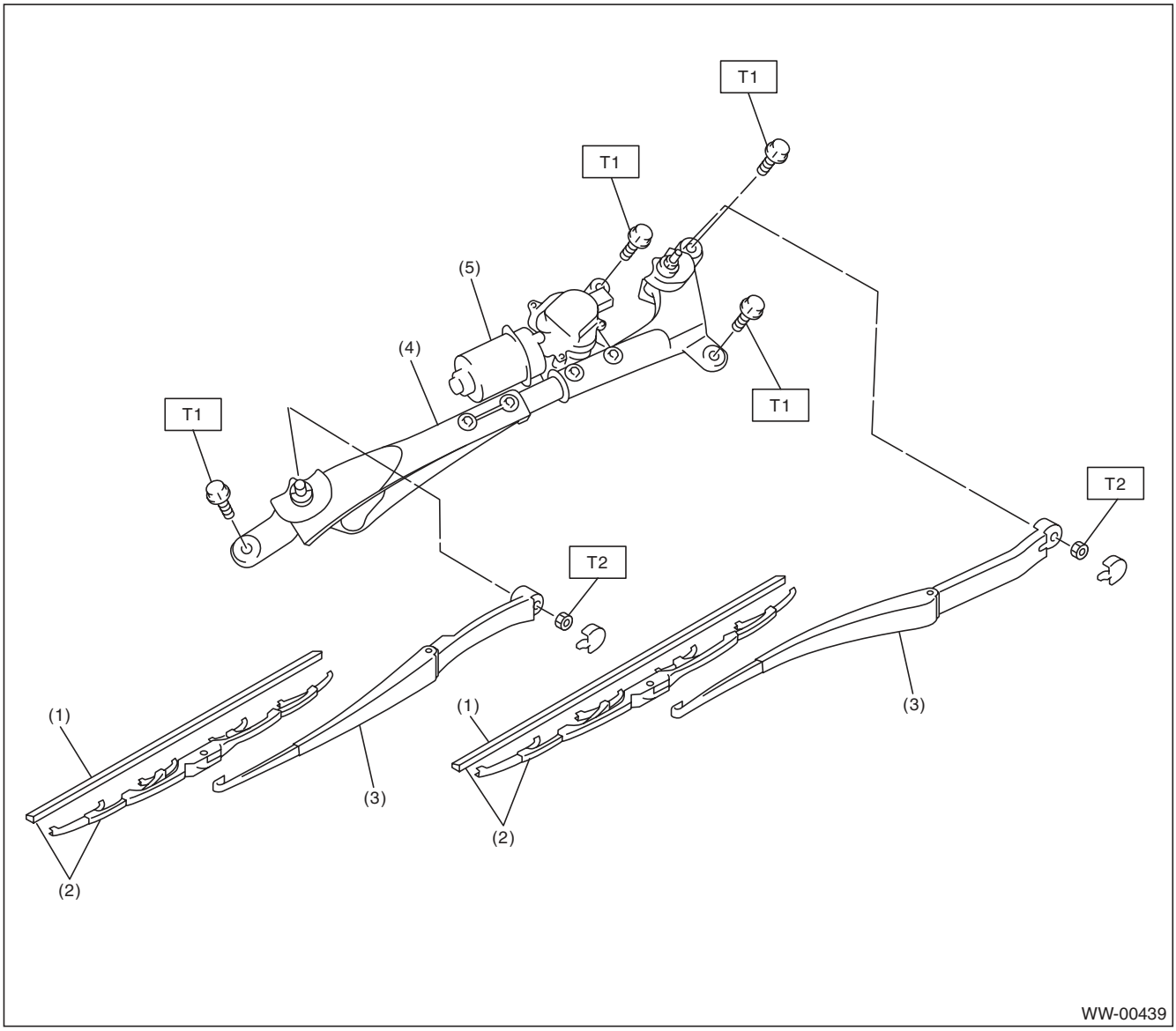

(1) Wiper rubber
(2) Wiper blade ASSY
(3) Wiper arm
(4) Wiper link ASSY
(5) Wiper motor ASSY

Tightening torque:N·m (kgf-m, ft-lb)
T1: 6.0 (0.61, 4.4)
T2: 20 (2.0, 14.8)

2. REAR WIPER (WAGON MODEL)

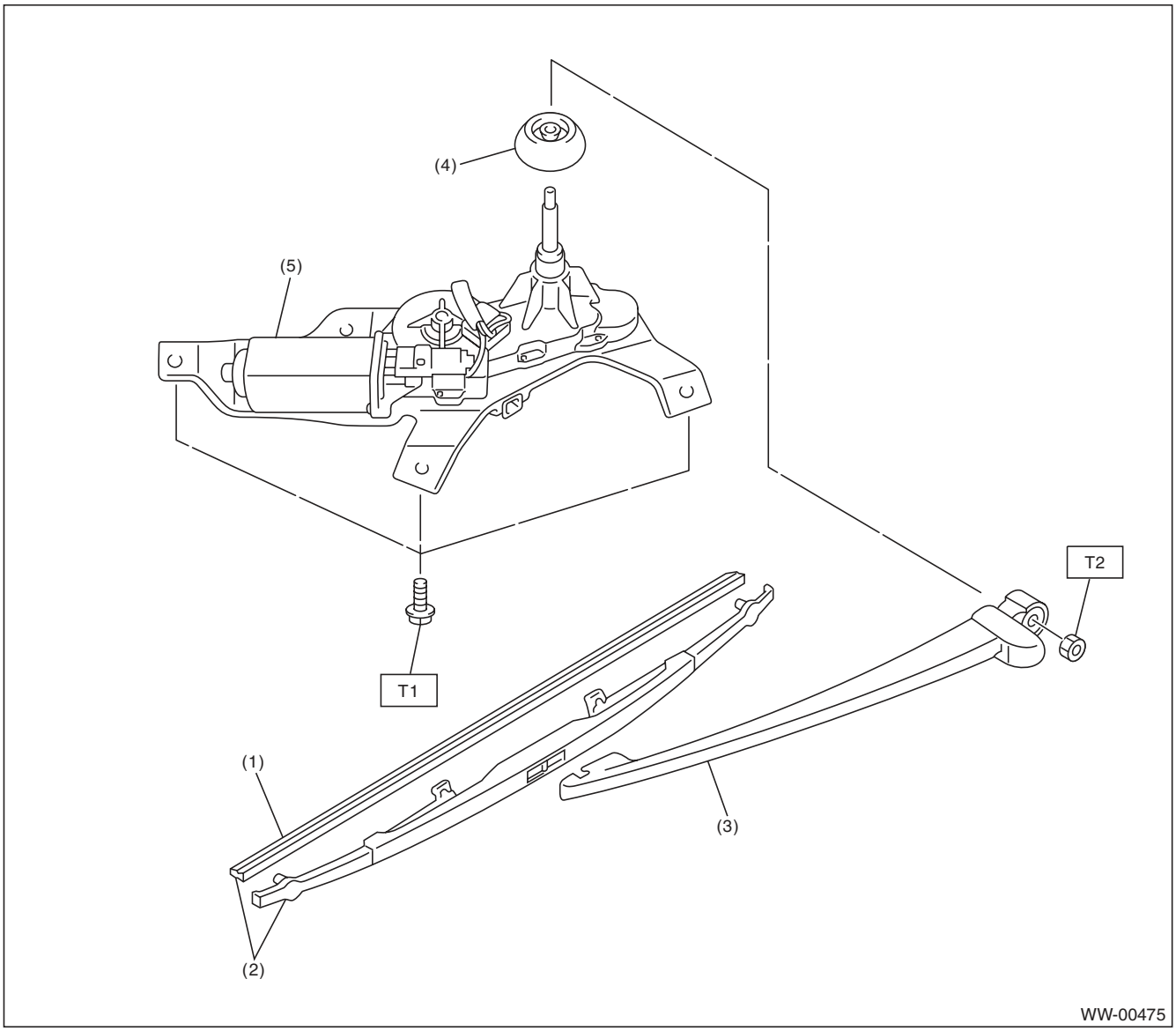

(1)	Wiper rubber	(4)	Cap
(2)	Wiper blade ASSY	(5)	Wiper motor ASSY
(3)	Wiper arm		

Tightening torque:N·m (kgf-m, ft-lb)
T1: 7.5 (0.76, 5.5)
T2: 8.0 (0.82, 5.9)

3. WASHER TANK

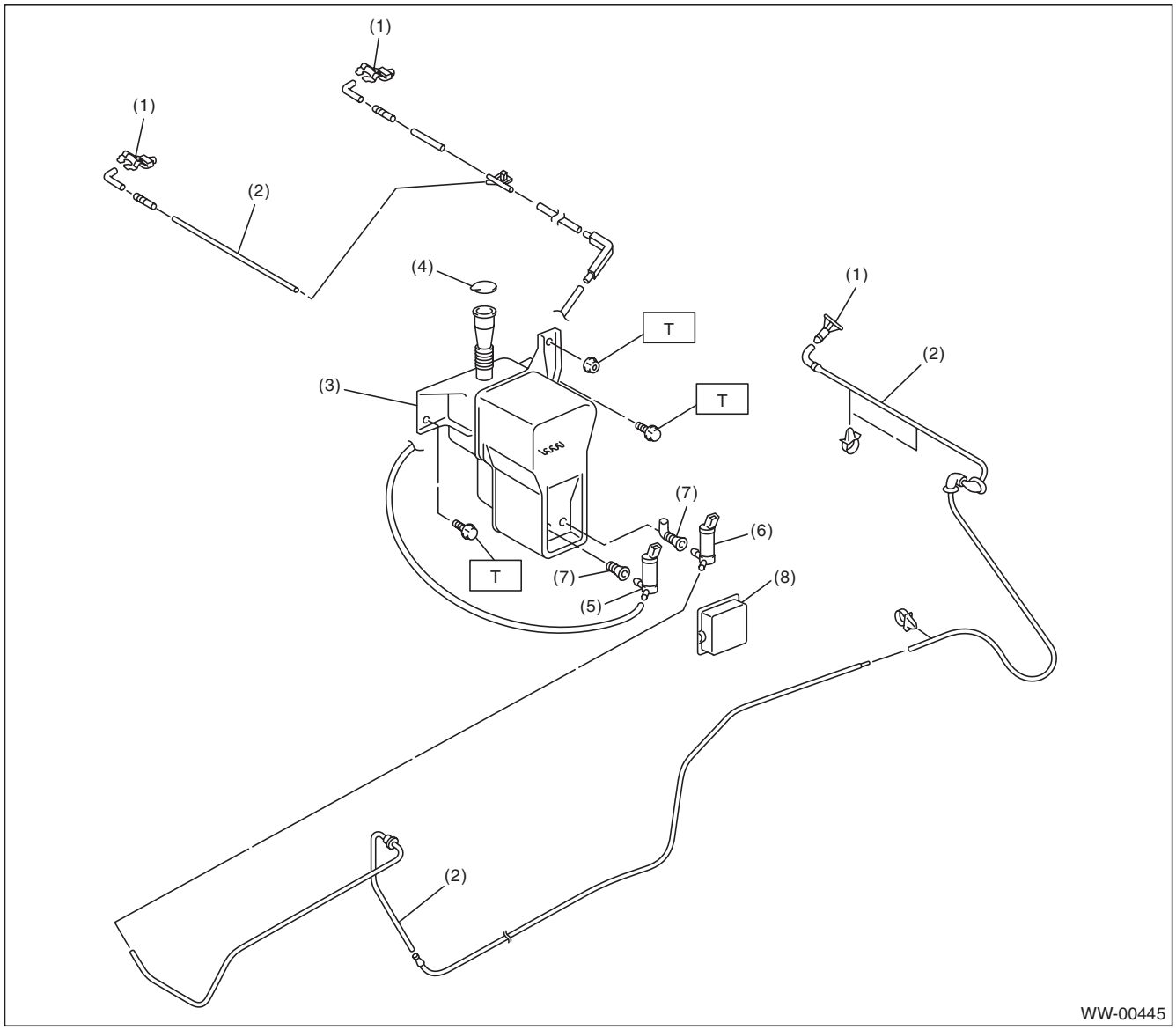

(1)	Washer nozzle	(5)	Front washer motor
(2)	Washer hose	(6)	Rear washer motor
(3)	Washer tank	(7)	Grommet
(4)	Washer tank cap	(8)	Washer motor cover

Tightening torque:N·m (kgf-m, ft-lb)
T: 6.0 (0.61, 4.4)

C: CAUTION

- Connect the connectors and hoses securely during reassembly.
- After reassembly, make sure functional parts operate smoothly.
- Be careful with the airbag system wiring harness which passes near electrical parts and switches.
- All airbag system wiring harness and connectors are colored yellow. Do not use a tester equipment on these circuits.
- Care must be taken when connecting the hoses to pipes so that there are no bends or blockage.
- If even a small amount of silicon oil or grease enters tank and washer fluid passages, an oil film will be formed on the glass and will cause the wiper to chatter and judder. Make sure that no oil comes into contact with the system.

D: PREPARATION TOOL

1. SPECIAL TOOL

ILLUSTRATION	TOOL NUMBER	DESCRIPTION	REMARKS
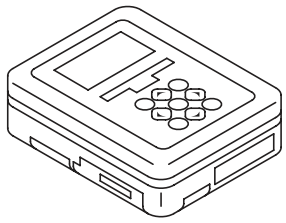 ST1B022XU0	1B022XU0	SUBARU SELECT MONITOR III KIT	Used for setting of each function and trouble-shooting for electrical system.

2. GENERAL TOOL

TOOL NAME	REMARKS
Circuit tester	Used for checking voltage and continuity.

2. Wiper and Washer System

A: WIRING DIAGRAM

1. WIPER AND WASHER (FRONT)

<Ref. to WI-145, WIRING DIAGRAM, Front Wiper and Washer System.>

2. WIPER AND WASHER (REAR)

<Ref. to WI-146, WIRING DIAGRAM, Rear Wiper and Washer System.>

B: INSPECTION

Symptom	Repair order
Wiper and washers do not operate.	1. Wiper fuse (Front: F/B No. 30, Rear: F/B No. 23) 2. Combination switch 3. Wiper motor assembly 4. Wiring harness 5. Body integrated unit (rear wiper only)
Wipers do not operate in LO or HI.	1. Combination switch 2. Wiper motor assembly 3. Wiring harness
Wipers do not operate in INT.	1. Combination switch 2. Wiper motor assembly 3. Wiring harness 4. Body integrated unit (rear wiper only)
Washer motor does not operate.	1. Washer switch 2. Washer motor 3. Wiring harness
Wipers do not operate when washer switch is ON.	1. Wiper motor assembly 2. Wiring harness
Washer fluid spray does not operate properly.	1. Washer motor 2. Washer hose and nozzle

3. Combination Switch (Wiper)

A: REMOVAL

1) Disconnect the ground cable from the battery.
2) Remove the driver's airbag module. <Ref. to AB-14, REMOVAL, Driver's Airbag Module.>
3) Remove the steering wheel. <Ref. to PS-13, REMOVAL, Steering Wheel.>
4) Remove the screws and remove the steering column covers (upper & lower).

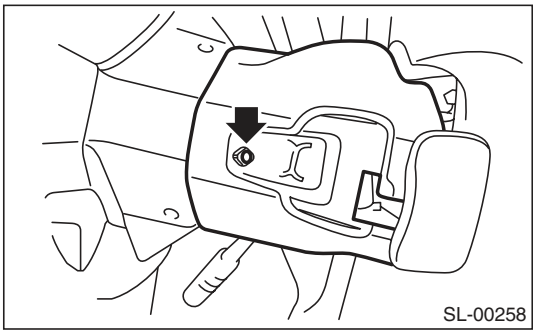

5) Disconnect the connector from combination switch.
6) Remove the three screws, and pull out the combination base switch assembly toward you.

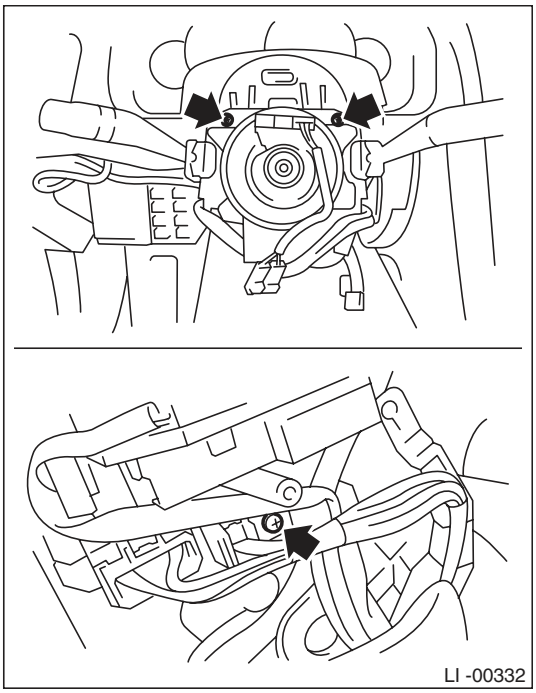

7) Remove the screws which secure the switch, then remove the combination switch.

B: INSTALLATION

Install in the reverse order of removal.

C: INSPECTION

1. COMBINATION SWITCH

1) Inspect the continuity between each connector terminal.

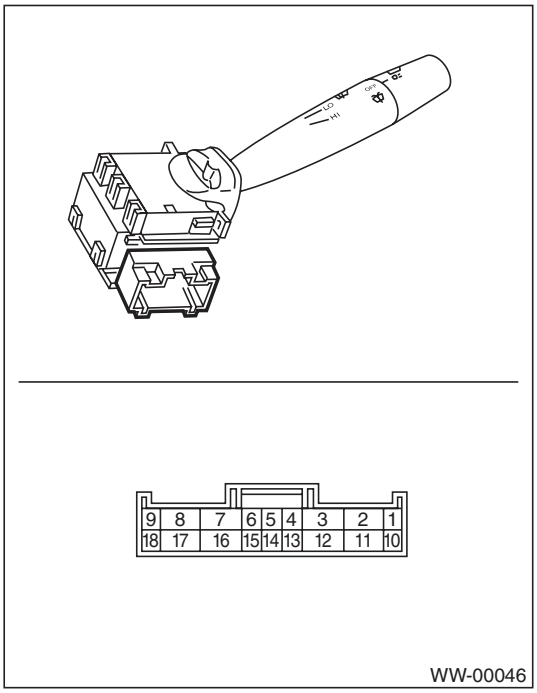

	Switch position	Terminal No.	Standard
Front	OFF	7 and 16	Less than 1 Ω
	INT	7 and 16	Less than 1 Ω
	LO	7 and 17	Less than 1 Ω
	HI	8 and 17	Less than 1 Ω
	Washer ON	2 and 11	Less than 1 Ω
Rear	Washer ON	2 and 12	Less than 1 Ω
	OFF	—	1 MΩ or more
	INT	2 and 13	Less than 1 Ω
	ON	2 and 10	Less than 1 Ω
	Washer ON	2 and 12	Less than 1 Ω

2) If continuity is not as specified, replace the switch.

2. FRONT WIPER

1) Check with Subaru Select Monitor
When the front wiper switch is operated, check the input signal using the Subaru Select Monitor.

(1) Prepare the Subaru Select Monitor kit. <Ref. to GW-7, PREPARATION TOOL, General Description.>
(2) Turn the ignition switch to ON (engine OFF) and run the "PC application for Subaru Select Monitor".
(3) On the «System Selection Menu» display, select the {Integ. unit mode}.
(4) Select the {Current Data Display & Save}.
(5) Check the input signal when the front wiper switch is set to LO or HI.

Check	Yes	No
Is the input signal normal?	Finish the diagnosis.	Replace the body integrated unit. <Ref. to SL-56, Body Integrated Unit.>

2) Check the intermittent operation (inspection of the wiper switch alone)

(1) Set the voltage meter between connector terminal No. 7 (+) and No. 2 (–).
(2) Connect the battery to connector. (Terminal No. 17 — (+), terminal No. 2 & 16 — (–))
(3) Turn the wiper switch to INT.
(4) Connect the battery (+) to the terminal No. 16 for 5 seconds.
(5) Connect the battery (–) to the terminal No. 16, and check the voltage between terminal No. 7 — No. 2 when performing the intermittent operation.
(6) Perform step (1) to (5) above when intermittent control switch is in MIN or MAX, and replace the switch if the operation is not as specified.

Intermittent stationary time
MIN: Approx. 2 seconds
MAX: Approx. 16 seconds

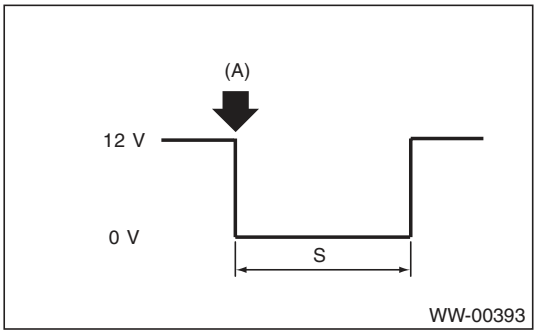

(A): Connect the battery (–) to the terminal No. 16.
S: Intermittent downtime (sec.)

3. REAR WIPER

1) Check with Subaru Select Monitor

	Step	Check	Yes	No
1	**CHECK INPUT OF REAR WIPER SWITCH.** Check the input from body integrated unit using the Subaru Select Monitor. 1) Prepare the Subaru Select Monitor kit. 2) Turn the ignition switch to ON. 3) On the «System Selection Menu» display, select the {Integ. unit mode}. 4) Select the {Current Data Display & Save}. 5) Check the input of the rear wiper switch.	Is the input normal?	Go to step **4**.	Go to step **2**.
2	**CHECK HARNESS.** 1) Disconnect the ground cable from battery. 2) Disconnect the connector of body integrated unit. 3) Disconnect the connector from wiper switch. 4) Measure the resistance between body integrated unit and wiper switch. ***Connector & terminal*** ***(B281) No. 18 — (B70) No. 13:*** ***(B281) No. 27 — (B70) No. 12:*** ***(B281) No. 6 — (B70) No. 10:***	Is the resistance less than 10 Ω?	Go to step **3**.	Repair the harness between the body integrated unit and wiper switch.
3	**CHECK INPUT VOLTAGE OF BODY INTEGRATED UNIT.** 1) Connect the ground cable to battery. 2) Turn the ignition switch to ACC. 3) Check the input voltage of body integrated unit. ***Connector & terminal*** ***(B280) No. 7 (+) — Chassis ground (–):***	Is the voltage 10 V or more?	Go to step **4**.	Check the harness and fuse.
4	**CHECK OUTPUT OF BODY INTEGRATED UNIT.** When the rear wiper switch is operated, check the output using the Subaru Select Monitor. 1) Turn the ignition switch to ON. 2) Operate the rear wiper switch and set to each position of ON and INT. 3) At this time, check the body integrated unit output.	When set to ON, is ON output continuous? When set to INT, is ON/OFF output repeated? (INT OFF time (when vehicle parked): 12 seconds)	Check the rear wiper motor circuit.	Replace the body integrated unit. <Ref. to SL-56, Body Integrated Unit.>

2) Check rear wiper motor circuit

	Step	Check	Yes	No
1	**CHECK POWER SUPPLY CIRCUIT OF THE REAR WIPER MOTOR.** 1) Disconnect the harness connector of the rear wiper motor. 2) Turn the ignition switch to ACC. 3) Measure the voltage between the rear wiper motor harness connector terminal and chassis ground. ***Connector & terminal*** ***(D43) No. 3 (+) — Chassis ground (–):***	Is the voltage 10 V or more?	Go to step **2**.	• Check the fuse (No. 23 in fuse & relay box). • Check the fusible link (No. 7 in main fuse box).
2	**CHECK GROUND CIRCUIT OF REAR WIPER MOTOR.** 1) Turn the ignition switch to OFF. 2) Measure the resistance between the rear wiper motor harness connector terminal and chassis ground. ***Connector & terminal*** ***(D43) No. 3 — Chassis ground:***	Is the resistance less than 10 Ω?	Go to step **3**.	Repair the open circuit of the rear wiper motor ground circuit.
3	**CHECK HARNESS BETWEEN BODY INTEGRATED UNIT AND REAR WIPER MOTOR.** 1) Turn the ignition switch to OFF. 2) Disconnect the harness connector of body integrated unit. 3) Disconnect the harness connector of the rear wiper motor. 4) Measure the resistance between the harness connector terminals of the body integrated unit and rear wiper motor. ***Connector & terminal*** ***(B280) No. 1 — (D43) No. 2:*** ***(B280) No. 8 — (D43) No. 4:***	Is the resistance less than 10 Ω?	Go to step **4**.	Repair the open circuit of the harness between body integrated unit and rear wiper motor.
4	**CHECK INPUT VOLTAGE OF BODY INTEGRATED UNIT.** 1) Turn the ignition switch to ACC. 2) Check the input voltage of body integrated unit. ***Connector & terminal*** ***(B280) No. 21 (+) — Chassis ground (–):***	Is the voltage 10 V or more?	Go to step **5**.	Check the harness and fuse.
5	**CHECK OUTPUT OF BODY INTEGRATED UNIT.** 1) Connect the harness connector of body integrated unit. 2) Disconnect the connector of the rear wiper motor. 3) Turn the ignition switch to ACC. 4) Measure the voltage between rear wiper motor connector and chassis ground. ***Connector & terminal*** ***(D43) No. 1 (+) — Chassis ground (–):***	Is the voltage 1.5 V or less when rear wiper switch is to OFF? / Is the voltage 10 V or more when rear wiper switch is to ON?	Go to step **6**.	Replace the body integrated unit. <Ref. to SL-56, Body Integrated Unit.>
6	**CHECK OPERATION OF REAR WIPER MOTOR.** 1) Remove the rear wiper motor. 2) Check the rear wiper motor. <Ref. to WW-18, INSPECTION, Rear Wiper Motor.>	Does the rear wiper motor rotate normally?	End.	Replace the rear wiper motor.

4. Wiper Blade

A: REMOVAL

CAUTION:
When replacing the wiper blade, if standing up the wiper arm, be sure to stand up the driver's side wiper arm first, and then passenger's side wiper arm next. Also, when putting the wiper arms back, be sure to start with passenger's side first, then driver's side next. Doing this in the reverse order may result in the driver's side wiper blade hitting the passenger's side wiper arm and causing damage.

1. FRONT

While pushing the locking clip (A) up, pull out the blade to the direction of the arrow and remove it from the wiper arm.

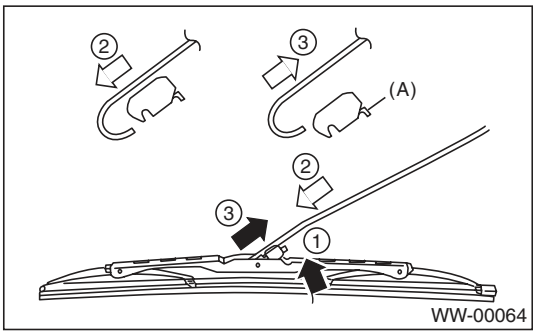

2. REAR

Turn the blade in the direction of arrow (A) and remove it from arm.

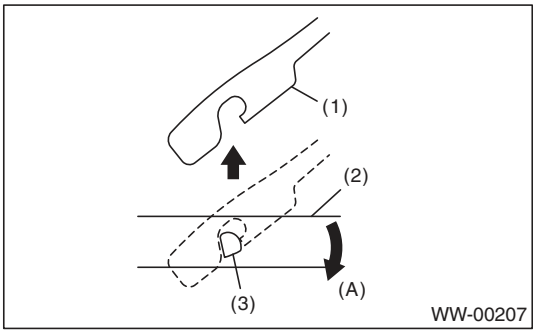

(A) Turn the wiper blade.
(1) Wiper arm
(2) Wiper blade
(3) Wiper blade attachment section

B: INSTALLATION

1) Install in the reverse order of removal.
2) Confirm that the clip is locked securely.

C: DISASSEMBLY

1. FRONT

Pull side (A) of the wiper rubber stopper and remove the rubber from the blade assembly.

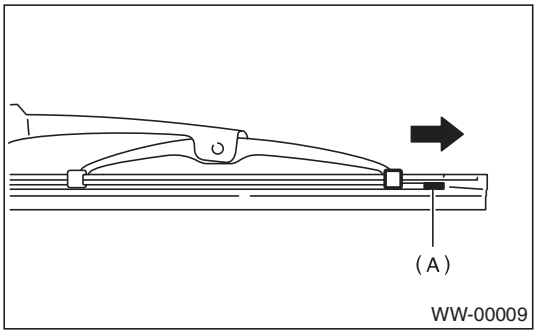

2. REAR

Pull the wiper rubber top slightly from stopper (A) and pull out completely.

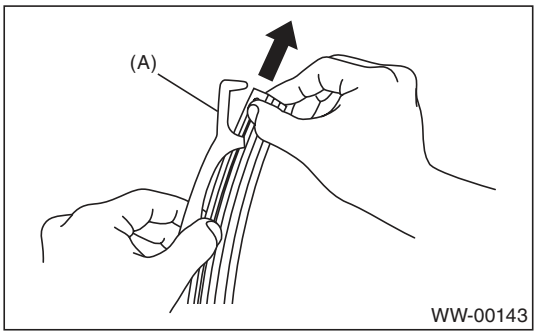

D: ASSEMBLY

1. FRONT

1) Insert the wiper rubber onto the blade so that the stopper is in the position shown in the figure.

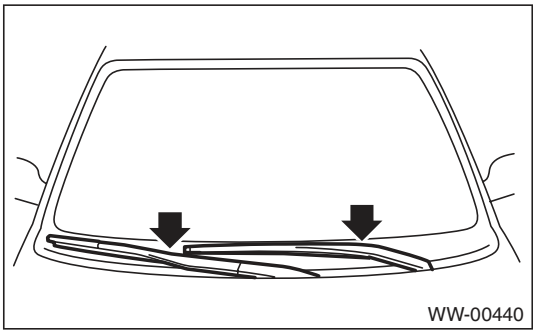

2) Make sure the wiper rubber is securely fastened to the pull stopper (A).

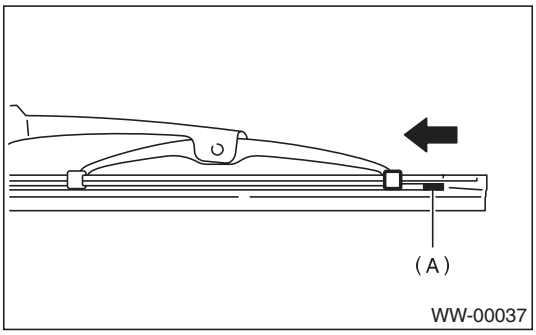

2. REAR

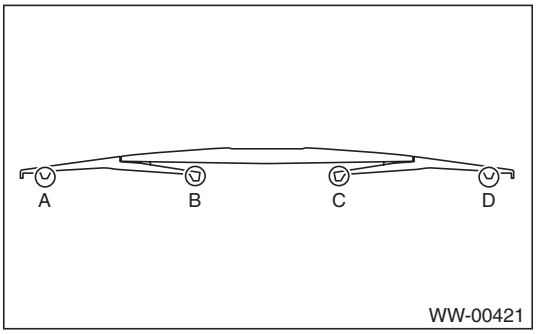

1) Insert the wiper rubber into claw B.

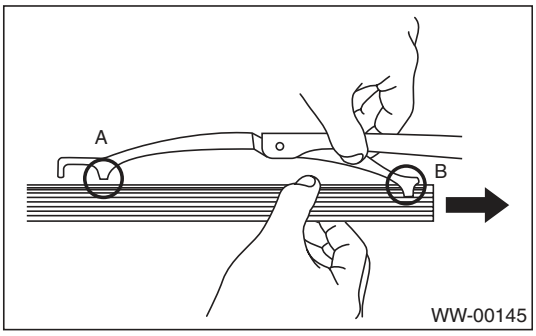

2) Insert the wiper rubber until its top end protrudes approx. 20 mm (0.79 in) from stopper D.

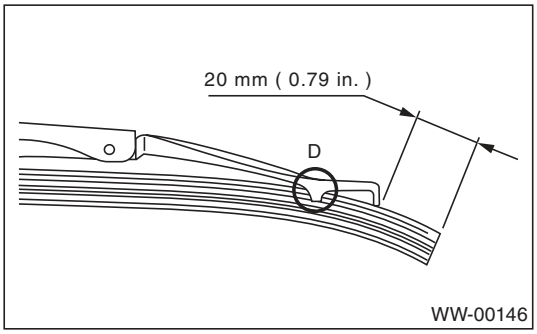

3) Insert the wiper rubber into claw A.

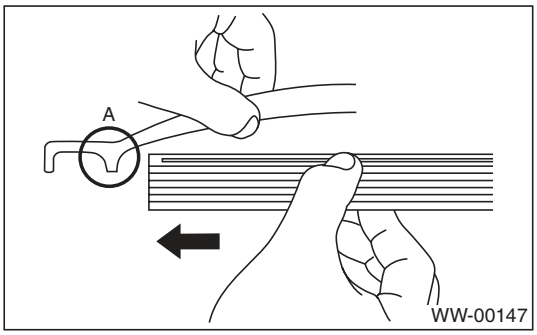

E: INSPECTION

1) When the wiper does not operate properly, inspect the following item.
- Make sure the movable part of wiper blade assembly moves smoothly.
- Make sure the wiper rubber is not deformed or damaged.

2) If damaged, replace with a new part.

5. Washer Tank and Motor

A: REMOVAL

1) Open the front hood.
2) Disconnect the ground cable from the battery.
3) Remove the front bumper. <Ref. to EI-30, REMOVAL, Front Bumper.>
4) Remove the clip holding washer water supply tap.

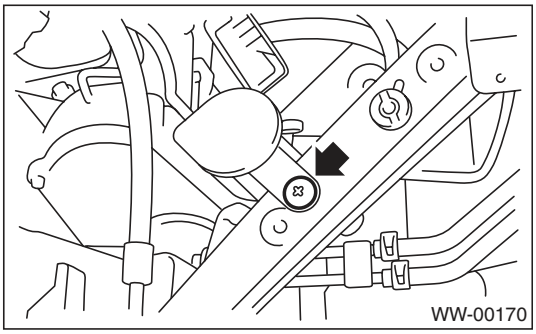

5) Remove the two bolts and one nut, hose, connector and washer motor cover, and then remove the washer tank.

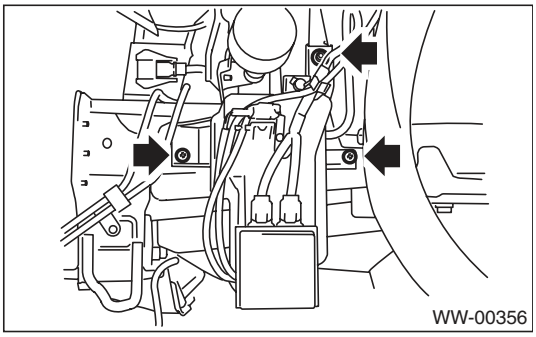

B: INSTALLATION

Install in the reverse order of removal.

Tightening torque:
6.0 N·m (0.61 kgf-m, 4.4 ft-lb)

C: DISASSEMBLY

Pull out the washer motor from the tank.

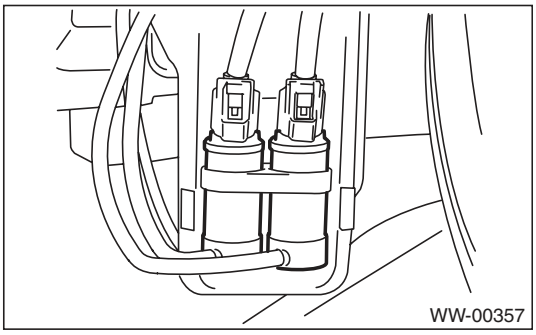

D: ASSEMBLY

1) Assemble in the reverse order of disassembly.
2) Confirm that water does not leak from installation area of motor.

E: INSPECTION

Apply battery voltage to the connector terminal of the washer motor and make sure the motor operates.

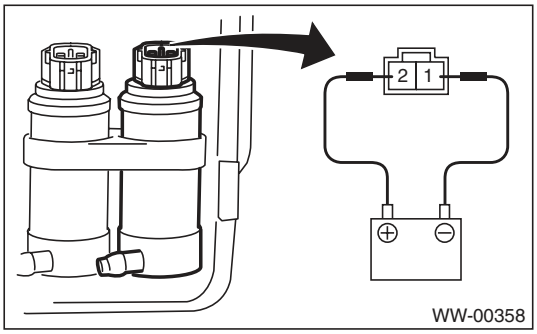

6. Front Wiper Arm

A: REMOVAL

1) Open the front hood.
2) Remove the cap.
3) Remove the nut and remove the wiper arm.

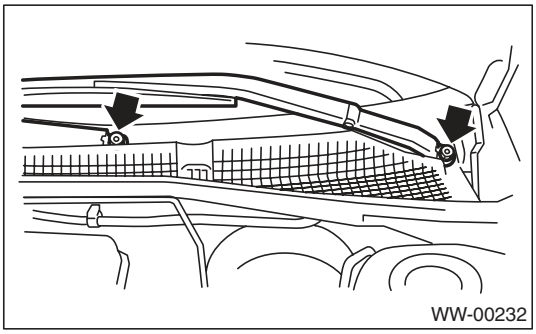

B: INSTALLATION

1) Install in the reverse order of removal.
2) Operate the wiper once.
3) Align the wiper blade to ceramic print point mark (A) of front window panel.

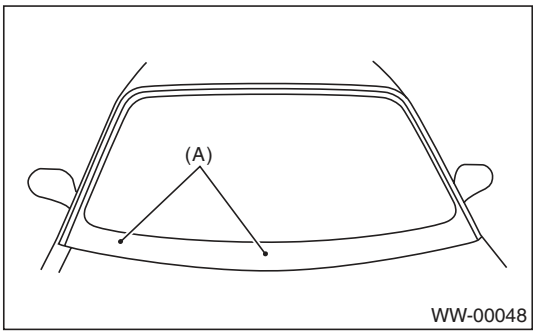

Tightening torque:
Refer to "COMPONENT" of "General Description". <Ref. to WW-2, FRONT WIPER, COMPONENT, General Description.>

C: ADJUSTMENT

Operate the wiper once. Align the wiper blade to ceramic print point mark (A) of front window panel.

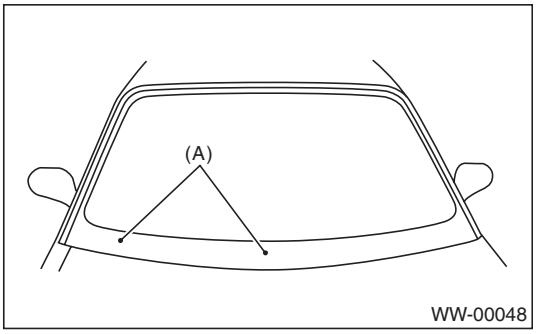

7. Front Wiper Motor and Link

A: REMOVAL

1) Disconnect the ground cable from the battery.
2) Remove the cowl panel. <Ref. to EI-40, REMOVAL, Cowl Panel.>
3) Disconnect the connector of wiper motor assembly.
4) Remove the bolt, and then remove the wiper assembly.

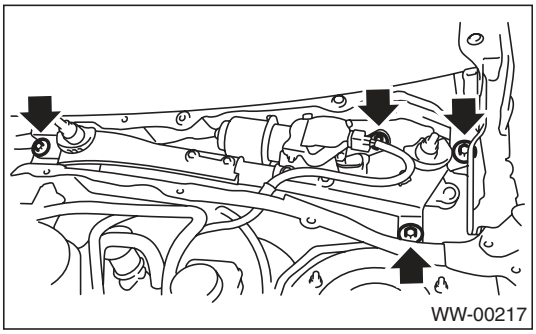

NOTE:
The wiper motor and wiper link is an assembly part and is not to be disassembled.

B: INSTALLATION

Install in the reverse order of removal.

Tightening torque:
Refer to "COMPONENT" of "General Description". <Ref. to WW-2, FRONT WIPER, COMPONENT, General Description.>

C: INSPECTION

1) When the battery is connected to the terminal of connectors, confirm that the wiper motor operates at low speed.

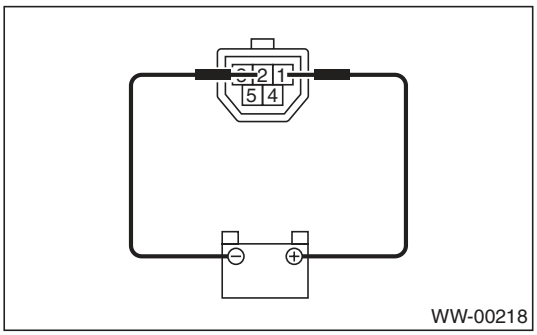

2) When the battery is connected to the terminal of connectors, confirm that the wiper motor operates at high speed.

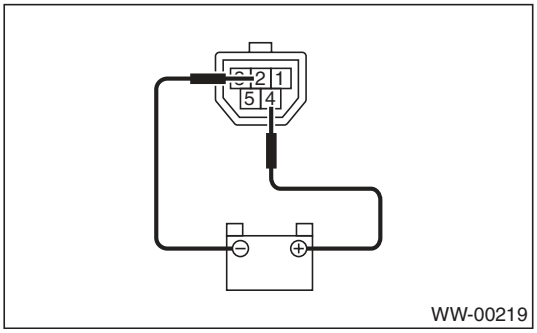

3) Connect the battery to the terminals to the connector, then run the wiper motor at low speed and disconnect the terminal in mid motion.

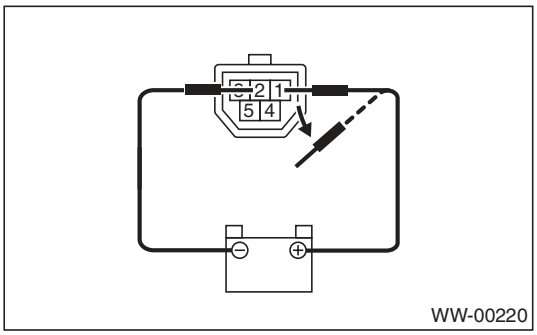

4) Connect the battery and confirm that the wiper motor stops at the automatic stop position after the wiper motor operates at low speed again.

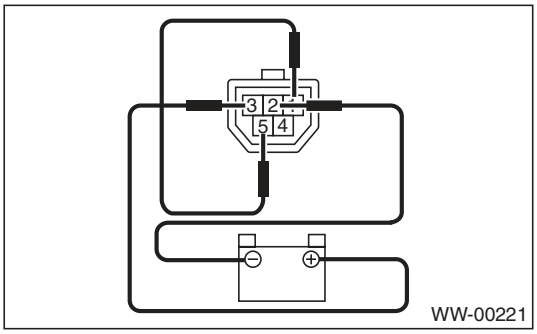

8. Front Washer Nozzle

A: REMOVAL

1) Remove the front hood insulator. <Ref. to EB-13, FRONT HOOD INSULATOR, REMOVAL, Front Hood.>
2) Hold the claw (A) of the washer nozzle towards the direction of the arrow, and remove the washer nozzle.

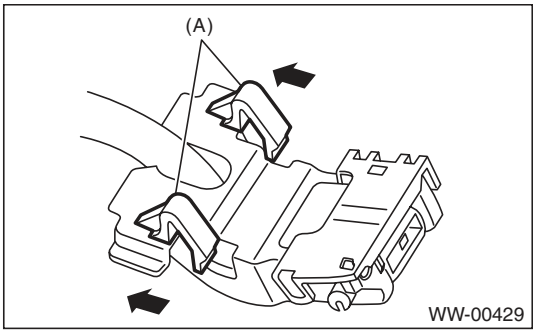

3) Remove the washer hose from the washer nozzle.

B: INSTALLATION

1) Install in the reverse order of removal.
2) Adjust the washer nozzle position.

C: INSPECTION

- Make sure the nozzle and hose are not clogged.
- Make sure the hose is not bent.
- While the vehicle is at a standstill and the wiper switch is turned OFF, make sure that the washer injection position is as shown in the figure.

Spray position:
A: 250 mm (9.84 in)
B: 535 mm (21.06 in)

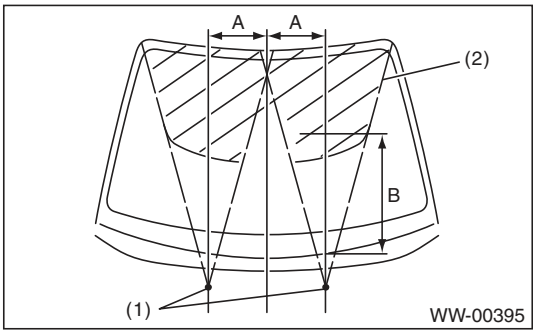

(1) Nozzle
(2) Spray area (shaded area)

9. Rear Wiper Arm

A: REMOVAL

1) Detach the wiper arm cover (A).
2) Remove the nut (B) to remove the wiper arm.

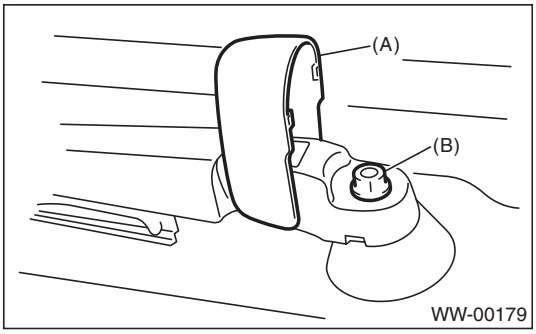

B: INSTALLATION

1) Install in the reverse order of removal.
2) Operate the rear wiper once.
3) Align the blade with the marking (A) of the glass.

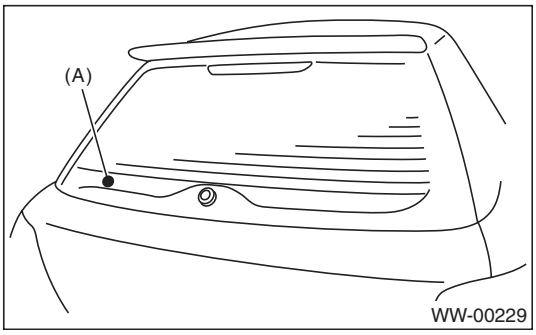

Tightening torque:
Refer to "COMPONENT" of "General Description". <Ref. to WW-3, REAR WIPER (WAGON MODEL), COMPONENT, General Description.>

C: ADJUSTMENT

1) Operate the rear wiper once.
2) Align the blade with the marking (A) of the glass.

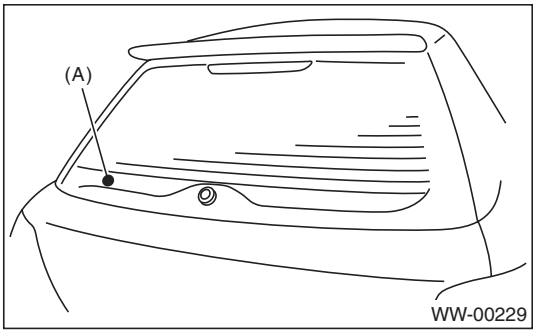

10. Rear Wiper Motor

A: REMOVAL

1) Disconnect the ground cable from the battery.
2) Remove the rear wiper arm. <Ref. to WW-17, REMOVAL, Rear Wiper Arm.>
3) Remove the rear gate lower trim. <Ref. to EI-68, REMOVAL, Rear Gate Trim.>
4) Disconnect the harness connector of wiper motor assembly.
5) Remove the bolts to remove wiper motor assembly (A).

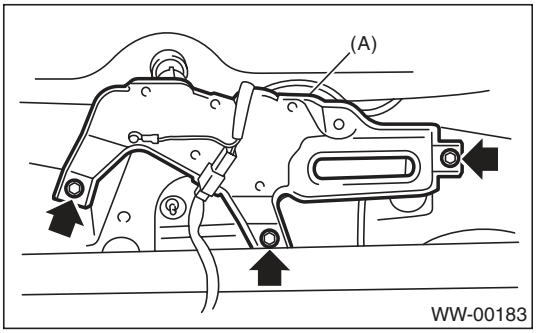

B: INSTALLATION

1) Install in the reverse order of removal.
2) Be sure that the pivot cap with the arrow mark facing up, as shown in the figure.

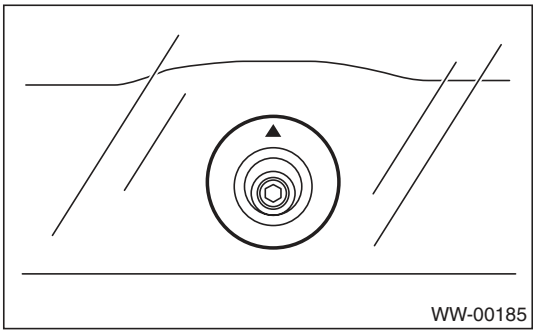

Tightening torque:
Refer to "COMPONENT" of "General Description". <Ref. to WW-3, REAR WIPER (WAGON MODEL), COMPONENT, General Description.>

C: INSPECTION

1) Connect the battery to the wiper motor connector and confirm that wiper motor operates.

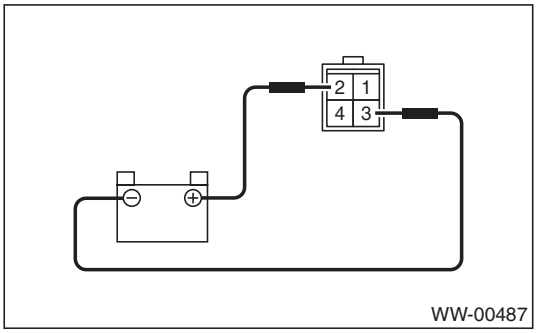

2) Connect the battery to the terminals to the connector, then run the wiper motor at low speed and disconnect the terminal in mid motion.

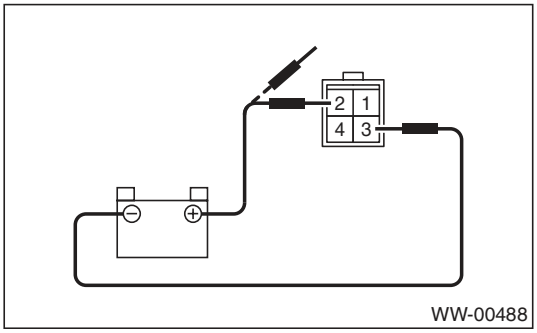

3) Connect the battery and confirm that the wiper motor stops at the automatic stop position after the wiper motor operates at low speed again.

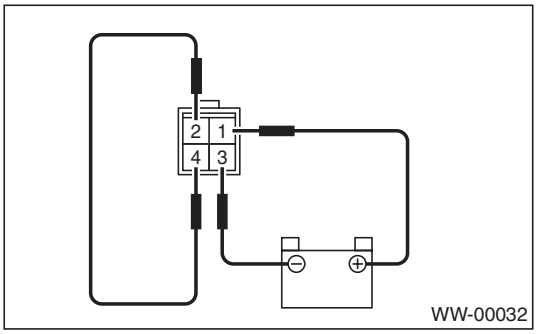

11. Rear Washer

A: REMOVAL

1) Remove the roof spoiler. <Ref. to EI-41, REMOVAL, Roof Spoiler.>
2) Remove the washer hose from washer nozzle.
3) Push the claw of the nozzle from the reverse side of roof spoiler with a flat tip screwdriver or equivalent, and remove the washer nozzle.

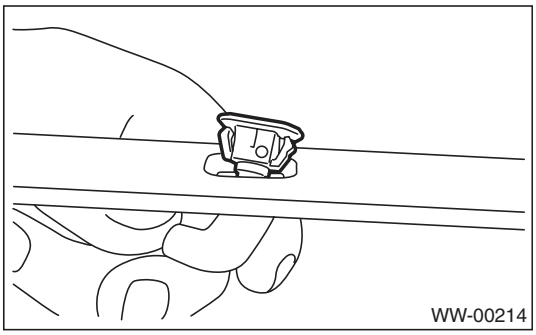

B: INSTALLATION

Install in the reverse order of removal.

C: INSPECTION

- Make sure the nozzle and hose are not clogged.
- Make sure the hose is not bent.
- While the vehicle is at a standstill, make sure that the washer injection position is as shown in the figure.

NOTE:
Washer injection position can not be adjusted.

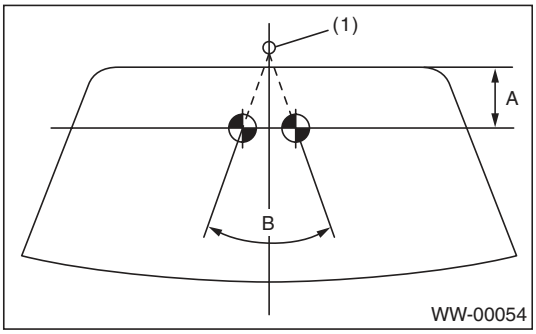

(1) Nozzle
(A) 70 mm (2.76 in)
(B) 70°

1. General Description

A: CAUTION

- Before disassembling or reassembling parts, always disconnect the battery ground cable from battery. When replacing the audio, control module and other parts provided with memory functions, record the memory contents before disconnecting the battery ground cable. Otherwise, the memory is cleared.
- Reassemble the parts in the reverse order of disassembly procedure unless otherwise indicated.
- Adjust parts to the given specifications.
- Connect the connectors securely during reassembly.
- After reassembly, make sure functional parts operate smoothly.

B: PREPARATION TOOL

1. GENERAL TOOL

TOOL NAME	REMARKS
Circuit tester	Used for measuring resistance and voltage.
Conductive silver composition (DUPONT No. 4817 or equivalent)	Used for repairing antenna wire.

2. Audio System

A: WIRING DIAGRAM

<Ref. to WI-148, WIRING DIAGRAM, Audio System.>

B: INSPECTION

Symptoms	Repair order
No power coming in. (No display and no sound from speakers)	1. Check the fuse and power supply for audio. 2. Check the audio ground. 3. Remove the audio and repair them.
A specific speaker does not operate.	1. Check the speaker. 2. Check the output circuit between audio and speaker.
Audio generates noise with engine is running.	1. Check the audio ground. 2. Check the generator. 3. Check the ignition coil. 4. Remove the audio and repair them.
Volume is low in AM and FM modes or interference noise occurs.	1. Check the antenna. 2. Check the rear window defogger. 3. Check the antenna amplifier. 4. Check the noise suppressor. 5. Check the audio ground. 6. Remove the audio and repair them.
Rear window defogger generates noise when it operate.	1. Check the rear window defogger.

3. Audio

A: REMOVAL

1) Disconnect the ground cable from the battery.
2) Remove the console box. <Ref. to EI-54, REMOVAL, Console Box.>
3) Remove the console front panel (A). <Ref. to EI-55, REMOVAL, Center Console.>
4) Remove the console side garnish (B). <Ref. to EI-55, REMOVAL, Center Console.>

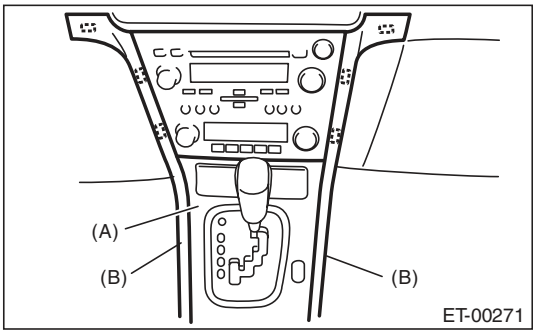

5) Remove the screws, and partially pull the audio out from center console.

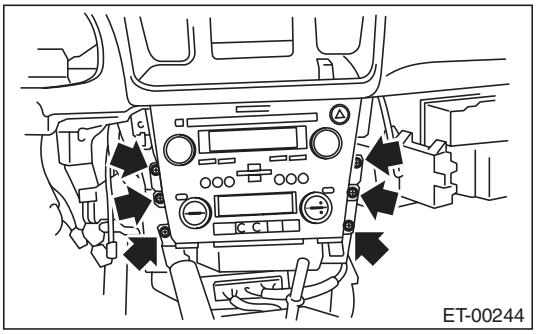

6) Disconnect the harness connector and antenna feeder cord, and then remove the audio.

B: INSTALLATION

Install in the reverse order of removal.

C: INSPECTION

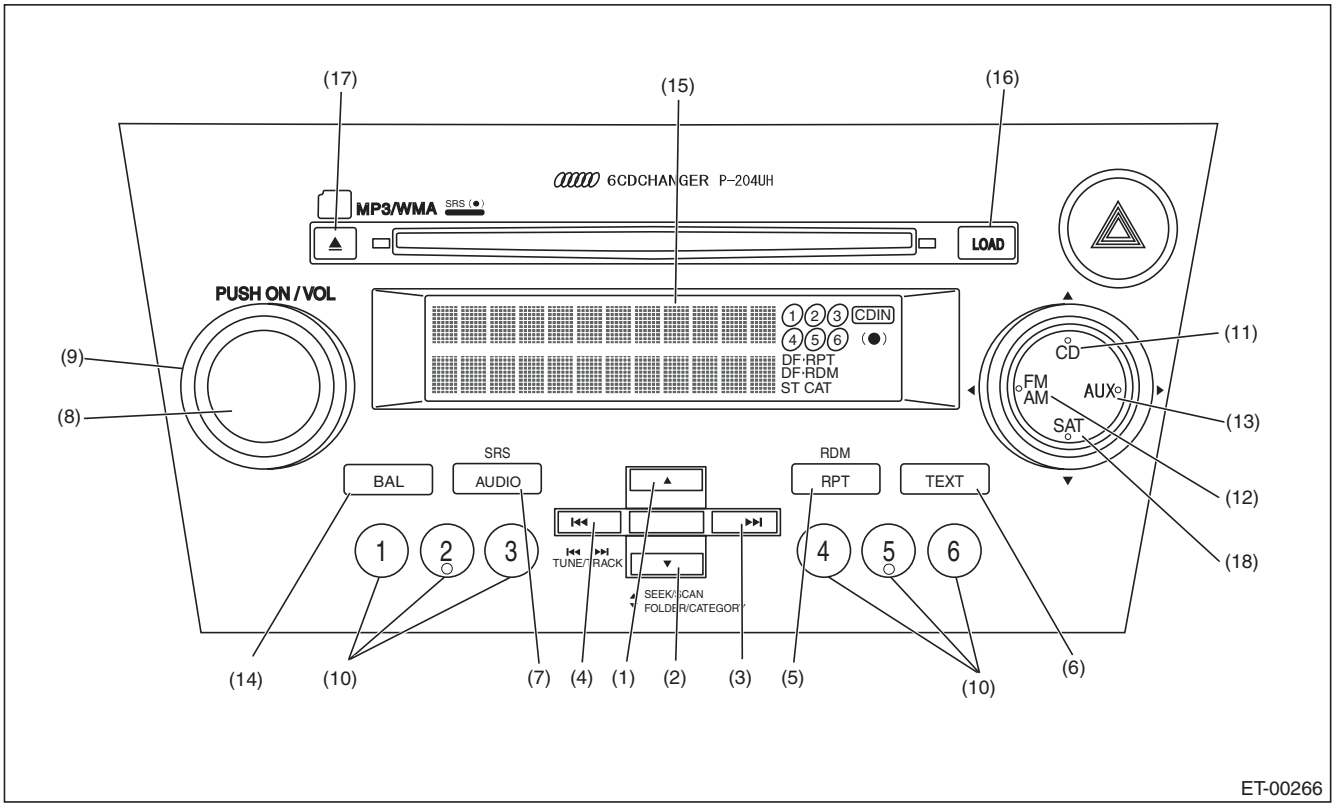

(1)	SEEK / SCAN UP switch	(7)	AUDIO switch	(13)	AUX switch
(2)	SEEK / SCAN DOWN switch	(8)	PUSH/POWER switch	(14)	BAL switch
(3)	TUNE / TRACK UP switch	(9)	VOLUME	(15)	VDF display
(4)	TUNE / TRACK DOWN switch	(10)	Presets 1 — 6	(16)	LOAD switch
(5)	RPT switch	(11)	CD switch	(17)	EJECT switch
(6)	TEXT switch	(12)	FM/AM switch	(18)	SAT switch

NOTE:
- For self diagnosis of the audio system, there is a communications check (communication condition between the audio and the control panel) and a switch check. Perform a communications check first and make sure it is operating normally before proceeding to the inspection of switches.
- Complete operations from when the self diagnosis mode of step 1 operates and the buzzer sounds, until you press the preset 1 switch in step 4, within 15 seconds. If 15 seconds or more pass, a communications error will be displayed.
- During the diagnosis, do not press the POWER (8), FM/AM (12), CD (11), AUX (13) or SAT (18) switches. Pressing these switches will disengage the self diagnosis mode. For the CD and AUX switch, the self diagnosis mode will be disengaged if the disc load and unit are connected.

1. SELF DIAGNOSIS OF THE CONTROL PANEL AND AUDIO

Step		Check	Yes	No
1	**SETTING THE SELF-DIAGNOSIS MODE BY OPERATING THE CONTROL PANEL.** 1) Turn the audio system OFF with the ignition switch ACC or ON. 2) With the TUNE/TRACK UP switch and the SEEK/SCAN DOWN switch held down, hold the RPT switch down for 2 seconds or more. 3) A buzzer will sound and all the VFD display will illuminate, and then the unit will enter the diagnosis mode.	Does the self diagnosis mode of the control panel operate?	Go to step **3**.	Go to step **2**.
2	**CHECK BUZZER.**	Did the buzzer sound when going into the diagnosis mode?	Go to step **3**.	Check the connection of harness connector, and if there are no problems found, repair or replace the audio unit and control panel. <Ref. to ET-4, REMOVAL, Audio.>
3	**CHECK THE VFD DISPLAY.**	Did all the VFD display illuminate?	Go to step **4**.	<Ref. to ET-4, REMOVAL, Audio.>
4	**CHECK THE COMMUNICATION STATUS.** Press the preset 1 switch, and confirm the VFD display section of the control panel.	Is the «Main Check!» or «Sub Check!» displayed on the VFD display?	Repair or replace the audio unit. <Ref. to ET-4, REMOVAL, Audio.>	Go to step **5**.
5	**CHECK SWITCH.** Operate the switches in the following list, and check the display content on the VFD display.	Does the switch check list and the operated switches match? <Ref. to ET-6, SWITCH CHECK LIST, INSPECTION, Audio.>	The self-diagnosis of the audio unit is normal.	Repair or replace the audio unit. <Ref. to ET-4, REMOVAL, Audio.>

2. SWITCH CHECK LIST

Switch	Display
TUNE/TRACK ⋀	▶▶| UP OK
TUNE/TRACK ⋁	|◀◀ DOWN OK
SEEK/SCAN ⋀	△ UP OK
SEEK/SCAN ⋁	▽ DOWN OK
EJECT	EJECT OK
RPT	RPT OK
VOL UP	VOL UP OK
VOL DOWN	VOL DOWN OK
TONE/BAL	BAL OK
1 (Preset)	P-1 OK
2 (Preset)	P-2 OK
3 (Preset)	P-3 OK
4 (Preset)	P-4 OK
5 (Preset)	P-5 OK
6 (Preset)	P-6 OK
LOAD	LOAD OK
AUDIO	AUDIO OK
TEXT	TEXT OK

4. Front Speaker

A: REMOVAL

1) Disconnect the ground cable from the battery.
2) Remove the front door trim. <Ref. to EI-49, REMOVAL, Door Trim.>
3) Remove the front speaker mounting screws.

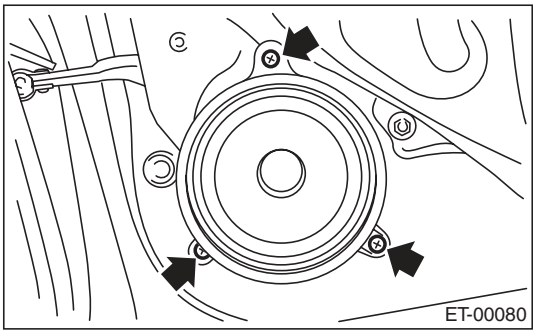

4) Disconnect the harness connector and remove the front speaker.

B: INSTALLATION

Install in the reverse order of removal.

5. Tweeter

A: REMOVAL

1) Disconnect the ground cable from the battery.
2) Remove the front door trim. <Ref. to EI-49, REMOVAL, Door Trim.>
3) Remove the tweeter mounting screws.

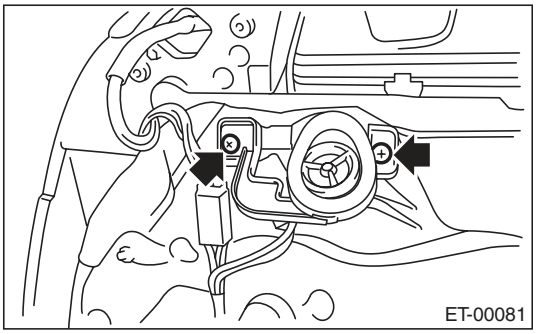

4) Disconnect the harness connector and remove the tweeter.

B: INSTALLATION

Install in the reverse order of removal.

6. Rear Speaker

A: REMOVAL

1) Disconnect the ground cable from the battery.
2) Remove the rear door trim. <Ref. to EI-49, REMOVAL, Door Trim.>
3) Remove the rear speaker mounting screws.

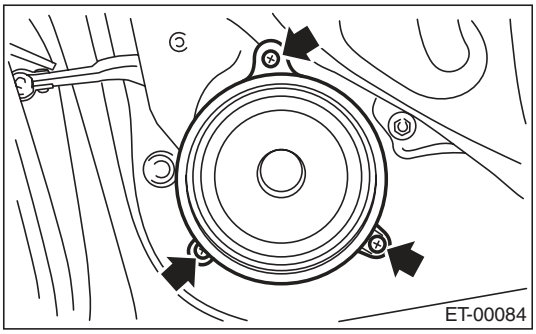

CAUTION:
Do not disassemble the rear speaker of premium audio system.

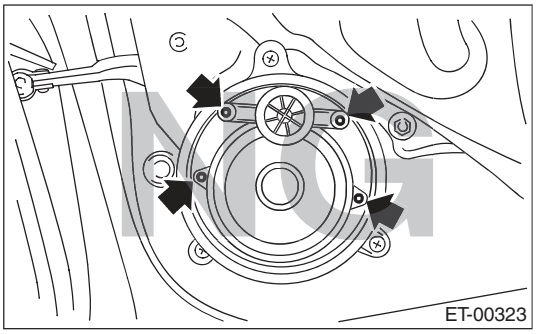

4) Disconnect the harness connector and remove the rear speaker.

B: INSTALLATION

Install in the reverse order of removal.

7. Woofer

A: REMOVAL

1. SEDAN MODEL

NOTE:
Only model with premium audio system
1) Disconnect the ground cable from the battery.
2) Remove the rear shelf trim. <Ref. to EI-69, REMOVAL, Rear Shelf Trim.>
3) Remove the woofer mounting screws.

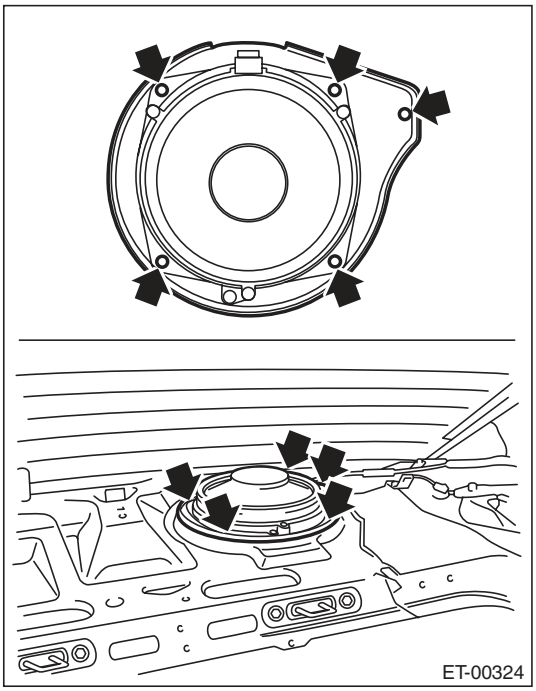

4) Disconnect the harness connector and detach the woofers.

2. WAGON MODEL

NOTE:
Only model with premium audio system
1) Disconnect the ground cable from the battery.
2) Remove the hooks (A) and detach the woofer cover. <Ref. to EI-63, REMOVAL, Rear Quarter Trim.>

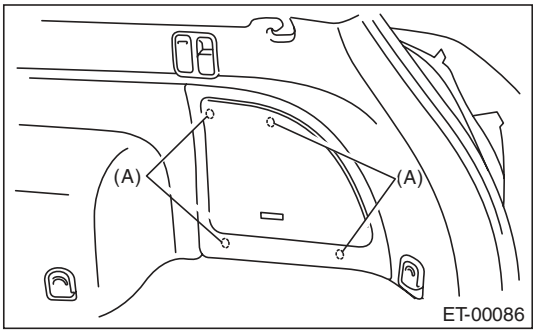

3) Remove the quarter lower trim. <Ref. to EI-63, REMOVAL, Rear Quarter Trim.>
4) Remove the woofer bracket mounting screws (A) and clips (B), then remove the harness connector.
5) Pull up the temporary clip (C), and remove the woofer assembly.

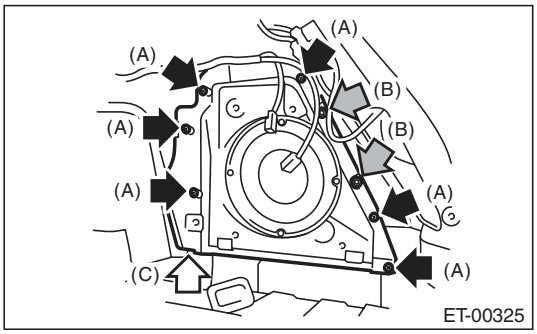

B: INSTALLATION

Install in the reverse order of removal.

8. Power Amplifier

A: REMOVAL

1) Disconnect the ground cable from the battery.
2) Slide passenger's side seat to the full forward position.
3) Remove the nut.
4) Disconnect the harness connector and remove the power amplifier.

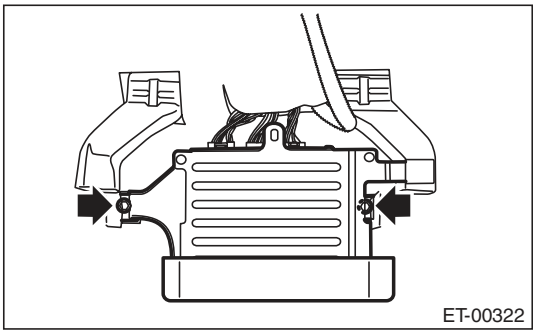

B: INSTALLATION

Install in the reverse order of removal.

Tightening torque:
4.5 N·m (0.46 kgf-m, 3.32 ft-lb)

9. Antenna

A: INSPECTION

CAUTION:
When wiping dirt off the glass to avoid heat wire damage, be careful of the following.
- **Use a dry and soft cloth.**
- **Move the cloth along the heat wire.**

Inspection method of antenna, it is differ from printing pattern of antenna.

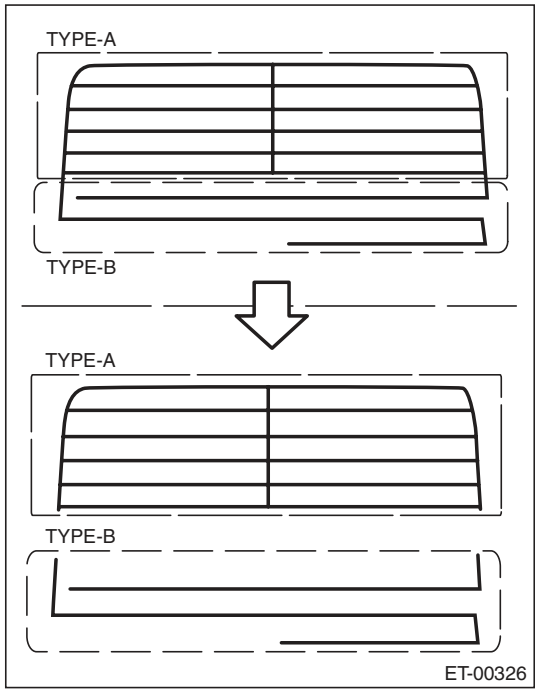

TYPE-A Printing pattern of grid
TYPE-B Printing pattern of straight

1. TYPE A

1) Disconnect the ground cable from the battery.
2) Remove the trim.
Sedan model: Remove the rear quarter trim rear. <Ref. to EI-63, SEDAN MODEL, REMOVAL, Rear Quarter Trim.>
Wagon model: Remove the rear gate trim. <Ref. to EI-68, REMOVAL, Rear Gate Trim.>
3) Disconnect the antenna harness connector and antenna terminals.

4) Prepare the extension harness (A), (B).

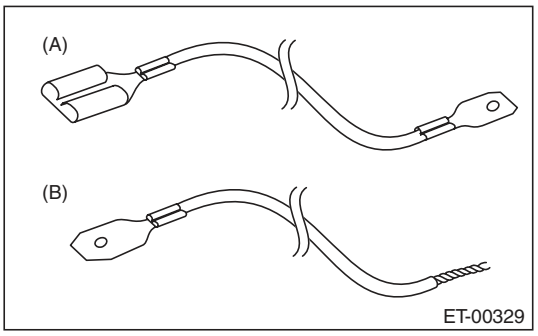

(A) Attach the flat terminals (male and female) to both ends of the harness of 2,000 mm (78.7 in) length (electrical wire unit dimensions approx. 2.0 mm ^{2} (0.0032 sp in))
(B) Attach the flat terminal (female) to one side of the harness, another side to twist the harness of 2,000 mm (78.7 in) length (electrical wire unit dimensions approx. 2.0 mm ^{2} (0.0032 sp in))

5) Connect the extension harness (A) to terminal of rear defogger harness (power supply side) and antenna terminal.

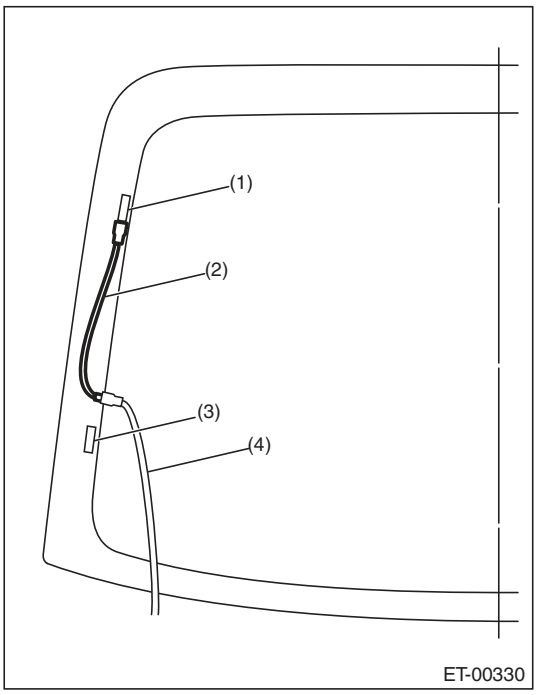

(1) Antenna terminal
(2) Extension harness (A)
(3) Rear defogger terminal
(4) Rear defogger harness (power supply side - red blue)

6) Connect the extension harness (B) to rear defogger harness (ground side) terminal.

7) Fasten the another side of extension harness (B) to end of printing pattern of grid with tape.

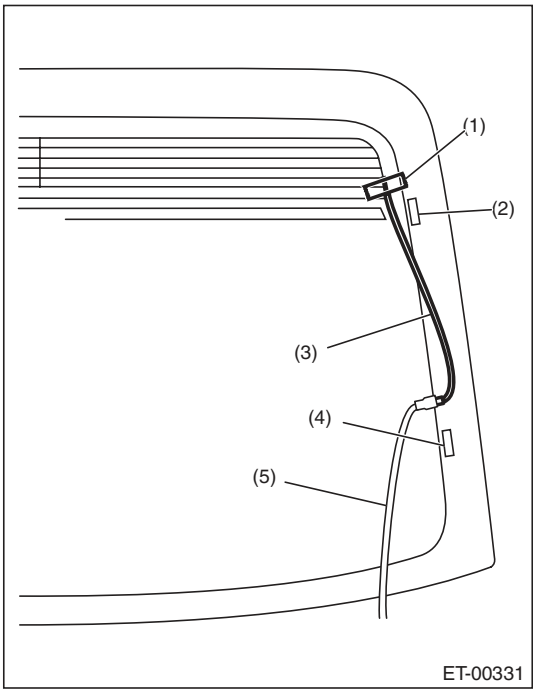

(1) Tape
(2) Antenna terminal
(3) Extension harness (B)
(4) Rear defogger terminal
(5) Rear defogger harness (ground side - black)

8) Connect the ground cable to battery.
9) Turn the ignition switch to ON.
10) Turn the rear defogger switch to ON.
11) Wrap a piece of aluminum foil around the tip of tester probe and press foil against wire with your finger.

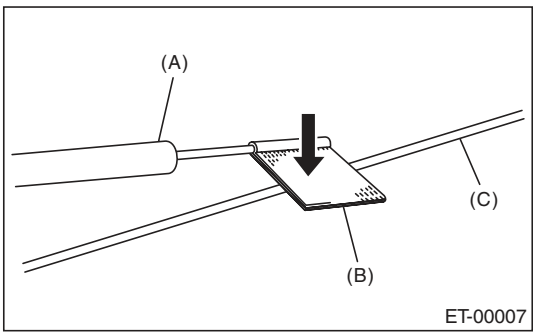

(A) Tester probe
(B) Aluminum foil
(C) Antenna wire

12) Measure the voltage around an antenna wire (a) and (b).

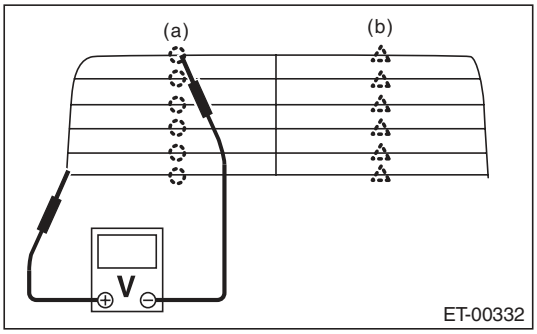

	Measured voltage value	Criteria
(a)	Approx. 3V (standard value)	Normal
	Approx. 6 V or 0 V	Open
(b)	Approx. 9V (standard value)	Normal
	Approx. 12 V or 6 V	Open

NOTE:
Measuring point (a)
• If the measured value is 6 V, heat wire is open between antenna wire center and positive (+) terminal of probe.
• If it is 0 V, the circuit is open between antenna wire center and ground.
Measuring point (b)
• If the measured value is 12 V, heat wire is open between antenna wire center and positive (+) terminal of probe.
• If it is 6 V, the circuit is open between antenna wire center and ground.

13) Fasten the voltmeter positive (+) side and negative (–) side to end of open harness of step 12).
14) Search a point the voltage changes from 0 V, move the negative (–) probe along antenna wire.

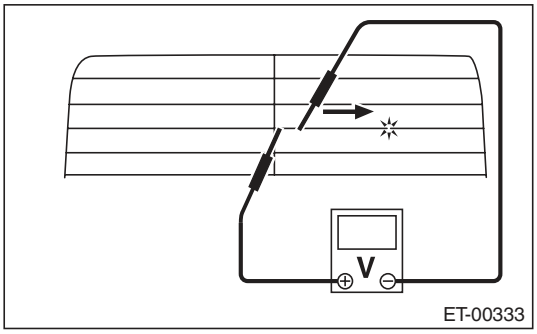

15) Repair the antenna wire that determine the place of the open circuit. <Ref. to ET-14, REPAIR, Antenna.>

2. TYPE B

Measure the resistance between the antenna terminal and each antenna wire.

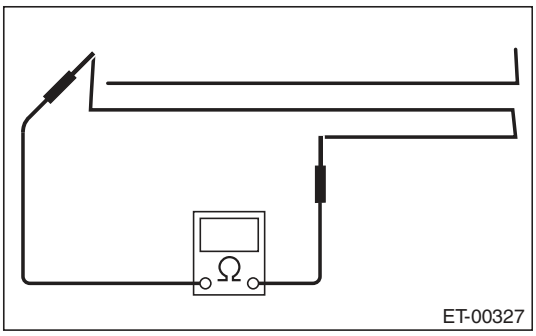

1) Disconnect the ground cable from the battery.
2) Wrap a piece of aluminum foil around the tip of probe and press foil against wire with your finger.

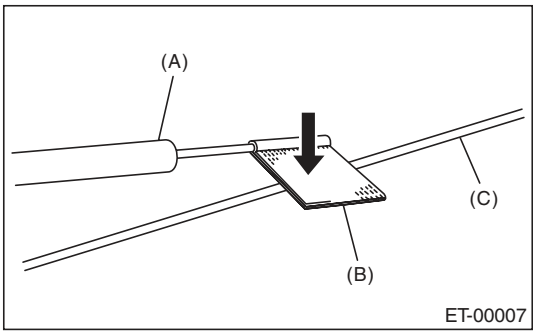

(A) Tester probe
(B) Aluminum foil
(C) Antenna wire

3) To locate the broken point, move the probe along antenna wire.

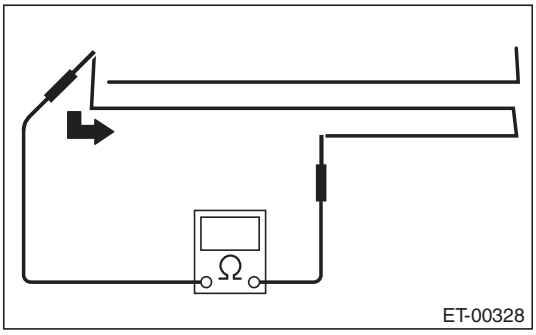

NOTE:
If an antenna wire is OK, resistance will be less than 20 Ω.
If an antenna wire is broken, resistance will be more than 1 MΩ.
4) Repair the antenna wire that determine the place of the open circuit. <Ref. to ET-14, REPAIR, Antenna.>

B: REPAIR

1) Clean the external circumference of antenna wire and around with alcohol or white gasoline.
2) Paste a thin masking film on the glass along broken wire.
3) Apply the conductive silver composition (DUPONT No. 4817) on the broken portion with a drawing pen.

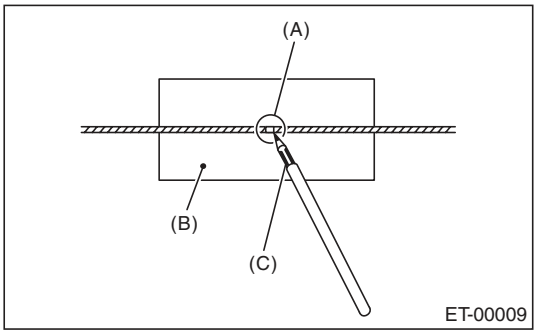

(A) Broken portion
(B) Masking film
(C) Conductive silver composition

4) Dry out the deposited portion.
5) After repair has been completed, measure the resistance in repaired wire.

10. Antenna Amplifier

A: REMOVAL

1. SEDAN MODEL

1) Disconnect the ground cable from the battery.
2) Remove the rear quarter trim. <Ref. to EI-63, SEDAN MODEL, REMOVAL, Rear Quarter Trim.>
3) Disconnect the harness connectors and terminals.
4) Remove the curtain airbag module. <Ref. to AB-18, REMOVAL, Curtain Airbag Module.>
5) Remove the screws and detach the antenna amplifier.

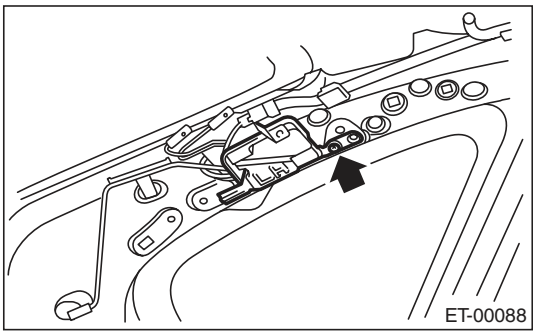

2. WAGON MODEL

1) Disconnect the ground cable from the battery.
2) Remove the rear gate trim. <Ref. to EI-68, REMOVAL, Rear Gate Trim.>
3) Disconnect the harness connectors and terminals.
4) Remove the screws and detach the antenna amplifier.

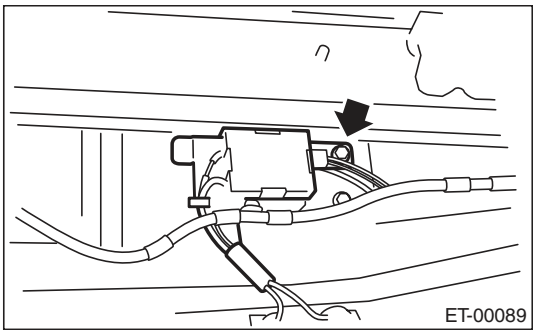

B: INSTALLATION

Install in the reverse order of removal.

C: INSPECTION

Measure the resistance of antenna amplifier.

- Sedan model

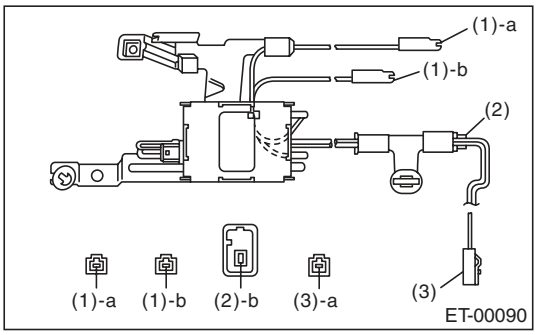

- Wagon model

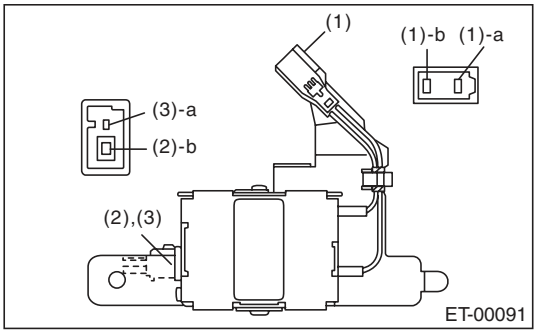

Terminal No.	Standard
(1) — a and amplifier body	10 kΩ or more
(1) — b and amplifier body	10 kΩ or more
(2) — b and amplifier body	10 kΩ or more
(3) — a and amplifier body	10 kΩ or more

11.Noise Suppressor

A: REMOVAL

1. SEDAN MODEL

1) Disconnect the ground cable from the battery.
2) Remove the rear quarter trim. <Ref. to EI-63, SEDAN MODEL, REMOVAL, Rear Quarter Trim.>
3) Remove the curtain airbag module. <Ref. to AB-18, REMOVAL, Curtain Airbag Module.>
4) Disconnect harness connector from noise suppressor.
5) Remove the harness clip.
6) Remove the screws and detach the noise suppressor.

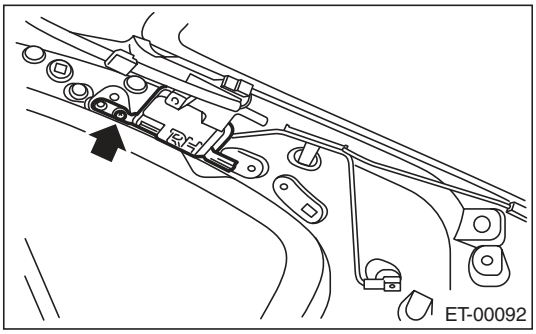

2. WAGON MODEL

1) Disconnect the ground cable from the battery.
2) Remove the rear gate trim. <Ref. to EI-68, REMOVAL, Rear Gate Trim.>
3) Disconnect harness connector from noise suppressor.
4) Remove the screws and detach the noise suppressor.

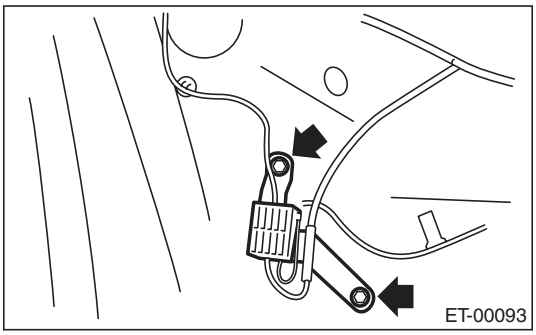

B: INSTALLATION

Install in the reverse order of removal.

12. Navigation System

A: WIRING DIAGRAM

<Ref. to WI-156, WIRING DIAGRAM, Navigation System.>

B: INSPECTION

1. CHECK THE OPERATION OF THE NAVIGATION

Start the engine, and then inspect that the opening screen is displayed.
Standard value: The opening screen should be displayed.
OK: Normal
NG: When not displayed, check the signal line connector and the audio connector. If there are no problems in the connecting lines or the lines were repaired, check that the opening screen is displayed.
At this point, if the display is not viewable, the unit is defective.

2. CHECK THE DVD-ROM

An opening screen is displayed, then it switches to the map screen after a while.
When a screen other than the opening screen is displayed, press the «MAP» key.
Standard value: The map screen should be displayed.
OK: Normal
NG: If the map screen is not displayed, check whether the DVD-ROM is set in the navigation system, whether the correct side is set, type of the DVD-ROM, the existence of any scratches, etc. If there are no problems on the DVD-ROM, the main body is defective.

3. CHECK EACH CONNECTION

If no problem is found in inspections 1 and 2 above, perform inspection using <Ref. to WI-156, WIRING DIAGRAM, Navigation System.> of the navigation system.

4. SWITCHING TO CONNECTION INSPECTION MODE

1) Press the menu key.
2) Select navigation setup from the menu screen.
3) Select the navigation information from the navigation setup screen.
4) Select the vehicle signal from the navigation information screen.
5) The display will switch to the vehicle signal (for connection inspection) screen.
6) Check that the display changes according to each operation
ON: Normal
NG: Check the circuit when the display does not change.

5. CHECK THE GPS ANTENNA

NOTE:
When checking the GPS antenna, perform the check operation outdoors to improve the receiver sensitivity.
Make sure that a value other than “zero” is displayed in the GPS item.
OK: Normal
NG: If “No positioning” is displayed, check the GPS antenna connection.
If the GPS display is red, the main unit could be faulty.

6. CHECK THE BACK SENSOR

NOTE:
Before starting inspections, inspect the safety around the rear end of the vehicle.
1) Turn the ignition switch to ON.
2) Pull the parking brake and depress the brake, then put the gear in reverse.
3) Make sure that “On” is lit in the back sensor item.
Standard Value: “On” should be lit.
OK: Normal
NG: If “On” does not light, check the signal line connection. If there are no problems, the unit could be faulty.

7. CHECK THE ILLUMINATION

1) Turn the lighting switch to level 1.

NOTE:
Make sure that the bright switch is not turned ON at this time.
2) Make sure that “On” lights in the illumination item, then the screen fades out.
Standard Value: “On” should be lit.
OK: Normal
NG: If “On” does not light, check the signal line connection. If there are no problems, the unit could be faulty.

8. CHECK THE PARKING SIGNAL

NOTE:
The side brake signal is normally “OFF”, so operating it will produce no change.

9. CHECK SPEED SENSOR

NOTE:
- Before starting inspections, inspect the safety around the vehicle.
- Lift up the vehicle as necessary.
- When the diagnostic trouble code is input in the VDCCM, perform the Clear Memory operation.

1) Move the vehicle 2 to 3 meters (6.6 to 9.8 ft).
2) Check that the numbers from the speed sensor are displayed.
Standard value: Vehicle speed is to be shown in numbers.
OK: Normal
NG: If vehicle speed is not displayed, check the signal line connection. If there are no problems, the unit could be faulty.

13. Navigation Display

A: REMOVAL

1) Disconnect the ground cable from the battery.
2) Remove the clip, and remove the center upper panel.

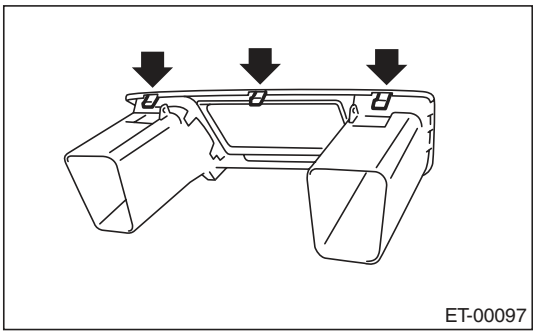

3) Remove the display mounting screws.

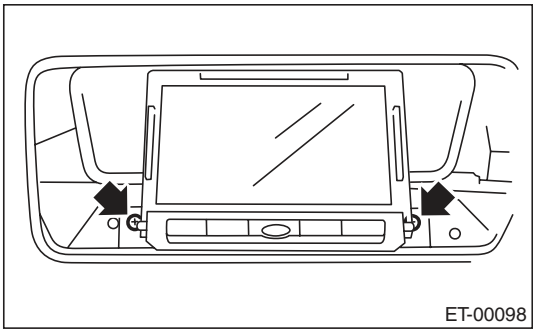

4) Disconnect the harness connector and remove the navigation display.

B: INSTALLATION

Install in the reverse order of removal.

14. GPS Antenna

A: REMOVAL

1) Disconnect the ground cable from the battery.
2) Remove the combination meter. <Ref. to IDI-22, REMOVAL, Combination Meter.>
3) Remove the GPS antenna mounting screws to remove the GPS antenna.

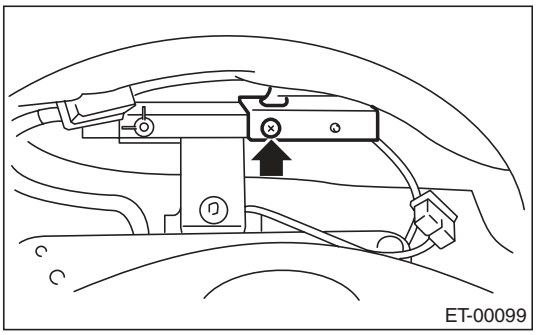

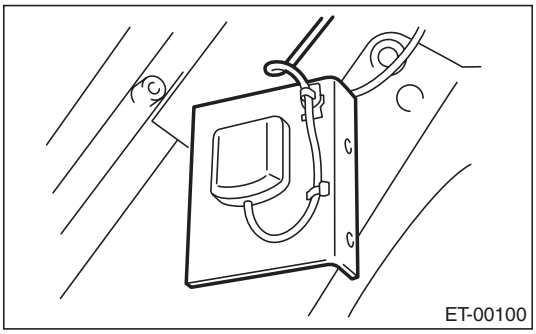

4) Remove the audio. <Ref. to ET-4, REMOVAL, Audio.>
5) Remove the GPS antenna cord connector from the steering support beam stay (on the driver's side).

B: INSTALLATION

Install in the reverse order of removal.

15. Navigation Body

A: REMOVAL

1) Disconnect the ground cable from the battery.
2) Slide the driver's seat to the forward position.
3) Disconnect the connector.
4) Remove the bolts and then remove the navigation unit.

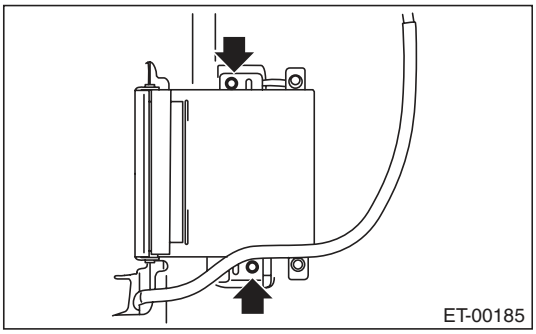

B: INSTALLATION

Install in the reverse order of removal.

Tightening torque:
8 N·m (0.82 kgf-m, 5.9 ft-lb)

16. AUX Input Terminal

A: REMOVAL

1) Disconnect the ground cable from the battery.
2) Remove the console box. <Ref. to EI-54, REMOVAL, Console Box.>
3) Disconnect the harness connector, and remove the AUX input terminal from the console box.

B: INSTALLATION

Install in the reverse order of removal.

17. Front Accessory Power Supply Socket

A: WIRING DIAGRAM

<Ref. to WI-154, WIRING DIAGRAM, Front Accessory Power Supply Socket System.>

B: REMOVAL

1) Disconnect the ground cable from the battery.
2) Remove the console front panel. <Ref. to EI-55, REMOVAL, Center Console.>
3) Disconnect the harness connector, and remove the accessory power supply socket.

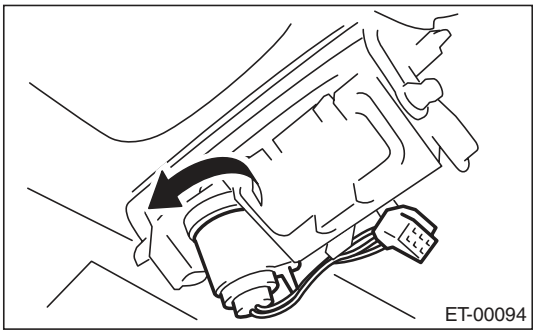

C: INSTALLATION

Install in the reverse order of removal.

18. Rear Accessory Power Supply Socket

A: WIRING DIAGRAM

<Ref. to WI-155, WIRING DIAGRAM, Rear Accessory Power Supply Socket System.>

B: REMOVAL

1) Disconnect the ground cable from the battery.
2) Remove the console box. <Ref. to EI-54, REMOVAL, Console Box.>
3) Disconnect the harness connector, and remove the accessory power supply socket.

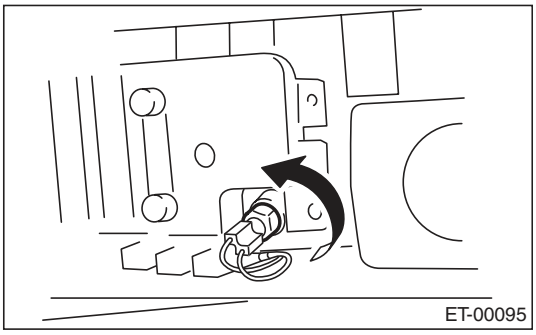

C: INSTALLATION

Install in the reverse order of removal.

19. Steering Satellite Switch

A: REMOVAL

WARNING:
Before servicing, be sure to read the notes in the "AB" section for proper handling of the driver's airbag module. <Ref. to AB-4, CAUTION, General Description.>

1) Set the front wheels in straight ahead position.
2) Turn the ignition switch to OFF.
3) Disconnect the ground cable from battery and wait for at least 20 seconds before starting work.
4) Using TORX® bit T30 (1), loosen the two TORX® bolts which secure the driver's airbag module.

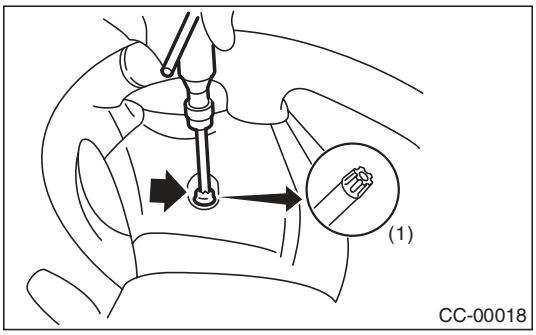

5) Disconnect the airbag module connector on back of the airbag module. <Ref. to AB-8, PROCEDURE, Airbag Connector.>
6) Remove the steering wheel. <Ref. to PS-13, REMOVAL, Steering Wheel.>
7) Remove the screws to remove the lower cover from steering wheel.

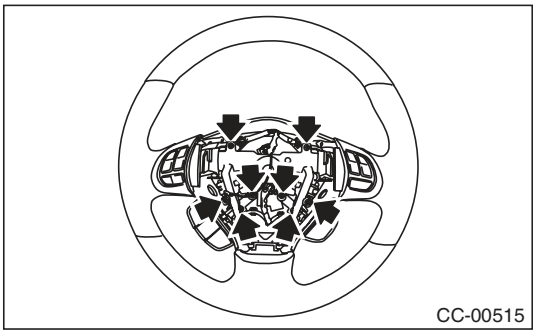

8) Loosen the screws on the backside of the steering wheel and remove the satellite switch.

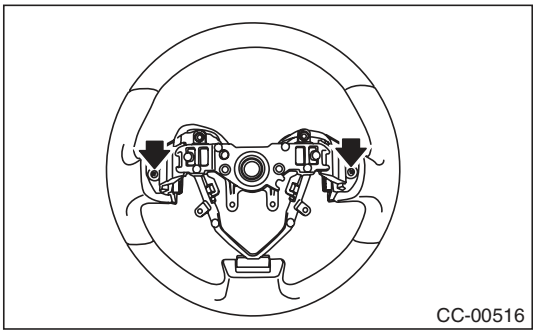

B: INSTALLATION

Install in the reverse order of removal.

C: INSPECTION

Measure the resistance between satellite switch connector terminals.

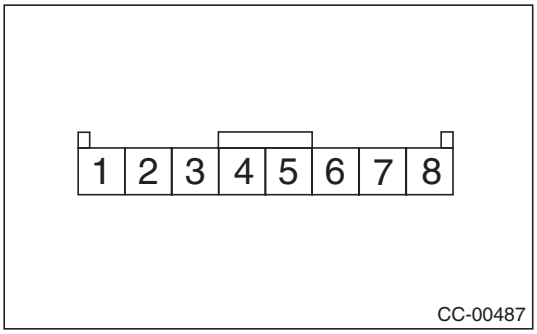

Switch	Area	Terminal No.	Standard
Mute Volume (+) Volume (–) Mode Seek (∧) Seek (∨)	All OFF	4 and 5	Approx. 4.7 kΩ
Mute	ON	4 and 5	Approx. 22 Ω
Volume (+)	ON	4 and 5	Approx. 90 Ω
Volume (–)	ON	4 and 5	Approx. 200 Ω
Mode	ON	4 and 5	Approx. 360 Ω
Seek (∧)	ON	4 and 5	Approx. 690 Ω
Seek (∨)	ON	4 and 5	Approx. 1.5 kΩ

Replace the satellite switch if defective.

1. General Description

A: CAUTION

- Before disassembling or reassembling parts, always disconnect the battery ground cable from battery. When replacing the audio, control module and other parts provided with memory functions, record the memory contents before disconnecting the battery ground cable. Otherwise, the memory is cleared.
- Reassemble the parts in the reverse order of disassembly procedure unless otherwise indicated.
- Adjust parts to the given specifications.
- Connect the connectors securely during reassembly.
- After reassembly, make sure functional parts operate smoothly.

B: PREPARATION TOOL

1. GENERAL TOOL

TOOL NAME	REMARKS
Circuit tester	Used for measuring resistance and voltage.
TORX® bit T30	Used for removing/installing driver's airbag module.

2. Horn System

A: WIRING DIAGRAM

1. HORN

<Ref. to WI-159, WIRING DIAGRAM, Horn System.>

B: INSPECTION

1. HORN RELAY

Measure the security horn relay resistance between terminals (indicated in the table below) when connecting terminal No. 4 to battery positive terminal and terminal No. 3 to battery ground terminal.

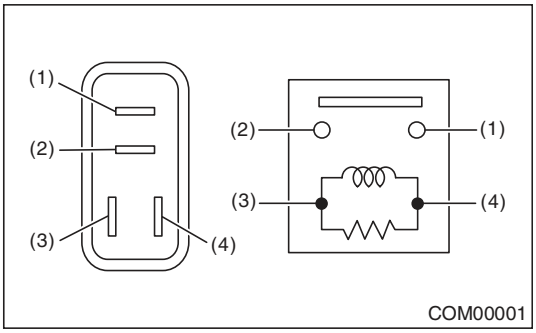

Continuity	Terminal No.	Standard
Yes	1 and 2	Less than 1 Ω
No		1 MΩ or more

3. Horn

A: REMOVAL

1) Disconnect the ground cable from battery.
2) Remove the three clips and peel the right side lower mud guard upward.

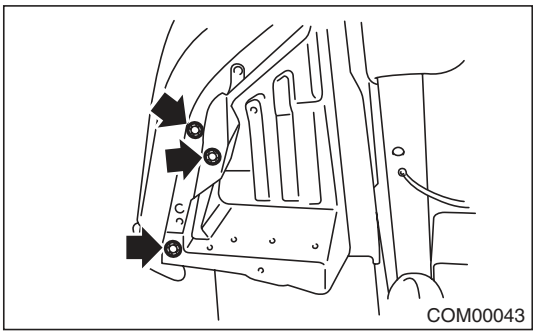

3) Remove the horn bracket mounting bolt (A).
4) Disconnect the harness connector and remove the horn assembly (B).

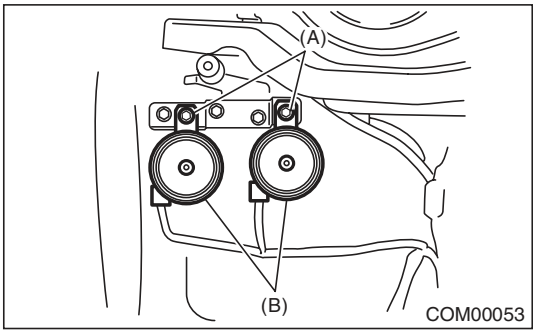

B: INSTALLATION

Install in the reverse order of removal.

Tightening torque:
18 N·m (1.8 kgf-m, 13.3 ft-lb)

C: INSPECTION

With 12 V direct current supplied between horn terminals, check that the horn sounds properly.

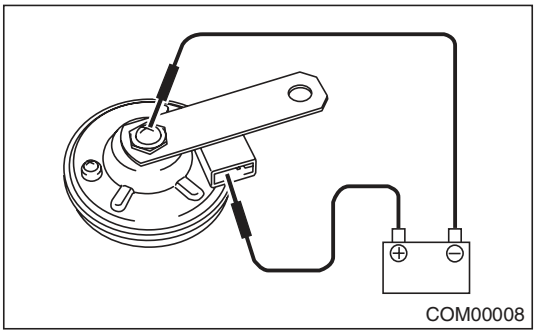

4. Horn Switch

A: REMOVAL

CAUTION:
Before servicing, be sure to read the notes in the "AB" section for proper handling of the driver's airbag module. <Ref. to AB-4, CAUTION, General Description.>

NOTE:
Horn switch is a unit with the driver's airbag module.
1) Disconnect the ground cable from the battery.
2) Remove the driver's airbag module. <Ref. to AB-14, REMOVAL, Driver's Airbag Module.>

B: INSTALLATION

Install in the reverse order of removal.

C: INSPECTION

Measure the resistance between horn switch terminal and airbag module bracket.

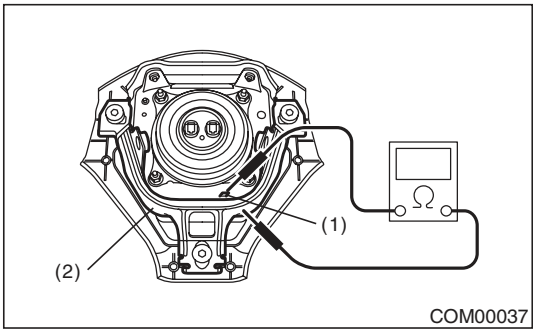

(1) Horn switch terminal
(2) Airbag module bracket

Switch position	Terminal No.	Resistance
When horn switch is pushed.	Horn switch terminal and airbag module bracket	Less than 1 Ω
When horn switch is not pushed.		1 MΩ or more

1. General Description

A: COMPONENT

1. FIXED GLASS (SEDAN MODEL)

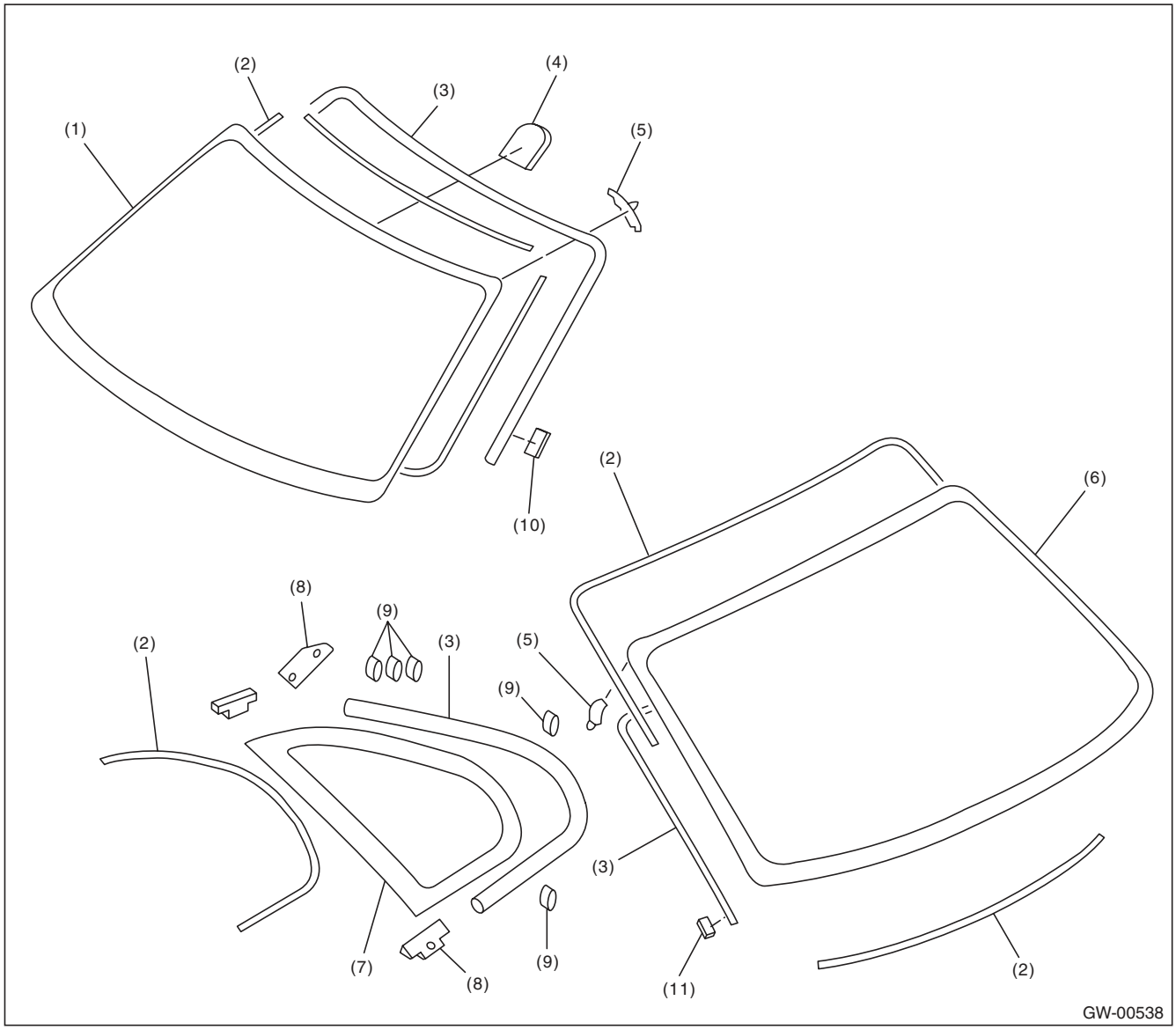

(1)	Windshield glass	(5)	Locating pin	(9)	Clip
(2)	Dam rubber	(6)	Rear window glass	(10)	Seal
(3)	Molding	(7)	Six light glass	(11)	Spacer
(4)	Rearview mirror mount	(8)	Bracket		

2. FIXED GLASS (WAGON MODEL)

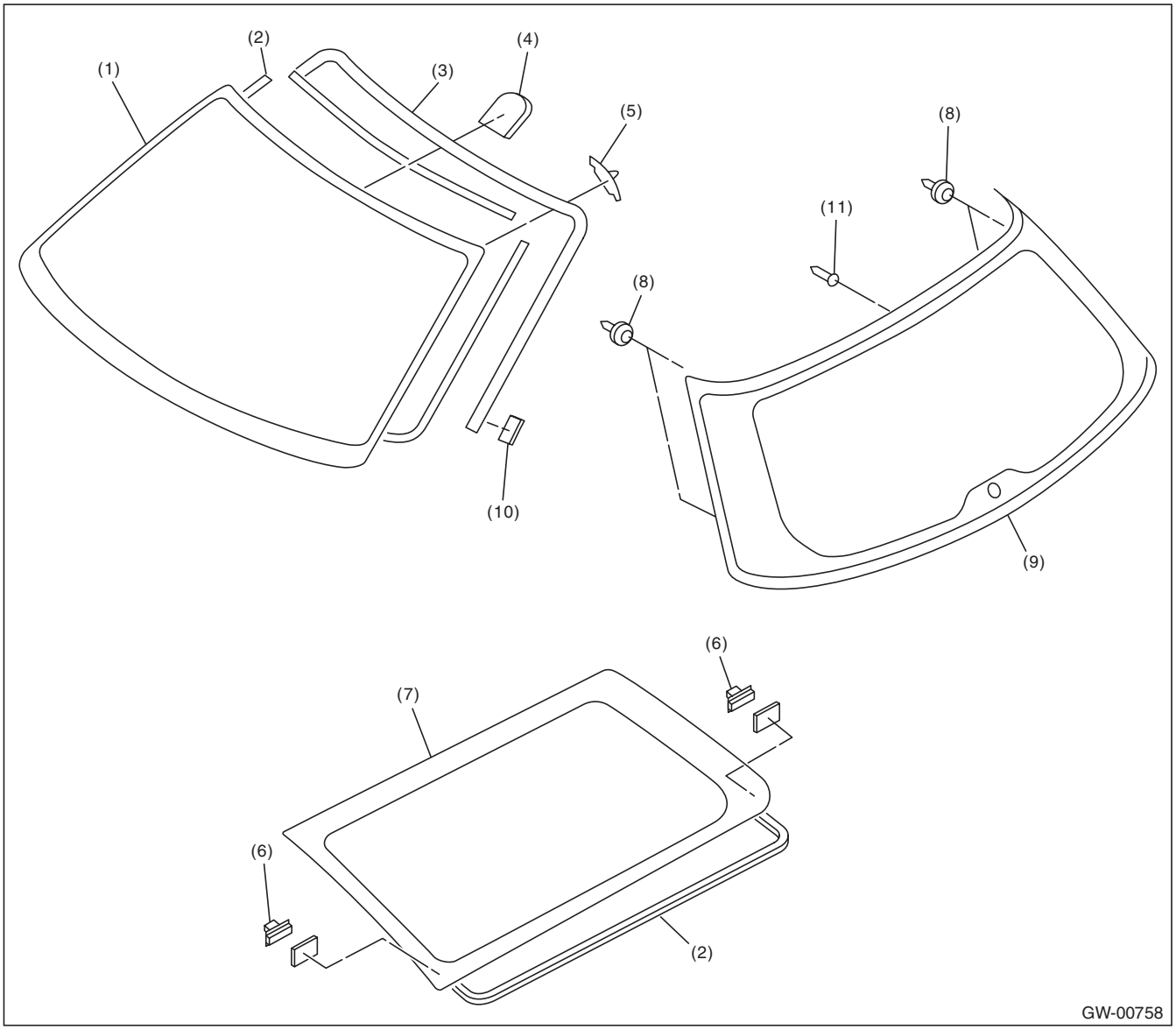

(1)	Windshield glass	(5)	Locating pin	(9)	Rear gate glass
(2)	Dam rubber	(6)	Fastener	(10)	Seal
(3)	Molding	(7)	Rear quarter glass	(11)	Locating pin
(4)	Rearview mirror mount	(8)	Holder		

3. FRONT DOOR GLASS

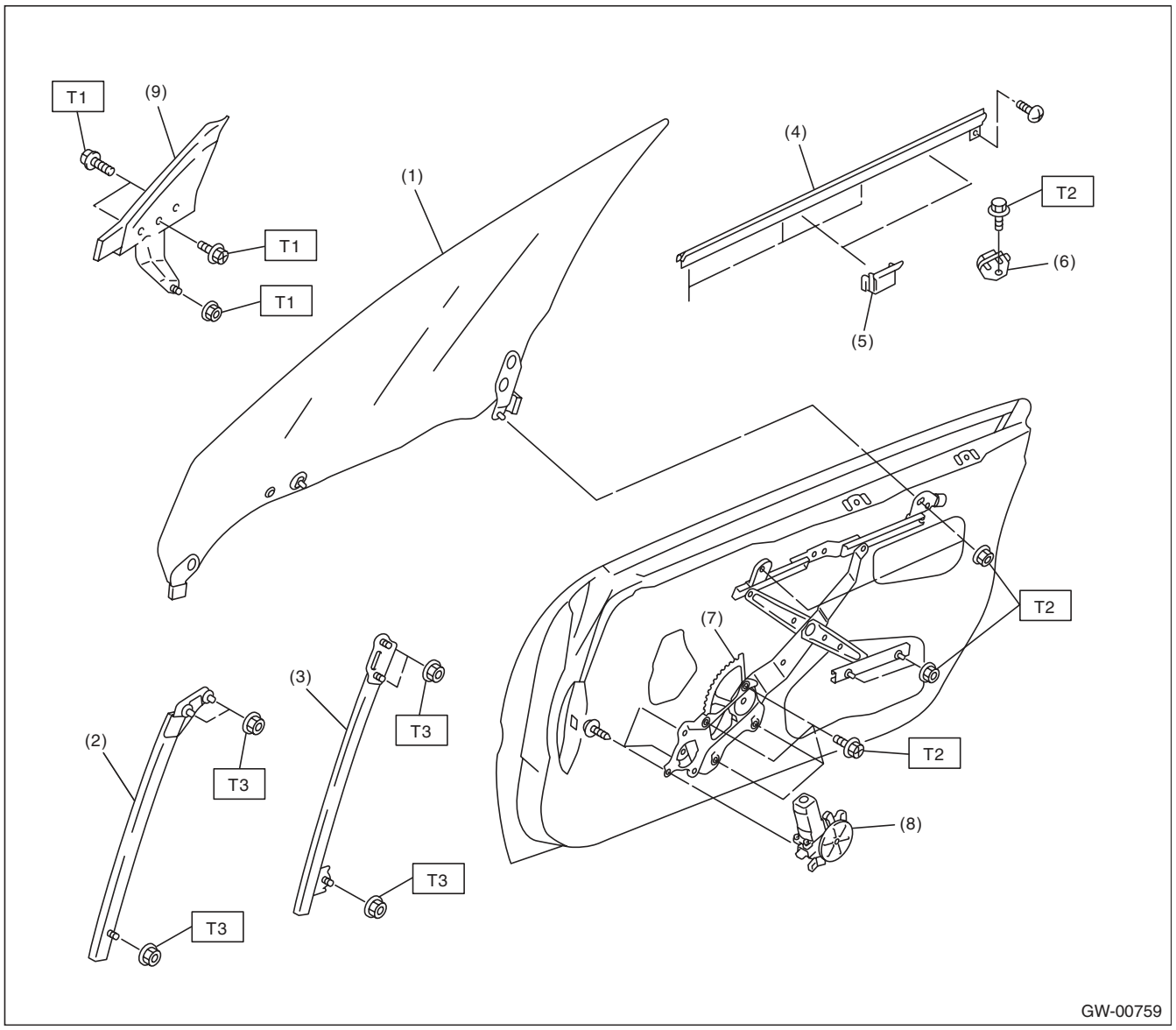

(1)	Glass	(6)	Stabilizer (inner)	***Tightening torque:N·m (kgf-m, ft-lb)***
(2)	Door sash (front)	(7)	Regulator ASSY	***T1: 6 (0.61, 4.3)***
(3)	Door sash (rear)	(8)	Motor ASSY	***T2: 7.5 (0.76, 5.5)***
(4)	Weather strip outer	(9)	Mirror gusset	***T3: 14 (1.43, 10.1)***
(5)	Stabilizer (outer)			

4. REAR DOOR GLASS

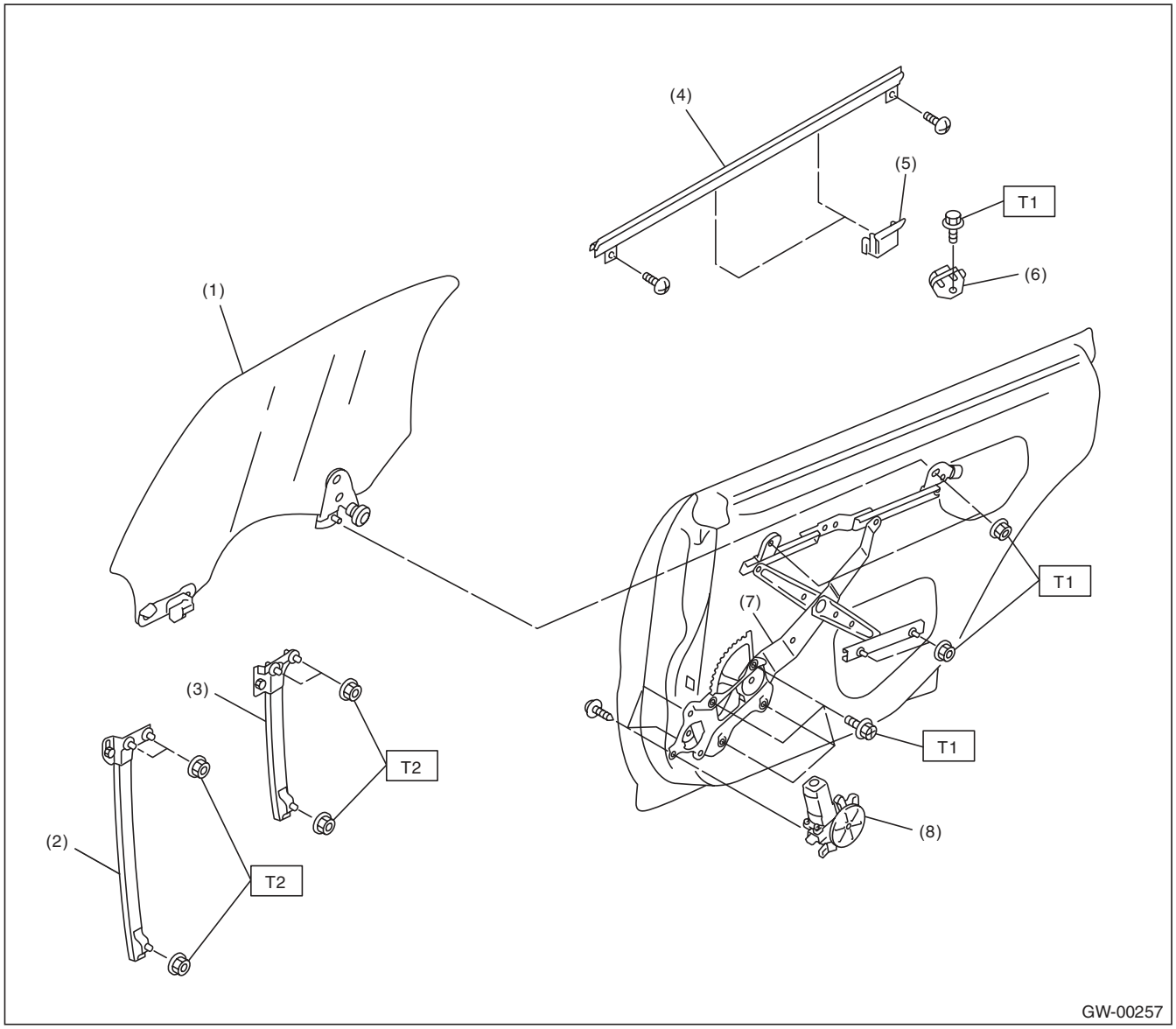

(1)	Glass	(5)	Stabilizer (outer)
(2)	Door sash (front)	(6)	Stabilizer (inner)
(3)	Door sash (rear)	(7)	Regulator ASSY
(4)	Weather strip outer	(8)	Motor ASSY

Tightening torque:N·m (kgf-m, ft-lb)
T1: 7.5 (0.76, 5.5)
T2: 14 (1.43, 10.1)

5. MIRROR

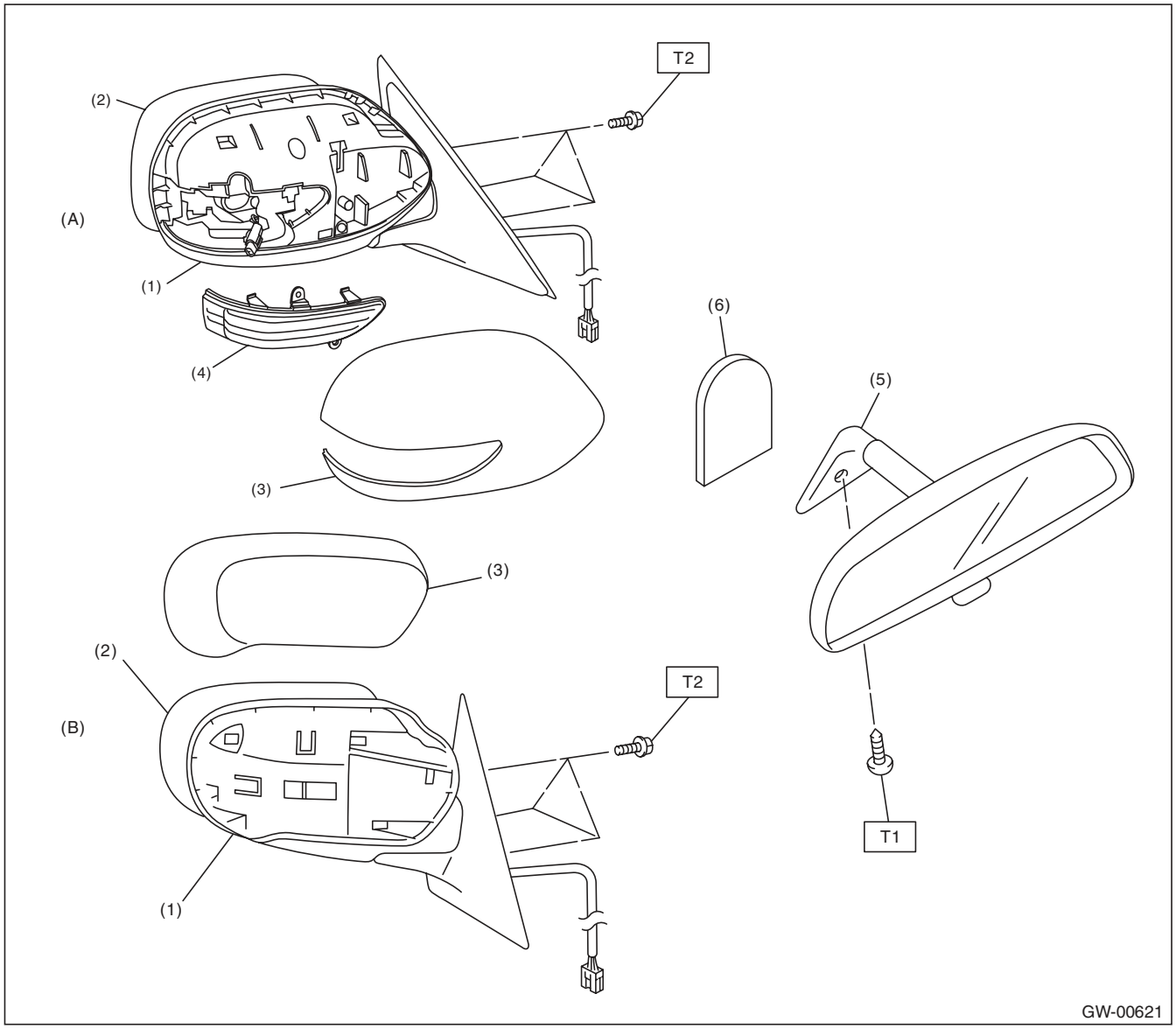

(A)	Model with side turn signal light	(B)	Model without side turn signal light

(1)	Outer mirror	(4)	Side turn signal light	***Tightening torque:N·m (kgf-m, ft-lb)***
(2)	Mirror	(5)	Rearview mirror	***T1: 1.9 (0.19, 1.4)***
(3)	Scalp cap	(6)	Mount	***T2: 4.5 (0.46, 3.3)***

B: CAUTION

- When electrical connectors are disconnected, always conduct an operational check after connecting them again.
- Avoid impact and damage to the glass.

C: PREPARATION TOOL

1. SPECIAL TOOL

ILLUSTRATION	TOOL NUMBER	DESCRIPTION	REMARKS
ST1B022XU0	1B022XU0	SUBARU SELECT MONITOR III KIT	Used for setting of each function and trouble-shooting for electrical system.
ST61299AE000	61299AE000	SPACER	Used for adjusting the upper end position of the front door glass. (Glass thickness: 5 mm (0.197 in))
ST61299AE010	61299AE010	SPACER	Used for adjusting the upper end position of rear door glass. (Glass thickness: 4 mm (0.157 in))

2. GENERAL TOOL

TOOL NAME	REMARKS
Circuit tester	Used for checking voltage and continuity.
Piano wire	Used for removing the window glass.
Windshield glass knife	Used for removing the window glass.
TORX® T20	Used for removing and installing the rearview mirror.

2. Power Window System

A: WIRING DIAGRAM

<Ref. to WI-160, Power Window System.>

B: INSPECTION

Symptom	Repair order
All power windows do not operate.	1. Fuse (SBF-4) 2. Power window circuit breaker 3. Power window relay 4. Wiring harness 5. Body integrated unit
Particular window does not operate.	1. Power window main switch 2. Power window sub-switch 3. Power window motor 4. Wiring harness
“Window Lock” does not operate.	Power window main switch

3. Power Window Control Switch

A: REMOVAL

1. MAIN SWITCH

1) Remove the front door trim.
<Ref. to EI-49, REMOVAL, Door Trim.>
2) Disconnect the harness connector.
3) Remove the screws from the reverse side of the front door trim to remove the power window main switch.

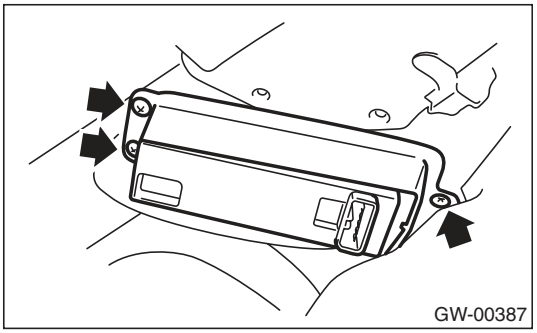

2. SUB-SWITCH

1) Remove the door trim. <Ref. to EI-49, REMOVAL, Door Trim.>
2) Disconnect the connector.
3) Remove the screws from the reverse side of door trim to remove the power window sub-switch.

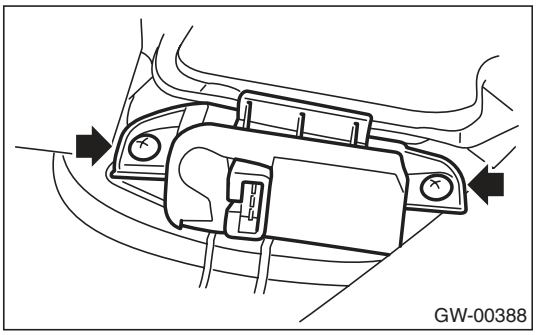

B: INSTALLATION

Install in the reverse order of removal.

C: INSPECTION

1. MAIN SWITCH

Measure the switch resistance.

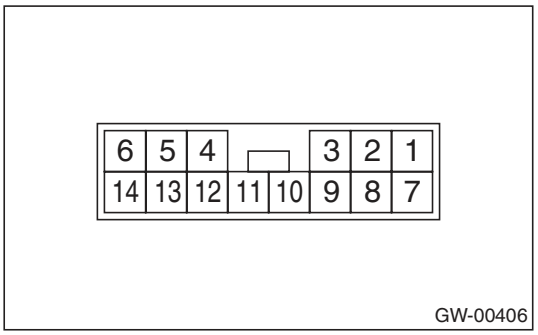

	Switch position	Terminal No.	Standard
Driver's seat	UP	10 and 2 7 and 1	Less than 1 Ω
	OFF	1 and 2	Less than 1 Ω
	DOWN	10 and 1 7 and 2	Less than 1 Ω
	AUTO DOWN	10 and 1 7 and 2	Less than 1 Ω
Passenger's seat	UP	10 and 14 7 and 11	Less than 1 Ω
	OFF	7 and 14 7 and 11	Less than 1 Ω
	DOWN	10 and 11 7 and 14	Less than 1 Ω
Rear RH seat	UP	10 and 13 7 and 12	Less than 1 Ω
	OFF	7 and 13 7 and 12	Less than 1 Ω
	DOWN	10 and 12 7 and 13	Less than 1 Ω
Rear LH seat	UP	10 and 8 7 and 9	Less than 1 Ω
	OFF	7 and 8 7 and 9	Less than 1 Ω
	DOWN	9 and 10 7 and 8	Less than 1 Ω

Replace the main switch if faulty.

2. SUB-SWITCH

Measure the switch resistance.

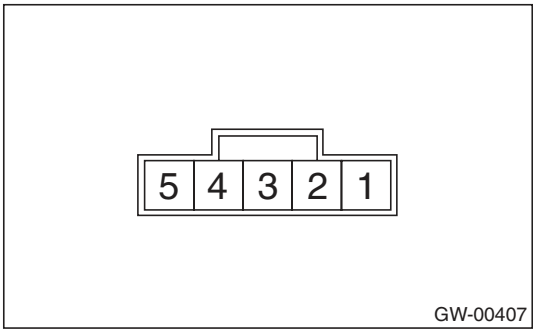

	Switch position	Terminal No.	Standard
Passenger's seat and rear seat	UP	2 and 3 4 and 5	Less than 1 Ω
	OFF	1 and 2 4 and 5	Less than 1 Ω
	DOWN	1 and 2 3 and 4	Less than 1 Ω

Replace the sub-switch if faulty.

4. Front Door Glass

A: REMOVAL

1) Remove the front door trim. <Ref. to EI-49, REMOVAL, Door Trim.>
2) Remove the sealing cover. <Ref. to EB-19, REMOVAL, Front Sealing Cover.>
3) Remove the outer mirror assembly. <Ref. to GW-20, REMOVAL, Outer Mirror Assembly.>
4) Remove clip (A), and remove the front end of the weather strip.

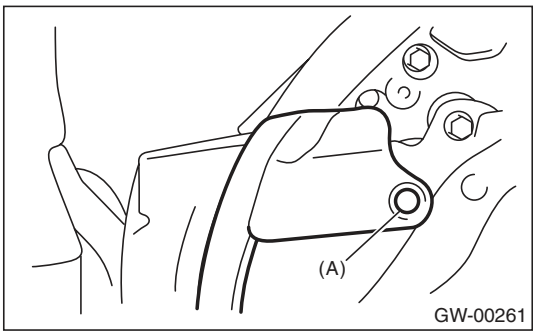

5) Remove the gusset.

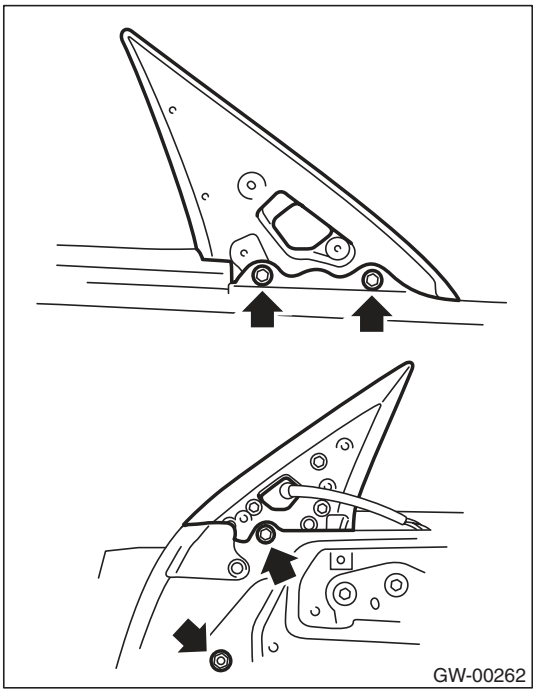

6) Remove the stabilizers.

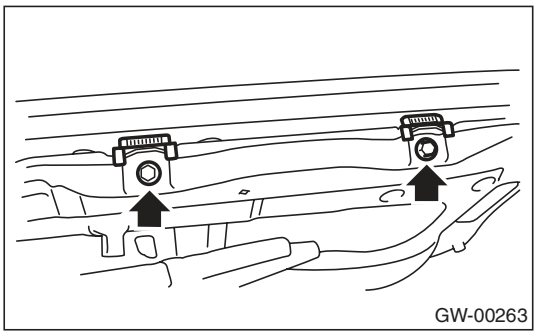

7) Remove clips (A), and remove the rear end of the weather strip.

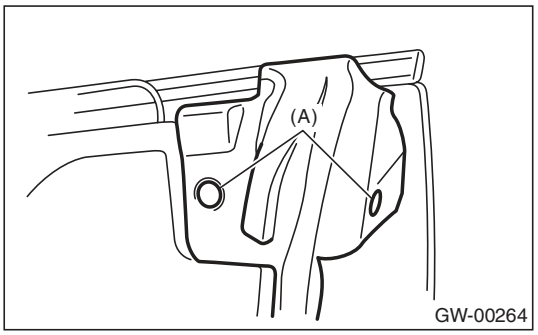

8) Remove screw (A) from the rear end of the weather strip outer, to remove the weather strip outer.

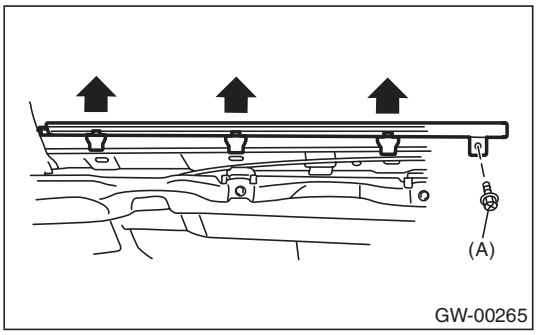

9) Connect the ground cable to battery and power window switch connector.
10) Operate the power window switch to move the glass to the position shown in the figure, then remove the two nuts through the service holes.

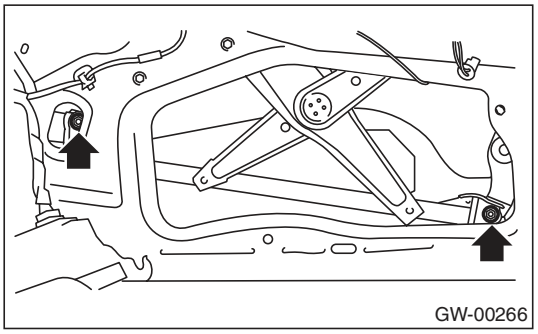

11) Remove the door glass.

CAUTION:
- **Since the gear may be disengaged, do not turn regulator in the closing direction after removing glass.**
- **Avoid impact and damage to the glass.**

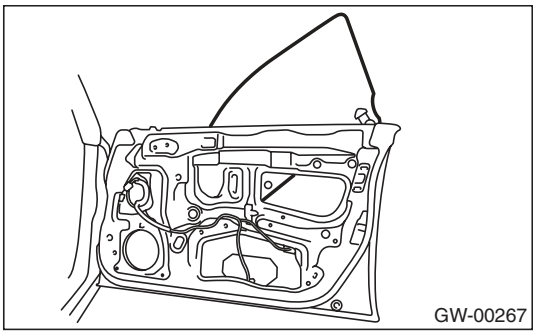

B: INSTALLATION

1) Install in the reverse order of removal.

CAUTION:
Make sure that the glass stay is placed securely in sash.

2) Adjust the front door glass. <Ref. to GW-12, ADJUSTMENT, Front Door Glass.>

Tightening torque:
Refer to "COMPONENT" of "General Description". <Ref. to GW-4, FRONT DOOR GLASS, COMPONENT, General Description.>

C: ADJUSTMENT

NOTE:
Before adjustment, ensure that all adjusting bolts of stabilizer, upper stopper and sash are loose and door glass rises until it makes contact with the weather strip.

1) Temporarily tighten the adjusting bolt on one side of the rear sash, at the midpoint of the slotted hole in the inner panel.

2) Temporarily tighten the regulator B channel at the top position of slotted hole.

3) Lower the door glass 10 — 15 mm (0.39 — 0.59 in) from fully closed position. While applying an outward pressure (F) of 45.0±5.0 N (4.5±0.5 kgf, 9.9±1.1 lb) to the upper edge of the glass above the midpoint of the two outer stabilizers, press the inner stabilizer to the glass at a pressure of 25±5 N (2.5±0.5 kgf, 5.5±1.1 lb) to secure it.

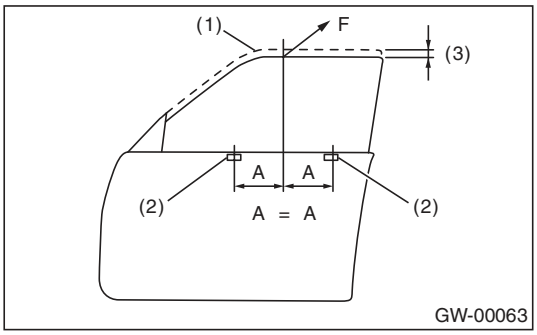

(1) Fully closed position
(2) Stabilizer
(3) 10 — 15 mm (0.39 — 0.59 in)

4) To adjust the clearance between windshield glass and center pillar cover, loosen nuts (A), and move the glass sash back and forth until the clearance becomes the value shown.

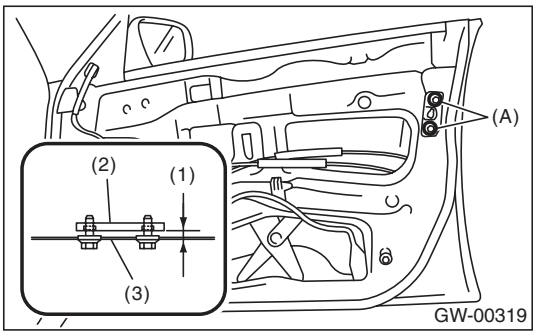

(1) Adjust the lines parallel
(2) Sash
(3) Inner panel

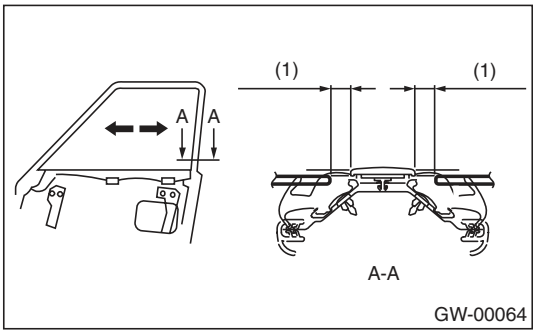

(1) 11 mm (0.433 in)

5) To adjust the upper end and lower end of the center pillar, loosen the stopper bolt (A) or nut (B) securing the door sash (front, rear), and move the stopper position until the clearance between center pillar cover is equal.

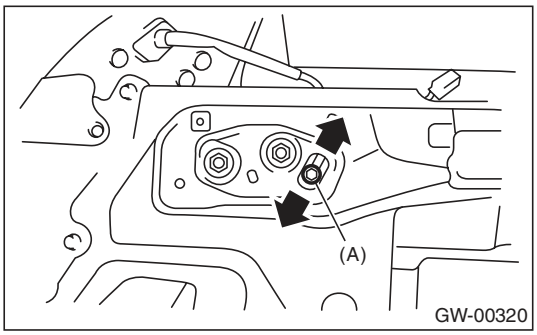

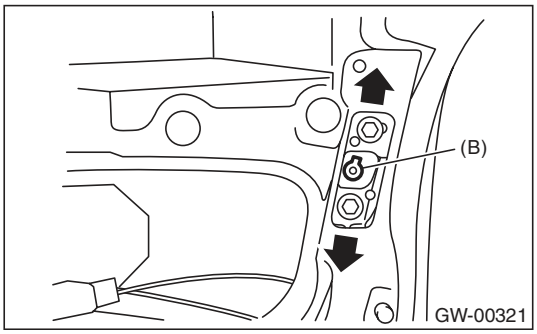

CAUTION:
Measure the clearance between center pillar at 50 mm (1.969 in) from upper end of window glass.

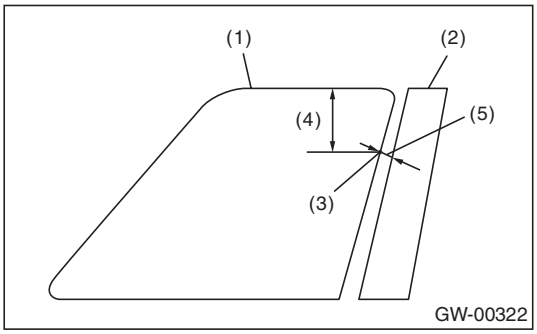

(1) Glass
(2) Center pillar cover
(3) Check point
(4) 50 mm (1.969 in)
(5) 11 mm (0.433 in)

6) Adjust so that the upper and lower ends of the center pillar are the same size.

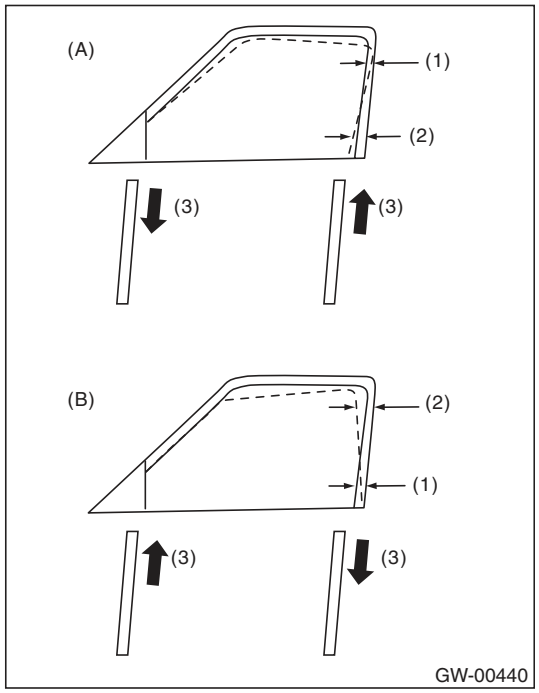

(A) Glass tilts too far rearward
(B) Glass tilts too far forward
(1) Narrow
(2) Wide
(3) Stopper adjusting direction

7) After adjusting the clearance between the center pillar, raise and lower the glass several times to check glass contact to the stopper when the glass is fully closed. Adjust the center pillar clearance to contact the front and rear stopper simultaneously.

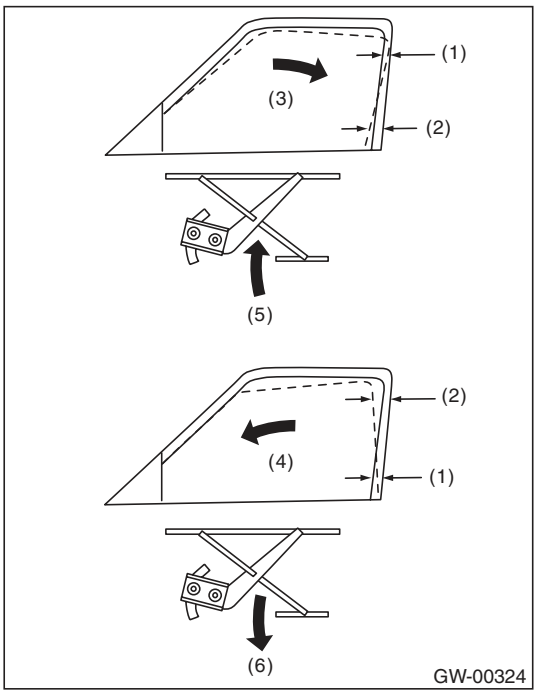

(1) Narrow
(2) Wide
(3) When the stopper of the door sash (front) contacts first
(4) When the stopper of the door sash (rear) contacts first
(5) Raise B channel
(6) Lower B channel

8) For glass stroke adjustment, attach special tool to the glass, close door, and raise the glass to the top edge using regulator until positional relationship between glass and weather strip becomes as shown. And secure the glass so that the upper stopper touches the glass holder without fail.

ST 61299AE000 SPACER
(Glass thickness: 5 mm
(0.197 in) for front door glass)

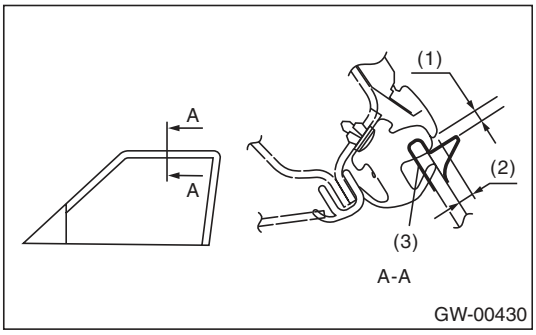

(1) 3.2 — 4.8 mm (0.126 — 0.189 in)
(2) When re-using weather strip: 5.5 mm (0.217 in)
When replacing the weather strip:
3 mm (0.118 in)
(3) ST

For preventing wind noise, adjust the glass at the position where the tip of the gusset is raised up slightly.

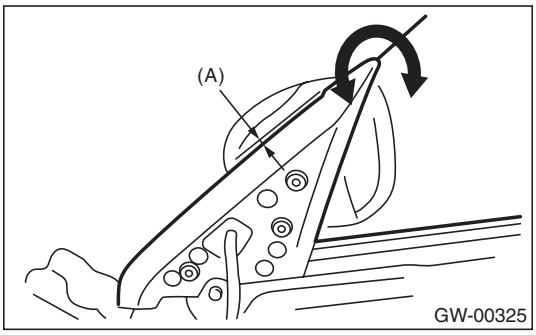

(A) 0 — 1.5 mm (0 — 0.059 in)

9) After stabilizer adjustment, carry out glass cohesion adjustment. First, visually ensure the positional relationship between the retainer & molding and the glass of the roof side, then start the rear sash adjustment. Attach the ST to the glass and adjust two adjusting bolts alternately step by step, to obtain dimensions shown below (section A).

NOTE:
If two nuts are loosened at the same time, the sash moves back and forth. Therefore, when one nut is adjusted, secure the other.

10) Make the same adjustment of two adjusting bolts of rear sash.

ST 61299AE000 SPACER
(Glass thickness: 5 mm
(0.197 in) for front door glass)

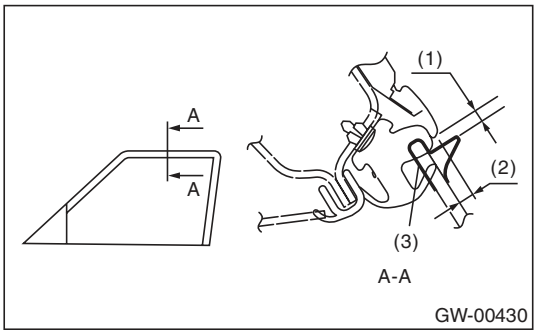

(1) 3.2 — 4.8 mm (0.126 — 0.189 in)
(2) When re-using weather strip: 5.5 mm (0.217 in)
When replacing the weather strip:
3 mm (0.118 in)
(3) ST

NOTE:
Do not tilt the sash bracket to inner panel during adjustment. If tilting, the regulator does not operate smoothly.

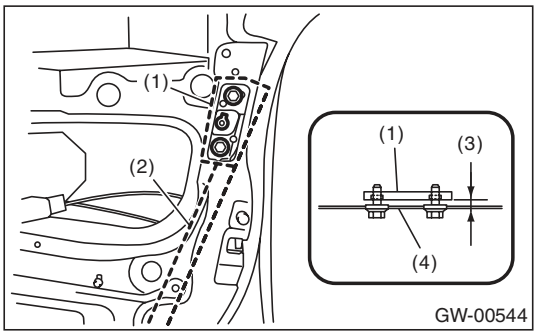

(1) Sash bracket
(2) Rear sash
(3) Adjust the lines parallel
(4) Inner panel

11) Make adjustment of front sash in the same manner as that of rear sash.

NOTE:
Although front and rear sashes must, as a rule, be adjusted in the same manner, in some door installation, the adjustment in a different manner may be required. However, adjustment of one sash to the maximum amount and the other to the minimum amount is not permitted. Such adjustment may result in applying excessive load against regulator.

12) After adjustments, tighten the nuts.

13) After adjustment of the glass, close the door. If there is a gap between outer lip of gusset and glass surface, adjust the gap by adjusting bolt (A) at the attachment hardware at the lower side of the gusset to prevent generation of wind noise.
14) During adjustment, loosen the other three clamping bolts.

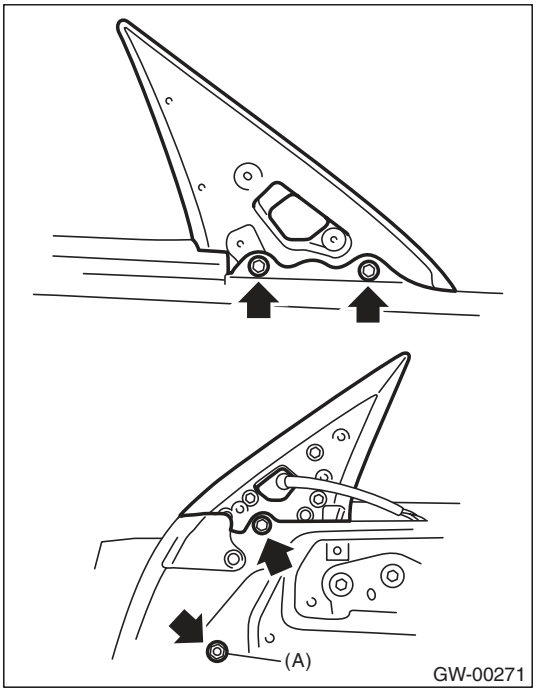

15) After adjustment, tighten the bolts and nuts.

5. Front Regulator and Motor Assembly

A: REMOVAL

1) Remove the door glass. <Ref. to GW-11, REMOVAL, Front Door Glass.>
2) Disconnect the motor connector.
3) Remove the four bolts and two nuts to remove regulator assembly.

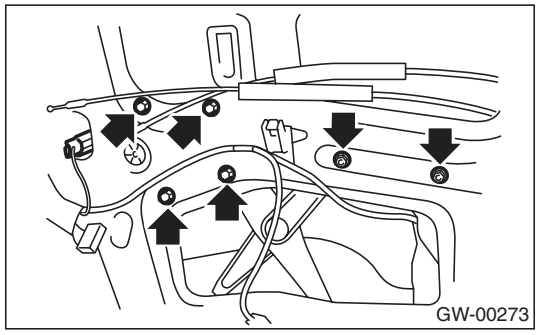

4) Remove the screws to remove motor assembly.

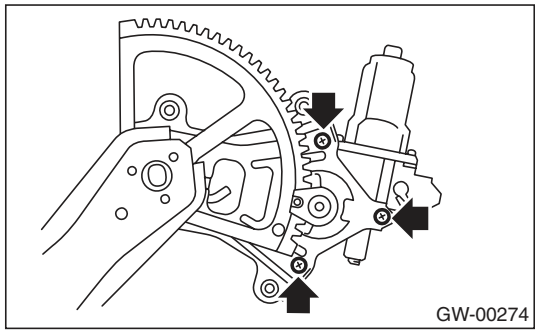

NOTE:
When removing the motor assembly, secure the arm correctly. Otherwise the regulator arm moves with the force of balancing spring.

B: INSTALLATION

1) Install in the reverse order of removal.
2) Adjust the front door glass. <Ref. to GW-12, ADJUSTMENT, Front Door Glass.>

Tightening torque:
Refer to "COMPONENT" of "General Description". <Ref. to GW-4, FRONT DOOR GLASS, COMPONENT, General Description.>

C: INSPECTION

1) Make sure that the power window motor rotates properly when the battery voltage is applied to the terminals of motor connector.
2) Change polarity of battery connection to terminals to ensure that the motor rotates in reverse direction.

6. Remote Control Mirror System

A: WIRING DIAGRAM

<Ref. to WI-164, Remote Control Mirror System.>

B: INSPECTION

Symptom	Repair order
All function does not operate.	1. Fuse (F/B No. 6) 2. Mirror switch 3. Wiring harness
One side of the mirror motor does not operate.	1. Mirror switch 2. Mirror motor 3. Wiring harness
Mirror heater does not operate.	1. Mirror switch 2. Mirror heater 3. Wiring harness

7. Scalp Cap

A: REPLACEMENT

1. MODEL WITH SIDE TURN SIGNAL LIGHT

1) Remove the outer mirror. <Ref. to GW-21, REPLACEMENT, Outer Mirror.>
2) Press-in the upper side clips (A) from inside of outer mirror.

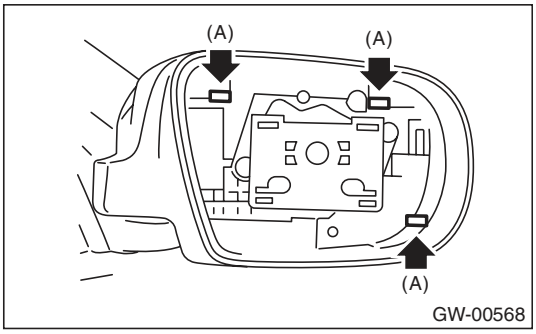

3) Pull the scalp cap frontward of outer mirror, remove the upper side clips (A), and then remove the scalp cap.

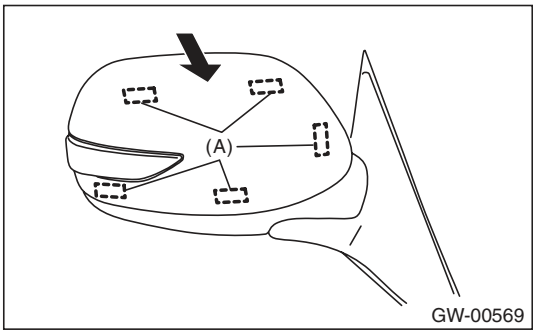

4) Install the scalp cap securely.

CAUTION:
Do not remove the scalp cap forcibly. The lower hooks may be damaged.

2. MODEL WITHOUT SIDE TURN SIGNAL LIGHT

1) Remove the mirror. <Ref. to GW-21, REPLACEMENT, Outer Mirror.>
2) Press-in the clips (A) from inside of outer mirror.

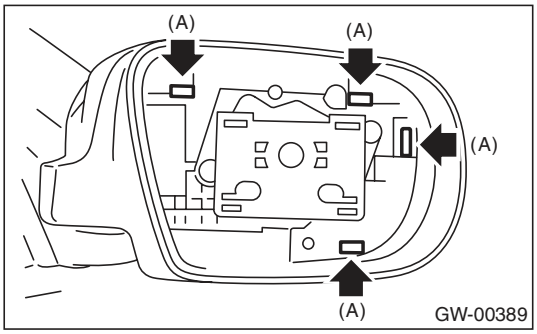

3) Pull the scalp cap towards the front of the outer mirror, then remove the scalp cap.
4) Align clip (A) on the reverse side of the scalp cap and the clip attachment hole of the outer mirror, and push the scalp cap in.

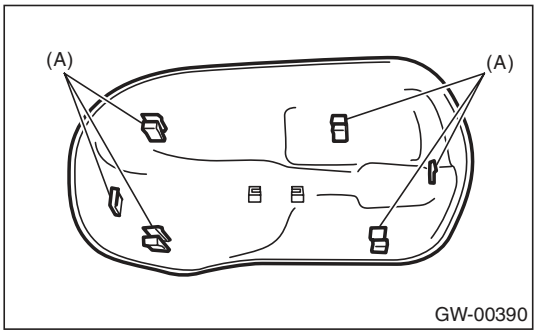

5) Install the scalp cap securely.

8. Outer Mirror Assembly

A: REMOVAL

1) Remove the mirror gusset cover.

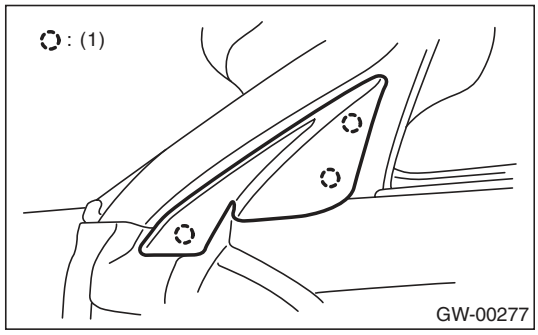

(1) Hook

2) Remove the door trim. <Ref. to EI-49, REMOVAL, Door Trim.>
3) Disconnect the outer mirror connector.
4) Remove the screws to remove outer mirror assembly.

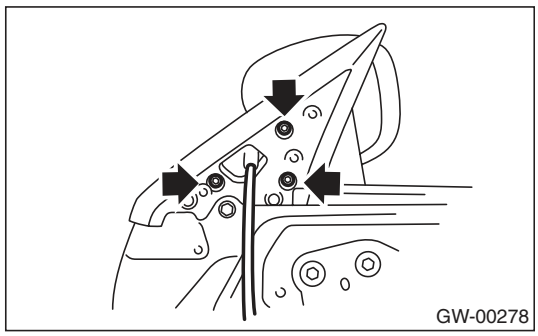

B: INSTALLATION

Install in the reverse order of removal.

C: INSPECTION

Check that the outer mirror moves properly when the battery voltage is applied to terminals.

- Model with side turn signal light

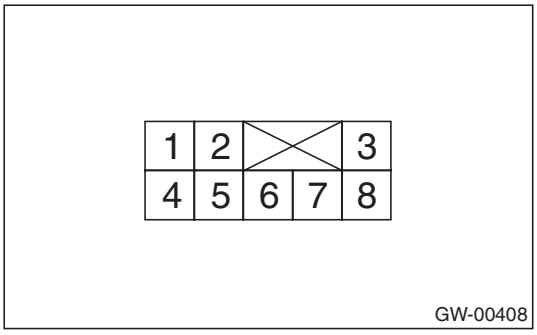

Switch position	Terminal No.
OFF	—
UP	6 (+) and 3 (–)
DOWN	3 (+) and 6 (–)
LEFT	7 (+) and 3 (–)
RIGHT	3 (+) and 7 (–)

- Model without side turn signal light

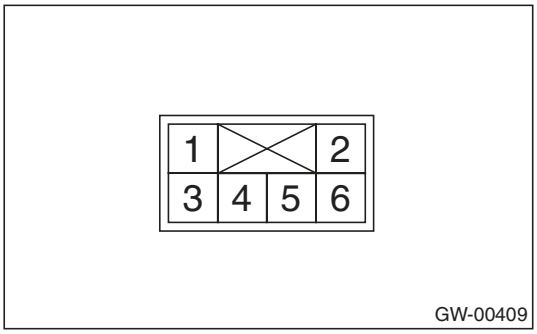

Switch position	Terminal No.
OFF	—
UP	4 (+) and 2 (–)
DOWN	2 (+) and 4 (–)
LEFT	5 (+) and 2 (–)
RIGHT	2 (+) and 5 (–)

Replace the outer mirror assembly if defective.

9. Outer Mirror

A: REPLACEMENT

CAUTION:
- **When removing the mirror, be careful not to damage the back surface of mirror with a flat tip screwdriver.**
- **When installing the mirror, insert the hook and clip securely.**

1) Face the mirror upward.
2) Disconnect the ground cable from the battery. (Model with mirror heater)
3) Use a flat tip screwdriver to remove clips (A).
4) Lift the lower mirror up to remove hooks (B).

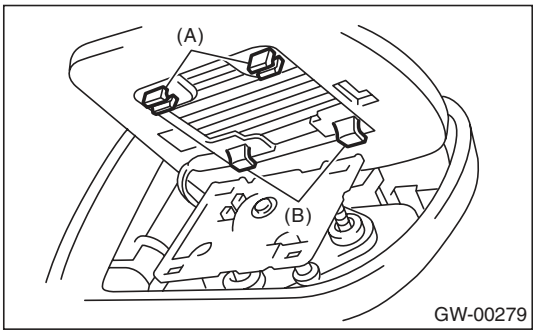

5) Disconnect the mirror heater connector from side of the mirror. (Model with mirror heater)

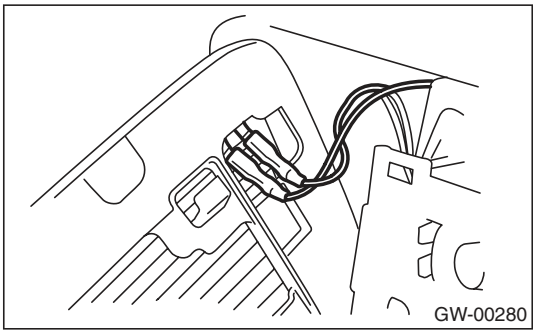

6) Catch the hooks (B) and install clips (A).

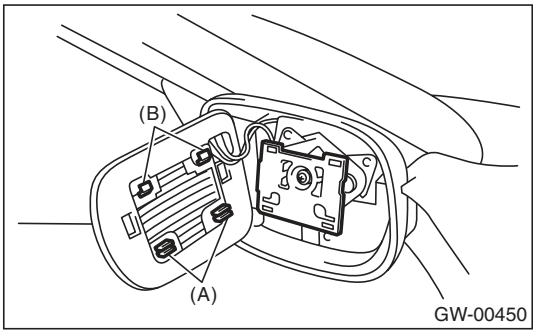

10. Remote Control Mirror Switch

A: REMOVAL

1) Remove the instrument panel lower cover. <Ref. to EI-51, REMOVAL, Instrument Panel Lower Cover.>
2) Disconnect the connector.

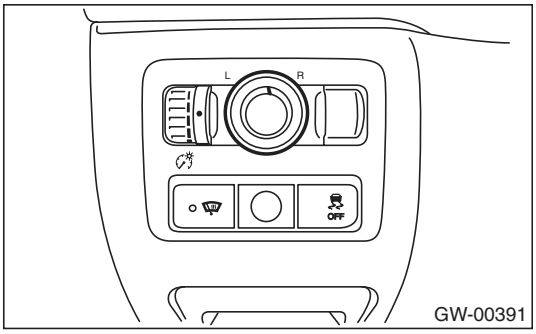

3) Remove the remote control mirror switch from instrument panel lower cover.

B: INSTALLATION

Install in the reverse order of removal.

C: INSPECTION

1. REMOTE CONTROL MIRROR SWITCH

Move the remote control mirror switch to each position and check continuity between terminals.

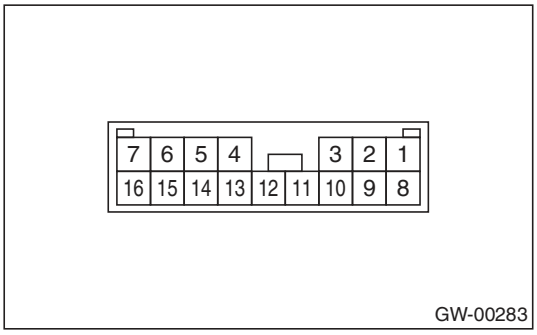

- Change over switch R

Switch position	Terminal No.	Standard
OFF	—	1 MΩ or more
UP	10 and 12 15 and 14	Less than 1 Ω
DOWN	10 and 15 12 and 14	Less than 1 Ω
LEFT	10 and 11 15 and 14	Less than 1 Ω
RIGHT	10 and 15 11 and 14	Less than 1 Ω

- Change over switch L

Switch position	Terminal No.	Standard
OFF	—	1 MΩ or more
UP	10 and 8 15 and 14	Less than 1 Ω
DOWN	10 and 15 8 and 14	Less than 1 Ω
LEFT	10 and 9 15 and 14	Less than 1 Ω
RIGHT	10 and 15 9 and 14	Less than 1 Ω

Replace the remote control mirror switch if defective.

11. Rear Door Glass

A: REMOVAL

1) Remove the rear door trim.
<Ref. to EI-49, REMOVAL, Door Trim.>
2) Remove the sealing cover. <Ref. to EB-23, REMOVAL, Rear Sealing Cover.>
3) Remove the stabilizers.

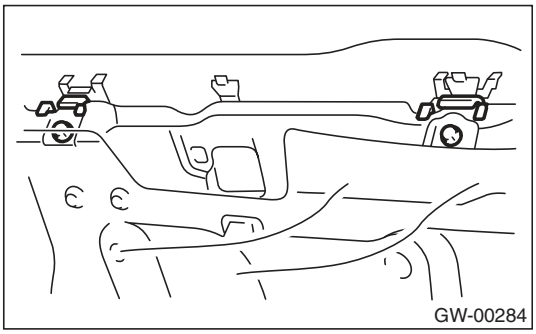

4) Remove clips (A), and remove the front end and rear end of the weather strip.

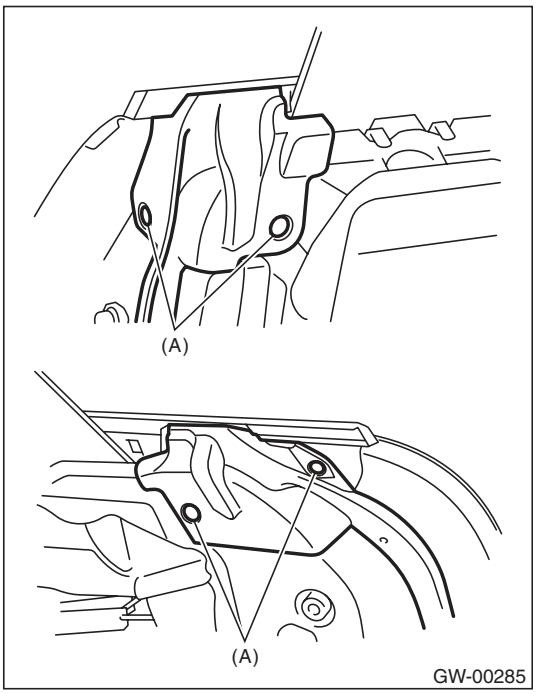

5) Remove the two screws to remove the weather strip outer.

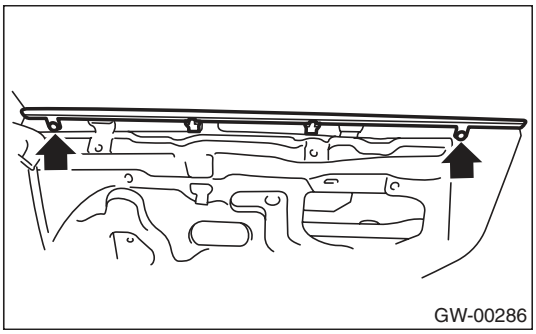

6) Connect the ground cable to battery and power window switch connector.
7) Operate the power window switch to move the glass to the position shown in the figure, then remove the two nuts through the service holes.

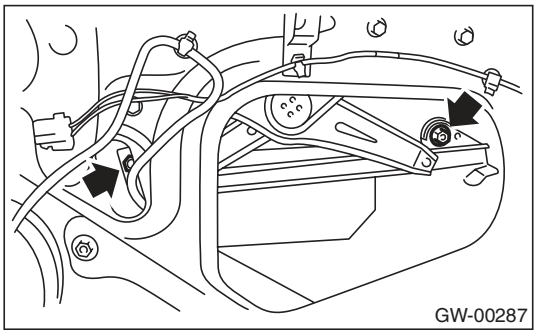

8) Remove the rear sash retaining nuts (A) and move the rear sash (B) rearward.

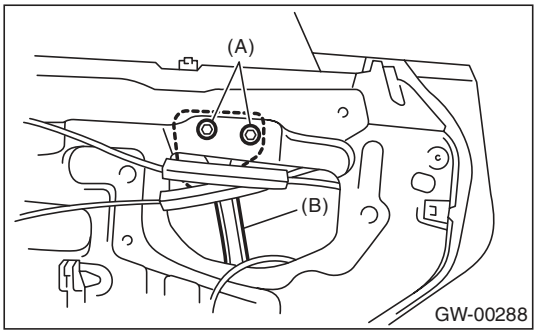

9) Remove the door glass.

CAUTION:
- **Since the gear may be disengaged, do not turn regulator in the closing direction after removing glass.**
- **Avoid impact and damage to the glass.**

B: INSTALLATION

1) Install in the reverse order of removal.

CAUTION:
Make sure that the glass stay is placed securely in sash.
2) Adjust the rear door glass. <Ref. to GW-24, ADJUSTMENT, Rear Door Glass.>

Tightening torque:
Refer to "COMPONENT" of "General Description". <Ref. to GW-5, REAR DOOR GLASS, COMPONENT, General Description.>

C: ADJUSTMENT

NOTE:
The rear door glass, as a rule, should be adjusted in the same manner as the front door glass, although they are different in dimension. <Ref. to GW-12, ADJUSTMENT, Front Door Glass.>

1) Adjust the glass position using the dimensions in the figure as a guide.

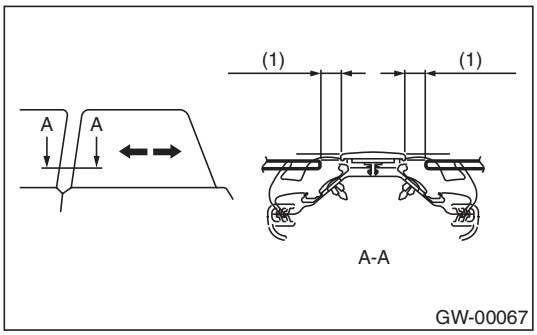

(1) 11 mm (0.433 in)

NOTE:
- If dimensions are smaller than the given dimensions, glass may get caught in weather strip during lifting/lowering operation and may not be fully open.
- After adjustment, move the glass up and down to check whether it is caught.

2) Attach the special tool to the glass, and adjust the glass adhesion until the dimensional value becomes as shown below.

ST 61299AE010 SPACER
(Glass thickness: 4 mm
(0.157 in) for rear door glass)

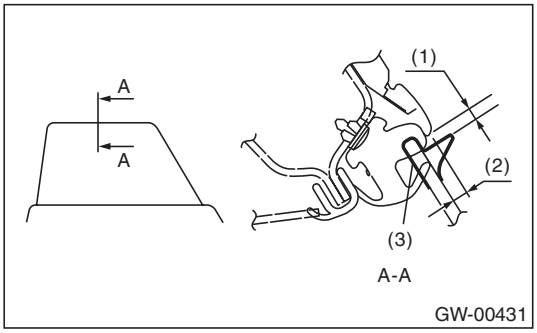

(1) 3.2 — 4.8 mm (0.126 — 0.189 in)
(2) When re-using weather strip: 5.5 mm (0.217 in)
When replacing the weather strip: 5.0 mm (0.179 in)
(3) ST

NOTE:
- If rear glass adhesion is higher than necessary, glass may get caught in weather strip of center pillar corner, resulting in early wear of weather strip. Be careful when adjusting.
- After adjustment, move the glass up and down to check whether it is caught.

12. Rear Regulator and Motor Assembly

A: REMOVAL

1) Remove the rear door glass. <Ref. to GW-23, REMOVAL, Rear Door Glass.>
2) Remove the nut (A) to remove the front sash.

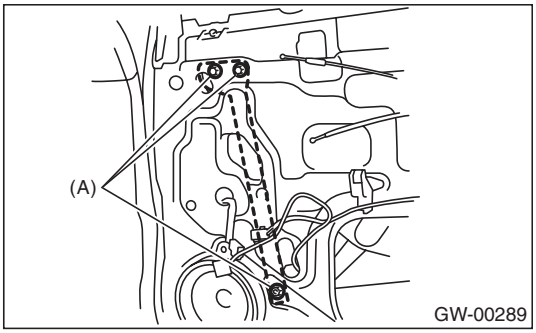

3) Disconnect the motor connector.
4) Remove the four bolts and two nuts to remove regulator assembly.

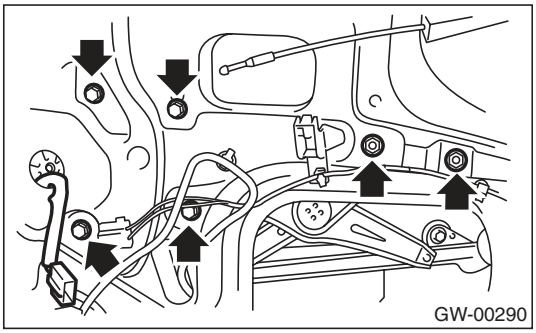

5) Remove the screws to remove motor assembly.

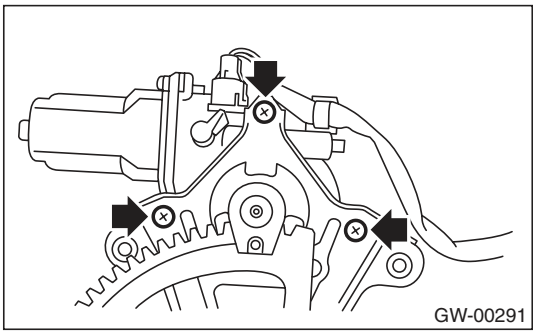

B: INSTALLATION

1) Install in the reverse order of removal.
2) Adjust the rear door glass. <Ref. to GW-24, ADJUSTMENT, Rear Door Glass.>

Tightening torque:
Refer to "COMPONENT" of "General Description". <Ref. to GW-5, REAR DOOR GLASS, COMPONENT, General Description.>

C: INSPECTION

1) Make sure that the power window motor rotates properly when the battery voltage is applied to the terminals of motor connector.
2) Change polarity of battery connection to terminals to ensure that the motor rotates in reverse direction.

13. Windshield Glass

A: REMOVAL

1. USING WINDSHIELD GLASS KNIFE

1) Disconnect the ground cable from the battery.
2) Remove the passenger side front pillar trim, and disconnect the wiper deicer connector. (Model with wiper deicer)
3) Remove the cowl panel.
<Ref. to EI-40, REMOVAL, Cowl Panel.>
4) Remove the molding.
5) Tape the body side of the circumference of windshield glass for protection.
6) Apply sufficient amount of soapy water to the adhesive part.
7) Insert the windshield glass knife into the adhesive.
8) While holding the knife edge and windshield glass edge at a right angle, move the windshield glass knife in parallel to the windshield glass edge along the surface and edge of windshield glass to cut the adhesive part.

NOTE:
- Do not twist the windshield glass knife.
- Cutting of adhesive part shall be started with wider gap between windshield glass and body.

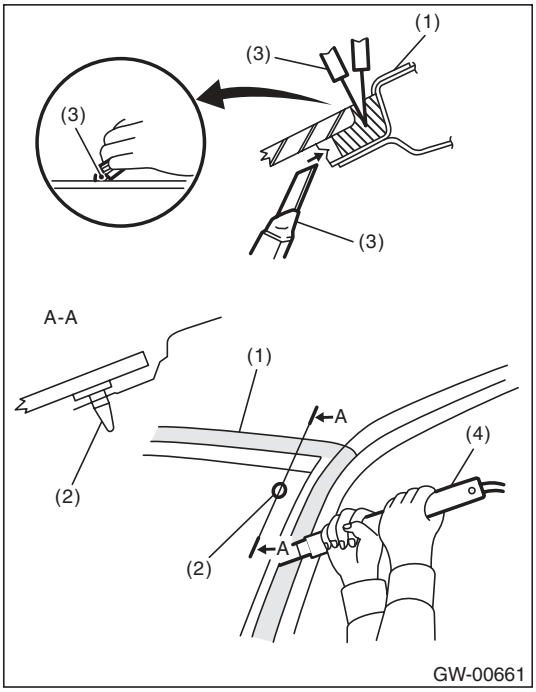

(1) Tape for protection
(2) Locating pin
(3) Cutter knife
(4) Windshield glass knife

- The locating pins are bonded to the corners of glass. Use piano wire to disconnect the pins.

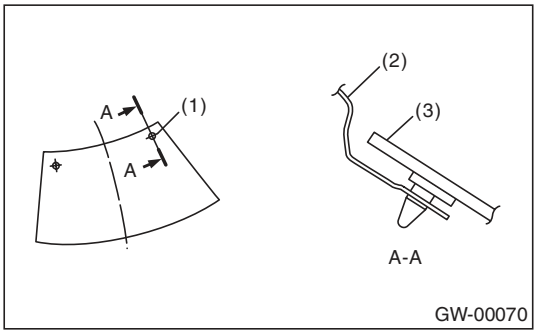

(1) Locating pin
(2) Body panel
(3) Windshield glass

2. USING PIANO WIRE

1) Disconnect the ground cable from the battery.
2) Remove the passenger side front pillar trim, and disconnect the wiper deicer connector. (Models with wiper deicer)
3) Remove the cowl panel.
<Ref. to EI-40, REMOVAL, Cowl Panel.>
4) Remove the molding.
5) Tape the body side of the circumference of windshield glass for protection.
6) Make a hole in the adhesive part using drill or knife.
7) Pass the piano wire through the hole, and attach both the wire ends securely to pieces of wood.

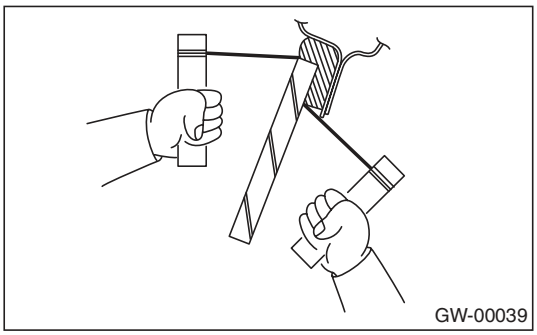

8) Pull the wire ends alternately to cut off the adhesive part.

CAUTION:
- **Do not tightly pull the piano wire against the windshield glass edge.**
- **Be careful not to damage interior and exterior parts.**
- **When removal is made with area close to instrument panel, place a protection plate over it. Pay particular attention to the removal.**
- **Do not cross piano wires. Otherwise they may be cut.**

B: INSTALLATION

1) Clean the external circumference of windshield glass with alcohol or white gasoline.
2) Remove the adhesive layer on the body using cutter knife to obtain smooth face of 2 mm (0.08 in) thick.

CAUTION:
Be careful not to damage the body and paint surface.

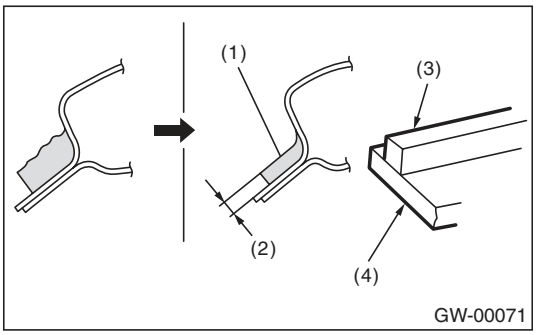

(1) Adhesive
(2) 2 mm (0.08 in)
(3) Dam rubber
(4) Glass

3) Clean the body with alcohol or white gasoline to eliminate cutting powder, dust and dirt completely from body.

4) Install the dam rubber.

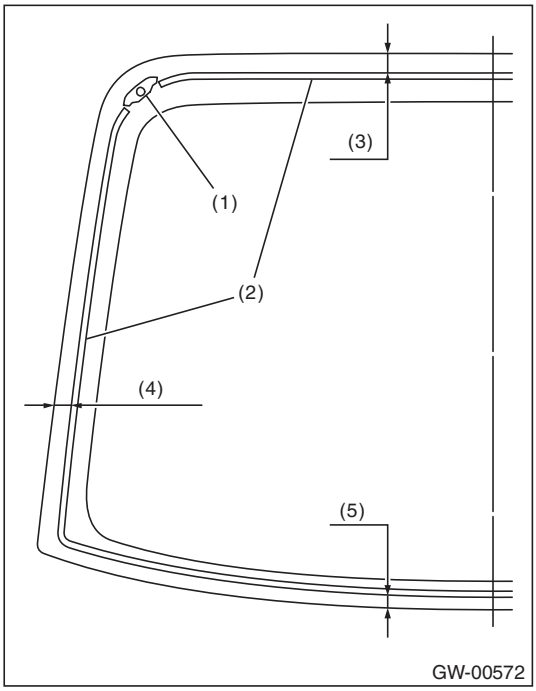

(1) Locating pin (adhered)
(2) Dam rubber
(3) 11 mm (0.433 in)
(4) 11 mm (0.433 in)
(5) 9 mm (0.354 in)

5) Fit the mark (B) on molding to the notch (A) of glass side, and install the molding to entire perimeter of glass.

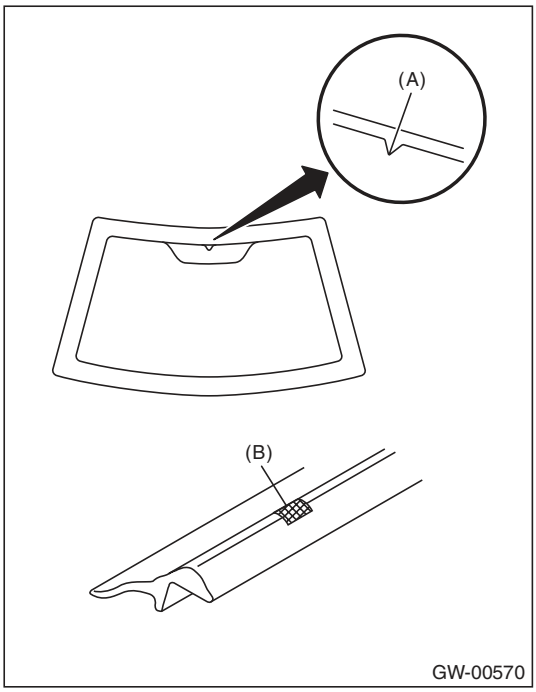

6) Apply two types of primers to the adhesive layer of glass using sponge.

Glass primer:
Dow Automotive
ESSEX U-401, U-402

7) Apply the primer to the adhesive layer of body.

Painted surface primer:
Dow Automotive
ESSEX U-413

NOTE:
- Primer once attached to the painted surface of the body and internal trim is hard to wipe off. Mask the circumference of such area.
- Let primer dry for about ten minutes before installing the glass.
- Do not touch the surface coated with primer.

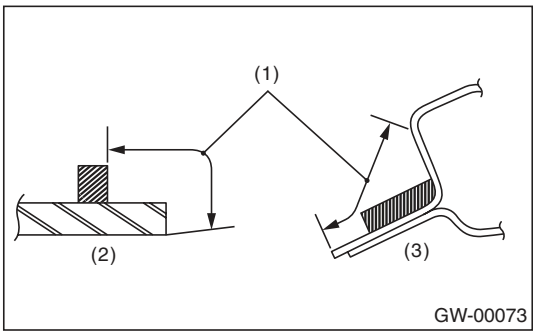

(1) Application of primer
(2) Glass side
(3) Body side

8) Cut off the cartridge nozzle tip as shown and set it in sealant gun.

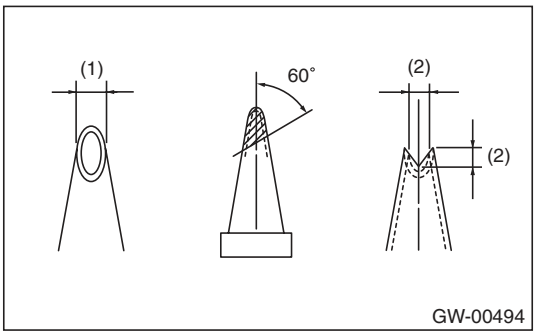

(1) 10 mm (0.39 in)
(2) 9 mm (0.35 in)

9) Apply adhesive to the glass end surface as shown.

Adhesive:
Dow Automotive
ESSEX U-400HV or equivalent

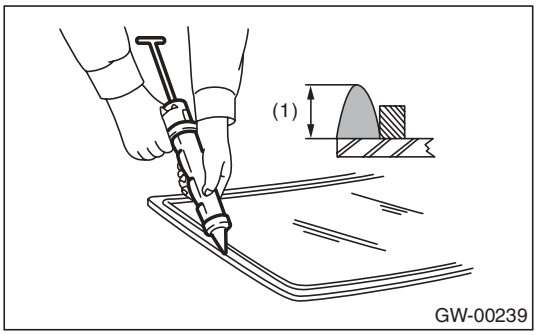

(1) 9 — 12 mm (0.35 — 0.47 in)

10) Fit the locating pins, and install windshield glass using suction rubber cup.

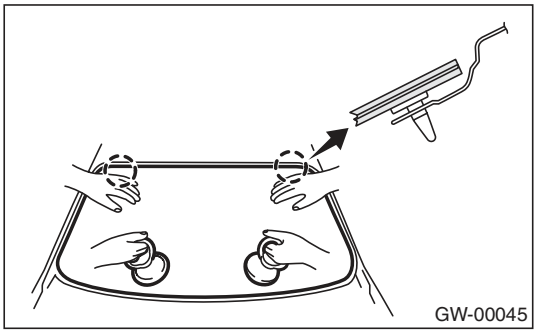

11) Lightly press the windshield glass for tight fit.
12) Make flush the adhesive surface jutted out using spatula.
13) After completion of all work, allow the vehicle to stand for about 24 hours.

NOTE:
- When door is opened/closed after glass is bonded, always lower the door glass first, and then open/close it carefully.
- Move the vehicle slowly.
- For minimum drying time and vehicle standing time before driving after bonding, follow instructions or instruction manual from the adhesive manufacturer.

14) After curing of adhesive, pour the water on external surface of vehicle to check that there are no water leaks.

NOTE:
When a vehicle is returned to the user, tell him or her that the vehicle should not be subjected to heavy impact for at least three days.

15) Install the cowl panel. <Ref. to EI-40, INSTALLATION, Cowl Panel.>
16) Connect the wiper deicer connector and attach the front pillar trim of the passenger's side. (Model with wiper deicer)

14. Rear Gate Glass

A: REMOVAL

1) Remove the rear wiper motor.
<Ref. to WW-18, REMOVAL, Rear Wiper Motor.>
2) Disconnect the electrical connectors from rear defogger terminal.
3) Remove the glass in the same procedure as for windshield glass. <Ref. to GW-26, REMOVAL, Windshield Glass.>

B: INSTALLATION

1) Apply adhesive in the same procedure as for windshield glass. <Ref. to GW-27, INSTALLATION, Windshield Glass.>
2) Insert the glass clip pin into rear gate hole, push on the area around the clip pin to secure it, and then push lightly all around the area to seal it.
3) About one hour after installation, conduct a leak test.

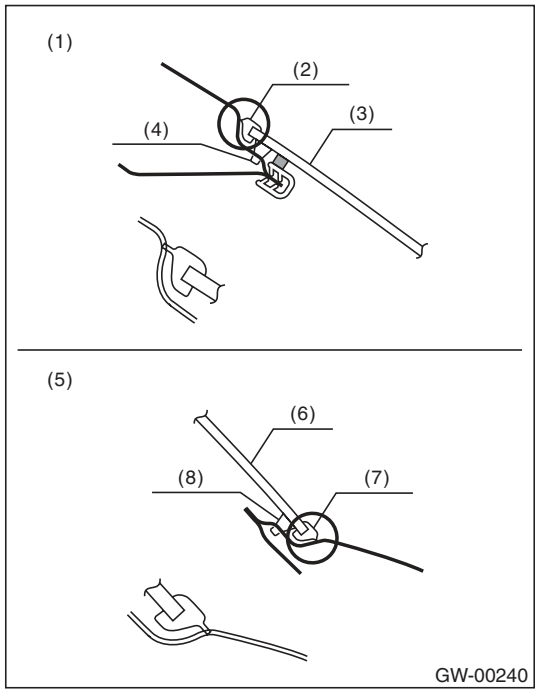

(1) Upside
(2) Molding
(3) Glass
(4) Adhesive
(5) Downside
(6) Glass
(7) Molding
(8) Adhesive

4) After completion of all work, allow the vehicle to stand for about 24 hours.

NOTE:
- When door is opened/closed after glass is bonded, always lower the door glass first, and then open/close it carefully.
- Move the vehicle slowly.
- For minimum drying time and vehicle standing time before driving after bonding, follow instructions or instruction manual from the adhesive manufacturer.
- When a vehicle is returned to the user, tell him or her that the vehicle should not be subjected to heavy impact for at least three days.

5) Connect the rear defogger terminals.
6) Install the rear wiper.
<Ref. to WW-18, INSTALLATION, Rear Wiper Motor.>

15. Rear Window Glass

A: REMOVAL

1) Disconnect the ground cable from the battery.
2) Disconnect the electrical connectors from rear defogger terminal.
3) Remove the glass in the same procedure as for windshield glass. <Ref. to GW-26, REMOVAL, Windshield Glass.>

B: INSTALLATION

1) Adhere the dam rubber.

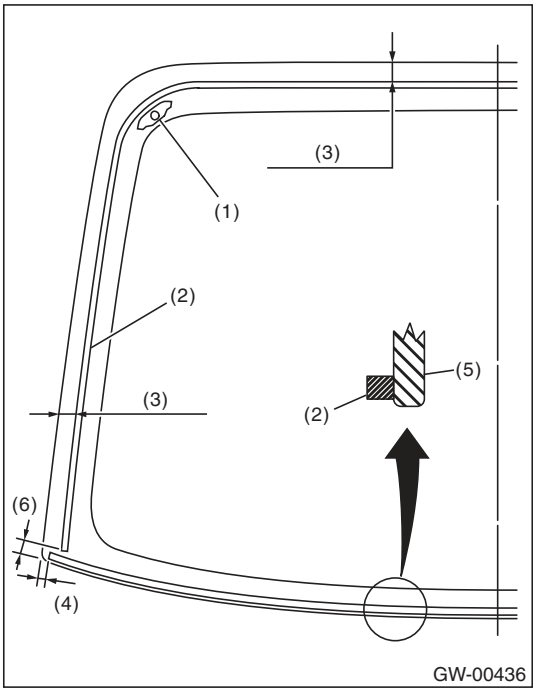

(1) Locating pin (adhered)
(2) Dam rubber
(3) 11 mm (0.433 in)
(4) 4 mm (0.157 in)
(5) Rear window glass
(6) 40 mm (1.575 in)

2) Install the glass in the same procedure as for windshield glass. <Ref. to GW-27, INSTALLATION, Windshield Glass.>
3) Connect the rear defogger and antenna terminal connectors.
4) After completion of all work, allow the vehicle to stand for about 24 hours.

NOTE:
- When door is opened/closed after glass is bonded, always lower the door glass first, and then open/close it carefully.
- Move the vehicle slowly.
- For minimum drying time and vehicle standing time before driving after bonding, follow instructions or instruction manual from the adhesive manufacturer.

5) After curing of adhesive, pour the water on external surface of vehicle to check that there are no water leaks.

NOTE:
When a vehicle is returned to the user, tell him or her that the vehicle should not be subjected to heavy impact for at least three days.

16. Rear Window Defogger System

A: WIRING DIAGRAM

<Ref. to WI-165, Rear Defogger System.>

B: INSPECTION

Symptom	Repair order
Rear window defogger does not operate.	1. Fuse (M/B No. 10) (F/B No. 22) 2. Rear defogger relay 3. Defogger switch 4. Rear defogger condenser 5. Defogger wire 6. Wiring harness 7. Body integrated unit

NOTE:
Rear window defogger system can be customized on the center display touch screen or on the Subaru Select Monitor.

System name	Initial setting	Customize setting
Rear window defogger timer	OFF after 15 min.	Repeat 15 min. operation and 2 min. stop.

1. CHECK WITH SUBARU SELECT MONITOR

CAUTION:
Check that the rear window defogger timer is in initial setting or customize setting before performing inspection.

1) Check the input signal when the rear window defogger switch is operated using Subaru Select Monitor.
   (1) Prepare the Subaru Select Monitor.
   (2) Turn the ignition switch to ON (engine OFF) and run the “PC application for Subaru Select Monitor”.
   (3) On the «System Selection Menu» display, select the {Integ. unit mode}.
   (4) Select the {Current Data Display & Save}.
   (5) Display the data of rear window defogger switch.
2) After rear defogger switch is set to ON, check whether it turns to OFF in 15 minutes or repeats 15 minutes operation and 2 minutes stop?
3) When it becomes OFF on above 2), it is normal. When it repeats 15 minutes operation and 2 minutes stop, replace body integrated unit.

2. HEAT WIRE INSPECTION

CAUTION:
Use a dry and soft cloth when wiping dirt off the glass. Move the cloth along the heat wire to avoid damaging it.

1) Turn the ignition switch to ON.
2) Turn the defogger switch to ON.
3) Wrap the tips of tester probe with aluminum foil to avoid damage to heat wire.

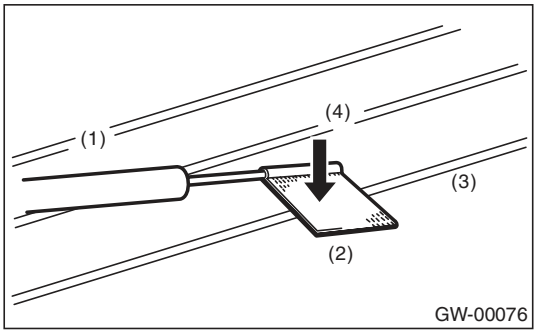

(1) Tester probe
(2) Aluminum foil
(3) Heat wire
(4) Press

4) Measure the voltage at heat wire center with DC voltmeter.

Standard voltage:
Approx. 6 V

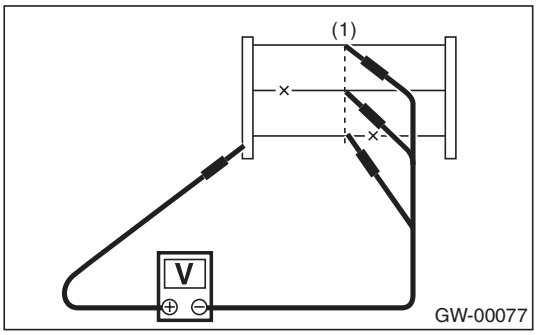

(1) Center of heat wire

Voltage	Criteria
Approx. 6 V	Normal
Approx. 12 V or 0 V	Open

NOTE:
- If the measured value is 12 V, heat wire is open between heat wire center and positive (+) terminal of tester probe.
- If it is 0 V, the circuit is open between heat wire center and ground.

5) Connect the tester probe of positive lead of voltmeter to positive terminal of heat wire and move tester probe of negative lead along the heat wire up to the negative terminal end. If voltage changes from zero to several volts during movement of tester probe, heat wire is open at the voltage change point.

6) Repair the heat wire that determine the place of the open circuit. <Ref. to GW-32, REPAIR, Rear Window Defogger System.>

C: REPAIR

1) Clean the broken portion with alcohol or white gasoline.
2) Mask both side of wire with thin film.
3) Apply the conductive silver composition (DU-PONT No. 4817) to the broken portion.

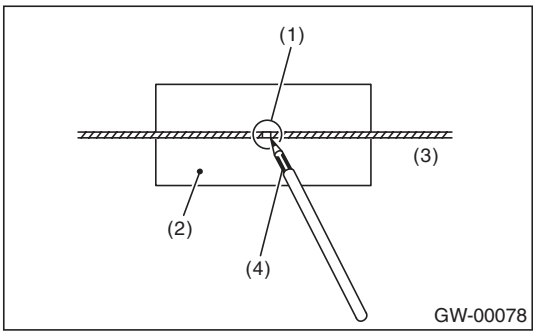

(1) Broken portion
(2) Thin film
(3) Broken wire
(4) Conductive silver composition (DUPONT No. 4817)

4) After repair, check the wire.

17. Rear Quarter Glass

A: REMOVAL

1. SEDAN MODEL

Remove the glass in the same procedure as for windshield glass. <Ref. to GW-26, REMOVAL, Windshield Glass.>

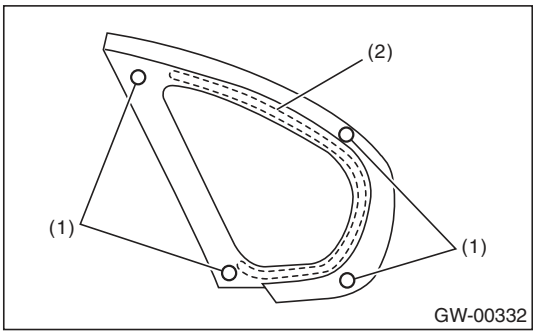

(1) Locating pin
(2) Dam rubber

2. WAGON MODEL

Remove the glass in the same procedure as for windshield glass. <Ref. to GW-26, REMOVAL, Windshield Glass.>

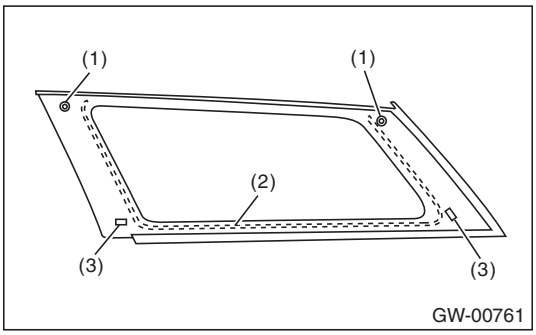

(1) Locating pin
(2) Dam rubber
(3) Fastener

B: INSTALLATION

1. SEDAN MODEL

1) Install the dam rubber.

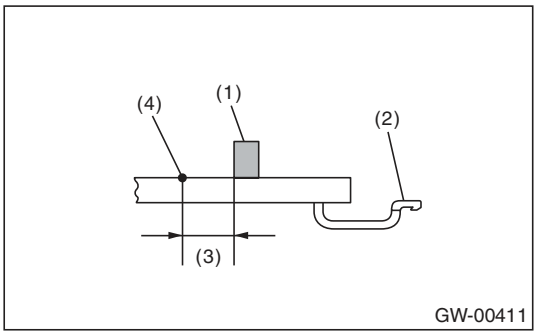

(1) Dam rubber
(2) Molding
(3) 10.5 mm (0.413 in) (constant)
(4) Ceramic terminal

2) Cut off the cartridge nozzle tip as shown and set it in sealant gun.

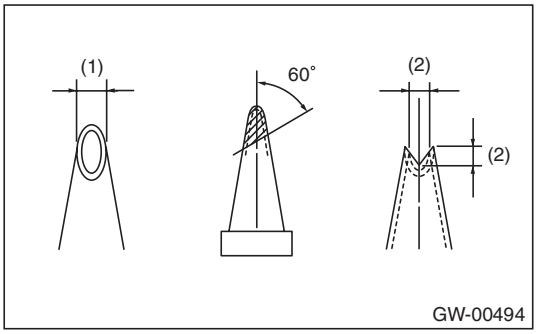

(1) 10 mm (0.39 in)
(2) 8 mm (0.31 in)

3) Apply adhesive to the glass end surface as shown.

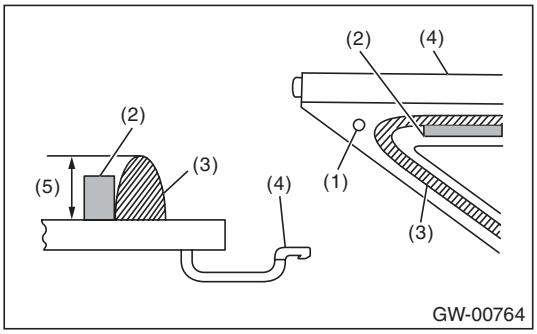

(1) Locating pin
(2) Dam rubber
(3) Adhesive
(4) Molding
(5) 8 — 10 mm (0.31 — 0.39 in)

4) Install the glass in the same procedure as for windshield glass. <Ref. to GW-27, INSTALLATION, Windshield Glass.>
5) After completion of all work, allow the vehicle to stand for about 24 hours.

NOTE:
- When door is opened/closed after glass is bonded, always lower the door glass first, and then open/close it carefully.
- Move the vehicle slowly.
- For minimum drying time and vehicle standing time before driving after bonding, follow instructions or instruction manual from the adhesive manufacturer.

6) After curing of adhesive, pour the water on external surface of vehicle to check that there are no water leaks.

NOTE:
When a vehicle is returned to the user, tell him or her that the vehicle should not be subjected to heavy impact for at least three days.

2. WAGON MODEL

1) Install the dam rubber.

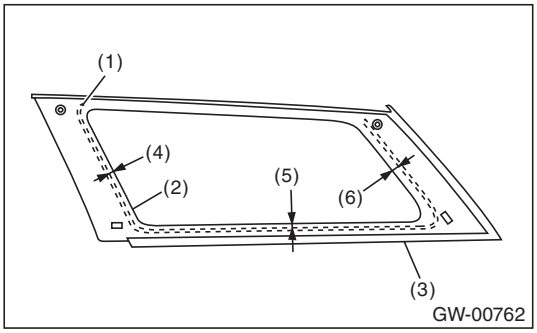

(1) Dam rubber
(2) Ceramic terminal
(3) Molding
(4) 17.5 mm (0.69 in)
(5) 13.5 mm (0.53 in)
(6) 16.5 mm (0.65 in)

2) Cut off the cartridge nozzle tip as shown and set it in sealant gun.

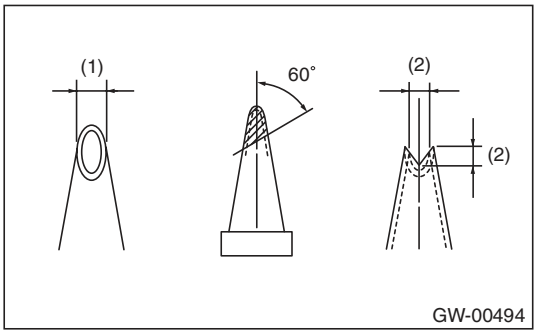

(1) 10 mm (0.39 in)
(2) 8 mm (0.31 in)

3) Apply adhesive to the glass end surface as shown.

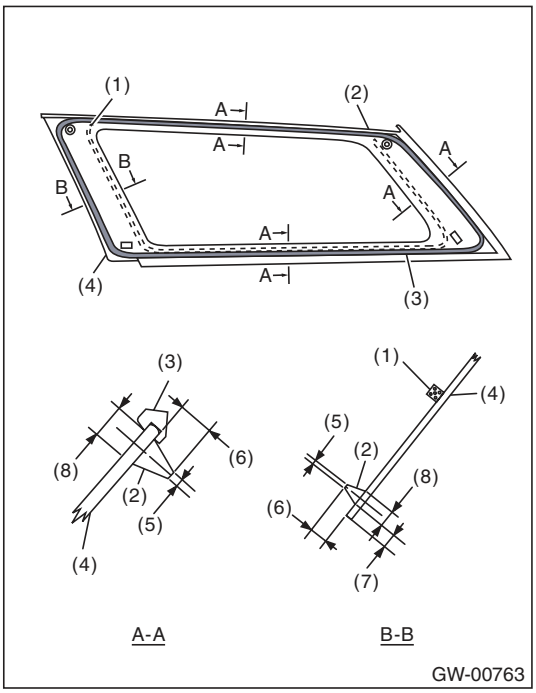

(1) Dam rubber
(2) Molding
(3) Adhesive
(4) Glass
(5) 2 mm (0.08 in)
(6) 8 — 10 mm (0.31 — 0.39 in)
(7) 7 mm (0.28 in)
(8) 8 mm (0.31 in)

4) Install the glass in the same procedure as for windshield glass. <Ref. to GW-27, INSTALLATION, Windshield Glass.>

5) After completion of all work, allow the vehicle to stand for about 24 hours.

NOTE:
- When door is opened/closed after glass is bonded, always lower the door glass first, and then open/close it carefully.
- Move the vehicle slowly.
- For minimum drying time and vehicle standing time before driving after bonding, follow instructions or instruction manual from the adhesive manufacturer.

6) After curing of adhesive, pour the water on external surface of vehicle to check that there are no water leaks.

NOTE:
When a vehicle is returned to the user, tell him or her that the vehicle should not be subjected to heavy impact for at least three days.

18. Sunroof Glass

A: PROCEDURE

For sunroof glass removal, installation and adjustment, refer section of sunroof.

- Removal <Ref. to SR-6, REMOVAL, Glass Lid.>
- Installation <Ref. to SR-7, INSTALLATION, Glass Lid.>
- Adjustment <Ref. to SR-7, ADJUSTMENT, Glass Lid.>

19. Rearview Mirror

A: REMOVAL

CAUTION:
- **Be careful not to damage the mirror surface.**
- **Be careful not to damage the windshield glass.**

1) Remove the TORX® screw (1).
2) Slide the rearview mirror (2) to the upper side (A) of the windshield glass (3), and remove the rearview mirror from the button (4).

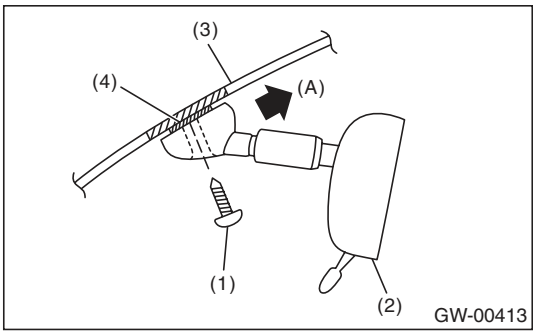

B: INSTALLATION

CAUTION:
When tightening the mounting TORX® screw, be sure to observe the tightening torque. Otherwise, the mount may be damaged in over-torque conditions.
Install in the reverse order of removal.

Tightening torque:
Refer to "COMPONENT" of "General Description". <Ref. to GW-6, MIRROR, COMPONENT, General Description.>

C: INSPECTION

Check that the mirror is not damaged.
Check that the spring is not damaged.

20. Wiper Deicer System

A: WIRING DIAGRAM

<Ref. to WI-147, Wiper Deicer System.>

B: INSPECTION

1. CHECK SYSTEM

Symptom	Repair order
Wiper deicer does not operate.	1. Fuse (F/B No. 4, 9) 2. Wiper deicer relay 3. Wiper deicer switch 4. Wiring harness 5. Body integrated unit

NOTE:
Wiper deicer system can be customized on the center display touch screen or on the Subaru Select Monitor.

System name	Initial setting	Customize setting
Wiper deicer timer	OFF after 15 min.	Continuous operation*

*: When one of the following conditions occurs, continuous operation is suspended and turned off after 15 min.

- Ambient temperature at 5°C (41°F) or more continues for 10 seconds
- A/C ECO mode ON continues for 10 sec.
- Malfunction occurs on ambient sensor.
- Vehicle speed below 15 km/h (9 MPH) continues 15 min.
- Malfunction occurs in CAN communication.

2. HEAT WIRE INSPECTION

Refer to “HEAT WIRE INSPECTION” of “Rear Window Defogger System”.
<Ref. to GW-31, HEAT WIRE INSPECTION, INSPECTION, Rear Window Defogger System.>

NOTE:
For heat wire inspection needs removing/installing procedure of instrument panel assembly.

C: REPAIR

Refer to “Rear Window Defogger System”.
<Ref. to GW-32, REPAIR, Rear Window Defogger System.>

NOTE:
For heat wire repair needs removing/installing procedure of instrument panel assembly.

21.Wiper Deicer Switch

A: REMOVAL

1) Remove the instrument panel lower cover. <Ref. to EI-51, REMOVAL, Instrument Panel Lower Cover.>
2) Disconnect the harness connector and remove wiper deicer switch.

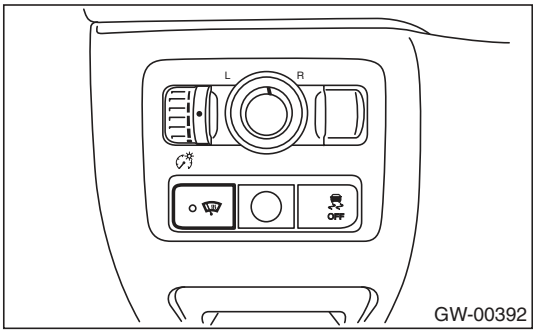

B: INSTALLATION

Install in the reverse order of removal.

C: INSPECTION

1. CHECK WITH SUBARU SELECT MONITOR

CAUTION:
Check whether the wiper deicer timer is in initial setting or customize setting before performing inspection.

1) Check the input signal when the wiper deicer switch is operated using Subaru Select Monitor.
   (1) Prepare the Subaru Select Monitor kit. <Ref. to GW-7, PREPARATION TOOL, General Description.>
   (2) Turn the ignition switch to ON (engine OFF) and run the “PC application for Subaru Select Monitor”.
   (3) On the «System Selection Menu» display, select the {Integ. unit mode}.
   (4) Select the {Current Data Display & Save}.
   (5) Display the data of wiper deicer switch.
2) After the wiper deicer switch is set to ON, check whether it turns OFF in 15 minutes or operates continuously.
3) When it becomes OFF on above 2), it is normal. When it operates continuously, replace the body integrated unit.

2. CHECK SWITCH

Remove the wiper deicer switch, and measure the switch resistance.

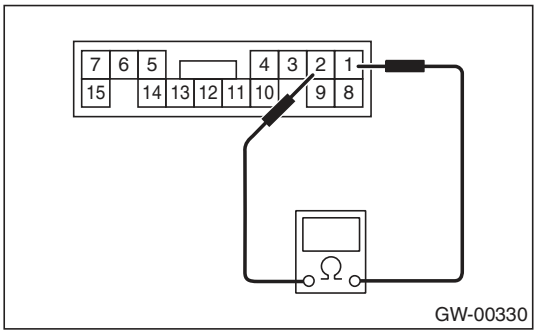

Switch position	Terminal No.	Standard
OFF	1 and 2	1 MΩ or more
ON		Less than 1 Ω

Replace the wiper deicer switch if faulty.

1. General Description

A: PREPARATION TOOL

TOOL NAME	REMARKS
Tram tracking gauge	Used for measuring dimension.
Tape measure	Used for measuring dimension.

2. Datum Dimensions

A: MEASUREMENT

NOTE:
- Using a tram tracking gauge, measure all the dimensions.
- When using a tape measure, carefully measure dimensions without letting the tape measure sag or twist.
- Measure the linear dimensions between cores of holes.
- Suffixes “RH” and “LH” indicate right-hand and left-hand.

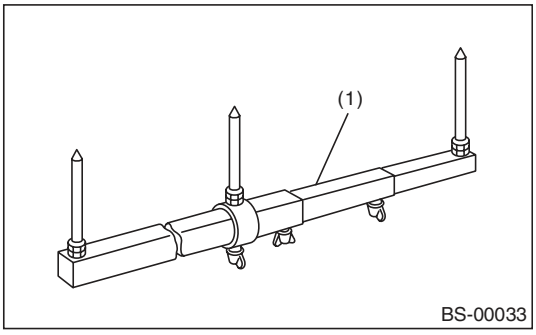

(1) Tram tracking gauge

- Measure at the center of the circle around the outside of the body panel.

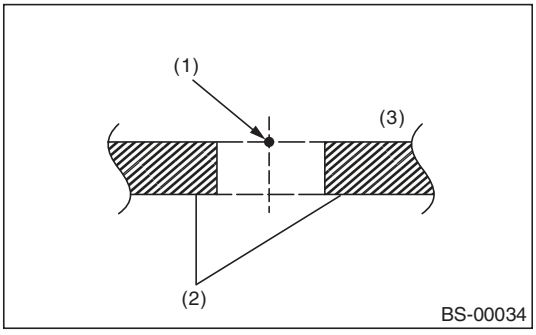

(1) Datum points
(2) Body panel
(3) Outside

1. CENTER STRUCTURE

NOTE:
- Longitudinal dimensions are projected dimensions.
- The height dimensions are the vertical distances from the gauge point on the assumed horizontal line through the side sill flange joint (bending angle point).
- Diagonal dimensions are the actual dimensions between reference points. The values in brackets are projected dimensions for reference.

Unit: mm

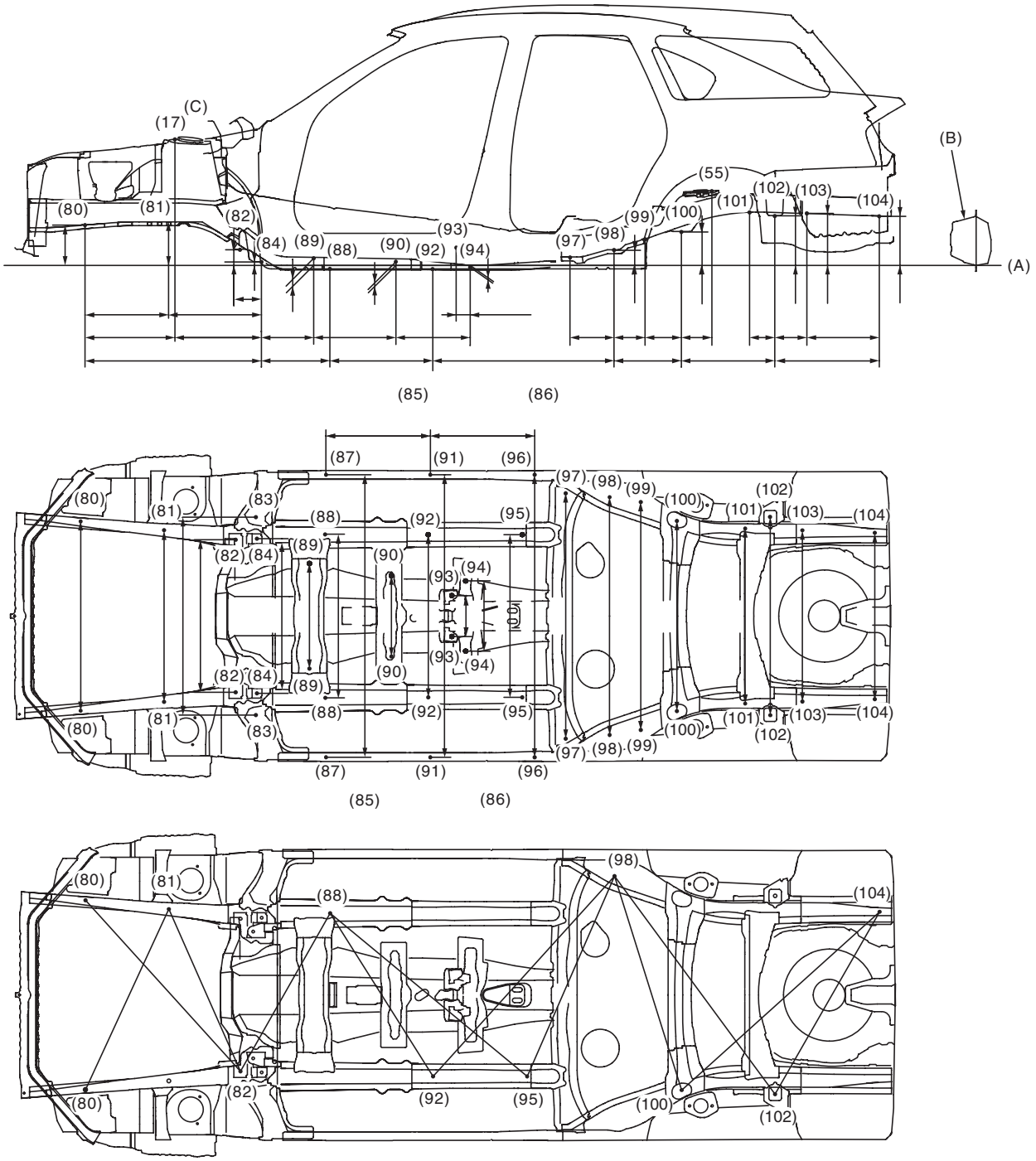

BS-01530

(A) Standard line

(80) Gauge hole (symmetrical)
(81) Front crossmember mounting hole (symmetrical), Lower surface rear
(82) Front arm mounting hole (symmetrical)
(83) Strut mount mounting hole (symmetrical)
(84) Strut mount mounting hole (symmetrical)
(85) Transmission crossmember mounting hole (symmetrical)
(86) Drain hose mounting hole (symmetrical)
(87) Under cover mounting hole (symmetrical)
(88) Under cover mounting hole (symmetrical)

(B) Side sill

(89) Transmission crossmember mounting hole (symmetrical)
(90) Gauge hole (symmetrical)
(91) Under cover mounting hole (symmetrical)
(92) Under cover mounting hole (symmetrical)
(93) Center bearing mounting hole (symmetrical)
(94) Exhaust cover mounting hole (symmetrical)
(95) Weight reduction hole (symmetrical)
(96) Under cover mounting hole (symmetrical)

(C) Upper face

(97) Fuel protector mounting hole (symmetrical)
(98) Trailing arm mounting hole (symmetrical)
(99) Trailing arm mounting hole (symmetrical)
(100) Rear suspension crossmember mounting hole (symmetrical)
(101) Canister hose mounting hole (symmetrical)
(102) Rear suspension crossmember mounting hole (symmetrical)
(103) Gauge hole (symmetrical)
(104) Weight reduction hole (symmetrical)

Datum Dimensions

Point of measurement	Dimension mm (in)
Datum line to (80)	198 (7.80)
Datum line to (81)	212 (8.35)
Datum line to (82)	77 (3.03)
Datum line to (84)	17 (0.07)
Datum line to (89)	(4AT and MT) 35 (1.38) (5AT) 56 (2.20)
Datum line to (90)	18 (0.71)
Datum line to (94)	–9 (–0.35)
Datum line to (98)	75 (2.95)
Datum line to (100)	164 (6.46)
Datum line to (102)	243 (9.57)
Datum line to (103)	255 (10.04)
Datum line to (104)	241 (9.49)
(17) to (80)	439 (17.28)
(17) to (84)	423 (16.65)
(80) to (81)	408 (16.06)
(80) to (84)	862 (33.94)
(81) to (84)	454 (17.87)
(82) to (84)	104 (4.09)
(84) to (88)	335 (13.19)
(84) to (89)	(4AT and MT) 257 (10.12) (5AT) 357 (14.06)
(88) to (92)	503 (19.80)
(89) to (90)	302 (11.89)
(90) to (94)	363 (14.29)
(92) to (98)	887 (34.92)
(93) to (94)	68 (2.68)
(97) to (98)	215 (8.46)
(98) to (99)	152 (5.98)
(98) to (100)	329 (12.95)
(99) to (100)	177 (6.97)
(100) to (55)	149 (5.87)
(100) to (102)	457 (17.99)
(101) to (102)	123 (4.84)
(102) to (103)	157 (6.18)
(102) to (104)	505 (19.88)
(103) to (104)	348 (13.70)
(80) RH to (80) LH	926 (36.46)
(81) RH to (81) LH	840 (33.07)
(82) RH to (82) LH	746 (29.37)
(83) RH to (83) LH	968 (38.11)
(84) RH to (84) LH	756 (29.76)
(87) RH to (87) LH	1,382 (54.41)
(87) to (91)	510 (20.08)
(88) RH to (88) LH	800 (31.50)
(89) RH to (89) LH	(4AT and MT) 529 (20.83) (5AT) 433 (17.05)
(90) RH to (90) LH	396 (15.59)
(91) RH to (91) LH	1,382 (54.41)
(91) to (96)	510 (20.08)

Point of measurement	Dimension mm (in)
(92) RH to (92) LH	796 (31.34)
(93) RH to (93) LH	200 (7.87)
(94) RH to (94) LH	343 (13.50)
(95) RH to (95) LH	796 (31.34)
(96) RH to (96) LH	1,382 (54.51)
(97) RH to (97) LH	1,200 (47.24)
(98) RH to (98) LH	1,163 (45.49)
(99) RH to (99) LH	1,115 (43.90)
(100) RH to (100) LH	930 (36.61)
(101) RH to (101) LH	856 (33.70)
(102) RH to (102) LH	970 (38.19)
(103) RH to (103) LH	836 (32.91)
(104) RH to (104) LH	814 (32.05)
(85)	Height 86 (3.39), Width 620 (24.41)
(86)	Height 117 (4.61), Width 600 (23.62)

Point of measurement	Dimension/Projected Dimensions For Reference mm (in)
(80) RH to (82) LH	1,135 (44.68)/1,128 (44.41)
(80) LH to (81) RH	973 (38.31)/973 (38.31)
(81) RH to (82) LH	877 (34.53)/867 (34.13)
(82) LH to (88) LH	894 (35.20)/889 (35.00)
(88) RH to (92) LH	943 (37.13)/943 (37.13)
(88) RH to (95) LH	1,251 (49.25)/1,251 (49.25)
(92) LH to (98) RH	1,325 (52.17)/1,321 (52.01)
(95) LH to (98) RH	1,072 (42.20)/1,069 (42.09)
(98) RH to (100) LH	1,101 (43.35)/1,097 (43.19)
(98) RH to (102) LH	1,335 (52.56)/1,325 (52.17)
(100) LH to (104) RH	1,305 (51.38)/1,303 (51.30)
(102) LH to (104) RH	1,028 (40.47)/1,028 (40.47)

Datum Dimensions

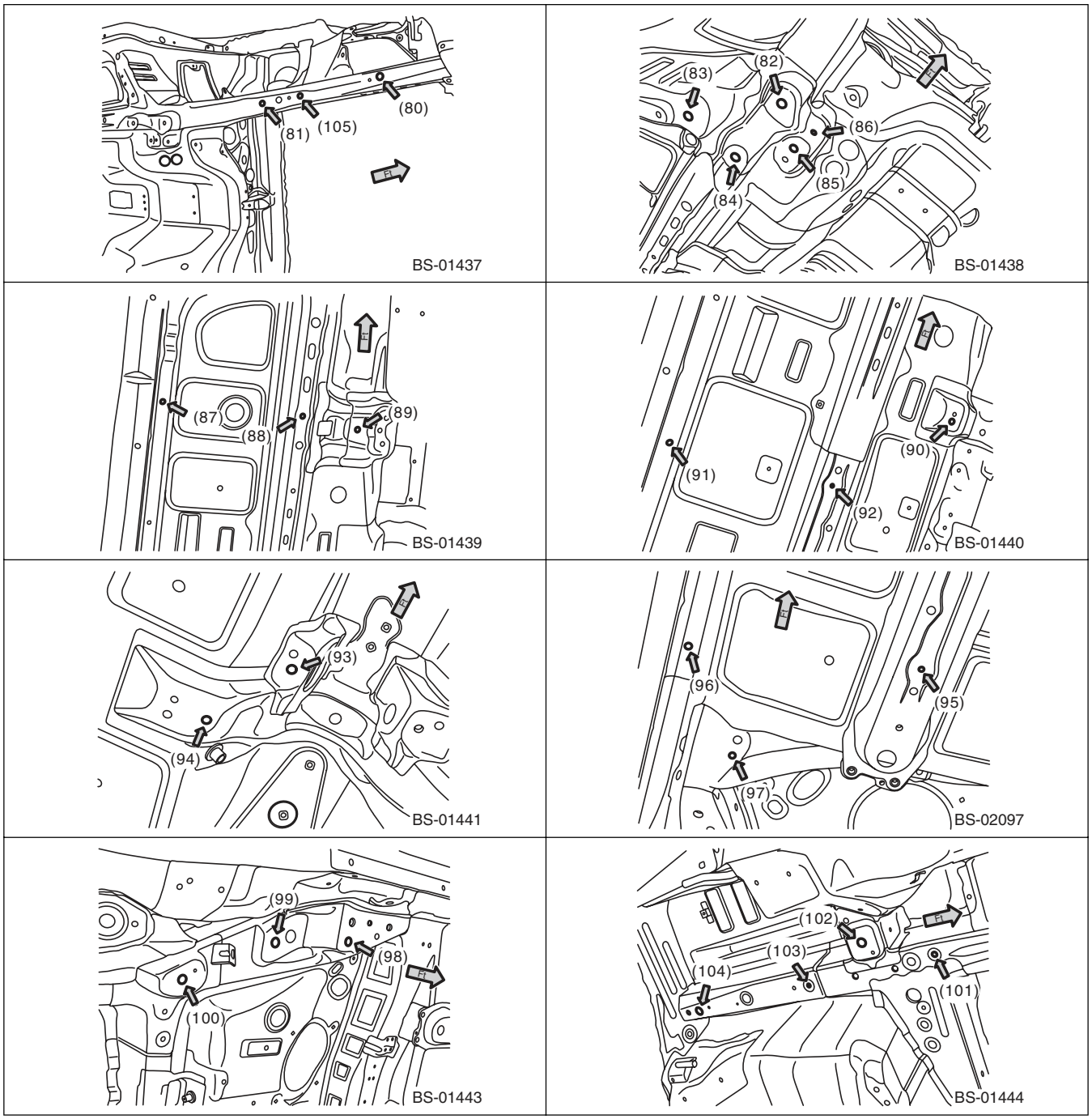

NOTE:
For reference point (17) Strut mounting hole (symmetrical), refer to “Datum Dimensions”. <Ref. to BS-8, FRONT STRUCTURE, MEASUREMENT, Datum Dimensions.>
For reference point (55) Rear suspension mounting hole (symmetrical), refer to “Datum Dimensions”. <Ref. to BS-11, INSIDE, MEASUREMENT, Datum Dimensions.>

2. FRONT STRUCTURE

- Common for wagon and sedan model

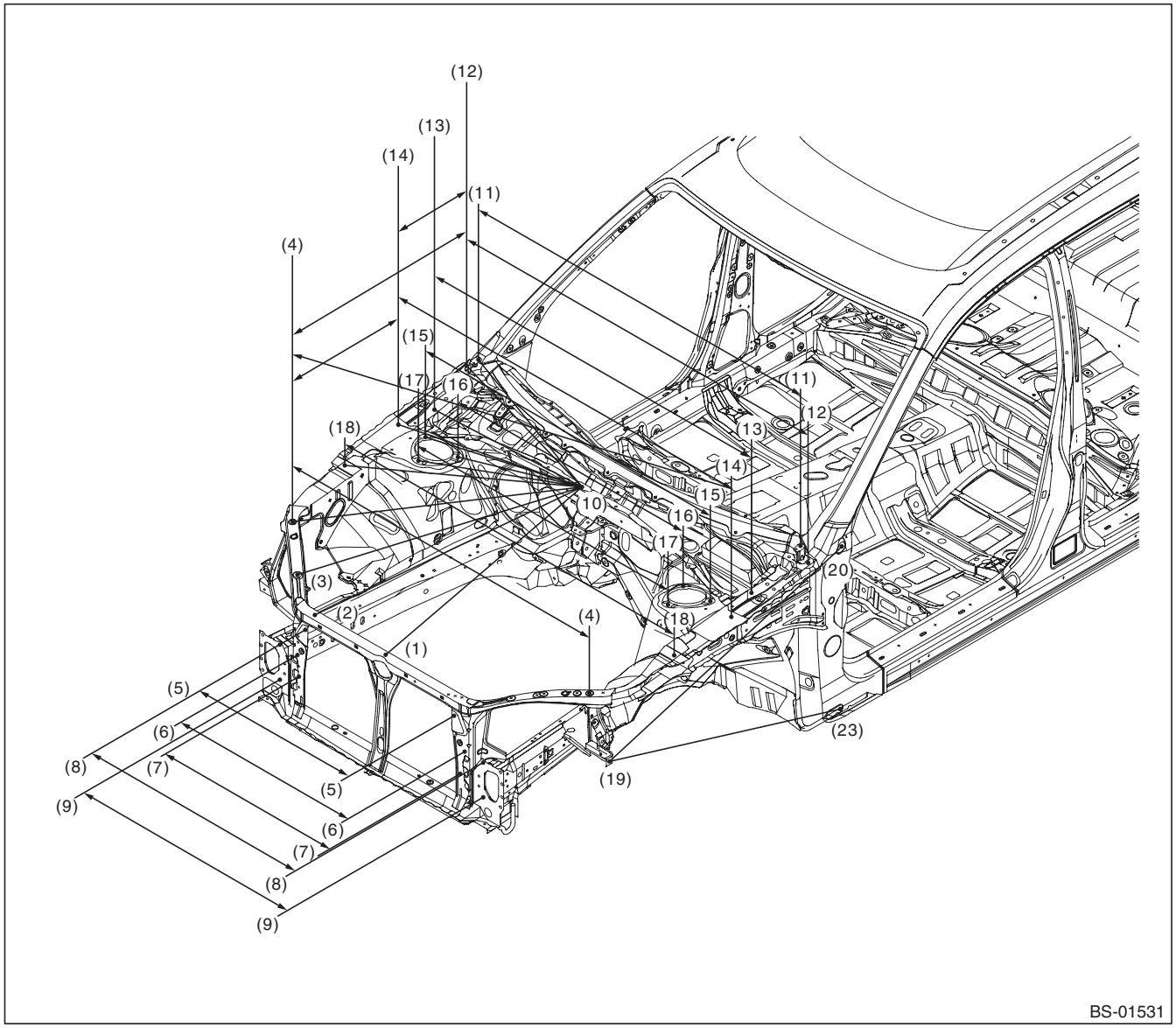

(1) Repair location hole (body center)
(2) Radiator mounting hole
(3) Headlight mounting hole (symmetrical)
(4) Reinforcement fender mounting hole (symmetrical)
(5) Air conditioner condenser mounting hole (symmetrical)
(6) Beam corner side mounting hole (symmetrical)
(7) Heat insulation cover mounting hole (symmetrical)
(8) Bumper beam mounting hole (symmetrical), upper side
(9) Bumper beam mounting hole (symmetrical), lower side
(10) Cowl panel mounting hole (body center)
(11) Fender mounting hole (symmetrical)
(12) Location hole (symmetrical)
(13) Hood hinge mounting hole (symmetrical), front
(14) Fender extension mounting hole (symmetrical)
(15) Strut mount mounting hole (symmetrical), rear outside
(16) Strut mount mounting hole (symmetrical), rear inside
(17) Strut mount mounting hole (symmetrical), front
(18) Fender mounting hole (symmetrical)
(19) Fender mounting hole (symmetrical)
(20) Fender mounting hole (symmetrical)
(23) Fender mounting hole (symmetrical)

Datum Dimensions

Point of measurement	Datum dimension mm (in)
(1) — (10)	893 (35.16)
(2) — (10)	948 (37.32)
(3) — (10)	934 (36.77)
(4) — (10)	918 (36.14)
(4) — (4)	1,314 (51.73)
(4) — (12)	882 (34.72)
(4) — (14)	557 (21.93)
(4) RH — (14) LH	1,498 (58.98)
(4) LH — (14) RH	1,498 (58.98)
(5) — (5)	658 (25.91)
(6) — (6)	740 (29.13)
(7) — (7)	700 (27.56)
(8) — (8)	900 (35.43)
(9) — (9)	900 (35.43)
(10) — (11)	755 (29.72)
(10) — (12)	794 (31.26)
(10) — (13)	707 (27.83)
(10) — (14)	745 (29.33)
(10) — (15)	639 (25.16)
(10) — (16)	512 (20.16)
(10) — (17)	585 (23.03)
(10) — (18)	804 (31.65)
(11) — (11)	1,422 (55.98)
(12) — (12)	1,508 (59.37)
(12) — (14)	326 (12.83)
(13) — (13)	1,402 (55.20)
(14) — (14)	1,472 (57.95)
(15) — (15)	1,258 (49.53)
(16) — (16)	995 (39.17)
(17) — (17)	1,104 (43.46)
(18) — (18)	1,456 (57.32)
(19) — (20)	1,064 (41.89)
(19) — (23)	1,035 (40.75)

Datum Dimensions

NOTE:

- The reference points (1) and (10) are at the body center, while the other points are left-right symmetrical.
- The dimensions are the actual dimensions between the reference points.

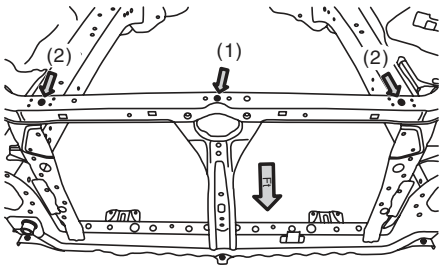

BS-01445

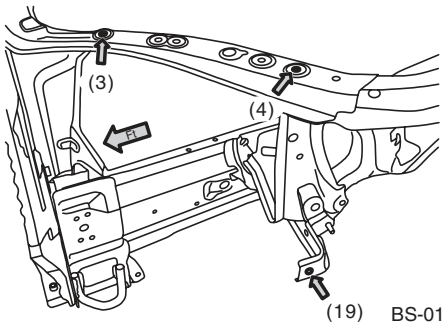

BS-01446

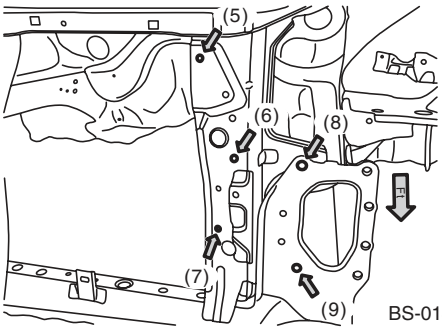

BS-01447

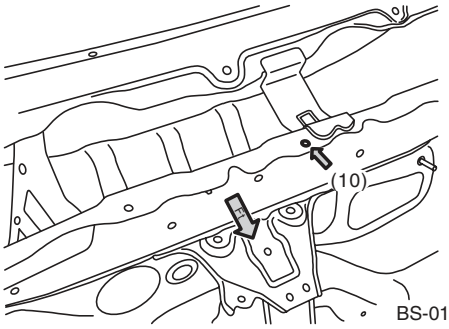

BS-01491

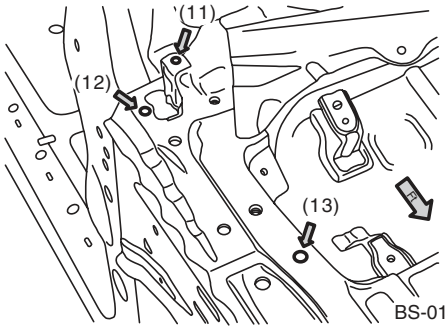

BS-01492

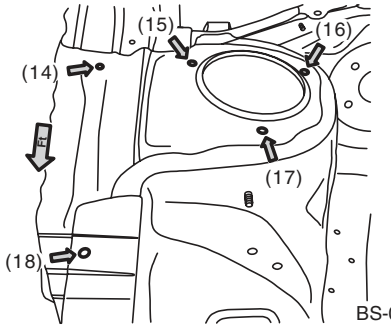

BS-01450

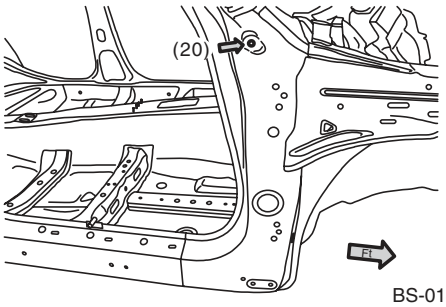

BS-01451

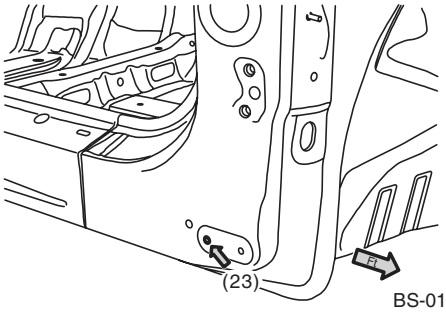

BS-01452

3. INSIDE

- Common for wagon and sedan model, 1

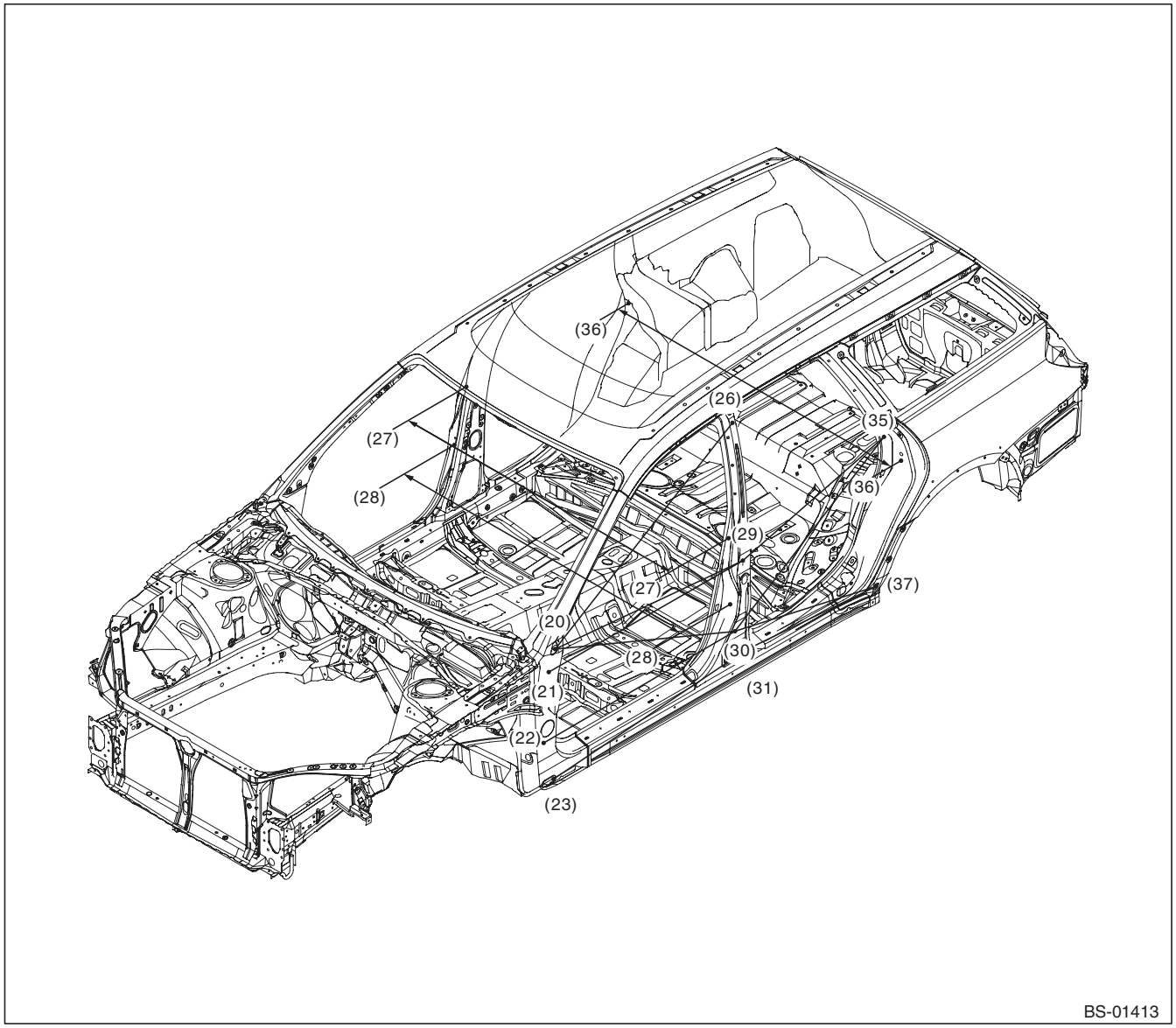

(20) Fender mounting hole (symmetrical)

(21) Front door hinge upper mounting hole (symmetrical), upper side

(22) Front door hinge lower mounting hole (symmetrical), upper side

(23) Fender mounting hole (symmetrical)

(26) Gauge hole (symmetrical)

(27) Weatherstrip mounting hole (symmetrical)

(28) Front door striker mounting hole (symmetrical)

(29) Rear door hinge upper mounting hole (symmetrical)

(30) Rear door hinge lower mounting hole (symmetrical)

(31) Gauge hole (symmetrical)

(35) Weatherstrip mounting hole (symmetrical)

(36) Rear door striker mounting hole (symmetrical)

(37) Protector mounting hole (symmetrical)

Datum Dimensions

Point of measurement	Datum dimension mm (in)
(20) — (26)	1,232 (48.50)
(20) — (29)	1,034 (40.71)
(20 — (30)	1,066 (41.97)
(21) — (29)	1,080 (42.52)
(22) — (30)	1,055 (41.54)
(23) — (31)	1,070 (42.13)
(27) — (27)	1,448 (57.01)
(28) — (28)	1,523 (59.96)
(29) — (35)	863 (33.98)
(30 — (35)	1,002 (39.45)
(30) — (37)	753 (29.65)
(31) — (37)	679 (26.73)
(36) — (36)	1,506 (59.29)

NOTE:
- All reference points are left-right symmetrical.
- The dimensions are the actual dimensions between the reference points.

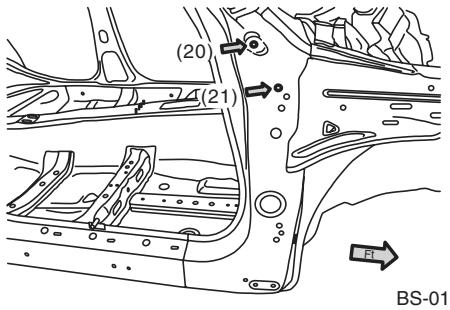

BS-01453

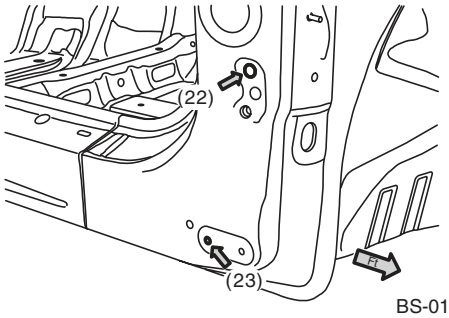

BS-01454

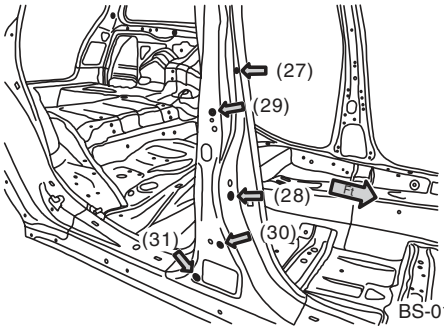

BS-01493

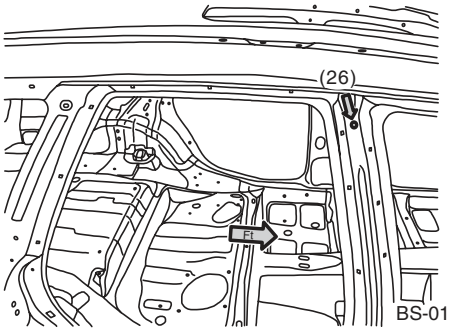

BS-01456

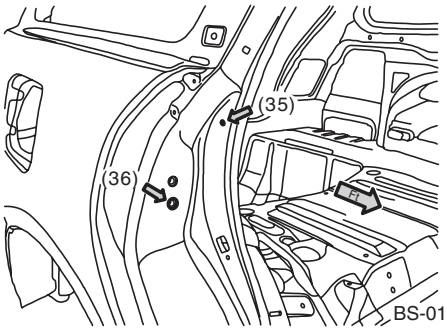

BS-01457

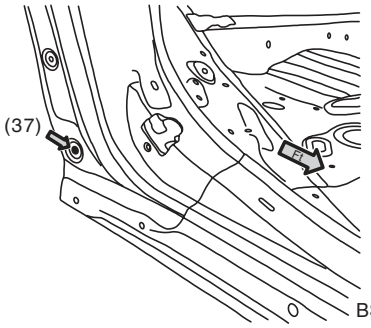

BS-01458

- Common for wagon and sedan model, 2

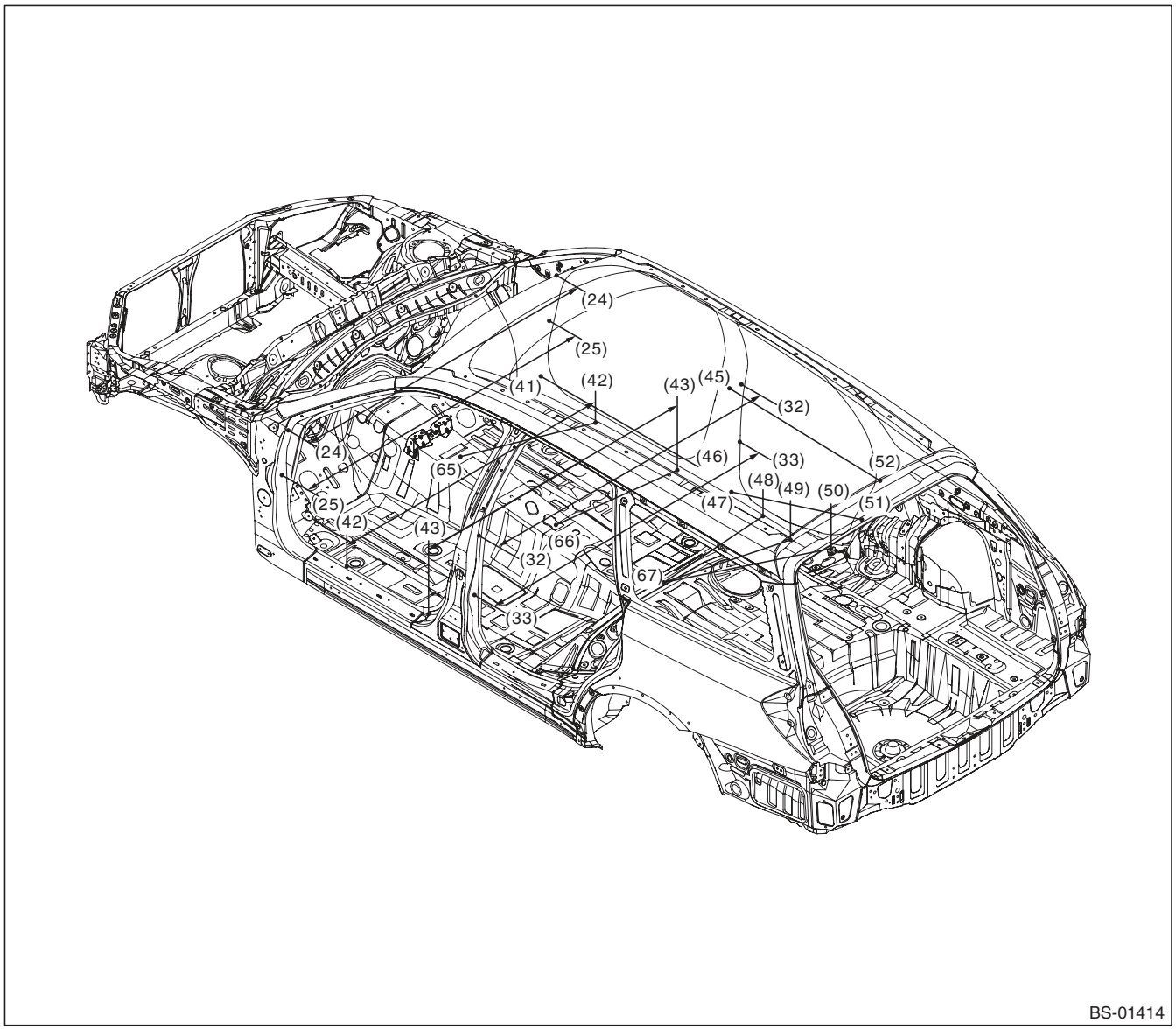

(24) Weatherstrip mounting hole (symmetrical)
(25) Front door checker mounting hole (symmetrical)
(32) Weatherstrip mounting hole (symmetrical)
(33) Rear door checker mounting hole (symmetrical)
(41) Side sill cover mounting hole (symmetrical)
(42) Harness clip mounting hole (symmetrical)
(43) Harness clip mounting hole (symmetrical)
(45) Trim clip mounting hole (symmetrical)
(46) Trim clip mounting hole (symmetrical)
(47) Harness clip mounting hole (symmetrical)
(48) Harness clip mounting hole (symmetrical)
(49) Harness clip mounting hole (symmetrical)
(50) Side sill cover mounting hole (symmetrical)
(51) Gauge hole (symmetrical)
(52) Trim clip mounting hole (symmetrical)
(65) Airbag unit mounting hole (body center)
(66) Side sill cover mounting hole (symmetrical)
(67) Floor mat mounting hole (body center)

Datum Dimensions

Point of measurement	Datum dimension mm (in)
(24) — (24)	1,482 (58.35)
(25) — (25)	1,476 (58.11)
(32) — (32)	1,448 (57.01)
(33) — (33)	1,464 (57.64)
(41) — (46)	863 (33.98)
(42) — (42)	1,373 (54.06)
(42) — (65)	706 (27.80)
(43) — (43)	1,373 (54.06)
(43) — (66)	693 (27.28)
(45) — (52)	838 (32.99)
(47) — (51)	740 (29.13)
(48) — (67)	711 (27.99)
(49) — (67)	649 (25.55)
(50) — (67)	704 (27.72)

NOTE:

- The reference points (65), (66), and (67) are at the body center, while the other points are left-right symmetrical.
- The dimensions are the actual dimensions between the reference points.

Datum Dimensions

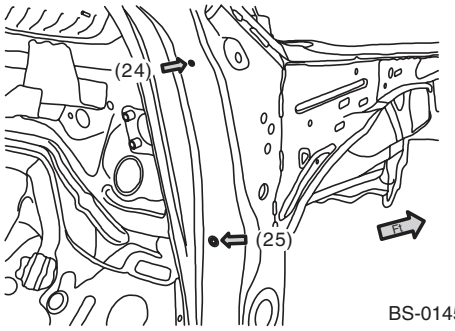

BS-01459

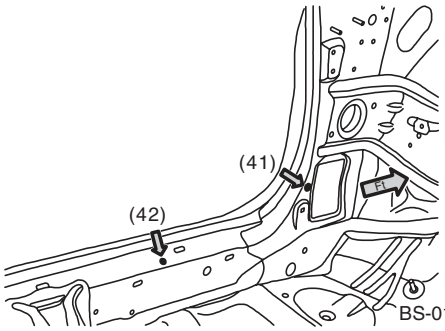

BS-01460

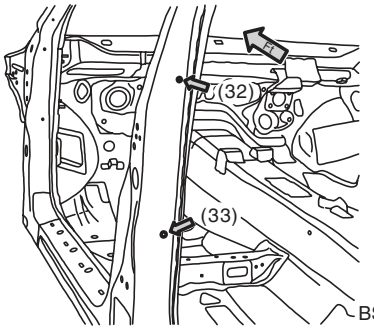

BS-01494

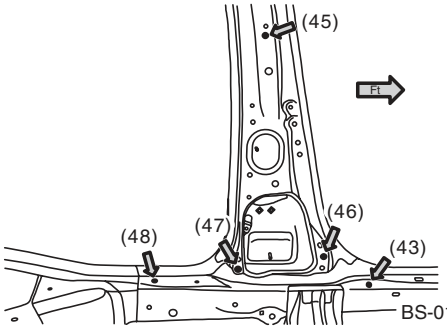

BS-01462

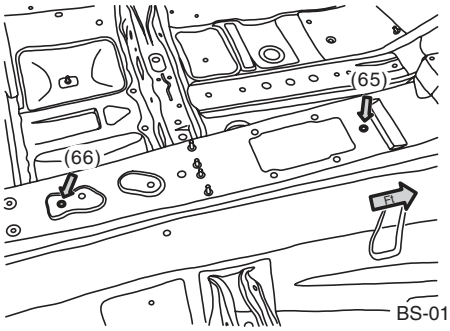

BS-01463

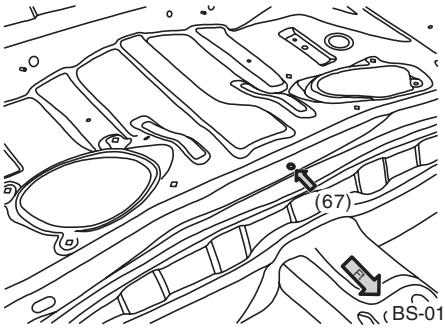

BS-01464

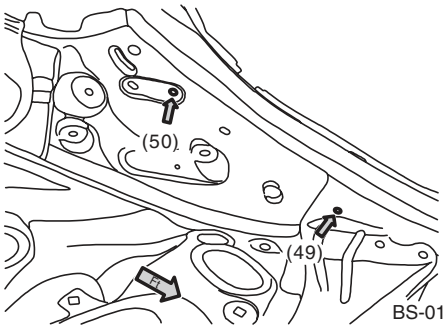

BS-01465

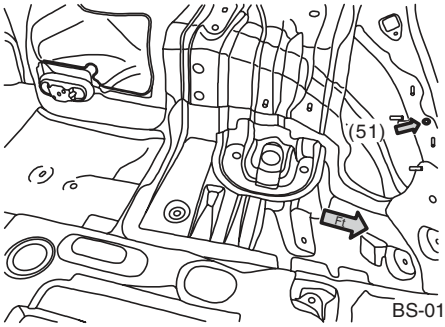

BS-01466

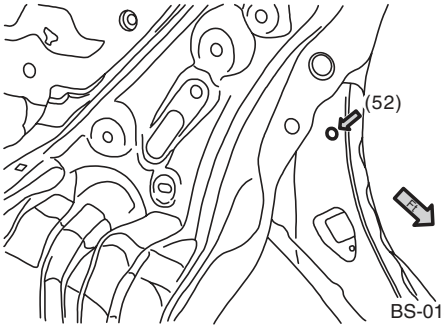

BS-01467

- Common for wagon and sedan model, 3

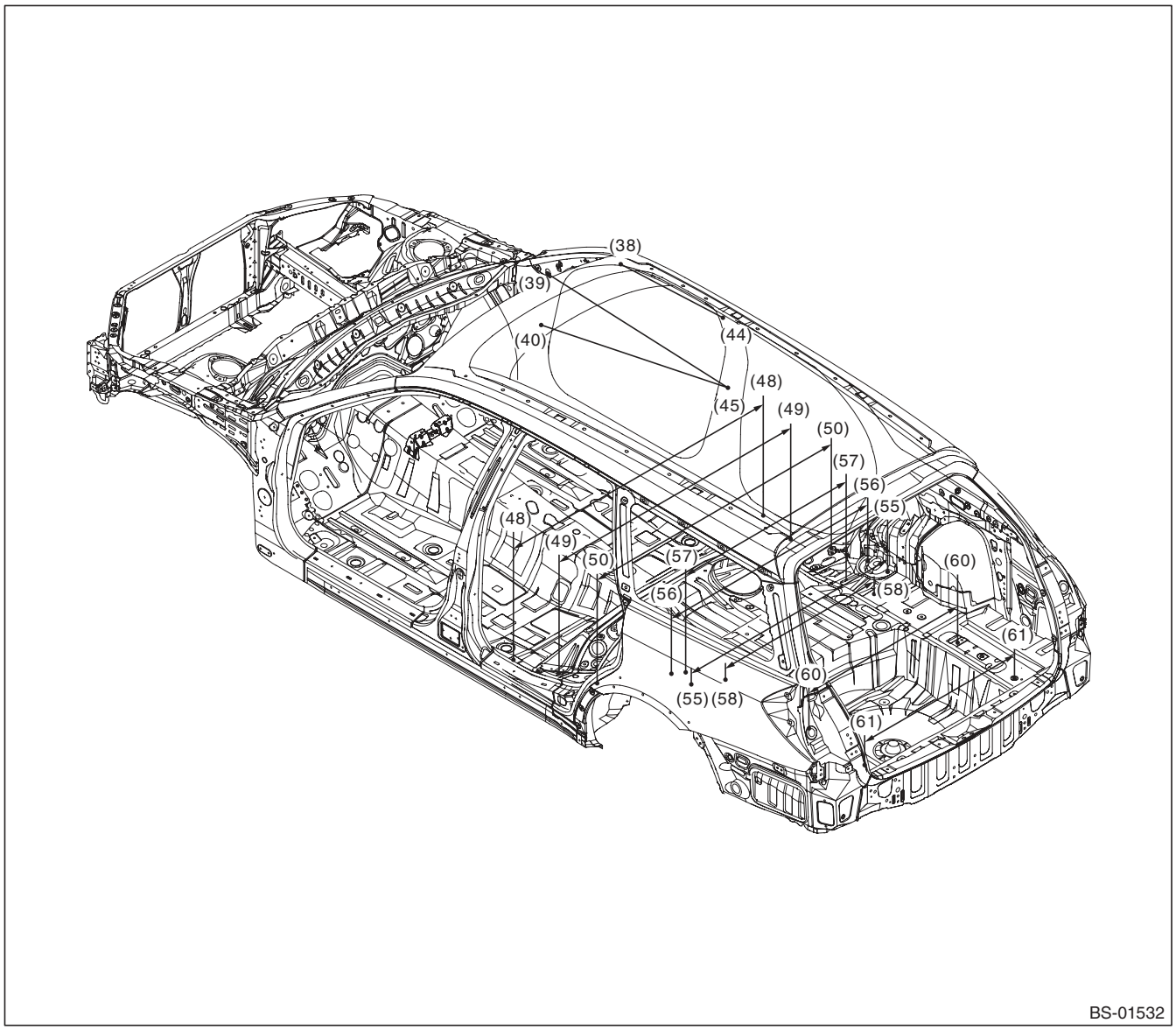

(38) Trim clip mounting hole (symmetrical)
(39) ED hole (symmetrical)
(40) Hood lock lever arrest hole (symmetrical)
(44) Trim clip mounting hole (symmetrical)
(45) Trim clip mounting hole (symmetrical)
(48) Harness clip mounting hole (symmetrical)
(49) Harness clip mounting hole (symmetrical)
(50) Side sill cover mounting hole (symmetrical)
(55) Rear suspension mounting hole (symmetrical), rear
(56) Rear suspension mounting hole (symmetrical), front
(57) Rear seat hinge mounting hole (symmetrical)
(58) Gauge hole (symmetrical)
(60) Gauge hole (symmetrical)
(61) Gauge hole (symmetrical)

Datum Dimensions

Point of measurement	Datum dimension mm (in)
(38) — (44)	586 (23.07)
(39) — (45)	993 (39.09)
(40) — (45)	1,043 (41.06)
(48) — (48)	1,380 (54.33)
(49) — (49)	1,280 (50.39)
(50) — (50)	1,294 (50.94)

Point of measurement	Datum dimension mm (in)
(55) — (55)	1,084 (42.68)
(56) — (56)	1,090 (42.91)
(57) — (57)	886 (34.88)
(58) — (58)	820 (32.28)
(60) — (60)	820 (32.28)
(61) — (61)	840 (33.07)

NOTE:
- All reference points are left-right symmetrical.
- The dimensions are the actual dimensions between the reference points.

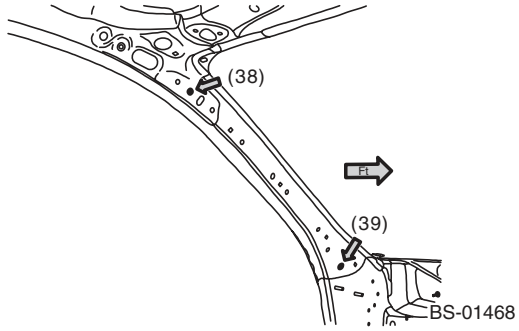

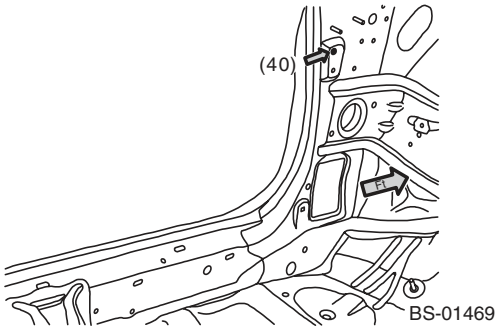

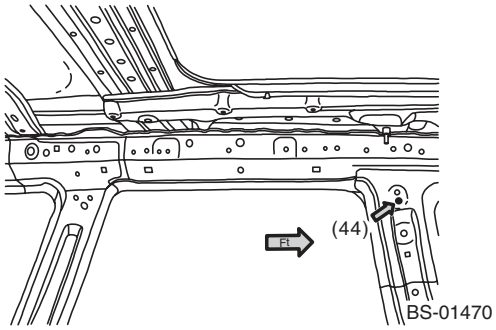

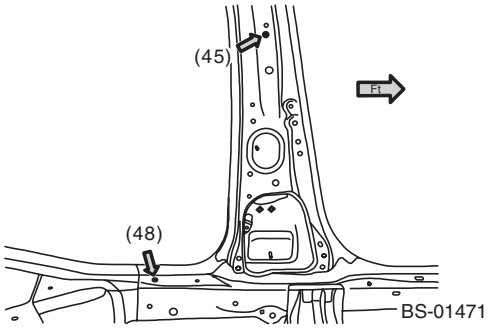

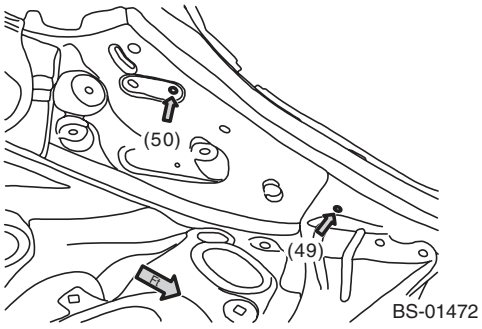

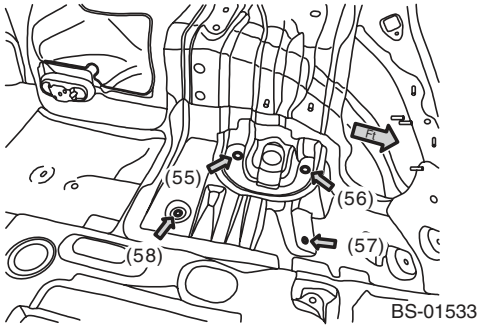

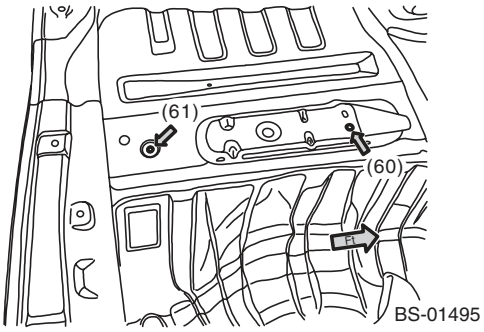

4. REAR

- Wagon model

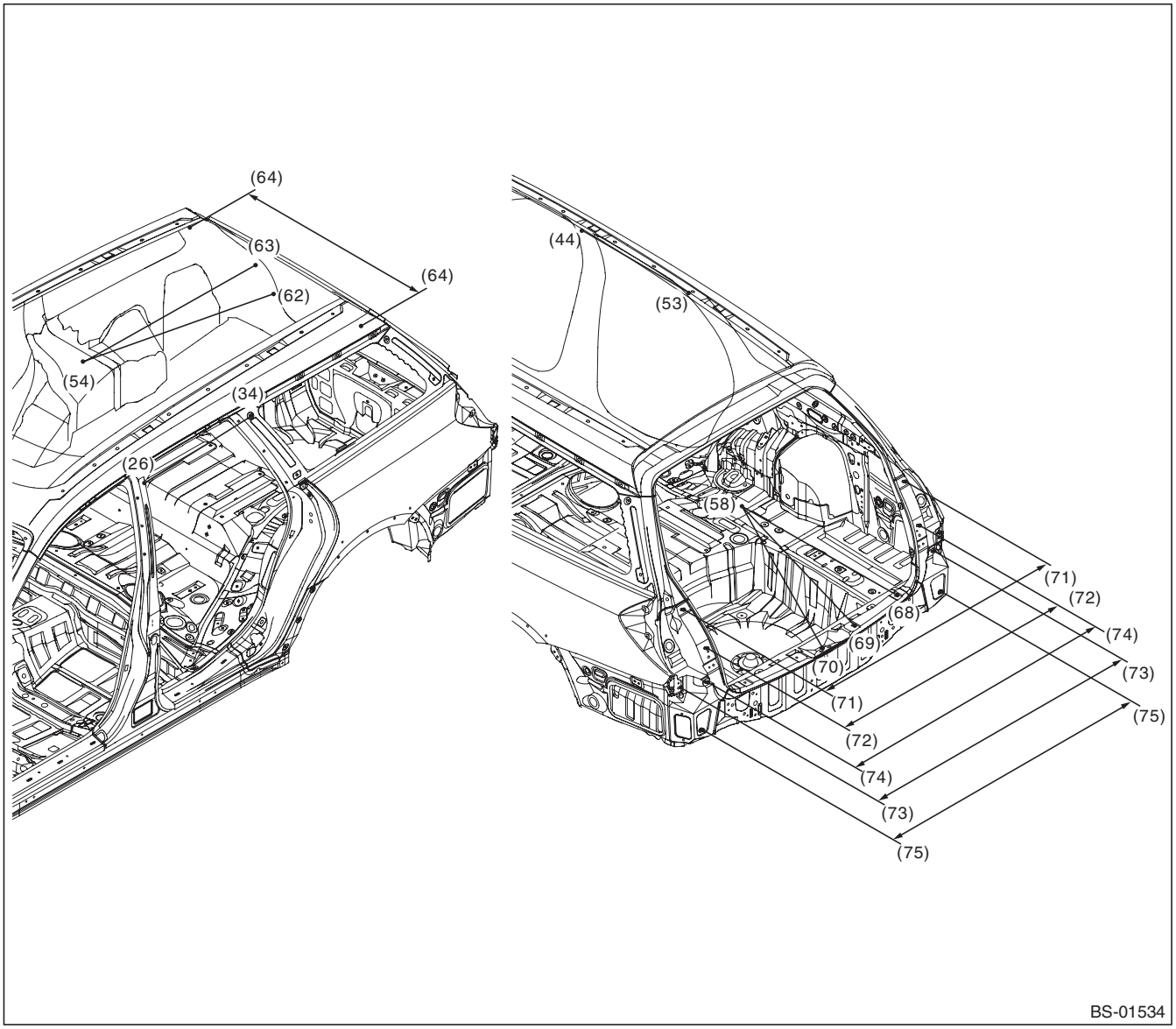

(26) Gauge hole (symmetrical)
(34) Rear quarter glass mounting hole (symmetrical)
(44) Trim clip mounting hole (symmetrical)
(53) Trim clip mounting hole (symmetrical)
(54) Rear seat striker mounting hole (symmetrical)
(58) Gauge hole (symmetrical)
(62) Trim clip mounting hole (symmetrical)
(63) Trim clip mounting hole (symmetrical)
(64) Harness clip mounting hole (symmetrical)
(68) Trim clip mounting hole (symmetrical)
(69) Trim clip mounting hole (symmetrical)
(70) Repair location hole (body center)
(71) Combination light mounting hole (symmetrical)
(72) Buffer mounting hole (symmetrical)
(73) Bumper mounting hole (symmetrical)
(74) Bracket corner mounting hole (symmetrical)
(75) Gauge hole (symmetrical)

Datum Dimensions

Point of measurement	Datum dimension mm (in)
(26) — (34)	613 (24.13)
(44) — (53)	591 (23.27)
(54) — (62)	969 (38.15)
(54) — (63)	884 (34.80)
(58) — (68)	900 (35.43)
(58) — (69)	958 (37.72)
(58) — (70)	990 (38.98)
(64) — (64)	944 (37.17)
(71) — (71)	1,224 (48.19)
(72) — (72)	1,173 (46.18)
(73) — (73)	1,438 (56.61)
(74) — (74)	1,250 (49.21)
(75) — (75)	1,320 (59.97)

Datum Dimensions

NOTE:

- The reference point (70) is at the body center, while the other points are left-right symmetrical.
- The dimensions are the actual dimensions between the reference points.

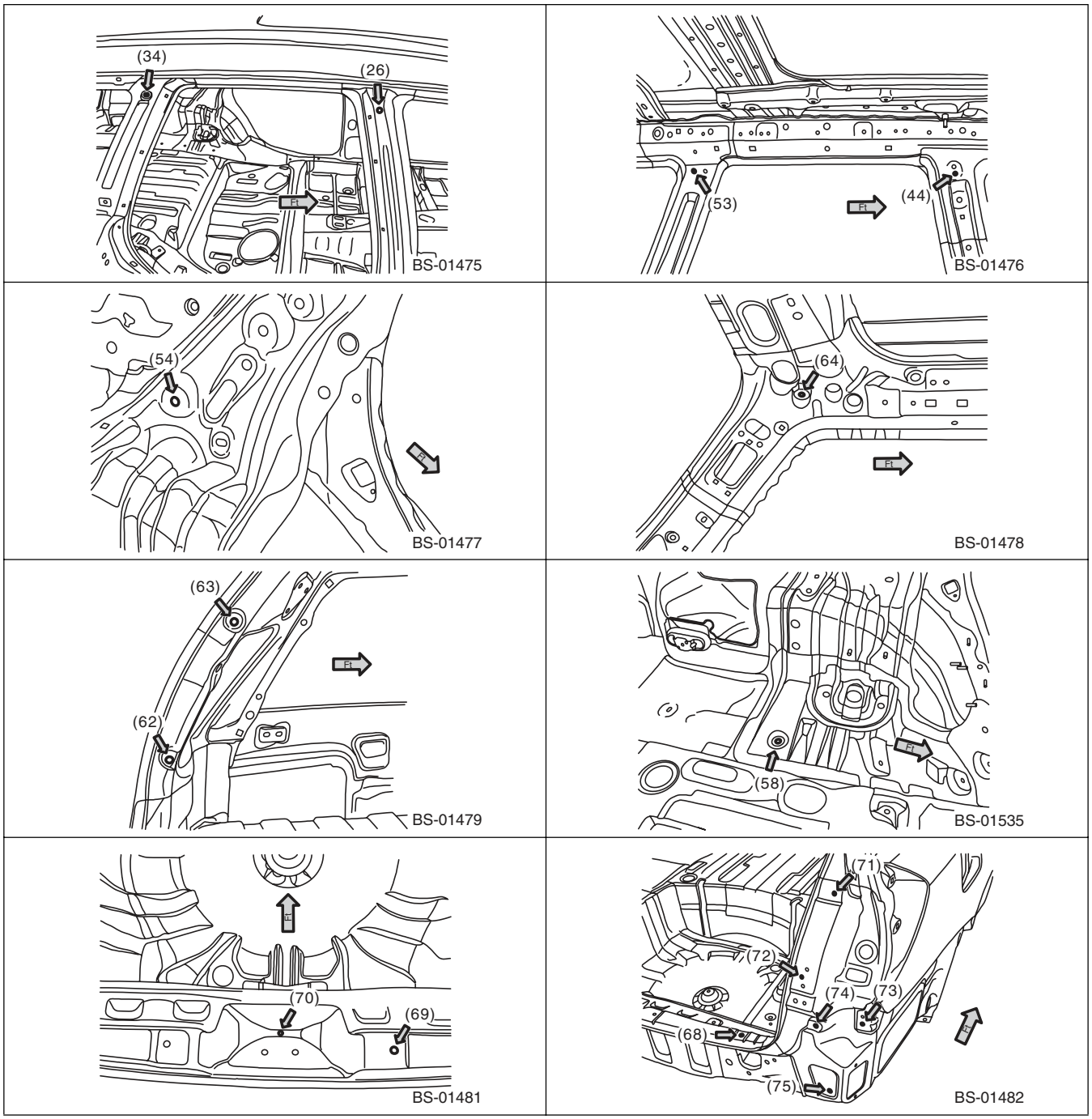

Datum Dimensions

- Sedan model

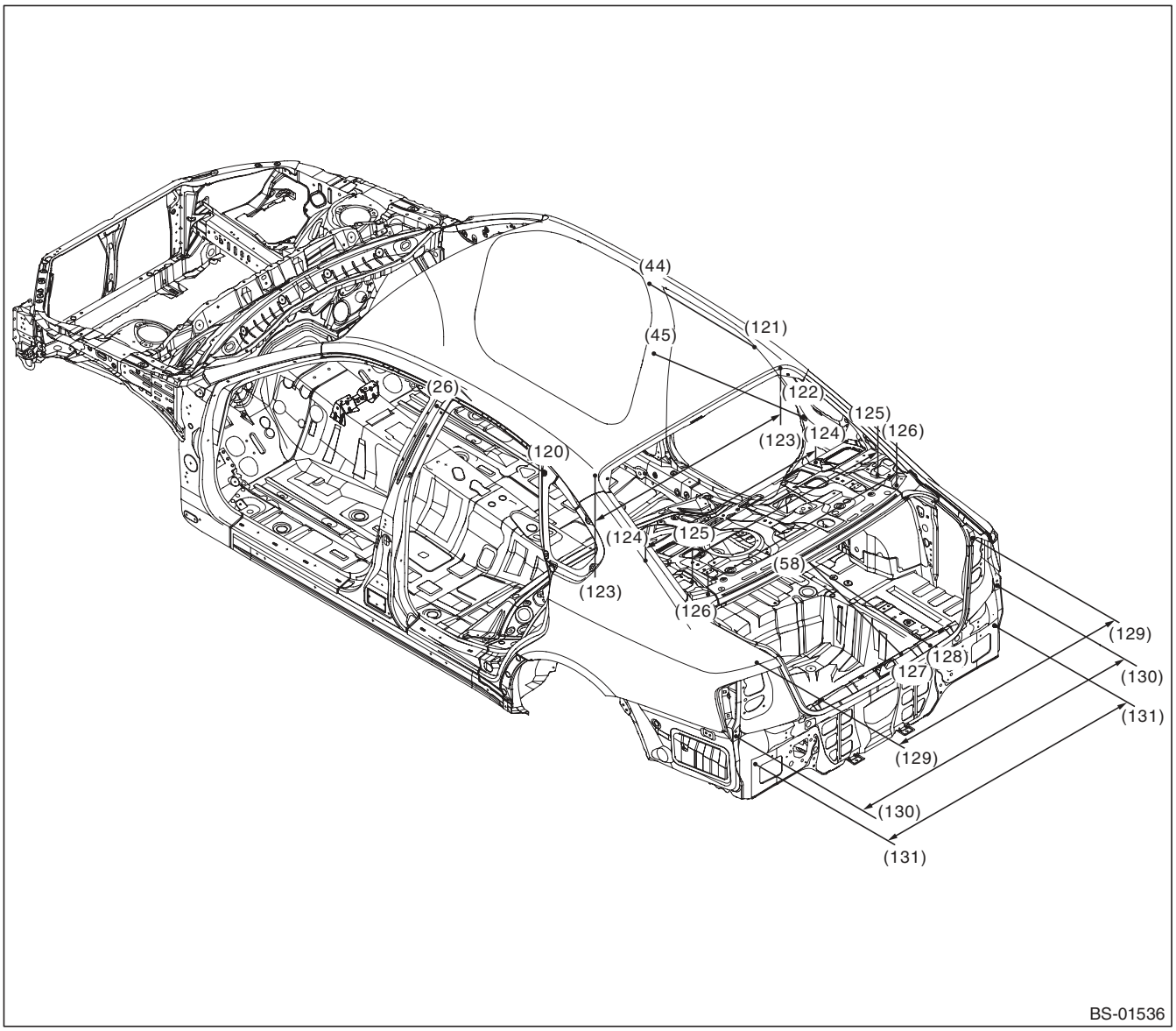

(26) Gauge hole (symmetrical)

(44) Trim clip mounting hole (symmetrical)

(45) Trim clip mounting hole (symmetrical)

(58) Gauge hole (symmetrical)

(120) Six light glass mounting hole (symmetrical)

(121) Trim clip mounting hole (symmetrical)

(122) Trim clip mounting hole (symmetrical)

(123) Sunroof drain hose clip mounting hole (symmetrical)

(124) Trim clip mounting hole (symmetrical)

(125) Harness clip mounting hole (symmetrical)

(126) Gauge hole (symmetrical)

(127) Trim clip mounting hole (symmetrical)

(128) ED hole (symmetrical)

(129) Combination light mounting hole (symmetrical)

(130) Bumper bracket mounting hole (symmetrical)

(131) ED hole (symmetrical)

Datum Dimensions

Point of measurement	Datum dimension mm (in)
(26) — (120)	598 (23.54)
(44) — (121)	570 (22.44)
(45) — (122)	835 (32.87)
(58) — (127)	916 (36.06)
(58) — (128)	904 (35.59)
(123) — (123)	1,024 (40.31)
(124) — (124)	940 (37.01)
(125) — (125)	1,024 (40.31)
(126) — (126)	1,040 (40.94)
(129) — (129)	1,191 (46.89)
(130) — (130)	1,442 (56.77)
(131) — (131)	1,322 (52.05)

NOTE:
- All reference points are left-right symmetrical.
- The dimensions are the actual dimensions between the reference points.

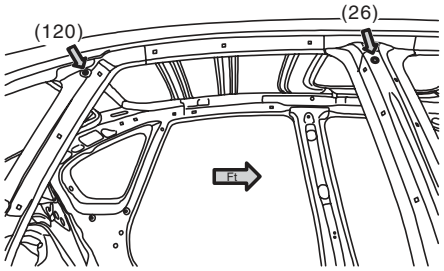

BS-01483

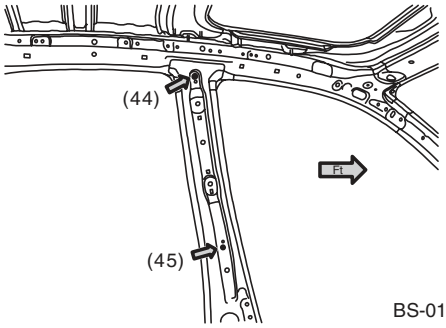

BS-01496

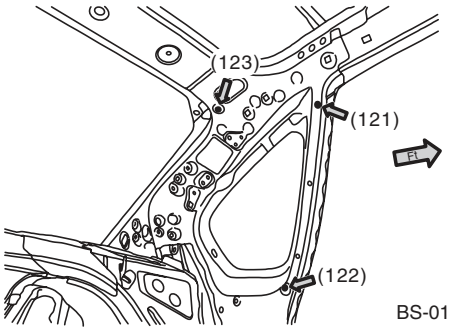

BS-01485

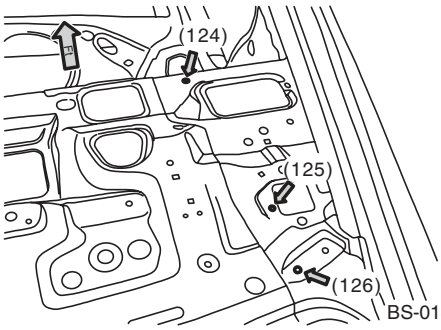

BS-01486

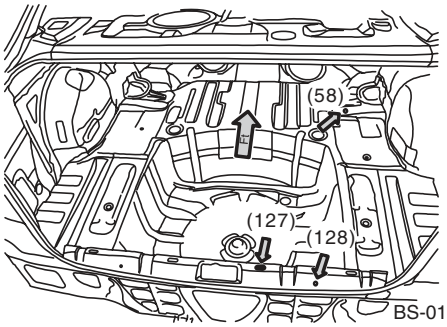

BS-01537

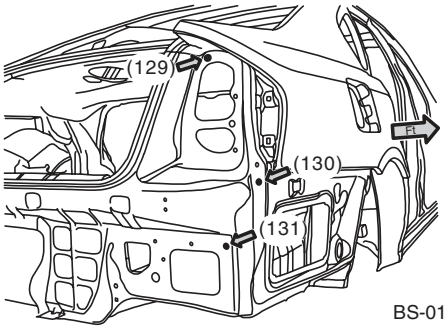

BS-01490

5. SUSPENSION MOUNT

NOTE:
- Longitudinal dimensions are projected dimensions.
- The height dimensions are the vertical distances from the gauge point on the assumed horizontal line through the side sill flange joint (bending angle point).

Datum Dimensions

- For the reference point positions, refer to “Datum Dimensions”. <Ref. to BS-4, CENTER STRUCTURE, MEASUREMENT, Datum Dimensions.>

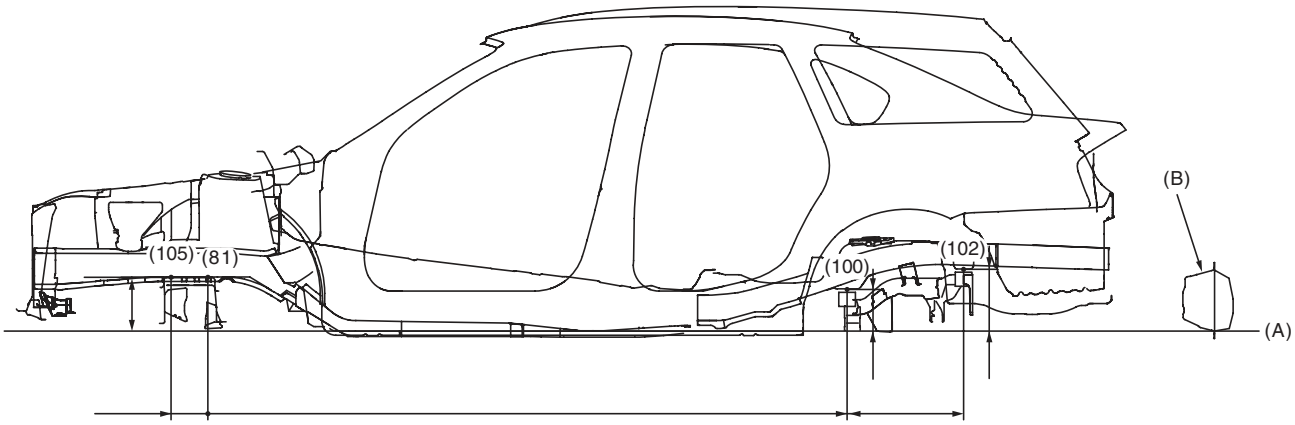

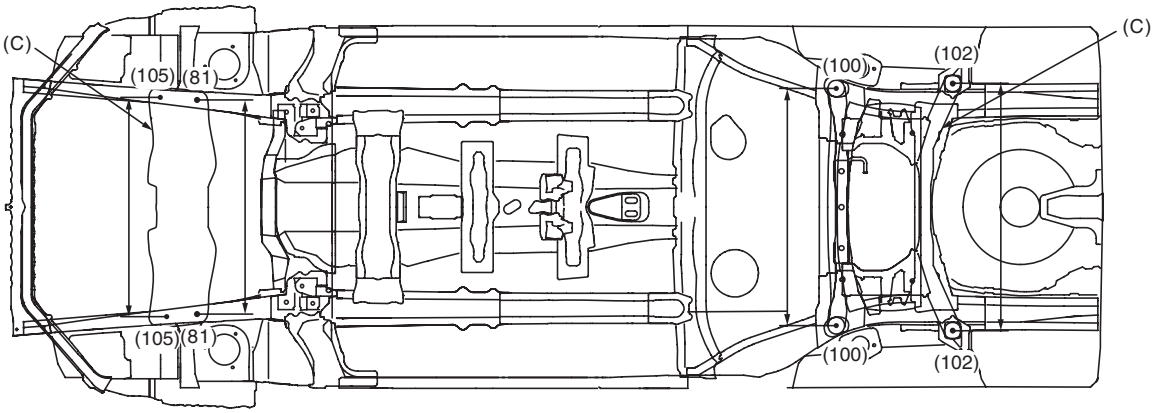

BS-01418

(A)	Standard line	(B)	Side sill	(C)	Crossmember
(81)	Front crossmember mounting hole (symmetrical), rear	(102)	Rear suspension mounting hole (symmetrical)	(105)	Front crossmember mounting hole (symmetrical), front
(100)	Rear suspension mounting hole (symmetrical)				

3. Plastic Parts and Materials

A: SPECIFICATION

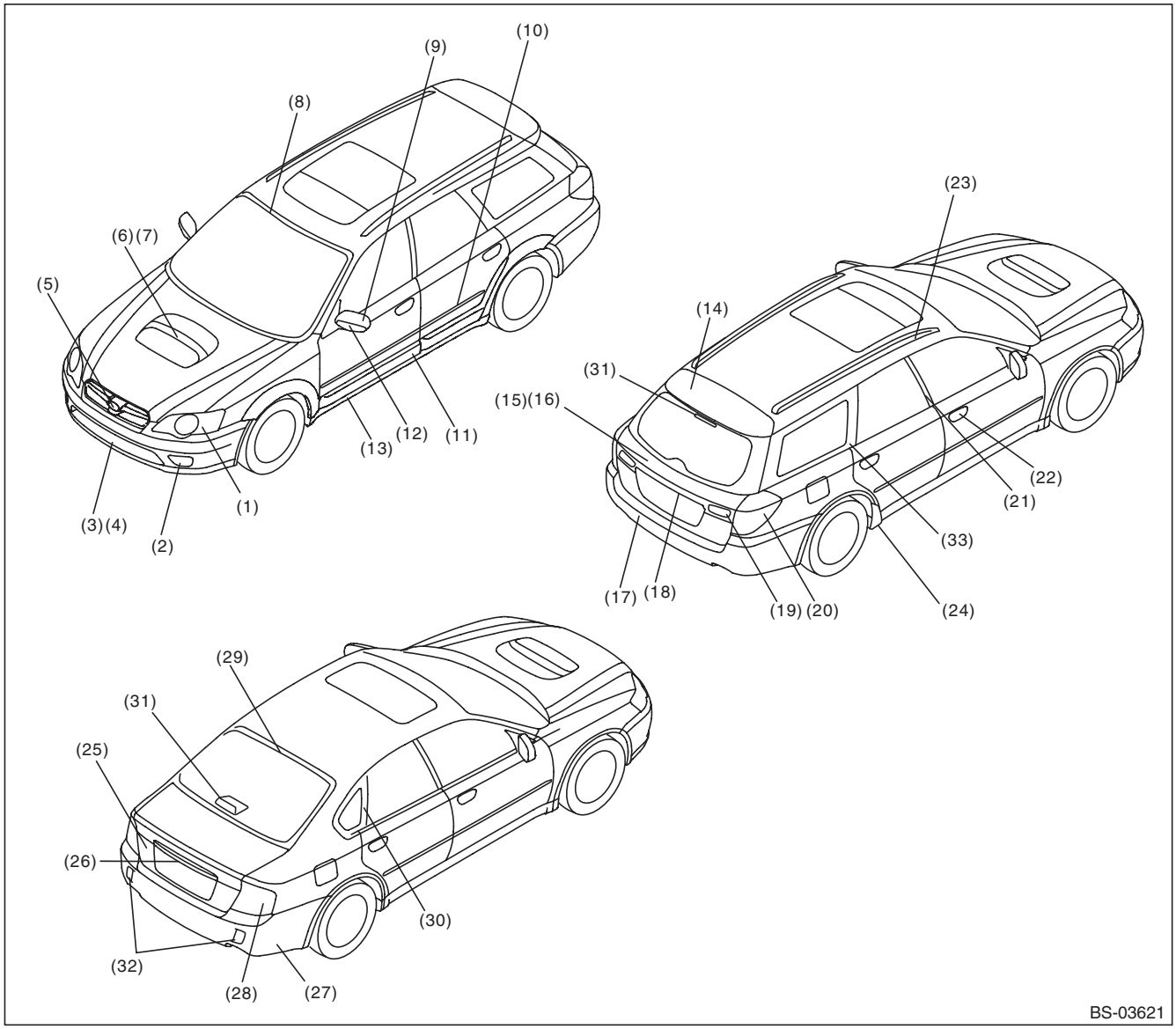

(1)	Headlight	(12)	Side turn light	(23)	Roof rail
(2)	Front fog light	(13)	Side spoiler	(24)	Rear quarter protector
(3)	Front bumper	(14)	Rear spoiler	(25)	Trunk garnish
(4)	Radiator guide	(15)	Rear garnish	(26)	License plate light
(5)	Front grille	(16)	License plate light	(27)	Rear bumper
(6)	Turbo grille	(17)	Rear bumper	(28)	Rear combination light
(7)	Hood duct inner	(18)	Rear gate handle	(29)	Rear window molding
(8)	Front window molding	(19)	Back-up light	(30)	Six light molding
(9)	Door mirror	(20)	Rear combination light	(31)	High-mounted stop light
(10)	Side protector	(21)	Center pillar cover	(32)	Reflex reflector
(11)	Side garnish	(22)	Door handle	(33)	Rear quarter molding

Plastic Parts and Materials

- Wagon model/Common for wagon and sedan model

No.	Part name		Material
(1)	Headlight	Lens	PC
		Housing	PP
		Extension	PBT + PET
(2)	Front fog light (standard)	Housing	PP - GF40
	Front fog light (OUTBACK)	Lens	PC
		Reflector	UP - GF10
		Bracket	PP - GF30
(3)	Front bumper	Face	PP
		EA foam	Foamed PP
		Fog light cover	PP
		Hook cover	PP
		Guide bracket	POM
		Corner bracket	PP + GF30
(4)	Air intake cover		PP
(5)	Front grille		ABS
(6)	Turbo grille		PA + PPE
(7)	Hood duct inner		PP + EPDM
(8)	Front window molding		PVC
(9)	Door mirror	Body	ASA
		Inner cover	AES
		Outer cover	ABS
		Mirror holder	PP
(10)	Side protector		PP
(11)	Side garnish	Door body	PC + PET
		Other than door body	PP
		Side sill end cover	PP + EPDM
(12)	Side turn light	Lens	PMMA + PC
		Housing	PC
(13)	Side spoiler	Engine	PP
(14)	Rear spoiler	Engine	PC + PET
		High mount lens	PMMA
		High mount housing	ABS
(15)	Rear garnish	Engine	PC + PET
		Molding	ABS
(16)	License plate light	Lens	PC
		Housing	PBT + PET
(17)	Rear bumper	Face	PP
		EA foam	Foamed PP
(18)	Rear gate handle		PP - GF 20
(19)	Back-up light	Lens	PMMA
		Housing	ASA
(20)	Rear combination light	Lens	PMMA
		Inner lens	PC
		Housing	ASA
		Reflex reflector	PMMA
		Cover	ASA
(21)	Center pillar cover		ABS
(22)	Door handle	Handle	PC + PET - GF10
		End cover	PP

No.	Part name		Material
(23)	Roof rail	Front cover	PC + PET
		Center cover (OUTBACK)	PC + PET
		Rear cover	PC + PET
(24)	Rear quarter protector		PP
(33)	Rear quarter molding		PVC
	Front mud guard	Engine	PE
		Air flap	PE
	Rear mud guard		PE
	Under cover		PP
	Splash board		PP
	Cowl panel	Body, side	PP
		Cover	PP
	Rear wiper	Blade	PBT
		Arm	PET
		Arm cover	PBT

- Sedan model

No.	Part name		Material
(25)	Trunk garnish		PC + PET
(26)	License plate light	Lens	PC
		Housing	ASA
(27)	Rear bumper	Face	PP
		EA foam	Foamed PP
		Corner bracket	POM
(28)	Rear combination light	Lens	PMMA
		Inner lens	PMMA
		Housing	ASA
		Reflex reflector	PMMA
		Cover	ASA
(29)	Rear window molding		PVC
(30)	Six light molding		ABS
(31)	High-mounted stop light	Lens	PC
		Case	PP
		Reflector	PBT + PET
(32)	Reflex reflector	Lens	PMMA
		Housing	PC

4. List of Plastic Material Notations

A: SPECIFICATION

Notation symbol	Material name	Notation symbol	Material name
ABS	ABS resin (acrylonitrile-butadiene-styrene resin)	PMMA	Polymethyl methacrylate
AES	Acrylonitrile/ethylene/styrene	PP	Polypropylene
ASA	Acrylonitrile/styrene/acrylate	PPE	Poly (phenylene ether)
EPDM	Ethylene/propylene/dien rubber	PP -GF20	Polypropylene (20% glass fiber content)
GF	Glass fiber	PP - GF30	Polypropylene (30% glass fiber content)
PA	Polyamide	PVC	Polyvinyl chloride
PBT	Poly (butylene terephthalate)	SEPM	Styrene/ethylene/propylene rubber
PC	Polycarbonate	TPO	Thermoplastic olefine
PE	Polyethylene	UP	Unsaturated polyester resin
PET	Polyethylene terephthalate	UP - GF10	Unsaturated polyester resin (10% glass fiber content)
PET - GF10	Polypropylene (10% glass fiber content)		

5. Body Sealing

A: SPECIFICATION

Used material:
THREE BOND 4101 (004403063)

- Common for wagon and sedan model

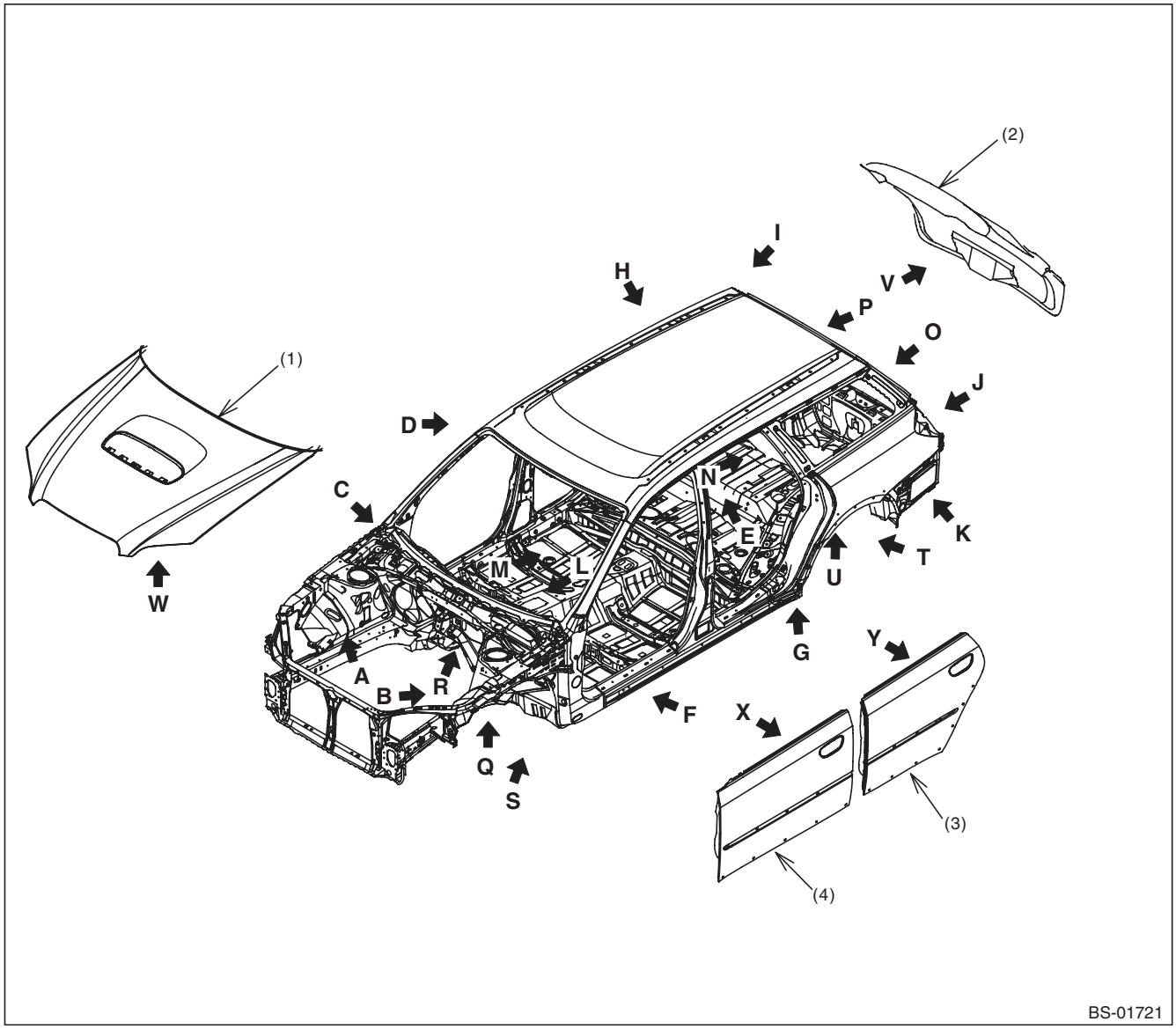

(1) Front hood
(2) Rear gate
(3) Rear door
(4) Front door

View A

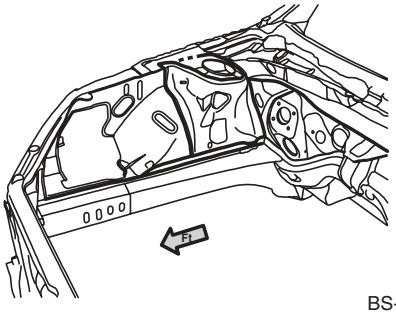

BS-01498

View B

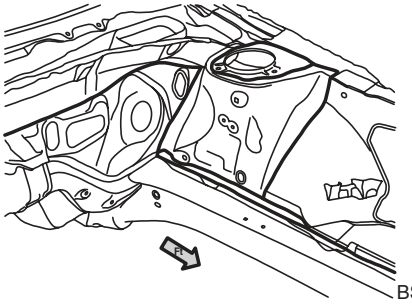

BS-01499

View C

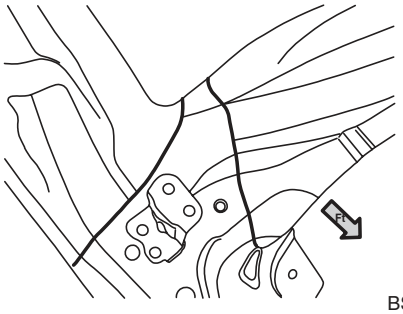

BS-00734

View D

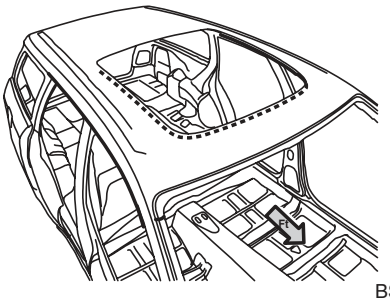

BS-00735

View E

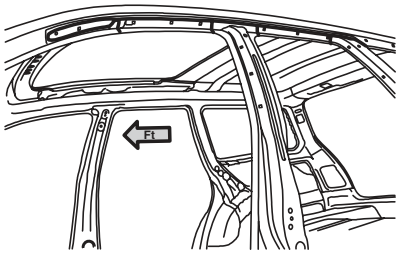

BS-00736

View F

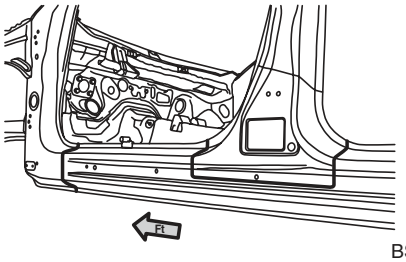

BS-01601

View G

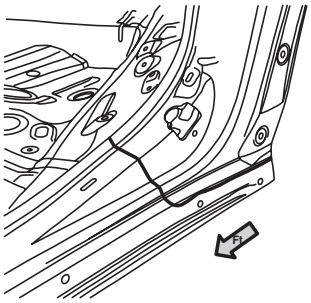

BS-00738

View H

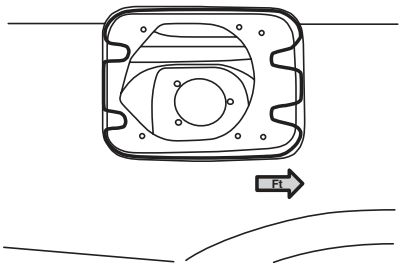

BS-00739

View I

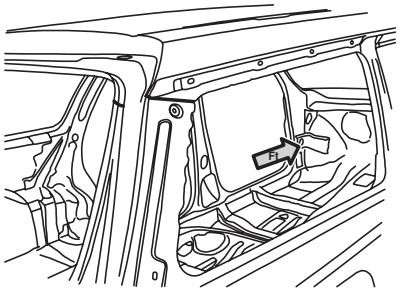

BS-00740

View J

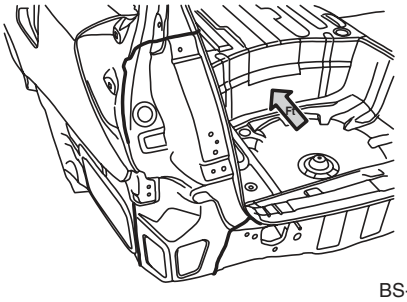

BS-00741

View K

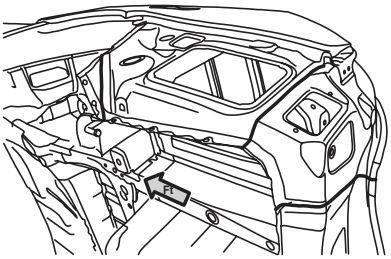

BS-00742

View L

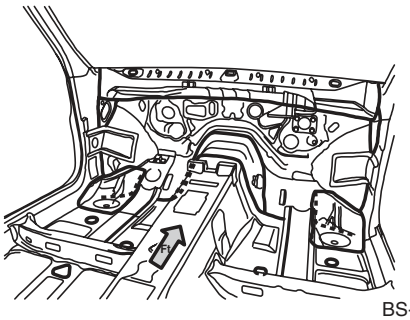

BS-00743

View M

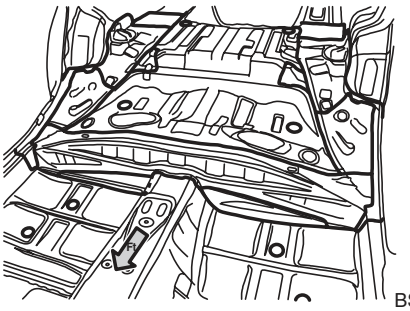

BS-01718

View N

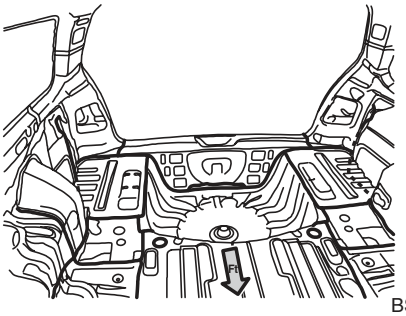

BS-01719

View O

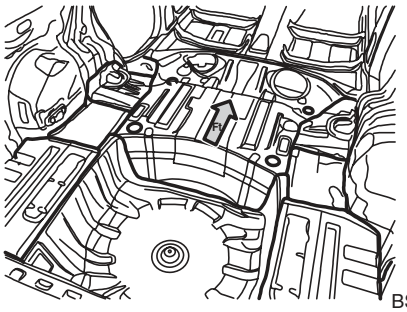

BS-01720

View P

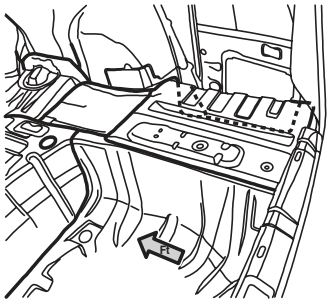

BS-00747

View Q 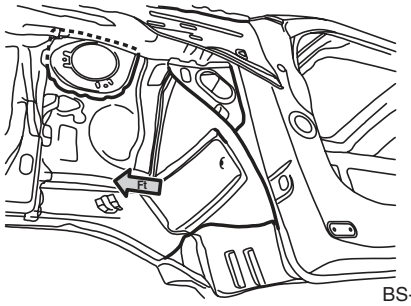 BS-00748	View R 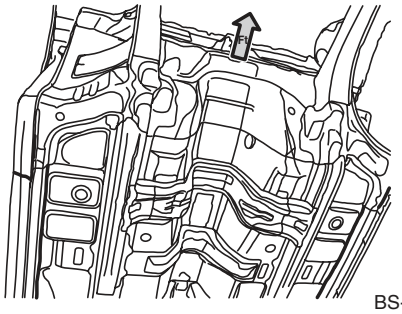 BS-01500
View S 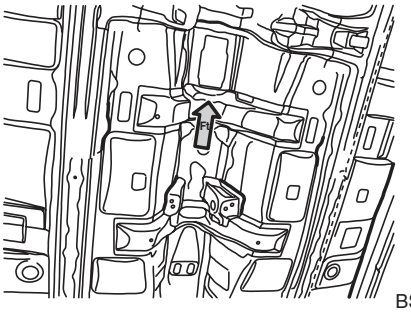 BS-01501	View T 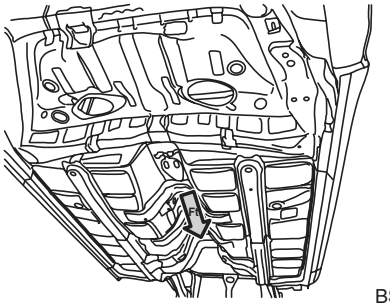 BS-01502
View U 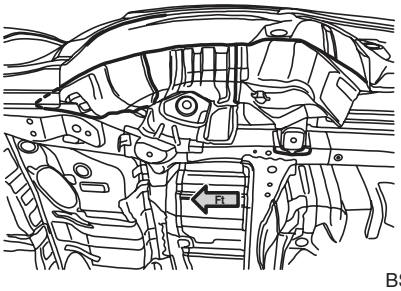 BS-01602	View V 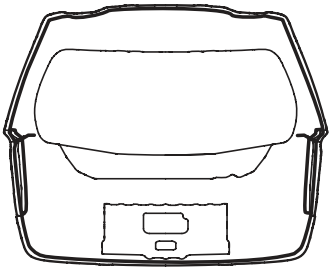 BS-00756

View W
Sedan model and wagon model

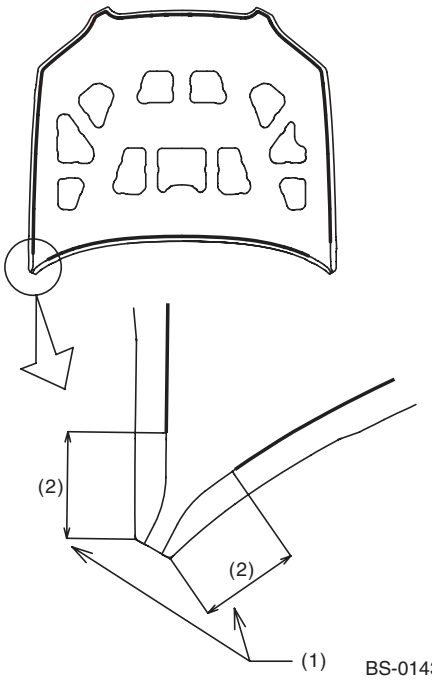

BS-01436

(1) Application not required.
(2) 50 mm (1.97 in)

OUTBACK model

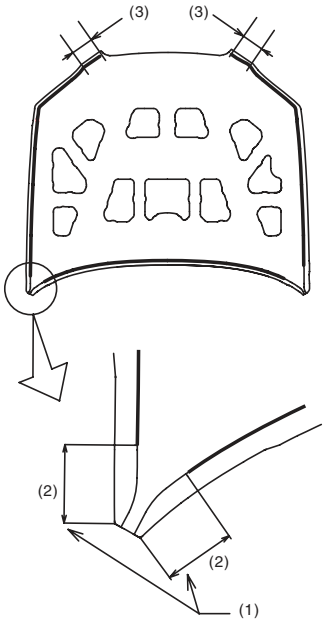

BS-02095

(1) Application not required.
(2) 50 mm (1.97 in)
(3) 84 mm (3.31 in) Fatten out after applied in this period.

View X

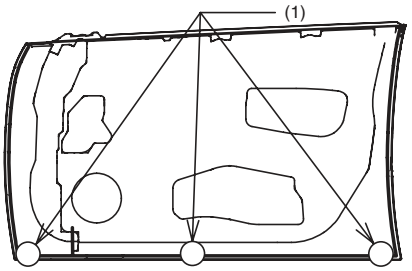

BS-00754

(1) Do not block the water drain holes.

View Y

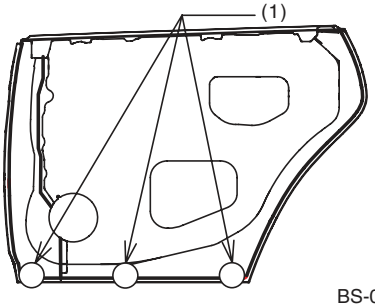

BS-00755

(1) Do not block the water drain holes.

CAUTION:
Sealer already has been applied to hood, door, and rear gate in replacement condition.

- Sedan model

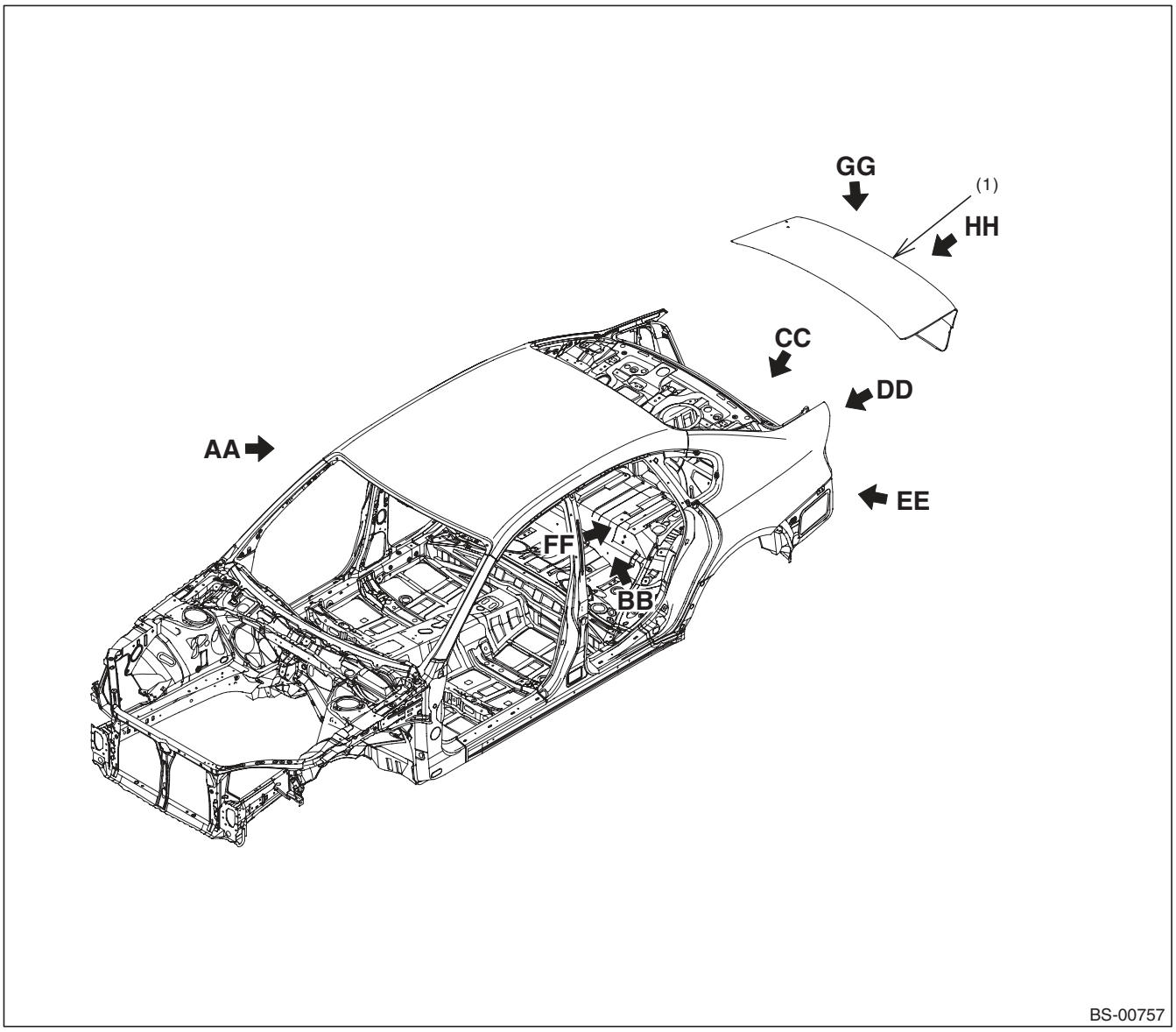

(1) Trunk

View AA

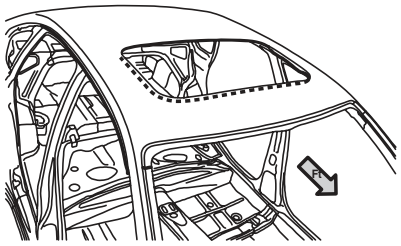

BS-00758

View BB

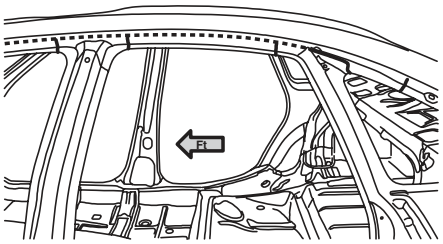

BS-00759

View CC

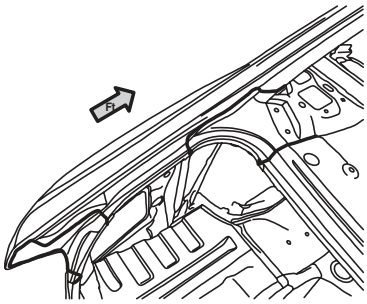

BS-00760

View DD

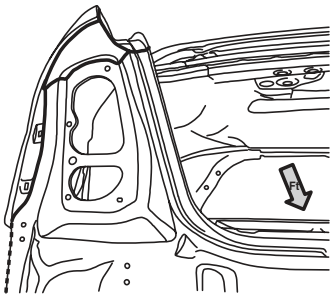

BS-00761

View EE

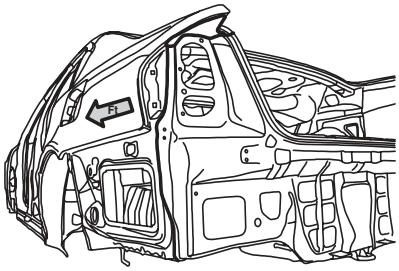

BS-00762

View FF

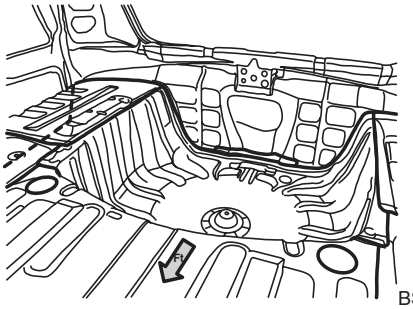

BS-00763

View GG
View HH

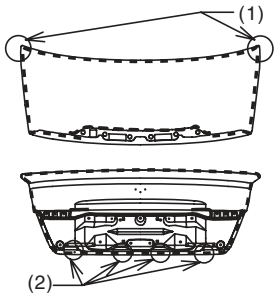

BS-00764

(1) The holes shall be blocked.
(2) Do not block the water drain holes.

CAUTION:
Sealer already has been applied to the trunk in replacement condition.

6. Anticorrosion Wax

A: SPECIFICATION

Used material:
Rust-stop aerosol (K0877YA015)

- Front hood

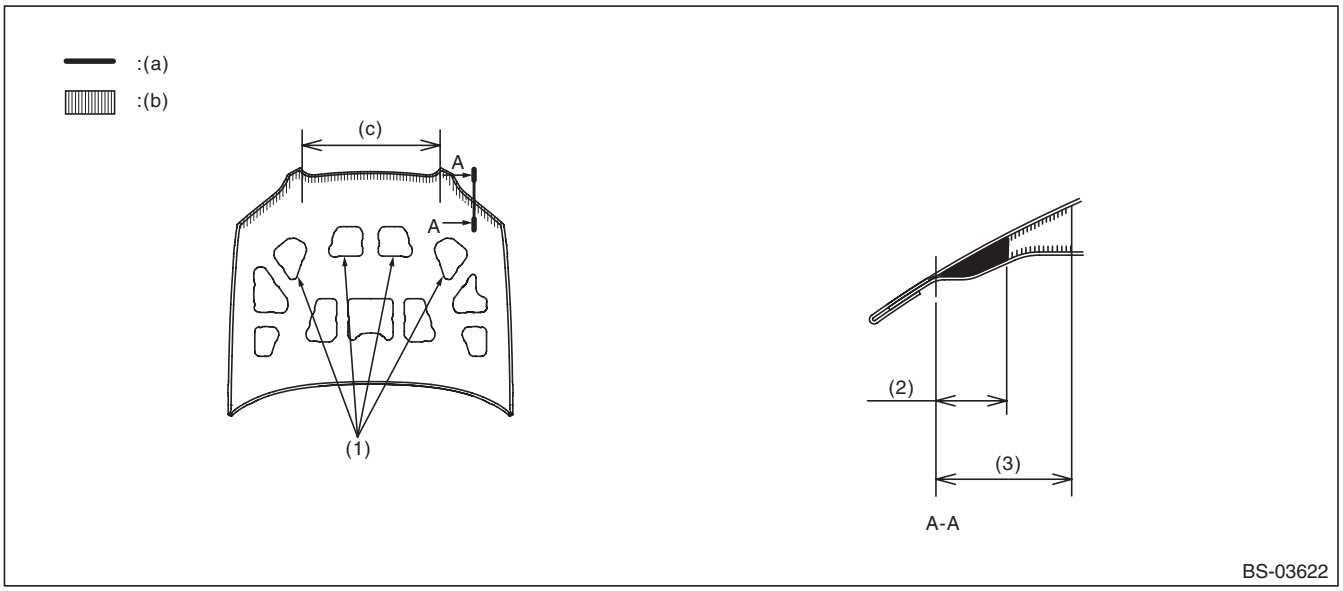

(a)	Application thickness = 50 μm or more	(b)	Application area	(c)	Non-application area (only for OUTBACK model)
(1)	Wax application work openings	(2)	10 mm (0.39 in)	(3)	60 mm (2.36 in)

- Door (front, rear)

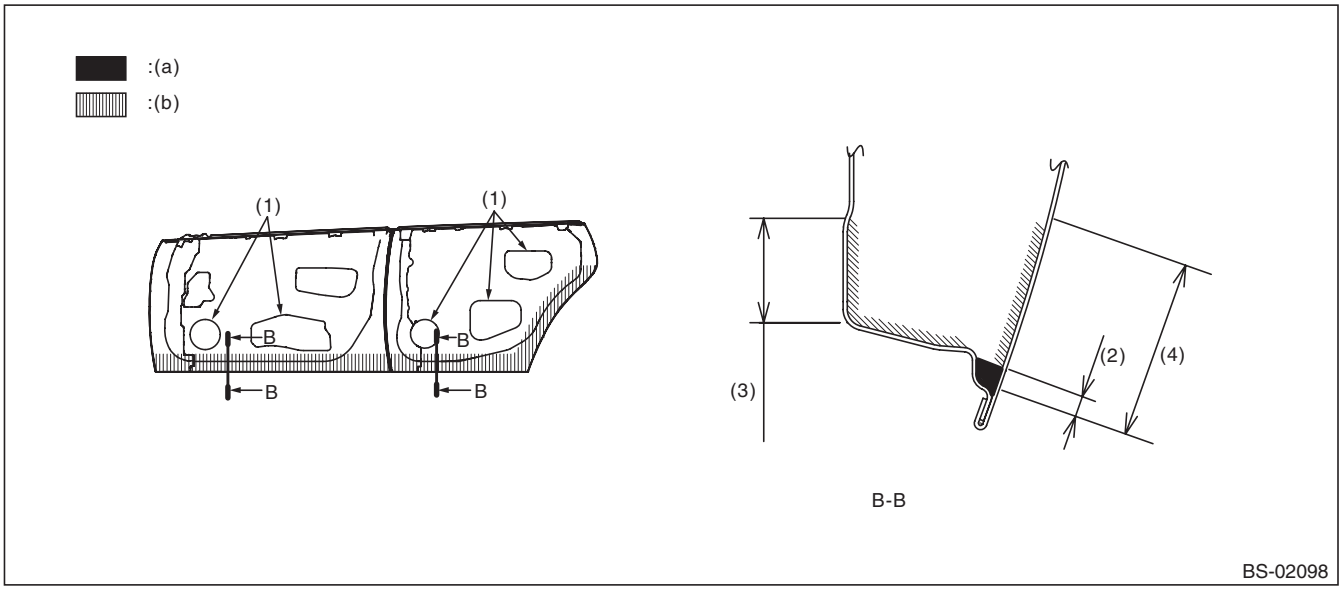

(a)	Wax filling part	(b)	Application area		
(1)	Wax application work openings	(3)	50 mm (1.97 in)	(4)	90 mm (3.54 in)
(2)	10 mm (0.39 in)				

- Rear gate

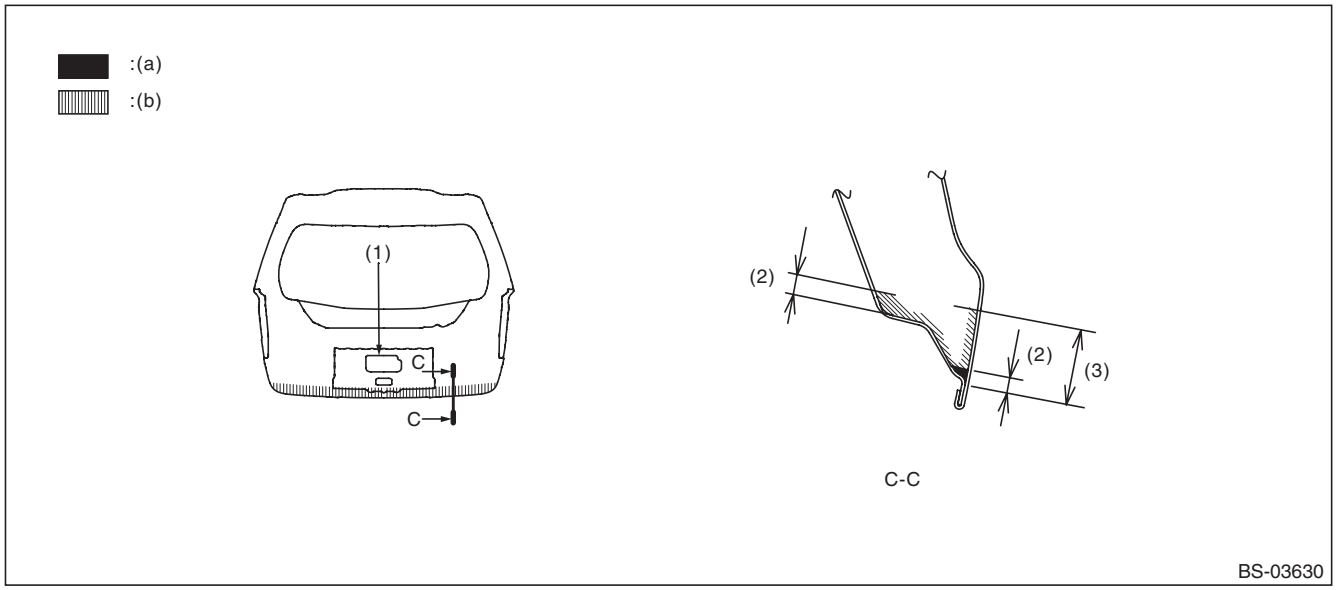

(a) Wax filling part (b) Application area

(1) Wax application work openings (2) 10 mm (0.39 in) (3) 40 mm (1.57 in)

- Trunk

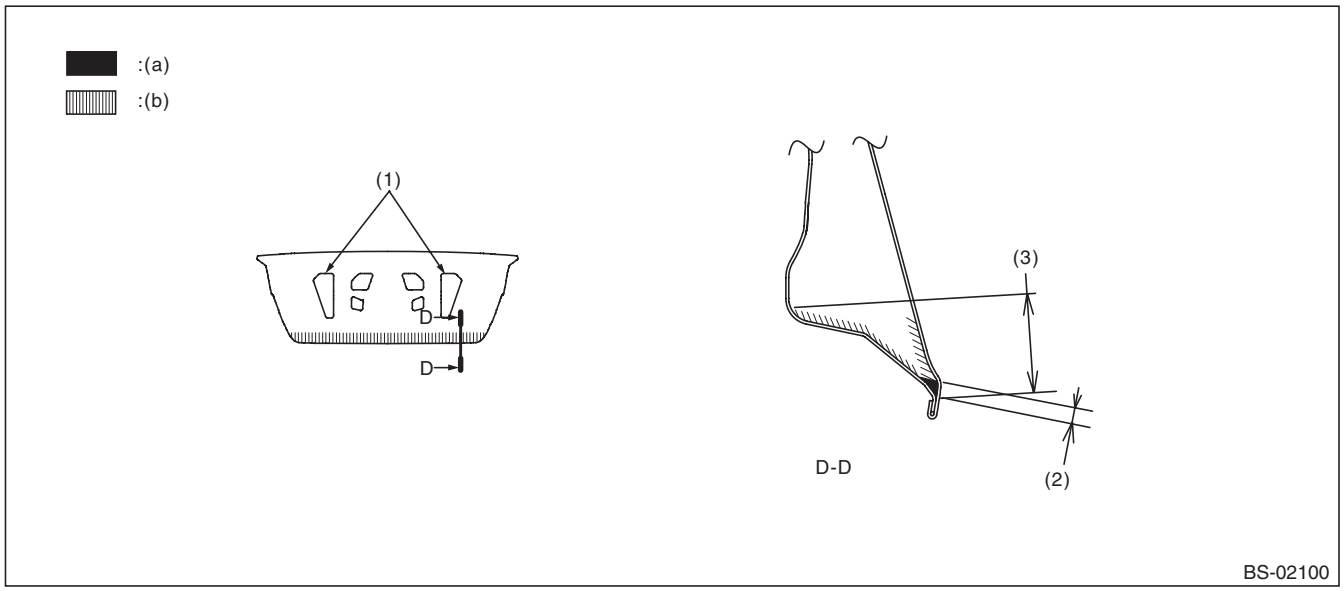

(a) Wax filling part (b) Application area

(1) Wax application work openings (2) 10 mm (0.39 in) (3) 100 mm (3.94 in)

- Front hood hinge

Apply around the installation outer circumference (indicated range) at two locations on the left and right.

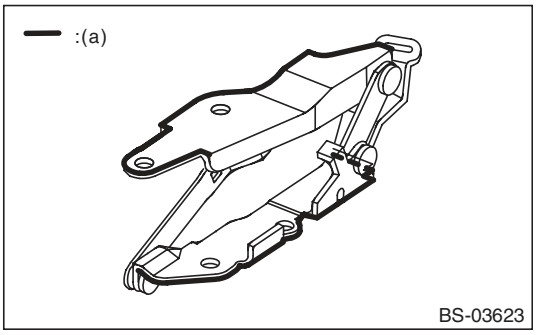

(a) Application thickness = 15 μm or more

- Door hinge

Apply to the installation outer circumference at two locations at the top and bottom (all eight locations).

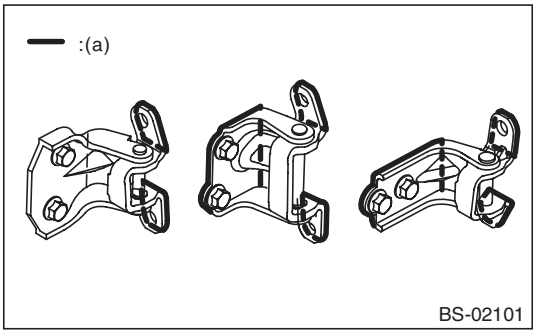

(a) Application thickness = 15 μm or more

- Rear gate hinge

Apply around the installation outer circumference (plate edges) at two locations on the left and right.

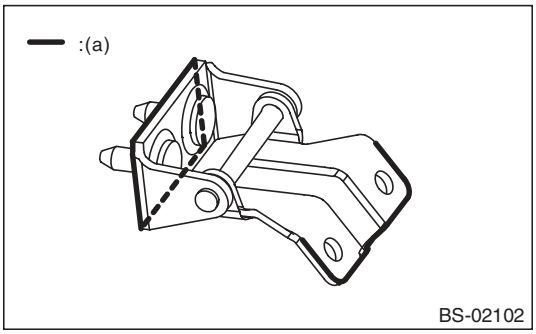

(a) Application thickness = 15 μm or more

- Overall view

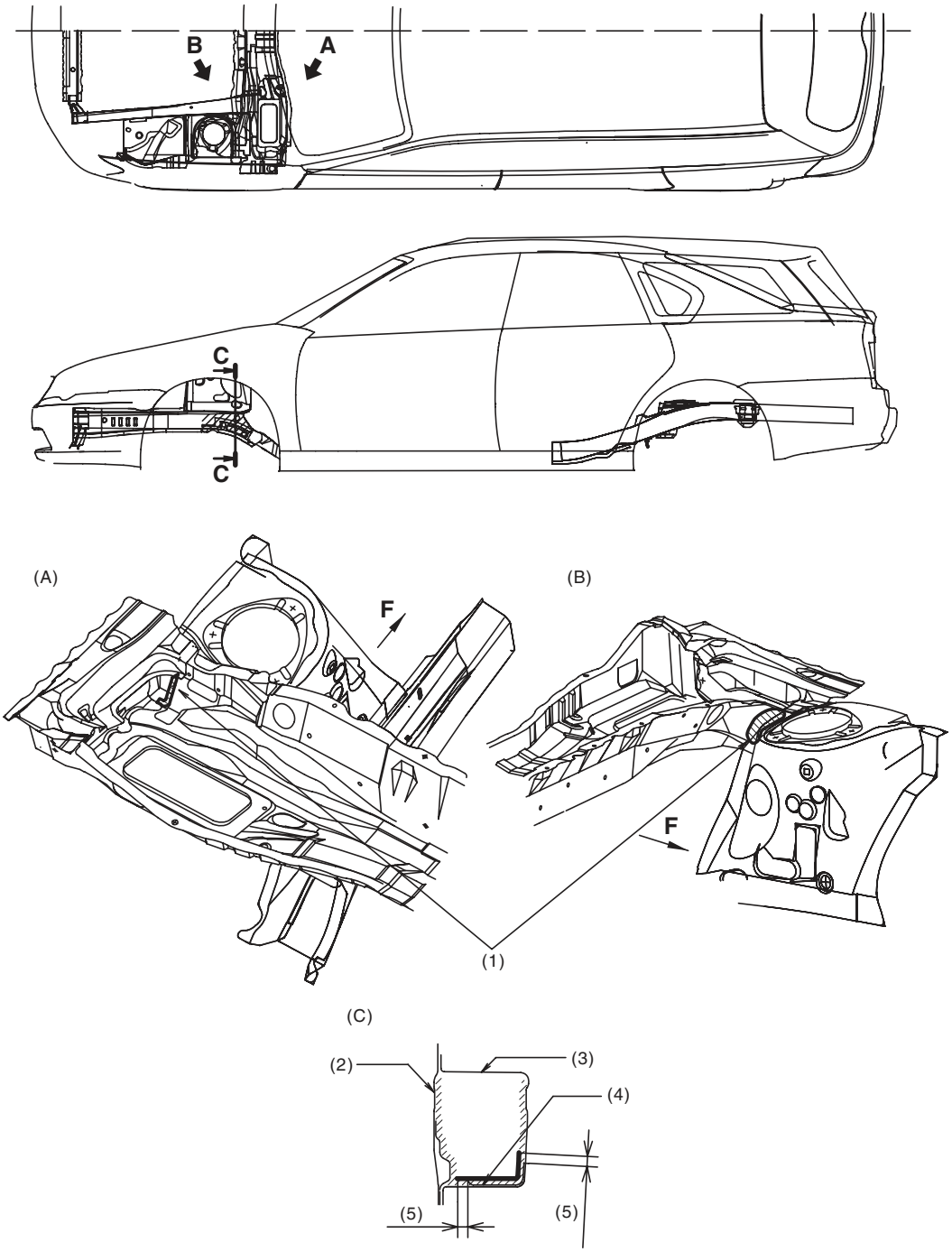

(A)	View A	(B)	View B	(C)	Section C — C
(1)	Apply to the contact surface between the front suspension bracket and duct. (15 µm or more)	(2)	Closing plate	(4)	Reinforcement
		(3)	Front side frame front	(5)	10 mm (0.39 in)

Anticorrosion Wax

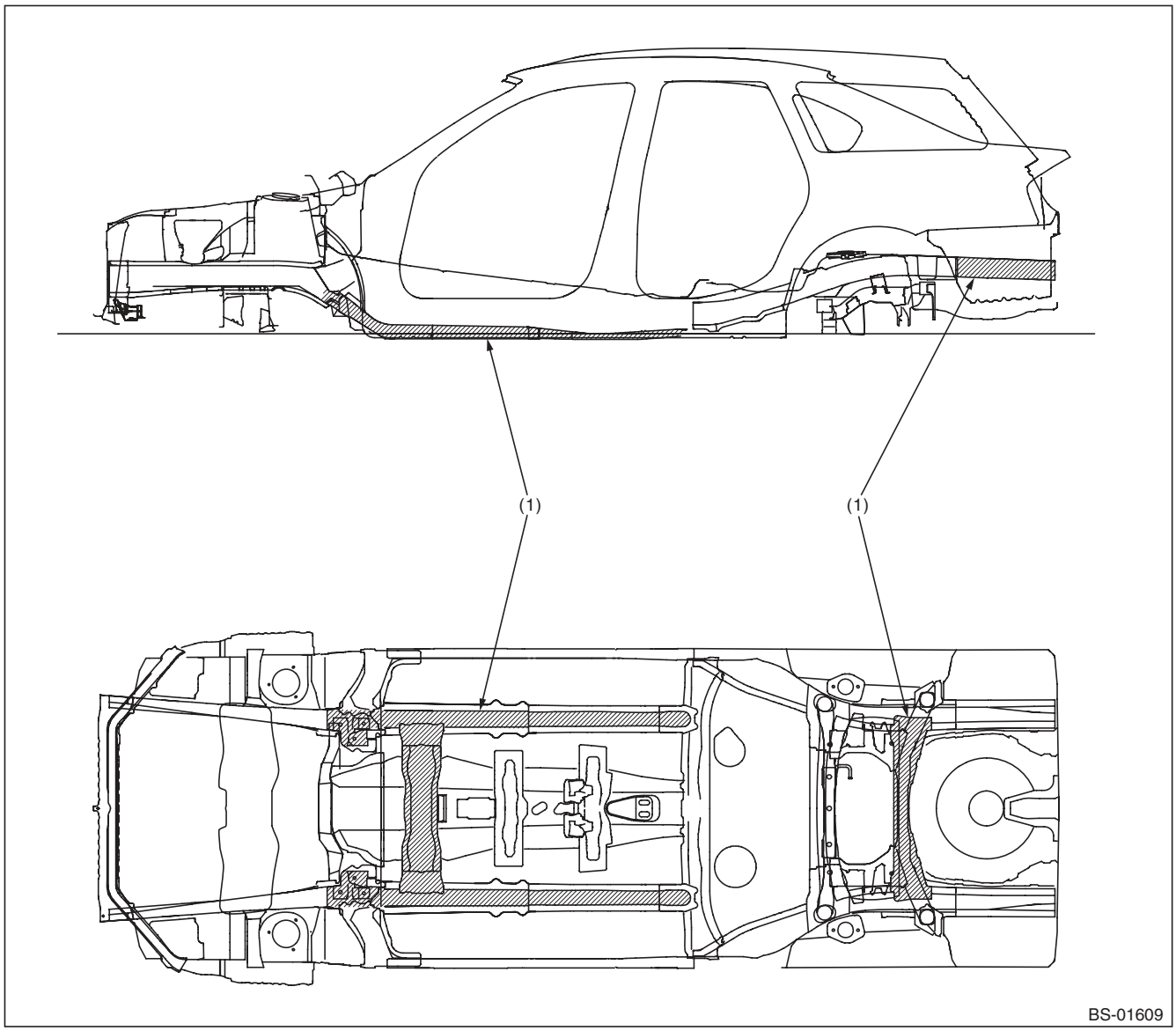

(1) Apply wax to the underside of vehicle.

7. Under Coat

A: SPECIFICATION

Repair material:
THREE BOND 6115

1) The application thickness is 0.4 mm or more when no instruction is indicated.
2) Take care that under coat does not become attached to other locations than shown in the figures and the following locations.
- High-temperature parts related to the exhaust pipe
- Hoses, tubes, and harness parts
- Installation surfaces of rear suspension, transmission, subframe, etc.

3) Application area

Under Coat

- Side view

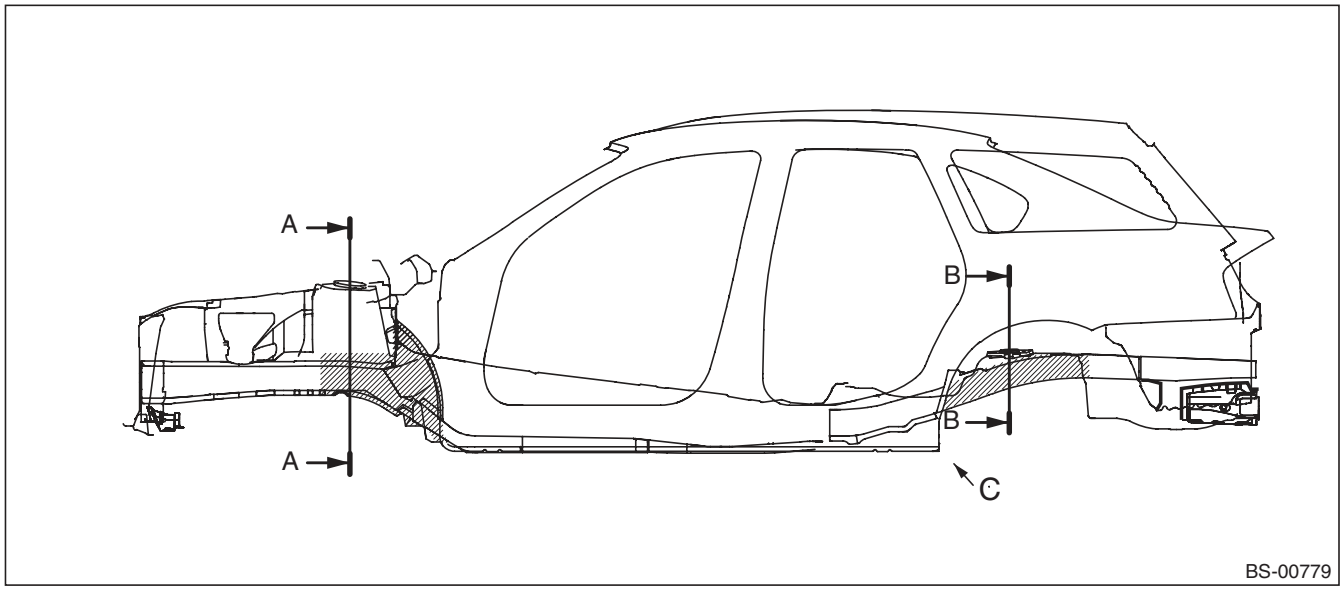

Cross section A — A

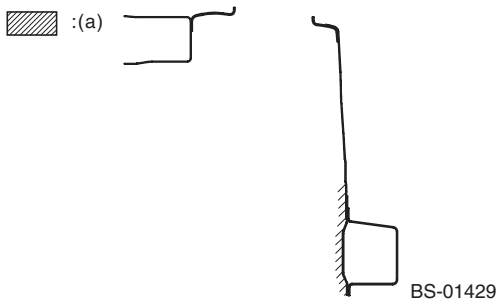

Cross section B — B

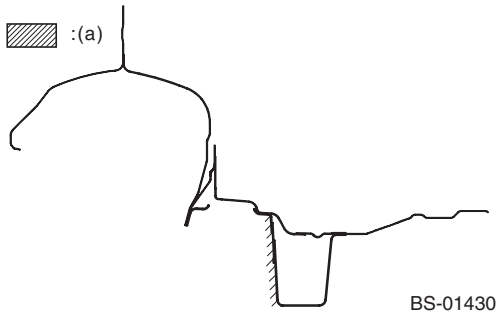

View C

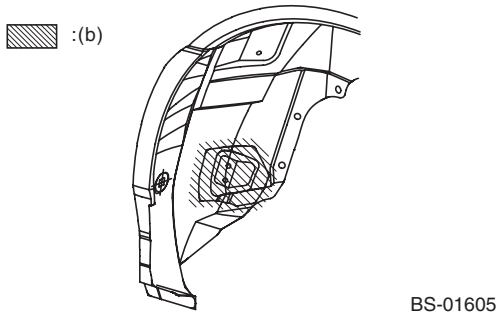

(a) Under coat application locations

(b) Under coat application locations (Film thickness = 600 μ or more)

Under Coat

- Bottom view/rear view

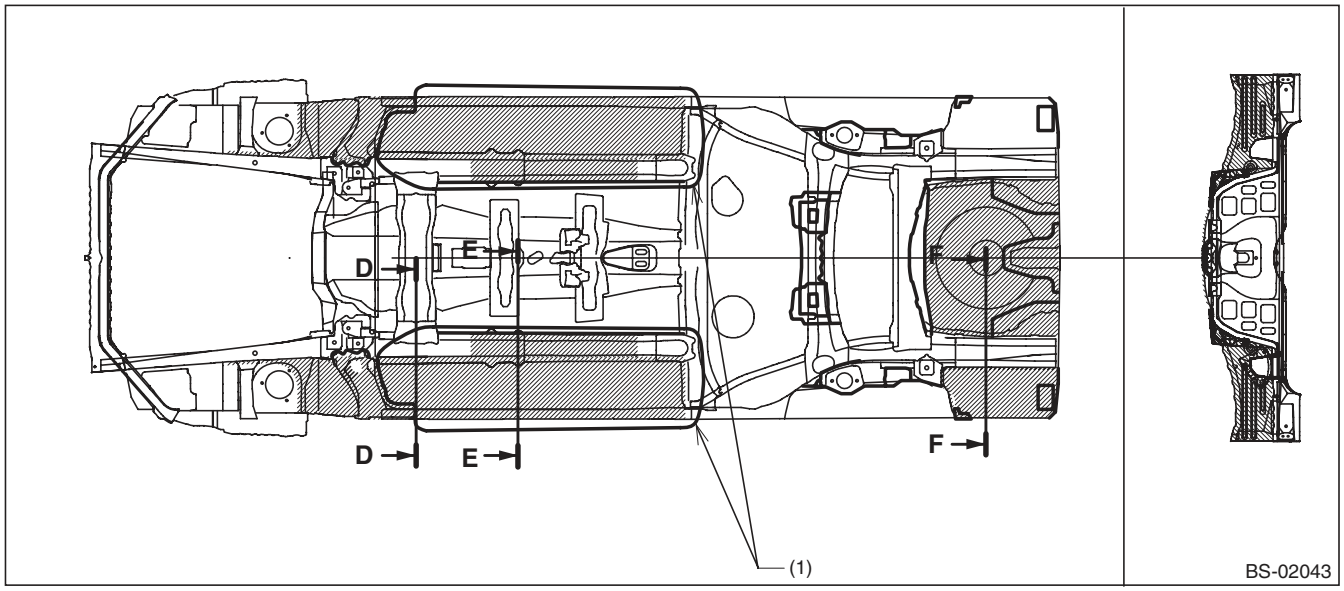

(1) For models with an under cover, no under coat is required in this area.

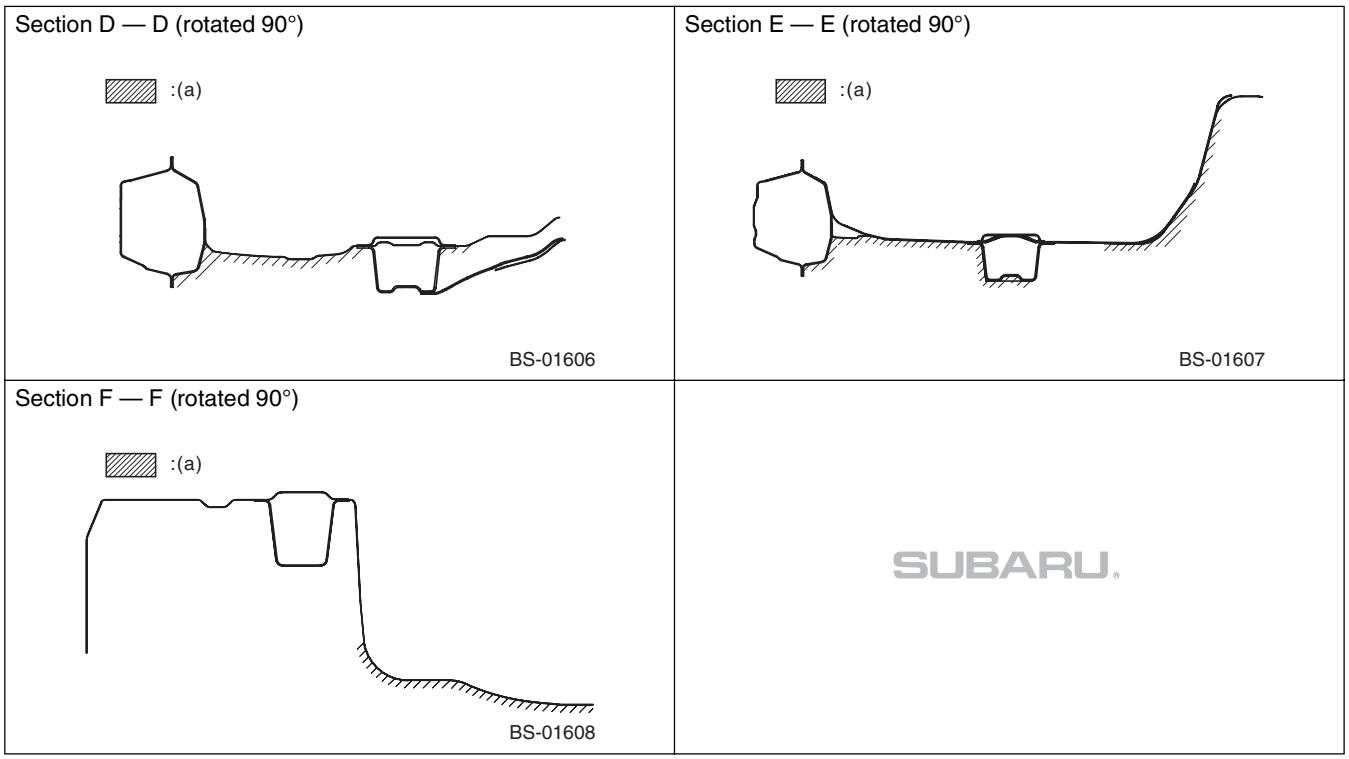

(a) Under coat application locations

8. Anti Chipping Coat

A: SPECIFICATION

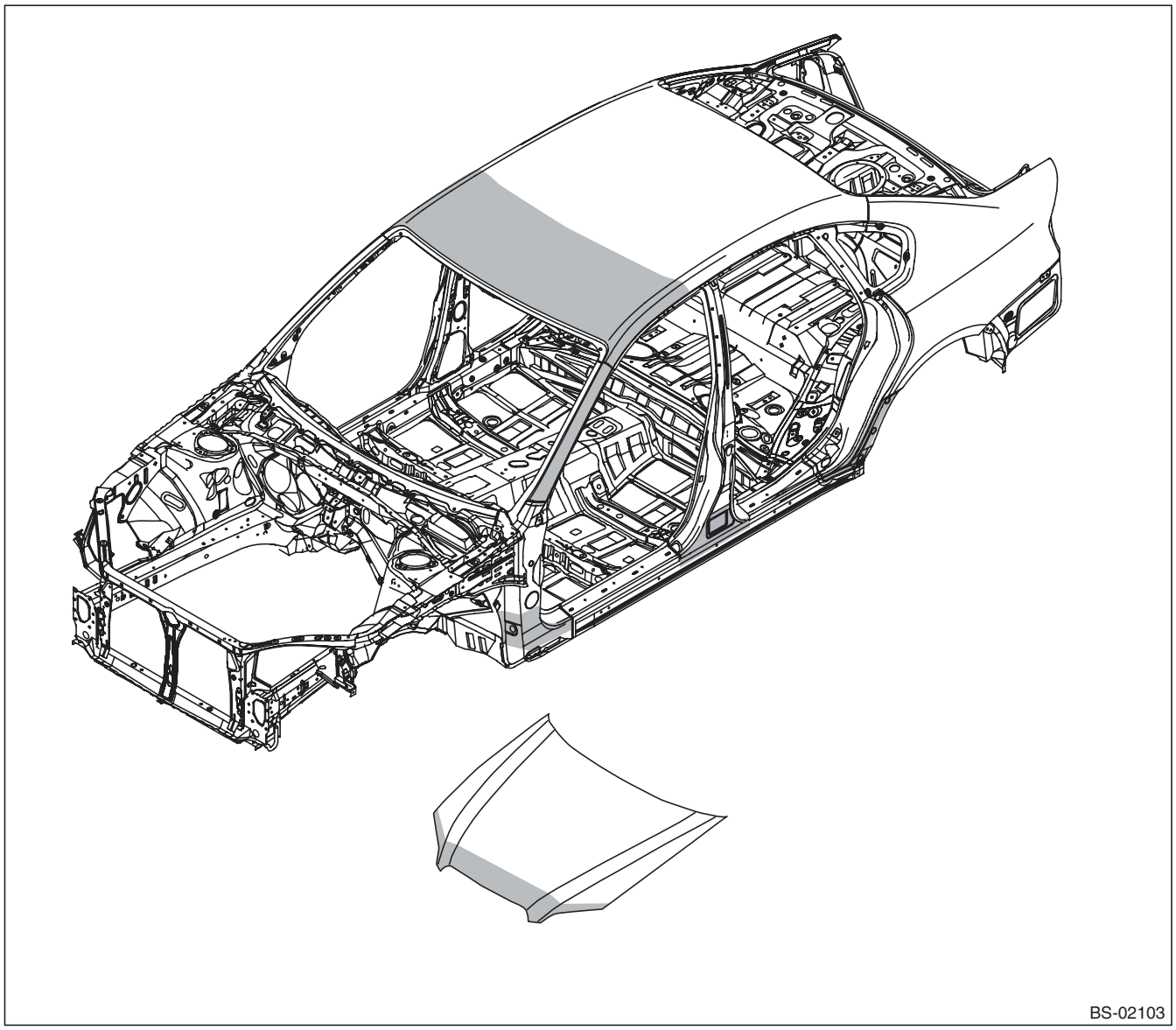

9. Stone Guard Coat

A: SPECIFICATION

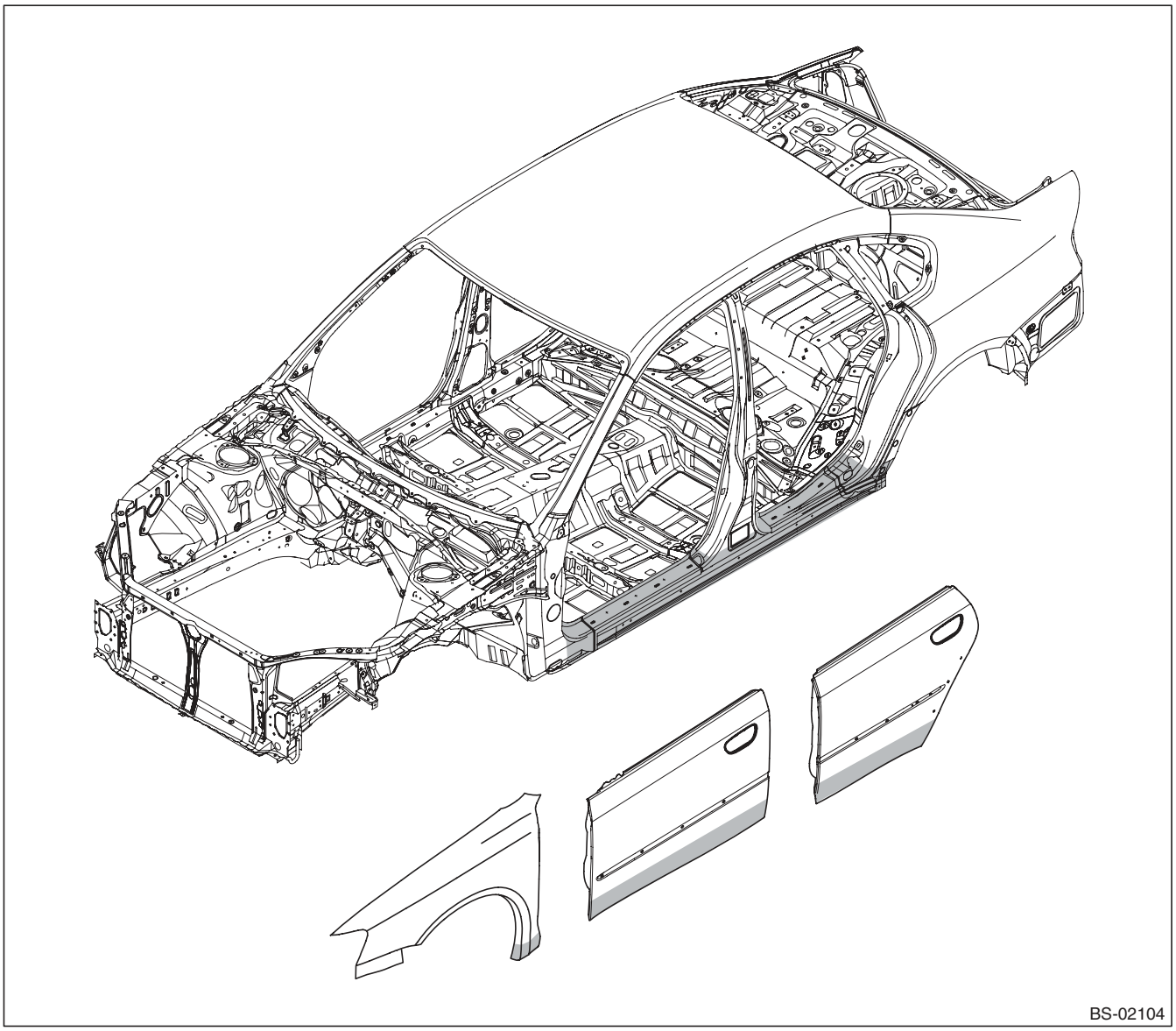

10. Galvanized Sheet Metal

A: SPECIFICATION

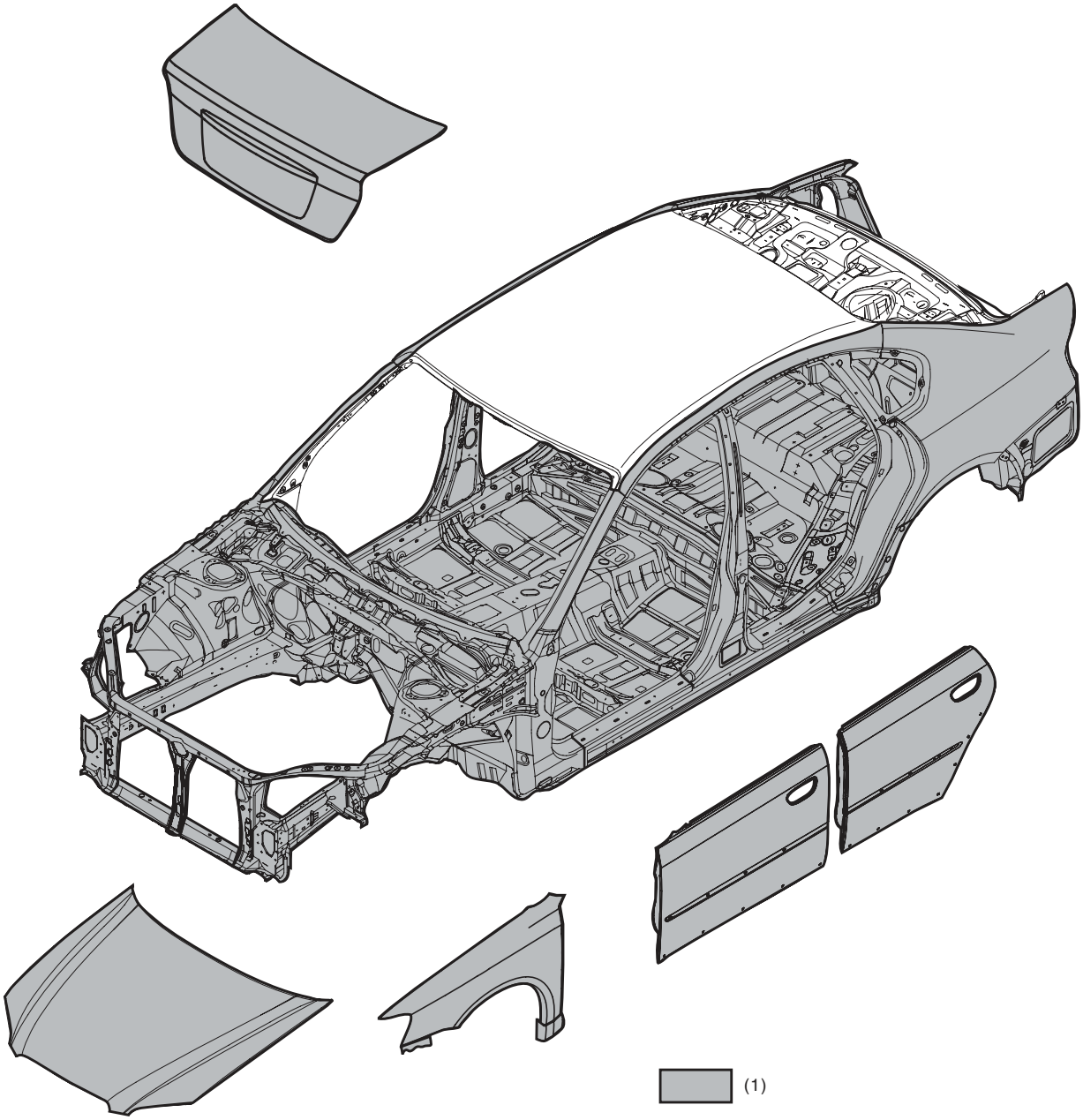

BS-02094

(1) Galvanized on both sides

NOTE:
Front hood panel is only for OUTBACK model.

11. Aluminium Sheet Metal

A: SPECIFICATION

- Front hood panel

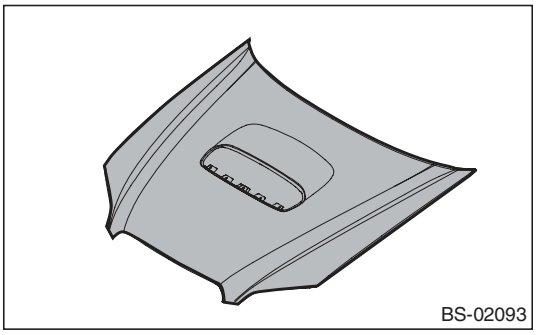

NOTE:
Only for sedan and wagon model (Except for OUTBACK model)

- Rear gate panel

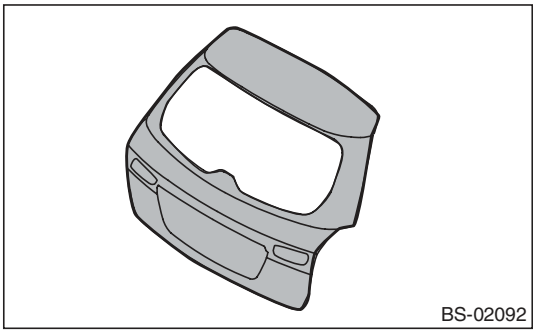

1. General Description

A: SPECIFICATION

- Normal meter

Combination meter	Speedometer	Stepping motor type
	Tachometer	
	Engine coolant temperature gauge	
	Fuel gauge	
	Malfunction indicator light	LED
	Oil pressure warning light	
	ABS warning light	
	Airbag warning light	
	Seat belt warning light	
	Door open warning light	
	Brake fluid and parking brake warning light	
	Low fuel warning light	
	Charge warning light	
	AT oil temperature warning light	
	AWD warning light	
	Vehicle dynamics control (VDC) warning light and VDC OFF indicator light	
	Vehicle dynamics control (VDC) indicator light	
	Turn signal indicator light	
	HI-beam indicator light	
	Security and immobilizer indicator light	
	Cruise indicator light	
	Cruise set indicator light	
	Front fog light indicator light	
	SPORT shift indicator back-up light	
	SPORT indicator light	
	AT select lever position indicator light	
	Light illumination indicator light	
	Meter illumination back-up light	
	LCD back light	
	Odo/Trip indicator	LCD
	SPORT shift indicator	

- Meter with multi-information display

Combination meter	Speedometer	Stepping motor type
	Tachometer	
	Engine coolant temperature gauge	
	Fuel gauge	
	ECO gauge	
	Malfunction indicator light	LED
	Oil pressure warning light	
	ABS warning light	
	Airbag warning light	
	Seat belt warning light	
	Door open warning light	
	Brake fluid and parking brake warning light	
	Low fuel warning light	
	Charge warning light	
	AT oil temperature warning light	
	S# change prohibited indicator light	
	AWD warning light	
	Tire pressure warning light	
	Vehicle dynamics control (VDC) warning light and VDC OFF indicator light	
	Vehicle dynamics control (VDC) indicator light	
	Turn signal indicator light	
	HI-beam indicator light	
	Security and immobilizer indicator light	
	Cruise indicator light	
	Cruise set indicator light	
	Front fog light indicator light	
	Shift up indicator light (MT model)	
	AT select lever position & SPORT shift indicator back-up light	
	Light illumination indicator light	
	Meter illumination back-up light	
	LCD back light	
	AT select lever position & SPORT shift indicator	LCD
	Multi-information Display (Odo/Trip indicator, Instant fuel economy/Average fuel economy, Ambient air temperature/Continuous driving time, Drivable distance, Current time, SI-DRIVE mode, Malfunction warning display)	

B: CAUTION

- Be careful not to damage the meters and instrument panel.
- Be careful not to damage the meter glass.
- Make sure the electrical connector is connected securely.
- After installation, make sure that each meter operates normally.
- Use gloves to avoid damage and getting fingerprints on the glass surface and meter surfaces.
- Do not apply an excessive force on the printed circuit.
- Do not drop or otherwise apply impact.
- When the combination meter of model with immobilizer has been replaced, be sure to perform the registration of immobilizer.

C: PREPARATION TOOL

1. SPECIAL TOOL

ILLUSTRATION	TOOL NUMBER	DESCRIPTION	REMARKS
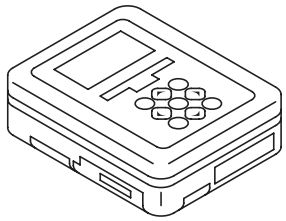 ST1B022XU0	1B022XU0	SUBARU SELECT MONITOR III KIT	Used for troubleshooting the electrical system.

2. GENERAL TOOL

TOOL NAME	REMARKS
Circuit tester	Used for measuring resistance and voltage.

2. Combination Meter System

A: WIRING DIAGRAM

1. COMBINATION METER

<Ref. to WI-166, WIRING DIAGRAM, Combination Meter System.>

B: INSPECTION

1. SELF-DIAGNOSIS

The self-diagnosis (checking of each meter, warning light, indicator, illumination, LCD, buzzer sound) of combination meter can be performed in the following procedure.

NOTE:
Perform the steps described in 2) through 4) within 10 seconds.
1) Within 3 seconds after turning the ignition switch to ON, set the lighting switch to tail light or headlight position.
2) Press the odo/trip meter knob three times.
3) Turn the lighting switch to OFF, and press the odo/trip meter knob three times.
4) Set the lighting switch to tail light or headlight position again, and press the odo/trip meter knob three times.

NOTE:
- When pressing the odo/trip meter knob four times, the display changes to DTC display mode. <Ref. to IDI-18, DTC DISPLAY MODE, INSPECTION, Combination Meter System.>
- When the self-diagnosis function operates, the warning light, indicator, and LCD display checks are performed. After this, operation checks are performed in the order of meter, illumination, and buzzer for each press of the odo/trip meter knob button. <Ref. to IDI-6, LIST OF SELF-DIAGNOSIS MODE OPERATION, INSPECTION, Combination Meter System.> Turn the ignition switch to OFF to cancel the self-diagnosis function.
- When the engine starts during diagnosis, the self-diagnosis function is not cancelled, however, once the vehicle starts driving, the self-diagnosis function is deactivated automatically for safety.

2. LIST OF SELF-DIAGNOSIS MODE OPERATION

Normal meter

Speedometer, tachometer, fuel gauge, engine coolant temperature gauge	Microcomputer running type warning light, indicator light	AT select lever position indicator light	Odo/Trip indicator	SPORT shift indicator	Illumination (indicator needle, plate, ring, LCD)	Buzzer (SPORT shift buzzer, VDC buzzer)
Step 0. Processing to self-diagnosis function						
Operating initial operation	Initial illuminating	Normal	Normal	Initial illuminating	Initial illuminating	Not beep.
Step 1-1. Check each indication after initial operation						
Repeat the sweep operation (After holding on lowest position for one second, reaches to highest position within 5 seconds, and after holding on highest position for one second, reaches to lowest position within 5 seconds).	Light ON	With the highest brightness, illuminate the position sequentially at a cycle of 1.5 seconds.	Perform the segment check. For the illumination order, refer to the illumination order table.	Perform the segment check. For the illumination order, refer to the illumination order table.	Light at the highest brightness.	Not beep.
Step 1-2. Press the trip knob (trip knob input is not accepted till the meter indicator needle reaches the highest position): sweep complete, AT select lever position indicator display is set						
After completing sweep in step 1-1, back to lowest position.	Light ON	Keep the position indicated when the trip knob is pressed.	Underbar “ _ ” is displayed.	“1” is displayed.	Light at the highest brightness.	Not beep.
Step 2-1. Press the trip knob, and hold it: Check each meter						
All meters are moved simultaneously in every 0.5 seconds from the lowest position to highest position. Speedometer/ Tachometer: Approx. 5 degrees at every movement. Engine coolant temperature /Fuel gauge: Moves approx. 2 degrees at a time.	Light OFF	Keep the position indicated that set in step 1-2.	Display the current meter directing angle on odometer. Ex.) When the speedometer/ tachometer: 135 degrees and engine coolant temperature gauge/fuel gauge: 54 degrees, displays “135054”.	“▼2” is displayed.	Light at the highest brightness.	Not beep.
Step 2-2. Release the trip knob: Specifying the meter directing position						
Stop at directing position when the trip knob is released.	Light OFF	Keep the position indicated that set in step 1-2.	Display the current meter directing angle on odometer.	“2” is displayed.	Light at the highest brightness.	Not beep.
Step 3-1. Press the trip knob, and hold it: Check illumination						

Speedometer, tachometer, fuel gauge, engine coolant temperature gauge	Microcomputer running type warning light, indicator light	AT select lever position indicator light	Odo/Trip indicator	SPORT shift indicator	Illumination (indicator needle, plate, ring, LCD)	Buzzer (SPORT shift buzzer, VDC buzzer)
Keep the position that specified at step 2-2.	Light OFF	Varying from the highest brightness (ILL6) to the lowest luminescence (ILL1) every second. After reaching at ILL1, repeat it from ILL6.	Illumination brightness is displayed. (From ILL6 to ILL1)	"▼3" is displayed.	Varying from the highest brightness (ILL6) to the lowest luminescence (ILL1) every second. After reaching at (ILL1), repeat it from (ILL6).	Not beep.
Step 3-2. Release the trip knob: Specifying the illumination brightness						
Keep the position that specified at step 2-2.	Light OFF	Keep the brightness at the time when the trip knob is released.	Displays the brightness level at the time when the trip knob was released.	"3" is displayed.	Keep the brightness at the time when the trip knob is released.	Not beep.
Step 4-1. Press the trip knob: Check the beeping of SPORT shift buzzer (For AT model)						
All meter indicator needle returns to lowest position.	Light OFF	Light at the highest brightness. Keep the position indicated that set in step 1-2.	Illumination brightness is displayed.	"▲ ▼8" is displayed. Blinks with buzzer.	Light at the highest brightness.	SPORT shift buzzer beeps.
Step 4-2. Press the trip knob: Check the VDC indicator light (Model with VDC)						
All meter indicator needle returns to lowest position.	VDC warning light and VDC operation indicator light blink.	Light at the highest brightness. Keep the position indicated that set in step 1-2.	Illumination brightness is displayed.	"4" is displayed.	Light at the highest brightness.	VDC buzzer beeps.
Step 5. Press the trip knob: Complete the self-diagnosis 1 cycle						
All meter indicator needle returns to lowest position, and go back to step 1 after completion.						

- Illuminating order table

Illuminating order	1	2	3	4	5	6	7	8	9	10	11	
Trip meter A/B	AB	A	B	A	B	A	B	A	B	A	B	
Odo/trip meter	8888.8 888888	00000 000000	1111.1 111111	22222 222222	3333.3 333333	44444 444444	5555.5 555555	66666 666666	7777.7 777777	88888 888888	9999.9 999999	
SPORT shift indicator	8	1	2	3	4	5	1	2	3	4	5	Go back to 1 and repeat.
▲ ▼	▲ ▼	▲	▼	▲	▼	▲	▼	▲	▼	▲	▼	
AT select lever position indicator	P	P	R	R	R	N	N	N	D	D	D	
Display time (sec.)	1	0.5	0.5	0.5	0.5	0.5	0.5	0.5	0.5	0.5	0.5	

3. LIST OF SELF-DIAGNOSIS MODE OPERATION

Meter with multi-information display

Speedometer, tachometer, fuel gauge, engine coolant temperature gauge, ECO gauge	Microcomputer running type warning light, indicator light	AT select lever position indicator light	Multi-information display	Illumination (indicator needle, plate, ring, LCD)	Buzzer (SPORT shift buzzer, VDC buzzer, vehicle speed warning buzzer)
Step 0. Processing to self-diagnosis function					
Operating initial operation	Initial illuminating	Normal	TRIP: Normal ODO: Normal	Initial illuminating	Not beep.
Step 1-1. Check each indication after initial operation					
Repeat the sweep operation (After holding on lowest position for one second, reaches to highest position within 5 seconds, and after holding on highest position for one second, reaches to lowest position within 5 seconds).	Light ON	Perform the segment check. For the illumination order, refer to the table 1 of illumination order tables.	STEP 1 is displayed. White illumination: 6 seconds. Yellow illumination: 6 seconds.	Light at the highest brightness.	Not beep.
Step 1-2. Press the trip knob: sweep completes, AT select lever position indicator display is set					
After quitting sweep in step 1-1, back to lowest position. (Until back to lowest position, ignore trip input.)	Light ON	Keep the position indicated when the trip knob is pressed.	Keep the illumination color indicated when the trip knob is pressed.	Light at the highest brightness.	Not beep.
Step 2-1. Press the trip knob, and hold it: Check each meter					
Perform the indicator needle check. For the illumination order, refer to the table 2 of illumination order tables.	Light OFF (Low fuel warning light follows the table 2 of tables.)	For the illumination order, refer to the table 2 of illumination order tables.	STEP 2 is displayed. White illumination: 12.5 seconds. Yellow illumination: 12.5 seconds.	Light at the highest brightness.	Not beep.
Step 2-2. Release the trip knob: Specifying the meter directing position					
Stop at directing position when the trip knob is released. (Indicator needle stops moving after movement is completed.)	Light OFF	Keep the position indicated when the trip knob is released.	Keep the illumination color at the time when the trip knob is released.	Light at the highest brightness.	Not beep.
Step 3-1. Press the trip knob, and hold it: Check illumination					
Keep the position that specified at step 2-2.	Light OFF	Keep the position that specified at step 2-2.	STEP 3 is displayed, then illumination brightness is displayed. (From ILL6 to ILL1)	Varying from the highest brightness (ILL6) to the lowest luminescence (ILL1) every second. After reaching at (ILL1), repeat it from (ILL6).	Not beep.
Step 3-2. Release the trip knob: Specifying the illumination brightness					
Keep the position that specified at step 2-2.	Light OFF	Keep the position that specified at step 2-2.	Keep the position indicated when the trip knob is pressed.	Keep the brightness at the time when the trip knob is released.	Not beep.
Step 4-1. Press the trip knob: Check the beeping of multi buzzer					
All meter indicator needle returns to lowest position.	Light OFF	P is displayed in white illumination.	STEP 3 WN BUZZER is displayed. White illumination: 1 second. Yellow illumination: 1 second.	Light at the highest brightness.	Buzzer beeps when multi information display is yellow illumination.

Speedometer, tachometer, fuel gauge, engine coolant temperature gauge, ECO gauge	Microcomputer running type warning light, indicator light	AT select lever position indicator light	Multi-information display	Illumination (indicator needle, plate, ring, LCD)	Buzzer (SPORT shift buzzer, VDC buzzer, vehicle speed warning buzzer)
Step 4-2. Press the trip knob: Check the beeping of SPORT shift buzzer (For AT model only, while for MT model, go to the next)					
All meter indicator needle returns to lowest position.	Light OFF	Shift display blinks with buzzer.	STEP 4 SS BUZZER is displayed.	Light at the highest brightness.	SPORT shift buzzer beeps.
Step 5. Press the trip knob: Complete the self-diagnosis 1 cycle					
All meter indicator needle returns to lowest position, and go back to step 1 after completion.					

- Illuminating order table

Display Contents 1

Illuminating order	1	2	3	4	5	6	7	8	9	10	
▲ ▼					▲ ▼	▲	▼	▲	▼	▲	Go back to 1 and repeat
AT select lever position indicator	P	R	N	D	All lights ON	1	2	3	4	5	
Display time (seconds)	1	0.5	0.5	0.5	1	0.5	0.5	0.5	0.5	0.5	
Back-up light	White light ON										

Display Contents 2

Illuminating order	1	2	3	4	5	6	7	8	9	10	
Speedometer	0	0	40	60	80	100	80	60	40	0	
Tachometer	0	0	1000	2000	3000	4000	3000	2000	1000	0	
Fuel gauge	Lowest position	EMPTY	Warning light illumination position	1/2	FULL	Highest position	FULL	1/2	Warning light illumination position	EMPTY	
Engine coolant temperature gauge	Lowest position	C	at the first scale	1/2	at the third scale	over the fourth scale (approx. 120°C)	at the third scale	1/2	at the first scale	C	
ECO gauge	–Max	0	+Max	0	–Max	0	+Max	0	–Max	0	Go back to 1 and repeat.
Low fuel warning light	Light ON	Light ON	Light ON	Light OFF	Light OFF	Light OFF	Light OFF	Light OFF	Light ON	Light ON	
AT select lever position indicator	P	R	N	D	All lights ON	▲1	▼2	▲3	▼4	▲5	
Multi-information display	STEP 2 is displayed.										
Display time (seconds)	2.5	2.5	2.5	2.5	2.5	2.5	2.5	2.5	2.5	2.5	
Back-up light (SS of AT model)	White light ON										
Back-up light (Multi information display LCD)	White light ON					Yellow light ON					

4. SYMPTOM CHART

Symptoms	Repair order	Reference
Combination meter assembly does not operate.	1. Power supply 2. Ground circuit 3. Combination meter	<Ref. to IDI-11, CHECK POWER SUPPLY AND GROUND CIRCUIT, INSPECTION, Combination Meter System.>
Speedometer does not operate.	1. ABS C/M or VDC C/M 2. Harness 3. Combination meter	<Ref. to IDI-12, CHECK THE ABSCM OR VDCCM, INSPECTION, Combination Meter System.>
Tachometer does not operate.	1. ECM 2. Harness 3. Combination meter	<Ref. to IDI-12, CHECK ENGINE CONTROL MODULE (ECM), INSPECTION, Combination Meter System.>
Fuel gauge does not operate.	1. Combination meter 2. Communication circuit 3. Harness 4. Body integrated unit 5. Fuel level sensor	<Ref. to IDI-13, CHECK FUEL LEVEL SENSOR, INSPECTION, Combination Meter System.>
Engine coolant temperature gauge does not operate.	1. Communication circuit 2. Engine coolant temperature sensor 3. Harness 4. Combination meter	<Ref. to IDI-15, CHECK ENGINE COOLANT TEMPERATURE SENSOR, INSPECTION, Combination Meter System.>
ECO gauge does not operate.	1. Communication circuit 2. Combination meter	<Ref. to IDI-15, CHECK ECO GAUGE, INSPECTION, Combination Meter System.> NOTE: After trip meter is reset, average fuel economy is not displayed within 1 km and ECO gauge does not operate.
Error display is shown on the odo/trip meter. (Except for meter with MID)	Communication circuit	<Ref. to IDI-17, COMMUNICATION ERROR DISPLAY, INSPECTION, Combination Meter System.>
Error display is shown on the Instantaneous/Average fuel economy and Estimated driving distance in the multi-information display.	1. Communication circuit	<Ref. to LAN(diag)-2, Basic Diagnostic Procedure.>
Error display is shown on the Ambient temperature in the multi-information display.	1. Communication circuit 2. Ambient sensor	<Ref. to LAN(diag)-2, Basic Diagnostic Procedure.> <Ref. to IDI-15, CHECK AMBIENT SENSOR, INSPECTION, Combination Meter System.>

CAUTION:
When measuring the voltage and resistance of each control module or sensor, use a tapered pin with a diameter of less than 0.64 mm (0.025 in) in order to avoid poor contact. Do not insert the pin more than 2 mm (0.08 in).

5. CHECK POWER SUPPLY AND GROUND CIRCUIT

Step		Check	Yes	No
1	**CHECK POWER SUPPLY FOR COMBINATION METER.** 1) Remove the combination meter. <Ref. to IDI-22, REMOVAL, Combination Meter.> 2) Disconnect the combination meter harness connector. 3) Turn the ignition switch to ON. 4) Measure the voltage between combination meter connector and chassis ground. ***Connector & terminal*** ***(i10) No. 3 (+) — Chassis ground (–):***	Is the voltage 10 V or more?	Go to step **2**.	Check the harness for open or short between the ignition switch and combination meter.
2	**CHECK POWER SUPPLY FOR COMBINATION METER.** Measure the voltage between combination meter connector and chassis ground. ***Connector & terminal*** ***(i10) No. 1 (+) — Chassis ground (–):***	Is the voltage 10 V or more?	Go to step **3**.	Check the harness for open or short between the fuse and combination meter.
3	**CHECK GROUND CIRCUIT OF COMBINATION METER.** 1) Turn the ignition switch to OFF. 2) Measure the resistance of harness between combination meter connector and chassis ground. ***Connector & terminal*** ***Normal meter model:*** ***(i10) No. 11 — Chassis ground:*** ***(i10) No. 12 — Chassis ground:*** ***Multi information display model:*** ***(i10) No. 11 — Chassis ground:*** ***(i10) No. 12 — Chassis ground:***	Is the resistance less than 10 Ω?	Replace the meter case assembly.	Repair the wiring harness.

6. CHECK THE ABSCM OR VDCCM

	Step	Check	Yes	No
1	**CHECK VEHICLE SPEED SIGNAL.** 1) Lift up the vehicle and support it with rigid racks. 2) Remove the combination meter with harness connector. 3) Drive the vehicle faster than 10 km/h (6 MPH). **WARNING:** **Be careful not to get caught in the running wheels.** 4) Measure the voltage between combination meter connector and chassis ground. ***Connector & terminal*** ***(i10) No. 19 (+) — Chassis ground (–):***	Is the voltage less than 1 V ←→ 5 V or more?	Replace the meter case assembly.	Go to step **2**.
2	**CHECK HARNESS BETWEEN ABSCM OR VDCCM AND COMBINATION METER.** 1) Turn the ignition switch to OFF. 2) Disconnect the connector from ABSCM or VDCCM and combination meter. 3) Measure the resistance between ABSCM or VDCCM harness connector and the combination meter harness connector. ***Connector & terminal*** ***Model without VDC*** ***(B301) No. 23 — (i10) No. 19:*** ***Model with VDC*** ***(B310) No. 33 — (i10) No. 19:***	Is the resistance less than 10 Ω?	Model without VDC: Check the ABSCM. <Ref. to ABS(diag)-2, Basic Diagnostic Procedure.> Model with VDC: Check the VDCCM. <Ref. to VDC(diag)-2, Basic Diagnostic Procedure.>	Repair the wiring harness.

7. CHECK ENGINE CONTROL MODULE (ECM)

	Step	Check	Yes	No
1	**CHECK ECM SIGNAL.** 1) Start the engine. 2) Measure the voltage between ECM connector and chassis ground. ***Connector & terminal*** ***(B136) No. 22 (+) — Chassis ground (–):***	Is the voltage 0 ←→ 14 V or more?	Go to step **2**.	Inspect the ECM. <Ref. to EN(H4SO)(diag)-2, Basic Diagnostic Procedure.> <Ref. to EN(H4DOTC)(diag)-2, Basic Diagnostic Procedure.> <Ref. to EN(H6DO)(diag)-2, Basic Diagnostic Procedure.>
2	**CHECK HARNESS BETWEEN COMBINATION METER AND ECM.** 1) Turn the ignition switch to OFF. 2) Disconnect the connector from ECM and combination meter. 3) Measure the resistance between ECM harness connector and combination meter harness connector. ***Connector & terminal*** ***(B136) No. 22 — (i10) No. 20:***	Is the resistance less than 10 Ω?	Replace the meter case assembly.	Repair the wiring harness.

8. CHECK FUEL LEVEL SENSOR

	Step	Check	Yes	No
1	**CHECK COMBINATION METER.** Check combination meter fuel gauge indication status.	Does the fuel gauge indicate EMPTY or is the remaining fuel or similar warning light blinking?	Go to step **4**.	Go to step **2**.
2	**CHECK COMBINATION METER.** Perform the self-diagnosis of combination meter. <Ref. to IDI-5, SELF-DIAGNOSIS, INSPECTION, Combination Meter System.>	Is operation normal?	Go to step **3**.	Replace the meter case assembly. <Ref. to IDI-22, Combination Meter.>
3	**CHECK THE COMMUNICATION STATUS.** 1) Prepare the Subaru Select Monitor kit. 2) Turn the ignition switch to ON (engine OFF) and run the "PC application for Subaru Select Monitor". 3) Read the DTC of body integrated unit using Subaru Select Monitor. <Ref. to LAN(diag)-12, OPERATION, Subaru Select Monitor.>	Is a DTC detected?	Perform the diagnosis according to DTC. <Ref. to LAN(diag)-31, LIST, List of Diagnostic Trouble Code (DTC).>	Go to step **4**.
4	**CHECK HARNESS.** 1) Disconnect the harness connector of body integrated unit. 2) Measure the resistance between body integrated unit harness connector terminal and chassis ground. ***Connector & terminal*** ***(B281) No. 19 — Chassis ground:***	Is the resistance less than 2 — 96 Ω?	Go to step **5**. When "Yes" was chosen in step 1, Go to step **9**.	Repair the wiring harness.
5	**CHECK COMMUNICATION BETWEEN BODY INTEGRATED UNIT AND METERS.** 1) Remove the fuel sub level sensor. <Ref. to FU(H4SO)-58, REMOVAL, Fuel Sub Level Sensor.> <Ref. to FU(H4DOTC)-73, REMOVAL, Fuel Sub Level Sensor.> <Ref. to FU(H6DO)-58, REMOVAL, Fuel Sub Level Sensor.> 2) Using suitable lead wires and a resister of approx. 100 Ω, short circuit the fuel sub level sensor connector to the chassis ground. 3) Turn the ignition switch to ON. ***Terminals*** ***(R59) No. 1 — Chassis ground:***	Does the meter needle indicate EMPTY?	Go to step **7**.	Go to step **6**.
6	**CHECK BODY INTEGRATED UNIT.** Under the same conditions as step 5, read the data of "Fuel level resistance" of the body integrated unit using the Subaru Select Monitor. <Ref. to LAN(diag)-12, OPERATION, Subaru Select Monitor.>	Is the data displayed as 100 Ω?	Go to step **11**.	Replace the body integrated unit. <Ref. to SL-56, REMOVAL, Body Integrated Unit.>

Step		Check	Yes	No
7	**CHECK COMMUNICATION BETWEEN BODY INTEGRATED UNIT AND METERS.** 1) Remove the fuel sub level sensor. <Ref. to FU(H4SO)-58, REMOVAL, Fuel Sub Level Sensor.> <Ref. to FU(H4DOTC)-73, REMOVAL, Fuel Sub Level Sensor.> <Ref. to FU(H6DO)-58, REMOVAL, Fuel Sub Level Sensor.> 2) Short the fuel sub level sensor connector terminal to the chassis ground using a suitable lead line wire with 2 — 6 Ω resistance connected between connector terminal and chassis ground. 3) Turn the ignition switch to ON. ***Terminals*** ***(R59) No. 1 — Chassis ground:***	Does the meter needle indicate FULL?	Go to step **9**.	Go to step **8**.
8	**CHECK BODY INTEGRATED UNIT.** Under the same conditions as step 7, read the data of "Fuel level resistance" of the body integrated unit using the Subaru Select Monitor. <Ref. to LAN(diag)-12, OPERATION, Subaru Select Monitor.>	Is it approximately 2 — 6 Ω?	Go to step **11**.	Replace the body integrated unit. <Ref. to SL-56, REMOVAL, Body Integrated Unit.>
9	**CHECK FUEL SUB LEVEL SENSOR.** 1) Remove the fuel sub level sensor. <Ref. to FU(H4SO)-58, REMOVAL, Fuel Sub Level Sensor.> <Ref. to FU(H4DOTC)-73, REMOVAL, Fuel Sub Level Sensor.> <Ref. to FU(H6DO)-58, REMOVAL, Fuel Sub Level Sensor.> 2) Measure the resistance between fuel sub level sensor connector terminals when the float is in FULL or EMPTY position. ***Connector & terminal*** ***(R59) No. 1 — No. 2:***	Is the resistance 1.0 — 3.0 Ω (FULL), and 61 — 63 Ω (EMPTY)?	Go to step **10**.	Replace the fuel sub level sensor.
10	**CHECK FUEL LEVEL SENSOR.** 1) Remove the fuel level sensor. <Ref. to FU(H4SO)-57, REMOVAL, Fuel Level Sensor.> <Ref. to FU(H4DOTC)-72, REMOVAL, Fuel Level Sensor.> <Ref. to FU(H6DO)-57, REMOVAL, Fuel Level Sensor.> 2) Measure the resistance between fuel level sensor connector terminals when the float is in FULL or EMPTY position. ***Connector & terminal*** ***(R58) No. 1 — No. 4:***	Is the resistance 1.0 — 3.0 Ω (FULL), and 31 — 33 Ω (EMPTY)?	Check connection status of the harness and connector that may have a temporary poor contact.	Replace the fuel level sensor.
11	**CHECK COMBINATION METER OPERATION.** 1) Remove the combination meter. 2) Install the combination meter to another vehicle with a normally operating fuel meter and check meter operation.	Is the fuel meter OK?	Replace the body integrated unit. <Ref. to SL-56, REMOVAL, Body Integrated Unit.>	Replace the meter case assembly.

9. CHECK ENGINE COOLANT TEMPERATURE SENSOR

	Step	Check	Yes	No
1	**CHECK COMMUNICATION ERROR DISPLAY.** 1) Turn the ignition switch to ON. 2) Check that the error code is displayed in odo/trip meter. (Except for meter with MID)	Is the error code “Er xx” displayed on odo/trip meter?	Check the communication circuit. <Ref. to IDI-17, COMMUNICATION ERROR DISPLAY, INSPECTION, Combination Meter System.>	Go to step **2**.
2	**CHECK ENGINE COOLANT TEMPERATURE SENSOR.** Check the engine coolant temperature sensor. <Ref. to EN(H4SO)(diag)-2, Basic Diagnostic Procedure.> <Ref. to EN(H4DOTC)(diag)-2, Basic Diagnostic Procedure.> <Ref. to EN(H6DO)(diag)-2, Basic Diagnostic Procedure.>	Is the engine coolant temperature sensor OK?	Replace the meter case assembly. <Ref. to IDI-22, Combination Meter.>	Replace the engine coolant temperature sensor. <Ref. to FU(H4SO)-22, Engine Coolant Temperature Sensor.> <Ref. to FU(H4DOTC)-31, Engine Coolant Temperature Sensor.> <Ref. to FU(H6DO)-20, Engine Coolant Temperature Sensor.>

10.CHECK ECO GAUGE

	Step	Check	Yes	No
1	**CHECK THE COMMUNICATION STATUS.** 1) Connect the Subaru Select Monitor, and turn the ignition switch and the Subaru Select Monitor to ON. 2) Read the DTC of the body integrated unit. <Ref. to LAN(diag)-12, OPERATION, Subaru Select Monitor.>	Is a DTC of low-speed CAN detected? <Ref. to LAN(diag)-31, LIST, List of Diagnostic Trouble Code (DTC).>	Perform the diagnosis according to DTC. <Ref. to LAN(diag)-31, LIST, List of Diagnostic Trouble Code (DTC).>	Go to step **2**.
2	**CHECK ECO GAUGE.** Perform the self-diagnosis of combination meter (multi-information display). <Ref. to IDI-5, SELF-DIAGNOSIS, INSPECTION, Combination Meter System.>	Does the ECO gauge operate normally when self-diagnosis of combination meter is performed?	Temporary poor contact occurs.	Replace the meter case assembly. <Ref. to IDI-22, Combination Meter.>

11.CHECK AMBIENT SENSOR

	Step	Check	Yes	No
1	**CHECK BODY INTEGRATED UNIT.** 1) Prepare the Subaru Select Monitor kit. 2) Turn the ignition switch to ON (engine OFF) and run the “PC application for Subaru Select Monitor”. 3) Read the DTC of body integrated unit using Subaru Select Monitor. <Ref. to LAN(diag)-12, OPERATION, Subaru Select Monitor.>	Is DTC displayed? <Ref. to LAN(diag)-31, LIST, List of Diagnostic Trouble Code (DTC).>	Repair it according to the DTC. <Ref. to LAN(diag)-31, LIST, List of Diagnostic Trouble Code (DTC).>	Go to step **2**.

	Step	Check	Yes	No
2	**CHECK BODY INTEGRATED UNIT.** 1) Start the engine, and set the vehicle speed at 20 km/h (12 MPH) or more. 2) Read the “Front Wheel Speed” of the body integrated unit using Subaru Select Monitor. <Ref. to LAN(diag)-12, OPERATION, Subaru Select Monitor.>	Is the data displayed as 999.9 km/h?	Check the following items. • LAN system <Ref. to LAN(diag)-65, DTC U1223 CAN-HS VDC/ABS NO-RECEIVE DATA, Diagnostic Procedure with Diagnostic Trouble Code (DTC).> • VDC <Ref. to VDC(diag)-2, Basic Diagnostic Procedure.> • ABS <Ref. to ABS(diag)-2, Basic Diagnostic Procedure.>	Go to step **3**.
3	**CHECK BODY INTEGRATED UNIT.** Read the “front wheel speed” of the body integrated unit using Subaru Select Monitor. <Ref. to LAN(diag)-12, OPERATION, Subaru Select Monitor.>	Is the vehicle speed displayed correctly?	Replace the body integrated unit. <Ref. to SL-56, REMOVAL, Body Integrated Unit.>	Go to step **4**.
4	**CHECK AMBIENT SENSOR.** Blow hot air at the ambient sensor, and read the voltage of ambient sensor using Subaru Select Monitor. <Ref. to LAN(diag)-12, OPERATION, Subaru Select Monitor.>	Does the voltage change?	Go to step **8**.	Go to step **5**.
5	**CHECK HARNESS.** 1) Turn the ignition switch to OFF. 2) Disconnect the connector from the body integrated unit and the ambient sensor. 3) Measure the resistance of harness between body integrated unit connector and ambient sensor connector. ***Connector & terminal*** ***(B281) No. 10 — (F78) No. 1:*** ***(B281) No. 3 — (F78) No. 2:***	Is the resistance less than 1 Ω?	Go to step **6**.	Repair the open circuit of harness.
6	**CHECK HARNESS.** Measure the resistance between body integrated unit connector and chassis ground. ***Connector & terminal*** ***(B281) No. 10 — Chassis ground:*** ***(B281) No. 3 — Chassis ground:***	Is the resistance less than 1 MΩ?	Go to step **7**.	Repair the short circuit of harness.
7	**CHECK AMBIENT SENSOR.** Blow hot air at the ambient sensor, and read the resistance between ambient sensor terminals. ***Terminals*** ***No. 1 — No. 2:***	Does the resistance change?	Replace the body integrated unit. <Ref. to SL-56, REMOVAL, Body Integrated Unit.>	Replace the ambient sensor.
8	**CHECK AMBIENT SENSOR.** Blow cold air at the ambient sensor, and read the ambient temperature using Subaru Select Monitor. <Ref. to LAN(diag)-12, OPERATION, Subaru Select Monitor.>	Does the temperature change (at lower temperatures)?	Replace the meter case assembly. <Ref. to IDI-22, Combination Meter.>	Replace the body integrated unit. <Ref. to SL-56, REMOVAL, Body Integrated Unit.>

12.COMMUNICATION ERROR DISPLAY

When the following error code is displayed in the odo/trip meter, inspect the communication circuit since the communication failure is generated between each control module. <Ref. to LAN(diag)-2, Basic Diagnostic Procedure.>
Since the communication error is not displayed on the multi-information display meter, perform the inspection by referring to the “Basic Diagnostic Procedure” on the LAN(diag) section.

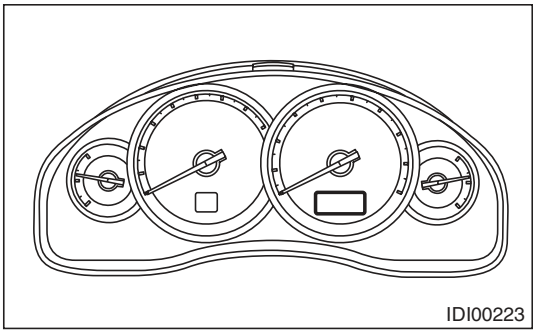

Error code	Remarks
Er IU	Malfunction in integrated unit
Er —	Simultaneous malfunction of high/low speed CAN communication
Er HC	High speed CAN communication failure
Er LC	Low-speed CAN communication failure
Er EG	EGI communication failure
Er TC	TCM communication failure
Er Ab	ABS/VDC communication failure
Er SP	ABS/VDC DTC information and vehicle speed pulse malfunction
Er SS	Wheel speed data malfunction

13.DTC DISPLAY MODE

It is possible to display the DTC of the combination meter through the following procedures.
1) Within 3 seconds after turning the ignition switch to ON, set the lighting switch to tail light or headlight position.
2) Press the odo/trip meter knob four times.
3) Turn the lighting switch to OFF, and press the odo/trip meter knob four times.
4) Set the lighting switch to tail light or headlight position again, and press the odo/tripmeter knob four times.

NOTE:
- Perform the steps described in 2) and 4) within 10 seconds.
- When the engine starts during diagnosis, the self-diagnosis function is not cancelled, however, once turning the ignition switch to OFF or the vehicle starts driving, DTC display mode is cancelled automatically for safety.
- When the DTC display mode operates, {ECM}, {TCM}, {ABS/VDC} is displayed cyclically in this order for every three seconds or every press of the trip knob. DTC is displayed in the following table according to type of control module, receiving DTC, DTC detected, No DTC.
- Past problems are displayed on the DTC display. When the DTC of individual control modules changes in status from current trouble to past trouble, and the trouble is fixed, the DTC will no longer appear in the combination meter if the engine is started three times or more.
- Normal meter

Control module	Condition	Display
ECM	Receiving DTC	Trip “A” + “P (Blink)”
	DTC detected	Trip “A” + “P xxxx”
	No DTC	Trip “A” + “P ----”
TCM	Receiving DTC	Trip “B” + “P (Blink)”
	DTC detected	Trip “B” + “P xxxx”
	No DTC	Trip “B” + “P ----”
ABS/VDCCM	Receiving DTC	Trip “A” + “C (Blink)”
	DTC detected	Trip “A” + “C xxxx”
	No DTC	Trip “A” + “C ----”
When CAN communication error is occurred	—	“----”

- Meter with multi-information display

Control module	Multi screen	Condition	Multi display
ECM	EGI fail code P xxxx	Receiving DTC	“P” blinking
		DTC detected	“P xxxx”
		No DTC	“P ----”
TCM	TCM fail code P xxxx	Receiving DTC	“P” blinking
		DTC detected	“P xxxx”
		No DTC	“P ----”
ABS/VDCCM	ABS fail code P xxxx	Receiving DTC	“C” blinking
		DTC detected	“C xxxx”
		No DTC	“C ----”
When CAN communication error is occurred	Body CAN fail -----	—	—

NOTE:
Because the MT model is not equipped with a TCM, only “Receiving DTC” is displayed.

3. Clock System

A: WIRING DIAGRAM

1. CLOCK

<Ref. to WI-178, WIRING DIAGRAM, Clock System.>

B: INSPECTION

1. SYMPTOM CHART

Symptoms	Repair order	Reference
No display is shown.	1. Power supply 2. Clock body	<Ref. to IDI-19, CHECK POWER SUPPLY AND GROUND CIRCUIT, INSPECTION, Clock System.>
Illumination does not illuminate.	1. Illumination power supply 2. Clock body	<Ref. to IDI-19, CHECK ILLUMINATION CIRCUIT, INSPECTION, Clock System.>
“Acc” or “ign” is displayed.	ACC or ignition power supply	<Ref. to IDI-20, CHECK ACC OR IGNITION POWER SUPPLY, INSPECTION, Clock System.>
“Err” is displayed in all items.	1. Communication circuit between combination meter and clock 2. Clock body	<Ref. to IDI-20, CHECK COMMUNICATION CIRCUIT, INSPECTION, Clock System.>
“Err” is displayed when a particular item is selected.	Communication circuit between combination meter and individual control modules	<Ref. to IDI-17, COMMUNICATION ERROR DISPLAY, INSPECTION, Combination Meter System.>
“Err” is displayed on the display of the ambient temperature.	1. Ambient sensor 2. Clock body	<Ref. to IDI-20, CHECK AMBIENT SENSOR, INSPECTION, Clock System.>
“Err” is displayed on the Instantaneous fuel economy, Average fuel economy, and the Remaining distance.	1. Communication circuit between combination meter and individual control modules 2. Clock body	<Ref. to IDI-17, COMMUNICATION ERROR DISPLAY, INSPECTION, Combination Meter System.>

2. CHECK POWER SUPPLY AND GROUND CIRCUIT

Step		Check	Yes	No
1	**CHECK CLOCK POWER SUPPLY.** 1) Disconnect the clock harness connector. 2) Measure the voltage between the clock harness connector and chassis ground. ***Connector & terminal*** ***(i59) No. 10 (+) — Chassis ground (–):***	Is the voltage 10 V or more?	Go to step **2**.	Check the harness for a open or short between the fuse and clock.
2	**CHECK CLOCK GROUND CIRCUIT.** 1) Turn the ignition switch to OFF. 2) Measure the resistance between the clock harness connector and chassis ground. ***Connector & terminal*** ***(i59) No. 6 — Chassis ground:***	Is the resistance less than 10 Ω?	Replace the clock body.	Repair the wiring harness.

3. CHECK ILLUMINATION CIRCUIT

Step		Check	Yes	No
1	**CHECK ILLUMINATION CIRCUIT POWER SUPPLY.** 1) Turn the ignition switch to OFF. 2) Disconnect the clock harness connector. 3) Turn the ignition switch and lighting switch to ON. 4) Measure the voltage between the clock harness connector and chassis ground. ***Connector & terminal*** ***(i59) No. 1 (+) — Chassis ground (–):***	Is the voltage 10 V or more?	Replace the clock body.	Check the harness for a open or short between the fuse and clock.

4. CHECK ACC OR IGNITION POWER SUPPLY

	Step	Check	Yes	No
1	**CHECK ACC POWER SUPPLY.** 1) Turn the ignition switch to OFF. 2) Disconnect the clock harness connector. 3) Turn the ignition switch to ACC. 4) Measure the voltage between the clock harness connector and chassis ground. ***Connector & terminal*** ***(i59) No. 9 (+) — Chassis ground (–):***	Is the voltage 10 V or more?	Go to step **2**.	Check for open circuits in the harness between the fuse and the clock.
2	**CHECK THE IGNITION POWER SUPPLY.** 1) Turn the ignition switch to ON. 2) Measure the voltage between the clock harness connector and chassis ground. ***Connector & terminal*** ***(i59) No. 8 (+) — Chassis ground (–):***	Is the voltage 10 V or more?	Replace the clock body.	Check for open circuits in the harness between the fuse and the clock.

5. CHECK COMMUNICATION CIRCUIT

	Step	Check	Yes	No
1	**CHECK HARNESS BETWEEN CLOCK AND COMBINATION METER.** 1) Turn the ignition switch to OFF. 2) Disconnect the harness connector of the clock and the combination meter. 3) Measure the resistance between the harness connector of the clock and the combination meter. ***Connector & terminal*** ***(i59) No. 1 — (i10) No. 13:***	Is the resistance less than 10 Ω?	Go to step **2**.	Repair the wiring harness.
2	**CHECK COMMUNICATION ERROR DISPLAY.** 1) Connect all the disconnected connectors. 2) Turn the ignition switch to ON. 3) Check that the error code is displayed in odo/trip meter. (Except for meter with MID)	Is the error code “Er xx” displayed on odo/trip meter?	Check the communication circuit. <Ref. to IDI-17, COMMUNICATION ERROR DISPLAY, INSPECTION, Combination Meter System.>	Replace the clock body. <Ref. to IDI-28, Clock.>

6. CHECK AMBIENT SENSOR

	Step	Check	Yes	No
1	**CHECK BODY INTEGRATED UNIT.** 1) Prepare the Subaru Select Monitor kit. 2) Turn the ignition switch to ON (engine OFF) and run the “PC application for Subaru Select Monitor”. 3) Read the DTC of body integrated unit using Subaru Select Monitor. <Ref. to LAN(diag)-12, OPERATION, Subaru Select Monitor.>	Is DTC displayed? <Ref. to LAN(diag)-31, LIST, List of Diagnostic Trouble Code (DTC).>	Repair it according to the DTC. <Ref. to LAN(diag)-31, LIST, List of Diagnostic Trouble Code (DTC).>	Go to step **2**.

	Step	Check	Yes	No
2	**CHECK BODY INTEGRATED UNIT.** 1) Start the engine, and set the vehicle speed at 20 km/h (12 MPH) or more. 2) Read the “Front Wheel Speed” of the body integrated unit using Subaru Select Monitor. <Ref. to LAN(diag)-12, OPERATION, Subaru Select Monitor.>	Is the data displayed as 999.9 km/h?	Check the following items. • LAN system <Ref. to LAN(diag)-65, DTC U1223 CAN-HS VDC/ABS NO-RECEIVE DATA, Diagnostic Procedure with Diagnostic Trouble Code (DTC).> • VDC <Ref. to VDC(diag)-2, Basic Diagnostic Procedure.> • ABS <Ref. to ABS(diag)-2, Basic Diagnostic Procedure.>	Go to step **3**.
3	**CHECK BODY INTEGRATED UNIT.** Read the “Front Wheel Speed” of the body integrated unit using Subaru Select Monitor. <Ref. to LAN(diag)-12, OPERATION, Subaru Select Monitor.>	Is the vehicle speed displayed correctly?	Replace the body integrated unit. <Ref. to SL-56, REMOVAL, Body Integrated Unit.>	Go to step **4**.
4	**CHECK AMBIENT SENSOR.** Blow hot air at the ambient sensor, and read the voltage of ambient sensor using Subaru Select Monitor. <Ref. to LAN(diag)-12, OPERATION, Subaru Select Monitor.>	Does the voltage change?	Go to step **8**.	Go to step **5**.
5	**CHECK HARNESS.** 1) Turn the ignition switch to OFF. 2) Disconnect the connector from the body integrated unit and the ambient sensor. 3) Measure the resistance of harness between body integrated unit connector and ambient sensor connector. ***Connector & terminal*** ***(B281) No. 10 — (F78) No. 1:*** ***(B281) No. 3 — (F78) No. 2:***	Is the resistance less than 1 Ω?	Go to step **6**.	Repair the open circuit of harness.
6	**CHECK HARNESS.** Measure the resistance between body integrated unit connector and chassis ground. ***Connector & terminal*** ***(B281) No. 10 — Chassis ground:*** ***(B281) No. 3 — Chassis ground:***	Is the resistance less than 1 MΩ?	Go to step **7**.	Repair the short circuit of harness.
7	**CHECK AMBIENT SENSOR.** Blow hot air at the ambient sensor, and read the resistance between ambient sensor terminals. ***Terminals*** ***No. 1 — No. 2:***	Does the resistance change?	Replace the body integrated unit. <Ref. to SL-56, REMOVAL, Body Integrated Unit.>	Replace the ambient sensor.
8	**CHECK AMBIENT SENSOR.** Blow cold air at the ambient sensor, and read the ambient temperature using Subaru Select Monitor. <Ref. to LAN(diag)-12, OPERATION, Subaru Select Monitor.>	Does the temperature change (at lower temperatures)?	Replace the clock body. <Ref. to IDI-28, Clock.>	Replace the body integrated unit. <Ref. to SL-56, REMOVAL, Body Integrated Unit.>

4. Combination Meter

A: REMOVAL

CAUTION:
- **Be careful not to damage the meter or instrument panel.**
- **Pay particular attention to avoid damaging the meter glass.**

1) Disconnect the ground cable from the battery.
2) Set the tilt steering at the lowest position. For steering wheel with telescopic system, pull the steering.
3) Remove the instrument panel under cover and lower cover on driver's side. <Ref. to EI-51, REMOVAL, Instrument Panel Lower Cover.>
4) Remove the screws of the combination meter (one on the upper side, two on lower side) and pull while tilting the meter towards yourself.

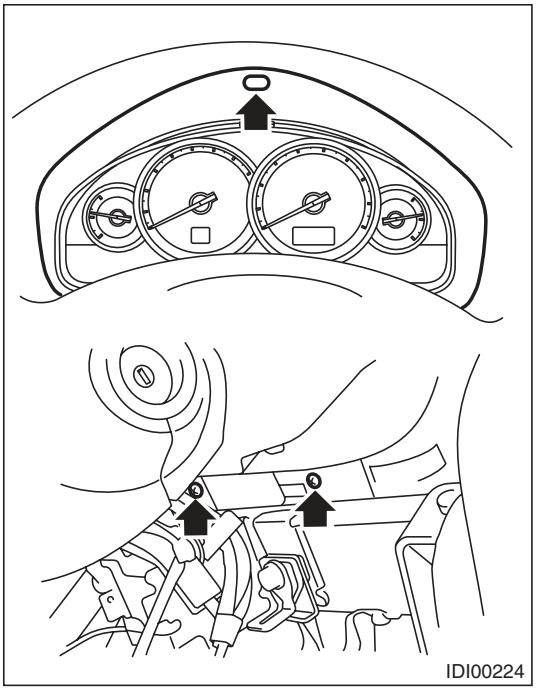

5) Disconnect the connector in the rear side of combination meter to remove meter.

B: INSTALLATION

CAUTION:
- **Make sure the electrical connector is connected securely.**
- **Make sure that each meter operates normally.**
- **When the combination meter of model with immobilizer has been replaced, be sure to perform the registration of immobilizer.**

Install in the reverse order of removal.

C: DISASSEMBLY

CAUTION:

- **Use gloves to avoid damage and getting fingerprints on the glass surface and meter surfaces.**
- **Be careful not to apply excessive force to the trip knob.**
- **Be sure not to touch the meter indicator needle.**

Disengage claw (A), and remove the meter glass assembly (B) from the meter case assembly (C).

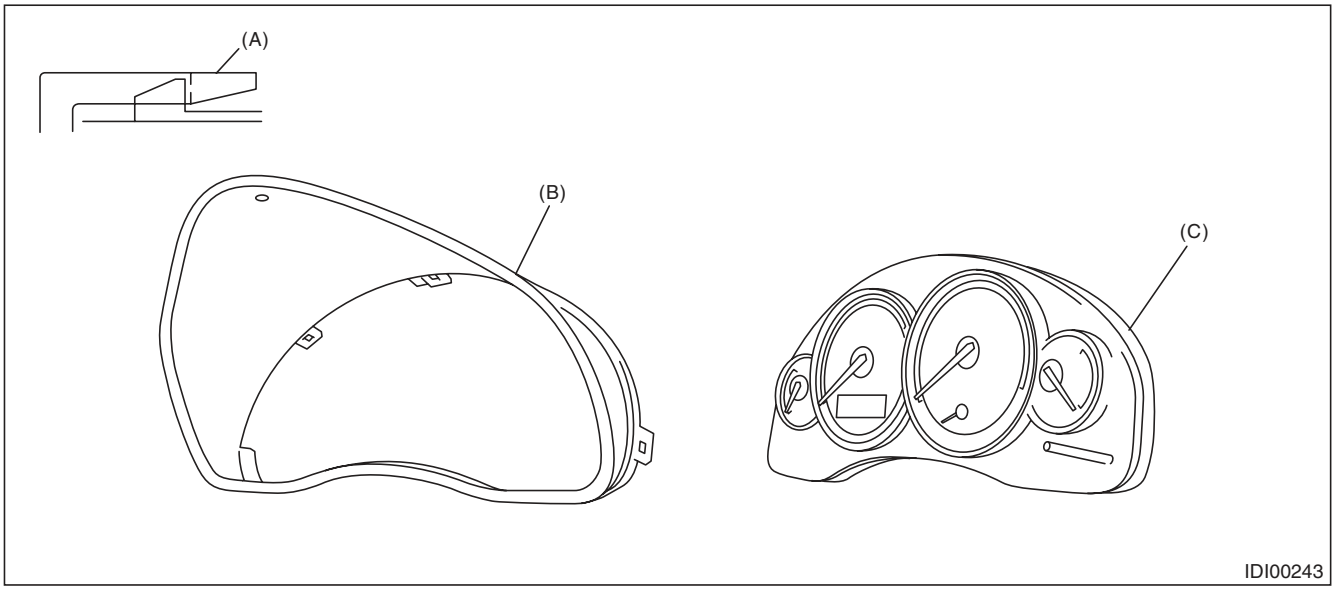

1. BULB REPLACEMENT

LEDs are used for all of warning lights and indicator lights of combination meters, replace the meter case assembly if faulty.

D: ASSEMBLY

Assemble in the reverse order of disassembly.

5. Speedometer

A: SPECIFICATION

Since the meter case assembly cannot be disassembled, do not remove or inspect the speedometer alone. (Do not remove the cover on the back surface.)

6. Tachometer

A: SPECIFICATION

Since the meter case assembly cannot be disassembled, do not remove or inspect the tachometer alone. (Do not remove the cover on the back surface.)

7. Fuel Gauge

A: SPECIFICATION

Since the meter case assembly cannot be disassembled, do not remove or inspect the fuel gauge alone. (Do not remove the cover on the back surface.)

8. Engine Coolant Temperature Gauge

A: SPECIFICATION

Since the meter case assembly cannot be disassembled, do not remove or inspect the engine coolant temperature gauge alone. (Do not remove the cover on the back surface.)

9. Clock

A: REMOVAL

1) Disconnect the ground cable from the battery.
2) Remove the center air vent grille. <Ref. to AC-47, REMOVAL, Air Vent Grille.>
3) Loosen the screws, and remove clock (B) from center air vent grille (A).

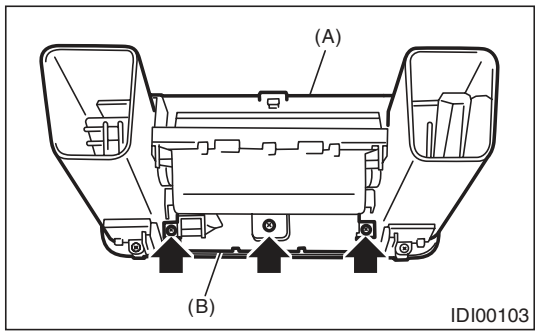

B: INSTALLATION

Install in the reverse order of removal.

10. Multi-Information Display Selector

A: REMOVAL

1) Remove the airbag module from the steering wheel. <Ref. to AB-14, REMOVAL, Driver's Airbag Module.>
2) Disconnect the roll connector and steering switch connector, and remove the bolts.

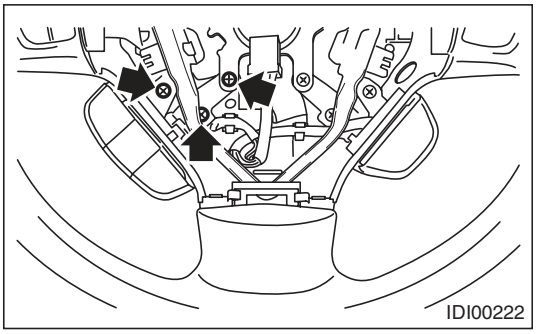

3) Remove the multi-information display selector.

B: INSTALLATION

Install in the reverse order of removal.

C: INSPECTION

1) Remove the airbag module from the steering wheel. <Ref. to AB-14, REMOVAL, Driver's Airbag Module.>
2) Connect tester as shown in the figure, and measure the resistance between the terminals when pressing each switch.

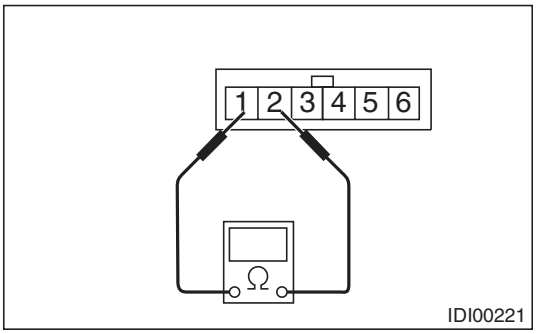

Switch	Resistance
Not pressed.	1 MΩ or more
Press ▲.	10Ω or less
Press i/SET.	Approx. 1 kΩ
Press ▼.	Approx. 3.67 kΩ

3) If resistance is out of specifications shown in the above table, a fault in switch is indicated. Replace the switch. <Ref. to IDI-29, REMOVAL, Multi-Information Display Selector.>

1. General Description

A: COMPONENT

1. FRONT SEAT LH (MANUAL SEAT)

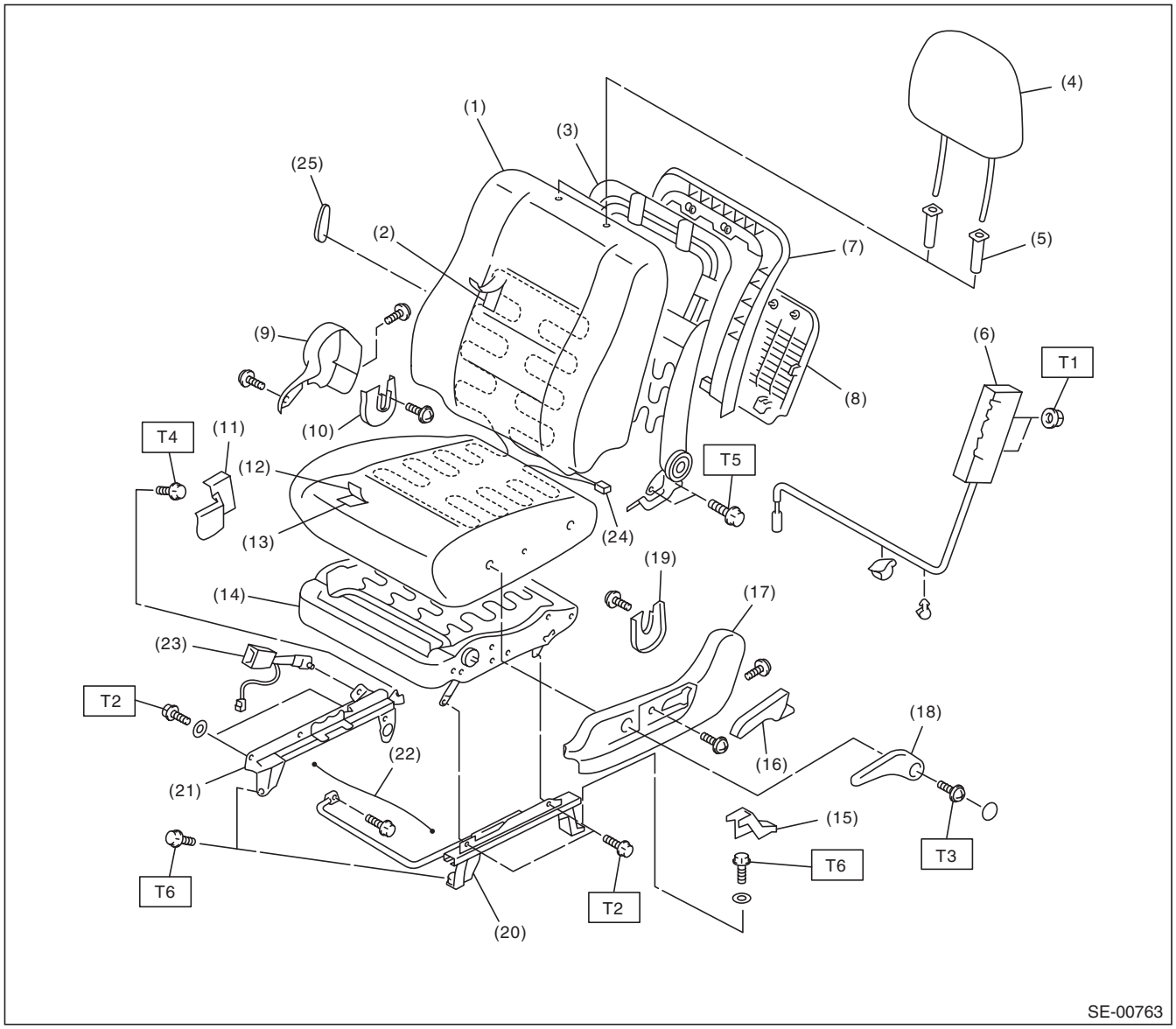

(1)	Backrest cover	(12)	Seat cushion cover	(23)	Inner seat belt ASSY
(2)	Backrest pad	(13)	Seat cushion pad	(24)	Seat heater unit
(3)	Backrest frame ASSY	(14)	Seat cushion frame ASSY	(25)	Lumber support lever
(4)	Headrest ASSY	(15)	Rear bolt cover outside		
(5)	Headrest lock bushing	(16)	Reclining lever		
(6)	Side airbag module	(17)	Seat side cover outside		
(7)	Cover frame	(18)	Lifter lever		
(8)	Backrest back cover	(19)	Hinge inner cover LH		
(9)	Seat side cover inside	(20)	Outer slide rail		
(10)	Hinge inner cover RH	(21)	Inner slide rail		
(11)	Rear bolt cover inside	(22)	Connecting wire		

Tightening torque:N·m (kgf-m, ft-lb)

T1: 6 (0.61, 4.43)
T2: 10 (1.02, 7.38)
T3: 22 (2.24, 16.2)
T4: 30 (3.06, 22.1)
T5: 52 (5.30, 38.4)
T6: 53 (5.40, 39.1)

2. FRONT SEAT LH (POWER SEAT)

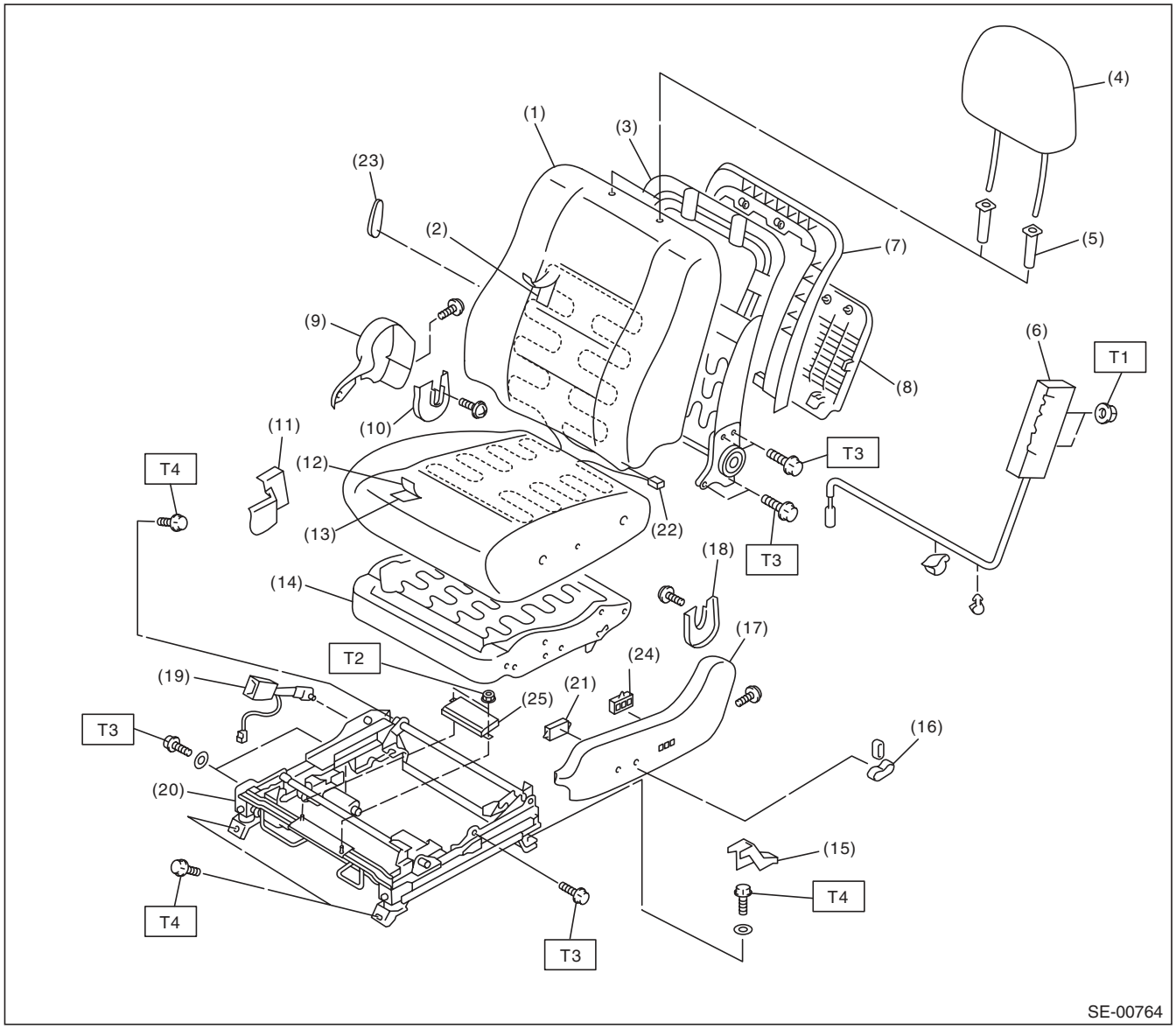

(1)	Backrest cover	(12)	Seat cushion cover	(23)	Lumber support lever
(2)	Backrest pad	(13)	Seat cushion pad	(24)	Memory switch (memory-equipped)
(3)	Backrest frame ASSY	(14)	Seat cushion frame ASSY	(25)	Memory module (memory-equipped)
(4)	Headrest ASSY	(15)	Rear bolt cover outside		
(5)	Headrest lock bushing	(16)	Power seat switch knob		
(6)	Side airbag module	(17)	Seat side cover outside		
(7)	Cover frame	(18)	Hinge inner cover LH		
(8)	Backrest back cover	(19)	Inner seat belt ASSY		
(9)	Seat side cover inside	(20)	Slide rail ASSY		
(10)	Hinge inner cover RH	(21)	Power seat switch unit		
(11)	Rear bolt cover inside	(22)	Seat heater unit		

Tightening torque:N·m (kgf-m, ft-lb)	
T1:	***6 (0.61, 4.43)***
T2:	***22 (2.24, 16.2)***
T3:	***52 (5.30, 38.4)***
T4:	***53 (5.40, 39.1)***

3. FRONT SEAT RH (MANUAL SEAT)

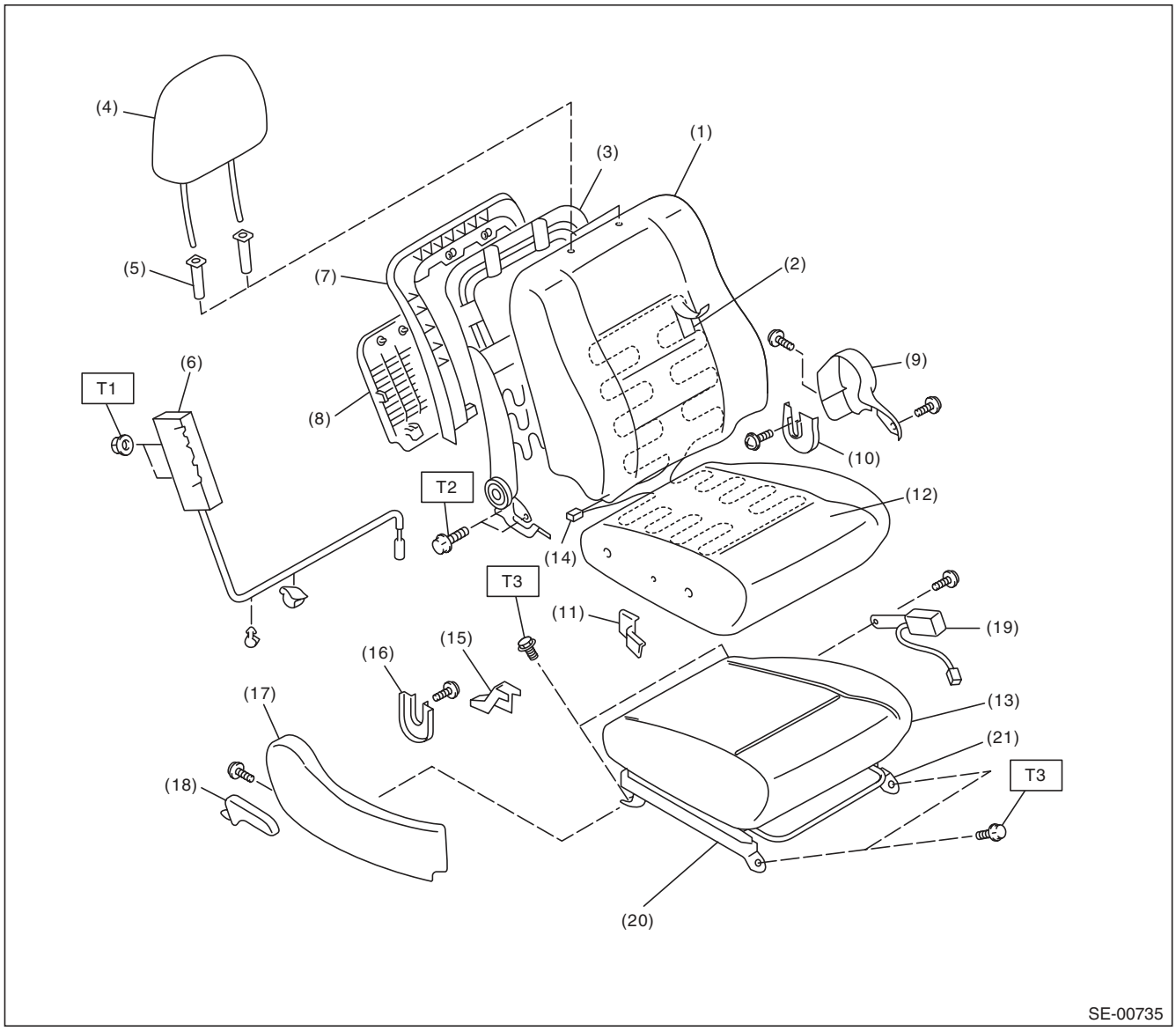

(1)	Backrest cover	(10)	Hinge inner cover LH	(19)	Inner seat belt ASSY
(2)	Backrest pad	(11)	Rear bolt cover inside	(20)	Outer slide rail
(3)	Backrest frame ASSY	(12)	Seat cushion cover	(21)	Inner slide rail
(4)	Headrest ASSY	(13)	Seat cushion pad and frame ASSY		
(5)	Headrest lock bushing	(14)	Seat heater unit		
(6)	Side airbag module	(15)	Rear bolt cover outside		
(7)	Cover frame	(16)	Hinge inner cover RH		
(8)	Backrest back cover	(17)	Seat side cover outside		
(9)	Seat cover inside	(18)	Reclining lever		

Tightening torque:N·m (kgf-m, ft-lb)

T1: 6 (0.61, 4.43)
T2: 52 (5.30, 38.4)
T3: 53 (5.40, 39.1)

4. FRONT SEAT RH (POWER SEAT)

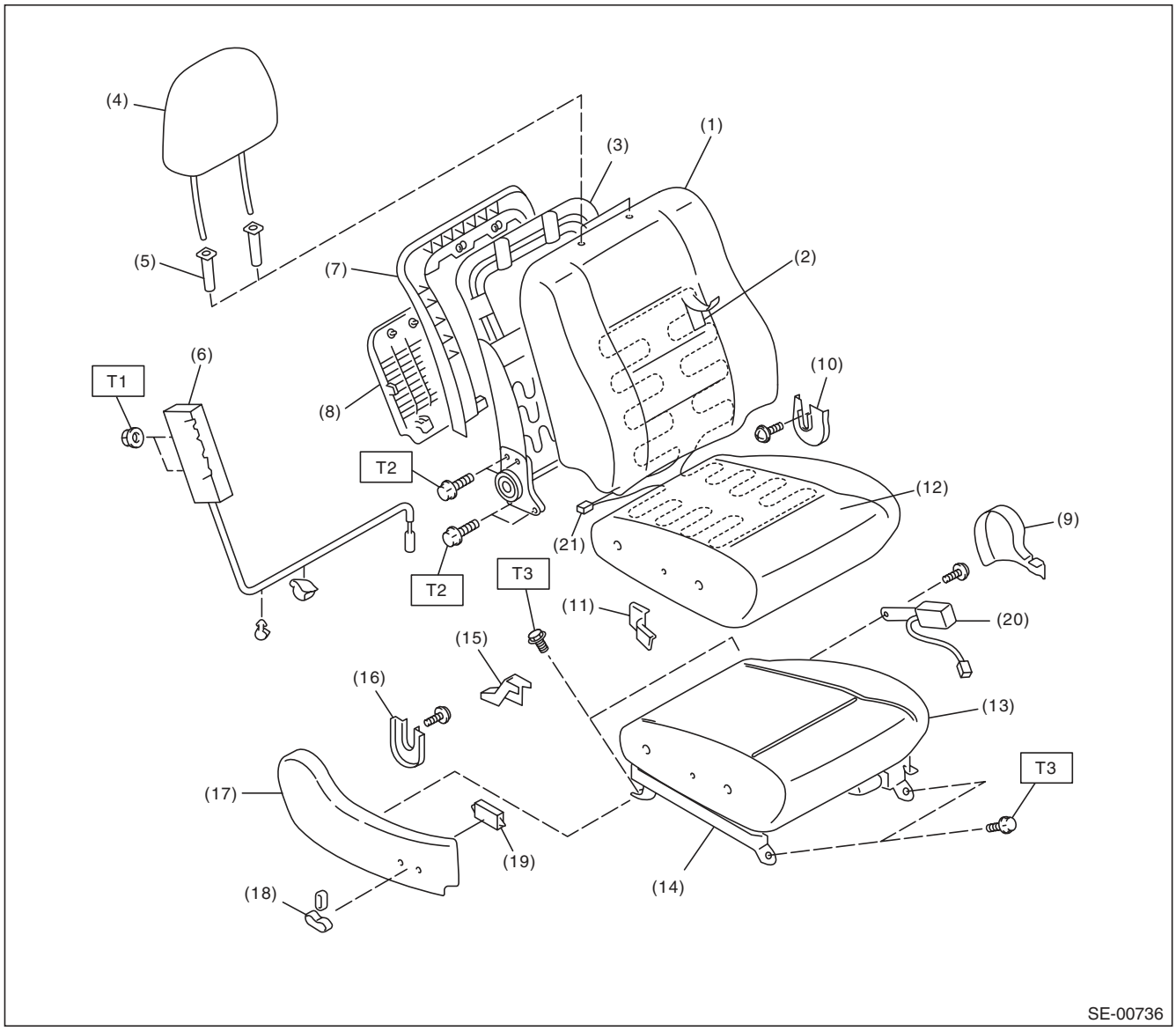

(1)	Backrest cover	(10)	Hinge inner cover LH	(19)	Power seat switch unit
(2)	Backrest pad	(11)	Rear bolt cover inside	(20)	Inner seat belt ASSY
(3)	Backrest frame ASSY	(12)	Seat cushion cover	(21)	Seat heater unit
(4)	Headrest ASSY	(13)	Seat cushion pad and frame ASSY		
(5)	Headrest lock bushing	(14)	Slide rail ASSY		
(6)	Side airbag module	(15)	Rear bolt cover outside		
(7)	Cover frame	(16)	Hinge inner cover RH		
(8)	Backrest back cover	(17)	Seat side cover outside		
(9)	Seat side cover inside	(18)	Power seat switch knob		

Tightening torque:N·m (kgf-m, ft-lb)

T1: 6 (0.61, 4.43)

T2: 52 (5.30, 38.4)

T3: 53 (5.40, 39.1)

5. REAR SEAT (SEDAN MODEL)

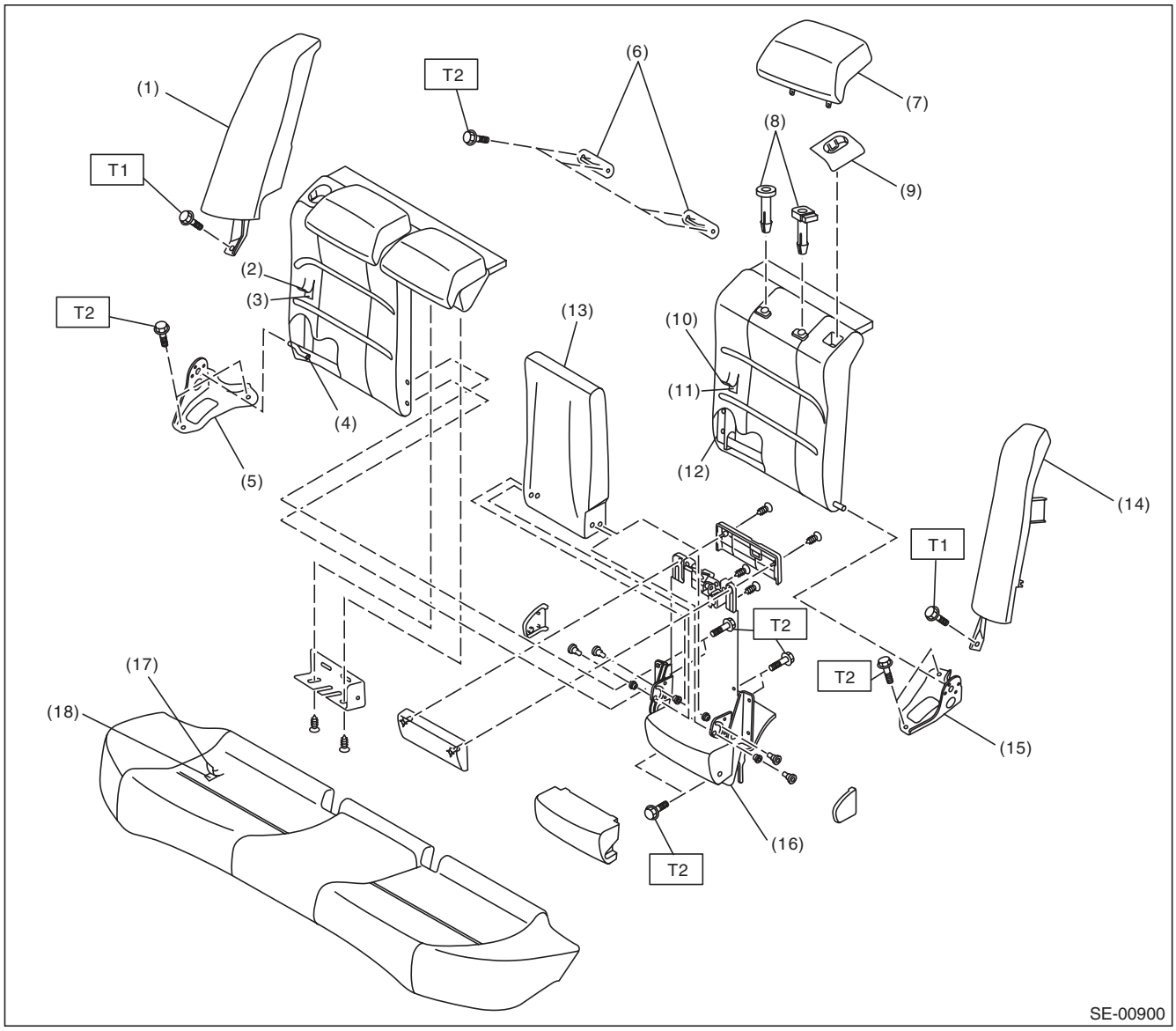

(1) Backrest shoulder RH
(2) Backrest cover RH
(3) Backrest pad RH
(4) Backrest frame RH ASSY
(5) Hinge ASSY RH
(6) Backrest striker
(7) Headrest
(8) Headrest bushing
(9) Holder & button cover
(10) Backrest cover LH
(11) Backrest pad LH
(12) Backrest frame LH ASSY
(13) Armrest
(14) Backrest shoulder LH
(15) Hinge ASSY LH
(16) Trunk through backboard ASSY
(17) Seat cushion cover
(18) Seat cushion pad

Tightening torque:N·m (kgf-m, ft-lb)
T1: 13.7 (1.4, 10.1)
T2: 25 (2.5, 18.4)

6. REAR SEAT (WAGON MODEL)

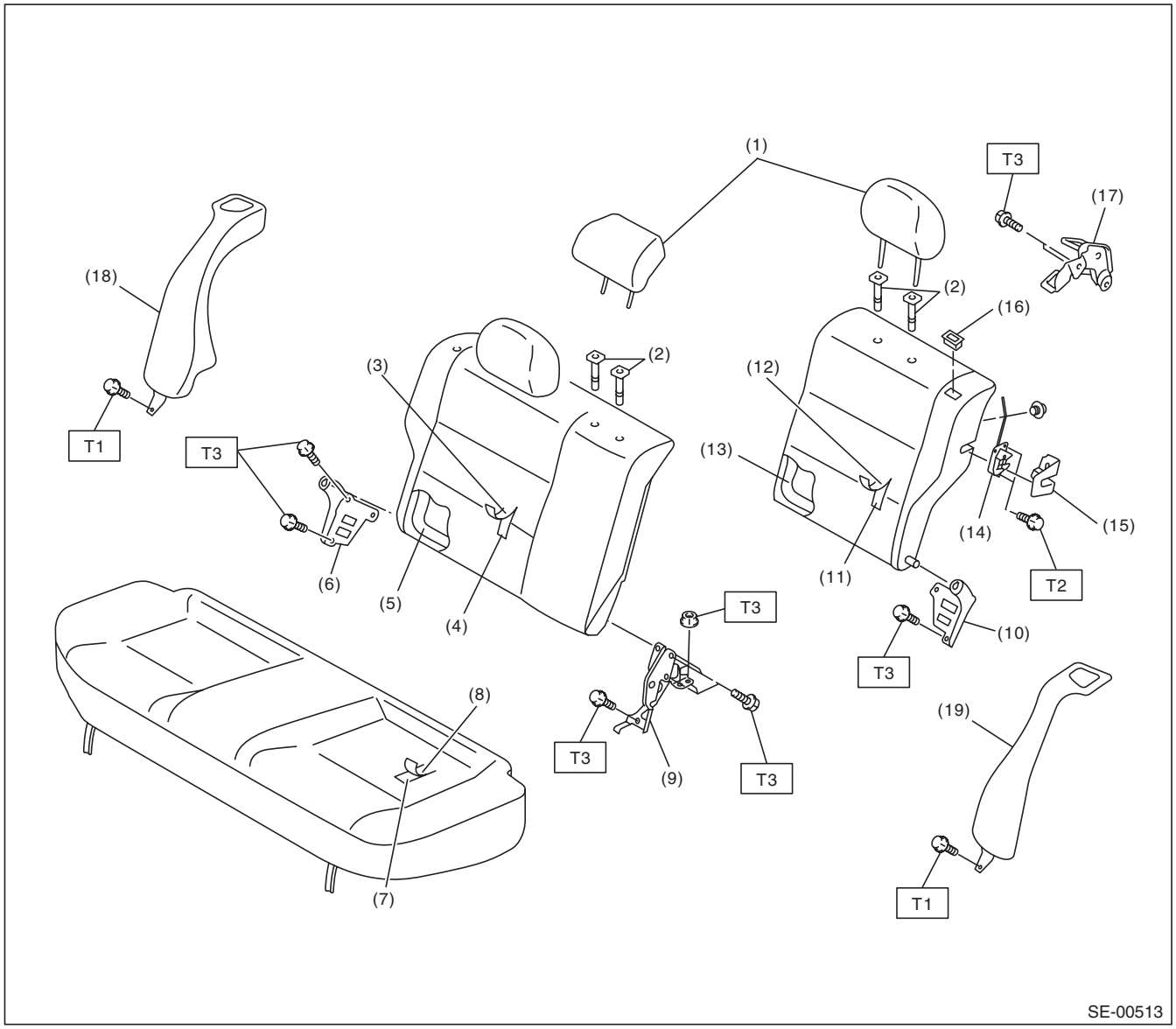

(1)	Headrest	(9)	Hinge ASSY center	(17)	Striker
(2)	Headrest bushing	(10)	Hinge ASSY LH	(18)	Backrest shoulder RH
(3)	Backrest cover RH	(11)	Backrest pad LH	(19)	Backrest shoulder LH
(4)	Backrest pad RH	(12)	Backrest cover LH		
(5)	Backrest frame RH	(13)	Backrest frame LH		
(6)	Hinge ASSY RH	(14)	Seat backrest latch		
(7)	Seat cushion pad	(15)	Seat backrest latch cover		
(8)	Seat cushion cover	(16)	Holder & button		

Tightening torque:N·m (kgf-m, ft-lb)

T1: 13.7 (1.40, 10.1)

T2: 17 (1.73, 12.3)

T3: 25 (2.5, 18.4)

B: CAUTION

• If the seat cushion cover is removed or replaced, make sure to perform passenger detection system adjustment after installing the seat to the vehicle. <Ref. to OD(diag)-15, SYSTEM CALIBRATION (REZEROING), OPERATION, Subaru Select Monitor.>
If system adjustment is not performed, the occupant detection system may not function properly.
• The passenger detection system (passenger seat only) control unit and the passenger detection sensor are fixed to the seat cushion frame. Never remove the passenger detection control unit or the pressure sensor from the seat cushion frame.
• Do not replace the seat cushion pad by itself. Always replace the seat cushion pad and frame assembly as a set. The seat cushion pad and cushion frame are adjusted as a set at the time of manufacture. If cushion pads and cushion frames are combined from those of other vehicles or other sets, the passenger detection system may not operate properly.
• If the seat cushion cover is removed, make sure to replace the hang wire on the seat cushion side with a new wire.
• When removing the front seat from a side airbag loaded vehicle, follow cautions given in the airbag section. <Ref. to AB-4, CAUTION, General Description.>

C: PREPARATION TOOL

1. GENERAL TOOL

TOOL NAME	REMARKS
Long nose plier	Used for removing the hog ring.
Hog ring pliers	Used for installing the hog ring.
TORX® T50	Used for removing and installing the inner seat belt assembly.
Circuit tester	Used for checking voltage and continuity.

2. Front Seat

A: REMOVAL

CAUTION:
The airbag system is fitted with a backup power source. After disconnecting the battery ground cable, the airbag may deploy if you do not wait for 20 seconds before starting the service of airbag system.

NOTE:
• When removing the front seat of memory-equipped power seats, always perform the initialize operation on the memory function after installing the seat to the vehicle. <Ref. to SE-40, ADJUSTMENT, Power Seat System.>
• Failure to do so may cause the abnormal operation of the memory function.

1. DRIVER'S SEAT

1) Remove the headrest.
2) Tilt the backrest forward, and move the seat forward.
3) Remove the rear bolt cover, and remove the two bolts at the rear side of the slide rail.
4) Move the seat towards the rear, and remove the two bolts at the front side of the slide rail.
5) Disconnect the ground cable from the battery.

CAUTION:
When remove the battery negative terminal, wait 20 seconds then go to the next procedure.
6) Disconnect the connector under the seat.
• Seat belt buckle switch connector
• Side airbag connector
• Seat heater connector (model with seat heater)
• Power seat connector (model with power seats)
7) Remove the seat from vehicle.

2. PASSENGER'S SEAT

CAUTION:
Refer to "CAUTION" of "General Description" before starting the work. <Ref. to SE-8, CAUTION, General Description.>
1) Remove the headrest.
2) Tilt the backrest forward, and move the seat forward.
3) Remove the rear bolt cover, and then remove the rear side of slide rail.
4) Move the seat backward, remove the front bolt cover, and then remove the bolt at the front side of the slide rail.
5) Disconnect the ground cable from the battery.

CAUTION:
When remove the battery negative terminal, wait 20 seconds then go to the next procedure.
6) Disconnect all the connectors of connector holder in the backside of seat cushion.
• Harness connector of occupant detection control module
• Side airbag connector
• Power seat connector (model with power seats)
• Seat heater connector (model with seat heater)
7) Remove the seat from vehicle.

B: INSTALLATION

CAUTION:
If a front seat is power seat with memory function, the memory function must be initialized after installing seat to the vehicle. <Ref. to SE-40, ADJUSTMENT, Power Seat System.>
Failure to do so may cause the abnormal operation of the memory function.
Install in the reverse order of removal.

NOTE:
Tighten the slide rail installing bolt gradually in several steps to the specified torque in the order as shown in the figure.

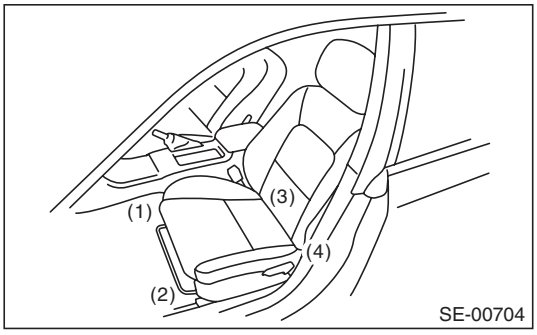

Tightening torque:
Refer to "COMPONENT" of "General Description". <Ref. to SE-2, COMPONENT, General Description.>

C: DISASSEMBLY

1. DRIVER'S SEAT

MANUAL SEAT

1) Remove the seat from vehicle. <Ref. to SE-9, REMOVAL, Front Seat.>
2) Remove the seat lifter cover using a flat tip screwdriver and loosen the inner bolt to remove the seat lifter lever.

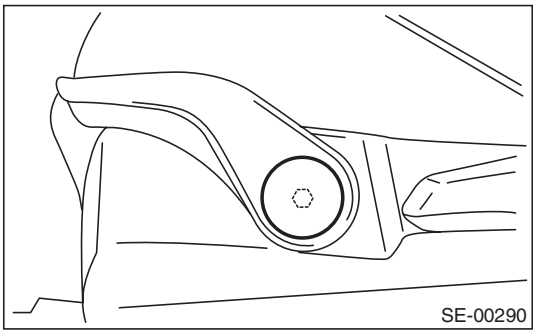

3) Disengage the tab while pulling the reclining lever, and remove the reclining lever cover.

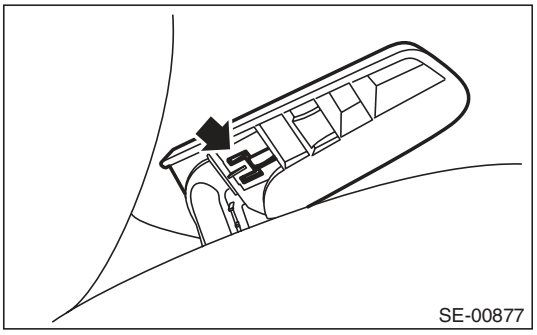

4) Remove screws (A) and clips (B), and then detach the seat side cover outside.

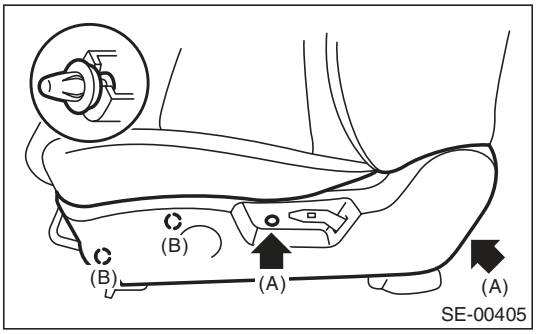

5) Loosen the screws to detach the seat side cover inside.

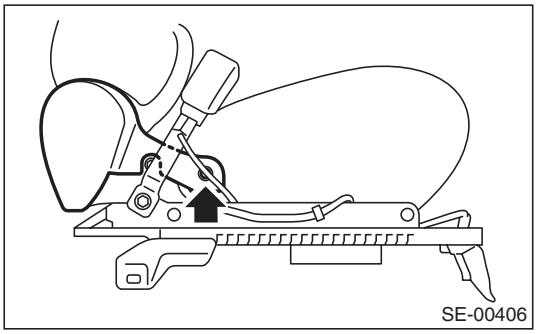

6) Remove the TORX® bolt, and then remove the inner seat belt assembly.

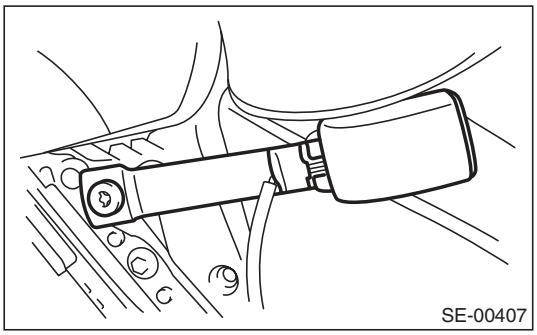

7) Remove the two bolts from the reclining hinge on each left and right side.

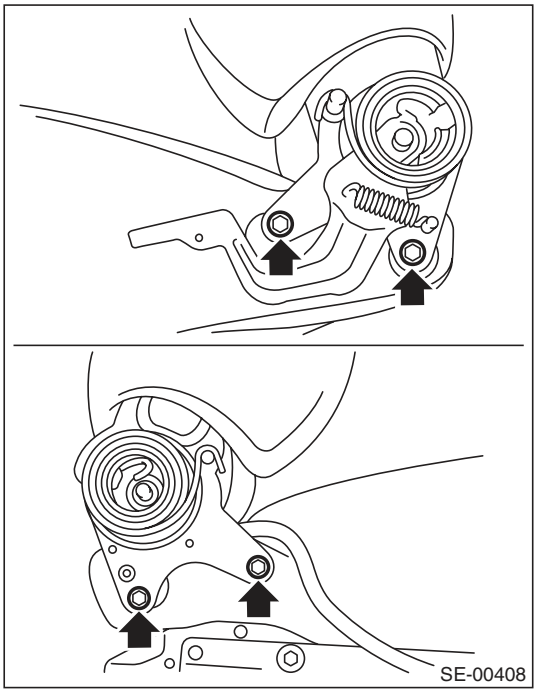

8) Remove the clips and hooks, and then detach the backrest back cover.

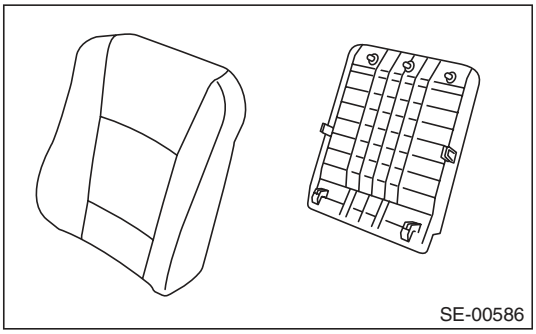

9) Remove the lock clip, and then remove the lumber support lever.

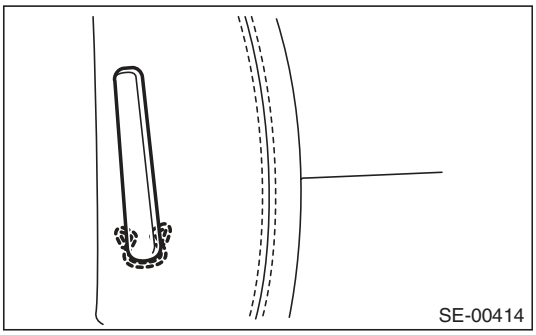

10) Remove the hooks and hog rings at the rear side of backrest.

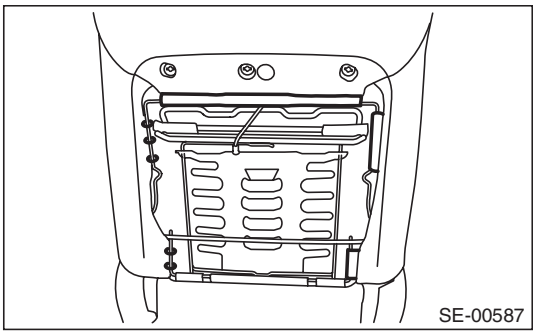

11) Remove the headrest lock bushing.

NOTE:
Push outside to remove it from the inside of seat.

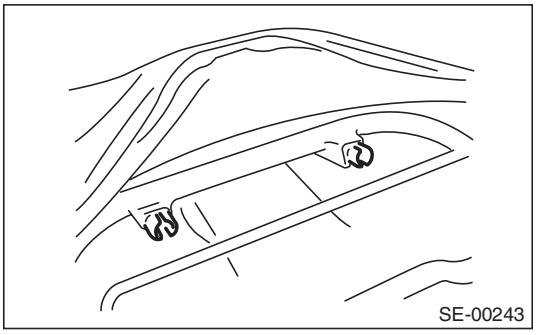

12) Remove the hog rings.

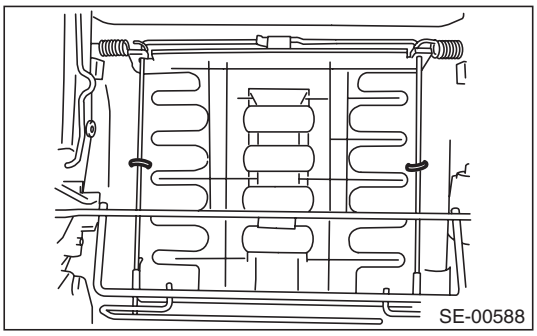

13) Remove the cover frame (A).

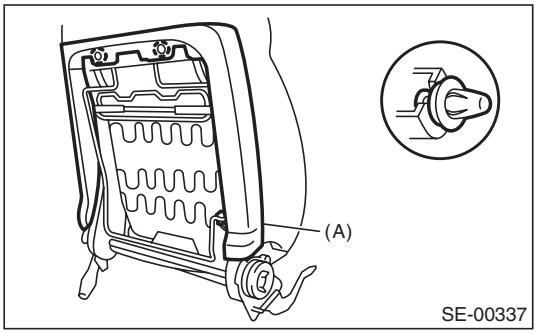

14) Pull out the backrest frame assembly.
15) Remove the side airbag module.

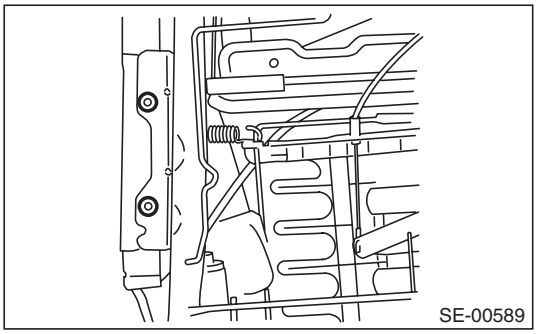

16) Remove the hog rings (A) on the surface side of backrest, and then remove the backrest cover from backrest.

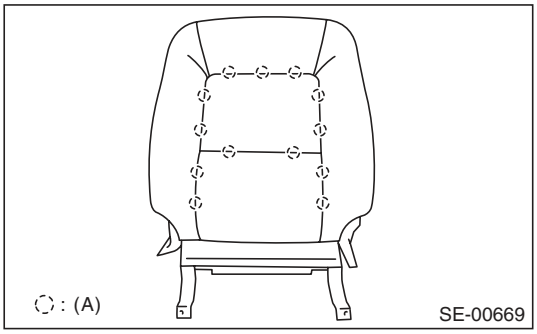

17) Remove the bolt (A) and hook (B) on left and right side, and then remove the seat cushion frame from slide rail assembly.

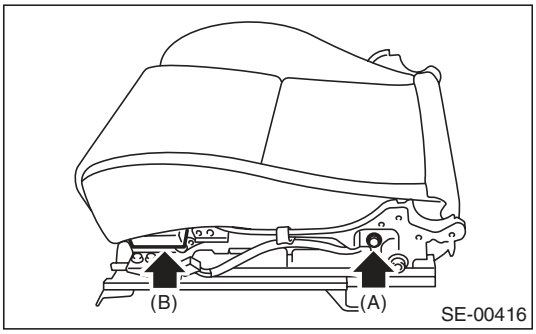

18) Remove the hooks (A), and then remove the seat cushion from seat cushion frame.

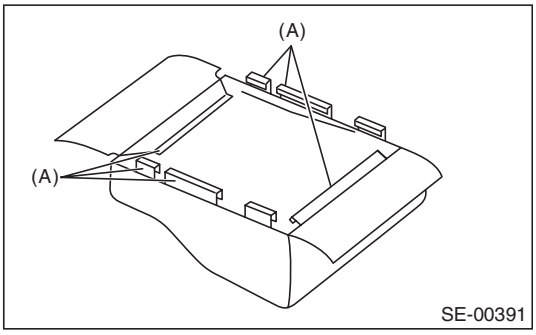

19) Remove the hog rings (A), and then remove the seat cushion cover from seat cushion pad.

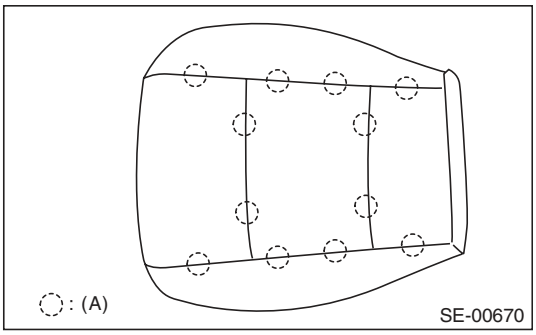

20) Remove the bolt of the sliding adjustment bar and connecting wire.

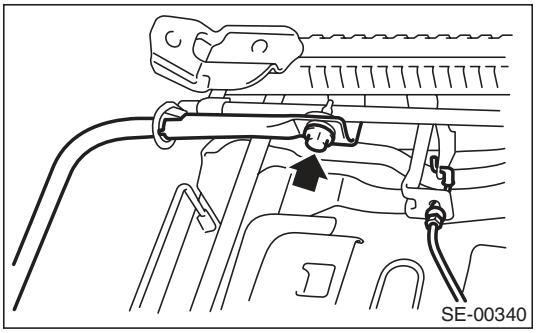

21) Remove the bolts, then remove the slide rail.

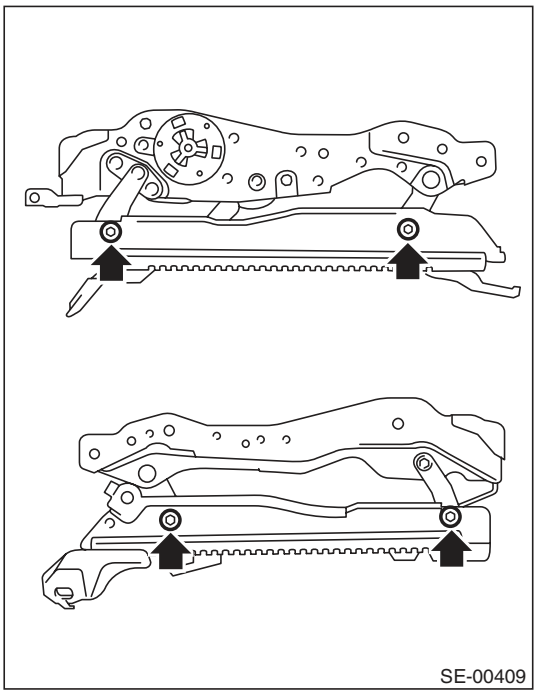

POWER SEAT

1) Remove the seat from vehicle. <Ref. to SE-9, DRIVER'S SEAT, REMOVAL, Front Seat.>
2) Remove the clip (A) and straps (B) on the back of seat cushion.

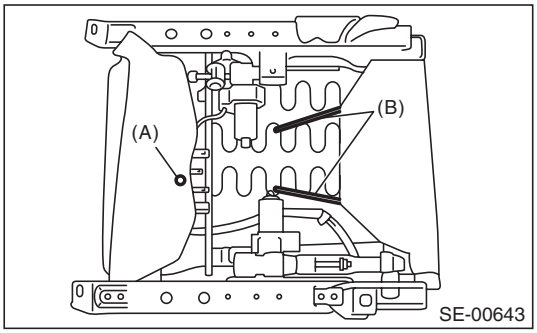

3) Disconnect the following connectors from the backside of seat cushion.
- Side airbag
- Seat heater
- Power seat
- Seat belt

4) Remove the screw (A) and clips (B), and then disconnect the seat switch connector to remove seat side cover outside.

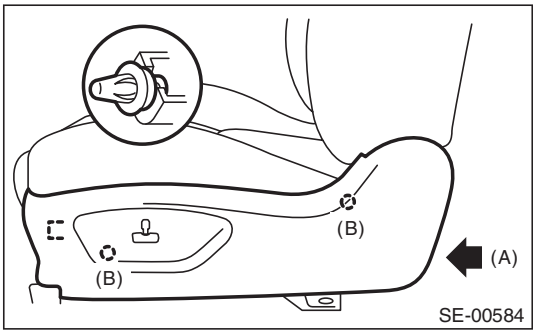

5) Remove the TORX® bolt, and then remove the inner seat belt assembly.

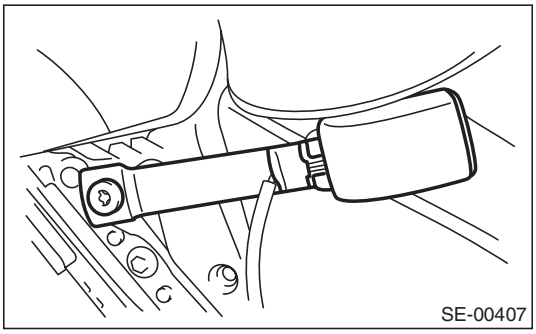

6) Remove the screw (A) and clip (B), and then remove the seat side cover inside.

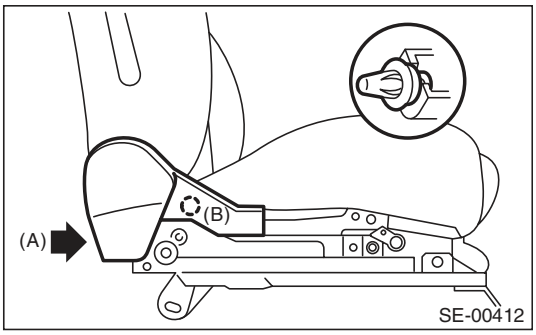

7) Remove the two bolts from the reclining hinge on each left and right side.

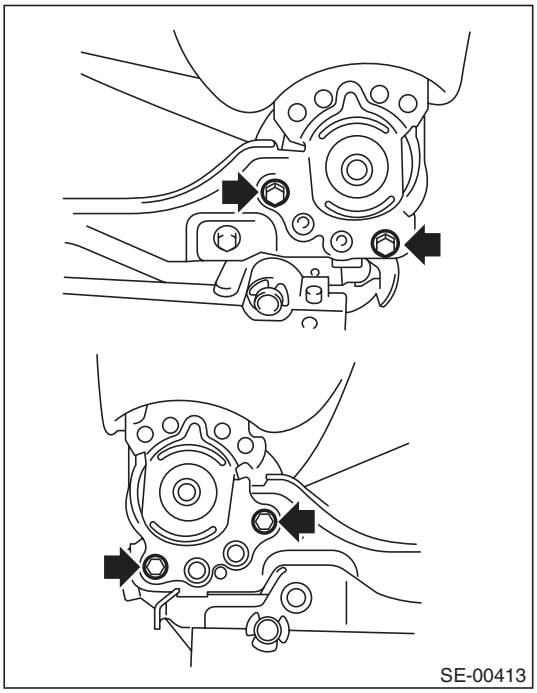

8) Remove the clips and hooks, and then detach the backrest back cover.

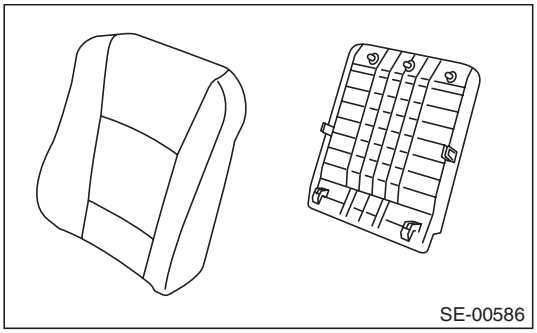

9) Remove the lock clip, and then remove the lumber support lever.

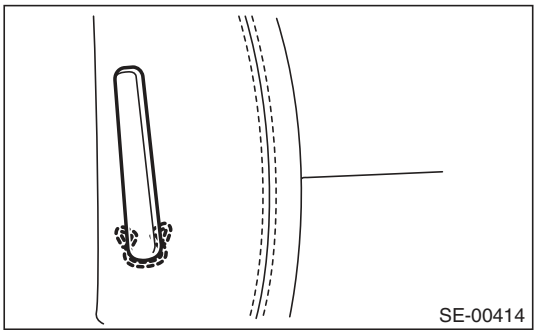

10) Remove the hooks and hog rings at the rear side of backrest.

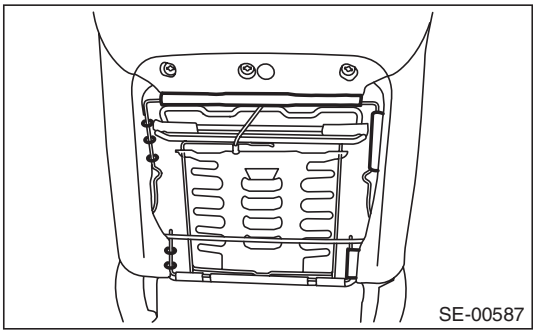

11) Remove the headrest lock bushing.

NOTE:
Push outside to remove it from the inside of seat.

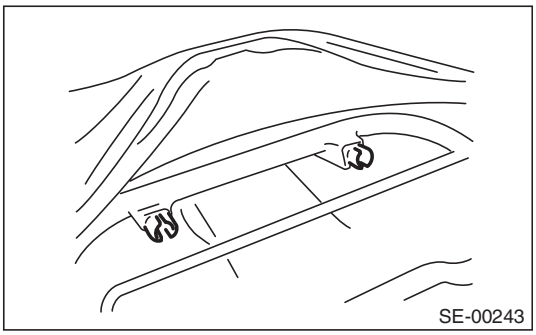

12) Remove the hog rings.

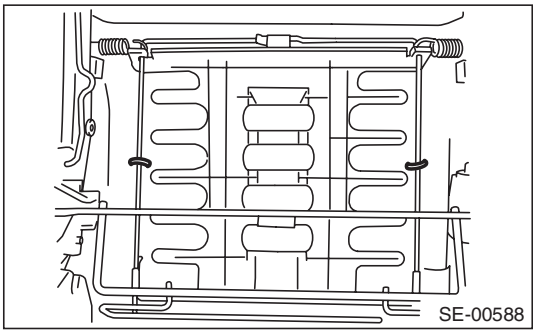

13) Remove the cover frame (A).

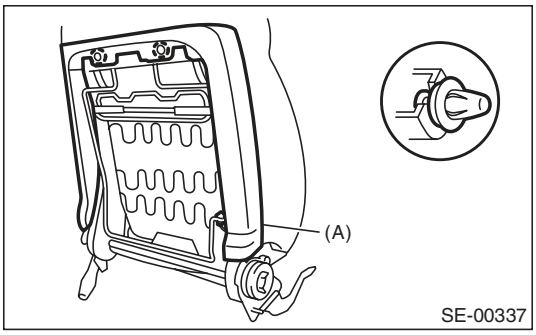

14) Pull out the backrest frame assembly.

15) Remove the side airbag module.

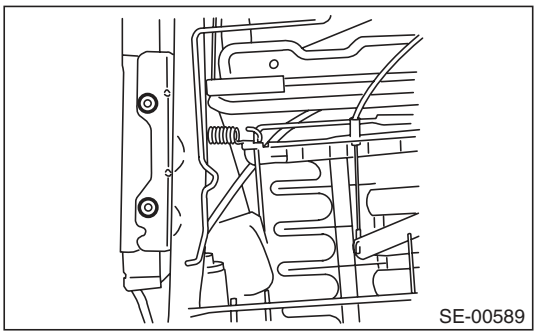

16) Remove the two bolts on each left and right side, and then remove the reclining motor assembly.

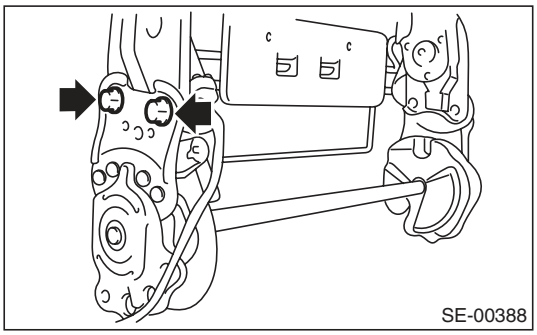

17) Remove the hog rings (A) on the surface side of backrest, and then remove the backrest cover from backrest.

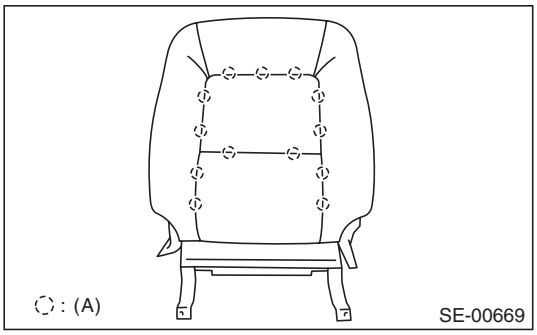

18) Remove the bolt (A) and hook (B) on left and right side, and then remove the seat cushion frame from slide rail assembly.

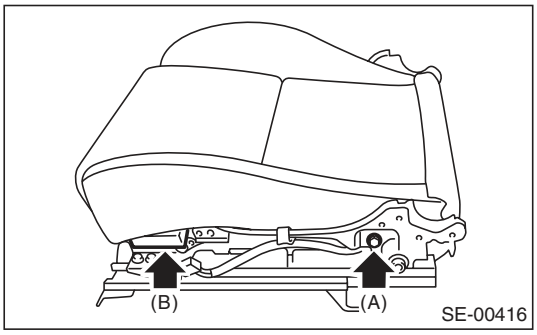

19) Remove the hooks (A), and then remove the seat cushion from seat cushion frame.

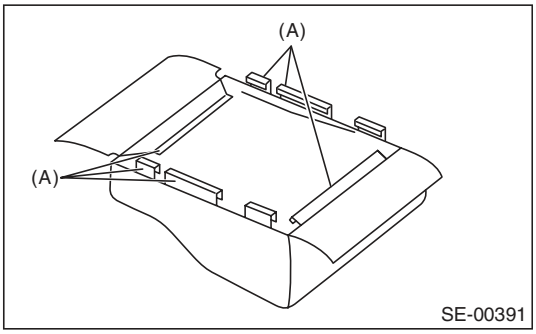

20) Remove the hog rings (A), and then remove the seat cushion cover from seat cushion pad.

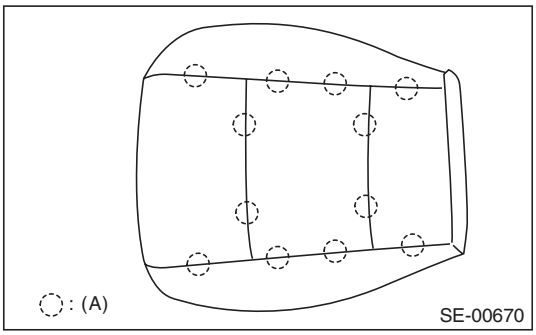

2. PASSENGER'S SEAT

CAUTION:

• If the seat cushion cover is removed or replaced, make sure to perform occupant detection system adjustment after installing the seat. <Ref. to OD(diag)-15, SYSTEM CALIBRATION (REZEROING), OPERATION, Subaru Select Monitor.>

Failure to do so may cause improper activation of passenger's airbag.

• The passenger detection system (passenger seat only) control unit, passenger detection sensor, seat cushion pad and seat cushion frame are considered as a single seat cushion pad and frame assembly. Never remove the passenger detection control unit or the pressure sensor from the seat cushion frame.

• If the seat cushion cover is removed, make sure to replace the hang wire on the seat cushion side with a new wire.

1) Remove the seat from vehicle. <Ref. to SE-9, PASSENGER'S SEAT, REMOVAL, Front Seat.>

2) Refer to the disassembly procedures for the driver's seat.

NOTE:

The back side of the seat cushion is affixed by a hook (A) and hog ring (B).

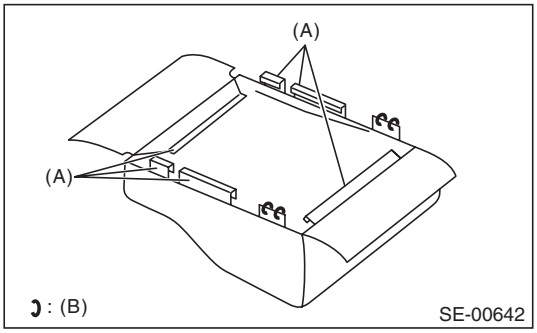

D: ASSEMBLY

CAUTION:
When the backrest cover is not installed securely, the side airbag module may not be deployed properly, therefore keep strictly to the following procedure.
- **Be careful not to stain or damage the backrest cover during assembly.**
- **The backrest cover of the side airbag module are to be tightened and fixed together with the attachment nuts for the side airbag module assembly.**
- **Always use new hog rings.**
- **Secure the hog ring using hog ring pliers.**
- **Install the hog rings to the specified points securely and make sure that no wrinkle or twisting on backrest cover.**

1. DRIVER'S SEAT

NOTE:
- When installing the inner seat belt assembly, follow the procedures described in the seat belt section. <Ref. to SB-19, INNER SEAT BELT ASSEMBLY, INSTALLATION, Front Seat Belt.>
- Install the backrest assembly and seat cushion assembly in the following procedure.

1) Temporarily tighten the four reclining hinge bolts.
2) Place the backrest in the most upright position.
3) Tighten the reclining hinge bolts in the order of (1) through (4), in two or three steps by gradually increasing the torque until they reach the specified torque.

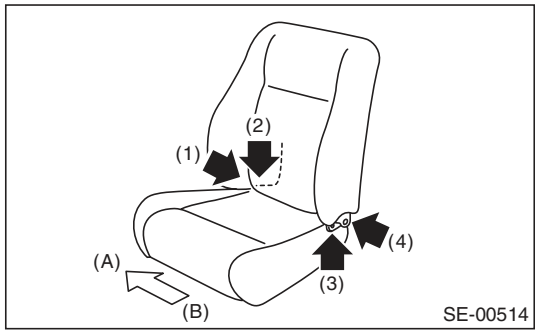

(A) Vehicle inside
(B) Vehicle outside

4) Assemble in the reverse order of disassembly.

2. PASSENGER'S SEAT

CAUTION:
Make sure to adhere to the following rules when assembling the passenger seat. Improper work procedures can cause the passenger detection system to not operate properly.
- **If the seat cushion cover is removed or replaced, make sure to perform occupant detection system adjustment after installing the seat. <Ref. to OD(diag)-15, SYSTEM CALIBRATION (REZEROING), OPERATION, Subaru Select Monitor.>**

Failure to do so may prevent the passenger's airbag from operating properly.
- **The passenger detection system (passenger seat only) control unit, passenger detection sensor, seat cushion pad and seat cushion frame are considered as a single seat cushion pad and frame assembly. Never remove the passenger detection control unit or the pressure sensor from the seat cushion frame.**
- **If the seat cushion cover is removed, make sure to replace the hang wire on the seat cushion side with a new wire.**
- **Make sure to install the hog rings/clips to the specified locations. Do not reuse hog rings.**

Assemble in the reverse order of disassembly.
1) Assemble the seat cushion in the reverse order of disassembly.
2) Assemble the backrest in the reverse order of disassembly.
3) When installing the backrest assembly to the seat cushion assembly, fill the gap in the front side of slide rail LH and in the rear side of slide rail RH with cloth etc. in order to stabilize the seat cushion assembly.

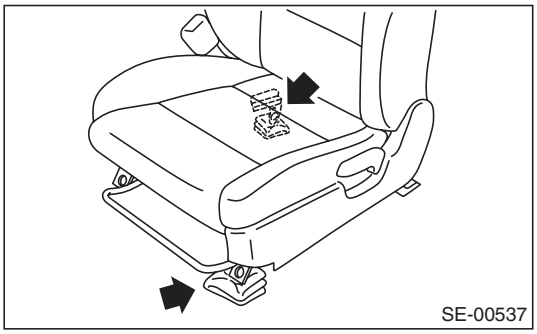

4) Temporarily tighten the reclining hinge bolts in the order of (1) through (4) to an extent that the seat backrest assembly is not held securely.

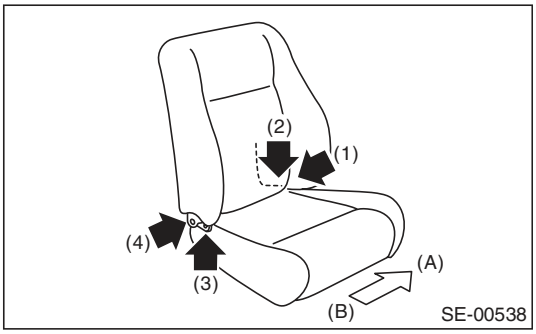

(A) Vehicle inside
(B) Vehicle outside

5) Use the reclining lever to place the backrest in the most upright position, and check the first lock position of recliner.
6) Hold the seat cushion assembly securely, and tighten the reclining hinge bolts in the order described above until they reach the specified torque.

CAUTION:
Do not touch the backrest assembly when tightening the reclining hinge bolts.

7) Assemble each harness, inner belt assembly and each cover in the reverse order of removal.

Tightening torque:
Refer to "COMPONENT" of "General Description". <Ref. to SE-2, COMPONENT, General Description.>

E: INSPECTION

Check that no tear or fray on the backrest cover and seat cushion cover.

NOTE:
If the door side of the backrest cover is torn or frayed, the side airbag may not be deployed properly. In this case, replace the backrest cover.

3. Rear Seat

A: REMOVAL

CAUTION:
• Airbag system satellite safing sensor is located in the lower of the rear seat cushion center. Read the cautions given in AB section before removing the rear seat. <Ref. to AB-4, CAUTION, General Description.>
• The airbag system is fitted with a backup power source. After disconnecting the battery ground cable, the airbag may deploy if you do not wait for 20 seconds before starting the service of airbag system.

1. SEDAN MODEL

1) Remove the two hooks while lifting up the rear seat cushion.

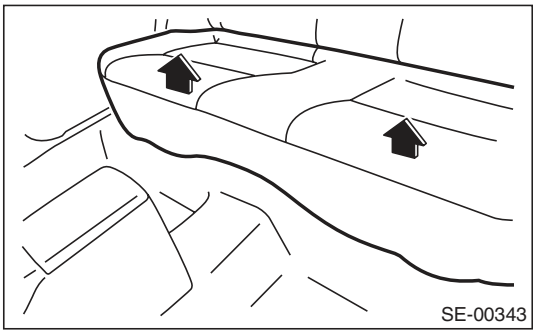

2) Remove the hook (A) by pushing it back while lifting the front side of the seat cushion, and remove the seat cushion.

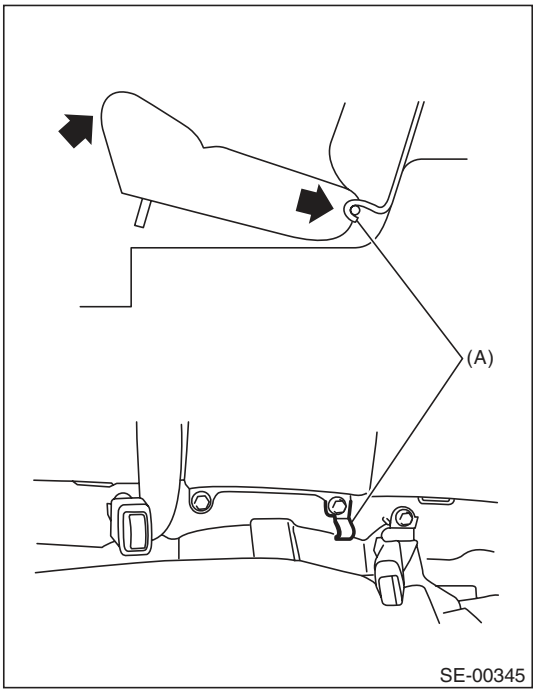

3) Tilt the backrest forward, remove the plastic fastener at the rear mat.

4) Remove the hinge assembly center bolts.

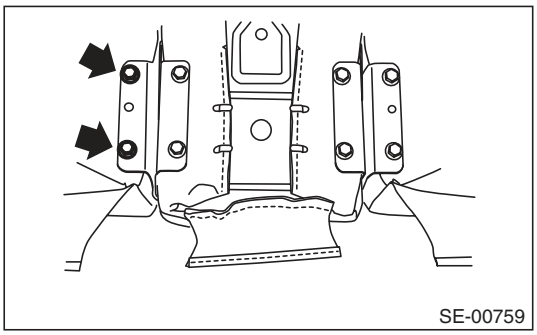

5) Push the entire seat to the direction of arrow and remove backrest assembly LH from the hinge assembly.

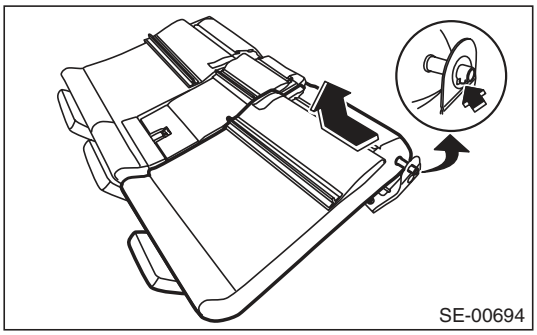

NOTE:
The backrest cannot be detached while the cutout on hinge assembly side and the pin on the backrest side are not aligned.
6) Similarly, remove the backrest assembly RH by performing the above step 5).
7) Remove the backrest shoulder. (Right and left)

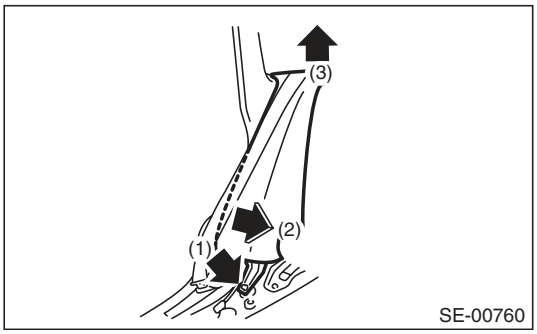

(1) Remove the bolt.
(2) Moving the lower side of backrest shoulder to the direction of arrow, and remove it from the stud bolt.
(3) Lift to remove the backrest shoulder.

8) Remove the two bolts at front side of the hinge assembly center.

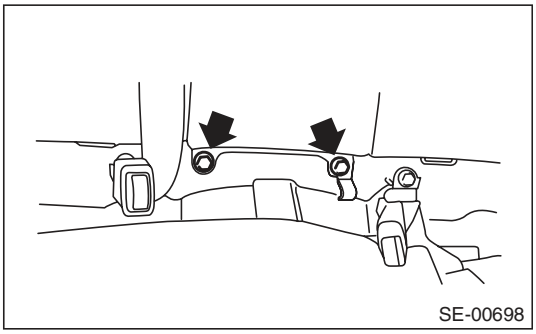

2. WAGON MODEL

1) Remove the two hooks while lifting up the rear seat cushion.

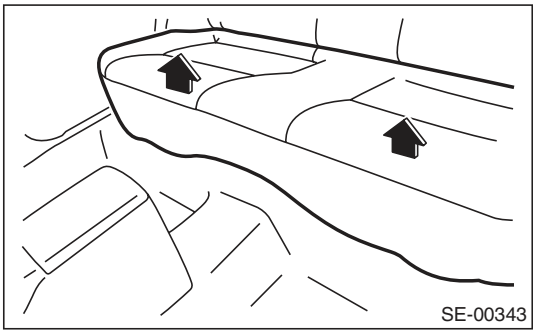

2) Remove the hook (A) by pushing it back while lifting the front side of the seat cushion, and remove the seat cushion.

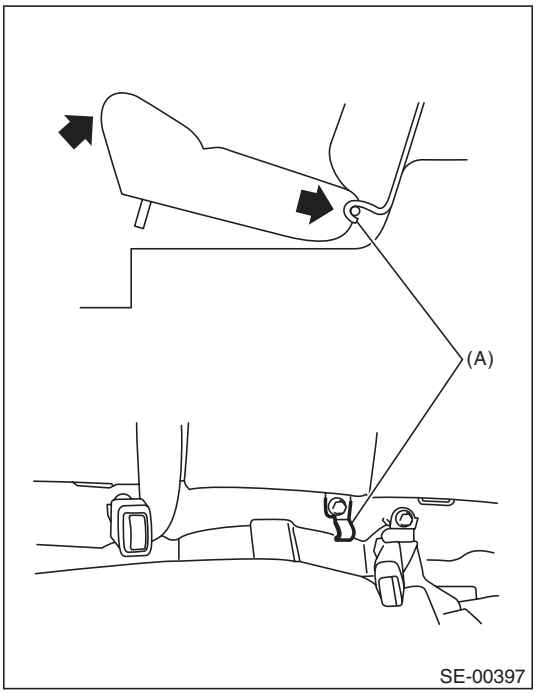

3) Remove the headrest, and then tilt the backrest forward.
4) Remove the luggage floor box. <Ref. to EI-73, REMOVAL, Luggage Floor Box.>
5) Peel the plastic fastener of rear face mat and remove the hinge assembly center bolts.

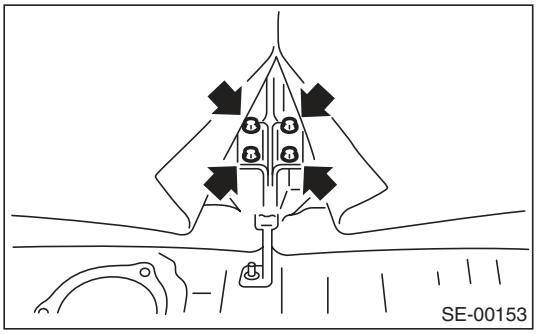

6) Remove the backrest assembly LH from hinge assembly LH.

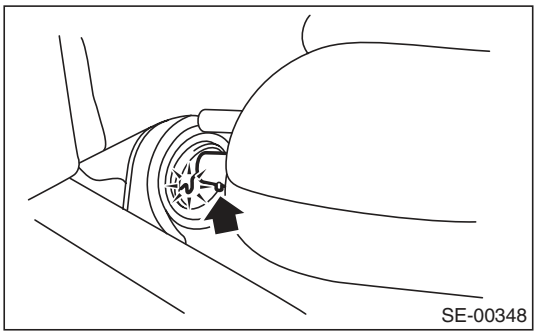

NOTE:
The backrest cannot be detached while the hinge assembly side and the backrest pin are not aligned.
7) Similarly, remove the backrest assembly RH by performing the above step 8).
8) Remove the hinge assembly center bolts.

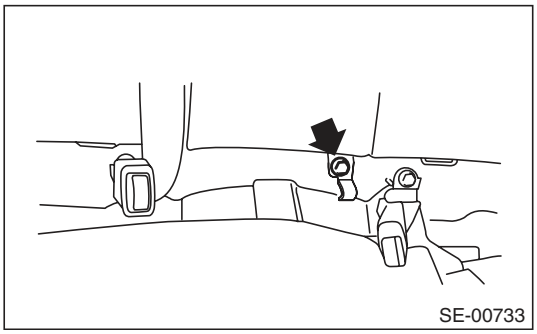

9) Remove the lower anchor bolt (A) of the outer seat belt and backrest shoulder bolt (B).

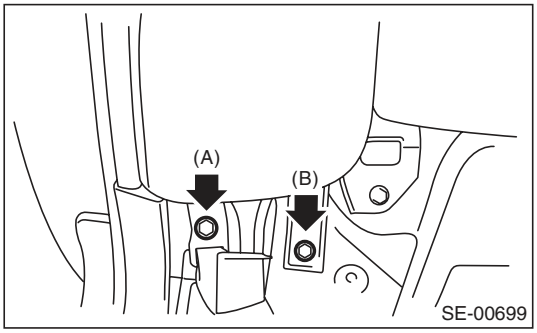

10) Remove the backrest shoulder with lifting it up.

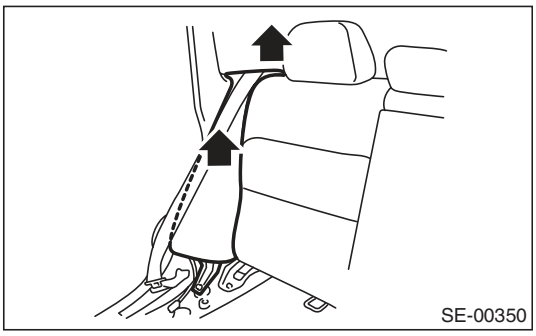

11) Remove the belt cover (A) from the backrest shoulder, then pull the seat belt out.

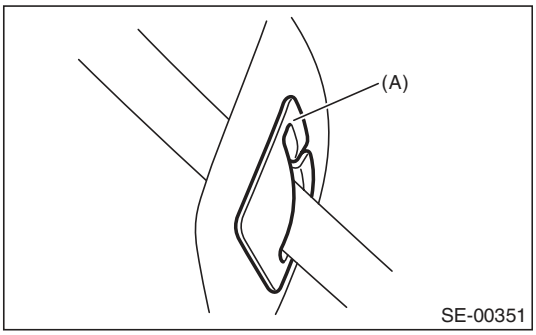

B: INSTALLATION

Install in the reverse order of removal.

NOTE:
- After installing the backrest, make sure that each seat belt operates normally.
- Make sure that they are properly secured on each hook on the vehicle side.

Tightening torque:
Refer to "COMPONENT" of "General Description". <Ref. to SE-2, COMPONENT, General Description.>

C: DISASSEMBLY

1. SEDAN MODEL

1) Remove the rear seat. <Ref. to SE-18, SEDAN MODEL, REMOVAL, Rear Seat.>
2) Remove the headrest.
3) Remove the hinge assembly center bolts.

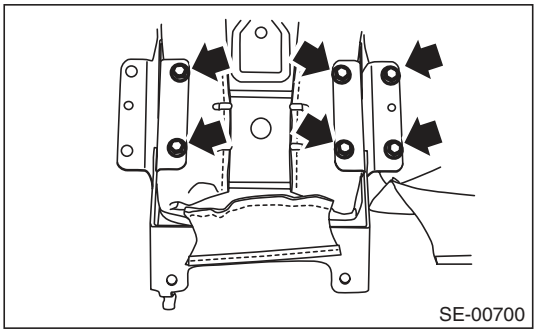

4) Remove the screws and detach the cover.

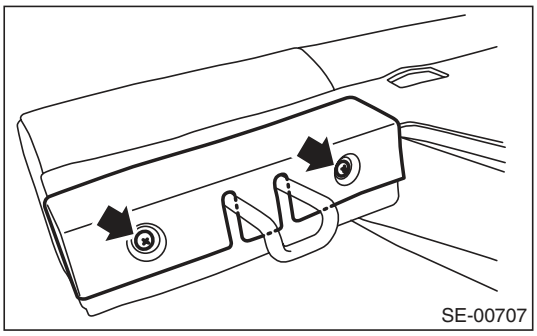

5) Remove tree clips and peel the back cover.

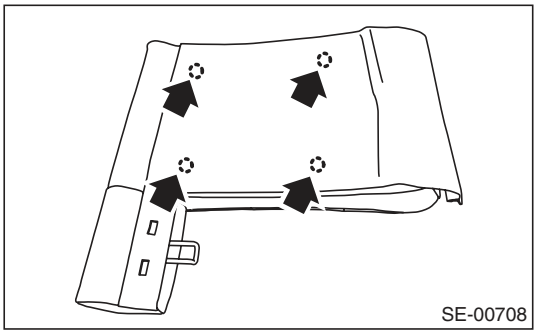

6) Turn over the backrest cover to remove hog rings (A) and hooks (B).

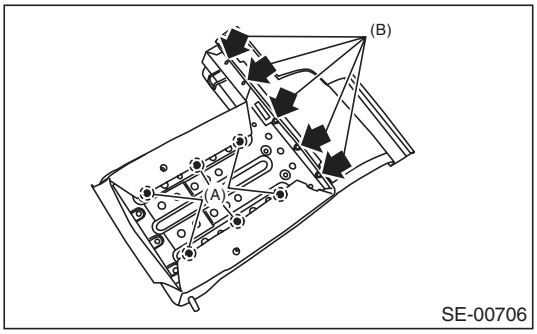

7) Remove the headrest bushing.

NOTE:
Push outside to remove it from the inside of seat.
8) Remove the button cover.

CAUTION:
The front and side faces of button cover have claws. Forceful removal can cause damage.
9) Remove the plate of shoulder section (A).
10) Remove the hog rings (B) on the front side of backrest, and then remove the backrest cover.

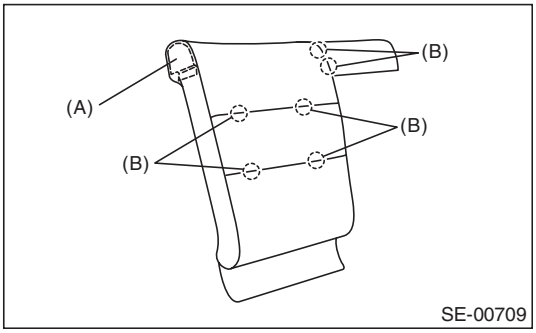

11) Remove the seat frame assembly from the backrest pad.
12) Disassemble the backrest assembly LH by referring to above procedures.
13) Remove the armrest hinge covers on both sides in direction of black arrow, and loosen the screws to remove the armrests.

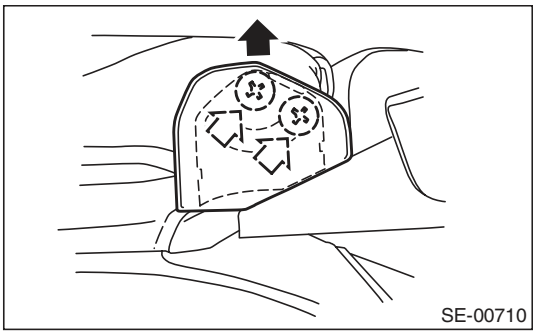

14) Remove the hinge assembly center from trunk through backboard.
15) Remove the hook, and then detach the center through cover.

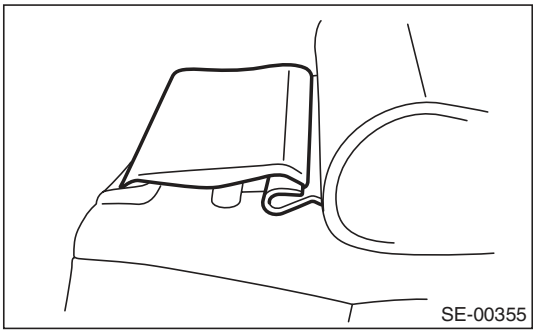

16) Remove the hook, and then remove the armrest cover.

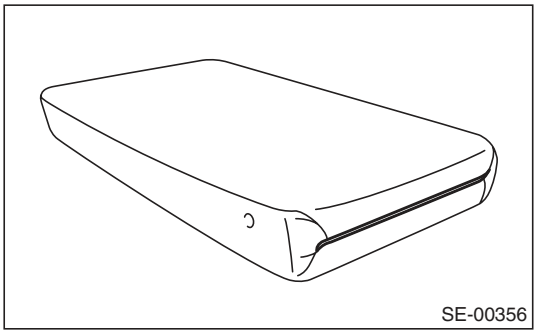

17) Remove the hook and hog ring, and then remove the headrest cover.

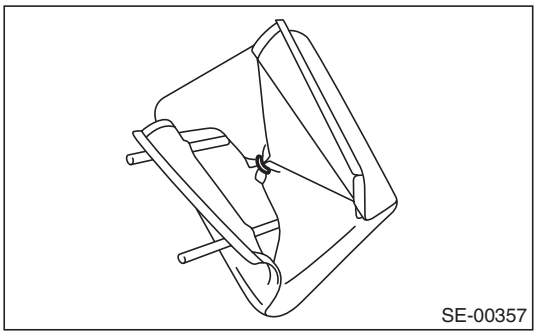

18) Remove the hog rings (A) on the rear side of the seat cushion.

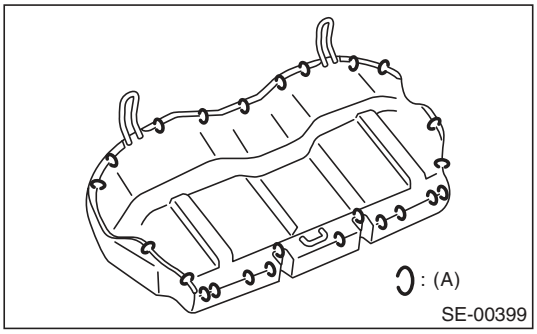

19) Remove the hog rings (A), then remove the seat cushion cover.

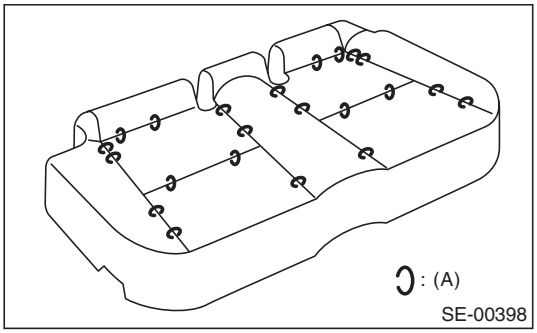

2. WAGON MODEL

1) Remove the rear seat. <Ref. to SE-19, WAGON MODEL, REMOVAL, Rear Seat.>
2) Remove the hooks at the bottom of backrest assembly LH, and then turn over the backrest cover to remove the hog rings (A) and hooks (B).

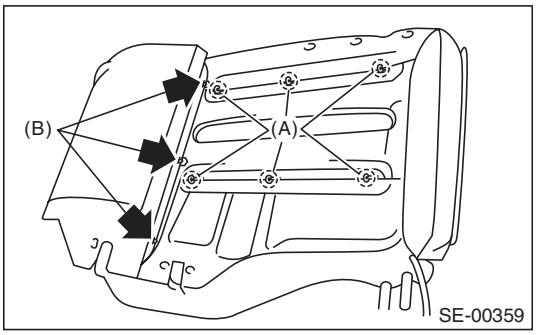

3) Remove the headrest bushing.

NOTE:
Push outside to remove it from the inside of seat.
4) Remove the hog rings (A) on the front side of backrest, and then remove the backrest cover.

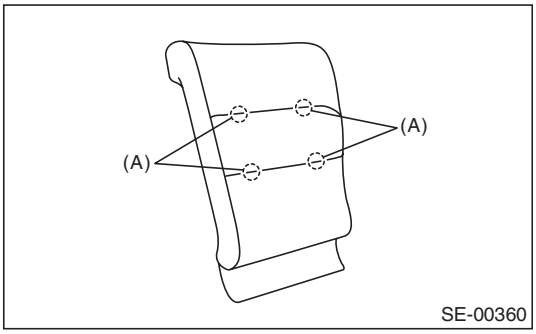

5) Remove the bolts, and then remove the backrest latch.

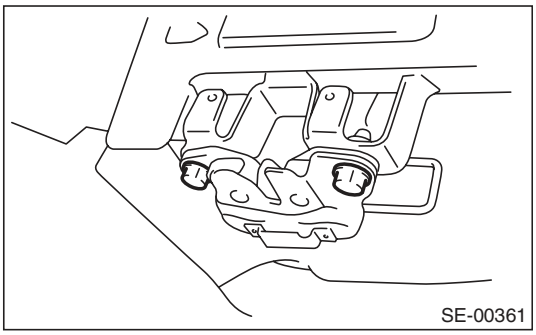

6) Loosen the screws to remove the armrest from backrest assembly RH.

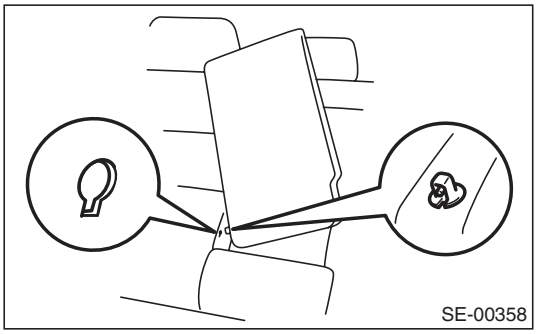

NOTE:
The armrests cannot be detached while the backrest assembly RH and armrest side pin positions are not aligned.
7) Disassemble the backrest assembly RH by referring to above procedures.
8) Remove the hook, and then remove the armrest cover.

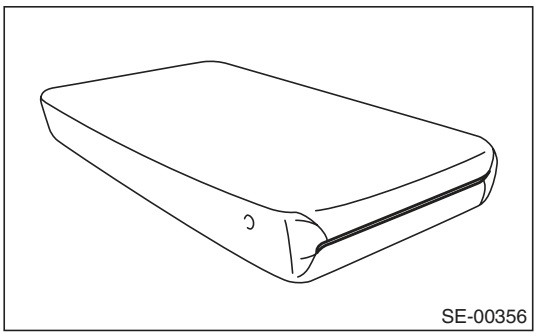

9) Remove the hook and hog ring, and then remove the headrest cover.

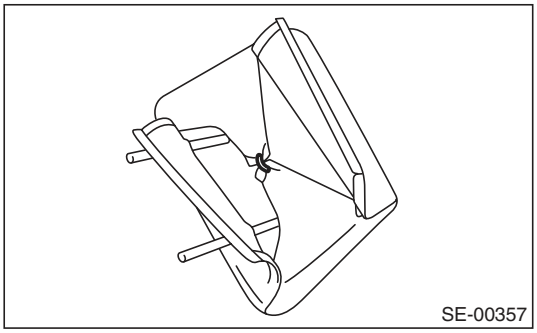

10) Remove the hog rings (A) on the rear side of the seat cushion.

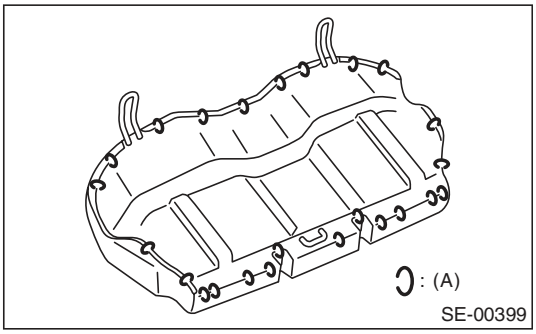

11) Remove the hog rings (A), then remove the seat cushion cover.

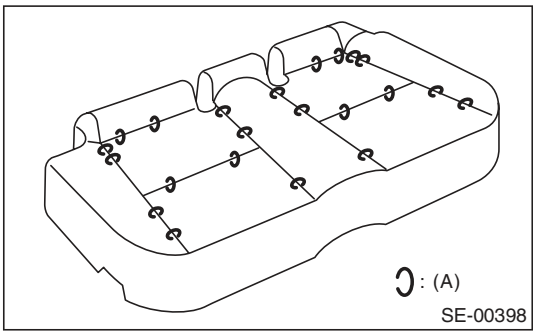

D: ASSEMBLY

CAUTION:
- **Always use new hog rings.**
- **Secure the hog ring using hog ring pliers.**
- **Install the hog rings to the specified points securely and make sure that no wrinkle or twisting on backrest cover.**

Assemble in the reverse order of disassembly.

NOTE:
- Do not contaminate or damage the cover.
- While installing the hog rings, prevent the seat from getting wrinkled.

E: INSPECTION

Check that no tear or fray on the seat cover.

4. Seat Heater System

A: REMOVAL

1. SEAT HEATER UNIT

1) Remove the front seats. <Ref. to SE-9, REMOVAL, Front Seat.>
2) Remove the backrest cover of front seat and seat cushion cover. <Ref. to SE-10, DISASSEMBLY, Front Seat.>
3) Remove the seat heater unit.

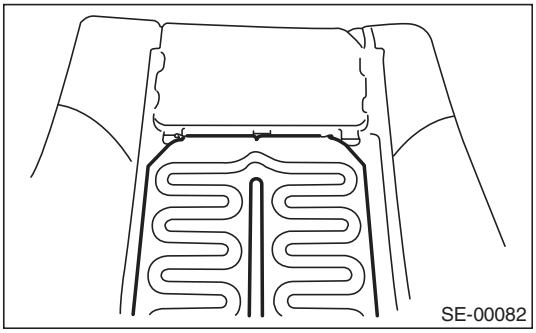

2. SEAT HEATER SWITCH

1) Remove the console box. <Ref. to EI-54, REMOVAL, Console Box.>
2) Remove the seat heater switch from the console box.

B: INSTALLATION

Install in the reverse order of removal.

C: INSPECTION

1. WIRING DIAGRAM

<Ref. to WI-127, WIRING DIAGRAM, Seat Heater System.>

2. DIAGNOSTIC CHART

Symptoms	Repair order
Seat heater does not operate.	1. Check the fuse. <Ref. to SE-24, CHECK SEAT HEATER FUSE, INSPECTION, Seat Heater System.>
	2. Check the power supply and ground circuit for the seat heater system. <Ref. to SE-24, CHECK POWER SUPPLY AND GROUND CIRCUIT, INSPECTION, Seat Heater System.>
	3. Check the thermistor circuit. <Ref. to SE-25, CHECK THERMISTOR CIRCUIT, INSPECTION, Seat Heater System.>
	4. Check the seat heater switch circuit. <Ref. to SE-25, CHECK SEAT HEATER SWITCH, INSPECTION, Seat Heater System.>

3. CHECK SEAT HEATER FUSE

Remove the seat heater fuse and inspect visually.
Is the fuse blown out?
- Yes → Replace the fuse.
- No → Check the power supply and ground circuit.

4. CHECK POWER SUPPLY AND GROUND CIRCUIT

1) Check power supply circuit.
   (1) Disconnect the seat heater switch.
   (2) Turn the ignition switch to ON.
   (3) Measure the voltage between harness connector terminal and chassis ground.

Connector & terminal

With SI-DRIVE
(C2) No. 12 (+) — Chassis ground (–):

Without SI-DRIVE
(C2) No. 11 (+) — Chassis ground (–):
Is the voltage 12 V or more?
- Yes → Go to step 2.
- No → Check the harness between the seat heater switch and fuse.

2) Check ground circuit.
Measure the resistance between harness connector terminal and chassis ground.

Connector & terminal

With SI-DRIVE
(C2) No. 2 — Chassis ground:

Without SI-DRIVE
(C2) No. 6 — Chassis ground:
Is the resistance less than 10 Ω?
- Yes → Go to step 3.
- No → Repair the harness.

3) Check ground circuit.
Measure the resistance between harness connector terminals.

Connector & terminal

With SI-DRIVE
(C2) No. 1 — (C2) No. 2:
(C2) No. 3 — (C2) No. 2:

Without SI-DRIVE
(C2) No. 3 — (C2) No. 6:
(C2) No. 7 — (C2) No. 6:
Is the resistance less than 10 Ω?
- Yes → The power supply and ground circuit are normal.
- No → Repair the harness.

5. CHECK THERMISTOR CIRCUIT

1) Disconnect the seat heater switch connector.
2) Measure the resistance between harness connector terminals.

Connector & terminal

Check LHD side

With SI-DRIVE
(C2) No. 8 — (C2) No. 3:

Without SI-DRIVE
(C2) No. 2 — (C2) No. 7:

Check RHD side

With SI-DRIVE
(C2) No. 6 — (C2) No. 1:

Without SI-DRIVE
(C2) No. 4 — (C2) No. 3:
Is the resistance between 1 KΩ to 200 KΩ?
- Yes → The thermistor circuit is normal.
- No → The harness or thermistor is faulty.

6. CHECK SEAT HEATER SWITCH

1) Check thermistor output voltage
(1) Turn the ignition switch to ON.
(2) Measure the voltage between the seat heater switch and chassis ground.

Connector & terminal:

LHD side seat

With SI-DRIVE
(C2) No. 8 (+) — Chassis ground (–):

Without SI-DRIVE
(C2) No. 2 (+) — Chassis ground (–):

RHD side seat

With SI-DRIVE
(C2) No. 6 (+) — Chassis ground (–):

Without SI-DRIVE
(C2) No. 4 (+) — Chassis ground (–):
Is the voltage 1.5 V or more?
- Yes → Go to step 2.
- No → Replace the seat heater switch.

2) Check output voltage
(1) Turn the ignition switch to ON.
(2) Measure the voltage between the seat heater switch and chassis ground when turning the switch to a position other than OFF.

Connector & terminal:

LHD side seat

With SI-DRIVE
(C2) No. 9 (+) — Chassis ground (–):

Without SI-DRIVE
(C2) No. 1 (+) — Chassis ground (–):

RHD side seat

With SI-DRIVE
(C2) No. 7 (+) — Chassis ground (–):

Without SI-DRIVE
(C2) No. 9 (+) — Chassis ground (–):
Does the voltage fluctuate between 12 V ←→ 0 V?
- Yes → Harness faulty, open circuit of heater or thermostat faulty.
- No → Replace the seat heater switch.

5. Power Seat System

A: REMOVAL

CAUTION:
When it is necessary to remove the front seat, disconnect the ground cable from battery and wait for 20 seconds before disconnecting the side airbag module harness connector.

1. POWER SEAT SWITCH

1) Detach the connectors and remove the seat side cover outside. <Ref. to SE-10, DISASSEMBLY, Front Seat.>
2) Remove the screws to remove the power seat switch assembly.

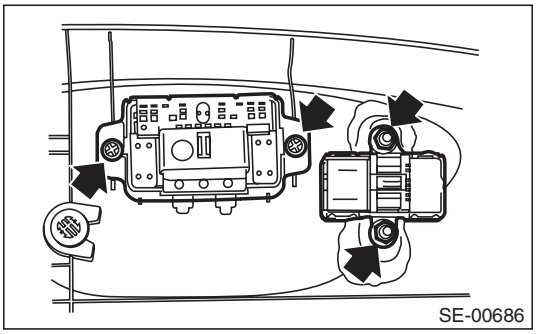

NOTE:
Perform the same procedure when removing the memory switch of memory-equipped seat.

2. MEMORY MODULE (MEMORY-EQUIPPED SEAT)

1) Lift the seat cushion by operating the switch.
2) Remove the front seat from the vehicle.
3) Remove the nut and then remove the memory module.

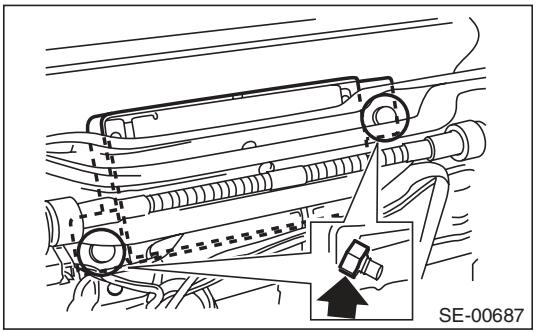

B: INSTALLATION

Install in the reverse order of removal.

NOTE:
• The seat with memory function must be initialized after installed. <Ref. to SE-40, ADJUSTMENT, Power Seat System.>
• Check the following items after replacing the memory-equipped seat or the memory module.
  • AT model
  1. Memory is reloaded when ignition is ON and select lever shifted to “P” range.
  2. Memory is not reloaded when ignition is ON and set the select lever to other than “P” range.
  • MT model
  1. Memory feature is restored after turning ignition switch to ON and pulling parking brake lever.
  2. Memory feature is not restored after turning the ignition switch to ON and pushing parking brake lever.

C: INSPECTION

1. WIRING DIAGRAM

<Ref. to WI-118, WIRING DIAGRAM, Power Seat System.>

2. TROUBLE SYMPTOM

• Driver’s seat (without memory)

Symptoms	Criteria
All function fails to operate. <Ref. to SE-28, ALL FUNCTION FAILS TO OPERATE (DRIVER’S SEAT, WITHOUT MEMORY), INSPECTION, Power Seat System.>	• Power seat switch • Power seat harness • Body harness
A part of function does not operate. <Ref. to SE-29, SOME OF THE MOTORS DO NOT OPERATE (DRIVER’S SEAT, WITHOUT MEMORY), INSPECTION, Power Seat System.>	• Power seat switch • Power seat harness • Relevant motor

- Driver's seat (with memory)

Symptoms	Criteria
Does not operate by manual operation. <Ref. to SE-31, DOES NOT OPERATE IN MANUAL OPERATION (DRIVER'S SEAT, MEMORY-EQUIPPED), INSPECTION, Power Seat System.>	• Power seat switch • Power seat harness • Body harness • Relevant motor and encoder
A part of function does not operate. <Ref. to SE-32, SOME OF THE MOTORS DO NOT OPERATE. (DRIVER'S SEAT, WITH MEMORY), INSPECTION, Power Seat System.>	• Power seat switch • Power seat harness • Relevant motor and encoder • Memory module
Fails to store the location to the memory <Ref. to SE-36, FAILS TO STORE THE LOCATION TO THE MEMORY (DRIVER'S SEAT, WITH MEMORY), INSPECTION, Power Seat System.>	• Memory switch • Power seat harness • Memory module
Restoring operation is impossible <Ref. to SE-37, FAILS TO PERFORM THE REPLAY OPERATION (DRIVER'S SEAT, WITH MEMORY), INSPECTION, Power Seat System.>	• Memory switch • Memory module • Motor and encoder
Initial setting is impossible <Ref. to SE-38, INITIALIZATION IS IMPOSSIBLE, INSPECTION, Power Seat System.>	• Power seat harness • Memory module

- Passenger's seat

Symptoms	Criteria
All function fails to operate. <Ref. to SE-38, ALL FUNCTION FAILS TO OPERATE (PASSENGER'S SEAT), INSPECTION, Power Seat System.>	• Power seat switch • Power seat harness • Body harness
A part of function does not operate. <Ref. to SE-39, SOME OF THE MOTORS DO NOT OPERATE (PASSENGER'S SEAT), INSPECTION, Power Seat System.>	• Power seat switch • Power seat harness • Relevant motor

3. CHECK POWER SEAT SWITCH

Move each switch and measure the resistance between connector terminals.

- Driver's seat (without memory)

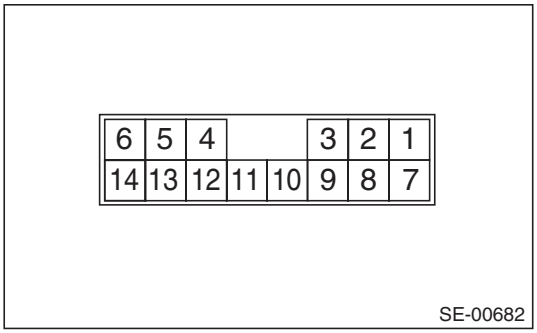

Switch position	Terminal No.	Standard
Slide forward	7 and 14 8 and 13	Less than 10 Ω
Slide backward	7 and 13 8 and 14	Less than 10 Ω
Tilt up	7 and 2 8 and 1	Less than 10 Ω
Tilt down	7 and 1 8 and 2	Less than 10 Ω
Lifter up	7 and 5 8 and 6	Less than 10 Ω
Lifter down	7 and 6 8 and 5	Less than 10 Ω
Reclining forward	7 and 3 8 and 4	Less than 10 Ω
Reclining backward	7 and 4 8 and 3	Less than 10 Ω

- Driver's seat (with memory)

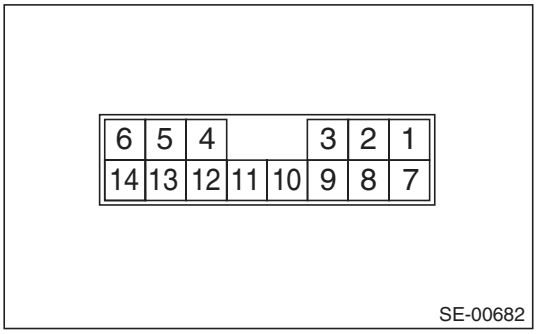

Switch position	Terminal No.	Standard
Slide forward	13 and 7	Less than 10 Ω
Slide backward	14 and 7	Less than 10 Ω
Tilt up	5 and 7	Less than 10 Ω
Tilt down	6 and 7	Less than 10 Ω
Lifter up	2 and 7	Less than 10 Ω
Lifter down	1 and 7	Less than 10 Ω
Reclining forward	4 and 7	Less than 10 Ω
Reclining backward	3 and 7	Less than 10 Ω

- Passenger's seat

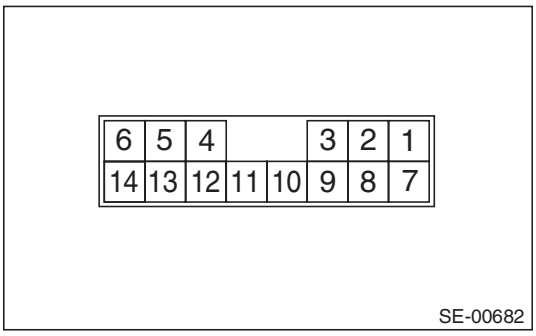

Switch position	Terminal No.	Standard
Slide forward	7 and 13 8 and 14	Less than 10 Ω
Slide backward	7 and 14 8 and 13	Less than 10 Ω
Reclining forward	7 and 4 8 and 3	Less than 10 Ω
Reclining backward	7 and 3 8 and 4	Less than 10 Ω

4. CHECK MEMORY SWITCH (MEMORY-EQUIPPED)

Move each switch and measure the resistance between connector terminals.

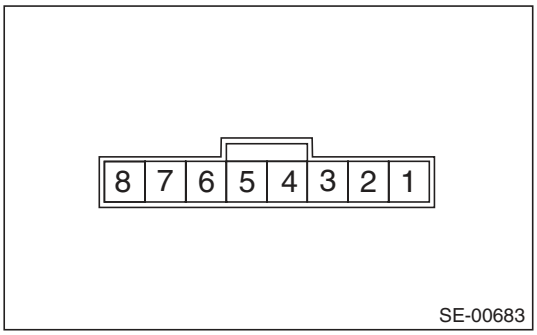

Switch position	Terminal No.	Standard
Memory 1	3 and 1	Less than 10 Ω
Memory 2	2 and 1	Less than 10 Ω
Set	8 and 1	Less than 10 Ω

5. ALL FUNCTION FAILS TO OPERATE (DRIVER'S SEAT, WITHOUT MEMORY)

	Step	Check	Yes	No
1	**CHECK SEAT FUNCTION.** Operate each power seat switch and check that each power seat function operates normally.	Does all function fails to operate?	Go to step **2**.	Check motors that do not operate. <Ref. to SE-29, SOME OF THE MOTORS DO NOT OPERATE (DRIVER'S SEAT, WITHOUT MEMORY), INSPECTION, Power Seat System.>
2	**CHECK FUSE.** Check the power seat fuse inside the fuse box.	Is the fuse blown out?	Replace the appropriate fuse.	Go to step **3**.
3	**CHECK POWER SUPPLY CIRCUIT.** 1) Disconnect the connector of power seat switch assembly. 2) Measure the voltage between harness connector and chassis ground. ***Connector & terminal*** ***(R190) No. 7 (+) — Chassis ground (–):***	Is the voltage 10 V or more?	Go to step **4**.	Check body harness.
4	**CHECK POWER SUPPLY CIRCUIT.** Measure the resistance between power seat switch harness connector and chassis ground. ***Connector & terminal*** ***(R190) No. 8 — Chassis ground:***	Is the resistance less than 10 Ω?	Replace the power seat switch assembly.	Check body harness.

6. SOME OF THE MOTORS DO NOT OPERATE (DRIVER'S SEAT, WITHOUT MEMORY)

- Malfunction of slide operation

	Step	Check	Yes	No
1	**CHECK SWITCH.** 1) Disconnect the connector of power seat switch assembly. 2) Measure resistance between terminals while moving the switch to slide forward and slide rearward positions. <Ref. to SE-27, CHECK POWER SEAT SWITCH, INSPECTION, Power Seat System.>	Is there any problem on the inspection result?	Go to step **2**.	Replace the power seat switch assembly.
2	**CHECK HARNESS.** 1) Disconnect the power seat switch connector and slide motor connector. 2) Measure the resistance between power seat switch connector and slide motor connector. ***Connector & terminal*** ***(R192) No. 1 — (R190) No. 14:*** ***(R192) No. 2 — (R190) No. 13:***	Is the resistance less than 10 Ω?	Go to step **3**.	Check power seat harness.
3	**CHECK SLIDE MOTOR.** 1) Connect the power seat switch connector and slide motor connector. 2) Apply 12 V voltage to the slide motor and check the motor rotation. ***Connector & terminal*** ***(R190) No. 14 (+) — (R190) No. 13 (–):*** ***(R190) No. 13 (+) — (R190) No. 14 (–):***	Does the motor rotate normally?	Check for temporary poor contact or mechanical trouble in slide rail.	Slide motor problem. Replace the slide rail assembly.

- Malfunction of tilt operation

	Step	Check	Yes	No
1	**CHECK SWITCH.** 1) Disconnect the connector of power seat switch assembly. 2) Measure resistance between terminals while moving the switch to tilt up and tilt down positions. <Ref. to SE-27, CHECK POWER SEAT SWITCH, INSPECTION, Power Seat System.>	Is there any problem on the inspection result?	Go to step **2**.	Replace the power seat switch assembly.
2	**CHECK HARNESS.** 1) Disconnect the power seat switch connector and tilt motor connector. 2) Measure the resistance between power seat switch connector and tilt motor connector. ***Connector & terminal*** ***(R197) No. 2 — (R190) No. 2:*** ***(R197) No. 3 — (R190) No. 1:***	Is the resistance less than 10 Ω?	Go to step **3**.	Check power seat harness.
3	**CHECK TILT MOTOR.** 1) Connect the power seat switch connector and tilt motor connector. 2) Apply 12 V voltage to the tilt motor and check the motor rotation. ***Connector & terminal*** ***(R190) No. 2 (+) — (R190) No. 1 (–):*** ***(R190) No. 1 (+) — (R190) No. 2 (–):***	Does the motor rotate normally?	Check for temporary poor contact or mechanical trouble in tilt mechanism.	Tilt motor problem. Replace the slide rail assembly.

- Malfunction of lifter operation

	Step	Check	Yes	No
1	**CHECK SWITCH.** 1) Disconnect the connector of power seat switch assembly. 2) Measure resistance between terminals while moving the switch to lifter up and lifter down positions. <Ref. to SE-27, CHECK POWER SEAT SWITCH, INSPECTION, Power Seat System.>	Is there any problem on the inspection result?	Go to step **2**.	Replace the power seat switch assembly.
2	**CHECK HARNESS.** 1) Disconnect the power seat switch connector and lifter motor connector. 2) Measure the resistance between power seat switch connector and lifter motor connector. ***Connector & terminal*** ***(R194) No. 4 — (R190) No. 5:*** ***(R194) No. 3 — (R190) No. 6:***	Is the resistance less than 10 Ω?	Go to step **3**.	Check power seat harness.
3	**CHECK LIFTER MOTOR.** 1) Connect the power seat switch connector and lifter motor connector. 2) Apply 12 V voltage to the lifter motor and check the motor rotation. ***Connector & terminal*** ***(R190) No. 5 (+) — (R190) No. 6 (–):*** ***(R190) No. 6 (+) — (R190) No. 5 (–):***	Does the motor rotate normally?	Check for temporary poor contact or mechanical trouble in lifter mechanism.	Lifter motor problem. Replace the slide rail assembly.

- Malfunction of reclining operation

	Step	Check	Yes	No
1	**CHECK SWITCH.** 1) Disconnect the connector of power seat switch assembly. 2) Measure resistance between terminals while moving the switch to reclining forward and reclining rearward positions. <Ref. to SE-27, CHECK POWER SEAT SWITCH, INSPECTION, Power Seat System.>	Is there any problem on the inspection result?	Go to step **2**.	Replace the power seat switch assembly.
2	**CHECK HARNESS.** 1) Disconnect the power seat switch connector and reclining motor connector. 2) Measure the resistance between power seat switch connector and reclining motor connector. ***Connector & terminal*** ***(R191) No. 2 — (R190) No. 3:*** ***(R191) No. 1 — (R190) No. 4:***	Is the resistance less than 10 Ω?	Go to step **3**.	Check power seat harness.
3	**CHECK RECLINING MOTOR.** 1) Connect the power seat switch connector and reclining motor connector. 2) Apply 12 V voltage to the reclining motor and check the motor rotation. ***Connector & terminal*** ***(R190) No. 3 (+) — (R190) No. 4 (–):*** ***(R190) No. 4 (+) — (R190) No. 3 (–):***	Does the motor rotate normally?	Check for temporary poor contact or mechanical trouble in reclining hinge.	Reclining motor problem. Replace the reclining motor assembly.

7. DOES NOT OPERATE IN MANUAL OPERATION (DRIVER'S SEAT, MEMORY-EQUIPPED)

	Step	Check	Yes	No
1	**CHECK SEAT FUNCTION.** Operate each power seat switch and check that each power seat function operates normally.	Does all function fails to operate?	Go to step **2**.	Check the motor which does not operate. <Ref. to SE-32, SOME OF THE MOTORS DO NOT OPERATE. (DRIVER'S SEAT, WITH MEMORY), INSPECTION, Power Seat System.>
2	**CHECK FUSE.** Check the power seat fuse inside the fuse box.	Is the fuse blown out?	Replace the appropriate fuse.	Go to step **3**.
3	**CHECK POWER SUPPLY CIRCUIT.** 1) Disconnect the memory module connector. 2) Measure the voltage between harness connector and chassis ground. ***Connector & terminal*** ***(R195) No. 10 (+) — Chassis ground (–):*** ***(R196) No. 8 (+) — Chassis ground (–):*** ***(R196) No. 3 (+) — Chassis ground (–):***	Is the voltage 10 V or more?	Go to step **4**.	Check body harness.
4	**CHECK POWER SUPPLY CIRCUIT.** Measure the resistance between memory module harness connector and chassis ground. ***Connector & terminal*** ***(R196) No. 14 — Chassis ground:*** ***(R196) No. 12 — Chassis ground:***	Is the resistance less than 10 Ω?	Go to step **5**.	Check body harness.
5	**CHECK IGNITION CIRCUIT.** Measure the voltage between harness connector and chassis ground while turning the ignition switch to ON. ***Connector & terminal*** ***(R195) No. 11 (+) — Chassis ground (–):***	Is the voltage 10 V or more?	Go to step **6**.	Check body harness.
6	**CHECK TRANSMISSION CIRCUITS.** Measure the resistance between harness connector and chassis ground in the following condition. • AT model: Select lever shifted to P position. • MT model: Parking brake lever pulled. ***Connector & terminal*** ***(R195) No. 12 — Chassis ground:***	Is the resistance less than 10 Ω?	Go to step **7**.	Check body harness.
7	**CHECK SWITCH.** 1) Disconnect the connector of power seat switch assembly. 2) Measure resistance between terminals while moving the switch to reclining forward and reclining rearward positions. <Ref. to SE-27, CHECK POWER SEAT SWITCH, INSPECTION, Power Seat System.>	Is there any problem on the inspection result?	Replace the memory module.	Replace the power seat switch assembly.

8. SOME OF THE MOTORS DO NOT OPERATE (DRIVER'S SEAT, WITH MEMORY)

- Malfunction of slide operation

	Step	Check	Yes	No
1	**CHECK OPERATION.** Check the slide motor rotation while moving the switch to slide forward and slide backward.	Does the motor rotate for one second or more when operating the switch?	Go to step **2**.	Encoder defection. Replace the slide rail assembly.
2	**CHECK SWITCH.** 1) Disconnect the harness connector of power seat switch assembly. 2) Measure resistance between terminals while moving the switch to slide forward and slide rearward positions. <Ref. to SE-27, CHECK POWER SEAT SWITCH, INSPECTION, Power Seat System.>	Is there any problem on the inspection result?	Go to step **3**.	Replace the power seat switch assembly.
3	**CHECK HARNESS.** 1) Disconnect the power seat switch connector and slide motor connector. 2) Measure the resistance between the memory module connector and power seat switch connector. ***Connector & terminal*** ***(R195) No. 7 — (R190) No. 13:*** ***(R195) No. 6 — (R190) No. 14:***	Is the resistance less than 10 Ω?	Go to step **4**.	Check power seat harness.
4	**CHECK HARNESS.** 1) Disconnect the slide motor connector. 2) Measure the resistance between the memory module connector and slide motor connector. ***Connector & terminal*** ***(R196) No. 16 — (R206) No. 1:*** ***(R196) No. 15 — (R206) No. 2:***	Is the resistance less than 10 Ω?	Go to step **5**.	Check power seat harness.
5	**CHECK SLIDE MOTOR.** Apply battery voltage to the memory module connector and check the motor rotation. ***Connector & terminal*** ***(R196) No. 16 (+) — (R196) No. 15 (–):*** ***(R196) No. 15 (+) — (R196) No. 16 (–):***	Does the motor rotate normally?	Replace the memory module.	Slide motor problem. Replace the slide rail assembly.

- Malfunction of tilt operation

Step		Check	Yes	No
1	**CHECK OPERATION.** Check the tilt motor rotation while moving the switch to tilt up and tilt down.	Does the motor rotate for one second or more when operating the switch?	Go to step **2**.	Encoder defection. Replace the slide rail assembly.
2	**CHECK SWITCH.** 1) Disconnect the harness connector of power seat switch assembly. 2) Measure resistance between terminals while moving the switch to tilt up and tilt down positions. <Ref. to SE-27, CHECK POWER SEAT SWITCH, INSPECTION, Power Seat System.>	Is there any problem on the inspection result?	Go to step **3**.	Replace the power seat switch assembly.
3	**CHECK HARNESS.** 1) Disconnect the power seat switch connector and tilt motor connector. 2) Measure the resistance between the memory module connector and power seat switch connector. ***Connector & terminal*** ***(R195) No. 3 — (R190) No. 5:*** ***(R195) No. 2 — (R190) No. 6:***	Is the resistance less than 10 Ω?	Go to step **4**.	Check power seat harness.
4	**CHECK HARNESS.** 1) Disconnect the tilt motor connector. 2) Measure the resistance between the memory module connector and tilt motor connector. ***Connector & terminal*** ***(R196) No. 4 — (R197) No. 3:*** ***(R196) No. 5 — (R197) No. 2:***	Is the resistance less than 10 Ω?	Go to step **5**.	Check power seat harness.
5	**CHECK TILT MOTOR.** Apply battery voltage to the memory module connector and check the motor rotation. ***Connector & terminal*** ***(R196) No. 4 (+) — (R196) No. 5 (–):*** ***(R196) No. 5 (+) — (R196) No. 4 (–):***	Does the motor rotate normally?	Replace the memory module.	Tilt motor problem. Replace the slide rail assembly.

- Malfunction of lifter operation

	Step	Check	Yes	No
1	**CHECK OPERATION.** Check the lifter motor rotation while turning the switch to lifter up and lifter down.	Does the motor rotate for one second or more when operating the switch?	Go to step **2**.	Encoder defection. Replace the slide rail assembly.
2	**CHECK SWITCH.** 1) Disconnect the harness connector of power seat switch assembly. 2) Measure resistance between terminals while moving the switch to lifter up and lifter down positions. <Ref. to SE-27, CHECK POWER SEAT SWITCH, INSPECTION, Power Seat System.>	Is there any problem on the inspection result?	Go to step **3**.	Replace the power seat switch assembly.
3	**CHECK HARNESS.** 1) Disconnect the power seat switch connector and lifter motor connector. 2) Measure the resistance between the memory module connector and power seat switch connector. ***Connector & terminal*** ***(R195) No. 5 — (R190) No. 2:*** ***(R195) No. 4 — (R190) No. 1:***	Is the resistance less than 10 Ω?	Go to step **4**.	Check power seat harness.
4	**CHECK HARNESS.** 1) Disconnect the lifter motor connector. 2) Measure the resistance between the memory module connector and lifter motor connector. ***Connector & terminal*** ***(R196) No. 1 — (R194) No. 4:*** ***(R196) No. 2 — (R194) No. 3:***	Is the resistance less than 10 Ω?	Go to step **5**.	Check power seat harness.
5	**CHECK LIFTER MOTOR.** Apply battery voltage to the memory module connector and check the motor rotation. ***Connector & terminal*** ***(R196) No. 1 (+) — (R196) No. 2 (–):*** ***(R196) No. 2 (+) — (R196) No. 1 (–):***	Does the motor rotate normally?	Replace the memory module.	Lifter motor problem. Replace the slide rail assembly.

- Malfunction of reclining operation

Step		Check	Yes	No
1	**CHECK OPERATION.** Check the reclining motor rotation while moving the switch to reclining forward and reclining backward.	Does the motor rotate for one second or more when operating the switch?	Go to step **2**.	Encoder defection. Replace the reclining motor assembly.
2	**CHECK SWITCH.** 1) Disconnect the harness connector of power seat switch assembly. 2) Measure resistance between terminals while moving the switch to reclining forward and reclining rearward positions. <Ref. to SE-27, CHECK POWER SEAT SWITCH, INSPECTION, Power Seat System.>	Is there any problem on the inspection result?	Go to step **3**.	Replace the power seat switch assembly.
3	**CHECK HARNESS.** 1) Disconnect the power seat switch connector and reclining motor connector. 2) Measure the resistance between the memory module connector and power seat switch connector. ***Connector & terminal*** ***(R195) No. 9 — (R190) No. 4:*** ***(R195) No. 8 — (R190) No. 3:***	Is the resistance less than 10 Ω?	Go to step **4**.	Check power seat harness.
4	**CHECK HARNESS.** 1) Disconnect the slide motor connector. 2) Measure the resistance between the memory module connector and reclining motor connector. ***Connector & terminal*** ***(R196) No. 6 — (R191) No. 1:*** ***(R196) No. 7 — (R191) No. 2:***	Is the resistance less than 10 Ω?	Go to step **5**.	Check power seat harness.
5	**CHECK RECLINING MOTOR.** Apply battery voltage to the memory module connector and check the motor rotation. ***Connector & terminal*** ***(R196) No. 6 (+) — (R196) No. 7 (–):*** ***(R196) No. 7 (+) — (R196) No. 6 (–):***	Does the motor rotate normally?	Replace the memory module.	Reclining motor problem. Replace the reclining motor assembly.

9. FAILS TO STORE THE LOCATION TO THE MEMORY (DRIVER'S SEAT, WITH MEMORY)

Step		Check	Yes	No
1	**CHECK SWITCH.** 1) Disconnect the harness connector of memory switch assembly. 2) Check memory switch. <Ref. to SE-28, CHECK MEMORY SWITCH (MEMORY-EQUIPPED), INSPECTION, Power Seat System.>	Is there any problem on the inspection result?	Go to step **2**.	Replace the memory switch assembly.
2	**CHECK HARNESS.** Measure the resistance between the memory switch connector and memory module connector. ***Connector & terminal*** ***(R195) No. 13 — (R198) No. 3:*** ***(R195) No. 14 — (R198) No. 2:*** ***(R195) No. 15 — (R198) No. 8:***	Is the resistance less than 10 Ω?	Go to step **3**.	Check power seat harness.
3	**CHECK COMBINATION METER.** Turn the ignition switch to ON and check the indicator inside the meter while the selector lever is in P position.	Does the indicator display P?	Go to step **4**.	Check the combination meter. <Ref. to IDI-5, INSPECTION, Combination Meter System.>
4	**SYSTEM INITIALIZATION.** Initialize memory seat system. <Ref. to SE-40, ADJUSTMENT, Power Seat System.>	Is the initialization completed successfully?	Replace the memory module.	<Ref. to SE-38, INITIALIZATION IS IMPOSSIBLE, INSPECTION, Power Seat System.>

10.FAILS TO PERFORM THE REPLAY OPERATION (DRIVER'S SEAT, WITH MEMORY)

	Step	Check	Yes	No
1	**CHECK MEMORY FUNCTION.** Perform the memory operation of the seat position, and check the memory replay operation.	Does the seat position memory replay correctly?	Memory function is normal. Memory seems to be cleared since voltage was less from the operation-ensured voltage temporary at the time of memory restoring and manual operation. It operates normally by registering a memory.	Go to step **2**.
2	**CHECK MEMORY FUNCTION.** At the step 1 memory operation, check the beep sound (once).	Check the beep sound?	Go to step **3**.	<Ref. to SE-36, FAILS TO STORE THE LOCATION TO THE MEMORY (DRIVER'S SEAT, WITH MEMORY), INSPECTION, Power Seat System.>
3	**CHECK SWITCH.** 1) Disconnect the harness connector of memory switch assembly. 2) Check memory switch. <Ref. to SE-28, CHECK MEMORY SWITCH (MEMORY-EQUIPPED), INSPECTION, Power Seat System.>	Is there any problem on the inspection result?	Go to step **4**.	Replace the memory switch assembly.
4	**CHECK HARNESS.** Measure the resistance between the memory switch connector and memory module connector. ***Connector & terminal*** ***(R195) No. 13 — (R198) No. 3:*** ***(R195) No. 14 — (R198) No. 2:*** ***(R195) No. 15 — (R198) No. 8:***	Is the resistance less than 10 Ω?	Go to step **5**.	Check power seat harness.
5	**CHECK COMBINATION METER.** Turn the ignition switch to ON and check the indicator light inside the meter. • AT model: when the select lever is in "P" position • MT model: when the parking brake lever is pulled	Is indicator light displayed?	Go to step **6**.	Check the combination meter. <Ref. to IDI-5, INSPECTION, Combination Meter System.>
6	**CHECK OPERATION.** Check the rotation of each motor when performing all the power seat switch operation.	Does each motor rotate for one second or more when operating each switch?	Replace the memory module.	Encoder defection. Replace the appropriate motor.

11.INITIALIZATION IS IMPOSSIBLE

Step		Check	Yes	No
1	**CHECK OPERATION.** Check the rotation of each motor when performing all the power seat switch operation.	Does each motor rotate for one second or more when operating each switch?	Go to step **2**.	Encoder defection. Replace the appropriate motor.
2	**CHECK SWITCH.** 1) Disconnect the harness connector of power seat switch assembly. 2) Measure resistance between all terminals of power seat switch assembly. <Ref. to SE-27, CHECK POWER SEAT SWITCH, INSPECTION, Power Seat System.>	Is there any problem on the inspection result?	Replace the memory module.	Replace the power seat switch assembly.

12.ALL FUNCTION FAILS TO OPERATE (PASSENGER'S SEAT)

Step		Check	Yes	No
1	**CHECK SEAT FUNCTION.** Operate each power seat switch and check that each power seat function operates normally.	Does all function fails to operate?	Go to step **2**.	Check the motor which does not operate. <Ref. to SE-39, SOME OF THE MOTORS DO NOT OPERATE (PASSENGER'S SEAT), INSPECTION, Power Seat System.>
2	**CHECK FUSE.** Check the power seat fuse inside the fuse box.	Is the fuse blown out?	Replace the appropriate fuse.	Go to step **3**.
3	**CHECK POWER SUPPLY CIRCUIT.** 1) Disconnect the connector of power seat switch assembly. 2) Measure the voltage between harness connector and chassis ground. ***Connector & terminal*** ***(R200) No. 7 (+) — Chassis ground (–):***	Is the voltage 10 V or more?	Go to step **4**.	Check body harness.
4	**CHECK POWER SUPPLY CIRCUIT.** Measure the resistance between power seat switch harness connector and chassis ground. ***Connector & terminal*** ***(R200) No. 8 — Chassis ground:***	Is the resistance less than 10 Ω?	Replace the power seat switch assembly.	Check body harness.

13.SOME OF THE MOTORS DO NOT OPERATE (PASSENGER'S SEAT)

- Malfunction of slide operation

Step		Check	Yes	No
1	**CHECK SWITCH.** 1) Disconnect the connector of power seat switch assembly. 2) Measure resistance between terminals while moving the switch to slide forward and slide rearward positions. <Ref. to SE-27, CHECK POWER SEAT SWITCH, INSPECTION, Power Seat System.>	Is there any problem on the inspection result?	Go to step **2**.	Replace the power seat switch assembly.
2	**CHECK HARNESS.** 1) Disconnect the power seat switch connector and slide motor connector. 2) Measure the resistance between power seat switch connector and slide motor connector. ***Connector & terminal*** ***(R202) No. 1 — (R200) No. 13:*** ***(R202) No. 2 — (R200) No. 14:***	Is the resistance less than 10 Ω?	Go to step **3**.	Check power seat harness.
3	**CHECK SLIDE MOTOR.** 1) Connect the power seat switch connector and slide motor connector. 2) Apply 12 V voltage to the slide motor and check the motor rotation. ***Connector & terminal*** ***(R200) No. 14 (+) — (R200) No. 13 (–):*** ***(R200) No. 13 (+) — (R200) No. 14 (–):***	Does the motor rotate normally?	Check for temporary poor contact or mechanical trouble in slide rail.	Slide motor problem. Replace the slide motor assembly.

- Malfunction of reclining operation

Step		Check	Yes	No
1	**CHECK SWITCH.** 1) Disconnect the connector of power seat switch assembly. 2) Measure resistance between terminals while moving the switch to reclining forward and reclining rearward positions. <Ref. to SE-27, CHECK POWER SEAT SWITCH, INSPECTION, Power Seat System.>	Is there any problem on the inspection result?	Go to step **2**.	Replace the power seat switch assembly.
2	**CHECK HARNESS.** 1) Disconnect the power seat switch connector and reclining motor connector. 2) Measure the resistance between power seat switch connector and reclining motor connector. ***Connector & terminal*** ***(R201) No. 2 — (R200) No. 4:*** ***(R201) No. 1 — (R200) No. 3:***	Is the resistance less than 10 Ω?	Go to step **3**.	Check power seat harness.
3	**CHECK RECLINING MOTOR.** 1) Connect the power seat switch connector and reclining motor connector. 2) Apply 12 V voltage to the reclining motor and check the motor rotation. ***Connector & terminal*** ***(R200) No. 3 (+) — (R200) No. 4 (–):*** ***(R200) No. 4 (+) — (R200) No. 3 (–):***	Does the motor rotate normally?	Check for temporary poor contact or mechanical trouble in reclining hinge.	Reclining motor problem. Replace the reclining motor assembly.

D: ADJUSTMENT

NOTE:
The calibration procedures apply only to the memory-equipped seat on the driver's side.

1. CONDITIONS FOR INITIALIZATION

Perform the initializing operation to the memory module when the following conditions are met.
- When the seat was removed from vehicle.
- When the memory module was replaced.
- When the slide rail assembly or reclining motor assembly was removed or replaced.
- When the pulse generated while the seat is moving differs from the actual distance. (When memory replay operation is not normally carried out)

2. INITIALIZATION PROCEDURE

NOTE:
- Initialize the records inside the module by performing all the following steps regardless the item order.
- Buzzer sounds once when keeping the switch operation for three seconds with each seat in lock* status.
- After the completion of all items for initialization process, the buzzer sounds three times when finishing the final operation and turning the switch from ON to OFF.

1) Move the seat rearward using the slide switch, and keep the seat lock* status for 3 seconds or more.
2) Move the seat downward using tilt switch, and keep the seat lock* status for three seconds or more.
3) Move the seat downward using lifter switch, and keep the seat lock* status for three seconds or more.
4) Tilt the seatback forward using reclining switch, and keep the seat lock* status for three seconds or more.

*: Seat lock is the status that there is no pulse output from the encoder within the specified period of time although it reaches the movable position end.

NOTE:
When the following conditions are met, the initializing operation is cancelled even though the procedure is carried out halfway.
- Any operation interval between each initialization procedures from 1) to 4) exceeded 10 seconds.
- All operations throughout initialization procedure 1) to 4) was not performed.
- During initialization procedure, power supply was cut off, or the voltage to the memory module exceeded the range of operating voltage.

1. General Description

A: COMPONENT

1. DOOR LOCK ASSEMBLY

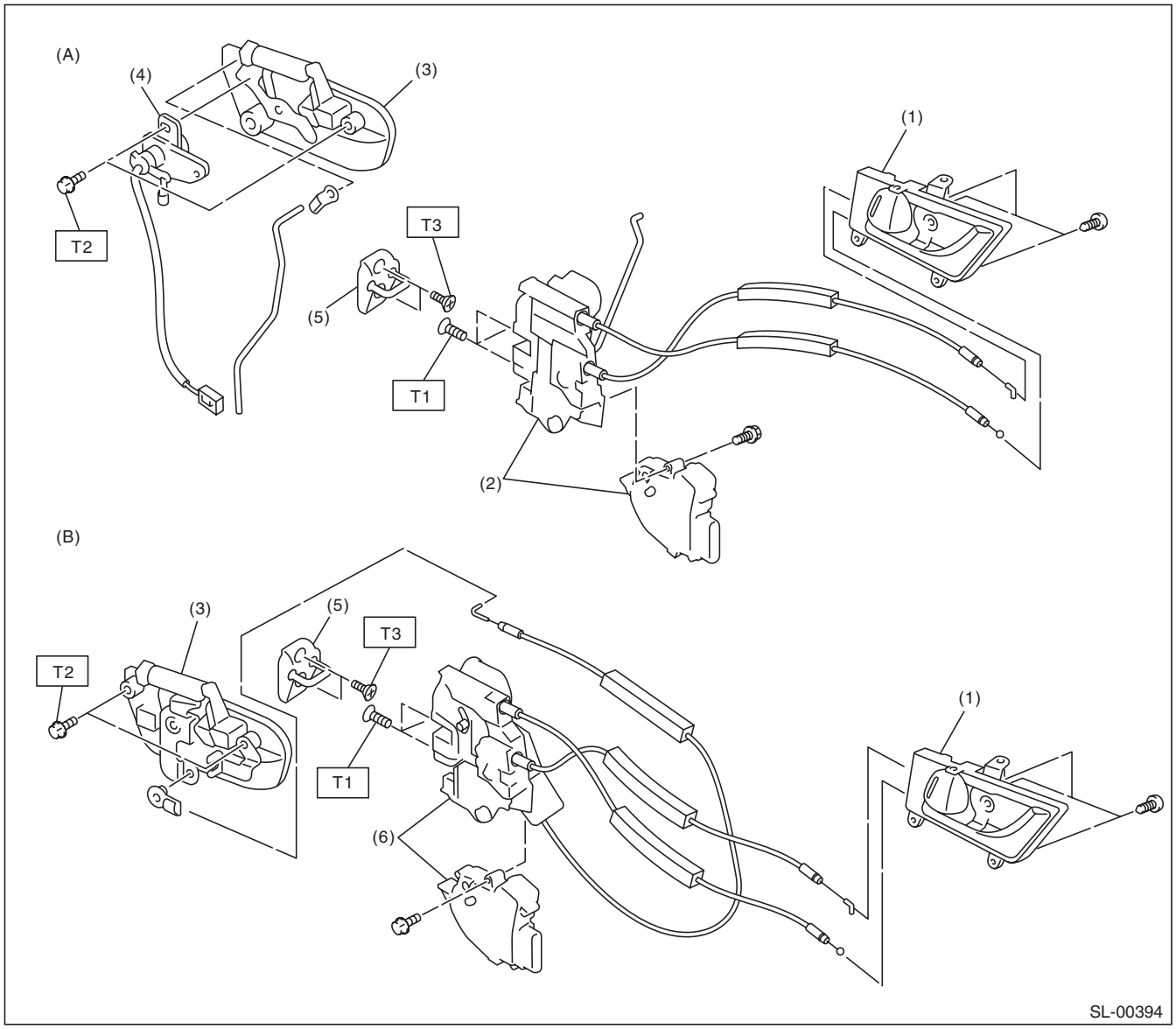

(A) Front

(B) Rear

(1) Inner remote ASSY

(2) Front door latch and door lock actuator ASSY

(3) Door outer handle

(4) Key cylinder (switch)

(5) Striker

(6) Rear door latch and door lock actuator ASSY

Tightening torque:N·m (kgf-m, ft-lb)
T1: 6.5 (0.66, 4.8)
T2: 7.5 (0.76, 5.5)
T3: 18 (1.8, 13.3)

2. TRUNK LID AND REAR GATE LOCK

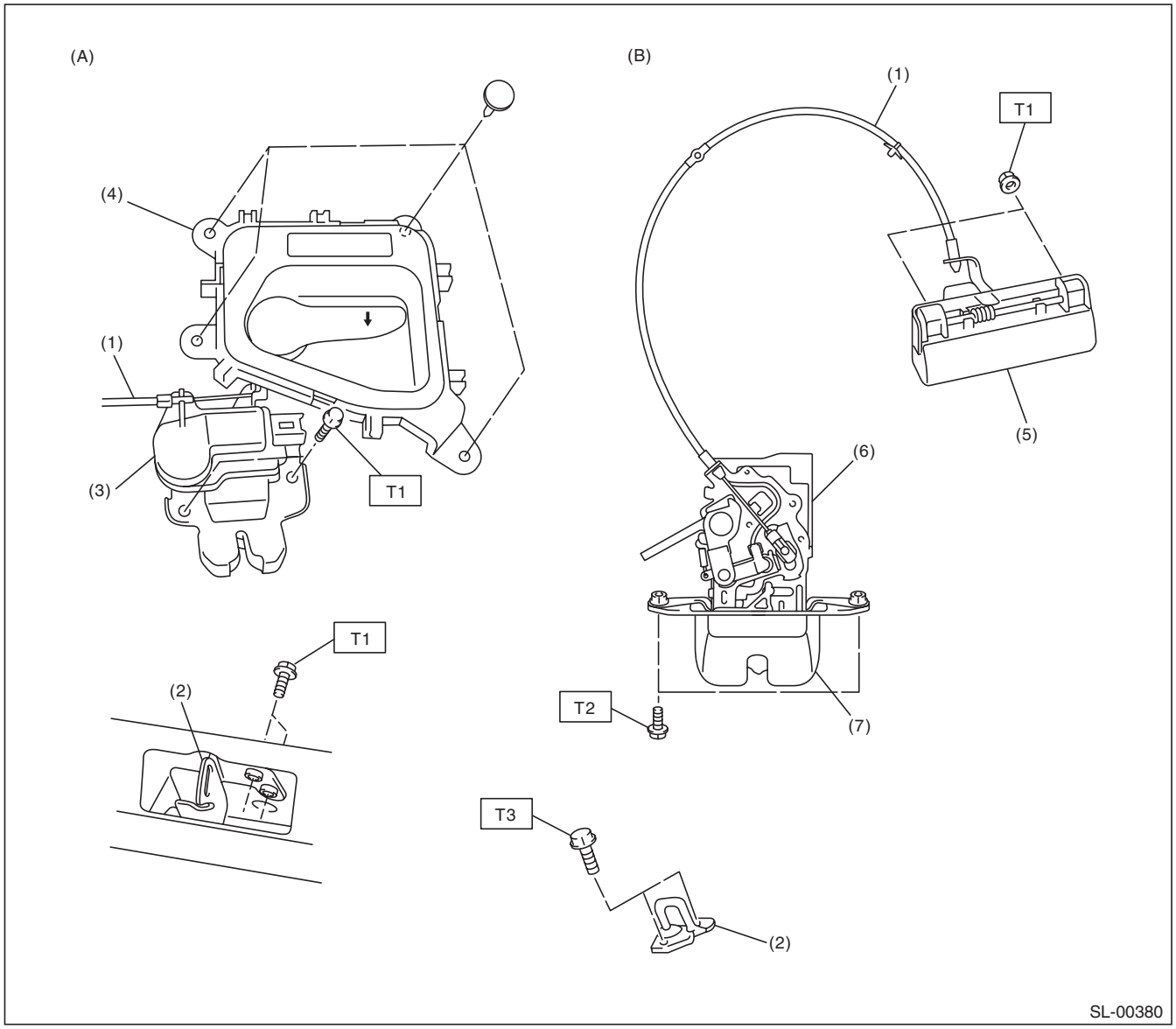

(A)	Trunk	(B)	Rear gate
(1)	Cable	(5)	Rear gate outer handle
(2)	Striker	(6)	Rear gate lock actuator
(3)	Trunk lid lock ASSY	(7)	Rear gate latch
(4)	Trunk lid release handle		

Tightening torque:N·m (kgf-m, ft-lb)
T1: 7.5 (0.76, 5.5)
T2: 18 (1.8, 13.3)
T3: 25 (2.5, 18.4)

3. FRONT HOOD LOCK AND REMOTE OPENERS

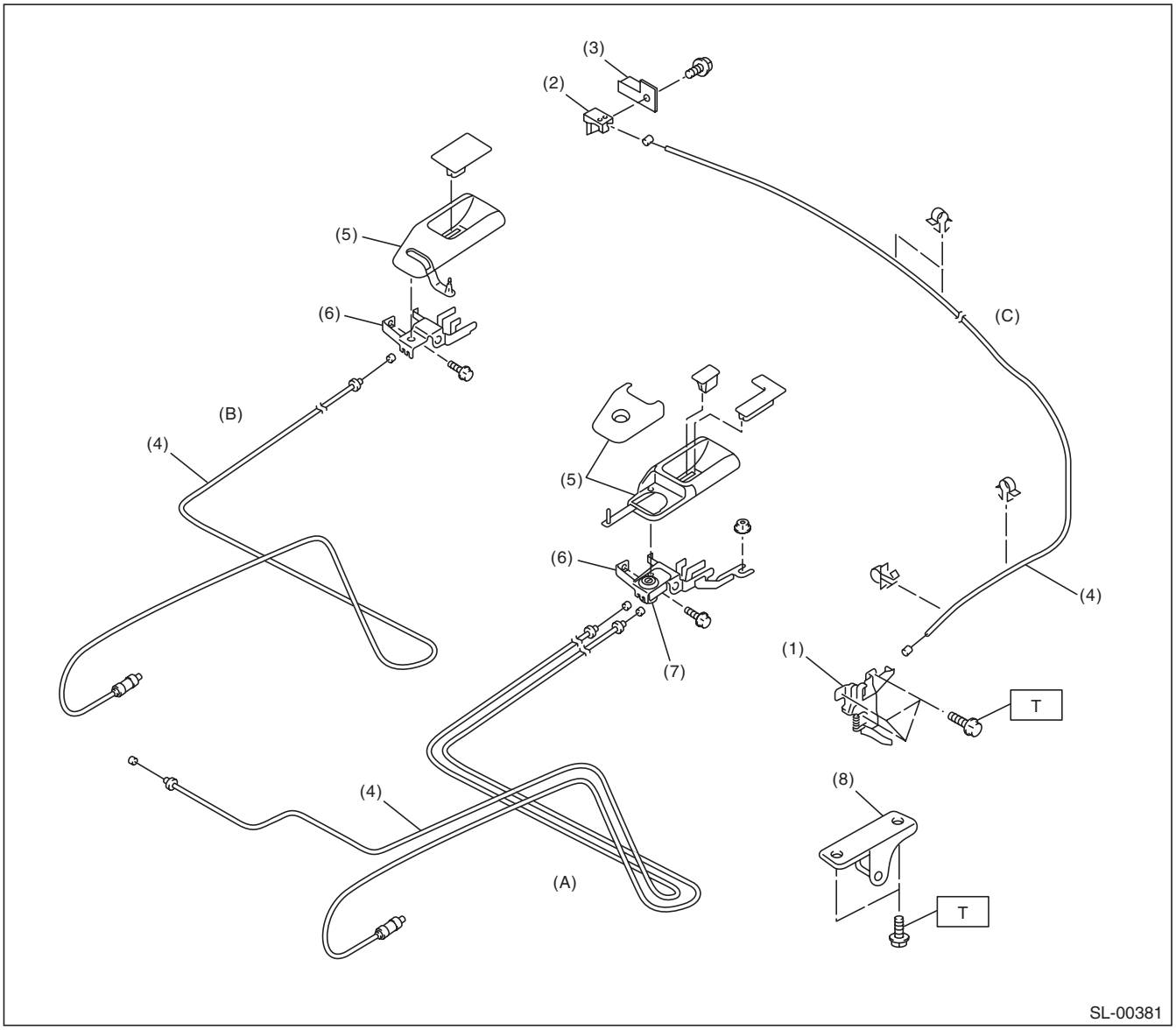

(A)	Sedan model	(B)	Wagon model	(C)	Hood
(1)	Front hood lock ASSY	(5)	Cover		
(2)	Lever ASSY	(6)	Pull handle ASSY		
(3)	Lever ASSY bracket	(7)	Key cylinder		
(4)	Cable	(8)	Striker		

Tightening torque:N·m (kgf-m, ft-lb)
T: 33 (3.36, 24.2)

4. IMMOBILIZER SYSTEM

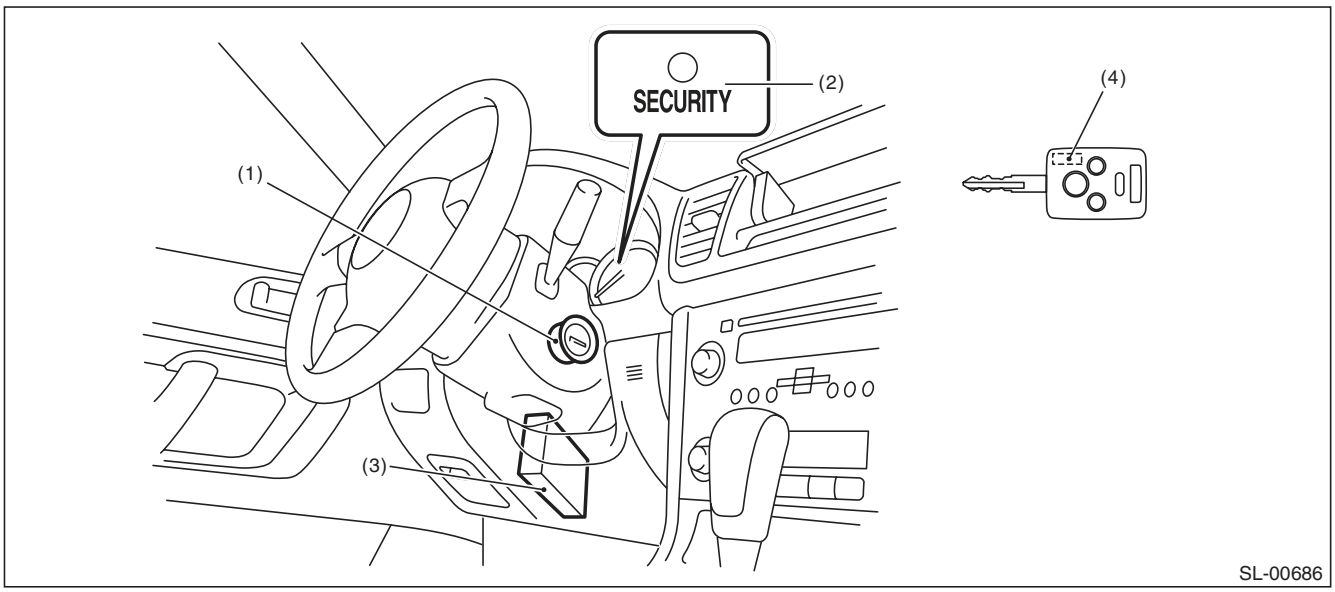

(1) Antenna
(2) Security indicator light (LED bulb)
(3) Body integrated unit
(4) Transponder

5. KEYLESS ENTRY SYSTEM

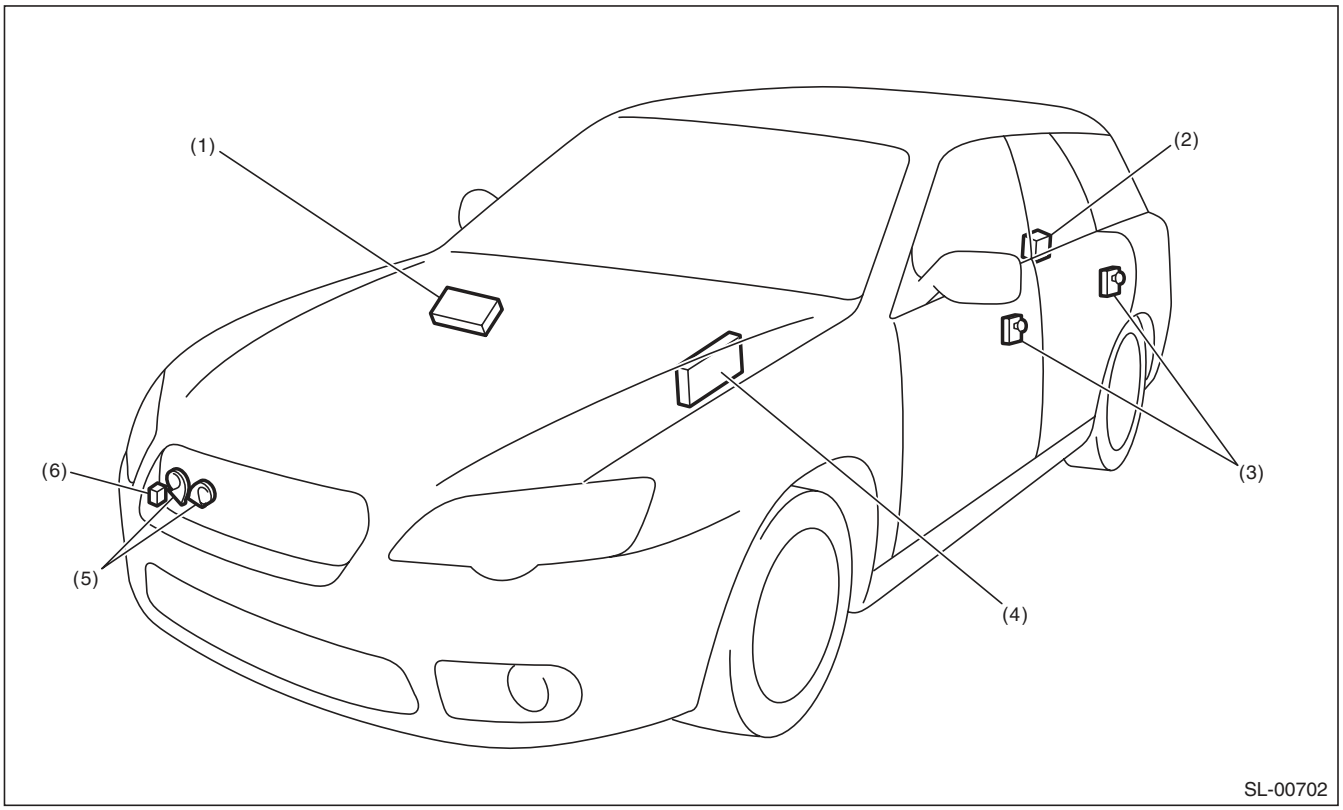

(1) Keyless entry control module
(2) Rear gate latch switch (wagon model), Trunk lid switch (sedan model)
(3) Door switch
(4) Body integrated unit
(5) Horn
(6) Keyless buzzer

B: CAUTION

- Before disassembling or reassembling parts, always disconnect the battery ground cable from battery. When repairing the audio, control module, etc. which are provided with memory functions, record the memory contents before disconnecting the ground cable from battery. Otherwise, these contents are erased upon disconnection.
- Reassemble the parts in the reverse order of disassembly unless otherwise indicated.
- Adjust the parts to the specifications described in this manual if so designated.
- Connect the connectors securely during reassembly.
- After reassembly, make sure all the functional parts operate smoothly.
- The airbag system wiring harness is routed near electrical parts and switches.
- Do not use the electrical test equipment on the airbag system wiring harnesses and connector circuits.
- Be careful not to damage the airbag system wiring harness when servicing the ignition key cylinder.

C: PREPARATION TOOL

1. SPECIAL TOOL

ILLUSTRATION	TOOL NUMBER	DESCRIPTION	REMARKS
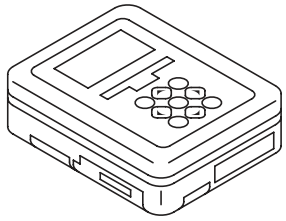 ST1B022XU0	1B022XU0	SUBARU SELECT MONITOR III KIT	Used for setting of each function and trouble-shooting for electrical system.

2. GENERAL TOOL

TOOL NAME	REMARKS
Circuit tester	Used for measuring resistance and voltage.
Drill	Used for replacing ignition key lock.
Clip remover	Used for removing trim clip
Clip clamp pliers	Used for removal of various clips and clamps.

2. Door Lock Control System

A: WIRING DIAGRAM

1. DOOR LOCK CONTROL

For wiring diagrams related to the door lock control system, refer to “Keyless Entry System” in Section WI. <Ref. to WI-190, WIRING DIAGRAM, Keyless Entry System.>

B: ELECTRICAL SPECIFICATION

1. BODY INTEGRATED UNIT

Refer to the Control Module I/O Signal of the LAN SYSTEM (DIAGNOSTICS). <Ref. to LAN(diag)-9, ELECTRICAL SPECIFICATION, Control Module I/O Signal.>

C: INSPECTION

1. SYMPTOM CHART

Symptom	Repair order	Reference
The door lock control system does not operate.	1. Remove and visually check the fuse No. 3 (in the fuse & relay box) and No. 7 (in the fuse & relay box).	If the fuse is blown out, replace the fuse with a new part. When there is no defective with the fuse, check the power supply and ground circuit. <Ref. to SL-8, CHECK POWER SUPPLY AND GROUND CIRCUIT, INSPECTION, Door Lock Control System.>
	2. Check the power supply and ground circuit for body integrated unit.	<Ref. to SL-8, CHECK POWER SUPPLY AND GROUND CIRCUIT, INSPECTION, Door Lock Control System.>
	3. Check the door lock switch and the circuit.	<Ref. to SL-8, CHECK DOOR LOCK SWITCH, INSPECTION, Door Lock Control System.>
	4. Check the door lock actuator and the circuit.	<Ref. to SL-10, CHECK DOOR LOCK ACTUATOR AND CIRCUIT, INSPECTION, Door Lock Control System.>
A specific door lock actuator does not operate. (except for trunk)	Check the door lock actuator and circuit.	<Ref. to SL-10, CHECK DOOR LOCK ACTUATOR AND CIRCUIT, INSPECTION, Door Lock Control System.>
Trunk/rear gate does not operate normally when the door lock switch is operated. (Trunk→ Opened by UNLOCK operation) (Rear gate→ Does not operate by LOCK/UNLOCK operation)	Check the sedan/wagon identification input circuit.	<Ref. to SL-11, CHECK SEDAN/WAGON IDENTIFICATION INPUT CIRCUIT, INSPECTION, Door Lock Control System.>

2. CHECK POWER SUPPLY AND GROUND CIRCUIT

	Step	Check	Yes	No
1	**CHECK POWER SUPPLY OF BODY INTEGRATED UNIT.** 1) Prepare the Subaru Select Monitor kit. 2) Turn the ignition switch to ON (engine OFF) and run the "PC application for Subaru Select Monitor". 3) On the «System Selection Menu» display, select the {Integ. unit mode}. 4) Select the {Current Data Display}. 5) Check the following data display.	Is the data display 10 V or more (BATT voltage (Control), BATT voltage (BACKUP))?	Body integrated unit is normal.	Go to step **2**.
2	**CHECK POWER SUPPLY.** 1) Disconnect the harness connector of body integrated unit. 2) Measure the voltage between harness connector terminal and chassis ground. ***Connector & terminal*** ***(i84) No. 34 (+) — Chassis ground (–):*** ***(B280) No. 7 (+) — Chassis ground (–):*** ***(B281) No. 2 (+) — Chassis ground (–):***	Is the voltage 10 V or more?	Go to step **3**.	Check the harness for open or short circuit between body integrated unit and fuse.
3	**CHECK GROUND CIRCUIT.** Measure the resistance between harness connector terminal and chassis ground. ***Connector & terminal*** ***(i84) No. 21 — Chassis ground:*** ***(B280) No. 22 — Chassis ground:*** ***(B281) No. 8 — Chassis ground:*** ***(B281) No. 9 — Chassis ground:***	Is the resistance less than 10 Ω?	Replace the body integrated unit. <Ref. to SL-56, Body Integrated Unit.>	Repair or replace the harness.

3. CHECK DOOR LOCK SWITCH

	Step	Check	Yes	No
1	**CHECK DOOR LOCK SWITCH.** Check the input from door lock switch to body integrated unit using Subaru Select Monitor. 1) Prepare the Subaru Select Monitor kit. 2) Turn the ignition switch to ON (engine OFF) and run the "PC application for Subaru Select Monitor". 3) On the «System Selection Menu» display, select the {Integ. unit mode}. 4) On the «System Selection Menu» display, select the {Integ. unit mode}. Select the {Current Data Display & Save}. 5) On the «System Selection Menu» display, select the {Integ. unit mode}. Select the {Current Data Display & Save}. Operate the door lock switches (driver's seat and passenger's seat) in the LOCK direction, and check the input of {Manual lock SW input}.	Does the display switch between OFF ⇔ ON when each door lock switch is moved to LOCK?	Go to step **2**.	Go to step **3**.
2	**CHECK DOOR LOCK SWITCH.** From the condition in step 1), check the {Manual unlock SW input} input by operating each door lock switch (driver's and passenger's) in the UNLOCK direction.	Does the display switch between OFF ⇔ ON when each door lock switch is moved to UNLOCK?	The door lock switch is OK.	Go to step **4**.

	Step	Check	Yes	No
3	**CHECK DOOR LOCK SWITCH.** 1) Disconnect the door lock switch harness connector. 2) Use a tester and check the continuity when the door lock switch is operated to the LOCK side. ***Connector & terminal*** ***Driver's side:*** ***(D7) No. 4 — No. 7:*** ***Passenger's side:*** ***(D125) No. 4 — No. 3:***	Did the indicator change from "No continuity" (1 MΩ or more) to "Continuity exists" (less than 10 Ω)?	Go to step **4**.	Replace the power window main switch or door lock switch.
4	**CHECK DOOR LOCK SWITCH.** Use a tester and check the continuity when the door lock switch is operated to the UNLOCK side. ***Connector & terminal*** ***Driver's side:*** ***(D7) No. 5 — No. 7:*** ***Passenger's side:*** ***(D125) No. 1 — No. 3:***	Did the indicator change from "No continuity" (1 MΩ or more) to "Continuity exists" (less than 10 Ω)?	Go to step **5**.	Replace the power window main switch or door lock switch.
5	**CHECK HARNESS.** Use a tester to measure the resistance between the door lock switch harness connector and chassis ground. ***Connector & terminal*** ***Driver's side:*** ***(D7) No. 7 — chassis ground:*** ***Passenger's side:*** ***(D125) No. 3 — Chassis ground:***	Is the resistance less than 10 Ω?	Go to step **6**.	Repair or replace the harness.
6	**CHECK HARNESS.** 1) Disconnect the harness connector of body integrated unit. 2) Measure the resistance between the body integrated unit and door lock switch. ***Connector & terminal*** ***Driver's side:*** ***(D7) No. 4 — (i84) No. 15:*** ***(D7) No. 5 — (i84) No. 29:*** ***Passenger's side:*** ***(D125) No. 4 — (i84) No. 15:*** ***(D125) No. 1 — (i84) No. 29:***	Is the resistance less than 10 Ω?	Replace the body integrated unit. <Ref. to SL-56, Body Integrated Unit.>	Repair or replace the harness.

4. CHECK DOOR LOCK ACTUATOR AND CIRCUIT

	Step	Check	Yes	No
1	**CHECK HARNESS (DOOR LOCK).** Check the harness for open or short circuits between body integrated unit and each door lock actuator. ***Connector & terminal*** ***(i84) No. 7 — (D72) No. 2: (front door LH)*** ***(i84) No. 7 — (D18) No. 2: (front door RH)*** ***(i84) No. 7 — (D26) No. 2: (rear door LH)*** ***(i84) No. 7 — (D32) No. 2: (rear door RH)*** ***(i84) No. 7 — (D47) No. 2: (rear gate)***	Is harness normal?	Go to step **2**.	Repair or replace the harness.
2	**CHECK HARNESS (DOOR UNLOCK).** Check the harness for open or short circuits between body integrated unit and each door lock actuator. ***Connector & terminal*** ***(i84) No. 23 — (D72) No. 1: (front door LH)*** ***(i84) No. 8 — (D18) No. 1: (front door RH)*** ***(i84) No. 8 — (D26) No. 1: (rear door LH)*** ***(i84) No. 8 — (D32) No. 1: (rear door RH)*** ***(i84) No. 22 — (D47) No. 1: (rear gate)***	Is harness normal?	Go to step **3**.	Repair or replace the harness.
3	**CHECK HARNESS (TRUNK UNLOCK).** Check the harness for open or short circuits between body integrated unit and trunk lid lock actuator. ***Connector & terminal*** ***(i84) No. 22 — (R186) No. 2:***	Is harness normal?	Go to step **4**.	Repair or replace the harness.
4	**CHECK HARNESS (TRUNK UNLOCK).** Measure the resistance between the trunk lid lock actuator and chassis ground. ***Connector & terminal*** ***(R186) No. 1 — Chassis ground:***	Is the resistance less than 10 Ω?	Go to step **5**.	Repair or replace the harness.
5	**CHECK BODY INTEGRATED UNIT OUTPUT SIGNAL.** Measure the voltage between the connector terminals of the body integrated unit when moving the door lock switch to LOCK. ***Connector & terminal*** ***Except for front door LH*** ***(i84) No. 7 (+) — (i84) No. 8 (–):*** ***Front door LH*** ***(i84) No. 7 (+) — (i84) No. 23 (–):*** ***Rear gate*** ***(i84) No. 7 (+) — (i84) No. 22 (–):***	Does the voltage change from less than 1.5 V → 10 V or more? (During lock output)	Go to step **6**.	Replace the body integrated unit. <Ref. to SL-56, Body Integrated Unit.>
6	**CHECK BODY INTEGRATED UNIT OUTPUT SIGNAL.** Measure the voltage between the connector terminals of the body integrated unit when moving the door lock switch to UNLOCK. ***Connector & terminal*** ***Except for front door LH*** ***(i84) No. 8 (+) — (i84) No. 7 (–):*** ***Front door LH*** ***(i84) No. 23 (+) — (i84) No. 7 (–):*** ***Rear gate*** ***(i84) No. 22 (+) — (i84) No. 7 (–):***	Does the voltage change from less than 1.5 V → 10 V or more? (During unlock output)	Go to step **7**.	Replace the body integrated unit. <Ref. to SL-56, Body Integrated Unit.>

	Step	Check	Yes	No
7	**CHECK DOOR LOCK ACTUATOR.** Check the door lock actuator. • Front door lock actuator <Ref. to SL-36, INSPECTION, Front Door Latch and Door Lock Actuator Assembly.> • Rear door lock actuator <Ref. to SL-40, INSPECTION, Rear Door Latch and Door Lock Actuator Assembly.>	Is the door lock actuator OK?	Go to step **8**.	Replace the door latch and door lock actuator assembly.
8	**CHECK REAR GATE LOCK ACTUATOR.** Check the rear gate lock actuator. <Ref. to SL-43, Rear Gate Latch Assembly.>	Is the rear gate lock actuator OK?	Temporary poor contact. Measure the resistance of harness connector between the body integrated unit and rear gate lock actuator.	Replace the rear gate latch assembly.

5. CHECK SEDAN/WAGON IDENTIFICATION INPUT CIRCUIT

	Step	Check	Yes	No
1	**CONFIRM VEHICLE TYPE.** Confirm the vehicle type.	Is vehicle sedan?	Go to step **2**.	Go to step **6**.
2	**CHECK CURRENT DATA.** 1) Prepare the Subaru Select Monitor kit. 2) Turn the ignition switch to ON (engine OFF) and run the “PC application for Subaru Select Monitor”. 3) On the «System Selection Menu» display, select the {Integ. unit mode}. 4) Select the {Current Data Display}. 5) Select the {Identification SW input} and confirm.	Is “ON” displayed?	Go to step **5**.	Go to step **3**.
3	**CHECK IGNITION CIRCUIT.** Check the ignition switch circuit. <Ref. to SL-49, INSPECTION, Ignition Key Lock.>	Is the ignition circuit normal?	Go to step **4**.	Replace the ignition key lock.
4	**CHECK HARNESS.** 1) Disconnect the harness connector of body integrated unit. 2) Measure the resistance between the body integrated unit harness connector and chassis ground. ***Connector & terminal*** ***(B281) No. 11 — Chassis ground:***	Is it less than 10 Ω?	Repair or replace the harness.	Replace the body integrated unit. <Ref. to SL-56, Body Integrated Unit.>
5	**CHECK OPERATION.** 1) Turn the ignition switch to ON. 2) LOCK/UNLOCK with the door lock switch.	Does trunk remain closed?	Identification input circuit is normal.	Check the trunk lid lock actuator. <Ref. to SL-10, CHECK DOOR LOCK ACTUATOR AND CIRCUIT, INSPECTION, Door Lock Control System.>

	Step	Check	Yes	No
6	**CHECK CURRENT DATA.** 1) Prepare the Subaru Select Monitor kit. 2) Turn the ignition switch to ON (engine OFF) and run the “PC application for Subaru Select Monitor”. 3) On the «System Selection Menu» display, select the {Integ. unit mode}. 4) Select the {Current Data Display}. 5) Select the {Identification SW input} and confirm.	Is “OFF” displayed?	Go to step **9**.	Go to step **7**.
7	**CHECK IGNITION CIRCUIT.** Check the ignition switch circuit. <Ref. to SL-49, INSPECTION, Ignition Key Lock.>	Is the ignition circuit normal?	Go to step **8**.	Replace the ignition key lock.
8	**CHECK HARNESS.** 1) Disconnect the harness connector of body integrated unit. 2) Measure the resistance between the body integrated unit harness connector and chassis ground. ***Connector & terminal*** ***(B281) No. 11 — Chassis ground:***	Is it less than 10 Ω?	Repair or replace the harness.	Replace the body integrated unit. <Ref. to SL-56, Body Integrated Unit.>
9	**CHECK OPERATION.** 1) Turn the ignition switch to ON. 2) LOCK/UNLOCK with the door lock switch.	Does the rear gate lock/unlock?	Identification input circuit is normal.	Check the rear gate lock actuator. <Ref. to SL-10, CHECK DOOR LOCK ACTUATOR AND CIRCUIT, INSPECTION, Door Lock Control System.>

3. Keyless Entry System

A: WIRING DIAGRAM

1. KEYLESS ENTRY

For wiring diagrams related to the keyless entry system, refer to “Keyless Entry System” in Section WI. <Ref. to WI-190, WIRING DIAGRAM, Keyless Entry System.>

B: ELECTRICAL SPECIFICATION

1. KEYLESS ENTRY CONTROL MODULE

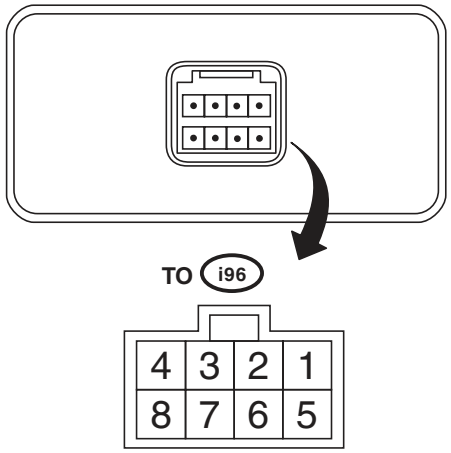

SL-00946

Remarks	Terminal No.	Measuring condition
-	1	-
-	2	-
Body integrated unit	3 (OUTPUT)	Battery voltage cannot be measured because of digital signal.
Power supply (Backup)	4	Battery voltage is constantly present.
-	5	-
-	6	-
Ground	7	0 V is constantly present.

2. BODY INTEGRATED UNIT

Refer to the Control Module I/O Signal of the LAN SYSTEM (DIAGNOSTICS). <Ref. to LAN(diag)-9, ELECTRICAL SPECIFICATION, Control Module I/O Signal.>

C: INSPECTION

1. SYMPTOM CHART

Symptom	Repair order	Reference
None of the functions of the keyless entry system operate.	1. Check the transmitter battery.	<Ref. to SL-16, CHECK KEYLESS TRANSMITTER BATTERY AND FUNCTION, INSPECTION, Keyless Entry System.>
	2. Remove and visually check the fuse No. 2 (in the fuse & relay box) and No. 7 (in the fuse & relay box).	If the fuse is blown out, replace the fuse with a new part. When there is no defective with the fuse, check the power supply and ground circuit. <Ref. to SL-8, CHECK POWER SUPPLY AND GROUND CIRCUIT, INSPECTION, Door Lock Control System.>
	3. Check the keyless entry control module.	<Ref. to SL-17, CHECK KEYLESS ENTRY CONTROL MODULE, INSPECTION, Keyless Entry System.>
	4. Check the power supply and ground circuit for body integrated unit.	<Ref. to SL-8, CHECK POWER SUPPLY AND GROUND CIRCUIT, INSPECTION, Door Lock Control System.>
	5. Check the key warning switch.	<Ref. to SL-20, CHECK KEY WARNING SWITCH, INSPECTION, Keyless Entry System.>
	6. Check the door switch.	<Ref. to SL-18, CHECK DOOR SWITCH, INSPECTION, Keyless Entry System.>
	7. Check the body integrated unit.	<Ref. to LAN(diag)-2, Basic Diagnostic Procedure.>
The keyless transmitter cannot be registered.	1. Check the key warning switch.	<Ref. to SL-20, CHECK KEY WARNING SWITCH, INSPECTION, Keyless Entry System.>
	2. Check the door lock switch signal.	<Ref. to SL-23, CHECK DOOR LOCK SWITCH, INSPECTION, Keyless Entry System.>
	3. Check the ignition switch.	<Ref. to SL-26, CHECK IGNITION SWITCH, INSPECTION, Keyless Entry System.>
	4. Check the door switch.	<Ref. to SL-18, CHECK DOOR SWITCH, INSPECTION, Keyless Entry System.>
	5. Check the body integrated unit.	<Ref. to LAN(diag)-2, Basic Diagnostic Procedure.>
Door lock or unlock does not operate. NOTE: If the door lock control system does not operate when using the door lock switch, check the door lock control system. <Ref. to SL-7, INSPECTION, Door Lock Control System.>	1. Check the transmitter battery.	<Ref. to SL-16, CHECK KEYLESS TRANSMITTER BATTERY AND FUNCTION, INSPECTION, Keyless Entry System.>
	2. Check the keyless entry control module.	<Ref. to SL-17, CHECK KEYLESS ENTRY CONTROL MODULE, INSPECTION, Keyless Entry System.>
	3. Check the key warning switch.	<Ref. to SL-20, CHECK KEY WARNING SWITCH, INSPECTION, Keyless Entry System.>
	4. Check the door switch.	<Ref. to SL-18, CHECK DOOR SWITCH, INSPECTION, Keyless Entry System.>
	5. Check the body integrated unit.	<Ref. to LAN(diag)-2, Basic Diagnostic Procedure.>

Symptom	Repair order	Reference
The panic alarm does not operate.	1. Check the keyless transmitter battery and function.	<Ref. to SL-16, CHECK KEYLESS TRANSMITTER BATTERY AND FUNCTION, INSPECTION, Keyless Entry System.>
	2. Check the horn operation.	<Ref. to SL-24, CHECK HORN OPERATION, INSPECTION, Keyless Entry System.>
	3. Check the body integrated unit.	<Ref. to LAN(diag)-2, Basic Diagnostic Procedure.>
Trunk lid unlock does not operate. (Sedan model)	1. Check the transmitter battery.	<Ref. to SL-16, CHECK KEYLESS TRANSMITTER BATTERY AND FUNCTION, INSPECTION, Keyless Entry System.>
	2. Check the keyless entry control module.	<Ref. to SL-17, CHECK KEYLESS ENTRY CONTROL MODULE, INSPECTION, Keyless Entry System.>
	3. Check the key warning switch.	<Ref. to SL-20, CHECK KEY WARNING SWITCH, INSPECTION, Keyless Entry System.>
	4. Check the trunk lid lock actuator.	<Ref. to SL-23, CHECK TRUNK LID LOCK ACTUATOR, INSPECTION, Keyless Entry System.>
	5. Check the body integrated unit.	<Ref. to LAN(diag)-2, Basic Diagnostic Procedure.>
Buzzer and hazard light do not operate.	1. Check the buzzer operation.	<Ref. to SL-25, CHECK KEYLESS BUZZER, INSPECTION, Keyless Entry System.>
	2. Check the hazard light operation.	<Ref. to SL-22, CHECK HAZARD LIGHT OPERATION, INSPECTION, Keyless Entry System.>
	3. Check the body integrated unit.	<Ref. to LAN(diag)-2, Basic Diagnostic Procedure.>
Room light does not operate.	1. Check the room light operation.	<Ref. to SL-21, CHECK ROOM LIGHT OPERATION, INSPECTION, Keyless Entry System.>
	2. Check the body integrated unit.	<Ref. to LAN(diag)-2, Basic Diagnostic Procedure.>
Ignition switch illumination does not operate.	1. Check the ignition switch illumination.	<Ref. to SL-24, CHECK IGNITION SWITCH ILLUMINATION, INSPECTION, Keyless Entry System.>
	2. Check the body integrated unit.	<Ref. to LAN(diag)-2, Basic Diagnostic Procedure.>

2. CHECK KEYLESS TRANSMITTER BATTERY AND FUNCTION

CAUTION:
Be sure to reset keyless transmitter of other vehicles registered to the inspection target vehicle, and vehicles to which keyless transmitters were registered for inspection, to the condition before performing the inspection. (Re-register the keyless transmitters.)

	Step	Check	Yes	No
1	**CHECK KEYLESS TRANSMITTER BATTERY.** 1) Remove the battery from the keyless transmitter. <Ref. to SL-57, REMOVAL, Transmitter.> 2) Check the battery voltage. <Ref. to SL-57, INSPECTION, Transmitter.>	Is the voltage 2.5 V or more?	Go to step **2**.	Replace the keyless transmitter battery. <Ref. to SL-57, Transmitter.>
2	**CHECK KEYLESS TRANSMITTER.** Register the keyless transmitter which operates normally on other vehicles to the inspection target vehicle. <Ref. to SL-58, REGISTRATION OF KEYLESS TRANSMITTER WITH SUBARU SELECT MONITOR, REPLACEMENT, Transmitter.> 1) Close all the doors and rear gate of inspection target vehicle. 2) Using the keyless transmitter, lock and unlock the doors and rear gate of vehicle.	Can the check vehicle be locked and unlocked properly?	Go to step **3**.	Due to vehicle malfunction, continue the keyless entry system diagnosis.
3	**CHECK KEYLESS TRANSMITTER.** Register the keyless transmitter of the inspected vehicle to another vehicle whose keyless system operates normally. <Ref. to SL-58, REGISTRATION OF KEYLESS TRANSMITTER WITH SUBARU SELECT MONITOR, REPLACEMENT, Transmitter.>	Is the keyless transmitter registered correctly?	Go to step **4**.	Replace the transmitter. <Ref. to SL-58, REGISTRATION OF KEYLESS TRANSMITTER WITH SUBARU SELECT MONITOR, REPLACEMENT, Transmitter.>
4	**CHECK KEYLESS TRANSMITTER.** Check the registered keyless transmitter. 1) Close all the doors and rear gate of the vehicle which keyless system operates normally. 2) Using the keyless transmitter, lock and unlock the doors and rear gate of vehicle.	Does the vehicle operate lock and unlock normally?	The keyless transmitter is OK.	Replace the transmitter. <Ref. to SL-58, REGISTRATION OF KEYLESS TRANSMITTER WITH SUBARU SELECT MONITOR, REPLACEMENT, Transmitter.>

3. CHECK KEYLESS ENTRY CONTROL MODULE

Step		Check	Yes	No
1	**CHECK DIAGNOSTIC TROUBLE CODE (DTC).** 1) Prepare the Subaru Select Monitor kit. 2) Turn the ignition switch to ON (engine OFF) and run the “PC application for Subaru Select Monitor”. 3) On the «System Selection Menu» display, select the {Integ. unit mode}. 4) Select the {Diagnostic Code(s) Display}. 5) Check that the DTC is displayed.	Is DTC B1500 “Keyless UART com. Malfunction” displayed?	Go to step **2**.	Keyless entry control module is normal.
2	**CHECK POWER SUPPLY.** 1) Disconnect the keyless entry control module harness connector. 2) Measure the voltage between harness connector terminal and chassis ground. ***Connector & terminal*** ***(i96) No. 4 (+) — Chassis ground (–):***	Is the voltage 10 V or more?	Go to step **3**.	Check the harness for open circuits and shorts between the keyless entry control module and fuse.
3	**CHECK GROUND CIRCUIT.** Measure the resistance between harness connector terminal and chassis ground. ***Connector & terminal*** ***(i96) No. 7 — Chassis ground:***	Is the resistance less than 10 Ω?	Go to step **4**.	Repair or replace the harness.
4	**CHECK KEYLESS ENTRY CONTROL MODULE CIRCUIT.** 1) Disconnect the harness connector of body integrated unit. 2) Measure the resistance between harness connector terminals. ***Connector & terminal*** ***(i84) No. 9 — (i96) No. 3:***	Is the resistance less than 10 Ω?	Replace the keyless entry control module. <Ref. to SL-54, Keyless Entry Control Module.>	Repair or replace the harness.

4. CHECK BODY INTEGRATED UNIT POWER SUPPLY AND GROUND CIRCUIT

Refer to the power supply & ground circuit inspection of the door lock control system. <Ref. to SL-8, CHECK POWER SUPPLY AND GROUND CIRCUIT, INSPECTION, Door Lock Control System.>

5. CHECK DOOR SWITCH

	Step	Check	Yes	No
1	**CHECK DOOR SWITCH CIRCUIT.** 1) Prepare the Subaru Select Monitor kit. 2) Turn the ignition switch to ON (engine OFF) and run the "PC application for Subaru Select Monitor". 3) On the «System Selection Menu» display, select the {Integ. unit mode}. 4) Select the {Current Data Display}. 5) Read the display of data (driver's door, passenger's door, rear right door, rear left door, rear gate/trunk SW) when each door is opened/closed.	Does the display switch between OFF ⇔ ON when each door or rear gate, trunk lid is opened/closed?	The door switch circuit is OK.	Go to step **2**.
2	**CHECK HARNESS.** 1) Disconnect the harness connector of body integrated unit. 2) Disconnect the door switch harness connector that the display does not change. 3) Check the harness for open or short circuits between the body integrated unit and the faulty door switch. ***Connector & terminal*** ***Front door RH:*** ***(i84) No. 32 — (R12) No. 1:*** ***Front door LH:*** ***(i84) No. 19 — (R9) No. 1:*** ***Rear door RH:*** ***(i84) No. 18 — (R16) No. 1:*** ***Rear door LH:*** ***(i84) No. 31 — (R22) No. 1:*** ***Trunk lid switch (Sedan model):*** ***(i84) No. 17 (+) — (R186) No. 3:*** ***Rear gate latch switch (Wagon model):*** ***(i84) No. 17 (+) — (D46) No. 2:***	Is harness normal?	Repair or replace the harness.	Go to step **3**.
3	**CHECK HARNESS.** Measure the resistance between faulty door switch harness connector and chassis ground. ***Connector & terminal*** ***Front door RH:*** ***(R12) No. 3 — Chassis ground:*** ***Front door LH:*** ***(R9) No. 3 — Chassis ground:*** ***Rear door RH:*** ***(R16) No. 3 — Chassis ground:*** ***Rear door LH:*** ***(R22) No. 3 — Chassis ground:*** ***Trunk lid switch (Sedan model):*** ***(R186) No. 1 — Chassis ground:*** ***Rear gate latch switch (Wagon model):*** ***(D46) No. 1 — chassis ground:***	Is the resistance less than 10 Ω?	Go to step **4**.	Repair or replace the harness.

Step		Check	Yes	No
4	**CHECK DOOR SWITCH.** Measure the resistance between faulty door switches. ***Connector & terminal*** ***(R12) Front RH door switch:*** ***(R9) Front LH door switch:*** ***(R16) Rear RH door switch:*** ***(R22) Rear LH door switch:*** ***No. 1 — No. 3:*** ***Trunk lid switch (Sedan model):*** ***(R186) No. 1 — No. 3:*** ***Rear gate latch switch (Wagon model):*** ***(D46) No. 1 — No. 2:***	Is the resistance 1 MΩ or more when switch is pushed?	Go to step **5**.	Replace the faulty parts. • Door switch • Rear gate latch ASSY • Trunk lid lock ASSY
5	**CHECK DOOR SWITCH.** Measure the resistance between faulty door switches. ***Connector & terminal*** ***(R12) Front RH door switch:*** ***(R9) Front LH door switch:*** ***(R16) Rear RH door switch:*** ***(R22) Rear LH door switch:*** ***No. 1 — No. 3:*** ***Trunk lid switch (Sedan model):*** ***(R186) No. 1 — No. 3:*** ***Rear gate latch switch (Wagon model):*** ***(D46) No. 1 — No. 2:***	Is the resistance less than 10 Ω when switch is released?	Replace the body integrated unit. <Ref. to SL-56, Body Integrated Unit.>	Replace the faulty parts. • Door switch • Rear gate latch ASSY • Trunk lid lock ASSY

6. CHECK KEY WARNING SWITCH

	Step	Check	Yes	No
1	**CHECK INPUT CIRCUIT.** Check the input signal from the key warning switch to the body integrated unit using the Subaru Select Monitor. 1) Prepare the Subaru Select Monitor kit. 2) On the «System Selection Menu» display, select the {Integ. unit mode}. 3) Select the {Current Data Display & Save}. 4) Check the input signal to body integrated unit by operating the ignition switch.	Does the display switch between OFF ⇔ ON when the key is inserted and removed from the ignition switch?	The key warning switch is OK.	Go to step **2**.
2	**CHECK FUSE.** Remove and visually check the fuse No. 14 (in the main fuse box).	Is the fuse blown out?	Replace the fuse with a new part.	Go to step **3**.
3	**CHECK KEY WARNING SWITCH INPUT CIRCUIT.** 1) Disconnect the harness connector of body integrated unit. 2) Insert the key into ignition switch. (LOCK position) 3) Measure the voltage between harness connector terminal and chassis ground. ***Connector & terminal*** ***(B281) No. 7 (+) — Chassis ground (–):***	Is the voltage 10 V or more?	Replace the body integrated unit. <Ref. to SL-56, Body Integrated Unit.>	Go to step **4**.
4	**CHECK KEY WARNING SWITCH INPUT CIRCUIT.** 1) Remove the key from ignition switch. 2) Measure the voltage between harness connector terminal and chassis ground. ***Connector & terminal*** ***(B281) No. 7 (+) — Chassis ground (–):***	Is the voltage less than 1.5 V?	Replace the body integrated unit. <Ref. to SL-56, Body Integrated Unit.>	Go to step **5**.
5	**CHECK KEY WARNING SWITCH.** 1) Disconnect the key warning switch harness connector. 2) Insert the key into ignition switch. (LOCK position) 3) Measure the resistance between key warning switch terminals. ***Connector & terminal*** ***(B350) No. 3 — No. 4:***	Is the resistance less than 10 Ω?	Go to step **6**.	Replace the key warning switch.
6	**CHECK KEY WARNING SWITCH.** 1) Remove the key from ignition switch. 2) Measure the resistance between key warning switch terminals. ***Connector & terminal*** ***(B350) No. 3 — No. 4:***	Is the resistance 1 MΩ or more?	Check the following: • Harness for open circuits and shorts between the key warning switch and fuse. • Harness for open or short between the body integrated unit and key warning switch	Replace the key warning switch.

7. CHECK ROOM LIGHT OPERATION

	Step	Check	Yes	No
1	**CHECK ROOM LIGHT OPERATION.** Make sure the room light illuminates when the room light switch is ON, and goes off when the switch is OFF.	Does the room light illuminate or go off?	Go to step **2**.	Check the harness between the fuse and main fuse box and room light.
2	**CHECK ROOM LIGHT OPERATION.** 1) Turn the room light switch to the "DOOR" position. 2) Open/close any door (other than trunk).	Does the room light illuminate ⇔ go off (including off delay) when the door is opened and closed?	Go to step **3**.	Check the room light circuit. <Ref. to LI-33, Room Light.>
3	**CHECK HARNESS.** 1) Disconnect the body integrated unit harness connector and room light harness connector. 2) Measure the resistance between the body integrated unit harness connector terminal and room light harness connector terminal. ***Connector & terminal*** ***(B280) No. 3 — (R52) No. 2:***	Is the resistance less than 10 Ω?	Go to step **4**.	Repair or replace the harness.
4	**CHECK HARNESS.** Measure the voltage between room light harness connector terminal and chassis ground. ***Connector & terminal*** ***(R52) No. 3 (+) — Chassis ground (–):***	Is the voltage 10 V or more?	Go to step **5**.	Repair or replace the harness.
5	**CHECK KEYLESS ENTRY OPERATION.** Press the LOCK/UNLOCK button of the keyless transmitter.	Is operation normal?	Replace the body integrated unit. <Ref. to SL-56, Body Integrated Unit.>	Check the bulb or room light assembly, and replace if necessary.

8. CHECK HAZARD LIGHT OPERATION

	Step	Check	Yes	No
1	**CHECK HAZARD LIGHT OPERATION.** Make sure the hazard light blinks when hazard switch is turned to ON.	Does the hazard light blink?	Go to step **2**.	Check the hazard light circuit. <Ref. to LI-7, Turn Signal Light and Hazard Light System.>
2	**CHECK OUTPUT TO HAZARD LIGHT.** 1) Turn the ignition switch to OFF. 2) Disconnect the key warning switch harness connector. 3) Prepare the Subaru Select Monitor kit. 4) Turn the ignition switch to ON (engine OFF) and run the “PC application for Subaru Select Monitor”. 5) On the «System Selection Menu» display, select the {Integ. unit mode}. 6) Select {ECM customizing}. 7) Check {Hazard answer-back setup}, and then switch to ON setting if necessary. 8) Select the {Current Data Display & Save}. 9) Remove the key from ignition switch. 10) When operate the LOCK/UNLOCK button of transmitter, check the hazard output signal of body integrated unit.	Is output signal is present when operating the transmitter LOCK/UNLOCK button?	Go to step **3**.	Check the body integrated unit. <Ref. to LAN(diag)-2, Basic Diagnostic Procedure.>
3	**CHECK CIRCUIT OF HAZARD LIGHT.** 1) Disconnect the harness connector of body integrated unit. 2) Disconnect the turn signal and hazard unit harness connector. 3) Measure the resistance between harness connector terminals. ***Connector & terminal*** ***(B280) No. 12 — (B32) No. 8:***	Is the resistance less than 10 Ω?	Check the body integrated unit. <Ref. to LAN(diag)-2, Basic Diagnostic Procedure.>	Repair or replace the harness.

9. CHECK TRUNK LID LOCK ACTUATOR

	Step	Check	Yes	No
1	**CHECK TRUNK LID LOCK ACTUATOR.** 1) Turn the ignition switch to OFF. 2) Disconnect the key warning switch harness connector. 3) Prepare the Subaru Select Monitor kit. 4) Turn the ignition switch to ON (engine OFF) and run the “PC application for Subaru Select Monitor”. 5) On the «System Selection Menu» display, select the {Integ. unit mode}. 6) Select the {Current Data Display & Save}. 7) When operating the TRUNK button of the transmitter, check the trunk unlock output signal of the body integrated unit.	Is the display change to OFF ⇔ ON, when the transmitter TRUNK button is operated?	Go to step **2**.	Check the body integrated unit. <Ref. to LAN(diag)-2, Basic Diagnostic Procedure.>
2	**CHECK CIRCUIT OF TRUNK LID LOCK ACTUATOR.** 1) Disconnect the harness connector of body integrated unit. 2) Disconnect the trunk lid lock actuator harness connector. 3) Measure the resistance between harness connectors. ***Connector & terminal*** ***(i84) No. 22 — (R186) No. 2:***	Is the resistance less than 10 Ω?	Go to step **3**.	Repair or replace the harness.
3	**CHECK GROUND CIRCUIT OF TRUNK LID LOCK ACTUATOR.** Measure the resistance between trunk lid lock actuator harness connector terminal and chassis ground. ***Connector & terminal*** ***(R186) No. 1 — Chassis ground:***	Is the resistance less than 10 Ω?	Go to step **4**.	Repair or replace the harness.
4	**CHECK TRUNK LID LOCK ACTUATOR.** Check the trunk lid lock actuator. <Ref. to SL-44, Trunk Lid Lock Assembly.>	Is trunk lid lock actuator normal?	Replace the body integrated unit. <Ref. to SL-56, Body Integrated Unit.>	Replace the trunk lid lock assembly.

10.CHECK DOOR LOCK SWITCH

Refer to the door lock switch inspection of the door lock control system. <Ref. to SL-8, CHECK DOOR LOCK SWITCH, INSPECTION, Door Lock Control System.>

11.CHECK IGNITION SWITCH ILLUMINATION

	Step	Check	Yes	No
1	**CHECK FUSE.** Remove and visually check the fuse No. 14 (in the main fuse box).	Is the fuse blown out?	Replace the fuse with a new part.	Go to step **2**.
2	**CHECK POWER SUPPLY.** 1) Disconnect the ignition switch illumination harness connector. 2) Measure the voltage between harness connector terminal and chassis ground. ***Connector & terminal*** ***(B224) No. 2 (+) — Chassis ground (–):***	Is the voltage 10 V or more?	Go to step **3**.	Check the harness for open circuits and shorts between the ignition switch illumination and fuse.
3	**CHECK IGNITION SWITCH ILLUMINATION CIRCUIT.** 1) Disconnect the harness connector of body integrated unit. 2) Measure the resistance between body integrated unit harness connector terminal and ignition switch illumination harness connector terminal. ***Connector & terminal*** ***(B280) No. 4 — (B224) No. 1:***	Is the resistance less than 10 Ω?	Go to step **4**.	Check the harness for open circuits and shorts between the body integrated unit and ignition switch illumination.
4	**CHECK IGNITION SWITCH ILLUMINATION BULB.** 1) Remove the ignition switch illumination bulb. 2) Connect the battery (+) terminal and (–) terminal to the illumination bulb.	Does the bulb illuminate?	Replace the body integrated unit. <Ref. to SL-56, Body Integrated Unit.>	Replace the ignition switch illumination bulb with a new part.

12.CHECK HORN OPERATION

	Step	Check	Yes	No
1	**CHECK HORN OPERATION.** Make sure the horn sounds when the horn switch is pushed.	Does the horn sound?	Go to step **2**.	Check the horn circuit. <Ref. to COM-2, General Description.>
2	**CHECK HORN OPERATION.** 1) Disconnect the harness connector of body integrated unit. 2) Connect the harness connector terminal to ground using a suitable lead wire. ***Connector & terminal*** ***(B280) No. 11 (+) — Chassis ground (–):***	Does the horn sound?	Check the body integrated unit. <Ref. to LAN(diag)-2, Basic Diagnostic Procedure.>	Check the harness for open circuits and/or shorts between the body integrated unit and horn relay.

13.CHECK KEYLESS BUZZER

	Step	Check	Yes	No
1	**CHECK KEYLESS BUZZER SOUND.** 1) Using the Subaru Select Monitor, set the keyless buzzer sound to ON. 2) Operate the LOCK/UNLOCK button of the transmitter and check whether the keyless buzzer sounds or not.	Does the keyless buzzer sound?	Keyless buzzer is normal.	Go to step **2**.
2	**CHECK KEYLESS BUZZER GROUND CIRCUIT.** 1) Turn the ignition switch to OFF. 2) Disconnect the keyless buzzer harness connector. 3) Measure the resistance between keyless buzzer harness connector terminal and chassis ground. ***Connector & terminal*** ***(F102) No. 2 — Chassis ground:***	Is the resistance less than 10 Ω?	Go to step **3**.	Repair or replace the harness.
3	**CHECK KEYLESS BUZZER POWER SUPPLY CIRCUIT.** 1) Disconnect the harness connector of body integrated unit. 2) Measure the resistance between the body integrated unit harness connector and keyless buzzer harness connector. ***Connector & terminal*** ***(i84) No. 6 — (F102) No. 1:***	Is the resistance less than 10 Ω?	Go to step **4**.	Repair or replace the harness.
4	**CHECK KEYLESS BUZZER.** 1) Remove the keyless buzzer. 2) Install the keyless buzzer to another vehicle which operates keyless buzzer normally, check the buzzer sounds.	Does the keyless buzzer sound?	Replace the body integrated unit. <Ref. to SL-56, Body Integrated Unit.>	Replace the keyless buzzer.

14.CHECK IGNITION SWITCH

CAUTION:
When the ignition key lock is replaced, all ignition keys also must be registered. (Refer to the "IMMOBILIZER TEACHING OPERATION MANUAL".)

	Step	Check	Yes	No
1	**CHECK IGNITION SWITCH INPUT.** 1) Prepare the Subaru Select Monitor kit. 2) Turn the ignition switch to ON (engine OFF) and run the "PC application for Subaru Select Monitor". 3) On the «System Selection Menu» display, select the {Integ. unit mode}. 4) Select the {Current Data Display}. 5) Check the following data display.	Is the data display 10 V or more (BATT voltage (Control), IG power supply voltage)?	Ignition switch is normal.	Go to step **2**.
2	**CHECK IGNITION SWITCH INPUT.** 1) Turn the ignition switch to ON. 2) Measure the voltage between the body integrated unit harness connector and chassis ground. ***Connector & terminal*** ***(i84) No. 1 (+) — Chassis ground (–):***	Is the voltage 10 V or more?	Replace the body integrated unit. <Ref. to SL-56, Body Integrated Unit.>	Go to step **3**.
3	**CHECK FUSIBLE LINK.** Remove the fusible link main SBF and SBF-6 (in main fuse box), and visually check.	Is the fusible link blown out?	Replace the fusible link main SBF or SBF-6. If the replaced fusible link has blown out easily, repair the short circuit between the fusible link and the ignition switch.	Go to step **4**.
4	**CHECK FOR POWER SUPPLY OF IGNITION SWITCH.** 1) Disconnect the ignition switch harness connector. 2) Measure the voltage between harness connector terminal and chassis ground. ***Connector & terminal*** ***(B72) No. 3 (+) — Chassis ground (–):***	Is the voltage 10 V or more?	Go to step **5**.	Check the harness for open circuits and shorts between the ignition switch and fusible link.
5	**CHECK IGNITION SWITCH.** 1) Insert the ignition key into ignition switch, and turn the each position. 2) Measure the resistance between ignition switch terminals. ***Connector & terminal*** ***No. 3 — No. 5: (ACC position)*** ***No. 3 — No. 5 — No. 1 — No. 4 (ON position)*** ***No. 3 — No. 1 — No. 4 — No. 2 (ST position)***	Is the resistance less than 1 Ω when turning the ignition key to each position?	Ignition switch is normal.	Replace the ignition switch. <Ref. to SL-49, REPLACEMENT, Ignition Key Lock.>

4. Security System

A: WIRING DIAGRAM

For wiring diagrams related to the security system, refer to “Security System” in Section WI. <Ref. to WI-186, WIRING DIAGRAM, Security System.>

B: ELECTRICAL SPECIFICATION

Refer to the Control Module I/O Signal of the LAN SYSTEM (DIAGNOSTICS). <Ref. to LAN(diag)-9, ELECTRICAL SPECIFICATION, Control Module I/O Signal.>

C: INSPECTION

1. BASIC DIAGNOSTIC PROCEDURE

	Step	Check	Yes	No
1	**INITIAL CHECK.** Check keyless entry system.	Does the keyless entry system operate normally?	Go to step **2**.	Check keyless entry system. <Ref. to SL-14, INSPECTION, Keyless Entry System.>
2	**CHECK SECURITY ON/OFF SETTING.** 1) Remove the key from ignition switch, and then close all doors. 2) Press the UNLOCK button of the keyless transmitter. 3) Check the security indicator light blinking patterns.	Is the security indicator light blinking patterns as follows? • Model with immobilizer: Blinks in every 3 seconds	Go to step **3**.	Check the security indicator light circuit. <Ref. to SL-32, CHECK SECURITY INDICATOR LIGHT CIRCUIT, INSPECTION, Security System.>
3	**CHECK SECURITY ON/OFF SETTING.** 1) Press the LOCK button of the transmitter. 2) Check the security indicator light blinking patterns.	Is the security indicator light blinking patterns as follows? • When monitoring lag is set to 0 seconds: Blinks twice within 0.5 seconds at 2 second intervals. • When monitoring lag is set to 30 seconds: Blinks three times within 1 second at 0.4 second intervals.	Go to step **6**.	Go to step **4**.
4	**CHANGE SETTING OF SECURITY SYSTEM.** Change the setting of security system to ON. <Ref. to SL-29, SECURITY SYSTEM ON/OFF SETTING, INSPECTION, Security System.>	Is setting change completed correctly?	Go to step **5**.	• Check the ignition switch circuit. <Ref. to SL-33, CHECK IGNITION SWITCH CIRCUIT, INSPECTION, Security System.> • Check the door lock switch circuit. <Ref. to SL-23, CHECK DOOR LOCK SWITCH, INSPECTION, Keyless Entry System.>

	Step	Check	Yes	No
5	**CHECK SETTING CHANGE OF SECURITY SYSTEM.** 1) Remove the key from ignition switch, and then close all doors. 2) Press the LOCK button of the transmitter. 3) Check the security indicator light blinking patterns.	Is the security indicator light blinking patterns as follows? • When monitoring lag is set to 0 seconds: Blinks twice within 0.5 seconds at 2 second intervals. • When monitoring lag is set to 30 seconds: Blinks three times within 1 second at 0.4 second intervals.	Go to step **6**.	Replace the body integrated unit. <Ref. to SL-56, Body Integrated Unit.>
6	**CHECK SECURITY SYSTEM OPERATION.** Press the LOCK button of keyless transmitter, and wait for 30 seconds.	Is the blinking pattern of security indicator light blink twice within 0.5 seconds in 2 second cycles?	Go to step **7**.	Replace the body integrated unit. <Ref. to SL-56, Body Integrated Unit.>
7	**CHECK SECURITY SYSTEM CANCEL OPERATION.** Insert the key to the door key cylinder to unlock.	Is the security indicator light blinking patterns as follows? • Model with immobilizer: Blinks in every 3 seconds	Press the LOCK button of keyless transmitter, and wait for 30 seconds. Go to step **8**.	Check the door key cylinder circuit. <Ref. to SL-33, CHECK DOOR KEY CYLINDER SWITCH & CIRCUIT, INSPECTION, Security System.>
8	**CHECK SECURITY ALARM OPERATION.** 1) Unlock all doors using the door lock switch on driver's door. 2) Open any door, trunk or rear gate.	Does the security alarm operate when opening any door, trunk or rear gate?	Go to step **9**.	• Check the door switch. <Ref. to SL-30, CHECK DOOR SWITCH, INSPECTION, Security System.> • Check the trunk lid switch or rear gate latch switch. <Ref. to SL-31, CHECK TRUNK LID SWITCH (SEDAN) OR REAR GATE LATCH SWITCH (WAGON), INSPECTION, Security System.>
9	**CHECK SECURITY ALARM OPERATION.** Check the security alarm operation.	Does all security alarm operate? • Horn sounds • Hazard light blinks • Security indicator light illuminates	Go to step **10**.	• Check the horn. <Ref. to SL-32, CHECK HORN, INSPECTION, Security System.> • Check the hazard light. <Ref. to SL-32, CHECK HAZARD LIGHT OPERATION, INSPECTION, Security System.>

Step		Check	Yes	No
10	**CHECK SECURITY ALARM CANCEL OPERATION.** Press any button of transmitter while operating security alarm. Or turn the ignition switch to OFF → ON once.	Does all security alarm stop? • Horn • Hazard light	Go to step **11**.	Check the ignition switch circuit. <Ref. to SL-33, CHECK IGNITION SWITCH CIRCUIT, INSPECTION, Security System.>
11	**CHECK SECURITY SYSTEM CONDITION MEMORY.** Check that the system functions properly even when the battery is not connected temporarily. <Ref. to SL-29, CHECK SECURITY SYSTEM CONDITION MEMORY, INSPECTION, Security System.>	Does the system function properly when the battery is not connected temporarily?	Go to step **12**.	Replace the body integrated unit. <Ref. to SL-56, Body Integrated Unit.>
12	**CHECK IMPACT SENSOR.** Check the sensibility of impact sensor. <Ref. to SL-53, CHECK IMPACT SENSOR, ADJUSTMENT, Impact Sensor.>	Is the sensibility set properly?	Press the UNLOCK button of keyless transmitter, and finish the diagnosis.	Adjust the sensitivity. <Ref. to SL-53, IMPACT SENSITIVITY ADJUSTMENT, ADJUSTMENT, Impact Sensor.>

NOTE:
Check the function settings of the body integrated unit if any of the following symptoms appear. <Ref. to LAN(diag)-2, Basic Diagnostic Procedure.>
- The horn does not sound even when the security system operates. (Siren YES/NO)
- The horn sounds when setting the security to ON using the keyless transmitter. (Impact sensor YES/NO)

2. CHECK SECURITY SYSTEM CONDITION MEMORY

1) Remove the key from ignition switch.
2) Close all the doors, trunk lid and rear gate.
3) Open the front hood.
4) Press the LOCK button of transmitter, and then wait until the security indicator light flashes twice for 0.5 sec. at intervals of 2 seconds.
5) Disconnect the ground cable from the battery.
6) Connect the ground cable to the battery.
7) Check that the security indicator light blinks twice within 0.5 seconds at 2 second intervals. When it does not blink, replace the body integrated unit.

3. SECURITY SYSTEM ON/OFF SETTING

1) Close all doors, trunk lid and rear gate, and sit down on the driver seat. Press the UNLOCK button of the keyless transmitter.
2) Turn the ignition switch to ON.
3) Push the centralized door unlock switch down and open the driver's side door at the same time, and hold in this condition for 10 seconds.
4) If the security system is ON, it will turn OFF. If OFF, it will turn ON.

4. CHECK DOOR SWITCH

	Step	Check	Yes	No
1	**CHECK INPUT FROM EACH DOOR SWITCH.** 1) Prepare the Subaru Select Monitor kit. 2) Turn the ignition switch to ON (engine OFF) and run the "PC application for Subaru Select Monitor". 3) On the «System Selection Menu» display, select the {Integ. unit mode}. 4) Select the {Current Data Display & Save}. 5) Check the door switch input to the body integrated unit when opening the each door (front RH and LH, rear RH and LH).	Does the display switch between OFF⇔ON when opening the each door (front RH and LH, rear RH and LH)?	The door switch circuit is OK.	Go to step **2**.
2	**CHECK DOOR SWITCH CIRCUIT.** 1) Turn the ignition switch to OFF. 2) Disconnect the harness connector of body integrated unit. 3) Disconnect the harness connector of faulty door switch. 4) Measure the resistance between harness connector terminals. ***Connector & terminal*** ***(i84) No. 19 — (R9) No. 1: (front door LH)*** ***(i84) No. 32 — (R12) No. 1: (front door RH)*** ***(i84) No. 31 — (R22) No. 1: (rear door LH)*** ***(i84) No. 18 — (R16) No. 1: (rear door RH)***	Is the resistance less than 10 Ω?	Go to step **3**.	Repair or replace the harness.
3	**CHECK GROUND CIRCUIT OF DOOR SWITCH.** 1) Disconnect the harness connector of faulty door switch. 2) Measure the resistance of harness connector and chassis ground. ***Connector & terminal*** ***(R9) No. 3 — Chassis ground: (front door LH)*** ***(R12) No. 3 — Chassis ground: (front door RH)*** ***(R22) No. 3 — Chassis ground: (rear door LH)*** ***(R16) No. 3 — Chassis ground: (rear door RH)***	Is the resistance less than 10 Ω?	Go to step **4**.	Repair or replace the harness.
4	**CHECK DOOR SWITCH.** 1) Disconnect the harness connector of faulty door switch. 2) Measure the resistance between door switch terminals. ***Terminals*** ***No. 1 — No. 3:***	Is the resistance 1 MΩ or more when door switch is pushed?	Go to step **5**.	Replace the door switch.
5	**CHECK DOOR SWITCH.** Measure the resistance between door switch terminals. ***Terminals*** ***No. 1 — No. 3:***	Is the resistance less than 1 Ω when door switch is released?	Check the body integrated unit. <Ref. to LAN(diag)-2, Basic Diagnostic Procedure.>	Replace the door switch.

5. CHECK TRUNK LID SWITCH (SEDAN) OR REAR GATE LATCH SWITCH (WAGON)

	Step	Check	Yes	No
1	**CHECK INPUT FROM TRUNK LID SWITCH OR REAR GATE LATCH SWITCH.** 1) Prepare the Subaru Select Monitor kit. 2) Turn the ignition switch to ON (engine OFF) and run the "PC application for Subaru Select Monitor". 3) On the «System Selection Menu» display, select the {Integ. unit mode}. 4) Select the {Current Data Display & Save}. 5) Check the input signal to the body integrated unit when opening the trunk lid or rear gate.	Does the display switch between OFF ⇔ ON when trunk lid or rear gate is opened?	The trunk lid switch or rear gate latch switch circuit is OK.	Go to step **2**.
2	**CHECK CIRCUIT FOR TRUNK LID SWITCH OR REAR GATE LATCH SWITCH.** 1) Turn the ignition switch to OFF. 2) Disconnect the harness connector of body integrated unit. 3) Disconnect the harness connector of the trunk lid switch or the rear gate latch switch. 4) Measure the resistance between harness connector terminals. ***Connector & terminal*** ***(i84) No. 17 — (D46) No. 2: (Wagon model)*** ***(i84) No. 17 — (R186) No. 3: (Sedan model)***	Is the resistance less than 10 Ω?	Go to step **3**.	Repair or replace the harness.
3	**CHECK GROUND CIRCUIT OF TRUNK LID SWITCH OR REAR GATE LATCH SWITCH.** 1) Disconnect the harness connector of the trunk lid switch or the rear gate latch switch. 2) Measure the resistance between harness connector terminal and chassis ground. ***Connector & terminal*** ***(D46) No. 1 — Chassis ground: (Wagon model)*** ***(R186) No. 1 — Chassis ground: (Sedan model)***	Is the resistance less than 10 Ω?	Go to step **4**.	Repair or replace the harness.
4	**CHECK TRUNK LID SWITCH OR REAR GATE LATCH SWITCH.** 1) Disconnect the harness connector of the trunk lid switch or the rear gate latch switch. 2) Measure the resistance between switch terminals. ***Terminals*** ***No. 1 — No. 2: (Wagon model)*** ***No. 1 — No. 3: (Sedan model)***	Is the resistance 1 MΩ or more when switch is pushed?	Go to step **5**.	Replace the trunk lid lock assembly or rear gate latch assembly.
5	**CHECK TRUNK LID SWITCH OR REAR GATE LATCH SWITCH.** Measure the resistance between switch terminals. ***Terminals*** ***No. 1 — No. 2: (Wagon model)*** ***No. 1 — No. 3: (Sedan model)***	Is the resistance less than 1 Ω when switch is released?	Check the body integrated unit. <Ref. to LAN(diag)-2, Basic Diagnostic Procedure.>	Replace the trunk lid lock assembly or rear gate latch assembly.

6. CHECK SECURITY INDICATOR LIGHT CIRCUIT

	Step	Check	Yes	No
1	**CHECK SECURITY INDICATOR LIGHT.** 1) Turn the ignition switch to OFF. 2) Disconnect the harness connector of body integrated unit. 3) Connect the resistor (100 Ω) between body integrated unit harness connector terminal (i84) No. 33 and chassis ground. ***Connector & terminal*** ***(i84) No. 33 — Chassis ground:***	Does the security indicator light illuminate?	Check the body integrated unit. <Ref. to LAN(diag)-2, Basic Diagnostic Procedure.>	Go to step **2**.
2	**CHECK POWER SUPPLY FOR SECURITY INDICATOR LIGHT.** 1) Disconnect the connector from the combination meter. 2) Measure the voltage between the combination meter harness connector terminal and chassis ground. ***Connector & terminal*** ***(i10) No. 1 (+) — Chassis ground (–):***	Is the voltage 10 V or more?	Go to step **3**.	Check the harness for open or short circuits between combination meter and fuse.
3	**CHECK SECURITY INDICATOR LIGHT CIRCUIT.** Measure the resistance between the combination meter harness connector terminal and the security control unit harness connector terminal. ***Connector & terminal*** ***(i10) No. 17 — (i84) No. 33:***	Is the resistance less than 10 Ω?	Replace the combination meter. <Ref. to IDI-22, Combination Meter.>	Check the harness for open or short circuits between the combination meter and body integrated unit.

7. CHECK HORN

	Step	Check	Yes	No
1	**CHECK HORN OPERATION.** Check the horn sounds when the horn switch is pushed.	Does the horn sound?	Go to step **2**.	Check the horn circuit. <Ref. to COM-5, Horn Switch.>
2	**CHECK OUTPUT TO HORN RELAY.** 1) Prepare the Subaru Select Monitor kit. 2) Turn the ignition switch to ON (engine OFF) and run the “PC application for Subaru Select Monitor”. 3) On the «System Selection Menu» display, select the {Integ. unit mode}. 4) Select {Function check}. 5) Select {Horn Output} and execute	Does the horn sound?	Horn circuit is OK.	Go to step **3**.
3	**CHECK HORN RELAY CIRCUIT.** 1) Turn the ignition switch to OFF. 2) Disconnect the harness connector of body integrated unit. 3) Disconnect the main fuse box harness connector (B186). 4) Measure the resistance between harness connector terminals. ***Connector & terminal*** ***(B280) No. 11 — (B186) No. 1:***	Is the resistance less than 10 Ω?	Check the body integrated unit. <Ref. to LAN(diag)-2, Basic Diagnostic Procedure.>	Repair or replace the harness.

8. CHECK HAZARD LIGHT OPERATION

Refer to the hazard light operation check of the Keyless Entry System. <Ref. to SL-22, CHECK HAZARD LIGHT OPERATION, INSPECTION, Keyless Entry System.>

9. CHECK IGNITION SWITCH CIRCUIT

	Step	Check	Yes	No
1	**CHECK IGNITION SWITCH VOLTAGE.** 1) Prepare the Subaru Select Monitor kit. 2) Turn the ignition switch to ON (engine OFF) and run the "PC application for Subaru Select Monitor". 3) On the «System Selection Menu» display, select the {Integ. unit mode}. 4) Select the {Current Data Display & Save}. 5) Check the {BATT voltage} and {IG power supply voltage}.	Is the {IG power supply voltage} within ±1 V against {BATT voltage}?	The ignition switch input circuit is OK.	Go to step **2**.
2	**CHECK IGNITION SWITCH CIRCUIT.** 1) Turn the ignition switch to OFF. 2) Disconnect the harness connector of body integrated unit. 3) Turn the ignition switch to ON. 4) Measure the voltage between harness connector terminal and chassis ground. ***Connector & terminal*** ***(i84) No. 1 (+) — Chassis ground (–):***	Is the voltage 10 V or more?	Check the body integrated unit. <Ref. to LAN(diag)-2, Basic Diagnostic Procedure.>	Check the harness for open or short circuit between the body integrated unit and fuse.

10.CHECK DOOR KEY CYLINDER SWITCH & CIRCUIT

	Step	Check	Yes	No
1	**CHECK DOOR KEY CYLINDER SWITCH CIRCUIT.** Measure the resistance between the harness connector terminal and chassis ground when moving the door key cylinder switch to UNLOCK. ***Connector & terminal*** ***(i84) No. 12 — Chassis ground:***	Is the resistance less than 10 Ω?	Door key cylinder switch is OK.	Go to step **2**.
2	**CHECK DOOR KEY CYLINDER SWITCH.** 1) Disconnect the door key cylinder switch harness connector. 2) Measure the resistance between door key cylinder switch terminals when turning the door key cylinder switch to LOCK. ***Terminals*** ***No. 1 — No. 2:***	Is the resistance less than 1 Ω?	Check the harness for open or short circuits between the body integrated unit and the door key cylinder switch.	Replace the door key cylinder switch.

5. Front Inner Remote

A: REMOVAL

1) Remove the door trim. <Ref. to EI-49, REMOVAL, Door Trim.>
2) Remove the back cover (1) of inner remote.
3) Remove the cable (2).
4) Remove the cable end ball (3).
5) Remove the screws (4), and remove the inner remote.

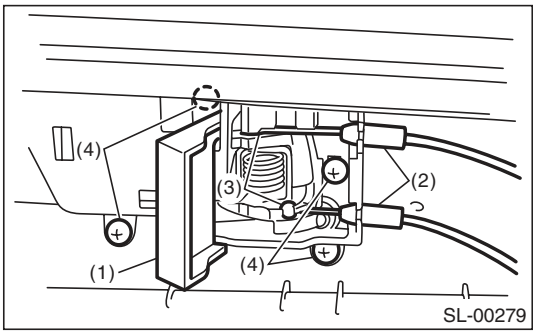

B: INSTALLATION

Install in the reverse order of removal.

C: INSPECTION

1) Check the cable of the door opener and door lock for deformation. When it is deformed, straighten it because failure operations may occur. When it is unrepairable, replace the front door latch and door lock actuator assembly.
2) Check the handle and cable for smooth operation.

6. Front Outer Handle

A: REMOVAL

1) Raise the front door glass to the top position.
2) Remove the door trim. <Ref. to EI-49, REMOVAL, Door Trim.>
3) Remove the cable from the front inner remote. <Ref. to SL-34, REMOVAL, Front Inner Remote.>
4) Remove the sealing cover. <Ref. to EB-19, REMOVAL, Front Sealing Cover.>
5) Remove the rod clamps (1).
6) Remove bolts (2), then remove the front outer handle.

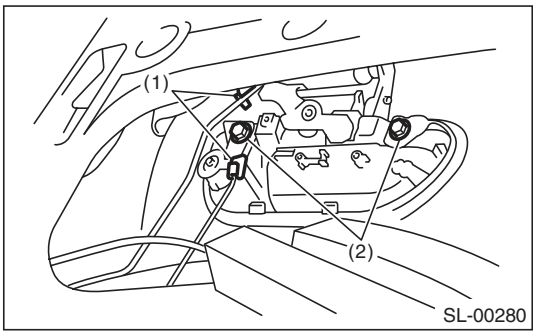

CAUTION:
Do not apply excessive force to remove the handle from the door panel. The door panel may become deformed.

B: INSTALLATION

Install in the reverse order of removal.

Tightening torque:
Refer to "COMPONENT" of "General Description". <Ref. to SL-2, DOOR LOCK ASSEMBLY, COMPONENT, General Description.>

C: INSPECTION

1) Check the rod for deformation.
2) Check the lever and rod for smooth operation.

7. Front Door Latch and Door Lock Actuator Assembly

A: REMOVAL

1) Remove the front door trim. <Ref. to EI-49, REMOVAL, Door Trim.>
2) Remove the cable from the front inner remote. <Ref. to SL-34, REMOVAL, Front Inner Remote.>
3) Remove the sealing cover. <Ref. to EB-19, REMOVAL, Front Sealing Cover.>
4) Remove the front door glass. <Ref. to GW-11, REMOVAL, Front Door Glass.>
5) Remove the rear sash. <Ref. to GW-17, REMOVAL, Front Regulator and Motor Assembly.>
6) Open the handle rod cover of the latch assembly.
7) Remove the three screws.

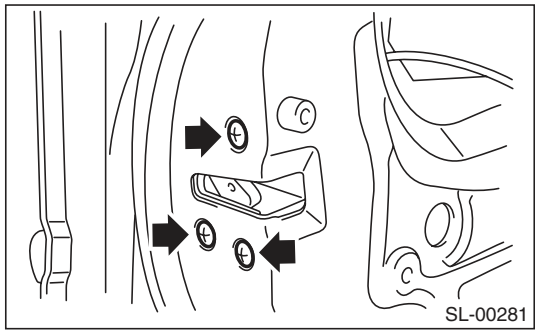

8) Remove the front door latch and door lock actuator assembly, and disconnect the connector.

B: INSTALLATION

Install in the reverse order of removal.

Tightening torque:
Refer to "COMPONENT" of "General Description". <Ref. to SL-2, DOOR LOCK ASSEMBLY, COMPONENT, General Description.>

C: INSPECTION

1) Check the rod and cable for deformation. When it is deformed, straighten it because failure operations may occur. When it is unrepairable, replace the front door latch and door lock actuator assembly.
2) Check the lever, rod and cable for smooth operation.

8. Front Door Lock Actuator

A: REMOVAL

1) Remove the front door latch and door lock actuator assembly. <Ref. to SL-36, REMOVAL, Front Door Latch and Door Lock Actuator Assembly.>
2) Remove the claw of front door latch security cover, and then remove the cover.
3) Remove the screw from front door latch and door lock actuator, and then remove the door lock actuator.

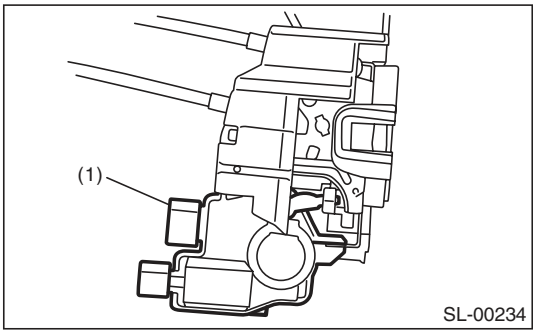

(1) Front door lock actuator

B: INSTALLATION

Install in the reverse order of removal.

C: INSPECTION

1) Disconnect the door lock actuator harness connector.
2) Connect the battery to door lock actuator terminals.
If defective, replace the front door lock actuator.

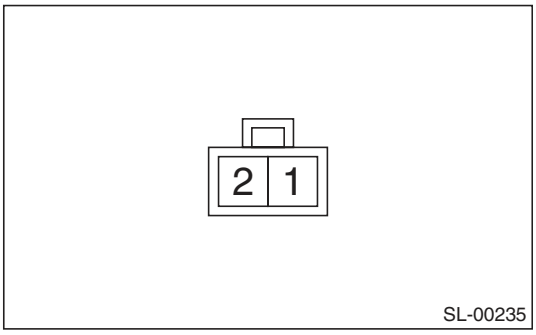

Actuator operation	Terminals	
	No. 1	No. 2
Lock → Unlock	+	–
Unlock → Lock	–	+

9. Rear Inner Remote

A: REMOVAL

1) Remove the rear door trim. <Ref. to EI-49, REMOVAL, Door Trim.>
2) Remove the back cover (1) of inner remote.
3) Remove the cable (2).
4) Remove the cable end ball (3).
5) Remove screws (4), and remove the inner remote handle.

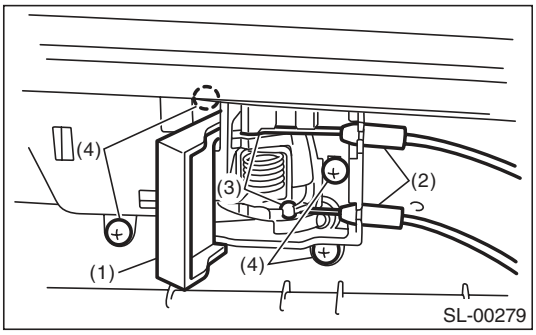

B: INSTALLATION

Install in the reverse order of removal.

C: INSPECTION

1) Check the cable of the door opener and door lock for deformation. When it is deformed, straighten it because failure operations may occur. When it is unrepairable, replace the rear door latch and door lock actuator assembly.
2) Check the handle and cable for smooth operation.
3) Check the child safety lock for correct operations.

10. Rear Outer Handle

A: REMOVAL

1) Raise the rear door glass to the top position.
2) Remove the rear door trim. <Ref. to EI-49, REMOVAL, Door Trim.>
3) Remove the sealing cover. <Ref. to EB-23, REMOVAL, Rear Sealing Cover.>
4) Remove the rear door latch and door lock actuator assembly. <Ref. to SL-40, REMOVAL, Rear Door Latch and Door Lock Actuator Assembly.>
5) Pull out the cable from the cable clamp (1) of the outer handle.
6) Remove two bolts.

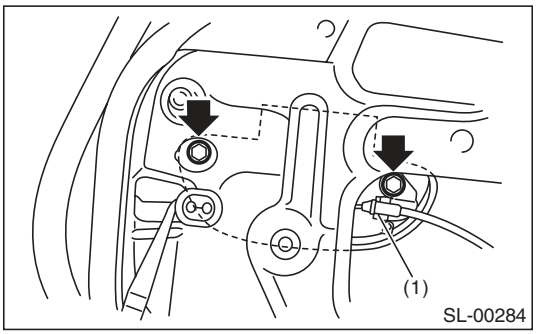

7) Remove the rear outer handle.

CAUTION:
Do not apply excessive force to remove the handle from the door panel. The door panel may become deformed.

B: INSTALLATION

Install in the reverse order of removal.

Tightening torque:
Refer to "COMPONENT" of "General Description". <Ref. to SL-2, DOOR LOCK ASSEMBLY, COMPONENT, General Description.>

C: INSPECTION

1) Check the cable for deformation. When it is deformed, straighten it because failure operations may occur. When it is unrepairable, replace the rear door latch and door lock actuator assembly.
2) Check the handle and cable for smooth operation.

11. Rear Door Latch and Door Lock Actuator Assembly

A: REMOVAL

1) Remove the rear door trim. <Ref. to EI-49, REMOVAL, Door Trim.>
2) Remove the cable from rear inner remote. <Ref. to SL-38, REMOVAL, Rear Inner Remote.>
3) Remove the sealing cover. <Ref. to EB-23, REMOVAL, Rear Sealing Cover.>
4) Remove the rear door glass. <Ref. to GW-23, REMOVAL, Rear Door Glass.>
5) Remove the rear sash. <Ref. to GW-25, REMOVAL, Rear Regulator and Motor Assembly.>
6) Pull out the cable from the cable clamp of the outer handle.
7) Remove the three screws.

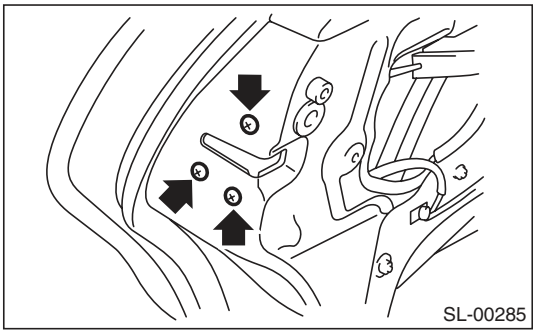

8) Disconnect the connectors, and then remove the rear door latch and door lock actuator assembly.

B: INSTALLATION

Install in the reverse order of removal.

Tightening torque:
Refer to "COMPONENT" of "General Description". <Ref. to SL-2, DOOR LOCK ASSEMBLY, COMPONENT, General Description.>

C: INSPECTION

1) Check the cable for deformation. When it is deformed, straighten it because failure operations may occur. When it is unrepairable, replace the rear door latch and door lock actuator assembly.
2) Check that the lever and cable operates smoothly.

12. Rear Door Lock Actuator

A: REMOVAL

1) Remove the rear door latch and door lock actuator assembly. <Ref. to SL-40, REMOVAL, Rear Door Latch and Door Lock Actuator Assembly.>
2) Remove the claw of rear door latch security cover, and then remove the cover.
3) Remove the screw from the rear door latch and door lock actuator, and then remove the door lock actuator.

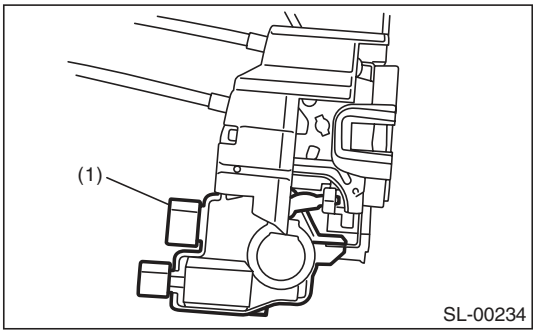

(1) Rear door lock actuator

B: INSTALLATION

Install in the reverse order of removal.

C: INSPECTION

1) Disconnect the door lock actuator harness connector.
2) Connect the battery to rear door lock actuator terminals.
If defective, replace the rear door lock actuator.

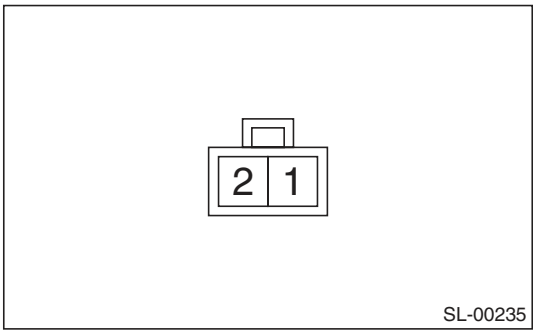

Actuator operation	Terminals	
	No. 1	No. 2
Lock → Unlock	+	–
Unlock → Lock	–	+

13. Rear Gate Outer Handle

A: REMOVAL

1) Disconnect the ground cable from battery.
2) Remove the rear gate trim. <Ref. to EI-68, REMOVAL, Rear Gate Trim.>
3) Remove the rear gate garnish. <Ref. to EI-75, REMOVAL, Rear Gate Garnish.>
4) Remove the two nuts, and take out the rear gate outer handle.
5) Remove cable (1) of the rear gate handle.

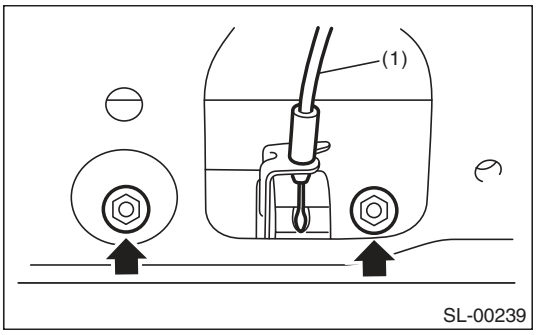

B: INSTALLATION

Install in the reverse order of removal.

Tightening torque:
Refer to "COMPONENT" of "General Description". <Ref. to SL-3, TRUNK LID AND REAR GATE LOCK, COMPONENT, General Description.>

C: INSPECTION

1) Check the cable of the rear gate handle for deformation.
2) Check the rear gate outer handle and cable of the rear gate handle for smooth operation.

14. Rear Gate Latch Assembly

A: REMOVAL

1) Disconnect the ground cable from battery.
2) Remove the rear gate trim. <Ref. to EI-68, REMOVAL, Rear Gate Trim.>
3) Remove the two screws.

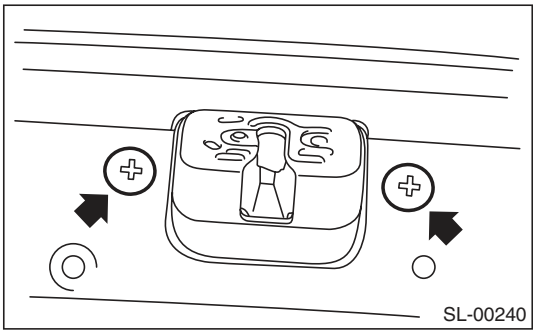

4) Disconnect connectors and cables of the rear gate handle.

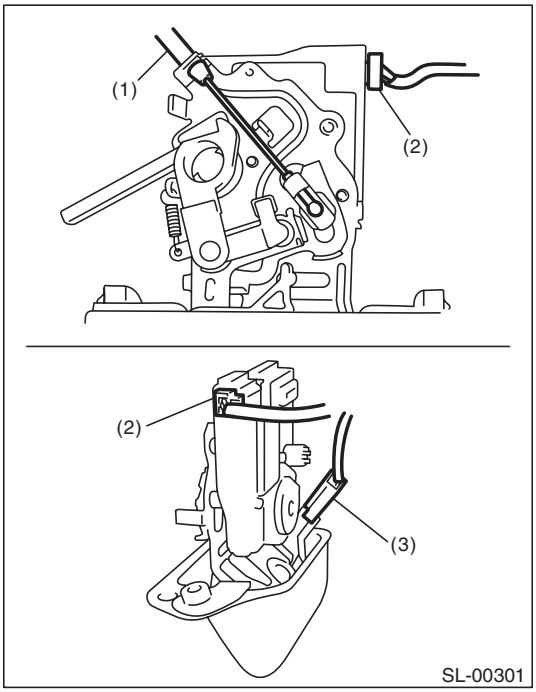

(1) Cable
(2) Rear gate lock actuator connector
(3) Rear gate latch switch connector

5) Remove the rear gate latch assembly.

B: INSTALLATION

Install in the reverse order of removal.

Tightening torque:
Refer to "COMPONENT" of "General Description". <Ref. to SL-3, TRUNK LID AND REAR GATE LOCK, COMPONENT, General Description.>

C: INSPECTION

1) Disconnect the rear gate lock actuator harness connector.
2) Connect the battery to rear gate lock actuator terminals.

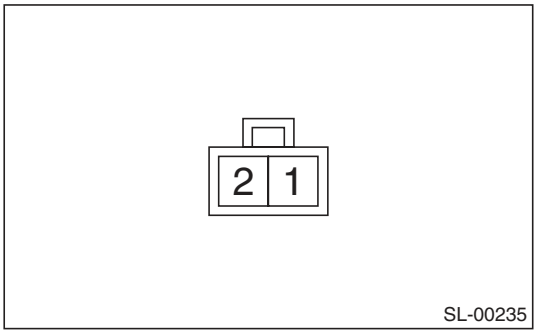

Actuator operation	Terminals	
	No. 1	No. 2
Lock → Unlock	+	–
Unlock → Lock	–	+

Replace the rear gate latch assembly if faulty.
3) Check the cable of the rear gate handle for deformation.
4) Check the lever and cable of the rear gate handle for smooth operation.

15. Trunk Lid Lock Assembly

A: REMOVAL

1) Disconnect the ground cable from battery.
2) Remove the trunk lid release handle. <Ref. to SL-45, REMOVAL, Trunk Lid Release Handle.>
3) Disconnect the connectors and remove the cable of the trunk opener.
4) Remove the two bolts to remove the trunk lid lock assembly.

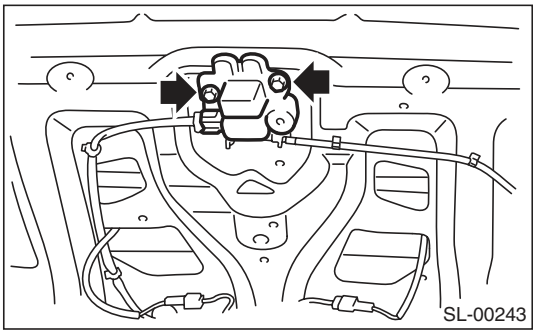

B: INSTALLATION

Install in the reverse order of removal.

Tightening torque:
Refer to "COMPONENT" of "General Description". <Ref. to SL-3, TRUNK LID AND REAR GATE LOCK, COMPONENT, General Description.>

NOTE:
Apply grease to the movable part.

C: INSPECTION

1) Disconnect the trunk lid lock actuator harness connector.
2) Connect the battery to the trunk lid lock actuator terminals.

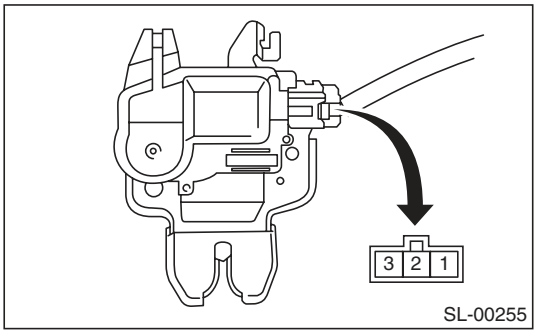

Actuator operation	Terminals	
	No. 1	No. 2
Lock → Unlock	–	+

Replace the trunk lid lock assembly if defective.
3) Check the striker for deformation or abnormal wear.
4) Check the safety lever for improper movement.
5) Check other levers and springs for rust formation or unsmooth movement.
6) Check the cable of the trunk opener for smooth operation.

16. Trunk Lid Release Handle

A: REMOVAL

1) Remove the cover (A).

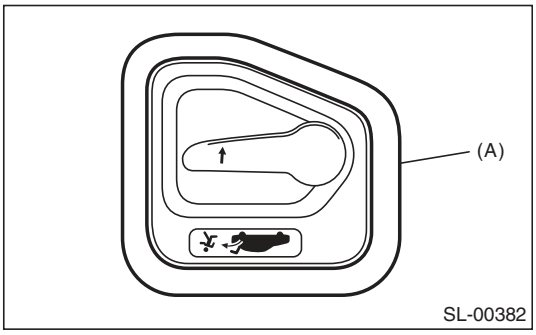

2) Remove the trunk lid trim. <Ref. to EI-70, REMOVAL, Trunk Room Trim.>
3) Remove the four clips to remove the trunk lid release handle.

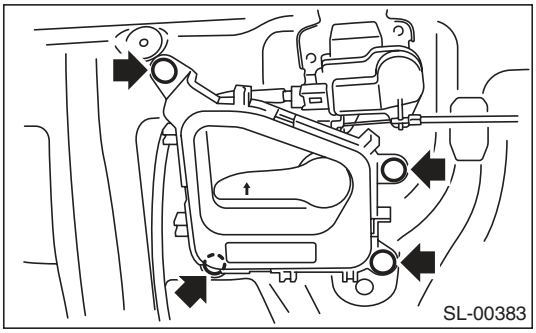

B: INSTALLATION

Install in the reverse order of removal.

C: INSPECTION

Make sure the lever works smoothly.

17. Front Hood Lock Assembly

A: REMOVAL

1) Open the front hood.
2) Remove the bolts, and then detach the front hood lock assembly.
3) Remove the cable from lock assembly.

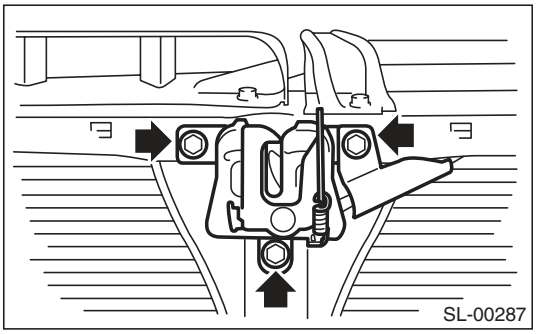

B: INSTALLATION

Install in the reverse order of removal.

Tightening torque:
Refer to "COMPONENT" of "General Description". <Ref. to SL-4, FRONT HOOD LOCK AND REMOTE OPENERS, COMPONENT, General Description.>

NOTE:
Apply grease to the movable part.

C: ADJUSTMENT

Loosen the bolt, and adjust the lock assembly while moving it up and down.

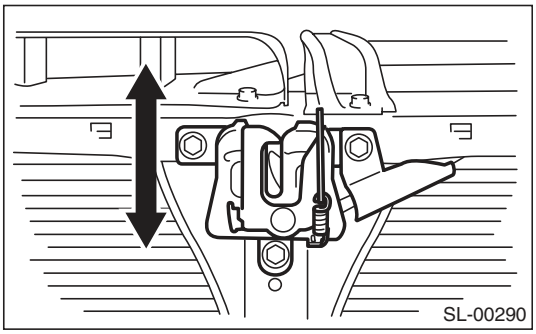

D: INSPECTION

1) Check the striker for deformation or abnormal wear.
2) Check the safety lever for improper movement.
3) Check other levers and springs for rust formation or unsmooth movement.

18. Remote Openers

A: REMOVAL

1. FRONT HOOD OPENER

1) Remove the cable from the front hood lock assembly.
2) Remove the bolt, and then detach the opener lever.

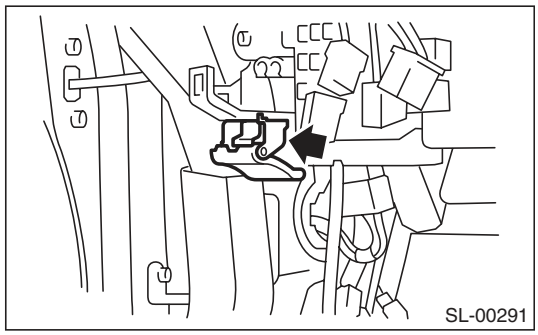

2. TRUNK LID OPENER

1) Remove the rear seat. <Ref. to SE-18, REMOVAL, Rear Seat.>
2) Remove the center pillar lower trim, side sill cover, rear pillar lower trim and floor mat on the driver's side. Remove the clip holding the cable.
3) Remove the opener lever (1) and rear cover (2).
4) Remove the pin (3) and remove front cover (4).
5) Remove the bolt and nut, and remove the pull handle assembly (5).

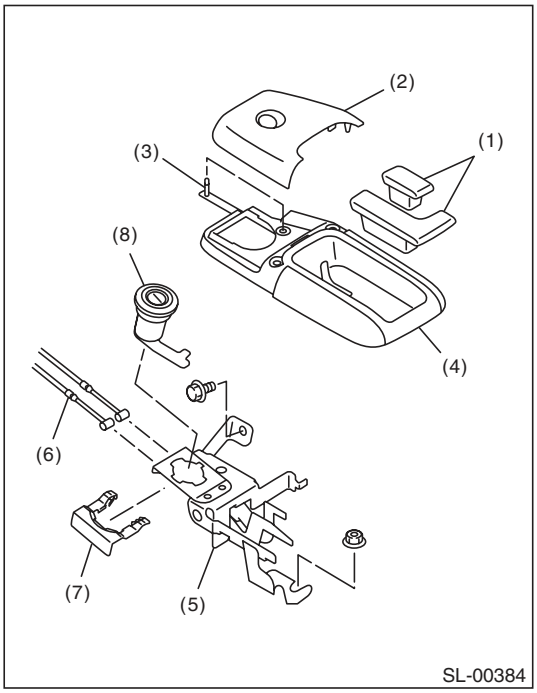

(1) Opener lever
(2) Rear cover
(3) Pin
(4) Front cover
(5) Pull handle ASSY
(6) Cable
(7) Clamp
(8) Key cylinder

6) Remove the cable from the pull handle assembly (5).
7) Remove clamp (7) to remove the key cylinder (8).

CAUTION:
Remove the key cylinder in the UNLOCK position.

8) Remove the trunk lid lock assembly from the trunk lid.
9) Remove the cable from the trunk lid lock assembly.

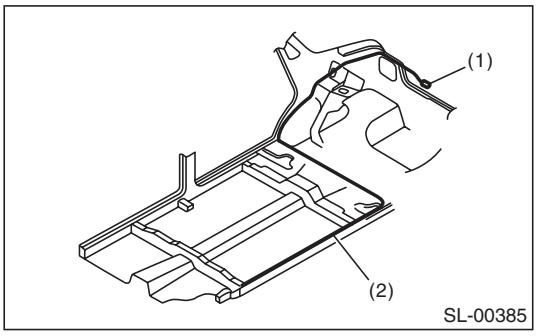

(1) Trunk lid lock ASSY
(2) Cable

3. FUEL FILLER LID OPENER

Sedan model

Refer to the trunk lid opener. <Ref. to SL-47, TRUNK LID OPENER, REMOVAL, Remote Openers.>

Wagon model

1) Remove the rear seat. <Ref. to SE-18, REMOVAL, Rear Seat.>
2) Remove the center pillar lower trim, side sill cover, rear pillar lower trim and floor mat on the driver's side. Remove the clip holding the cable.
3) Remove the bolt and nut, and then detach the pull handle assembly.

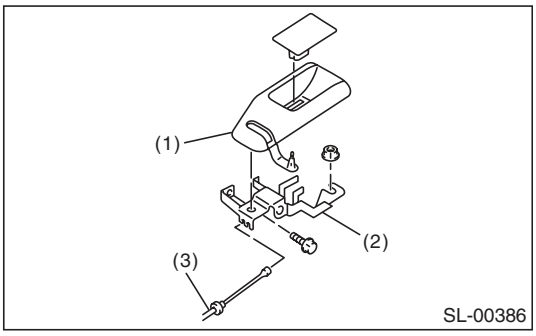

(1) Cover
(2) Pull handle ASSY
(3) Cable

4) Remove the cable from pull handle assembly.
5) Remove the rear quarter trim RH. <Ref. to EI-63, REMOVAL, Rear Quarter Trim.>
6) Rotate the fuel lock inside the quarter panel to 90° and remove. (Either right or left turn)

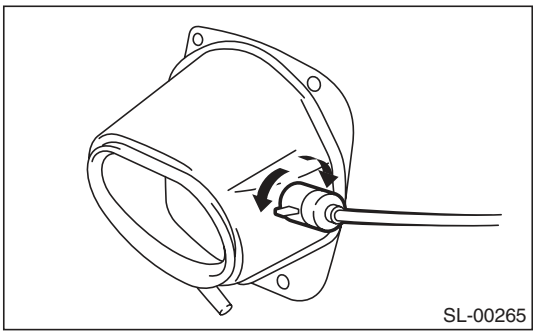

B: INSTALLATION

Install in the reverse order of removal.

CAUTION:
Install the key cylinder to the trunk lid in the UNLOCK position.

C: INSPECTION

Make sure the front hood, trunk lid and fuel filler lid open and close smoothly.

19.Ignition Key Lock

A: REPLACEMENT

1) Disconnect the ground cable from battery.
2) Remove the steering column. <Ref. to PS-16, REMOVAL, Tilt Steering Column.>
3) Secure the steering column in a vise. Remove the bolt with a drill.

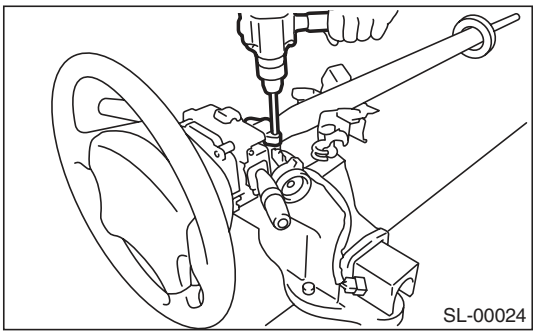

4) Remove the ignition key lock.
5) Use new bolts. Tighten the bolt until the bolt head is broken (bolt head wrenched off).

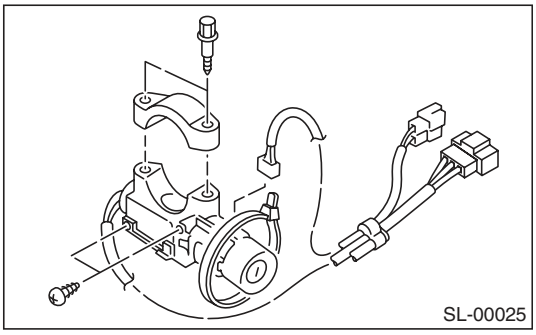

B: INSPECTION

1) Remove the instrument panel lower panel.
2) Remove the steering column lower cover.
3) Unfasten the fixing clip which secures harness, and then disconnect the connector of the ignition switch from body harness.
4) Turn the ignition key plate to each position and check the continuity between terminals of ignition connector.

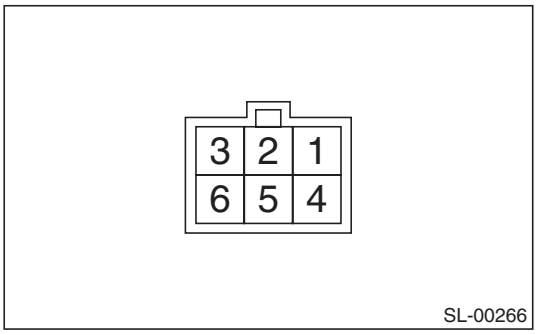

Switch position	Terminal No.	Standard
LOCK	—	—
ACC	No. 3 and No. 5	Less than 1 Ω
ON	No. 3 and No. 5 No. 3 and No. 1 No. 3 and No. 4	Less than 1 Ω
ST	No. 3 and No. 4 No. 3 and No. 2	Less than 1 Ω

If NG, replace the ignition switch.

20. Key Lock Cylinders

A: REPLACEMENT

1) Raise the front door glass to the top position.
2) Remove the door trim. <Ref. to EI-49, REMOVAL, Door Trim.>
3) Remove the sealing cover. <Ref. to EB-19, REMOVAL, Front Sealing Cover.>
4) Remove the rod clamp and the bolt, then replace the key cylinder (1).

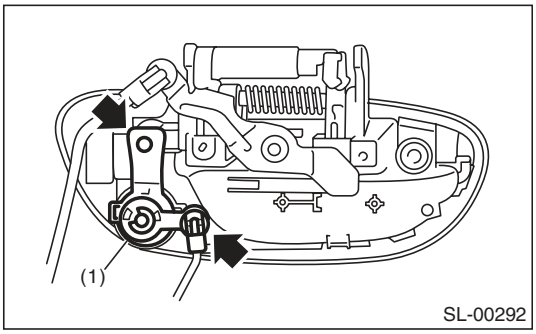

21.Security Control Module

A: NOTE

The control of security system is carried out in body integrated unit. Refer to the section of body integrated unit for work.
<Ref. to SL-56, Body Integrated Unit.>

22. Impact Sensor

A: REMOVAL

1) Remove the key from ignition switch.
2) Close all the doors, trunk lid and rear gate.
3) Press the UNLOCK button of the keyless transmitter.
4) Change the setting of impact sensor using Subaru Select Monitor.
5) Disconnect the ground cable from the battery.
6) Remove the impact sensor.

B: INSTALLATION

1) Remove the key from ignition switch.
2) Close all the doors, trunk lid and rear gate.
3) Press the UNLOCK button of the keyless transmitter.
4) Disconnect the ground cable from the battery.
5) Install the impact sensor.
6) Connect the ground cable to the battery.
7) Change the setting of impact sensor using Subaru Select Monitor.

C: OPERATION

1. IMPACT SENSOR SETTING USING SUBARU SELECT MONITOR

1) Prepare the Subaru Select Monitor kit. <Ref. to SL-6, SPECIAL TOOL, PREPARATION TOOL, General Description.>

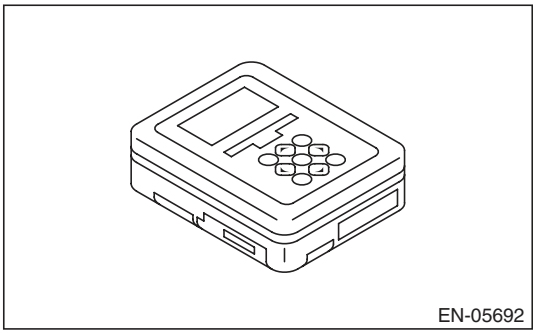

2) Prepare PC with Subaru Select Monitor installed.
3) Connect the USB cable between SDI (Subaru Diagnosis Interface) and USB port on the personal computer (dedicated port for the Subaru Select Monitor).

NOTE:
The dedicated port for the Subaru Select Monitor means the USB port which was used to install the Subaru Select Monitor.

4) Connect the diagnosis cable to SDI.
5) Connect SDI to data link connector located in the lower portion of the instrument panel (on the driver's side).

CAUTION:
Do not connect scan tools other than the Subaru Select Monitor.

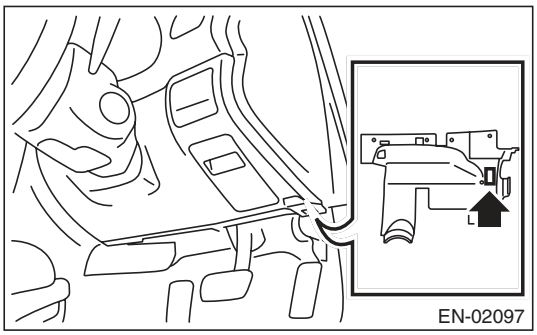

6) Start the PC.
7) Turn the ignition switch to ON (engine OFF) and run the "PC application for Subaru Select Monitor".
8) On the «System Selection Menu» display, select the {Integ. unit mode}.
9) Select {ECM customizing}.
10) Make a impact monitor setting.
- When installing: ON
- When removing: OFF

11) Make a impact monitor ON/OFF setting.
- When installing: ON
- When removing: OFF

12) Turn the ignition switch to OFF, and then remove the Subaru Select Monitor.

D: ADJUSTMENT

1. CHECK IMPACT SENSOR

1) Remove the key from ignition switch.
2) Close all the windows.
3) Close all the doors, trunk lid and rear gate. Leave open the front hood.
4) Press the LOCK button of the keyless transmitter from outside of vehicle.
5) Check that the security indicator light blinks twice within 0.5 seconds in 2 second cycles after 30 seconds.
6) Hit the windshield with your palm continuously and check the security alarm operates. Lift up the front hood approx. 12 cm (4.7 in) or more, and then drop it off to check the operation of security alarm.
7) If NG, adjust the impact sensitivity.

2. IMPACT SENSITIVITY ADJUSTMENT

1) Prepare the Subaru Select Monitor kit. <Ref. to SL-6, SPECIAL TOOL, PREPARATION TOOL, General Description.>

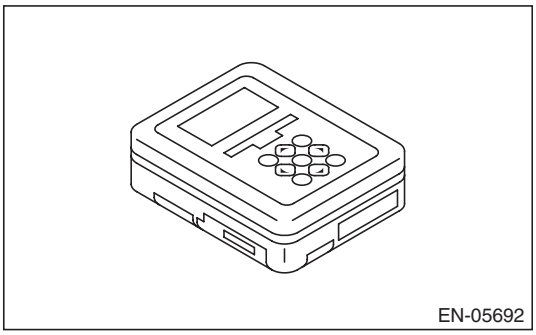

2) Prepare PC with Subaru Select Monitor installed.
3) Connect the USB cable between SDI (Subaru Diagnosis Interface) and USB port on the personal computer (dedicated port for the Subaru Select Monitor).

NOTE:
The dedicated port for the Subaru Select Monitor means the USB port which was used to install the Subaru Select Monitor.

4) Connect the diagnosis cable to SDI.
5) Connect SDI to data link connector located in the lower portion of the instrument panel (on the driver's side).

CAUTION:
Do not connect scan tools other than the Subaru Select Monitor.

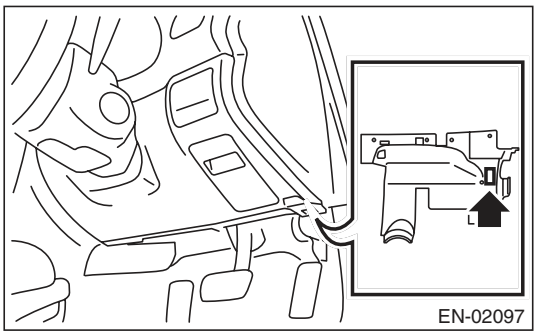

6) Start the PC.
7) Turn the ignition switch to ON (engine OFF) and run the "PC application for Subaru Select Monitor".
8) On the «System Selection Menu» display, select the {Impact Sensor}.
9) Make a {Sensitivity Adjustment Mode}.
- Sensitivity can be adjusted in 11 levels (0 to 10).
- Initial setting is 5.
- Smaller number means more sensitive.
- Larger number means less sensitive.

10) Turn the ignition switch to OFF, and then remove the Subaru Select Monitor.

NOTE:
- Set the sensor so that it is not triggered by normal vibrations (someone reclining on the door, hit by a ball, etc.).
- Set the sensor to operate the alarm when the windshield glass or door is hit hard repeatedly, etc, where it can be assumed that there is an attempt to damage the car by a burglar, etc.
- Even if there is no attempt to steal or burglarize the car, if the vehicle is subject to an equivalent shock or vibration (from road construction, etc.), the alarm will sound. Discuss with the customer their parking environment to make sensitivity settings accordingly.

23. Keyless Entry Control Module

A: REMOVAL

1) Disconnect the ground cable from battery.
2) Remove the glove box. <Ref. to EI-52, REMOVAL, Glove Box.>
3) Remove the screw, disconnect the connector and remove the keyless entry control module.

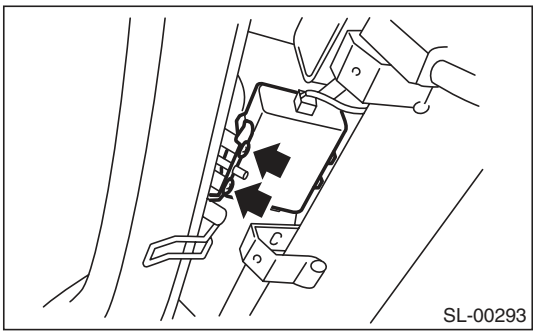

B: INSTALLATION

Install in the reverse order of removal.

24. Keyless Buzzer

A: REMOVAL

1) Remove the front bumper face. <Ref. to EI-30, FRONT BUMPER FACE, REMOVAL, Front Bumper.>
2) Remove the keyless buzzer installed to the back side of the horn bracket.

B: INSTALLATION

Install in the reverse order of removal.

C: INSPECTION

Install the keyless buzzer to another vehicle which operates keyless buzzer normally, check the buzzer sounds. If NG, replace the keyless buzzer.

25. Body Integrated Unit

A: REMOVAL

NOTE:
• When replacing the body integrated unit, check the current settings and record it. <Ref. to LAN(diag)-17, CONFIRMATION OF CURRENT SETTING, OPERATION, Subaru Select Monitor.>
• When replacing the body integrated unit, all immobilizer keys also must be replaced and registered again.

1) Disconnect the ground cable from battery.
2) Remove the instrument panel lower cover. <Ref. to EI-51, REMOVAL, Instrument Panel Lower Cover.>
3) Disconnect the connector of body integrated unit.

CAUTION:
Be careful to keep water and other foreign materials away from body integrated unit.

4) Remove two mounting nuts for body integrated unit bracket, and remove the body integrated unit.

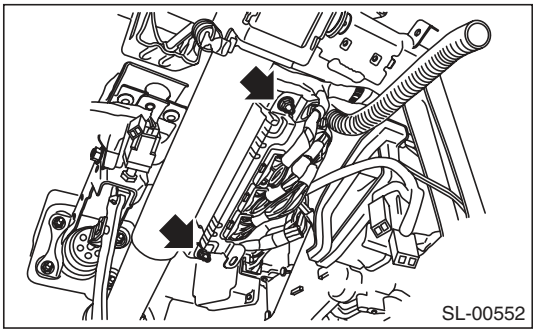

B: INSTALLATION

Install in the reverse order of removal.

NOTE:
• When the same body integrated unit is reinstalled in the same vehicle, it is not necessary to register the immobilizer again.
• When replacing a body integrated unit, perform the registration of immobilizer for the model with immobilizer. For detailed procedures, refer to “IMMOBILIZER TEACHING OPERATION MANUAL”.
• Make sure that there are no differences from the contents of the current settings after installation. <Ref. to LAN(diag)-17, CONFIRMATION OF CURRENT SETTING, OPERATION, Subaru Select Monitor.>

26. Transmitter

A: REMOVAL

1. TRANSMITTER BATTERY

1) Disassemble the keyless transmitter, and take out the transmitter case (1).

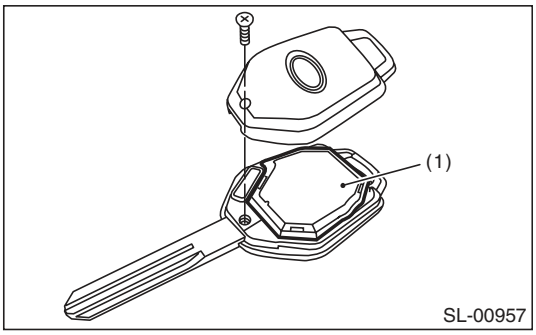

2) Remove the claw, and open the transmitter case.

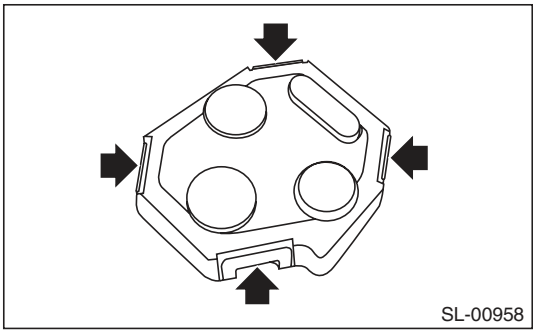

3) Remove the battery (1) from the transmitter.

NOTE:
To prevent static electricity damage to the transmitter printed circuit board, touch the steel area of building with hand to discharge static electricity carried on body or clothes before disassembling the transmitter.

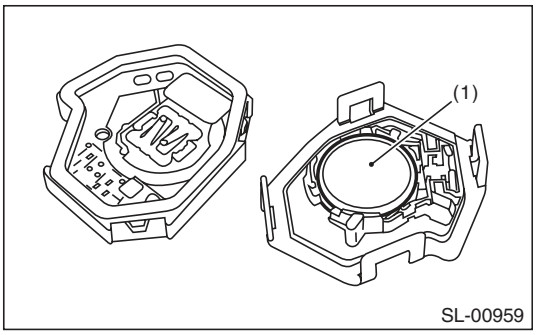

B: INSTALLATION

1. TRANSMITTER BATTERY

Install in the reverse order of removal.

C: INSPECTION

1. TRANSMITTER BATTERY

Measure the voltage between the keyless transmitter battery (+) terminal and (–) terminal.

NOTE:
Battery discharge occurs during the measurement. Complete the measurement within 5 seconds.

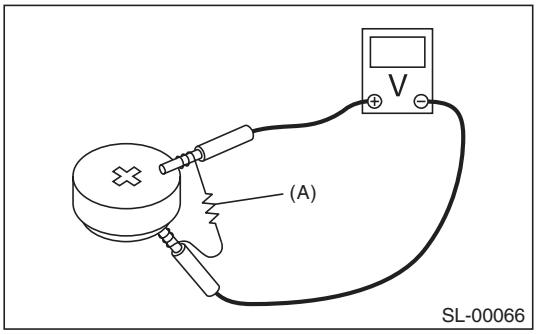

(A) Resistance (47 Ω)

Tester connection		Standard
(+)	(–)	
Battery Positive terminal	Battery Ground terminal	2.5 — 3.0 V

If NG, replace the battery. (Use CR1620 or equivalent.)

D: REPLACEMENT

1. REGISTRATION OF KEYLESS TRANSMITTER WITH SUBARU SELECT MONITOR

NOTE:
• A maximum of four keyless transmitter can be registered for each individual vehicle.
• When replacing or adding the keyless transmitter, new registration of transmitter is necessary.

1) Prepare the Subaru Select Monitor kit. <Ref. to SL-6, SPECIAL TOOL, PREPARATION TOOL, General Description.>

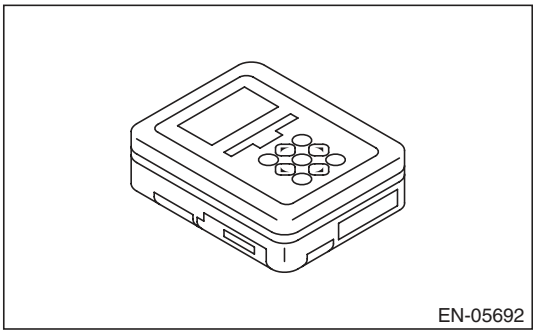

2) Prepare PC with Subaru Select Monitor installed.
3) Connect the USB cable between SDI (Subaru Diagnosis Interface) and USB port on the personal computer (dedicated port for the Subaru Select Monitor).

NOTE:
The dedicated port for the Subaru Select Monitor means the USB port which was used to install the Subaru Select Monitor.

4) Connect the diagnosis cable to SDI.
5) Connect SDI to data link connector located in the lower portion of the instrument panel (on the drivers side).

CAUTION:
Do not connect scan tools other than the Subaru Select Monitor.

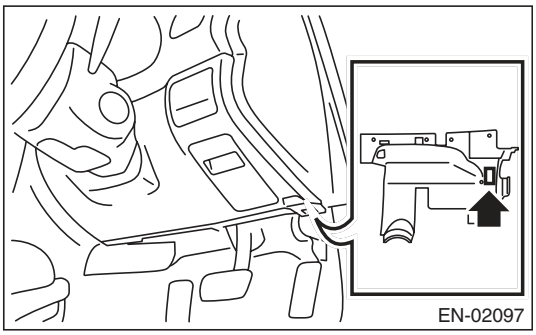

6) Start the PC.
7) Turn the ignition switch to ON (engine OFF) and run the “PC application for Subaru Select Monitor”.
8) On the «Main Menu» of the Subaru Select Monitor, select the “Each System Check” → “Integ. unit mode” → “Keyless ID registration”.
9) Input the 8-digit ID number attached to the tag plate of the transmitter or inside the transmitter, from left to right. Press the [OK] key.
10) The ID number you have entered will be shown. Make sure that the ID number shown is the same as that of plastic bag or inside of transmitter.
11) Press the [OK] key if the ID number is correct. Press the [END] key if incorrect, to return to the step 3) and try again.
12) «ID is being registered···» is displayed and registration starts.
13) «ID registration completed» will be displayed when the registration process is done.
14) To exit, select «Quit: NO» to return to {Keyless ID registration}. If there are additional keyless transmitters to be registered, select «The following are registered: OK» to return to the step 4).

NOTE:
• If the registration fails, «ID cannot register. Try again.» will be shown. Select the [OK] key to return to the {Keyless ID registration}. And retry from the step 3).
• «Quit: NO» is shown on the Subaru Select Monitor when fourth keyless transmitter has been registered. Select the [NO] key to return to {Keyless ID registration}.

27.Immobilizer Control Module

A: NOTE

The control of immobilizer system is carried out in body integrated unit. Refer to the section of body integrated unit for work. <Ref. to SL-56, Body Integrated Unit.>

28. Immobilizer Antenna

A: REMOVAL

1) Disconnect the ground cable from battery.
2) Remove the screws, and remove the steering column lower cover.

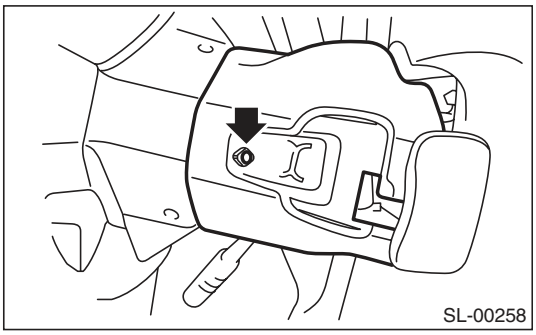

3) Remove the screws and steering column upper cover.
4) Remove the instrument panel lower cover. <Ref. to EI-51, REMOVAL, Instrument Panel Lower Cover.>
5) Disconnect the immobilizer antenna connector (A) and ignition switch lighting connector (B).
6) Loosen the screw and release the lock (D) at opposite side using flat tip screwdriver (1), and then detach the immobilizer antenna (C).

CAUTION:
Do not apply excessive force to remove the immobilizer antenna and lock. Otherwise they may be broken because those parts are the products made of a plastic.

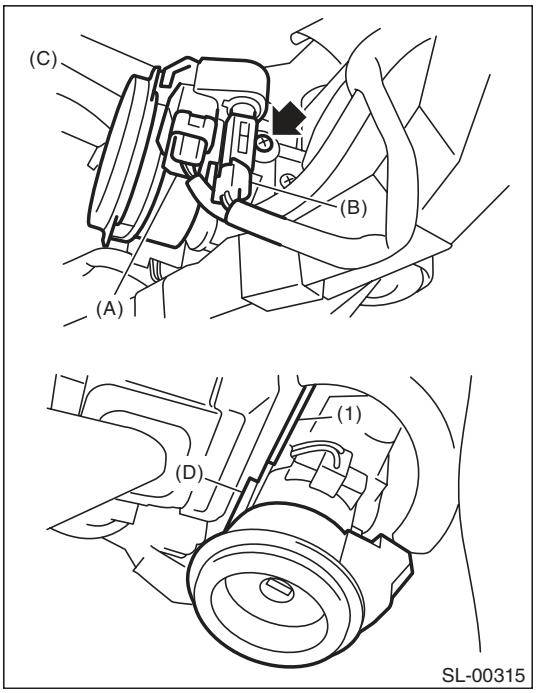

B: INSTALLATION

Install in the reverse order of removal.

1. General Description

A: COMPONENT

1. SEDAN MODEL

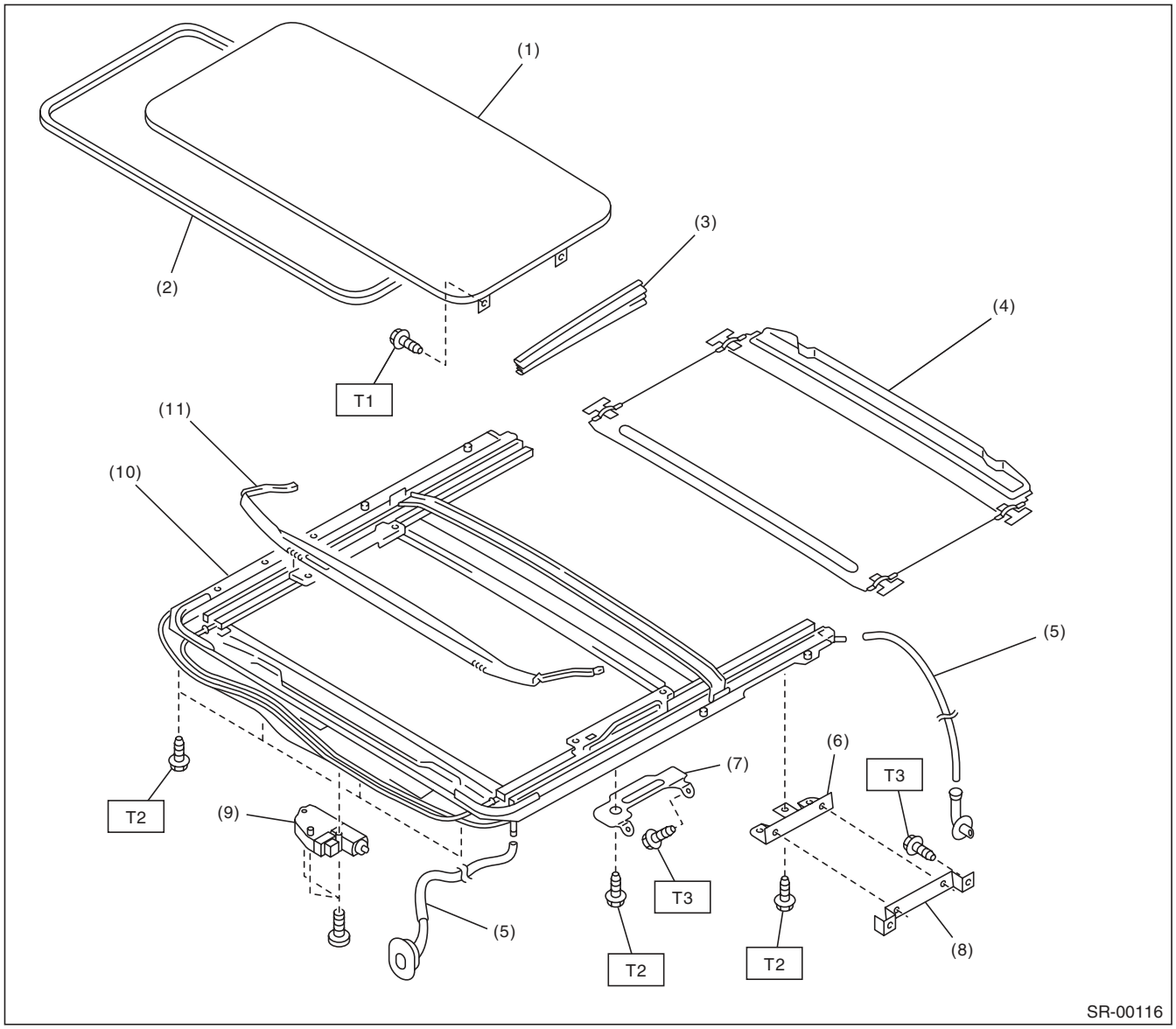

(1)	Glass lid	(7)	Assist rail bracket (Front)	***Tightening torque:N·m (kgf-m, ft-lb)***
(2)	Weather strip	(8)	Sunroof bracket (Rear)	***T1: 4.5 (0.46, 3.3)***
(3)	Cover	(9)	Motor ASSY	***T2: 6.0 (0.61, 4.4)***
(4)	Sunshade	(10)	Frame ASSY	***T3: 7.5 (0.76, 5.3)***
(5)	Drain tube	(11)	Deflector	
(6)	Assist rail bracket (Rear)			

2. WAGON MODEL

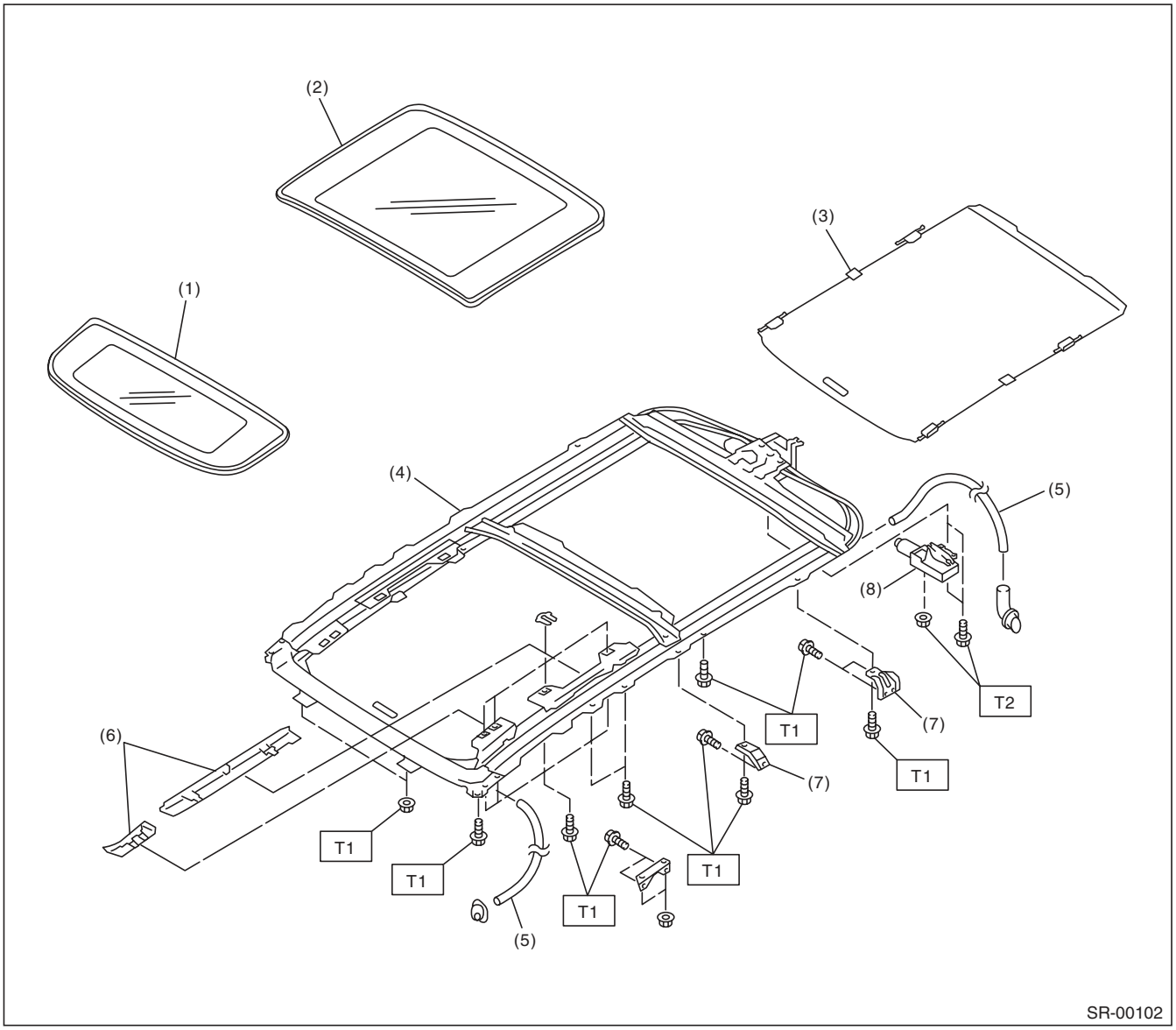

(1)	Glass lid (Front)	(5)	Drain tube	***Tightening torque:N·m (kgf-m, ft-lb)***
(2)	Glass lid (Rear)	(6)	Cover (Front and rear)	***T1: 7.5 (0.76, 5.3)***
(3)	Sunshade	(7)	Frame bracket	***T2: 4.5 (0.46, 3.0)***
(4)	Frame ASSY	(8)	Motor ASSY	

B: CAUTION

- Before disassembling or reassembling parts, always disconnect the battery ground cable from battery. When replacing the audio, control unit, and other parts provided with memory functions, record the memory contents before disconnecting the battery ground cable in order to prevent memory deletion.
- Reassemble the parts in the reverse order of disassembly unless otherwise indicated.
- Adjust parts to the given specifications.
- Connect the connectors securely for reassembly.
- After reassembly, make sure functional parts operate smoothly.

C: PREPARATION TOOL

1. GENERAL TOOL

TOOL NAME	REMARKS
Circuit tester	Used for measuring resistance and voltage.
TORX® T20	Used for removing and installing the sunroof motor, glass lid and sunshade. (Sedan model)

2. Sunroof Control System

A: WIRING DIAGRAM

1. SUNROOF

<Ref. to WI-184, WIRING DIAGRAM, Sunroof Control System.>

B: INSPECTION

Symptom	Inspection order
Water leakage	1. Check roof panel and glass lid for improper or poor sealing. 2. Check drain tube for clogging. 3. Check sunroof frame seal and body for improper fit.
Booming noise, wind noise and other noise	1. Check glass lid and roof panel for improper clearance. 2. Check sunshade and roof trim for improper clearance.
Abnormal motor noise	1. Check installing part of motor for looseness. 2. Check gears and bearings for wear. 3. Check cable for wear. 4. Check cable pipe for deformities.
Failure of sunroof (Motor operates properly.)	1. Check guide rail for foreign particles. 2. Check guide rail for improper installation. 3. Check parts for mutual interference. 4. Check cable slider for improper clinching. 5. Check cable for improper installation.
Motor does not rotate or rotate improperly.	1. Check fuse for blown out. 2. Check switch for improper function. 3. Check motor for incorrect terminal voltage. 4. Check the relay for improper operation. 5. Check poor grounding system. 6. Check harness for open or short and terminals for poor connections.
Failure turn of glass lid	Check guide rail for foreign particles.

- Failure turn of glass lid while driving rough road.

Glass lid has auto-reverse function. When applied above specified force to the glass lid, the lid turns back and stops. When operating the glass lid (open or close) while driving the rough road, the lid judges vibration as a force and may causes failure turns. When the failure turn is occurred, need to perform the initialize operation with following procedure.

1. INITIALIZE OPERATION (SEDAN MODEL)

1) Tilt up the glass lid.
2) Release the switch once, and press the tilt up switch again for 15 seconds.
3) When the glass lid is raised a little and returned to tilt up position, release the switch for the moment. (Initialization of position detecting function)
4) Keep pressing the tilt up switch within 5 seconds from releasing the switch. The glass lid will tilt down → slides open → slides close automatically. (When 5 seconds pass, the position detecting function is cancelled.)
5) Initialize operation is completed.

2. INITIALIZE OPERATION (WAGON MODEL)

1) Apply force to the glass lid in the opening direction while the glass lid (rear) is closing, and make it reverse five times in a row.
However, in the following situation, the initialize operation is canceled.
- When the lid is fully closed once during one of the auto-reverse operations five times in a row.
- When the interval between the auto-reverse operations was 30 seconds or more even once.

2) When the operation of glass lid shifts to inching operation*, fully close the lid by switch operation.
3) Initialize operation is completed.
* Inching operation: A condition where the glass lid only operates for only at the moment when the switch is pressed, even when the switch is held down.

3. Glass Lid

A: REMOVAL

1. SEDAN MODEL

1) Completely close the glass lid, and then open the sunshade.
2) Remove the cover (A), and then remove the TORX® bolts (B).

CAUTION:
The thread locker is applied to the TORX® bolts, so use the new parts once they are removed.

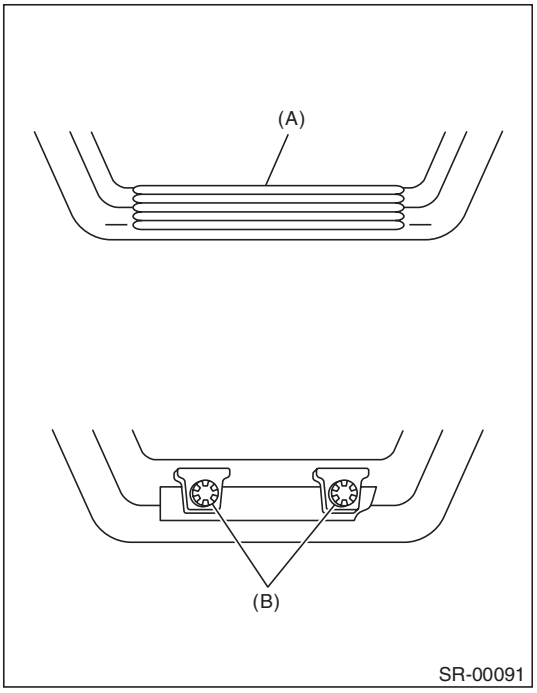

3) Remove the glass lid carefully.

2. WAGON MODEL (FRONT)

1) Open the sunshade.
2) Pull out the cover (A) towards the arrow mark, and remove the nuts (B).

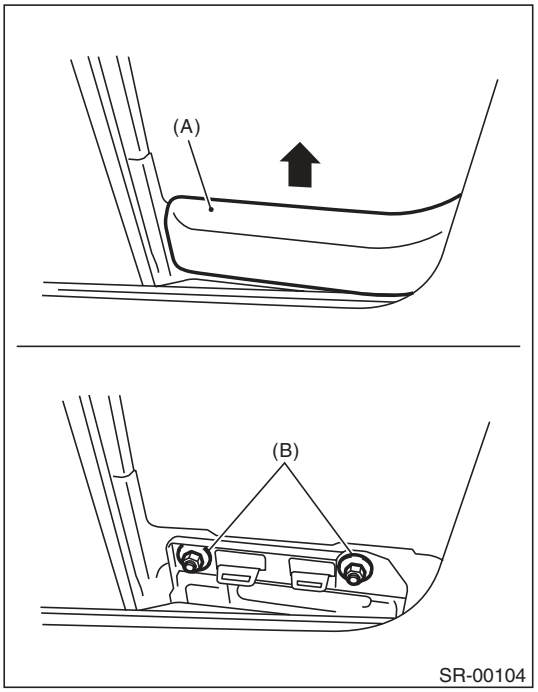

3) Remove the glass lid (front) carefully.

3. WAGON MODEL (REAR)

1) Tilt the glass lid (front) up, then open the sunshade.
2) Remove the cover (A), then remove the nuts (B).

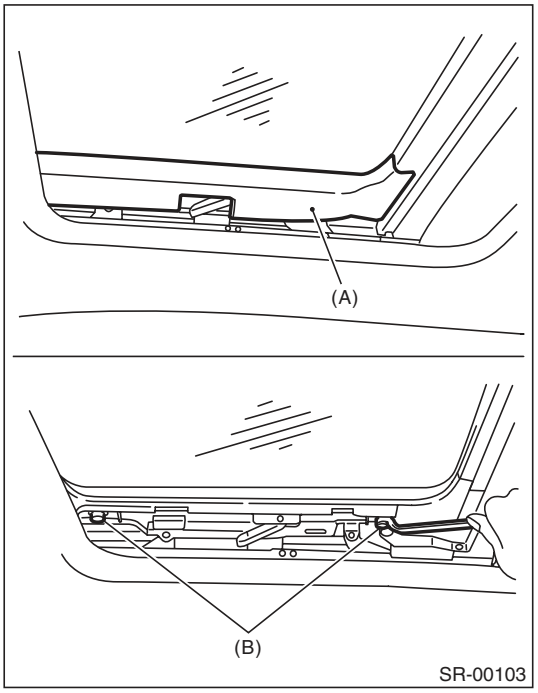

3) Remove the glass lid carefully.

B: INSTALLATION

Install in the reverse order of removal.

C: ADJUSTMENT

1. SEDAN MODEL

Loosen the glass lid mounting TORX® bolts (A), and then adjust the height with moving the lid.

Difference in height between glass lid and roof panel L:

2.0±1.0 mm (0.079±0.039 in)

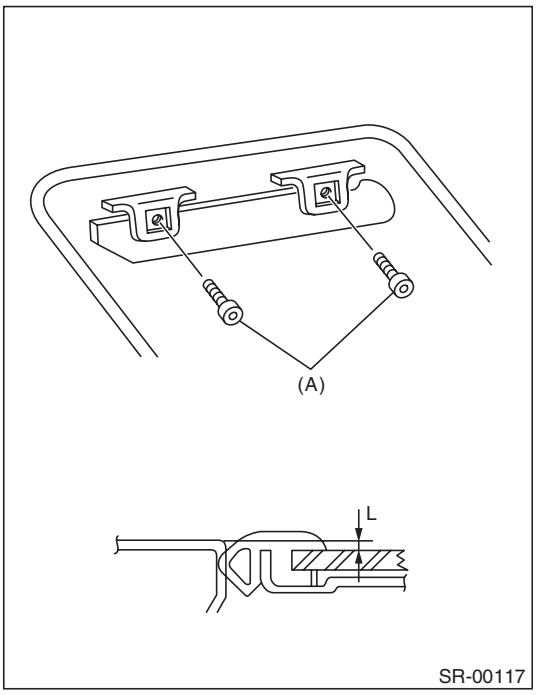

2. WAGON MODEL

Loosen the glass lid installation nuts, and adjust the height by adding (max: four pieces) or extracting (min: zero piece) shims (B) (standard: two pieces) between the glass lid (A) and body.

Difference in height between glass lid and roof panel L:

2.0±1.0 mm (0.079±0.039 in)

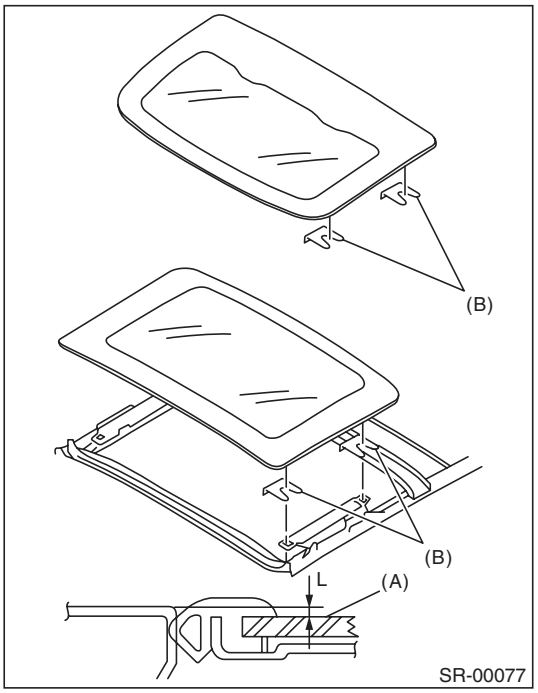

D: FORCED DRIVE

CAUTION:
After a forced operation, make sure to perform an initialize operation. <Ref. to SR-5, INSPECTION, Sunroof Control System.>

If the glass lid does not operate or is not supplied with power, move the glass lid using the hexagon wrench.
Sedan model: bolt width 4 mm (0.16 in)
Wagon model: bolt width 5 mm (0.20 in)

1. SEDAN MODEL

1) Remove the spot map light. <Ref. to LI-32, REMOVAL, Spot Map Light.>
2) Insert the hexagon wrench securely until it touches the motor shaft end.
3) Turn the hexagon wrench, and move the glass lid.
- Turning right, the glass lid open.
- Turning left, the glass lid close.

CAUTION:
Be careful not to damage the adjacent parts with the rod end when moving the glass lid with the hexagon wrench.

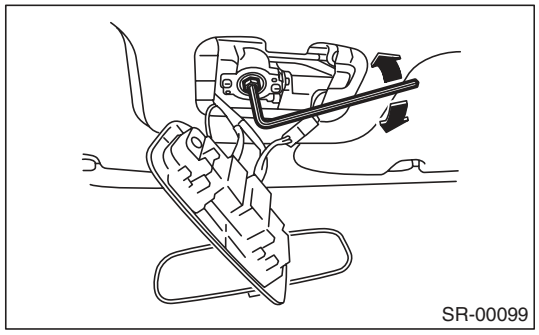

2. WAGON MODEL

1) Slide the slider (A) towards the rear of the vehicle (C), and remove the sun shade from the slider by raising the rod (B).

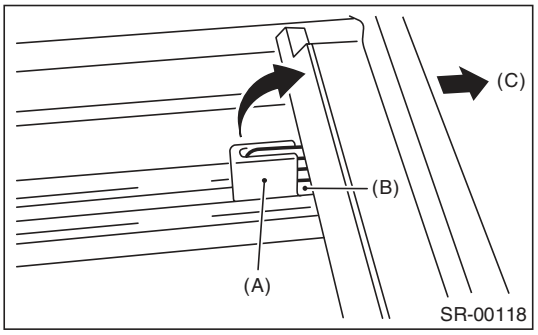

2) Slide the sunshade forward.
3) Remove the plug to the rear of the roof trim.

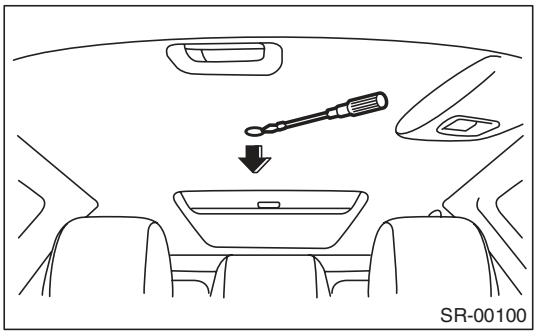

4) Insert the hexagon wrench securely until it touches the motor shaft end.
5) Turn the wrench to right, and close the glass lid (front and rear).

CAUTION:
Be careful not to damage the adjacent parts with the rod end when moving the glass lid with the hexagon wrench.

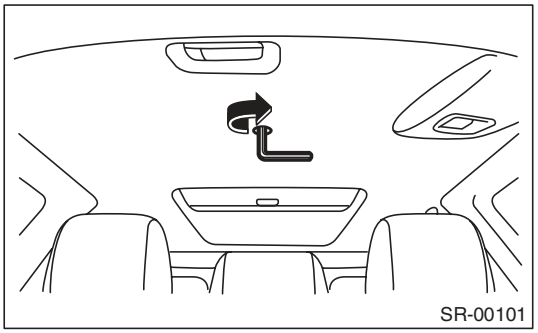

4. Sunroof Assembly

A: REMOVAL

1. SEDAN MODEL

1) Disconnect the ground cable from the battery.
2) Remove the roof trim. <Ref. to EI-67, SEDAN MODEL, REMOVAL, Roof Trim.>
3) Disconnect the harness connector of sunroof motor.
4) Remove the glass lid. <Ref. to SR-6, SEDAN MODEL, REMOVAL, Glass Lid.>
5) Remove the drain tube from frame assembly.
6) Remove the assist rail bracket (front) (A) and sunroof bracket (rear) (B).

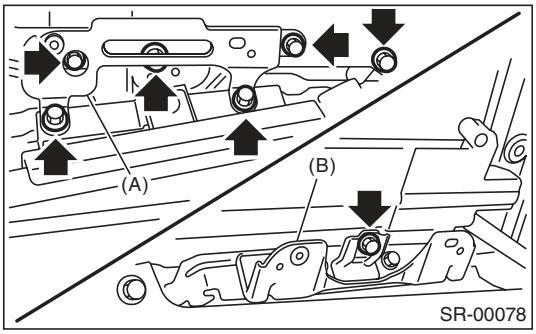

7) Remove the nuts, and then remove the frame assembly.

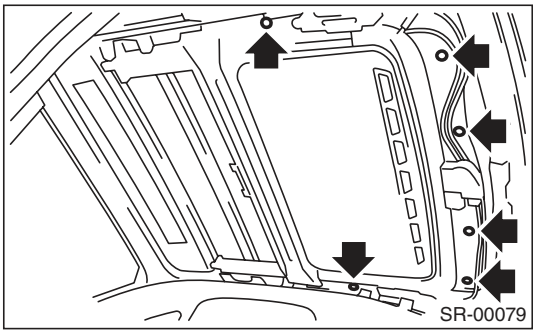

2. WAGON MODEL

1) Disconnect the ground cable from the battery.
2) Remove the roof trim. <Ref. to EI-67, WAGON MODEL, REMOVAL, Roof Trim.>
3) Disconnect the harness connector of the motor assembly.

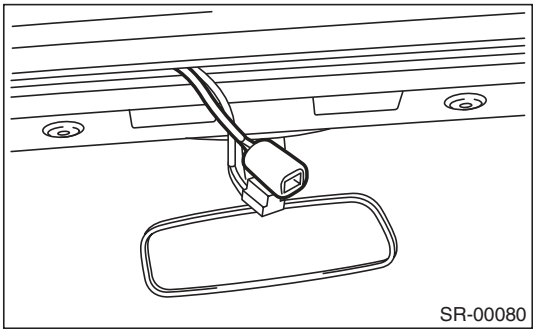

4) Remove the front and rear glass lid. <Ref. to SR-6, WAGON MODEL (FRONT), REMOVAL, Glass Lid.> <Ref. to SR-6, WAGON MODEL (REAR), REMOVAL, Glass Lid.>
5) Remove the attachment bolts (A) on the rear frame bracket of the frame assembly.

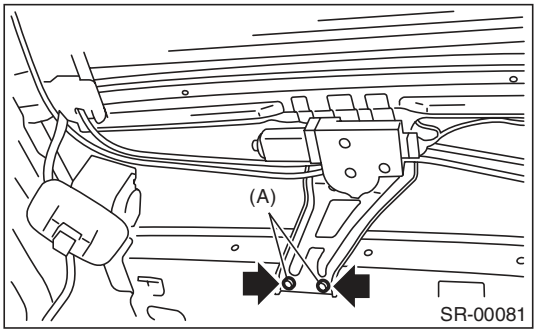

6) Remove the drain tube from frame assembly.
7) Remove the frame bracket (A).
8) Remove bolts (B) and nuts (C), then remove the frame assembly.

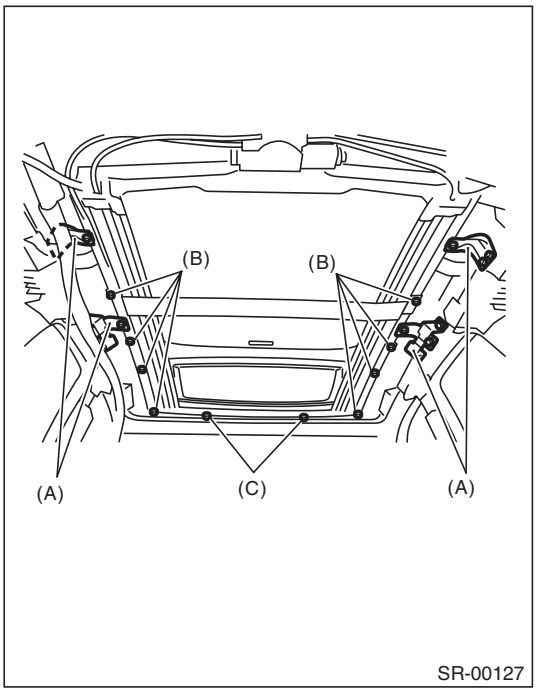

B: INSTALLATION

CAUTION:
Be careful not to snag the harness.
Install in the reverse order of removal.

NOTE:
- Be sure to connect the harness connector.
- When installing the drain tube, insert it securely into drain pipe.

Length A:
15 mm (0.59 in) or more

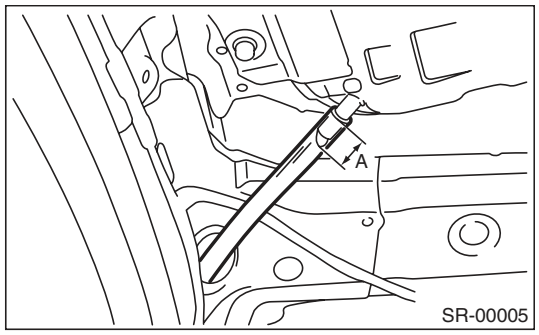

C: DISASSEMBLY

1) Remove the sunroof motor. <Ref. to SR-11, REMOVAL, Sunroof Motor.>
2) Remove the sunshade. <Ref. to SR-15, REMOVAL, Sunshade.>

D: ASSEMBLY

Assemble in the reverse order of disassembly.

5. Sunroof Motor

A: REMOVAL

CAUTION:
- **When removing the clip, use great care not to damage the roof trim.**
- **Never rotate the sunroof motor assembly after removing it.**

1. SEDAN MODEL

1) Completely close the glass lid.
2) Disconnect the ground cable from the battery.
3) Remove the spot map light. <Ref. to LI-32, REMOVAL, Spot Map Light.>
4) Disconnect the harness connector and remove the TORX® bolts, and then remove the motor assembly.

CAUTION:
When removing the motor assembly, secure the cable wires to prevent moves.

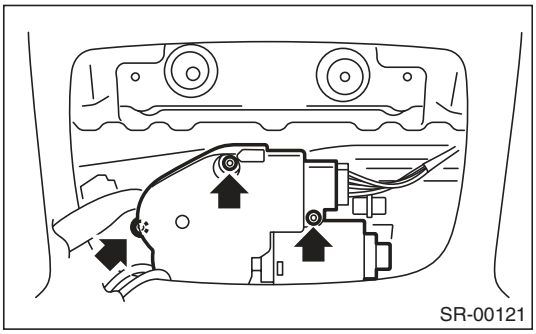

2. WAGON MODEL

1) Fully close the glass lid (front) and glass lid (rear).
2) Disconnect the ground cable from the battery.
3) Remove the luggage room light. <Ref. to LI-34, REMOVAL, Luggage Room Light.>
4) Remove the roof trim. <Ref. to EI-67, WAGON MODEL, REMOVAL, Roof Trim.>
5) Pass the seat belt tongue located on the center of the rear seat through the hole, and then pull it out to the opposite side of the trim.

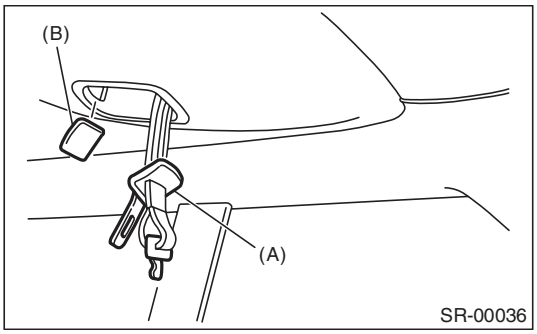

(A) Tongue
(B) Cover

6) Remove the clips, and let the rear end of the roof trim hang.
7) Disconnect the harness connector (A), and then remove the motor assembly mounting bolts (B) and nut (C).

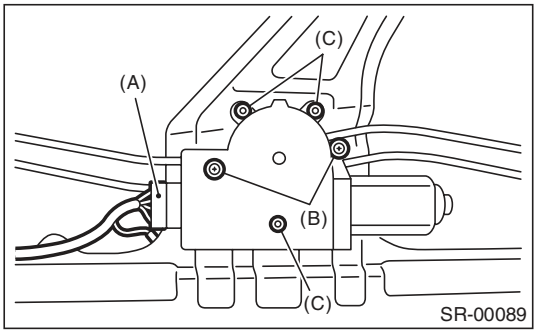

B: INSTALLATION

CAUTION:
When installing the motor assembly, be careful not to move the sunroof cable.

1. SEDAN MODEL

1) Align the coulisse assembly and link assembly in the same position.

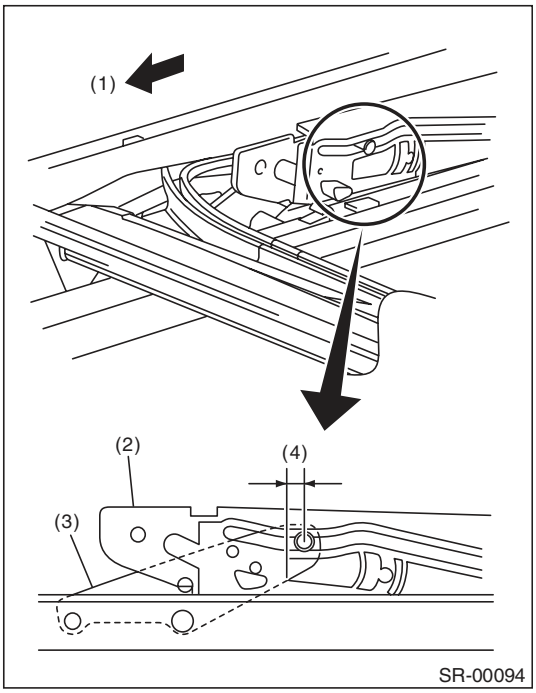

(1) Front
(2) Coulisse ASSY
(3) Link ASSY
(4) 4.7 mm (0.185 in)

2) Install the motor assembly.
3) Connect the harness connector of motor assembly, and then connect the battery ground cable to battery.
4) Perform the initialize operation of motor.
(1) Tilt up the glass lid.
(2) Release the switch once, and press the tilt up switch again for 15 seconds.
(3) When the glass lid is raised a little and on tilt up position, release the switch for the moment.
(4) Keep pressing the tilt up switch within 5 seconds from releasing the switch, glass lid automatically performs the tilts down → slides open → slides close operation, then the initialize operation is completed.

5) Check the operation of sunroof with following table.

Operation	Switch position
(1) Glass lid closes completely.	Close
(2) Glass lid tilt up to the top position.	Tilt up
(3) Glass lid closes completely.	Tilt down
(4) Glass lid opens completely.	Open
(5) Glass lid closes 150 mm (5.91 in) away from the completely closed position.	Close
(6) Glass lid closes completely.	Close

6) Install the trim in the reverse order of removal.

2. WAGON MODEL

Check that the wedge of the glass lid (front) bracket is in contact at the vehicle forward direction end. At this time, the lid is at the fully open position.

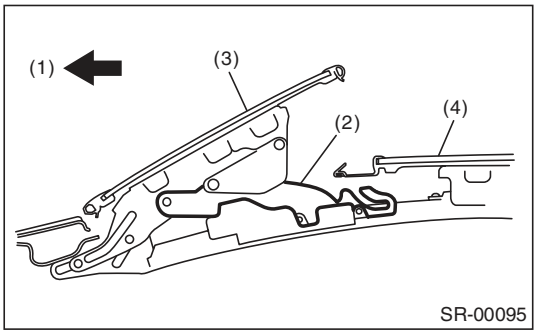

(1) Front
(2) Wedge
(3) Glass lid (Front)
(4) Glass lid (Rear)

1) Install the motor assembly.
2) After the installation of the motor assembly, check again that the wedge of glass lid (front) bracket part is in contact at the vehicle forward direction end.
3) Connect the harness connector of motor assembly, and then connect the battery ground cable to battery.
4) Perform the initialize operation of motor.
• When replacing the motor, fully close the glass once and perform position initialization, because the movement of the glass lid will shift to inching operation.
• When reusing the motor, operate the auto-reverse function five times in a row to shift to the inching operation, then perform the initialization of position.

5) Check the operation of sunroof with following table.

Operation	Switch position
(1) Glass lid (front) and glass lid (rear) closes completely.	Close
(2) Glass lid (front) tilts up to the ventilating position.	Open
(3) Glass lid (front) tilts up to top position, and glass lid (rear) opens to just before the completely open position.	Open
(4) Glass lid (rear) opens completely.	Open
(5) Glass lid (rear) closes at a position 150 mm (5.91 in) from rear end of the tilted up glass lid (front).	Close
(6) Glass lid (rear) closes completely, and glass lid (front) stops in the ventilating position.	Close
(7) Glass lid (front) lowers, and then glass lid (front) and glass lid (rear) closes completely.	Close

6) Install the trim in the reverse order of removal.

6. Sunroof Switch

A: REMOVAL

1) Disconnect the ground cable from the battery.
2) Remove the spot map light lens (A) and sunroof switch mounting screws (B).

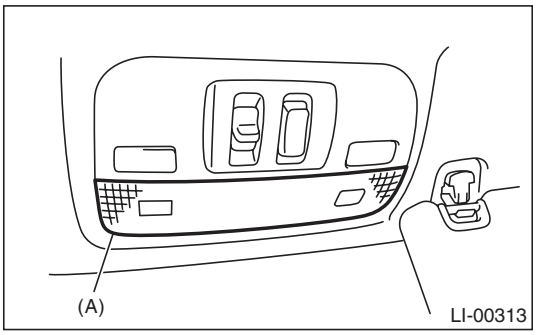

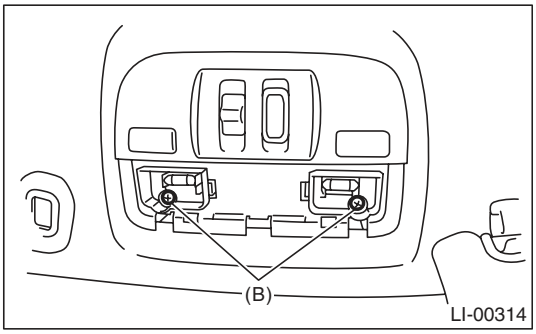

3) Disconnect the harness connector, and then remove the sunroof switch.

B: INSTALLATION

Install in the reverse order of removal.

C: INSPECTION

1. SEDAN MODEL

Measure the sunroof switch resistance.

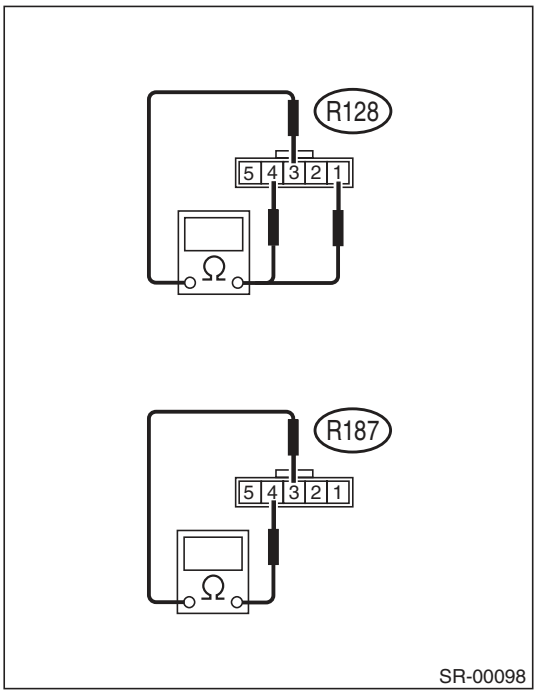

Switch position	Terminal No.	Standard	Connector No.
Open	1 and 3	Less than 1 Ω	R128
Close	3 and 4	Less than 1 Ω	
Tilt up	1 and 3	Less than 1 Ω	R187
Tilt down	3 and 4	Less than 1 Ω	

2. WAGON MODEL

Measure the sunroof switch resistance.

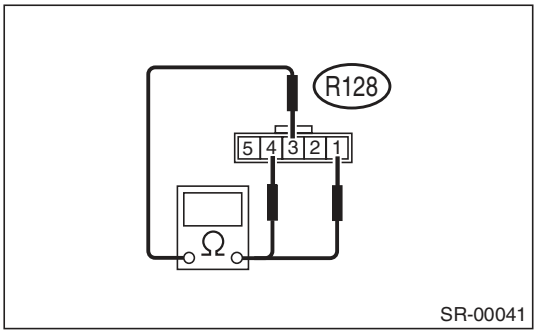

Switch position	Terminal No.	Standard
Open	1 and 3	Less than 1 Ω
Close	3 and 4	Less than 1 Ω

NOTE:
If the glass lid does not operate or is not supplied with power, move the glass lid using the hexagon wrench. <Ref. to SR-8, FORCED DRIVE, Glass Lid.>

7. Sunshade

A: REMOVAL

1. SEDAN MODEL

1) Remove the glass lid. <Ref. to SR-6, SEDAN MODEL, REMOVAL, Glass Lid.>
2) Loosen the TORX® bolt to remove the front sunshade bracket.

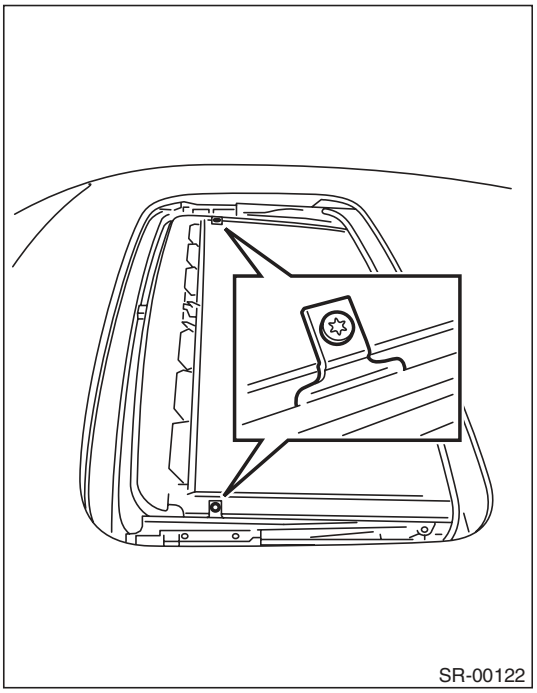

3) Pull the sunshade until the rear sunshade bracket comes into the sight, then loosen the TORX® bolts to remove the sunshade.

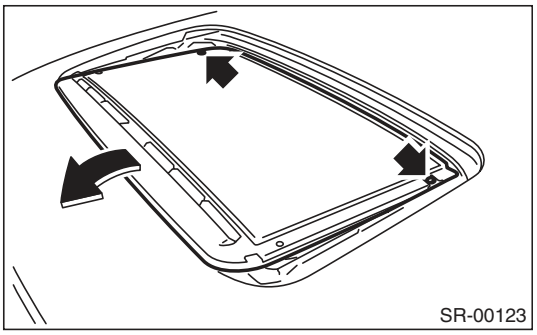

2. WAGON MODEL

1) Remove the frame assembly.
2) Remove the shade stopper (A) of the sunshade.

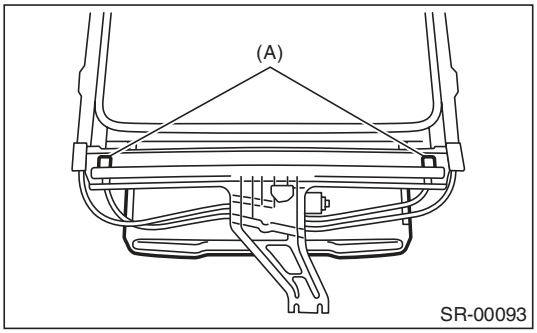

3) Pull out the sunshade (A) from the sunroof frame.

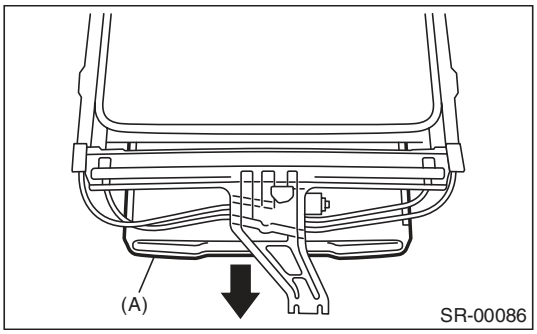

B: INSTALLATION

Install in the reverse order of removal.

C: INSPECTION

1. CHECK FOR MOVING LOAD OF SUNSHADE

1) Attach a spring scale to sunshade edge using a cloth.

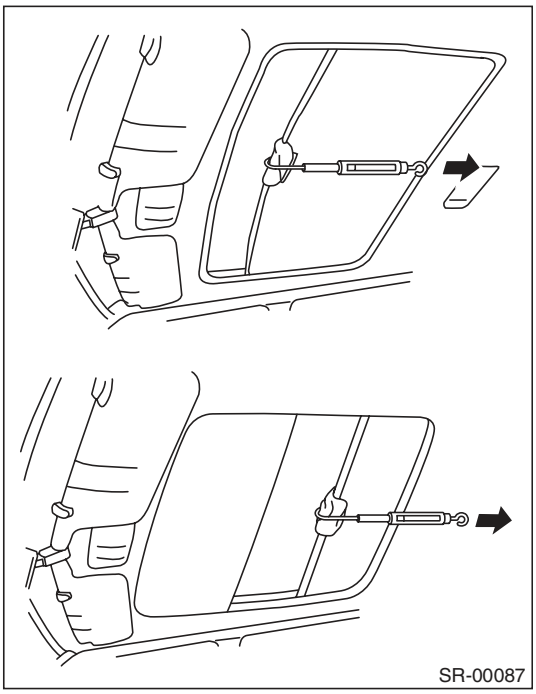

2) Pull the spring scale to measure moving load of the sunshade.

Moving load of sunshade:
Standard
18.0±5.0 N (1.8±0.5 kgf, 13±3.7 lbf)

NOTE:
Moving load is larger at the beginning of pulling a spring scale, so take a spring scale reading while sunshade sliding smoothly.

3) If moving load exceeds specifications, check the glass lid, sunshade and frame assembly for improper installation.

1. General Description

A: COMPONENT

1. FRONT GRILLE

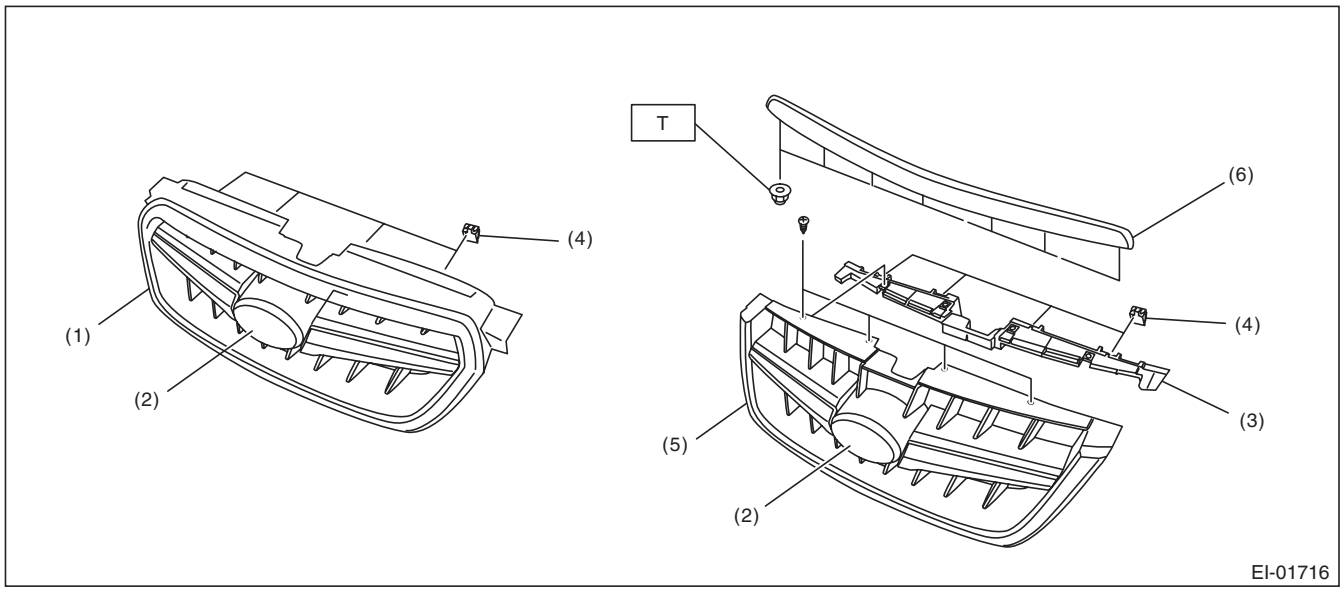

(1) Front grille ASSY
(2) Front grille emblem
(3) Front grille bracket
(4) Front grille clip
(5) Front grille ASSY (OUTBACK model)
(6) Front upper grille (OUTBACK model)

Tightening torque:N·m (kgf-m, ft-lb)
T: 4.5 (0.46, 3.32)

2. UNDER COVER

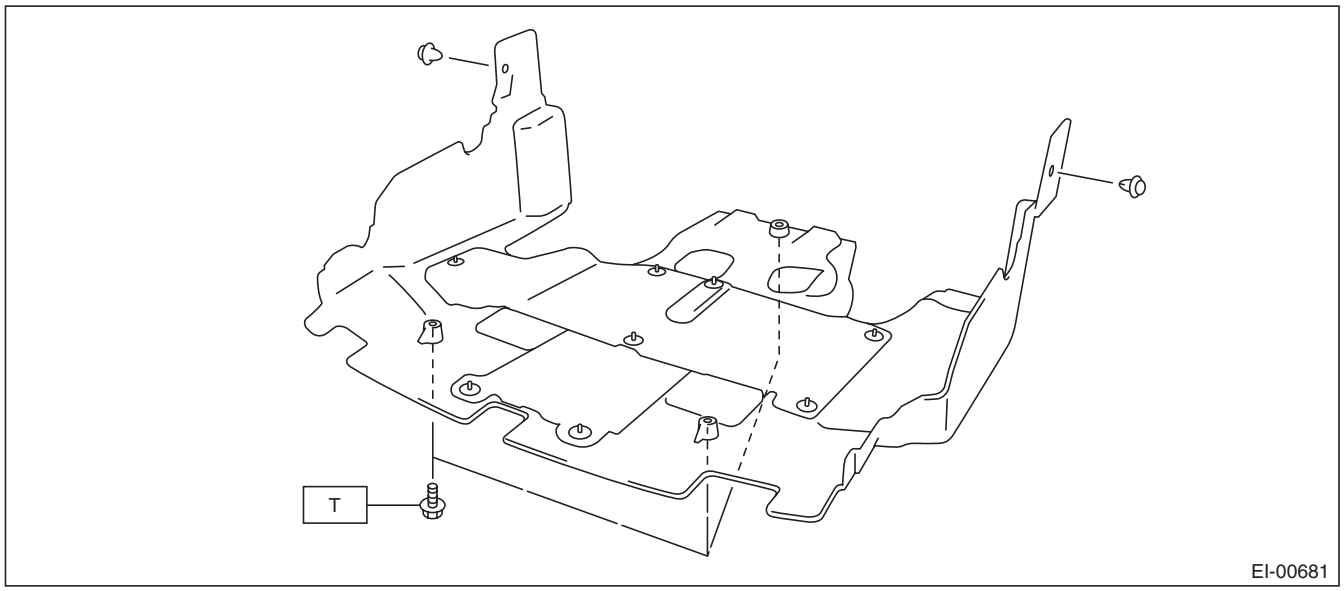

Tightening torque:N·m (kgf-m, ft-lb)
T: 17.5 (1.78, 12.9)

3. UNDER PROTECTOR

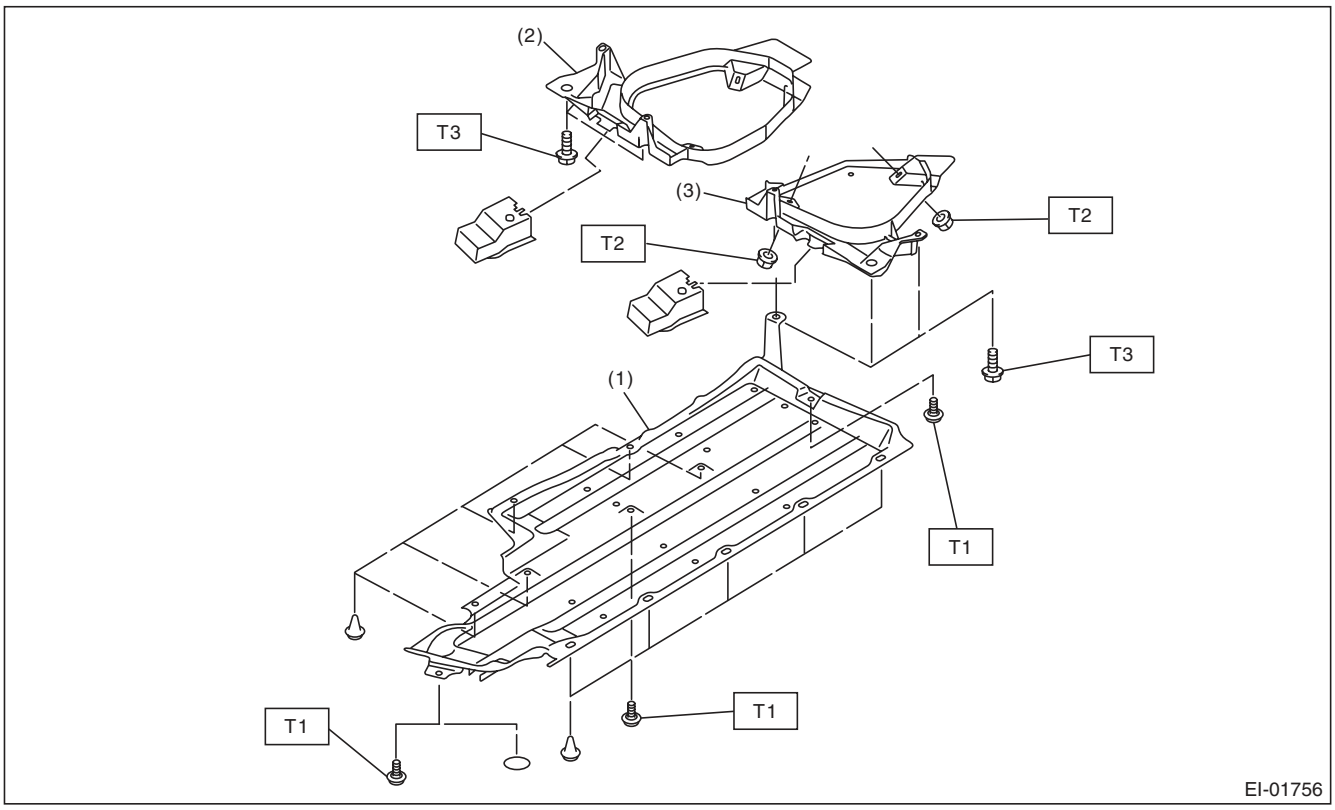

(1) Floor under protector
(2) Fuel tank protector RH
(3) Fuel tank protector LH

Tightening torque:N·m (kgf-m, ft-lb)
T1: 7.5 (0.76, 5.5)
T2: 9 (0.92, 6.4)
T3: 17.5 (1.78, 12.9)

4. FRONT HOOD GRILLE

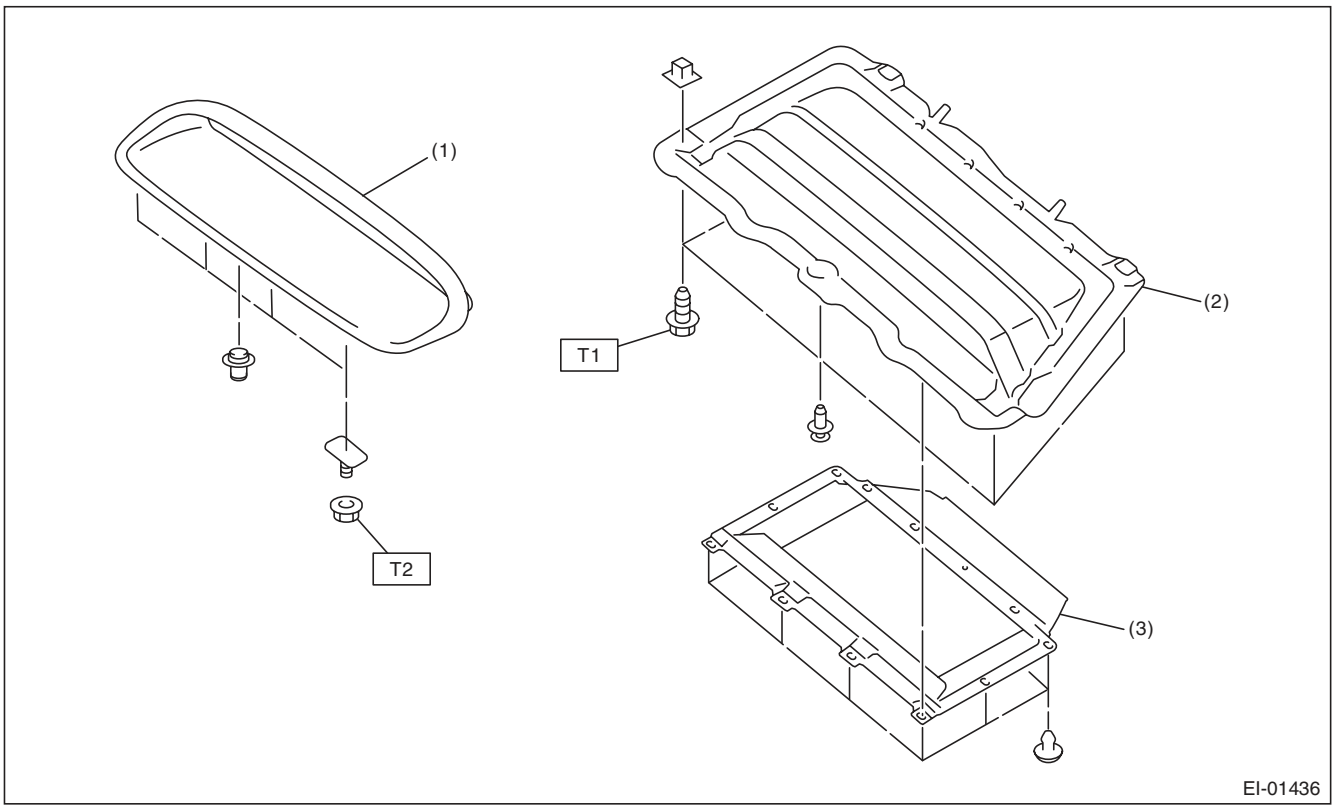

(1) Front hood grille
(2) Grille duct upper
(3) Grille duct lower

Tightening torque:N·m (kgf-m, ft-lb)
T1: 1.0 (0.1, 0.74)
T2: 4.5 (0.46, 3.32)

5. FRONT BUMPER

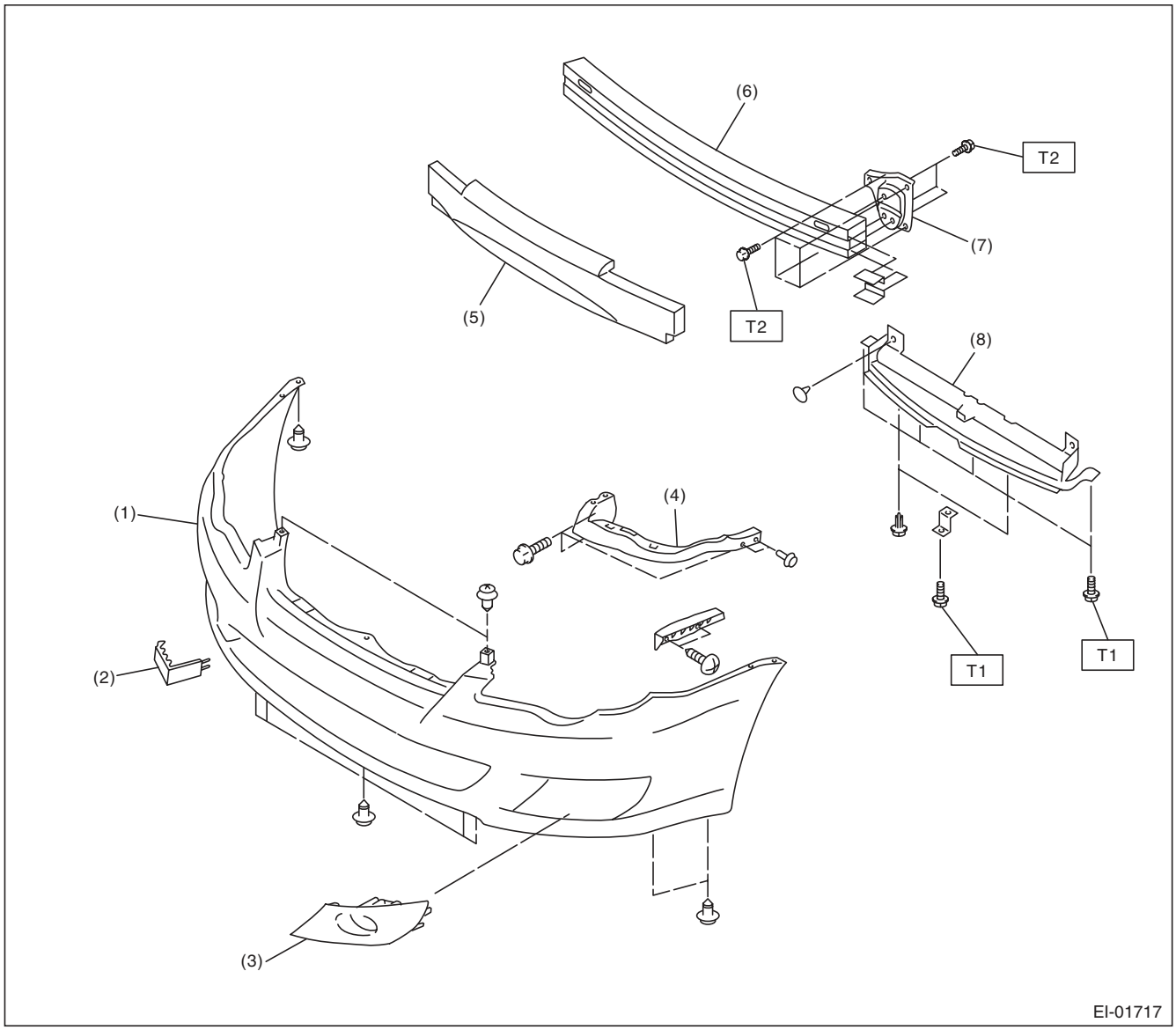

(1)	Bumper face	(5)	Energy absorber foam
(2)	Towing hook cover	(6)	Bumper beam reinforcement
(3)	Fog light cover	(7)	Bumper beam bracket
(4)	Side bracket	(8)	Radiator guide

Tightening torque:N·m (kgf-m, ft-lb)
T1: 7.5 (0.76, 5.5)
T2: 33 (3.4, 24)

6. REAR BUMPER (SEDAN MODEL)

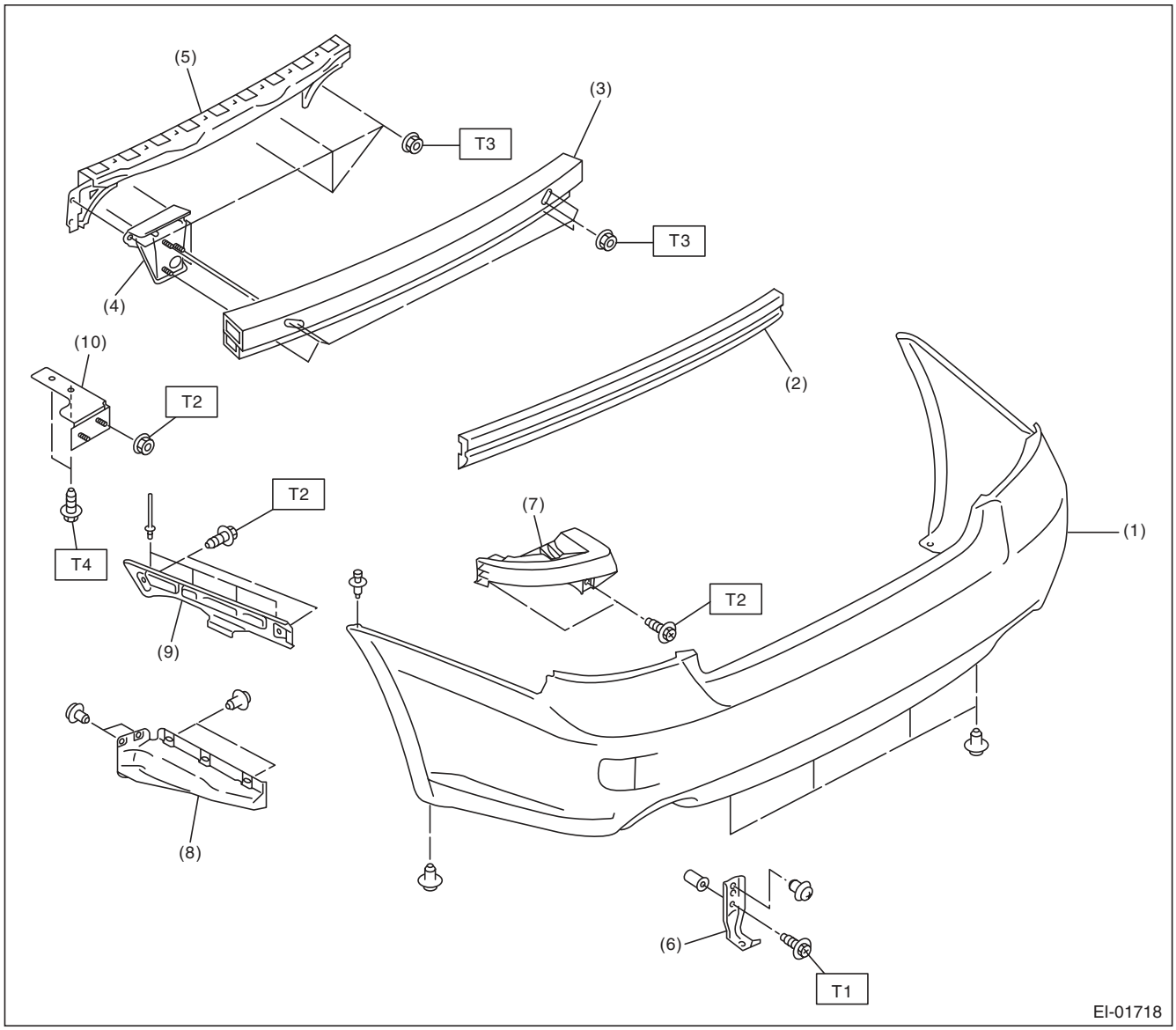

(1)	Bumper face	(7)	Bracket corner	***Tightening torque:N·m (kgf-m, ft-lb)***
(2)	Energy absorber foam	(8)	Bumper side support lower	***T1: 2 (0.2, 1.48)***
(3)	Bumper beam reinforcement	(9)	Bumper side support upper	***T2: 7.5 (0.76, 5.5)***
(4)	Bumper beam bracket	(10)	Rear bumper gusset (for installing trailer hitch, OUTBACK only)	***T3: 33 (3.4, 24)***
(5)	Beam upper rear			***T4: 72 (7.3, 53.1)***
(6)	Lower bracket			

7. REAR BUMPER (WAGON MODEL)

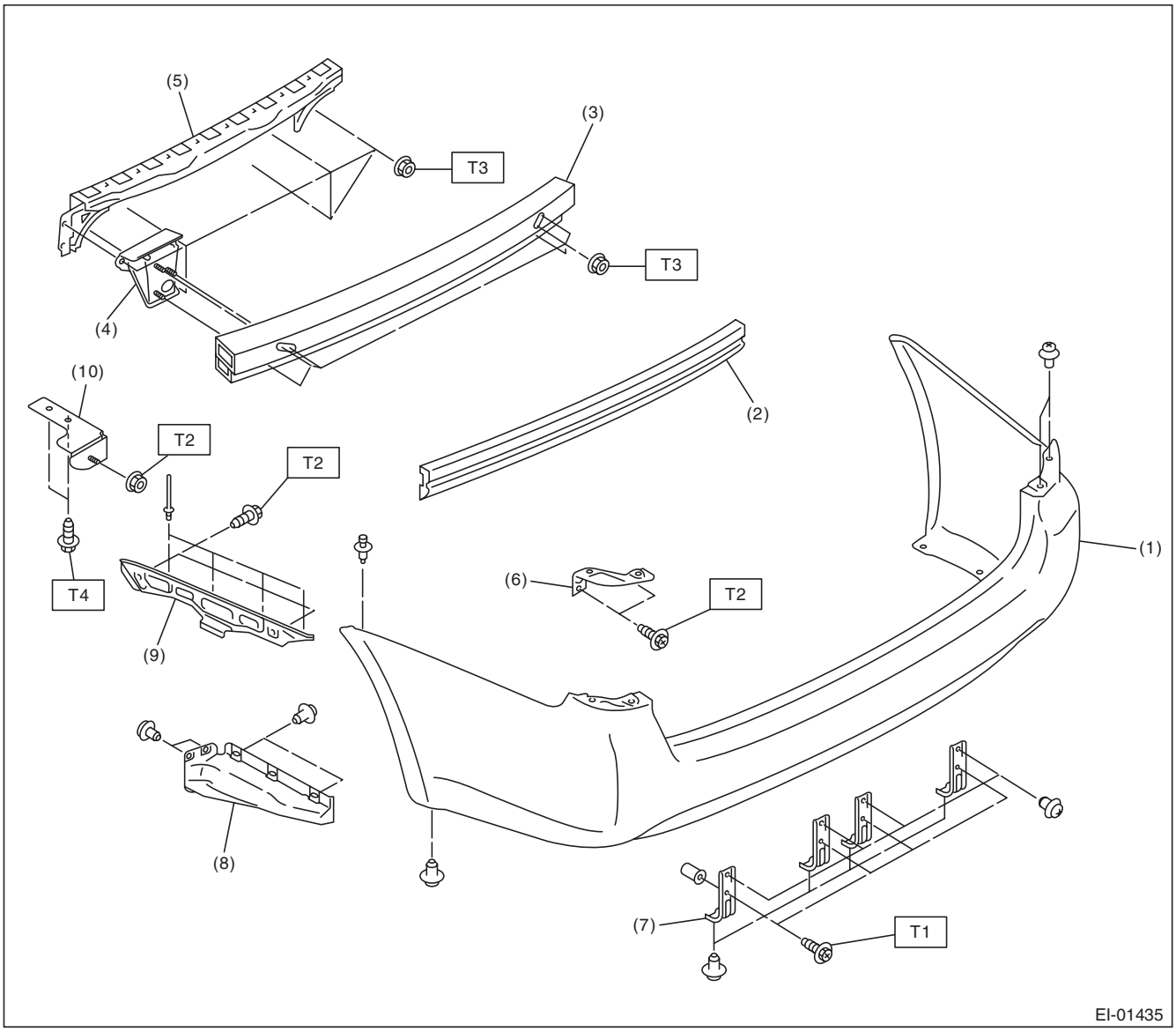

(1)	Bumper face	(7)	Lower bracket	***Tightening torque:N·m (kgf-m, ft-lb)***
(2)	Energy absorber foam	(8)	Bumper side support lower	***T1: 2 (0.2, 1.48)***
(3)	Bumper beam reinforcement	(9)	Bumper side support upper	***T2: 7.5 (0.76, 5.5)***
(4)	Bumper beam bracket	(10)	Rear bumper gusset (for installing trailer hitch, OUTBACK only)	***T3: 33 (3.4, 24)***
(5)	Beam upper rear			***T4: 72 (7.3, 53.1)***
(6)	Bracket corner			

8. MUD GUARD

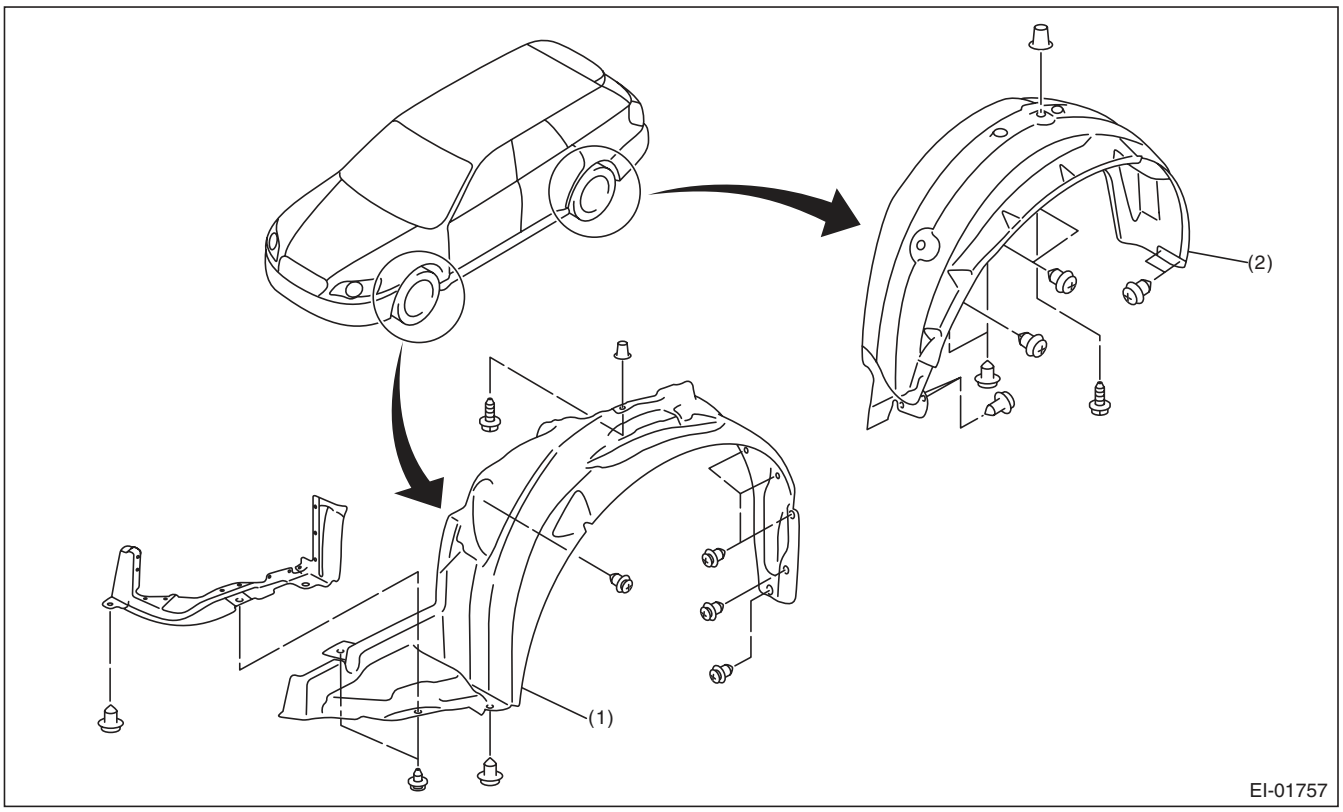

(1) Front mud guard
(2) Rear mud guard

9. COWL PANEL

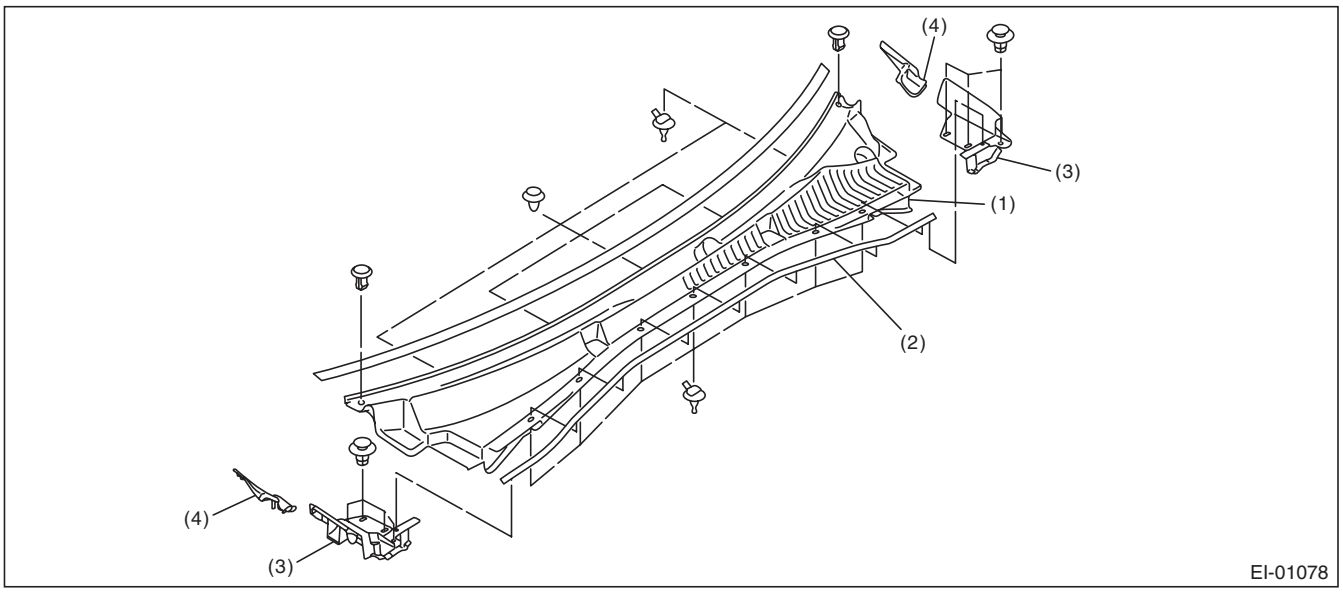

(1) Cowl panel
(2) Weather strip
(3) Cover cowl panel
(4) Cowl side panel

10.ROOF SPOILER

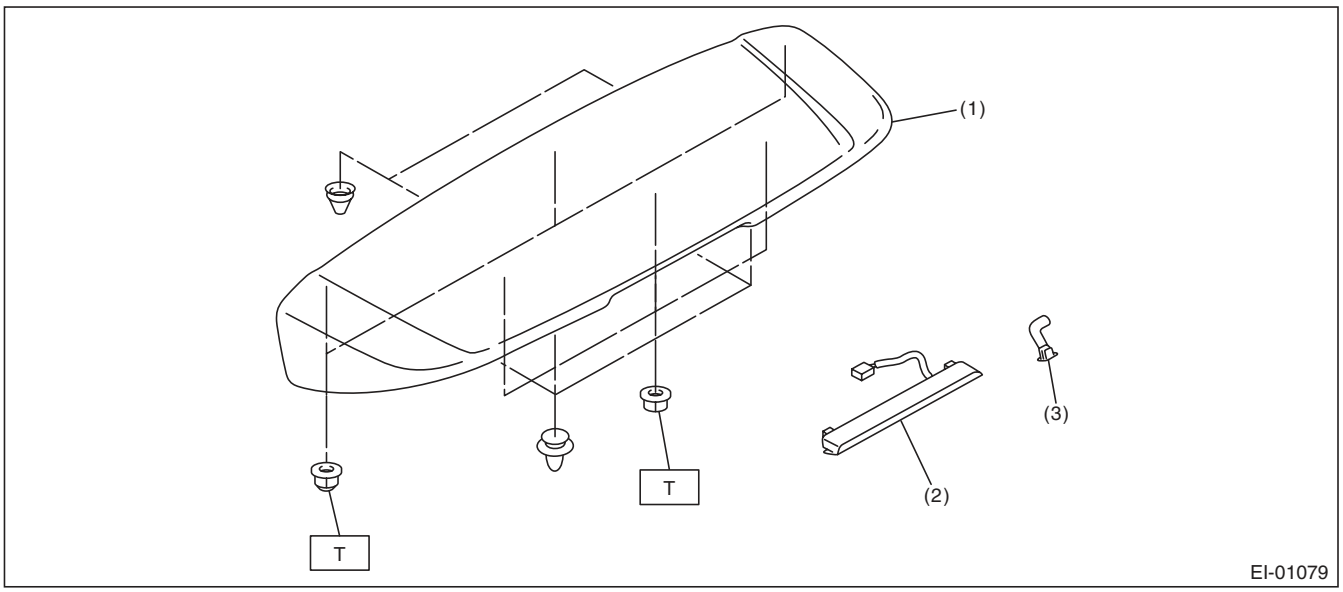

(1) Roof spoiler
(2) High-mounted stop light
(3) Washer nozzle

Tightening torque:N·m (kgf-m, ft-lb)
T: 4.5 (0.46, 3.32)

11.SIDE SILL SPOILER

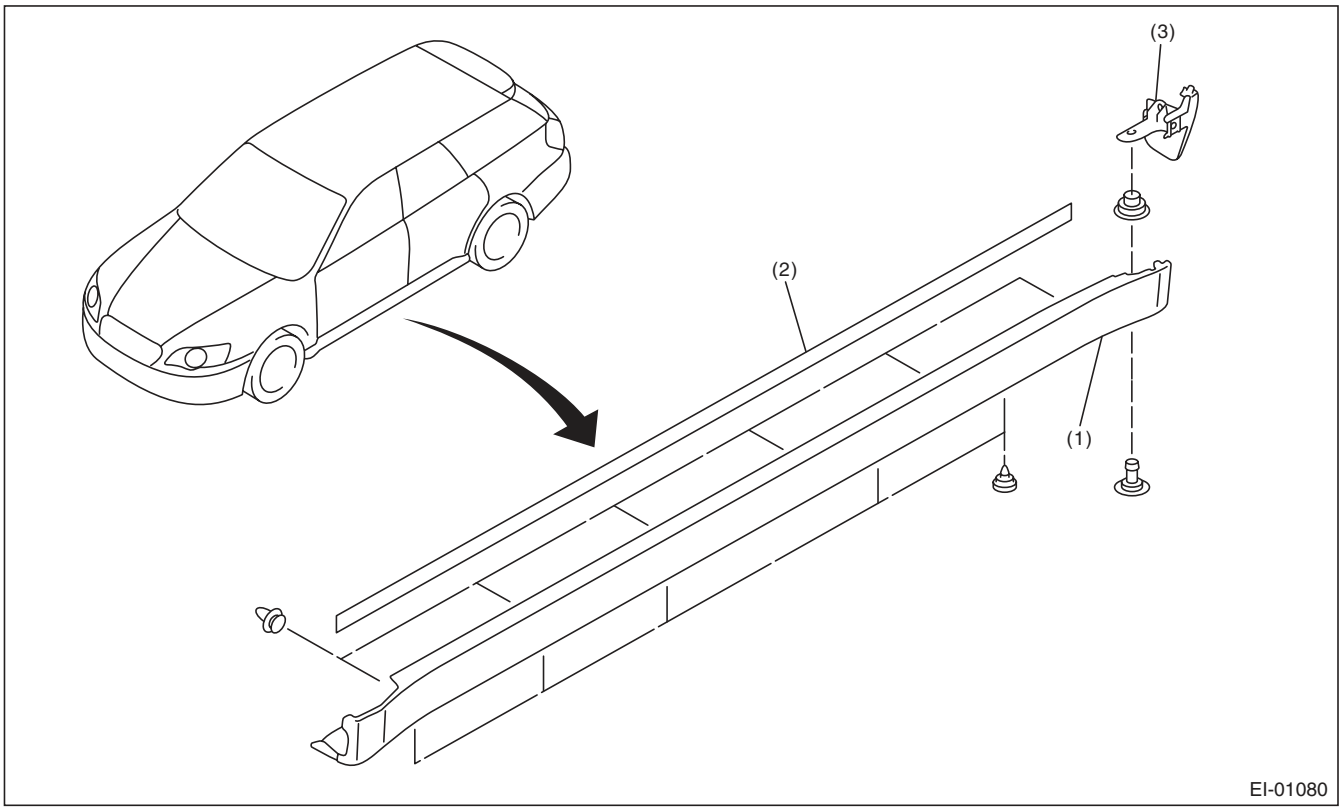

(1) Side sill spoiler
(2) Double-sided tape
(3) Air flap side sill end

12.ROOF RAIL

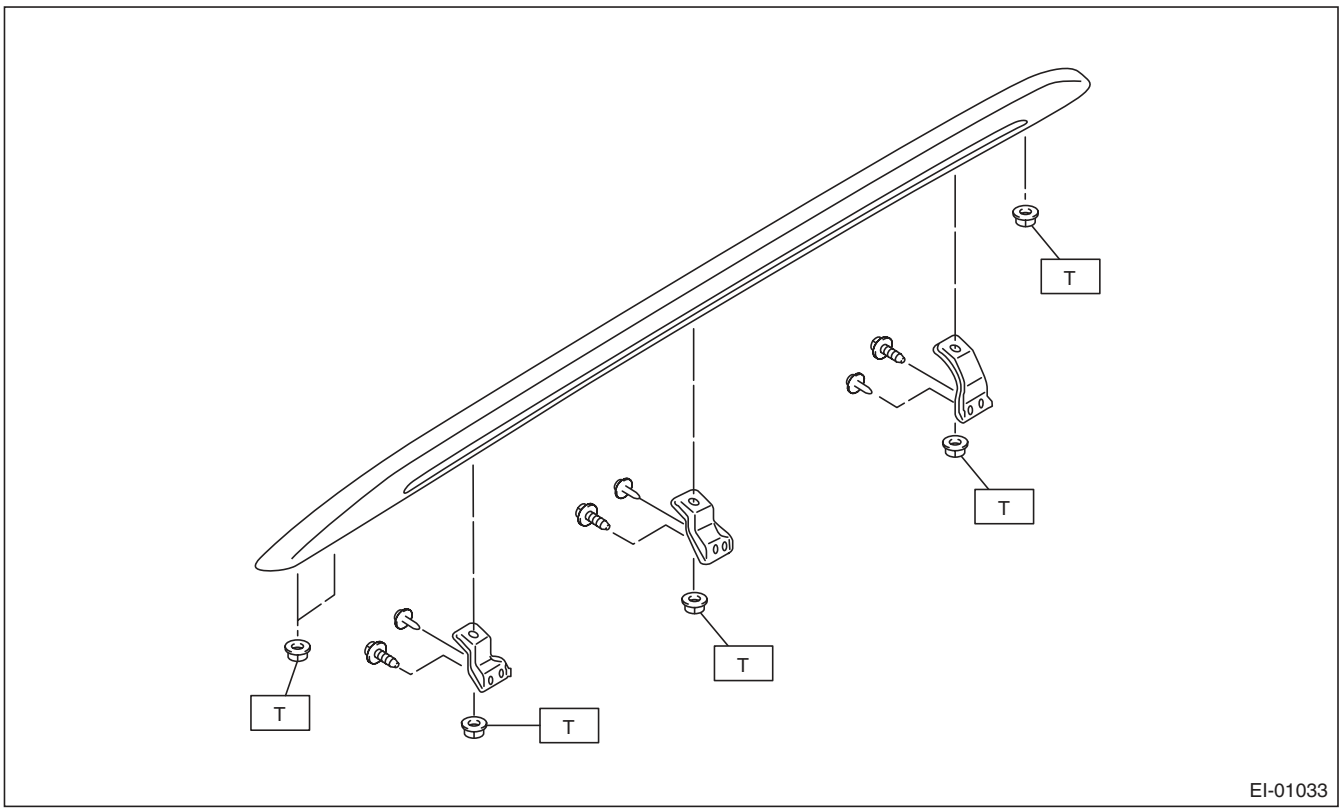

Tightening torque:N·m (kgf-m, ft-lb)
T: 7.5 (0.76, 5.5)

13.SIDE PROTECTOR

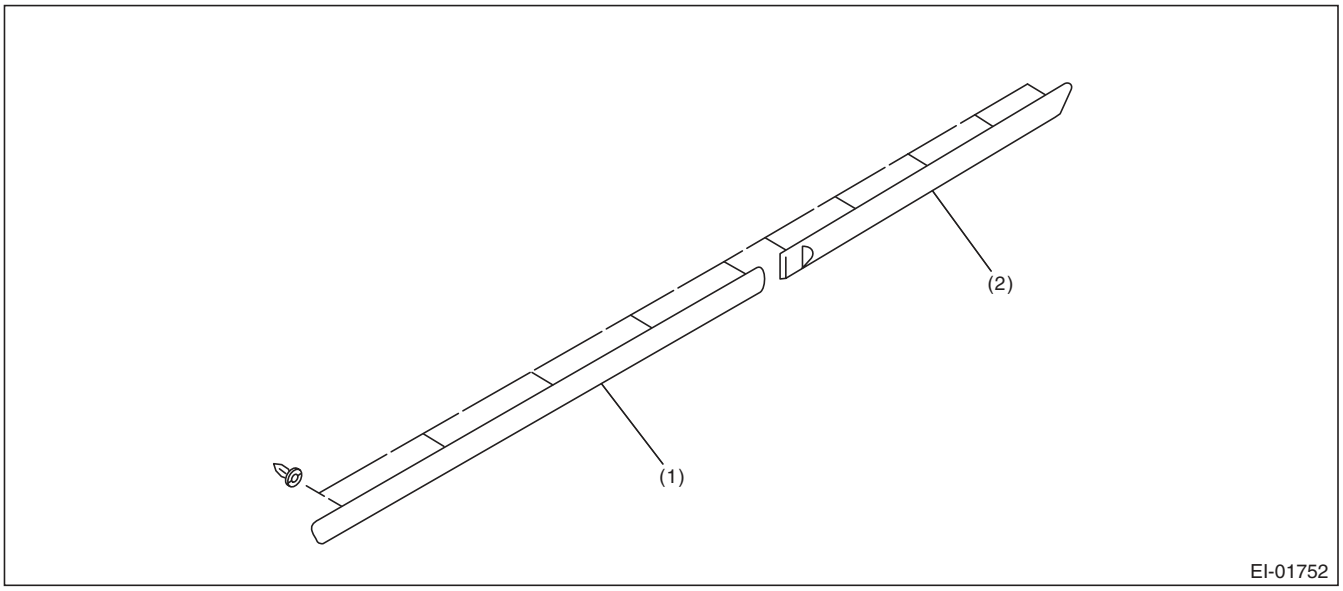

(1) Front door protector (2) Rear door protector

14.SIDE GARNISH

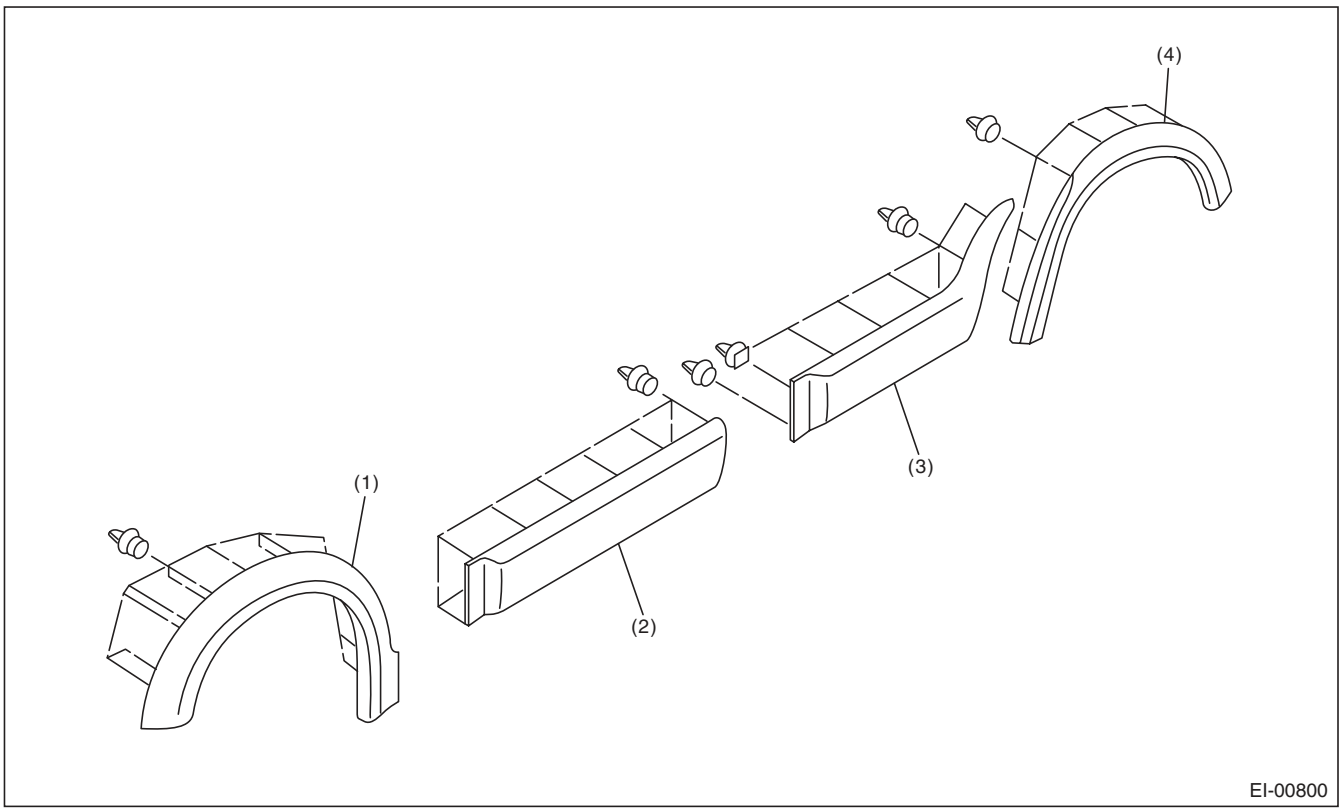

(1) Front fender garnish
(2) Front door garnish
(3) Rear door garnish
(4) Rear quarter garnish

15.TRUNK LID GARNISH

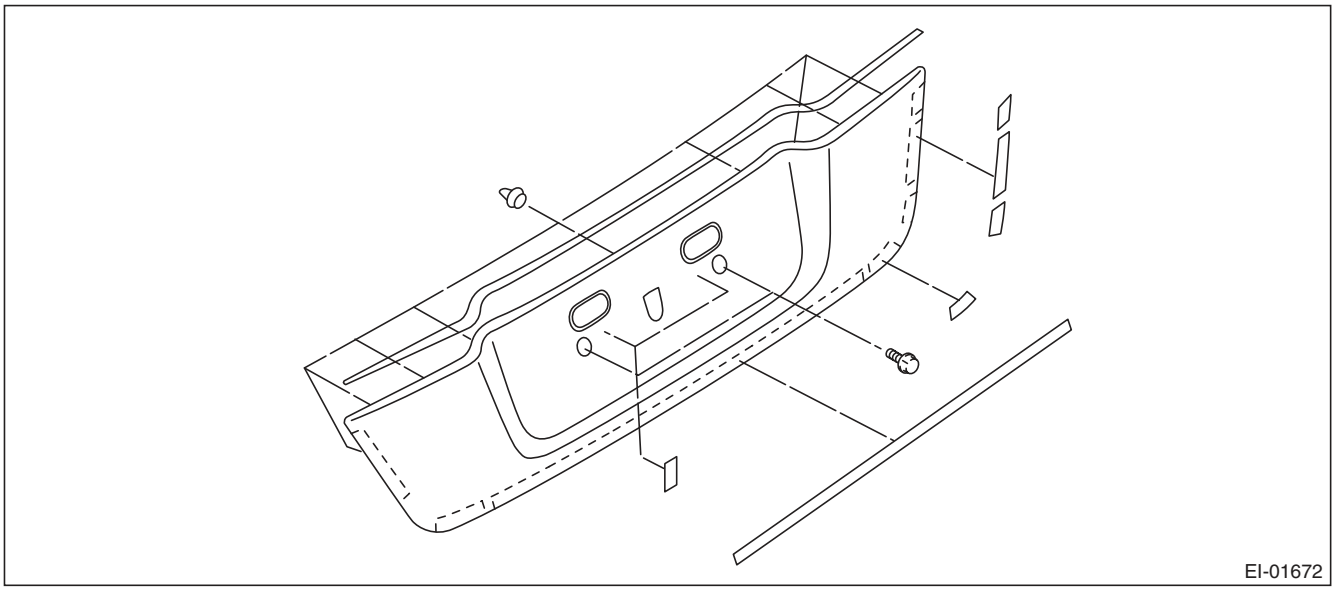

16.REAR GATE GARNISH

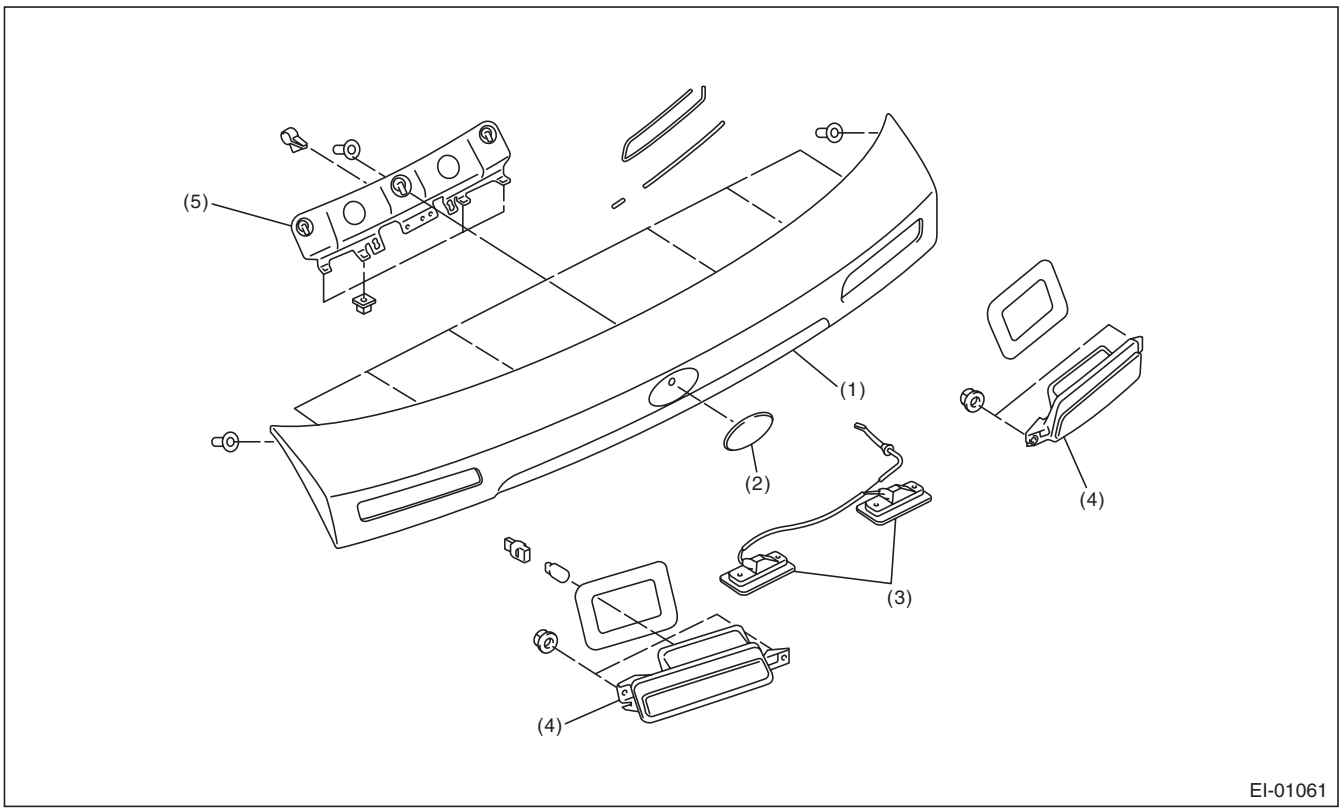

(1)	Rear gate garnish	(3)	License plate light	(5)	License plate light bracket
(2)	Ornament	(4)	Back-up light		

17.DOOR TRIM

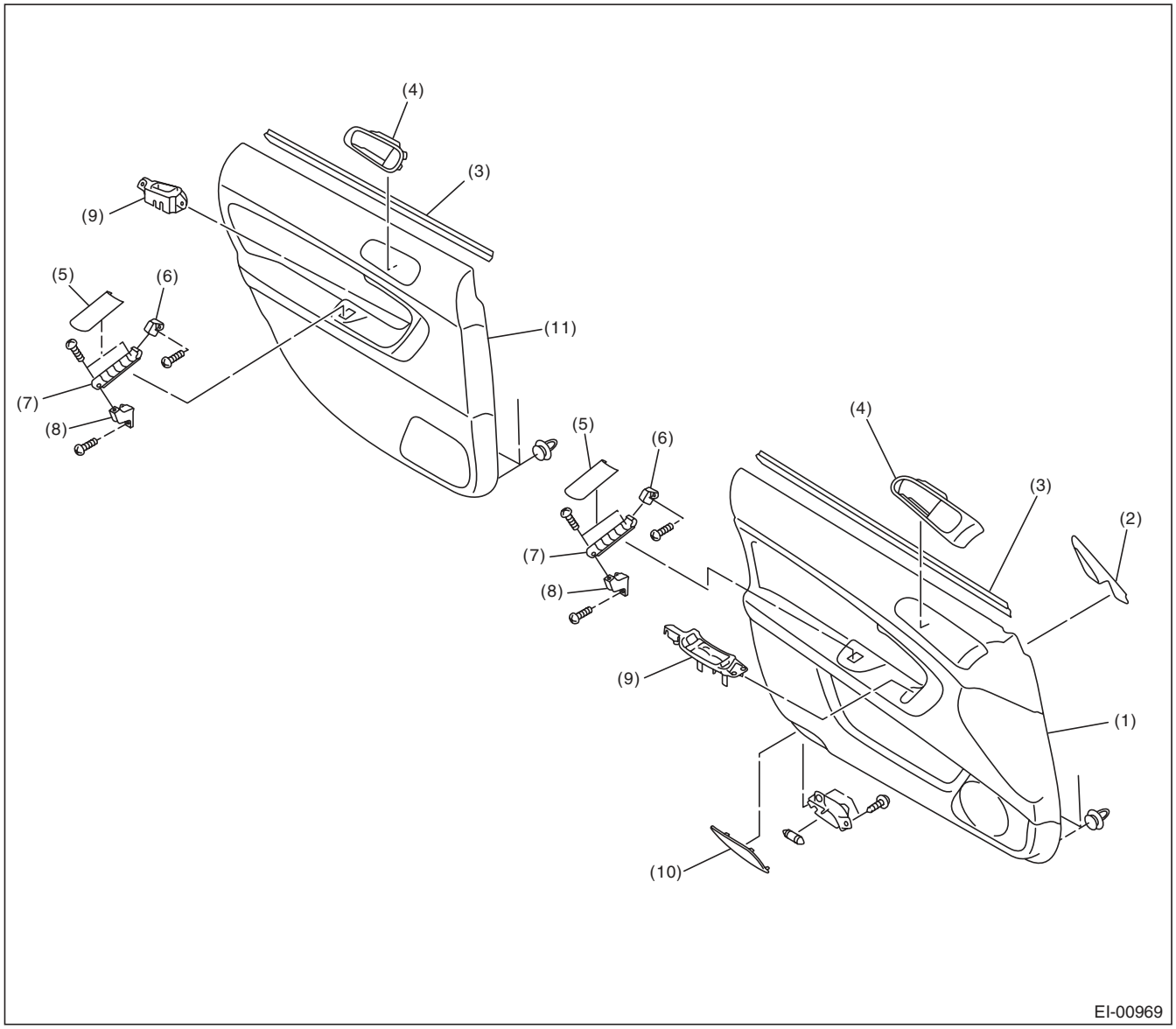

(1)	Front door trim	(5)	Door grip	(9)	Power window switch
(2)	Gusset cover	(6)	Door grip bracket upper	(10)	Step light cover
(3)	Upper weather strip	(7)	Door grip frame	(11)	Rear door trim
(4)	Inner remote cover	(8)	Door grip bracket lower		

18.CONSOLE BOX

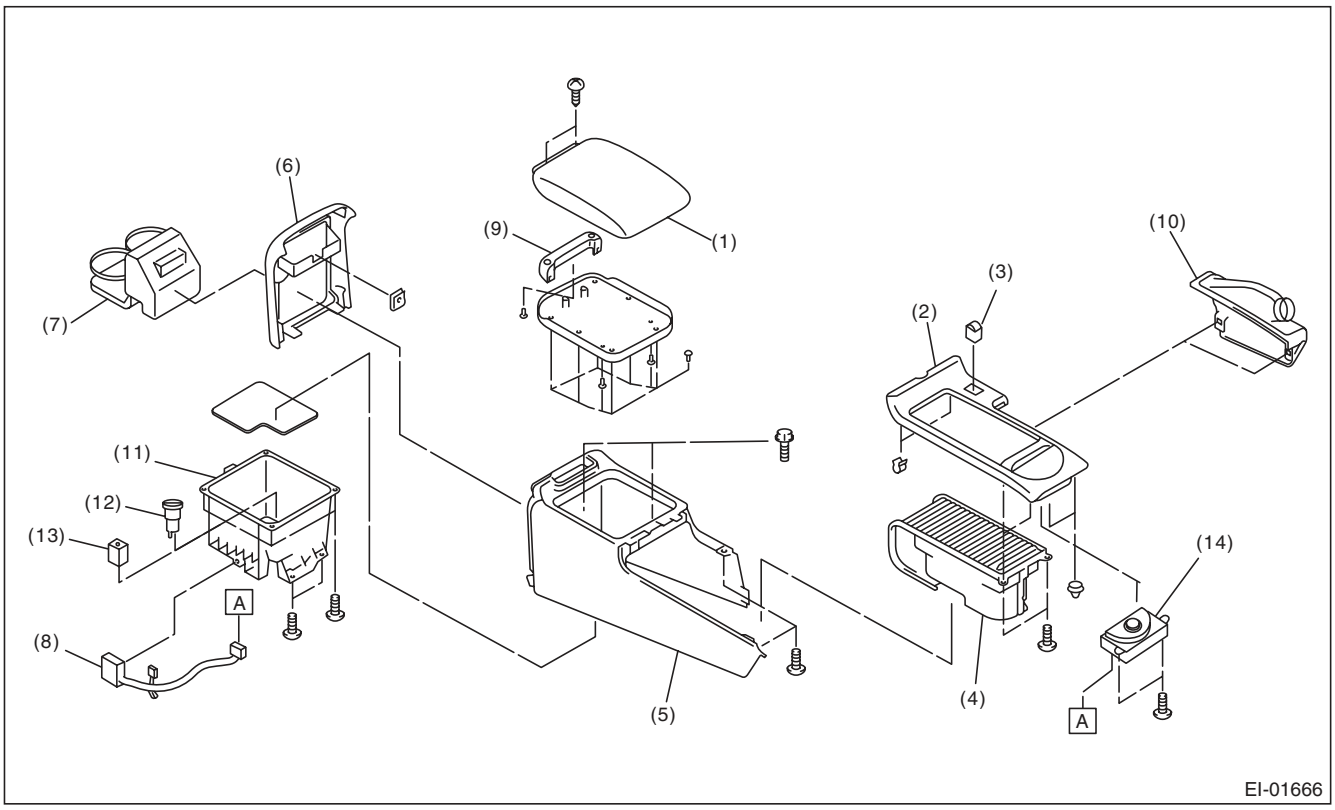

(1)	Upper lid	(6)	Rear lid	(11)	Console pocket
(2)	Console cover	(7)	Rear cup holder	(12)	Front accessory power supply socket
(3)	Seat heater switch	(8)	Console box harness		
(4)	Front cup holder	(9)	Lid hinge	(13)	AUX input terminal
(5)	Console box outer	(10)	Parking brake lever boot	(14)	SI-DRIVE switch

19.INSTRUMENT PANEL

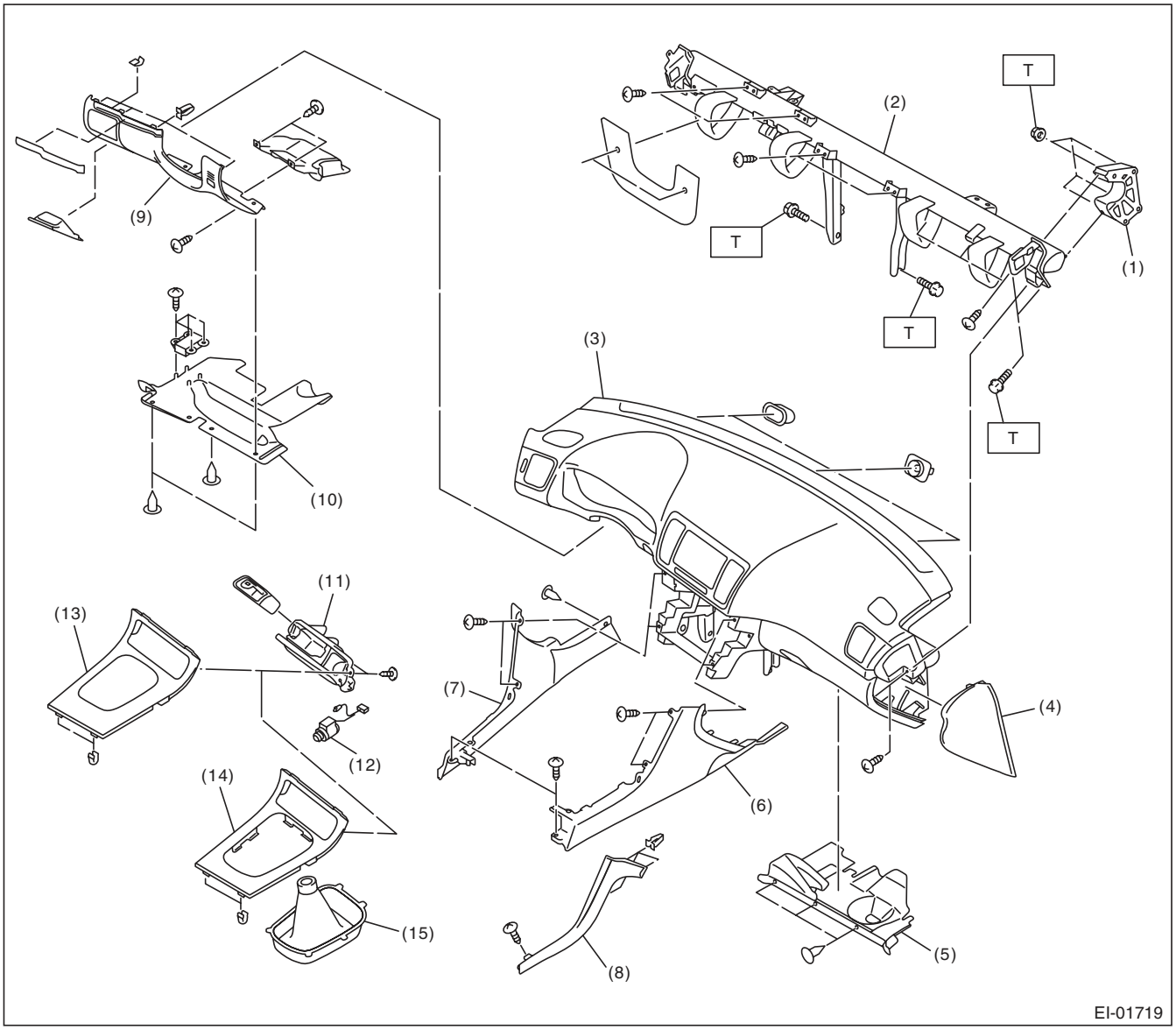

(1) Steering support beam bracket
(2) Steering support beam
(3) Instrument panel pad and frame ASSY
(4) Instrument panel side cover
(5) Glove box lower cover
(6) Console side panel RH
(7) Console side panel LH
(8) Console side garnish
(9) Instrument panel lower cover upper
(10) Instrument panel lower cover under
(11) Ash tray holder
(12) Front accessory power supply socket
(13) Console front panel (AT model)
(14) Console front panel (MT model)
(15) Shift lever boot (MT model)

Tightening torque:N·m (kgf-m, ft-lb)
T: 25 (2.55, 18.4)

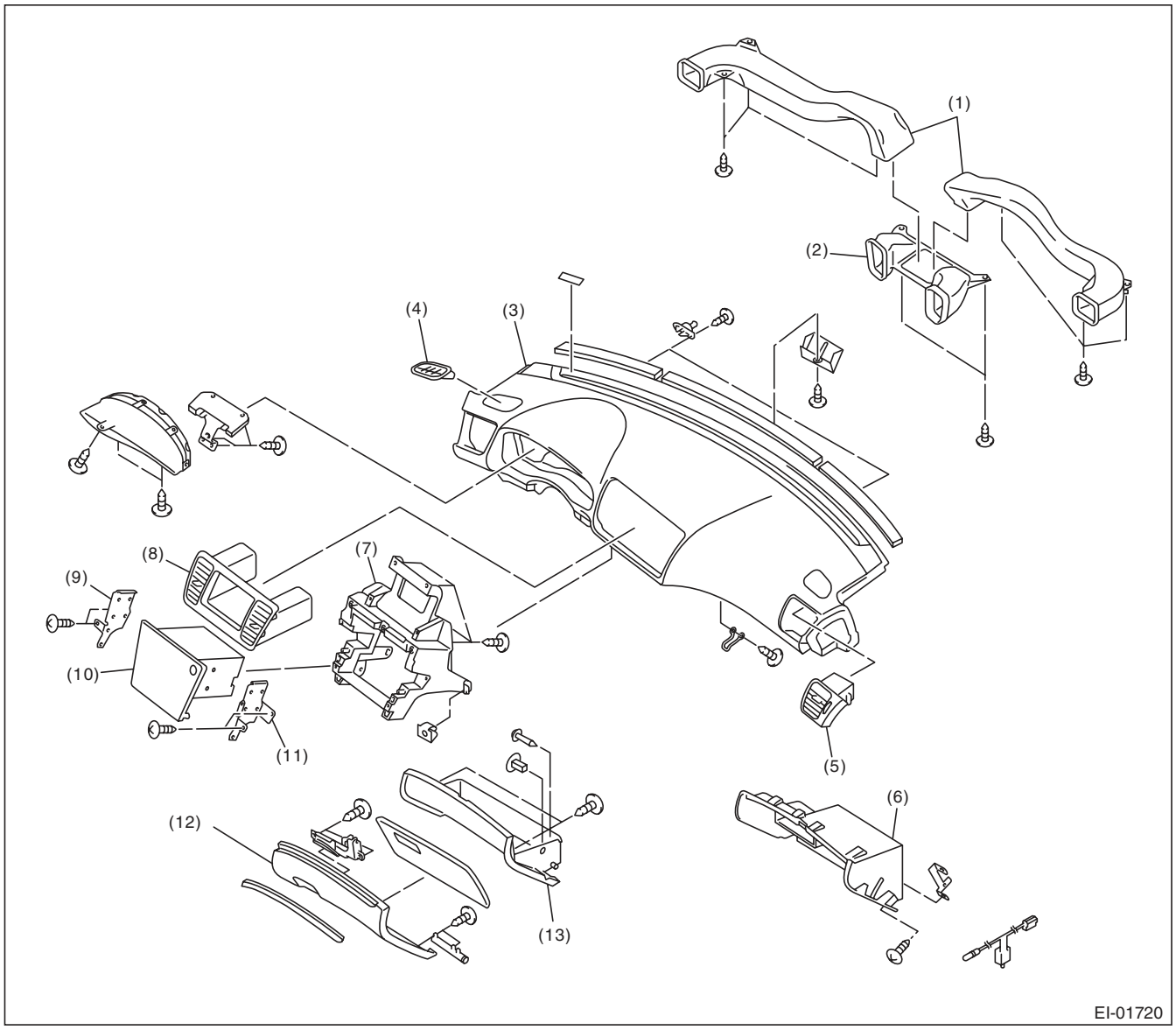

(1)	Air vent side duct	(6)	Glove box panel	(10)	Center panel
(2)	Air vent center duct	(7)	Center console frame	(11)	Audio bracket (RH)
(3)	Instrument panel pad and frame	(8)	Air vent center grille	(12)	Glove box lid
(4)	Air vent defroster grille	(9)	Audio bracket (LH)	(13)	Glove box
(5)	Air vent side grille				

20.INNER TRIM (SEDAN MODEL)

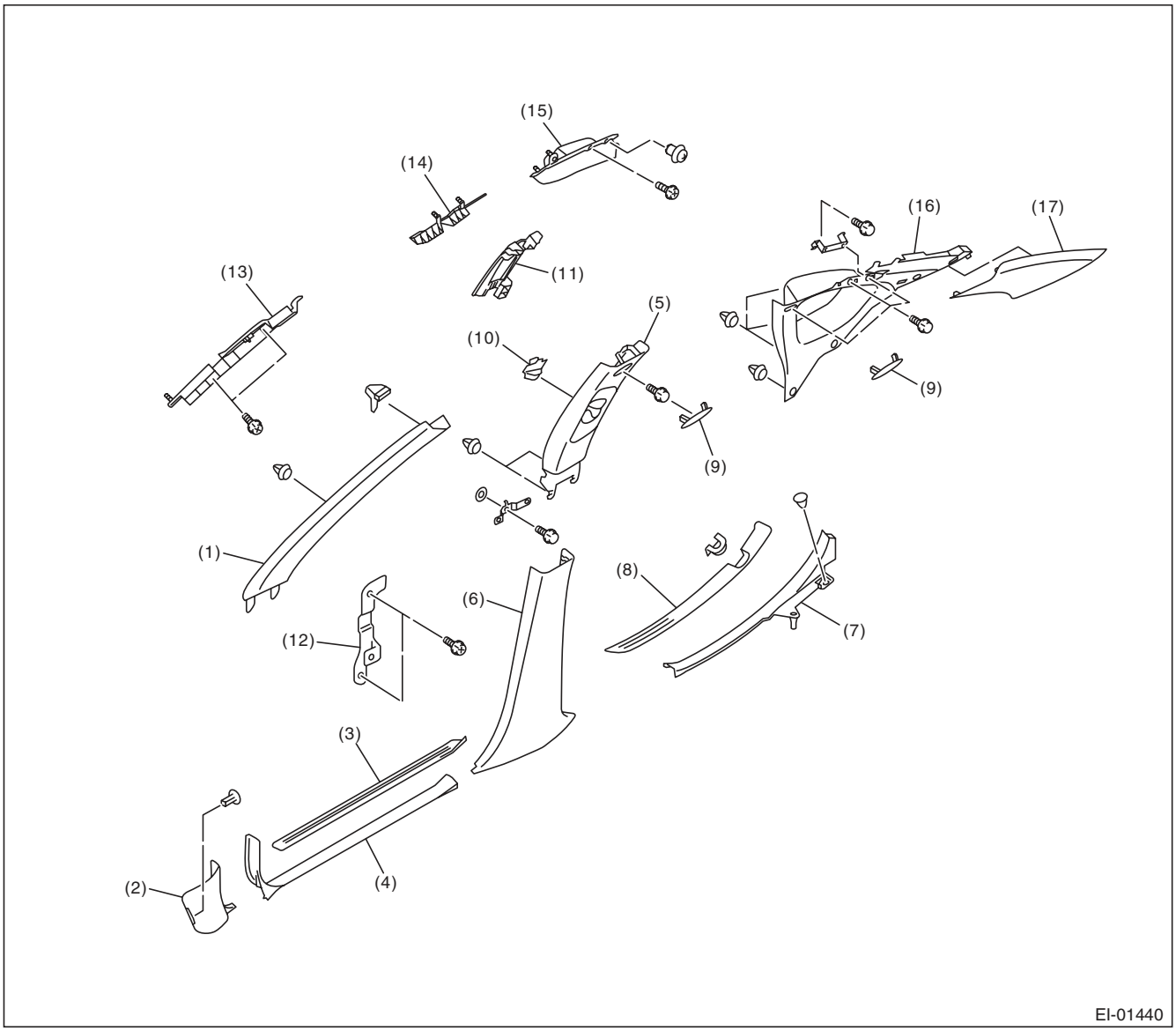

(1)	Front pillar upper trim	(7)	Rear inside scuff plate	(12)	Center pillar inner protector lower
(2)	Front pillar lower trim	(8)	Rear outside scuff plate	(13)	Curtain airbag guide front
(3)	Front outside scuff plate	(9)	Bolt cover	(14)	Curtain airbag guide center
(4)	Front inside scuff plate	(10)	Seat belt shoulder anchor adjuster button	(15)	Curtain airbag guide rear
(5)	Center pillar upper trim			(16)	Rear quarter trim front
(6)	Center pillar lower trim	(11)	Center pillar inner protector upper	(17)	Rear quarter trim rear

21.INNER TRIM (WAGON MODEL)

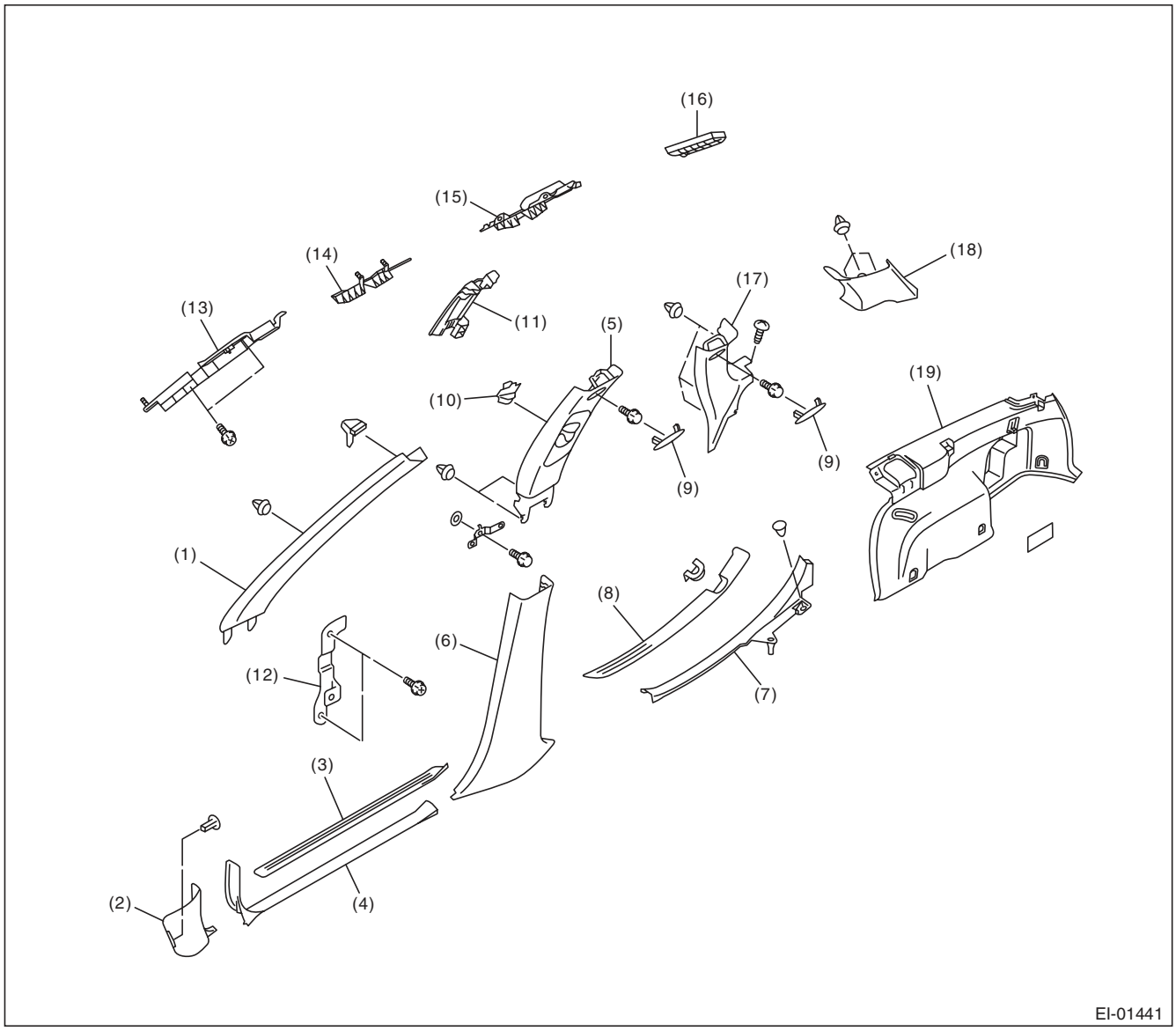

(1)	Front pillar upper trim	(8)	Rear outside scuff plate	(14)	Curtain airbag guide center
(2)	Front pillar lower trim	(9)	Bolt cover	(15)	Curtain airbag guide rear
(3)	Front outside scuff plate	(10)	Seat belt shoulder anchor adjuster button	(16)	Curtain airbag module protector
(4)	Front inside scuff plate			(17)	Rear quarter front pillar trim
(5)	Center pillar upper trim	(11)	Center pillar inner protector upper	(18)	Rear quarter rear pillar trim
(6)	Center pillar lower trim	(12)	Center pillar inner protector lower	(19)	Rear quarter lower trim
(7)	Rear inside scuff plate	(13)	Curtain airbag guide front		

22.REAR GATE TRIM

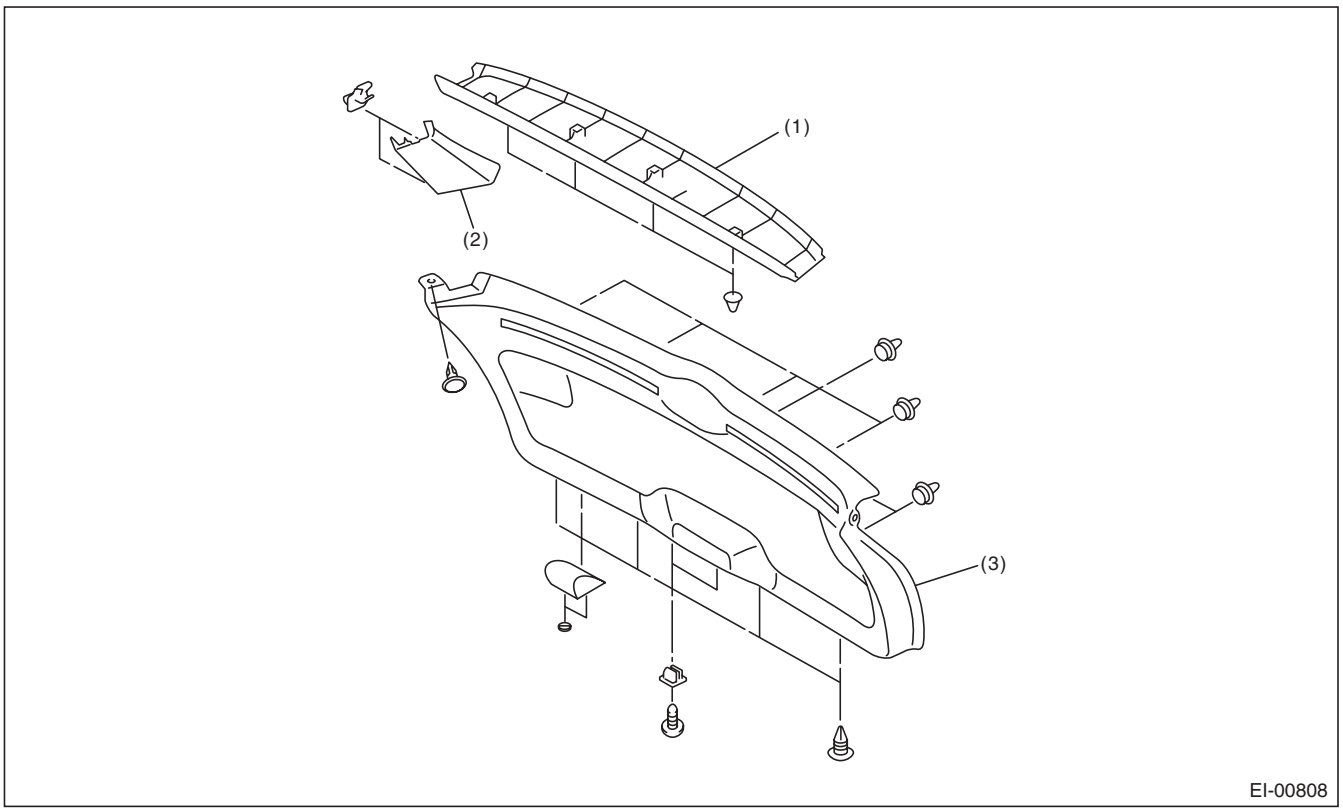

(1) Rear gate panel upper trim (2) Rear gate panel pillar trim (3) Rear gate panel lower trim

23.ROOF TRIM (SEDAN MODEL)

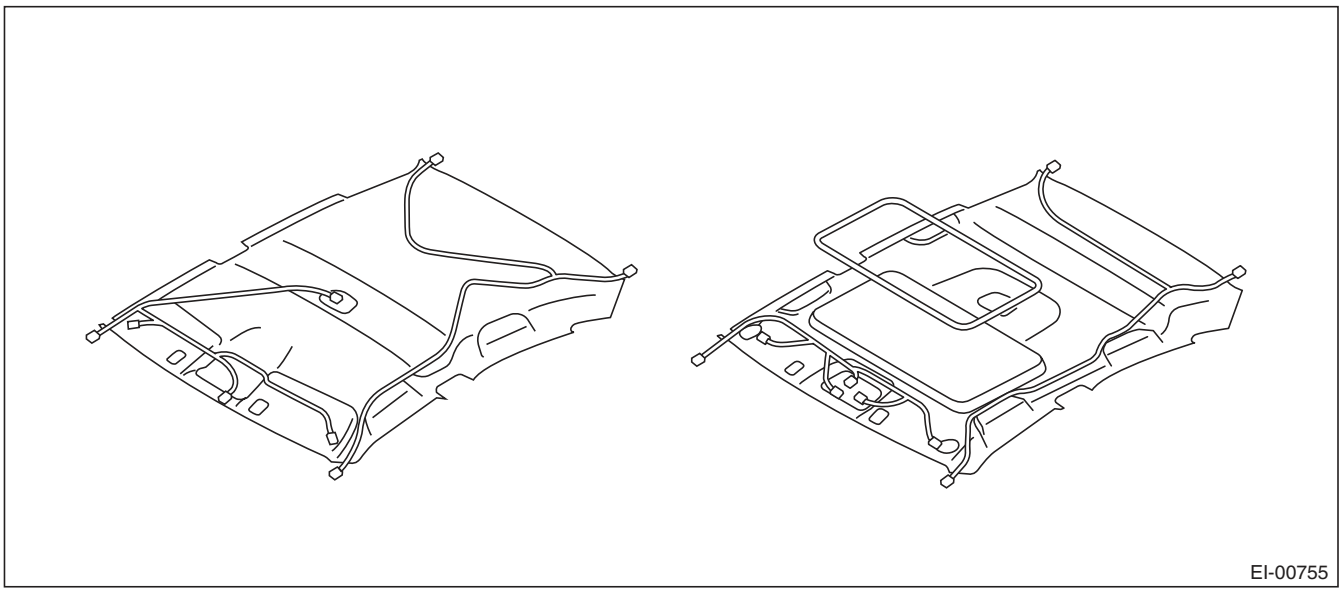

24.ROOF TRIM (WAGON MODEL)

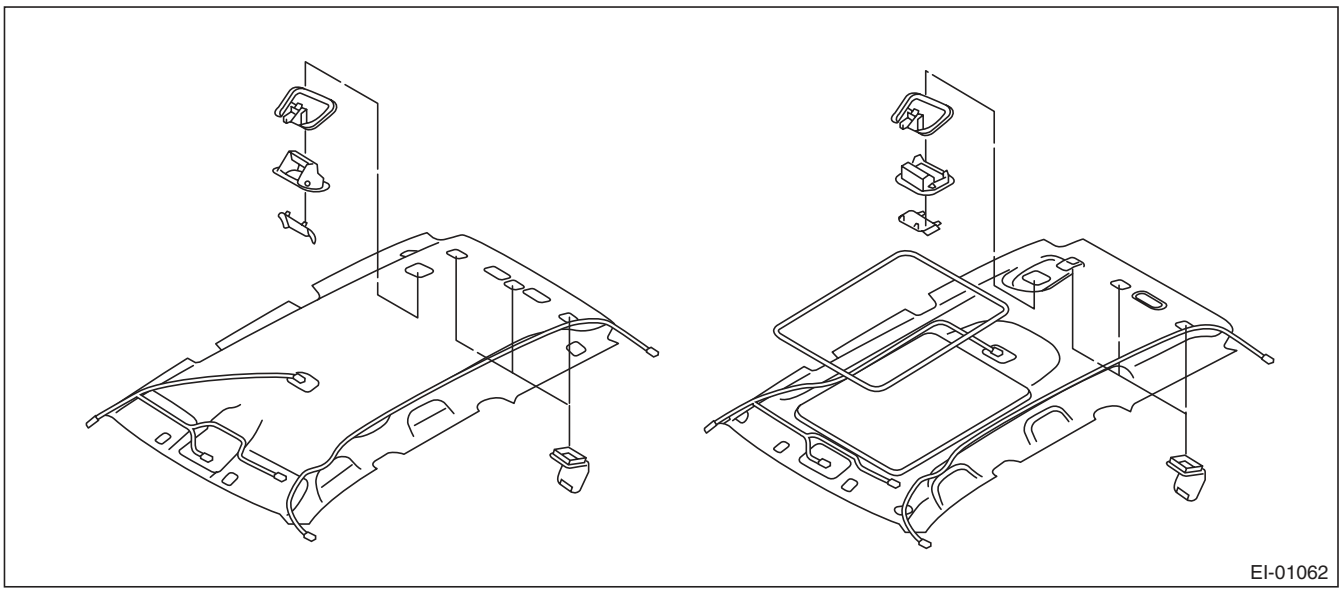

25.TRUNK ROOM TRIM

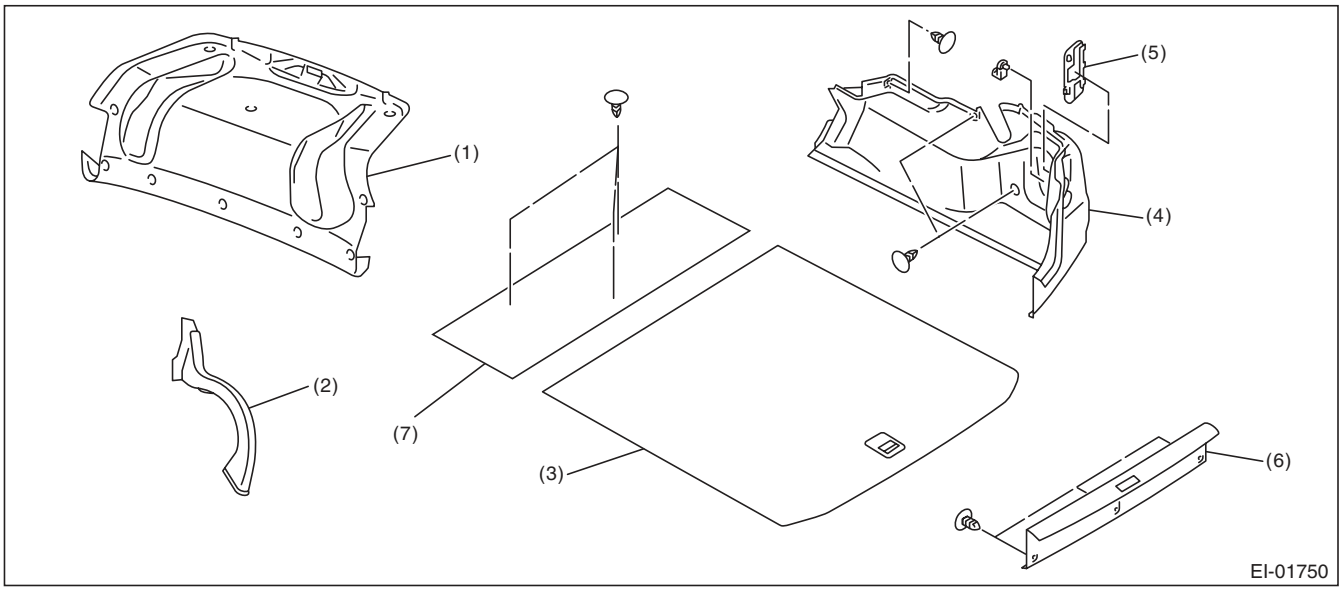

(1) Trunk lid trim
(2) Trunk lid arm cover
(3) Trunk room mat
(4) Trunk side trim
(5) Combination light cover
(6) Trunk room end cover
(7) Spacer trunk

26.LUGGAGE FLOOR MAT

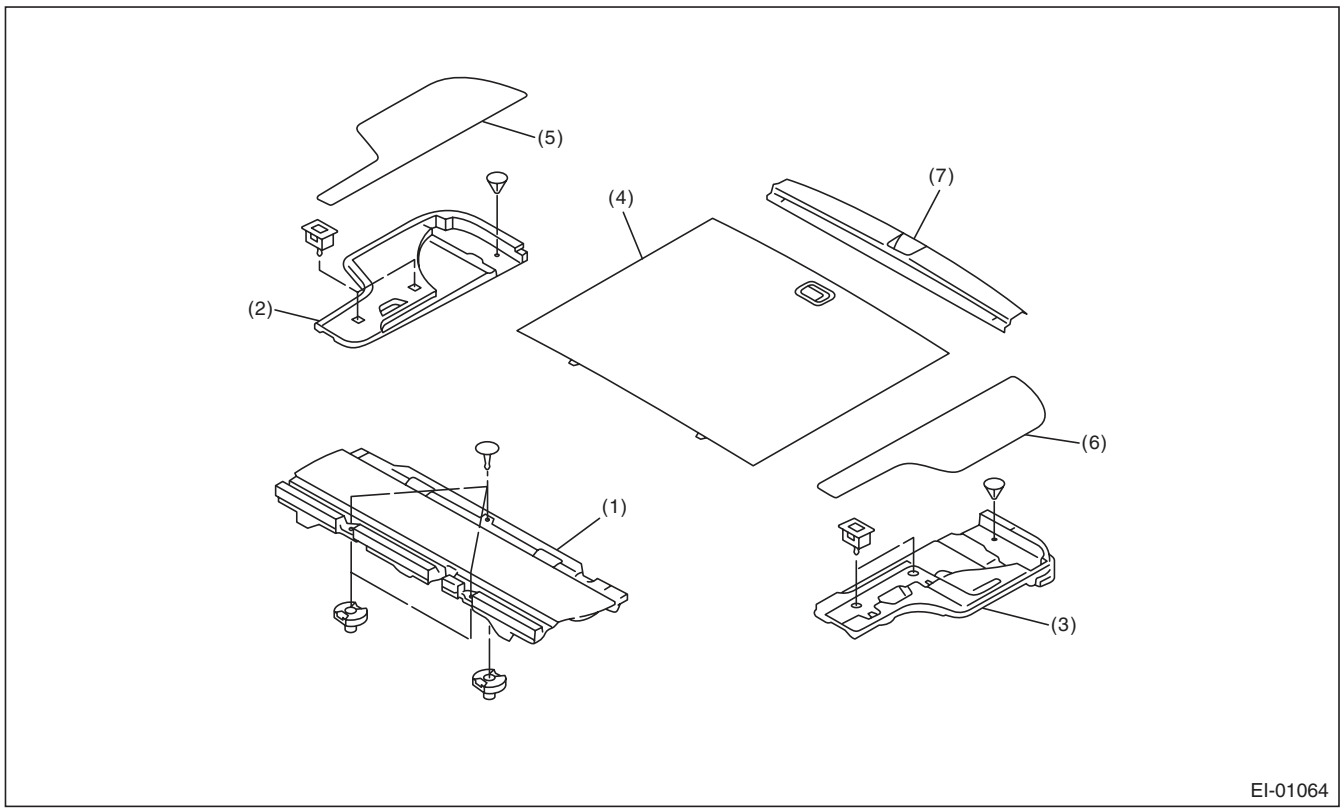

(1)	Front floor mat	(4)	Center floor mat	(6)	Side floor mat (LH)
(2)	Floor box (RH)	(5)	Side floor mat (RH)	(7)	Luggage floor end cover
(3)	Floor box (LH)				

27.ROOM INNER PARTS

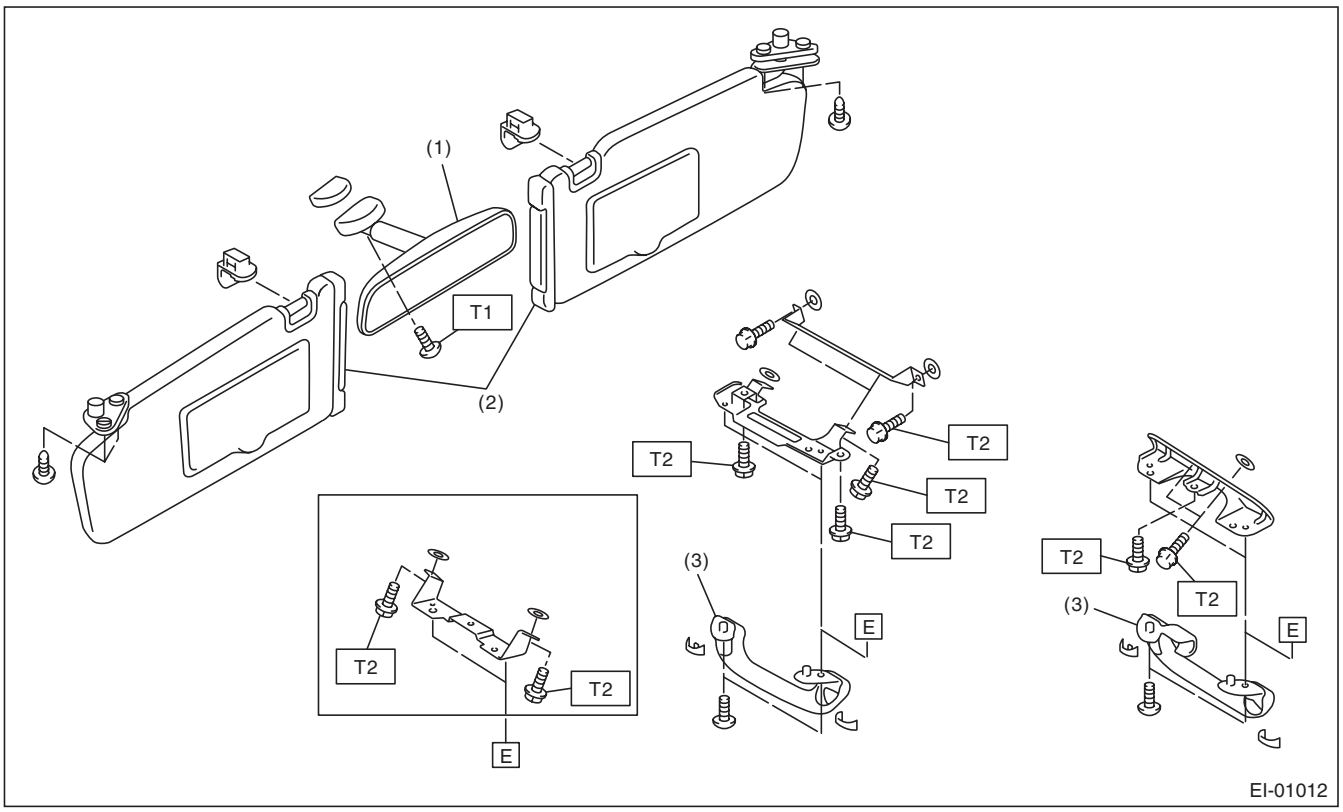

(1) Room mirror
(2) Sun visor
(3) Assist grip

Tightening torque:N·m (kgf-m, ft-lb)
T1: 2.0 (0.2, 1.48)
T2: 7.5 (0.76, 5.5)

28.HEAT SHIELD COVER

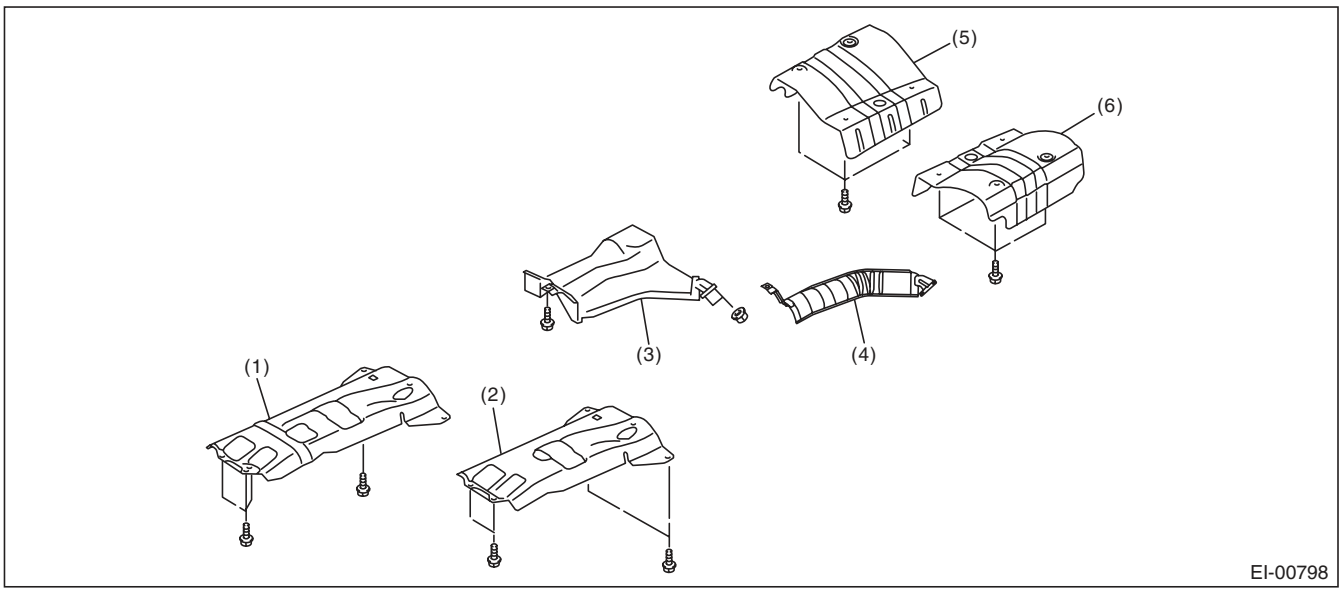

(1) Front heat shield cover (4AT model and MT model)
(2) Front heat shield cover (5AT model)
(3) Center heat shield cover (Turbo model)
(4) Center heat shield cover (Non-turbo model)
(5) Rear heat shield cover RH
(6) Rear heat shield cover LH

B: PREPARATION TOOL

TOOL NAME	REMARKS
Clip remover	Used for removing trim.
Clip clamp pliers	Used for removal of various clips and clamps.

2. Front Grille

A: REMOVAL

1) Remove the front bumper face. <Ref. to EI-30, FRONT BUMPER FACE, REMOVAL, Front Bumper.>
2) Remove the screws from the reverse side of the bumper face to remove the front grille assembly.

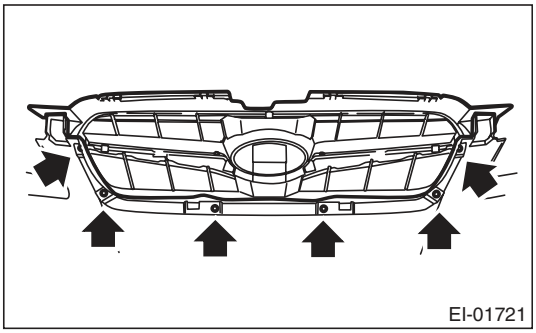

3) Remove the hexagon cap nut from the reverse side of the front hood to remove the upper grille. (OUTBACK model)

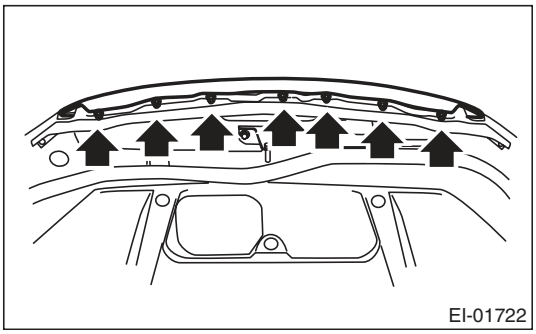

B: INSTALLATION

Install in the reverse order of removal.

Tightening torque:
4.5 N·m (0.46 kgf-m, 3.32 ft-lb)

3. Front Hood Grille

A: REMOVAL

1) Open the front hood.
2) Remove the front hood insulator. <Ref. to EB-13, FRONT HOOD INSULATOR, REMOVAL, Front Hood.>
3) Remove screws (A) and clip (B), and remove the front hood duct.

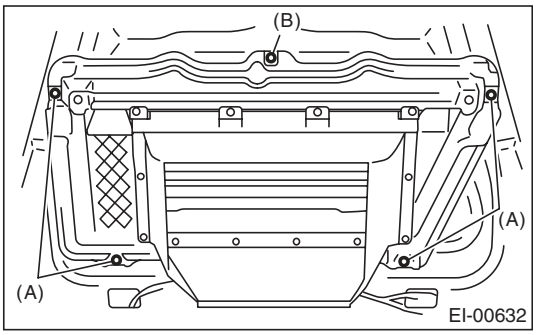

4) Loosen the nuts (A), remove the clip (B), and then remove the front hood grille.

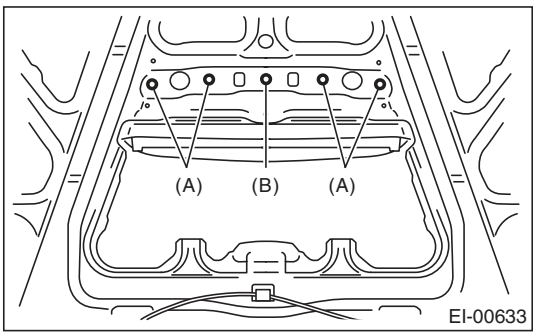

B: INSTALLATION

1) Fit the clip (B) of the front hood grille, and install the front hood grille using nuts (A).

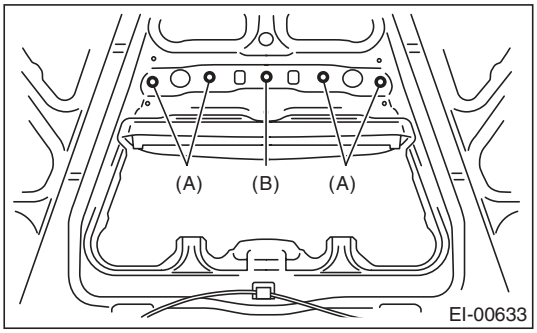

Tightening torque:
4.5 N·m (0.46 kgf-m, 3.32 ft-lb)

2) Insert the hooks (B) of the front hood duct into holes (A) of the front hood.

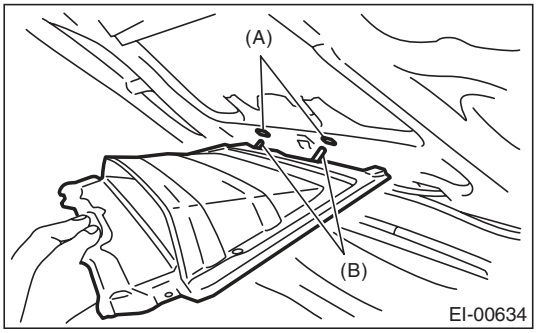

3) Install the front hood duct with screws (A) and clip (B).

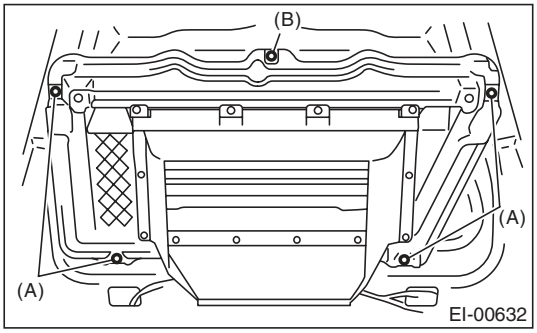

4. Front Under Cover

A: REMOVAL

1) Lift up the vehicle.
2) Remove clips (A) in front fender and bolts (B), then remove the front under cover.

- Large type

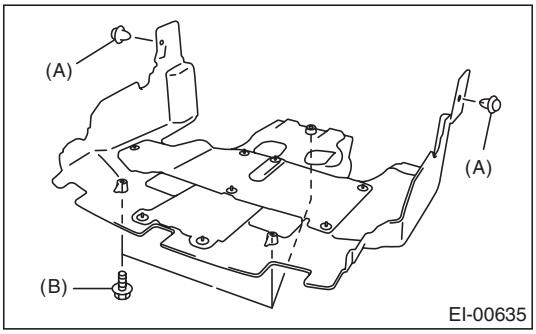

- Small type

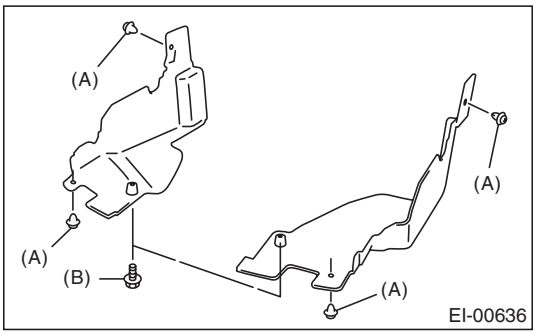

B: INSTALLATION

Install in the reverse order of removal.

Tightening torque:
17.5 N·m (1.78 kgf-m, 12.9 ft-lb)

5. Floor Under Protector

A: REMOVAL

1) Lift up the vehicle.

NOTE:
A plate type lift cannot be used.
2) Remove the push turn clips (A) and bolts (B), and remove the floor under protector.

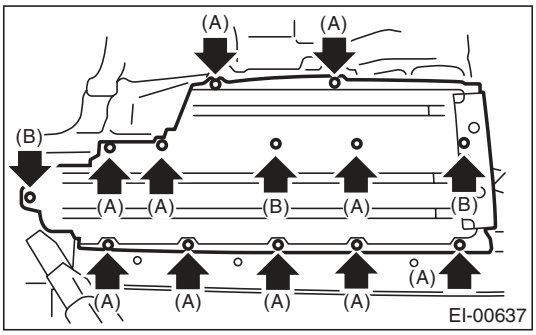

B: INSTALLATION

Install in the reverse order of removal.

Tightening torque:
Refer to "COMPONENT" of "General Description". <Ref. to EI-3, UNDER PROTECTOR, COMPONENT, General Description.>

6. Fuel Tank Protector

A: REMOVAL

1) Lift up the vehicle.
2) Remove the bolts (A) and nuts (B), and then remove the fuel tank protector.

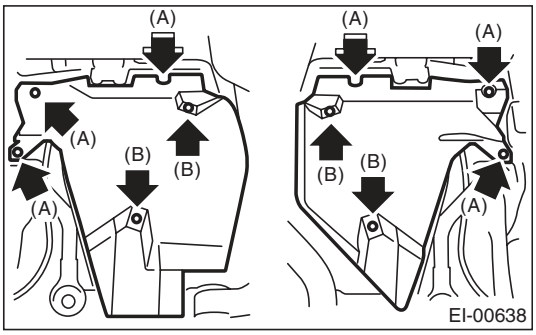

B: INSTALLATION

Install in the reverse order of removal.

Tightening torque:
Refer to "COMPONENT" of "General Description". <Ref. to EI-3, UNDER PROTECTOR, COMPONENT, General Description.>

7. Mud Guard

A: REMOVAL

1. FRONT MUD GUARD

1) Jack-up the vehicle.
2) Remove the front wheels.
3) Loosen the screws and clips to remove mud guard.

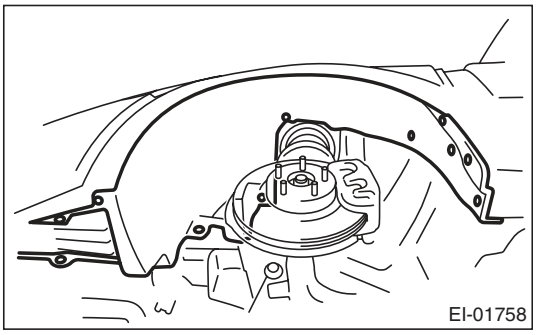

2. REAR MUD GUARD

1) Jack-up the vehicle.
2) Remove the rear wheels.
3) Loosen the screws and clips to remove the mud guard.

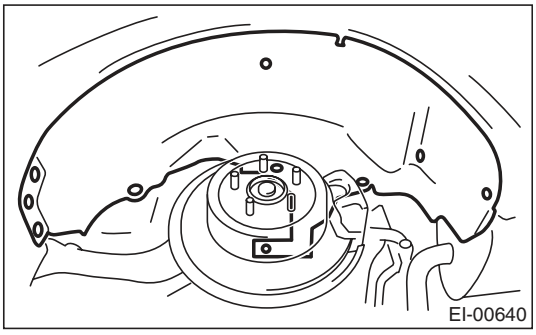

B: INSTALLATION

Install in the reverse order of removal.

8. Front Bumper

A: REMOVAL

1. FRONT BUMPER FACE

1) Disconnect the ground cable from the battery.
2) Remove the upper side clip of the front grille.
3) Turn over the front mud guard, and remove the clips connecting the fender and bumper.

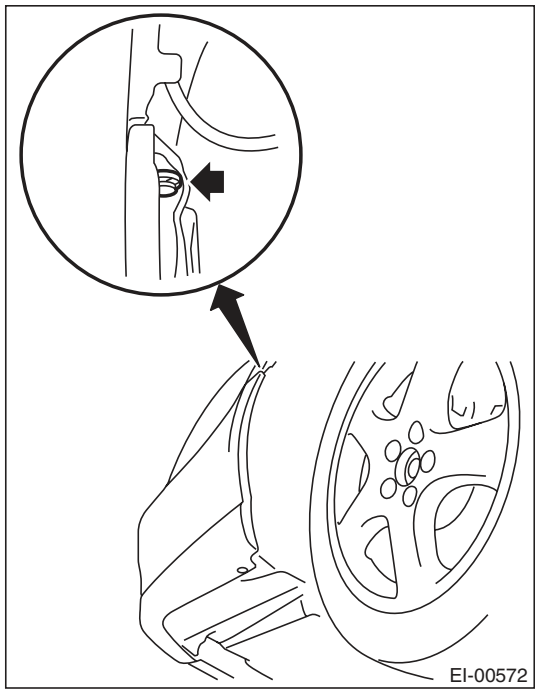

4) Remove the clips at the lower side of bumper.

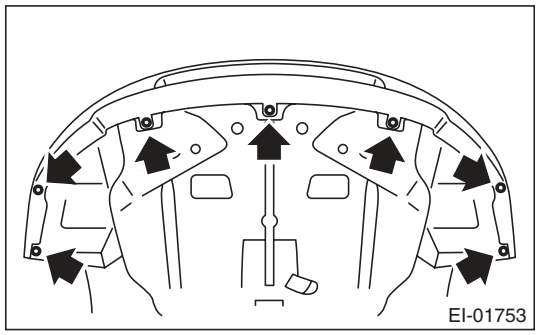

NOTE:
Remove the under cover to facilitate the work. <Ref. to EI-26, REMOVAL, Front Under Cover.>
5) Turn over the mud guard and disconnect the fog light connector. (Model with fog light)

6) For OUTBACK model, remove the front fender side garnish.

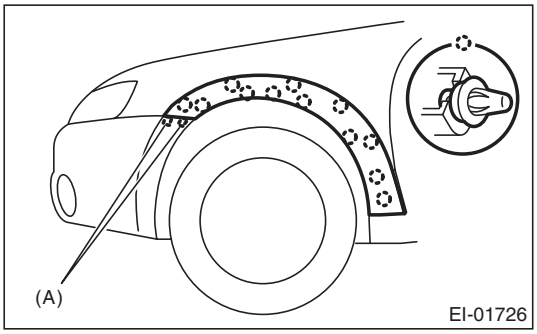

NOTE:
To remove the side garnish claw (A) from the bumper face.
7) Detach the flange sections on the bumper face side from guide bracket (A).

CAUTION:
Do not pull forcibly. Doing so can damage the flange on the bumper face.

NOTE:
It is easier to detach them from the fender side in the order from (1) to (3), while pulling up the bumper face to the direction of arrow (B) (upward).

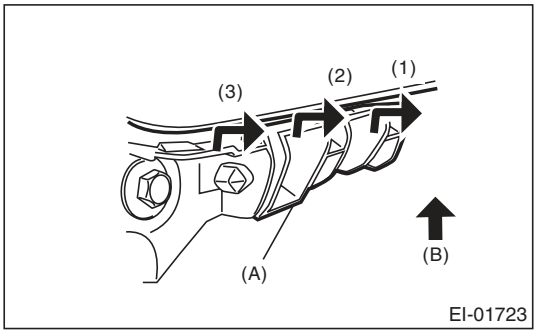

8) Remove the bumper face from vehicle body.
9) Remove the fog light from bumper face. <Ref. to LI-19, REMOVAL, Front Fog Light Assembly.>
10) Remove the front grille assembly from bumper face. <Ref. to EI-24, REMOVAL, Front Grille.>

2. FRONT BUMPER BEAM ASSEMBLY

1) Disconnect the ground cable from the battery.
2) Remove the front bumper face. <Ref. to EI-30, FRONT BUMPER FACE, REMOVAL, Front Bumper.>
3) Remove the energy absorber foam from bumper beam.
4) Remove the headlight assembly. <Ref. to LI-13, REMOVAL, Headlight Assembly.>
5) Remove the bolts, and remove the bumper beam assembly from vehicle body.

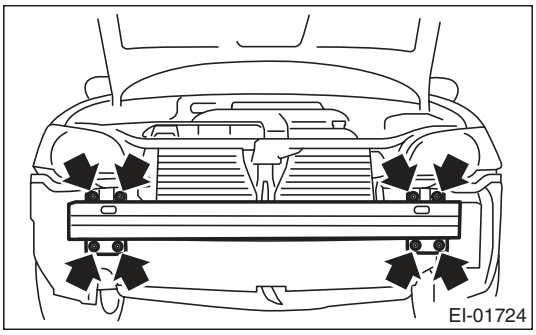

NOTE:
After all bolts are removed, raise the whole bumper beam a little to remove it from vehicle body.
6) Remove the bolts and nuts, and disassemble the bumper beam.

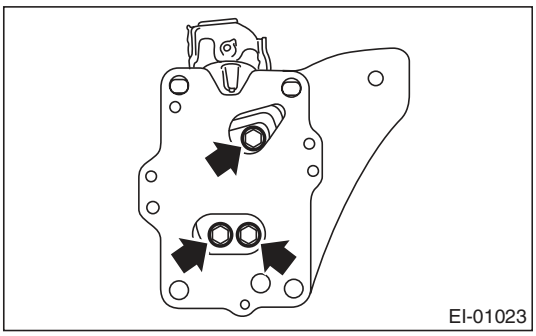

7) Remove the under cover.
8) Remove the bolts and clips, and remove the radiator guide.

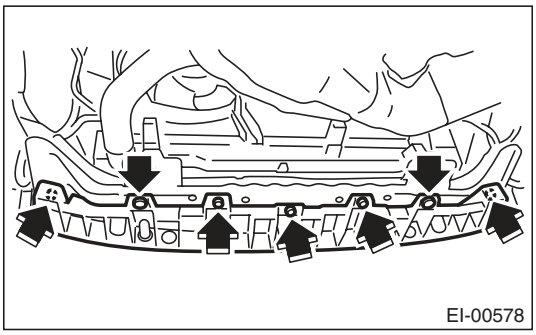

B: INSTALLATION

1. FRONT BUMPER FACE

1) Install in the reverse order of removal.
2) Fit the bumper face to the gap (B) between the guide bracket (A) and fender securely.

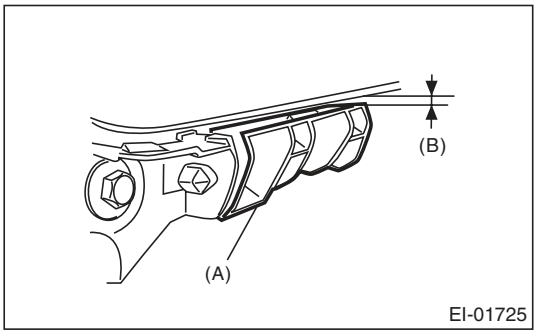

3) Replace the double-sided tape with new one, and install it to the side garnish.

2. FRONT BUMPER BEAM ASSEMBLY

Install in the reverse order of removal.

Tightening torque:
Refer to "COMPONENT" of "General Description". <Ref. to EI-5, FRONT BUMPER, COMPONENT, General Description.>

C: REPAIR

1. COATING METHOD FOR PP BUMPER

Process No.	Process name	Job contents	
1	Bumper installation	Place the bumper on a paint worktable as required. Use the paint worktable conforming to inner shape of bumper if possible.	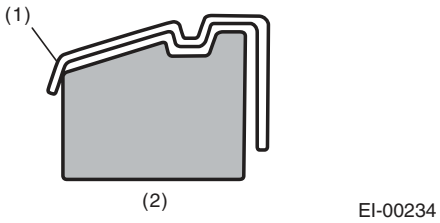 (1) Bumper (2) Set bumper section
2	Masking	Mask specified part (black base) with masking tape. Use masking tape for PP (example, Nichiban No. 533, etc.).	
3	Degreasing/cleaning	Clean all parts to be painted with white gasoline, normal alcohol, etc. to remove dirt, oil, fat, etc.	
4	Primer paint	Apply primer to all parts to be painted, using spray gun. Use primer (clear).	
5	Drying	Dry at normal temperature [10 — 15 min. at 20°C (68°F)]. In half-dried condition, PP primer paint is dissolved by solvent, e.g. thinner, etc. Therefore, if dust or dirt must be removed, use ordinary alcohol etc.	
6	Top coat paint (I)	Non-colored	Metallic paint
		Use section (block) paint for top coat. • Paint to be used (for each color): Solid paint Hardener PB Thinner T-301 • Mixture ratio: Main agent : Hardener = 4 : 1 • Viscosity: 10 — 13 sec./20°C (68°F) • Film thickness: 35 — 45 μ • Spraying pressure: 245 — 343 kPa (2.5 — 3.5 kg/cm^2, 36 — 50 psi)	Use section (block) paint for top coat. • Paint to be used (for each color): Metallic paint Hardener PB Thinner T-306 • Mixture ratio: Main agent : Hardener = 10 : 1 • Viscosity: 10 — 13 sec./20°C (68°F) • Film thickness: 15 — 20 μ • Spraying pressure: 245 — 343 kPa (2.5 — 3.5 kg/cm^2, 36 — 50 psi)
7	Drying	Not required.	Dry at normal temperature [at least 10 min. at 20°C (68°F)]. In half-dried condition, avoid dust, dirt.
8	Top coat paint (II)	Not required.	Apply a clear coat to parts with top coat paint (I), three times at 5 — 7 minutes intervals. • Paint to be used: Metallic paint Hardener PB Thinner T-301 • Mixture ratio: Clear coat : Hardener = 6 : 1 • Viscosity: 14 — 16 sec./20°C (68°F) • Film thickness: 25 — 30 μ • Spraying pressure: 245 — 343 kPa (2.5 — 3.5 kg/cm^2, 36 — 50 psi)
9	Drying	60°C (140°F), 60 min. or 80°C (176°F), 30 min. If higher than 80°C (176°F), PP may become be deformed. Keep maximum temperature 80°C (176°F) or less.	
10	Inspection	Check paint.	
11	Removal of masking	Remove the masking tape applied in procedure 2.	

2. REPAIR INSTRUCTIONS FOR COLORED PP BUMPER

NOTE:
All PP bumpers are provided with a grained surface, and if the surface is damaged, it cannot normally be restored to its former condition. Damages limited to the shallow scratches that cause only a change in the luster of the base material or coating, can be almost fully restored. Before repairing a damaged area, explain this point to the customer and obtain an understanding about the matter. Repair methods are outlined below, based on a classification of the extent of damage.

1) Minor damage causing only a change in the luster of the bumper due to a light touch
Almost restorable.

Process No.	Process name	Job contents	
1	Cleaning	Clean the area to be repaired using water.	
2	Sanding	Grind the repairing area with #500 sand paper in a “feathering” motion.	
3	Finish	Resin section	Coated section
		Repeatedly apply wax to the affected area using soft cloth (such as flannel). Recommended wax: NITTO KASEI Soft 99 TIRE WAX BLACK, or equivalent.	Perform either the same process as for the resin section or process No. 18 and subsequent in the 3) section, depending on the degree and nature of damage.
		Polish the waxed area with clean cloth after 5 — 10 minutes.	

2) Deep damage caused by scratching with fences etc.
A dent cannot be repaired but a whitened or swelled part can be removed.

Process No.	Process name	Job contents	
1	Cleaning	Clean the damaged area with water.	
2	Removal of damaged area	Cut off protruding area, if any, due to collision, using a putty knife.	
3	Sanding	Sand the affected area with #100 — #500 sand paper.	
4	Finish	Resin section	Coated section
		Same as process No. 3 in the 1) section.	Perform process No. 12 and subsequent operations in the 3) section.

3) Deep damage such as a break or hole that requires filling
Much of the peripheral grained surface must be sacrificed for repair. The degree of restoration is not really worth the expense. (The surface, however, will become almost flush with adjacent areas.)
Recommended repair kit: PP Part Repair Kit (NRM)

Process No.	Process name	Job contents	
1	Bumper removal	Remove the bumper as required.	
2	Removal of parts	Remove the parts built into bumper as required.	
3	Bumper placement	Place the bumper on a paint worktable as required. It is recommended to use the paint worktable conforming to internal shape of bumper.	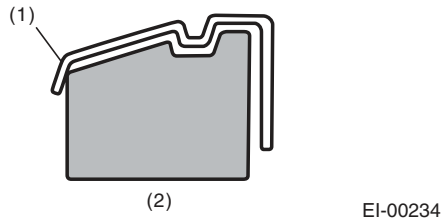 (1) Bumper (2) Set bumper section
4	Surface preparation	Remove dust, oil, etc. from areas to be repaired and surrounding areas, using a suitable solvent (NRM No. 900 Precleno, white gasoline, or alcohol, etc.).	
5	Cutting	If the damage is a crack or a hole, cut a guide slit of 20 to 30 mm (0.79 to 1.18 in) in length along the crack or hole up to the bumper base surface. Next, use a knife or grinder to carve a V-shaped groove in the area for repair.	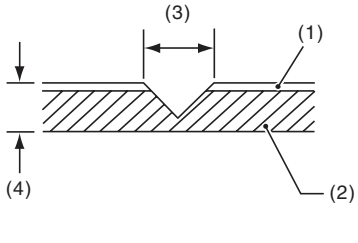 (1) Paint surface (2) PP base surface (3) 20 — 30 mm (0.79 — 1.18 in) (4) 3 mm (0.12 in)
6	Sanding (I)	Grind the beveled surface with sand paper (#40 — #60) to smooth finish.	
7	Cleaning	Clean the sanded surface with the same solvent as used in procedure No. 4.	
8	Temporary welding	Grind the side just opposite the beveled area with sand paper (#40 — #60) and clean using a solvent. Temporarily spot-weld the side, using PP welding rod and heater gun.	
		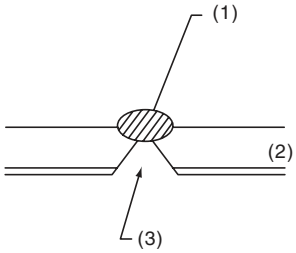 (1) Welded point (use heater gun and PP welding rod) (2) PP base surface (3) Beveled section NOTE: • Do not melt welding rod until it flows out. This results in reduced strength. • Leave the welded spot unattended until it cools completely.	

Process No.	Process name	Job contents
9	Welding	Using a heater gun and PP welding rod, weld the beveled spot while melting both the rod and damaged area.
		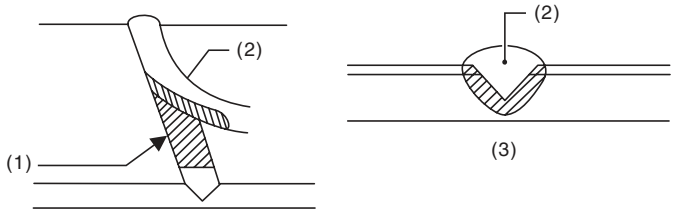 EI-00237 (1) Welding rod (2) Melt hatched area (3) Section NOTE: • Melt the sections indicated by hatched area. • Do not melt the welding rod until it flows out, in order to provide strength. • Always keep the heater gun 1 to 2 cm (0.4 to 0.8 in) away from the welding spot. • Leave the welded spot unattended until it cools completely.
10	Sanding (II)	Remove excess part of weld with a putty knife. If a drill or disc wheel is used instead of the knife, operate it at a rate lower than 1,500 rpm and grind the excess part little by little. A higher rpm will cause the PP substrate to melt from the heat.
		 EI-00042
		Sand the welded spot smooth with #240 sand paper.
11	Masking	Mask the black substrate section using masking tape. Recommended masking tape: Nichiban No. 533 or equivalent
12	Cleaning/degreasing	Completely clean the entire coated area, using solvent similar to that used in procedure No. 4.
13	Primer coating	Apply a coat of primer to the repaired surface and its surrounding areas. Mask these areas, if necessary. Recommended primer: Mp/ 364 PP Primer NOTE: Be sure to apply a coat of primer using a spray gun at a pressure of 245 — 343 kPa (2.5 — 3.5 kg/cm^2, 36 — 50 psi).
14	Leave unattended	Leave the repaired area unattended at 20°C (68°F) for 10 to 15 minutes until primer is half-dry. NOTE: If dirt or dust comes in contact with the coated area, wipe it off with a cloth dampened with alcohol. (Do not use thinner since the coated area tends to melt.)
15	Primer surfacer coating	Apply primer surfacer to the repaired area two or three times at an interval of 3 — 5 minutes. • Recommended surfacer: UPS 300 Flex Primer No. 303 UPS 300 Exclusive hardener NPS 725 Exclusive Reducer (thinner) • Mixture ratio: 2 : 1 (UPS 300 : No. 303) • Viscosity: 12 — 14 seconds/20°C (68°F) • Coating film thickness: 40 — 50 μ
16	Drying	Allow the coated surface to dry for 20 minutes at 20°C (68°F) [or 30 minutes at 60°C (140°F)].

Process No.	Process name	Job contents	
17	Sanding (III)	Sand the coated surface and its surrounding areas using #400 sand paper and water.	
18	Cleaning/degreasing	Same as process No. 12.	
19	Top coat (I)	Non-colored	Metallic paint
		Use a “block” coating method. • Recommended paint: Suncryl (SC) No. 307 Flex Hardener SC Reducer (thinner) • Mixture ratio: Suncryl (SC): No. 307 Flex Hardener = 3 : 1 • Viscosity: 11 — 13 seconds/20°C (68°F) • Coating film thickness: 40 — 50 μ • Spraying pressure: 245 — 343 kPa (2.5 — 3.5 kg/cm^2, 36 — 50 psi)	Use a “block” coating method. • Recommended paint: Suncryl (SC) No. 307 Flex Hardener SC Reducer (thinner) • Mixture ratio: Suncryl (SC): No. 307 Flex Hardener = 3 : 1 • Viscosity: 11 — 13 seconds/20°C (68°F) • Coating film thickness: 20 — 30 μ • Spraying pressure: 245 — 343 kPa (2.5 — 3.5 kg/cm^2, 36 — 50 psi)
20	Leave unattended	Not required	Leave unattended at 20°C (68°F) for at least 10 minutes until the top coated area is half-dry. NOTE: Be careful to keep dust or dirt from coming in contact with the affected area.
21	Top coat (II)	Not required	Apply a clear coat three times at an interval of 3 to 5 minutes. • Recommended paint: SC710 Overlay Clear No. 307 Flex Hardener SC Reducer (thinner) • Mixture ratio: Suncryl (SC): No. 307 Flex Hardener = 3 : 1 • Viscosity: 10 — 13 seconds/20°C (68°F) • Coating film thickness: 20 — 30 μ • Spraying pressure: 245 — 343 kPa (2.5 — 3.5 kg/cm^2, 36 — 50 psi)
22	Drying	Allow the coated surface to dry for two hours at 20°C (68°F) or 30 minutes at 60°C (140°F). NOTE: Do not allow the temperature to exceed 80°C (176°F) since this will deform the PP substrate.	
23	Inspection	Carefully check the condition of the repaired area.	
24	Removal of masking	Remove the masking tape applied in process No. 11 and 13.	
25	Parts installation	Install parts on the bumper in reverse order of removal.	
26	Bumper installation	Install the bumper.	

9. Rear Bumper

A: REMOVAL

1. REAR BUMPER FACE (SEDAN MODEL)

1) Turn over the mud guard, and remove the bolt (A) inside wheel house, and the clips (B) on the lower side of the bumper.

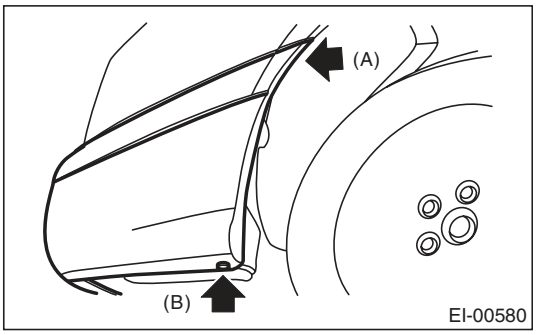

2) Remove the clips on the lower side of rear bumper.

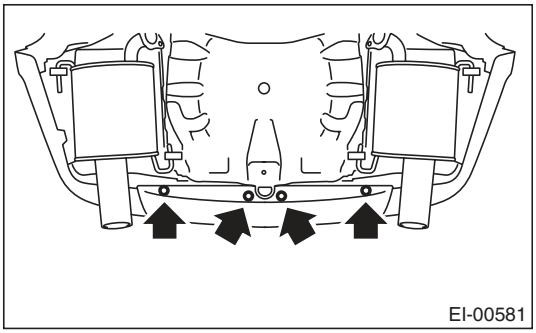

3) Remove the service hole cover, and remove the bolt.

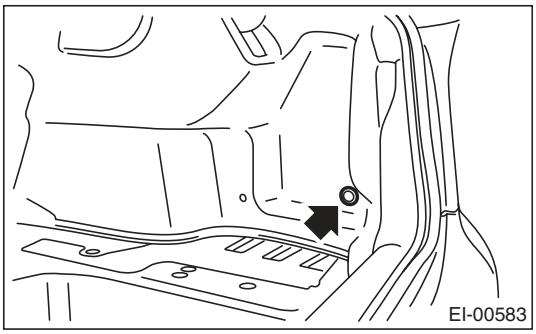

4) Remove the bumper face from vehicle body in the order from (a) to (e).

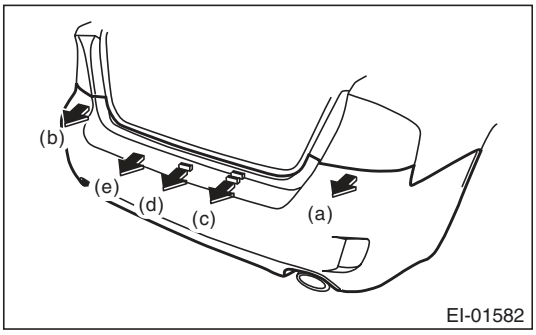

(1) Detach the engaged section from the corner bracket of the rear combination light RH and LH.
(2) Detach the engaged section of the bumper face center from one end to the another.

NOTE:
Do not pull with an excessive force. Otherwise the bumper face flange sections may be damaged.

2. REAR BUMPER FACE (WAGON MODEL)

1) Disconnect the ground cable from the battery.
2) Remove the rear combination light assembly. <Ref. to LI-23, REMOVAL, Rear Combination Light Assembly.>
3) Remove the two clips.

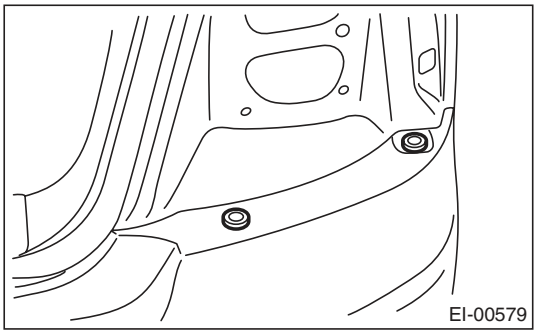

4) For OUTBACK model, remove the rear fender side garnish.

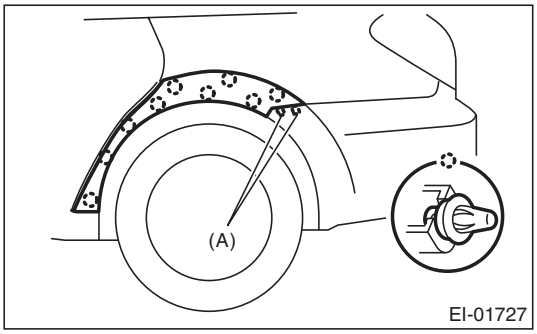

NOTE:
To remove the side garnish claw (A) from the bumper face.
5) Turn over the mud guard, and remove the bolt (A) inside wheel house, and the clips (B) on the lower side of the bumper.

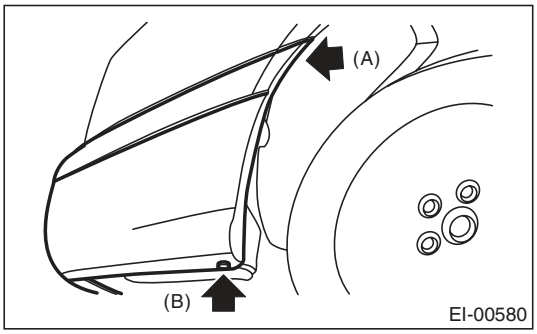

6) Remove the clips on the lower side of rear bumper.

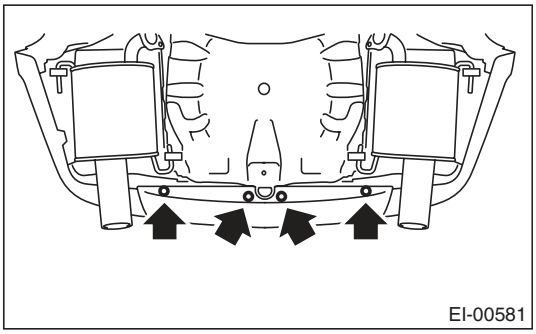

7) Remove the service hole cover, and remove the bolt.

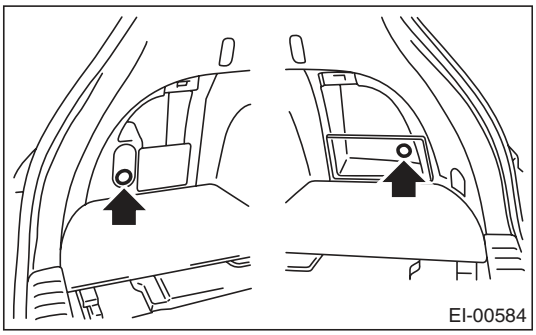

NOTE:
For models with woofers, remove the woofer cover.

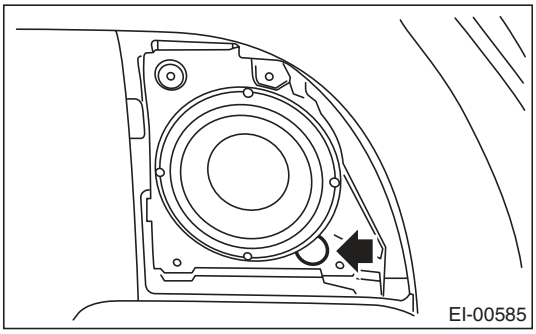

8) Remove the rear bumper from vehicle body.

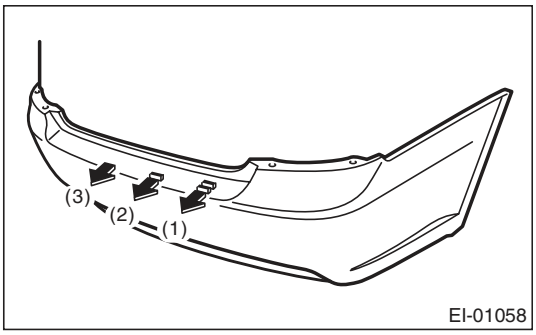

NOTE:
- Do not pull with a excessive force. Otherwise the bracket installation area may be damaged.
- To facilitate the removal of bracket, detach the engaged sections between bumper face and bracket from one end to the other.

3. REAR BUMPER BRACKET

Remove the rear bumper face from vehicle body, and remove each bumper bracket.

- Corner bracket
  - Sedan model

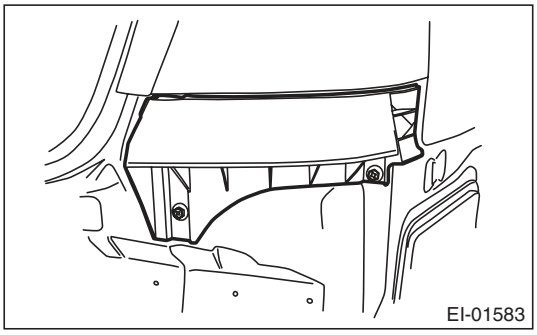

  - Wagon model

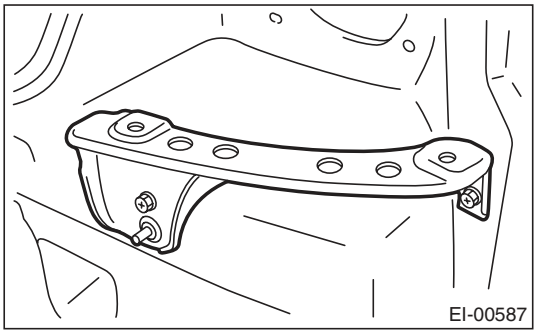

- Lower bracket
  - Sedan model

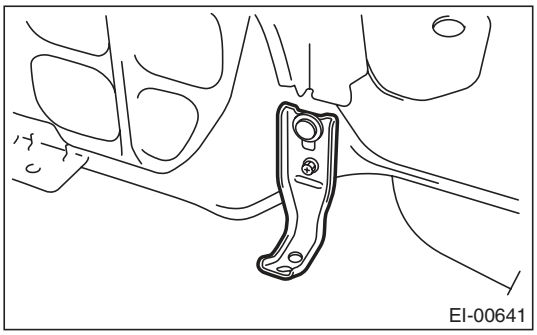

  - Wagon model

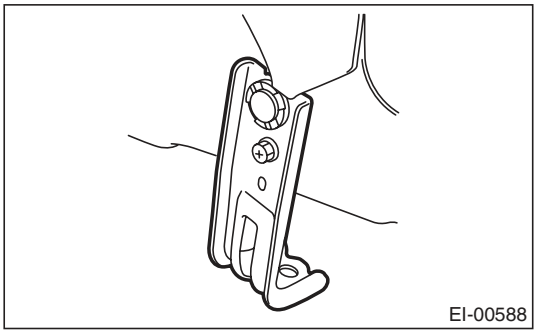

4. REAR BUMPER BEAM ASSEMBLY

1) Disconnect the ground cable from the battery.
2) Remove the rear bumper face. <Ref. to EI-37, REAR BUMPER FACE (SEDAN MODEL), REMOVAL, Rear Bumper.>
3) Remove the energy absorber foam.
4) Remove the nuts, and remove the beam main reinforcement from the vehicle body.

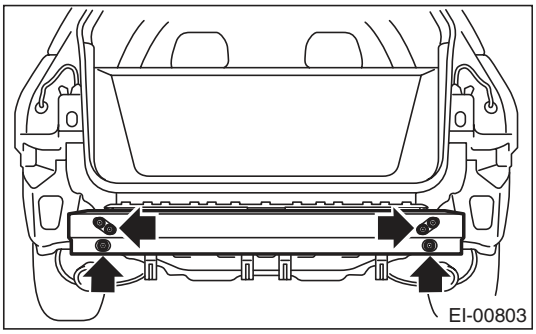

5) Remove the nuts, and remove the bumper beam bracket and beam upper rear from the vehicle body.

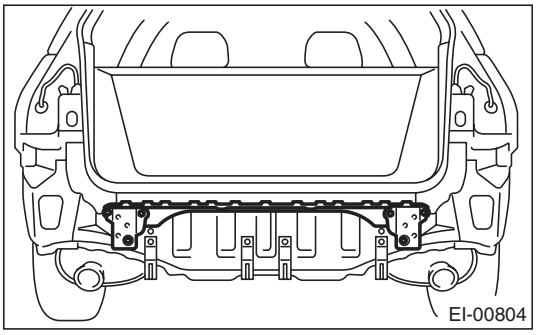

B: INSTALLATION

Install in the reverse order of removal.

NOTE:
- When the side garnish is removed, replace the double-sided tape with new one.
- If the bumper face comes off easily from the beam upper rear, adjust the hook of the bracket side.

Tightening torque:
Refer to "COMPONENT" of "General Description".

- ***Sedan model <Ref. to EI-6, REAR BUMPER (SEDAN MODEL), COMPONENT, General Description.>***
- ***Wagon model <Ref. to EI-7, REAR BUMPER (WAGON MODEL), COMPONENT, General Description.>***

C: REPAIR

Refer to the front bumper repair. <Ref. to EI-32, REPAIR, Front Bumper.>

10. Cowl Panel

A: REMOVAL

1) Open the front hood.
2) Remove the wiper arm. <Ref. to WW-14, REMOVAL, Front Wiper Arm.>
3) Remove the weather strip clips, and remove the weather strip.

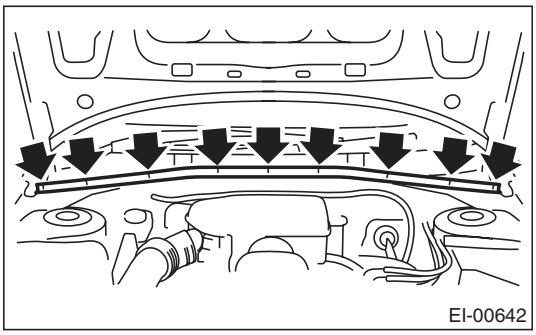

NOTE:
If the weather strip clip is removed with excessive force, the weather strip may be damaged. Be sure to use a clip remover to remove.

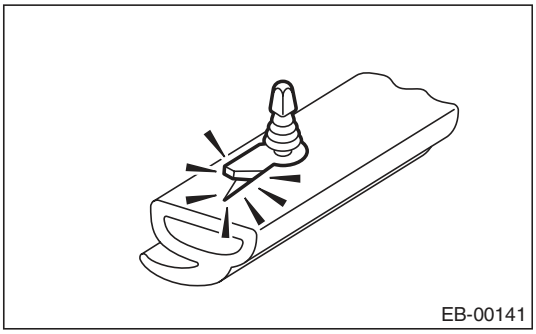

4) Remove the clip, and remove the cover cowl panel.

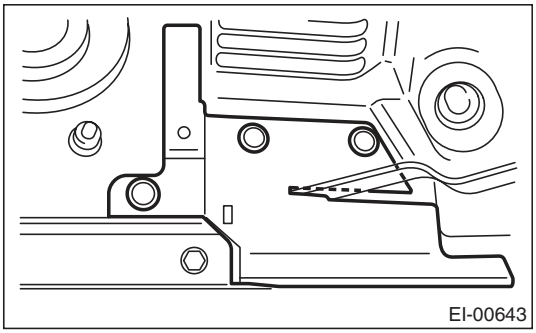

5) Remove the cowl panel side and clip (A).

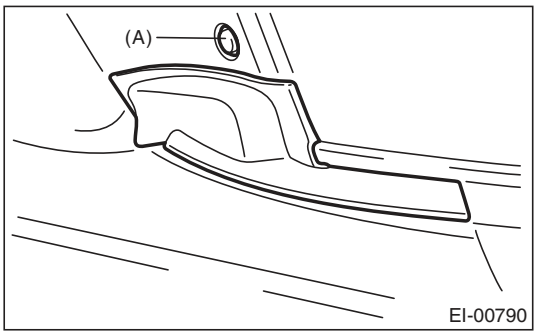

6) Remove the clips (A), and remove the cowl panel.

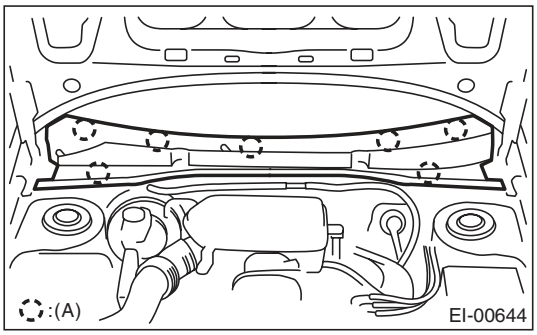

B: INSTALLATION

Install in the reverse order of removal.

11. Roof Spoiler

A: REMOVAL

1) Disconnect the ground cable from the battery.
2) Remove the rear gate trim. <Ref. to EI-68, REMOVAL, Rear Gate Trim.>
3) Disconnect the connector of high-mounted stop light and the washer hose of rear washer.
4) Remove the nut and plastic caps.

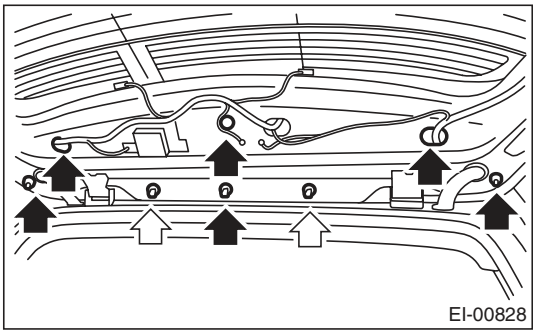

5) Remove the clips, and remove the roof spoiler.

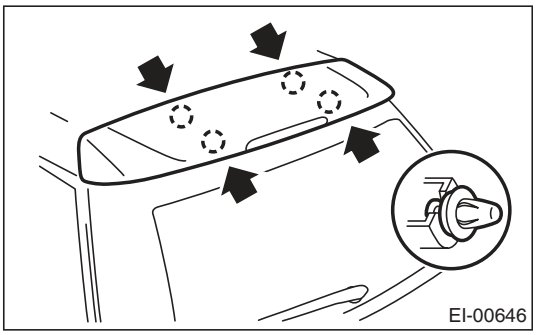

B: INSTALLATION

Install in the reverse order of removal.

Tightening torque:
4.5 N·m (0.46 kgf-m, 3.32 ft-lb)

12. Side Sill Spoiler

A: REMOVAL

Remove the clips (two in the front fender arch, six for side sill spoiler lower area), and remove the side spoiler.

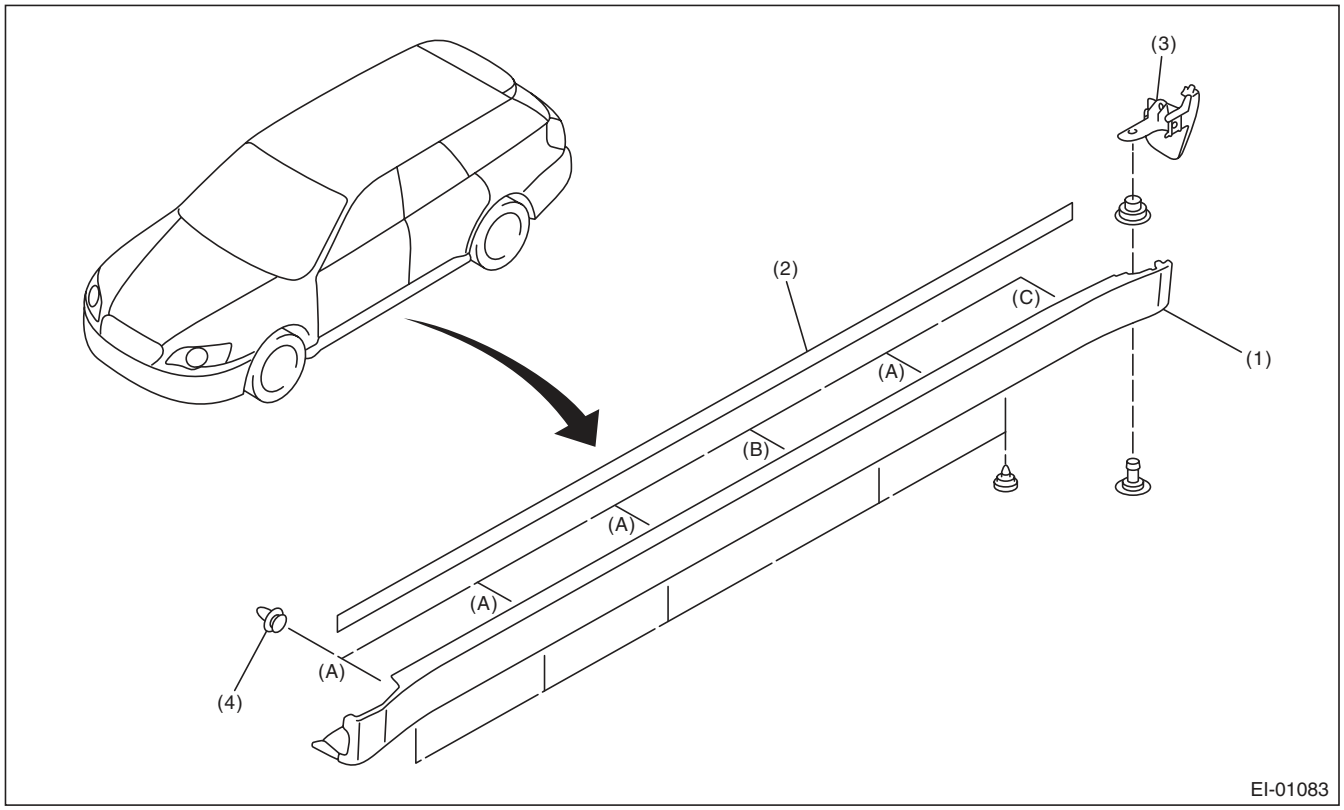

(A)	Yellow clip	(B)	Green clip	(C)	Black clip
(1)	Side sill spoiler	(3)	End cover	(4)	Clip
(2)	Double-sided tape				

NOTE:
When peeling the double sided tape, refer to removal procedures for the side protector. <Ref. to EI-44, REMOVAL, Side Protector.>

B: INSTALLATION

Install in the reverse order of removal.

NOTE:
For the rearmost clip securing the side sill spoiler, install through the end cover.

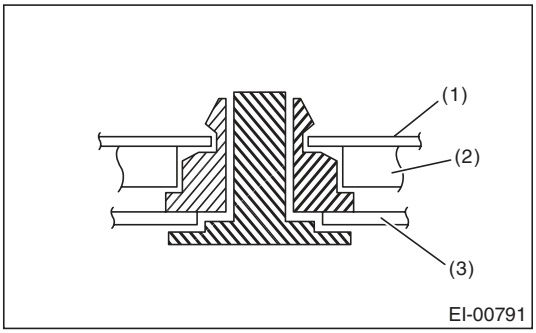

(1) Vehicle body
(2) End cover
(3) Side sill spoiler

13. Side Protector

A: REMOVAL

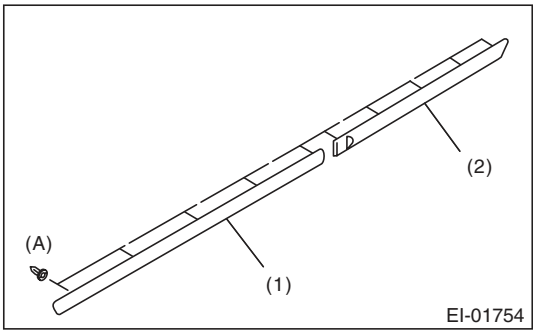

(A) White clip

(1) Front door protector
(2) Rear door protector

1) Slide in a thin thread (A) of 0.8 mm (0.031 in) diameter or less (fishing line etc.) between the body and the protector, and cut the double-sided tape. Pull the protector, and remove the clip using the clip remover.

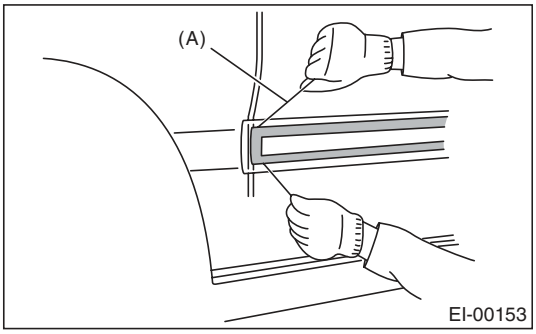

NOTE:
- To optimize the effect of solvent, slide the thread along body without removing the double-sided tape on the surface of body and protector.
- If it is difficult to remove the double-sided tape, warm it up to approx. 40°C (104°F).
- If the double-sided tape remains thick on the surface due to interfacial peeling, apply solvent after slicing off the double-sided tape using a cutter.

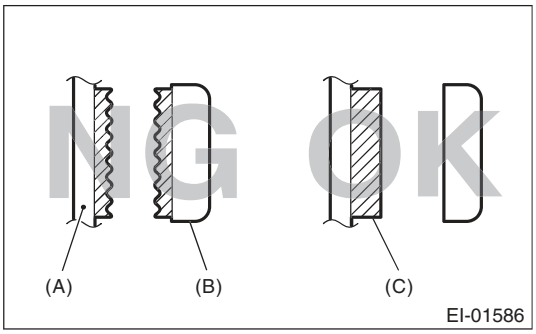

(A) Panel
(B) Side protector
(C) Double-sided tape

2) Apply masking tape around the double-sided tape remaining on the surface of body or protector.
3) Apply solvent uniformly on the double-sided tape using a brush.

CAUTION:
- **Do not use solvent to the body which has been repaired with lacquer paint.**
- **Wipe off immediately when the solvent is attached on surface of the body or protector.**

Solvent:
3M 8907 or equivalent

4) Cover the area where solvent is applied using plastic wrap (A), and then heat the double-sided tape for 5 to 10 minutes in 40 — 60°C (104 — 140°F) using a heat light (B).

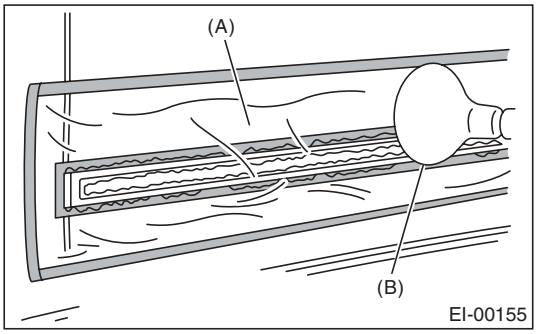

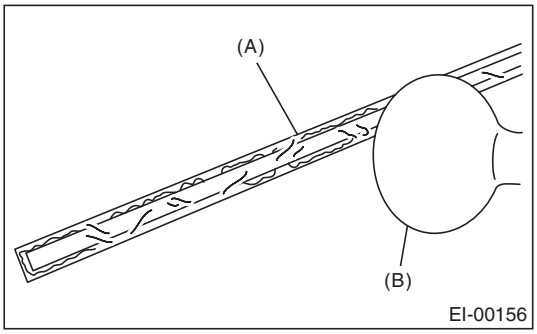

CAUTION:
Do not heat the double-sided tape until the surface becomes white and excessively dried.

5) Remove the double-sided tape using a plastic spatula.
6) After completely removing the double-sided tape, detach the masking tape and clean the surface using a cotton cloth damped with white gasoline.

B: INSTALLATION

1) Apply primer to the protector surface where the double-sided tape is to be adhered, and then adhere the double-sided tape as shown in the figure.

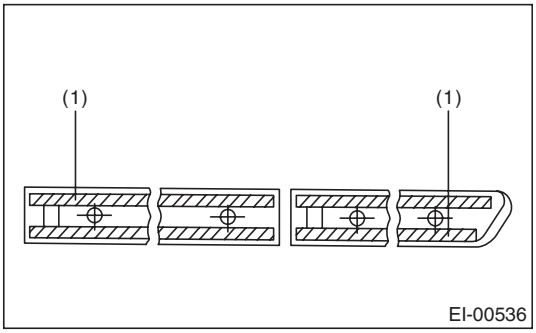

(1) Double-sided tape: thickness 1.2 mm (0.047 in), width 5 mm (0.197 in)

Primer:
3M K-500 or equivalent

Double-sided tape:
3M 5531-5 or equivalent

2) Heat the adhering part using a heat light.
Body side: 40 — 60°C (104 — 140°F)
Protector side: 20 — 30°C (68 — 86°F)
3) Peel off the backing sheet of double-sided tape, align the clip position, and then adhere the tape to the body while taking care to avoid air entering.

CAUTION:
To keep the adhesion, do not wash the vehicle within 24 hours from installation.

14. Side Garnish

A: REMOVAL

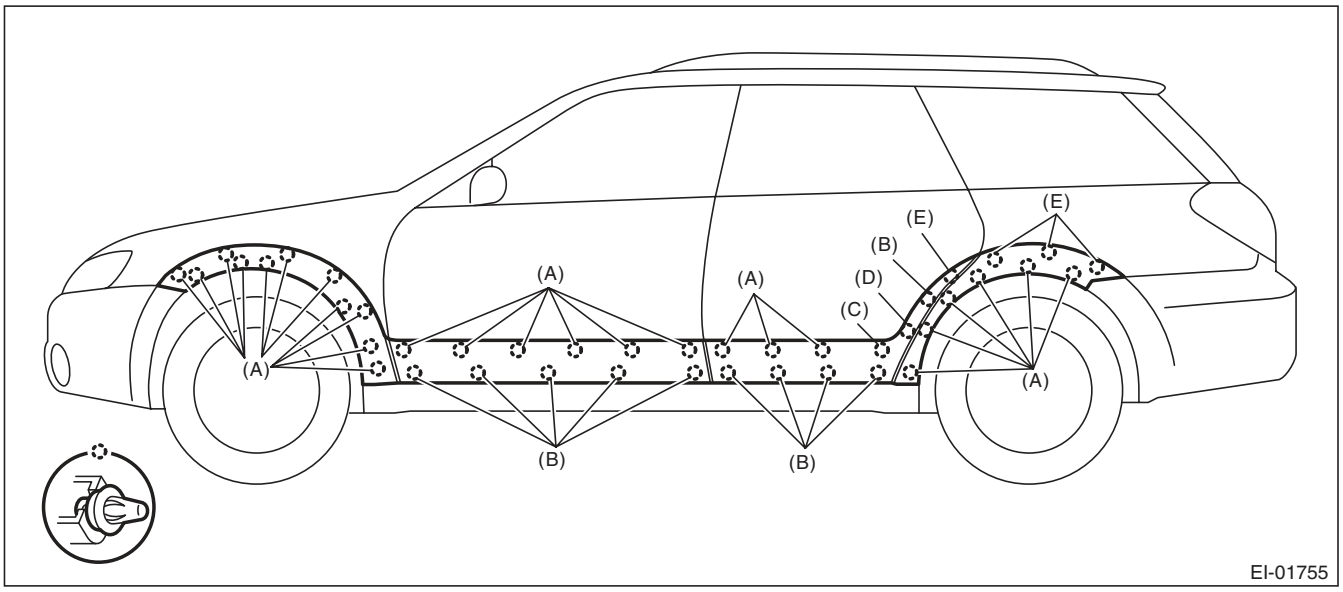

(A)	Black clip	(C)	Pink clip	(E)	Green clip
(B)	White clip	(D)	Gray clip		

1) Remove the side sill spoilers. <Ref. to EI-42, REMOVAL, Side Sill Spoiler.>
2) For removal of the side garnish, refer to the removal procedure of “Side Protector”. <Ref. to EI-44, REMOVAL, Side Protector.>

B: INSTALLATION

Check the color of the clip, and install in the reverse order of removal.

15. Rear Quarter Protector

A: REMOVAL

1) Remove the side sill spoilers. <Ref. to EI-42, REMOVAL, Side Sill Spoiler.>
2) Remove clips (A) by rotating it rearward using the fender arch as a fulcrum, and then remove the rear quarter protector.

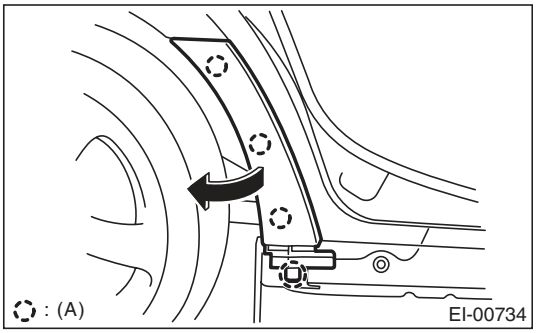

B: INSTALLATION

Install in the reverse order of removal.

16. Roof Rail

A: REMOVAL

1) Remove the roof trim. <Ref. to EI-67, REMOVAL, Roof Trim.>
2) Remove the six nuts.

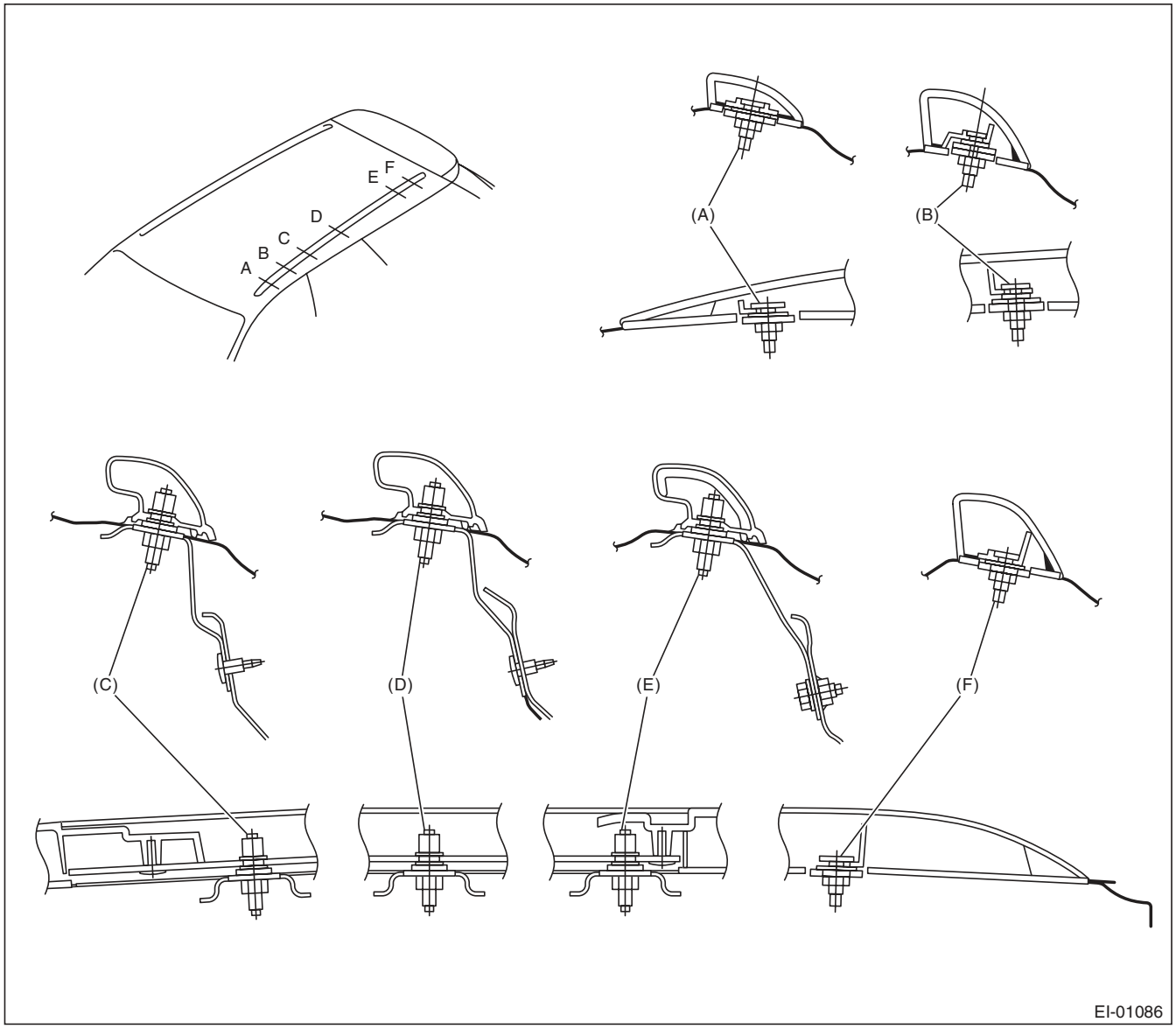

NOTE:
Perform the removal procedures by referring to above illustration. (OUTBACK model)

B: INSTALLATION

Install in the reverse order of removal.

CAUTION:
When removing or installing the roof rail, be careful not to scratch the body panel with the stud bolt of roof rail.

Tightening torque:
7.5 N·m (0.76 kgf-m, 5.5 ft-lb)

17.Door Trim

A: REMOVAL

1) Disconnect the ground cable from the battery.
2) Remove the cover (A) at the inner remote area.

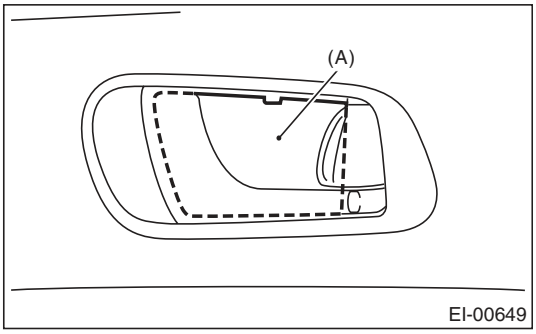

3) Push the root of hand grip upward, and remove the hand grip cover by twisting it towards the front of the vehicle.

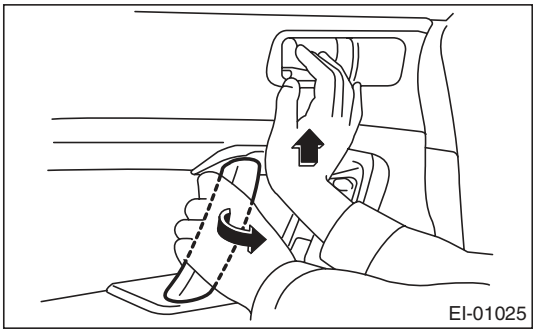

LH side: Counterclockwise
RH side: Clockwise

NOTE:
If it does not come off using the procedures above, apply protective tape to the tip of a flat tip screwdriver and the door trim, and pry out the upper side of the hand grip cover.

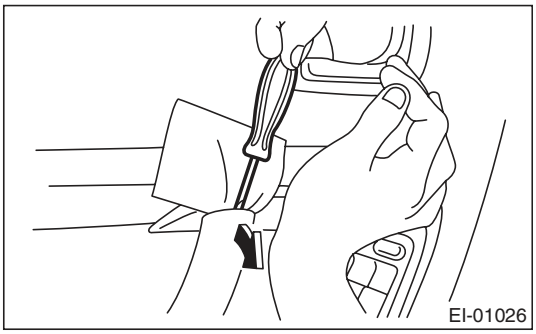

4) Loosen the screws.

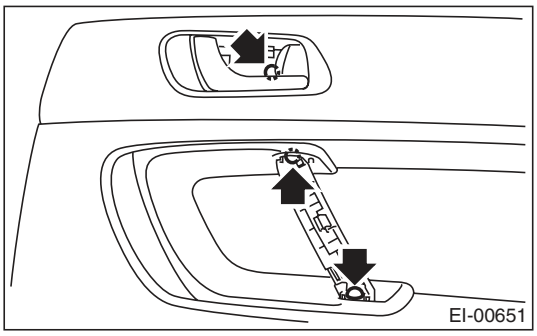

5) Remove the clips, and disconnect all connectors and wire cables to remove the door trim.

- Front door trim

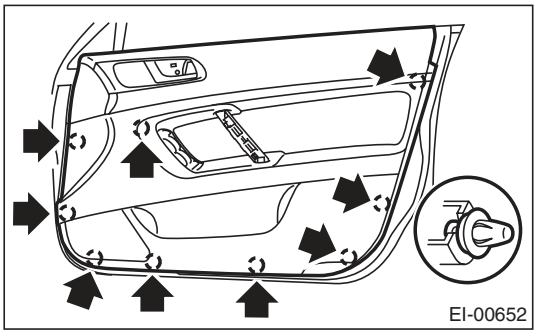

- Rear door trim

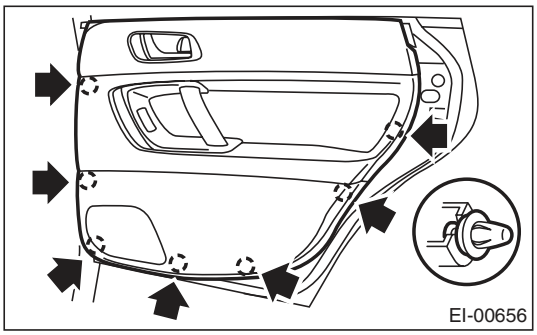

B: INSTALLATION

Install in the reverse order of removal.

NOTE:
Be careful not to install the hand grip cover and plate clip of the hand grip in the wrong direction.

- Hand grip cover (front and rear door)

The side with the protrusion is the upper side.

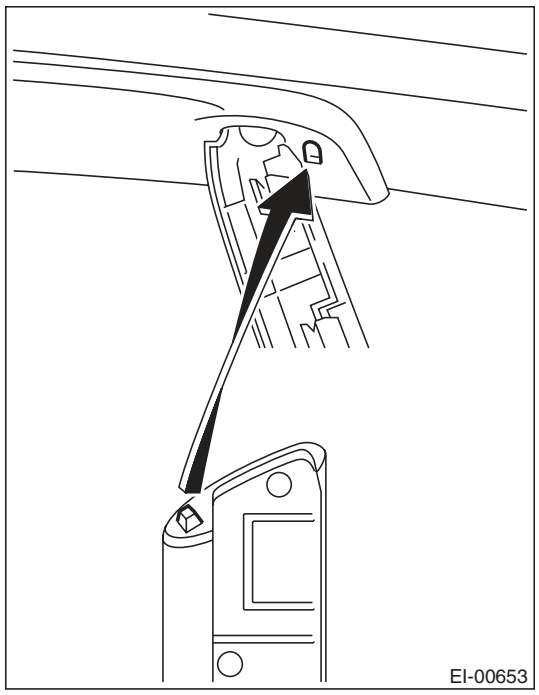

- Bottom clip of the front door faces the opposite direction

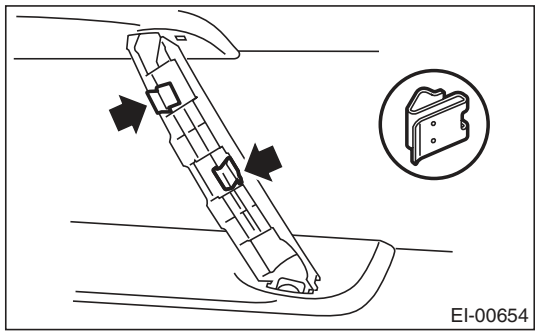

- Lower side of the hand grip cover for the front door has a claw.
- The bottom clip of the rear door faces the opposite direction

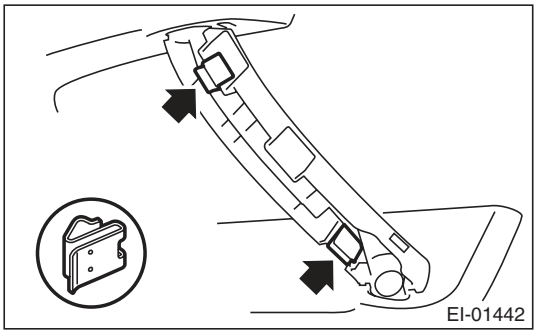

18. Instrument Panel Lower Cover

A: REMOVAL

1) Disconnect the ground cable from the battery.
2) Remove the front door inside scuff plate (A) and front pillar lower trim (B) on the driver's side. <Ref. to EI-61, REMOVAL, Lower Inner Trim.>

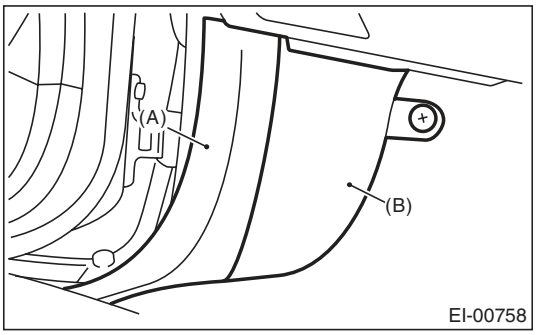

3) Remove the clips, and remove the instrument panel lower cover under.

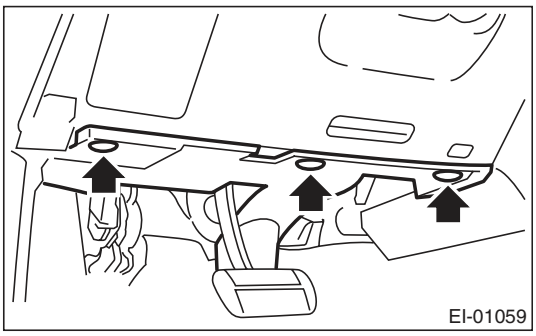

4) Loosen the screw (A), disconnect the connectors, and remove the instrument panel lower cover upper.

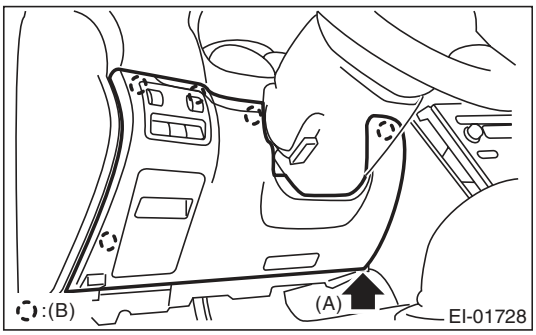

(B) Clip

B: INSTALLATION

Install in the reverse order of removal.

19. Glove Box

A: REMOVAL

1) Disconnect the ground cable from the battery.
2) Remove the console box. <Ref. to EI-54, REMOVAL, Console Box.>
3) Remove the console front panel.

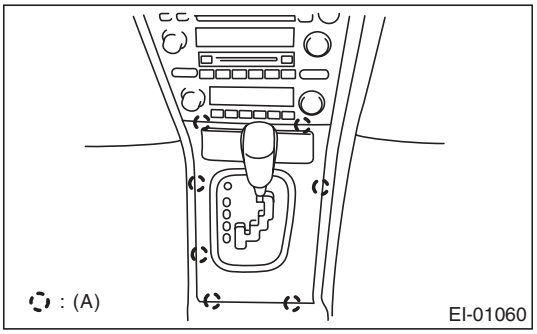

(A) Hook

NOTE:
For the AT model, remove the ring indicator.
For the MT model, remove the shift knob.
4) Remove the console side garnish.

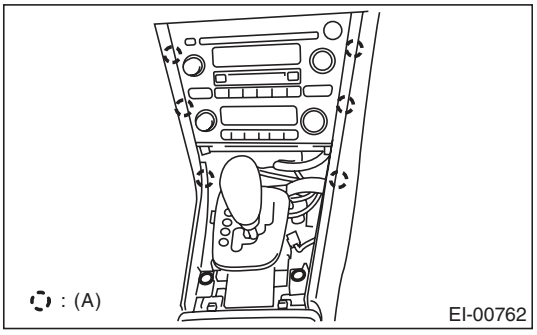

(A) Hook

5) Remove the front inside scuff plate (A) and front pillar lower trim (B). <Ref. to EI-61, REMOVAL, Lower Inner Trim.>

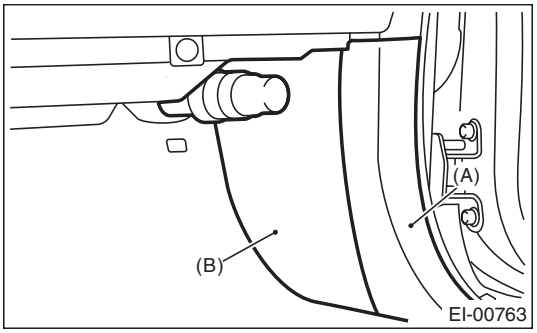

6) Remove the clips, and remove the glove box lower cover.

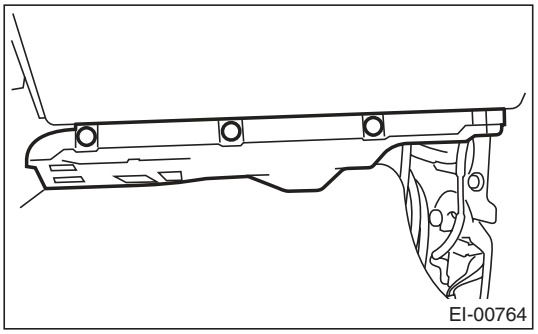

7) Remove the console side panel.

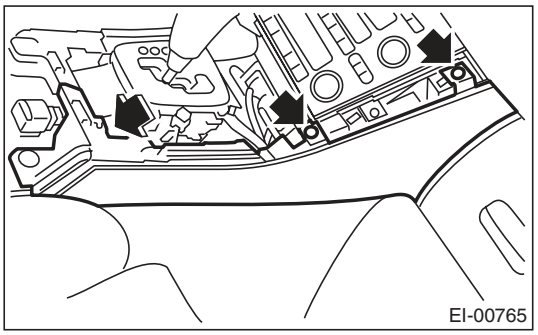

8) Remove the instrument panel side cover, and remove the clip.

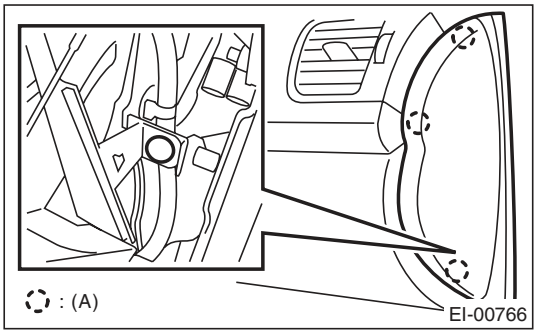

(A) Clip

9) Remove the strap of the glove box damper.
10) Remove the backside of stopper on one side, and remove the glove box lid.

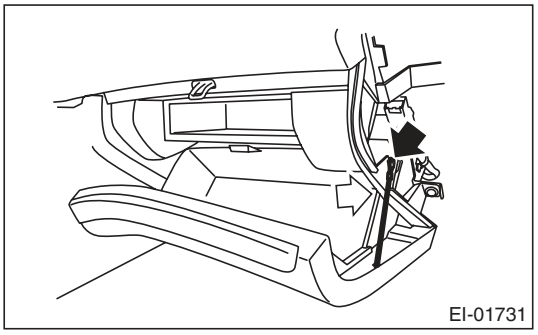

11) Remove the harness holder and connector holder.

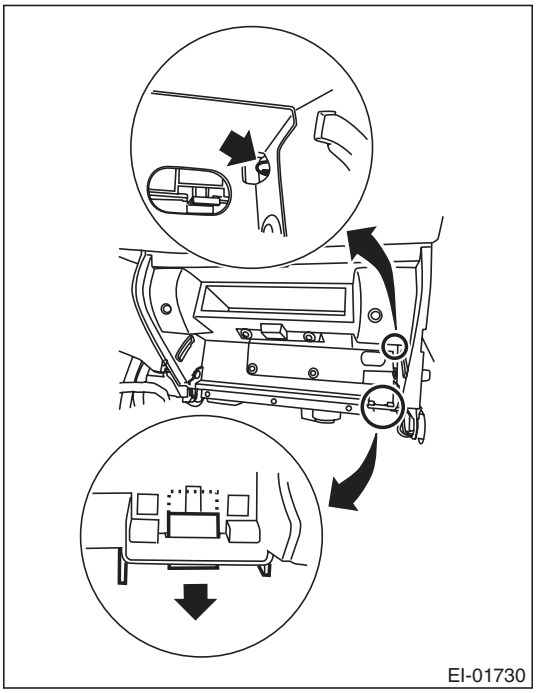

12) Remove the screws and upper clip to remove the glove box.

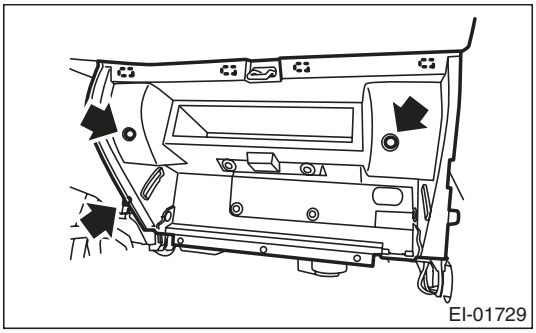

B: INSTALLATION

Install in the reverse order of removal.

20. Console Box

A: REMOVAL

1) Disconnect the ground cable from the battery.
2) Remove the parking brake lever cover.

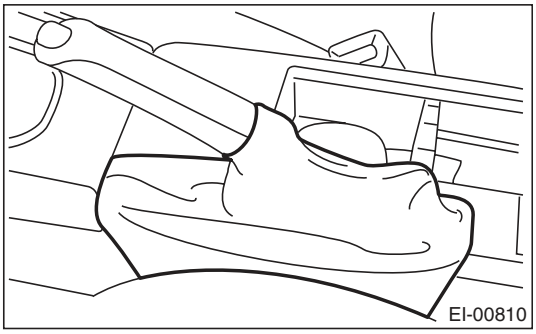

3) Remove the bolts and clips.

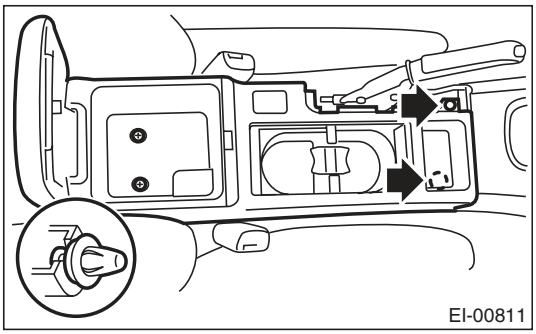

4) Disconnect the connector, and remove the console box.

B: INSTALLATION

Install in the reverse order of removal.

21. Center Console

A: REMOVAL

1) Disconnect the ground cable from the battery.
2) Remove the console box. <Ref. to EI-54, REMOVAL, Console Box.>
3) Remove the console front panel.

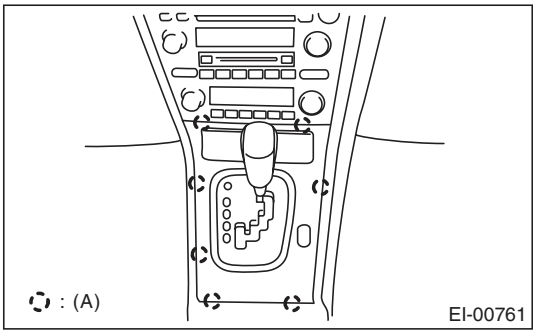

(A) Hook

NOTE:
For the AT model, remove the ring indicator.
For the MT model, remove the shift knob.
4) Loosen the screw, remove the hook, and remove the console side garnish.

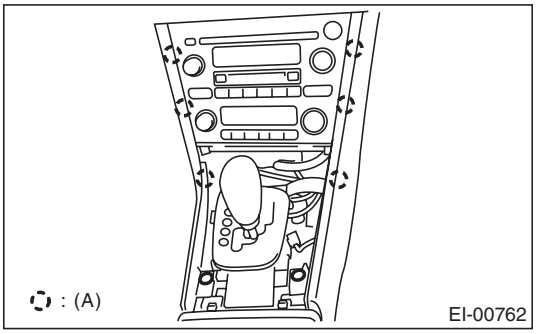

(A) Hook

5) Remove the instrument panel lower cover. <Ref. to EI-51, REMOVAL, Instrument Panel Lower Cover.>

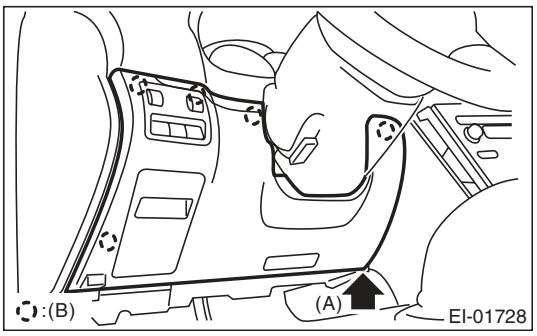

6) Remove the clip at the tip of the console side panel.

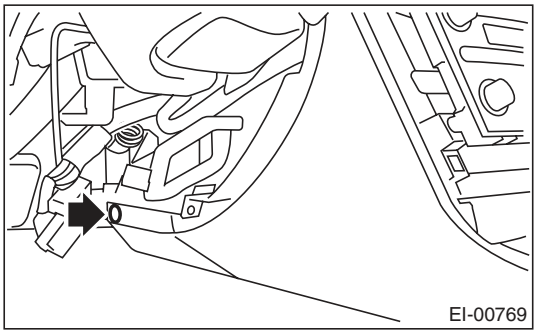

7) Remove the passenger's side front inside scuff plate (A) and front pillar lower trim (B). <Ref. to EI-61, REMOVAL, Lower Inner Trim.>

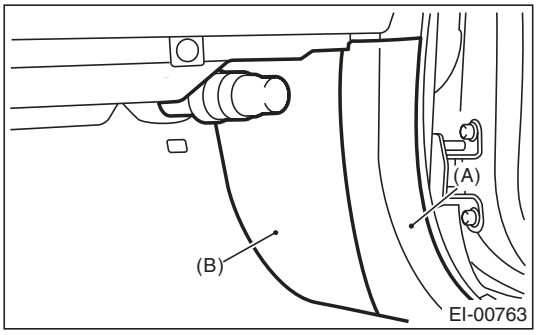

8) Remove the clips, and remove the glove box lower cover.

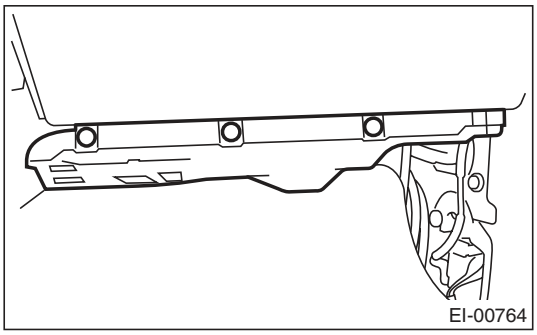

9) Remove the screws, and remove the console side panel.

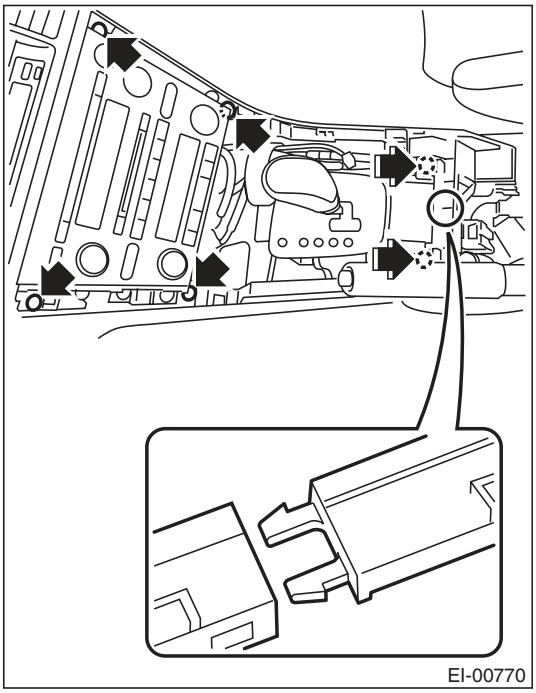

10) Loosen the screws and pull out the audio unit assembly, and disconnect the connector for removal.

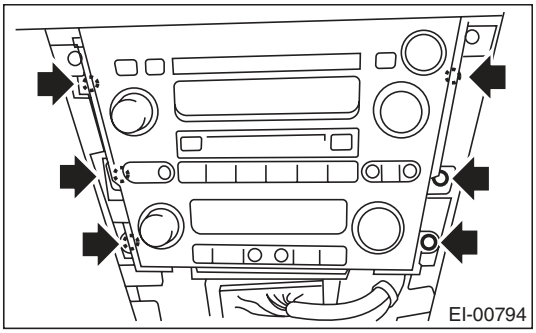

NOTE:
The audio unit assembly can be removed without removing the console side panel.

B: INSTALLATION

Install in the reverse order of removal.

22. Instrument Panel Assembly

A: REMOVAL

1. INSTRUMENT PANEL (EXCLUDING STEERING SUPPORT BEAM)

CAUTION:
Be careful not to damage the airbag system harness when servicing the instrument panel. Damage may cause the system to malfunction.

1) Disconnect the ground cable from the battery.
2) Remove the front pillar upper trim. <Ref. to EI-62, REMOVAL, Upper Inner Trim.>
3) Remove the console box. <Ref. to EI-54, REMOVAL, Console Box.>
4) Remove the center console. <Ref. to EI-55, REMOVAL, Center Console.>
5) Remove the instrument panel lower cover. <Ref. to EI-51, REMOVAL, Instrument Panel Lower Cover.>
6) Remove the glove box. <Ref. to EI-52, REMOVAL, Glove Box.>
7) Remove the combination meter assembly. <Ref. to IDI-22, REMOVAL, Combination Meter.>
8) Remove the screws.

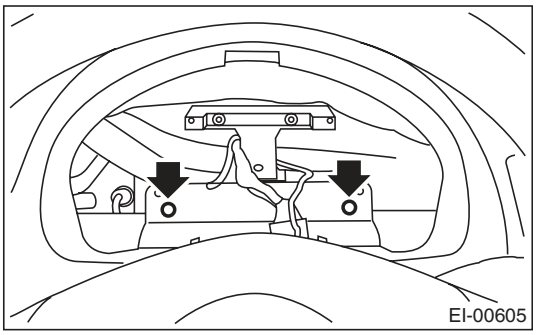

9) Remove the driver's side instrument panel side cover, and remove the screws.

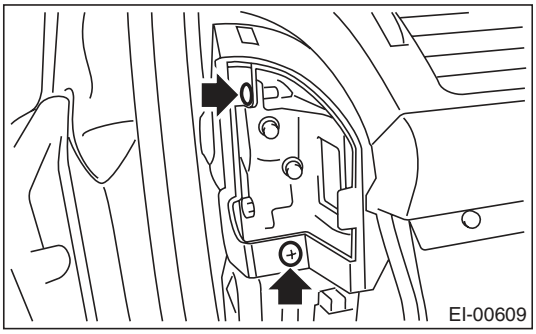

10) Remove the screw at the side of the center console.

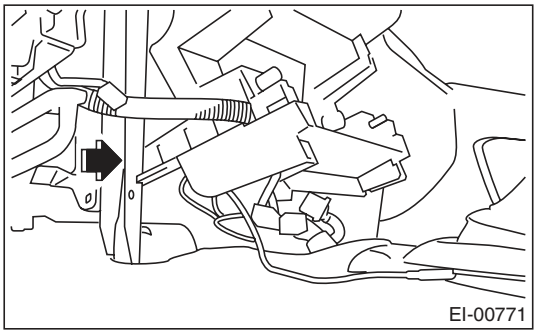

11) Remove the center air vent grille of the instrument panel. <Ref. to AC-47, CENTER GRILLE, REMOVAL, Air Vent Grille.>
12) Remove the screws.

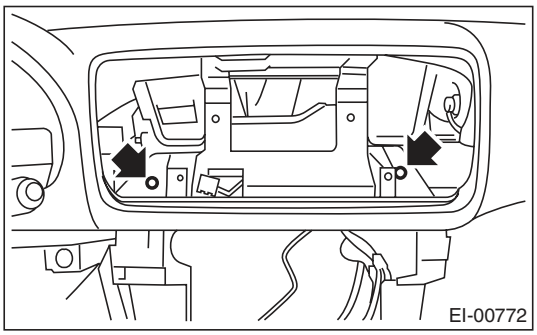

13) Remove the screws at the side of the passenger's side instrument panel.

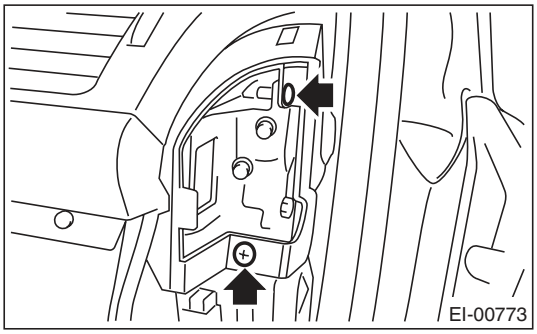

14) Remove the bolts securing the passenger's side airbag module to the steering support beam.

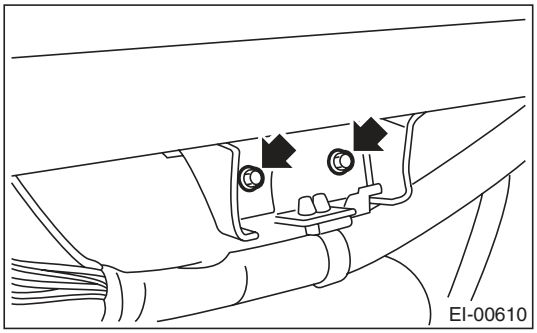

15) Disconnect the connectors, and remove the instrument panel from vehicle body.

NOTE:
- If necessary, make alignment marks for easy reassembly.
- When storing the removed instrument panel, be sure to prepare a table or the like to place the instrument panel, in order to prevent scratches or other damage to the panel.

16) Remove the side air vent grille. <Ref. to AC-47, REMOVAL, Air Vent Grille.>

17) Remove the heater vent duct. <Ref. to AC-49, REMOVAL, Heater Vent Duct.>

18) Loosen the screws to remove the center console frame.

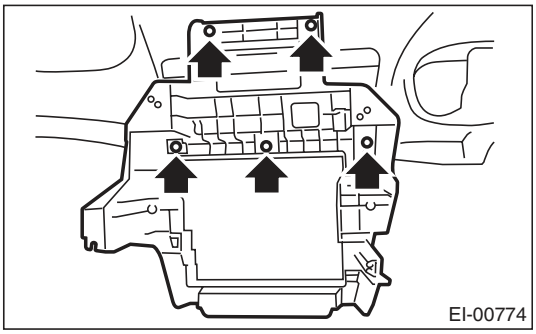

19) Loosen the screws to remove the meter bracket

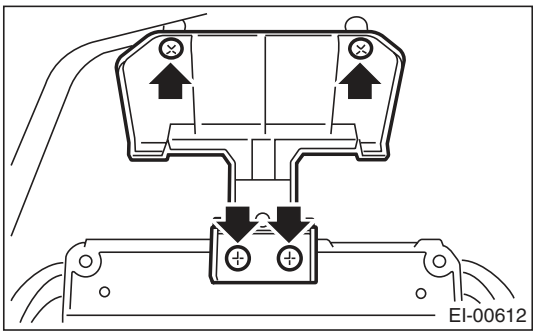

20) Loosen the screws to remove the instrument panel matching pins.

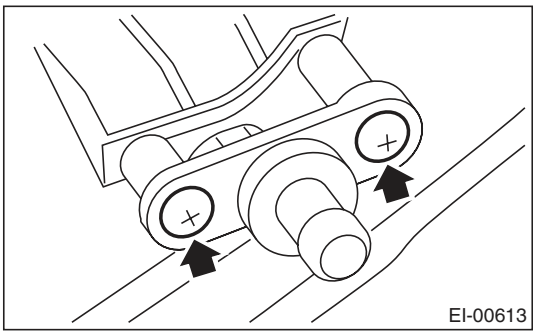

21) Loosen the screws to remove the glove box striker.

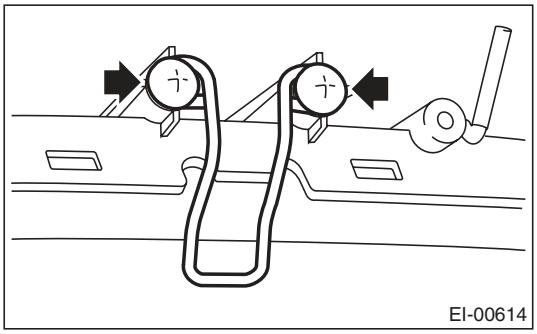

22) Remove the claw, and remove the passenger's airbag module.

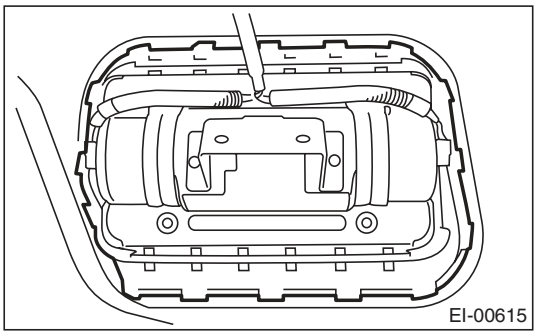

2. STEERING SUPPORT BEAM

1) Remove the instrument panel. <Ref. to EI-57, INSTRUMENT PANEL (EXCLUDING STEERING SUPPORT BEAM), REMOVAL, Instrument Panel Assembly.>
2) Remove the steering shaft assembly. <Ref. to PS-16, REMOVAL, Tilt Steering Column.>
3) Remove all harness clips, and remove the harness from the steering support beam.

NOTE:
If necessary, make alignment marks for easy reassembly.

4) Remove the bolts and remove the steering support beam.

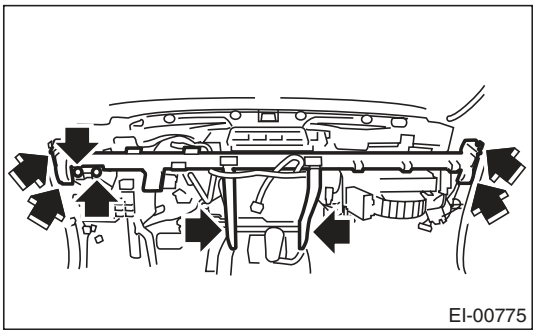

5) Remove the steering support beam bracket.

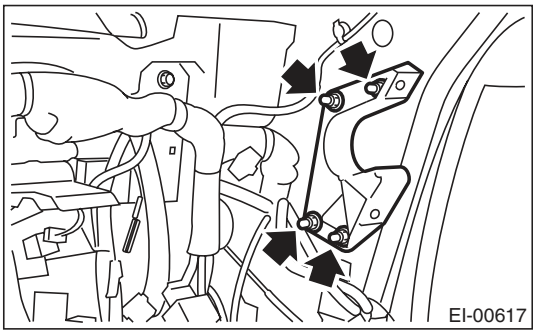

3. INSTRUMENT PANEL ASSEMBLY (INCLUDING STEERING SUPPORT BEAM)

CAUTION:
Be careful not to damage the airbag system harness when servicing the instrument panel. Damage may cause the system to malfunction.

1) Remove the front pillar upper trim. <Ref. to EI-62, REMOVAL, Upper Inner Trim.>
2) Remove the center console. <Ref. to EI-55, REMOVAL, Center Console.>
3) Remove the instrument panel lower cover. <Ref. to EI-51, REMOVAL, Instrument Panel Lower Cover.>
4) Remove the glove box. <Ref. to EI-52, REMOVAL, Glove Box.>
5) Remove the steering shaft assembly. <Ref. to PS-16, REMOVAL, Tilt Steering Column.>
6) Remove the driver's side instrument panel side cover, and remove the bolts.

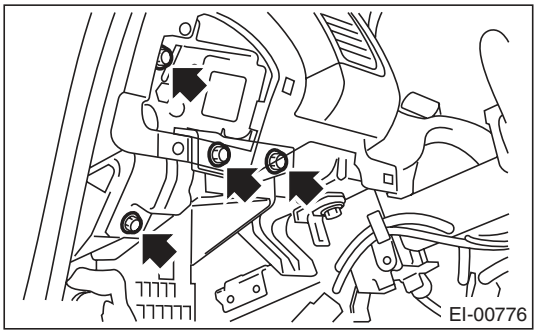

7) Remove the bolts at the side of the passenger's side instrument panel.

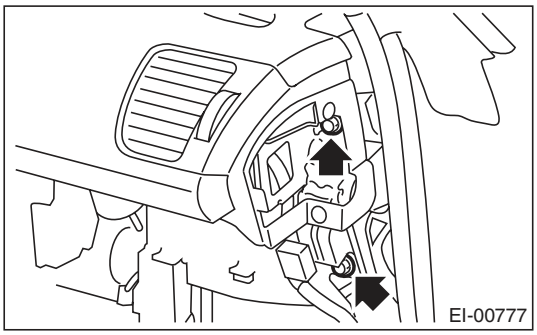

8) Loosen the bolts on the center console side.

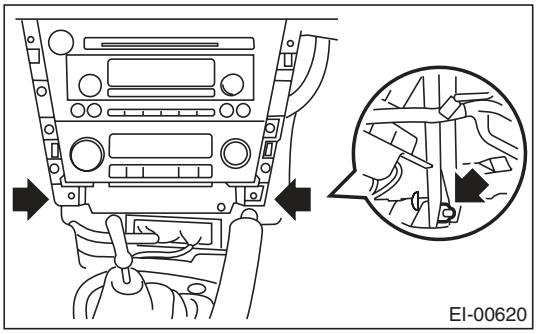

9) Disconnect the connectors, and remove the instrument panel assembly.

NOTE:
If necessary, make alignment marks for easy reassembly.

B: INSTALLATION

1. INSTRUMENT PANEL (EXCLUDING STEERING SUPPORT BEAM)

1) Insert the matching pins (three places) on the instrument panel tip into the grommet (A) and (B) on the body panel side.

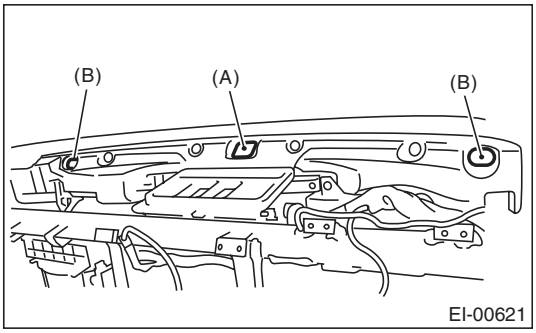

2) Check that the matching pins are inserted securely, and then route the harness.
3) Tighten the instrument panel with screws, and recheck the installation condition of instrument panel and harness routing.
4) Install in the reverse order of removal.

NOTE:
How to install insulator and pad;
- Adhesive

Use polyurethane adhesive. When assembling the instrument panel assembly, wait until the adhesive has evaporated to prevent filling of the smell in the compartment.
- Double-sided tape

Use commercial double-sided tape. (Use strong double-sided adhesive tape.)
- Locations

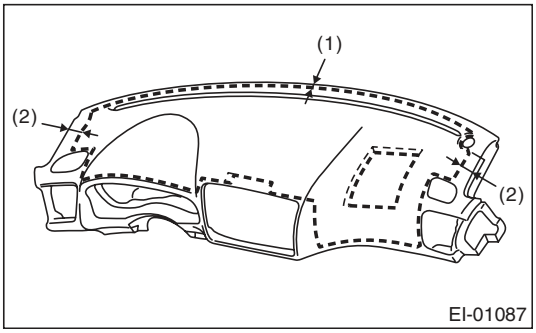

(1) 10 mm
(2) 40 mm

Apply at a position spaced by 10 mm from the instrument panel front end, and 40 mm from the ends on both sides.

2. STEERING SUPPORT BEAM

1) Temporarily tighten the steering support beam with bolts, and then route the harness.
2) Make sure that there is no mutual interference in each pedal, and then tighten each bolt.

Tightening torque:
25 N·m (2.55 kgf-m, 18.4 ft-lb)

3) Install in the reverse order of removal.

3. INSTRUMENT PANEL ASSEMBLY (INCLUDING STEERING SUPPORT BEAM)

1) Insert the matching pins (three places) on the instrument panel tip into the grommet (A) and (B) on the body panel side.

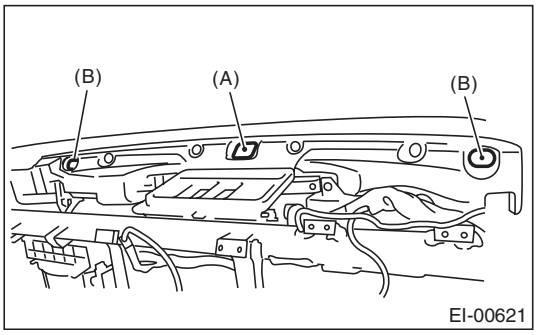

2) Check that the matching pins are inserted securely, and then route the harness.
3) Temporarily tighten the steering support beam with bolts, and then route the harness.
4) Make sure that there is no mutual interference in each pedal, and then tighten each bolt.

Tightening torque:
25 N·m (2.55 kgf-m, 18.4 ft-lb)

5) Install in the reverse order of removal.

23. Lower Inner Trim

A: REMOVAL

1) Remove the hook, and remove the inside scuff plate.

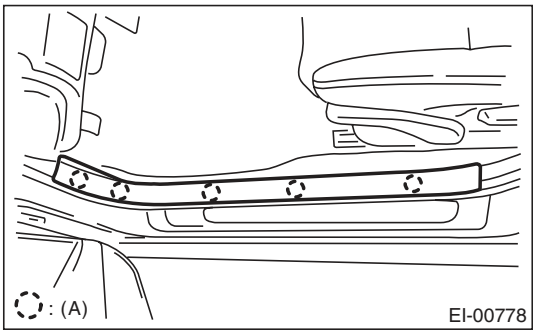

(A) Hook

2) Remove the door molding (A), and remove the outside scuff plate.

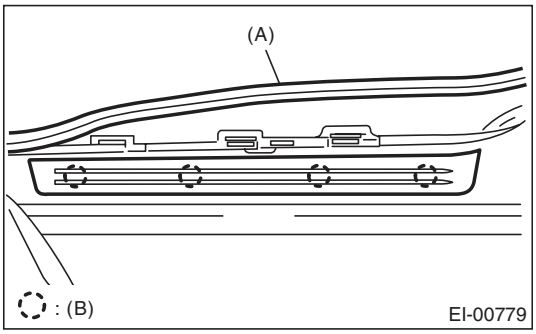

(B) Clip

3) Remove clip (A), and remove the front pillar lower trim.

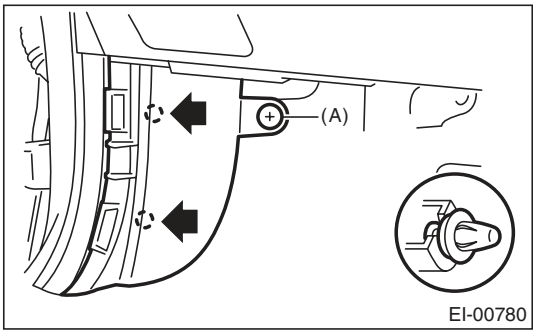

4) Remove the rear seat cushion. <Ref. to SE-18, REMOVAL, Rear Seat.>

5) Remove clip (A), and remove the inside scuff plate.

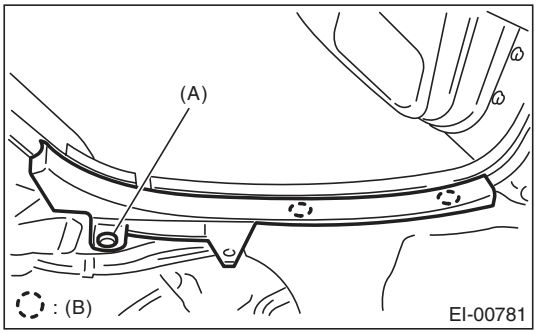

(B) Hook

6) Remove door molding (A) and door catcher cover (B), then remove the outside scuff plate.

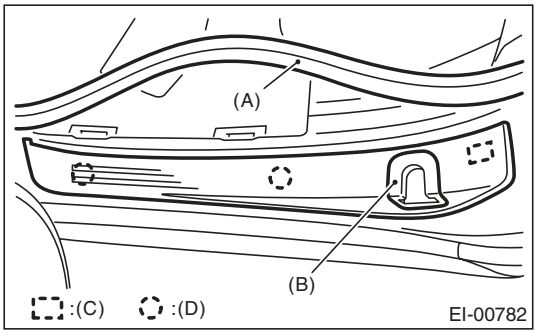

(C) Hook with plate clip
(D) Clip

7) Remove the clips of the center pillar lower trim.

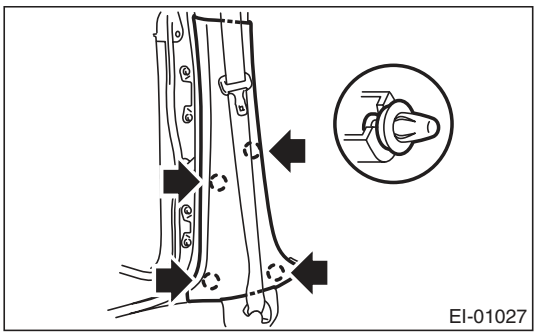

B: INSTALLATION

Install in the reverse order of removal.

24. Upper Inner Trim

A: REMOVAL

1) From the top side of the trim, remove the metal clip using a flat tip screwdriver.

CAUTION:
When the metal clip comes off or becomes damaged, replace both trim and metal clips with new parts.

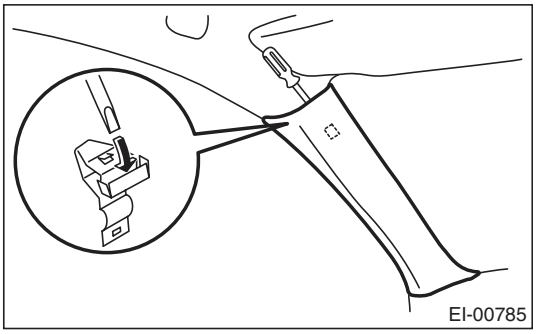

2) Remove the front pillar upper trim.

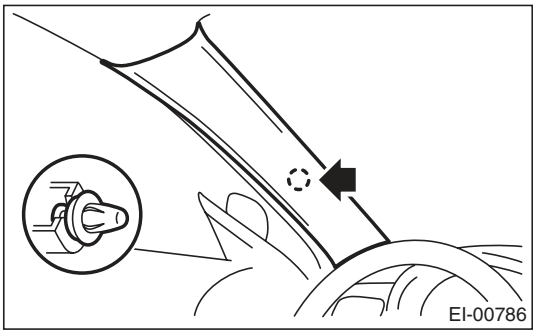

3) Remove the front inside scuff plate, rear inside scuff plate and center pillar lower trim. <Ref. to EI-61, REMOVAL, Lower Inner Trim.>
4) Remove the cap on the upper side of the pillar trim, and remove the bolt inside.

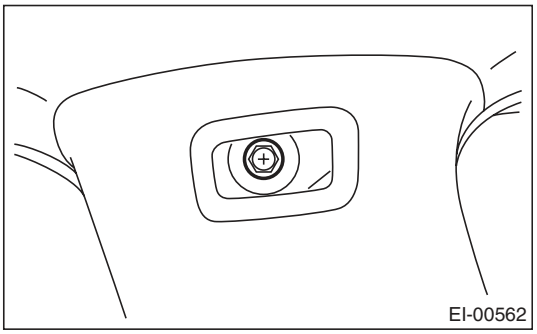

5) Remove the center pillar upper trim.

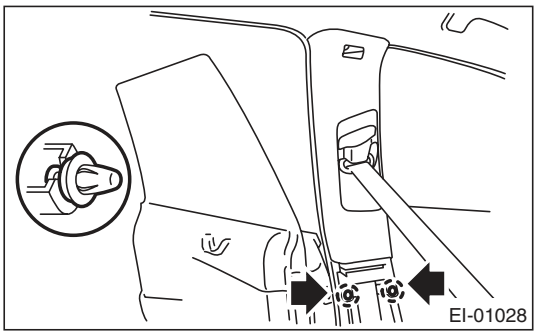

6) Remove the seat belt lower anchor bolt at the center pillar lower port. (Driver's seat)
7) Refer to the removal procedure of "Front Seat Belt" for the passenger's seat. <Ref. to SB-18, OUTER SEAT BELT ASSEMBLY, REMOVAL, Front Seat Belt.>

B: INSTALLATION

Install in the reverse order of removal.

Tightening torque:
7.5 N·m (0.76 kgf-m, 5.5 ft-lb)

25. Rear Quarter Trim

A: REMOVAL

1. SEDAN MODEL

1) Remove the rear seat. <Ref. to SE-18, SEDAN MODEL, REMOVAL, Rear Seat.>
2) Turn over the trim, and remove the quarter trim rear by pressing the claw (A) of the metal clip using a flat screwdriver, etc.

CAUTION:
When the metal clip comes off or becomes damaged, replace both trim and metal clips with new parts.

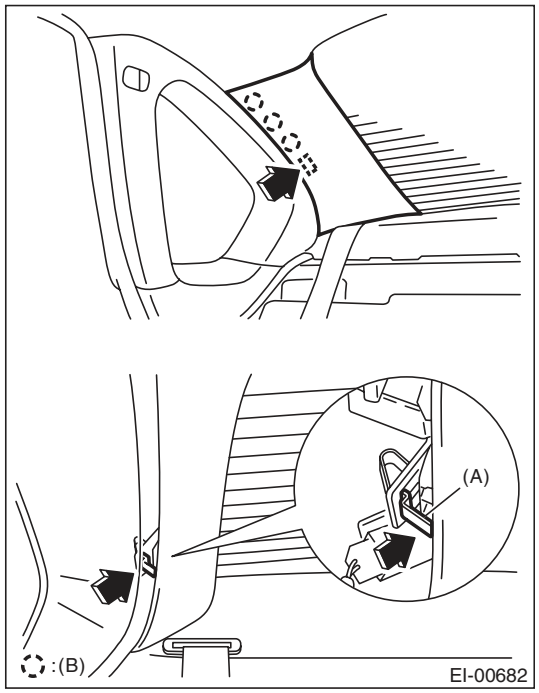

(B) Hook

3) Remove the cap on the upper side of the trim, and remove the bolt inside.

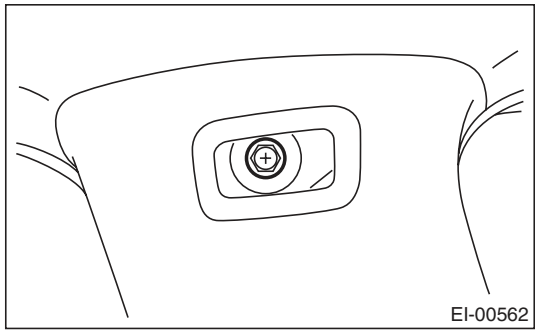

4) Remove the bolts (A), and remove the quarter trim (front).

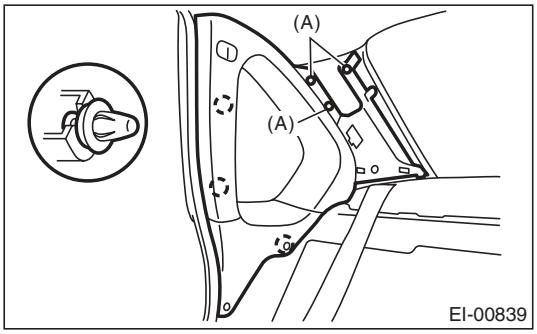

2. WAGON MODEL

1) Remove the rear seat cushion and backrest shoulder. <Ref. to SE-19, WAGON MODEL, REMOVAL, Rear Seat.>
2) Remove the cap on the upper side of the pillar trim, and remove the bolt inside.

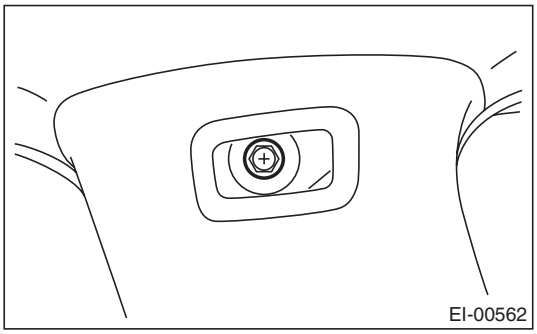

3) Remove the clip, and remove the quarter front pillar trim.

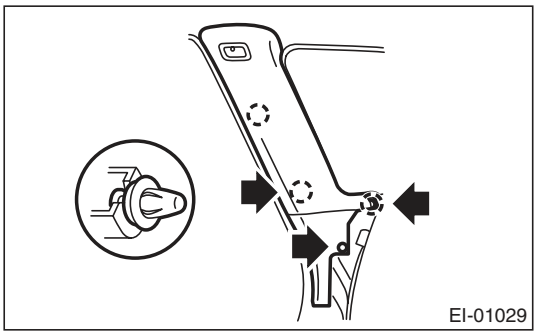

4) Remove the quarter rear pillar trim.

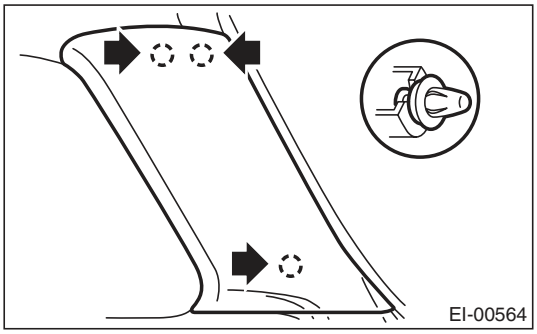

5) Remove the luggage floor box. <Ref. to EI-73, REMOVAL, Luggage Floor Box.>
6) Remove the luggage floor end cover.

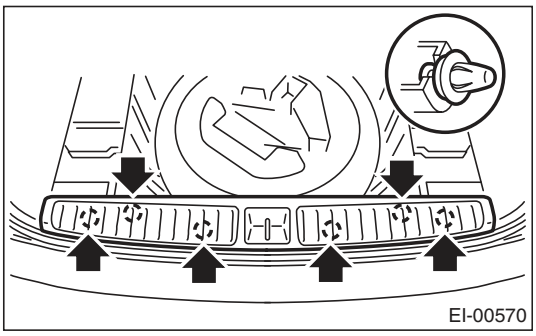

7) Remove the woofer cover. (Model with woofer)

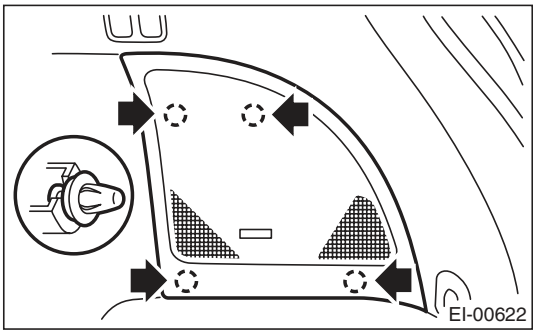

8) Remove the screws (A) and bolts (B), and remove the quarter lower trim.

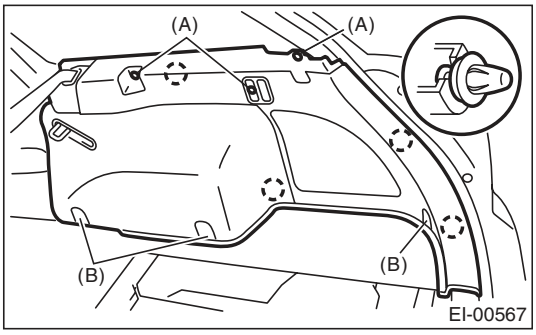

NOTE:
- Remove the screw cover on the tonneau cover installation area.
- Pull out the shopping bag hook, and remove the screw on the far end.

B: INSTALLATION

Install in the reverse order of removal.

Tightening torque:
7.5 N·m (0.76 kgf-m, 5.5 ft-lb)

26.Sun Visor

A: REMOVAL

1) Remove the cover, loosen the mounting screws, and remove the sun visor.

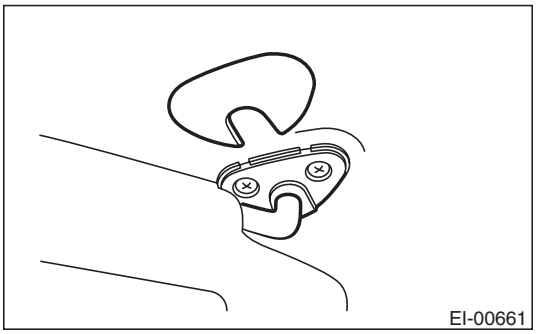

2) Disconnect the connector. (Model with vanity mirror light)
3) While pressing the (A) on the both side using flat tip screwdriver, pull the sun visor hook to remove it.

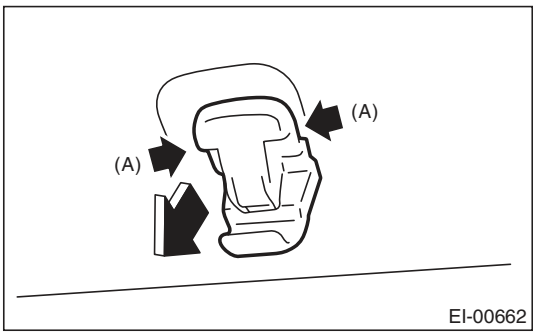

B: INSTALLATION

Install in the reverse order of removal.

27. Assist Grip

A: REMOVAL

1) Remove the screw cover, and remove the screw inside.
2) Pull the left side of assist grip, and rotate the right side of it counterclockwise to remove.

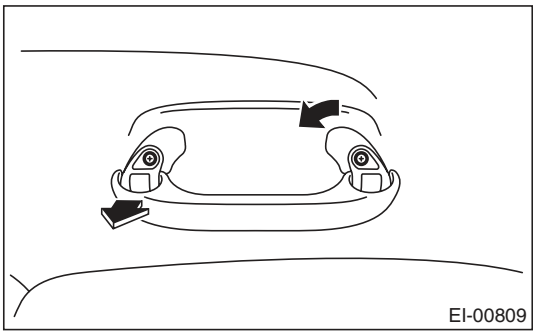

3) Remove the roof trim. <Ref. to EI-67, REMOVAL, Roof Trim.>
4) Remove the bolts, and remove the assist grip bracket.

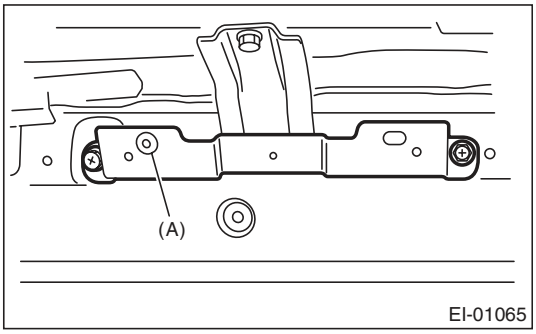

(A) Grommet

B: INSTALLATION

CAUTION:
Be sure to install the grommet to assist grip bracket.
When the assist grip is installed with no grommet, it ill cause the grip to not return properly.
Install in the reverse order of removal.

28. Roof Trim

A: REMOVAL

1. SEDAN MODEL

1) Disconnect the ground cable from the battery.
2) Remove the front seats. <Ref. to SE-9, REMOVAL, Front Seat.>
3) Remove the rear seat. <Ref. to SE-18, REMOVAL, Rear Seat.>
4) Remove the console box. <Ref. to EI-54, REMOVAL, Console Box.>
5) Remove the center console. <Ref. to EI-55, REMOVAL, Center Console.>
6) Remove the select lever. (AT model) <Ref. to CS-23, REMOVAL, Select Lever.>
7) Remove the spot map light. <Ref. to LI-32, REMOVAL, Spot Map Light.>
8) Remove the room light. <Ref. to LI-33, REMOVAL, Room Light.>
9) Remove the sun visor. <Ref. to EI-65, REMOVAL, Sun Visor.>
10) Remove the assist grip. <Ref. to EI-66, REMOVAL, Assist Grip.>
11) Remove the upper inner trim. <Ref. to EI-62, REMOVAL, Upper Inner Trim.>
12) Remove the rear quarter trim. <Ref. to EI-63, SEDAN MODEL, REMOVAL, Rear Quarter Trim.>
13) Remove the sunroof opening trim. (Model with sunroof)

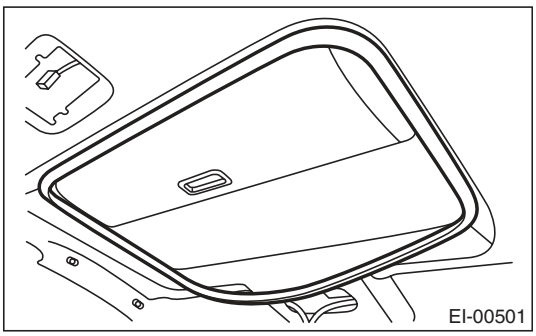

14) Remove the clips and harnesses, and remove the roof trim.
15) Pull out the roof trim from the vehicle.

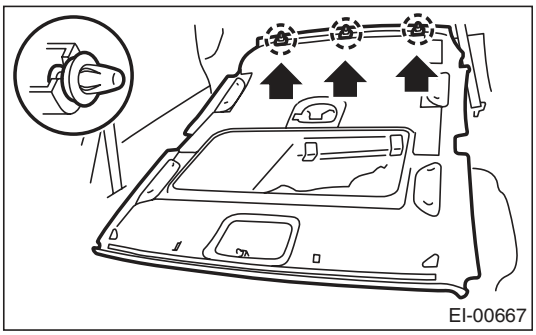

2. WAGON MODEL

1) Disconnect the ground cable from the battery.
2) Remove the spot map light. <Ref. to LI-32, REMOVAL, Spot Map Light.>
3) Remove the room light. <Ref. to LI-33, REMOVAL, Room Light.>
4) Remove the luggage room light. <Ref. to LI-34, REMOVAL, Luggage Room Light.>
5) Remove the sun visor. <Ref. to EI-65, REMOVAL, Sun Visor.>
6) Remove the assist grip. <Ref. to EI-66, REMOVAL, Assist Grip.>
7) Remove the upper inner trim. <Ref. to EI-62, REMOVAL, Upper Inner Trim.>
8) Remove the rear quarter trim. <Ref. to EI-63, WAGON MODEL, REMOVAL, Rear Quarter Trim.>

CAUTION:
Do not remove the roof end trim with excessive force. Otherwise the roof trim may become damaged. Roof trim and roof end trim are fastened by rivets.

9) Remove the sunroof opening trim. (Model with sunroof)

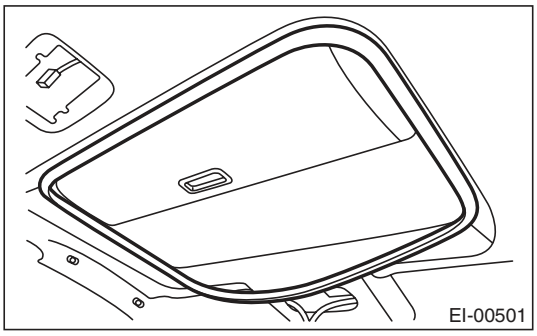

10) Remove the clips and each harness, pull out the rear center seat belt, and remove the roof trim.

CAUTION:
Do not remove the roof end trim with excessive force. Otherwise the roof trim may become damaged.

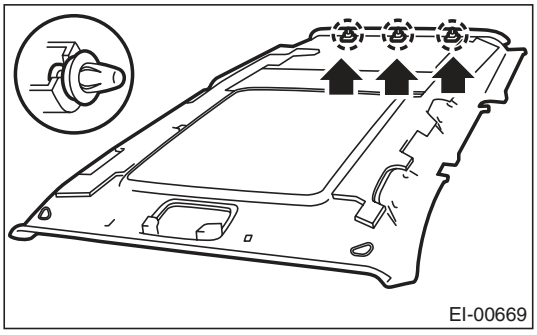

B: INSTALLATION

Install in the reverse order of removal.

29. Rear Gate Trim

A: REMOVAL

1) Remove clips (A), and remove the rear gate pillar trim.

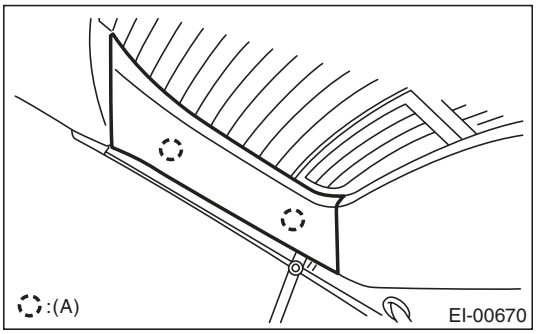

2) Remove the clips, and remove the rear gate upper trim.

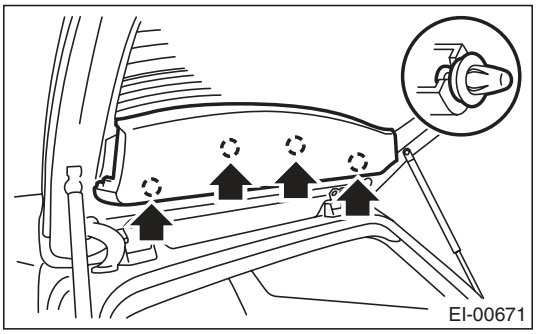

3) Remove the cover in the inner handle, and loosen the inside screw.
4) Turn over the weather strip, and remove the clips.

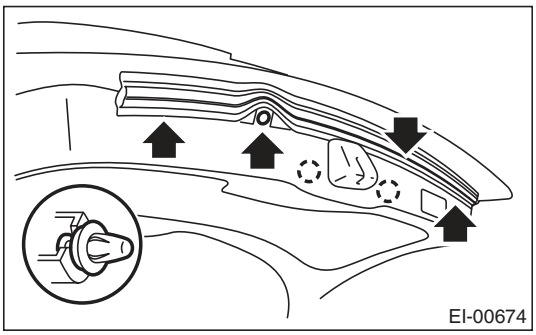

5) Remove the clips (A), and remove the rear gate lower trim.

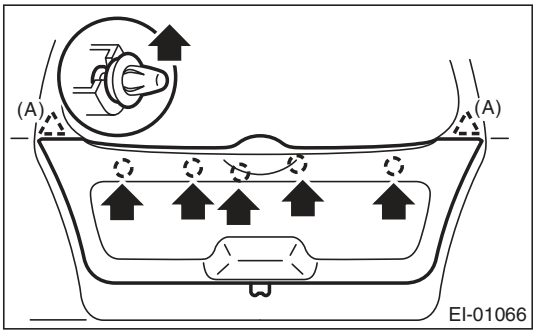

6) Remove the rear gate weather strip.

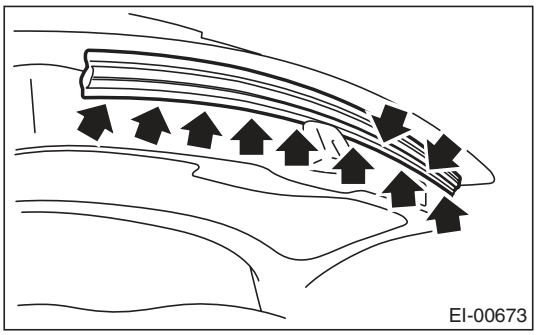

NOTE:
If the weather strip clip is removed with excessive force, the weather strip may be damaged. Be sure to use a clip remover to remove.

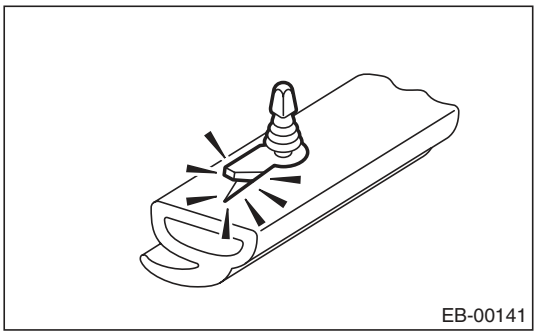

B: INSTALLATION

Install in the reverse order of removal.

30. Rear Shelf Trim

A: REMOVAL

1) Disconnect the ground cable from the battery.
2) Remove the rear seat cushion. <Ref. to SE-18, SEDAN MODEL, REMOVAL, Rear Seat.>
3) Remove the backrest shoulder. (Right and left)

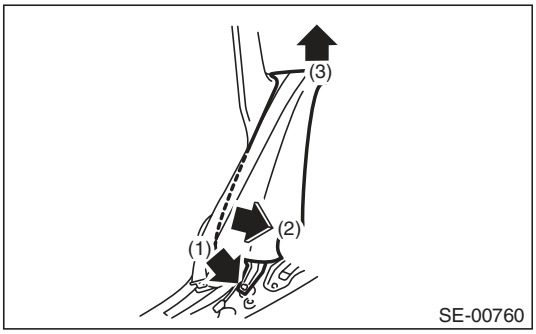

(1) Remove the bolt.
(2) Moving the lower side of backrest shoulder to the direction of arrow, and remove it from the stud bolt.
(3) Lift to remove the backrest shoulder.

4) Tilt the seat backrest forward.
5) Remove the clip, and remove the rear bulkhead panel upper.

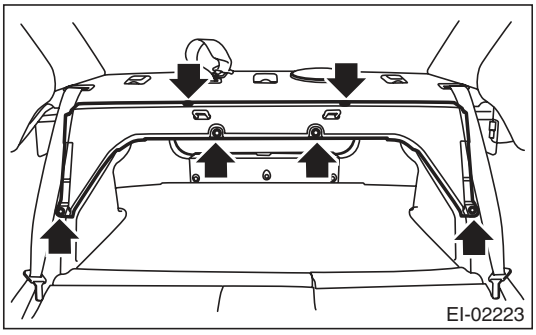

6) Remove the rear quarter trim. <Ref. to EI-63, SEDAN MODEL, REMOVAL, Rear Quarter Trim.>
7) Remove the high-mounted stop light. <Ref. to LI-31, REMOVAL, High-mounted Stop Light.>
8) After disconnecting the high-mounted stop light harness connector (A) and removing the five clips, remove the rear shelf trim by pulling it frontward.

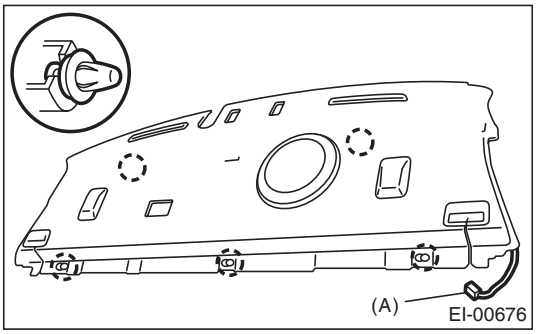

B: INSTALLATION

Install in the reverse order of removal.

NOTE:
Securely insert the vehicle body panel into the hook of the rear shelf trim center, and install the rear shelf trim.

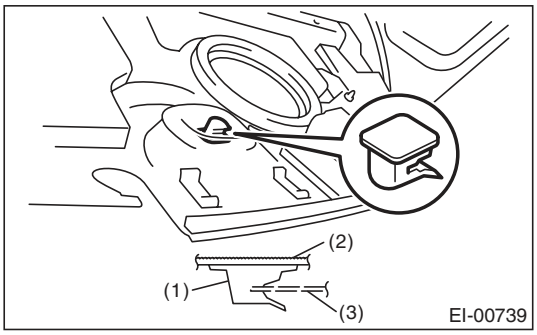

(1) Hook
(2) Rear Shelf Trim
(3) Vehicle body panel

31.Trunk Room Trim

A: REMOVAL

1. TRUNK LID TRIM

1) Remove the trim clips and stopper rubber, and remove the trunk lid trim.

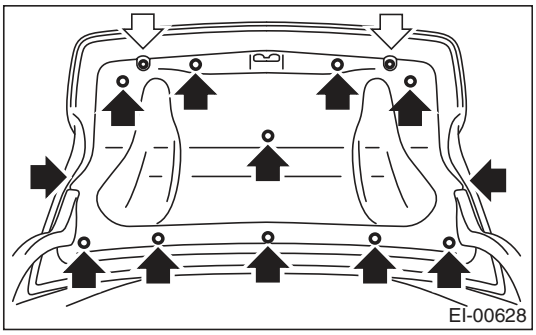

2) Remove the four claws, and remove the trunk handle cover (1).

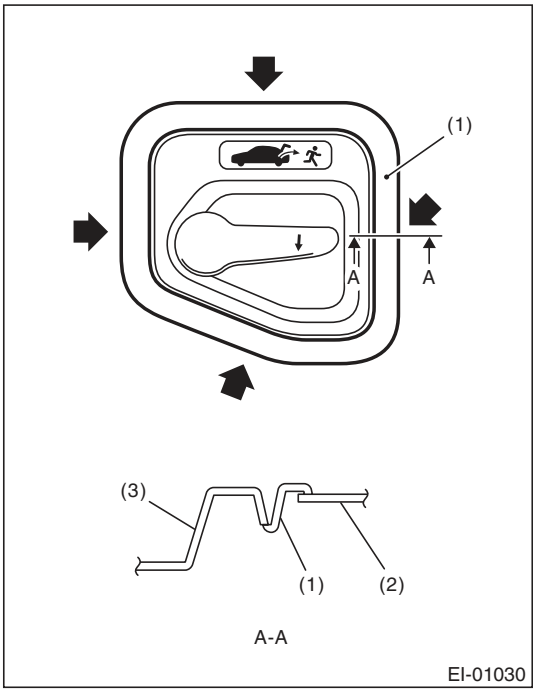

(1) Trunk handle cover
(2) Trunk lid trim
(3) Trunk release handle

3) Remove clip (A) of the trunk side trim, and remove the trunk lid arm cover.

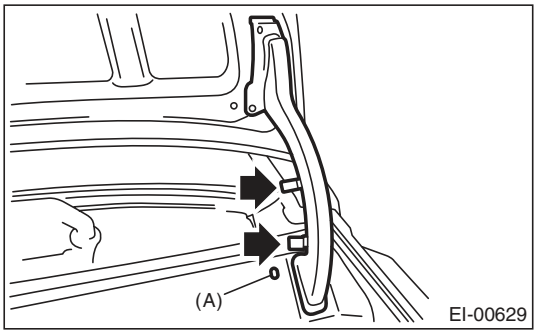

2. TRUNK ROOM TRIM

1) Remove the trunk room mat.

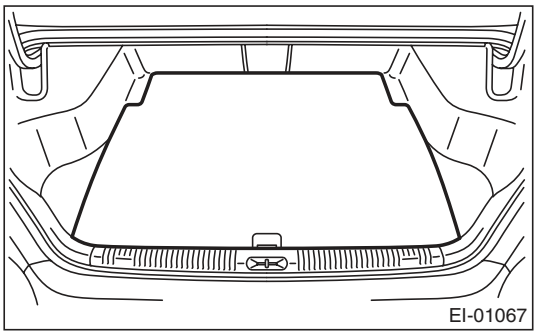

2) Remove the trim clips (A), and remove the trunk room end cover.

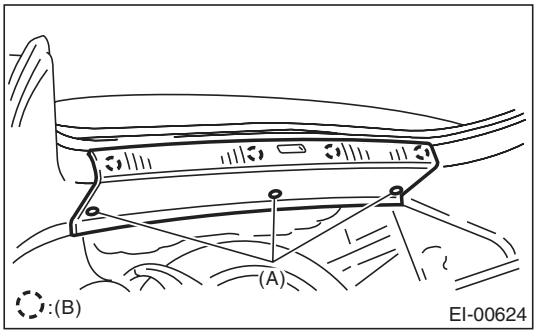

(B) Clip

3) Insert the flat tip screwdriver from the lower side of the trunk hook, and then remove the trunk hook by rotating it 90°.

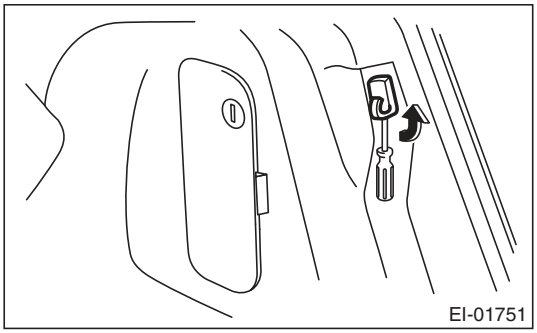

4) Remove the trim clips, and remove the trunk side trim.

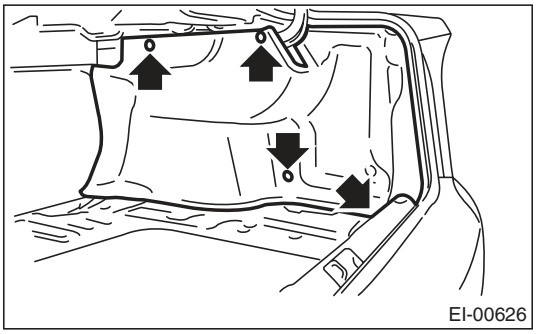

B: INSTALLATION

Install in the reverse order of removal.

32. Floor Mat

A: REMOVAL

1) Remove the front seats. <Ref. to SE-9, REMOVAL, Front Seat.>
2) Remove the rear seat cushion. <Ref. to SE-18, REMOVAL, Rear Seat.>
3) Remove the console box. <Ref. to EI-54, Console Box.>
4) Remove the console side panel. <Ref. to EI-55, REMOVAL, Center Console.>
5) Remove the lower inner trim. <Ref. to EI-61, REMOVAL, Lower Inner Trim.>
6) Remove the clips from the floor mat.
7) Remove the mat hook on both sides.
8) Remove the mat from toe board area.
9) Remove the mat from rear heater duct.
10) Roll the mat, and then take it out of opened rear door.

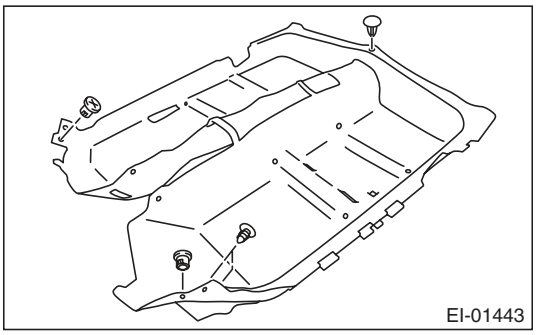

B: INSTALLATION

Install in the reverse order of removal.

NOTE:
- Secure the mat firmly with hook and clip.
- Insert the mat edge firmly into the groove of side sill cover.

33. Luggage Floor Box

A: REMOVAL

1) Remove the luggage floor mat.
2) Remove the clips, and remove the luggage floor box.

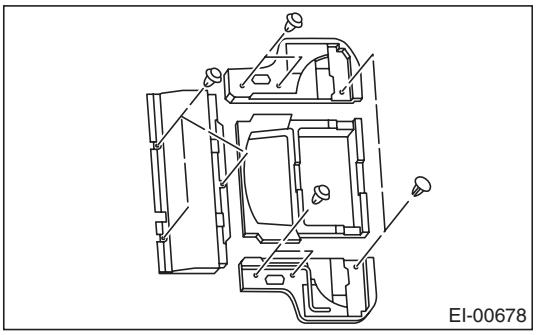

B: INSTALLATION

Install in the reverse order of removal.

34. Trunk Lid Garnish

A: REMOVAL

1) Remove the license plate, and loosen bolts (A).

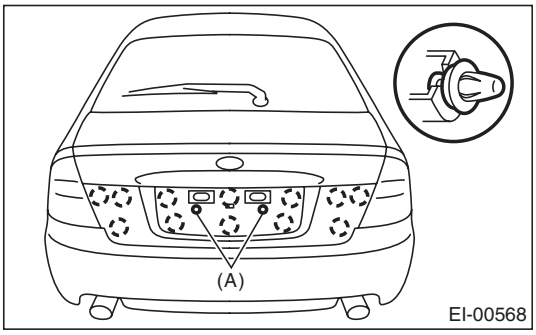

2) Remove the clip in the upper corner of the trunk lid garnish.

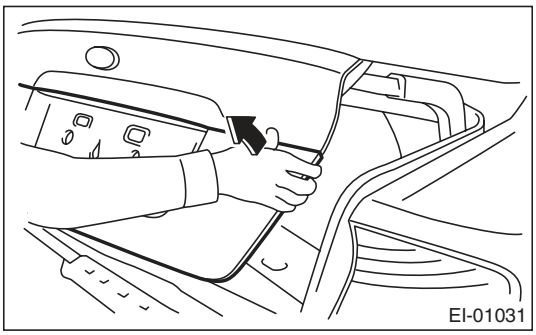

3) Place your hands between the trunk lid garnish and the trunk lid panel, and remove the trunk lid garnish starting from the edge, in order.

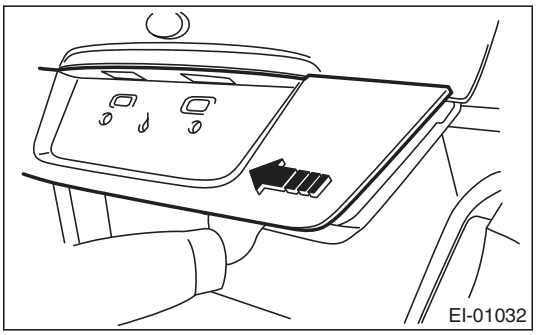

B: INSTALLATION

Install in the reverse order of removal.

Tightening torque:
7.5 N·m (0.76 kgf-m, 5.5 ft-lb)

35. Rear Gate Garnish

A: REMOVAL

1) Remove the rear gate trim. <Ref. to EI-68, REMOVAL, Rear Gate Trim.>
2) Remove clip (A), and remove the rear gate panel side cover.

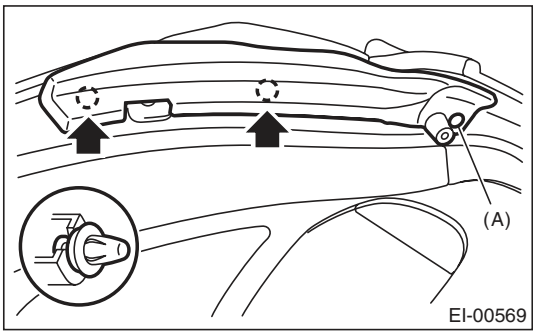

3) Remove the hexagon cap nut.

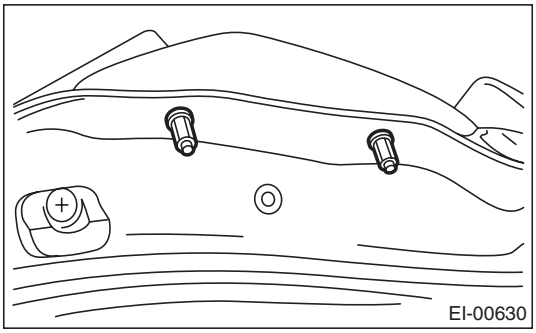

4) Remove the nuts, disconnect connectors, and remove the rear gate garnish.

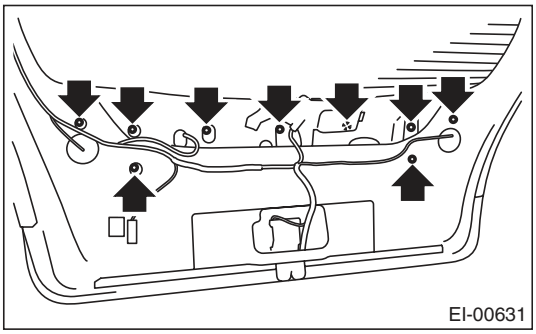

B: INSTALLATION

Install in the reverse order of removal.

Tightening torque:
4.5 N·m (0.46 kgf-m, 3.32 ft-lb)

36. Heat Shield Cover

A: REMOVAL

1. FRONT HEAT SHIELD COVER

Remove the four bolts to remove the front heat shield cover.

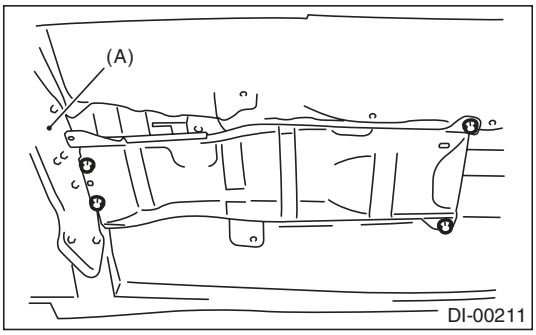

(A) Transmission mount

2. CENTER HEAT SHIELD COVER

Remove the nut and bolt to remove center heat shield cover.

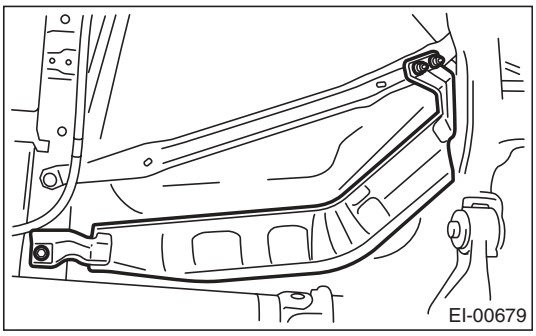

3. REAR HEAT SHIELD COVER

1) Remove the muffler. <Ref. to EX(H4SO)-10, REMOVAL, Muffler.> <Ref. to EX(H4DOTC)-14, REMOVAL, Muffler.>
2) Remove the four bolts to remove the rear heat shield cover.

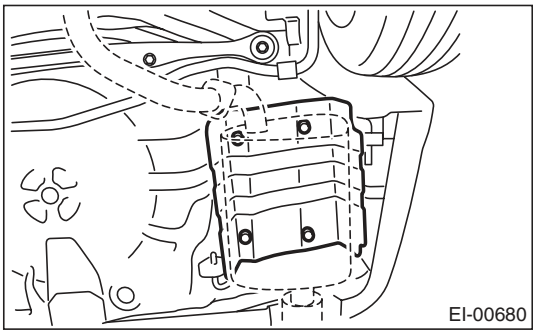

B: INSTALLATION

Install in the reverse order of removal.

37. Ornament

A: INSTALLATION

1. LETTER MARK

Adhere the letter mark according to the following measurements.

- Sedan model

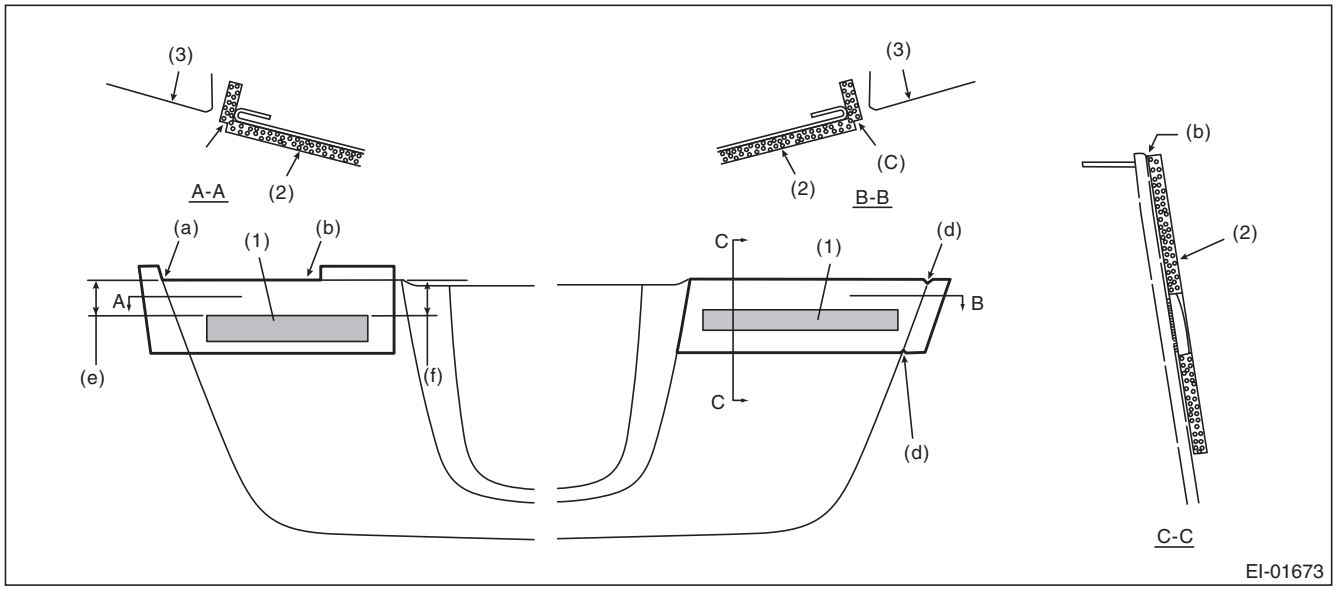

(a)	Apply the edge of application tape by aligning with the end of the radius for the trunk lid garnish.	(b)	Apply the application tape by aligning with the end of the radius, at the upper edge of the trunk lid garnish.	(c)	Align the slit of the application tape to the panel end.
(d)	Apply the application tape by aligning the cut out to the edge of the trunk lid garnish.	(e)	33 mm (1.3 in)	(f)	35 mm (1.38 in)
(1)	Letter mark	(2)	Application tape	(3)	Rear combination light

- Wagon model

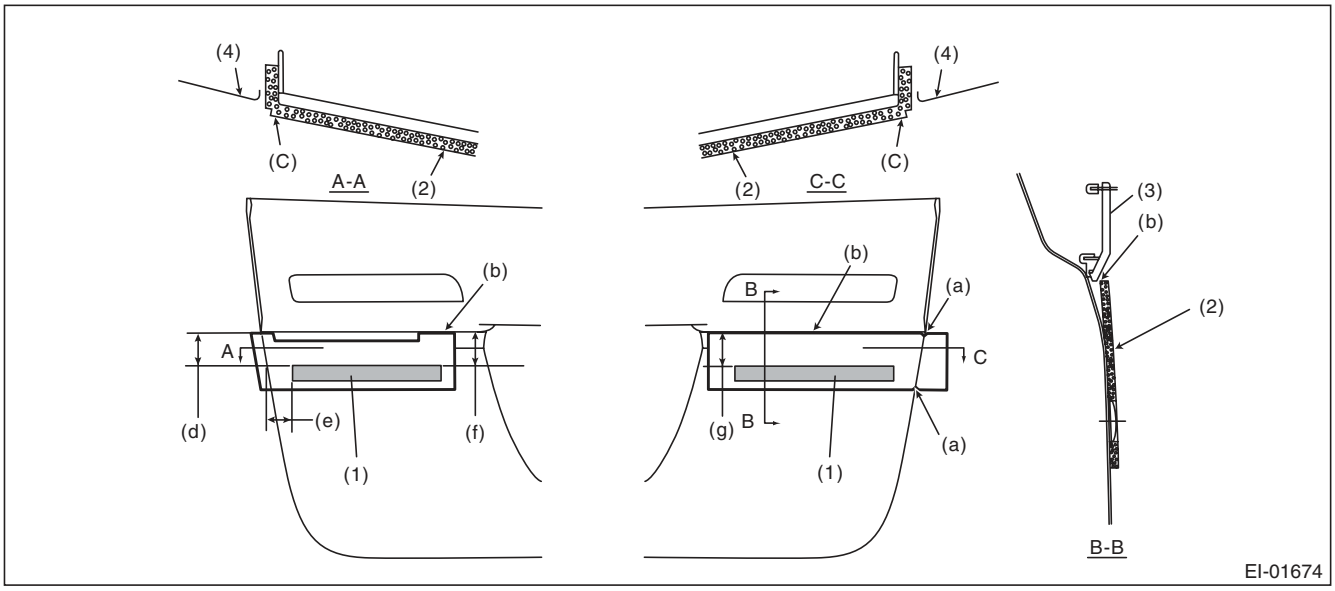

(a)	Apply the application tape by aligning the cut out to the edge of the rear gate panel.	(b)	Apply the application tape by aligning it with the outer bottom end of the rear gate garnish.	(c)	Align the slit of the application tape to the panel end.
(d)	44.5 mm (1.75 in)	(e)	45 mm (1.77 in)	(f)	45.5 mm (1.79 in)
(1)	Letter mark	(3)	Rear gate garnish	(4)	Rear combination light
(2)	Application tape				

2. AWD STICKER

Apply the AWD sticker from inside of the glass according to the following dimensions.

- Sedan model

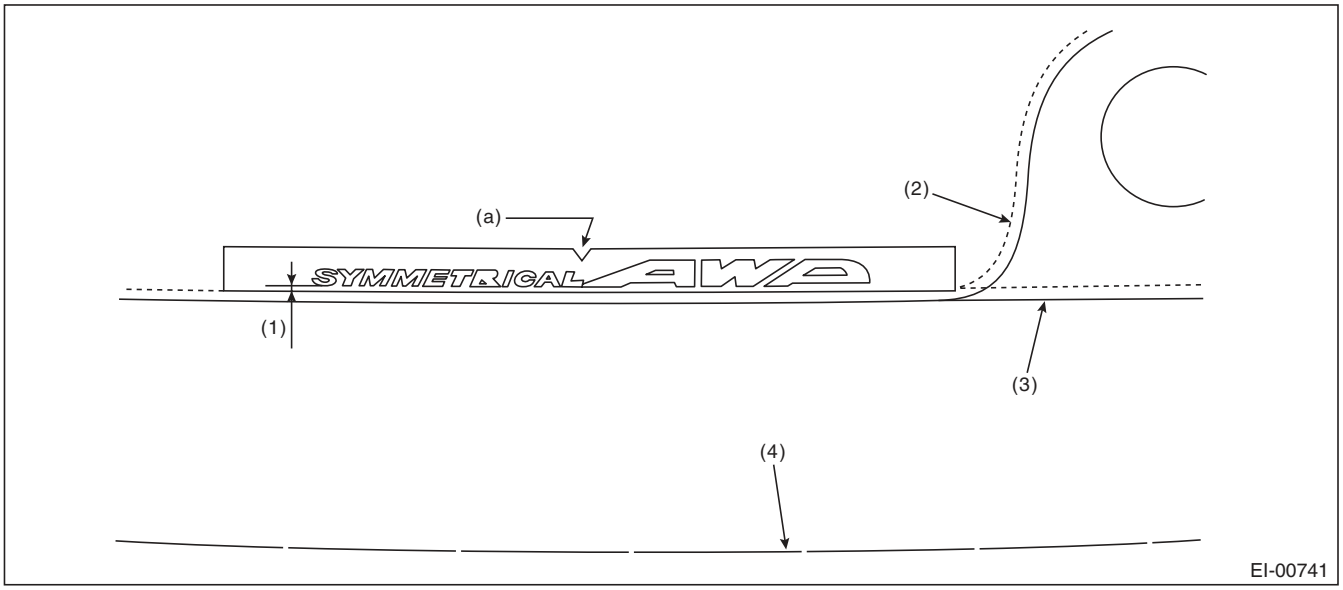

(a) Apply the application tape by aligning the cut out to the edge of the rear glass center.

(1) 1 mm (0.04 in)

(2) Gradation end of the ceramic print (with rear wiper)

(3) Gradation end of the ceramic print (without rear wiper)

(4) End of rear glass

1. General Description

A: SPECIFICATION

1. SIDE

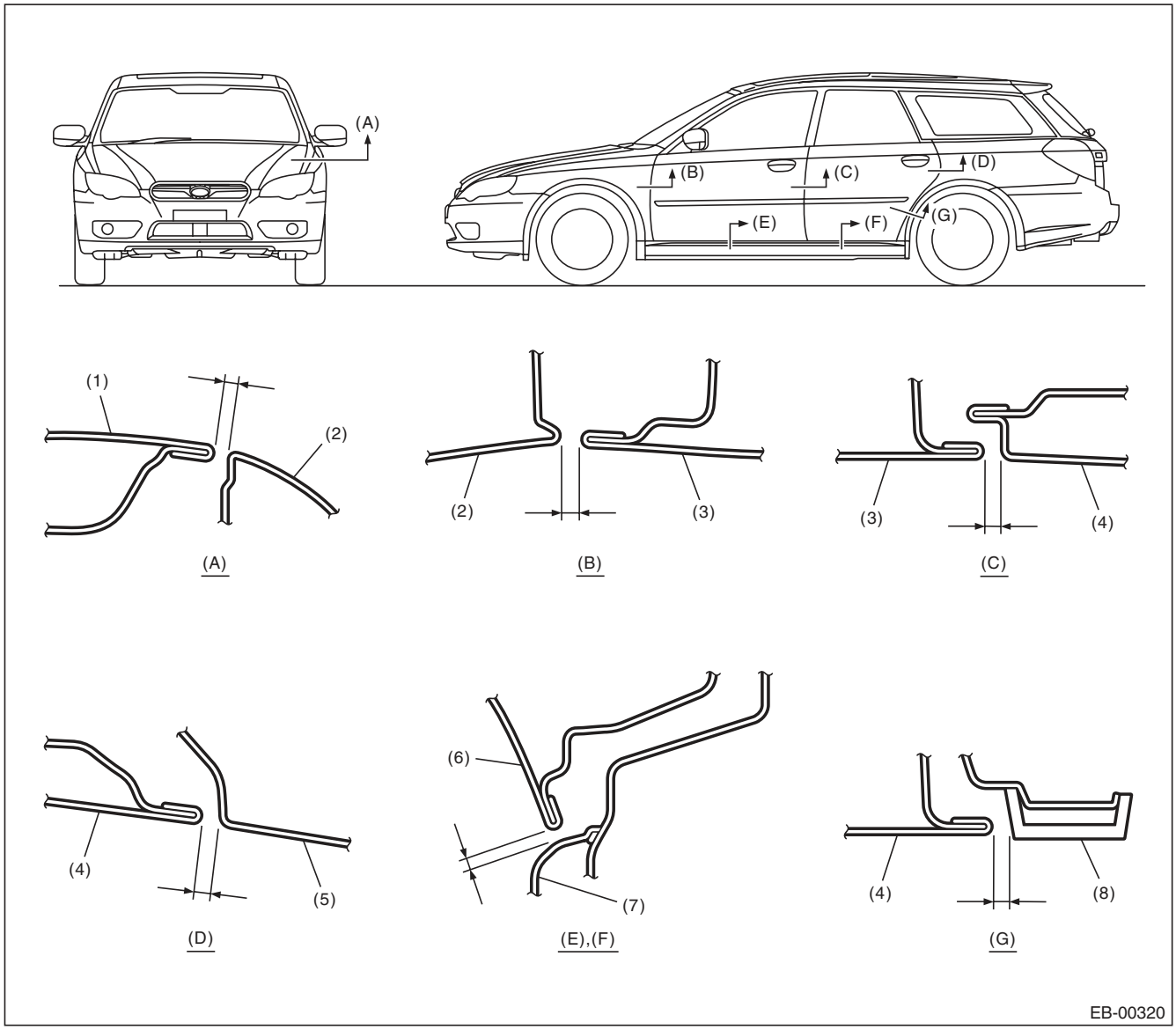

(1) Front hood panel
(2) Front fender panel
(3) Front door panel
(4) Rear door panel
(5) Rear quarter panel
(6) Door panel
(7) Side sill
(8) Rear quarter lower protector

Section	Part	Specification
(A)	Front hood panel to Front fender panel	Sedan• wagon model: 3.6±1.0 mm (0.14±0.04 in) OUTBACK model: 3.8±1.0 mm (0.15±0.04 in)
(B)	Front fender panel to Front door panel	4.7±1.0 mm (0.18±0.04 in)
(C)	Front door panel to Rear door panel	5.1±1.0 mm (0.20±0.04 in)
(D)	Rear door panel to Rear quarter panel	4.6±1.0 mm (0.18±0.04 in)
(E), (F)	Door panel to Side sill	6.0±1.0 mm (0.24±0.04 in)
(G)	Rear door panel to Rear quarter lower protector	4.8±1.0 mm (0.19±0.04 in)

2. FRONT

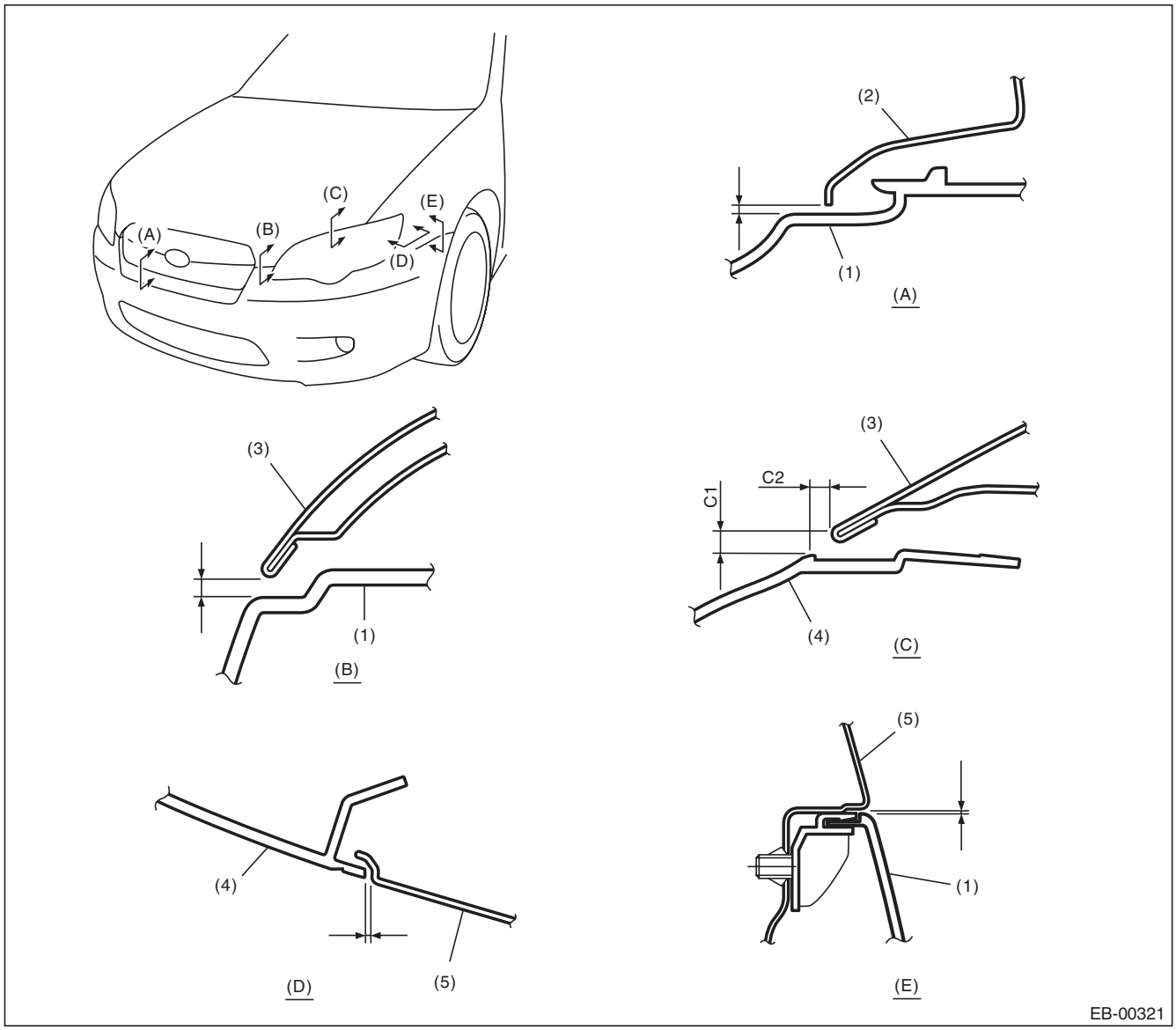

(1) Front bumper
(2) Front grille
(3) Front hood panel
(4) Headlight
(5) Front fender panel

Section	Part	Standard value
(A)	Front bumper to Front grille (longitudinal direction)	1.0±0.7 mm (0.04±0.03 in)
(B)	Front hood panel to Front bumper	4.0 — 6.0 mm (0.16 — 0.24 in)
(C)	Front hood panel to Headlight	C1: 6.0±1.0 mm (0.24±0.04 in) C2: 5.0±1.0 mm (0.20±0.04 in)
(D)	Front fender panel to Headlight	1.5±1.0 mm (0.06±0.04 in)
(E)	Front fender panel to Front bumper	1.0±0.7 mm (0.04±0.03 in)

3. REAR (SEDAN MODEL)

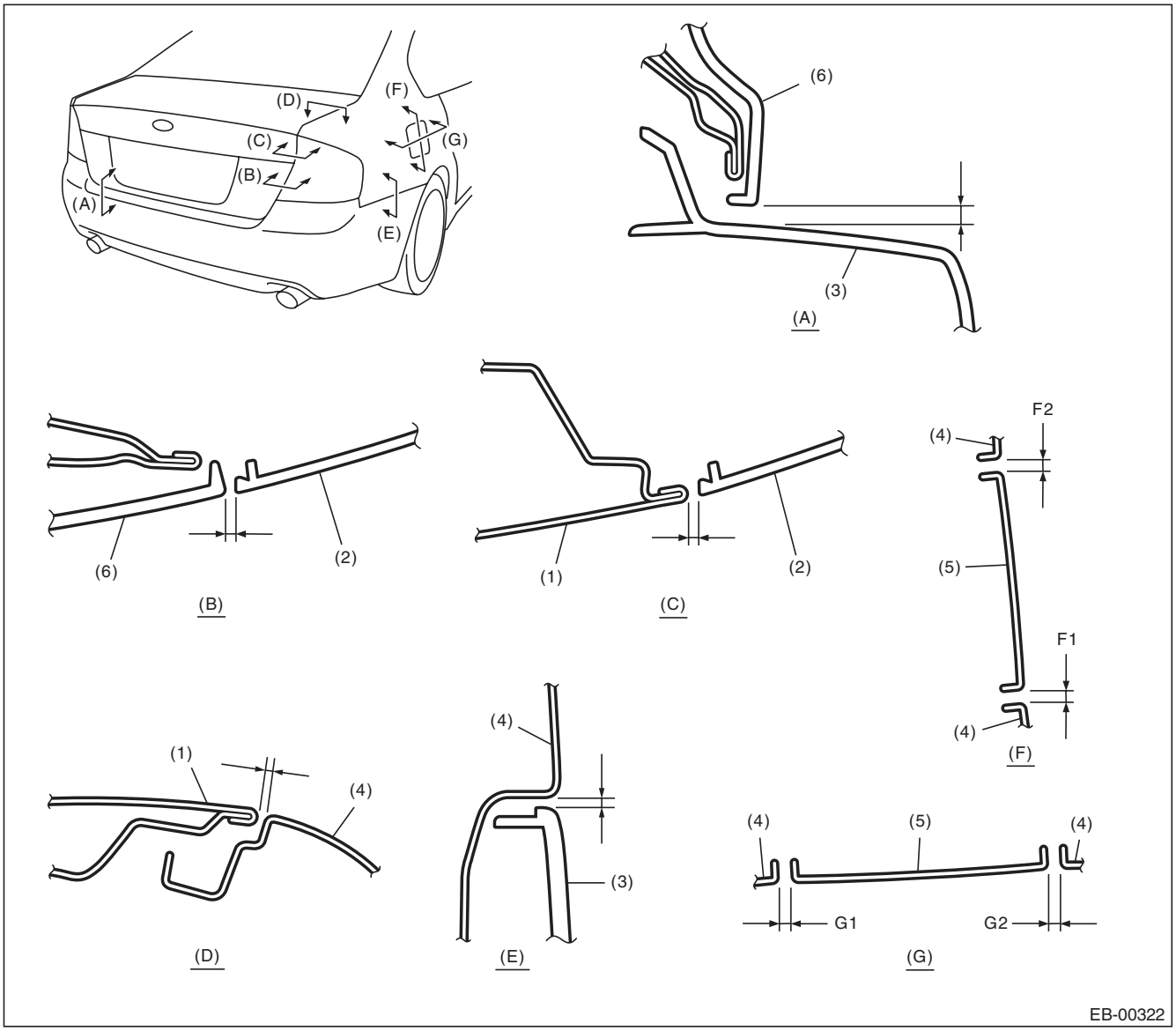

(1)	Trunk lid panel	(3)	Rear bumper	(5)	Fuel filler lid
(2)	Rear combination light	(4)	Rear fender panel	(6)	Trunk lid garnish

Section	Part	Specification
(A)	Trunk lid garnish to Rear bumper	7.0±1.0 mm (0.28±0.04 in)
(B)	Trunk lid garnish to Rear combination light	4.0±1.0 mm (0.16±0.04 in)
(C)	Trunk lid panel to Rear combination light	3.5±1.0 mm (0.14±0.04 in)
(D)	Trunk lid panel to Rear fender panel	3.5±1.0 mm (0.14±0.04 in)
(E)	Rear fender panel to Rear bumper	1.0±0.7 mm (0.04±0.03 in)
(F)	Rear fender panel to Fuel filler lid (longitudinal direction)	F1: 3.7±0.5 mm (0.15±0.02 in) F2: 3.4±0.5 mm (0.13±0.02 in)
(G)	Rear fender panel to Fuel filler lid (lateral direction)	G1, G2: 3.5±0.5 mm (0.14±0.02 in)

4. REAR (WAGON MODEL)

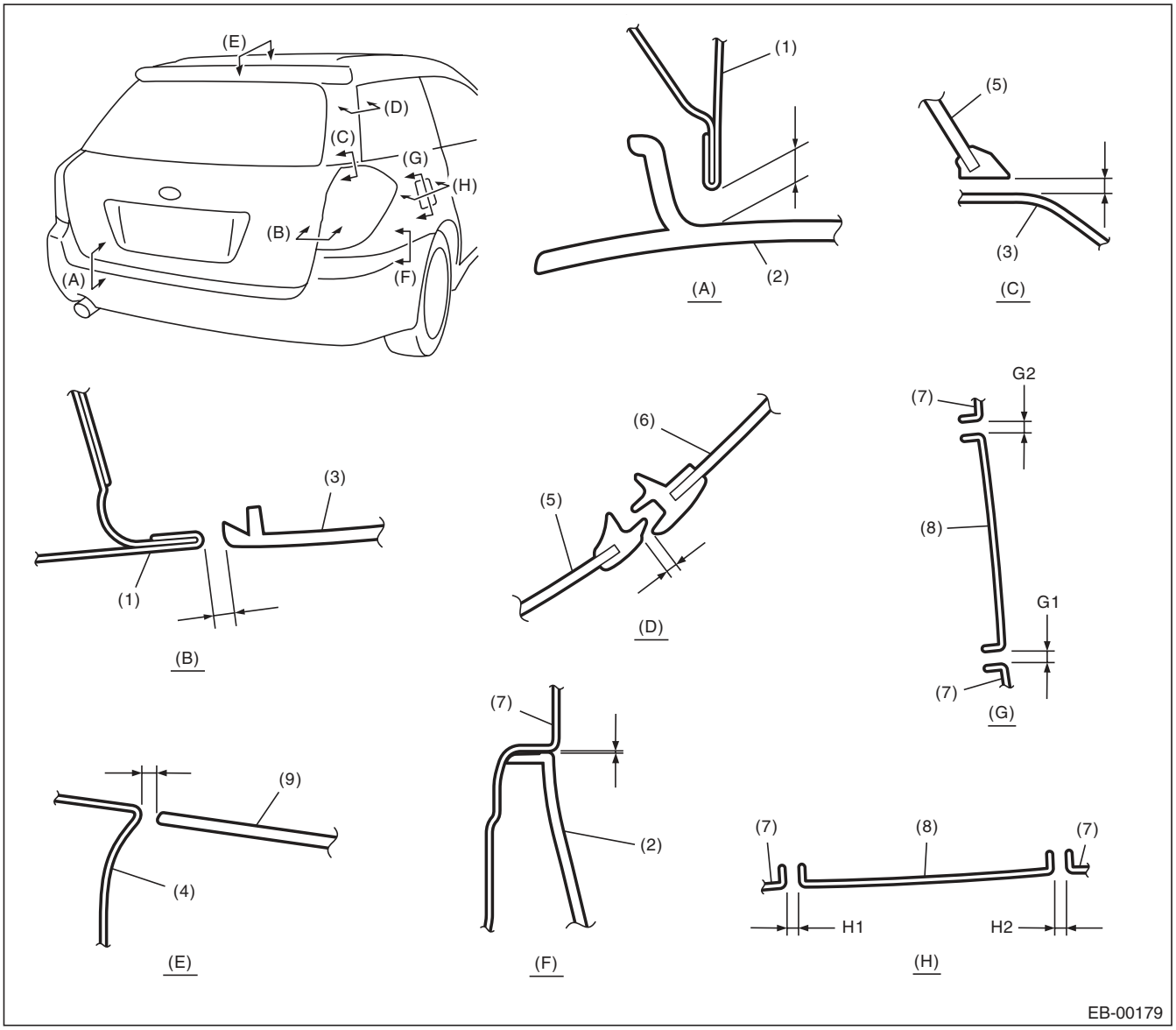

(1)	Rear gate panel	(4)	Roof panel	(7)	Rear fender panel
(2)	Rear bumper	(5)	Rear gate glass	(8)	Fuel filler lid
(3)	Rear combination light	(6)	Rear quarter glass	(9)	Roof spoiler

Section	Part	Specification
(A)	Rear gate panel to Rear bumper	8.0±1.0 mm (0.31±0.04 in)
(B)	Rear gate panel to Rear combination light	5.0±1.0 mm (0.20±0.04 in)
(C)	Rear gate glass to Rear combination light	5.5±1.0 mm (0.22±0.04 in)
(D)	Rear gate glass to Rear quarter glass	4.0±1.5 mm (0.16±0.06 in)
(E)	Roof panel to Roof spoiler	5.5±1.0 mm (0.22±0.04 in)
(F)	Rear fender panel to Rear bumper	1.0±0.7 mm (0.04±0.03 in)
(G)	Rear fender panel to Fuel filler lid (longitudinal direction)	G1: 3.7±0.5 mm (0.15±0.02 in) G2: 3.4±0.5 mm (0.13±0.02 in)
(H)	Rear fender panel to Fuel filler lid (lateral direction)	H1, H2: 3.5±0.5 mm (0.14±0.02 in)

B: COMPONENT

1. FRONT HOOD

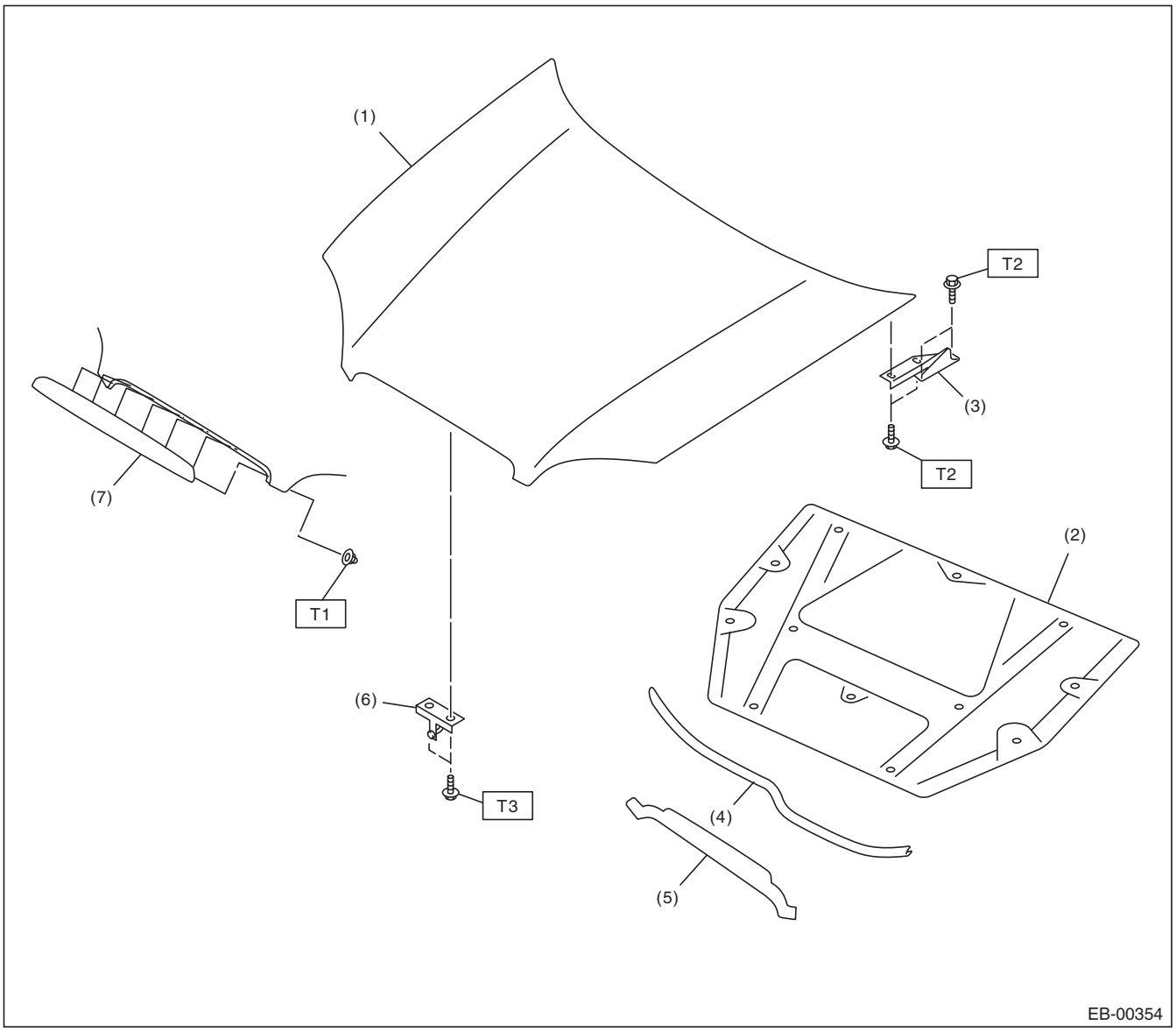

(1)	Front hood panel	(5)	Front hood weather strip	***Tightening torque:N·m (kgf-m, ft-lb)***
(2)	Front hood insulator	(6)	Front hood striker	***T1: 4.5 (0.46, 3.3)***
(3)	Front hood hinge	(7)	Front upper grille (OUTBACK model)	***T2: 25 (2.6, 18.4)***
(4)	Intake duct weather strip			***T3: 33 (3.4, 24.5)***

2. FRONT FENDER PANEL

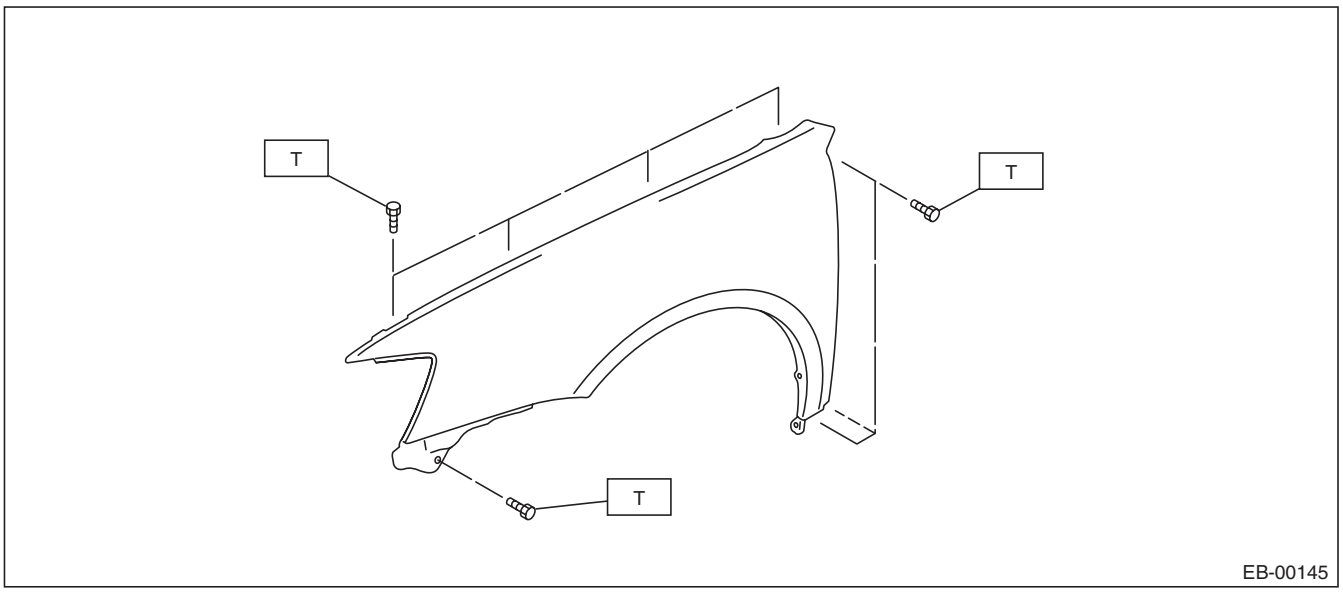

Tightening torque:N·m (kgf-m, ft-lb)
T: 7.5 (0.76, 5.5)

3. FRONT DOOR PANEL

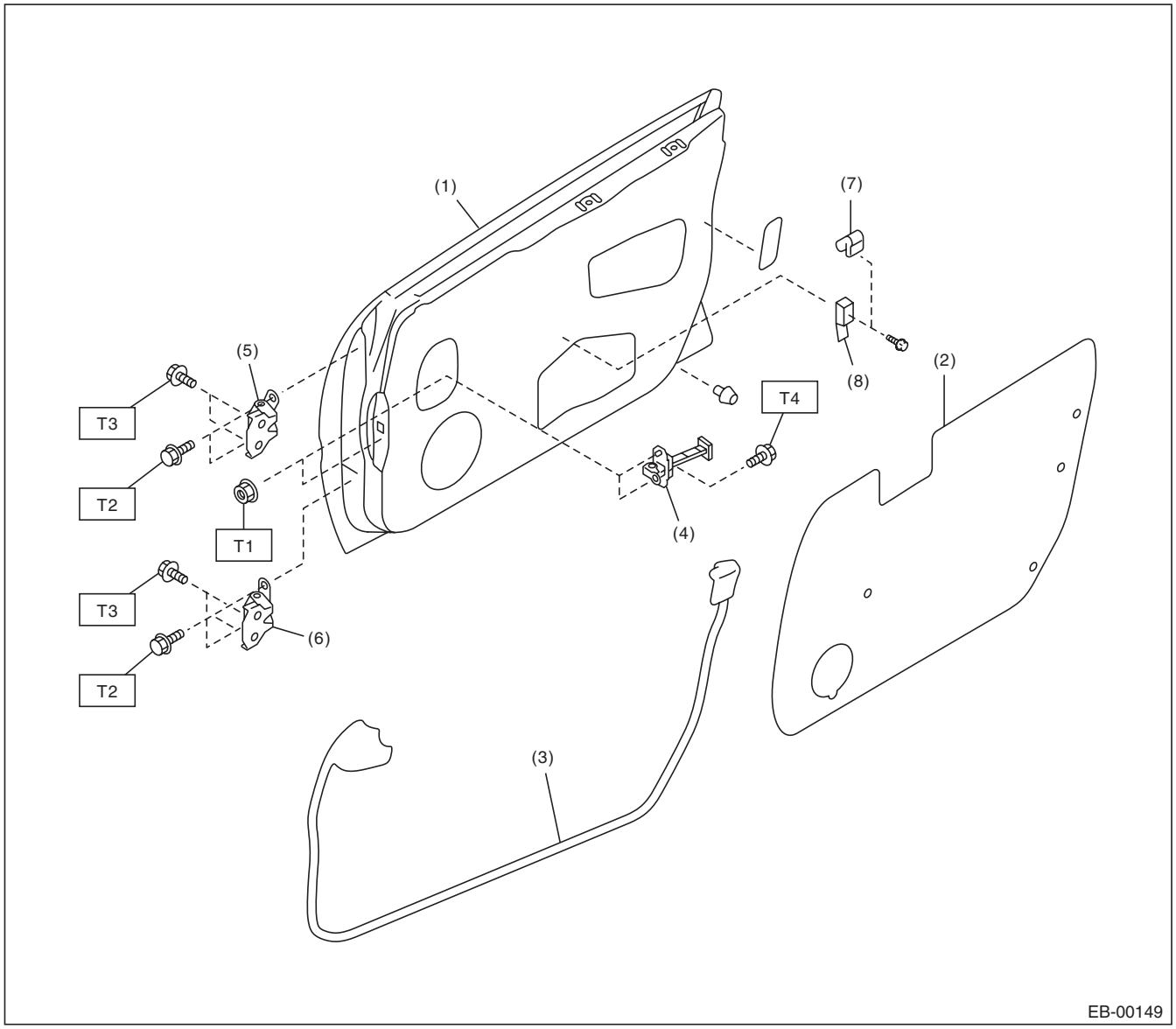

(1)	Front door panel	(5)	Upper hinge	***Tightening torque:N·m (kgf-m, ft-lb)***
(2)	Sealing cover	(6)	Lower hinge	***T1: 7.4 (0.75, 5.5)***
(3)	Front door weather strip	(7)	Door trim bracket upper	***T2: 24.5 (2.5, 18.1)***
(4)	Checker	(8)	Door trim bracket lower	***T3: 29.4 (3.0, 21.7)***
				T4: 32.3 (3.3, 23.8)

4. REAR DOOR PANEL

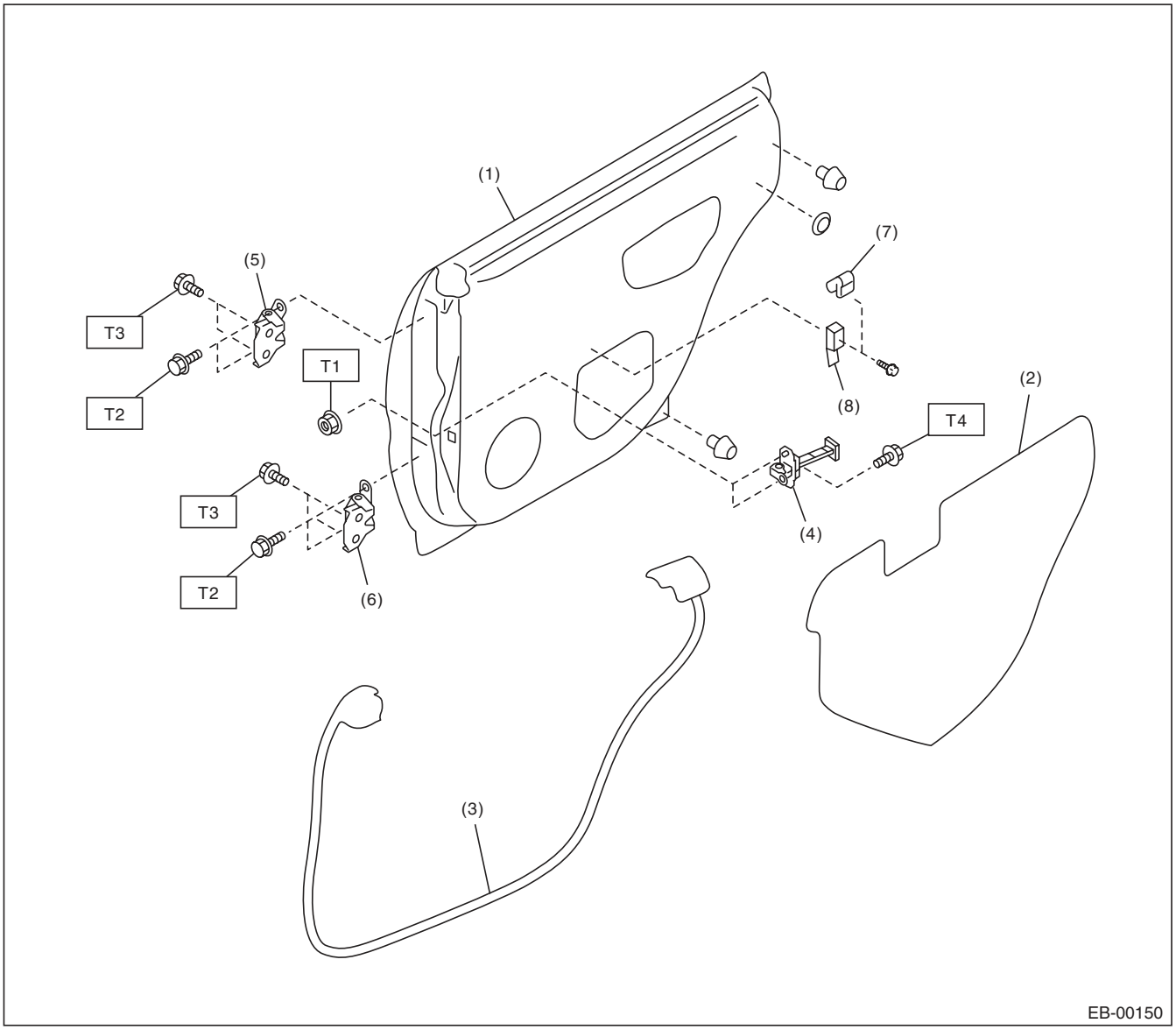

(1)	Rear door panel	(5)	Upper hinge
(2)	Sealing cover	(6)	Lower hinge
(3)	Rear door weather strip	(7)	Door trim bracket upper
(4)	Checker	(8)	Door trim bracket lower

Tightening torque:N·m (kgf-m, ft-lb)

T1: 7.4 (0.75, 5.5)
T2: 24.5 (2.5, 18.1)
T3: 29.4 (3.0, 21.7)
T4: 32.3 (3.3, 23.8)

5. TRUNK LID PANEL

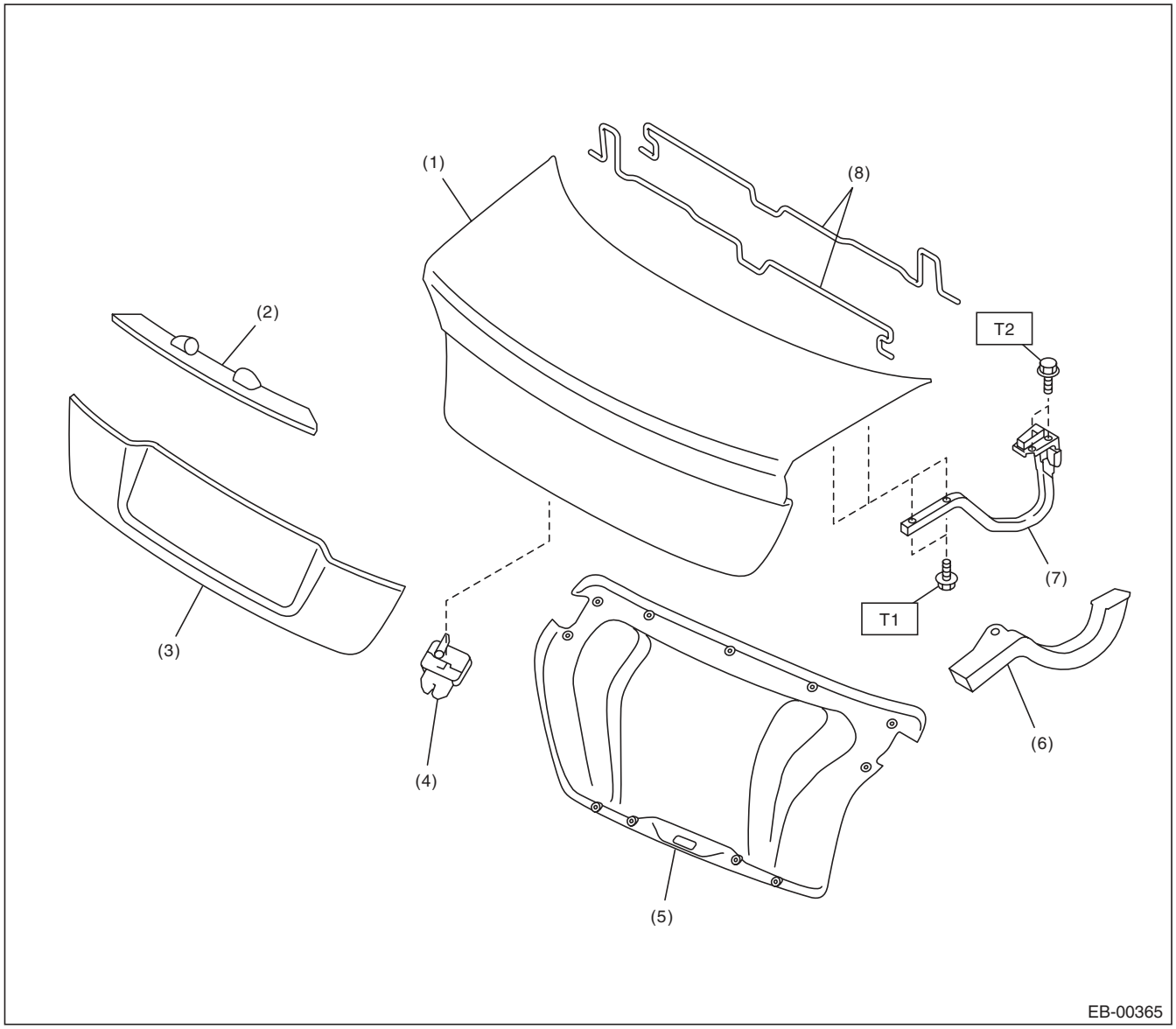

(1)	Trunk lid panel	(5)	Trunk lid trim
(2)	License plate light cover	(6)	Trunk lid arm cover
(3)	Trunk lid garnish	(7)	Trunk lid arm ASSY
(4)	Trunk lid lock ASSY	(8)	Torsion bar

Tightening torque:N·m (kgf-m, ft-lb)
T1: 14 (1.43, 10.3)
T2: 18 (1.8, 13.3)

6. REAR GATE PANEL

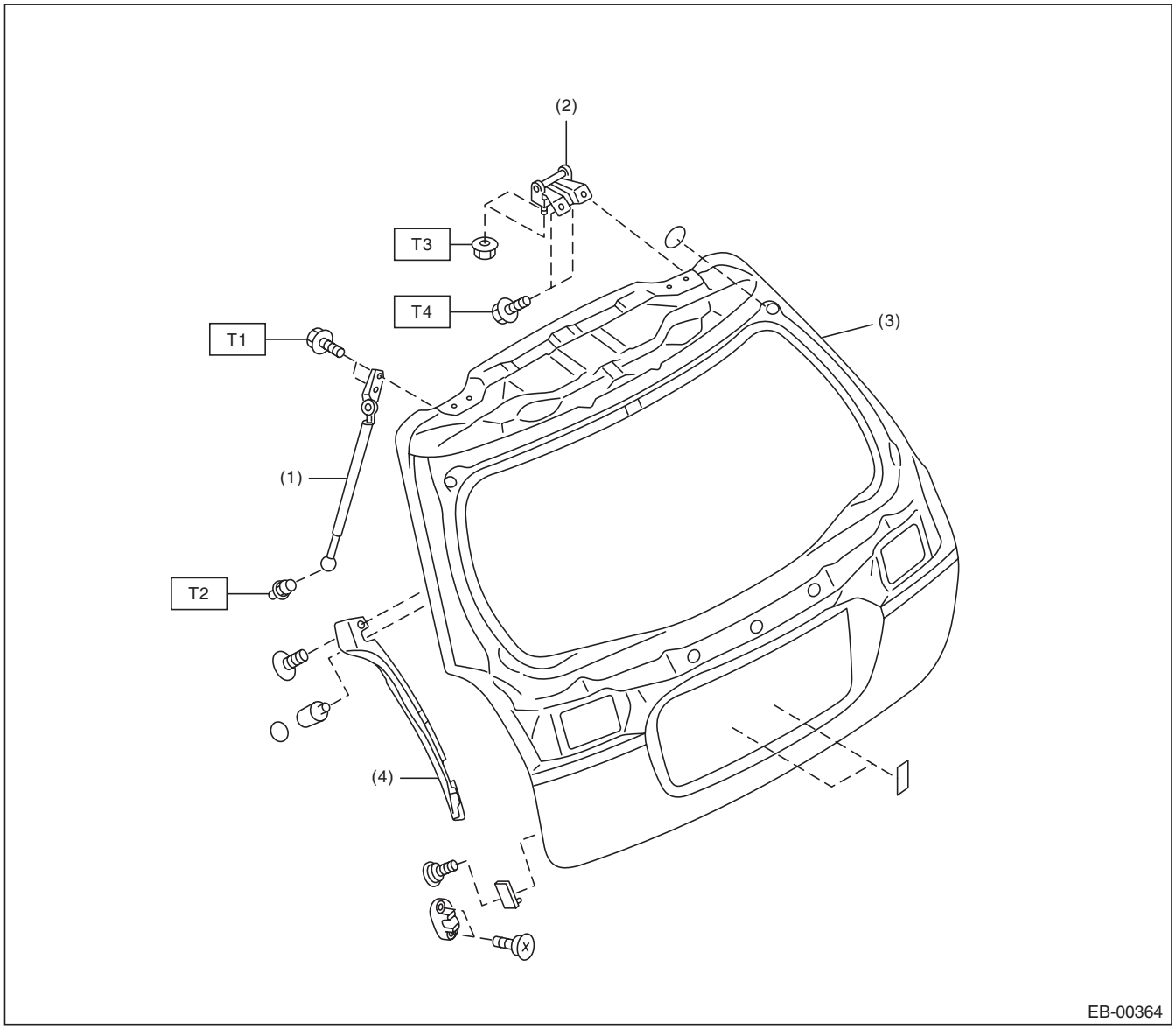

(1)	Rear gate damper stay	(3)	Rear gate panel
(2)	Hinge	(4)	Rear gate side panel cover

Tightening torque:N·m (kgf-m, ft-lb)

T1: 10 (1.0, 7.4)
T2: 20 (2.0, 14.8)
T3: 25 (2.6, 18.4)
T4: 37 (3.7, 27.1)

C: CAUTION

- Exterior body panels are heavy. Do not drop and damage the panels. During removal and installation, do not damage the panel painting surface.
- While removing mounting bolts, using assistance devices such as a support jack will help support the panel.
- Be careful not to lose small parts.

D: PREPARATION TOOL

1. SPECIAL TOOL

ILLUSTRATION	TOOL NUMBER	DESCRIPTION	REMARKS
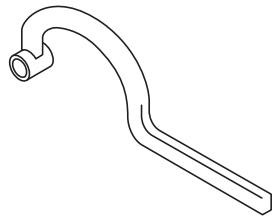 ST-925610000	925610000	WRENCH	Used for removing and installing door hinge.
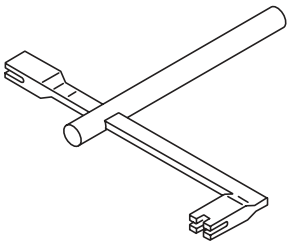 ST-927780000	927780000	REMOVER	Used for removing and installing the trunk torsion bar.

2. GENERAL TOOL

TOOL NAME	REMARKS
Support jack	Used for supporting door panel.
Clip remover	Used for removing various types of clips.

2. Front Hood

A: REMOVAL

1. FRONT HOOD INSULATOR

1) Open the front hood.
2) Release the clips to remove the front hood insulator.

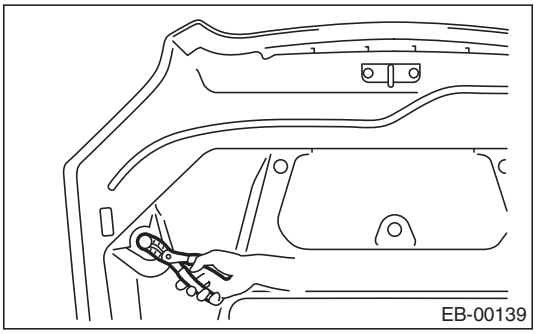

2. FRONT HOOD WEATHER STRIP

1) Open the front hood.
2) Remove the clips, and remove the front hood weather strip (A) and intake duct weather strip (B).

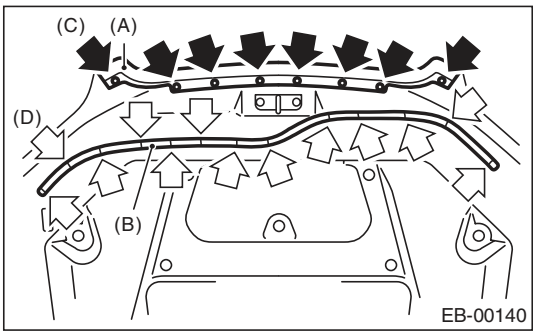

(C) Clip
(D) Weather strip clip

NOTE:
If the weather strip clip is removed with excessive force, the weather strip may be damaged. Be sure to use clip remover to remove.

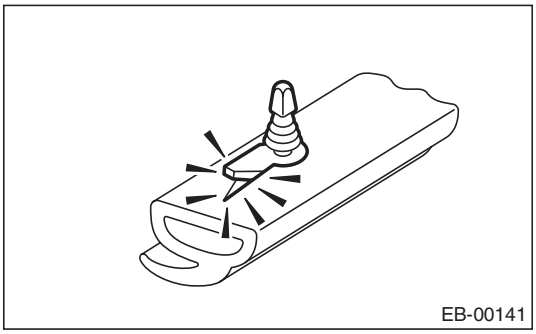

3. FRONT HOOD HINGE

1) Remove the bolt, and remove the front hood panel. <Ref. to EB-14, FRONT HOOD PANEL, REMOVAL, Front Hood.>

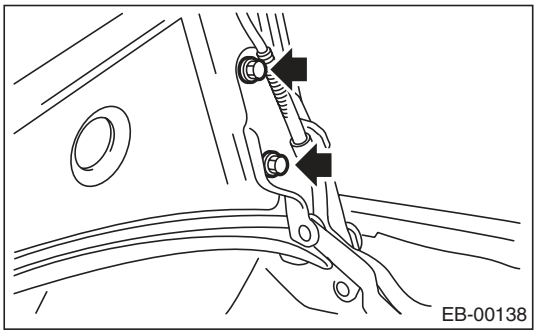

2) Remove the clip, and remove the cowl side panel front.

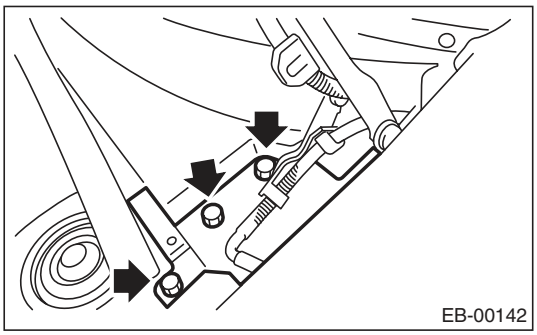

3) Remove clamp (A) of the window washer hose, and remove the bolt of the hinge.

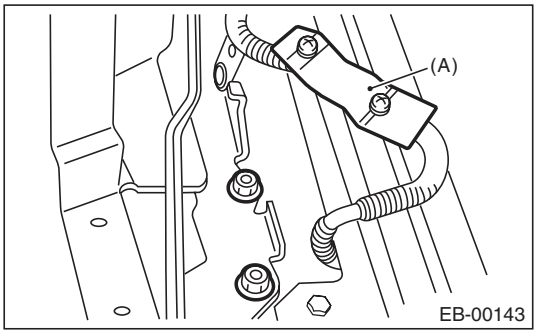

4. FRONT HOOD STRIKER

1) Open the front hood.
2) Remove the bolt, and remove the front hood striker.

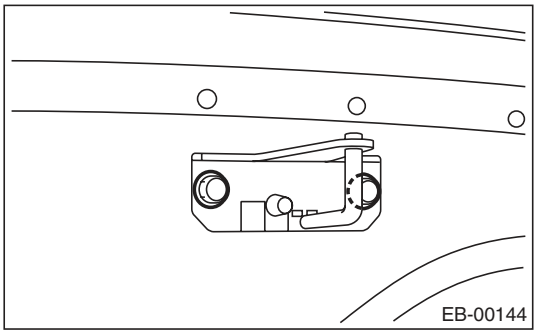

5. FRONT HOOD PANEL

1) Remove the upper grille of the front grille. (OUTBACK model) <Ref. to EI-24, REMOVAL, Front Grille.>
2) Open the front hood to remove the window washer hose.

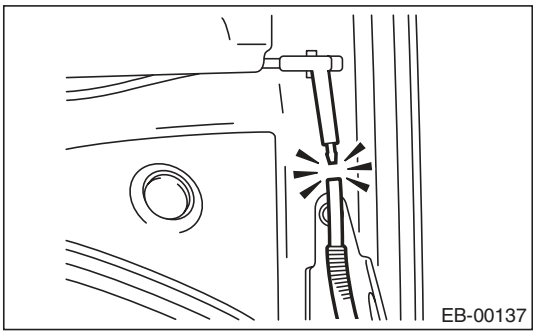

3) Remove the front hood insulator. <Ref. to EB-13, FRONT HOOD INSULATOR, REMOVAL, Front Hood.>
4) Remove the front hood weather strip. <Ref. to EB-13, FRONT HOOD WEATHER STRIP, REMOVAL, Front Hood.>
5) Remove the front hood striker. <Ref. to EB-13, FRONT HOOD STRIKER, REMOVAL, Front Hood.>
6) Remove the front hood duct. (Turbo model) <Ref. to EI-25, REMOVAL, Front Hood Grille.>
7) Remove the window washer hose and nozzle. <Ref. to WW-16, REMOVAL, Front Washer Nozzle.>
8) Remove the bolt, and remove the front hood panel from the front hood hinge.

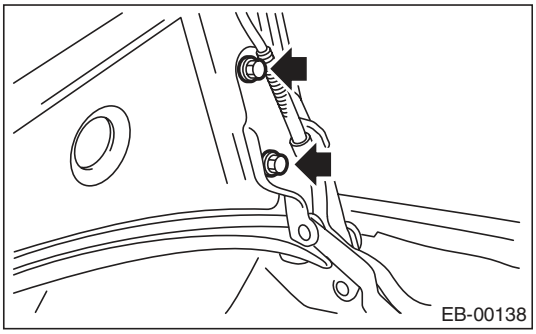

B: INSTALLATION

Install in the reverse order of removal.

NOTE:
Be careful not to catch the window washer hose in when installing the front hood insulator.

Tightening torque:
Refer to "COMPONENT" of "General Description". <Ref. to EB-6, FRONT HOOD, COMPONENT, General Description.>

C: ADJUSTMENT

1) Adjust the clearance between front hood panel and front fender panel. Clearance must be equal at both sides. For the dimension of clearance, refer to "SPECIFICATION" in "General Description". <Ref. to EB-2, SPECIFICATION, General Description.>
2) Use the hinge mounting bolts to align the front hood longitudinal and lateral position.

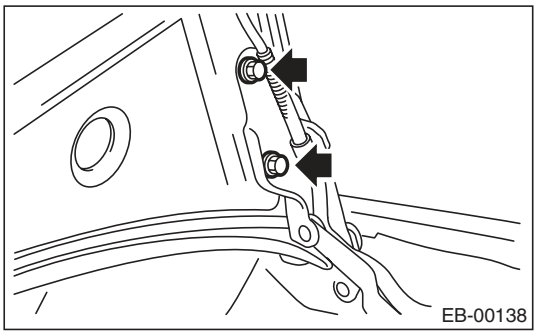

3) Adjust the height at the front end of hood. <Ref. to SL-46, ADJUSTMENT, Front Hood Lock Assembly.>
4) Rotate the hood buffer to adjust lateral height.

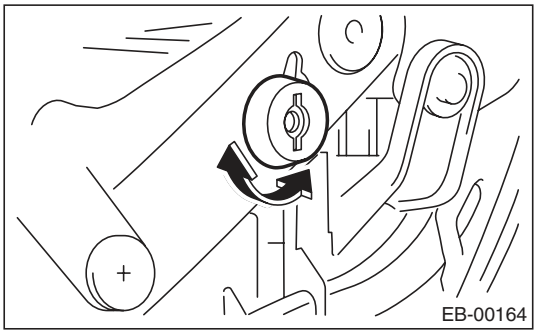

3. Front Fender

A: REMOVAL

1) Disconnect the ground cable from the battery.
2) Remove the side sill spoilers. <Ref. to EI-42, REMOVAL, Side Sill Spoiler.>
3) Remove the front grille. <Ref. to EI-24, REMOVAL, Front Grille.>
4) Remove the front bumper face. <Ref. to EI-30, REMOVAL, Front Bumper.>
5) Remove the headlight assembly. <Ref. to LI-13, REMOVAL, Headlight Assembly.>
6) Remove the mud guard. <Ref. to EI-29, REMOVAL, Mud Guard.>
7) Remove the cowl panel side.

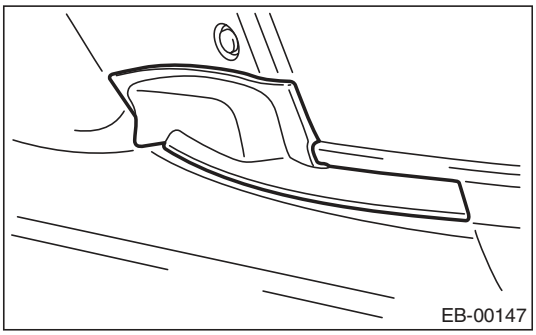

8) Remove the bolt, and remove the front fender panel.

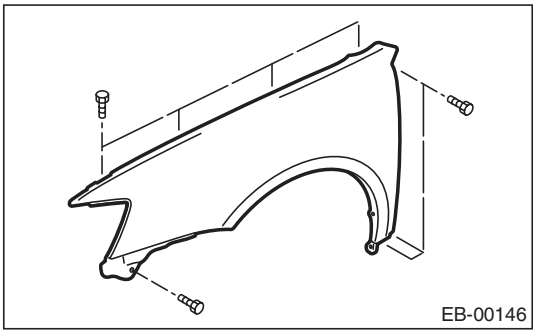

B: INSTALLATION

1) Install in the reverse order of removal.
2) Install with attention to make uniform clearance between front fender panel and front hood panel. For the dimension of clearance, refer to “SPECIFICATION” in “General Description”. <Ref. to EB-2, SPECIFICATION, General Description.>

Tightening torque:
7.5 N·m (0.76 kgf-m, 5.5 ft-lb)

4. Front Door

A: REMOVAL

1. FRONT DOOR PANEL

1) Disconnect the ground cable from the battery.
2) Remove the front door trim. <Ref. to EI-49, REMOVAL, Door Trim.>
3) Remove the outer mirror assembly. <Ref. to GW-20, REMOVAL, Outer Mirror Assembly.>
4) Remove the front door speaker. <Ref. to ET-7, REMOVAL, Front Speaker.>
5) Remove the sealing cover. <Ref. to EB-19, REMOVAL, Front Sealing Cover.>
6) Remove the gusset and front door glass. <Ref. to GW-11, REMOVAL, Front Door Glass.>
7) Remove the door sash, and remove the front door regulator and motor. <Ref. to GW-17, REMOVAL, Front Regulator and Motor Assembly.>
8) Remove the front door latch assembly. <Ref. to SL-36, REMOVAL, Front Door Latch and Door Lock Actuator Assembly.>
9) Remove the front outer handle. <Ref. to SL-35, REMOVAL, Front Outer Handle.>
10) Remove the screw to remove the door trim bracket.

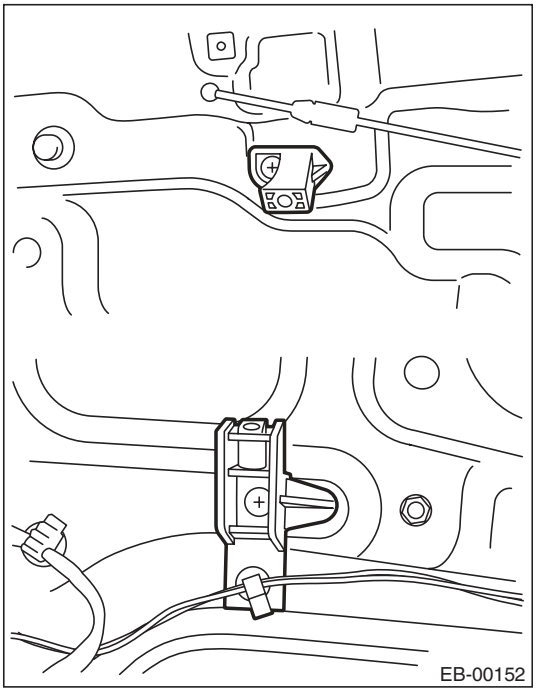

11) Remove the front door weather strip.

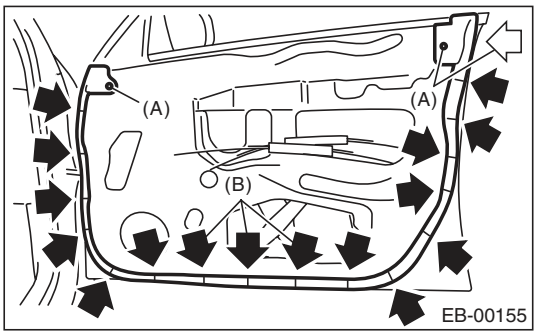

(A) Pin clip
(B) Weather strip clip

NOTE:
If the weather strip clip is removed with excessive force, the weather strip may be damaged. Be sure to use clip remover to remove.

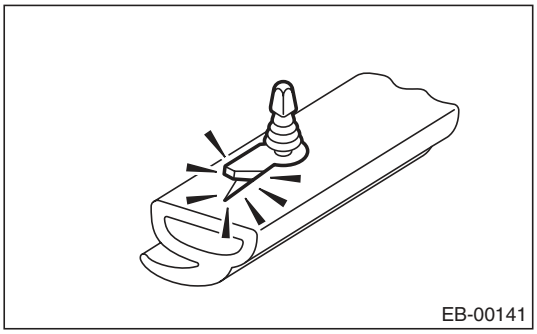

12) Remove the bolts and nuts to remove the door checker.

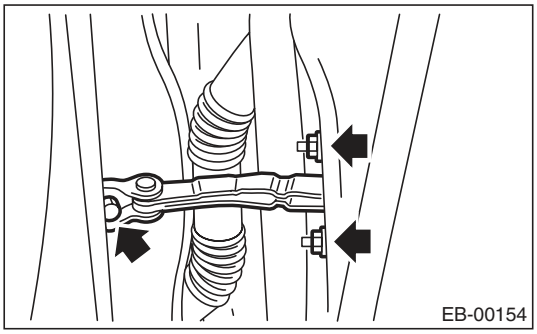

13) Remove the front door. <Ref. to EB-17, FRONT DOOR ASSEMBLY, REMOVAL, Front Door.>

2. FRONT DOOR ASSEMBLY

1) Disconnect the ground cable from the battery.
2) Remove the front pillar lower trim. <Ref. to EI-61, REMOVAL, Lower Inner Trim.>
3) Remove the instrument panel lower cover or glove box lower cover <Ref. to EI-51, REMOVAL, Instrument Panel Lower Cover.> or <Ref. to EI-52, REMOVAL, Glove Box.>
4) Disconnect the connector of door harness from body harness.

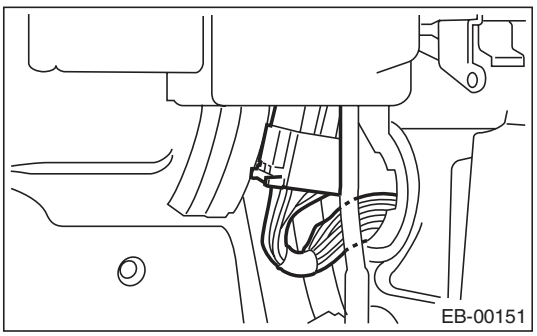

5) Put a wooden block on jack and place jack under the front door. Support the door with a jack to protect it from damage.

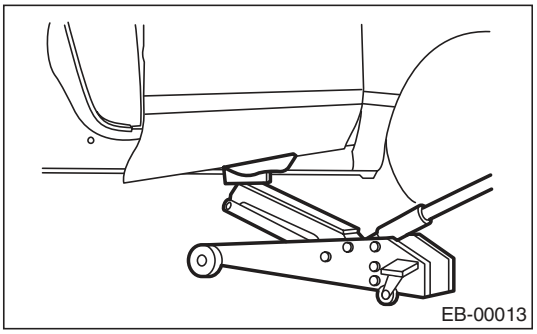

6) Remove the bolt from the door checker.

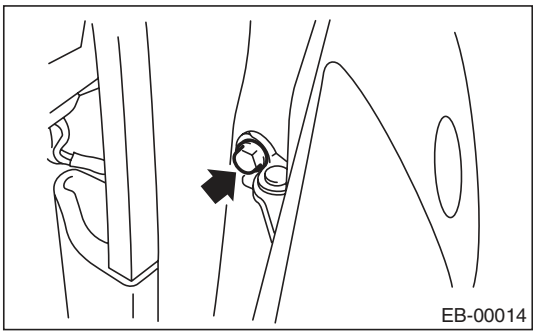

7) Remove the door-side bolts for upper and lower hinges to remove front door panel.

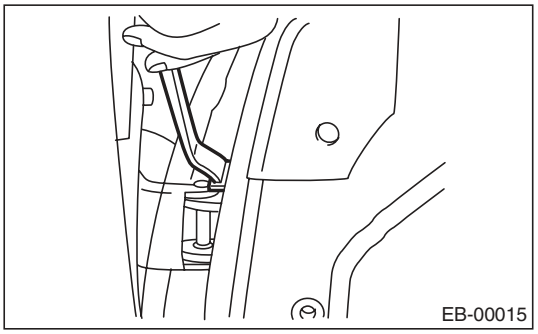

8) Remove the door hinge from vehicle.

B: INSTALLATION

1. FRONT DOOR PANEL

Install in the reverse order of removal.

Tightening torque:
Refer to "COMPONENT" of "General Description". <Ref. to EB-8, FRONT DOOR PANEL, COMPONENT, General Description.>

2. FRONT DOOR ASSEMBLY

1) Put a wooden block on jack and place the front door on that.

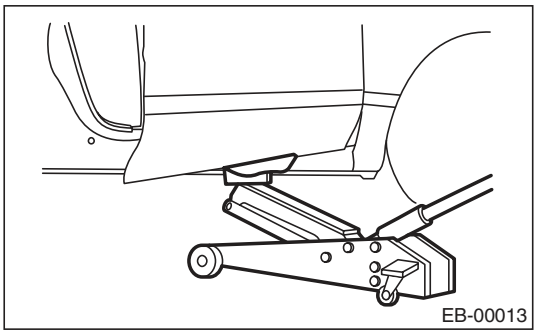

2) Apply grease to the sliding area of door hinges, and install the door hinge to vehicle.
3) Install the front door to upper hinge and lower hinge adjusting by jack.
4) Tighten bolt of door checker.
5) Connect door harness connector, and install the instrument panel lower cover.
6) Install the front pillar lower trim.

Tightening torque:
Refer to "COMPONENT" of "General Description". <Ref. to EB-8, FRONT DOOR PANEL, COMPONENT, General Description.>

C: ADJUSTMENT

1) Using the ST, loosen the body-side bolts of upper and lower hinges to align the position for vertical and horizontal direction of the front door panel.
ST 925610000 DOOR HINGE WRENCH

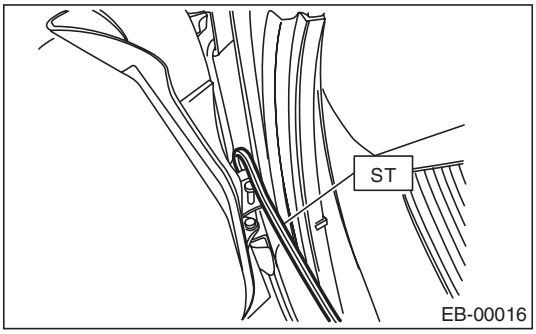

2) Loosen the screw (A) and tap striker (B) using plastic hammer to adjust the gap between rear end surface of front door panel and front end surface of rear door.

CAUTION:
Do not use an impact wrench. Welding area on the striker nut plate is easily broken.

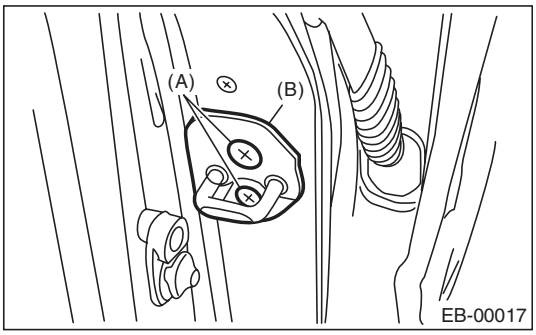

5. Front Sealing Cover

A: REMOVAL

1) Disconnect the ground cable from the battery.
2) Remove the front door trim. <Ref. to EI-49, REMOVAL, Door Trim.>
3) Remove the front speaker. <Ref. to ET-7, REMOVAL, Front Speaker.>
4) Remove the sealing cover.

NOTE:
- Carefully remove the butyl tape. Excessive force will easily break the cover.
- If cover gets broken, replace it with a new part.

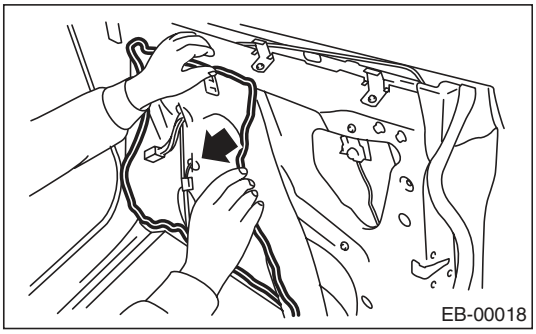

B: INSTALLATION

1) Install in the reverse order of removal.
2) When replacing the sealing cover, use the butyl tape.
3) Press the butyl tape-applied area firmly to prevent any floating on surface.

Butyl tape:
3M 8626 or equivalent

NOTE:
- Apply a uniform bead of butyl tape.
- Attach the sealing cover, keeping it from becoming wrinkled.
- Breaks in the bead will allow water leakage and contamination.

C: INSPECTION

If the sealing cover gets damaged, replace it with a new part.

6. Rear Door

A: REMOVAL

1. REAR DOOR PANEL

1) Disconnect the ground cable from the battery.
2) Remove the rear door trim. <Ref. to EI-49, REMOVAL, Door Trim.>
3) Remove the rear speaker. <Ref. to ET-9, REMOVAL, Rear Speaker.>
4) Remove the sealing cover. <Ref. to EB-23, REMOVAL, Rear Sealing Cover.>
5) Remove the rear door glass. <Ref. to GW-23, REMOVAL, Rear Door Glass.>
6) Remove the door sash and rear door regulator and motor assembly. <Ref. to GW-25, REMOVAL, Rear Regulator and Motor Assembly.>
7) Remove the rear door latch. <Ref. to SL-40, REMOVAL, Rear Door Latch and Door Lock Actuator Assembly.>
8) Remove the rear outer handle. <Ref. to SL-39, REMOVAL, Rear Outer Handle.>
9) Remove the screw to remove the door trim bracket.

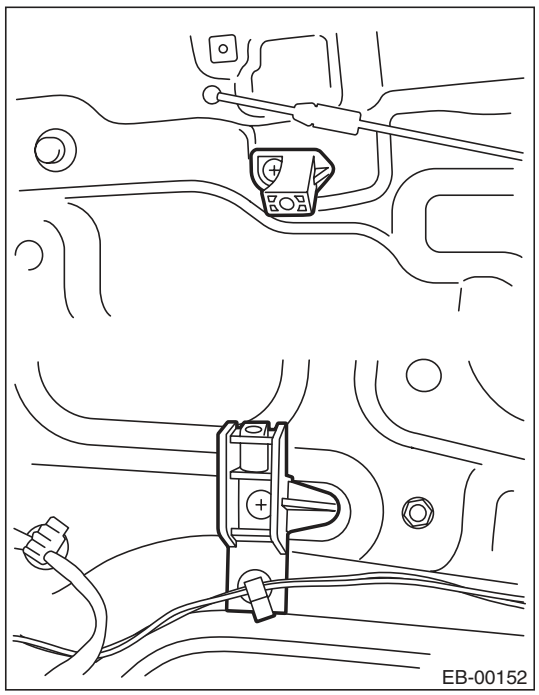

10) Remove the rear door weather strip.

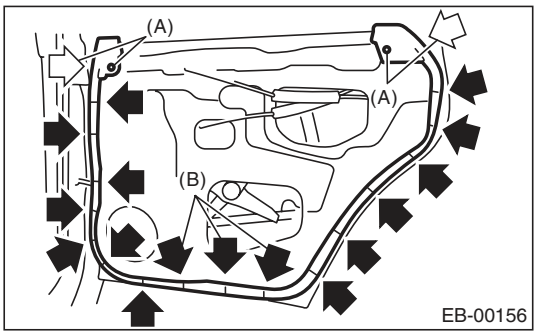

(A) Pin clip
(B) Weather strip clip

NOTE:
If the weather strip clip is removed with excessive force, the weather strip may be damaged. Be sure to use clip remover to remove.

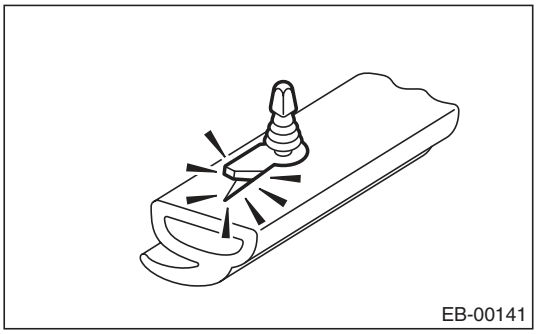

11) Remove the bolts and nuts to remove the door checker.

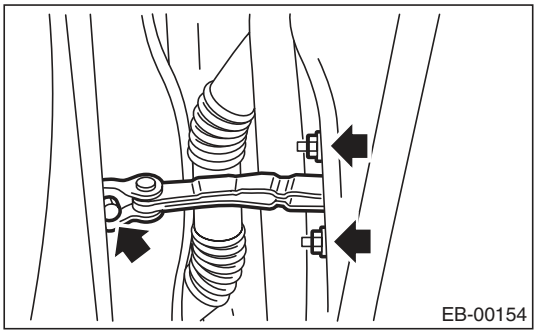

12) Remove the rear door. <Ref. to EB-21, REAR DOOR ASSEMBLY, REMOVAL, Rear Door.>

2. REAR DOOR ASSEMBLY

1) Disconnect the ground cable from the battery.
2) Pull the door harness connector inside the center pillar, then disconnect the connector.

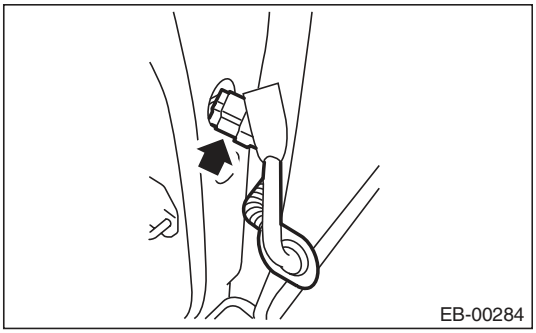

3) Put a wooden block on jack and place jack under the rear door. Support the rear door with the jack to protect it from damage.

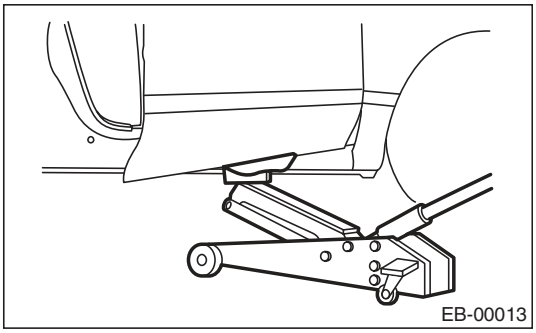

4) Remove the bolt from the door checker.

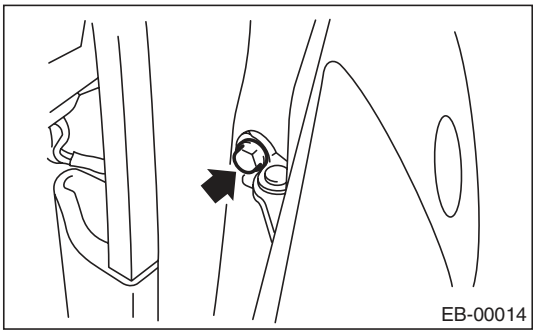

5) Remove the door-side bolts for upper and lower hinges to remove the rear door panel.

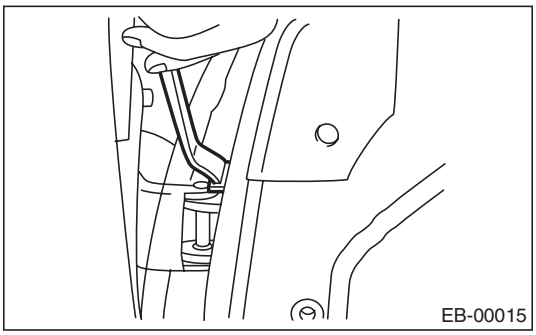

6) Remove the door hinge from vehicle.

B: INSTALLATION

1. REAR DOOR PANEL

Install in the reverse order of removal.

Tightening torque:
Refer to "COMPONENT" of "General Description". <Ref. to EB-9, REAR DOOR PANEL, COMPONENT, General Description.>

2. REAR DOOR ASSEMBLY

1) Put a wooden block on jack and place the rear door on that.

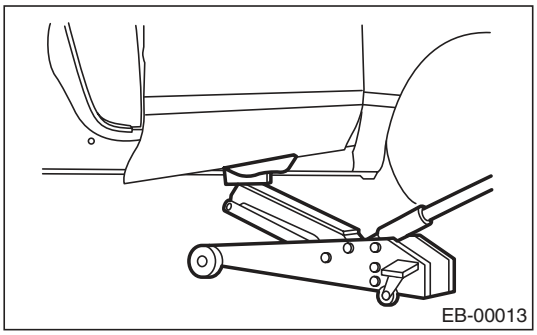

2) Apply grease to the moving part of door hinges.
3) Install the rear door to upper hinge and lower hinge adjusting by jack.
4) Tighten bolt of door checker.
5) Connect the door harness connector, and install the center pillar inner protector.
6) Install the center pillar lower trim.

Tightening torque:
Refer to "COMPONENT" of "General Description". <Ref. to EB-9, REAR DOOR PANEL, COMPONENT, General Description.>

C: ADJUSTMENT

1) Open the rear door, loosen the door-side bolts of upper and lower hinges to align the position for vertical and horizontal direction of rear door panel.

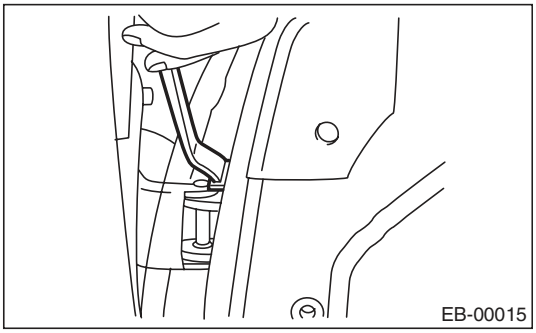

2) Loosen the screw (A) and tap striker (B) using plastic hammer to adjust the gap between rear end surface of rear door panel and body surface.

CAUTION:
Do not use an impact wrench. Welding area on the striker nut plate is easily broken.

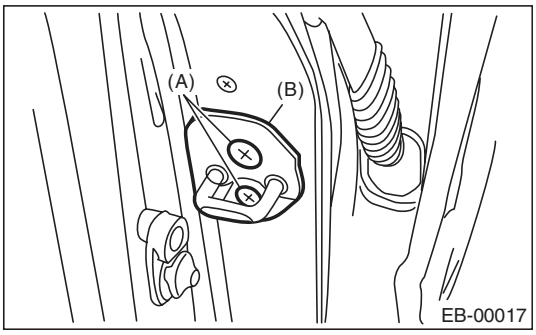

7. Rear Sealing Cover

A: REMOVAL

1) Disconnect the ground cable from the battery.
2) Remove the rear door trim. <Ref. to EI-49, REMOVAL, Door Trim.>
3) Remove the sealing cover.

NOTE:
- Carefully remove the butyl tape. Excessive force will easily break the cover.
- If cover gets broken, replace it with a new part.

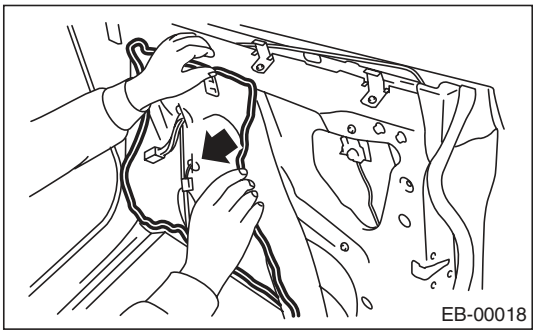

B: INSTALLATION

1) Install in the reverse order of removal.
2) When replacing the sealing cover, use the butyl tape.
3) Press the butyl tape-applied area firmly to prevent any floating on surface.

Butyl tape:
3M 8626 or equivalent

NOTE:
- Apply a uniform bead of butyl tape.
- Attach the sealing cover, keeping it from becoming wrinkled.
- Breaks in the bead will allow water leakage and contamination.

C: INSPECTION

If the sealing cover gets damaged, replace it with a new part.

8. Trunk Lid

A: REMOVAL

1. TORSION BAR

1) Open the trunk lid.
2) Using the ST, remove the torsion bar from the hinge link.
ST 927780000 REMOVER

CAUTION:
During removal and installation, handle the torsion bar carefully, because it will generate reactive force.

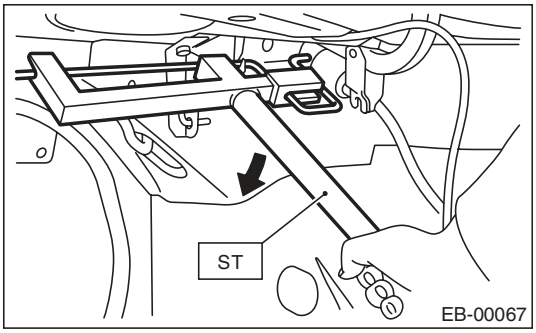

3) Remove the torsion bars RH/LH.

2. TRUNK LID ARM

1) Disconnect the ground cable from battery.
2) Open the trunk lid to remove the trunk lid trim, trunk lid arm cover and trunk room trim. <Ref. to EI-70, REMOVAL, Trunk Room Trim.>
3) Disconnect the trunk lid release cable. <Ref. to SL-44, REMOVAL, Trunk Lid Lock Assembly.>
4) Disconnect the connectors, and remove the harness clip, etc.
5) Remove the trunk lid mounting bolts, to remove the trunk lid panel from the trunk lid arm.

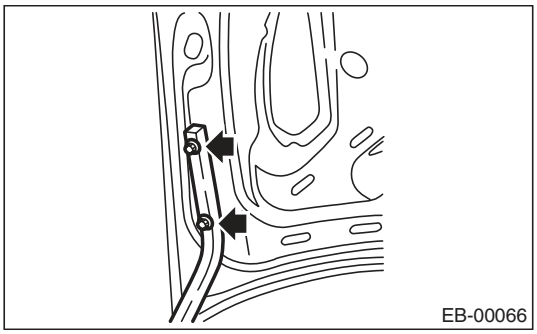

6) Remove the torsion bar from the trunk lid hinge link. <Ref. to EB-24, TORSION BAR, REMOVAL, Trunk Lid.>
7) Remove the rear shelf trim. <Ref. to EI-69, REMOVAL, Rear Shelf Trim.>
8) Remove the bolts, then remove the trunk lid arm.

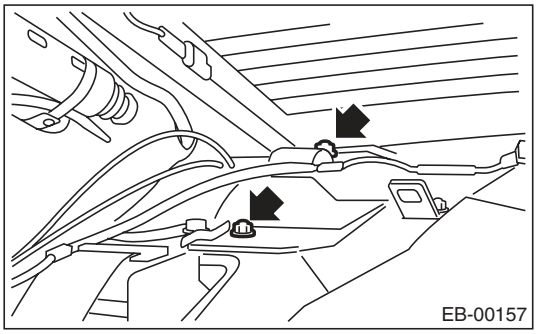

3. TRUNK LID PANEL

1) Disconnect the ground cable from battery.
2) Open the trunk lid to remove the trunk lid trim and trunk lid arm cover. <Ref. to EI-70, TRUNK ROOM TRIM, REMOVAL, Trunk Room Trim.>
3) Disconnect the connector to remove the trunk lid harness.
4) Remove the trunk lid lock assembly. <Ref. to SL-44, REMOVAL, Trunk Lid Lock Assembly.>
5) Remove the trunk lid garnish. <Ref. to EI-74, REMOVAL, Trunk Lid Garnish.>
6) Remove the license plate light cover.

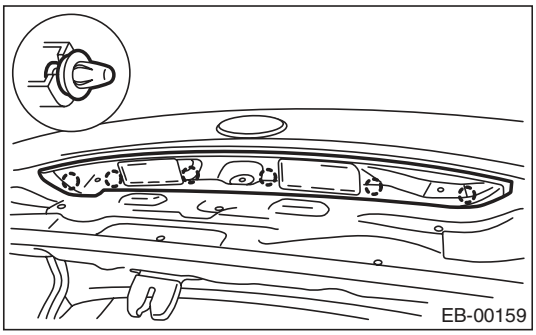

7) Remove the bolts, then remove the trunk lid panel from the trunk lid arm.

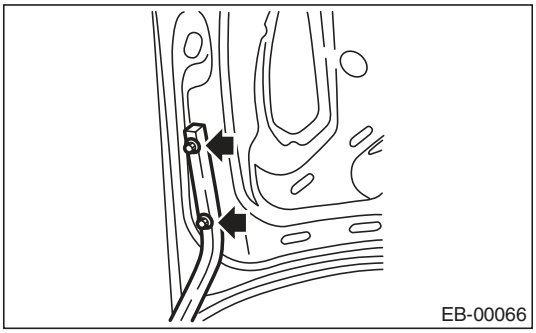

B: INSTALLATION

1) Install in the reverse order of removal.
2) Apply grease to the rotating area of hinges and the torsion bar.
3) Install while paying attention to make a uniform clearance around the trunk lid panel. For the dimension of clearance, refer to “SPECIFICATION” in “General Description”. <Ref. to EB-2, SPECIFICATION, General Description.>

Tightening torque:
Refer to “COMPONENT” of “General Description”. <Ref. to EB-11, REAR GATE PANEL, COMPONENT, General Description.>

9. Rear Gate

A: REMOVAL

1. REAR GATE PANEL

1) Disconnect the ground cable from the battery.
2) Open the rear gate.
3) Remove the rear gate trim. <Ref. to EI-68, REMOVAL, Rear Gate Trim.>
4) Remove the rear gate garnish. <Ref. to EI-75, REMOVAL, Rear Gate Garnish.>
5) Remove the rear wiper arm. <Ref. to WW-17, REMOVAL, Rear Wiper Arm.>
6) Remove the rear wiper motor. <Ref. to WW-18, REMOVAL, Rear Wiper Motor.>
7) Remove the rear gate outer handle. <Ref. to SL-42, REMOVAL, Rear Gate Outer Handle.>
8) Remove the rear gate latch assembly. <Ref. to SL-43, REMOVAL, Rear Gate Latch Assembly.>
9) Remove the roof spoiler. <Ref. to EI-41, REMOVAL, Roof Spoiler.>
10) Remove harness clip of each connector from the rear gate panel.
11) Remove the weather strip clip (A), and remove the rear gate panel weather strip.

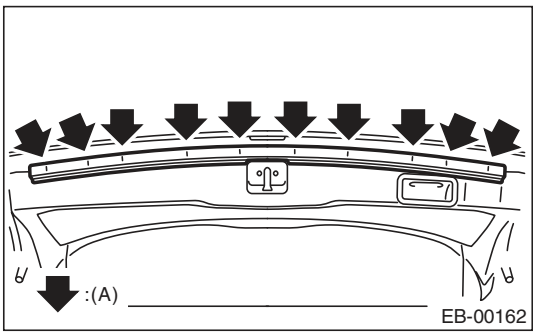

NOTE:
If the weather strip clip is removed with excessive force, the weather strip may be damaged. Be sure to use clip remover to remove.

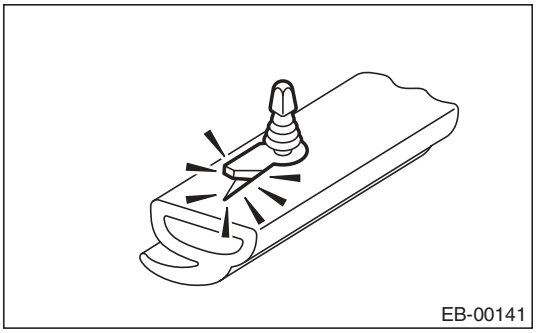

12) Remove the rubber duct (A) connection, and pull out the harness and washer hose from the rear gate.

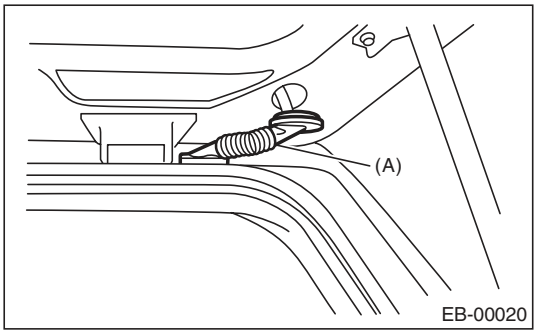

13) Before removing the rear gate damper stay, prevent the rear gate from closing using prop or the like.

CAUTION:
If the prop comes off, operators may get injured and vehicle may get damaged. Make sure to support the rear gate with secure material to prevent injury or damage.

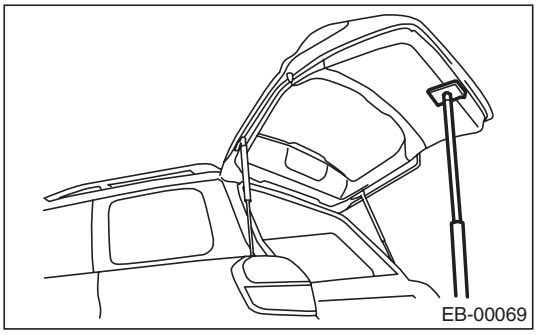

14) Remove the mounting bolt of rear gate damper stay.

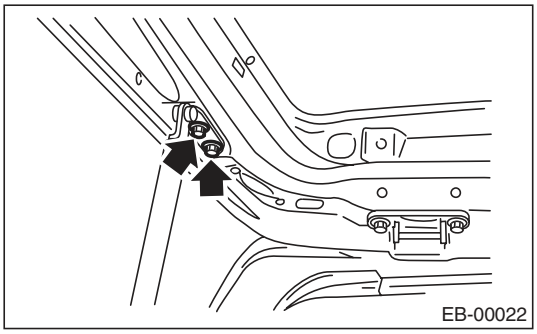

15) Remove the rear gate hinge bolt, and remove the rear gate panel.

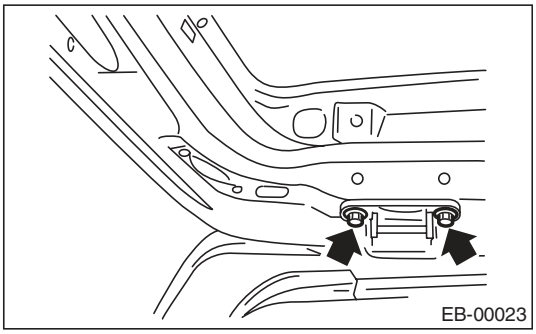

16) Remove the rear gate hinge from the vehicle.

2. REAR GATE DAMPER STAY

CAUTION:
- **Do not damage piston rods and oil seals.**
- **Never disassemble cylinders: They contain gas.**

1) Open the rear gate.
2) Before removing the rear gate damper stay, prevent the rear gate from closing using prop or the like.

CAUTION:
If the prop comes off, operators may get injured and vehicle may get damaged. Make sure to support the rear gate with secure material to prevent injury or damage.

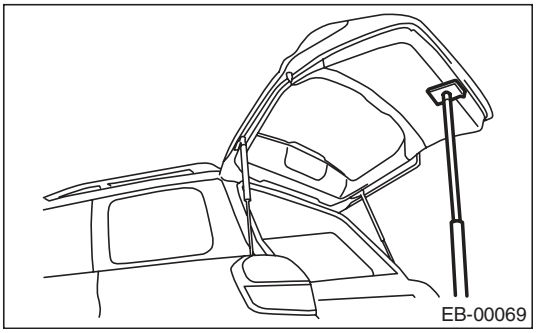

3) Remove the mounting bolt of rear gate damper stay.

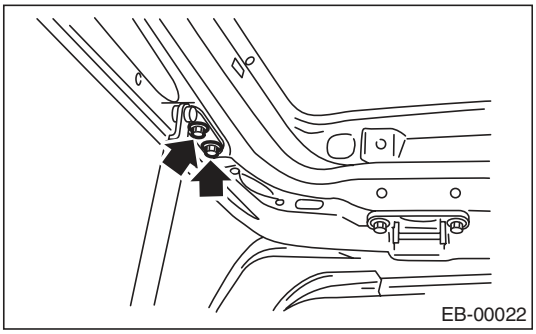

4) Remove the clips and detach the rear combination light covers.

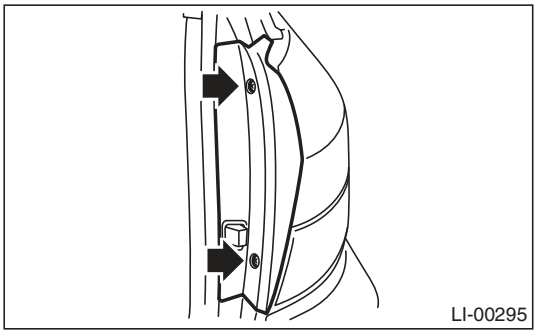

5) Remove mounting bolt (A), and remove the damper stay.

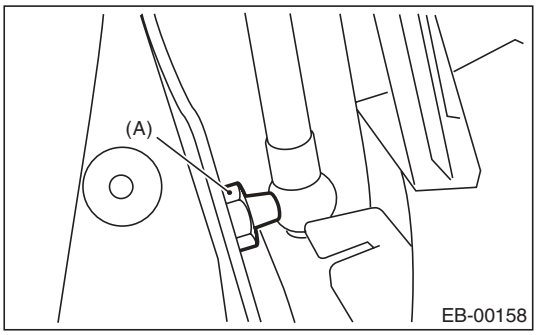

B: INSTALLATION

1. REAR GATE PANEL

1) Install in the reverse order of removal.
2) Install with attention to make uniform clearance between rear gate panel and body. For the dimension of clearance, refer to “SPECIFICATION” in “General Description”. <Ref. to EB-5, REAR (WAGON MODEL), SPECIFICATION, General Description.>

Tightening torque:
Refer to “COMPONENT” of “General Description”. <Ref. to EB-11, REAR GATE PANEL, COMPONENT, General Description.>

2. REAR GATE DAMPER STAY

1) Prevent the rear gate from closing using prop or the like.

CAUTION:
If the prop comes off, operators may get injured and vehicle may get damaged. Make sure to support the rear gate with secure material to prevent injury or damage.

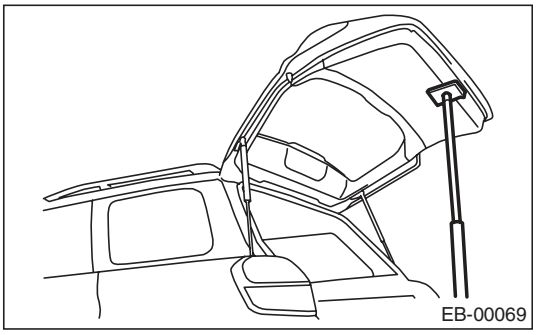

2) Install in the reverse order of removal.

Tightening torque:
Refer to “COMPONENT” of “General Description”. <Ref. to EB-11, REAR GATE PANEL, COMPONENT, General Description.>

C: DISPOSAL

1. REAR GATE DAMPER STAY

CAUTION:
Gas is colorless, odorless, and harmless. However, gas pressure may spray cutting powder or oil. Be sure to wear dust-resistant goggles.

1) Cover with a vinyl sack as shown in the figure.

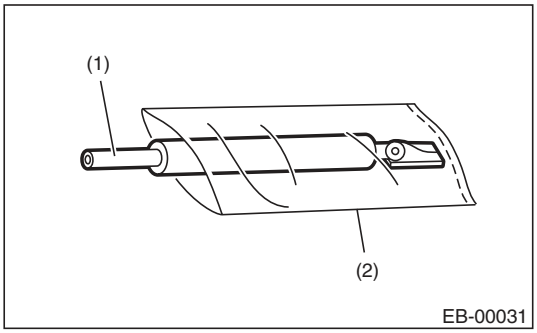

(1) Rear gate damper stay
(2) Vinyl sack

NOTE:
Prevent the vinyl sack from being caught by drill cutting edge

2) Lift the body side slightly with piston rods fully extended, and secure the body side with vise.
Drill a hole in 2 to 3 mm (0.08 to 0.12 in) diameter at a point 10 to 200 mm (0.39 to 7.87 in) from door side, and bleed rear gate damper stay gas stay completely.

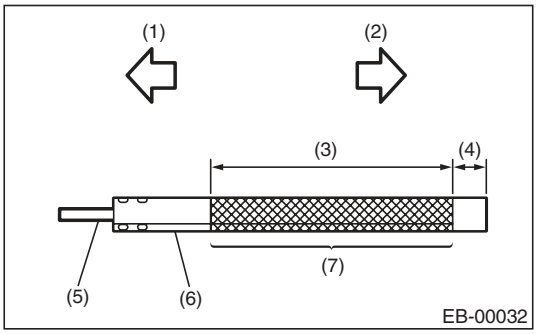

(1) Door side
(2) Body side
(3) 190 mm (7.48 in)
(4) 10 mm (0.39 in)
(5) Piston rod
(6) Cylinder
(7) Portion to be drilled

1. General Description

A: COMPONENT

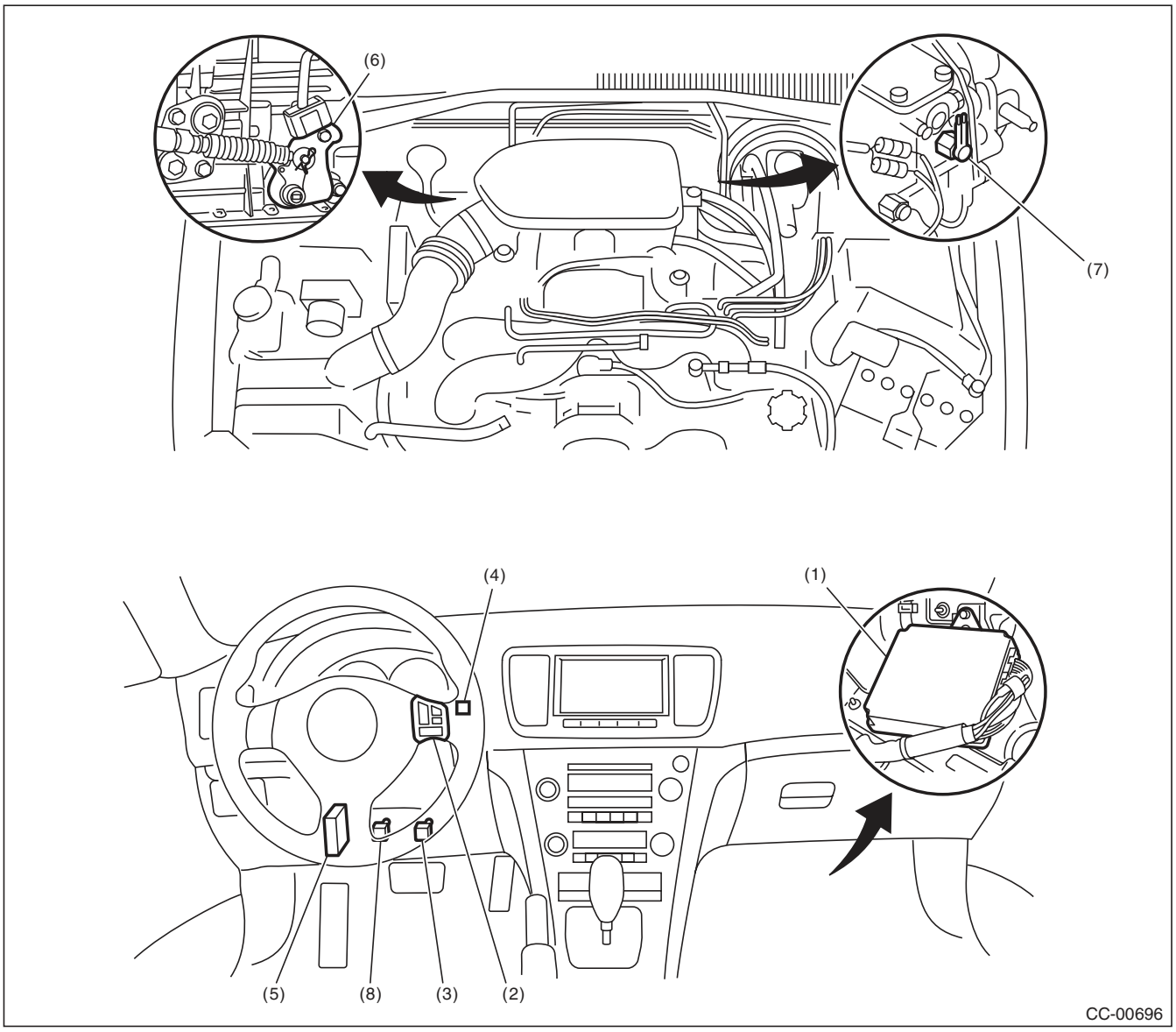

(1) Engine control module (ECM)
(2) Cruise control command switch
(3) Stop light & brake switch
(4) Cruise indicator light and cruise set indicator light
(5) Transmission control module (TCM) (AT model)
(6) Inhibitor switch (AT model)
(7) Neutral position switch (MT model)
(8) Clutch switch (MT model)

B: CAUTION

- Before disassembling or reassembling parts, always disconnect the battery ground cable from battery. When repairing the audio, control module, etc. which are provided with memory functions, record the memory contents before disconnecting the ground cable from battery. Otherwise, the memory will be cleared.
- Reassemble the parts in the reverse order of disassembly unless otherwise indicated.
- Adjust the parts to specifications specified in this manual.
- Connect the connectors securely during reassembly.
- After reassembly, ensure functional parts operate properly.

C: PREPARATION TOOL

TOOL NAME	REMARKS
Circuit tester	Used for measuring resistance and voltage.
TORX® bit T30	Used for removing/installing driver's airbag module.

2. Cruise Control Module

A: NOTE

The control of cruise control system is carried out in engine control module (ECM).

B: REMOVAL

- 2.5 L non-turbo model <Ref. to FU(H4SO)-39, REMOVAL, Engine Control Module (ECM).>
- 2.5 L turbo model <Ref. to FU(H4DOTC)-52, REMOVAL, Engine Control Module (ECM).>
- 3.0 L model <Ref. to FU(H6DO)-38, REMOVAL, Engine Control Module (ECM).>

C: INSTALLATION

- 2.5 L non-turbo model <Ref. to FU(H4SO)-39, INSTALLATION, Engine Control Module (ECM).>
- 2.5 L turbo model <Ref. to FU(H4DOTC)-52, INSTALLATION, Engine Control Module (ECM).>
- 3.0 L model <Ref. to FU(H6DO)-38, INSTALLATION, Engine Control Module (ECM).>

3. Cruise Control Command Switch

A: REMOVAL

CAUTION:
Before servicing, be sure to read the notes in the "AB" section for proper handling of the driver's airbag module. <Ref. to AB-4, CAUTION, General Description.>

1) Set the front wheels in straight ahead position.
2) Turn the ignition switch to OFF.
3) Disconnect the ground cable from battery and wait for at least 20 seconds before starting work.
4) Using TORX® bit T30 (1), loosen two TORX® bolts which secure the driver's airbag module.

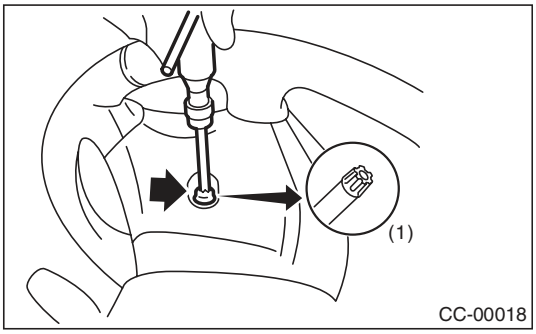

5) Disconnect the airbag module connector on back of the airbag module.
6) Remove the steering wheel. <Ref. to PS-13, REMOVAL, Steering Wheel.>
7) Remove the eight screws to remove the lower cover from steering wheel.

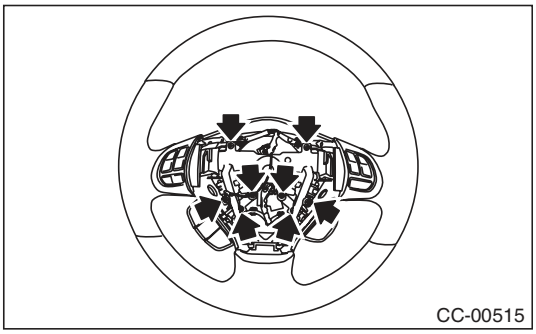

8) Remove the screw on the backside of the steering wheel to remove the cruise control command switch.

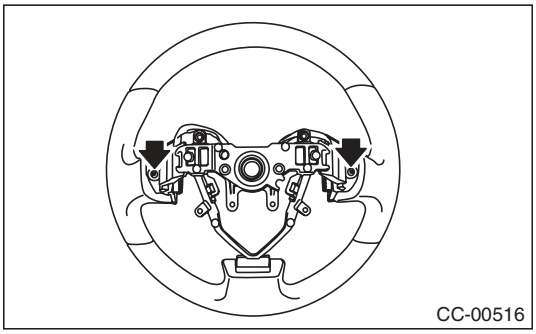

B: INSTALLATION

Install in the reverse order of removal.

C: INSPECTION

Measure the cruise control command switch resistance.

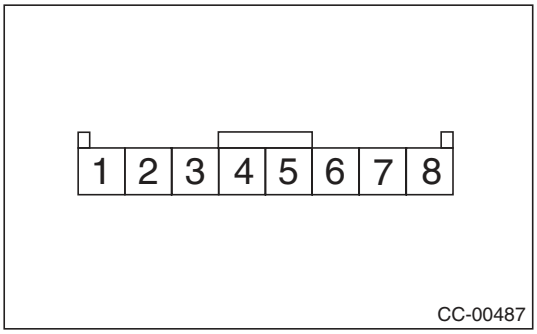

Switch	Position	Terminal No.	Standard
CANCEL SET/COAST RESUME/ ACCEL	All OFF	7 and 6	Approx. 4 kΩ
CANCEL	ON	7 and 6	Less than 1 Ω
SET/COAST	ON	7 and 6	Approx. 250 Ω
RESUME/ ACCEL	ON	7 and 6	Approx. 1500 Ω
MAIN (CRUISE)	OFF	8 and 6	1 MΩ or more
	ON	8 and 6	Less than 1 Ω

If NG, replace the cruise control command switch.

4. Combination Meter

A: NOTE

For the combination meter, refer to the IDI section.
<Ref. to IDI-22, Combination Meter.>

5. Stop Light & Brake Switch

A: NOTE

For the stop light & brake switch, refer to BR section. <Ref. to BR-39, INSPECTION, Stop Light Switch.>

6. Clutch Switch

A: NOTE

For the clutch switch, refer to CL section. <Ref. to CL-37, Clutch Switch.>

7. Inhibitor Switch

A: NOTE

1. 4AT MODEL

For the inhibitor switch, refer to 4AT section. <Ref. to 4AT-46, INSPECTION, Inhibitor Switch.>

2. 5AT MODEL

Inhibitor switch cannot be removed and checked, because the inhibitor switch is installed on control valve assembly.
When a malfunction occurs, refer to 5AT (diag) section. <Ref. to 5AT(diag)-35, DTC P0705 TRANSMISSION RANGE SENSOR CIRCUIT (PRNDL INPUT), Diagnostic Procedure with Diagnostic Trouble Code (DTC).>

8. Transmission Control Module (TCM)

A: NOTE

For the transmission control module (TCM), refer to the following section.

- 4AT model <Ref. to 4AT-61, Transmission Control Module (TCM).>
- 5AT model <Ref. to 5AT-60, Transmission Control Module (TCM).>

9. Neutral Position Switch

A: NOTE

For the neutral position switch, refer to the following section.

- 5MT model <Ref. to 5MT-35, Switches and Harness.>
- 6MT model <Ref. to 6MT-41, Neutral Position Switch.>

1. Basic Diagnostic Procedure

A: PROCEDURE

Step		Check	Yes	No
1	**CHECK MALFUNCTION INDICATOR LIGHT.** Make sure the malfunction indicator light illuminates.	Does the malfunction indicator light illuminate?	Go to step **5**.	Go to step **2**.
2	**CHECK CRUISE INDICATOR LIGHT.** Make sure the cruise indicator light blinks.	Does the cruise indicator light blink?	Go to step **5**.	Go to step **3**.
3	**CHECK CRUISE CONTROL MAIN SWITCH OPERATION.** Check cruise control main switch operation. (Ensure the cruise indicator light illuminates.)	Is the cruise control main switch turned on? (Does the cruise indicator light illuminate?)	Go to step **4**.	Go to phenomenon 1. <Ref. to CC(diag)-9, DIAGNOSTIC PROCEDURE WITH PHENOMENON, Diagnostics with Phenomenon.>
4	**CHECK CRUISE CONTROL SET OPERATION.** Check the cruise control setting operation.	Can the cruise control be set while driving at 40 km/h (25 MPH) or more?	Go to step **7**.	Go to step **6**.
5	**CHECK DTC.** Read all DTCs using the Subaru Select Monitor.	Is an engine or ABS/VDC related DTC displayed?	Perform the diagnosis according to DTC.	Go to phenomenon 2. <Ref. to CC(diag)-9, DIAGNOSTIC PROCEDURE WITH PHENOMENON, Diagnostics with Phenomenon.>
6	**CHECK CANCEL CODE.** Using the Subaru Select Monitor, read the cancel codes. NOTE: • Do not turn the ignition switch to OFF after the cruise control is deactivated. • Do not operate the cruise control command switch after the cruise control is deactivated. If the above is performed, the cancel code will be cleared.	Is it possible to read the cancel codes?	Perform the diagnosis according to the cancel code. <Ref. to CC(diag)-11, LIST, List of Cancel Code.>	Go to step **7**.
7	**CHECK CRUISE SET INDICATOR LIGHT.** Make sure the cruise set indicator light illuminates.	Does the cruise set indicator light illuminate?	Go to step **8**.	Go to phenomenon 3. <Ref. to CC(diag)-9, DIAGNOSTIC PROCEDURE WITH PHENOMENON, Diagnostics with Phenomenon.>
8	**CHECK VEHICLE SPEED IS HELD WITHIN SET SPEED.** Make sure the vehicle speed is held within set speed.	Is the vehicle speed kept within setting speed ±3 km/h (±2 MPH)? (Make sure that on a level road.)	Go to step **9**.	Go to phenomenon 4. <Ref. to CC(diag)-9, DIAGNOSTIC PROCEDURE WITH PHENOMENON, Diagnostics with Phenomenon.>

Step		Check	Yes	No
9	**CHECK RESUME/ACCEL OPERATION.** Check the RESUME/ACCEL switch operation.	Does the vehicle speed increase or return to set speed after RESUME/ACCEL switch has been pressed?	Go to step **10**.	Go to phenomenon 5. <Ref. to CC(diag)-9, DIAGNOSTIC PROCEDURE WITH PHENOMENON, Diagnostics with Phenomenon.>
10	**CHECK SET/COAST OPERATION.** Check the SET/COAST switch operation.	Does the vehicle speed decrease after SET/COAST switch has been pressed?	Go to step **11**.	Go to phenomenon 6. <Ref. to CC(diag)-9, DIAGNOSTIC PROCEDURE WITH PHENOMENON, Diagnostics with Phenomenon.>
11	**CHECK CANCEL OPERATION.** Check the CANCEL switch operation.	Is the cruise control released after CANCEL switch has been pressed?	Go to step **12**.	Go to phenomenon 7. <Ref. to CC(diag)-9, DIAGNOSTIC PROCEDURE WITH PHENOMENON, Diagnostics with Phenomenon.>
12	**CHECK CRUISE CONTROL RELEASE OPERATION.** Check the cruise control release operation.	Is the cruise control released after brake pedal has been depressed?	Go to step **13**.	Go to phenomenon 8. <Ref. to CC(diag)-9, DIAGNOSTIC PROCEDURE WITH PHENOMENON, Diagnostics with Phenomenon.>
13	**CHECK CRUISE CONTROL RELEASE OPERATION.** Check the cruise control release operation.	Is the cruise control released after shifting to the neutral position?	Go to step **14**.	Go to phenomenon 9. <Ref. to CC(diag)-9, DIAGNOSTIC PROCEDURE WITH PHENOMENON, Diagnostics with Phenomenon.>
14	**CHECK CRUISE CONTROL RELEASE OPERATION.** Check the cruise control release operation.	Is the cruise control released after depressing the clutch pedal?	Finish the diagnosis.	Go to phenomenon 10. <Ref. to CC(diag)-9, DIAGNOSTIC PROCEDURE WITH PHENOMENON, Diagnostics with Phenomenon.>

2. General Description

A: CAUTION

Airbag system wiring harness is routed near the cruise control command switch.

CAUTION:
- **Airbag system wiring harnesses and connectors are yellow. Do not use electrical test equipment on these circuits.**
- **Be careful not to damage the airbag system wiring harness when servicing the cruise control command switch. Airbag system wiring harness is routed near the cruise control command switch.**

B: PREPARATION TOOL

1. SPECIAL TOOL

ILLUSTRATION	TOOL NUMBER	DESCRIPTION	REMARKS
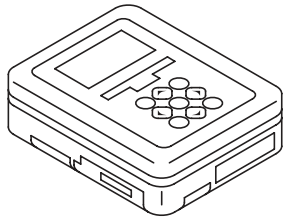 ST1B022XU0	1B022XU0	SUBARU SELECT MONITOR III KIT	Used for troubleshooting the electrical system.

2. GENERAL TOOL

TOOL NAME	REMARKS
Circuit tester	Used for measuring resistance, voltage and current.

C: INSPECTION

Measure the battery voltage and specific gravity of electrolyte.

Standard voltage:
12 V or more

Specific gravity:
1.260 or more

3. Electrical Component Location

A: LOCATION

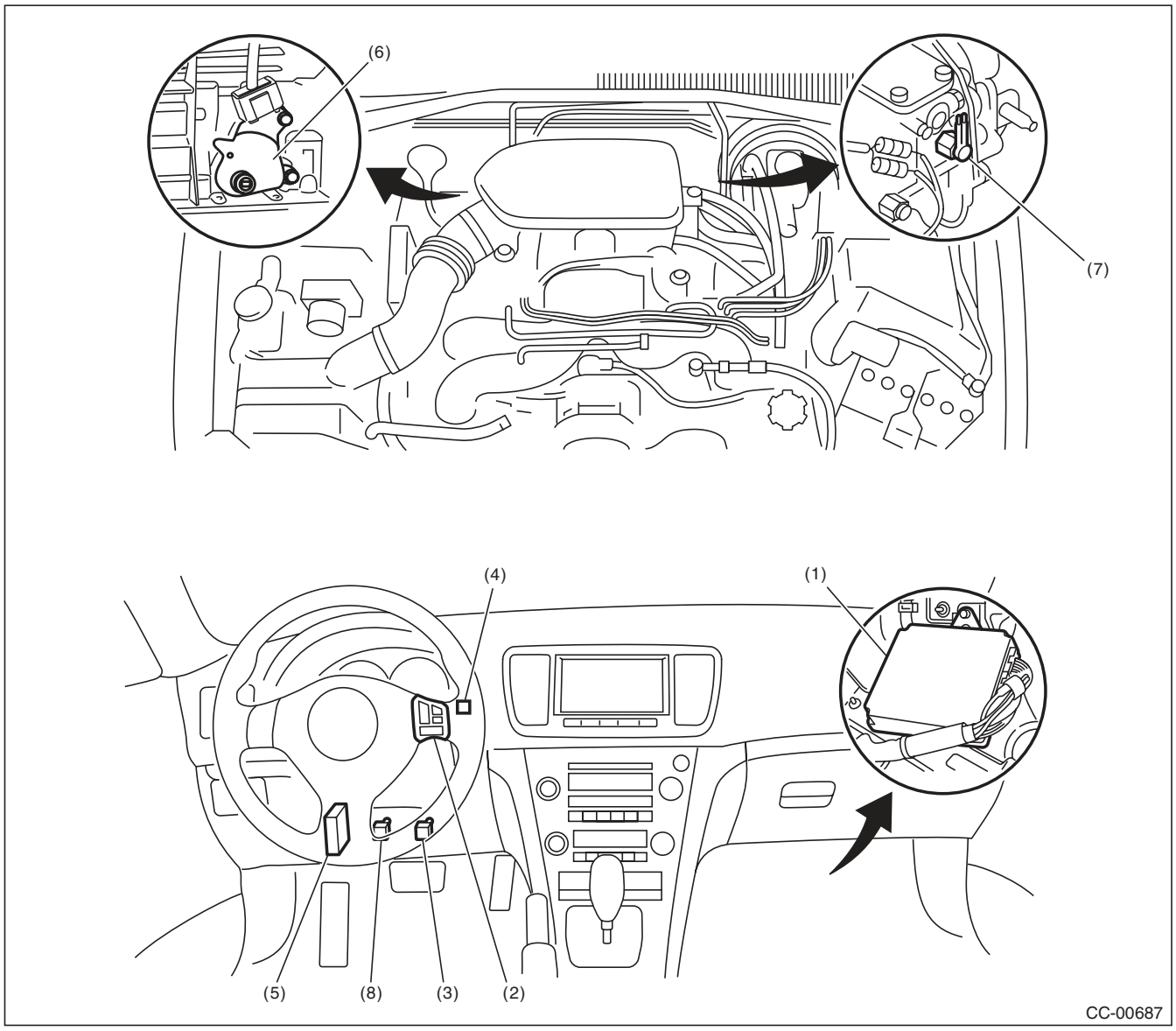

(1) Engine control module (ECM)
(2) Cruise control command switch
(3) Stop light & brake switch
(4) Cruise indicator light and cruise set indicator light
(5) Transmission control module (TCM) (AT model)
(6) Inhibitor switch (AT model)
(7) Neutral position switch (MT model)
(8) Clutch switch (MT model)

4. Engine Control Module (ECM) I/O Signal

A: ELECTRICAL SPECIFICATION

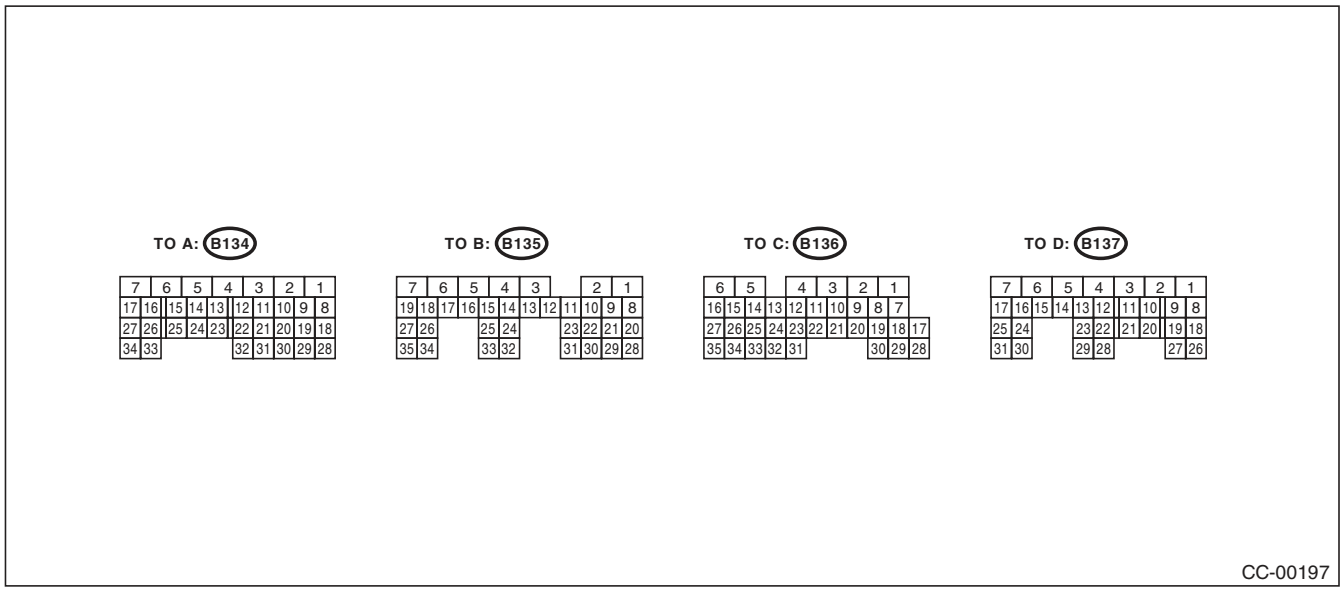

Description		Terminal No.	Measurement condition and I/O signal (Idling with ignition ON: except for cruise set light)
Main power supply	VB (CONTROL 1) VB (CONTROL 2)	A7, B2	• Battery voltage is detected when the main power is turned ON. • “0 V” is detected when the main power is turned OFF.
Command switch		B24	• “0 V” is detected when the command switch is in CANCEL position. • “Approx. 1 V” is present when the command switch is in SET/COAST position. • “Approx. 3 V” is detected when the command switch is in RESUME/ACCEL position. • “Approx. 4 V” is detected when the command switch is released.
Brake switch 1 (Brake switch)		B20	• Battery voltage is detected when the brake pedal is released. • “0 V” is present when brake pedal is depressed.
Brake switch 2 (Stop light switch)		B28	• Battery voltage is present when brake pedal is depressed. • “0 V” is detected when the brake pedal is released.
Main switch		B12	• “0 V” is present while the main switch is pressed or turned on. • Approx. “5 V” is detected when the main switch is turned to OFF.
Ground	GND (CONTROL 1) GND (CONTROL 2)	A5 D7	—
Ignition switch		B19	• Battery voltage is detected when the ignition switch is turned ON. • “0 V” is detected when the ignition switch is turned OFF.
Clutch switch (MT model)		C25	• “0 V” is present when brake pedal is depressed. • Battery voltage is detected when the clutch pedal is released.
Neutral position switch (MT model)		C31	• Battery voltage is detected when the shift lever is in any position except for neutral. • “Approx. 0 V” is detected when the shift lever is in neutral position.
Neutral signal (AT model)		C31	• Battery voltage is detected when the shift lever is in any position except for “P” or “N”. • “0 V” is detected when the shift lever is in “P” or “N” position.

B: WIRING DIAGRAM

<Ref. to WI-194, WIRING DIAGRAM, Cruise Control System.>

5. Subaru Select Monitor

A: OPERATION

1. GENERAL DESCRIPTION

The on-board diagnosis function of the cruise control system uses Subaru Select Monitor.
The on-board diagnosis function operates in two categories, which are used depending on the type of problems;

1) Cruise Control Cancel Conditions Diagnosis:
   (1) This category of diagnosis requires actual vehicle driving in order to determine the cause, as when cruise speed is cancelled during driving although cruise cancel condition is not entered.
   (2) Cruise control memory in ECM stores the cancel code which occurred during driving. When there are multiple cancel code, they are shown on the Subaru Select Monitor.

CAUTION:
- **The cruise control memory stores not only the cruise "cancel" which occurred (although "cancel" operation is not entered by the driver), but also the "cancel" condition input by the driver.**
- **The content of the latest memory (the latest code) is cleared when the ignition switch is turned to OFF. However, memory contents set by the diagnosis of faulty switches related to the system and cruise control will remain as trouble history (memory code) after the ignition switch is turned to OFF.**

2) Real-time Diagnosis:
Real-time diagnosis function is used to determine whether or not the input signal system is in good order, according to signal emitted from switches, sensors, etc.
   (1) Vehicle cannot be driven at cruise speed when the problem occurs in the cruise control system or relevant circuits.
   (2) Monitor the signal conditions from switches and sensors.

2. CRUISE CONTROL CANCEL CONDITIONS DIAGNOSIS

1) Prepare the Subaru Select Monitor kit.
2) Connect the diagnosis cable to Subaru Select Monitor.
3) Connect the Subaru Select Monitor to data link connector.
   (1) Data link connector is located in the lower portion of the instrument panel (on the driver's side).

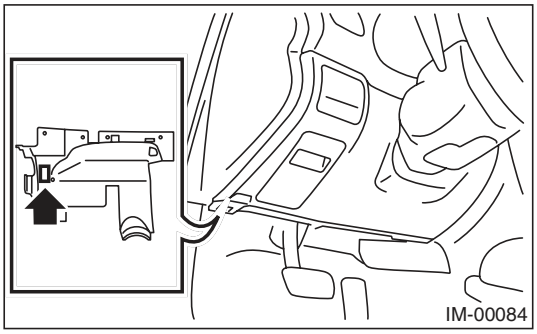

   (2) Connect the diagnosis cable to data link connector.
4) Start the engine and turn the cruise control main switch to ON.
5) Run the Subaru Select Monitor.
6) On the «Main Menu» display, select the {2. Each System Check}.
On the «System Selection Menu» display, select the {Engine Control System} and select the [OK]. Select the [OK] after the information of engine type is displayed.
7) Drive vehicle at 40 km/h (25 MPH) or more and set the cruise control.

CAUTION:
- **When performing diagnosis, observe the legal speed limit on the road.**
- **The cancel code will be also appear when cruise control is cancelled by the driver's operation. Do not confuse them.**
- **Be sure to get an assistant to support the diagnosis while driving, and have him/her operate the select monitor.**

8) When the set speed is canceled by itself (when cancelled without a cancel operation such as applying the brake) or if the cruise control could not be set by performing the setting operation, selecting the {Cancel Code(s) Display} on the engine malfunction diagnosis screen will display the cancel code on the select monitor display.

NOTE:
The {Latest Code} and {Memorized diagnostic code(s)} are contained in the cancel code. The latest code recognized during current test drive is displayed in {Latest Code}. Cancel codes resulting from fault diagnosis of switches relating to the system and cruise control are also displayed in {Memorized diagnostic code(s)}.

9) Perform Engine DTC Clear Memory operation.
<Ref. to EN(H4SO)(diag)-50, OPERATION, Clear Memory Mode.>
<Ref. to EN(H4DOTC)(diag)-52, OPERATION, Clear Memory Mode.>
<Ref. to EN(H6DO)(diag)-52, OPERATION, Clear Memory Mode.>
Cancel codes for switches relating to the system and cruise control are deleted by clearing memory on the engine side.

NOTE:
The latest code will be cleared by turning ignition switch to OFF.

3. REAL-TIME DIAGNOSIS

1) Connect the Subaru Select Monitor.
2) Turn the ignition switch and cruise control main switch to ON.
3) Run the Subaru Select Monitor.
4) On the «Main Menu» display, select the {2. Each System Check}.
5) On the «System Selection Menu» display, select the {Engine Control System}.
6) Select [OK] after engine type information is displayed.
7) Select {Current Data Display & Save} in Cruise Control Diagnosis display screen.
8) Make sure that normal display is shown when operated as follows:
- Depress and release the brake pedal. (Stop light switch and brake switch are turned ON.)
- Turn the main switch to ON.
- Turn the “CANCEL” switch to ON.
- Turn the “SET/COAST” switch to ON.
- Turn the “RESUME/ACCEL” switch to ON.
- Depress or release the clutch pedal.
- Place the shift lever in any position other than neutral.

NOTE:
- For detailed operation procedure, refer to the “PC application help for Subaru Select Monitor”
- For detailed concerning cancel codes, refer to the “List of Cancel Codes”. <Ref. to CC(diag)-11, List of Cancel Code.>

6. Diagnostics with Phenomenon

A: DIAGNOSTIC PROCEDURE WITH PHENOMENON

Phenomenon		Check item	Reference
1	Cruise control main switch is not turned to ON. (Cruise indicator light does not illuminate.)	(1) Perform cruise cancel conditions diagnosis.	Perform the diagnosis according to displayed cancel code.
		(2) Perform the real-time diagnosis.	Check the input signal of cruise control system.
		(3) Check the cruise control command switch.	<Ref. to CC(diag)-13, 11, Diagnostic Procedure with Cancel Code.>
		(4) Check the cruise indicator light.	<Ref. to CC(diag)-10, CHECK CRUISE INDICATOR LIGHT AND CRUISE SET INDICATOR LIGHT, Diagnostics with Phenomenon.>
2	Cruise control cannot be set.	(1) Perform cruise cancel conditions diagnosis.	Perform the diagnosis according to displayed cancel code.
		(2) Perform the real-time diagnosis.	Check the input signal of cruise control system.
		(3) Check the cruise control command switch.	<Ref. to CC(diag)-13, 11, Diagnostic Procedure with Cancel Code.>
		(4) Check stop light switch and brake switch.	<Ref. to BR-39, Stop Light Switch.> <Ref. to CC(diag)-15, 12, Diagnostic Procedure with Cancel Code.>
		(5) Check clutch switch.	<Ref. to CL-37, Clutch Switch.> <Ref. to CC(diag)-17, 13, Diagnostic Procedure with Cancel Code.>
		(6) Check the neutral position switch.	<Ref. to CC(diag)-19, 14, Diagnostic Procedure with Cancel Code.> <Ref. to CC(diag)-26, 62, Diagnostic Procedure with Cancel Code.>
		(7) Check vehicle speed sensor.	<Ref. to CC(diag)-24, 22, Diagnostic Procedure with Cancel Code.>
3	Cruise set indicator light does not illuminate.	Check the cruise set indicator light.	<Ref. to CC(diag)-10, CHECK CRUISE INDICATOR LIGHT AND CRUISE SET INDICATOR LIGHT, Diagnostics with Phenomenon.>
4	Vehicle speed is not held within set speed ±3 km/h (±2 MPH).	Check the vehicle speed sensor.	<Ref. to CC(diag)-24, 22, Diagnostic Procedure with Cancel Code.>
5	Vehicle speed does not increase or does not return to set speed after RESUME/ACCEL switch has been pressed.	(1) Perform the real-time diagnosis.	Check the input signal of cruise control system.
		(2) Check the RESUME/ACCEL switch.	<Ref. to CC(diag)-13, 11, Diagnostic Procedure with Cancel Code.>
6	Vehicle speed does not decrease after SET/COAST switch has been pressed.	(1) Perform the real-time diagnosis.	Check the input signal of cruise control system.
		(2) Check the SET/COAST switch.	<Ref. to CC(diag)-13, 11, Diagnostic Procedure with Cancel Code.>
7	Cruise control is not released after CANCEL switch has been pressed.	(1) Perform the real-time diagnosis.	Check the input signal of cruise control system.
		(2) Check the CANCEL switch.	<Ref. to CC(diag)-13, 11, Diagnostic Procedure with Cancel Code.>
8	Cruise control is not released after brake pedal has been depressed.	(1) Perform the real-time diagnosis.	Check the input signal of cruise control system.
		(2) Check stop light switch and brake switch.	<Ref. to CC(diag)-15, 12, Diagnostic Procedure with Cancel Code.> <Ref. to BR-39, INSTALLATION, Stop Light Switch.>

Phenomenon		Check item	Reference
9	Cruise control is not released after shifting to the neutral position.	(1) Perform the real-time diagnosis.	Check the input signal of cruise control system.
		(2) Check the neutral position switch.	<Ref. to CC(diag)-19, 14, Diagnostic Procedure with Cancel Code.> <Ref. to 4AT-46, INSPECTION, Inhibitor Switch.>
10	Cruise control is not released after clutch pedal has been depressed.	(1) Perform the real-time diagnosis.	Check the input signal of cruise control system.
		(2) Check clutch switch.	<Ref. to CC(diag)-17, 13, Diagnostic Procedure with Cancel Code.> <Ref. to CL-37, CLUTCH SWITCH (WITH CRUISE CONTROL), INSTALLATION, Clutch Switch.>

B: CHECK CRUISE INDICATOR LIGHT AND CRUISE SET INDICATOR LIGHT

TROUBLE SYMPTOM:

Cruise control can be set, but the cruise indicator light and cruise set indicator light do not illuminate.

Step		Check	Yes	No
1	**CHECK CRUISE INDICATOR LIGHT AND CRUISE SET INDICATOR LIGHT.** 1) Perform the self-diagnosis of combination meter. <Ref. to IDI-5, SELF-DIAGNOSIS, INSPECTION, Combination Meter System.> 2) Check the cruise indicator light and cruise set indicator light if they illuminate.	Do the cruise indicator light and cruise set indicator light illuminate?	Go to step **2**.	Replace the meter case assembly. <Ref. to IDI-22, Combination Meter.>
2	**CHECK DTC OF LAN COMMUNICATION CIRCUIT.** 1) Complete self-diagnosis, and turn the ignition switch to ON again. 2) Read the DTC of body integrated unit using Subaru Select Monitor.	Is DTC of Low-speed CAN displayed?	Check the LAN communication circuit. <Ref. to LAN(diag)-2, Basic Diagnostic Procedure.>	Replace the ECM. <Ref. to FU(H4SO)-39, Engine Control Module (ECM).> <Ref. to FU(H4DOTC)-52, Engine Control Module (ECM).> <Ref. to FU(H6DO)-38, Engine Control Module (ECM).>

7. List of Cancel Code

A: LIST

NOTE:
- The cancel code is registered even when cancel is performed intentionally by the driver.
- Cancel codes are cleared if the ignition switch is turned to OFF.
- If a different cancel code is input after a cancel code (latest code) has been input, the latest code is overwritten.
- If the cruise indicator light is flashing, a malfunction is occurring in the system or cruise control related switch. The cancel code at this time is saved even after ignition switch OFF as a memory code of a past malfunction.
- To display a cancel code, use the Subaru Select Monitor to read the code after the cruise control is deactivated during a driving test.

Cancel code	Item	Contents of diagnosis	Note
11	Main Switch	Main switch of cruise control command switch is turned to OFF, and then the cruise control is released.	This code is displayed without operating the main switch. <Ref. to CC(diag)-13, 11, Diagnostic Procedure with Cancel Code.>
12	Stop Light & Brake Switch	Stop light switch or brake switch is turned to ON, and then the cruise control is released.	This code is displayed without depressing the brake pedal. <Ref. to CC(diag)-15, 12, Diagnostic Procedure with Cancel Code.>
13	Clutch Switch	Clutch switch is turned to ON, and then the cruise control is released.	This code is displayed without depressing the clutch pedal. <Ref. to CC(diag)-17, 13, Diagnostic Procedure with Cancel Code.>
14	Neutral Position Switch	Neutral position switch is turned to ON, and then the cruise control is released.	This code is displayed without shifting to neutral position. <Ref. to CC(diag)-19, 14, Diagnostic Procedure with Cancel Code.>
15	Cancel Switch	Cancel switch is turned to ON, and then the cruise control is released.	This code is displayed without operating the cancel switch. <Ref. to CC(diag)-22, 15, Diagnostic Procedure with Cancel Code.>
16	Ignition Switch	Ignition switch is turned to OFF, and then the cruise control is released.	This code is displayed without operating the ignition switch. <Ref. to CC(diag)-23, 16, Diagnostic Procedure with Cancel Code.>
21	Cruise control switch malfunction when ignition switch is turned to ON	When the ignition switch is turned to ON, each switch of cruise control command switch is already turned to ON.	This code is displayed when the ignition switch is turned to ON without operating the cruise control command switch. <Ref. to CC(diag)-23, 21, Diagnostic Procedure with Cancel Code.>
22	Abnormality of change in vehicle speed	Malfunction of vehicle speed signal variation is detected.	<Ref. to CC(diag)-24, 22, Diagnostic Procedure with Cancel Code.>
24	Cruise Control Related Switch Malfunction	Open circuit of the cruise control switch is detected during cruise driving. (The system is judged as model without cruise control.)	This code is displayed with normal operation. <Ref. to CC(diag)-25, 24, Diagnostic Procedure with Cancel Code.>
25	Brake Switch Input Circuit Malfunction	Malfunction of brake switch input circuit in ECM is detected.	<Ref. to CC(diag)-25, 25, Diagnostic Procedure with Cancel Code.>
31	Abnormal engine speed Signal	• Abnormal increase of engine speed is detected. • Gear is placed in Neutral, 1st or Reverse position.	Cruise in 2nd shift position or more. <Ref. to CC(diag)-25, 31, Diagnostic Procedure with Cancel Code.>

List of Cancel Code

Cancel code	Item	Contents of diagnosis	Note
32	Out of vehicle speed range of cruise control operation	• Controlled vehicle speed decreased under the limit during cruising. • Set operation was performed at vehicle speed unavailable for setting. • RESUME operation was performed without memorized vehicle speed.	This code is displayed, though the vehicle speed is increased to the speed available for cruise set and set operation was performed again. <Ref. to CC(diag)-25, 32, Diagnostic Procedure with Cancel Code.>
34	Prohibition of cruise control at continuing big Accel. angle	The vehicle has been driven at higher speed than set vehicle speed for an abnormally long time (approximately 10 minutes) during cruise driving.	This code is displayed when driving for a long period of time at higher speed than appropriate cruise set vehicle speed by operating accelerator pedal. In this case, the cruise setting is deactivated. <Ref. to CC(diag)-25, 34, Diagnostic Procedure with Cancel Code.>
35	Prohibition when vehicle speed feedback is impossible	Set vehicle speed cannot be kept because of some reasons (steep uphill, parking brake, abnormal decrease of engine output, etc.) during cruise driving.	This code is displayed when driving condition is not suitable for cruise control. Perform cruise set operation again after clearing the possible cause. <Ref. to CC(diag)-25, 35, Diagnostic Procedure with Cancel Code.>
41	VDC/TCS Operating	Vehicle dynamics control (VDC) or TCS is operated during cruise driving or cruise setting.	This code is displayed when driving condition is not suitable for cruise control. Perform cruise set operation again after clearing the possible cause. <Ref. to CC(diag)-25, 41, Diagnostic Procedure with Cancel Code.>
43	ABS/VDC Failure	ABS or Vehicle dynamics control (VDC) system malfunction is detected during cruise driving or cruise setting.	<Ref. to CC(diag)-25, 43, Diagnostic Procedure with Cancel Code.>
44	Body Integrated unit Failure	Body integrated unit system malfunction is detected during cruise driving or cruise setting.	<Ref. to CC(diag)-26, 44, Diagnostic Procedure with Cancel Code.>
45	Meter Failure	Combination meter malfunction is detected during cruise driving or cruise setting.	<Ref. to CC(diag)-26, 45, Diagnostic Procedure with Cancel Code.>
61	Brake switch abnormal	Malfunction in the stop light & brake switch is detected.	<Ref. to CC(diag)-26, 61, Diagnostic Procedure with Cancel Code.>
62	Neutral switch Failure	Neutral position switch malfunction is detected.	<Ref. to CC(diag)-26, 62, Diagnostic Procedure with Cancel Code.>
63	Abnormality 1 of change in vehicle speed	Malfunction of vehicle speed signal variation is detected.	<Ref. to CC(diag)-26, 63, Diagnostic Procedure with Cancel Code.>
64	Engine Sensor Failure	Malfunction related to engine is detected.	<Ref. to CC(diag)-26, 64, Diagnostic Procedure with Cancel Code.>
65	Abnormality 1 of switches related to cruise control 1	Cruise control command switch malfunction is detected. (When the switch is pressed ON for a long time (approximately two minutes), stuck ON condition is detected.)	<Ref. to CC(diag)-26, 65, Diagnostic Procedure with Cancel Code.>
66	Cruise Control Calculation Error	Cruise control calculation (microcomputer) malfunction is detected.	<Ref. to CC(diag)-26, 66, Diagnostic Procedure with Cancel Code.>

8. Diagnostic Procedure with Cancel Code

A: 11

Detected when main switch is pressed or when main switch related malfunction occurs.

TROUBLE SYMPTOM:

- Cruise control cannot be set. (Cancelled immediately.)
- Cruise control cannot be released.

WIRING DIAGRAM:

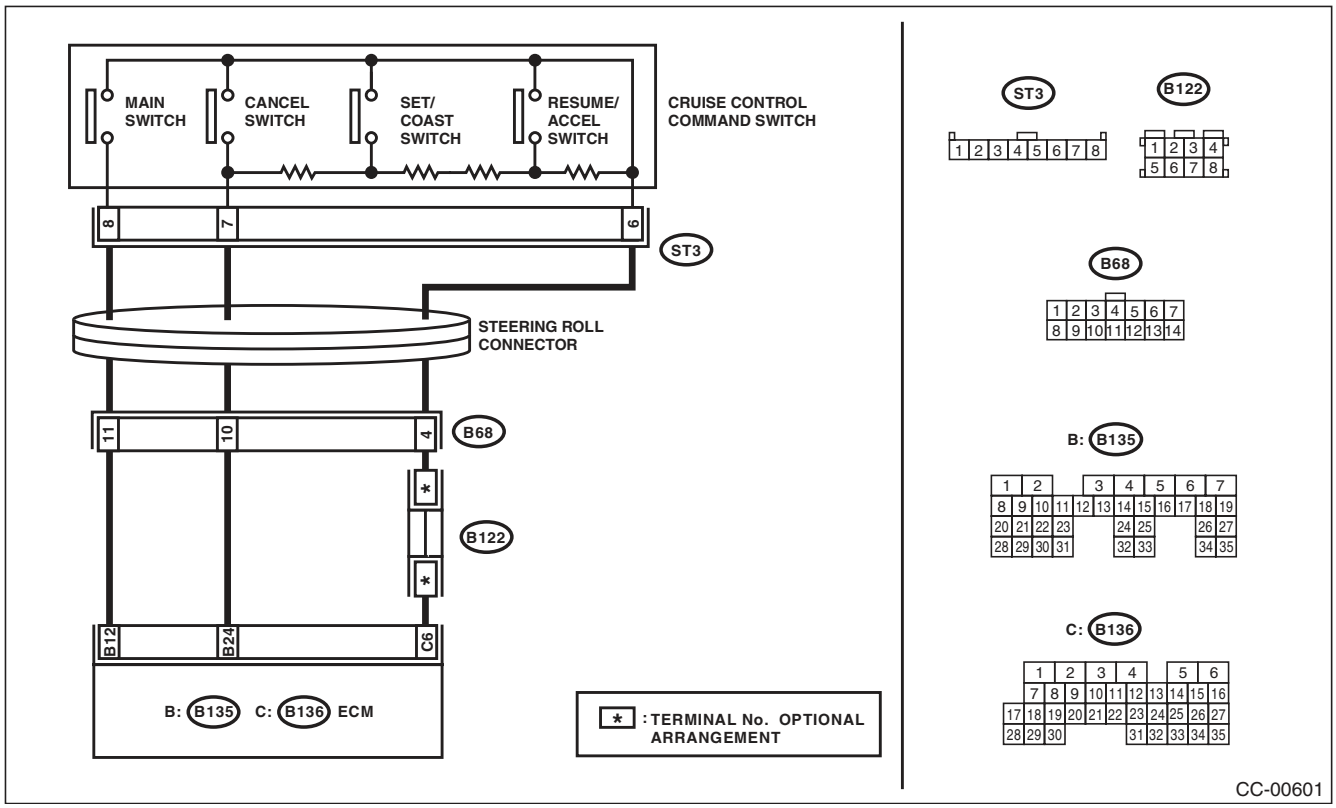

Diagnostic Procedure with Cancel Code

	Step	Check	Yes	No
1	**CHECK CRUISE CONTROL COMMAND SWITCH CIRCUIT.** 1) Remove the driver's airbag module. <Ref. to AB-14, REMOVAL, Driver's Airbag Module.> 2) Disconnect the harness connector of cruise control command switch. 3) Turn the ignition switch to ON. 4) Measure the voltage between harness connector terminal and chassis ground. ***Connector & terminal*** ***(ST3) No. 8 (+) — Chassis ground (–):*** ***(ST3) No. 7 (+) — Chassis ground (–):***	Is the voltage 5 V or more?	Go to step **2**.	Check for open, shorted circuit, or poor contact of harness between cruise control command switch and ECM and steering roll connector.
2	**CHECK CRUISE CONTROL COMMAND SWITCH CIRCUIT.** 1) Turn the ignition switch to OFF. 2) Remove the cruise control command switch. <Ref. to CC-5, REMOVAL, Cruise Control Command Switch.> 3) Measure the resistance between harness connector terminal and chassis ground. ***Connector terminal*** ***(ST3) No. 6 — Chassis ground:***	Is the resistance less than 10 Ω?	Go to step **3**.	Check for open between cruise control command switch and ECM and chassis ground, and check the ECM.
3	**CHECK CRUISE CONTROL COMMAND SWITCH.** Measure the resistance between switch terminals when the cruise control command switch is not depressed. ***Terminals*** ***No. 6 — No. 7:***	Is the resistance approx. 4 kΩ?	Go to step **4**.	Replace the cruise control command switch. <Ref. to CC-5, Cruise Control Command Switch.>
4	**CHECK CANCEL SWITCH.** 1) Turn the ignition switch to OFF. 2) Remove the cruise control command switch. <Ref. to CC-5, REMOVAL, Cruise Control Command Switch.> 3) Measure the resistance between switch terminals with the CANCEL switch pressed. ***Terminals*** ***No. 6 — No. 7:***	Is the resistance approx. less than 1 Ω when the CANCEL switch is pressed?	Go to step **5**.	Replace the cruise control command switch. <Ref. to CC-5, Cruise Control Command Switch.>
5	**CHECK SET/COAST SWITCH.** Measure the resistance between switch terminals with the SET/COAST switch pressed. ***Terminals*** ***No. 6 — No. 7:***	Is the resistance approx. 250 Ω when SET/COAST switch is pressed?	Go to step **6**.	Replace the cruise control command switch. <Ref. to CC-5, Cruise Control Command Switch.>
6	**CHECK RESUME/ACCEL SWITCH CIRCUIT.** Measure the resistance between switch terminals when the RESUME/ACCEL switch is pressed. ***Terminals*** ***No. 6 — No. 7:***	Is the resistance approx. 1,500 Ω when RESUME/ACCEL switch is pressed?	Replace the ECM. <Ref. to FU(H4SO)-39, Engine Control Module (ECM).> <Ref. to FU(H4DOTC)-52, Engine Control Module (ECM).> <Ref. to FU(H6DO)-38, Engine Control Module (ECM).>	Replace the cruise control command switch. <Ref. to CC-5, Cruise Control Command Switch.>

B: 12

The DTC is detected when the brake pedal is pressed or problem relating to stop light & brake switch occurs.

TROUBLE SYMPTOM:

- Cruise control cannot be set.
- Cruise control cannot be released.

WIRING DIAGRAM:

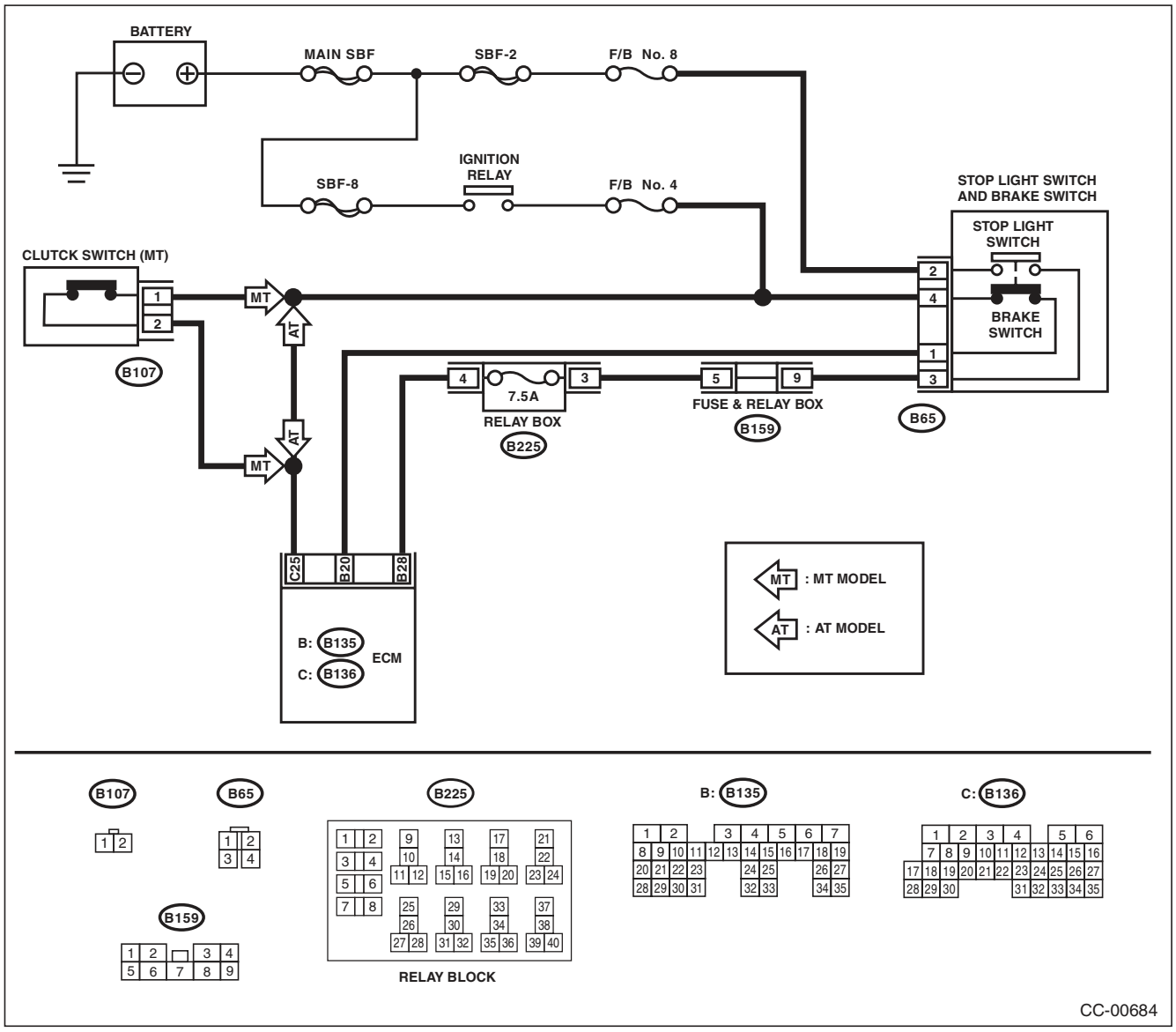

Diagnostic Procedure with Cancel Code

	Step	Check	Yes	No
1	**CHECK STOP LIGHT & BRAKE SWITCH CIRCUIT.** 1) Turn the ignition switch to OFF. 2) Disconnect the stop light & brake switch harness connector. 3) Turn the ignition switch to ON. 4) Measure the voltage between harness connector terminal and chassis ground. ***Connector & terminal*** ***(B65) No. 2 (+) — Chassis ground (–):***	Is the voltage 10 V or more?	Go to step **2**.	• Check fuse No. 8 (in fuse & relay box). • Check for open or short circuit in the harness between stop light & brake switch and fuse & relay box.
2	**CHECK STOP LIGHT & BRAKE SWITCH CIRCUIT.** Measure the voltage between harness connector terminal and chassis ground. ***Connector & terminal*** ***(B65) No. 4 (+) — Chassis ground (–):***	Is the voltage 10 V or more?	Go to step **3**.	• Check fuse No. 4 (in fuse & relay box). • Check for open or short in the harness between stop light & brake switch and fuse & relay box.
3	**CHECK STOP LIGHT & BRAKE SWITCH CIRCUIT.** 1) Turn the ignition switch to OFF. 2) Disconnect the harness connector of ECM. 3) Measure the resistance between ECM harness connector terminal and stop light & brake switch harness connector terminal. ***Connector & terminal*** ***(B135) No. 28 — (B65) No. 3:*** ***(B135) No. 20 — (B65) No. 1:***	Is the resistance less than 10 Ω?	Go to step **4**.	Repair the harness.
4	**CHECK STOP LIGHT & BRAKE SWITCH CIRCUIT.** Remove and check the stop light & brake switch. <Ref. to CC-7, Stop Light & Brake Switch.>	Is the stop light & brake switch OK?	Replace the ECM. <Ref. to FU(H4SO)-39, Engine Control Module (ECM).> <Ref. to FU(H4DOTC)-52, Engine Control Module (ECM).> <Ref. to FU(H6DO)-38, Engine Control Module (ECM).>	Replace the stop light & brake switch.

C: 13

The DTC is detected when the clutch pedal is depressed or problem relating to the clutch switch occurs.

TROUBLE SYMPTOM:

- Cruise control cannot be set.
- Cruise control cannot be released.

WIRING DIAGRAM:

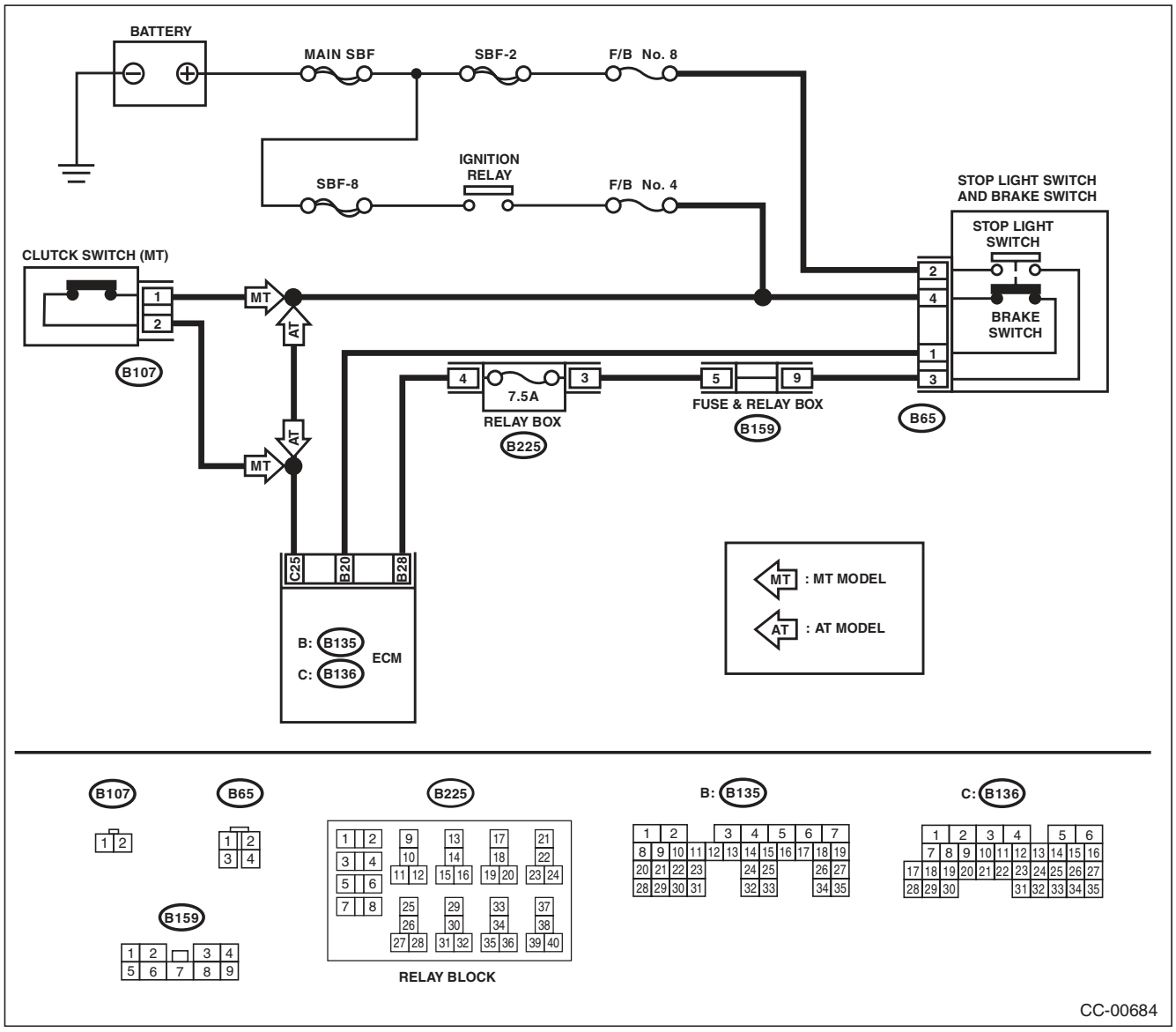

Diagnostic Procedure with Cancel Code

Step		Check	Yes	No
1	**CHECK CLUTCH SWITCH CIRCUIT.** 1) Turn the ignition switch to OFF. 2) Disconnect the clutch switch harness connector. 3) Turn the ignition switch to ON. 4) Measure the voltage between harness connector terminal and chassis ground. ***Connector & terminal*** ***(B107) No. 1 (+) — Chassis ground (–):***	Is the voltage 10 V or more?	Go to step **2**.	• Check fuse No. 4 (in fuse & relay box). • Check open or shorted circuit of harness between clutch switch and fuse & relay box.
2	**CHECK CLUTCH SWITCH CIRCUIT.** 1) Turn the ignition switch to OFF. 2) Disconnect the harness connector of ECM. 3) Measure the resistance between clutch switch harness connector terminal and ECM harness connector terminal. ***Connector & terminal*** ***(B107) No. 2 — (B136) No. 25:***	Is the resistance less than 10 Ω?	Go to step **3**.	Repair the harness.
3	**CHECK CLUTCH SWITCH.** Remove and check the clutch switch. <Ref. to CC-8, Clutch Switch.>	Is clutch switch OK?	Replace the ECM. <Ref. to FU(H4SO)-39, Engine Control Module (ECM).> <Ref. to FU(H4DOTC)-52, Engine Control Module (ECM).> <Ref. to FU(H6DO)-38, Engine Control Module (ECM).>	Replace the clutch switch.

D: 14

Detected when select lever is set in the neutral position, or when malfunction related to neutral position switch occurs.

TROUBLE SYMPTOM:

Cruise control cannot be set.

WIRING DIAGRAM:

- 2.5 L non-turbo model

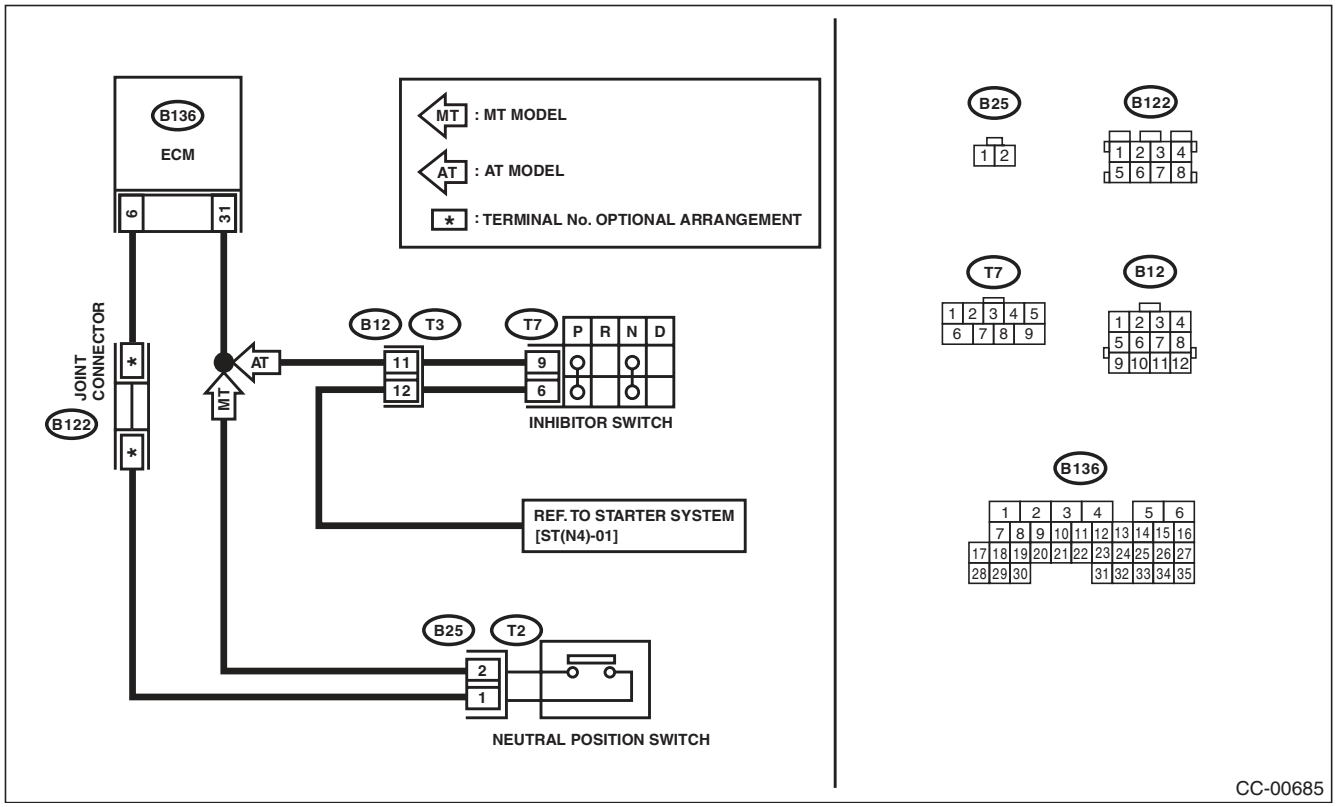

Diagnostic Procedure with Cancel Code

- 2.5L turbo model
- 3.0 L model

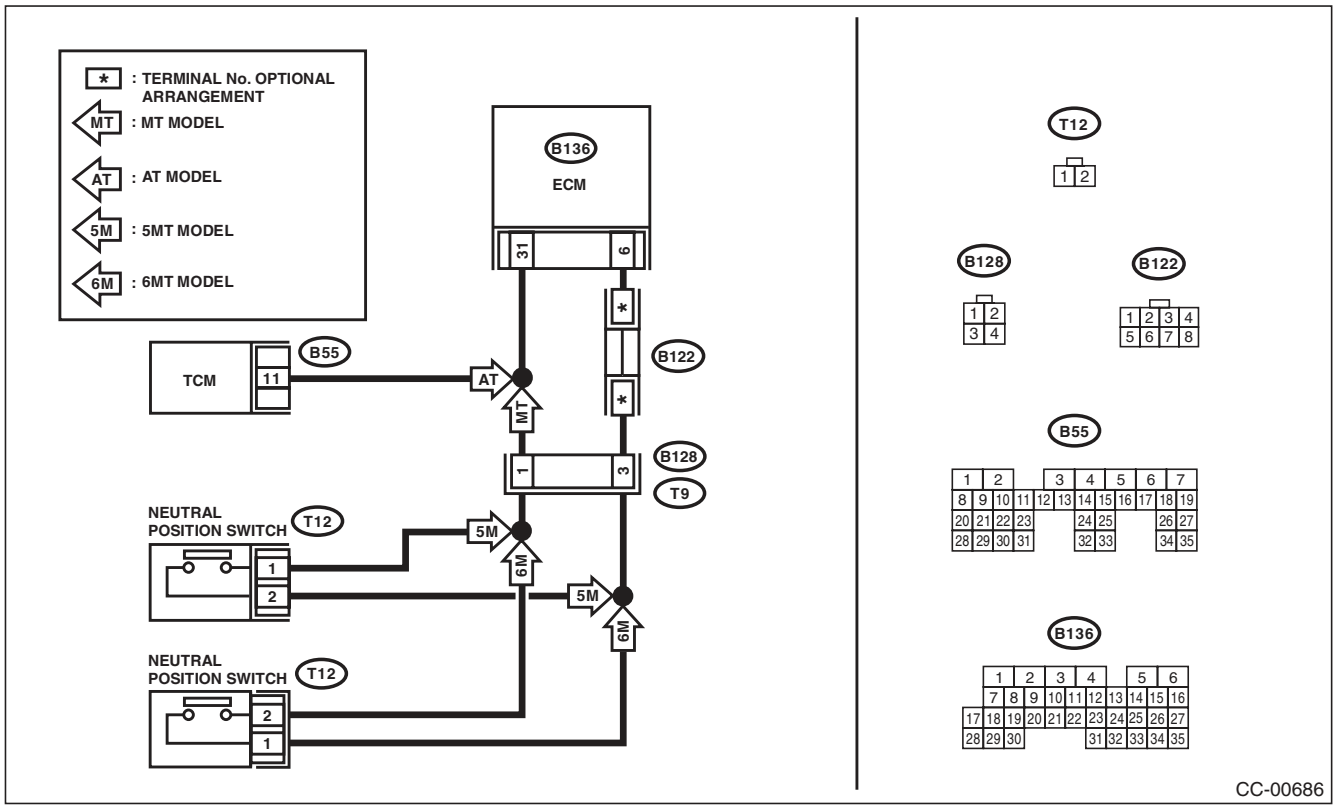

Step		Check	Yes	No
1	**CHECK VEHICLE FOR SPECIFICATION.** Check the destination and vehicle specification.	Is the vehicle 5AT model?	Go to step **2**.	Go to step **5**.
2	**CHECK NEUTRAL POSITION SWITCH.** 1) Connect the Subaru Select Monitor to data link connector. 2) Turn the ignition switch to ON and run the Subaru Select Monitor. 3) Select {Engine Control System} from the main menu. 4) Then, select the {Current Data Display & Save}. 5) Check the neutral position switch signal by shifting the select lever to “P” or “N” range.	If the select lever is in the “P” or the “N” range, is the Subaru Select Monitor Display ON? Or, if in a range other than “P” or “N”, is the Subaru Select Monitor display OFF?	Replace the ECM. <Ref. to FU(H4DOTC)-52, Engine Control Module (ECM).> <Ref. to FU(H6DO)-38, Engine Control Module (ECM).>	Go to step **3**.
3	**CHECK TCM OUTPUT VOLTAGE.** 1) Turn the ignition switch to ON. 2) Measure the voltage between TCM harness connector terminal and chassis ground. ***Connector & terminal*** ***(B55) No. 11 (+) — Chassis ground (–):***	If the select lever is in a range other than “P” or “N” ranges, is the voltage 10V or higher? Or, if in “P” or “N”, is the voltage less than 1V?	Go to step **4**.	Check the TCM. <Ref. to 5AT(diag)-2, Basic Diagnostic Procedure.>
4	**CHECK HARNESS BETWEEN TCM AND ECM.** 1) Turn the ignition switch to OFF. 2) Disconnect the harness connector from TCM and ECM. 3) Measure the resistance between TCM harness connector terminal and ECM harness connector terminal. ***Connector & terminal*** ***(B136) No. 31 — (B55) No. 11:***	Is the resistance less than 10 Ω?	Replace the ECM. <Ref. to FU(H4DOTC)-52, Engine Control Module (ECM).> <Ref. to FU(H6DO)-38, Engine Control Module (ECM).>	Repair the wiring harness.
5	**CHECK TRANSMISSION TYPE.**	Is the transmission type 4AT?	Go to step **6**.	MT model:Go to step **9**.

	Step	Check	Yes	No
6	**CHECK INHIBITOR SWITCH CIRCUIT.** 1) Turn the ignition switch to OFF. 2) Disconnect the inhibitor switch harness connector. 3) Turn the ignition switch to ON. 4) Measure the voltage between harness connector terminal and chassis ground. ***Connector & terminal*** ***(T7) No. 9 (+) — Chassis ground (–):***	Is the voltage 10 V or more?	Go to step **7**.	Check for open or short in the harness between inhibitor switch and ECM.
7	**CHECK INHIBITOR SWITCH CIRCUIT.** 1) Turn the ignition switch to OFF. 2) Disconnect the starter motor harness connector. 3) Measure the resistance between inhibitor switch harness connector terminal and starter motor. ***Connector & terminal*** ***(T7) No. 6 — Starter motor:***	Is the resistance less than 10 Ω?	Go to step **8**.	Repair the harness.
8	**CHECK INHIBITOR SWITCH.** Remove and check the inhibitor switch. <Ref. to CC-9, Inhibitor Switch.>	Is the inhibitor switch OK?	Replace the ECM. <Ref. to FU(H4SO)-39, Engine Control Module (ECM).>	Replace the inhibitor switch.
9	**CHECK NEUTRAL POSITION SWITCH CIRCUIT.** 1) Turn the ignition switch to OFF. 2) Disconnect the neutral position switch harness connector. 3) Turn the ignition switch to ON. 4) Measure the voltage between harness connector terminal and chassis ground. ***Connector & terminal*** ***5MT model*** ***(T12) No. 1 (+) — Chassis ground (–)*** ***(2.5L turbo model):*** ***(B25) No. 2 (+) — Chassis ground (–)*** ***(2.0L NA model):*** ***6MT model:*** ***(T12) No. 2 (+) — Chassis ground (–):***	Is the voltage 10 V or more?	Go to step **10**.	Check for open or short in the harness between neutral position switch and ECM.
10	**CHECK NEUTRAL POSITION SWITCH CIRCUIT.** 1) Turn the ignition switch to OFF. 2) Measure resistance between harness connector terminal of neutral position switch and chassis ground. ***Connector & terminal*** ***5MT model:*** ***(T12) No. 2 — Chassis ground (2.5L turbo model):*** ***(B25) No. 1 — Chassis ground (2.0L NA model):*** ***6MT model:*** ***(T12) No. 1 — Chassis ground:***	Is the resistance less than 10 Ω?	Go to step **11**.	Repair the harness.
11	**CHECK NEUTRAL POSITION SWITCH.** Remove and check the neutral position switch. <Ref. to CC-11, Neutral Position Switch.>	Is the neutral position switch OK?	Replace the ECM. <Ref. to FU(H4SO)-39, Engine Control Module (ECM).> <Ref. to FU(H4DOTC)-52, Engine Control Module (ECM).>	Replace the neutral position switch.

E: 15

This DTC is detected when the cancel switch is pressed or problem relating to the main switch occurs.
TROUBLE SYMPTOM:
- Cruise control cannot be set. (Cancelled immediately.)
- Cruise control cannot be released.

Refer to DTC 11 for diagnostic procedure.
<Ref. to CC(diag)-13, 11, Diagnostic Procedure with Cancel Code.>

F: 16

This DTC is detected when the ignition switch is turned OFF or problem relating to the ignition switch occurs.
TROUBLE SYMPTOM:
Cruise control cannot be set.
WIRING DIAGRAM:

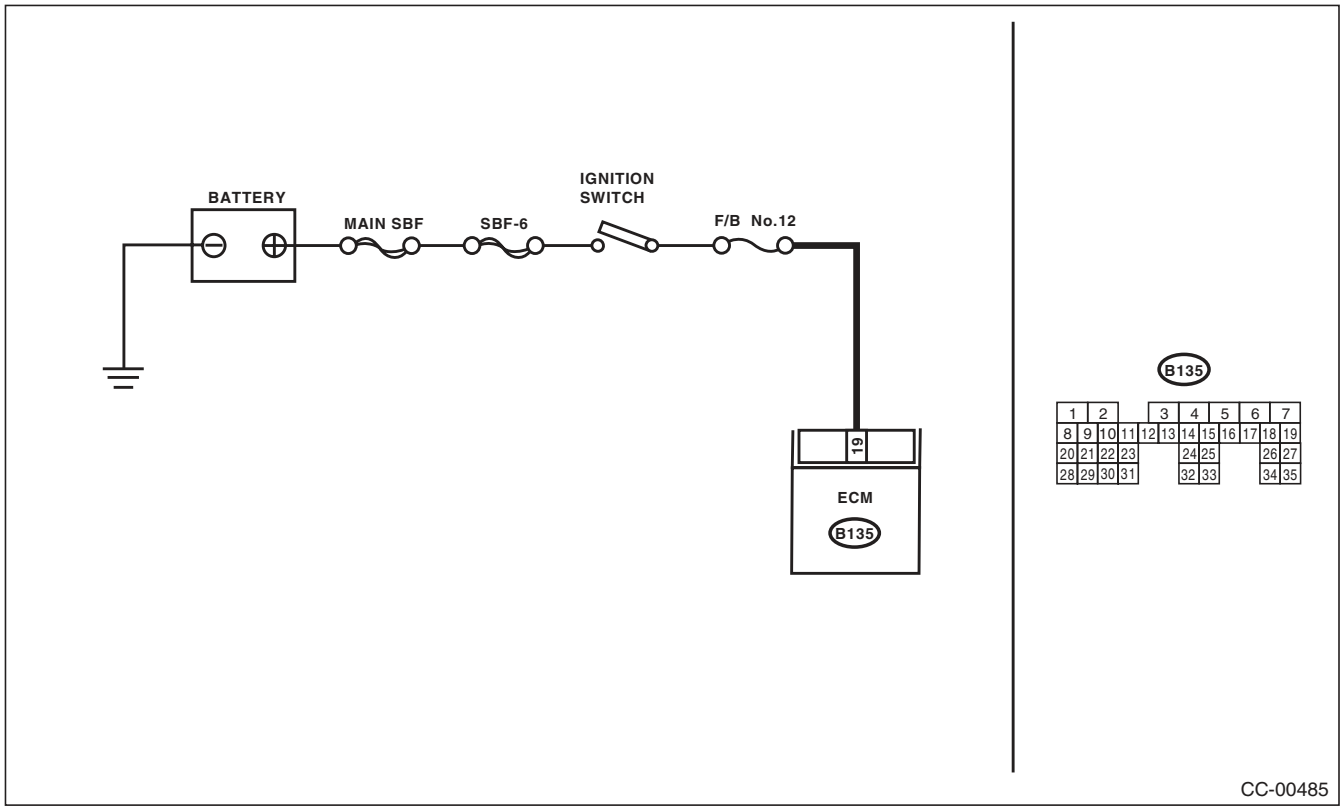

Step	Check	Yes	No
1 **CHECK IGNITION SWITCH CIRCUIT.** 1) Turn the ignition switch to OFF. 2) Disconnect the ECM harness connector. 3) Turn the ignition switch to ON. 4) Measure the voltage between harness connector terminal and chassis ground. ***Connector & terminal*** ***(B135) No. 19 (+) — Chassis ground (–):***	Is the voltage 10 V or more?	Check for poor contact of ECM connector.	• Check fuse No. 12 (in fuse & relay box). • Check the harness for open or short circuit between ignition switch and ECM.

G: 21

Cruise control command switch malfunction is detected.
TROUBLE SYMPTOM:
- Cruise control cannot be set. (Cancelled immediately.)
- Cruise control cannot be released.

Refer to DTC 11 for diagnostic procedure.
<Ref. to CC(diag)-13, 11, Diagnostic Procedure with Cancel Code.>

H: 22

Malfunction related to vehicle speed sensor is detected.
DIAGNOSIS:
Open or shorted circuit in vehicle speed sensor system.
TROUBLE SYMPTOM:
Cruise control cannot be set. (Cancelled immediately.)

Step		Check	Yes	No
1	**CHECK ABS OR VDC WARNING LIGHT.** 1) Turn the ignition switch to ON. 2) After the initial operation of combination meter is completed, check if the ABS or VDC warning light continues to illuminate.	Does the warning light continue to illuminate?	Check ABSCM or VDCCM. <Ref. to ABS(diag)-2, Basic Diagnostic Procedure.> <Ref. to VDC(diag)-2, Basic Diagnostic Procedure.>	Go to step **2**.
2	**CHECK DTC FOR LAN COMMUNICATION.** Using the Subaru Select Monitor to read the DTC of body integrated unit.	Is a DTC of low-speed CAN displayed?	Check the LAN communication circuit. <Ref. to LAN(diag)-2, Basic Diagnostic Procedure.>	Replace the ECM. <Ref. to FU(H4SO)-39, Engine Control Module (ECM).> <Ref. to FU(H4DOTC)-52, Engine Control Module (ECM).> <Ref. to FU(H6DO)-38, Engine Control Module (ECM).>

I: 24

Malfunction in cruise control-related switch is detected.
TROUBLE SYMPTOM:
- Cruise control cannot be set. (Cancelled immediately.)
- Cruise control cannot be released.

Refer to DTC 11 for diagnostic procedure.
<Ref. to CC(diag)-13, 11, Diagnostic Procedure with Cancel Code.>

J: 25

Malfunction of brake input circuit in ECM is detected.
Refer to the Engine Diagnostic Procedure for diagnostic procedure.
<Ref. to EN(H4SO)(diag)-2, PROCEDURE, Basic Diagnostic Procedure.>
<Ref. to EN(H4DOTC)(diag)-2, PROCEDURE, Basic Diagnostic Procedure.>
<Ref. to EN(H6DO)(diag)-2, PROCEDURE, Basic Diagnostic Procedure.>

K: 31

Engine speed signal malfunction is detected.
Abnormal increase of engine speed is detected.
Gear is placed in 1st or Reverse position.
After driving at the 2nd gear position or higher, perform the cruise setting again. If a cancel code is not detected, it is normal.

L: 32

This DTC is detected out of vehicle speed range.
Increase vehicle speed high enough to allow the cruise control to function, and then perform setting operation again.
If cancel code is still detected after setting cruise again, perform the diagnosis for DTC 22.
Refer to DTC 22 for diagnostic procedure.
<Ref. to CC(diag)-24, 22, Diagnostic Procedure with Cancel Code.>

M: 34

The vehicle has been driven at a speed higher than set speed for a long time (approximately 10 minutes) during cruise driving.
This cancel code is detected when driving for a long period of time at a speed higher than appropriate for cruise control setting by operating the accelerator pedal.
Perform the cruise control setting operation again. If the cancel code is not detected, it is normal.

N: 35

Detected when it is impossible to perform the vehicle speed feedback.
Set vehicle speed cannot be kept for some reasons (steep uphill, unreleased parking brake, etc.) during cruise driving.
Cancel code is detected when driving conditions are not suitable for cruise control.
Perform cruise set operation again after clearing the possible cause.

O: 41

VDC/TCS has operated.
Vehicle dynamics control (VDC) or TCS is operated during cruise driving or cruise setting.
<Ref. to VDC(diag)-2, PROCEDURE, Basic Diagnostic Procedure.>

P: 43

Malfunction of ABS/VDC is detected.
VDC malfunction is detected during cruise driving or cruise setting.
<Ref. to VDC(diag)-2, PROCEDURE, Basic Diagnostic Procedure.>

Q: 44

Body integrated unit malfunction is detected.
Body integrated unit system malfunction is detected during cruise driving or cruise setting.
<Ref. to LAN(diag)-2, PROCEDURE, Basic Diagnostic Procedure.>

R: 45

Malfunction of the combination meter is detected.
Combination meter malfunction is detected during cruise driving or cruise setting.
<Ref. to LAN(diag)-2, PROCEDURE, Basic Diagnostic Procedure.>

S: 61

Malfunction in the stop light & brake switch is detected.
TROUBLE SYMPTOM:
- Cruise control cannot be set.
- Cruise control cannot be released.

Refer to DTC 12 for diagnostic procedure.
<Ref. to CC(diag)-15, 12, Diagnostic Procedure with Cancel Code.>

T: 62

Neutral position switch malfunction is detected.
TROUBLE SYMPTOM:
Cruise control cannot be set.
Refer to DTC 14 for diagnostic procedure.
<Ref. to CC(diag)-19, 14, Diagnostic Procedure with Cancel Code.>

U: 63

Malfunction of vehicle speed signal variation is detected.
TROUBLE SYMPTOM:
Cruise control cannot be set. (Cancelled immediately.)
Refer to DTC 22 for diagnostic procedure.
<Ref. to CC(diag)-24, 22, Diagnostic Procedure with Cancel Code.>

V: 64

Malfunction related to engine is detected.
Refer to the Engine Diagnostic Procedure for diagnostic procedure.
<Ref. to EN(H4SO)(diag)-2, PROCEDURE, Basic Diagnostic Procedure.>
<Ref. to EN(H4DOTC)(diag)-2, PROCEDURE, Basic Diagnostic Procedure.>
<Ref. to EN(H6DO)(diag)-2, PROCEDURE, Basic Diagnostic Procedure.>

W: 65

Cruise control command switch malfunction is detected.
While the command switch is pressed ON for a long time (approximately two minutes), stuck ON condition is detected.
TROUBLE SYMPTOM:
- Cruise control cannot be set. (Cancelled immediately.)
- Cruise control cannot be released.

Refer to DTC 11 for diagnostic procedure.
<Ref. to CC(diag)-13, 11, Diagnostic Procedure with Cancel Code.>

X: 66

Cruise control processing malfunction is detected.
Refer to the Engine Diagnostic Procedure for diagnostic procedure.
<Ref. to EN(H4SO)(diag)-2, PROCEDURE, Basic Diagnostic Procedure.>
<Ref. to EN(H4DOTC)(diag)-2, PROCEDURE, Basic Diagnostic Procedure.>
<Ref. to EN(H6DO)(diag)-2, PROCEDURE, Basic Diagnostic Procedure.>

1. Basic Diagnostic Procedure

A: PROCEDURE

	Step	Check	Yes	No
1	**CHECK SECURITY INDICATOR LIGHT.** 1) Turn the ignition switch to “OFF” or “ACC”. 2) Wait at least 60 seconds.	Does the security indicator light blink?	Go to step **2**.	Check the security indicator light circuit. <Ref. to IM(diag)-10, CHECK SECURITY INDICATOR LIGHT CIRCUIT, INSPECTION, Diagnostics Chart for Security Indicator Light.>
2	**CHECK KEY SWITCH.** Remove the key from ignition switch.	Does the security indicator light begin to blink within 1 second after the key is removed?	Go to step **3**.	Check the key switch circuit. <Ref. to IM(diag)-12, CHECK KEY SWITCH CIRCUIT, INSPECTION, Diagnostics Chart for Security Indicator Light.>
3	**CHECK SECURITY INDICATOR LIGHT.** Turn the ignition switch to ON.	Does the security indicator light go off?	Go to step **5**.	Go to step **4**.
4	**CHECK ENGINE START.** Turn the ignition switch to START.	Does the starter operate?	Check the LAN communication system. <Ref. to LAN(diag)-2, Basic Diagnostic Procedure.>	Check the DTC display (body integrated unit). Go to step **7**.
5	**CHECK ENGINE START.** Turn the ignition switch to START.	Does the starter operate?	Go to step **6**.	Check the LAN communication system. <Ref. to LAN(diag)-2, Basic Diagnostic Procedure.>
6	**CHECK ENGINE START.** Turn the ignition switch to START.	Does the engine start?	Immobilizer system is normal.	Check the DTC display (ECM). Go to step **7**.
7	**CHECK FOR ANY OTHER DTC ON DISPLAY.** 1) Turn the ignition switch to OFF. 2) Connect the Subaru Select Monitor to data link connector. <Ref. to IM(diag)-7, Subaru Select Monitor.> 3) Turn the ignition switch and Subaru Select Monitor switch to ON. 4) Read DTC’s on the display.	Is the DTC displayed on screen?	Go to step **8**.	Repair the related parts.
8	**PERFORM DIAGNOSIS.** 1) Inspect using the “Diagnostic Procedure with Diagnostic Trouble Code (DTC)”. <Ref. to IM(diag)-16, Diagnostic Procedure with Diagnostic Trouble Code (DTC).> 2) Repair the trouble cause. 3) Perform the Clear Memory Mode. 4) Read DTC’s again.	Is the DTC displayed on screen?	Inspect using the “Diagnostic Procedure with Diagnostic Trouble Code (DTC)”. <Ref. to IM(diag)-16, Diagnostic Procedure with Diagnostic Trouble Code (DTC).>	Finish the diagnosis.

2. General Description

A: CAUTION

CAUTION:

- **Do not use electrical test devices on any airbag system wiring harnesses and connector circuits.**
- **Be careful not to damage the airbag system wiring harness.**
- **While diagnostic items are being checked, do not operate radios, portable telephones, etc. which emit electromagnetic waves near or inside the vehicle.**

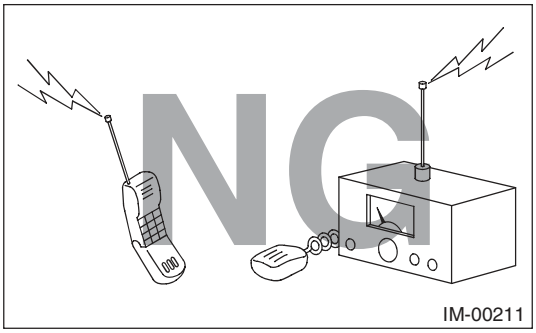

- **When turning the ignition switch to ON or OFF while diagnostic items are being checked, do not allow keys with different ID codes close to the ignition switch. If the ignition key is on a key holder, remove it from the key holder before performing diagnoses.**

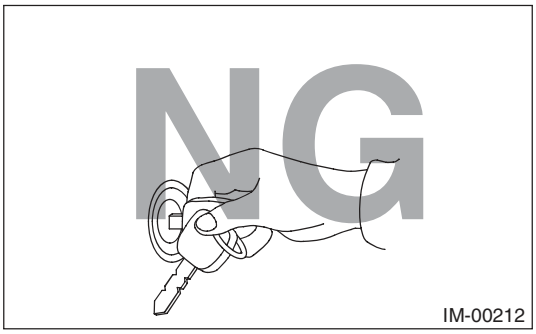

- **When repeatedly turning the ignition switch to ON or OFF while diagnostic items are being checked, it should be switched in cycles of "ON" for at least 5 seconds → "OFF" for at least 8 seconds.**

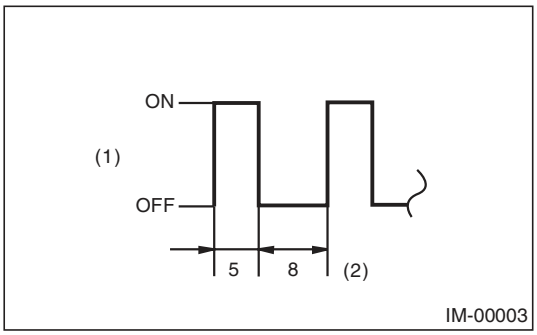

(1) Ignition switch position
(2) Sec.

- **If the engine fails to start with a registered ignition key, detach the ignition key from ignition switch and wait for approx. 1 second until security indicator light begins to flash. And then start the engine again.**
- **Before performing the diagnostics, obtain all keys for the vehicle from the owner.**
- **Do not install or register a body integrated unit already registered to another vehicle to diagnose failures or inspect functions.**

B: PREPARATION TOOL

1. SPECIAL TOOL

ILLUSTRATION	TOOL NUMBER	DESCRIPTION	REMARKS
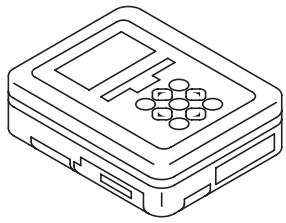 ST1B022XU0	1B022XU0	SUBARU SELECT MONITOR III KIT	Used for troubleshooting the electrical system.

2. GENERAL TOOL

TOOL NAME	REMARKS
Circuit tester	Used for measuring resistance, voltage and current.

3. Electrical Component Location

A: LOCATION

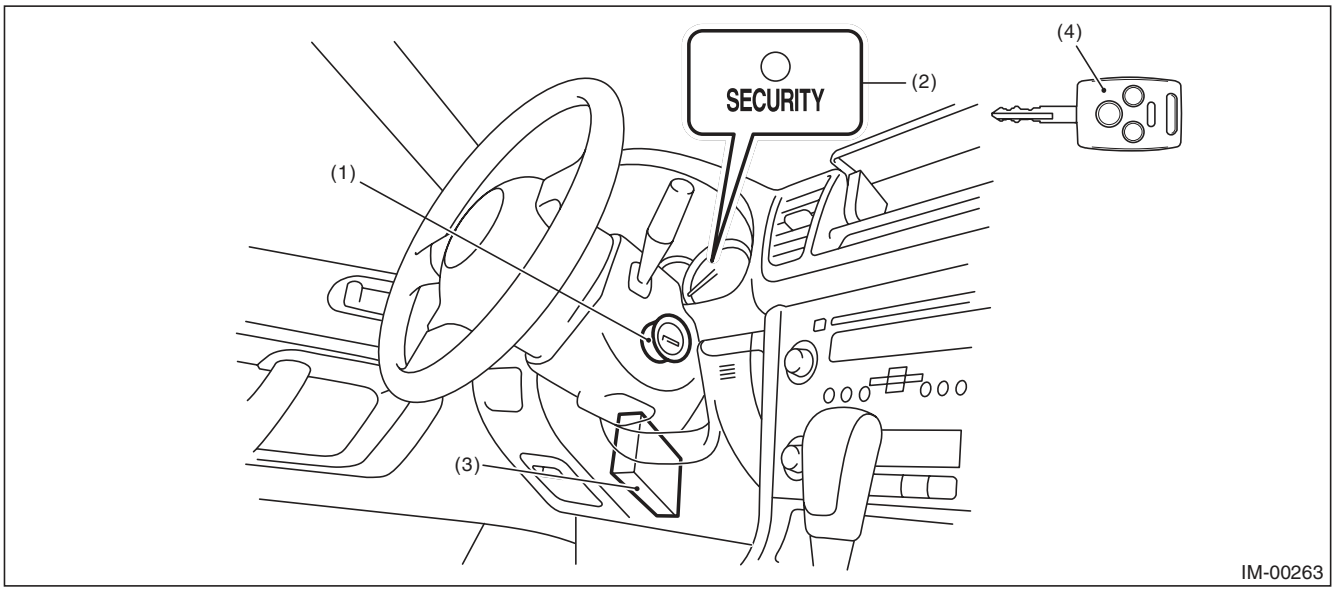

(1) Antenna
(2) Security indicator light (LED bulb)
(3) Body integrated unit
(4) Transponder

4. Immobilizer Control Module I/O Signal

A: WIRING DIAGRAM

1. IMMOBILIZER

<Ref. to WI-189, WIRING DIAGRAM, Immobilizer System.>

5. Subaru Select Monitor

A: OPERATION

1. HOW TO USE THE SUBARU SELECT MONITOR

1) Prepare the Subaru Select Monitor kit.
2) Connect the diagnosis cable to the Subaru Select Monitor.
3) Connect the Subaru Select Monitor to the data link connector.
   (1) Data link connector is located in the lower portion of the instrument panel (on the driver's side).

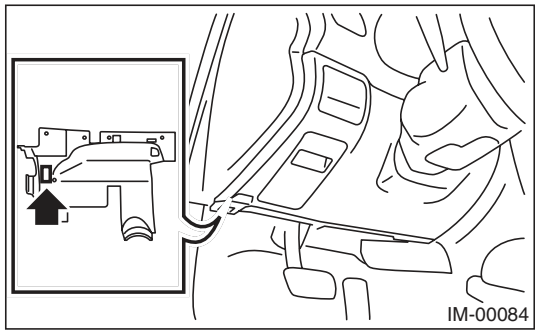

   (2) Connect the diagnosis cable to the data link connector.

CAUTION:
Do not connect scan tools other than the Subaru Select Monitor.

4) Turn the ignition switch to ON (engine OFF) and run the Subaru Select Monitor.
5) Using the Subaru Select Monitor, call up DTCs and various data, then record them.

2. READ DIAGNOSTIC TROUBLE CODE (DTC) FOR ENGINE AND BODY INTEGRATED UNIT

Refer to "Read Diagnostic Trouble Code" for information about how to indicate DTC. <Ref. to IM(diag)-8, Read Diagnostic Trouble Code (DTC).>

3. COMMUNICATION LINE CHECK

NOTE:
The communication line between ECM and body integrated unit can be checked in "System Operation Check Mode". This is referred to as "Communication line check".

1) Connect the Subaru Select Monitor.
2) On the «Main Menu» display, select the {Each System Check}.
3) On the «System Selection Menu» display, select the {Engine Control System}.
4) Select the [OK] after the information of engine type is displayed.
5) On the «Engine Diagnosis» display, select the {System Operation Check Mode}.
6) On the «System Operation Check Mode» display, select the {Immobilizer System}.
7) Start the communication line check.
8) Is «OK» displayed on screen?
If displayed, go to step 9).
If not, go to step 10).
9) After diagnostic results, it is determined that the circuit is not shorted. Finish the communication line check.
10) If a problem is detected, repair the trouble cause. <Ref. to IM(diag)-20, DTC P1572 IMM CIRCUIT FAILURE (EXCEPT ANTENNA CIRCUIT), Diagnostic Procedure with Diagnostic Trouble Code (DTC).>

6. Read Diagnostic Trouble Code (DTC)

A: OPERATION

1. ECM

1) On the «Main Menu» display, select the {Each System Check}.
2) On the «System Selection Menu» display, select the {Engine Control System}.
3) Select the [OK] after the information of engine type is displayed.
4) On the «Engine Diagnosis» display, select the {Diagnostic Code(s) Display}.
5) On the «Diagnostic Code(s) Display» display, select the {Current DTC} or {Past DTC}.

NOTE:
- For detailed operation procedures, refer to the “PC application help for Subaru Select Monitor”.
- For detailed concerning DTC, refer to the List of Diagnostic Trouble Codes (DTC). <Ref. to IM(diag)-14, LIST, List of Diagnostic Trouble Code (DTC).>

2. BODY INTEGRATED UNIT

1) On the «Main Menu» display, select the {Each System Check}.
2) On the «System Selection Menu» display, select the {Integ. Unit}.
3) After {Integ. Unit} is displayed, select [OK].
4) On the «Integ. unit mode failure diag» display, select the {Diagnostic Code(s) Display}.

NOTE:
- For detailed operation procedures, refer to the “PC application help for Subaru Select Monitor”.
- For detailed concerning DTC, refer to the List of Diagnostic Trouble Codes (DTC). <Ref. to IM(diag)-14, LIST, List of Diagnostic Trouble Code (DTC).>

7. Clear Memory Mode

A: OPERATION

1. ECM

1) On the «Main Menu» display, select the {Each System Check}.
2) On the «System Selection Menu» display, select the {Engine Control System}.
3) Select the [OK] after the information of engine type is displayed.
4) On the «Engine Diagnosis» display, select the {Clearing Memory}.
5) When “Done” is displayed on the display, end the Subaru Select Monitor and turn the ignition switch to OFF.

NOTE:
- After the memory is cleared, initial diagnosis of the electronic throttle control is performed. Wait for 10 seconds or more after turning the ignition switch to ON, and then start the engine.
- For detailed operation procedures, refer to the “PC application help for Subaru Select Monitor”.

2. BODY INTEGRATED UNIT

1) On the «Main Menu» display, select the {Each System Check}.
2) On the «System Selection Menu» display, select the {Integ. Unit}.
3) After {Integ. Unit} is displayed, select [OK].
4) On the «Integ. unit mode failure diag» display, select the {Clearing Memory}.
5) When “Done” is displayed on the display, end the Subaru Select Monitor and turn the ignition switch to OFF.

NOTE:
For detailed operation procedures, refer to the “PC application help for Subaru Select Monitor”.

8. Diagnostics Chart for Security Indicator Light

A: INSPECTION

1. CHECK SECURITY INDICATOR LIGHT CIRCUIT

WIRING DIAGRAM:

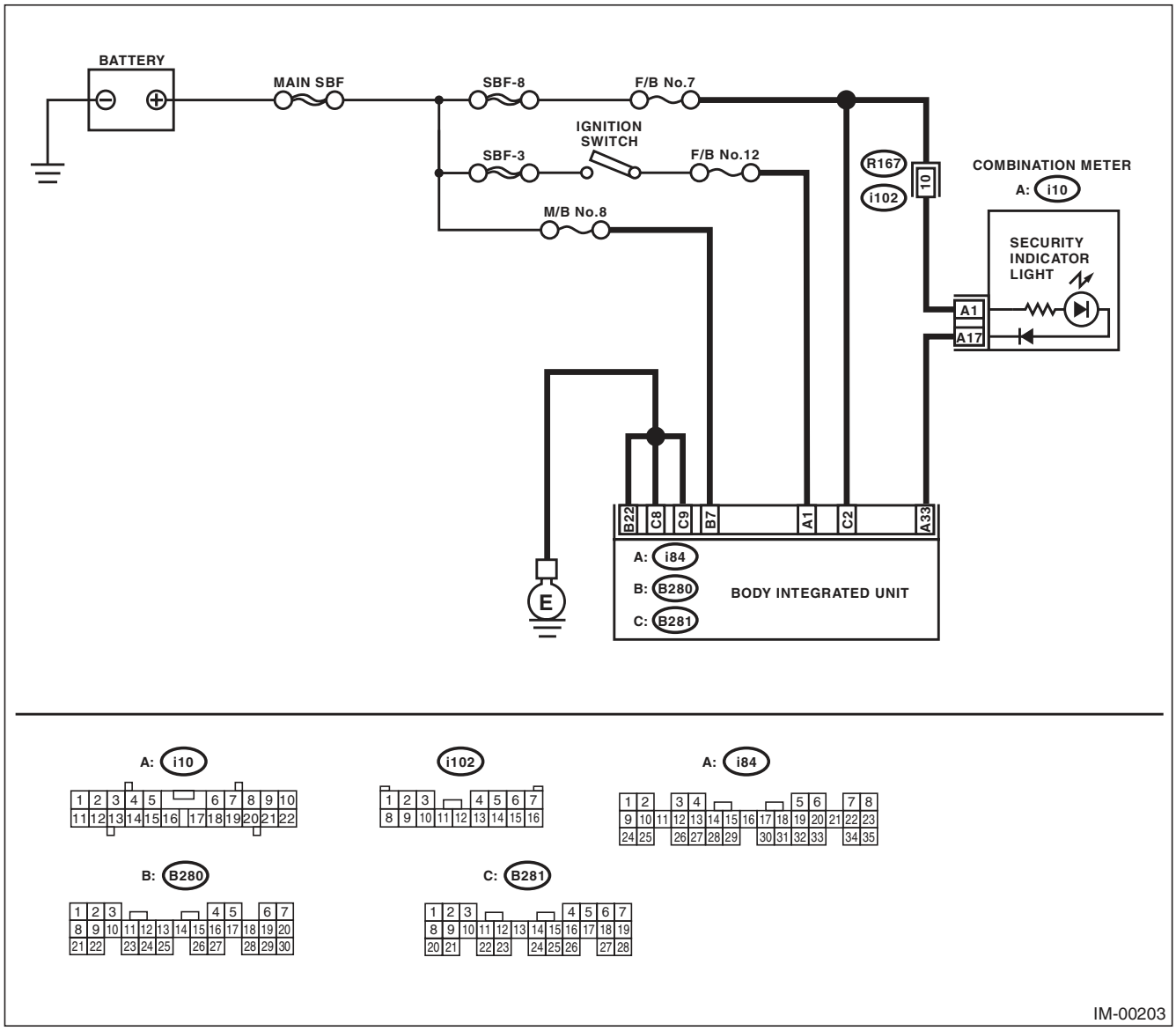

Diagnostics Chart for Security Indicator Light

	Step	Check	Yes	No
1	**CHECK SECURITY INDICATOR LIGHT.** 1) Turn the ignition switch to OFF. 2) Disconnect the harness connector from body integrated unit. 3) Connect a resistor (100 Ω) between the body integrated unit harness connector terminal (i84) No. 33 and chassis ground.	Does the security indicator light illuminate?	Go to step **2**.	Go to step **5**.
2	**CHECK BODY INTEGRATED UNIT GROUND CIRCUIT.** Measure the resistance between body integrated unit harness connector terminal and chassis ground. ***Connector & terminal*** ***(B280) No. 22 — Chassis ground:*** ***(B281) No. 8 — Chassis ground:*** ***(B281) No. 9 — Chassis ground:***	Is the resistance less than 10 Ω?	Go to step **3**.	Repair the open circuit of body integrated unit ground circuit.
3	**CHECK BODY INTEGRATED UNIT IGNITION CIRCUIT.** 1) Turn the ignition switch to ON. (engine OFF) 2) Measure the voltage between body integrated unit harness connector terminal and chassis ground. ***Connector & terminal*** ***(i84) No. 1 (+) — Chassis ground (–):***	Is the voltage 10 V or more?	Go to step **4**.	Check the harness for open or short circuit between the body integrated unit and ignition switch.
4	**CHECK BODY INTEGRATED UNIT POWER SUPPLY CIRCUIT.** 1) Turn the ignition switch to OFF. 2) Measure the voltage between body integrated unit harness connector terminal and chassis ground. ***Connector & terminal*** ***(B280) No. 7 (+) — Chassis ground (–):*** ***(B281) No. 2 (+) — Chassis ground (–):***	Is the voltage 10 V or more?	Replace the body integrated unit. <Ref. to SL-56, Body Integrated Unit.> Replace all ignition keys (including the transponder). Execute the registration procedure next. Refer to the “PC application help for Subaru Select Monitor”.	Check the harness for open or short circuit between the body integrated unit and fuse.
5	**CHECK COMBINATION METER CIRCUIT.** 1) Remove the combination meter. <Ref. to IDI-22, Combination Meter.> 2) Measure the voltage between combination meter harness connector terminal and chassis ground. ***Connector & terminal*** ***(i10) No. 1 (+) — Chassis ground (–):***	Is the voltage 10 V or more?	Go to step **6**.	Check the harness for open or short between combination meter and fuse.
6	**CHECK COMBINATION METER CIRCUIT.** Measure the resistance between the body integrated unit harness connector terminal and combination meter harness connector terminals. ***Connector & terminal*** ***(i84) No. 33 — (i10) No. 17:***	Is the resistance less than 10 Ω?	LED bulb is defective. Replace the combination meter case assembly. <Ref. to IDI-23, DISASSEMBLY, Combination Meter.>	Repair the harness or connector.

2. CHECK KEY SWITCH CIRCUIT

WIRING DIAGRAM:

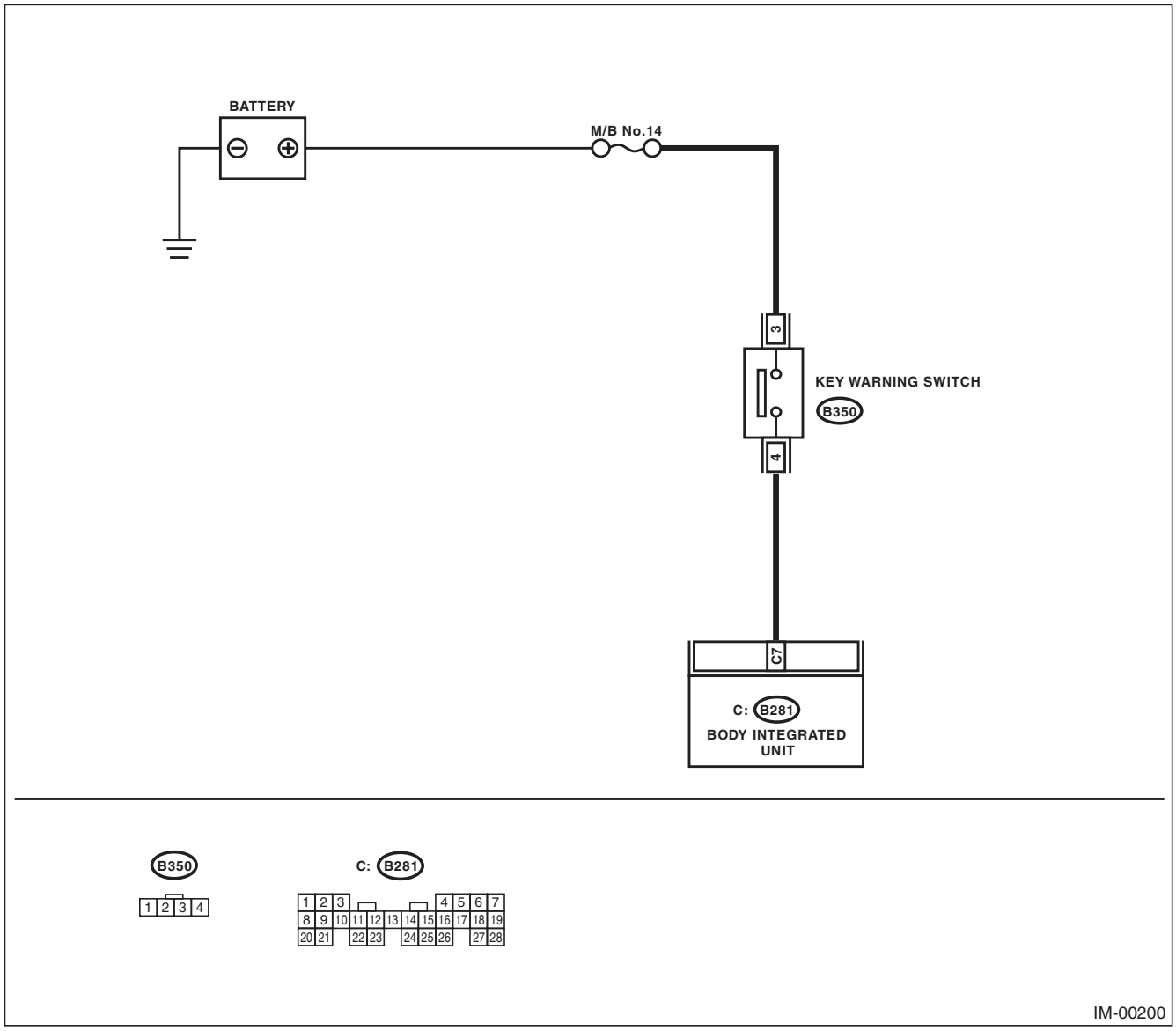

Diagnostics Chart for Security Indicator Light

	Step	Check	Yes	No
1	**CHECK POWER SUPPLY CIRCUIT.** 1) Disconnect the key warning switch harness connector. 2) Turn the ignition switch to “ACC” or “LOCK” (with key inserted). 3) Measure the voltage between key warning switch harness connector terminal and chassis ground. ***Connector & terminal*** ***(B350) No. 3 (+) — Chassis ground (–):***	Is the voltage 10 V or more?	Go to step **2**.	Check the harness for an open or short between the key warning switch and fuse.
2	**CHECK KEY WARNING SWITCH.** 1) Insert the ignition key in the ignition switch. (OFF or ACC) 2) Measure the resistance between key warning switch connector terminals. ***Connector & terminal*** ***No. 3 — No. 4:***	Is the resistance less than 1 Ω?	Go to step **3**.	Replace the key warning switch.
3	**CHECK KEY WARNING SWITCH.** 1) Remove the ignition key from ignition switch. 2) Measure the resistance between key warning switch connector terminals. ***Connector & terminal*** ***No. 3 — No. 4:***	Is the resistance 1 MΩ or more?	Go to step **4**.	Replace the key warning switch.
4	**CHECK HARNESS BETWEEN KEY WARNING SWITCH AND BODY INTEGRATED UNIT.** 1) Disconnect the key warning switch harness connector. 2) Disconnect the harness connector from body integrated unit. 3) Measure the resistance between key warning switch harness connector terminal and body integrated unit harness connector terminal. ***Connector & terminal*** ***(B350) No. 4 — (B281) No. 7:***	Is the resistance less than 10 Ω?	Replace the body integrated unit <Ref. to SL-56, Body Integrated Unit.> Replace all ignition keys (including the transponder). Execute the registration procedure next. Refer to the “PC application help for Subaru Select Monitor”.	Repair the harness between key warning switch and body integrated unit.

9. List of Diagnostic Trouble Code (DTC)

A: LIST

1. ECM

DTC	Item	Contents of diagnosis	Index No.
P0513	Incorrect Immobilizer Key	Incorrect immobilizer key (Use of unregistered key in body integrated unit)	<Ref. to IM(diag)-16, DTC P0513 INCORRECT IMMOBILIZER KEY, Diagnostic Procedure with Diagnostic Trouble Code (DTC).>
P1570	Antenna	Faulty antenna	<Ref. to IM(diag)-17, DTC P1570 ANTENNA, Diagnostic Procedure with Diagnostic Trouble Code (DTC).>
P1571	Reference Code Incompatibility	Reference code incompatibility between body integrated unit and ECM	<Ref. to IM(diag)-19, DTC P1571 REFERENCE CODE INCOMPATIBILITY, Diagnostic Procedure with Diagnostic Trouble Code (DTC).>
P1572	IMM Circuit Failure (Except Antenna Circuit)	Communication failure between body integrated unit and ECM	<Ref. to IM(diag)-20, DTC P1572 IMM CIRCUIT FAILURE (EXCEPT ANTENNA CIRCUIT), Diagnostic Procedure with Diagnostic Trouble Code (DTC).>
P1574	Key Communication Failure	Communication failure between key and body integrated unit	<Ref. to IM(diag)-23, DTC P1574 KEY COMMUNICATION FAILURE, Diagnostic Procedure with Diagnostic Trouble Code (DTC).>
P1576	EGI Control Module EEPROM	ECM malfunctioning	<Ref. to IM(diag)-23, DTC P1576 EGI CONTROL MODULE EEPROM, Diagnostic Procedure with Diagnostic Trouble Code (DTC).>
P1577	IMM Control Module EEPROM	Body integrated unit malfunctioning	<Ref. to IM(diag)-24, DTC P1577 IMM CONTROL MODULE EEPROM, Diagnostic Procedure with Diagnostic Trouble Code (DTC).>
P1578	Meter Failure	• Reference code incompatibility between combination meter and body integrated unit • Communication failure between body integrated unit and ECM	<Ref. to IM(diag)-24, DTC P1578 METER FAILURE, Diagnostic Procedure with Diagnostic Trouble Code (DTC).>

NOTE:
Perform diagnosis of engine DTC when a DTC other than an immobilizer DTC is detected. <Ref. to EN(H4DOTC)(diag)-81, List of Diagnostic Trouble Code (DTC).> <Ref. to EN(H6DO)(diag)-81, List of Diagnostic Trouble Code (DTC).>

2. BODY INTEGRATED UNIT

DTC	Item	Contents of diagnosis	Index No.	Relation between ECM and DTC
B1401	M collation NG	Reference code incompatibility between combination meter and body integrated unit	<Ref. to IM(diag)-24, DTC P1578 METER FAILURE, Diagnostic Procedure with Diagnostic Trouble Code (DTC).>	P1578
B1402	Immobirizer Key collation NG	• Incorrect immobilizer key (Use of unregistered key in body integrated unit) • Faulty antenna	<Ref. to IM(diag)-16, DTC P0513 INCORRECT IMMOBILIZER KEY, Diagnostic Procedure with Diagnostic Trouble Code (DTC).> <Ref. to IM(diag)-17, DTC P1570 ANTENNA, Diagnostic Procedure with Diagnostic Trouble Code (DTC).> or <Ref. to IM(diag)-23, DTC P1574 KEY COMMUNICATION FAILURE, Diagnostic Procedure with Diagnostic Trouble Code (DTC).>	• P0513 • P1570 • P1574
B1403	E/G request NG	Communication failure between body integrated unit and ECM	<Ref. to IM(diag)-20, DTC P1572 IMM CIRCUIT FAILURE (EXCEPT ANTENNA CIRCUIT), Diagnostic Procedure with Diagnostic Trouble Code (DTC).>	P1572

NOTE:
The starter relay control is performed in immobilizer system. When the body integrated unit detect the inconformity of reference code, immediately output the starter relay cut signal to ECM, and then ECM stop the starter relay operation. In this case, engine does not start, and DTC is not recorded in ECM. Check that the engine does not start on the DTC of body integrated unit.

10. Diagnostic Procedure with Diagnostic Trouble Code (DTC)

A: DTC P0513 INCORRECT IMMOBILIZER KEY

DTC DETECTING CONDITION:

Incorrect immobilizer key (Use of unregistered key in body integrated unit)

Step		Check	Yes	No
1	**PERFORM REGISTRATION ON IGNITION KEY.** Perform registration on all keys of the vehicle. Refer to the “PC application help for Subaru Select Monitor”.	Is registration for all keys complete?	END	Replace ignition keys (including transponder) which cannot be registered. Go to step **2**.
2	**PERFORM REGISTRATION ON IGNITION KEY.** Perform registration on all keys of the vehicle. Refer to the “PC application help for Subaru Select Monitor”.	Is registration for all keys complete?	END	Replace the body integrated unit <Ref. to SL-56, Body Integrated Unit.> Replace all ignition keys (including the transponder). Execute the registration procedure next. Refer to the “PC application help for Subaru Select Monitor”.

B: DTC P1570 ANTENNA

DTC DETECTING CONDITION:

Faulty antenna

WIRING DIAGRAM:

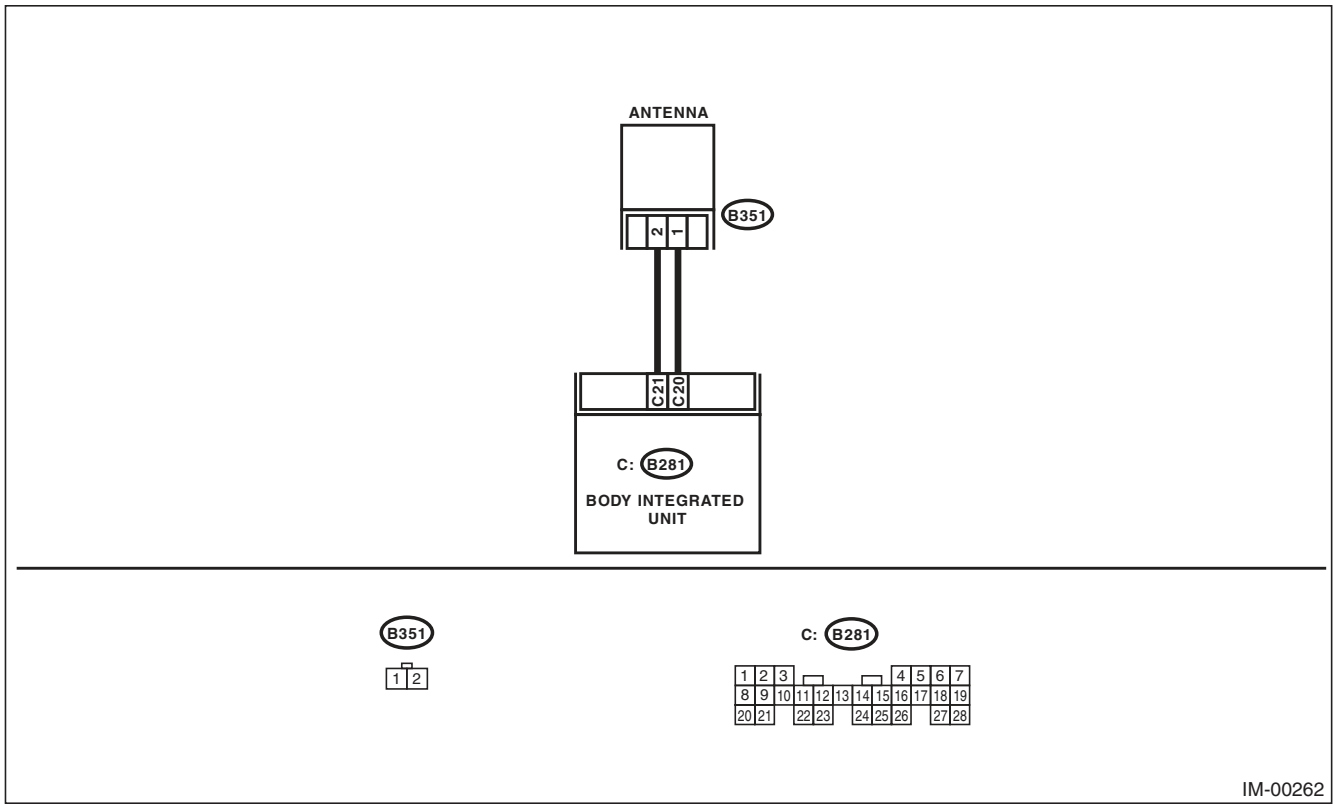

	Step	Check	Yes	No
1	**CHECK THE ANTENNA CIRCUIT.** 1) Turn the ignition switch to OFF. 2) Disconnect the harness connector from the antenna. <Ref. to SL-60, Immobilizer Antenna.> 3) Measure the resistance of antenna circuit. ***Connector & terminal*** ***(B351) No. 1 — No. 2:***	Is the resistance less than 10 Ω?	Go to step **2**.	Replace the antenna. <Ref. to SL-60, Immobilizer Antenna.>
2	**CHECK ANTENNA CIRCUIT.** 1) Disconnect the harness connector from body integrated unit. 2) Measure the resistance between harness connector and chassis ground. ***Connector & terminal*** ***(B281) No. 21 — Chassis ground:***	Is the resistance less than 10 Ω?	Repair the harness.	Go to step **3**.
3	**CHECK ANTENNA CIRCUIT.** Measure the resistance between harness connector and chassis ground. ***Connector & terminal*** ***(B281) No. 20 — Chassis ground:***	Is the resistance less than 10 Ω?	Repair the harness.	Go to step **4**.
4	**CHECK ANTENNA CIRCUIT.** 1) Turn the ignition switch to ON. (engine OFF) 2) Measure the voltage between harness connector and chassis ground. ***Connector & terminal*** ***(B281) No. 21 (+) — Chassis ground (–):***	Is the voltage 0 V?	Go to step **5**.	Repair the harness.
5	**CHECK ANTENNA CIRCUIT.** Measure the voltage between harness connector and chassis ground. ***Connector & terminal*** ***(B281) No. 20 (+) — Chassis ground (–):***	Is the voltage 0 V?	Go to step **6**.	Because the battery voltage or ignition switch "ON" circuit is shorted, repair the harness between the body integrated unit and antenna.
6	**CHECK BODY INTEGRATED UNIT FUNCTION.** 1) Turn the ignition switch to OFF. 2) Connect the harness connector to body integrated unit. 3) Insert the key into the ignition switch, then measure changes in voltage between the antenna harness connectors. ***Connector & terminal*** ***(B281) No. 20 (+) — No. 21 (–):***	Is the voltage –30 — 30 V? (Approx. 0.1 second after inserting the key) Is the voltage 0 V? (Approx. 1 second after inserting the key)	Go to step **7**.	Replace the body integrated unit <Ref. to SL-56, Body Integrated Unit.> Replace all ignition keys (including the transponder). Execute the registration procedure next. Refer to the "PC application help for Subaru Select Monitor".
7	**CHECK IGNITION KEY (TRANSPONDER).** 1) Remove the key from ignition switch. 2) Start the engine using other key which is already registered.	Does the engine start?	Replace the ignition key (including the transponder). Execute the registration procedure next. Refer to the "PC application help for Subaru Select Monitor".	Replace the body integrated unit <Ref. to SL-56, Body Integrated Unit.> Replace all ignition keys (including the transponder). Execute the registration procedure next. Refer to the "PC application help for Subaru Select Monitor".

C: DTC P1571 REFERENCE CODE INCOMPATIBILITY

DTC DETECTING CONDITION:

Reference code incompatibility between body integrated unit and ECM

Step		Check	Yes	No
1	**PERFORM REGISTRATION ON IGNITION KEY.** Perform registration on all keys of the vehicle. Refer to the “PC application help for Subaru Select Monitor”.	Is registration for all keys complete?	END	Go to step **2**.
2	**CHECK FOR ANY OTHER DTC ON DISPLAY.**	Is any other immobilizer DTC displayed?	Check the appropriate DTC using the “List of Diagnostic Trouble Code (DTC)”. <Ref. to IM(diag)-14, List of Diagnostic Trouble Code (DTC).> Execute the registration procedure next. Refer to the “PC application help for Subaru Select Monitor”.	Replace the ECM. <Ref. to FU(H4DOTC)-52, Engine Control Module (ECM).> <Ref. to FU(H6DO)-38, Engine Control Module (ECM).> Body integrated unit <Ref. to SL-56, Body Integrated Unit.>, and replace all the ignition keys (including transponder). Execute the registration procedure next. Refer to the “PC application help for Subaru Select Monitor”.

D: DTC P1572 IMM CIRCUIT FAILURE (EXCEPT ANTENNA CIRCUIT)

DTC DETECTING CONDITION:

Communication failure between body integrated unit and ECM

WIRING DIAGRAM:

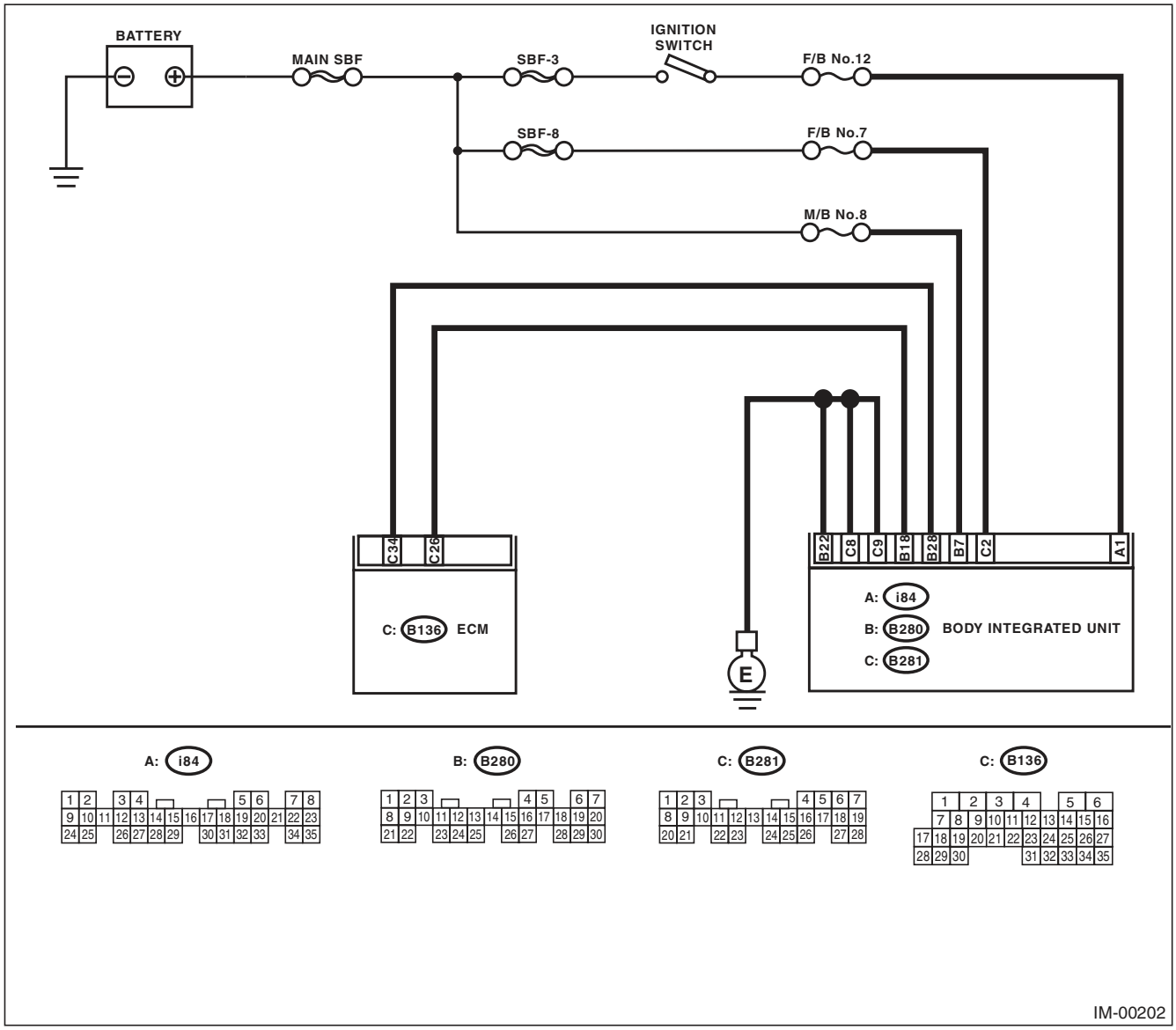

	Step	Check	Yes	No
1	**CHECK BODY INTEGRATED UNIT POWER SUPPLY CIRCUIT.** 1) Turn the ignition switch to OFF. 2) Disconnect the harness connector from body integrated unit. 3) Measure the voltage between body integrated unit harness connector terminal and chassis ground. ***Connector & terminal*** ***(B280) No. 7 (+) — Chassis ground (–):*** ***(B281) No. 2 (+) — Chassis ground (–):***	Is the voltage 10 V or more?	Go to step **2**.	Check the harness for open or short circuit between the body integrated unit and fuse.
2	**CHECK BODY INTEGRATED UNIT POWER SUPPLY CIRCUIT.** 1) Turn the ignition switch to ON. (engine OFF) 2) Measure the voltage between body integrated unit harness connector terminal and chassis ground. ***Connector & terminal*** ***(i84) No. 1 (+) — Chassis ground (–):***	Is the voltage 10 V or more?	Go to step **3**.	Check the harness for open or short circuit between the body integrated unit and ignition switch.
3	**CHECK BODY INTEGRATED UNIT GROUND CIRCUIT.** 1) Turn the ignition switch to OFF. 2) Measure the resistance between body integrated unit harness connector terminal and chassis ground. ***Connector & terminal*** ***(B280) No. 22 — Chassis ground:*** ***(B281) No. 8 — Chassis ground:*** ***(B281) No. 9 — Chassis ground:***	Is the resistance less than 10 Ω?	Go to step **4**.	Repair the open circuit of body integrated unit ground circuit.
4	**CHECK GROUND CIRCUIT FOR ECM.** Measure the resistance between the ECM ground terminal and engine ground.	Is the resistance less than 10 Ω?	Go to step **5**.	Repair ground circuit of ECM.
5	**CHECK HARNESS BETWEEN BODY INTEGRATED UNIT AND ECM.** 1) Disconnect the harness connector from the ECM and body integrated unit. 2) Measure the resistance between body integrated unit harness connector terminal and ECM harness connector terminal. ***Connector & terminal*** ***(B280) No. 18 — (B136) No. 26:***	Is the resistance less than 10 Ω?	Go to step **6**.	Repair the open circuit of the harness between the body integrated unit and ECM.
6	**CHECK HARNESS BETWEEN BODY INTEGRATED UNIT AND ECM.** Measure the resistance between body integrated unit harness connector terminal and ECM harness connector terminal. ***Connector & terminal*** ***(B280) No. 28 — (B136) No. 34:***	Is the resistance less than 10 Ω?	Go to step **7**.	Repair the open circuit of the harness between the body integrated unit and ECM.
7	**CHECK COMMUNICATION CIRCUIT HARNESS.** 1) Turn the ignition switch to ON. (engine OFF) 2) Measure the voltage between body integrated unit harness connector terminal and chassis ground. ***Connector & terminal*** ***(B280) No. 18 (+) — Chassis ground (–):*** ***(B280) No. 28 (+) — Chassis ground (–):***	Is the voltage 0 V?	Go to step **8**.	Because the battery voltage or ignition switch “ON” circuit is shorted, repair the harness between the body integrated unit and ECM.

Step		Check	Yes	No
8	**CHECK COMMUNICATION CIRCUIT HARNESS.** Measure voltage between the ECM harness connector terminal and engine ground. ***Connector & terminal*** ***(B136) No. 26 (+) — Engine ground (–):*** ***(B136) No. 34 (+) — Engine ground (–):***	Is the voltage 0 V?	Go to step **9**.	Because the battery voltage or ignition switch “ON” circuit is shorted, repair the harness between the body integrated unit and ECM.
9	**CHECK ECM BY COMMUNICATION LINE CHECK.** 1) Connect the harness connector to ECM. 2) Disconnect the harness connector from body integrated unit. 3) Start the communication line short check. <Ref. to IM(diag)-7, COMMUNICATION LINE CHECK, OPERATION, Subaru Select Monitor.>	Is the communication line check OK?	Replace the body integrated unit <Ref. to SL-56, Body Integrated Unit.> Replace all ignition keys (including the transponder). Execute the registration procedure next. Refer to the “PC application help for Subaru Select Monitor”.	Replace the ECM. <Ref. to FU(H4DOTC)-52, Engine Control Module (ECM).> <Ref. to FU(H6DO)-38, Engine Control Module (ECM).> Perform the registration procedure next. Refer to the “PC application help for Subaru Select Monitor”.

E: DTC P1574 KEY COMMUNICATION FAILURE

DTC DETECTING CONDITION:

Communication failure between key and body integrated unit

	Step	Check	Yes	No
1	**CHECK BODY INTEGRATED UNIT FUNCTION.** Insert the key into the ignition switch (LOCK position), then measure changes in voltage between the antenna connectors. ***Connector & terminal*** ***(B351) No. 1 (+) — No. 2 (–):***	Is the voltage –30 to 30 V? (Approx. 0.1 second after inserting the key) Is the voltage 0 V? (Approx. 1 second after inserting the key)	Go to step **2**.	Replace the body integrated unit <Ref. to SL-56, Body Integrated Unit.> Replace all ignition keys (including the transponder). Execute the registration procedure next. Refer to the "PC application help for Subaru Select Monitor".
2	**CHECK IGNITION KEY (TRANSPONDER).** 1) Remove the key from ignition switch. 2) Start the engine using other key which is already registered.	Does the engine start?	Replace the ignition key (including the transponder). Execute the registration procedure next. Refer to the "PC application help for Subaru Select Monitor".	Replace the body integrated unit <Ref. to SL-56, Body Integrated Unit.> Replace all ignition keys (including the transponder). Execute the registration procedure next. Refer to the "PC application help for Subaru Select Monitor".

F: DTC P1576 EGI CONTROL MODULE EEPROM

DTC DETECTING CONDITION:

- ECM malfunctioning
- Inaccessible ROM in ECM during key registration.

	Step	Check	Yes	No
1	**PERFORM REGISTRATION ON IGNITION KEY.** Perform registration on all keys of the vehicle. Refer to the "PC application help for Subaru Select Monitor".	Is registration for all keys complete?	Verify that the engine starts with all registered keys and finish the diagnosis.	Go to step **2**.
2	**PERFORM REGISTRATION ON IGNITION KEY.** Perform registration on all keys of the vehicle. Refer to the "PC application help for Subaru Select Monitor".	Is registration for all keys complete?	Verify that the engine starts with all registered keys and finish the diagnosis.	Go to step **3**.
3	**PERFORM REGISTRATION ON IGNITION KEY.** Perform registration on all keys of the vehicle. Refer to the "PC application help for Subaru Select Monitor".	Is registration for all keys complete?	Verify that the engine starts with all registered keys and finish the diagnosis.	Replace the ECM. <Ref. to FU(H4DOTC)-52, Engine Control Module (ECM).> <Ref. to FU(H6DO)-38, Engine Control Module (ECM).>

G: DTC P1577 IMM CONTROL MODULE EEPROM

DTC DETECTING CONDITION:

- Body integrated unit malfunctioning
- Failed to access the ROM inside the body integrated unit.

	Step	Check	Yes	No
1	**PERFORM REGISTRATION ON IGNITION KEY.** Perform registration on all keys of the vehicle. Refer to the “PC application help for Subaru Select Monitor”.	Is registration for all keys complete?	Verify that the engine starts with all registered keys and finish the diagnosis.	Go to step **2**.
2	**PERFORM REGISTRATION ON IGNITION KEY.** Perform registration on all keys of the vehicle. Refer to the “PC application help for Subaru Select Monitor”.	Is registration for all keys complete?	Verify that the engine starts with all registered keys and finish the diagnosis.	Go to step **3**.
3	**PERFORM REGISTRATION ON IGNITION KEY.** Perform registration on all keys of the vehicle. Refer to the “PC application help for Subaru Select Monitor”.	Is registration for all keys complete?	Verify that the engine starts with all registered keys and finish the diagnosis.	Replace the body integrated unit. <Ref. to SL-56, Body Integrated Unit.>

H: DTC P1578 METER FAILURE

DTC DETECTING CONDITION:

Reference code incompatibility between combination meter and body integrated unit

	Step	Check	Yes	No
1	**CHECK DIAGNOSTIC CODE.** Read the DTC of body integrated unit using Subaru Select Monitor.	Is DTC B1401 detected?	Go to step **2**.	<Ref. to IM(diag)-20, DTC P1572 IMM CIRCUIT FAILURE (EXCEPT ANTENNA CIRCUIT), Diagnostic Procedure with Diagnostic Trouble Code (DTC).>
2	**CHECK LAN COMMUNICATION SYSTEM.** Inspect LAN communication system. <Ref. to LAN(diag)-2, Basic Diagnostic Procedure.>	Is DTC U1300, U1301, U1302, B1100 or B1101 of the body integrated unit displayed?	Perform the diagnosis according to DTC. <Ref. to LAN(diag)-31, List of Diagnostic Trouble Code (DTC).>	Go to step **3**.
3	**CHECK COMBINATION METER.** 1) Perform the registration of immobilizer. Refer to the “PC application help for Subaru Select Monitor”. 2) Start the engine.	Does the engine start?	System is normal.	Replace the combination meter. <Ref. to IDI-22, REMOVAL, Combination Meter.>

1. Basic Diagnostic Procedure

A: PROCEDURE

CAUTION:
- **Subaru Select Monitor is required for reading DTC, performing diagnosis and reading current data.**
- **Remove foreign matter (dust, water, oil, etc.) from the body integrated unit connector during removal and installation.**
- **For model with immobilizer, registration of immobilizer may be needed after the replacement of controller etc. For details, refer to the "PC application help for Subaru Select Monitor".**

NOTE:
- To check harness for open or short circuits, shake the suspected trouble spot or connector.
- Check List for Interview <Ref. to LAN(diag)-3, Check List for Interview.>

	Step	Check	Yes	No
1	**CHECK PRE-INSPECTION.** Ask the customer when and how the trouble occurred using the interview check list. <Ref. to LAN(diag)-3, Check List for Interview.>	Did you interview the customer?	Go to step **2**.	Interview the customer and Go to step **2**.
2	**BASIC INSPECTION.** Check the components which might affect body control. <Ref. to LAN(diag)-5, INSPECTION, General Description.>	Is the component that might influence the body control problem normal?	Go to step **3**.	Repair or replace each component.
3	**CHECK INDICATION OF DTC.** 1) Read the DTC. <Ref. to LAN(diag)-12, READ DIAGNOSTIC TROUBLE CODE (DTC), OPERATION, Subaru Select Monitor.> NOTE: If the communication function of the Subaru Select Monitor cannot be executed properly, check the communication circuit. <Ref. to LAN(diag)-24, COMMUNICATION FOR INITIALIZING IMPOSSIBLE, INSPECTION, Subaru Select Monitor.> 2) Record all DTC.	Is DTC displayed?	Go to step **5**.	Go to step **4**.
4	**PERFORM GENERAL DIAGNOSTICS.** Inspect using the "General Diagnostics Table". <Ref. to LAN(diag)-83, General Diagnostic Table.>	Is result of inspection OK?	LAN system is normal.	Go to step **5**.
5	**PERFORM DIAGNOSIS.** 1) Correct the cause of trouble. 2) Perform the Clear Memory Mode. <Ref. to LAN(diag)-20, CLEAR MEMORY MODE, OPERATION, Subaru Select Monitor.> 3) Read the DTC. <Ref. to LAN(diag)-12, READ DIAGNOSTIC TROUBLE CODE (DTC), OPERATION, Subaru Select Monitor.>	Is DTC displayed?	Repeat step 5 until DTC is not shown.	Finish the diagnosis.

2. Check List for Interview

A: CHECK

Inspect the following item about the vehicle's state.

1. DISPLAY OF COMMUNICATION ERROR

Communication error is displayed in odo/trip meter. (Except for meter with MID)	When and how often are they displayed? ❑ Always ❑ Sometimes ❑ Only once
	Which communication error is displayed? (Record them all) ❑ Er IU (Fail in the body integrated unit) ❑ Er HC (Fail of high-speed CAN) ❑ Er LC (Fail of low-speed CAN) ❑ Er –– (Fails of both high-speed and low-speed CAN) ❑ Er EG (Fail of EGI communication data) ❑ Er TC (fail of TCM communication data) ❑ Er Ab (Fail of vehicle dynamics control (VDC)/ABS communication data)
Ignition key position	❑ OFF ❑ ACC ❑ ON (before starting engine) ❑ START ❑ ON (after starting engine, engine is running) ❑ ON (after starting engine, engine is at a standstill)
Timing	❑ Immediately after turning the ignition ON. ❑ Immediately after turning the ignition to START.

2. DISPLAY STATUS IN THE COMBINATION METER

Display status in the combination meter	a) Engine coolant temperature gauge display	❑ OK / ❑ NG
	b) Fuel gauge display	❑ OK / ❑ NG
Display of other indicators	c) Malfunction indicator light	❑ ON / ❑ OFF
	d) SPORT indicator light (AT warning light)	❑ ON / ❑ OFF
	e) ABS warning light/Vehicle dynamics control (VDC) warning light	❑ ON / ❑ OFF
	f) Security indicator light	❑ ON / ❑ Blink / ❑ OFF
	g) Seat belt warning light (Driver's seat)	❑ ON / ❑ OFF
	h) Seat belt warning light (Passenger's seat)	❑ ON / ❑ OFF

3. SYMPTOM

Vehicle condition	a) Lighting adjustment is not possible by the illumination volume control.	❑ Yes / ❑ No
	b) Rear wiper does not operate.	❑ Yes / ❑ No
	c) Wiper deicer does not operate.	❑ Yes / ❑ No
	d) Rear defogger does not operate.	❑ Yes / ❑ No
	e) Door lock does not operate.	❑ Yes / ❑ No
	f) Trunk/rear gate lock does not operate.	❑ Yes / ❑ No
	g) Drivers door lock does not operate.	❑ Yes / ❑ No
	h) Shift lock does not operate.	❑ Yes / ❑ No
	i) Key illumination blinks.	❑ Yes / ❑ No

4. CONDITIONS UNDER WHICH TROUBLE OCCURS

Driving condition	❑ At standstill (While idling) ❑ When the vehicle is running Vehicle speed km/h (MPH) ❑ While accelerating Acceleration km/h (MPH) to km/h (MPH) ❑ Decelerating (With braking) Deceleration km/h (MPH) to km/h (MPH) ❑ Decelerating (Without braking) Deceleration km/h (MPH) to km/h (MPH)
	❑ Flat road ❑ Uphill ❑ Downhill ❑ Gravel road ❑ Bumpy road ❑ Snowy road
	Does it occur when operating any part? Operated part: Trouble symptom:
	Are there any other troubles occurred? From where: Trouble symptom:

3. General Description

A: CAUTION

1. SUPPLEMENTAL RESTRAINT SYSTEM "AIRBAG"

Airbag system wiring harness is routed near the body integrated unit and twisted pair line.

CAUTION:

- **Do not use electrical test equipment on any airbag system wiring harness and connector circuit.**
- **Be careful not to damage the airbag system wiring harness when servicing the body integrated unit and LAN system.**

2. LAN SYSTEM

- Bus line of LAN system is twisted pair line. Be careful not to by-pass or partly unbind the twisted pair line.
- Do not make clearance between bus lines (CAN High, CAN Low).
- Difference of bus line length should be within 10 cm (3.94 in).
- Fray near the connector should be within 8 cm (3.14 in).

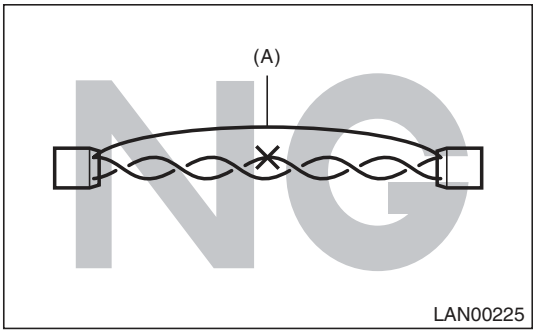

(A) Bypass wire connection

- If the characteristics of the twisted pair line are changed, it may extremely weaken against noise.
- When repairing the harness, connect the wires using soldering and protect it with insulating tape etc.

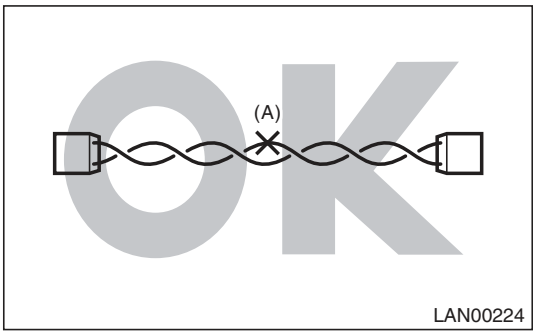

(A) Soldering and protection with insulating tape

B: INSPECTION

Before performing diagnostics, check the following item which might affect body integrated unit malfunctions.

1) Measure the battery voltage and check electrolyte.

Standard voltage: 12 V or more

Specific gravity: Above 1.260

2) Check the fuse condition.
Make sure that ampere of the fuse is setting value, and it is not blown out. While doing this, also check the backup fuse condition.
3) Check the connecting condition of harness and harness connector.
4) Confirm that a setting that does not match the vehicle equipment, is not set in the body integrated unit. <Ref. to LAN(diag)-18, REGISTRATION BODY INTEGRATED UNIT (EQUIPMENT SETTING), OPERATION, Subaru Select Monitor.>
5) Make sure that the function setting (ECM customizing) of the body integrated unit matches the vehicle equipment. <Ref. to LAN(diag)-21, FUNCTION SETTING (ECM CUSTOMIZING), OPERATION, Subaru Select Monitor.>
6) Confirm "Factory or Market setting" of body integrated unit registrations is "Market".
7) Confirm key illumination does not blink with ignition switch turned to ON.

C: PREPARATION TOOL

1. SPECIAL TOOL

ILLUSTRATION	TOOL NUMBER	DESCRIPTION	REMARKS
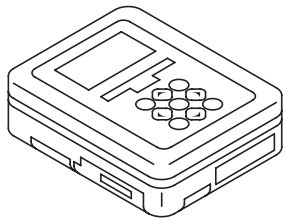 ST1B022XU0	1B022XU0	SUBARU SELECT MONITOR III KIT	Used for troubleshooting the electrical system.

2. GENERAL TOOL

TOOL NAME	REMARKS
Circuit tester	Used for measuring resistance, voltage and current.

4. Electrical Component Location

A: LOCATION

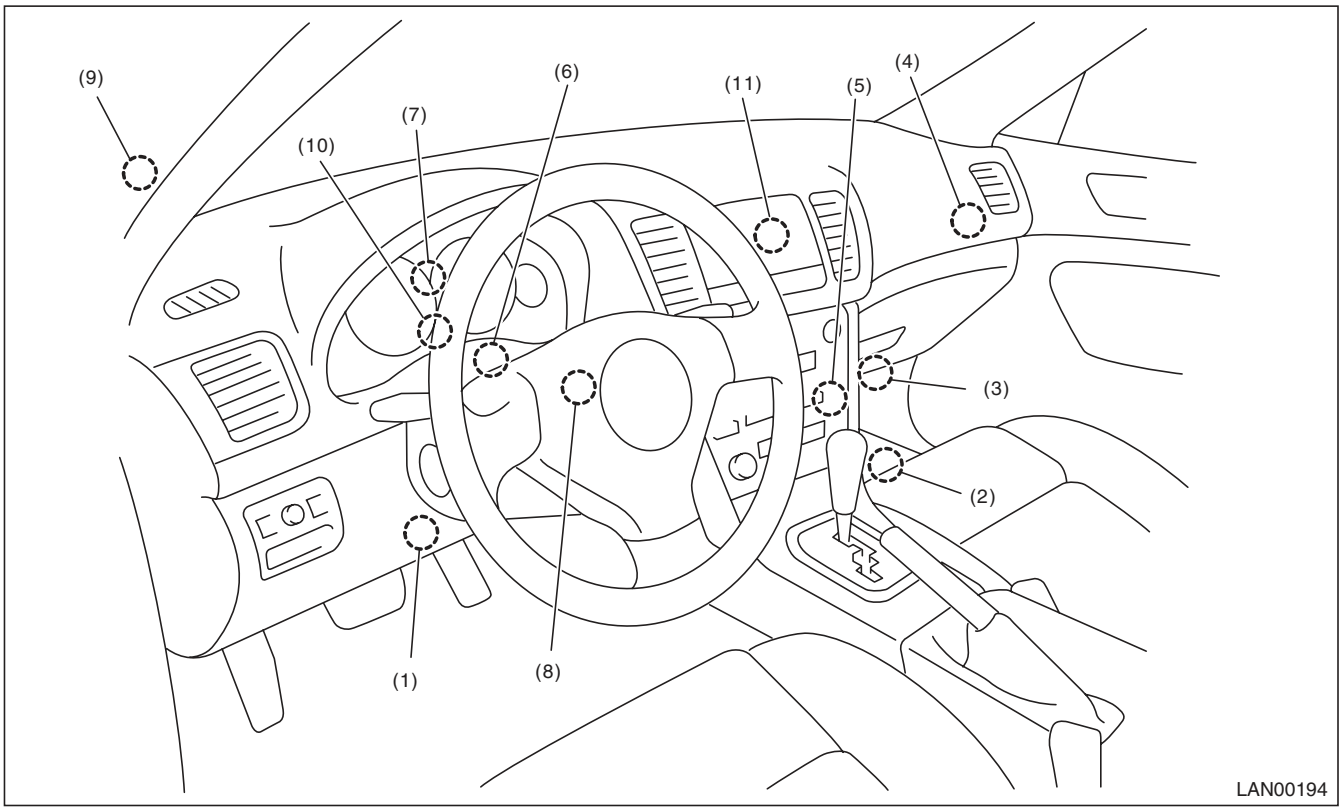

(1) Body integrated unit
(2) Engine control module (ECM)
(3) Auto A/C control module
(4) Keyless entry control module (Antenna)
(5) A/C control panel
(6) Transmission control module (TCM)
(7) Combination meter
(8) Steering angle sensor
(9) ABSCM&H/U or VDCCM&H/U (inside engine room)
(10) Odo/trip meter
(11) Center display

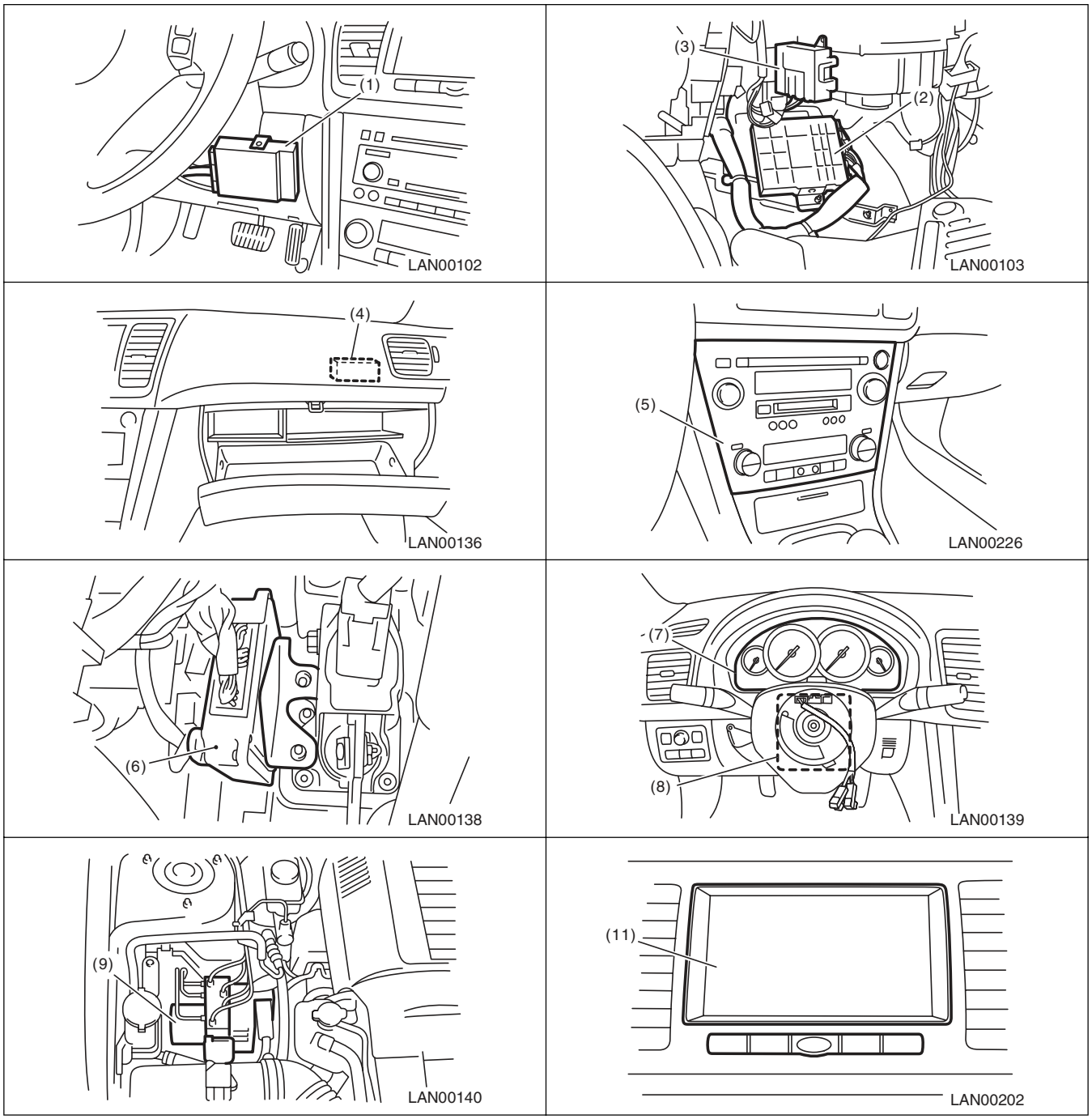
(1)
LAN00102
(3)
(2)
LAN00103
(4)
LAN00136
(5)
LAN00226
(6)
LAN00138
(7)
(8)
LAN00139
(9)
LAN00140
(11)
LAN00202

5. Control Module I/O Signal

A: ELECTRICAL SPECIFICATION

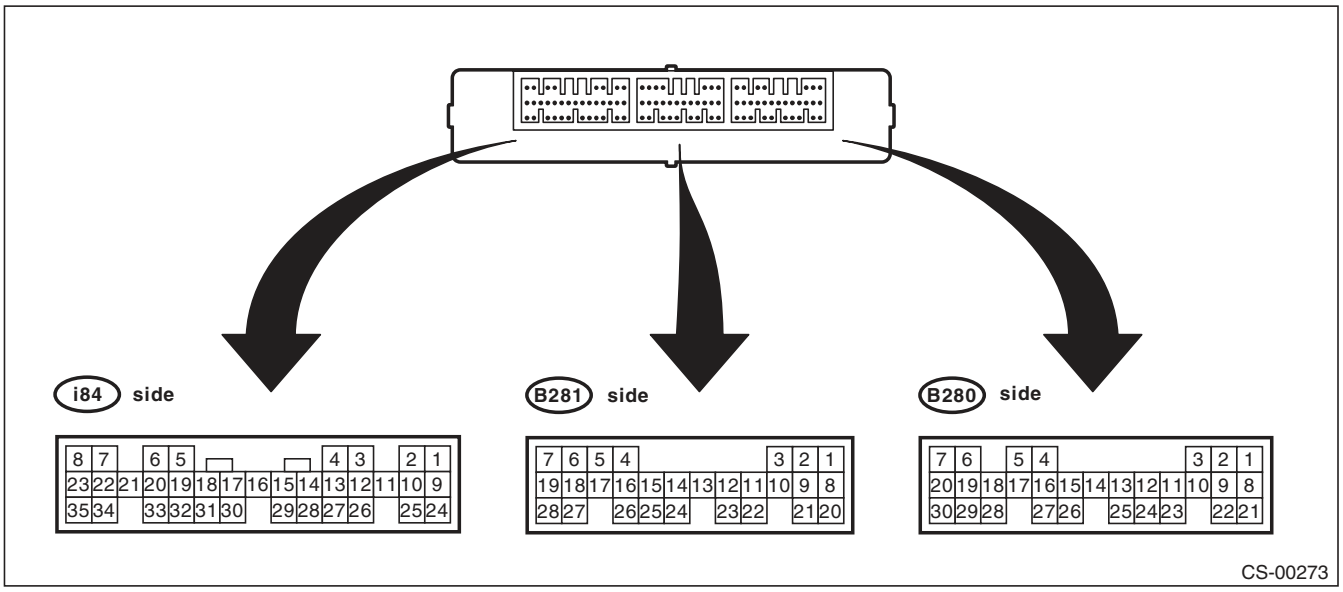

Description	Connector No.	Terminal No.	Signal (V) Ignition switch ON (engine OFF)	Note
System control power supply	B281	2	10 — 13 V	Always
Backup power supply	B280	7	10 — 13 V	When backup fuse is installed
Ignition power supply	i84	1	10 — 13 V	Ignition ON
ACC power supply	i84	24	10 — 13 V	ACC ON
Ground	i84	21	0 V	Always
	B281	9		
	B281	8		
	B280	22		
Key warning switch	B281	7	10 — 13 V	When ignition key inserted
STOP LIGHT SWITCH	B281	23	10 — 13 V	When brake pedal depressed
Illumination control switch (bright switch)	i84	30	10 — 13 V (at dimmer ON)	Cancel the dimming of the clock and audio illumination
Illumination volume (Vi1)	i84	10	4.5 — 5.5 V	Small light ON
Illumination volume (Vi2)	i84	2	0.5 — 4.5 V	Small light ON
Illumination volume (Vi3)	i84	25	0 V	Ground circuit
Illumination output	i84	5	Pulse signal	Small light ON
Front fog light SW input	B281	17	10 — 13 V	Front fog light ON
Door switch input Driver's seat	i84	19	Less than 1 V (10 — 13 V at OFF)	Driver's door open (ON)
Door switch input Passenger's seat	i84	32	Less than 1 V (10 — 13 V at OFF)	Passenger's door open (ON)
Door switch input Rear RH seat	i84	18	Less than 1 V (10 — 13 V at OFF)	Rear RH door open (ON)
Door switch input Rear LH seat	i84	31	Less than 1 V (10 — 13 V at OFF)	Rear LH door open (ON)
Door switch Trunk/Rear gate	i84	17	Less than 1 V (10 — 13 V at OFF)	Trunk/Rear gate open (ON)
Manual switch (LOCK)	i84	15	Less than 1 Ω	Door lock switch ON

Control Module I/O Signal

Description	Connector No.	Terminal No.	Signal (V)	Note
			Ignition switch ON (engine OFF)	
Manual switch (UNLOCK)	i84	29	Less than 1 Ω	Door unlock switch ON
Door lock power supply	i84	34	10 — 13 V	Always
All door lock output	i84	7	10 — 13 V	Manual lock switch, door key switch ON
Driver's door UNLOCK output	i84	23	10 — 13 V	Driver's seat unlock signal ON
All door UNLOCK output	i84	8	10 — 13 V	ALL door unlock signals ON
Rear gate UNLOCK output	i84	22	10 — 13 V	When the rear gate release switch ON with all seats unlocked
Key/shift lock power supply	B281	1	10 — 13 V	Always
Shift lock output	B280	6	10 — 13 V	Ignition switch ON, shift position "P" range, foot brake ON (Only AT)
Key locking output	B280	5	10 — 13 V	Except P range, ignition key is inserted, ignition switch ON (AT model)
Wiper deicer switch	i84	14	Less than 1 Ω	Wiper deicer switch ON
Wiper deicer relay output	B280	14	1 V or less	Wiper deicer relay ON
Rear defogger switch	i84	28	Less than 1 Ω	Rear defogger switch ON
Rear defogger relay output	B280	16	1 V or less	Rear defogger relay ON
Shift switch (ON)	B281	26	Less than 1 Ω	At Manual mode
Shift switch (UP)	B281	15	Less than 1 Ω	At Manual mode UP
Shift switch (DOWN)	B281	25	Less than 1 Ω	At Manual mode DOWN
P range switch	B281	13	Less than 1 Ω	Shift range P position
Impact sensor	B281	5	8 V or more (pulse signal is usually used)	Impact sensor ON (Model with impact sensor)
Fuel level sensor	B281	19	0 — 102.3 Ω	Resistance differs according to the fuel level (displays resistance combining level gauge main and sub)
Ambient sensor	B281	3	0.5 — 4.5 V	SIG
	B281	10	0 V	GND
Seat belt switch (driver's seat)	i84	4	Less than 1 Ω	When driver's seat belt is not worn
Seat belt switch (Passenger's seat)	i84	13	Less than 1 Ω	When passenger's seat belt is not worn
Seat belt warning light (driver's seat)	i84	20	Less than 1 Ω	When driver's seat belt is worn
Seat belt warning light (Passenger's seat)	B281	27	Less than 1 Ω	When passenger's seat belt is worn
Rear wiper switch (ON)	B281	6	Less than 1 Ω	Rear wiper switch ON
Rear wiper switch (INT)	B281	18	Less than 1 Ω	Rear wiper switch ON
Rear washer switch	B281	27	Less than 1 Ω	Rear washer switch ON
Rear wiper power supply	B280	21	10 — 13 V	Ignition switch ON
Rear wiper ON output	B280	1	10 — 13 V	Rear wiper switch ON
Rear wiper return	B280	8	10 — 13 V	At wiper reversing
		1 — 8	10 — 13 V	
Room light output	B280	3	1 V or less	When LOCK, UNLOCK with keyless entry
Key ring illumination output	B280	4	1 V or less	Ignition key removed, driver's door open
Turn hazard output	B280	12	1 V or less	When operating keyless entry answer back
Keyless Buzzer Output	i84	6	10 — 13 V	When operating keyless entry answer back

Description	Connector No.	Terminal No.	Signal (V)	Note
			Ignition switch ON (engine OFF)	
Security horn output	B280	11	1 V or less	When operating security horn
Security indicator light output	i84	33	Approx. 1 V	At ignition key removed, immobilizer operating
TPMS registration check signal input	B281	4	1 V or less	When inputting registration check signal
Keyless communication	i84	9	Serial communication	At keyless entry signal received
High speed CAN circuit	B280	20	Between B20 — B30 Serial communication	At communicating (sending and receiving)
High speed CAN circuit	B280	30		
Low-speed CAN circuit 1	i84	27	Between A26 — A27 Serial communication	At communicating (sending and receiving)
Low-speed CAN circuit 1	i84	26		
Low-speed CAN circuit 2	B280	26	Between B25 — B26 Serial communication	At communicating (sending and receiving) (Model with auto A/C)
Low-speed CAN circuit 2	B280	25		
Immobilizer antenna	B281	20 — 21	Serial communication	—
Immobilizer communication (main)	B280	18 (Back-up 28)	Serial communication	—
Subaru Select Monitor communication	B280	19	Serial communication	—

B: WIRING DIAGRAM

<Ref. to WI-200, WIRING DIAGRAM, CAN Communication System.> <Ref. to WI-114, AUTO A/C MODEL, WIRING DIAGRAM, Air Conditioning System.>

6. Subaru Select Monitor

A: OPERATION

1. READ DIAGNOSTIC TROUBLE CODE (DTC)

NOTE:
• DTC is displayed in the sequence of inputting. (When entering two DTCs or more simultaneously, they are displayed in the sequence of priority.)
• When more than one DTC is displayed, perform the diagnosis of top one.

1) Prepare the Subaru Select Monitor kit.
2) Connect the diagnosis cable to Subaru Select Monitor.
3) Connect the Subaru Select Monitor to data link connector.
Data link connector is located in the lower portion of instrument panel (on the driver's side).

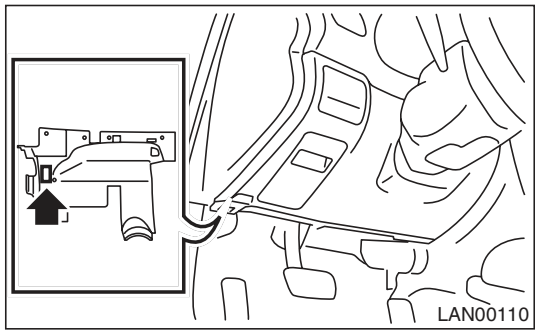

CAUTION:
Do not connect scan tools other than the Subaru Select Monitor.

4) Turn the ignition switch to ON (engine OFF) and run the Subaru Select Monitor.
5) On the «Main Menu» display, select the {Each System Check}.
6) On the «System Selection Menu» display, select the {Integ. unit mode}.
7) On the «Integ. unit mode failure diag» display, select the {Diagnostic Code(s) Display}.

NOTE:
• For details concerning the operation procedure, refer to the "PC application help for Subaru Select Monitor".
• For details concerning DTCs, refer to the List of Diagnostic Trouble Code (DTC). <Ref. to LAN(diag)-31, List of Diagnostic Trouble Code (DTC).>

2. READ CURRENT DATA

1) On the «Main Menu» display screen, select the {Each System Check}.
2) On the «System Selection Menu» display screen, select the {Integ. Unit mode}.
3) On the «Integ. Unit mode failure diag» display screen, select the {Current Data Display & Save}.
4) On the «Current Data Display & Save» display screen, select the {Data Display}.
5) Using the scroll key, scroll the display screen up or down until the desired data is shown.
A support list contains both of analog and digital data, and they are shown in the following table.

3. DISPLAY OF ANALOG DATA

Items to be displayed	Unit of measure	Description	Note
BATT voltage (control)	10 — 15 V	Body integrated unit input value	Always
BATT voltage (BACKUP)	10 — 15 V	Body integrated unit input value	Always
IG power supply voltage	10 — 15 V	Body integrated unit input value	Ignition switch ON
ACC voltage	10 — 15 V	Body integrated unit input value	Ignition switch ACC
Illumination VR Voltage	0 — 5 V	Body integrated unit output value	Illumination volume input value
Illumi. output d-ratio	0 — 100%	Body integrated unit input value	Small light ON Illumination volume is other than bright.
Ambient temp sensor V	0 — 5 V	Body integrated unit output value	Ignition switch ON
Ambient Temperature	–40 — 87.5°C	Body integrated unit output value	Ignition switch ON
Fuel level voltage	0 — 8 V	Body integrated unit input value	Ignition switch ON
Fuel level resistance	0 — 102.3 Ω	Body integrated unit input value	Ignition switch ON
key-lock solenoid V	6 — 12 V	Body integrated unit output value	Other than parking range Key warning switch ON
number of regist.	0 — 4	Key No. to register	
Front Wheel Speed	km/h	CAN data input value	Reception from VDC module
VDC/ABS latest f-code	DTC display (Temporarily)	CAN data input value	It is normal when DTC is not been input even if this code is displayed. Reception from VDC
Blower Fan Steps	0 — 2 levels	CAN data input value	0: OFF, 1: Low, 2: 2 levels or more Reception from air conditioner ECM (AUTO A/C model)
Fuel level resistance 2	0 — 102.3 Ω	CAN data output value	Reception from body integrated unit
Fuel consumption	cc/s	CAN data input value	Reception from ECM and transmission to center monitor
Coolant Temp.	–40 — 130°C	CAN data input value	Reception from ECM
Vehicle longitudinal G	m/s^2	CAN data input value	Reception from VDC unit
SPORT Shift Stages	0 — 7 levels	CAN data input value	(0: Light OFF; 1 — 5: Gear display; 6: Fail; 7: ATF temperature High/Low) Reception from TCM (AT model)
Shift Position	0 — 7 levels	CAN data input value	0: 1; 1: 2; 2: 3; 3: 4; 4: D; 5: N; 6: R; 7: P shift position (8 indicates no input) Reception from TCM (AT model)
Off delay time	OFF, Short, Normal, Long	Body integrated unit setting items	Customize setting

4. DISPLAY OF ON/OFF DATA

Items to be displayed	Unit of measure	Description	Note
key-lock warning SW	ON/OFF	Body integrated unit input value	ON when ignition key is inserted
Stop Light Switch	ON/OFF	Body integrated unit input value	ON when brake pedal is depressed
Front fog lamp SW input	ON/OFF	Body integrated unit input value	ON when Front fog light is ON.
TPMS input	ON/OFF	Body integrated unit input value	ON when TPMS registration completed
Door unlock SW input	ON/OFF	Body integrated unit input value	ON when door key cylinder is in UNLOCK
Driver's door SW input	ON/OFF	Body integrated unit input value	ON when driver's door is open
P-door SW input	ON/OFF	Body integrated unit input value	ON when passenger's door is open
Rear right door SW input	ON/OFF	Body integrated unit input value	ON when rear right door is open
Rear left door SW input	ON/OFF	Body integrated unit input value	ON when rear left door is open
R Gate SW input	ON/OFF	Body integrated unit input value	ON when trunk/rear gate is open
Manual lock SW input	ON/OFF	Body integrated unit input value	Manual lock switch ON
Manual unlock SW input	ON/OFF	Body integrated unit input value	Manual unlock switch ON
Bright SW input	ON/OFF	Body integrated unit input value	Except automatic A/C
Tiptronic Mode Switch	ON/OFF	Body integrated unit input value	SPORT shift mode ON
TIP UP SW input	ON/OFF	Body integrated unit input value	SPORT shift ON and ON at up operation
TIP DOWN SW input	ON/OFF	Body integrated unit input value	SPORT shift ON and ON at down operation
P SW	ON/OFF	Body integrated unit input value	ON when shift range is in parking
R wiper ON SW input	ON/OFF	Body integrated unit input value	Rear wiper switch ON
R wiper INT SW input	ON/OFF	Body integrated unit input value	ON when rear wiper switch is in INT
R washer SW input	ON/OFF	Body integrated unit input value	Rear washer switch ON
wiper deicer SW input	ON/OFF	Body integrated unit input value	Wiper deicer switch ON
Rear Defogger SW	ON/OFF	Body integrated unit input value	Rear defogger switch ON (manual A/C)
Driver's Seat SW input	ON/OFF	Body integrated unit input value	Driver's seat buckle switch ON
P seatbelt SW input	ON/OFF	Body integrated unit input value	Passenger's seat buckle switch ON
Fr wiper input	ON/OFF	Body integrated unit input value	ON when front wiper is operating
Identification SW input	ON/OFF	Body integrated unit input value	ON with sedan
Rr defogger output	ON/OFF	Body integrated unit output value	ON when rear defogger relay is operating
lock actuat. LOCK output	ON/OFF	Body integrated unit output value	ON when LOCK signal is output
All seat UNLOCK output	ON/OFF	Body integrated unit output value	ON when unlock signal is output
D-seat UNLOCK output	ON/OFF	Body integrated unit output value	ON when unlock signal is output
R gate/trunk UNLK output	ON/OFF	Body integrated unit output value	ON when rear gate/trunk unlock signal is output
R wiper output	ON/OFF	Body integrated unit output value	ON when rear wiper is operating
Shift Lock Solenoid	ON/OFF	Body integrated unit output value	ON when shift lock solenoid is operating (AT model)
Key locking output	ON/OFF	Body integrated unit output value	ON when key lock solenoid is operating (AT model)
wiper deicer output	ON/OFF	Body integrated unit output value	ON when wiper deicer is operating
Starter cutting output	ON/OFF	Body integrated unit output value	
Hazard Output	ON/OFF	Body integrated unit output value	ON when keyless lock/unlock signal is received (when keyless switch connector is removed)
Keyless Buzzer Output	ON/OFF	Body integrated unit output value	ON when keyless lock/unlock signal is received (when keyless switch connector is removed)
Horn Output	ON/OFF	Body integrated unit output value	ON when security warning is operating

Items to be displayed	Unit of measure	Description	Note
Siren Output	ON/OFF	Body integrated unit output value	ON when siren is installed, customize settings are enabled, and security warning is operating
D-belt warning light O/P	ON/OFF	Body integrated unit output value	ON when ignition switch is turned to ON, and buckle switch is turned off
P-belt warning light O/P	ON/OFF	Body integrated unit output value	ON when ignition switch is turned to ON, occupant is seated, and buckle switch is turned off
Illumination lamp O/P	ON/OFF	Body integrated unit output value	ON when illumination is illuminated
Room lamp output	ON/OFF	Body integrated unit output value	ON when keyless lock/unlock signal is received (when keyless switch connector is removed)
key illumi. lamp o/p	ON/OFF	Body integrated unit output value	ON when key illumination light is illuminated
Immobilizer lamp output	ON/OFF	Body integrated unit output value	ON when immobilizer pilot light blinks
Keyless operation 1	Registration/Normal	Body integrated unit input value	Not supported by North American specifications
Keyless operation 2	Deletion/Normal	Body integrated unit input value	Not supported by North American specifications
CC Main Lamp	ON/OFF	CAN data input value	Cruise control switch ON Reception from ECM and transmission to combination meter
CC Set Lamp	ON/OFF	CAN data input value	ON when cruise control vehicle speed is set Reception from ECM and transmission to combination meter
SPORT Lamp	ON/OFF	CAN data input value	SPORT mode switch ON Reception from TCM and transmission to combination meter (AT model)
SPORT Blink	Blink/OFF	CAN data input value	TCM error signal reception ON Reception from TCM and transmission to combination meter (AT model)
ATF Temperature Lamp	ON/OFF	CAN data input value	ATF oil temperature rise ON Reception from TCM and transmission to combination meter (AT model)
ATF Blink	Blink/OFF	CAN data input value	4AT model: During learning control and bleeding control valve air
Tire diameter abnormal 1	ON/OFF	CAN data input value	4AT model: When FWD fuse is installed
Tire diameter abnormal 2	Blink/OFF	CAN data input value	ON when difference in rotation between front and rear wheels is 4% or more Reception from TCM and transmission to combination meter (AT model)
Shift Up Indication	UP/OFF	CAN data input value	ON when shift-up operation available lamp in the combination meter lights (AT model)
Shift Down Indication	DOWN/OFF	CAN data input value	ON when shift-down operation available lamp in the combination meter lights (AT model)
SPORT Shift (buzzer 1)	ON/OFF	CAN data input value	Reception from TCM and transmission to combination meter (AT model)
SPORT Shift (buzzer 2)	ON/OFF	CAN data input value	Not supported by North American specifications
ABS/VDC Judging	ABS/VDC	CAN data input value	Transmission from vehicle dynamic control (VDC) to high speed control module
Small Light SW	ON/OFF	CAN data input value	ON when small light is illuminated
DRL	ON/OFF	CAN data input value	Headlight switch OFF, ignition switch ON (during DRL operation)

Items to be displayed	Unit of measure	Description	Note
Rr Defogger SW	ON/OFF	CAN data input value	Rear defogger switch ON
Australia Judging Flag	Australia/Others	CAN data output value	North American specifications have others
large Diameter Tire	large tire/Others	CAN data output value	Reception from combination meter
Number of cylinders	4 Cylinder/6 Cylinder	CAN data input value	—
Cam shaft specification	SOHC/DOHC	CAN data input value	—
Turbo	Turbo/Non-turbo	CAN data input value	—
E/G displacement (2.5L)	2.5 L/ OFF	CAN data input value	—
E/G displacement (3.0L)	3.0 L/ OFF	CAN data input value	—
AT Vehicle ID Signal	ON/OFF	CAN data input value	—
Blower fan information	ON/OFF	CAN data input value	—
Keyless buzzer	ON/OFF	CAN data output value	ON when keyless answer-back buzzer operates (when keyless switch connector is removed)
Center display failure	OK/NG	CAN data input value	Reception from center display (NAVI monitor)
NAVI Failure	OK/NG	CAN data input value	Reception from Center Display
IE Bus failure	Can not use	CAN data input value	Reception from Center Display
Auto A/C failure	OK/NG	CAN data input value	Reception from auto A/C module
EBD Warning Light	OK/OFF	CAN data input value	Reception from VDC/ABS and transmission to combination meter
ABS Warning Light	OK/OFF	CAN data input value	Reception from VDC/ABS and transmission to combination meter
VDC OFF flag	ON/OFF	CAN data input value	Reception from VDC/ABS and transmission to combination meter
VDC/ABS OK B	OK/NG	CAN data input value	Reception from VDC/ABS (When an error is detected in either of the yaw rate, G sensor, steering sensor, or pressure sensor)

NOTE:
For details concerning the operation procedure, refer to the “PC application help for Subaru Select Monitor”.

5. CONFIRMATION OF CURRENT SETTING

1) On the «Main Menu» display, select the {Each System Check}.
2) On the «System Selection Menu» display, select the {Integ. unit mode}.
3) On the «Integ. unit mode failure diag» display, select the {Current Data Display & Save}.
4) On the «Current Data Display & Save» display, select the {Data Display}.
5) Using the scroll key, scroll the display screen up or down until the desired data is shown.
6) Display the following item and record the settings.

Required items for new registration (Except for system not equipped)

Item	Item to confirm				Remarks
number of regist.	1	2	3	4	Registered ID type
Off delay time	OFF	Long	Normal	Short	Setting for lighting off time
Outside Temp. Offset	–2°C — +2°C (0.5°C increments)				Adjustment of outside temperature
Rr defogger op. mode	normal		continuous		Normal: OFF at 15 minutes of operation Continuous: Operations from switch ON to OFF
Wiper deicer op. mode	normal		continuous		Normal: OFF at 15 minutes of operation Continuous: Operations from switch ON to OFF, repeats ON for 15 minutes, OFF for 2 minutes
Security Alarm Setup	ON		OFF		ON: Warning device operation possible OFF: Warning device does not operate
Impact Sensor Setup	ON		OFF		ON: Impact sensor operation possible OFF: Impact sensor does not operate Turn OFF for vehicles not equipped with an Impact Sensor
Alarm delay setup	ON		OFF		ON: Monitor after a fixed period of time from reception of the keyless lock signal OFF: Monitor after reception of the keyless lock signal
Lockout prevention	ON		OFF		ON: Lockout prevention operation OFF: Lockout prevention not operated
Impact sensor	support		no support		Support: Impact sensor equipped No support: Impact sensor not equipped Always set to no support for vehicles not equipped with the impact sensor.
Answer-back buzzer setup	ON		OFF		ON: Answer-back buzzer operation possible OFF: Answer-back buzzer not operated
Hazard answer-back setup	ON		OFF		ON: Hazard answer-back buzzer operation possible OFF: Hazard answer-back buzzer not operated
Ans.-back Buzzer	support		no support		Support: Vehicle equipped with answer-back buzzer No support: Vehicle not equipped with answer-back buzzer
Passive Alarm	ON		OFF		ON: Passive arming operation possible OFF: Passive arming not in operation
Belt Warning Switch	ON		OFF		ON: All alarms except the first stage not in operation OFF: Belt alarm operation possible
Door open warning (prevention of battery run-out)	support		no support		Support: Door interlocked room light goes off when on for 10 minutes consecutively when door is open. No support: Room light remains illuminated until door is closed.
A/C ECM setting	support		no support		Set models with auto A/C to support.
Wiper deicer	support		no support		Support: Vehicle equipped with wiper deicer No support: Vehicle not equipped with wiper deicer
Rear fog light setting	support		no support		Not supported by North American specifications
Factory or Market setting	Factory		Market		Do not change to the factory mode. Set to market when using normally.

6. REGISTRATION BODY INTEGRATED UNIT (EQUIPMENT SETTING)

CAUTION:
Body integrated unit is core of LAN system, and also can select the function of all vehicle system control. To perform normal operation of vehicle and diagnosis, the above settings must match the actual vehicle equipment.
If registrations and function setting are different from vehicle equipment, vehicle system does not operate normally and diagnosis cannot be performed correctly. Pay attention to following item.
• Be sure to correspond registrations and function settings to vehicle equipment.
• Do not change the settings of vehicle improperly.
• Confirm key illumination does not blink or "Factory or Market setting" of body integrated unit registrations is "Market". If "Factory or Market setting" is set to "Factory," key illumination blinks when ignition key is turned ON, to notify that the settings are unconfirmed.
• Key illumination does not blink with ignition switch turned to ON and go off with door closed.
• Be sure to register immobilizer if body integrated unit is replaced with a new part. (models with immobilizer)
• Make a registration of immobilizer when the parts related to immobilizer have been replaced. For details, refer to the "PC application help for Subaru Select Monitor".
1) Turn the ignition switch to OFF.
2) Connect the Subaru Select Monitor to data link connector.

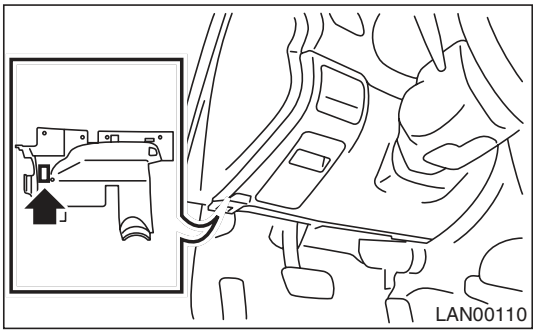

3) Turn the ignition switch to ON and run the Subaru Select Monitor.
4) On the «Main Menu» display, select the {Each System Check}.
5) On the «Each System Check» display, select the {Integ. unit mode} and then select the «ECM customizing».

6) Change the setting with UP/DOWN key and select the [OK].
List of body integrated unit registration item

NOTE:
Setting is different depending on the grade of vehicle.

Data	Initial setting	Registration	Remarks
A/C ECM setting	OFF	ON	Illumination control does not operate if A/C ECM setting is set to “OFF” in case of model with auto A/C.
		OFF	If A/C ECM setting is set to “ON” in case of model without auto A/C, illumination change to night illumination and it is difficult to be recognized.
P/W ECM setting	OFF	ON	Set to “OFF”.
		OFF	
wiper deicer	OFF	ON	ON signal does not output with operation of wiper deicer switch if wiper deicer is set to “OFF” in models with a wiper deicer.
		OFF	
Rear fog light setting	OFF	ON	Set to “OFF”.
		OFF	
Factory or Market setting (Reset of body integrated unit)	Factory	Factory (Reset)	If Factory or Market setting is set to “Factory”, registrations of items above is changed to “OFF”. After setting, be sure to set to “Market”.
		Market (Confirmed)	

CAUTION:
- **To perform normal operation of vehicle and diagnosis, the above settings must match the actual vehicle equipment.**
- **When body integrated unit is a new part or “Factory” mode, key illumination blinks to show equipment settings have not been completed.**
- **Be sure not to change Factory or Market setting except when installing a new body integrated unit.**

NOTE:
“Factory” mode:
- Body integrated unit has not been set yet. It can be recognized by key illumination blinking with ignition switch turned to ON.
- All replacement body integrated units are set to “Factory” mode. When replacing a body integrated unit, be sure to perform the registration operation.

“Market” mode:
Each settings have been set. It can be recognized by key illumination coming on in concocting with room light and going off with ignition switch turned to ON.

7) Perform the Factory setting. On the «ECM customizing" display screen of Subaru Select Monitor, select the {Factory or Market setting} and select the [OK].
8) Change the mode from Factory to Market.
9) Change to the immobilizer cartridge, and register the immobilizer key. (For models with immobilizer, perform the operation according to the "PC application help for Subaru Select Monitor".)
10) When key registration is completed, "Do you want to register remote engine start?" is displayed. Perform registration only for equipped models.
11) Perform the function setting (ECM customizing). <Ref. to LAN(diag)-21, FUNCTION SETTING (ECM CUSTOMIZING), OPERATION, Subaru Select Monitor.>

NOTE:
For details concerning the operation procedure, refer to the "PC application help for Subaru Select Monitor".

7. CLEAR MEMORY MODE

1) On the «Main Menu» display, select the {2. Each System Check}.
2) On the «System Selection Menu» display, select the {Integ. unit mode}.
3) Select the [OK] after the information of body integrated unit type is displayed.
4) On the «Integ. unit mode failure diag» display, select the {Clearing Memory}.

Display	Contents to be displayed
Clear Memory ?	Clear function of DTC and freeze frame data

5) When "Done" is shown on the display screen, turn the ignition switch to OFF.

NOTE:
For details concerning the operation procedure, refer to the "PC application help for Subaru Select Monitor".

8. FREEZE FRAME DATA

NOTE:
- Data stored at the time of trouble occurrence is shown on the display.
- Freeze frame data will be memorized maximum to 20.
- If freeze frame data is not stored in memory correctly (caused by low power supply of body integrated unit), DTC will be displayed with "?" on the head of it in the Subaru Select Monitor display. This shows it may be an unreliable reading.

9. FUNCTION SETTING (ECM CUSTOMIZING)

1) On the «Main Menu» display, select the {Each System Check}.
2) On the «System Selection Menu» display, select the {Integ. unit mode}.
3) On the «Integ. unit mode failure diag» display, select the {ECM customizing}.
4) Change the setting with UP/DOWN key and set with the [OK].

List of function setting item (ECM customizing)

Data	Initial setting value	Customize setting	Remarks		Destination Specifications
Off delay time	Normal		Delay time below can be selected by setting.		
			After door closed	After keyless unlock	
		OFF	0 sec.	0 sec.	
		Short	3 sec.	10 sec.	
		Normal	5 sec.	20 sec.	
		Long	8 sec.	30 sec.	
Outside Temp. Offset	0°C	–2 — +2 (increment of 0.5)	If it is set to +2.0°C at outside temperature of 12°, the displayed outside temperature will be 14°C.		
Rr defogger op. mode	15 min.	15 min.	Automatically stops in 15 minutes after switch is turned to ON.		
		Continuous	Repeats active condition for 15 minutes and inactive condition for 2 minutes until switch is turned to OFF.		
Wiper deicer op. mode	15 min.	15 min.	Automatically stops in 15 minutes after switch is turned to ON.		
		Continuous	Repeats active condition for 15 minutes and inactive condition for 2 minutes until switch is turned to OFF.		
Security Alarm Setup	ON	ON	Security alarm (hazard, horn or siren) in active condition		
		OFF	Security alarm in inactive condition		
Impact Sensor Setup	OFF	ON	Workable when Impact Sensor Setup is set to “ON”. Impact sensor in active condition		
		OFF	Impact sensor in inactive condition (Always set to OFF for vehicles not equipped with the sensor.)		
Alarm delay setup	ON		After doors are locked by keyless entry system operated, the alarm monitor starts in following time.		
		ON	Delay time is 30 seconds.		
		OFF	Delay time is 0 seconds.		
Lockout prevention	ON	ON	Lockout prevention in active condition (The function does not operate if safety knob is locked by hand.)		
		OFF	Lockout prevention in inactive condition		
Impact sensor	OFF	ON	Vehicle is controlled in impact sensor equipped mode. (Make sure to set to OFF for models without the impact sensor. When set to “ON”, hazard, the horn or siren will operate after doors are locked by the keyless entry system operation (Alarm monitor start).		Set to “ON” when an optional impact sensor is installed.
		OFF	Vehicle is controlled in impact sensor no-equipped mode.		
Answer-back buzzer setup	ON	ON	Workable when answer-back buzzer setup is set to “ON”. When lock/unlock is selected by keyless entry system operated, answer-back buzzer operates.		
		OFF	When lock/unlock is selected by keyless entry system operated, answer-back buzzer does not sound.		
Hazard answer-back setup	ON	ON	Workable when hazard answer-back setup is set to “ON”. When lock/unlock is selected by keyless entry system operated, hazard answer-back buzzer operates.		
		OFF	When lock/unlock is selected by keyless entry system operated, hazard answer-back does not operate.		

Data	Initial setting value	Customize setting	Remarks	Destination Specifications
Ans.-back Buzzer	ON	ON	Vehicle is controlled in answer-back buzzer equipped mode.	
		OFF	Vehicle is controlled in answer-back buzzer non-equipped mode. (Always set to OFF for vehicles not equipped with the answer-back.)	
Initial keyless setting	—	—	—	
		Execution	Settings of keyless entry system are initialized. (Auto-lock time: 30 sec., Answer-back buzzer setup: ON, Hazard answer-back setup: ON, Automatic locking setup: ON, Ans.-back Buzzer: ON)	
Initial button setting	—	—	—	
		Execution	Settings of each function are initialized. (Off delay time: Normal, R defogger op. mode: 15 min., Wiper deicer op. mode: 15 min., Lockout prevention: ON)	
Passive Alarm	OFF	ON	Workable when passive arming is set to “ON.”	
		OFF		
Door open warning (prevention of battery run-out)	ON	ON	If detecting door open for 10 minutes, room light, key illumination and door warning light are turned off to prevent battery run-out.	
		OFF	Room light, key illumination and door warning light is not turned off.	
Belt Warning Switch	OFF	ON	Alarm is set off with the indicator lit and buzzer beep from the first to third stage according to the vehicle speed and whether or not seat belts are worn.	
		OFF	Turns off the indicator and stops buzzer except for the first stage.	

5) After setting, make sure that vehicle equipment is same as the setting changed in the {Current Data Display & Save}.

CAUTION:
- **The above settings must match the actual vehicle equipment for proper operation.**
- **Do not change settings except for setting above while setting the functions.**
- **Be sure not to change Factory or Market setting except when installing a new body integrated unit.**

NOTE:
For details concerning the operation procedure, refer to the “PC application help for Subaru Select Monitor”.

10.FUNCTION CHECK

In order to check the body integrated unit function, inspect the body integrated unit and actuator using Subaru Select Monitor without operating switches.
1) On the «Main Menu» display, select the {Each System Check}.
2) On the «System Selection Menu» display, select the {Integ. unit mode}.
3) On the «Integ. unit mode failure diag» display, select the {Function check}.
4) Select the item to be operated on the «Function check» display screen with «UP/Down key» and select the [OK].

FUNCTION CHECK
HEATER COCK VALVE OUTPUT
DOOR LOCK ACTUATOR LOCK OUTPUT
ALL SEAT UNLOCK OUTPUT
HORN OUTPUT
R GATE/TRUNK UNLK OUTPUT
DOUBLE LOCK OUTPUT
SHIFT LOCK SOLENOID
KEY LOCK OUTPUT
LAN00018

5) Pressing [OK] starts, [NO] cancels the operation and [OK] returns to the System Operation Check Mode display screen.

NOTE:
If not equipped (based on area or condition), process will not go on.

B: INSPECTION

1. COMMUNICATION FOR INITIALIZING IMPOSSIBLE

DETECTING CONDITION:
Faulty harness connectors
TROUBLE SYMPTOM:
Not communicable with Subaru Select Monitor.
WIRING DIAGRAM:

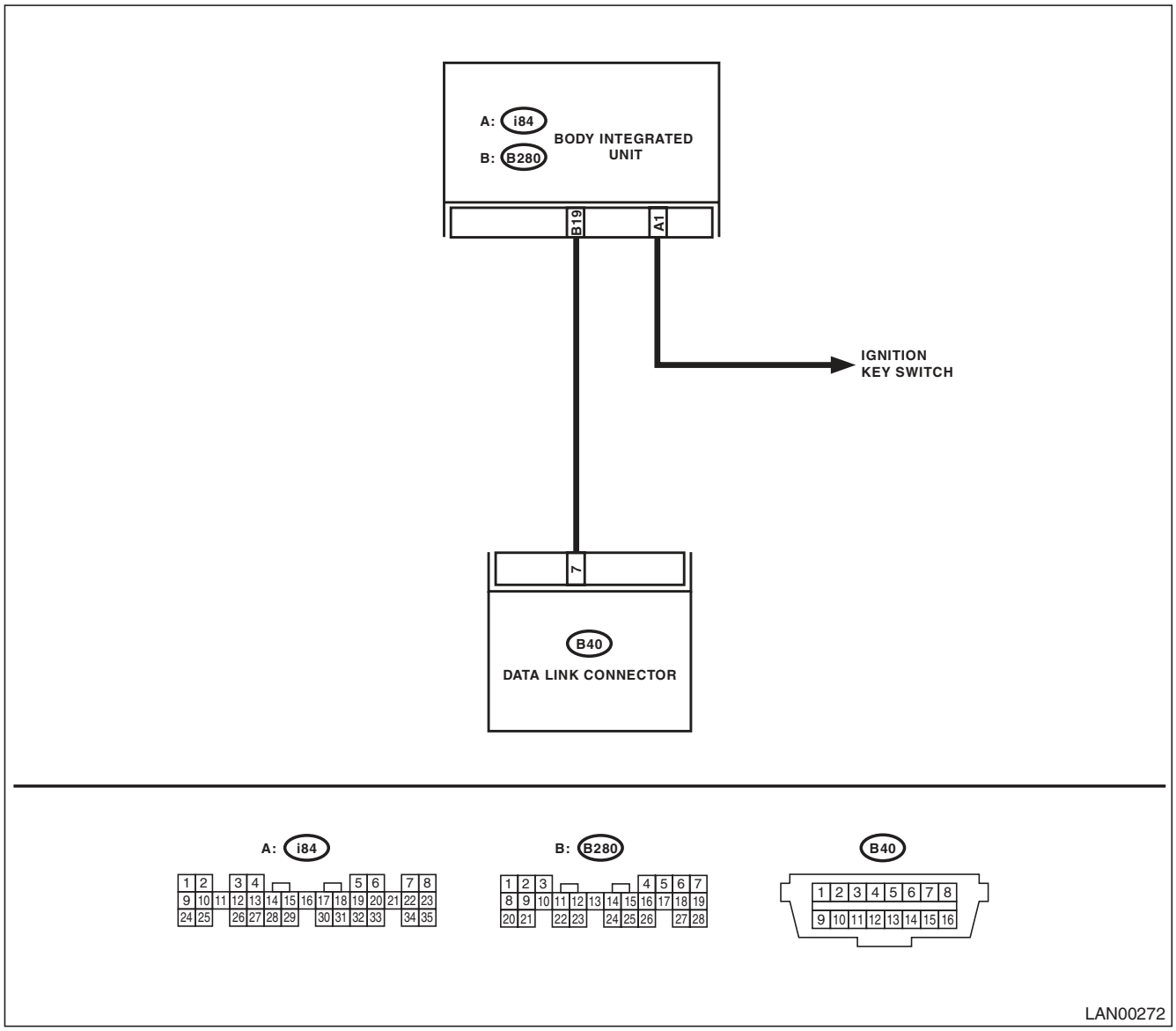

	Step	Check	Yes	No
1	**CHECK IGNITION SWITCH.**	Is the ignition switch ON?	Go to step **2**.	Turn the ignition switch to ON, and select Integ. Unit mode using Subaru Select Monitor.
2	**CHECK BATTERY.** 1) Turn the ignition switch to OFF. 2) Measure the battery voltage.	Is the voltage 11 V or more?	Go to step **3**.	Charge or replace the battery.
3	**CHECK BATTERY TERMINAL.**	Is there poor contact at the battery terminal?	Repair or tighten the battery terminal.	Go to step **4**.
4	**CHECK COMMUNICATION OF SUBARU SELECT MONITOR.** 1) Turn the ignition switch to ON. 2) Using the Subaru Select Monitor, check whether communication to other system can be executed normally.	Is the system name displayed?	Go to step **7**.	Go to step **5**.
5	**CHECK COMMUNICATION OF SUBARU SELECT MONITOR.** 1) Turn the ignition switch to OFF. 2) Disconnect the body integrated unit connector. 3) Turn the ignition switch to ON. 4) Check whether communication to other systems can be executed normally.	Is the system name displayed?	Go to step **7**.	Go to step **6**.
6	**CHECK HARNESS CONNECTOR BETWEEN EACH CONTROL UNIT AND SUBARU SELECT MONITOR.** 1) Turn the ignition switch to ON. 2) Disconnect the body integrated unit connector. 3) Measure the resistance between data link connector and chassis ground. ***Connector & terminal*** ***(B40) No. 7 — Chassis ground:***	Is the resistance 1 MΩ or more?	Go to step **7**.	Repair the harness and connector between each control unit and Subaru Select Monitor.
7	**CHECK OUTPUT SIGNAL TO BODY INTEGRATED UNIT.** 1) Turn the ignition switch to ON. 2) Measure the voltage between body integrated unit and chassis ground. ***Connector & terminal*** ***(B40) No. 7 (+) — Chassis ground (–):***	Is the voltage less than 1 V?	Go to step **8**.	Repair the harness and connector between each control unit and Subaru Select Monitor.
8	**CHECK HARNESS CONNECTOR BETWEEN BODY INTEGRATED UNIT AND DATA LINK CONNECTOR.** Measure the resistance between body integrated unit and data link connector. ***Connector & terminal*** ***(B40) No. 7 — (B280) No. 19:***	Is the resistance less than 1 Ω?	Go to step **9**.	Repair the harness and connector between body integrated unit and Subaru Select Monitor.
9	**CHECK INSTALLATION OF BODY INTEGRATED UNIT CONNECTOR.** Turn the ignition switch to OFF.	Is the body integrated unit connector inserted into body integrated unit until the clamp locks onto it?	Go to step **10**.	Insert the body integrated unit connector into body integrated unit.
10	**CHECK POWER SUPPLY CIRCUIT.** 1) Turn the ignition switch to ON (engine OFF). 2) Measure the ignition voltage between body integrated unit connector and chassis ground. ***Connector & terminal*** ***(i84) No. 1 (+) — Chassis ground (–):***	Is the voltage 10 V or more?	Go to step **11**.	Repair the open circuit of harness between body integrated unit and battery.

Step		Check	Yes	No
11	**CHECK HARNESS CONNECTOR BETWEEN BODY INTEGRATED UNIT AND CHASSIS GROUND.** 1) Turn the ignition switch to OFF. 2) Disconnect the connector from body integrated unit. 3) Measure the resistance of harness between the body integrated unit and chassis ground. ***Connector & terminal*** ***(B280) No. 19 — Chassis ground:***	Is the resistance 1 MΩ or more?	Go to step **12**.	Repair the poor contact of harness between body integrated unit and ground.
12	**CHECK POOR CONTACT OF CONNECTORS.**	Is there poor contact at control unit ground and Subaru Select Monitor?	Repair the poor contact of connector.	Replace the body integrated unit. <Ref. to SL-56, Body Integrated Unit.>

CAUTION:
When replacing body integrated unit on the model with immobilizer system, refer to the "PC application help for Subaru Select Monitor"

2. WITHOUT DTC

DETECTING CONDITION:
Defective combination meter
TROUBLE SYMPTOM:
- Communication error display in odo/trip meter is not cleared. (Except for meter with MID)
- "No diagnostic Code Present" will be displayed on the Subaru Select Monitor. is displayed on Subaru Select Monitor.

NOTE:
If DTC is not displayed on Subaru Select Monitor, LAN communication System should be OK.

Step		Check	Yes	No
1	**CHECK DTC.** Read the DTC of body integrated unit using Subaru Select Monitor.	Is DTC displayed?	Perform the diagnosis according to DTC.	Go to step **2**.
2	**CHECK COMBINATION METER.** Perform the self-diagnosis of combination meter.	Is combination meter OK?	Go to step **3**.	Replace the combination meter. <Ref. to IDI-22, Combination Meter.>
3	**CHECK BODY INTEGRATED UNIT.** 1) Display the current data of ECM using Subaru Select Monitor. 2) Check data of "Body Int. Unit Data".	Is "ON" displayed?	Go to step **4**.	Replace the body integrated unit. <Ref. to SL-56, Body Integrated Unit.>
4	**CHECK BODY INTEGRATED UNIT.** 1) Display the current data of ECM using Subaru Select Monitor. 2) Check data of "Body Int. Unit Count".	Is "ON" displayed?	Repair the poor contact of connector.	Replace the body integrated unit. <Ref. to SL-56, Body Integrated Unit.>

7. Read Diagnostic Trouble Code (DTC)

A: OPERATION

For details concerning DTC reading procedure, refer to “Subaru Select Monitor”. <Ref. to LAN(diag)-12, READ DIAGNOSTIC TROUBLE CODE (DTC), OPERATION, Subaru Select Monitor.>

8. Clear Memory Mode

A: OPERATION

For details concerning DTC clear operation, refer to “Subaru Select Monitor”. <Ref. to LAN(diag)-20, CLEAR MEMORY MODE, OPERATION, Subaru Select Monitor.>

9. Read Current Data

A: OPERATION

1) On the «Main Menu» display, select the {Each System Check}.
2) On the «System Selection Menu» display, select the {Integ. unit mode}.
3) On the «Integ. unit mode failure diag» display, select the {Current Data Display & Save}.
4) On the «Data Display Menu» display, select the {Data Display}.
5) Using the scroll key, scroll the display screen up or down until the desired data is shown.
<Ref. to LAN(diag)-13, DISPLAY OF ANALOG DATA, OPERATION, Subaru Select Monitor.> <Ref. to LAN(diag)-14, DISPLAY OF ON/OFF DATA, OPERATION, Subaru Select Monitor.> <Ref. to LAN(diag)-17, CONFIRMATION OF CURRENT SETTING, OPERATION, Subaru Select Monitor.>

10. Function Setting (Customize)

A: OPERATION

For detailed procedures of function setting (ECM customizing), refer to “SUBARU SELECT MONITOR”. <Ref. to LAN(diag)-21, FUNCTION SETTING (ECM CUSTOMIZING), OPERATION, Subaru Select Monitor.>

11. List of Diagnostic Trouble Code (DTC)

A: LIST

DTC	Item	Content of diagnosis	Note
B1100	Integ. Unit System Error	Body integrated unit internal error	<Ref. to LAN(diag)-34, DTC B1100 INTEG. UNIT SYSTEM ERROR, Diagnostic Procedure with Diagnostic Trouble Code (DTC).>
B1101	BATT p/supply Malfunction Cont.	Open or short in battery power supply control circuit	<Ref. to LAN(diag)-35, DTC B1101 BATT P/SUPPLY MALFUNCTION CONT, Diagnostic Procedure with Diagnostic Trouble Code (DTC).>
B1102	BATT p/supply Malfunction Backup	Open or short of battery power supply backup circuit	<Ref. to LAN(diag)-37, DTC B1102 BATT P/SUPPLY MALFUNCTION BACKUP, Diagnostic Procedure with Diagnostic Trouble Code (DTC).>
B1103	Ignition Power Failure	Open or short in IGN power supply circuit	<Ref. to LAN(diag)-39, DTC B1103 IGNITION POWER FAILURE, Diagnostic Procedure with Diagnostic Trouble Code (DTC).>
B1104	ACC Power Failure	Open or short in ACC power supply circuit	<Ref. to LAN(diag)-41, DTC B1104 ACC POWER FAILURE, Diagnostic Procedure with Diagnostic Trouble Code (DTC).>
B1105	Key Interlock Circuit Abnormal	Ground short of key interlock circuit	<Ref. to LAN(diag)-43, DTC B1105 KEY INTERLOCK CIRCUIT ABNORMAL, Diagnostic Procedure with Diagnostic Trouble Code (DTC).>
B1106	Shift Lock Circuit Failure	Ground short of shift lock circuit	<Ref. to LAN(diag)-45, DTC B1106 SHIFT LOCK CIRCUIT FAILURE, Diagnostic Procedure with Diagnostic Trouble Code (DTC).>
U1201	CAN-HS Counter Abnormal	Malfunction of high-speed CAN communication	<Ref. to LAN(diag)-47, DTC U1201 CAN-HS COUNTER ABNORMAL, Diagnostic Procedure with Diagnostic Trouble Code (DTC).>
U1202	CAN-HS Bus Off	Any unit is cut communication.	<Ref. to LAN(diag)-51, DTC U1202 CAN-HS BUS OFF, Diagnostic Procedure with Diagnostic Trouble Code (DTC).>
U1211	CAN-HS ECM Data Abnormal	Received error data from ECM.	<Ref. to LAN(diag)-55, DTC U1211 CAN-HS ECM DATA ABNORMAL, Diagnostic Procedure with Diagnostic Trouble Code (DTC).>
U1212	CAN-HS TCM Data Abnormal	Received error data from TCM.	<Ref. to LAN(diag)-57, DTC U1212 CAN-HS TCM DATA ABNORMAL, Diagnostic Procedure with Diagnostic Trouble Code (DTC).>
U1213	CAN-HS VDC/ABS Data Abnormal	Received error data from VDC/ABS module.	<Ref. to LAN(diag)-59, DTC U1213 CAN-HS VDC/ABS DATA ABNORMAL, Diagnostic Procedure with Diagnostic Trouble Code (DTC).>
U1221	CAN-HS ECM No-Receive Data	Not received data from ECM.	<Ref. to LAN(diag)-61, DTC U1221 CAN-HS ECM NO-RECEIVE DATA, Diagnostic Procedure with Diagnostic Trouble Code (DTC).>
U1222	CAN-HS TCM No-Receive Data	Not received data from TCM.	<Ref. to LAN(diag)-63, DTC U1222 CAN-HS TCM NO-RECEIVE DATA, Diagnostic Procedure with Diagnostic Trouble Code (DTC).>
U1223	CAN-HS VDC/ABS No-Receive Data	Not received data from VDC/ABS CM.	<Ref. to LAN(diag)-65, DTC U1223 CAN-HS VDC/ABS NO-RECEIVE DATA, Diagnostic Procedure with Diagnostic Trouble Code (DTC).>
U1300	CAN-LS Malfunction	Open or short in CAN-LS circuit, on each side or both sides.	<Ref. to LAN(diag)-67, DTC U1300 CAN-LS MALFUNCTION, Diagnostic Procedure with Diagnostic Trouble Code (DTC).>

List of Diagnostic Trouble Code (DTC)

DTC	Item	Content of diagnosis	Note
U1301	CAN-LS Counter Abnormal	Malfunction of CAN-LS communication	<Ref. to LAN(diag)-70, DTC U1301 CAN-LS COUNTER ABNORMAL, Diagnostic Procedure with Diagnostic Trouble Code (DTC).>
U1302	CAN-LS Bus Off	Any unit is cut communication.	<Ref. to LAN(diag)-73, DTC U1302 CAN-LS BUS OFF, Diagnostic Procedure with Diagnostic Trouble Code (DTC).>
U1311	CAN-LS Meter Unit Data Abnormal	Received error data from meter.	<Ref. to LAN(diag)-76, DTC U1311 CAN-LS METER UNIT DATA ABNORMAL, Diagnostic Procedure with Diagnostic Trouble Code (DTC).>
U1313	CAN-LS Monitor Data Abnormal	Received error data from monitor.	<Ref. to LAN(diag)-78, DTC U1313 CAN-LS MONITOR DATA ABNORMAL, Diagnostic Procedure with Diagnostic Trouble Code (DTC).>
U1321	CAN-LS Meter No-Receive Data	Not received error data from meter.	<Ref. to LAN(diag)-79, DTC U1321 CAN-LS METER NO-RECEIVE DATA, Diagnostic Procedure with Diagnostic Trouble Code (DTC).>
B1401	M Collation NG	Immobilizer related malfunction	<Ref. to IM(diag)-14, List of Diagnostic Trouble Code (DTC).>
B1402	Immobilizer Key Collation NG	Immobilizer related malfunction	<Ref. to IM(diag)-14, List of Diagnostic Trouble Code (DTC).>
B1403	E/G Request NG	Immobilizer related malfunction	<Ref. to IM(diag)-14, List of Diagnostic Trouble Code (DTC).>
B1500	Keyless UART Com. Malfunction	Open or short circuit in keyless UART circuit	<Ref. to LAN(diag)-81, DTC B1500 KEYLESS UART COM. MALFUNCTION, Diagnostic Procedure with Diagnostic Trouble Code (DTC).>

1. DTC TABLE

NOTE:
When more than two DTC codes are recorded, referring to their combination will make it easy to identify the possible cause. Refer to the list for typical examples.

DTC to Check	Diagnostic Code that was displayed.					Probable cause
	Body integrated unit	ECM	TCM	VDC/ ABSCM	Combination meter display (except for meter with MID)	
B1100 <Ref. to LAN(diag)-34, DTC B1100 INTEG. UNIT SYSTEM ERROR, Diagnostic Procedure with Diagnostic Trouble Code (DTC).>	B1100	—	—	—	Er IU	There could be a problem in the body integrated unit.
U1221 <Ref. to LAN(diag)-61, DTC U1221 CAN-HS ECM NO-RECEIVE DATA, Diagnostic Procedure with Diagnostic Trouble Code (DTC).>	U1221	—	P1718	C0057	Er HC	It is possible that the ECM is faulty.
U1222 <Ref. to LAN(diag)-63, DTC U1222 CAN-HS TCM NO-RECEIVE DATA, Diagnostic Procedure with Diagnostic Trouble Code (DTC).>	U1222	P0600	—	C0057	Er HC	It is possible that the TCM is faulty.
U1223 <Ref. to LAN(diag)-65, DTC U1223 CAN-HS VDC/ABS NO-RECEIVE DATA, Diagnostic Procedure with Diagnostic Trouble Code (DTC).>	U1223	P0600	P1718	—	Er HC	It is possible that the VDC/ ABSCM is faulty.
U1321 <Ref. to LAN(diag)-79, DTC U1321 CAN-LS METER NO-RECEIVE DATA, Diagnostic Procedure with Diagnostic Trouble Code (DTC).>	U1321	—	—	—	—	It is possible that the combination meter is faulty.
U1313 <Ref. to LAN(diag)-78, DTC U1313 CAN-LS MONITOR DATA ABNORMAL, Diagnostic Procedure with Diagnostic Trouble Code (DTC).>	U1313	—	—	—	—	It is possible that the navigation monitor is faulty.
B1500 <Ref. to LAN(diag)-81, DTC B1500 KEYLESS UART COM. MALFUNCTION, Diagnostic Procedure with Diagnostic Trouble Code (DTC).>	B1500	—	—	—	—	It is possible that the keyless entry module is faulty.

12. Diagnostic Procedure with Diagnostic Trouble Code (DTC)

A: DTC B1100 INTEG. UNIT SYSTEM ERROR

DTC DETECTING CONDITION:
System error in body integrated unit
TROUBLE SYMPTOM:
- Check light comes on in the combination meter, and displays communication error display “Er IU”. (Except for meter with MID)
- LAN communication immobilizer function may not be executed normally.

	Step	Check	Yes	No
1	**CHECK DTC.** Check the DTC displayed in the body integrated unit.	Is the DTC displayed a current malfunction?	Check the connection of body integrated unit. Go to step **2**.	Go to step **2**.
2	**CHECK DTC.** Turn the ignition switch to OFF and read DTCs again.	Is the DTC displayed a current malfunction?	Go to step **4**.	Go to step **3**.
3	**CHECK CURRENT DATA.** Using the Subaru Select Monitor, display engine speed and vehicle speed signal from ECM, TCM, VDC/ABS and body integrated unit under the same conditions and compare data.	Do all data values match?	Temporary poor contact occurs. Perform the Clear Memory operation.	Go to step **4**.
4	**CHECK ALL DTCS.**	Is DTC concerning ECM displayed?	Go to step **5**.	Replace the body integrated unit. <Ref. to SL-56, Body Integrated Unit.>
5	**CHECK DTC CONCERNING ECM.**	Is output DTC on ECM concerning CAN communication failure?	Replace the body integrated unit. <Ref. to SL-56, Body Integrated Unit.>	Perform the diagnosis according to DTC concerning ECM.

B: DTC B1101 BATT P/SUPPLY MALFUNCTION CONT

DTC DETECTING CONDITION:
Battery power supply control circuit is open or shorted.
TROUBLE SYMPTOM:
No malfunction occurs because the back-up power supply is activated.

NOTE:
When B1102 BATT p/supply (backup) malfunction is output at the same time, all the function of body integrated unit may not operate.
WIRING DIAGRAM:

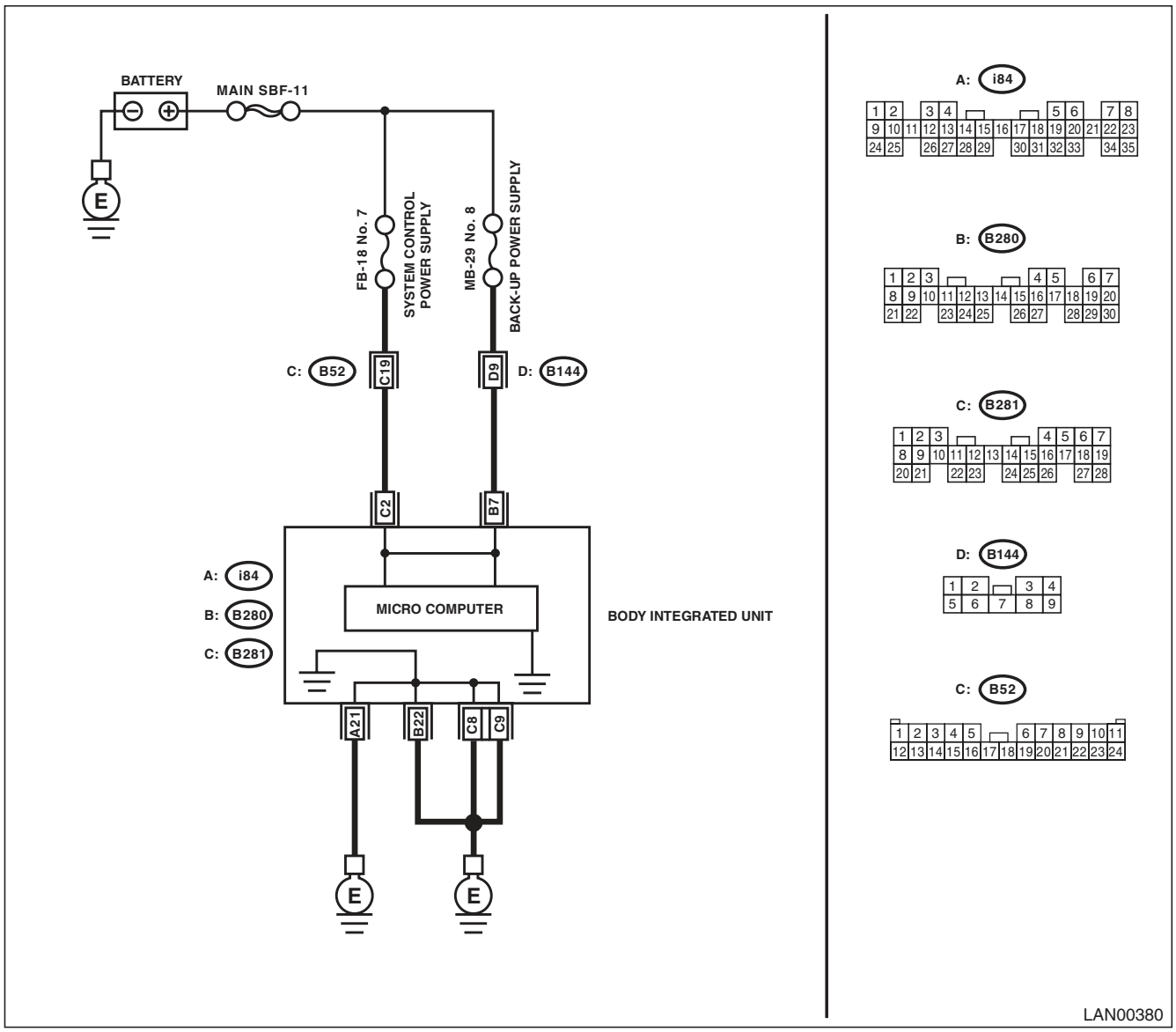

Step		Check	Yes	No
1	**CHECK FUSE.** 1) Turn the ignition switch to OFF. 2) Remove the fuse (No. 7).	Is the fuse blown out?	Replace the fuse (No. 7). If the replaced fuse has blown out easily, repair the short circuit of harness between fuse (No. 7) and body integrated unit.	Go to step **2**.
2	**CONTINUITY CHECK OF WIRING HARNESS.** 1) Disconnect the connector (B281) from body integrated unit. 2) Measure the voltage between body integrated unit connector and chassis ground. ***Connector & terminal*** ***(B281) No. 2 (+) — Chassis ground (–):***	Is the voltage 9 — 15 V?	Go to step **3**.	Repair the harness for open or shorted circuit between body integrated unit and fuse.
3	**CHECK POOR CONTACT OF CONNECTORS.**	Is there poor contact in body integrated unit connector?	Repair the poor contact of connector.	Go to step **4**.
4	**CHECK BODY INTEGRATED UNIT HARNESS.** 1) Connect all connectors. 2) Perform the Clear Memory Mode. 3) Read DTC.	Is the same DTC displayed?	Replace the body integrated unit. <Ref. to SL-56, Body Integrated Unit.>	Temporary poor contact occurs.

C: DTC B1102 BATT P/SUPPLY MALFUNCTION BACKUP

DTC DETECTING CONDITION:

Battery power supply backup circuit is open or shorted.

TROUBLE SYMPTOM:

- Engine malfunction indicator light may illuminates.
- Keyless entry, room light and key illumination do not operate.
- “En IU” may display in combination meter. (Except for meter with MID)

NOTE:

When B1101 BATT p/supply (cont.) malfunction are output at the same time, all function of body integrated unit may not operate.

WIRING DIAGRAM:

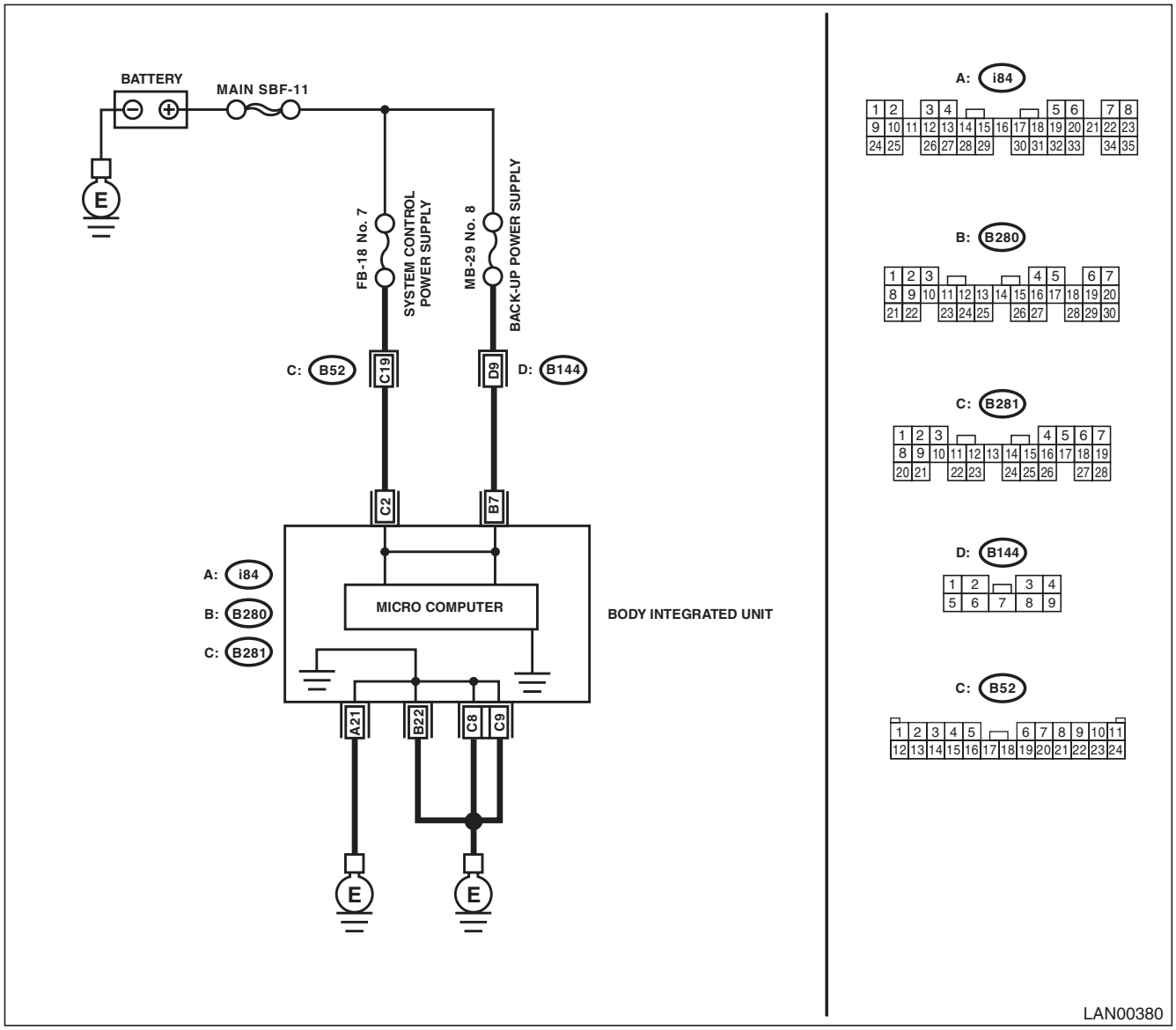

Step		Check	Yes	No
1	**CHECK FUSE.** 1) Turn the ignition switch to OFF. 2) Remove the fuse (No. 8).	Is the fuse blown out?	Replace the fuse (No. 8). If the replaced fuse has blown out easily, repair the short circuit of harness between fuse (No. 8) and body integrated unit.	Go to step **2**.
2	**CONTINUITY CHECK OF WIRING HARNESS.** 1) Disconnect the connector (B280) from body integrated unit. 2) Measure the voltage between body integrated unit connector and chassis ground. ***Connector & terminal*** ***(B280) No. 7 (+) — Chassis ground (–):***	Is the voltage 9 — 15 V?	Go to step **3**.	Repair the harness for open or shorted circuit between body integrated unit and fuse.
3	**CHECK POOR CONTACT OF CONNECTORS.**	Is there poor contact in body integrated unit connector?	Repair the poor contact of connector.	Go to step **4**.
4	**CHECK BODY INTEGRATED UNIT HARNESS.** 1) Connect all connectors. 2) Perform the Clear Memory Mode. 3) Read DTC.	Is the same DTC displayed?	Replace the body integrated unit. <Ref. to SL-56, Body Integrated Unit.>	Temporary poor contact occurs.

D: DTC B1103 IGNITION POWER FAILURE

DTC DETECTING CONDITION:

IGN power supply circuit is open or shorted.

TROUBLE SYMPTOM:

Symptoms such as illuminating the malfunction indicator light or high speed CAN error display “Er HC” may occur. (Except for meter with MID)

WIRING DIAGRAM:

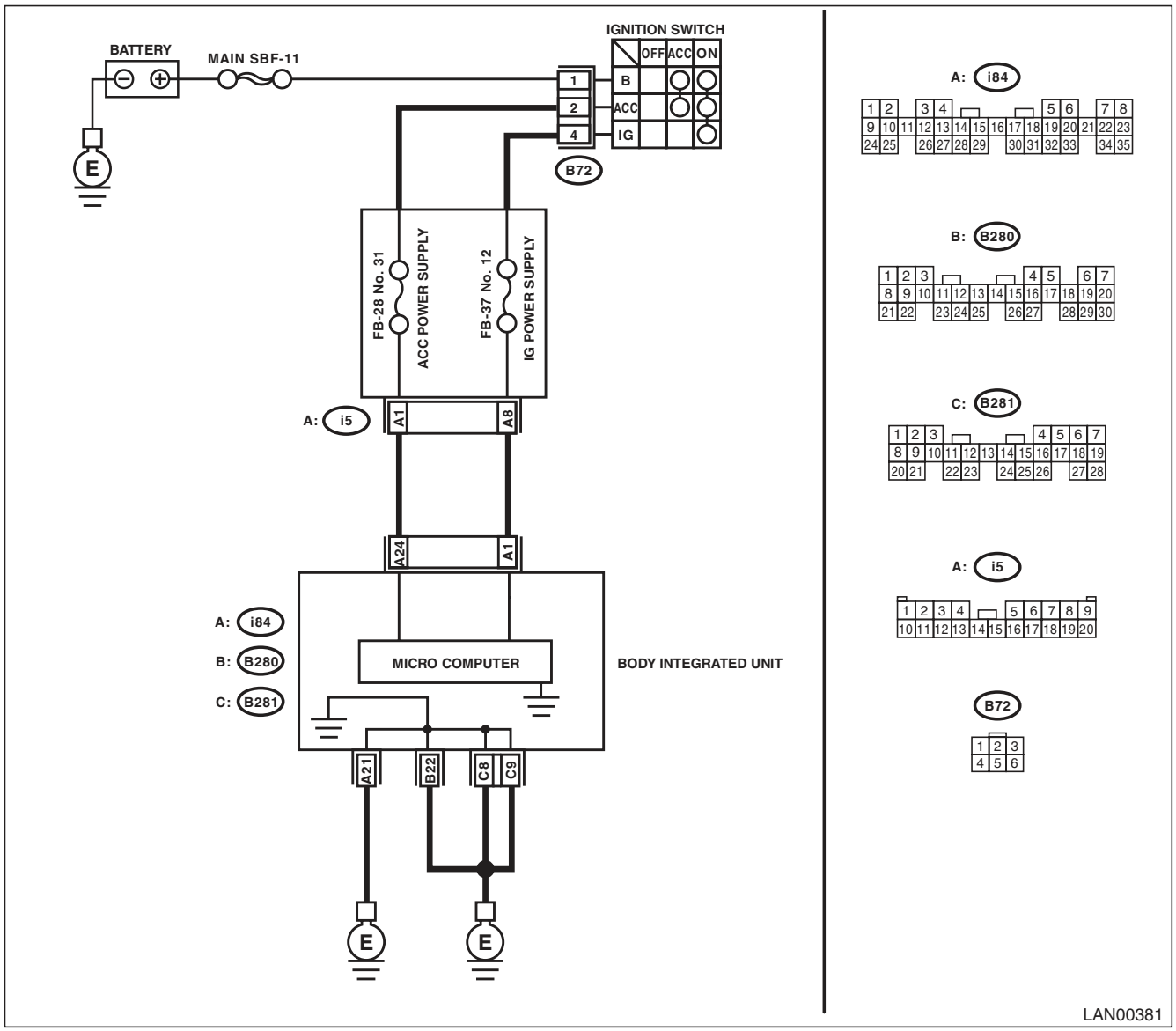

Diagnostic Procedure with Diagnostic Trouble Code (DTC)

	Step	Check	Yes	No
1	**CHECK FUSE.** 1) Turn the ignition switch to OFF. 2) Remove the fuse (No. 12).	Is the fuse blown out?	Replace the fuse (No. 12). If the replaced fuse has blown out easily, repair the short circuit of harness between fuse (No. 12) and body integrated unit.	Go to step **2**.
2	**CONTINUITY CHECK OF WIRING HARNESS.** 1) Disconnect the connector (i84) from body integrated unit. 2) Turn the ignition switch to ON. 3) Measure the voltage between body integrated unit connector and chassis ground. ***Connector & terminal*** ***(i84) No. 1 (+) — Chassis ground (–):***	Is the voltage 9 — 15 V?	Go to step **3**.	Repair the harness for open or shorted circuit between body integrated unit and fuse.
3	**CHECK POOR CONTACT IN CONNECTOR.**	Is there poor contact in body integrated unit connector?	Repair the poor contact of connector.	Go to step **4**.
4	**CHECK BODY INTEGRATED UNIT HARNESS.** 1) Connect all connectors. 2) Perform the Clear Memory Mode. 3) Read DTC.	Is the same DTC displayed?	Replace the body integrated unit. <Ref. to SL-56, Body Integrated Unit.>	Temporary poor contact occurs.

E: DTC B1104 ACC POWER FAILURE

DTC DETECTING CONDITION:
ACC power supply circuit is open or shorted.
TROUBLE SYMPTOM:
Rear wiper may not operate at ACC position.
WIRING DIAGRAM:

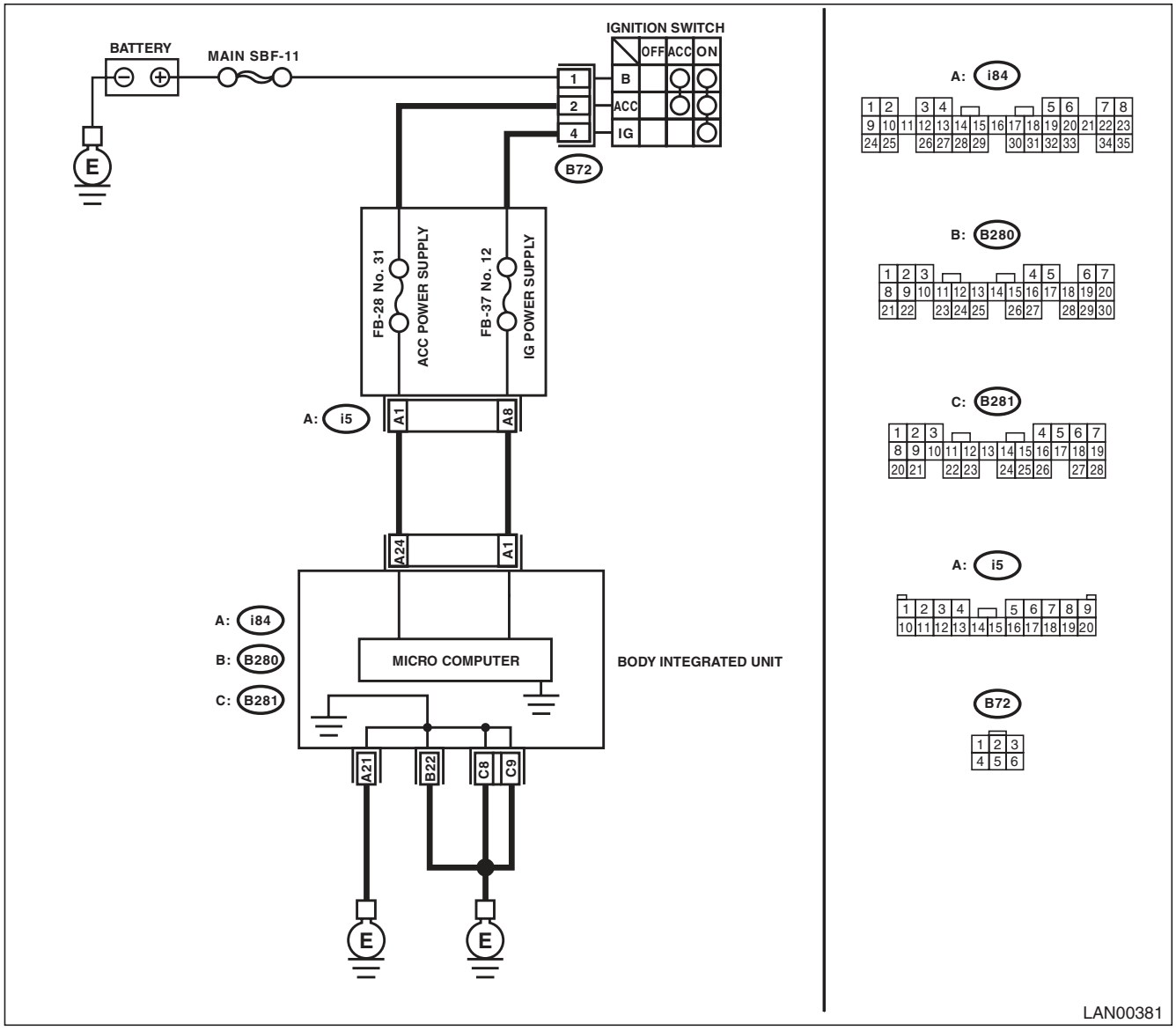

	Step	Check	Yes	No
1	**CHECK FUSE.** 1) Turn the ignition switch to OFF. 2) Remove the fuse (No. 31).	Is the fuse blown out?	Replace the fuse (No. 31). If the replaced fuse has blown out easily, repair the short circuit of harness between fuse (No. 31) and body integrated unit.	Go to step **2**.
2	**CONTINUITY CHECK OF WIRING HARNESS.** 1) Disconnect the connector (i84) from body integrated unit. 2) Turn the ignition switch to ON. 3) Measure the voltage between body integrated unit connector and chassis ground. ***Connector & terminal*** ***(i84) No. 24 (+) — Chassis ground (–):***	Is the voltage 9 — 15 V?	Go to step **3**.	Repair the harness for open or shorted circuit between body integrated unit and fuse.
3	**CHECK POOR CONTACT IN CONNECTOR.**	Is there poor contact in body integrated unit connector?	Repair the poor contact of connector.	Go to step **4**.
4	**CHECK BODY INTEGRATED UNIT HARNESS.** 1) Connect all connectors. 2) Perform the Clear Memory Mode. 3) Read DTC.	Is DTC displayed?	Replace the body integrated unit. <Ref. to SL-56, Body Integrated Unit.>	Temporary poor contact occurs.

F: DTC B1105 KEY INTERLOCK CIRCUIT ABNORMAL

DTC DETECTING CONDITION:

Key interlock circuit is shorted to ground.

TROUBLE SYMPTOM:

- There is no key interlock power supply.
- Key interlock does not release or does not keep lock condition.

WIRING DIAGRAM:

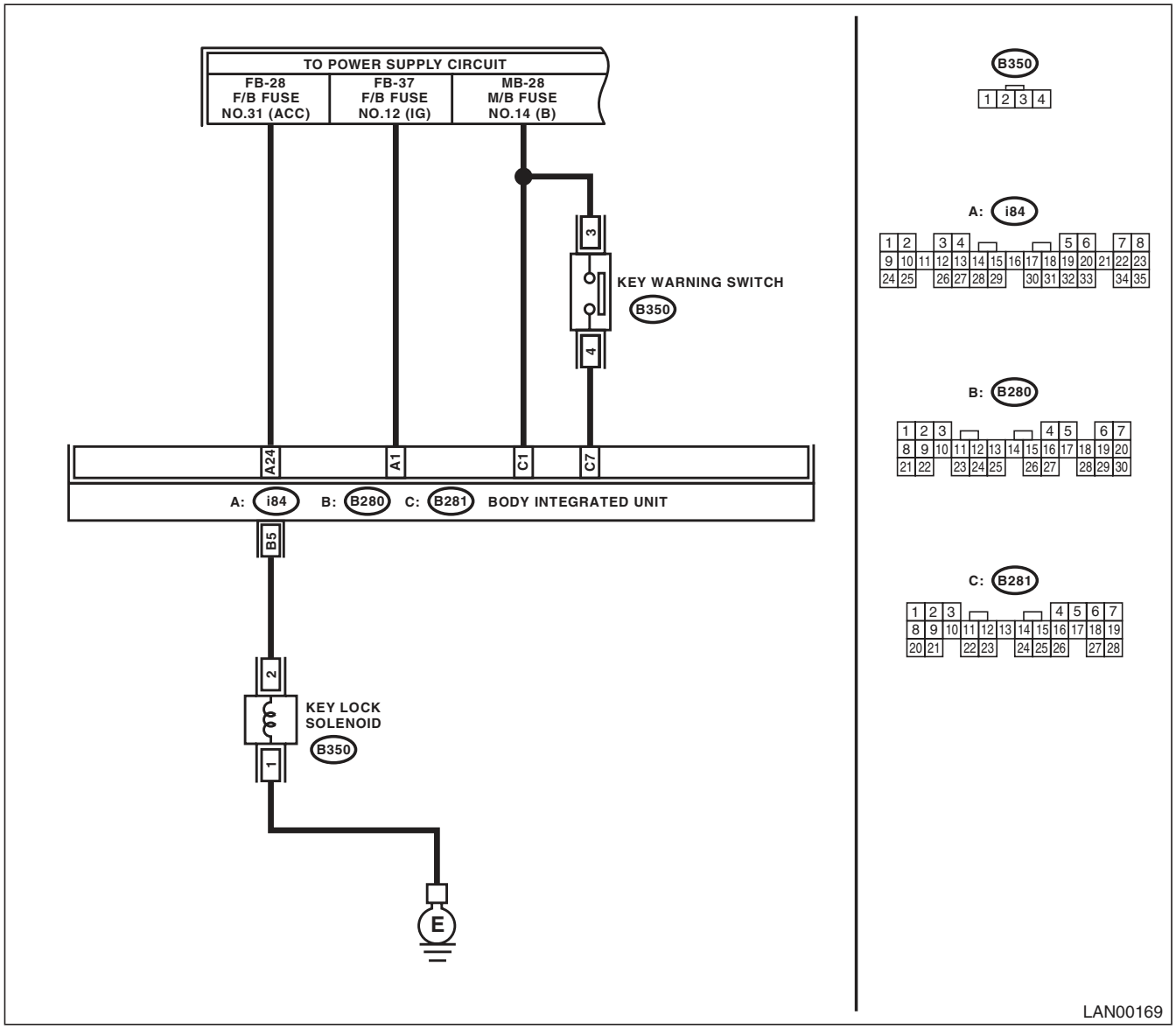

Step		Check	Yes	No
1	**CHECK KEY LOCK SOLENOID.** 1) Disconnect the connector of key lock solenoid. 2) Measure the internal resistance of key lock solenoid. ***Connector & terminal*** ***(B350) No. 1 — No. 2:***	Is the resistance between 10 — 20 Ω?	Go to step **2**.	Replace the key lock solenoid.
2	**CHECK GROUND CIRCUIT.** 1) Disconnect the connector of key lock solenoid. 2) Measure the resistance between the key lock solenoid connector and chassis ground. ***Connector & terminal*** ***(B350) No. 1 — Chassis ground:***	Is the resistance less than 10 Ω?	Go to step **3**.	Check the key lock solenoid ground circuit for short circuit and confirm the correct installation. Repair the ground circuit if defective.
3	**CHECK HARNESS.** 1) Disconnect the body integrated unit connector (B280) and key lock solenoid connector (B350). 2) Measure the resistance between body integrated unit connector and chassis ground. ***Connector & terminal*** ***(B280) No. 5 — Chassis ground:***	Is the resistance 1 MΩ or more?	Replace the body integrated unit. <Ref. to SL-56, Body Integrated Unit.>	Repair the short circuit of harness or replace harness.

G: DTC B1106 SHIFT LOCK CIRCUIT FAILURE

DTC DETECTING CONDITION:
Shift lock circuit is shorted to ground.
TROUBLE SYMPTOM:
Shift lock does not be released or remain locked.
WIRING DIAGRAM:

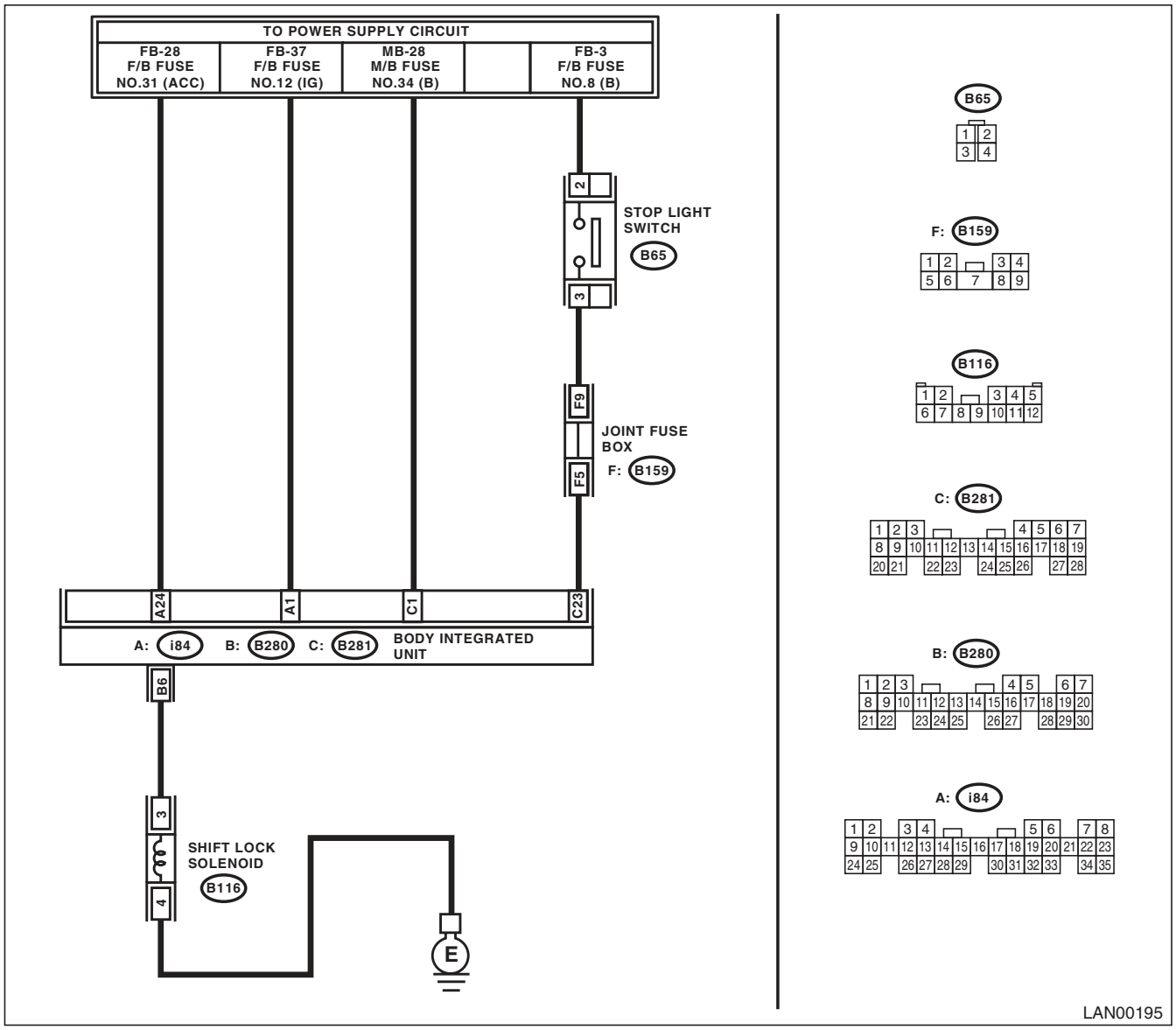

	Step	Check	Yes	No
1	**CHECK HARNESS.** 1) Disconnect the body integrated unit connector (B280). 2) Measure the resistance between body integrated unit connector and chassis ground. ***Connector & terminal*** ***(B280) No. 6 — Chassis ground:***	Is the resistance between 20 — 30 Ω?	Go to step **5**.	Go to step **2**.
2	**CHECK HARNESS.** 1) Disconnect the body integrated unit connector (B280). 2) Disconnect the shift lock solenoid connector. 3) Measure the resistance between body integrated unit connector and shift lock solenoid connector. ***Connector & terminal*** ***(B280) No. 6 — (B116) No. 3:***	Is the resistance less than 10 Ω?	Go to step **3**.	Repair or replace the open or short circuit of harness.
3	**CHECK SHIFT LOCK SOLENOID.** 1) Disconnect the shift lock solenoid connector. 2) Measure the internal resistance of shift lock solenoid. ***Connector & terminal*** ***(B116) No. 3 — No. 4:***	Is the resistance between 20 — 30 Ω?	Go to step **4**.	Replace the shift lock solenoid.
4	**CHECK GROUND CIRCUIT.** 1) Disconnect the shift lock solenoid connector. 2) Measure the resistance between the shift lock solenoid connector and chassis ground. ***Connector & terminal*** ***(B116) No. 4 — Chassis ground:***	Is the resistance less than 10 Ω?	Temporary poor contact occurs. Check the connection of each terminal and repair when necessary.	Replace the body integrated unit. <Ref. to SL-56, Body Integrated Unit.>
5	**CHECK HARNESS.** 1) Disconnect the body integrated unit connector (B280) and shift lock solenoid connector (B116). 2) Measure the resistance between body integrated unit connector (B280) and chassis ground. ***Connector & terminal*** ***(B280) No. 6 — Chassis ground:***	Is the resistance 1 MΩ or more?	Replace the body integrated unit. <Ref. to SL-56, Body Integrated Unit.>	Repair the short circuit of harness or replace harness.

H: DTC U1201 CAN-HS COUNTER ABNORMAL

DTC DETECTING CONDITION:

High speed CAN communication of body integrated unit which monitor the error data and non-received data are faulty.

TROUBLE SYMPTOM:

- “Er HC” is displayed in odo/trip meter. (Except for meter with MID)
- Malfunction indicator light illuminates.

WIRING DIAGRAM:

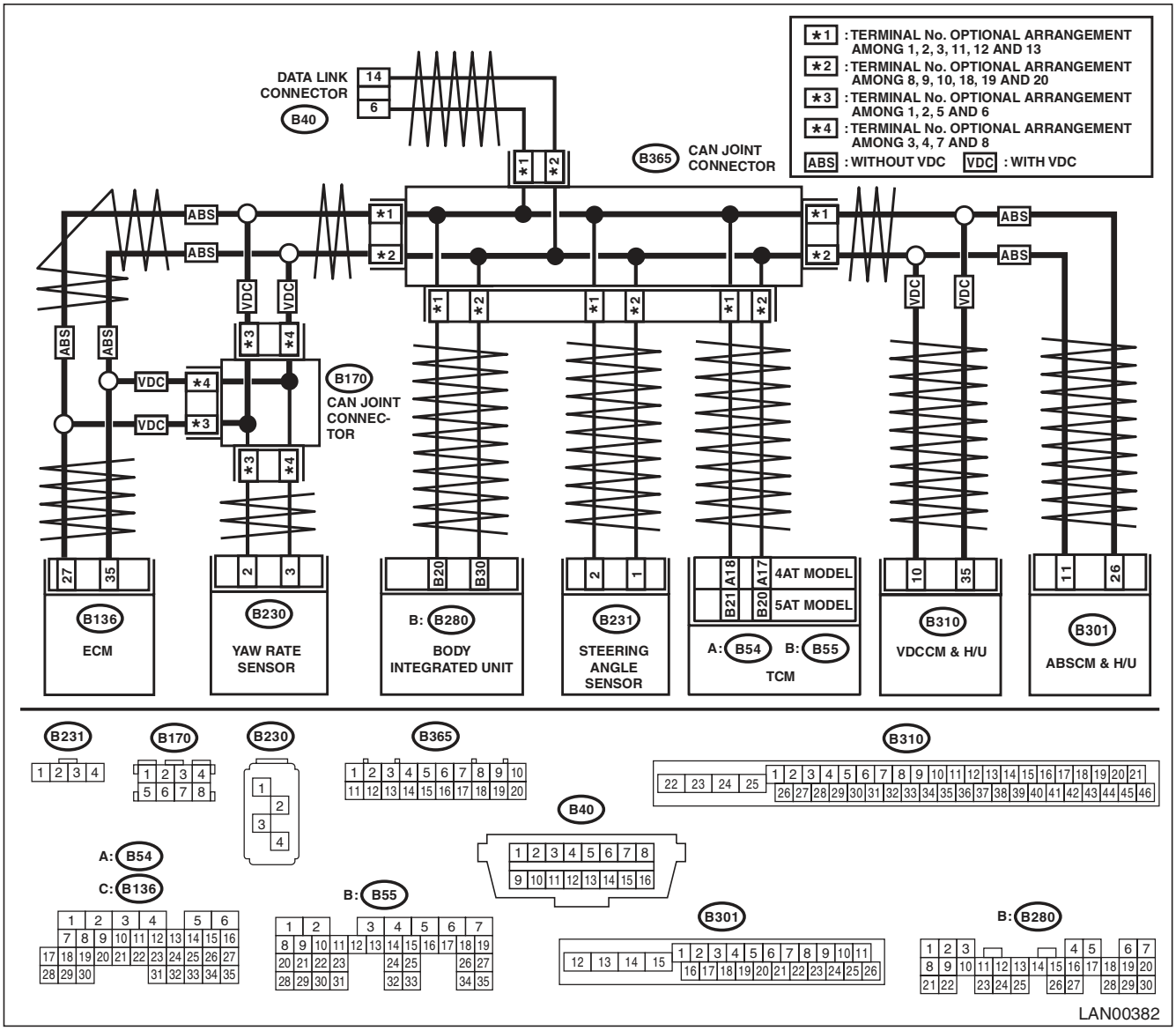

	Step	Check	Yes	No
1	**CHECK DTC.** Connect the Subaru Select Monitor and read all DTCs.	Is there any DTC other than for the body integrated unit?	Perform the diagnosis according to the DTC of other control modules.	Go to step **2**.
2	**CHECK DTC.** Check the DTC displayed in the body integrated unit.	Is the DTC displayed a current malfunction?	Check the connection of harness connectors. Go to step **3**.	Go to step **4**.
3	**CHECK DTC.** Turn the ignition switch to OFF and read DTCs again.	Is the DTC displayed a current malfunction?	Go to step **5**.	Go to step **4**.
4	**CHECK CURRENT DATA.** Using the Subaru Select Monitor, display engine speed and vehicle speed signal from ECM, TCM, VDC/ABS and body integrated unit under the same conditions and compare data.	Do all data values match?	Temporary poor contact occurs. Perform the Clear Memory operation.	Go to step **5**.
5	**CHECK HARNESS.** 1) Disconnect the body integrated unit connector (B280). 2) Connect the tester to vehicle side connector, and measure the resistance. ***Connector & terminal*** ***(B280) No. 20 — No. 30:***	Is the resistance between 55 — 65 Ω?	Go to step **6**.	Go to step **9**.
6	**CHECK HARNESS.** 1) Disconnect the TCM connector (B54). 2) Connect the tester to vehicle side connector, and measure the resistance. ***Connector & terminal*** ***5AT model:*** ***(B54) No. 20 — No. 21:*** ***4AT model:*** ***(B54) No. 17 — No. 18:***	Is the resistance between 55 — 65 Ω?	Go to step **7**.	Go to step **9**.
7	**CHECK HARNESS.** NOTE: For ABS model, Go to step **12**. 1) Disconnect the yaw rate sensor connector (B230). 2) Connect the tester to vehicle side connector, and measure the resistance. ***Connector & terminal*** ***(B230) No. 2 — No. 3:***	Is the resistance between 55 — 65 Ω?	Go to step **8**.	Go to step **9**.
8	**CHECK HARNESS.** 1) Disconnect the steering angle sensor connector (B231). 2) Connect the tester to vehicle side connector, and measure the resistance. ***Connector & terminal*** ***(B231) No. 1 — No. 2:***	Is the resistance between 55 — 65 Ω?	Go to step **12**.	Go to step **9**.
9	**CHECK HARNESS.**	Is the measured resistance 115 — 125 Ω when connecting the tester to vehicle side connector?	Go to step **12**.	Go to step **10**.
10	**CHECK HARNESS.**	Is the measured resistance less than 10 Ω when connecting the tester to vehicle side connector?	Repair or replace the short circuit of measured related harness.	Go to step **11**.

Step		Check	Yes	No
11	**CHECK HARNESS.**	Is the measured resistance 30 MΩ or more when connecting the tester to vehicle side connector?	Repair or replace the open circuit of measured related harness.	Go to step **12**.
12	**CHECK HARNESS.** 1) Disconnect the VDC/ABS CM connector. 2) Connect the tester to vehicle side harness, and measure the resistance. ***Connector & terminal*** ***Model with VDC:*** ***(B310) No. 10 — No. 35:*** ***Model without VDC:*** ***(B301) No. 11 — No. 26:***	Is the resistance between 115 — 125 Ω?	Go to step **13**.	Go to step **14**.
13	**CHECK CONTROL MODULE.** 1) Connect the VDC/ABS CM connector. 2) Disconnect the connector from ECM. 3) Connect the tester to vehicle side harness, and measure the resistance between terminals. ***Connector & terminal*** ***(B136) No. 27 — No. 35:***	Is the resistance between 115 — 125 Ω?	Go to step **16**.	Replace the VDC/ABS CM. <Ref. to VDC-7, VDC Control Module and Hydraulic Control Unit (VDCCM&H/U).>
14	**CHECK HARNESS.** 1) Connect the VDC/ABS CM connector. 2) Disconnect the connector from ECM. 3) Connect the tester to vehicle side harness, and measure the resistance between terminals. ***Connector & terminal*** ***(B136) No. 27 — No. 35:***	Is the resistance between 115 — 125 Ω?	Go to step **15**.	Repair or replace the open circuit of main wiring harness.
15	**CHECK CONTROL MODULE.** Connect the tester to ECM terminal, and measure the resistance. ***Connector & terminal*** ***(B136) No. 27 — No. 35:***	Is the resistance between 115 — 125 Ω?	Go to step **16**.	Replace the ECM. <Ref. to FU(H6DO)-38, Engine Control Module (ECM).>
16	**CHECK CONTROL MODULE.** 1) Connect all the control module connectors. 2) Connect the Subaru Select Monitor and perform the clear memory. 3) Disconnect the TCM connector (B54 or B55). 4) Turn the ignition switch to ON and read the DTC of body integrated unit. <Ref. to LAN(diag)-12, READ DIAGNOSTIC TROUBLE CODE (DTC), OPERATION, Subaru Select Monitor.>	Is DTC U1201 displayed?	Go to step **17**.	Check the TCM. <Ref. to 5AT(diag)-18, READ DIAGNOSTIC TROUBLE CODE (DTC), OPERATION, Subaru Select Monitor.>
17	**CHECK CONTROL MODULE.** 1) Connect the TCM control module connector. 2) Using the Subaru Select Monitor, perform the clear memory. 3) Disconnect the steering angle sensor connector (B231). 4) Turn the ignition switch to ON and read the DTC of the body integrated unit. <Ref. to LAN(diag)-12, READ DIAGNOSTIC TROUBLE CODE (DTC), OPERATION, Subaru Select Monitor.>	Is DTC U1201 displayed?	Go to step **18**.	Check the steering angle sensor. <Ref. to VDC(diag)-14, HOW TO USE SUBARU SELECT MONITOR, OPERATION, Subaru Select Monitor.>

Step		Check	Yes	No
18	**CHECK CONTROL MODULE.** 1) Connect the steering angle sensor connector. 2) Using the Subaru Select Monitor, perform the clear memory. 3) Disconnect the yaw rate sensor connector (B230). 4) Turn the ignition switch to ON and read the DTC of the body integrated unit. <Ref. to LAN(diag)-12, READ DIAGNOSTIC TROUBLE CODE (DTC), OPERATION, Subaru Select Monitor.>	Is DTC U1201 displayed?	Go to step **19**.	Check the yaw rate sensor. <Ref. to VDC(diag)-14, HOW TO USE SUBARU SELECT MONITOR, OPERATION, Subaru Select Monitor.>
19	**CHECK CONTROL MODULE.** 1) Connect all the control module connectors. 2) Check the data of “Body Int. Unit Data” on the current data display of ECM using Subaru Select Monitor.	Is the “ON” displayed?	Go to step **20**.	Replace the body integrated unit. <Ref. to SL-56, REMOVAL, Body Integrated Unit.>
20	**CHECK CONTROL MODULE.** Check the data of “Body Int. Unit Count” on the data display of ECM.	Is the “ON” displayed?	Inspect the ABS/VDC CM and ECM. <Ref. to ABS(diag)-13, HOW TO USE SUBARU SELECT MONITOR, OPERATION, Subaru Select Monitor.> <Ref. to VDC(diag)-14, HOW TO USE SUBARU SELECT MONITOR, OPERATION, Subaru Select Monitor.> <Ref. to EN(H6DO)(diag)-43, SUBARU SELECT MONITOR (NORMAL MODE), OPERATION, Read Diagnostic Trouble Code (DTC).>	Replace the body integrated unit. <Ref. to SL-56, REMOVAL, Body Integrated Unit.>

I: DTC U1202 CAN-HS BUS OFF

DTC DETECTING CONDITION:

- Find the unit or CAN line in which trouble occurs, and repair and replace it.
- Not received data and error data may be detected at the same time.

TROUBLE SYMPTOM:

"Er HC" is displayed in odo/trip meter. (Except for meter with MID)

WIRING DIAGRAM:

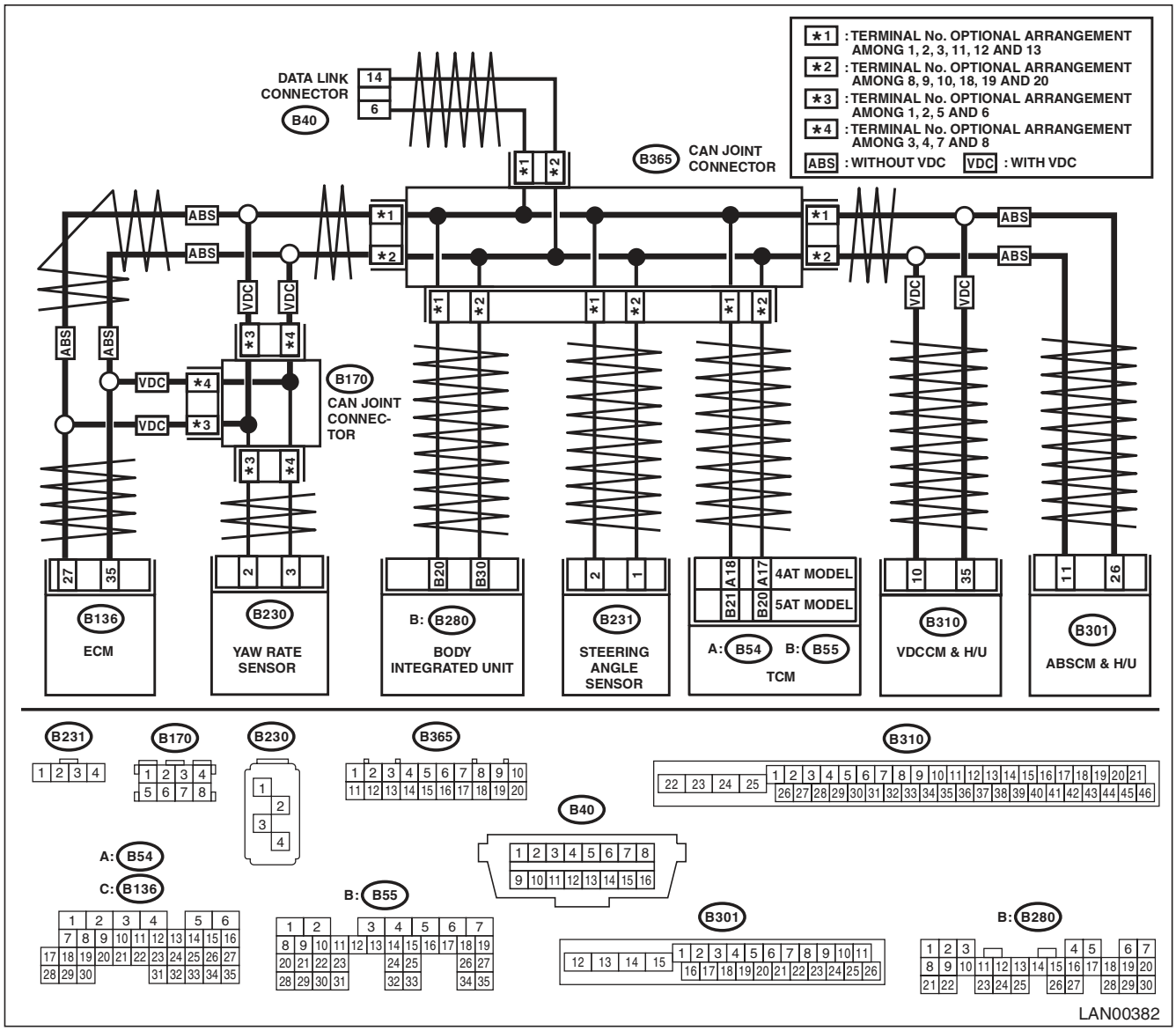

	Step	Check	Yes	No
1	**CHECK DTC.** Check the DTC displayed in the body integrated unit.	Is the DTC displayed a current malfunction?	Check the connection of harness connectors. Go to step **2**.	Go to step **2**.
2	**CHECK DTC.** Turn the ignition switch to OFF and read DTCs again.	Is the DTC displayed a current malfunction?	Check the connection of harness connectors. Go to step **4**.	Go to step **3**.
3	**CHECK CURRENT DATA.** Using the Subaru Select Monitor, display engine speed and vehicle speed signal from ECM, TCM, VDC/ABS and body integrated unit under the same conditions and compare data.	Do all data values match?	Temporary poor contact occurs. Perform the Clear Memory operation.	Go to step **4**.
4	**CHECK TCM.** 1) Disconnect the TCM connector (B54 or B55). 2) Perform the Clear Memory operation for the body integrated unit. <Ref. to LAN(diag)-20, CLEAR MEMORY MODE, OPERATION, Subaru Select Monitor.> 3) Read DTC of body integrated unit.	Is DTC (U1202) displayed?	Go to step **5**.	Check the TCM. <Ref. to 5AT(diag)-18, READ DIAGNOSTIC TROUBLE CODE (DTC), OPERATION, Subaru Select Monitor.>
5	**CHECK STEERING ANGLE SENSOR.** 1) Disconnect the steering angle sensor connector (B231). 2) Perform Clear Memory Mode for the body integrated unit. <Ref. to LAN(diag)-20, CLEAR MEMORY MODE, OPERATION, Subaru Select Monitor.> 3) Read DTC of body integrated unit.	Is DTC (U1202) displayed?	Go to step **6**.	Replace the steering angle sensor. <Ref. to VDC-18, REPLACEMENT, Steering Angle Sensor.>
6	**CHECK YAW RATE SENSOR.** 1) Disconnect the yaw rate sensor connector (B230). 2) Perform Clear Memory Mode for the body integrated unit. 3) Read DTC of body integrated unit.	Is DTC (U1202) displayed?	Go to step **7**.	Check the yaw rate sensor. <Ref. to VDC(diag)-14, HOW TO USE SUBARU SELECT MONITOR, OPERATION, Subaru Select Monitor.>
7	**CHECK HARNESS.** 1) Disconnect the body integrated unit connector (B280). 2) Measure the resistance between harness connector terminals. ***Connector & terminal*** ***(B280) No. 20 — No. 30:***	Is the resistance between 55 — 65 Ω?	Go to step **13**.	Go to step **8**.
8	**CHECK HARNESS.** 1) Disconnect the body integrated unit connector (B280). 2) Measure the resistance between harness connector terminals. ***Connector & terminal*** ***(B280) No. 20 — No. 30:***	Is the resistance between 115 — 125 Ω?	Go to step **10**.	Go to step **9**.
9	**CHECK HARNESS.** 1) Disconnect the harness connector of body integrated unit. 2) Measure the resistance between harness connector terminals. ***Connector & terminal*** ***(B280) No. 20 — No. 30:***	Is the resistance 30 MΩ or more?	Open circuit in related line of body integrated unit. Repair the open circuit of harness or replace harness.	Go to step **10**.

	Step	Check	Yes	No
10	**CHECK HARNESS.** 1) Disconnect the VDC/ABS CM connector. 2) Measure the resistance between harness connector terminals. ***Connector & terminal*** ***Model with VDC:*** ***(B310) No. 10 — No. 35:*** ***Model without VDC:*** ***(B301) No. 11 — No. 26:***	Is the resistance between 115 — 125 Ω?	Go to step **11**.	Go to step **12**.
11	**CHECK VDC/ABS CM.** 1) Disconnect the VDC/ABS CM connector. 2) Measure the resistance between VDC/ABS CM connector terminals. ***Connector & terminal*** ***Model with VDC:*** ***(B310) No. 10 — No. 35:*** ***Model without VDC:*** ***(B301) No. 11 — No. 26:***	Is the resistance between 115 — 125 Ω?	Go to step **12**.	End resistance of VDC/ABS CM is open. Replace the VDC/ABS CM. <Ref. to VDC-7, VDC Control Module and Hydraulic Control Unit (VDCCM&H/U).>
12	**CHECK ECM.** 1) Disconnect the ECM connector (B136). 2) Measure the resistance between ECM connector terminals. ***Connector & terminal*** ***(B136) No. 27 — No. 35:***	Is the resistance between 115 — 125 Ω?	Repair or replace the open circuit of the harness connector.	End resistance of ECM is open. Replace the ECM. <Ref. to FU(H6DO)-38, Engine Control Module (ECM).>
13	**CHECK HARNESS.** 1) Disconnect the body integrated unit connector (B280). 2) Measure the resistance between body integrated unit connector and chassis ground. ***Connector & terminal*** ***(B280) No. 20 — Chassis ground:*** ***(B280) No. 30 — Chassis ground:***	Is the resistance less than 10 Ω?	Go to step **14**.	Go to step **15**.
14	**CHECK CONTROL MODULE.** 1) Turn the ignition switch to ON. 2) Disconnect each control module connector one by one with the tester connected to vehicle side harness. ***Connector & terminal*** ***(B280) No. 20 — Chassis ground:*** ***(B280) No. 30 — Chassis ground:***	Are there any modules whose resistance has become 10 Ω or more?	Replace modules whose resistance has become 10 Ω or more.	Repair or replace the short circuit of the harness.
15	**CHECK HARNESS.** 1) Disconnect the body integrated unit connector (B280). 2) Measure the voltage between body integrated unit connector and chassis ground. ***Connector & terminal*** ***(B280) No. 20 (+) — Chassis ground (–):*** ***(B280) No. 30 (+) — Chassis ground (–):***	Is the voltage 6 V or more?	Go to step **16**.	Go to step **17**.
16	**CHECK CONTROL MODULE.** 1) Turn the ignition switch to ON. 2) Disconnect each control module connector one by one with the tester connected to vehicle side harness. ***Connector & terminal*** ***(B280) No. 20 — Chassis ground:*** ***(B280) No. 30 — Chassis ground:***	Is there any module whose voltage changes to 6 V or less?	Replace modules whose voltage has changed to 6 V or less.	Repair or replace the short circuit of the harness.

Step		Check	Yes	No
17	**CHECK DTC.** Connect the Subaru Select Monitor and read the Diagnostic Trouble Code (DTC) of ECM. <Ref. to EN(H6DO)(diag)-43, OPERATION, Read Diagnostic Trouble Code (DTC).>	Is DTC other than “CAN communication” displayed?	Perform the diagnosis according to DTC.	Go to step **18**.
18	**CHECK DTC.** Connect the Subaru Select Monitor and read the Diagnostic Trouble Code (DTC) of VDC/ABS CM. <Ref. to VDC(diag)-14, HOW TO USE SUBARU SELECT MONITOR, OPERATION, Subaru Select Monitor.>	Is DTC other than “CAN communication” or “C0057” displayed?	Perform the diagnosis according to DTC.	Go to step **19**.
19	**CHECK DTC.** Connect the Subaru Select Monitor and read the Diagnostic Trouble Code (DTC) of TCM. <Ref. to 5AT(diag)-18, READ DIAGNOSTIC TROUBLE CODE (DTC), OPERATION, Subaru Select Monitor.>	Is DTC other than “CAN communication” displayed?	Perform the diagnosis according to DTC.	Replace the body integrated unit. <Ref. to SL-56, REMOVAL, Body Integrated Unit.>

J: DTC U1211 CAN-HS ECM DATA ABNORMAL

DTC DETECTING CONDITION:

Defective data from ECM.

TROUBLE SYMPTOM:

“Er HC” or “Er EG” is displayed in odo/trip meter. (Except for meter with MID)

WIRING DIAGRAM:

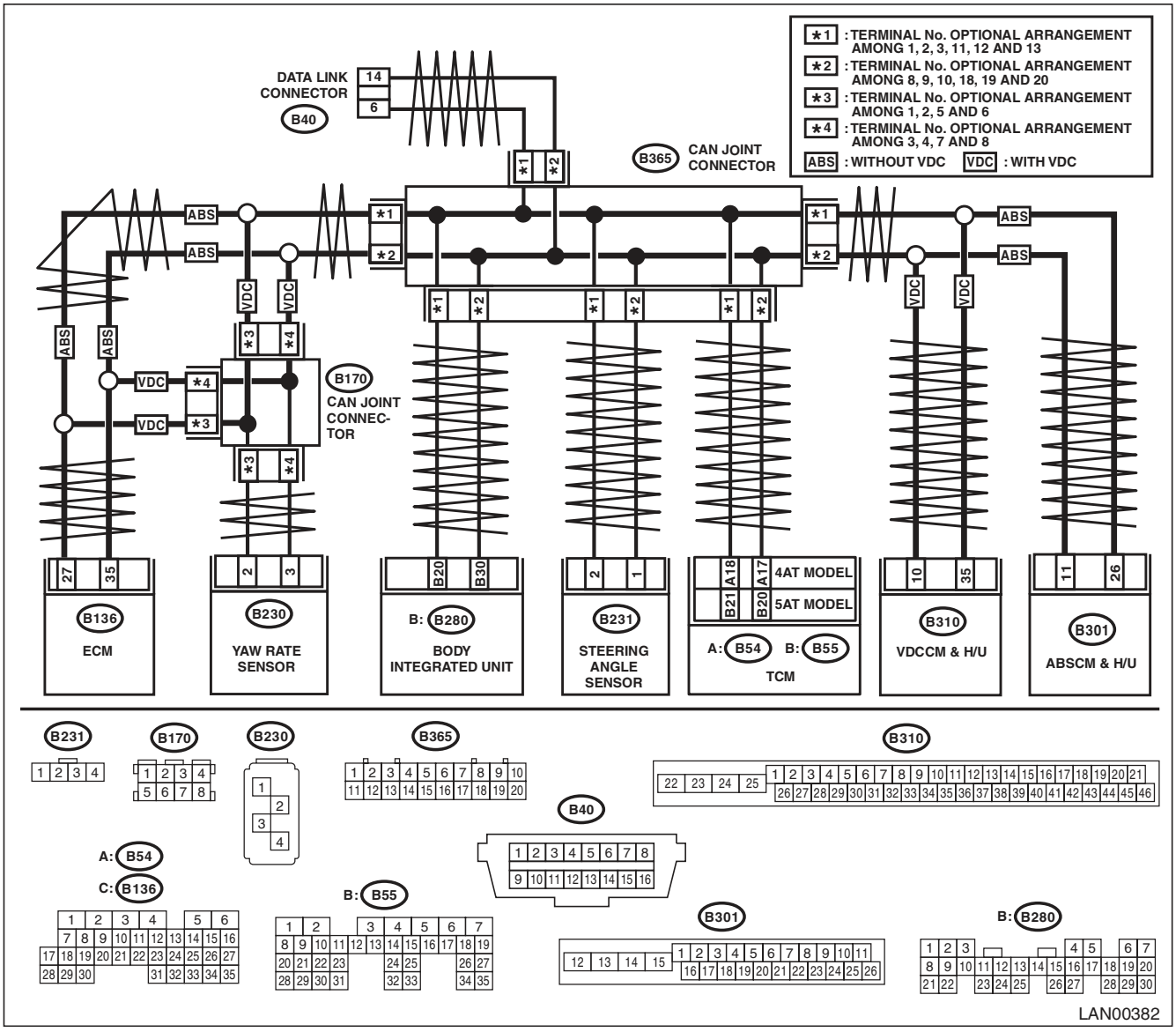

Step		Check	Yes	No
1	**CHECK DTC.** Connect the Subaru Select Monitor and read all DTCs.	Is there any DTC other than for the body integrated unit?	Perform the diagnosis according to the DTC of other control modules.	Go to step **2**.
2	**CHECK DTC.** Check the DTC displayed in the body integrated unit.	Is the DTC displayed a current malfunction?	Check the connection of harness connectors. Go to step **3**.	Go to step **4**.
3	**CHECK DTC.** Turn the ignition switch to OFF and read DTCs again.	Is the DTC displayed a current malfunction?	Replace the ECM. <Ref. to FU(H4DOTC)-52, REMOVAL, Engine Control Module (ECM).> <Ref. to FU(H6DO)-38, REMOVAL, Engine Control Module (ECM).> <Ref. to FU(H4SO)-39, REMOVAL, Engine Control Module (ECM).>	Go to step **4**.
4	**CHECK CURRENT DATA.** Using the Subaru Select Monitor, display engine speed and vehicle speed signal from ECM, TCM, VDC/ABS and body integrated unit under the same conditions and compare data.	Do all data values match?	Temporary poor contact occurs. Perform the Clear Memory operation.	Go to step **5**.
5	**CHECK ECM.** Read the DTC of ECM using the Subaru Select Monitor. <Ref. to EN(H6DO)(diag)-43, OPERATION, Read Diagnostic Trouble Code (DTC).>	Is DTC other than “CAN communication” displayed?	Perform the diagnosis according to DTC.	Replace the body integrated unit. <Ref. to SL-56, REMOVAL, Body Integrated Unit.>

K: DTC U1212 CAN-HS TCM DATA ABNORMAL

DTC DETECTING CONDITION:

TCM has error, harness between the main harness splice and TCM is open or shorted, connectors are not connected securely, or the terminal has poor crimping.

TROUBLE SYMPTOM:

- SPORT indicator light blinks.
- “Er HC” or “Er tC” is displayed in odo/trip meter. (Except for meter with MID)

WIRING DIAGRAM:

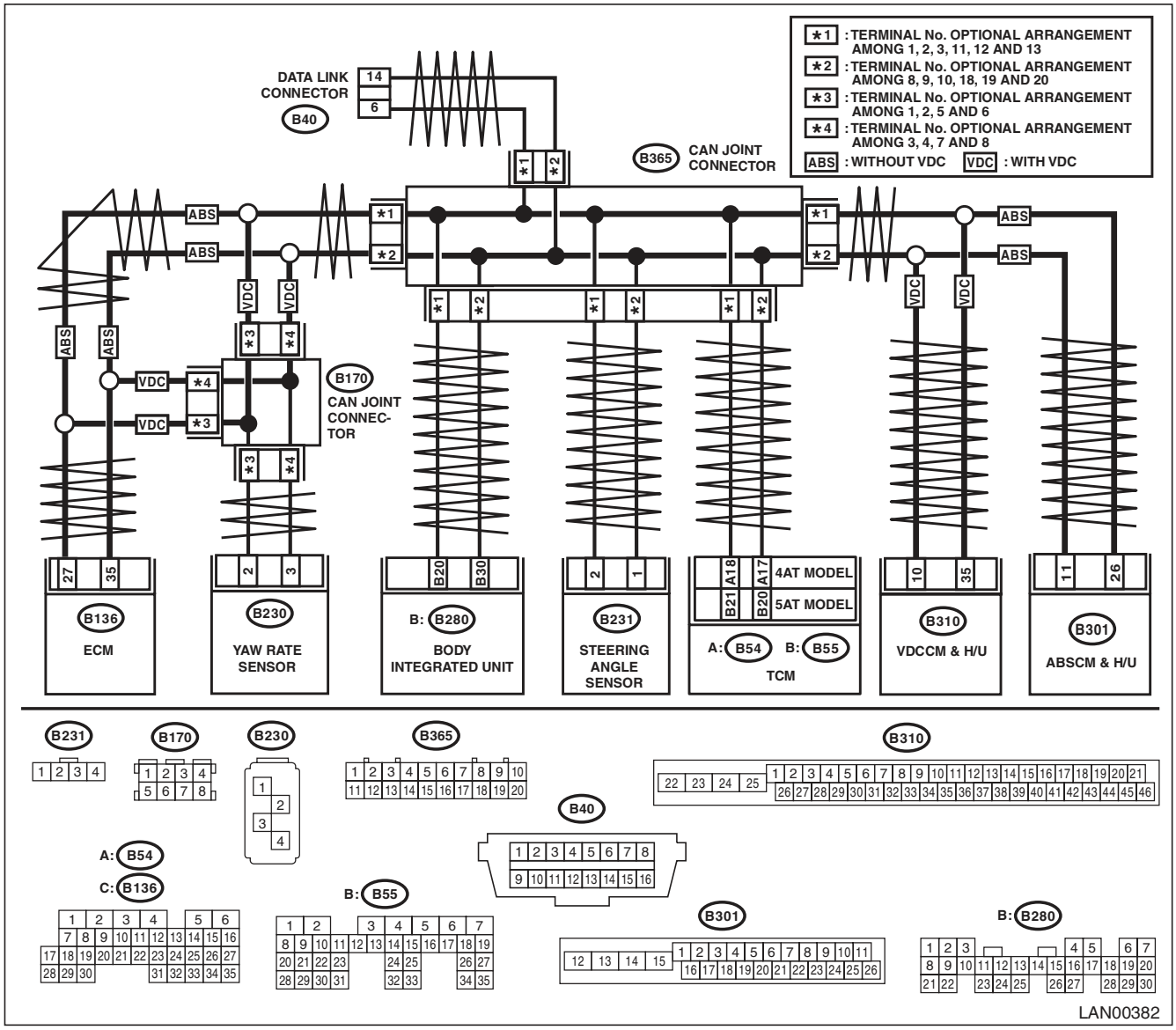

Diagnostic Procedure with Diagnostic Trouble Code (DTC)

Step		Check	Yes	No
1	**CHECK DTC.** Connect the Subaru Select Monitor and read all DTCs.	Is there any DTC other than for the body integrated unit?	Perform the diagnosis according to the DTC of other control modules.	Go to step **2**.
2	**CHECK DTC.** Check the DTC displayed in the body integrated unit.	Is the DTC displayed a current malfunction?	Check the connection of harness connectors. Go to step **3**.	Go to step **4**.
3	**CHECK DTC.** Turn the ignition switch to OFF and read DTCs again.	Is the DTC displayed a current malfunction?	Replace the TCM. <Ref. to 5AT-60, Transmission Control Module (TCM).>	Go to step **4**.
4	**CHECK CURRENT DATA.** Using the Subaru Select Monitor, display engine speed and vehicle speed signal from ECM, TCM, VDC/ABS and body integrated unit under the same conditions and compare data.	Do all data values match?	Temporary poor contact occurs. Perform the Clear Memory operation.	Go to step **5**.
5	**CHECK TCM.** Read the DTC of the TCM using Subaru Select Monitor. <Ref. to 5AT(diag)-18, OPERATION, Subaru Select Monitor.>	Is DTC other than “CAN communication” displayed?	Perform the diagnosis according to DTC.	Replace the body integrated unit. <Ref. to SL-56, REMOVAL, Body Integrated Unit.>

L: DTC U1213 CAN-HS VDC/ABS DATA ABNORMAL

DTC DETECTING CONDITION:

VDC/ABSCM itself is malfunctioning, the main harness is open or shorted, the connector is not connected properly, or the terminal is crimped poorly.

TROUBLE SYMPTOM:

- ABS warning light and VDC warning light come on.
- “Er HC” or “Er Ab” is displayed in odo/trip meter. (Except for meter with MID)

WIRING DIAGRAM:

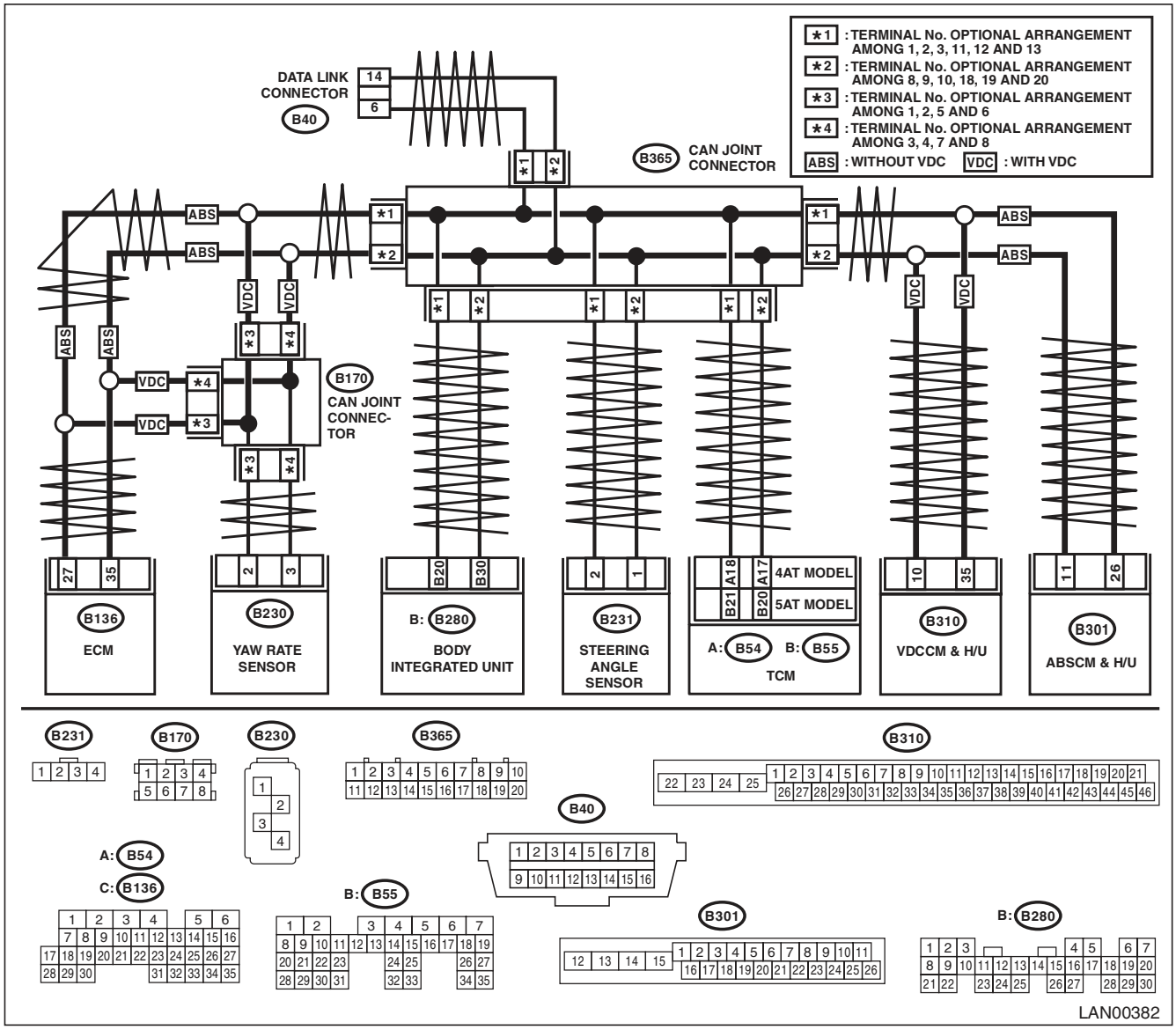

Diagnostic Procedure with Diagnostic Trouble Code (DTC)

Step		Check	Yes	No
1	**CHECK DTC.** Connect the Subaru Select Monitor and read all DTCs.	Is there any DTC other than for the body integrated unit?	Perform the diagnosis according to the DTC of other control modules.	Go to step **2**.
2	**CHECK DTC.** Check the DTC displayed in the body integrated unit.	Is the DTC displayed a current malfunction?	Check the connection of harness connectors. Go to step **3**.	Go to step **4**.
3	**CHECK DTC.** Turn the ignition switch to OFF and read DTCs again.	Is the DTC displayed a current malfunction?	Replace the VDC/ABS CM. <Ref. to VDC-7, VDC Control Module and Hydraulic Control Unit (VDCCM&H/U).>	Go to step **4**.
4	**CHECK CURRENT DATA.** Using the Subaru Select Monitor, display engine speed and vehicle speed signal from ECM, TCM, VDC/ABS and body integrated unit under the same conditions and compare data.	Do all data values match?	Temporary poor contact occurs. Perform the Clear Memory operation.	Go to step **5**.
5	**CHECK VDC/ABS CM.** Read the DTC of VDCCM using Subaru Select Monitor.	Is DTC other than “CAN communication” displayed?	Perform the diagnosis according to DTC.	Replace the body integrated unit. <Ref. to SL-56, REMOVAL, Body Integrated Unit.>

M: DTC U1221 CAN-HS ECM NO-RECEIVE DATA

DTC DETECTING CONDITION:

Defective ECM. (If error is in the main harness, DTC P0600 CAN communication link is input simultaneously.)

TROUBLE SYMPTOM:

- Malfunction indicator light illuminates.
- “Er HC” is displayed in odo/trip meter. (Except for meter with MID)

WIRING DIAGRAM:

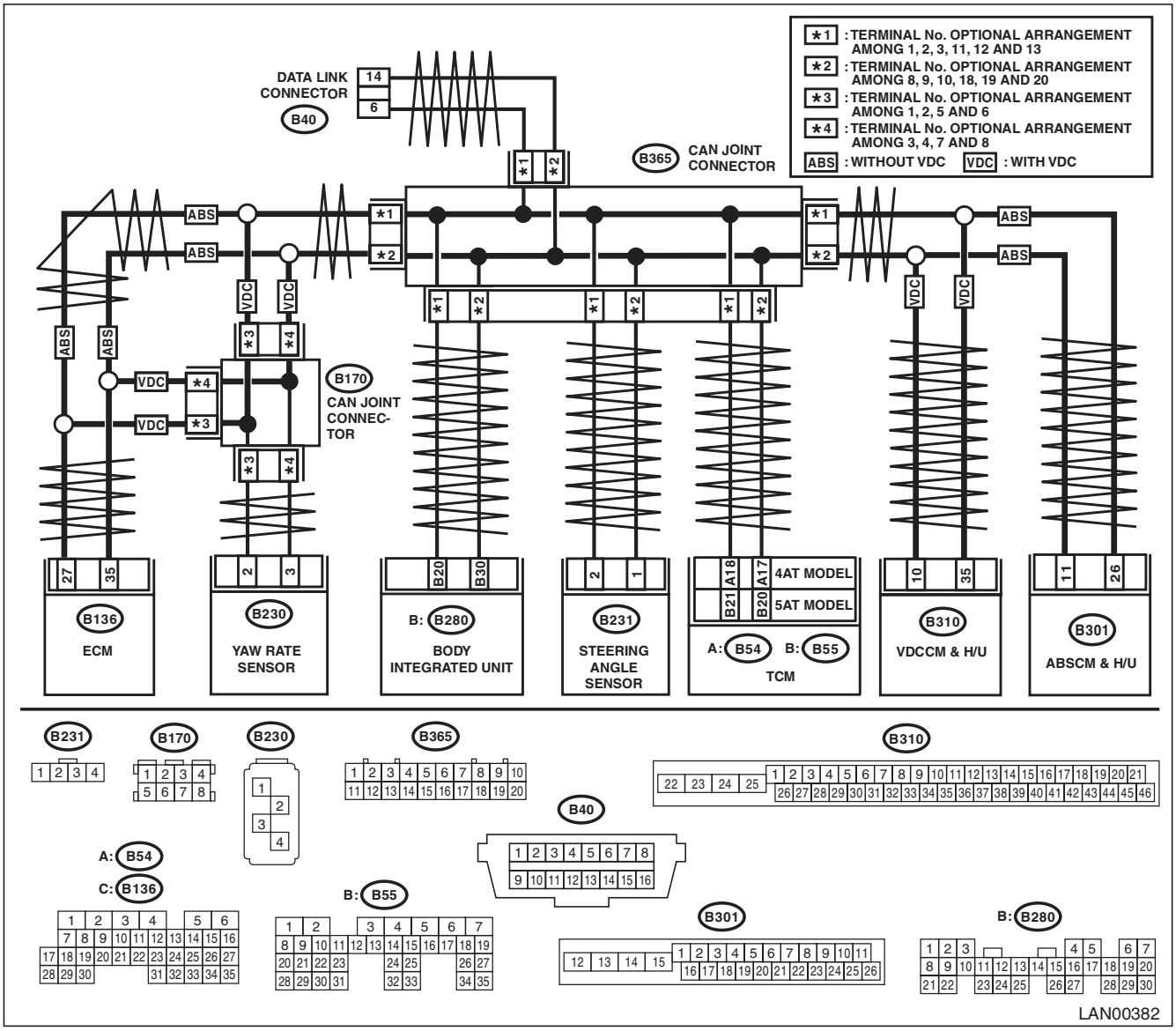

Step		Check	Yes	No
1	**CHECK DTC.** Connect the Subaru Select Monitor and read all DTCs.	Is there any DTC other than for the body integrated unit?	Perform the diagnosis according to the DTC of other control modules.	Go to step **2**.
2	**CHECK DTC.** Check the DTC displayed in the body integrated unit.	Is the DTC displayed a current malfunction?	Check the connection of harness connectors. Go to step **3**.	Go to step **3**.

	Step	Check	Yes	No
3	**CHECK DTC.** Turn the ignition switch to OFF and read DTCs again.	Is the DTC displayed a current malfunction?	Go to step **5**.	Go to step **4**.
4	**CHECK CURRENT DATA.** Using the Subaru Select Monitor, display engine speed and vehicle speed signal from ECM, TCM, VDC/ABS and body integrated unit under the same conditions and compare data.	Do all data values match?	Temporary poor contact occurs. Perform the Clear Memory operation.	Go to step **5**.
5	**CHECK HARNESS.** 1) Disconnect the body integrated unit connector (B280). 2) Measure the resistance between harness connectors. ***Connector & terminal*** ***(B280) No. 20 — No. 30:***	Is the resistance 55 — 65 Ω? (Specification 60 Ω)	Go to step **8**.	Go to step **6**.
6	**CHECK HARNESS.** 1) Disconnect the body integrated unit connector (B280). 2) Measure the resistance between harness connectors. ***Connector & terminal*** ***(B280) No. 20 — No. 30:***	Is the resistance 115 — 125 Ω? (End resistance or main wiring harness is open.)	Go to step **7**.	If the resistance is 1 M Ω or larger, a line related to the body integrated unit is open. Repair the open circuit of harness or replace harness.
7	**CHECK ECM.** Read the DTC of ECM using the Subaru Select Monitor. <Ref. to EN(H6DO)(diag)-43, SUBARU SELECT MONITOR (NORMAL MODE), OPERATION, Read Diagnostic Trouble Code (DTC).>	Are there any DTCs other than one for “CAN communication”?	Perform the diagnosis according to DTC. <Ref. to EN(H6DO)(diag)-43, SUBARU SELECT MONITOR (NORMAL MODE), OPERATION, Read Diagnostic Trouble Code (DTC).>	Go to step **8**.
8	**CHECK BODY INTEGRATED UNIT.** 1) Connect all the control module connectors. 2) Check the data of “body integrated unit data received” on the current data display of ECM using Subaru Select Monitor.	Is the “ON” displayed?	Go to step **9**.	Replace the body integrated unit. <Ref. to SL-56, REMOVAL, Body Integrated Unit.>
9	**CHECK BODY INTEGRATED UNIT.** Check the data of “body integrated unit counter update” on the data display of ECM.	Is the “ON” displayed?	Replace the body integrated unit. <Ref. to SL-56, REMOVAL, Body Integrated Unit.>	Inspect the ECM. <Ref. to FU(H4SO)-39, REMOVAL, Engine Control Module (ECM).> <Ref. to FU(H4DOTC)-52, REMOVAL, Engine Control Module (ECM).> <Ref. to FU(H6DO)-38, REMOVAL, Engine Control Module (ECM).>

N: DTC U1222 CAN-HS TCM NO-RECEIVE DATA

DTC DETECTING CONDITION:

TCM has error, harness between the main harness splice and TCM is open or shorted, connectors are not connected securely, or the terminal has poor crimping.

TROUBLE SYMPTOM:

- Malfunction indicator light illuminates.
- “Er HC” is displayed in odo/trip meter. (Except for meter with MID)

WIRING DIAGRAM:

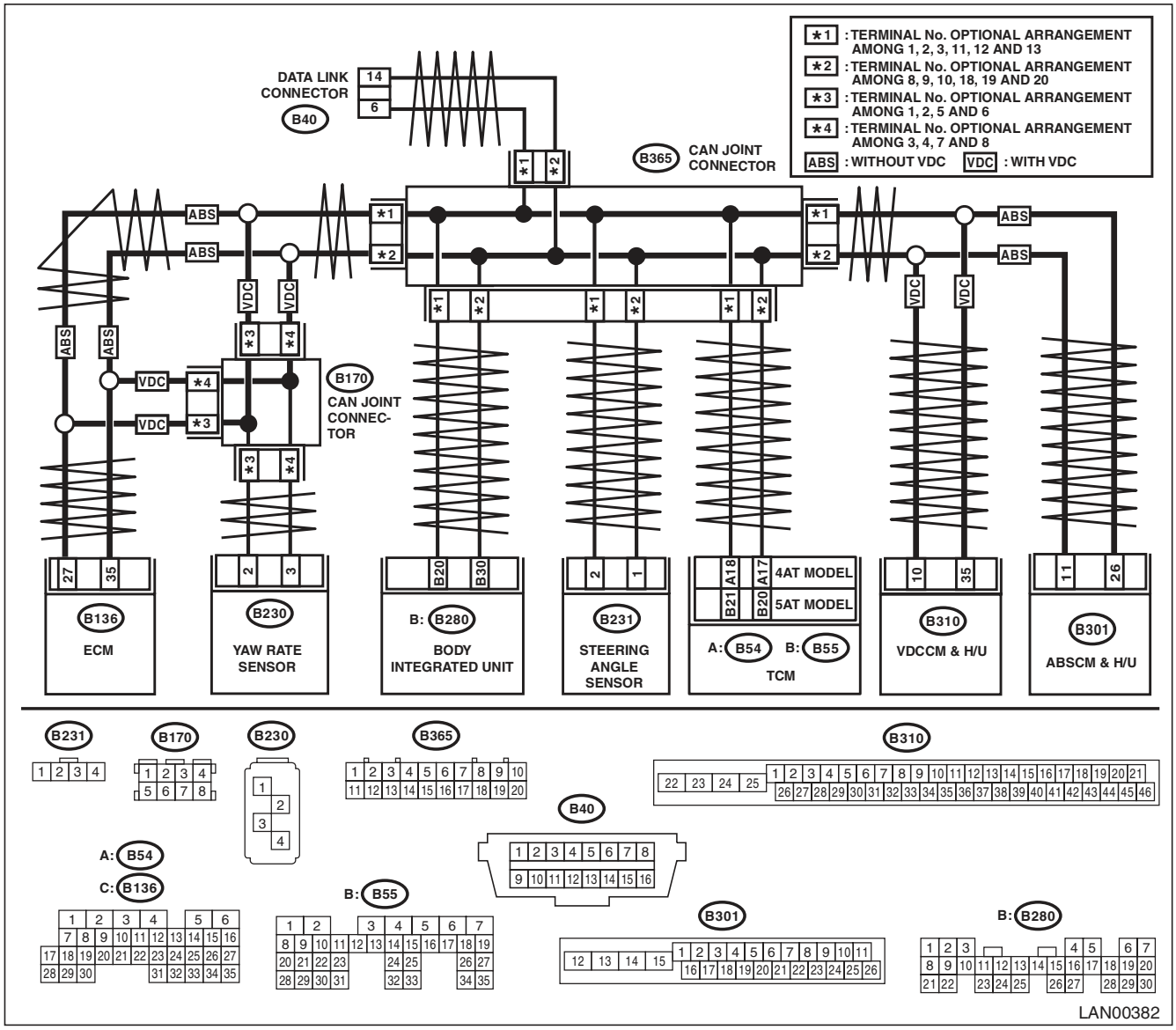

Diagnostic Procedure with Diagnostic Trouble Code (DTC)

	Step	Check	Yes	No
1	**CHECK DTC.** Connect the Subaru Select Monitor and read all DTCs.	Is there any DTC other than for the body integrated unit?	Perform the diagnosis according to the DTC of other control modules.	Go to step **2**.
2	**CHECK DTC.** Check the DTC displayed in the body integrated unit.	Is the DTC displayed a current malfunction?	Check the connection of harness connectors. Go to step **3**.	Go to step **3**.
3	**CHECK DTC.** Turn the ignition switch to OFF and read DTCs again.	Is the DTC displayed a current malfunction?	Go to step **5**.	Go to step **4**.
4	**CHECK CURRENT DATA.** Using the Subaru Select Monitor, display engine speed and vehicle speed signal from ECM, TCM, VDC/ABS and body integrated unit under the same conditions and compare data.	Do all data values match?	Temporary poor contact occurs. Perform the Clear Memory operation.	Go to step **5**.
5	**CHECK HARNESS.** 1) Disconnect the TCM connector (B54 or B55). 2) Measure the resistance between harness connector terminals. ***Connector & terminal*** ***4AT model:*** ***(B54) No. 17 — No. 18:*** ***5AT model:*** ***(B55) No. 20 — No. 21:***	Is the resistance 1 MΩ or more?	Open circuit in related lines of TCM. Repair the open circuit of harness or replace harness.	Go to step **6**.
6	**CHECK TCM.** Read the DTC of the TCM using Subaru Select Monitor. <Ref. to 5AT(diag)-18, OPERATION, Subaru Select Monitor.>	Is DTC other than “CAN communication” displayed?	Perform the diagnosis according to DTC.	Go to step **7**.
7	**CHECK BODY INTEGRATED UNIT.** 1) Connect all the control module connectors. 2) Check the data of “body integrated unit data received” on the current data display of ECM using Subaru Select Monitor.	Is the “ON” displayed?	Go to step **8**.	Replace the body integrated unit. <Ref. to SL-56, REMOVAL, Body Integrated Unit.>
8	**CHECK BODY INTEGRATED UNIT.** Check the data of “body integrated unit counter update” on the data display of ECM.	Is the “ON” displayed?	Replace the TCM. <Ref. to 4AT-61, REMOVAL, Transmission Control Module (TCM).> <Ref. to 5AT-60, REMOVAL, Transmission Control Module (TCM).>	Replace the body integrated unit. <Ref. to SL-56, REMOVAL, Body Integrated Unit.>

O: DTC U1223 CAN-HS VDC/ABS NO-RECEIVE DATA

DTC DETECTING CONDITION:

Defective VDC/ABSCM. (If error is in the main harness, DTC P0600 High-speed CAN circuit is input at the same time.

TROUBLE SYMPTOM:

- ABS warning light and VDC warning light come on.
- “Er HC” is displayed in odo/trip meter. (Except for meter with MID)

WIRING DIAGRAM:

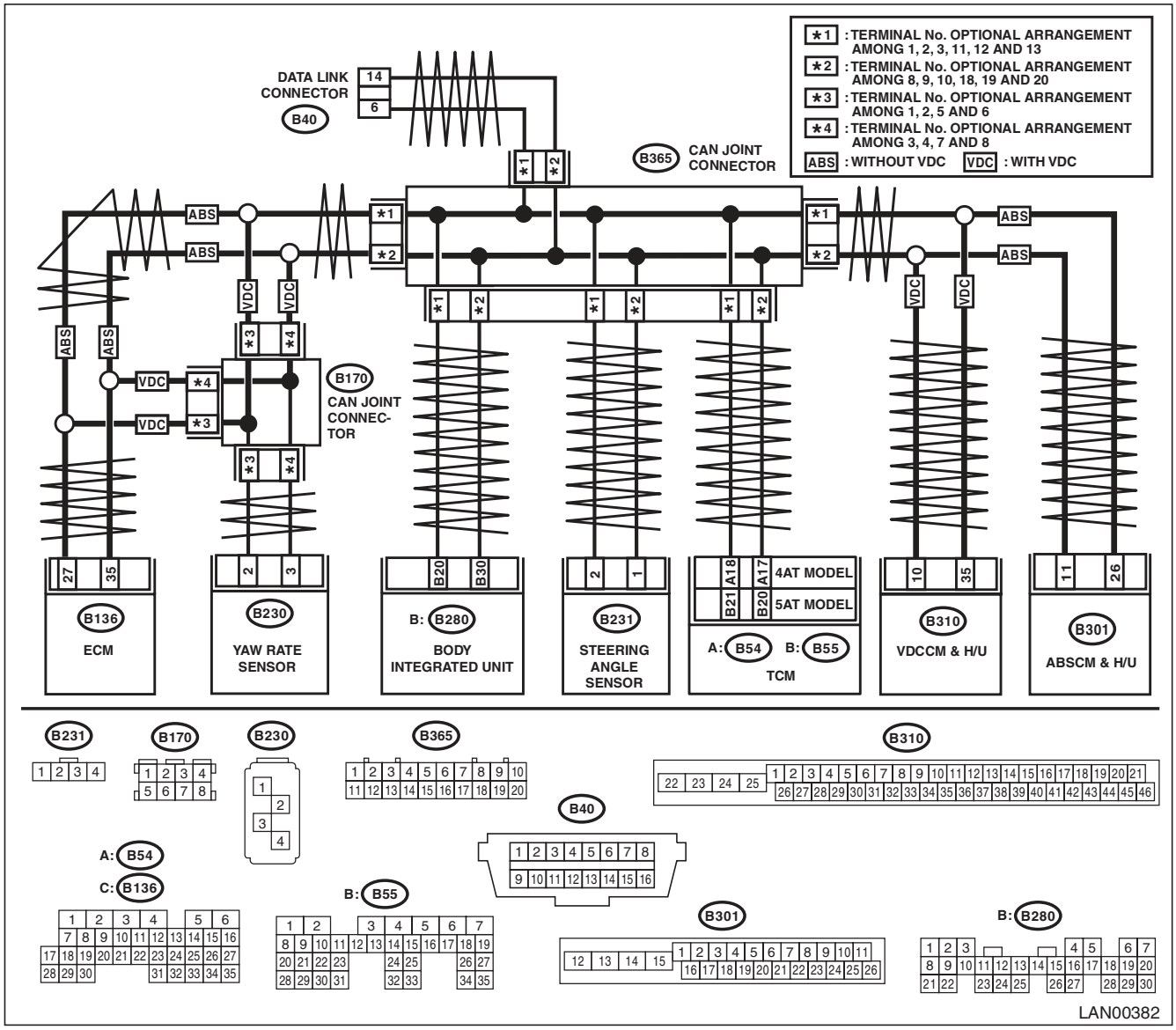

Diagnostic Procedure with Diagnostic Trouble Code (DTC)

	Step	Check	Yes	No
1	**CHECK DTC.** Connect the Subaru Select Monitor and read all DTCs.	Is there any DTC other than for the body integrated unit?	Perform the diagnosis according to the DTC of other control modules.	Go to step **2**.
2	**CHECK DTC.** Check the DTC displayed in the body integrated unit.	Is the DTC displayed a current malfunction?	Check the connection of harness connectors. Go to step **3**.	Go to step **3**.
3	**CHECK DTC.** Turn the ignition switch to OFF and read DTCs again.	Is the DTC displayed a current malfunction?	Go to step **5**.	Go to step **4**.
4	**CHECK CURRENT DATA.** Using the Subaru Select Monitor, display engine speed and vehicle speed signal from ECM, TCM, VDC/ABS and body integrated unit under the same conditions and compare data.	Do all data values match?	Temporary poor contact occurs. Perform the Clear Memory operation.	Go to step **5**.
5	**CHECK HARNESS.** 1) Disconnect the harness connector of body integrated unit. 2) Measure the resistance between harness connector terminals. ***Connector & terminal*** ***(B280) No. 20 — No. 30:***	Is the resistance between 55 — 65 Ω?	Go to step **6**.	Open circuit in related line of body integrated unit. Repair the open circuit of harness or replace harness.
6	**CHECK VDC/ABS CM.** 1) Connect all connectors. 2) Read the DTC of VDC/ABS CM using the Subaru Select Monitor.	Is DTC other than “CAN communication” displayed?	Perform the diagnosis according to DTC of VDC/ABS CM.	Go to step **7**.
7	**CHECK BODY INTEGRATED UNIT.** 1) Connect all the control module connectors. 2) Check the data of “body integrated unit data received” on the current data display of ECM using Subaru Select Monitor.	Is the “ON” displayed?	Go to step **8**.	Replace the body integrated unit. <Ref. to SL-56, REMOVAL, Body Integrated Unit.>
8	**CHECK BODY INTEGRATED UNIT.** Check the data of “body integrated unit counter update” on the data display of ECM.	Is the “ON” displayed?	Replace the VDC/ABS CM. <Ref. to VDC-7, REMOVAL, VDC Control Module and Hydraulic Control Unit (VDCCM&H/U).> <Ref. to ABS-6, REMOVAL, ABS Control Module and Hydraulic Control Unit (ABSCM&H/U).>	Replace the body integrated unit. <Ref. to SL-56, REMOVAL, Body Integrated Unit.>

P: DTC U1300 CAN-LS MALFUNCTION

DTC DETECTING CONDITION:

Either end of low-speed CAN communication line is open or shorted, the connector is not connected properly, or the terminal has poor crimping.

TROUBLE SYMPTOM:

“Er LC” is displayed in odo/trip meter (except for meters with MID), but communicating function is normal.

WIRING DIAGRAM:

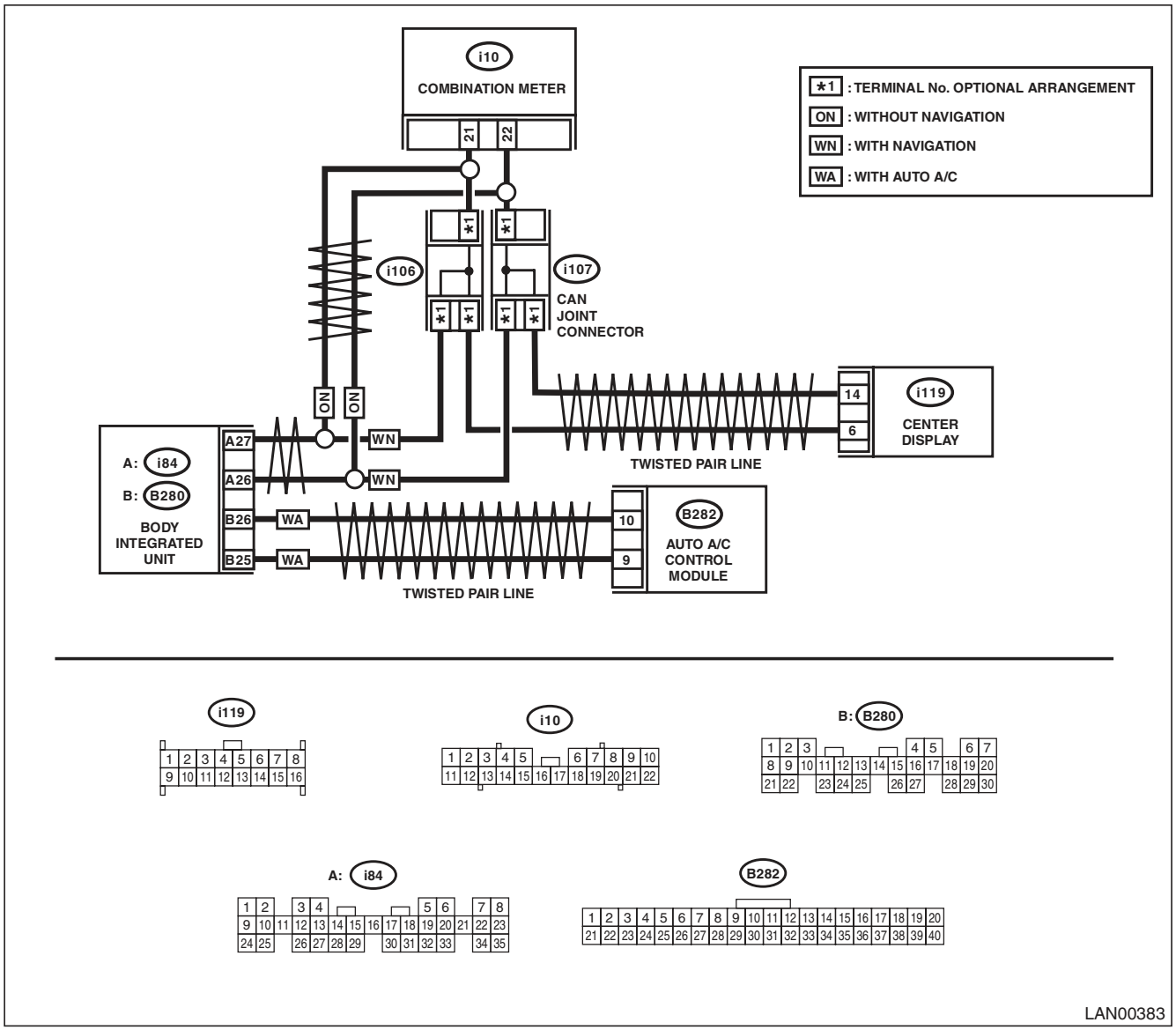

Diagnostic Procedure with Diagnostic Trouble Code (DTC)

	Step	Check	Yes	No
1	**CHECK DTC.** Connect the Subaru Select Monitor and read the DTC of the body integrated unit.	Are there any other DTC besides U1300?	Perform diagnosis according to other DTC.	Go to step **2**.
2	**CHECK DTC.** Check the DTC displayed in the body integrated unit.	Is U1300 a current malfunction?	Check the connection of harness connectors. Go to step **3**.	Go to step **3**.
3	**CHECK DTC.** Turn the ignition switch to OFF and read DTCs again.	Is U1300 a current malfunction?	Go to step **4**.	Temporary poor contact occurs.
4	**CHECK CURRENT DATA.** Check the current data (auto A/C failure) of the body integrated unit using the Subaru Select Monitor.	Is OK displayed?	Go to step **5**.	Perform the auto A/C self-diagnosis. <Ref. to AC(diag)-9, OPERATION, Diagnostic Chart for Self-Diagnosis.>
5	**CHECK AUTO A/C ECM.** 1) Turn the ignition switch to OFF. 2) Disconnect the auto A/C control module connector (B282). 3) Connect the Subaru Select Monitor and then turn the ignition switch to ON. 4) Perform the clear memory operation for the body integrated unit. 5) Read the DTC of the body integrated unit.	Is DTC U1300 detected?	Go to step **6**.	Go to step **7**.
6	**CHECK HARNESS.** 1) Disconnect the body integrated unit connector (B280) and auto A/C control module connector (B282). 2) Check open or short conditions between body integrated unit connector and auto A/C control module connector. ***Connector & terminal*** ***(B282) No. 10 — (B280) No. 26:*** ***(B282) No. 9 — (B280) No. 25:***	Is harness normal?	Replace auto A/C ECM. <Ref. to AC-35, REMOVAL, Control Unit (Auto A/C Model).>	Repair or replace the open or short circuit of harness.
7	**CHECK CURRENT DATA.** Check current data (center display failure) of the body integrated unit.	Is OK displayed?	Go to step **8**.	Repair or replace the center display. <Ref. to ET-19, REMOVAL, Navigation Display.>
8	**CHECK CENTER DISPLAY.** 1) Turn the ignition switch to OFF. 2) Disconnect the center display connector (i119). 3) Connect the Subaru Select Monitor and then turn the ignition switch to ON. 4) Perform the clear memory operation for the body integrated unit. 5) Read the DTC of the body integrated unit.	Is DTC U1300 detected?	Go to step **10**.	Go to step **9**.
9	**CHECK HARNESS.** 1) Disconnect the body integrated unit connector (i84) and center display connector (i119). 2) Check open or short conditions between body integrated unit connector and center display connector. ***Connector & terminal*** ***(i119) No. 14 — (i84) No. 26:*** ***(i119) No. 6 — (i84) No. 27:***	Is harness normal?	Replace the center display. <Ref. to ET-19, REMOVAL, Navigation Display.>	Repair or replace the open or short circuit of harness.

	Step	Check	Yes	No
10	**CHECK CURRENT DATA.** Check current data (meter failure) of the body integrated unit.	Is OK displayed?	Go to step **11**.	Replace the combination meter. <Ref. to IDI-22, REMOVAL, Combination Meter.>
11	**CHECK COMBINATION METER.** 1) Turn the ignition switch to OFF. 2) Disconnect the combination meter connector (i10). 3) Connect the Subaru Select Monitor and then turn the ignition switch to ON. 4) Perform the clear memory operation for the body integrated unit. 5) Read the DTC of the body integrated unit.	Is DTC U1300 detected?	Go to step **12**.	Go to step **13**.
12	**CHECK HARNESS.** 1) Disconnect the combination meter connector (i10). 2) Check open or short conditions between body integrated unit connector and combination meter connector. ***Connector & terminal*** ***(i10) No. 21 — (i84) No. 27:*** ***(i10) No. 22 — (i84) No. 26:***	Is harness normal?	Replace the combination meter. <Ref. to IDI-22, REMOVAL, Combination Meter.>	Repair or replace the open or short circuit of harness.
13	**CHECK HARNESS.** 1) Disconnect connectors of A/C ECM (B282), center monitor (i119), combination meter (i10) and body integrated unit connector (i84). 2) Measure the resistance between connector terminals. ***Connector & terminal*** ***(i84) No. 27 — (i84) No. 26:***	Is the resistance 1 MΩ or more?	Go to step **14**.	Repair the short circuit of harness or replace harness.
14	**CHECK HARNESS.** 1) Connect the disconnected connectors. 2) Measure the resistance between body integrated unit connector and chassis ground. ***Connector & terminal*** ***(B280) No. 25 — Chassis ground:*** ***(B280) No. 26 — Chassis ground:*** ***(i84) No. 26 — Chassis ground:*** ***(i84) No. 27 — Chassis ground:***	Is the resistance less than 10 Ω?	Repair the short circuit of harness or replace harness.	Go to step **15**.
15	**CHECK HARNESS.** 1) Turn the ignition switch to ON. 2) Measure the voltage between body integrated unit connector and chassis ground. ***Connector & terminal*** ***(B280) No. 25 (+) — Chassis ground (–):*** ***(B280) No. 26 (+) — Chassis ground (–):*** ***(i84) No. 26 (+) — Chassis ground (–):*** ***(i84) No. 27 (+) — Chassis ground (–):***	Is the voltage 6 V or more?	Repair the short circuit of harness or replace harness.	Replace the body integrated unit. <Ref. to SL-56, REMOVAL, Body Integrated Unit.>

Q: DTC U1301 CAN-LS COUNTER ABNORMAL

DTC DETECTING CONDITION:

Find the unit in which trouble occurs and open or short CAN line, and repair and replace them.
(Free running counter error may be detected at the same time from the unit in which the malfunction occurs.)

TROUBLE SYMPTOM:

"Er LC" is displayed in odo/trip meter. (Except for meter with MID)

WIRING DIAGRAM:

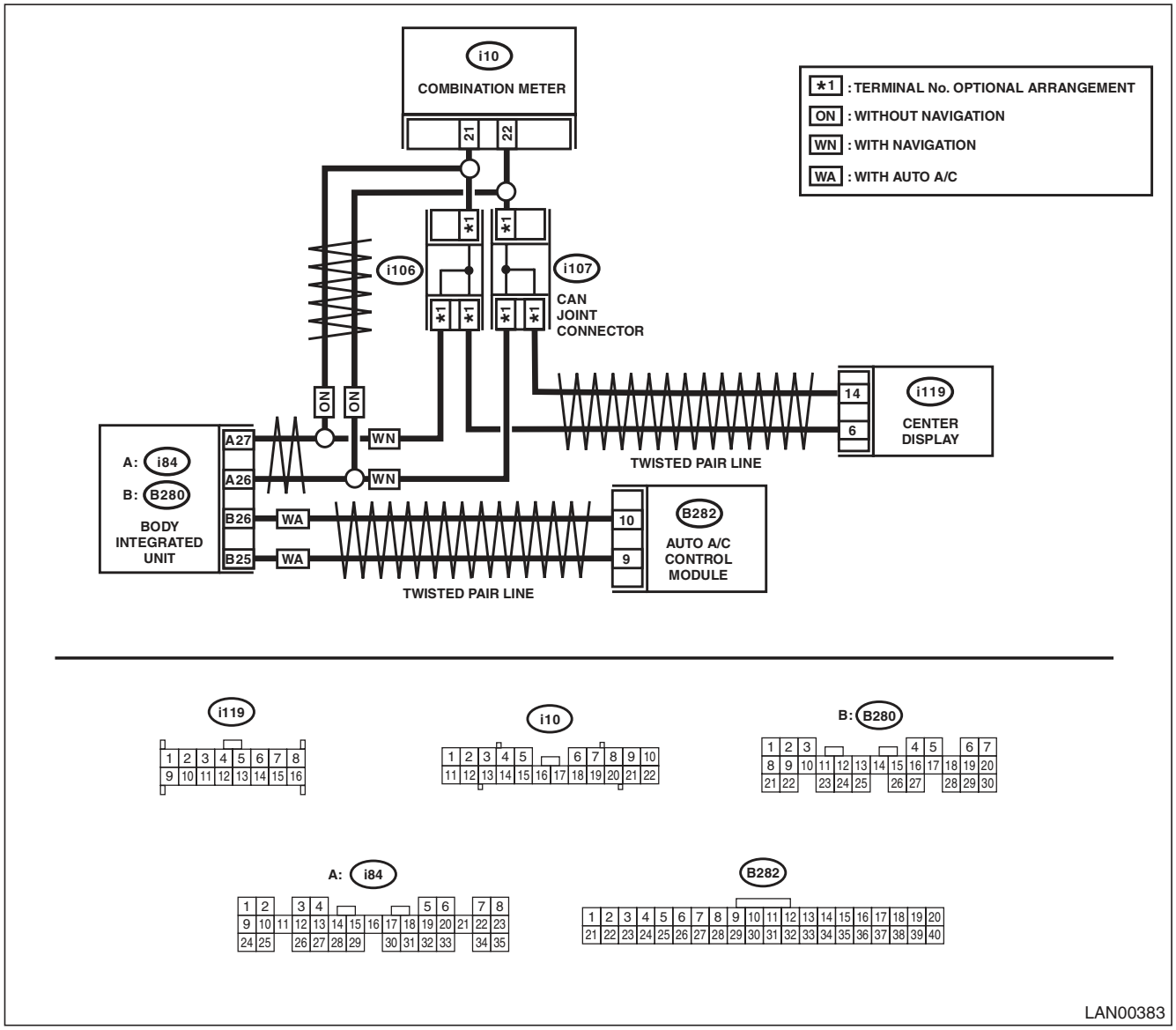

Diagnostic Procedure with Diagnostic Trouble Code (DTC)

	Step	Check	Yes	No
1	**CHECK DTC.** Connect the Subaru Select Monitor and read the DTC of the body integrated unit.	Are there any other DTC besides U1301?	Perform diagnosis according to other DTC.	Go to step **2**.
2	**CHECK DTC.** Check the DTC displayed in the body integrated unit.	Is U1301 current malfunction?	Check the connection of harness connectors. Go to step **3**.	Go to step **3**.
3	**CHECK DTC.** Turn the ignition switch to OFF and read DTCs again.	Is U1301 current malfunction?	Go to step **4**.	Temporary poor contact occurs.
4	**CHECK CURRENT DATA.** Check the current data (auto A/C failure) of the body integrated unit using the Subaru Select Monitor.	Is OK displayed?	Go to step **5**.	Perform the auto A/C self-diagnosis. <Ref. to AC(diag)-9, OPERATION, Diagnostic Chart for Self-Diagnosis.>
5	**CHECK AUTO A/C ECM.** 1) Turn the ignition switch to OFF. 2) Disconnect the auto A/C control module connector (B282). 3) Connect the Subaru Select Monitor and then turn the ignition switch to ON. 4) Perform the clear memory operation for the body integrated unit. 5) Read the DTC of the body integrated unit.	Is DTC U1301 detected?	Go to step **7**.	Go to step **6**.
6	**CHECK HARNESS.** 1) Disconnect the body integrated unit connector (B280) and auto A/C control module connector (B282). 2) Check open or short conditions between body integrated unit connector and auto A/C control module connector. ***Connector & terminal*** ***(B282) No. 10 — (B280) No. 26:*** ***(B282) No. 9 — (B280) No. 25:***	Is harness normal?	Replace auto A/C ECM. <Ref. to AC-35, REMOVAL, Control Unit (Auto A/C Model).>	Repair or replace the open or short circuit of harness.
7	**CHECK CURRENT DATA.** Check current data (center display failure) of the body integrated unit.	Is OK displayed?	Go to step **8**.	Repair or replace the center display. <Ref. to ET-19, REMOVAL, Navigation Display.>
8	**CHECK CENTER DISPLAY.** 1) Turn the ignition switch to OFF. 2) Disconnect the center display connector (i119). 3) Connect the Subaru Select Monitor and then turn the ignition switch to ON. 4) Perform the clear memory operation for the body integrated unit. 5) Read the DTC of the body integrated unit.	Is DTC U1301 detected?	Go to step **10**.	Go to step **9**.
9	**CHECK HARNESS.** 1) Disconnect the body integrated unit connector (B280) and center display connector (i119). 2) Check open or short conditions between body integrated unit connector and center display connector. ***Connector & terminal*** ***(i119) No. 14 — (i84) No. 26:*** ***(i119) No. 6 — (i84) No. 27:***	Is harness normal?	Replace the center display. <Ref. to AC-35, REMOVAL, Control Unit (Auto A/C Model).>	Repair or replace the open or short circuit of harness.

	Step	Check	Yes	No
10	**CHECK CURRENT DATA.** Check current data (meter failure) of the body integrated unit.	Is OK displayed?	Go to step **11**.	Replace the combination meter. <Ref. to IDI-22, REMOVAL, Combination Meter.>
11	**CHECK COMBINATION METER.** 1) Turn the ignition switch to OFF. 2) Disconnect the combination meter connector (i10). 3) Connect the Subaru Select Monitor and then turn the ignition switch to ON. 4) Perform the clear memory operation for the body integrated unit. 5) Read the DTC of the body integrated unit.	Is DTC U1301 detected?	Go to step **13**.	Go to step **12**.
12	**CHECK HARNESS.** 1) Disconnect the combination meter connector (i10). 2) Check open or short conditions between body integrated unit connector and combination meter connector. ***Connector & terminal*** ***(i10) No. 21 — (i84) No. 27:*** ***(i10) No. 22 — (i84) No. 26:***	Is harness normal?	Replace the combination meter. <Ref. to IDI-22, REMOVAL, Combination Meter.>	Repair or replace the open or short circuit of harness.
13	**CHECK HARNESS.** 1) Disconnect connectors of A/C ECM (B282), center monitor (i119), combination meter (i10) and body integrated unit connector (i84). 2) Measure the resistance between connector terminals. ***Connector & terminal*** ***(i84) No. 27 — (i84) No. 26:***	Is the resistance 1 MΩ or more?	Go to step **14**.	Repair the short circuit of harness or replace harness.
14	**CHECK HARNESS.** 1) Connect the disconnected connectors. 2) Measure the resistance between body integrated unit connector and chassis ground. ***Connector & terminal*** ***(B280) No. 25 — Chassis ground:*** ***(B280) No. 26 — Chassis ground:*** ***(i84) No. 26 — Chassis ground:*** ***(i84) No. 27 — Chassis ground:***	Is the resistance less than 10 Ω?	Repair the short circuit of harness or replace harness.	Go to step **15**.
15	**CHECK HARNESS.** 1) Turn the ignition switch to ON. 2) Measure the voltage between body integrated unit connector and chassis ground. ***Connector & terminal*** ***(B280) No. 25 (+) — Chassis ground (–):*** ***(B280) No. 26 (+) — Chassis ground (–):*** ***(i84) No. 26 (+) — Chassis ground (–):*** ***(i84) No. 27 (+) — Chassis ground (–):***	Is the voltage 6 V or more?	Repair the short circuit of harness or replace harness.	Replace the body integrated unit. <Ref. to SL-56, REMOVAL, Body Integrated Unit.>

R: DTC U1302 CAN-LS BUS OFF

DTC DETECTING CONDITION:

- Because of a lot of error data occurred, some units have been disconnected not to affect other units.
- Communication failure from the unit in which error is occurred is input at the same time.

TROUBLE SYMPTOM:

"Er LC" is displayed in odo/trip meter. (Except for meter with MID)

WIRING DIAGRAM:

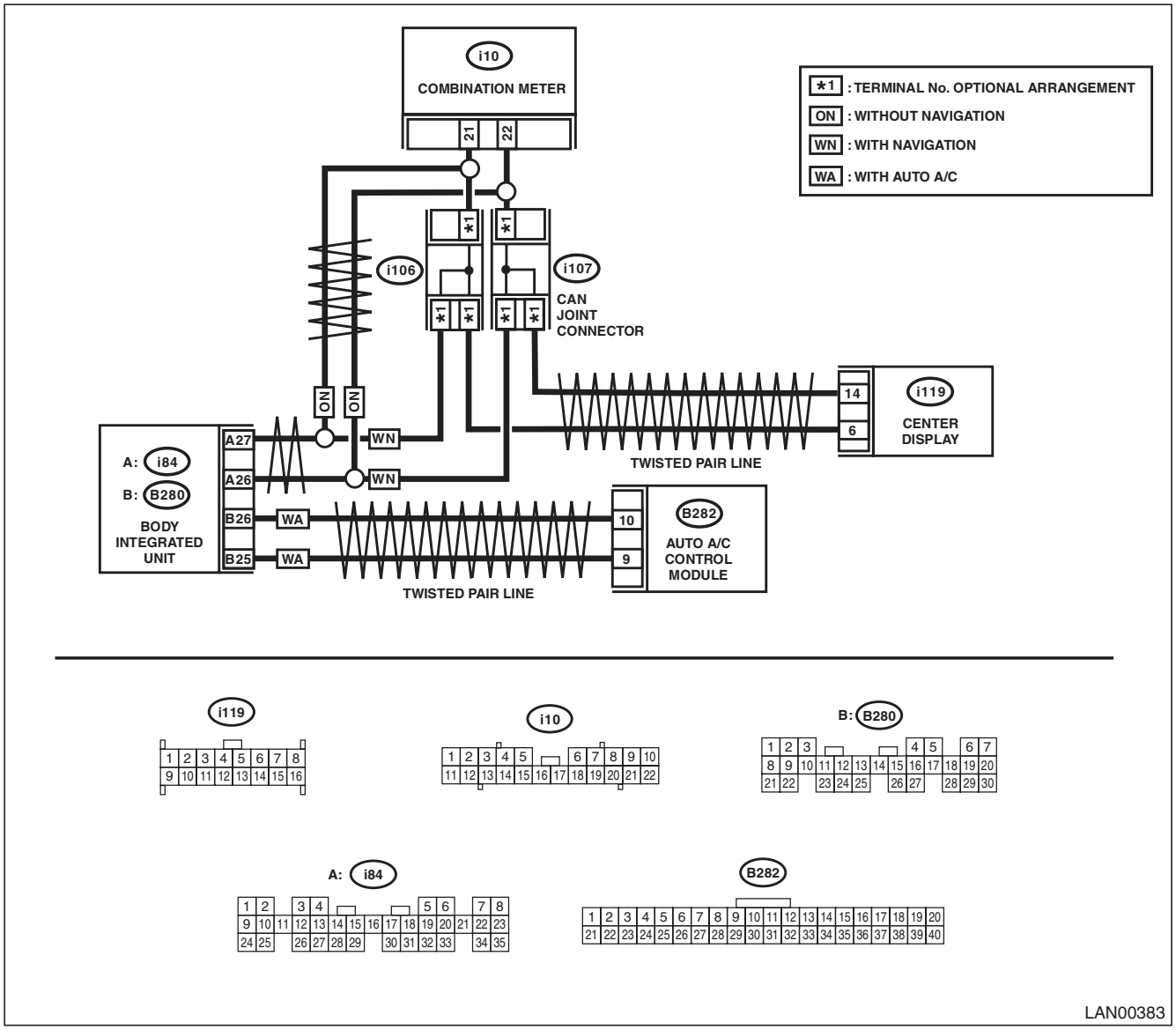

	Step	Check	Yes	No
1	**CHECK DTC.** Connect the Subaru Select Monitor and read the DTC of the body integrated unit.	Are there any other DTC besides U1302?	Perform diagnosis according to other DTC.	Go to step **2**.
2	**CHECK DTC.** Check the DTC displayed in the body integrated unit.	Is the DTC displayed a current malfunction?	Check the connection of harness connectors. Go to step **3**.	Go to step **3**.
3	**CHECK DTC.** Turn the ignition switch to OFF and read DTCs again.	Is U1302 a current malfunction?	Go to step **4**.	Temporary poor contact occurs.
4	**CHECK CURRENT DATA.** Check the current data (auto A/C failure) of the body integrated unit using the Subaru Select Monitor.	Is OK displayed?	Go to step **5**.	Perform the auto A/C self-diagnosis. <Ref. to AC(diag)-9, OPERATION, Diagnostic Chart for Self-Diagnosis.>
5	**CHECK AUTO A/C ECM.** 1) Turn the ignition switch to OFF. 2) Disconnect the auto A/C ECM connector (B282). 3) Connect the Subaru Select Monitor and then turn the ignition switch to ON. 4) Perform the clear memory operation for the body integrated unit. 5) Read the DTC of the body integrated unit.	Is DTC U1302 detected?	Go to step **7**.	Go to step **6**.
6	**CHECK HARNESS.** 1) Disconnect the body integrated unit connector (B280) and auto A/C control module connector (B282). 2) Check open or short conditions between body integrated unit connector and auto A/C control module connector. ***Connector & terminal*** ***(B282) No. 10 — (B280) No. 26:*** ***(B282) No. 9 — (B280) No. 25:***	Is harness normal?	Replace auto A/C ECM. <Ref. to AC-35, REMOVAL, Control Unit (Auto A/C Model).>	Repair or replace the open or short circuit of harness.
7	**CHECK CURRENT DATA.** Check current data (center display failure) of the body integrated unit.	Is OK displayed?	Go to step **8**.	Repair or replace the center display. <Ref. to ET-19, REMOVAL, Navigation Display.>
8	**CHECK CENTER DISPLAY.** 1) Turn the ignition switch to OFF. 2) Disconnect the center display connector (i119). 3) Connect the Subaru Select Monitor and then turn the ignition switch to ON. 4) Perform the clear memory operation for the body integrated unit. 5) Read the DTC of the body integrated unit.	Is DTC U1302 detected?	Go to step **10**.	Go to step **9**.
9	**CHECK HARNESS.** 1) Disconnect the body integrated unit connector (B280) and center display connector (i119). 2) Check open or short conditions between body integrated unit connector and center display connector. ***Connector & terminal*** ***(i119) No. 14 — (i84) No. 26:*** ***(i119) No. 6 — (i84) No. 27:***	Is harness normal?	Replace the center display. <Ref. to AC-35, REMOVAL, Control Unit (Auto A/C Model).>	Repair or replace the open or short circuit of harness.

	Step	Check	Yes	No
10	**CHECK CURRENT DATA.** Check current data (meter failure) of the body integrated unit.	Is OK displayed?	Go to step **11**.	Replace the combination meter. <Ref. to IDI-22, REMOVAL, Combination Meter.>
11	**CHECK COMBINATION METER.** 1) Turn the ignition switch to OFF. 2) Disconnect the combination meter connector (i10). 3) Connect the Subaru Select Monitor and then turn the ignition switch to ON. 4) Perform the clear memory operation for the body integrated unit. 5) Read the DTC of the body integrated unit.	Is DTC U1302 detected?	Go to step **13**.	Go to step **12**.
12	**CHECK HARNESS.** 1) Disconnect the combination meter connector (i10). 2) Check open or short conditions between body integrated unit connector and combination meter connector. ***Connector & terminal*** ***(i10) No. 21 — (i84) No. 27:*** ***(i10) No. 22 — (i84) No. 26:***	Is harness normal?	Replace the combination meter. <Ref. to IDI-22, REMOVAL, Combination Meter.>	Repair or replace the open or short circuit of harness.
13	**CHECK HARNESS.** 1) Disconnect connectors of A/C ECM (B282), center monitor (i119), combination meter (i10) and body integrated unit connector (i84). 2) Measure the resistance between connector terminals. ***Connector & terminal*** ***(i84) No. 27 — (i84) No. 26:***	Is the resistance 1 MΩ or more?	Go to step **14**.	Repair the short circuit of harness or replace harness.
14	**CHECK HARNESS.** 1) Connect the disconnected connectors. 2) Measure the resistance between body integrated unit connector and chassis ground. ***Connector & terminal*** ***(B280) No. 25 — Chassis ground:*** ***(B280) No. 26 — Chassis ground:*** ***(i84) No. 26 — Chassis ground:*** ***(i84) No. 27 — Chassis ground:***	Is the resistance less than 10 Ω?	Repair the short circuit of harness or replace harness.	Go to step **15**.
15	**CHECK HARNESS.** 1) Turn the ignition switch to ON. 2) Measure the voltage between body integrated unit connector and chassis ground. ***Connector & terminal*** ***(B280) No. 25 (+) — Chassis ground (–):*** ***(B280) No. 26 (+) — Chassis ground (–):*** ***(i84) No. 26 (+) — Chassis ground (–):*** ***(i84) No. 27 (+) — Chassis ground (–):***	Is the voltage 6 V or more?	Repair the short circuit of harness or replace harness.	Replace the body integrated unit. <Ref. to SL-56, REMOVAL, Body Integrated Unit.>

S: DTC U1311 CAN-LS METER UNIT DATA ABNORMAL

DTC DETECTING CONDITION:

Combination meter has error, the harness between main harness splice and combination meter is open or shorted, the connector is not connected properly, or the terminal has poor crimping.

TROUBLE SYMPTOM:

“Er Lc” is displayed in odo/trip meter. (Except for meter with MID)

WIRING DIAGRAM:

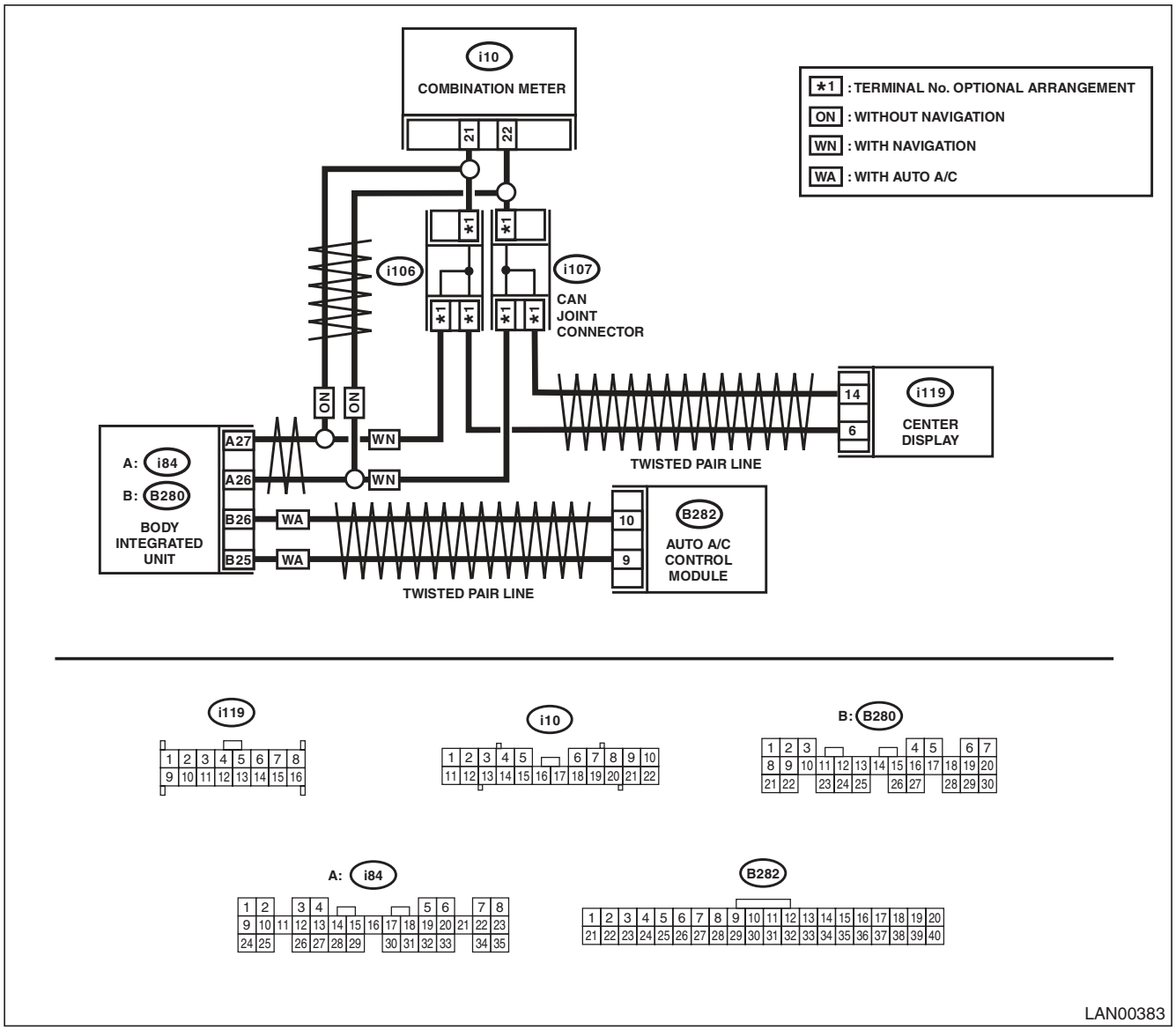

Diagnostic Procedure with Diagnostic Trouble Code (DTC)

	Step	Check	Yes	No
1	**CHECK DTC.** Connect the Subaru Select Monitor and read the DTC of the body integrated unit.	Are there any other DTC besides U1311?	Perform diagnosis according to other DTC.	Go to step **2**.
2	**CHECK DTC.** Check the DTC displayed in the body integrated unit.	Is the DTC displayed a current malfunction?	Check the connection of harness connectors. Go to step **3**.	Go to step **3**.
3	**CHECK DTC.** Turn the ignition switch to OFF and read DTCs again.	Is U1311 a current malfunction?	Replace the combination meter. <Ref. to IDI-22, REMOVAL, Combination Meter.>	Go to step **4**.
4	**CHECK COMBINATION METER.** Perform the self-diagnosis of combination meter. <Ref. to IDI-5, SELF-DIAGNOSIS, INSPECTION, Combination Meter System.>	Is the self-diagnosis OK?	Temporary poor contact occurs.	Replace the combination meter. <Ref. to IDI-22, REMOVAL, Combination Meter.>

T: DTC U1313 CAN-LS MONITOR DATA ABNORMAL

DTC DETECTING CONDITION:

Center display unit error, or harness between the main harness splice and center display unit is open or shorted, the connector is not connected securely and the terminal has poor crimping.

TROUBLE SYMPTOM:

“Er LC” is displayed in odo/trip meter. (Except for meter with MID)

WIRING DIAGRAM:

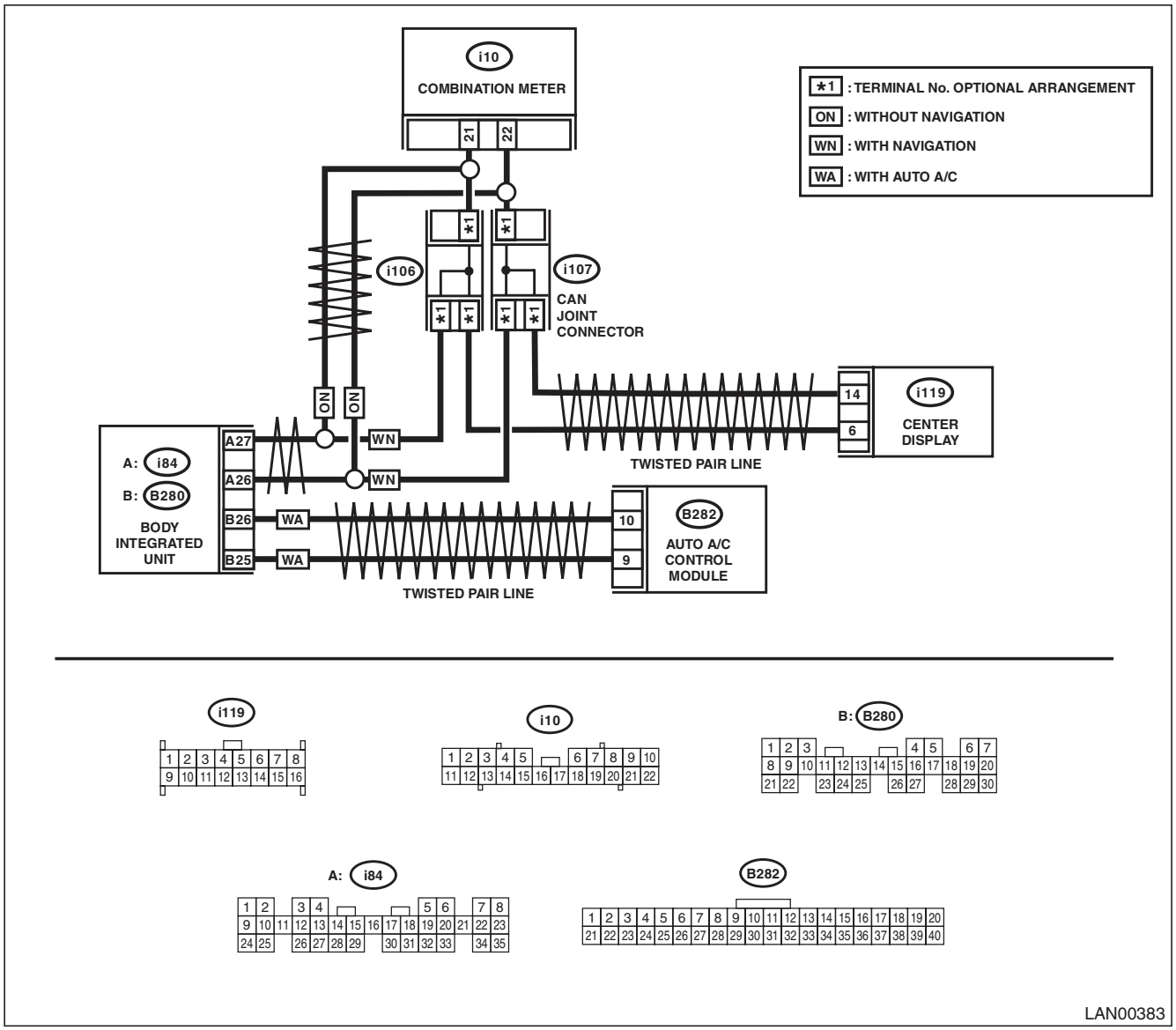

Step		Check	Yes	No
1	**CHECK CENTER MONITOR.** 1) Display the current data of body integrated unit using Subaru Select Monitor. 2) Display the “center display failure”.	Is OK displayed?	Go to step **2**.	Refer to the navigation display. <Ref. to ET-19, REMOVAL, Navigation Display.>
2	**CHECK NAVIGATION.** 1) Display the current data of body integrated unit using Subaru Select Monitor. 2) Display NAVI failure.	Is OK displayed?	Refer to the navigation display. <Ref. to ET-19, REMOVAL, Navigation Display.>	Refer to navigation body. <Ref. to ET-21, REMOVAL, Navigation Body.>

U: DTC U1321 CAN-LS METER NO-RECEIVE DATA

DTC DETECTING CONDITION:

Combination meter unit error, or harness between the main harness splice and combination meter unit is open or shorted, the connector is not connected properly and the terminal has poor crimping.

TROUBLE SYMPTOM:

Fail mode occurs because the data is not received from combination meter unit.

WIRING DIAGRAM:

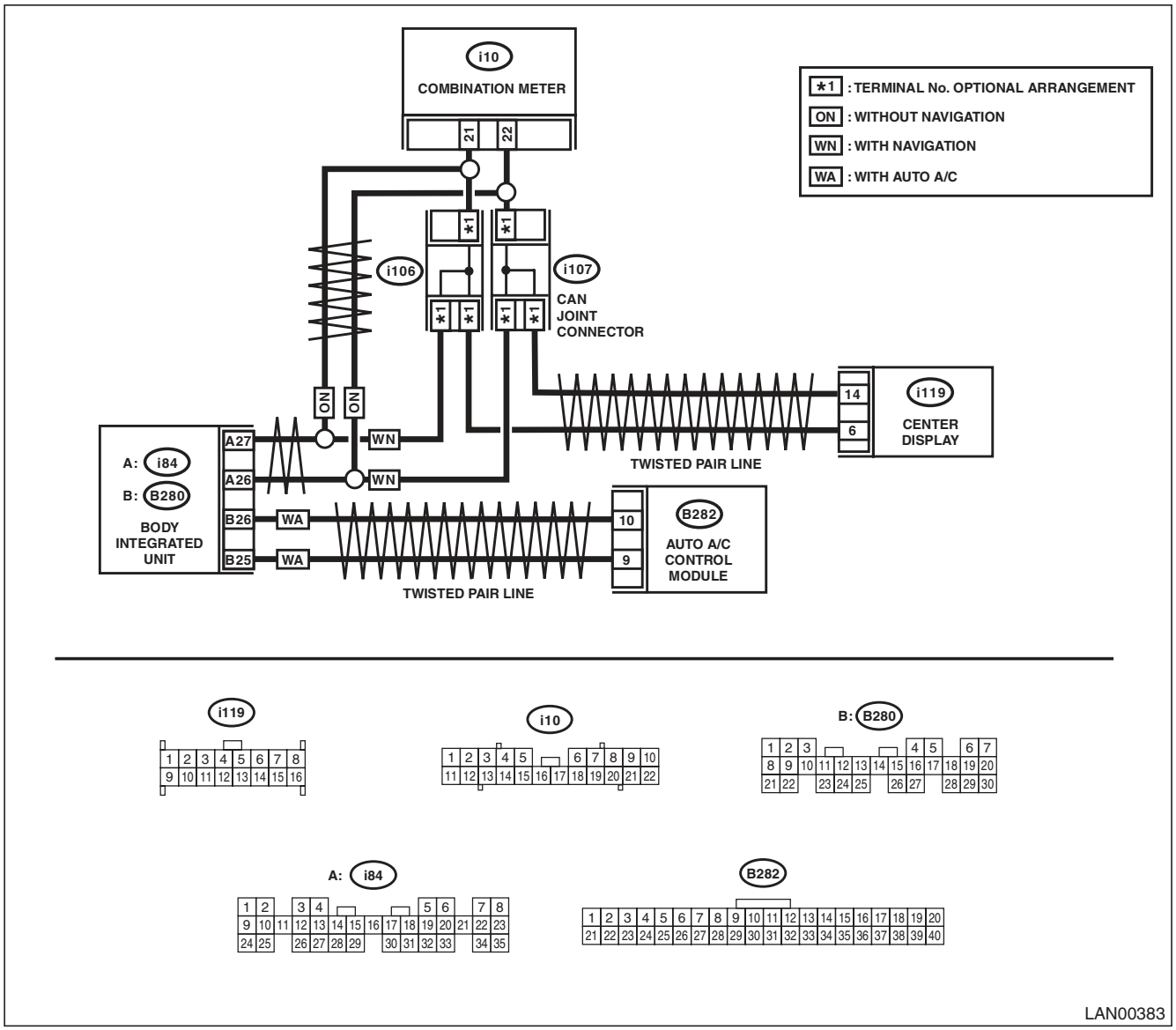

	Step	Check	Yes	No
1	**CHECK COMMUNICATION LINE.** 1) Warm up the engine. 2) Compare the data of body integrated unit and combination meter using Subaru Select Monitor. Check item: • Engine speed • Shift range	Is the data displayed same?	Go to step **2**.	Perform the self-diagnosis of combination meter. <Ref. to IDI-5, SELF-DIAGNOSIS, INSPECTION, Combination Meter System.>
2	**CHECK HARNESS.** 1) Disconnect the body integrated unit and combination meter connector. 2) Measure the resistance between harness connectors. ***Connector & terminal*** ***(i10) No. 21 — (i84) No. 27:*** ***(i10) No. 22 — (i84) No. 26:***	Is the resistance less than 10 Ω?	Go to step **4**.	Go to step **3**.
3	**CHECK HARNESS.** Measure the resistance between harness connector and chassis ground with the connector of the unit disconnected. ***Connector & terminal*** ***(i10) No. 21 — Chassis ground:*** ***(i10) No. 22 — Chassis ground:***	Is the resistance less than 10 Ω?	Go to step **4**.	Repair or replace the open circuit of harness.
4	**CHECK COMBINATION METER.** Perform the self-diagnosis of combination meter. <Ref. to IDI-5, SELF-DIAGNOSIS, INSPECTION, Combination Meter System.>	Is the self-diagnosis OK?	Temporary poor contact occurs. Check the connection of each connector.	Replace the combination meter. <Ref. to IDI-22, REMOVAL, Combination Meter.>

V: DTC B1500 KEYLESS UART COM. MALFUNCTION

DTC DETECTING CONDITION:

UART between keyless control unit and body integrated unit is open or shorted, the connector is not connected properly, or the terminal is crimped improperly.

TROUBLE SYMPTOM:

Door lock does not operate with keyless.

WIRING DIAGRAM:

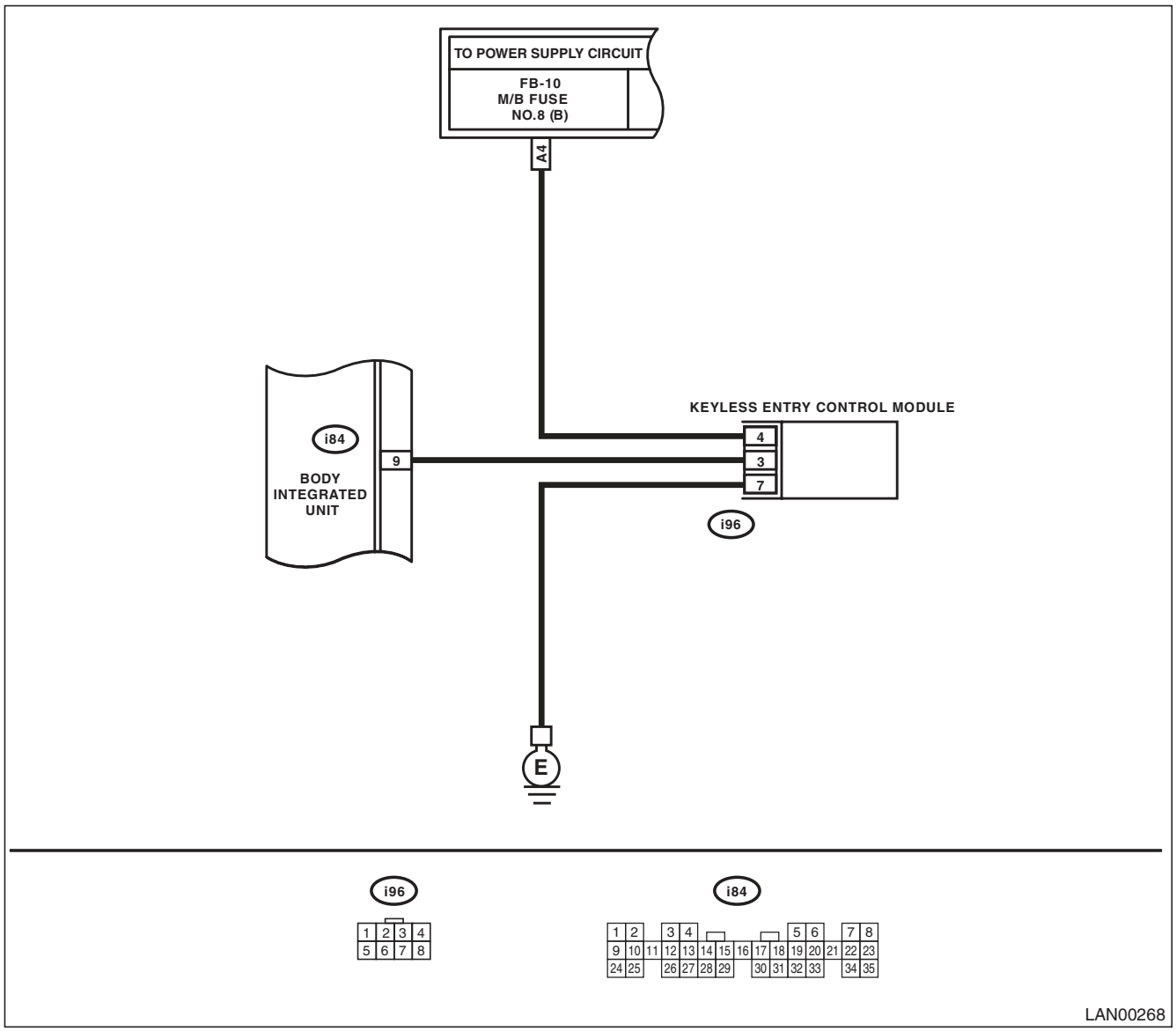

Diagnostic Procedure with Diagnostic Trouble Code (DTC)

	Step	Check	Yes	No
1	**CHECK DTC.** Connect the Subaru Select Monitor and read the DTC of the body integrated unit.	Are there DTCs other than B1500?	Perform diagnosis according to other DTC.	Go to step **2**.
2	**CHECK DTC.** Check the DTC displayed in the body integrated unit.	Is the DTC displayed a current malfunction?	Check the connection of harness connectors. Go to step **3**.	Go to step **4**.
3	**CHECK DTC.** Turn the ignition switch to OFF and read DTCs again.	Is B1500 current malfunction?	Go to step **4**.	Go to step **7**.
4	**CHECK HARNESS.** 1) Disconnect the body integrated unit connector (i84) and keyless entry control module connector (i96). 2) Measure the resistance between harnesses. ***Connector & terminal*** ***(i84) No. 9 — (i96) No. 3:***	Is the resistance less than 10 Ω?	Go to step **5**.	Repair the open circuit of harness or replace harness.
5	**CHECK HARNESS.** Measure the resistance between harness connector and chassis ground. ***Connector & terminal*** ***(i84) No. 9 — Chassis ground:***	Is the resistance less than 1 MΩ?	Repair the short circuit of harness or replace harness.	Go to step **6**.
6	**CHECK HARNESS.** 1) Turn the ignition switch to ON. 2) Measure the voltage between harness connector and chassis ground. ***Connector & terminal*** ***(i84) No. 9 (+) — Chassis ground (–):***	Is the voltage 6 V or more?	Repair the short circuit of harness or replace harness.	Go to step **7**.
7	**CHECK OPERATION.** Check the door lock operation when the doors LOCK/UNLOCK using manual LOCK switch.	Does it operate on switch operation?	Go to step **8**.	Replace the body integrated unit. <Ref. to SL-56, REMOVAL, Body Integrated Unit.>
8	**CHECK OPERATION.** 1) Remove the ignition key. 2) Close all the doors, and then perform the LOCK/UNLOCK operation on keyless entry operation.	Does it operate?	Temporary poor contact occurs.	Replace the keyless entry control module. <Ref. to SL-54, REMOVAL, Keyless Entry Control Module.>

13. General Diagnostic Table

A: INSPECTION

Read the DTC or inspect and diagnose the following data in the current data display using Subaru Select Monitor.

1. LAN SYSTEM

Item	Operation	Specifications		Note
		YES	NO	
DTC	DTC is not displayed when inspecting all DTCs.	DTC is not displayed.	Perform the diagnosis according to DTC.	—
Coolant Temp.	Check the current data display of ECM, TCM and body integrated unit. Three data value are the same.	Same values	Inspect LAN system.	If engine coolant temperature sensor is not OK, inspect the sensor circuit.
Rr Defogger SW	It turns to ON when pressing switch. (Low-speed CAN is OK)	Turns to ON.	Inspect rear defogger switch.	Rear defogger switch is connected with Low-speed CAN.
Rr defogger output	When switch input, it is output.	Output	Check the body integrated unit.	If not operating with output, check the rear defogger relay.
Door lock SW	When locked with door lock switch, it turns to ON.	Turns to ON.	Inspect door lock switch.	The door lock switch is connected to the Low-speed CAN.
Door lock actuator	When locked with door lock switch, it is output.	Output	Check the body integrated unit.	—

2. BODY INTEGRATED UNIT

Item	Operation	Specifications		Note
		YES	NO	
Illumination VR power supply	Operate the illumination volume, illumination light is controlled according to the change of voltage on data display.	Illumination light is controlled with changing of data.	Inspect the illumination volume.	—
Fuel level resistance	Check the fuel level resistance and fuel level resistance 2. Both resistances are same.	Same values	Inspect the body integrated unit.	Compare the input and output values of body integrated unit.
R wiper ON/INT SW input	When rear wiper SW to ON, data display turns to ON.	Turns to ON.	Inspect the rear wiper switch.	—
R wiper output	When rear wiper switch to ON, output signal turns to ON.	Turns to ON.	Check the body integrated unit.	If not operate with output turned to ON, check the rear wiper motor.
Keyless Entry	Keyless entry LOCK/UNLOCK the doors.	Operate	Inspect the keyless antenna.	If the antenna is OK, replace the body integrated unit.
Brake Switch	When brake pedal is depressed, it turns to ON.	Turns to ON.	Inspect the brake switch.	—
Shift Lock Solenoid	The shift lock releases when depressing the brake pedal.	Released	Inspect the shift lock.	—
Body integrated unit registration function setting	Does Vehicle equipment correspond to setting values?	Correspondence	Reconfigure the values according to vehicle equipment.	—
Customizing	When changing customize setting, the registration completes correctly.	Registered	Inspect the body integrated unit.	—
Manual Mode	Switch the shift (UP/DOWN) on Manual mode. Indicator is changed in 1 — 2.	Change	Inspect the shift lever.	—
Function check	Each checking item operate correctly. (Except for not equipped)	Operate	Inspect for non-functional actuator.	—
Security	After locking with keyless entry system and open the door, the security system operates and the horn sounds.	Horn sounds. (Security system operates.)	Inspect the security system.	—