2006 Chevrolet Avalanche Owner Manual

Seats and Restraint Systems 1-1
Front Seats 1-2
Rear Seats 1-7
Safety Belts 1-9
Child Restraints 1-30
Airbag System 1-52
Restraint System Check 1-67
Features and Controls 2-1
Keys 2-3
Doors and Locks 2-8
Windows 2-22
Theft-Deterrent Systems 2-24
Starting and Operating Your Vehicle 2-26
Mirrors 2-43
OnStar® System 2-55
Universal Home Remote System 2-58
Storage Areas 2-62
Sunroof 2-89
Vehicle Personalization 2-90
Instrument Panel 3-1
Instrument Panel Overview 3-4
Climate Controls 3-20
Warning Lights, Gages, and Indicators 3-28
Driver Information Center (DIC) 3-46
Audio System(s) 3-66
Driving Your Vehicle 4-1
Your Driving, the Road, and Your Vehicle 4-2
Towing 4-57
Service and Appearance Care 5-1
Service 5-3
Fuel 5-5
Checking Things Under the Hood 5-11
Rear Axle 5-49
Four-Wheel Drive 5-50
Front Axle 5-51
Bulb Replacement 5-52
Windshield Wiper Blade Replacement 5-61
Tires 5-62
Appearance Care 5-103
Vehicle Identification 5-111
Electrical System 5-111
Capacities and Specifications 5-120
Maintenance Schedule 6-1
Maintenance Schedule 6-2
Customer Assistance and Information 7-1
Customer Assistance and Information 7-2
Reporting Safety Defects 7-14
Index 1

GENERAL MOTORS, GM, the GM Emblem, CHEVROLET, the CHEVROLET Emblem, and the names AVALANCHE and Z71 are registered trademarks of General Motors Corporation.

This manual includes the latest information at the time it was printed. We reserve the right to make changes after that time without further notice. For vehicles first sold in Canada, substitute the name “General Motors of Canada Limited” for Chevrolet Motor Division whenever it appears in this manual.

Keep this manual in the vehicle, so it will be there if it is ever needed. If the vehicle is sold, leave this manual in the vehicle.

Canadian Owners

A French language copy of this manual can be obtained from your dealer or from:

Helm, Incorporated
P.O. Box 07130
Detroit, MI 48207

How to Use This Manual

Many people read the owner manual from beginning to end when they first receive their new vehicle. If this is done, it can help you learn about the features and controls for the vehicle. Pictures and words work together in the owner manual to explain things.

Index

A good place to quickly locate information about the vehicle is the Index in the back of the manual. It is an alphabetical list of what is in the manual and the page number where it can be found.

Litho in U.S.A.
Part No. 06AVALANCHE A First Printing

©2005 General Motors Corporation. All Rights Reserved.

Safety Warnings and Symbols

There are a number of safety cautions in this book. We use a box and the word CAUTION to tell about things that could hurt you if you were to ignore the warning.

> ⚠ **CAUTION:**
>
> **These mean there is something that could hurt you or other people.**

In the caution area, we tell you what the hazard is. Then we tell you what to do to help avoid or reduce the hazard. Please read these cautions. If you do not, you or others could be hurt.

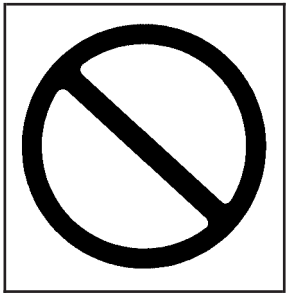

You will also find a circle with a slash through it in this book. This safety symbol means “Do Not,” “Do Not do this” or “Do Not let this happen.”

Vehicle Damage Warnings

Also, in this manual you will find these notices:

Notice: **These mean there is something that could damage your vehicle.**

A notice tells about something that can damage the vehicle. Many times, this damage would not be covered by your vehicle's warranty, and it could be costly. But the notice will tell what to do to help avoid the damage.

When you read other manuals, you might see CAUTION and NOTICE warnings in different colors or in different words.

There are also warning labels on the vehicle. They use the same words, CAUTION or NOTICE.

Vehicle Symbols

The vehicle has components and labels that use symbols instead of text. Symbols are shown along with the text describing the operation or information relating to a specific component, control, message, gage, or indicator.

If you need help figuring out a specific name of a component, gage, or indicator, reference the following topics:

- Seats and Restraint Systems in Section 1
- Features and Controls in Section 2
- Instrument Panel Overview in Section 3
- Climate Controls in Section 3
- Warning Lights, Gages, and Indicators in Section 3
- Audio System(s) in Section 3
- Engine Compartment Overview in Section 5

These are some examples of symbols that may be found on the vehicle:

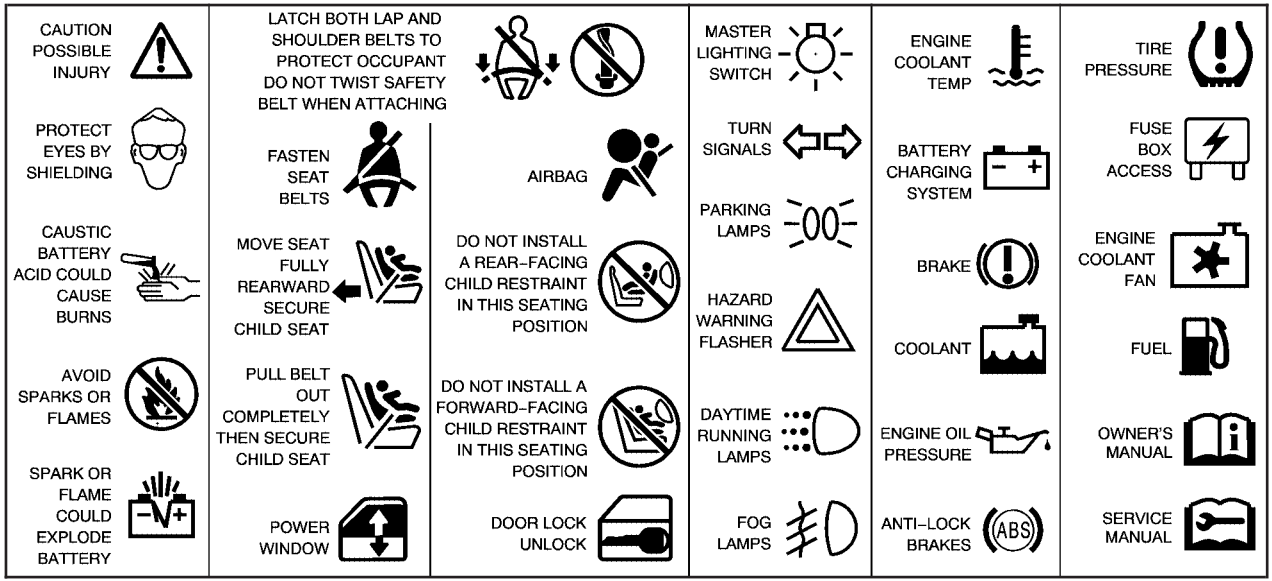

NOTES

Section 1 Seats and Restraint Systems

Front Seats 1-2
Manual Passenger Seat 1-2
Power Seats 1-2
Power Lumbar 1-3
Heated Seats 1-4
Reclining Seatbacks 1-5
Head Restraints 1-7

Rear Seats 1-7
Rear Seat Operation 1-7

Safety Belts 1-9
Safety Belts: They Are for Everyone 1-9
Questions and Answers About Safety Belts 1-13
How to Wear Safety Belts Properly 1-14
Driver Position 1-14
Safety Belt Use During Pregnancy 1-22
Right Front Passenger Position 1-23
Center Front Passenger Position 1-23
Rear Seat Passengers 1-24
Rear Safety Belt Comfort Guides 1-27
Safety Belt Extender 1-29

Child Restraints 1-30
Older Children 1-30
Infants and Young Children 1-33
Child Restraint Systems 1-36
Where to Put the Restraint 1-40
Lower Anchors and Tethers for Children (LATCH) 1-41
Securing a Child Restraint in a Rear Seat Position 1-46
Securing a Child Restraint in the Center Front Seat Position 1-48
Securing a Child Restraint in the Right Front Seat Position 1-49

Airbag System 1-52
Where Are the Airbags? 1-55
When Should an Airbag Inflate? 1-58
What Makes an Airbag Inflate? 1-59
How Does an Airbag Restrain? 1-59
What Will You See After an Airbag Inflates? 1-60
Passenger Sensing System 1-61
Servicing Your Airbag-Equipped Vehicle 1-65
Adding Equipment to Your Airbag-Equipped Vehicle 1-66

Restraint System Check 1-67
Checking the Restraint Systems 1-67
Replacing Restraint System Parts After a Crash 1-68

Front Seats

Manual Passenger Seat

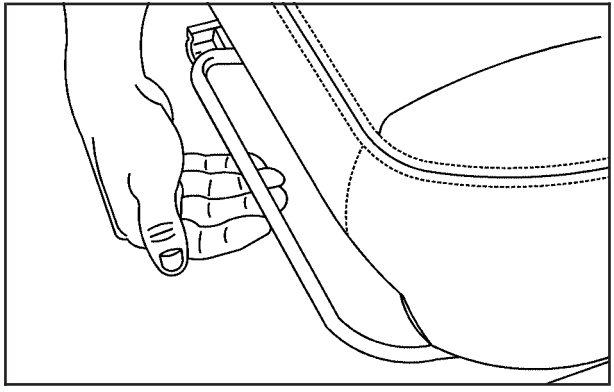

If your vehicle has a manual front passenger split bench seat, you can adjust it with this lever located at the front of the seat.

Lift the lever to unlock the seat and use your body to slide the seat to where you want it. Release the lever and try to move the seat with your body to make sure that the seat is locked into place.

Power Seats

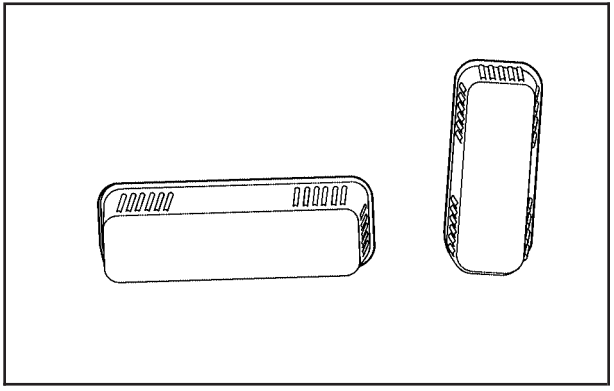

If your vehicle has power seats, the control(s) are located on the outboard side of the front seats.

- Raise or lower the front of the seat cushion by raising or lowering the front of the horizontal control.
- Raise or lower the rear of the seat cushion by raising or lowering the rear of the horizontal control.
- Raise or lower the entire seat cushion by raising or lowering the whole horizontal control.
- Move the seat forward or rearward by moving the horizontal control forward or rearward.

If your vehicle has power reclining seatbacks, the control is located rear of the power seat control on the outboard side of the seats. Adjust the angle of the seatback by pressing the vertical control forward or rearward. See *Reclining Seatbacks on page 1-5*.

If your vehicle has manual reclining seatbacks, see *Reclining Seatbacks on page 1-5*.

Your vehicle may have a memory function which allows seat settings to be saved and recalled. See *Memory Seat on page 2-90* for more information.

Power Lumbar

Your vehicle may have this feature.

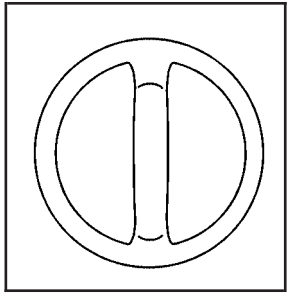

The control is located on the outboard side of the seat cushion.

To increase or decrease support, hold the control forward or rearward. Keep in mind that as your seating position changes, as it may during long trips, so should the position of your lumbar support. Adjust the seat as needed.

Heated Seats

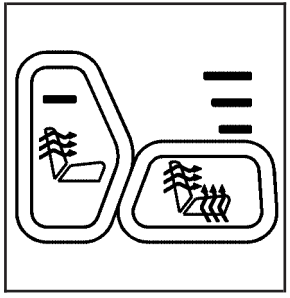

If your vehicle has this feature, the buttons are located on the front doors. The engine must be running for the heated seats to work.

To heat the entire seat, press the horizontal button with the heated seat and seatback symbol. Press the button to cycle through the temperature settings of high, medium and low and to turn the heated seat off. Indicator lights will be lit to designate the level of heat selected: three for high, two for medium, and one for low.

To heat only the seatback, press the vertical button with the heated seatback symbol. An indicator light on the seatback button will be lit to designate that only the seatback is being heated. Additional presses of the seatback button will cycle through the heat levels for the seatback only. Press the horizontal button again to heat the whole seat.

The heated seats will be canceled after the ignition is turned off. If you still want to use the heated seat feature after you restart your vehicle, you will need to press the heated seat button again.

Reclining Seatbacks

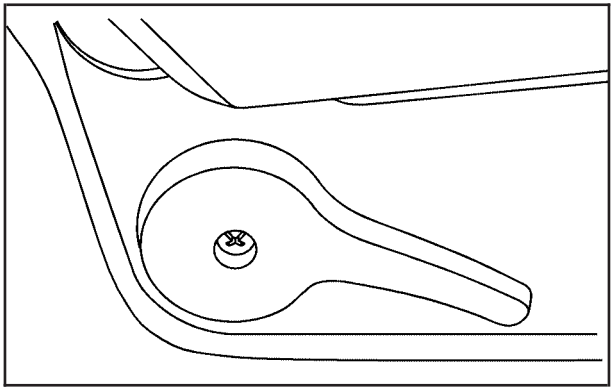

If the seats have manual reclining seatbacks, the lever is located on the outboard side of the seat cushions. To adjust the seatback, lift the lever. Release the lever to lock the seatback where you want it.

Lift the lever without pushing on the seatback and the seatback will go to an upright position.

⚠ CAUTION:

If the seatback is not locked, it could move forward in a sudden stop or crash. That could cause injury to the person sitting there. Always push and pull on the seatback to be sure it is locked.

Push and pull on the seatback to make sure it is locked in place.

If your vehicle has a power recline, see *Power Seats on page 1-2*.

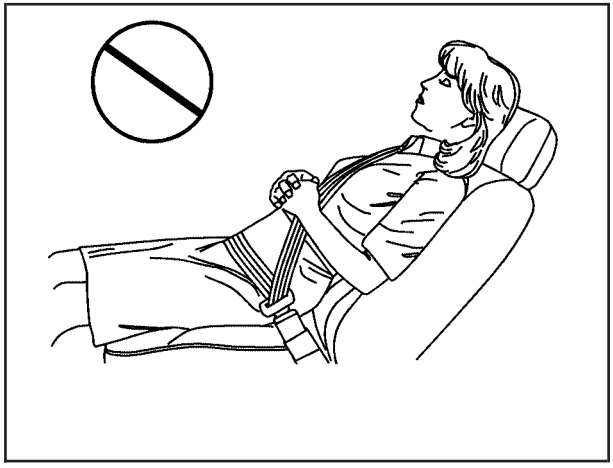

⚠ CAUTION:

Sitting in a reclined position when your vehicle is in motion can be dangerous. Even if you buckle up, your safety belts cannot do their job when you are reclined like this.

The shoulder belt cannot do its job. In a crash, you could go into it, receiving neck or other injuries.

The lap belt cannot do its job either. In a crash the belt could go up over your abdomen. The belt forces would be there, not at your pelvic bones. This could cause serious internal injuries.

For proper protection when the vehicle is in motion, have the seatback upright. Then sit well back in the seat and wear your safety belt properly.

Do not have a seatback reclined if your vehicle is moving.

Head Restraints

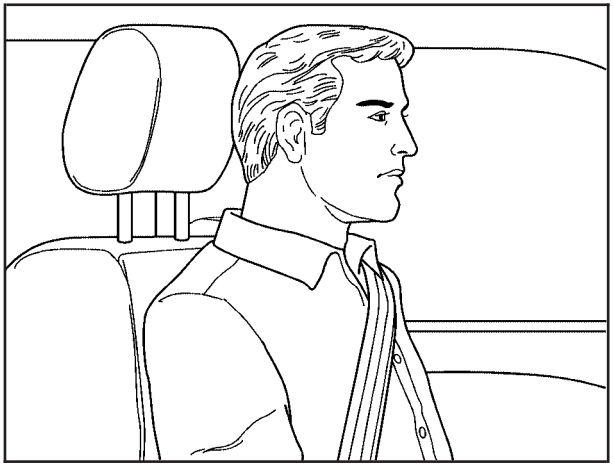

Adjust your head restraint so that the top of the restraint is closest to the top of your head. This position reduces the chance of a neck injury in a crash.

Pull the head restraint up to raise it. Push the head restraint down to lower it.

The rear seat head restraints are adjustable and work the same as the front seat head restraints.

Rear Seats

Rear Seat Operation

The rear seat is a 60/40 split bench seat that can be folded to give you more cargo space and access to the folding midgate. See *Midgate® on page 2-11* for more information on operation of the folding midgate.

To fold either side of the seat do the following:

1. Push the rear seat head restraints all the way down.

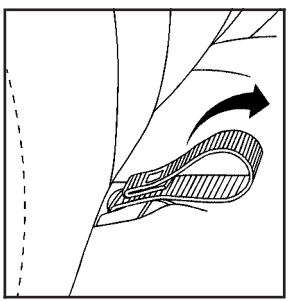

2. Pull the seat loop located where the seatback and seat cushion meet. The seat cushion will release and allow you to tilt it toward the front of the vehicle.

3. Fold the seatback forward until it is flat. You may have to move the front seats forward slightly to do this.
4. Repeat the procedure for the other side.

To return the seats to the normal position, push the seatback up and fold the seat cushion down.

⚠ CAUTION:

If the seatback is not locked, it could move forward in a sudden stop or crash. That could cause injury to the person sitting there. Always be sure to press the rear of the seat cushion down. This action locks the seatback in place.

Push and pull on the seatback to make sure it is locked. Raise the head restraint.

⚠ CAUTION:

A safety belt that is improperly routed, not properly attached, or twisted will not provide the protection needed in a crash. The person wearing the belt could be seriously injured. After raising the rear seatback, always check to be sure that the safety belts are properly routed and attached, and are not twisted.

Safety Belts

Safety Belts: They Are for Everyone

This part of the manual tells you how to use safety belts properly. It also tells you some things you should not do with safety belts.

⚠ CAUTION:

Do not let anyone ride where he or she cannot wear a safety belt properly. If you are in a crash and you are not wearing a safety belt, your injuries can be much worse. You can hit things inside the vehicle or be ejected from it. You can be seriously injured or killed. In the same crash, you might not be, if you are buckled up. Always fasten your safety belt, and check that your passengers' belts are fastened properly too.

⚠ CAUTION:

It is extremely dangerous to ride in a cargo area, inside or outside of a vehicle. In a collision, people riding in these areas are more likely to be seriously injured or killed. Do not allow people to ride in any area of your vehicle that is not equipped with seats and safety belts. Be sure everyone in your vehicle is in a seat and using a safety belt properly.

Your vehicle has a light that comes on as a reminder to buckle up. See *Safety Belt Reminder Light on page 3-30*.

In most states and in all Canadian provinces, the law says to wear safety belts. Here is why: *They work*.

You never know if you will be in a crash. If you do have a crash, you do not know if it will be a bad one.

A few crashes are mild, and some crashes can be so serious that even buckled up, a person would not survive. But most crashes are in between. In many of them, people who buckle up can survive and sometimes walk away. Without belts they could have been badly hurt or killed.

After more than 30 years of safety belts in vehicles, the facts are clear. In most crashes buckling up does matter...a lot!

Why Safety Belts Work

When you ride in or on anything, you go as fast as it goes.

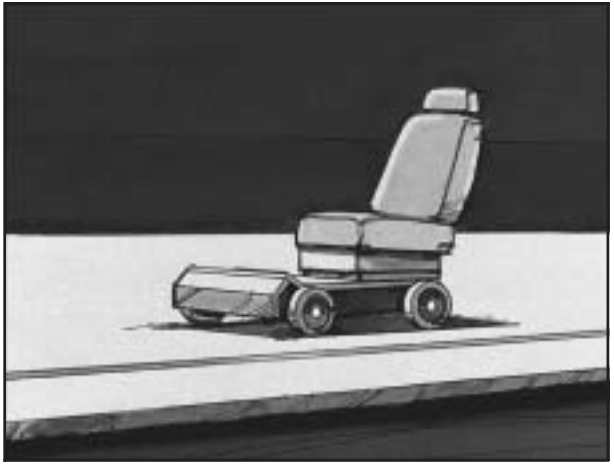

Take the simplest vehicle. Suppose it is just a seat on wheels.

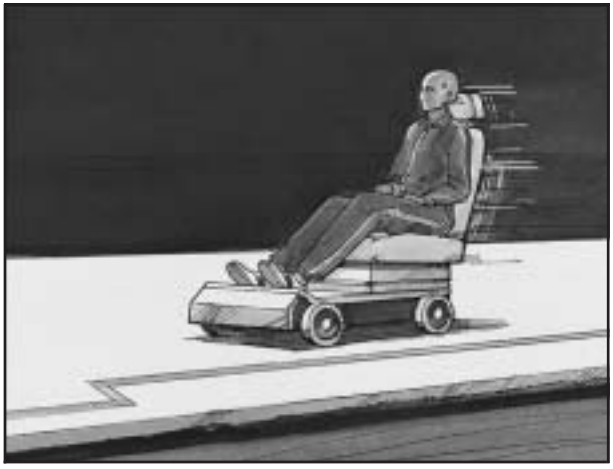

Put someone on it.

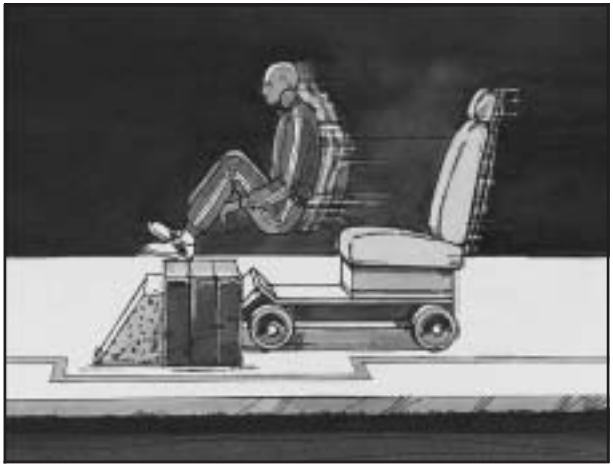

Get it up to speed. Then stop the vehicle. The rider does not stop.

The person keeps going until stopped by something. In a real vehicle, it could be the windshield...

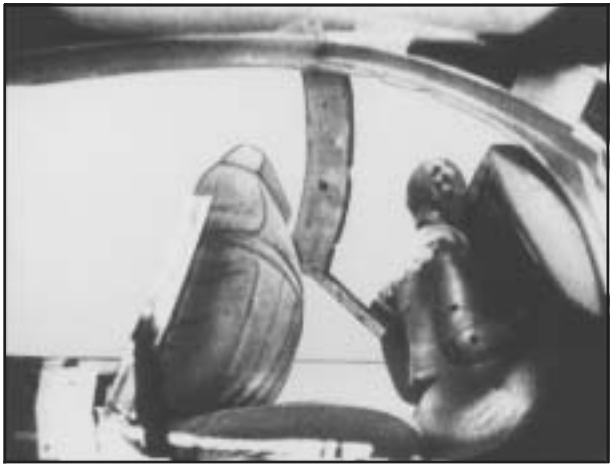

or the instrument panel...

or the safety belts!

With safety belts, you slow down as the vehicle does. You get more time to stop. You stop over more distance, and your strongest bones take the forces. That is why safety belts make such good sense.

Questions and Answers About Safety Belts

Q: Will I be trapped in the vehicle after an accident if I am wearing a safety belt?

A: You *could* be — whether you are wearing a safety belt or not. But you can unbuckle a safety belt, even if you are upside down. And your chance of being conscious during and after an accident, so you *can* unbuckle and get out, is *much* greater if you are belted.

Q: If my vehicle has airbags, why should I have to wear safety belts?

A: Airbags are in many vehicles today and will be in most of them in the future. But they are supplemental systems only; so they work *with* safety belts — not instead of them. Every airbag system ever offered for sale has required the use of safety belts. Even if you are in a vehicle that has airbags, you still have to buckle up to get the most protection. That is true not only in frontal collisions, but especially in side and other collisions.

Q: If I am a good driver, and I never drive far from home, why should I wear safety belts?

A: You may be an excellent driver, but if you are in an accident — even one that is not your fault — you and your passengers can be hurt. Being a good driver does not protect you from things beyond your control, such as bad drivers.

Most accidents occur within 25 miles (40 km) of home. And the greatest number of serious injuries and deaths occur at speeds of less than 40 mph (65 km/h).

Safety belts are for everyone.

How to Wear Safety Belts Properly

This part is only for people of adult size.

Be aware that there are special things to know about safety belts and children. And there are different rules for smaller children and babies. If a child will be riding in your vehicle, see *Older Children on page 1-30* or *Infants and Young Children on page 1-33*. Follow those rules for everyone's protection.

First, you will want to know which restraint systems your vehicle has.

We will start with the driver position.

Driver Position

Lap-Shoulder Belt

The driver has a lap-shoulder belt. Here is how to wear it properly.

1. Close and lock the door.
2. Adjust the seat so you can sit up straight. To see how, see "Seats" in the Index.

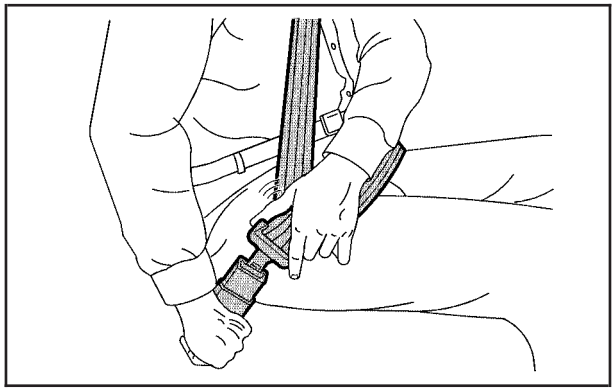

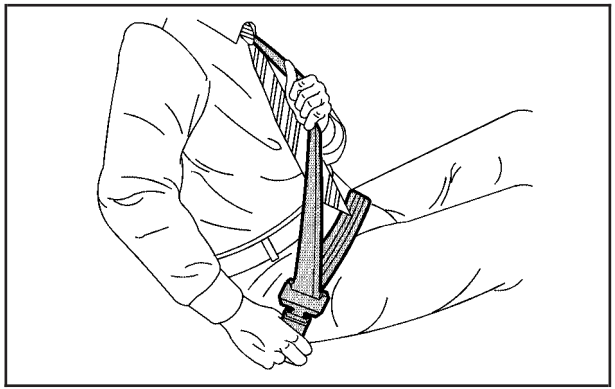

3. Pick up the latch plate and pull the belt across you. Do not let it get twisted.

   The shoulder belt may lock if you pull the belt across you very quickly. If this happens, let the belt go back slightly to unlock it. Then pull the belt across you more slowly.

4. Push the latch plate into the buckle until it clicks.

   Pull up on the latch plate to make sure it is secure. If the belt is not long enough, see *Safety Belt Extender on page 1-29*.

   Make sure the release button on the buckle is positioned so you would be able to unbuckle the safety belt quickly if you ever had to.

5. To make the lap part tight, pull up on the shoulder belt.

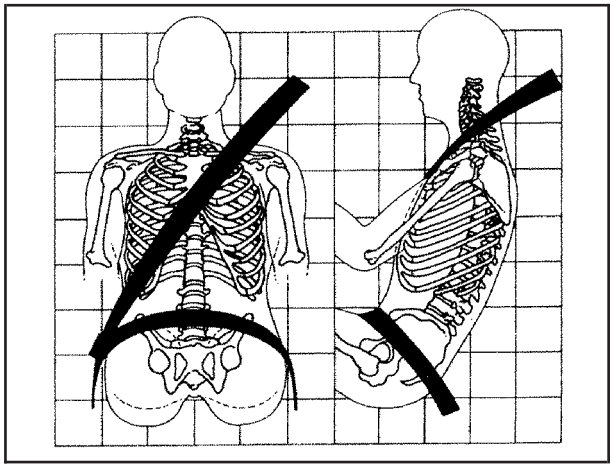

The lap part of the belt should be worn low and snug on the hips, just touching the thighs. In a crash, this applies force to the strong pelvic bones. And you would be less likely to slide under the lap belt. If you slid under it, the belt would apply force at your abdomen. This could cause serious or even fatal injuries. The shoulder belt should go over the shoulder and across the chest. These parts of the body are best able to take belt restraining forces.

The safety belt locks if there is a sudden stop or crash, or if you pull the belt very quickly out of the retractor.

Q: What is wrong with this?

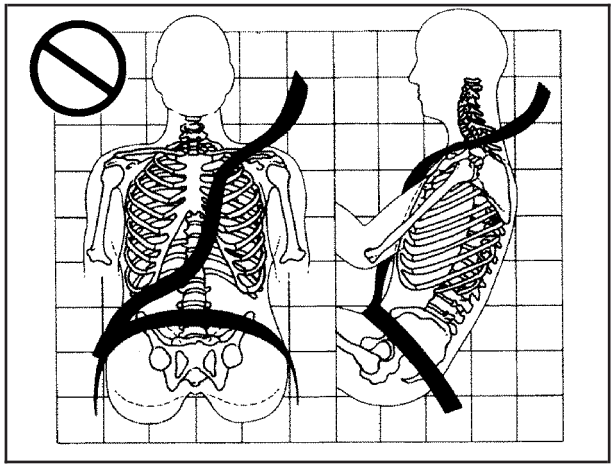

A: The shoulder belt is too loose. It will not give nearly as much protection this way.

⚠ CAUTION:

You can be seriously hurt if your shoulder belt is too loose. In a crash, you would move forward too much, which could increase injury. The shoulder belt should fit against your body.

Q: What is wrong with this?

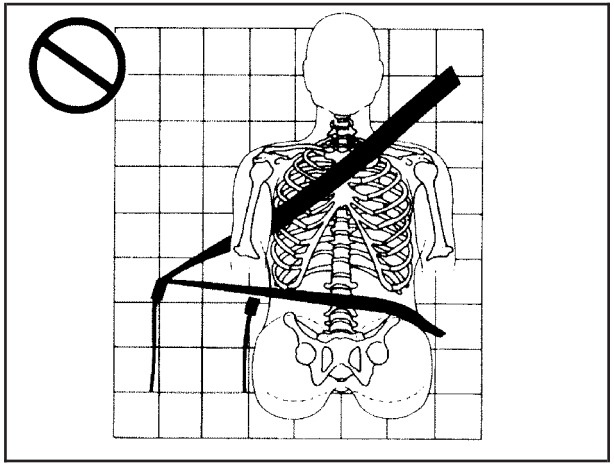

A: The belt is buckled in the wrong place.

⚠ CAUTION:

You can be seriously injured if your belt is buckled in the wrong place like this. In a crash, the belt would go up over your abdomen. The belt forces would be there, not at the pelvic bones. This could cause serious internal injuries. Always buckle your belt into the buckle nearest you.

Q: What is wrong with this?

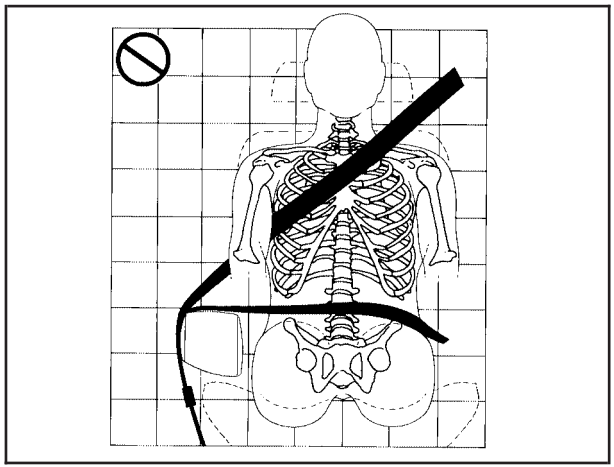

A: The belt is over an armrest.

⚠ CAUTION:

You can be seriously injured if your belt goes over an armrest like this. The belt would be much too high. In a crash, you can slide under the belt. The belt force would then be applied at the abdomen, not at the pelvic bones, and that could cause serious or fatal injuries. Be sure the belt goes under the armrests.

Q: What is wrong with this?

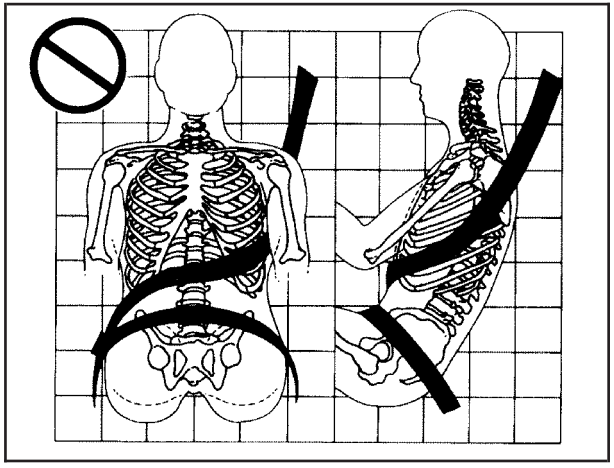

A: The shoulder belt is worn under the arm. It should be worn over the shoulder at all times.

⚠ CAUTION:

You can be seriously injured if you wear the shoulder belt under your arm. In a crash, your body would move too far forward, which would increase the chance of head and neck injury. Also, the belt would apply too much force to the ribs, which are not as strong as shoulder bones. You could also severely injure internal organs like your liver or spleen.

Q: What is wrong with this?

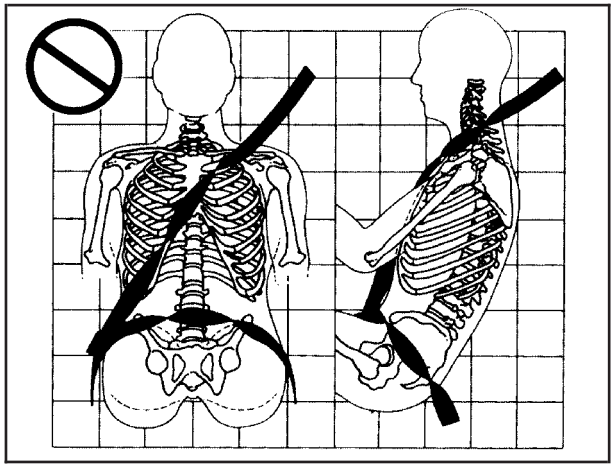

A: The belt is twisted across the body.

⚠ CAUTION:

You can be seriously injured by a twisted belt. In a crash, you would not have the full width of the belt to spread impact forces. If a belt is twisted, make it straight so it can work properly, or ask your dealer to fix it.

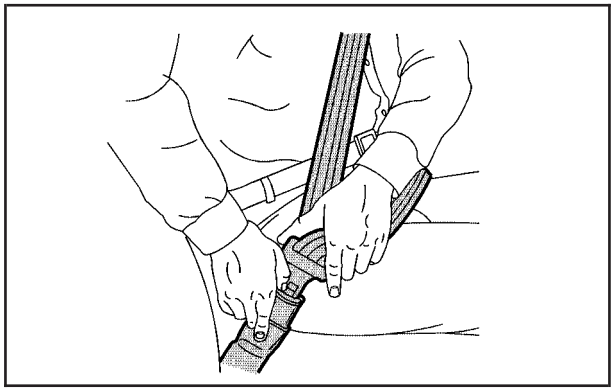

To unlatch the belt, just push the button on the buckle. The belt should go back out of the way.

Before you close the door, be sure the belt is out of the way. If you slam the door on it, you can damage both the belt and your vehicle.

Safety Belt Use During Pregnancy

Safety belts work for everyone, including pregnant women. Like all occupants, they are more likely to be seriously injured if they do not wear safety belts.

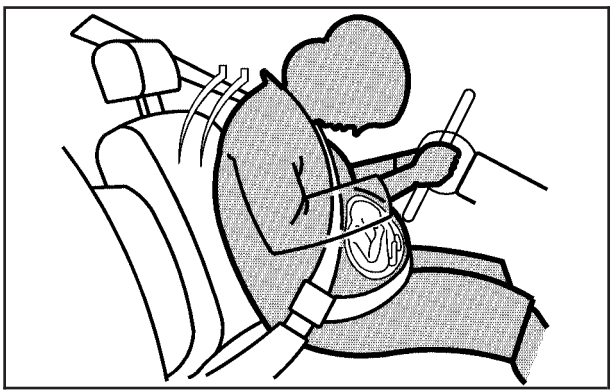

A pregnant woman should wear a lap-shoulder belt, and the lap portion should be worn as low as possible, below the rounding, throughout the pregnancy.

The best way to protect the fetus is to protect the mother. When a safety belt is worn properly, it is more likely that the fetus will not be hurt in a crash. For pregnant women, as for anyone, the key to making safety belts effective is wearing them properly.

Right Front Passenger Position

To learn how to wear the right front passenger's safety belt properly, see *Driver Position on page 1-14*.

The right front passenger's safety belt works the same way as the driver's safety belt — except for one thing. If you ever pull the shoulder portion of the belt out all the way, you will engage the child restraint locking feature which may turn off the passenger's frontal airbag. If this happens unintentionally, just let the belt go back all the way and start again.

Center Front Passenger Position

Lap Belt

If your vehicle has a front bench seat, someone can sit in the center position.

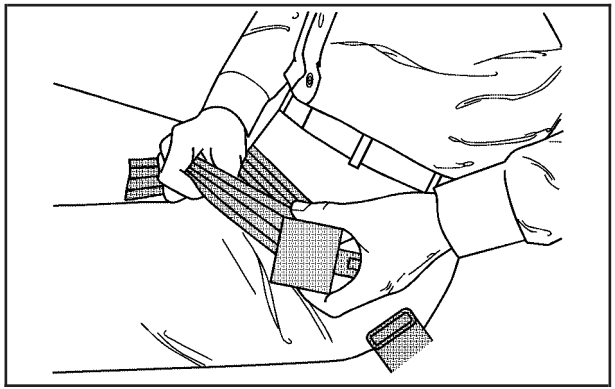

When you sit in a center front seating position, you have a lap safety belt, which has no retractor. To make the belt longer, tilt the latch plate and pull it along the belt.

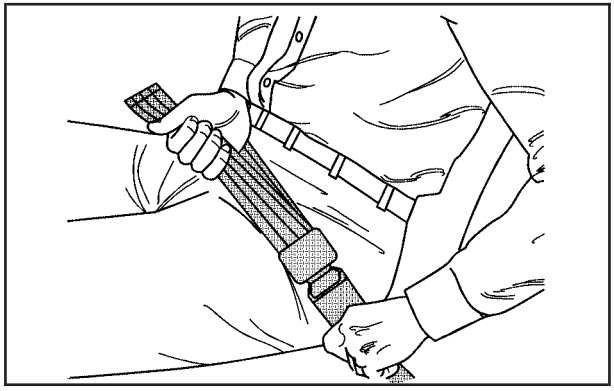

To make the belt shorter, pull its free end as shown until the belt is snug.

Buckle, position and release it the same way as the lap part of a lap-shoulder belt. If the belt is not long enough, see *Safety Belt Extender on page 1-29*.

Make sure the release button on the buckle is positioned so you would be able to unbuckle the safety belt quickly if you ever had to.

Rear Seat Passengers

It is very important for rear seat passengers to buckle up! Accident statistics show that unbelted people in the rear seat are hurt more often in crashes than those who are wearing safety belts.

Rear passengers who are not safety belted can be thrown out of the vehicle in a crash. And they can strike others in the vehicle who are wearing safety belts.

Lap-Shoulder Belt

All rear seat positions have lap-shoulder belts. Here is how to wear one properly.

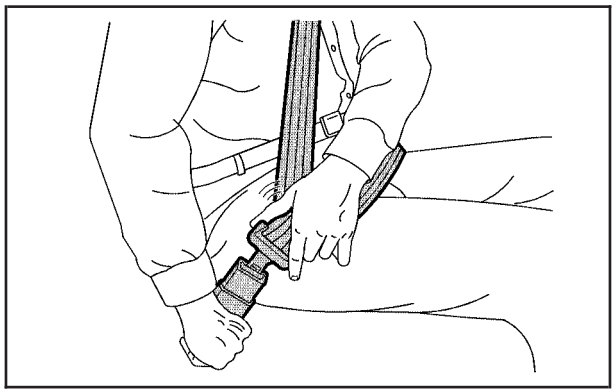

1. Pick up the latch plate and pull the belt across you. Do not let it get twisted.

   The shoulder belt may lock if you pull the belt across you very quickly. If this happens, let the belt go back slightly to unlock it. Then pull the belt across you more slowly.

2. Push the latch plate into the buckle until it clicks.

   Pull up on the latch plate to make sure it is secure.

   When the shoulder belt is pulled out all the way, it will lock. If it does, let it go back all the way and start again.

   If the belt is not long enough, see *Safety Belt Extender on page 1-29*.

   Make sure the release button on the buckle is positioned so you would be able to unbuckle the safety belt quickly if you ever had to.

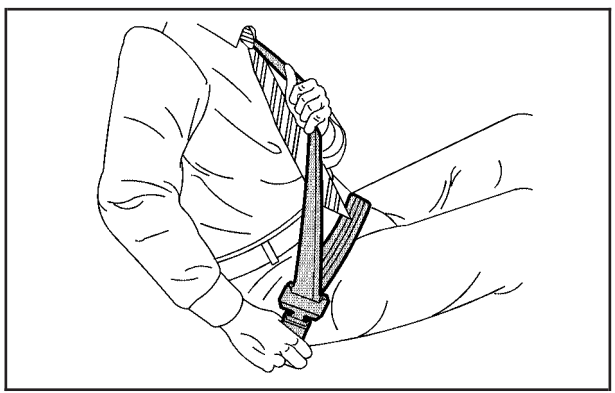

3. To make the lap part tight, pull up on the shoulder part.

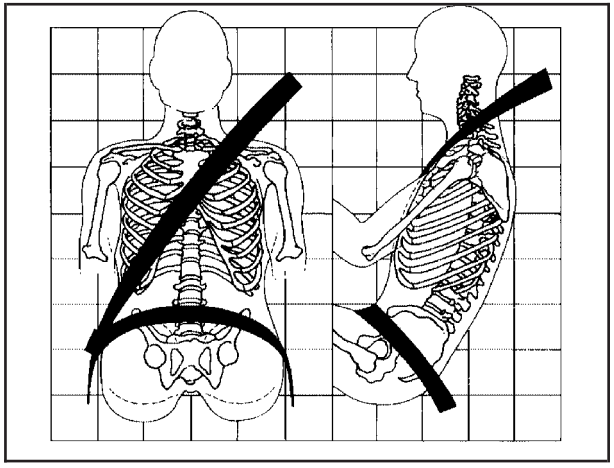

The lap part of the belt should be worn low and snug on the hips, just touching the thighs. In a crash, this applies force to the strong pelvic bones. And you would be less likely to slide under the lap belt. If you slid under it, the belt would apply force at your abdomen. This could cause serious or even fatal injuries. The shoulder belt should go over the shoulder and across the chest. These parts of the body are best able to take belt restraining forces.

The safety belt locks if there is a sudden stop or a crash, or if you pull the belt very quickly out of the retractor.

⚠ CAUTION:

You can be seriously hurt if your shoulder belt is too loose. In a crash, you would move forward too much, which could increase injury. The shoulder belt should fit against your body.

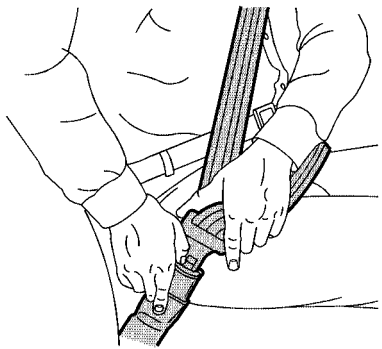

To unlatch the belt, push the button on the buckle.

Rear Safety Belt Comfort Guides

Rear shoulder belt comfort guides may provide added safety belt comfort for older children who have outgrown booster seats and for some adults. When installed on a shoulder belt, the comfort guide positions the belt away from the neck and head.

There is one guide for each passenger in the rear seat. Here is how to install a comfort guide and use the safety belt:

1. Remove the guide from the storage clip on the side of the rear seatback.

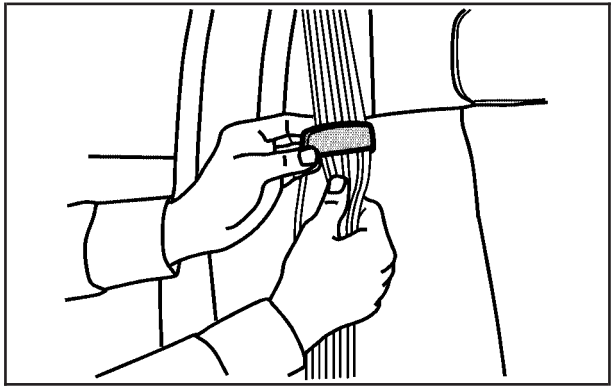

2. Place the guide over the belt and insert the two edges of the belt into the slots of the guide.

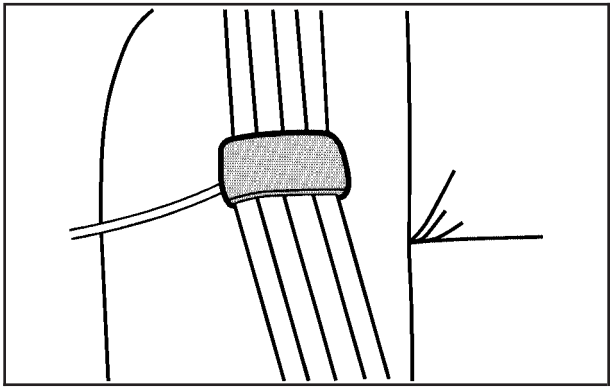

3. Be sure that the belt is not twisted and it lies flat. The guide must be on top of the belt.

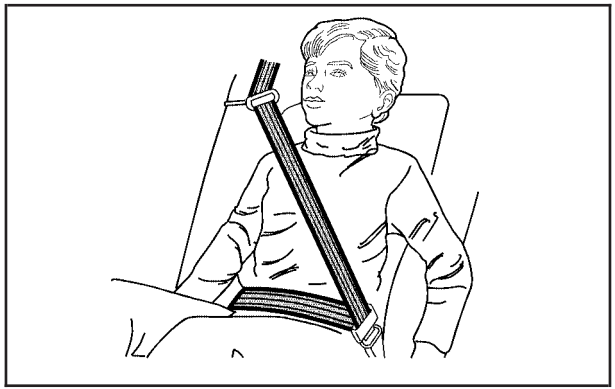

⚠ CAUTION:

A safety belt that is not properly worn may not provide the protection needed in a crash. The person wearing the belt could be seriously injured. The shoulder belt should go over the shoulder and across the chest. These parts of the body are best able to take belt restraining forces.

4. Buckle, position, and release the safety belt as described in *Rear Seat Passengers on page 1-24*. Make sure that the shoulder belt crosses the shoulder.

To remove and store the comfort guides, squeeze the belt edges together so that you can take them out of the guides. Slide the guide onto the storage clip. Be sure to remove the comfort guide from the belt before folding the seat.

Safety Belt Extender

If the vehicle's safety belt will fasten around you, you should use it.

But if a safety belt is not long enough, your dealer will order you an extender. It is free. When you go in to order it, take the heaviest coat you will wear, so the extender will be long enough for you. To help avoid personal injury, do not let someone else use it, and use it only for the seat it is made to fit. The extender has been designed for adults. Never use it for securing child seats. To wear it, just attach it to the regular safety belt. For more information, see the instruction sheet that comes with the extender.

Child Restraints

Older Children

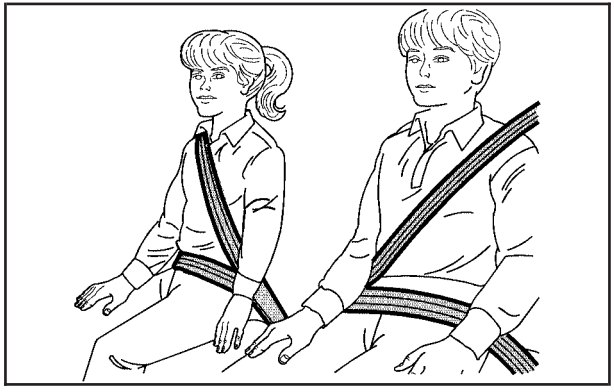

Older children who have outgrown booster seats should wear the vehicle's safety belts.

Q: What is the proper way to wear safety belts?

A: An older child should wear a lap-shoulder belt and get the additional restraint a shoulder belt can provide. The shoulder belt should not cross the face or neck. The lap belt should fit snugly below the hips, just touching the top of the thighs. It should never be worn over the abdomen, which could cause severe or even fatal internal injuries in a crash.

Accident statistics show that children are safer if they are restrained in the rear seat.

In a crash, children who are not buckled up can strike other people who are buckled up, or can be thrown out of the vehicle. Older children need to use safety belts properly.

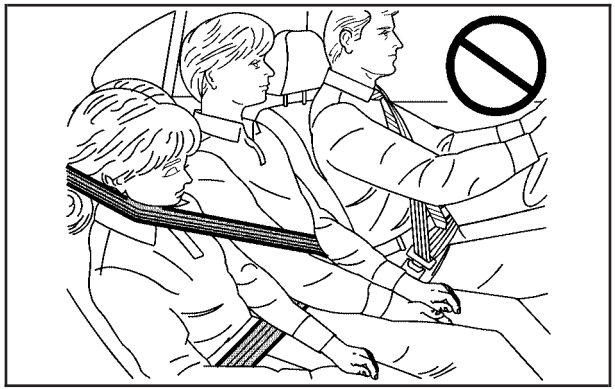

⚠ CAUTION:

Never do this.

Here two children are wearing the same belt. The belt can not properly spread the impact forces. In a crash, the two children can be crushed together and seriously injured. A belt must be used by only one person at a time.

Q: What if a child is wearing a lap-shoulder belt, but the child is so small that the shoulder belt is very close to the child's face or neck?

A: If the child is sitting in a seat next to a window, move the child toward the center of the vehicle. If the child is sitting in the center rear seat passenger position, move the child toward the safety belt buckle. Also see *Rear Safety Belt Comfort Guides on page 1-27*. In either case, be sure that the shoulder belt still is on the child's shoulder, so that in a crash the child's upper body would have the restraint that belts provide.

⚠ CAUTION:

Never do this.

Here a child is sitting in a seat that has a lap-shoulder belt, but the shoulder part is behind the child. If the child wears the belt in this way, in a crash the child might slide under the belt. The belt's force would then be applied right on the child's abdomen. That could cause serious or fatal injuries.

The lap portion of the belt should be worn low and snug on the hips, just touching the child's thighs. This applies belt force to the child's pelvic bones in a crash.

Infants and Young Children

Everyone in a vehicle needs protection! This includes infants and all other children. Neither the distance traveled nor the age and size of the traveler changes the need, for everyone, to use safety restraints. In fact, the law in every state in the United States and in every Canadian province says children up to some age must be restrained while in a vehicle.

Every time infants and young children ride in vehicles, they should have the protection provided by appropriate restraints. Young children should not use the vehicle's adult safety belts alone, unless there is no other choice. Instead, they need to use a child restraint.

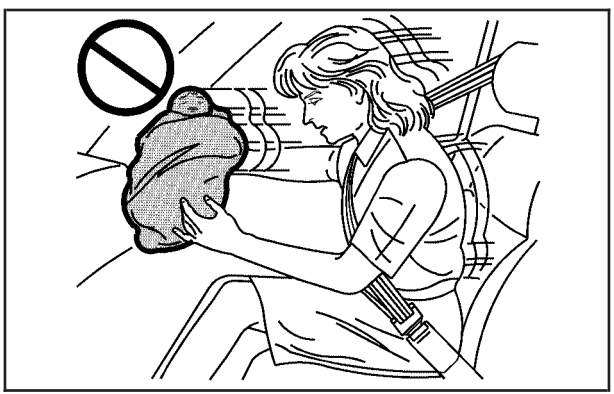

⚠ CAUTION:

People should never hold a baby in their arms while riding in a vehicle. A baby does not weigh much — until a crash. During a crash a baby will become so heavy it is not possible to hold it. For example, in a crash at only 25 mph (40 km/h), a 12 lb (5.5 kg) baby will suddenly become a 240 lb (110 kg) force on a person's arms. A baby should be secured in an appropriate restraint.

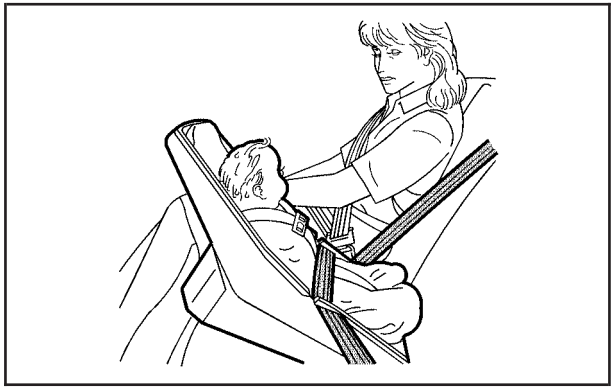

⚠ CAUTION:

Children who are up against, or very close to, any airbag when it inflates can be seriously injured or killed. Airbags plus lap-shoulder belts offer protection for adults and older children, but not for young children and infants. Neither the vehicle's safety belt system nor its airbag system is designed for them. Young children and infants need the protection that a child restraint system can provide.

Q: What are the different types of add-on child restraints?

A: Add-on child restraints, which are purchased by the vehicle's owner, are available in four basic types. Selection of a particular restraint should take into consideration not only the child's weight, height and age but also whether or not the restraint will be compatible with the motor vehicle in which it will be used.

For most basic types of child restraints, there are many different models available. When purchasing a child restraint, be sure it is designed to be used in a motor vehicle. If it is, the restraint will have a label saying that it meets federal motor vehicle safety standards.

The restraint manufacturer's instructions that come with the restraint, state the weight and height limitations for a particular child restraint. In addition, there are many kinds of restraints available for children with special needs.

⚠ CAUTION:

Newborn infants need complete support, including support for the head and neck. This is necessary because a newborn infant's neck is weak and its head weighs so much compared with the rest of its body. In a crash, an infant in a rear-facing seat settles into the restraint, so the crash forces can be distributed across the strongest part of an infant's body, the back and shoulders. Infants always should be secured in appropriate infant restraints.

⚠ CAUTION:

The body structure of a young child is quite unlike that of an adult or older child, for whom the safety belts are designed. A young child's hip bones are still so small that the vehicle's regular safety belt may not remain low on the hip bones, as it should. Instead, it may settle up around the child's abdomen. In a crash, the belt would apply force on a body area that is unprotected by any bony structure. This alone could cause serious or fatal injuries. Young children always should be secured in appropriate child restraints.

Child Restraint Systems

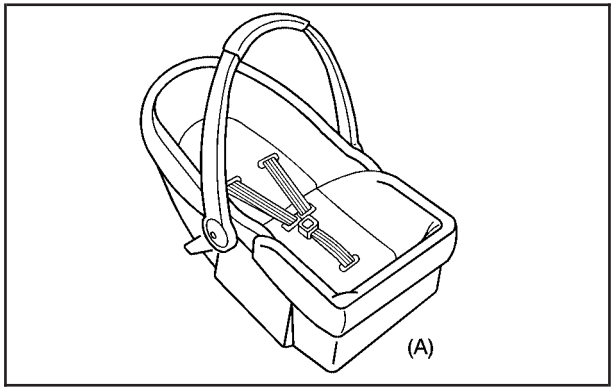

An infant car bed (A), a special bed made for use in a motor vehicle, is an infant restraint system designed to restrain or position a child on a continuous flat surface. Make sure that the infant's head rests toward the center of the vehicle.

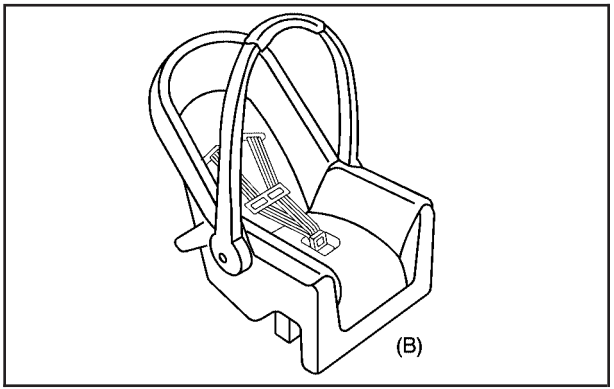

A rear-facing infant seat (B) provides restraint with the seating surface against the back of the infant. The harness system holds the infant in place and, in a crash, acts to keep the infant positioned in the restraint.

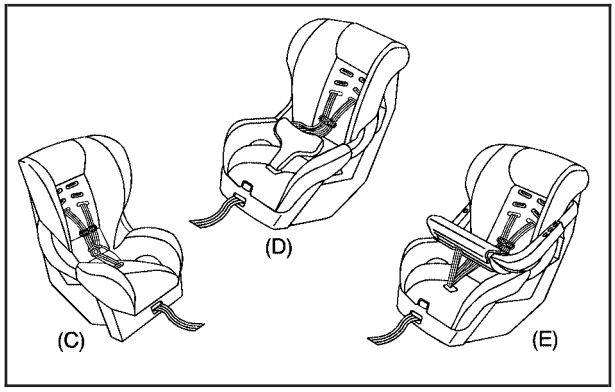

A forward-facing child seat (C-E) provides restraint for the child's body with the harness and also sometimes with surfaces such as T-shaped or shelf-like shields.

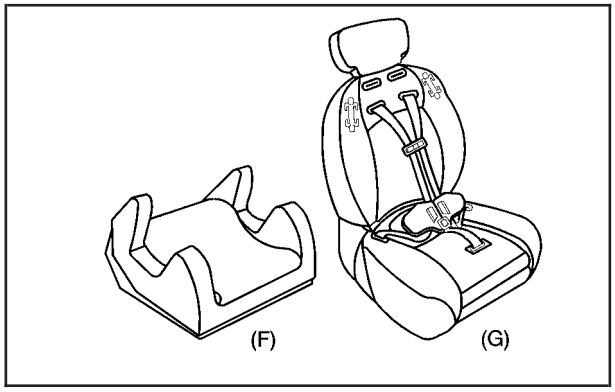

A booster seat (F-G) is a child restraint designed to improve the fit of the vehicle's safety belt system. Some booster seats have a shoulder belt positioner, and some high-back booster seats have a five-point harness. A booster seat can also help a child to see out the window.

Q: How Should I Use a Child Restraint?

A: A child restraint system is any device designed for use in a motor vehicle to restrain, seat, or position children. A built-in child restraint system is a permanent part of the motor vehicle. An add-on child restraint system is a portable one, which is purchased by the vehicle's owner. To help reduce injuries, an add-on child restraint must be secured in the vehicle. With built-in or add-on child restraints, the child has to be secured within the child restraint.

When choosing an add-on child restraint, be sure the child restraint is designed to be used in a vehicle. If it is, it will have a label saying that it meets federal motor vehicle safety standards. Then follow the instructions for the restraint. You may find these instructions on the restraint itself or in a booklet, or both.

Securing an Add-on Child Restraint in the Vehicle

⚠ CAUTION:

A child can be seriously injured or killed in a crash if the child restraint is not properly secured in the vehicle. Make sure the child restraint is properly installed in the vehicle using the vehicle's safety belt or LATCH system, following the instructions that came with that restraint, and also the instructions in this manual.

To help reduce the chance of injury, the child restraint must be secured in the vehicle. Child restraint systems must be secured in vehicle seats by lap belts or the lap belt portion of a lap-shoulder belt, or by the LATCH system. See *Lower Anchors and Tethers for Children (LATCH) on page 1-41* for more information. A child can be endangered in a crash if the child restraint is not properly secured in the vehicle.

When securing an add-on child restraint, refer to the instructions that come with the restraint which may be on the restraint itself or in a booklet, or both, and to this manual. The child restraint instructions are important, so if they are not available, obtain a replacement copy from the manufacturer.

Keep in mind that an unsecured child restraint can move around in a collision or sudden stop and injure people in the vehicle. Be sure to properly secure any child restraint in your vehicle — even when no child is in it.

Securing the Child Within the Child Restraint

There are several systems for securing the child within the child restraint. One system, the three-point harness, has straps that come down over each of the infant's shoulders and buckle together at the crotch. The five-point harness system has two shoulder straps, two hip straps, and a crotch strap. A shield may take the place of hip straps. A T-shaped shield has shoulder straps that are attached to a flat pad which rests low against the child's body. A shelf- or armrest-type shield has straps that are attached to a wide, shelf-like shield that swings up or to the side.

⚠ CAUTION:

A child can be seriously injured or killed in a crash if the child is not properly secured in the child restraint. Make sure the child is properly secured, following the instructions that came with that restraint.

Because there are different systems, it is important to refer to the instructions that come with the restraint. A child can be endangered in a crash if the child is not properly secured in the child restraint.

Where to Put the Restraint

Accident statistics show that children are safer if they are restrained in the rear rather than the front seat. General Motors recommends that child restraints be secured in a rear seat, including an infant riding in a rear-facing infant seat, a child riding in a forward-facing child seat and an older child riding in a booster seat.

Your vehicle has a rear seat that will accommodate a rear-facing child restraint. A label on your sun visor says, “Never put a rear-facing child seat in the front.” This is because the risk to the rear-facing child is so great, if the airbag deploys.

⚠ CAUTION:

A child in a rear-facing child restraint can be seriously injured or killed if the right front passenger’s airbag inflates. This is because the back of the rear-facing child restraint would be very close to the inflating airbag.

Even though the passenger sensing system is designed to turn off the passenger’s frontal airbag if the system detects a rear-facing child

CAUTION: (Continued)

CAUTION: (Continued)

restraint, no system is fail-safe, and no one can guarantee that an airbag will not deploy under some unusual circumstance, even though it is turned off. We recommend that rear-facing child restraints be secured in the rear seat, even if the airbag is off.

If you need to secure a forward-facing child restraint in the right front seat, always move the front passenger seat as far back as it will go. It is better to secure the child restraint in a rear seat.

Do not use child restraints in the center front seat position. The restraints will not work properly.

Wherever you install it, be sure to secure the child restraint properly.

Keep in mind that an unsecured child restraint can move around in a collision or sudden stop and injure people in the vehicle. Be sure to properly secure any child restraint in your vehicle — even when no child is in it.

Lower Anchors and Tethers for Children (LATCH)

Your vehicle has the LATCH system. The LATCH system holds a child restraint during driving or in a crash. This system is designed to make installation of a child restraint easier. The LATCH system uses anchors in the vehicle and attachments on the child restraint that are made for use with the LATCH system

Make sure that a LATCH-compatible child restraint is properly installed using the anchors, or use the vehicle's safety belts to secure the restraint, following the instructions that came with that restraint, and also the instructions in this manual. When installing a child restraint with a top tether, you must also use either the lower anchors or the safety belts to properly secure the child restraint. A child restraint must never be installed using only the top tether and anchor.

In order to use the LATCH system in your vehicle, you need a child restraint equipped with LATCH attachments. The child restraint manufacturer will provide you with instructions on how to use the child restraint and its attachments. The following explains how to attach a child restraint with these attachments in your vehicle.

Your vehicle has lower anchors and top tether anchors. Your child restraint may have lower attachments and a top tether.

Not all vehicle seating positions or child restraints have lower anchors and attachments or top tether anchors and attachments.

Lower Anchors

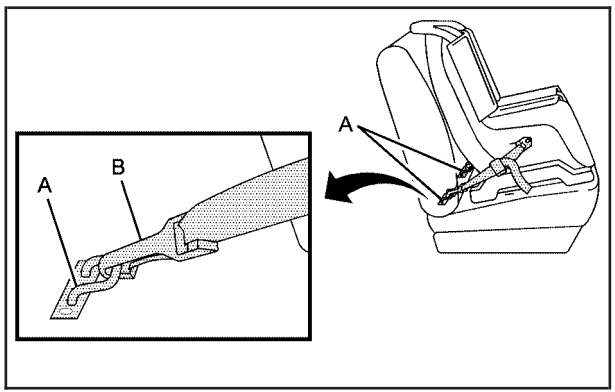

Lower anchors (A) are metal bars built into the vehicle. There are two lower anchors for each LATCH seating position that will accommodate a child restraint with lower attachments (B).

Top Tether Anchor

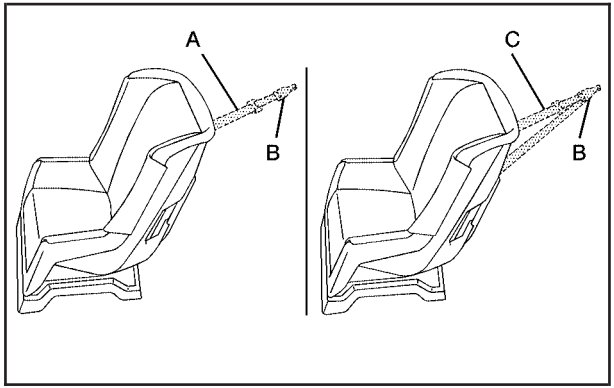

A top tether (A, C) anchors the top of the child restraint to the vehicle. A top tether anchor is built into the vehicle. The top tether attachment (B) on the child restraint connects to the top tether anchor in the vehicle in order to reduce the forward movement and rotation of the child restraint during driving or in a crash.

Your child restraint may have a single tether (A) or a dual tether (C). Either will have a single attachment (B) to secure the top tether to the anchor.

Some top tether-equipped child restraints are designed for use with or without the top tether being attached. Others require the top tether always to be attached. In Canada, the law requires that forward-facing child restraints have a top tether, and that the tether be attached. In the United States, some child restraints also have a top tether. Be sure to read and follow the instructions for your child restraint.

If the child restraint does not have a top tether, one can be obtained, in kit form, for many child restraints. Ask the child restraint manufacturer whether or not a kit is available.

Lower Anchor and Top Tether Anchor Locations

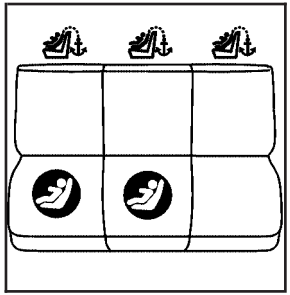

Rear Seat

(Top Tether Anchor):
Seating positions with top tether anchors.

(Lower Anchor):
Seating positions with two lower anchors.

The right side rear passenger and center seating positions have exposed metal anchors located in the crease between the seatback and the seat cushion.

The top tether anchors are located on the back of the rear seat frame above the floor for each rear seating position. Fold down the rear seatback(s) to access the anchors. See *Rear Seat Operation on page 1-7*. Be sure to use an anchor located on the same side of the vehicle as the seating position where the child restraint will be placed.

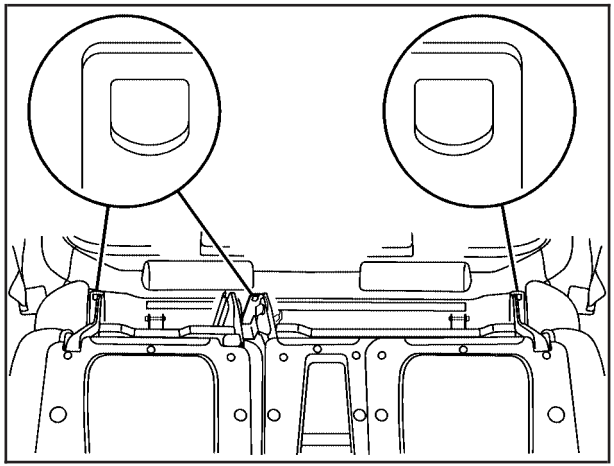

Do not secure a child restraint in the right front passenger's position if a national or local law requires that the top tether be attached, or if the instructions that come with the child restraint say that the top tether must be attached. There is no place to attach the top tether in this position.

Accident statistics show that children are safer if they are restrained in the rear rather than the front seat. See *Where to Put the Restraint on page 1-40* for additional information.

Securing a Child Restraint Designed for the LATCH System

⚠ CAUTION:

If a LATCH-type child restraint is not attached to anchors, the restraint will not be able to protect the child correctly. In a crash, the child could be seriously injured or killed. Make sure that a LATCH-type child restraint is properly installed using the anchors, or use the vehicle's safety belts to secure the restraint, following the instructions that came with that restraint, and also the instructions in this manual.

⚠ CAUTION:

Each top tether anchor and lower anchor in the vehicle is designed to hold only one child restraint. Attaching more than one child restraint to a single anchor could cause the anchor or attachment to come loose or even break during a crash. A child or others could be injured if this happens. To help prevent injury to people and damage to your vehicle, attach only one child restraint per anchor.

1. If the child restraint manufacturer recommends that the top tether be attached, attach the top tether to the top tether anchor, if equipped. Refer to the child restraint instructions and the following steps:
   1.1. To access the top tether anchors, raise the seat cushion by pulling up on the strap loop at the rear of the seat cushion and fold the seat cushion forward. Then fold the seatback forward until it is flat. See *Rear Seat Operation on page 1-7* for additional information.
   1.2. Place the child restraint in the vehicle, near the seating position that you are using.

1.3. Route the top tether according to your child restraint instructions and the following instructions:

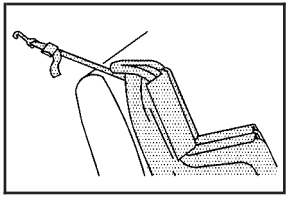

If the position you are using does not have a head restraint and you are using a single tether, route the tether over the seatback.

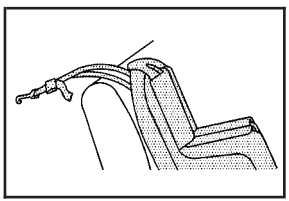

If the position you are using does not have a head restraint and you are using a dual tether, route the tether over the seatback.

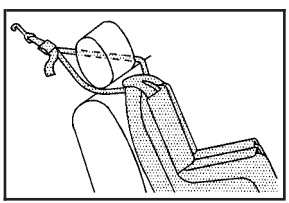

If the position you are using has an adjustable head restraint and you are using a dual tether, route the tether around the head restraint.

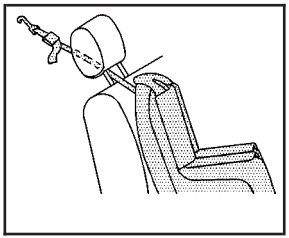

If the position you are using has an adjustable head restraint and you are using a single tether, raise the head restraint and route the tether under the head restraint and in between the head restraint posts.

1.4. Attach the top tether attachment to the top tether anchor.

⚠ CAUTION:

If the seatback is not locked, it could move forward in a sudden stop or crash. That could cause injury to the person sitting there. Always push and pull on the seatback to be sure it is locked.

1.5. Lift the seatback up and push it rearward. Then lower the seat cushion until the seatback and the seat cushion lock into position.

2. Attach the lower attachments to the lower anchors. If the child restraint does not have lower attachments or the desired seating position does not have lower anchors, secure the child restraint with the top tether and the safety belts. Refer to your child restraint manufacturer instructions and the instructions in this manual.
   2.1. Find the lower anchors for the desired seating position.
   2.2. Put the child restraint on the seat.
   2.3. Attach and tighten the lower attachments on the child restraint to the lower anchors.
3. Tighten the top tether.
4. Push and pull the child restraint in different directions to be sure it is secure.

Securing a Child Restraint in a Rear Seat Position

If your child restraint is equipped with the LATCH system, see *Lower Anchors and Tethers for Children (LATCH) on page 1-41*.

If your child restraint does not have the LATCH system, you will be using the lap-shoulder belt to secure the child restraint in this position. Be sure to follow the instructions that came with the child restraint. Secure the child in the child restraint when and as the instructions say.

1. If your child restraint manufacturer recommends using a top tether, attach and tighten the top tether to the top tether anchor. Refer to the instructions that came with the child restraint and see *Lower Anchors and Tethers for Children (LATCH) on page 1-41*.
2. Put the child restraint on the seat.
3. Pick up the latch plate, and run the lap and shoulder portions of the vehicle's safety belt through or around the restraint. The child restraint instructions will show you how.

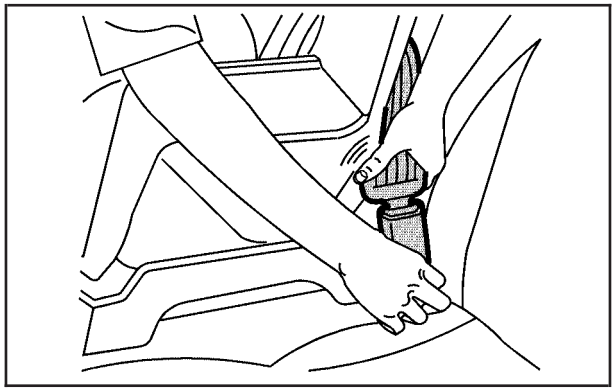

4. Buckle the belt. Make sure the release button is positioned so you would be able to unbuckle the safety belt quickly if you ever had to.

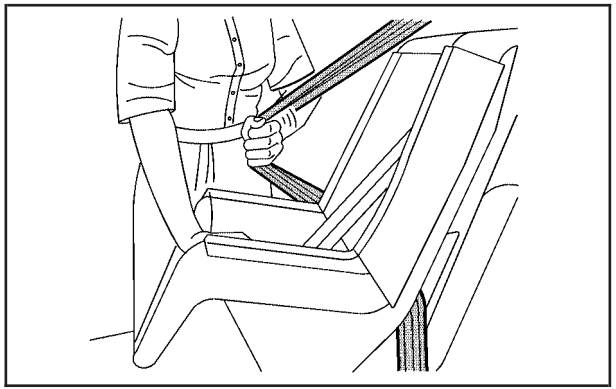

5. Pull the rest of the shoulder belt all the way out of the retractor to set the lock.

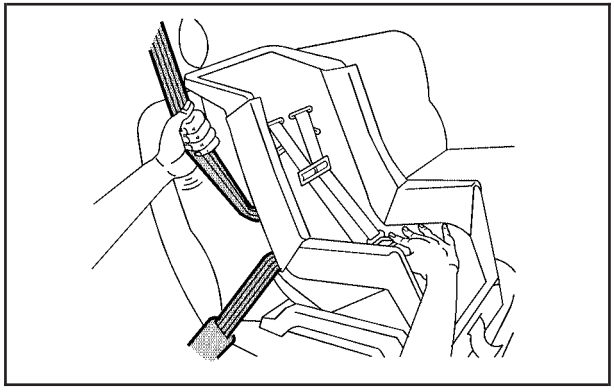

6. To tighten the belt, push down on the child restraint, pull the shoulder portion of the belt to tighten the lap portion of the belt and feed the shoulder belt back into the retractor. If you are using a forward-facing child restraint, you may find it helpful to use your knee to push down on the child restraint as you tighten the belt.
7. Push and pull the child restraint in different directions to be sure it is secure.

To remove the child restraint, unbuckle the vehicle's safety belt and let it go back all the way. The safety belt will move freely again and be ready to work for an adult or larger child passenger. If the top tether is attached to the top tether anchor, disconnect it.

Securing a Child Restraint in the Center Front Seat Position

⚠ CAUTION:

A child in a child restraint in the center front seat can be badly injured or killed by the right front passenger's airbag if it inflates. Never secure a child restraint in the center front seat. It is always better to secure a child restraint in the rear seat.

Do not use child restraints in this position.

Securing a Child Restraint in the Right Front Seat Position

Your vehicle has a right front passenger's airbag. A rear seat is a safer place to secure a forward-facing child restraint. See *Where to Put the Restraint on page 1-40*.

In addition, your vehicle may have the passenger sensing system. The passenger sensing system is designed to turn off the right front passenger's frontal airbag when an infant in a rear-facing infant seat or a small child in a forward-facing child restraint or booster seat is detected. See *Passenger Sensing System on page 1-61* and *Passenger Airbag Status Indicator on page 3-32* for more information on this including important safety information.

A label on your sun visor says, "Never put a rear-facing child seat in the front." This is because the risk to the rear-facing child is so great, if the airbag deploys.

⚠ CAUTION:

A child in a rear-facing child restraint can be seriously injured or killed if the right front passenger's airbag inflates. This is because the back of the rear-facing child restraint would be very close to the inflating airbag.

Even though the passenger sensing system is designed to turn off the passenger's frontal airbag if the system detects a rear-facing child restraint, no system is fail-safe, and no one can guarantee that an airbag will not deploy under some unusual circumstance, even though it is turned off. We recommend that rear-facing child restraints be secured in the rear seat, even if the airbag is off.

If you need to secure a forward-facing child restraint in the right front seat position, move the seat as far back as it will go before securing the forward-facing child restraint. See *Power Seats on page 1-2* or *Manual Passenger Seat on page 1-2*.

If your child restraint is equipped with the LATCH system, see *Lower Anchors and Tethers for Children (LATCH) on page 1-41*.

There is no top tether anchor in the right front passenger's position. Do not secure a child seat in this position if a national or local law requires that the top tether be anchored, or if the instructions that come with the child restraint say that the top tether must be anchored. See *Lower Anchors and Tethers for Children (LATCH) on page 1-41* if the child restraint has a top tether.

You will be using the lap-shoulder belt to secure the child restraint in this position. Be sure to follow the instructions that came with the child restraint. Secure the child in the child restraint when and as the instructions say.

1. Your vehicle has a right front passenger's frontal airbag. See *Passenger Sensing System on page 1-61*. General Motors recommends that rear-facing child restraints be secured in a rear seat, even if the airbag is off. If your child restraint is forward-facing, move the seat as far back as it will go before securing the child restraint in this seat. See *Power Seats on page 1-2* or *Manual Passenger Seat on page 1-2*.

   When the passenger sensing system has turned off the right front passenger's frontal airbag, the off indicator in the passenger airbag status indicator should light and stay lit when you turn the ignition to RUN or START. See *Passenger Airbag Status Indicator on page 3-32*.

2. Put the child restraint on the seat.
3. Pick up the latch plate, and run the lap and shoulder portions of the vehicle's safety belt through or around the restraint. The child restraint instructions will show you how.

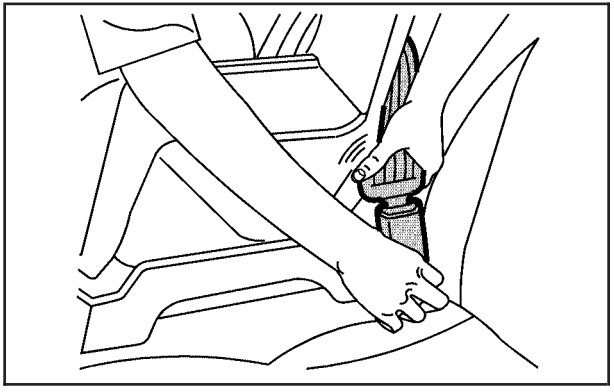

4. Buckle the belt. Make sure the release button is positioned so you would be able to unbuckle the safety belt quickly if you ever had to.

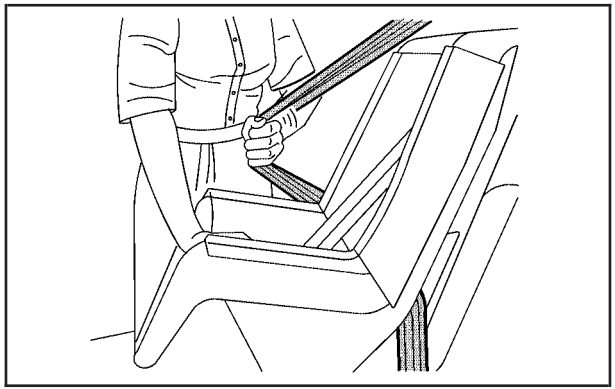

5. Pull the rest of the shoulder belt all the way out of the retractor to set the lock.

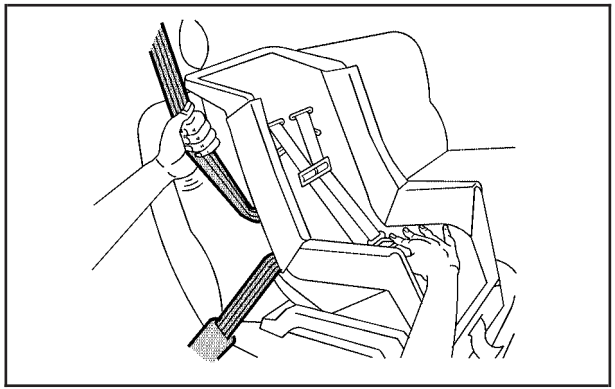

6. To tighten the belt, push down on the child restraint, pull the shoulder portion of the belt to tighten the lap portion of the belt and feed the shoulder belt back into the retractor. If you are using a forward-facing child restraint, you may find it helpful to use your knee to push down on the child restraint as you tighten the belt. You should not be able to pull more of the belt from the retractor once the lock has been set.

7. Push and pull the child restraint in different directions to be sure it is secure.
8. If your vehicle has the passenger sensing system and the airbag is off, the off indicator will be lit and stay lit in the inside rearview mirror when the key is turned to RUN or START.

If a child restraint has been installed and the on indicator is lit, turn the vehicle off. Remove the child restraint from the vehicle and reinstall the child restraint.

If after reinstalling the child restraint and restarting the vehicle, the on indicator is still lit, check to make sure that the vehicle's seatback is not pressing the child restraint into the seat cushion. If this happens, slightly recline the vehicle's seatback and adjust the seat cushion if possible. Also make sure the child restraint is not trapped under the vehicle head restraint. If this happens, adjust the head restraint.

If the on indicator is still lit, secure the child in the child restraint in a rear seat position in the vehicle and check with your dealer.

To remove the child restraint, just unbuckle the vehicle's safety belt and let it go back all the way. The safety belt will move freely again and be ready to work for an adult or larger child passenger.

Airbag System

Your vehicle has a frontal airbag for the driver and a frontal airbag for the right front passenger. Your vehicle may also have side impact airbags. Side impact airbags are available for the driver and right front passenger.

If your vehicle has a side impact airbag for the driver and/or the right front passenger, the words AIR BAG will appear on the airbag covering on the side of the seatback closest to the door.

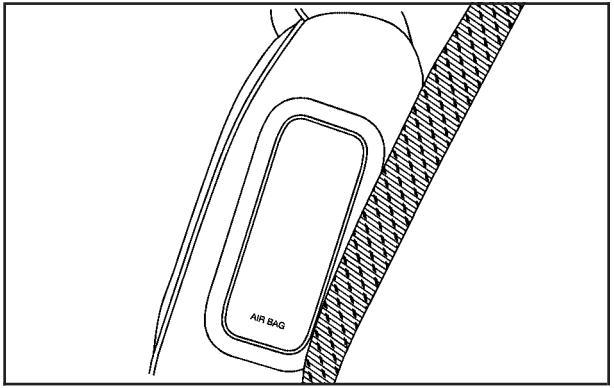

Frontal airbags are designed to help reduce the risk of injury from the force of an inflating frontal airbag. But these airbags must inflate very quickly to do their job and comply with federal regulations.

Here are the most important things to know about the airbag system:

⚠ CAUTION:

You can be severely injured or killed in a crash if you are not wearing your safety belt — even if you have airbags. Wearing your safety belt during a crash helps reduce your chance of hitting things inside the vehicle or being ejected from it. Airbags are "supplemental restraints" to the safety belts. Airbags are designed to work with safety belts but do not replace them.

Frontal airbags for the driver and right front passenger are designed to deploy in moderate to severe frontal and near frontal crashes. They are not designed to inflate in rollover, rear crashes, or in many side crashes. And, for

CAUTION: (Continued)

CAUTION: (Continued)

some unrestrained occupants, frontal airbags may provide less protection in frontal crashes than more forceful airbags have provided in the past.

Side impact airbags are designed to inflate in moderate to severe crashes where something hits the side of your vehicle. They are not designed to inflate in frontal, in rollover or in rear crashes.

Everyone in your vehicle should wear a safety belt properly — whether or not there is an airbag for that person.

⚠ CAUTION:

Both frontal and side impact airbags inflate with great force, faster than the blink of an eye. If you are too close to an inflating airbag, as you would be if you were leaning forward, it could seriously injure you. Safety belts help keep you in position for airbag inflation before and during a crash. Always wear your safety belt, even with frontal airbags. The driver should sit as far back as possible while still maintaining control of the vehicle. Front occupants should not lean on or sleep against the door.

⚠ CAUTION:

Anyone who is up against, or very close to, any airbag when it inflates can be seriously injured or killed. Airbags plus lap-shoulder belts offer the best protection for adults, but not for young children and infants. Neither the vehicle's safety belt system nor its airbag system is designed for them. Young children and infants need the protection that a child restraint system can provide. Always secure children properly in your vehicle. To read how, see *Older Children on page 1-30* or *Infants and Young Children on page 1-33*.

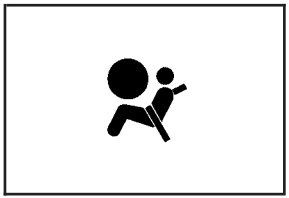

There is an airbag readiness light on the instrument panel cluster, which shows the airbag symbol.

The system checks the airbag electrical system for malfunctions. The light tells you if there is an electrical problem. See *Airbag Readiness Light on page 3-31* for more information.

Where Are the Airbags?

The driver's frontal airbag is in the middle of the steering wheel.

The right front passenger's frontal airbag is in the instrument panel on the passenger's side.

If your vehicle has one, the driver's side impact airbag is in the side of the driver's seatback closest to the door.

If your vehicle has one, the right front passenger's side impact airbag is in the side of the passenger's seatback closest to the door.

⚠ CAUTION:

If something is between an occupant and an airbag, the airbag might not inflate properly or it might force the object into that person causing severe injury or even death. The path of an inflating airbag must be kept clear. Do not put anything between an occupant and an airbag, and do not attach or put anything on the steering wheel hub or on or near any other airbag covering. Do not let seat covers block the inflation path of a side impact airbag.

When Should an Airbag Inflate?

The driver's and right front passenger's frontal airbags are designed to inflate in moderate to severe frontal or near-frontal crashes. But they are designed to inflate only if the impact exceeds a predetermined deployment threshold. Deployment thresholds take into account a variety of desired deployment and non-deployment events and are used to predict how severe a crash is likely to be in time for the airbags to inflate and help restrain the occupants. Whether your frontal airbags will or should deploy is not based on how fast your vehicle is traveling. It depends largely on what you hit, the direction of the impact and how quickly your vehicle slows down.

In addition, your vehicle has "dual stage" frontal airbags, which adjust the restraint according to crash severity. Your vehicle is equipped with electronic frontal sensors which help the sensing system distinguish between a moderate and a more severe frontal impact. For moderate frontal impacts, these airbags inflate at a level less than full deployment. For more severe frontal impacts, full deployment occurs. If the front of your vehicle goes straight into a wall that does not move or deform, the threshold level for the reduced deployment is about 10 to 16 mph (16 to 25 km/h), and the threshold level for a full deployment is about 20 to 30 mph (32 to 48 km/h). (The threshold level can vary, however, with specific vehicle design, so that it can be somewhat above or below this range.)

Frontal airbags may inflate at different crash speeds. For example:

- If the vehicle hits a stationary object, the airbags could inflate at a different crash speed than if the vehicle hits a moving object.
- If the vehicle hits an object that deforms, the airbags could inflate at a different crash speed than if the vehicle hits an object that does not deform.
- If the vehicle hits a narrow object (like a pole) the airbags could inflate at a different crash speed than if the vehicle hits a wide object (like a wall).
- If the vehicle goes into an object at an angle the airbags could inflate at a different crash speed than if the vehicle goes straight into the object.

The frontal airbags (driver and right front passenger) are not intended to inflate during vehicle rollovers, rear impacts, or in many side impacts.

Vehicles with dual stage airbags are also equipped with special sensors which enable the sensing system to monitor the position of both the driver and passenger front seats. The seat position sensor provides information which is used to determine if the airbags should deploy at a reduced level or at full deployment.

Your vehicle may or may not have a side impact airbag. See *Airbag System on page 1-52*. Side impact airbags are intended to inflate in moderate to severe side crashes. A side impact airbag will inflate if the crash severity is above the system's designed "threshold level." The threshold level can vary with specific vehicle design. Side impact airbags are not intended to inflate in frontal or near-frontal impacts, rollovers or rear impacts. A side impact airbag is intended to deploy on the side of the vehicle that is struck.

In any particular crash, no one can say whether an airbag should have inflated simply because of the damage to a vehicle or because of what the repair costs were. For frontal airbags, inflation is determined by what the vehicle hits, the angle of the impact, and how quickly the vehicle slows down. For side impact airbags, inflation is determined by the location and severity of the impact.

The airbag system is designed to work properly under a wide range of conditions, including off-road usage. Observe safe driving speeds, especially on rough terrain. As always, wear your safety belt. See *Off-Road Driving on page 4-17* for tips on off-road driving.

What Makes an Airbag Inflate?

In an impact of sufficient severity, the airbag sensing system detects that the vehicle is in a crash. The sensing system triggers a release of gas from the inflator, which inflates the airbag. The inflator, the airbag and related hardware are all part of the airbag modules. Frontal airbag modules are located inside the steering wheel and instrument panel. For seating positions with side impact airbags, there are also airbag modules in the side of the seatbacks closest to the door.

How Does an Airbag Restrain?

In moderate to severe frontal or near frontal collisions, even belted occupants can contact the steering wheel or the instrument panel. In moderate to severe side collisions, even belted occupants can contact the inside of the vehicle. The airbag supplements the protection provided by safety belts. Airbags distribute the force of the impact more evenly over the occupant's upper body, stopping the occupant more gradually. But the frontal airbags would not help you in many types of collisions, including rollovers, rear impacts, and many side impacts, primarily because an occupant's motion is not toward the airbag. Side impact airbags would not help you in many types of collisions, including many frontal or near frontal collisions, and rear impacts, primarily because an occupant's motion is not toward those airbags.

Airbags should never be regarded as anything more than a supplement to safety belts, and then only in moderate to severe frontal or near-frontal collisions for the frontal airbags, and only in moderate to severe side collisions for vehicles with a side impact airbag.

What Will You See After an Airbag Inflates?

After the airbag inflates, it quickly deflates, so quickly that some people may not even realize the airbag inflated. Some components of the airbag module may be hot for a short time. These components include the steering wheel hub for the driver's frontal airbag and the instrument panel for the right front passenger's frontal airbag. For seating positions with side impact airbags, the side of the seatback closest to the door may be hot. The parts of the airbag that come into contact with you may be warm, but not too hot to touch.
There will be some smoke and dust coming from the vents in the deflated airbags. Airbag inflation does not prevent the driver from seeing out of the windshield or being able to steer the vehicle, nor does it stop people from leaving the vehicle.

⚠ CAUTION:

When an airbag inflates, there is dust in the air. This dust could cause breathing problems for people with a history of asthma or other breathing trouble. To avoid this, everyone in the vehicle should get out as soon as it is safe to do so. If you have breathing problems but cannot get out of the vehicle after an airbag inflates, then get fresh air by opening a window or a door. If you experience breathing problems following an airbag deployment, you should seek medical attention.

In many crashes severe enough to inflate an airbag, windshields are broken by vehicle deformation. Additional windshield breakage may also occur from the right front passenger airbag.

- Airbags are designed to inflate only once. After an airbag inflates, you will need some new parts for your airbag system. If you do not get them, the airbag system will not be there to help protect you in another crash. A new system will include airbag modules and possibly other parts. The service manual for your vehicle covers the need to replace other parts.

- Your vehicle is equipped with a crash sensing and diagnostic module which records information after a crash. See *Vehicle Data Collection and Event Data Recorders on page 7-9*.
- Let only qualified technicians work on your airbag system. Improper service can mean that an airbag system will not work properly. See your dealer for service.

Passenger Sensing System

If your rearview mirror has one of the indicators pictured in the following illustrations, your vehicle has a passenger sensing system. The indicator will be visible when you turn your ignition key to START or RUN. The words ON and OFF or the symbol for on and off, will be visible on the rearview mirror during the system check. When the system check is complete, either the word ON or the word OFF, or the symbol for on or the symbol for off will be visible. See *Passenger Airbag Status Indicator on page 3-32*. If your rearview mirror does not have either of the indicators pictured, then your vehicle does not have the passenger sensing system.

Passenger Airbag Status Indicator – United States

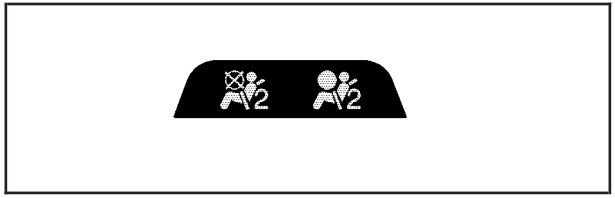

Passenger Airbag Status Indicator – Canada

The passenger sensing system will turn off the right front passenger's frontal airbag under certain conditions. The driver's airbag and the side airbags are not part of the passenger sensing system.

The passenger sensing system works with sensors that are part of the right front passenger's seat and safety belt. The sensors are designed to detect the presence of a properly-seated occupant and determine if the passenger's frontal airbag should be enabled (may inflate) or not.

Accident statistics show that children are safer if they are restrained in the rear rather than the front seat. General Motors recommends that child restraints be secured in a rear seat, including an infant riding in a rear-facing infant seat, a child riding in a forward-facing child seat and an older child riding in a booster seat.

Your vehicle has a rear seat that will accommodate a rear-facing child restraint. A label on your sun visor says, "Never put a rear-facing child seat in the front." This is because the risk to the rear-facing child is so great, if the airbag deploys.

⚠ CAUTION:

A child in a rear-facing child restraint can be seriously injured or killed if the right front passenger's airbag inflates. This is because the back of the rear-facing child restraint would be very close to the inflating airbag.

Even though the passenger sensing system is designed to turn off the passenger's frontal airbag if the system detects a rear-facing child restraint, no system is fail-safe, and no one can guarantee that an airbag will not deploy under some unusual circumstance, even though it is turned off. We recommend that rear-facing child restraints be secured in the rear seat, even if the airbag is off.

If you need to secure a forward-facing child restraint in the right front seat, always move the front passenger seat as far back as it will go. It is better to secure the child restraint in a rear seat.

The passenger sensing system is designed to turn off the right front passenger's frontal airbag if:

- the right front passenger seat is unoccupied
- the system determines that an infant is present in a rear-facing infant seat
- the system determines that a small child is present in a forward-facing child restraint
- the system determines that a small child is present in a booster seat
- a right front passenger takes his/her weight off of the seat for a period of time
- the right front passenger seat is occupied by a smaller person, such as a child who has outgrown child restraints
- or if there is a critical problem with the airbag system or the passenger sensing system.

When the passenger sensing system has turned off the passenger's frontal airbag, the off indicator will light and stay lit to remind you that the airbag is off.

If a child restraint has been installed and the on indicator is lit, turn the vehicle off. Remove the child restraint from the vehicle and reinstall the child restraint following the child restraint manufacturer's directions and refer to *Securing a Child Restraint in the Right Front Seat Position on page 1-49*.

If after reinstalling the child restraint and restarting the vehicle, the on indicator is still lit, check to make sure that the vehicle's seatback is not pressing the child restraint into the seat cushion. If this happens, slightly recline the vehicle's seatback and adjust the seat cushion if possible. Also make sure the child restraint is not trapped under the vehicle head restraint. If this happens, adjust the head restraint.

If the on indicator is still lit, secure the child in the child restraint in a rear seat position in the vehicle and check with your dealer.

The passenger sensing system is designed to enable (may inflate) the right front passenger's frontal airbag anytime the system senses that a person of adult size is sitting properly in the right front passenger's seat. When the passenger sensing system has allowed the airbag to be enabled, the on indicator will light and stay lit to remind you that the airbag is active.

For some children who have outgrown child restraints and for very small adults, the passenger sensing system may or may not turn off the right front passenger's frontal airbag, depending upon the person's seating posture and body build. Everyone in your vehicle who has outgrown child restraints should wear a safety belt properly — whether or not there is an airbag for that person.

If a person of adult-size is sitting in the right front passenger's seat, but the off indicator is lit, it could be because that person is not sitting properly in the seat. If this happens, turn the vehicle off and ask the person to place the seatback in the fully upright position, then sit upright in the seat, centered on the seat cushion, with the person's legs comfortably extended. Restart the vehicle and have the person remain in this position for about two minutes. This will allow the system to detect that person and then enable the passenger's airbag.

⚠ CAUTION:

If the airbag readiness light in the instrument panel cluster ever comes on and stays on, it means that something may be wrong with the airbag system. If this ever happens, have the vehicle serviced promptly, because an adult-size person sitting in the right front passenger's seat may not have the protection of the frontal airbag. See *Airbag Readiness Light on page 3-31* for more on this, including important safety information.

Aftermarket equipment, such as seat covers, can affect how well the passenger sensing system operates. You may want to consider not using seat covers or other aftermarket equipment if your vehicle has the passenger sensing system. See *Adding Equipment to Your Airbag-Equipped Vehicle on page 1-66* for more information about modifications that can affect how the system operates.

⚠ CAUTION:

Stowing of articles under the passenger's seat or between the passenger's seat cushion and seatback may interfere with the proper operation of the passenger sensing system.

Servicing Your Airbag-Equipped Vehicle

Airbags affect how your vehicle should be serviced. There are airbag system parts in several places around your vehicle. You do not want the system to inflate while someone is working on your vehicle. Your dealer and the service manual have information about servicing your vehicle and the airbag system. To purchase a service manual, see *Service Publications Ordering Information on page 7-15*.

⚠ CAUTION:

For up to 10 seconds after the ignition key is turned off and the battery is disconnected, an airbag can still inflate during improper service. You can be injured if you are close to an airbag when it inflates. Avoid yellow connectors. They are probably part of the airbag system. Be sure to follow proper service procedures, and make sure the person performing work for you is qualified to do so.

The airbag system does not need regular maintenance.

Adding Equipment to Your Airbag-Equipped Vehicle

Q: Is there anything I might add to the front or sides of the vehicle that could keep the airbags from working properly?

A: Yes. If you add things that change your vehicle's frame, bumper system, front end or side sheet metal or height, they may keep the airbag system from working properly. Also, the airbag system may not work properly if you relocate any of the airbag sensors. If you have any questions about this, you should contact Customer Assistance before you modify your vehicle. The phone numbers and addresses for Customer Assistance are in Step Two of the Customer Satisfaction Procedure in this manual. See *Customer Satisfaction Procedure on page 7-2*.

Q: Because I have a disability, I have to get my vehicle modified. How can I find out whether this will affect my advanced airbag system?

A: Changing or moving any parts of the front seats, safety belts, the airbag sensing and diagnostic module (located under the driver's seat), or the inside rearview mirror can affect the operation of the advanced airbag system. If you have questions, call Customer Assistance. The phone numbers and addresses for Customer Assistance are in Step Two of the Customer Satisfaction Procedure in this manual. See *Customer Satisfaction Procedure on page 7-2*.

Restraint System Check

Checking the Restraint Systems

Now and then, make sure the safety belt reminder light and all your belts, buckles, latch plates, retractors and anchorages are working properly. Look for any other loose or damaged safety belt system parts. If you see anything that might keep a safety belt system from doing its job, have it repaired.

Torn or frayed safety belts may not protect you in a crash. They can rip apart under impact forces. If a belt is torn or frayed, get a new one right away.

Also look for any opened or broken airbag covers, and have them repaired or replaced. (The airbag system does not need regular maintenance.)

Notice: **If you damage the covering for the driver's or the right front passenger's frontal airbag, or an airbag covering (if equipped) on a seatback, the airbag may not work properly. You may have to replace the airbag module in the steering wheel, both the airbag module and the instrument panel for the right front passenger's frontal airbag, or both the airbag module and the seatback for seating positions with a side impact airbag (if equipped.) Do not open or break the airbag coverings.**

Replacing Restraint System Parts After a Crash

⚠ CAUTION:

A crash can damage the restraint systems in your vehicle. A damaged restraint system may not properly protect the person using it, resulting in serious injury or even death in a crash. To help make sure your restraint systems are working properly after a crash, have them inspected and any necessary replacements made as soon as possible.

If you have had a crash, do you need new belts or LATCH system parts?

After a very minor collision, nothing may be necessary. But if the belts were stretched, as they would be if worn during a more severe crash, then you need new parts.

If the LATCH system was being used during a more severe crash, you may need new LATCH system parts.

If belts are cut or damaged, replace them. Collision damage also may mean you will need to have LATCH system, safety belt or seat parts repaired or replaced. New parts and repairs may be necessary even if the belt or LATCH system was not being used at the time of the collision.

If an airbag inflates, you will need to replace airbag system parts. See the part on the airbag system earlier in this section.

Section 2 Features and Controls

Keys 2-3
Remote Keyless Entry System 2-4
Remote Keyless Entry System Operation 2-5

Doors and Locks 2-8
Door Locks 2-8
Power Door Locks 2-9
Delayed Locking 2-9
Programmable Automatic Door Locks 2-10
Rear Door Security Locks 2-10
Lockout Protection 2-10
Midgate® 2-11
Tailgate 2-20

Windows 2-22
Power Windows 2-23
Sun Visors 2-24

Theft-Deterrent Systems 2-24
Content Theft-Deterrent 2-24
Passlock® 2-26

Starting and Operating Your Vehicle 2-26
New Vehicle Break-In 2-26
Ignition Positions 2-27
Retained Accessory Power (RAP) 2-27
Starting the Engine 2-28
Adjustable Throttle and Brake Pedal 2-29
Engine Coolant Heater 2-29
Automatic Transmission Operation 2-30
Tow/Haul Mode 2-33
Four-Wheel Drive 2-34
Parking Brake 2-38
Shifting Into Park (P) 2-39
Shifting Out of Park (P) 2-41
Parking Over Things That Burn 2-41
Engine Exhaust 2-42
Running the Engine While Parked 2-42

Mirrors 2-43
Automatic Dimming Rearview Mirror with OnStar® and Compass 2-43
Automatic Dimming Rearview Mirror with OnStar®, Compass and Temperature Display 2-45
Automatic Dimming Rearview Mirror with Compass 2-48
Automatic Dimming Rearview Mirror with Compass and Temperature Display 2-50
Outside Camper-Type Mirrors 2-52
Outside Power Mirrors 2-53
Outside Convex Mirror 2-54
Outside Heated Mirrors 2-54
Outside Automatic Dimming Mirror with Curb View Assist 2-55

Section 2 Features and Controls

OnStar® System 2-55
Universal Home Remote System 2-58
Universal Home Remote System Operation 2-59
Storage Areas 2-62
Glove Box 2-62
Cupholder(s) 2-62
Center Overhead Console 2-62
Front Armrest Storage Area 2-63
Center Console Storage Area 2-63
Luggage Carrier 2-63
Rear Storage Area 2-64
Cargo Cover Panels 2-64
All-Weather Cargo Area 2-77
Top-Box Storage 2-82
Tonneau Cover 2-83
Sunroof 2-89
Vehicle Personalization 2-90
Memory Seat 2-90

Keys

⚠ CAUTION:

Leaving children in a vehicle with the ignition key is dangerous for many reasons. They could operate the power windows or other controls or even make the vehicle move. The children or others could be badly injured or even killed. Do not leave the keys in a vehicle with children.

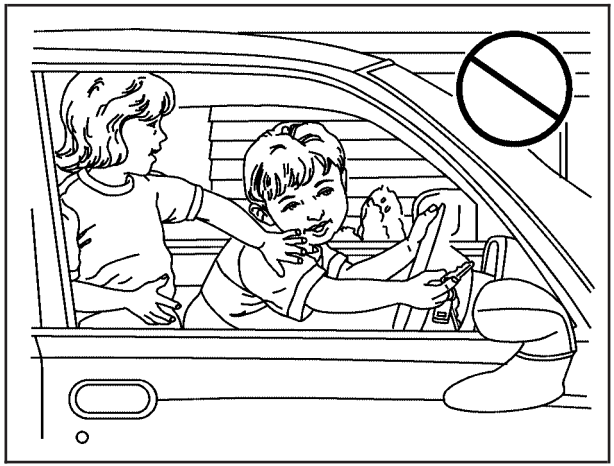

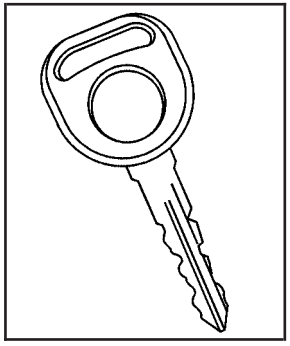

Your vehicle has one double-sided key for the ignition, all door locks, tailgate and side storage boxes.

If you ever lose your keys, your dealer will be able to assist you with obtaining replacements.

In an emergency contact roadside assistance. See *Roadside Assistance Program on page 7-6* for more information.

If you ever lock your keys in your vehicle, you may be able to have your doors unlocked automatically with the OnStar® system if you have an active OnStar® subscription. For more information see *OnStar® System on page 2-55*.

Remote Keyless Entry System

Your keyless entry system operates on a radio frequency subject to Federal Communications Commission (FCC) Rules and with Industry Canada.

This device complies with Part 15 of the FCC Rules. Operation is subject to the following two conditions:

1. This device may not cause interference.
2. This device must accept any interference received, including interference that may cause undesired operation of the device.

This device complies with RSS-210 of Industry Canada. Operation is subject to the following two conditions:

1. This device may not cause interference.
2. This device must accept any interference received, including interference that may cause undesired operation of the device.

Changes or modifications to this system by other than an authorized service facility could void authorization to use this equipment.

At times you may notice a decrease in range. This is normal for any remote keyless entry system. If the transmitter does not work or if you have to stand closer to your vehicle for the transmitter to work, try this:

- Check the distance. You may be too far from your vehicle. You may need to stand closer during rainy or snowy weather.
- Check the location. Other vehicles or objects may be blocking the signal. Take a few steps to the left or right, hold the transmitter higher, and try again.
- Check to determine if battery replacement is necessary. See “Battery Replacement” under *Remote Keyless Entry System Operation on page 2-5*.
- If you are still having trouble, see your dealer or a qualified technician for service.

Remote Keyless Entry System Operation

You can lock and unlock your doors from about 3 feet (1 m) up to 100 feet (30 m) away using the remote keyless entry transmitter supplied with your vehicle.

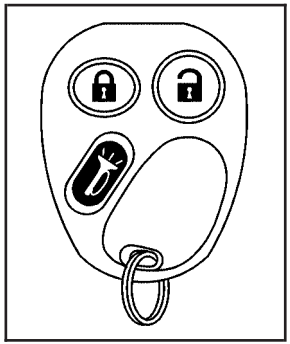

(Unlock): Press this button once to unlock the driver’s door. The interior lamps will come on. Pressing unlock again within three seconds will cause the remaining doors to unlock.

You can choose different feedback options for each press of the unlock button. See “Lock Feedback” and “Unlock Feedback” under *DIC Vehicle Customization on page 3-60* for more information.

(Lock): Press this button once to lock all of the doors. Pressing lock again within three seconds may cause the horn to chirp for lock confirmation. You can choose different feedback options for each press of the lock button. See “Lock Feedback” and “Unlock Feedback” under *DIC Vehicle Customization on page 3-60* for more information.

(Panic): Press this button to sound the horn and flash the headlamps and taillamps for up to 30 seconds. Panic can be turned off by pressing the button again, by waiting for 30 seconds, or by starting the vehicle.

Matching Transmitter(s) to Your Vehicle

Each remote keyless entry transmitter is coded to prevent another transmitter from unlocking your vehicle. If a transmitter is lost or stolen, a replacement can be purchased through your dealer. Remember to bring any remaining transmitters with you when you go to your dealer. When the dealer matches the replacement transmitter to your vehicle, any remaining transmitters must also be matched. Once your dealer has coded the new transmitter, the lost transmitter will not unlock your vehicle. Each vehicle can have a maximum of four transmitters matched to it.

Battery Replacement

Under normal use, the battery in your remote keyless entry transmitter should last about two years.

You can tell the battery is weak if the transmitter will not work at the normal range in any location. If you have to get close to your vehicle before the transmitter works, it is probably time to change the battery.

Notice: **When replacing the battery, use care not to touch any of the circuitry. Static from your body transferred to these surfaces may damage the transmitter.**

To replace the battery in the keyless entry transmitter, do the following:

1. Insert a thin object, such as a coin, in the slot between the covers of the transmitter housing near the key ring hole. Remove the bottom by twisting the coin.
2. Remove and replace the battery with a three-volt CR2032 or equivalent battery, positive (+) side up.
3. Align the covers and snap them together.
4. Resynchronize the transmitter. See “Resynchronization” following this information.
5. Check the operation of the transmitter.

Resynchronization

Resynchronization may be necessary due to the security method used by this system. The transmitter does not send the same signal twice to the receiver. The receiver will not respond to a signal that has been sent previously. This prevents anyone from recording and playing back the signal from the transmitter.

To resynchronize your transmitter, stand close to your vehicle and press and hold the lock and unlock buttons on the transmitter at the same time for 15 seconds. The door locks should cycle to confirm synchronization. If the locks do not cycle, see your dealer for service.

Doors and Locks

Door Locks

⚠ CAUTION:

Unlocked doors can be dangerous.

- **Passengers — especially children — can easily open the doors and fall out of a moving vehicle. When a door is locked, the handle will not open it. You increase the chance of being thrown out of the vehicle in a crash if the doors are not locked. So, wear safety belts properly and lock the doors whenever you drive.**
- **Young children who get into unlocked vehicles may be unable to get out. A child can be overcome by extreme heat and can suffer permanent injuries or even death from heat stroke. Always lock your vehicle whenever you leave it.**
- **Outsiders can easily enter through an unlocked door when you slow down or stop your vehicle. Locking your doors can help prevent this from happening.**

There are several ways to lock and unlock your vehicle.

To unlock the door from the outside, use the keyless entry system or the key.

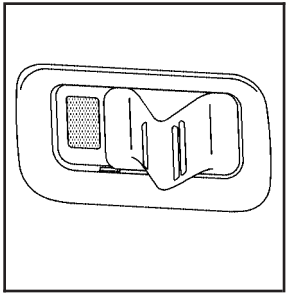

To unlock or lock the door from the inside, slide the manual lever forward or rearward.

Power Door Locks

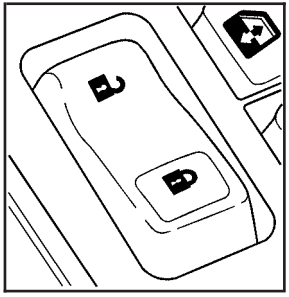

The power door lock switches are located on the driver's and front passenger's armrests.

(Lock): Remove the ignition key and press the lock symbol to lock all of the doors.

If the delayed locking feature is on, the doors will not lock until five seconds after the last door is closed. Press the lock symbol twice to override this feature and lock all of the doors immediately. See *Delayed Locking on page 2-9* for more information.

(Unlock): To unlock the doors, press the unlock symbol.

Delayed Locking

When locking the doors with the power lock switch or the keyless entry transmitter and a door or the liftgate is open, the delayed locking feature will delay locking the doors until five seconds after the last door is closed. You will hear three chimes to signal that the delayed locking feature is in use.

Pressing the power lock switch or the lock button on the keyless entry transmitter twice will override the delayed locking feature and immediately lock all the doors.

You can turn the delayed locking feature off or back on again by doing the following:

1. Press and hold the power door lock switch in the lock position.
2. Press unlock twice on the remote keyless entry transmitter.

This feature will not operate if the key is in the ignition.

You can also program this feature using the Driver Information Center (DIC). See "Door Lock Delay" under *DIC Vehicle Customization on page 3-60*.

Programmable Automatic Door Locks

Your vehicle is equipped with an automatic lock/unlock feature which enables you to program your vehicle's power door locks. You can program this feature through the Driver Information Center (DIC). See *DIC Vehicle Customization on page 3-60* for more information on DIC programming.

Rear Door Security Locks

With this feature, you can lock the rear doors so they can't be opened from the inside by passengers.

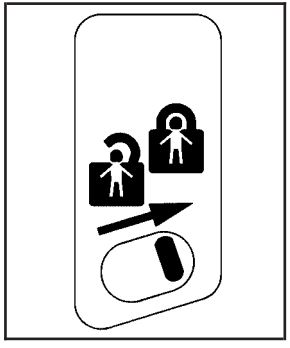

This feature is located on the inside edge of the rear doors.

To use the locks, do the following:

1. Open one of the rear doors.
2. Move the lever forward to engage the rear door security lock.
3. Close the door.
4. Do the same thing to the other rear door.

The rear doors cannot be opened from the inside when this feature is in use. If you want to open the rear door while the security lock is engaged, unlock the door and open the door from the outside. Move the lever rearward to disengage the child security lock feature.

Lockout Protection

This feature protects you from locking your key in the vehicle when the key is in the ignition and a door is open.

If the power lock switch is pressed when a door is open and the key is in the ignition, all of the doors will lock and then the driver's door will unlock.

Midgate®

⚠ CAUTION:

It can be dangerous to drive with the cargo area covered and the tailgate and the midgate® open because carbon monoxide (CO) gas can come into your vehicle. You can not see or smell CO. It can cause unconsciousness and even death. If you must drive with the cargo

CAUTION: (Continued)

CAUTION: (Continued)

covers on and the tailgate and midgate® open or if electrical wiring or other cable connections must pass through the seal between the body and the midgate®:

- **Make sure all windows are shut.**
- **Turn the fan on your heating or cooling system to its highest speed on the setting that brings in outside air. This will force outside air into your vehicle. See *Dual Automatic Climate Control System on page 3-22*.**
- **If you have air outlets on or under the instrument panel, open them all the way. See *Engine Exhaust on page 2-42*.**

Midgate® Operation

Your vehicle is equipped with a midgate and a removable rear glass panel. The midgate allows you to extend the length of your vehicle's cargo area.

The following are the main components of the midgate system:

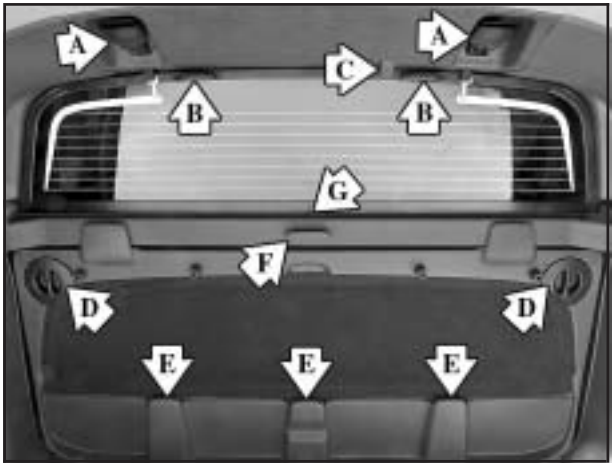

A. Latch Levers
B. Grab Handles
C. Glass-Catch Release Button
D. Glass Lock Knobs
E. Window Retaining Tabs
F. Midgate Release Handle
G. Window Alignment Arrows

Rear Glass Removal and Storage

⚠ CAUTION:

If the removable rear glass is not stored properly, it could be thrown about the vehicle in a crash or sudden maneuver. People in the vehicle could be injured. Whenever you store the rear glass in the vehicle, always be sure that it is stored securely in the midgate storage pocket.

Do not remove the rear glass when the rear defroster is on. If you remove the rear glass with the rear defroster on, you may see a discharge spark coming from the latch area.

To remove the rear glass do the following:

1. Fold the rear seats. See *Rear Seat Operation on page 1-7* for more information. The front seats may have to be moved forward slightly to allow the rear seats to fold completely.

   Although the rear glass can be removed without folding the rear seats, you will not be able to access the rear glass storage pocket. Be sure to fold the seats before removing the rear glass.

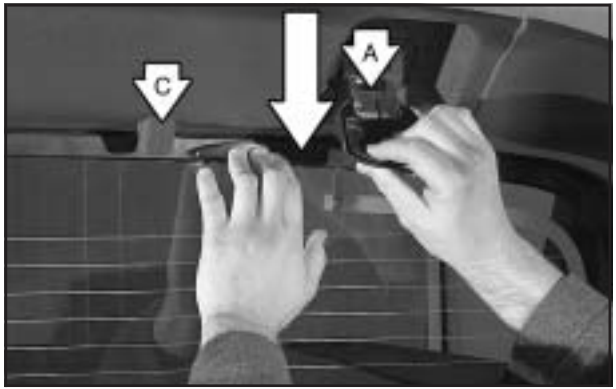

2. Squeeze and pull down the latch levers (A), located near the upper corners of the rear glass, to unlatch. Once unlatched, the glass-catch release button (C) will catch the rear glass and prevent it from falling forward.

3. While holding the rear glass in place, press the glass-catch release button (C) and pull the top of the rear glass toward you using the grab handle(s) (B) located at the top of the rear glass.

4. With the rear glass tilted toward you, lift it out from the lower window frame channel. Use the grab handles to assist you in removing the rear glass.

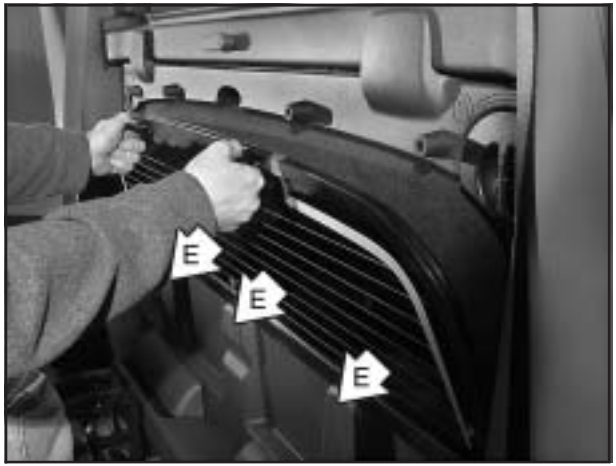

5. Load the rear glass into the storage pocket in the midgate, guiding the lower edge of the rear glass behind the three rear glass retaining tabs (E).

   Hold the rear glass flat against the storage pocket, with grab handles facing you, until the next step.

6. Turn both glass lock knobs (D), located at both top corners of the storage pocket, to the locked position. Push in on the corner of the rear glass to allow the lock knob to engage more easily.

   Once both glass lock knobs are in the locked position, the rear glass is securely stored.

7. Push both latch levers up to the locked position. You should hear a click when each latch lever locks correctly.

   The rear seats can be returned to the normal position when the rear glass is out and stored properly in the storage pocket.

Reinstalling the Rear Glass

To reinstall the rear glass, do the following:

1. Squeeze and pull down the latch levers (A), located near the upper corners of the rear glass, to unlatch.

2. Hold the rear glass in place with one hand and turn the glass lock knobs, located at both top corners of the glass storage pocket, to the unlocked position.
3. Pull the rear glass out from the storage pocket using the grab handles.

4. With the rear glass tilted at an angle, place the bottom edge in the lower channel of the window frame.

Be sure to align the rear glass side-to-side using the alignment arrows (G).

5. Apply a firm downward pressure and then push the rear glass flat against the window frame. Use the grab handles at the top of the rear glass to assist you.

6. Push the rear glass flat against the window frame and push each latch lever up until it locks. You should hear a click when each latch lever locks correctly.

Lowering the Midgate with the Rear Glass in Place

The midgate can be lowered to allow the cargo area of your vehicle to extend into the cab. The rear glass can be either installed in its normal position, or it can be removed and stored in the rear glass storage pocket.

To lower the midgate, do the following:

1. Fold the rear seats. The front seats might have to be moved forward slightly to allow the rear seats to fold. See *Rear Seat Operation on page 1-7* for more information.

Rear Glass in Normal Position

2. Standing outside of the vehicle, hold the midgate securely so it does not fall forward. Turn the midgate handle clockwise and pull the midgate toward you.

3. Lower the midgate until it is flat.

Lowering the Midgate with the Rear Glass in the Storage Pocket

Rear Glass Stored in Glass Storage Pocket

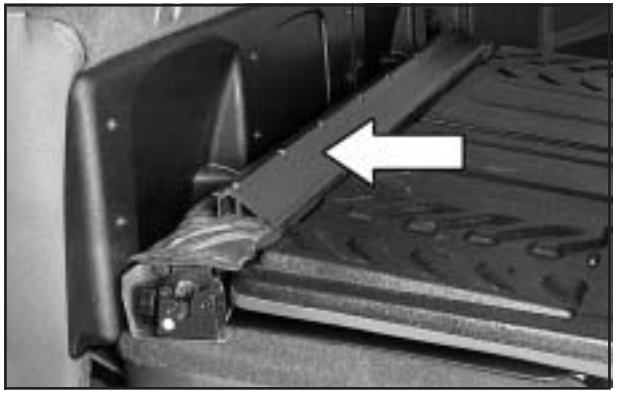

Midgate Lowered with Crossbar Attached

This procedure works the same as the procedure described previously, but when you lower the midgate with the rear glass in the stored position, you will notice that the entire crossbar will lower with the midgate. This is completely normal; however, since the crossbar lowers with the midgate, it will be heavier. As you lower the midgate be ready for the extra weight and do not let the midgate fall as you lower it.

Raising the Midgate

To return the midgate to its normal position, raise the midgate up with a firm swinging motion until it latches into place securely. This will help to ensure that the midgate closes with enough force to engage the latches.

If the rear glass is removed and you would like to put it back, do so using the instructions given previously.

Tailgate

Use the ignition/door key to unlock/lock the tailgate.

Open the tailgate by lifting up on its handle while pulling the tailgate toward you.

To shut the tailgate, firmly push it upward until it latches. Push and pull on the tailgate to be sure it is latched securely.

Tailgate Removal

The tailgate can be removed to allow for different loading situations. Although the tailgate can be removed without assistance, you may want someone to assist you with the removal to avoid possible damage to the vehicle.

To remove the tailgate, do the following:

1. Hold the tailgate up, slightly raised.

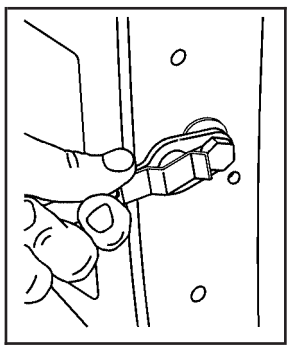

2. Release the retaining cable clip by lifting the cable so it is level with the ground and then push the cable clip toward the vehicle.

3. Raise the tailgate at a slight upward angle, pull back on the tailgate at the right edge so it releases from the block hinge and then move the tailgate to the right to release the left edge.

Reverse the above procedure to reinstall. Make sure the tailgate is secure.

Windows

⚠ CAUTION:

Leaving children, helpless adults, or pets in a vehicle with the windows closed is dangerous. They can be overcome by the extreme heat and suffer permanent injuries or even death from heat stroke. Never leave a child, a helpless adult, or a pet alone in a vehicle, especially with the windows closed in warm or hot weather.

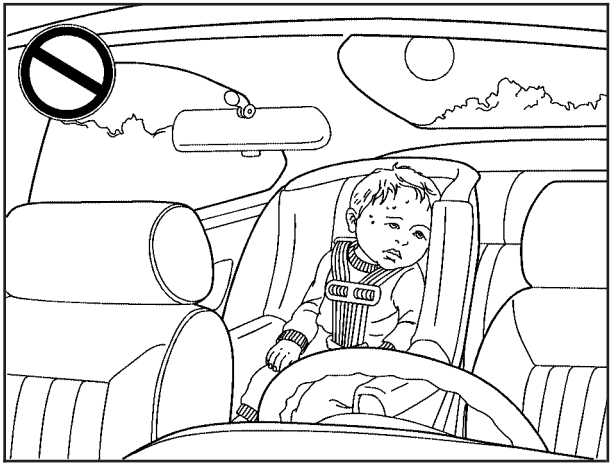

Power Windows

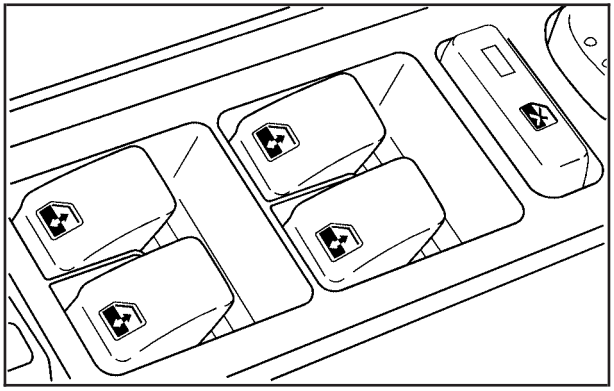

The controls for the power windows are located on the armrest on each of the side doors. The switches operate the windows when the ignition is in RUN, ACCESSORY or while Retained Accessory Power (RAP) is active. See *Retained Accessory Power (RAP) on page 2-27*.

The driver's door also has a switch for each of the passenger's windows.

Press the top of the switch to lower the window. Pull up the top of the switch to raise the window.

Express-Down Windows

The driver and front passenger windows also have an express-down feature that allows the windows to be lowered without holding the switch. Press down fully on the window switch, then release, to activate the express-down mode. This mode can be canceled at any time by pulling up on the switch. To open the window partway, press the switch to the first position until the window is at the desired position.

Window Lockout

(Window Lockout): Press the lockout switch to prevent passengers from operating the power windows from their switches. A light in the lockout switch will come on to show that the switch has been activated. Press the lockout switch again to return to normal operation.

Sun Visors

Sun Visors with Slide Rod

Your vehicle may have this feature.

Pull the sun visor down to block glare. Detach the sun visor from the center mount and slide it along the rod from side-to-side to cover the driver or passenger side of the front window. Swing the sun visor to the side to cover the side window. It can be moved along the rod from side-to-side in this position also.

Sun Visors with Fixed Rod and Pull-out Extension

Your vehicle may have this feature.

Pull the sun visor down to block glare. Pull the sun visor extender out for additional coverage. Detach the sun visor from the center mount and swing it to the side to cover the side window.

Lighted Visor Vanity Mirror

Your vehicle has lighted visor vanity mirrors on both the driver's and passenger's sun visors. Pull the sun visor down and lift the mirror cover to turn the lamps on.

Theft-Deterrent Systems

Vehicle theft is big business, especially in some cities. Although your vehicle has a number of theft-deterrent features, we know that nothing we put on it can make it impossible to steal.

Content Theft-Deterrent

Your vehicle has a content theft-deterrent alarm system.

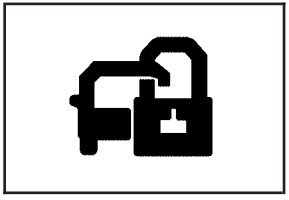

The security light is located on the instrument panel cluster. See *Security Light on page 3-43* for additional information.

To activate the theft-deterrent system, do the following:

1. Close all the doors.
2. Lock the door with the remote keyless entry transmitter. The security light should come on and flash.

If the lock button on the remote keyless entry transmitter is pressed, but a door is open, you may hear three chimes indicating delayed locking is enabled.

See *Delayed Locking on page 2-9* for additional information. Close the door and the content theft-deterrent system will be activated.

If a locked door is opened without using the remote keyless entry transmitter or OnStar, if equipped with an active subscription, the alarm will go off. Your vehicle's lamps will flash and the horn will sound for about two minutes, then will turn off to save the battery power. If this occurs, you can turn off the alarm by pressing unlock on the remote keyless entry transmitter or by placing the key in the ignition and turning it to START.

If your vehicle has a Driver Information Center (DIC), you can customize your alarm warning. See *DIC Vehicle Customization on page 3-60* for additional information.

The horn may chirp for 10 seconds before the alarm goes off if the theft-deterrent system is activated using the remote keyless entry transmitter and the driver's door is opened. If this occurs, you can turn off the alarm by pressing unlock on the remote keyless entry transmitter or by placing the key in the ignition and turning it to START.

Here is how to avoid setting off the alarm by accident:

- If you do not want to activate the theft-deterrent system, the vehicle should be locked with the door key after the doors are closed.
- Always unlock a door with the remote keyless entry transmitter.

If you set off the alarm by accident, turn off the alarm by pressing unlock on the remote keyless entry transmitter or by placing the key in the ignition and turning it to START.

Testing the Alarm

The alarm can be tested by following these steps:

1. From inside the vehicle, activate the system by locking the doors with the remote keyless entry transmitter.
2. Wait for the security light to go out.
3. Unlock the door with the manual door lock and open the door. This should set off the alarm.
4. Turn off the alarm by pressing unlock on the remote keyless entry transmitter or by placing the key in the ignition and turning it to START.

If the alarm does not sound when it should, but the vehicle's headlamps flash, check to see if the horn works. The horn fuse may be blown. To replace the fuse, see *Instrument Panel Fuse Block on page 5-112* and *Underhood Fuse Block on page 5-115*.

If the alarm does not sound or the vehicle's headlamps do not flash, see your dealer for service.

Passlock®

Your vehicle is equipped with the Passlock® theft-deterrent system.

Passlock® is a passive theft-deterrent system. Passlock® enables fuel if the ignition lock cylinder is turned with a valid key. If a correct key is not used or the ignition lock cylinder is tampered with, the fuel system is disabled and the vehicle will not start.

During normal operation, the security light will turn off approximately five seconds after the key is turned to RUN.

If the engine stalls and the security light flashes, wait about 10 minutes until the light stops flashing before trying to restart the engine. Remember to release the key from START as soon as the engine starts.

If the engine does not start after three tries, the vehicle needs service.

If the engine is running and the security light comes on, you will be able to restart the engine if you turn the engine off. However, your Passlock® system is not working properly and must be serviced by your dealer. Your vehicle is not protected by Passlock® at this time. You may also want to check the fuse. See *Fuses and Circuit Breakers on page 5-112*. See your dealer for service.

In an emergency, call the Roadside Assistance Center. See *Roadside Assistance Program on page 7-6*.

Starting and Operating Your Vehicle

New Vehicle Break-In

Notice: **Your vehicle does not need an elaborate break-in. But it will perform better in the long run if you follow these guidelines:**

- **Keep your speed at 55 mph (88 km/h) or less for the first 500 miles (805 km).**
- **Do not drive at any one constant speed, fast or slow, for the first 500 miles (805 km). Do not make full-throttle starts. Avoid downshifting to brake, or slow, the vehicle.**
- **Avoid making hard stops for the first 200 miles (322 km) or so. During this time your new brake linings are not yet broken in. Hard stops with new linings can mean premature wear and earlier replacement. Follow this breaking-in guideline every time you get new brake linings.**
- **Do not tow a trailer during break-in. See *Towing a Trailer on page 4-62* for the trailer towing capabilities of your vehicle and more information.**

Following break-in, engine speed and load can be gradually increased.

Ignition Positions

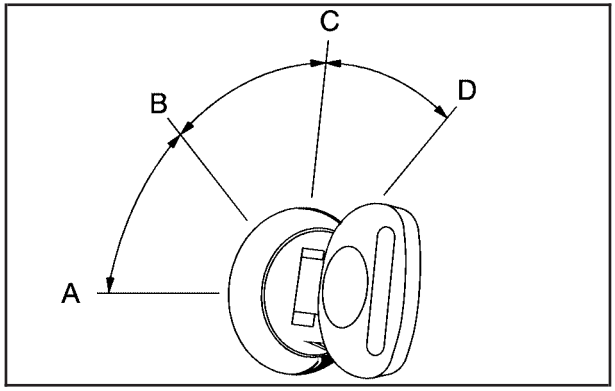

Use the key to turn the ignition switch to four different positions.

A (LOCK): This position locks the ignition and transmission. It is a theft-deterrent feature. You will only be able to remove the key when the ignition is turned to LOCK.

Notice: **Using a tool to force the key from the ignition switch could cause damage or break the key. Use the correct key and turn the key only with your hand. Make sure the key is all the way in. If it is, turn the steering wheel left and right while you turn the key hard. If none of this works, then your vehicle needs service.**

B (ACCESSORY): This position lets you use things like the radio and the windshield wipers when the engine is off.

Notice: **Lengthy operation of features such as the radio in the accessory ignition position may drain the battery and prevent your vehicle from starting. Do not operate your vehicle in the accessory ignition position for a long period of time.**

C (RUN): This is the position for driving.

D (START): This position starts the engine.

Retained Accessory Power (RAP)

The Retained Accessory Power (RAP) feature will allow certain features on your vehicle to continue to work for up to 10 minutes after the ignition key is turned to LOCK or until one of the doors is opened.

Starting the Engine

Your vehicle is equipped with Starter Motor Control. This feature assists in starting the engine and protects the electrical system. This feature may cause the engine to crank even after the ignition key is not in START.

Move your shift lever to PARK (P) or NEUTRAL (N). Your engine will not start in any other position — that is a safety feature. To restart when you are already moving, use NEUTRAL (N) only.

Notice: **Do not try to shift to PARK (P) if your vehicle is moving. If you do, you could damage the transmission. Shift to PARK (P) only when your vehicle is stopped.**

1. With your foot off the accelerator pedal, turn the ignition key to START. When the engine starts, let go of the key. The idle speed will go down as your engine gets warm.

Notice: **Holding your key in START for longer than 15 seconds at a time will disengage the starter motor, cause your battery to be drained much sooner, and add excessive heat that can damage your starter motor. Try not to hold the key in START for longer than 15 seconds and wait about 15 seconds between each try to help avoid draining your battery or damaging your starter.**

2. If it does not start within 10 seconds, push the accelerator pedal all the way to the floor, while you hold the ignition key in START. When the engine starts, let go of the key and let up on the accelerator pedal. Wait about 15 seconds between each try.

When starting your engine in very cold weather (below 0°F or –18°C), do this:

1. With your foot off the accelerator pedal, turn the ignition key to START and hold it there up to 15 seconds. When the engine starts, let go of the key.
2. If your engine still will not start, or starts but then stops, it could be flooded with too much gasoline. Try pushing your accelerator pedal all the way to the floor and holding it there as you hold the key in START for about three seconds. When the engine starts, let go of the key and accelerator. If the vehicle starts briefly but then stops again, do the same thing, but this time keep the pedal down for five or six seconds. This clears the extra gasoline from the engine.

Notice: **Your engine is designed to work with the electronics in your vehicle. If you add electrical parts or accessories, you could change the way the engine operates. Before adding electrical equipment, check with your dealer. If you do not, your engine might not perform properly. Any resulting damage would not be covered by your vehicle's warranty.**

Adjustable Throttle and Brake Pedal

If your vehicle has this feature, you can change the position of the throttle and brake pedals. This feature is designed for shorter drivers, since the pedals cannot move farther away from the standard position, but can move closer to you for better pedal reach. This feature can be programmed to work with the memory function (if equipped) on your vehicle. See *Memory Seat on page 2-90*.

The vehicle must be in PARK (P) for this feature to operate.

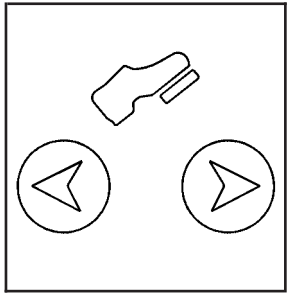

The buttons used to adjust the pedals are located on the driver's side door panel.

Press the button closest to you to move the pedals closer to you. Press the button farthest from you to move the pedals away from you.

Engine Coolant Heater

Your vehicle may be equipped with an engine coolant heater.

In very cold weather, 0°F (–18°C) or colder, the engine coolant heater can help. You will get easier starting and better fuel economy during engine warm-up.

Usually, the coolant heater should be plugged in a minimum of four hours prior to starting your vehicle. At temperatures above 32°F (0°C), use of the coolant heater is not required. Your vehicle may also have an internal thermostat in the plug end of the cord. This will prevent operation of the engine coolant heater when the temperature is at or above 0°F (–18°C) as noted on the cord.

To Use the Engine Coolant Heater

1. Turn off the engine.
2. Open the hood and unwrap the electrical cord. The cord is located on the driver's side of the engine compartment, near the power steering fluid reservoir.
3. Plug it into a normal, grounded 110-volt AC outlet.

⚠ CAUTION:

Plugging the cord into an ungrounded outlet could cause an electrical shock. Also, the wrong kind of extension cord could overheat and cause a fire. You could be seriously injured. Plug the cord into a properly grounded three-prong 110-volt AC outlet. If the cord will not reach, use a heavy-duty three-prong extension cord rated for at least 15 amps.

4. Before starting the engine, be sure to unplug and store the cord as it was before to keep it away from moving engine parts. If you do not, it could be damaged.

How long should you keep the coolant heater plugged in? The answer depends on the outside temperature, the kind of oil you have, and some other things. Instead of trying to list everything here, we ask that you contact your dealer in the area where you will be parking your vehicle. The dealer can give you the best advice for that particular area.

Automatic Transmission Operation

Your vehicle is equipped with an automatic transmission and features an electronic shift position indicator located within the instrument panel cluster.

There are several different positions for your shift lever.

PARK (P): This position locks your drive wheels. It is the best position to use when you start your engine because your vehicle cannot move easily.

⚠ CAUTION:

It is dangerous to get out of your vehicle if the shift lever is not fully in PARK (P) with the parking brake firmly set. Your vehicle can roll.

Do not leave your vehicle when the engine is running unless you have to. If you have left the engine running, the vehicle can move suddenly. You or others could be injured. To be sure your vehicle will not move, even when you are on fairly level ground, always set your parking brake and move the shift lever to PARK (P). See *Shifting Into Park (P) on page 2-39*. If you are pulling a trailer, see *Towing a Trailer on page 4-62*.

⚠ CAUTION:

Your vehicle will be free to roll — even if your shift lever is in PARK (P) — if your transfer case is in NEUTRAL. So, be sure the transfer case is in a drive gear — not in NEUTRAL. See *Shifting Into Park (P) on page 2-39*.

REVERSE (R): Use this gear to back up.

Notice: **Shifting to REVERSE (R) while your vehicle is moving forward could damage the transmission. The repairs would not be covered by your warranty. Shift to REVERSE (R) only after your vehicle is stopped.**

To rock your vehicle back and forth to get out of snow, ice or sand without damaging your transmission, see *If Your Vehicle is Stuck in Sand, Mud, Ice or Snow on page 4-44*.

NEUTRAL (N): In this position, your engine does not connect with the drive wheels. To restart when you are already moving, use NEUTRAL (N) only.

⚠ CAUTION:

Shifting into a drive gear while your engine is running at high speed is dangerous. Unless your foot is firmly on the brake pedal, your vehicle could move very rapidly. You could lose control and hit people or objects. Do not shift into a drive gear while your engine is running at high speed.

Notice: **Shifting out of PARK (P) or NEUTRAL (N) with the engine running at high speed may damage the transmission. The repairs would not be covered by your warranty. Be sure the engine is not running at high speed when shifting your vehicle.**

DRIVE (D): This position is for normal driving. If you need more power for passing, and you are:

- Going less than about 35 mph (55 km/h), push your accelerator pedal about halfway down.
- Going about 35 mph (55 km/h) or more, push the accelerator all the way down.

You will shift down to the next gear and have more power.

DRIVE (D) can be used when towing a trailer, carrying a heavy load, driving on steep hills or for off-road driving. You may want to shift the transmission to THIRD (3) or, if necessary, a lower gear selection if the transmission shifts too often.

THIRD (3): This position is also used for normal driving, however it offers more power and lower fuel economy than DRIVE (D).

SECOND (2): This position gives you more power but lower fuel economy. You can use SECOND (2) on hills. It can help control your speed as you go down steep mountain roads, but then you would also want to use your brakes off and on.

If you manually select SECOND (2), the transmission will drive in second gear. You may use this feature for reducing the speed of the rear wheels when you are trying to start your vehicle from a stop on slippery road surfaces. Once the vehicle is moving, shift into DRIVE (D).

FIRST (1): This position gives you even more power, but lower fuel economy than SECOND (2). You can use it on very steep hills, or in deep snow or mud. If the shift lever is put in FIRST (1) while the vehicle is moving forward, the transmission will not shift into first gear until the vehicle is going slowly enough.

Notice: **Spinning the tires or holding the vehicle in one place on a hill using only the accelerator pedal may damage the transmission. If you are stuck, do not spin the tires. When stopping on a hill, use the brakes to hold the vehicle in place.**

On cold days, approximately 32°F (0°C) or colder, your transmission is designed to shift differently until the engine reaches normal operating temperature. This is intended to improve heater performance.

Tow/Haul Mode

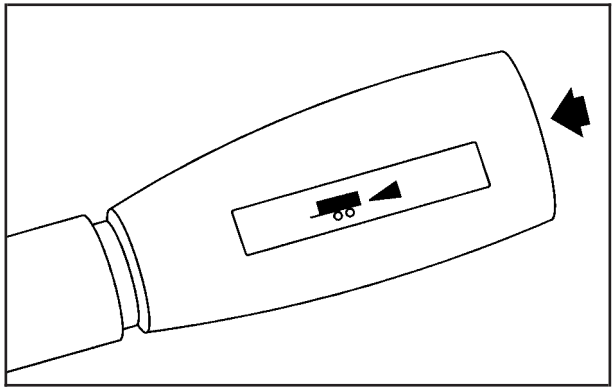

Your vehicle is equipped with a tow/haul mode. The button is located on the end of the column shift lever. You can use this feature to assist when towing or hauling a heavy load. See “Tow/Haul Mode” under *Towing a Trailer on page 4-62* for more information.

Four-Wheel Drive

If your vehicle has four-wheel drive, you will see the buttons shown below. You can send your engine's driving power to all four wheels for extra traction. To get the most satisfaction out of four-wheel drive, you must be familiar with its operation. Read the part that follows before using four-wheel drive.

Notice: **Driving on clean, dry pavement in Four-Wheel-Drive High or Four-Wheel-Drive Low for an extended period of time may cause premature wear on your vehicle's powertrain. Do not drive on clean, dry pavement in Four-Wheel Drive High or Four-Wheel-Drive Low for extended periods of time.**

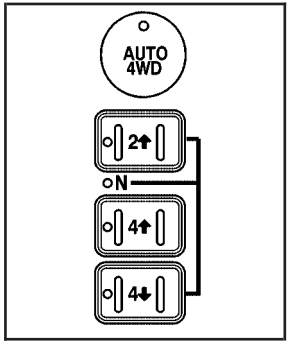

The transfer case buttons are located to the left of the instrument panel cluster.

The front axle locks and unlocks automatically when you shift the transfer case. Some delay for the axle to lock or unlock is normal.

For information on StabiliTrak®, see *StabiliTrak® System on page 4-9*.

Use these buttons to shift into and out of four-wheel drive.

You can choose among four driving settings:

AUTO 4WD (Automatic Four-Wheel Drive): This setting is ideal for use when road surface traction conditions are variable. When driving your vehicle in AUTO 4WD, the front axle is engaged, but the vehicle's power is sent only to the rear wheels. When the vehicle senses a loss of traction, the system will automatically engage four-wheel drive. Driving in this mode results in slightly lower fuel economy than Two-Wheel High.

2 ↑ (Two-Wheel High): This setting is used for driving in most street and highway situations. Your front axle is not engaged in two-wheel drive. This setting also provides the best fuel economy.

4 ↑ (Four-Wheel High): Use the four-wheel high position when you need extra traction, such as on snowy or icy roads or in most off-road situations. This setting also engages your front axle to help drive your vehicle. This is the best setting to use when plowing snow.

4 ↓ (Four-Wheel Low): This setting also engages your front axle and delivers extra torque. You may never need this setting. It sends maximum power to all four wheels. You might choose Four Wheel-Low if you are driving off-road in deep sand, deep mud, deep snow, and while climbing or descending steep hills. StabiliTrak® will not engage in this mode. See *StabiliTrak® System on page 4-9* for more information.

> **⚠ CAUTION:**
>
> **Shifting the transfer case to NEUTRAL can cause your vehicle to roll even if the transmission is in PARK (P). You or someone else could be seriously injured. Be sure to set the parking brake before placing the transfer case in NEUTRAL. See *Parking Brake on page 2-38*.**

NEUTRAL (N): Shift the vehicle's transfer case to NEUTRAL only when towing your vehicle. See *Recreational Vehicle Towing on page 4-57* or *Towing Your Vehicle on page 4-57* for more information.

Indicator lights in the button show which setting you are in. The indicator lights will come on briefly when you turn on the ignition and one will stay on. If the lights do not come on, you should take your vehicle to your dealer for service. An indicator light will flash while shifting the transfer case. It will remain illuminated when the shift is complete. If for some reason the transfer case cannot make a requested shift, it will return to the last chosen setting.

If the SERVICE 4WD message stays on, you should take your vehicle to your dealer for service. See "Service 4WD message" under *DIC Warnings and Messages on page 3-50*.

Shifting Into Four-Wheel High or AUTO 4WD (Automatic Four-Wheel Drive)

Press and release the Four-Wheel High or AUTO 4WD button. This can be done at any speed, except when shifting from Four-Wheel Low, and the indicator light will flash while shifting. It will remain on when the shift is completed.

Shifting Into Two-Wheel High

Press and release the Two-Wheel High button. This can be done at any speed, except when shifting from Four-Wheel Low.

Shifting Into Four-Wheel Low

To shift to the Four-Wheel Low position, the ignition must be in RUN and the vehicle must be stopped or moving less than 3 mph (5 km/h) with the transmission in NEUTRAL (N). The preferred method for shifting into four-wheel low is to have your vehicle moving 1 to 2 mph (1.6 to 3.2 km/h). Press and release the Four-Wheel Low button. You must wait for the four-wheel low indicator light to stop flashing and remain on before shifting your transmission in gear.

Notice: **Shifting the transmission into gear before the Four-Wheel Low indicator light has stopped flashing could damage the transfer case. To help avoid damaging your vehicle, always wait for the Four-Wheel Low indicator light to stop flashing before shifting the transmission into gear.**

It is typical for your vehicle to exhibit significant engagement noise and bump when shifting between Four-Wheel Low and Four-Wheel High ranges or from NEUTRAL with the engine running.

If the Four-Wheel Low button is pressed when your vehicle is in gear and/or moving, the Four-Wheel Low indicator light will flash for 30 seconds and not complete the shift unless your vehicle is moving less than 3 mph (5 km/h) and the transmission is in NEUTRAL (N). After 30 seconds the transfer case will shift to Four-Wheel High mode.

Shifting Out of Four-Wheel Low

To shift from Four-Wheel Low to Four-Wheel High, AUTO 4WD or Two-Wheel High, your vehicle must be stopped or moving less than 3 mph (5 km/h) with the transmission in NEUTRAL (N) and the ignition in RUN. The preferred method for shifting out of Four-Wheel Low is to have your vehicle moving 1 to 2 mph (1.6 to 3.2 km/h). Press and release the Four-Wheel High, AUTO 4WD or Two-Wheel High button. You must wait for the Four-Wheel High, AUTO 4WD or Two-Wheel High indicator light to stop flashing and remain on before shifting your transmission into gear.

Notice: **Shifting the transmission into gear before the Four-Wheel Low indicator light has stopped flashing could damage the transfer case. To help avoid damaging your vehicle, always wait for the Four-Wheel Low indicator light to stop flashing before shifting the transmission into gear.**

It is typical for your vehicle to exhibit significant engagement noise and bump when shifting between Four-Wheel Low and Four-Wheel High ranges or from NEUTRAL with the engine running.

If the Four-Wheel High, AUTO 4WD or Two-Wheel High switch is pressed when your vehicle is in gear and/or moving, the Four-Wheel High, AUTO 4WD or Two-Wheel High indicator light will flash for 30 seconds but will not complete the shift unless your vehicle is moving less than 3 mph (5 km/h) and the transmission is in NEUTRAL (N).

Shifting into NEUTRAL

To shift the transfer case to NEUTRAL do the following:

1. Make sure the vehicle is parked so that it will not roll.
2. Set the parking brake. See *Parking Brake on page 2-38* for more information.
3. Start the vehicle or turn the ignition to RUN.
4. Put the transmission in NEUTRAL (N).
5. Shift the transfer case to Two-Wheel High.
6. Simultaneously press and hold the Two-Wheel High and Four-Wheel Low buttons for 10 seconds. The NEUTRAL light will come on when the transfer case shift to NEUTRAL is complete.
7. If the engine is running, verify that the transmission is in NEUTRAL (N) by shifting the transmission to REVERSE (R) for one second, then shift the transmission to DRIVE (D) for one second.
8. Turn the ignition to ACCESSORY, which will turn the engine off.
9. Place the transmission shift lever in PARK (P).
10. Turn the ignition to LOCK.

Shifting Out of NEUTRAL

To shift out of NEUTRAL do the following:

1. Set the parking brake and apply the regular brake pedal.
2. Shift the transmission to NEUTRAL (N) and turn the ignition to RUN with the engine off.
3. Press the button for the desired transfer case shift position (Two-Wheel High, Four-Wheel High, AUTO 4WD, or Four-Wheel Low).

   After the transfer case has shifted out of NEUTRAL the NEUTRAL light will go out.

4. Release the parking brake.

Notice: **Shifting the transmission into gear before the Four-Wheel Low indicator light has stopped flashing could damage the transfer case. To help avoid damaging your vehicle, always wait for the Four-Wheel Low indicator light to stop flashing before shifting the transmission into gear.**

5. Start the engine and shift the transmission to the desired position.

Excessively shifting the transfer case into or out of the different modes may cause the transfer case to enter the shift protection mode. This will protect the transfer case from possible damage and will only allow the transfer case to respond to one shift per 10 seconds. The transfer case may stay in this mode for up to three minutes.

Parking Brake

To set the parking brake, hold the regular brake pedal down with your right foot. Push down the parking brake pedal with your left foot.

A chime will activate and the warning light will flash when the parking brake is applied and the vehicle is moving at least 3 mph (5 km/h) for at least three seconds.

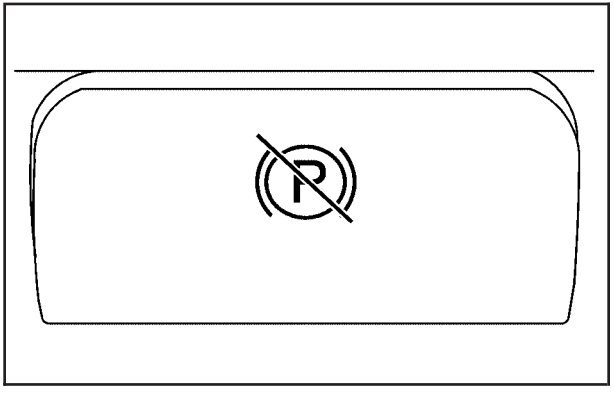

To release the parking brake, hold the regular brake pedal down. Pull the bottom edge of the lever, located above the parking brake pedal, with the parking brake symbol, to release the parking brake.

If the ignition is on when the parking brake is released, the brake system warning light will go off.

Notice: **Driving with the parking brake on can overheat the brake system and cause premature wear or damage to brake system parts. Verify that the parking brake is fully released and the brake warning light is off before driving.**

If you are towing a trailer and are parking on any hill, see *Towing a Trailer on page 4-62*.

Shifting Into Park (P)

⚠ CAUTION:

It can be dangerous to get out of your vehicle if the shift lever is not fully in PARK (P) with the parking brake firmly set. Your vehicle can roll. If you have left the engine running, the vehicle can move suddenly. You or others could be injured. To be sure your vehicle will not move, even when you are on fairly level ground, use the steps that follow. With

CAUTION: (Continued)

CAUTION: (Continued)

four-wheel drive, if your transfer case is in NEUTRAL, your vehicle will be free to roll, even if your shift lever is in PARK (P). So, be sure the transfer case is in a drive gear — not in NEUTRAL. If you are pulling a trailer, see *Towing a Trailer on page 4-62*.

1. Hold the brake pedal down with your right foot and set the parking brake.
2. Move the shift lever into the PARK (P) position by pulling the shift lever toward you and moving it up as far as it will go.
3. Be sure the transfer case is in a drive gear — not in NEUTRAL (N).
4. Turn the ignition key to LOCK.
5. Remove the key and take it with you. If you can leave your vehicle with the ignition key in your hand, your vehicle is in PARK (P).

Leaving Your Vehicle With the Engine Running

⚠ CAUTION:

It can be dangerous to leave your vehicle with the engine running. Your vehicle could move suddenly if the shift lever is not fully in PARK (P) with the parking brake firmly set.

If you have four-wheel drive and your transfer case is in NEUTRAL, your vehicle will be free to roll, even if your shift lever is in PARK (P). So be sure the transfer case is in a drive gear — not in NEUTRAL.

And, if you leave the vehicle with the engine running, it could overheat and even catch fire. You or others could be injured. Do not leave your vehicle with the engine running unless you have to.

If you have to leave your vehicle with the engine running, be sure your vehicle is in PARK (P) and the parking brake is firmly set before you leave it. After you move the shift lever into PARK (P), hold the regular brake pedal down. Then, see if you can move the shift lever away from PARK (P) without first pulling it toward you. If you can, it means that the shift lever was not fully locked into PARK (P).

Torque Lock

If you are parking on a hill and you do not shift your transmission into PARK (P) properly, the weight of the vehicle may put too much force on the parking pawl in the transmission. You may find it difficult to pull the shift lever out of PARK (P). This is called “torque lock.” To prevent torque lock, set the parking brake and then shift into PARK (P) properly before you leave the driver’s seat. To find out how, see *Shifting Into Park (P) on page 2-39*.

When you are ready to drive, move the shift lever out of PARK (P) before you release the parking brake.

If torque lock does occur, you may need to have another vehicle push yours a little uphill to take some of the pressure from the parking pawl in the transmission, so you can pull the shift lever out of PARK (P).

Shifting Out of Park (P)

Your vehicle has an automatic transmission shift lock control system. You have to fully apply your regular brakes before you can shift from PARK (P) when the ignition is in RUN. See *Automatic Transmission Operation on page 2-30*.

If you cannot shift out of PARK (P), ease pressure on the shift lever and push the shift lever all the way up into PARK (P) as you maintain brake application. Then, move the shift lever into the gear you want.

If you ever hold the brake pedal down but still cannot shift out of PARK (P), try this:

1. Turn the key to ACCESSORY. There is no shift interlock in this key position.
2. Apply and hold the brake until the end of Step 4.
3. Shift the vehicle to NEUTRAL (N).
4. Start the vehicle and then shift to the drive gear you want.
5. Have the system fixed as soon as possible.

Parking Over Things That Burn

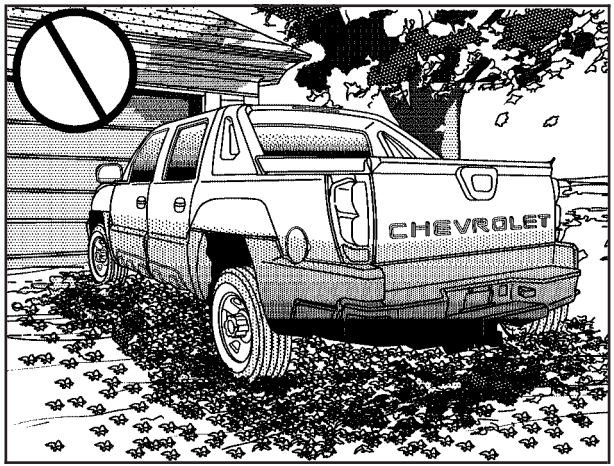

⚠ CAUTION:

Things that can burn could touch hot exhaust parts under your vehicle and ignite. Do not park over papers, leaves, dry grass, or other things that can burn.

Engine Exhaust

⚠ CAUTION:

Engine exhaust can kill. It contains the gas carbon monoxide (CO), which you cannot see or smell. It can cause unconsciousness and death.

You might have exhaust coming in if:

- **Your exhaust system sounds strange or different.**
- **Your vehicle gets rusty underneath.**
- **Your vehicle was damaged in a collision.**
- **Your vehicle was damaged when driving over high points on the road or over road debris.**
- **Repairs were not done correctly.**
- **Your vehicle or exhaust system had been modified improperly.**

If you ever suspect exhaust is coming into your vehicle:

- **Drive it only with all the windows down to blow out any CO; and**
- **Have your vehicle fixed immediately.**

Running the Engine While Parked

It is better not to park with the engine running. But if you ever have to, here are some things to know.

⚠ CAUTION:

Idling the engine with the climate control system off could allow dangerous exhaust into your vehicle. See the earlier caution under *Engine Exhaust on page 2-42*.

Also, idling in a closed-in place can let deadly carbon monoxide (CO) into your vehicle even if the climate control fan is at the highest setting. One place this can happen is a garage. Exhaust — with CO — can come in easily. NEVER park in a garage with the engine running.

Another closed-in place can be a blizzard. See *Winter Driving on page 4-40*.

⚠ CAUTION:

It can be dangerous to get out of your vehicle if the shift lever is not fully in PARK (P) with the parking brake firmly set. Your vehicle can roll. Do not leave your vehicle when the engine is running unless you have to. If you have left the engine running, the vehicle can move suddenly. You or others could be injured. To be sure your vehicle will not move, even when you are on fairly level ground, always set your parking brake and move the shift lever to PARK (P).

⚠ CAUTION:

Four-wheel drive vehicles with the transfer case in NEUTRAL will allow the vehicle to roll, even if your shift lever is in PARK (P). So, be sure the transfer case is in a drive gear — not in NEUTRAL. Always set your parking brake.

Follow the proper steps to be sure your vehicle will not move. See *Shifting Into Park (P) on page 2-39*.

If you are pulling a trailer, see *Towing a Trailer on page 4-62*.

Mirrors

Automatic Dimming Rearview Mirror with OnStar® and Compass

Your vehicle may have an automatic-dimming rearview mirror with a compass and the OnStar® system.

There are three additional buttons for the OnStar® system. See your dealer for more information on the system and how to subscribe to OnStar®. See *OnStar® System on page 2-55* for more information about the services OnStar® provides.

Mirror Operation

When turned on, this mirror automatically dims to the proper level to minimize glare from any headlamps behind you after dark.

⏻ **(On/Off):** This is the on/off button for the automatic dimming feature and compass. Press the far left button, located below the mirror face, for up to three seconds to turn the feature on and off. A light on the mirror will be lit while the feature is turned on.

Compass Operation

Press the on/off button once to turn the compass on or off.

There is a compass display in the window in the upper right corner of the mirror face. The compass displays a maximum of two characters. For example, “NE” is displayed for north-east.

Compass Calibration

Press and hold the on/off button down for nine seconds to activate the compass calibration mode. CAL will be displayed in the compass window on the mirror.

The compass can be calibrated by driving the vehicle in circles at 5 mph (8 km/h) or less until the display reads a direction.

Compass Variance

Compass variance is the difference between earth’s magnetic north and true geographic north. The mirror is set to zone eight upon leaving the factory. It will be necessary to adjust the compass to compensate for compass variance if you live outside zone eight. Under certain circumstances, such as during a long distance cross-country trip, it will be necessary to adjust for compass variance. If not adjusted to account for compass variance, your compass could give false readings.

To adjust for compass variance, do the following:

1. Find your current location and variance zone number on the map.

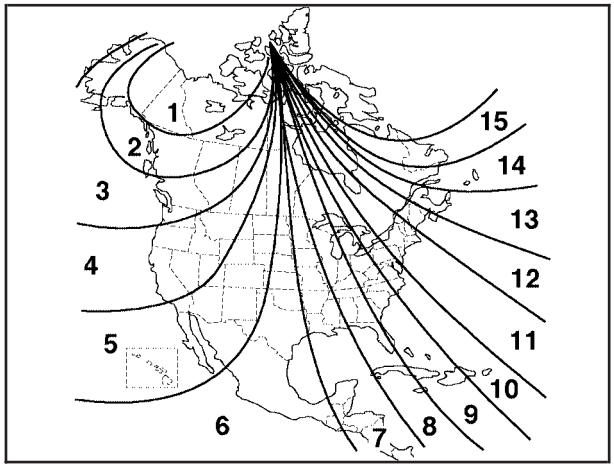

2. Press and hold the on/off button for six seconds. Release the button when ZONE is displayed. The number shown is the current zone number.
3. Scroll through the zone numbers that appear in the compass/temperature window on the mirror by pressing the on/off button. Once you find your zone number, release the button. After about four seconds, the mirror will return to the compass display, and the new zone number will be set.

Automatic Dimming Rearview Mirror with OnStar®, Compass and Temperature Display

Your vehicle may have this feature. When on, the automatic dimming mirror dims to the proper level to minimize glare from lights behind you after dark.

The mirror has a dual display in the upper right corner of the mirror face that shows the compass reading and the outside temperature.

Control buttons for the OnStar® system are at the bottom of the mirror. See *OnStar® System on page 2-55* for more information about the services OnStar® provides.

⏻ **(On/Off):** This is the on/off button.

Temperature and Compass Display

Press the on/off button, located to the far left, briefly to turn the compass/temperature display on or off.

If the display reads CAL, the compass needs to be calibrated. For more information, see “Compass Calibration” following.

To adjust between Fahrenheit and Celsius, do the following:

1. Press and hold the on/off button for approximately four seconds until either a flashing F or C appears.
2. Press the button again to change the display to the desired unit of measurement. After approximately four seconds of inactivity, the new unit will be locked in and the compass/temperature display will return.

If an abnormal temperature reading is displayed for an extended period of time, please see your GM dealer. Under certain circumstances, a delay in updating the temperature is normal.

Automatic Dimming Mirror Operation

The automatic dimming mirror function is turned on automatically each time the ignition is started. To operate the automatic dimming mirror, do the following:

1. Make sure the green indicator light, located to the left of the on/off button, is lit. If it is not, press and hold the on/off button for approximately six seconds until the green light comes on, indicating that the mirror is in automatic dimming mode.
2. Turn off the automatic dimming mirror function by pressing and holding the on/off button for approximately six seconds, until the green indicator light turns off.

Compass Variance

The mirror is set in zone eight upon leaving the factory. It will be necessary to adjust the compass to compensate for compass variance if the vehicle is outside of zone eight. Under certain circumstances, as during a long distance cross-country trip, it will be necessary to adjust for compass variance. Compass variance is the difference between earth’s magnetic north and true geographic north. If not adjusted to account for compass variance, the compass could give false readings.

To adjust for compass variance, do the following:

1. Find your current location and variance zone number on the following zone map.

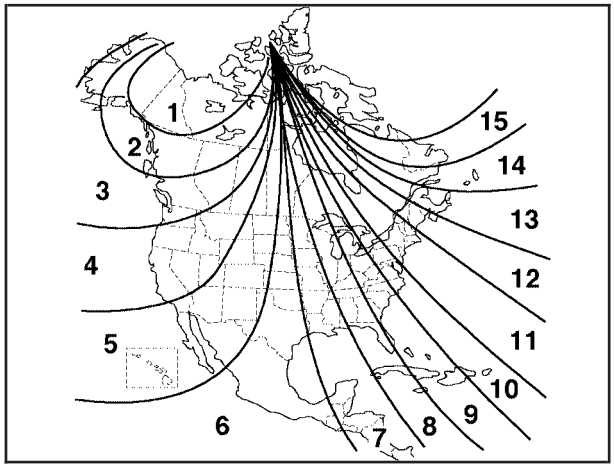

2. Press and hold the on/off button until a Z and a zone number appears in the display. The compass is now in zone mode.
3. Keep pressing the on/off button until the desired zone number appears in the display. Release the button. After approximately four seconds of inactivity, the new zone number will be locked in and the compass/temperature display will return.
4. Calibrate the compass as described next.

Compass Calibration

The compass may need calibration if one of the following occurs:

- After approximately five seconds, the display does not show a compass heading, N for North, for example, there may be a strong magnetic field interfering with the compass. Such interference may be caused by a magnetic antenna mount, magnetic note pad holder, or a similar magnetic item.
- The compass does not display the correct heading and the compass zone variance is set correctly.

In order to calibrate, CAL must be displayed in the mirror compass windows. If CAL is not displayed, push the on/off button for approximately 12 seconds or until CAL is displayed.

The compass can be calibrated by driving the vehicle in circles at 5 mph (8 km/h) or less until the display reads a direction.

Passenger Airbag Indicator

The vehicle may be equipped with a passenger airbag indicator, on the mirror glass, just above the buttons. For more information, see *Passenger Sensing System on page 1-61* and *Passenger Airbag Status Indicator on page 3-32*.

Cleaning the Mirror

When cleaning the mirror, use a paper towel or similar material dampened with glass cleaner. Do not spray glass cleaner directly on the mirror as that may cause the liquid cleaner to enter the mirror housing.

Automatic Dimming Rearview Mirror with Compass

Your vehicle may have an automatic-dimming rearview mirror with a compass.

Mirror Operation

When turned on, this mirror automatically dims to the proper level to minimize glare from any headlamps behind you after dark.

⏻ **(On/Off):** This is the on/off button for the automatic dimming feature and compass. Press the far left button, located below the mirror face, for up to three seconds to turn the feature on and off. A light on the mirror will be lit while the feature is turned on.

Compass Operation

Press the on/off button once to turn the compass on or off.

There is a compass display in the window in the upper right corner of the mirror face. The compass displays a maximum of two characters. For example, “NE” is displayed for north-east.

Compass Calibration

Press and hold the on/off button down for nine seconds to activate the compass calibration mode. CAL will be displayed in the compass window on the mirror.

The compass can be calibrated by driving the vehicle in circles at 5 mph (8 km/h) or less until the display reads a direction.

Compass Variance

Compass variance is the difference between earth's magnetic north and true geographic north. The mirror is set to zone eight upon leaving the factory. It will be necessary to adjust the compass to compensate for compass variance if you live outside zone eight. Under certain circumstances, such as during a long distance cross-country trip, it will be necessary to adjust for compass variance. If not adjusted to account for compass variance, your compass could give false readings.

To adjust for compass variance, do the following:

1. Find your current location and variance zone number on the map.

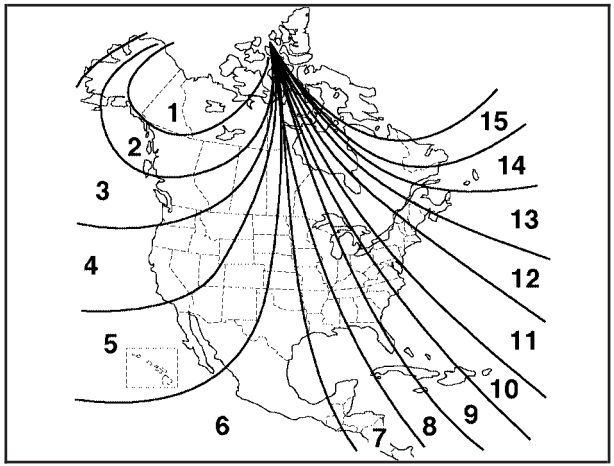

2. Press and hold the on/off button for six seconds. Release the button when ZONE is displayed. The number shown is the current zone number.
3. Scroll through the zone numbers that appear in the compass/temperature window on the mirror by pressing the on/off button. Once you find your zone number, release the button. After about four seconds, the mirror will return to the compass display, and the new zone number will be set.

Automatic Dimming Rearview Mirror with Compass and Temperature Display

Your vehicle may be equipped with this feature. When on, an automatic dimming mirror will dim to the proper level to minimize glare from lights behind you after dark.

The mirror also includes a dual display in the upper right corner of the mirror with the compass reading and the outside temperature. The display can be turned on or off by briefly pressing either the TEMP or the COMP button.

Temperature Display

The temperature can be displayed by pressing the TEMP button. Pressing the TEMP button once briefly, will toggle the temperature reading on and off. To alternate the temperature reading between Fahrenheit and Celsius, press and hold the TEMP button for approximately four seconds until the display blinks F and C. Press and release the TEMP button to toggle between the Fahrenheit and Celsius readings. After approximately four seconds of inactivity, the display will stop blinking and display the last selection made.

Press and release the TEMP button to toggle the temperature display between Fahrenheit or Celsius.

If an abnormal reading is displayed, please consult your GM dealer.

Automatic Dimming Mirror Operation

Press and hold the TEMP button for approximately eight seconds to turn the automatic dimming feature on or off. The indicator light to the left of the TEMP button will turn on or off to indicate when the feature is on. Once the mirror is turned off, it will remain off until it is turned back on, or until the vehicle is restarted.

Compass Operation

Press the COMP button once briefly to turn the compass on or off.

When the ignition is started and the compass feature is on, the compass will show two character boxes for approximately two seconds. After two seconds, the mirror will display the compass heading.

Compass Calibration

The compass may need calibration if one of the following occurs:

- If CAL is displayed while driving in the vehicle.
- After approximately five seconds, the display does not show a compass heading, N for North, for example, there may be a strong magnetic field interfering with the compass. Such interference may be caused by a magnetic antenna mount, magnetic note pad holder, or a similar magnetic item.
- The compass does not display the correct heading and the compass zone variance is set correctly.

In order to calibrate, CAL must be displayed in the mirror compass windows. If CAL is not displayed, push in the COMP button for approximately eight seconds or until CAL is displayed.

The compass can be calibrated by driving the vehicle in circles at 5 mph (8 km/h) or less until the display reads a direction.

Compass Variance

The mirror is set in zone eight upon leaving the factory. It will be necessary to adjust the compass to compensate for compass variance if the vehicle is outside zone eight. Under certain circumstances, as during a long distance cross-country trip, it will be necessary to adjust for compass variance. Compass variance is the difference between earth's magnetic north and true geographic north. If not adjusted to account for compass variance, your compass could give false readings.

To adjust for compass variance:

1. Find your current location and variance zone number on the following zone map.

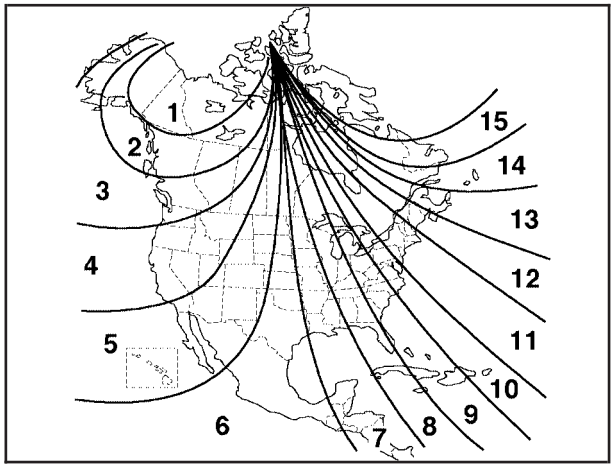

2. Press and hold the COMP button for five seconds until a zone number appears in the display.
3. Press the COMP button on the bottom of the mirror until the new zone number appears in the display. After you stop pressing the button, the display will show a compass direction within a few seconds.

Passenger Airbag Indicator

The mirror may be equipped with a passenger airbag indicator on the mirror glass, just above the buttons. If the vehicle has this feature, the mirror will display the word ON, or an airbag symbol in Canada, when the passenger airbag is enabled. See *Passenger Sensing System on page 1-61* for more information.

Cleaning the Mirror

Use a paper towel or similar material dampened with glass cleaner. Do not spray glass cleaner directly on the mirror as that may cause the liquid cleaner to enter the mirror housing.

Outside Camper-Type Mirrors

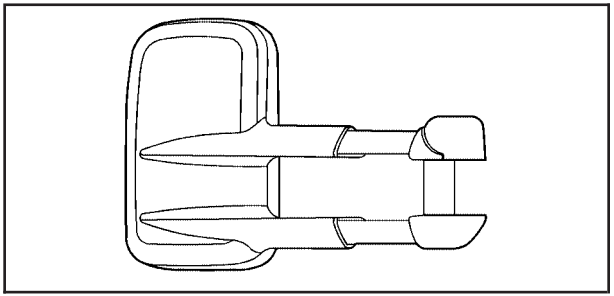

If your vehicle is equipped with this trailer towing type mirror, they can be adjusted so you can have a clear view of the objects behind you. Pull out the mirror head to extend it for better visibility when towing a trailer.

These mirrors can also be manually folded in. On the lower portion of the mirror is a convex mirror. A convex mirror's surface is curved so you can see more from the driver's seat.

Outside Power Mirrors

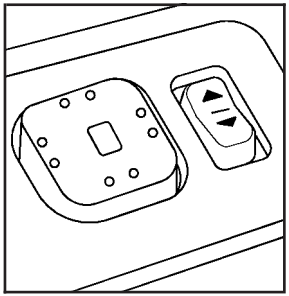

The controls are located on the driver's door armrest.

Move the upper selector switch to the left or right to choose the mirror to be adjusted, then press the dots, located below the selector switch on the four-way control pad, to adjust the direction of each mirror.

The mirrors may also include a memory function which works in conjunction with the memory seats. See *Memory Seat on page 2-90* for more information.

Power Folding Mirrors

To fold or unfold the mirrors, move the selector switch, located above the mirror control, to the middle position. The mirror control will illuminate. Press the right or left side of the mirror control to fold or unfold the mirrors. The mirror will adjust as it folds in and will reposition itself once it is unfolded.

If the mirrors are accidentally folded/unfolded manually, they may shake or flutter at normal driving speeds and may not stay in the unfolded position. If this happens, the mirrors need to be reset. See "Resetting the Power Folding Mirrors" next.

Resetting the Power Folding Mirrors

The power folding mirrors will need to be reset if:

- They are accidently manually folded/unfolded.
- The mirrors will not stay in the unfolded position.
- The mirrors shake and flutter at normal driving speeds.

To reset the power folding mirrors, fold and unfold them at least three times using the mirror controls. This will reset them to their normal detent position.

Outside Convex Mirror

⚠ CAUTION:

A convex mirror can make things (like other vehicles) look farther away than they really are. If you cut too sharply into the right lane, you could hit a vehicle on your right. Check your inside mirror or glance over your shoulder before changing lanes.

The passenger's side mirror is convex. A convex mirror's surface is curved so more can be seen from the driver's seat. It makes things in the mirror appear farther away than they really are.

Outside Heated Mirrors

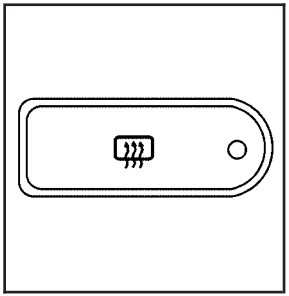

If the vehicle has heated mirrors, the button to turn this function on or off is located on the climate control panel.

Press this button to warm the driver's and passenger's outside rearview mirrors to help clear them of ice, snow, and condensation.

If the vehicle has a rear window defogger, the heated mirrors will come on when this button is pressed. See "Rear Window Defogger" under *Dual Automatic Climate Control System on page 3-22* for more information.

Outside Automatic Dimming Mirror with Curb View Assist

Your vehicle may have this feature.

The driver's outside mirror will adjust for the glare of the headlamps behind you. See *Automatic Dimming Rearview Mirror with OnStar®, Compass and Temperature Display on page 2-45*.

Your vehicle's mirrors will also be capable of performing the curb view assist mirror function. This feature will cause the passenger's and/or driver's mirror to tilt to a preselected position when the vehicle is in REVERSE (R). This feature may be useful in allowing you to view the curb when you are parallel parking.

When the vehicle is shifted out of REVERSE (R) and a short delay has occurred, the passenger's and/or driver's mirror will return to its original position.

To change the preselected tilt position, adjust the mirrors to the desired position while the vehicle is in REVERSE (R). When the vehicle is shifted out of REVERSE (R), this new position is saved in memory as the tilt position.

This feature can be enabled/disabled through the Driver Information Center. See *DIC Vehicle Customization on page 3-60* for more information.

OnStar® System

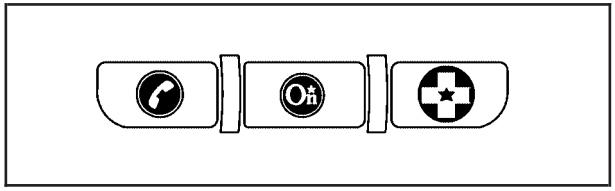

OnStar® uses global positioning system (GPS) satellite technology, wireless communications, and live advisors to provide you with a wide range of safety, security, information, and convenience services. If your airbags deploy, the system is designed to make an automatic call to OnStar® Emergency where we can request emergency services be sent to your location. If you lock your keys in the car, call OnStar® at 1-888-4-ONSTAR and they can send a signal to unlock your doors. if you need roadside assistance, press the OnStar® button and they will get you the help you need.

A complete OnStar® User's Guide and the Terms and Conditions of the OnStar® Subscription Service Agreement are included in the vehicle's glove box literature. For more information, visit www.onstar.com or www.onstar.ca. Contact OnStar® at 1-888-4-ONSTAR (1-888-466-7827), or press the OnStar® button to speak to an OnStar® advisor 24 hours a day, 7 days a week.

Terms and conditions of the Subscription Service Agreement can be found at www.onstar.com or www.onstar.ca.

OnStar® Services

For new vehicles equipped with OnStar®, the Safe and Sound plan is included for one year from the date of purchase. The OnStar® subscription can be extended beyond the first year, or upgraded to the Directions and Connections® Plan to meet your needs. For more information, press the OnStar® button to speak with an advisor.

Safe and Sound Plan

- Automatic Notification of Airbag Deployment
- Emergency Services
- Roadside Assistance
- Stolen Vehicle Tracking
- AccidentAssist
- Remote Door Unlock/Vehicle Alert
- Remote Diagnostics
- Online Concierge

Directions and Connections® Plan

- All Safe and Sound Plan Services
- Driving Directions
- RideAssist
- Information and Convenience Services

OnStar® Personal Calling

As an OnStar® subscriber, the Personal Calling capability allows you to make hands-free calls using a wireless system that is integrated into the vehicle. Calls can be placed nationwide using simple voice commands with no additional contracts and no additional roaming charges. To find out more about OnStar® Personal Calling, refer to the OnStar® User's Guide in the vehicle's glove box, visit www.onstar.com or www.onstar.ca, or speak to an OnStar® advisor by pressing the OnStar® button or calling 1-888-4-ONSTAR (1-888-466-7827).

OnStar® Virtual Advisor

Your vehicle may have Virtual Advisor. It is a feature of OnStar® Personal Calling that uses your minutes to access weather, local traffic reports and stock quotes. By pressing the phone button and giving a few simple voice commands, you can browse through the various topics. Customize your information profile at www.myonstar.com. See the OnStar® user's guide for more information.

OnStar® Steering Wheel Controls

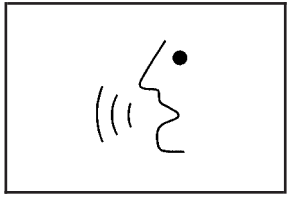

Your vehicle may be equipped with a Talk/Mute button that can be used to interact with OnStar®. See *Audio Steering Wheel Controls on page 3-106* for more information.

When calling into voice mail systems or to dial directory numbers, press this button once, wait for the response, say the number(s) to be dialed, wait for the number(s) to be repeated and then say "dial."

See the OnStar® user's guide for more information.

Universal Home Remote System

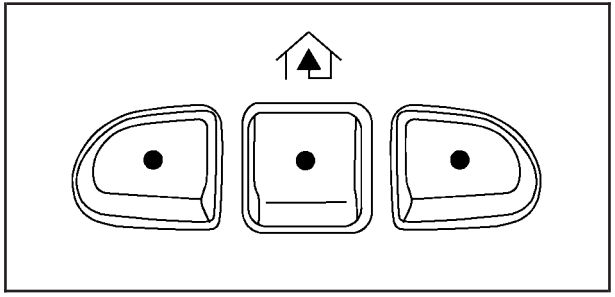

The Universal Home Remote System, a combined universal transmitter and receiver, provides a way to replace up to three hand-held transmitters used to activate devices such as gate operators, garage door openers, entry door locks, security systems, and home lighting.

If your vehicle is equipped with the Universal Home Remote Transmitter, it complies with Part 15 of the FCC Rules. Operation is subject to the following two conditions: (1) this device may not cause harmful interference, and (2) this device must accept any interference received, including interference that may cause undesired operation.

This device complies with RSS-210 of Industry Canada. Operation is subject to the following two conditions: (1) this device may not cause interference, and (2) this device must accept any interference received, including interference that may cause undesired operation of the device.

Changes and modifications to this system by other than an authorized service facility could void authorization to use this equipment.

Universal Home Remote System Operation

Do not use the Universal Home Remote with any garage door opener that does not have the “stop and reverse” feature. This includes any garage door opener model manufactured before April 1, 1982. If you have a newer garage door opener with rolling codes, please be sure to follow Steps 6 through 8 to complete the programming of your Universal Home Remote Transmitter.

Read the instructions completely before attempting to program the Universal Home Remote. Because of the steps involved, it may be helpful to have another person available to assist you in the programming steps.

Keep the original hand-held transmitter for use in other vehicles as well as for future Universal Home Remote programming. It is also recommended that upon the sale of the vehicle, the programmed Universal Home Remote buttons should be erased for security purposes. See “Erasing Universal Home Remote Buttons” later in this section or, for assistance, see *Customer Assistance Offices on page 7-4*.

Be sure that people and objects are clear of the garage door or gate operator you are programming. When programming a garage door, it is advised to park outside of the garage.

It is recommended that a new battery be installed in your hand-held transmitter for quicker and more accurate transmission of the radio-frequency signal.

Programming Universal Home Remote

Follow these steps to program up to three channels:

1. Press and hold down the two outside Universal Home Remote buttons, releasing only when the Universal Home Remote indicator light begins to flash, after 20 seconds. Do not hold down the buttons for longer than 30 seconds and do not repeat this step to program a second and/or third hand-held transmitter to the remaining two Universal Home Remote buttons.
2. Position the end of your hand-held transmitter about 1 to 3 inches (3 to 8 cm) away from the Universal Home Remote buttons while keeping the indicator light in view.

3. Simultaneously press and hold both the desired Universal Home Remote button and the hand-held transmitter button. Do not release the buttons until Step 4 has been completed.

   Some entry gates and garage door openers may require you to substitute Step 3 with the procedure noted in “Gate Operator and Canadian Programming” later in this section.

4. The indicator light will flash slowly at first and then rapidly after Universal Home Remote successfully receives the frequency signal from the hand-held transmitter. Release both buttons.

5. Press and hold the newly-trained Universal Home Remote button and observe the indicator light.

   If the indicator light stays on constantly, programming is complete and your device should activate when the Universal Home Remote button is pressed and released.

   To program the remaining two Universal Home Remote buttons, begin with Step 2 under “Programming Universal Home Remote.” Do not repeat Step 1 as this will erase all of the programmed channels.

   If the indicator light blinks rapidly for two seconds and then turns to a constant light, continue with Steps 6 through 8 following to complete the programming of a rolling-code equipped device, most commonly, a garage door opener.

6. Locate in the garage, the garage door opener receiver (motor-head unit). Locate the “Learn” or “Smart” button. This can usually be found where the hanging antenna wire is attached to the motor-head unit.

7. Firmly press and release the “Learn” or “Smart” button. The name and color of the button may vary by manufacturer.

   You will have 30 seconds to start Step 8.

8. Return to the vehicle. Firmly press and hold the programmed Universal Home Remote button for two seconds, then release. Repeat the press/hold/release sequence a second time, and depending on the brand of the garage door opener, or other rolling code device, repeat this sequence a third time to complete the programming.

   The Universal Home Remote should now activate your rolling-code equipped device.

To program the remaining two Universal Home Remote buttons, begin with Step 2 of “Programming Universal Home Remote.” You do not want to repeat Step 1, as this will erase all previous programming from the Universal Home Remote buttons.

Gate Operator and Canadian Programming

Canadian radio-frequency laws require transmitter signals to time out or quit after several seconds of transmission. This may not be long enough for Universal Home Remote to pick up the signal during programming. Similarly, some U.S. gate operators are manufactured to time out in the same manner.

If you live in Canada, or you are having difficulty programming a gate operator or garage door opener by using the “Programming Universal Home Remote” procedures, regardless of where you live, replace Step 3 under “Programming Universal Home Remote” with the following:

Continue to press and hold the Universal Home Remote button while you press and release every two seconds (cycle) the hand-held transmitter button until the frequency signal has been successfully accepted by the Universal Home Remote. The Universal Home Remote indicator light will flash slowly at first and then rapidly. Proceed with Step 4 under “Programming Universal Home Remote” to complete.

Using Universal Home Remote

Press and hold the appropriate Universal Home Remote button for at least half of a second. The indicator light will come on while the signal is being transmitted.

Erasing Universal Home Remote Buttons

To erase programming from the three Universal Home Remote buttons do the following:

1. Press and hold down the two outside buttons until the indicator light begins to flash, after 20 seconds. Do not hold the two outside buttons for longer than 30 seconds.
2. Release both buttons.

The Universal Home Remote is now in the train (learning) mode and can be programmed at any time beginning with Step 2 under “Programming Universal Home Remote” shown earlier in this section.

Individual buttons cannot be erased, but they can be reprogrammed. See “Reprogramming a Single Universal Home Remote Button” following this section.

Reprogramming a Single Universal Home Remote Button

To program a device to Universal Home Remote using a Universal Home Remote button previously trained, follow these steps:

1. Press and hold the desired Universal Home Remote button. Do not release the button.
2. The indicator light will begin to flash after 20 seconds. While still holding the Universal Home Remote button, proceed with Step 2 under “Programming Universal Home Remote” shown earlier in this section.

For additional information on Universal Home Remote, see *Customer Assistance Offices on page 7-4*.

Storage Areas

Glove Box

Open the glove box by pulling the bottom of the handle upward.

Cupholder(s)

Your vehicle may be equipped with cupholders for the front and rear passengers.

The cupholders are located in the center console for the front passengers and on the rear of the center console for the rear passengers.

To use the front cupholders, press down on the access door and release. The door will then open. Push the door back down to close it.

To use the rear cupholders, pull down on the door located on the back of the console.

The front cupholder may be removed for cleaning by pushing down and then back on the cupholder.

Center Overhead Console

Your vehicle may have an overhead console equipped with reading lights and a small storage area.

Press the button next to the light to turn it on. Press it again to turn it off.

Front Armrest Storage Area

Your vehicle may have a center armrest storage compartment in the front bench seat.

To open it, fold down the armrest and press the latch handle located at the front of the armrest. Then, let the lid pop up and swing open.

Center Console Storage Area

Your vehicle may have a console compartment with cupholders between the bucket seats.

To open it, press the button and swing the console lid open.

The rear of the console has a cupholder that swings down for the rear seat passenger to use.

Luggage Carrier

You can load things on top of your vehicle if it has this feature.

The luggage carrier has slats and siderails attached to the roof and may have crossrails which can be moved back and forth to help secure cargo. Tie the load to the siderails or siderail supports.

Notice: **Loading cargo on the luggage carrier that weighs more than 200 lbs (91 kg) or hangs over the rear or sides of the vehicle may damage your vehicle. Load cargo so that it rests on the slats as far forward as possible and against the side rails, making sure to fasten it securely.**

Don’t exceed the maximum vehicle capacity when loading your vehicle. For more information on vehicle capacity and loading, see *Loading Your Vehicle on page 4-46*.

To prevent damage or loss of cargo as you’re leaving, check now and then to make sure the luggage and cargo are still securely fastened.

Be sure the cargo is properly loaded.

- If small heavy objects are placed on the roof cut a piece of 3/8 inch plywood to fit inside the crossrails and siderails to spread the load. If plywood is used, tie it to the siderail supports.
- Tie the load to the crossrails or the siderail supports. Use the crossrails only to keep the load from sliding. To move the crossrails, pull out on the latch release handle at each end. Slide the crossrail to the desired position balancing the force side to side. Push the release handle back into the latched position and slide the crossrail back and forth slightly to be sure the latch snaps securely into place.

- If you need to carry long items, move the crossrails as far apart as they will go. Tie the load to the crossrails and the siderails or siderail supports. Also tie the load to the bumpers. Do not tie the load so tightly that the crossrails or siderails are damaged.
- After moving a crossrail, be sure it is securely locked into the siderail.

Your vehicle has a Center High-Mounted Stoplamp (CHMSL) located above the rear glass.

If items are loaded on the roof of the vehicle, care should be taken not to block or damage the CHMSL unit.

Rear Storage Area

Your vehicle is equipped with a rear armrest/cupholder for the rear seat passengers.

To open it, pull up and then out on the tab, located at the top center of the armrest, and pull the armrest down.

Cargo Cover Panels

⚠ CAUTION:

Improperly stored cargo cover panels could be thrown about the vehicle during a collision or sudden maneuver. You or others could be injured. If you remove a panel, always store it in the proper storage location. When you put it back, always be sure that is securely reattached.

Notice: **Exceeding the weight limit of 250 lbs (113 kg) can damage the cargo covers, and the repairs would not be covered by your warranty. Do not put anything on top of the cargo covers over the weight limit.**

Your vehicle may be equipped with a three-piece cargo cover system. The cargo panels can be removed and stored in the cargo area of the vehicle with the cargo panel storage bag.

To remove a cargo panel(s), do the following:

1. Lower the tailgate. Use the ignition/door key to unlock the tailgate if it is locked. See *Tailgate on page 2-20* for more information on the tailgate.

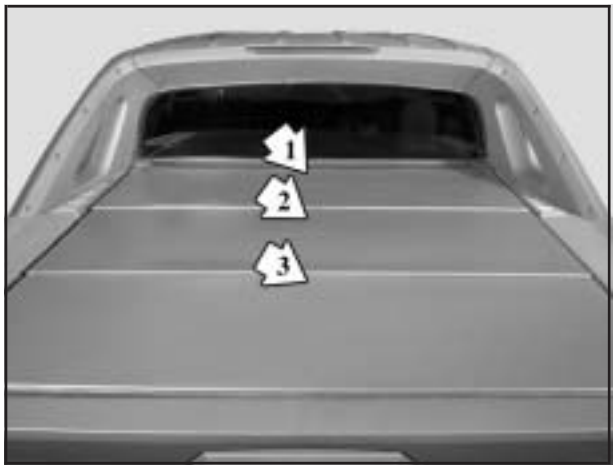

The panels are embossed on the upper center portion with the numbers 1, 2 and 3. There are also numbered labels on the bottom of the panels. The numbers on the top and bottom of the panels will be used as reference when removing, storing and reinstalling the panels.

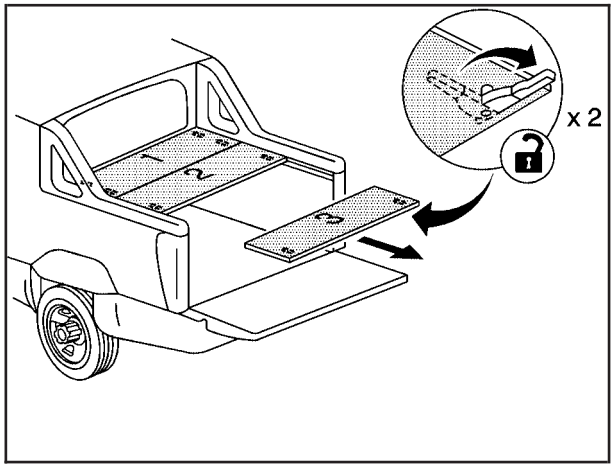

2. Remove cargo panel 3 by pulling the left and right cargo panel latches, located on the bottom of each cargo panel, forward to unlock the cargo panel latches.

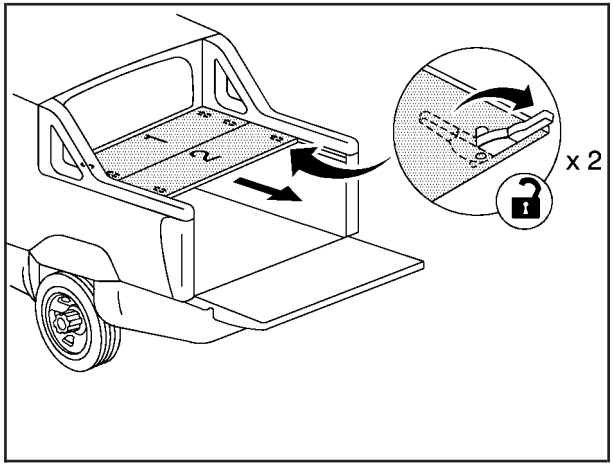

3. Pull each cargo panel up and then out from the side rails and set it aside. Remove as many cargo panels as needed.

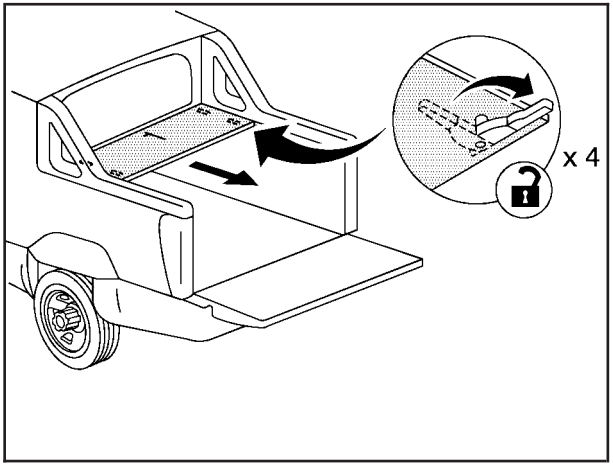

4. If cargo panel 1 needs to be removed. There are latches on both sides that need to be released.

After you have removed each cargo panel, store them within the cargo storage area using the cargo panel storage system.

Cargo Panel Storage System

The three cargo panels can be stored in the cargo area using the storage strap system. To store the panels, do the following:

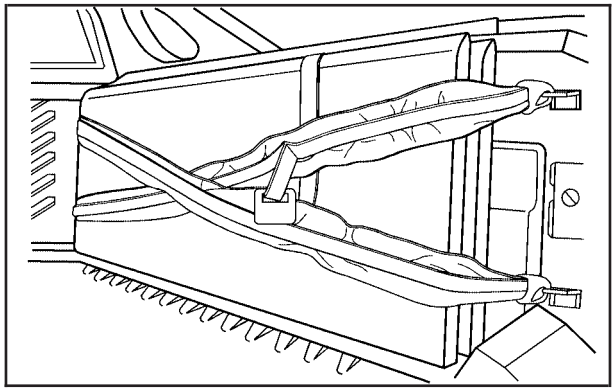

1. Secure the storage strap system in the cargo storage area by attaching the six clips included on the cargo strap system to the tie down locations on either side of the storage area.

Always use the storage strap system to store the cargo panels during driving.

Before storing the cargo panels, be sure that the latches are in the locked position. The latches are in the locked position when they are parallel to the front and back edge of the panel.

Use the following instructions for the proper storage sequence and location for each panel:

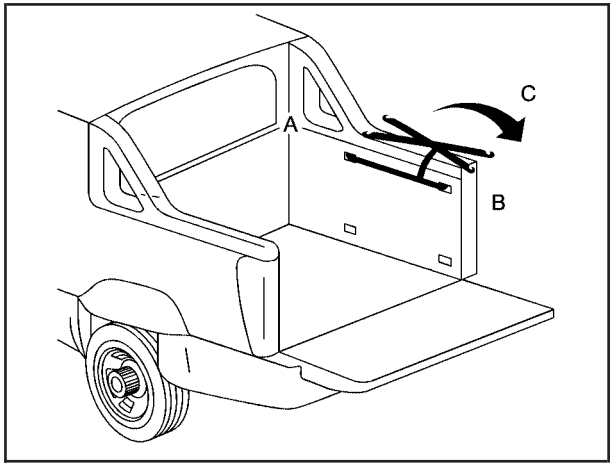

A. Secure the first secondary strap.

B. Secure the last secondary strap.

C. Put the rest of the strap system towards the top of the lid and tray.

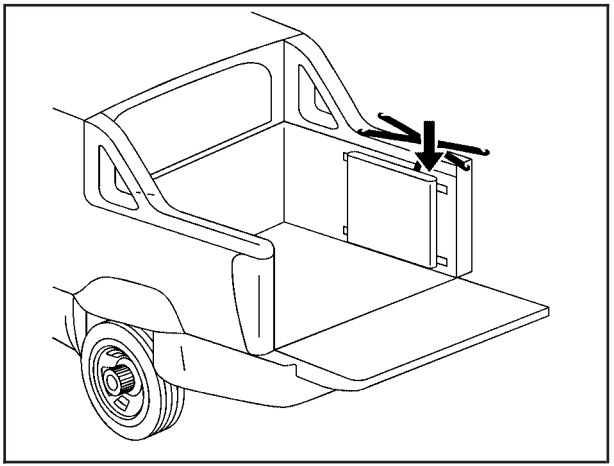

2. Starting with cargo panel 1, load the cargo panel with latches up and facing away from you.

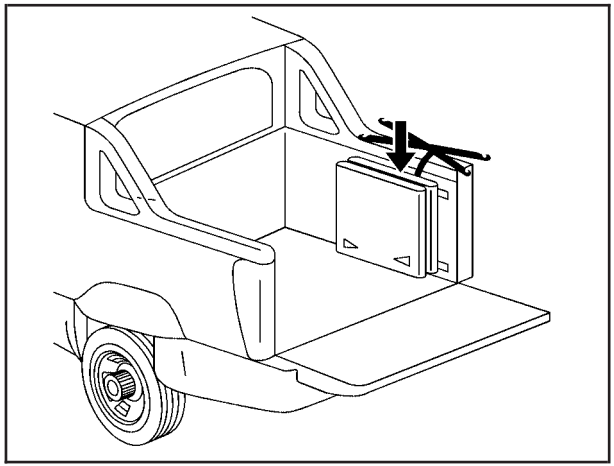

3. Store cargo panel 2 by loading the cargo panel with latches down and facing toward you.

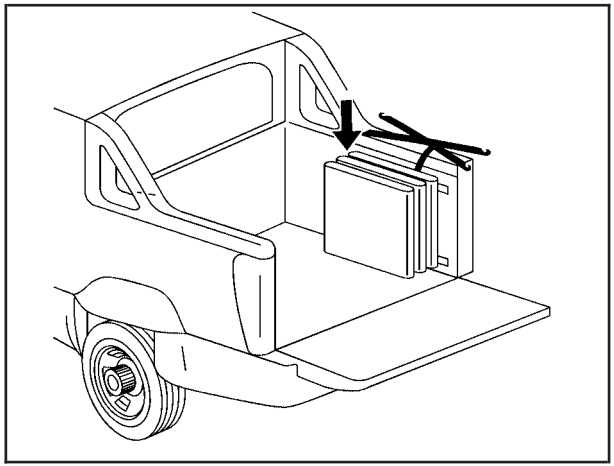

4. Store cargo panel 3 by loading the cargo panel with latches up and facing away from you.

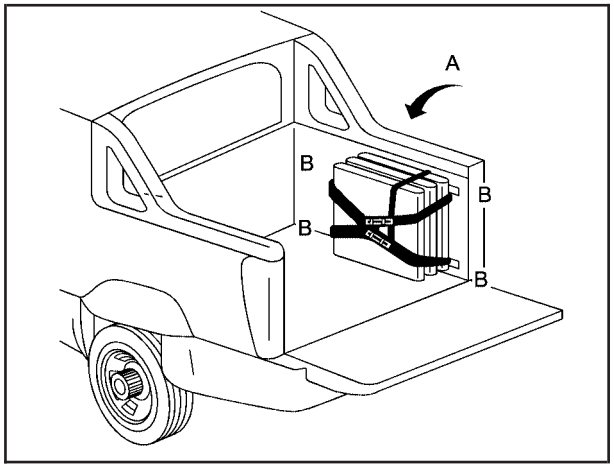

5. Move the rest of the strap system inside the cargo box, covering the three cargo covers (A). Fasten the four strap clips (B).

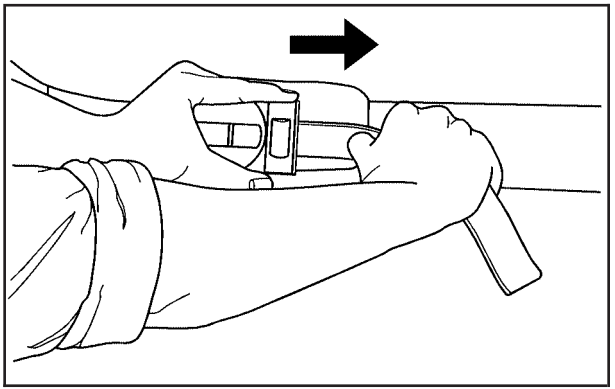

6. Tighten all straps by pulling on the free end of each strap.

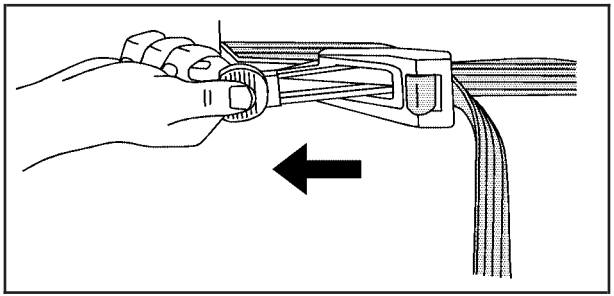

7. Close both cross locks at the center of the strap system to secure tightly.

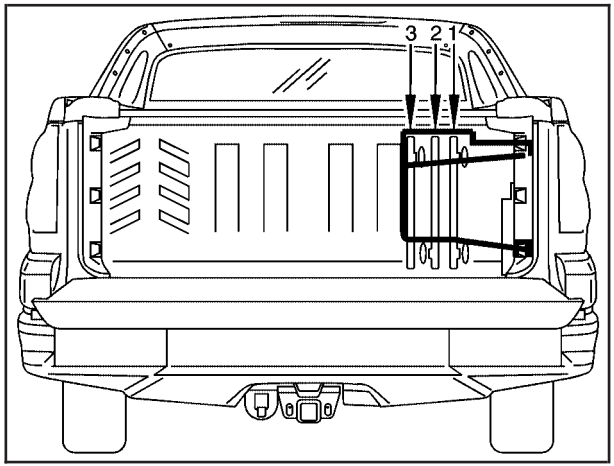

Panels 3, 2, 1 Loaded

Reinstalling the Cargo Cover Panels

To reinstall a cargo panel do the following.

1. Remove the cargo panel(s) from the storage strap system.

   You can either leave the strap system attached to the side of the cargo area while it is not in use, or you can store it inside the top box compartment. See *Top-Box Storage on page 2-82* for more information.

2. Starting with cargo panel 1, place the latches in the unlocked position. Place cargo panel 1 on the cargo area rails while holding the back of the cargo panel up.

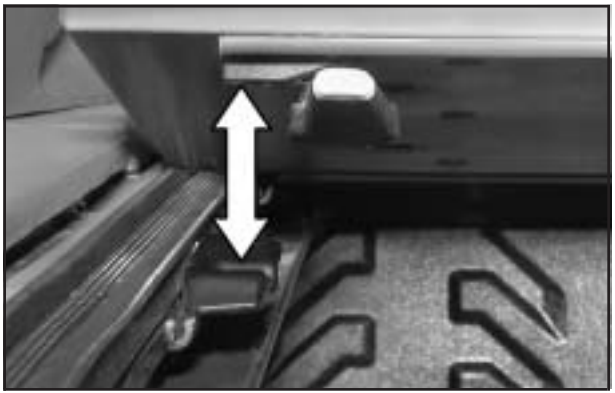

Left Side Shown, Right Side Similar

Push the panel forward until it is snug against the midgate and then let the back of the panel down being sure that the pegs align with the receivers.

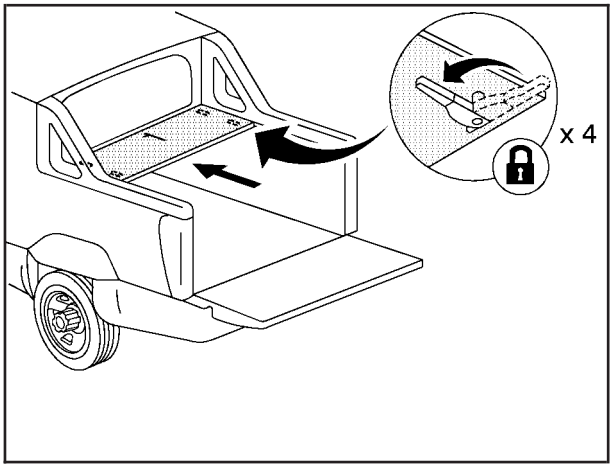

3. Push both left latches away from you to lock the latches. Remember that there are two latches on each side for panel 1. You should hear a click when each latch locks. Lock the remaining two right latches on panel 1.

   For any cargo cover panel you must lock the left latch in place before you can lock the right latch. If you do not follow this exactly, the cargo cover panels may not lock in place correctly.

4. Install cargo cover 2 next. Place the latches in the unlocked position. Place the cargo cover panel on the cargo area rails while holding the back of the cargo panel up.

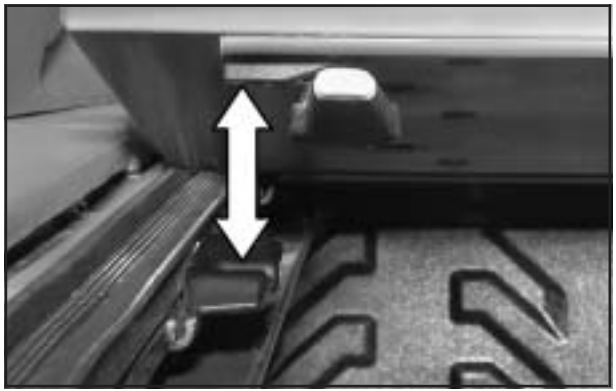

Left Side Shown, Right Side Similar

Push the panel forward until it is snug against the other panel and then let the back of the panel down being sure that the pegs align with the receivers.

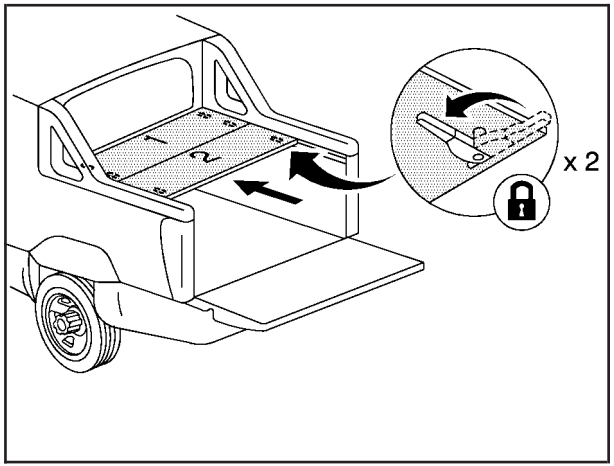

5. Push the latches away from you, starting with the left latch, to lock the panel in place. You should hear a click when each latch locks correctly.
6. Install cargo cover 3 next. Place the latches in the unlocked position. Place the cargo cover panel on the cargo area rails while holding the back of the cargo panel up.

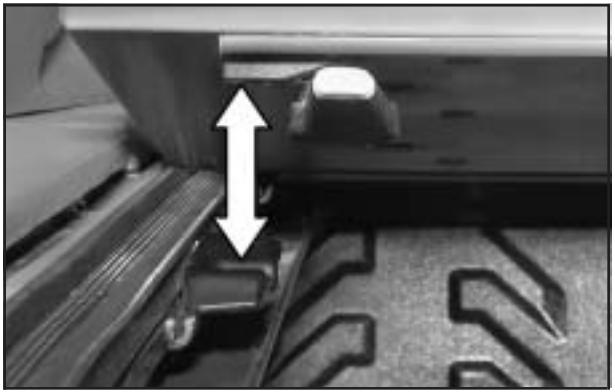

Left Side Shown, Right Side Similar

Push the panel forward until it is snug against the other panel and then let the back of the panel down being sure that the pegs align with the receivers.

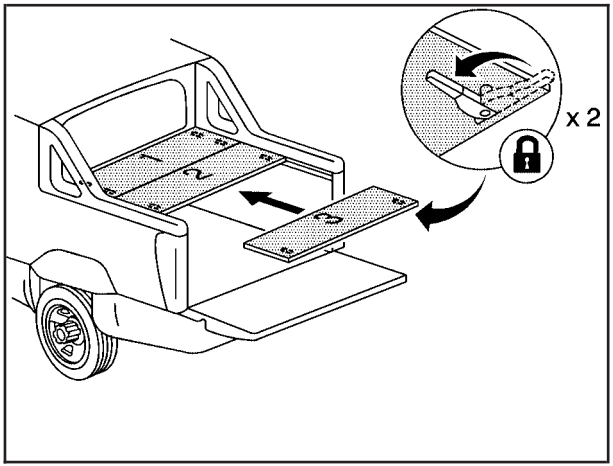

7. Push the latches away from you, starting with the left latch, to lock the panel in place. You should hear a click when each latch locks.

Folding and Storage of Straps

To store the folding straps do the following:

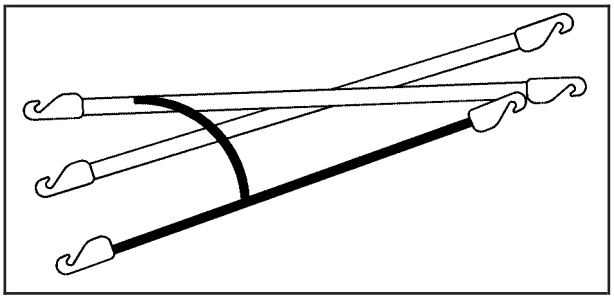

1. Extend the six strap ends on a flat surface.

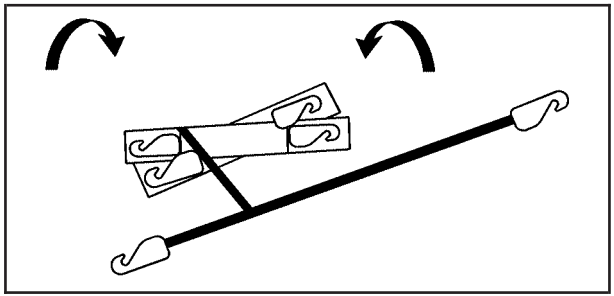

2. Fold the four strap ends towards the center as shown.

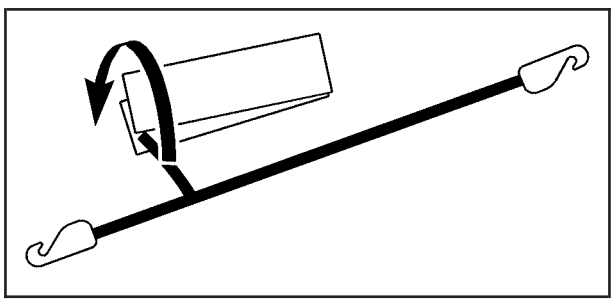

3. Take the short strap and surround the folded webbing, forming a package.

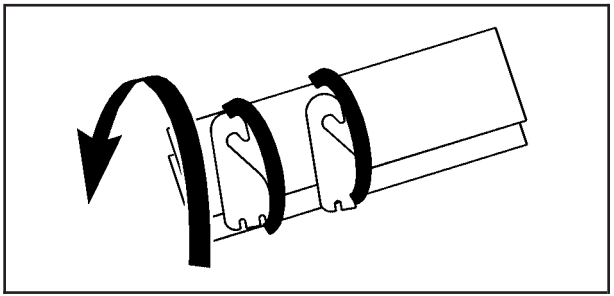

4. Take the long strap and wrap it around the package Finally, attach the hooks to the webbing.

Cargo Tie Downs

Cargo tie downs are located in the rear cargo area that can be used to secure cargo.

The tie downs can also be used to secure the cargo cover panel strap system or the tonneau cover storage bag, if equipped. For more information see “Cargo Cover Panels” earlier in this section and *Tonneau Cover on page 2-83*.

All-Weather Cargo Area

Your vehicle can be driven with the cargo panels on or off, the midgate up or down, or with the rear glass in or out. The vehicle has features to help resist the elements and protect cargo inside the cargo area. Parts of the water management system, which is designed to quickly direct water out of the cargo box, include the top drain grates, side rail channels, catch cups, midgate drain, cargo area floor drains and the rubber cargo mat.

Even when the water management system is working properly and the vehicle’s cargo cover system is on, water could still accumulate in areas of the vehicle during heavy rains and after going through an automated car wash.

The areas where water could collect are:

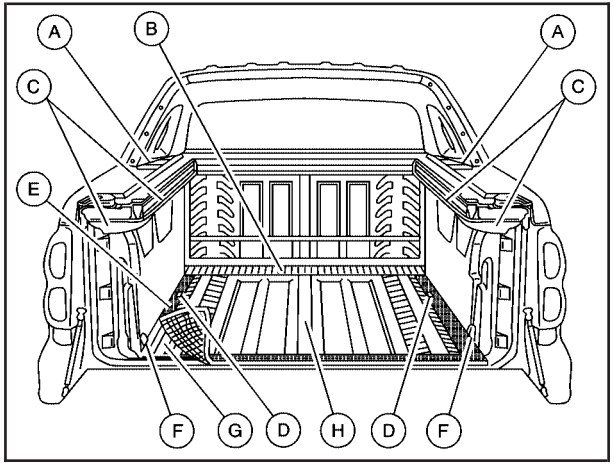

A. Top drain grates
B. Removable front drain grate (Midgate drain gate)
C. Side rail channels and catch cups
D. Front drains
E. Water drainage area around both sides of the box and the tailgate side
F. Rear drains
G. Cargo floor
H. Cargo mat

Maintenance and Cleaning

To ensure that the water management system performs properly, be sure that the midgate, tailgate, and cover system are fully closed and that each part of the water management system is clean and not blocked with debris. Follow the instruction given next in this section for the proper procedures on cleaning each part of the water management system.

Top Drain Grates – Removal and Cleaning

The top drain grates are located near the rear glass on both sides of the vehicle. You may need to clean the grates and drains if there seems to be a blockage.

To remove each drain grate, do the following:

1. Remove the cargo panels or tonneau cover. See *Cargo Cover Panels on page 2-64* or *Tonneau Cover on page 2-83* for more information.

2. Grasp the edges of the grate and pull it out from the vehicle. Flush the drain with clean water.

To replace the drain grate do the following:

1. Line up the clips on the vehicle with the slots in the grate.
2. When you are sure that the clips are aligned with the slots, push the grate down firmly.

The grate should clip into place. Do not force the grate if it will not clip into place; realign the clips with the holes and try again.

Side Rail Channels

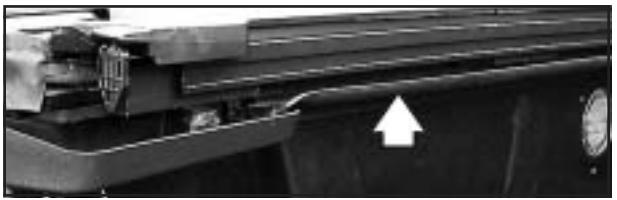

The side rail channels are located on top of both sides of the cargo area. Flush them out with clean water debris collects inside of them.

When loading cargo into the cargo area, be careful not to damage the rails.

Midgate Drain Grate Removal and Cleaning

The midgate drain grate is located near the base of the midgate in the cargo area. You will find a removable drain grate covering the drain.

After hauling dirt, wood chips, pebbles etc. you will need to flush the midgate drain with water. But first you will have to remove the drain grate by using the following steps:

1. Lower the midgate. See *Midgate® on page 2-11* for more information.
2. Pull up on the rear side of the drain grate.
3. Tilt the drain grate away from you and pull it straight out.

Reverse the procedure to reinstall the drain grate.

Cargo Area Floor Drains

Your vehicle also has four cargo-area floor drains located under the cargo mat near the sides of the cargo area. These drains should be cleaned periodically to allow water to drain from the cargo area.

The cargo mat has cutouts for the drains. Flush the drains through the cutouts. If the cargo area is extremely dirty lift up the edges of the cargo floor mat or take the whole mat out and flush the drains with water.

Top-Box Storage

Your vehicle is equipped with top-box storage units on both side of the vehicle. The passenger side top box contains the tools you will need to change a flat tire.

Use the ignition/door key to unlock/lock it. Press the key cylinder button and swing the lid open. Turn on the cargo lamps, if equipped, if you need more light inside. See *Exterior Cargo Lamps on page 3-17* for more information.

Tonneau Cover

⚠ CAUTION:

Improperly stored tonneau cover components could be thrown about the vehicle during a collision or sudden maneuver. You or others could be injured. If you remove the cover, bows and rails, always store them properly in the cargo area.

When you put them back, always be sure that they are securely reattached.

Your vehicle may be equipped with a tonneau cover. The main components of the tonneau cover are the following:

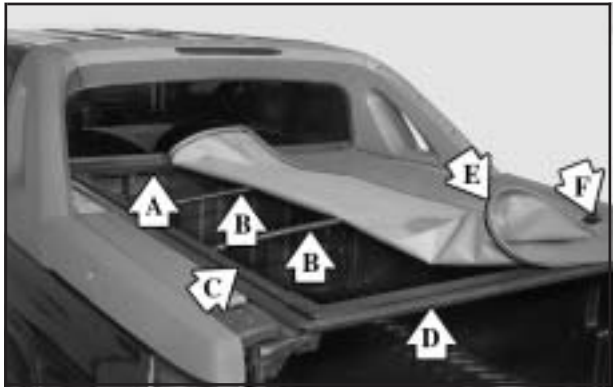

A. Front Rail
B. Bows
C. Side Rails
D. Rear Rail
E. Plastic Lip
F. Loop

Removing the Tonneau Cover

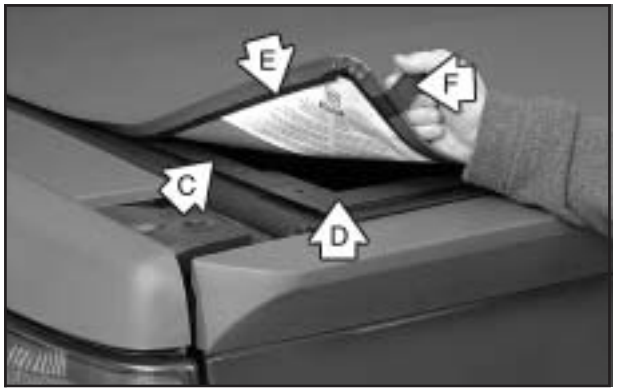

1. Starting at the rear corner of the driver's side of the vehicle, pull the loop (F) toward you and then pull up so the plastic lip (E) releases from the channel in the rear rail (D) and the side rail (C).

2. Pull the back of the cover out from the rear rail (D).

3. Roll the cover toward the front of the vehicle. The plastic lip (E) will release from the siderails (C) as you roll the cover forward.

4. Stow the cover using the buckles and the straps attached to the front rail.

You can also store the tonneau cover outside of the vehicle or use the storage bag included.

To use the storage bag, do the following:

1. Attach the bag to the cargo tie downs as shown. Unzip the top of the storage bag.

2. With the tonneau cover rolled up, place it in the proper compartment in the bag and zip the bag shut.

Removing the Front/Rear Rails and Bows

Before moving on to the next step, you will want to attach the storage bag to the cargo tie downs, if it is not already attached, so you will have a place ready to store the front and back rails and the two bows.

1. Remove the rear rail by pulling it straight out from the side rails. Set the rail aside.

2. Remove the two bows by gently pushing them against the spring-loaded end. Set the bow aside.

3. With the midgate lowered, enter the rear passenger compartment of the vehicle. See *Midgate® on page 2-11*.

4. Remove the front rail by first twisting up the edge nearest you, to clear the midgate seals, and then pulling it out from the side rails.

5. Stow both bows and the front and rear rails in the storage bag. When all components of the tonneau cover are secured in the bag properly, zip the bag shut.

Reverse the procedure to reinstall the tonneau cover using the following suggestions:

- When reinstalling the front rail, start by holding the back edge of the rail up and then twisting the back edge down while pushing it into place.
- Both bows are the same size and therefore interchangeable.

- When placing the bows in the side rails, it is easiest to place the spring-loaded bow end in first.

- When placing the bows, locate the small notches in the side rails. These notches receive the tang on the bow ends and help the bows seat into place.

- When reinstalling the tonneau cover, start at the front, near the cab. Place the plastic lip into the front rail, then the rear rail, and finish with the side rails.

To clean the tonneau cover, use mild soap and water. If necessary, use a soft bristle brush to remove dirt trapped in the grain of the material.

Sunroof

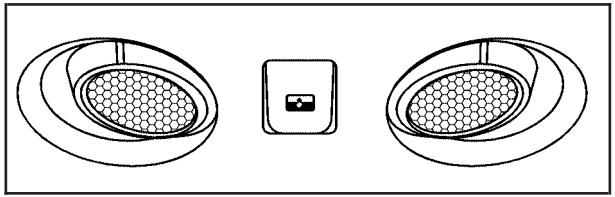

Your vehicle may be equipped with a power sliding sunroof. To open or close your sunroof, the ignition needs to be on or Retained Accessory Power (RAP) needs to be active. See *Retained Accessory Power (RAP) on page 2-27*.

Press and release the rear side of the button located in the front overhead console to express-open the glass panel and sunshade. To stop the express-open motion, press the front or rear of the button again. To close the glass panel, press and hold the front of the button. The glass will not be fully seated unless the button is held until the glass stops moving. With the sunroof closed, press the forward side of the button to open the sunroof to the vent position.

The sunroof is also equipped with a sunshade which you can pull forward to block sun rays.

If a hand, arm, or other object is blocking the sunroof glass panel as it is closing, the glass panel will stop at the obstruction. After the obstruction is removed, the glass panel can be closed or opened.

Use care not to leave the sunroof open for long periods of time as debris may collect in the tracks.

If the battery has been recharged, disconnected or is not working, you may need to reprogram the sunroof. To do this, start the vehicle and press the forward side of the sunroof button until the glass panel moves to a fully closed position. Release, and press again to move to the vent position, which occurs when the sunroof is fully tilted upward and the button is held for an additional twenty seconds. This will reset the memory and enable the sunroof to function properly.

Vehicle Personalization

In addition to the following features, your vehicle may also have features that can be programmed through the Driver Information Center (DIC). See *DIC Vehicle Customization on page 3-60* for more information.

Memory Seat

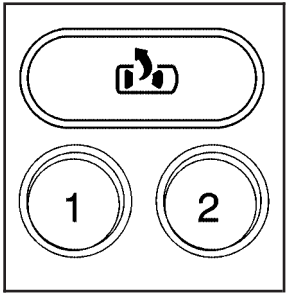

If your vehicle has this feature, the controls for the memory function are located on the driver's door.

These buttons are used to program and recall memory settings for the driver's seat, both the driver's and passenger's outside mirrors, and the throttle and brake pedals for vehicles with the adjustable throttle and brake pedal feature. The settings for these features can be saved for up to two drivers.

To store the memory settings, do the following:

1. While the vehicle is in PARK (P), adjust the driver's seat, including the seatback recliner and lumbar, both outside mirrors, and the throttle and brake pedals to your preference.
2. Press and hold the 1 or 2 button of the memory control for three seconds. A double chime will sound to let you know that the position has been stored.

To repeat the procedure for a second driver, follow the preceding steps, but press the other numbered memory control button.

Each time button 1 or 2 is pressed and released while the vehicle is in PARK (P), a single chime will sound and the memory position will be recalled.

To stop recall movement of the memory seat feature at any time, press one of the memory buttons or power seat controls.

Easy Exit Seat

The controls for this memory function are located on the driver's door.

(Easy Exit Seat): This button is used to program and recall the desired driver's seat position when exiting or entering the vehicle. The seat position can be saved for up to two drivers.

To store the seat exit position, do the following:

1. Press and release the 1 or 2 button. The seat will move to the stored memory position.
2. Adjust the seat to the desired exit position.
3. Press and hold the exit button of the memory control for three seconds. A double chime will sound to let you know that the position has been stored for the selected button 1 or 2.

To repeat the procedure for a second driver, follow the preceding steps, but press the other numbered memory control button.

To use the seat exit position, do one of the following:

- Press the exit button on the memory control.
- If this feature is activated in the Driver Information Center (DIC), removing the key from the ignition will move the seat to the exit position.

See "Easy Exit Seat" under *DIC Vehicle Customization on page 3-60* for more information on activating this feature in the DIC.

NOTES

Section 3 Instrument Panel

Instrument Panel Overview 3-4
Hazard Warning Flashers 3-6
Other Warning Devices 3-6
Horn 3-6
Tilt Wheel 3-7
Turn Signal/Multifunction Lever 3-7
Turn and Lane-Change Signals 3-8
Headlamp High/Low-Beam Changer 3-9
Flash-to-Pass 3-9
Windshield Wipers 3-9
Windshield Washer 3-10
Cruise Control 3-10
Exterior Lamps 3-14
Headlamps on Reminder 3-15
Daytime Running Lamps (DRL) 3-15
Automatic Headlamp System 3-15
Fog Lamps 3-16
Auxiliary Roof Mounted Lamp 3-17
Exterior Cargo Lamps 3-17
Instrument Panel Brightness 3-17
Dome Lamps 3-18
Dome Lamp Override 3-18
Entry/Exit Lighting 3-18
Reading Lamps 3-18
Battery Run-Down Protection 3-18
Accessory Power Outlet(s) 3-19
Ashtray(s) and Cigarette Lighter 3-19

Climate Controls 3-20
Dual Climate Control System 3-20
Dual Automatic Climate Control System 3-22
Outlet Adjustment 3-27

Warning Lights, Gages, and Indicators 3-28
Instrument Panel Cluster 3-29
Speedometer and Odometer 3-30
Trip Odometer 3-30
Tachometer 3-30
Safety Belt Reminder Light 3-30
Airbag Readiness Light 3-31
Passenger Airbag Status Indicator 3-32
Charging System Light 3-34
Voltmeter Gage 3-34
Brake System Warning Light 3-35
Anti-Lock Brake System Warning Light 3-36
Low Tire Pressure Warning Light 3-37
Traction Off Light 3-37
Engine Coolant Temperature Gage 3-38

Section 3 Instrument Panel

Transmission Temperature Gage 3-38
Malfunction Indicator Lamp 3-40
Oil Pressure Gage 3-42
Security Light 3-43
Cruise Control Light 3-44
Highbeam On Light 3-44
Tow/Haul Mode Light 3-44
Cargo Lamp Light 3-44
Fuel Gage 3-45
Low Fuel Warning Light 3-45

Driver Information Center (DIC) 3-46
DIC Operation and Displays 3-47
DIC Warnings and Messages 3-50
DIC Vehicle Customization 3-60

Audio System(s) 3-66
Setting the Time 3-67
Radio with CD 3-68
Radio with Six-Disc CD 3-78
Navigation/Radio System 3-93
Rear Seat Entertainment System 3-93
Rear Seat Audio (RSA) 3-104
Theft-Deterrent Feature 3-105
Audio Steering Wheel Controls 3-106
Radio Reception 3-107
Care of Your CDs and DVDs 3-107
Care of the CD and DVD Player 3-108
Fixed Mast Antenna 3-108
XM™ Satellite Radio Antenna System 3-108
Chime Level Adjustment 3-108

NOTES

Instrument Panel Overview

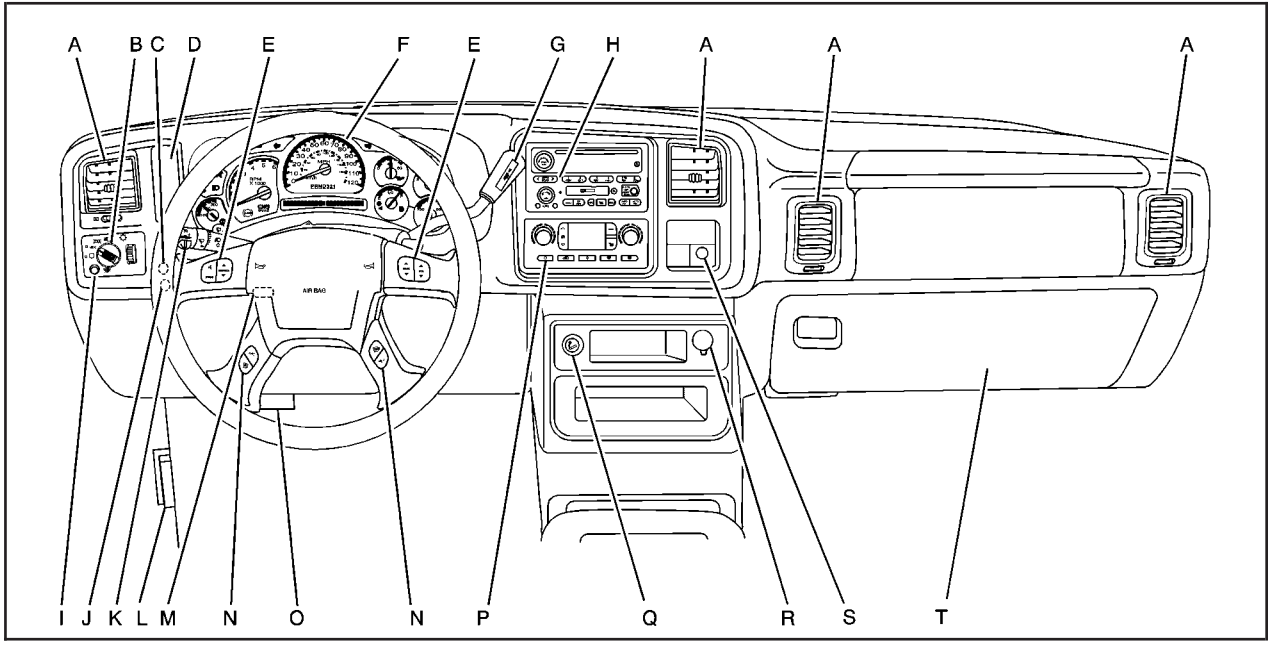

The main components of your instrument panel are the following:

A. Air Outlets. See *Outlet Adjustment on page 3-27*.

B. Exterior Lamps Control. See *Exterior Lamps on page 3-14*.

C. Cargo/Top-Box Lamps Button. See *Exterior Cargo Lamps on page 3-17*.

D. Automatic Transfer Case Buttons (If Equipped). See *Four-Wheel Drive on page 2-34*.

E. OnStar® and Radio Steering Wheel Buttons (If Equipped). See *OnStar® System on page 2-55* and *Audio Steering Wheel Controls on page 3-106*.

F. Instrument Panel Cluster. See *Instrument Panel Cluster on page 3-29*.

G. Shift Lever/Tow/Haul Selector Button. See *Automatic Transmission Operation on page 2-30* and *Tow/Haul Mode on page 2-33*.

H. Audio System. See *Audio System(s) on page 3-66*.

I. Dome Override Button. See *Dome Lamp Override on page 3-18*.

J. Fog Lamps Button. See *Fog Lamps on page 3-16*.

K. Turn Signal/Multifunction Lever. See *Turn Signal/Multifunction Lever on page 3-7*.

L. Hood Release. See *Hood Release on page 5-12*.

M. Tilt Lever. See *Tilt Wheel on page 3-7*.

N. Driver Information Center (DIC) Buttons. See *Driver Information Center (DIC) on page 3-46*.

O. Parking Brake Release. See *Parking Brake on page 2-38*.

P. Climate Control System. See *Dual Automatic Climate Control System on page 3-22* or *Dual Climate Control System on page 3-20*.

Q. Lighter (If Equipped) or Accessory Power Outlet (If Equipped). See *Ashtray(s) and Cigarette Lighter on page 3-19* and *Accessory Power Outlet(s) on page 3-19*.

R. Accessory Power Outlet (If Equipped). See *Accessory Power Outlet(s) on page 3-19*.

S. StabiliTrak® Button. See *StabiliTrak® System on page 4-9*.

T. Glove Box. See *Glove Box on page 2-62*.

Hazard Warning Flashers

Your hazard warning flashers let you warn others. They also let police know you have a problem. Your front and rear turn signal lamps will flash on and off.

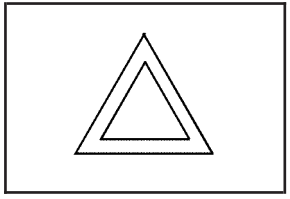

The hazard warning flasher button is located on top of the steering column.

Your hazard warning flashers work no matter what position your key is in, and even if the key is not in the ignition.

Press the button to make the front and rear turn signal lamps flash on and off. Press the button again to turn the flashers off.

When the hazard warning flashers are on, your turn signals will not work.

Other Warning Devices

If you carry reflective triangles, you can set them up at the side of the road about 300 feet (100 m) behind your vehicle.

Horn

To sound the horn, press the center pad on the steering wheel.

Tilt Wheel

The tilt steering wheel allows you to adjust the steering wheel before you drive. You can raise it to the highest level to give your legs more room when you enter and exit the vehicle.

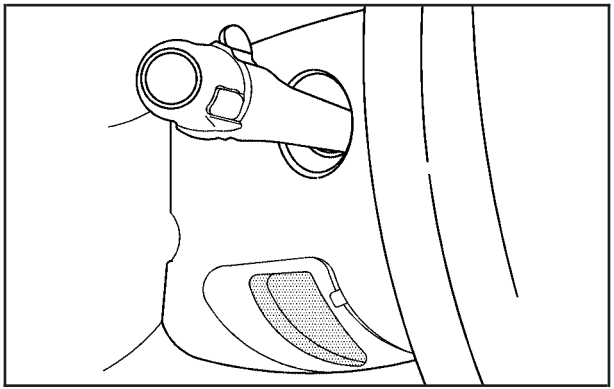

The tilt lever is located on the driver's side of the steering column under the turn signal lever.

To tilt the wheel, hold the steering wheel and pull the lever. Move the steering wheel to a comfortable level, then release the lever to lock the wheel in place.

Turn Signal/Multifunction Lever

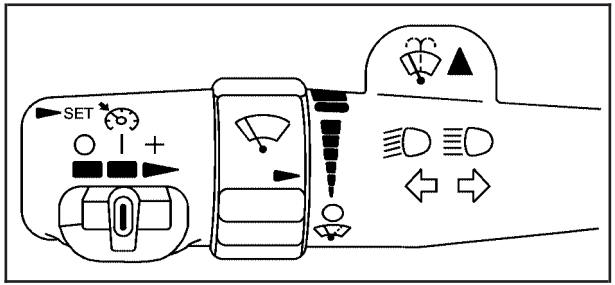

The lever on the left side of the steering column includes the following:

- Turn and Lane Change Signals. See *Turn and Lane-Change Signals on page 3-8*.
- Headlamp High/Low-Beam Changer. See *Headlamp High/Low-Beam Changer on page 3-9*.
- Flash-to-Pass. See *Flash-to-Pass on page 3-9*.
- Windshield Wipers. See *Windshield Wipers on page 3-9*.

- Windshield Washer. See *Windshield Washer on page 3-10*.
- Cruise Control. See *Cruise Control on page 3-10*.

For information on the exterior lamps, see *Exterior Lamps on page 3-14*.

Turn and Lane-Change Signals

The turn signal has two upward (for right) and two downward (for left) positions. These positions allow you to signal a turn or a lane change.

To signal a turn, move the lever all the way up or down. When the turn is finished, the lever will return automatically.

To signal a lane change, just raise or lower the lever until the arrow starts to flash. Hold it there until you complete your lane change. The lever will return by itself when you release it.

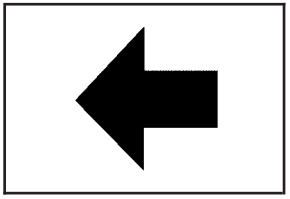

An arrow on the instrument panel cluster will flash in the direction of the turn or lane change.

As you signal a turn or a lane change, if the arrows flash more quickly than normal, a signal bulb may be burned out and other drivers won't see your turn signal.

If a bulb is burned out, replace it to help avoid an accident. If the arrows don't go on at all when you signal a turn, check for burned-out bulbs and a blown fuse. See *Instrument Panel Fuse Block on page 5-112* and *Underhood Fuse Block on page 5-115*.

Turn Signal On Chime

If your turn signal is left on for more than 3/4 of a mile (1.2 km), a chime will sound at each flash of the turn signal and the message TURN SIGNAL ON will also appear in the DIC. See *DIC Warnings and Messages on page 3-50*. To turn the chime and message off, move the turn signal lever to the off position.

Headlamp High/Low-Beam Changer

(Headlamp High/Low Beam Changer): To change the headlamps from low to high beam, push the lever toward the instrument panel. To return to low-beam headlamps, pull the multifunction lever toward you. Then release it.

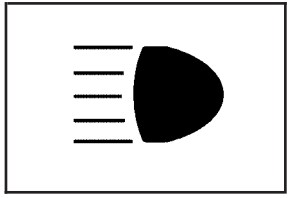

When the high beams are on, this indicator light on the instrument panel cluster will also be on.

Flash-to-Pass

This feature lets you use your high-beam headlamps to signal a driver in front of you that you want to pass. It works even if your headlamps are in the automatic position.

To use it, pull the turn signal lever toward you, then release it.

If your headlamps are in the automatic position or on low beam, your high-beam headlamps will turn on. They'll stay on as long as you hold the lever toward you. The high-beam indicator on the instrument panel cluster will come on. Release the lever to return to normal operation.

Windshield Wipers

You control the windshield wipers by turning the band with the wiper symbol on it.

(Mist): For a single wiping cycle, turn the band to mist. Hold it there until the wipers start. Then let go. The wipers will stop after one wipe. If you want more wipes, hold the band on mist longer.

(Delay): You can set the wiper speed for a long or short delay between wipes. This can be very useful in light rain or snow. Turn the band to choose the delay time. The closer to the top of the lever, the shorter the delay.

(Low Speed): For steady wiping at low speed, turn the band away from you to the first solid band past the delay settings.

(High Speed): For high-speed wiping, turn the band further, to the second solid band past the delay settings.

(Off): To stop the wipers, move the band to off.

Be sure to clear ice and snow from the wiper blades before using them. If they're frozen to the windshield, carefully loosen or thaw them. If your blades do become worn or damaged, get new blades or blade inserts.

Windshield Washer

(Washer Fluid): There is a paddle marked with the windshield washer symbol at the top of the multifunction lever. To spray washer fluid on the windshield, push the paddle. The wipers will clear the window and then either stop or return to your preset speed.

⚠ CAUTION:

In freezing weather, do not use your washer until the windshield is warmed. Otherwise the washer fluid can form ice on the windshield, blocking your vision.

Cruise Control

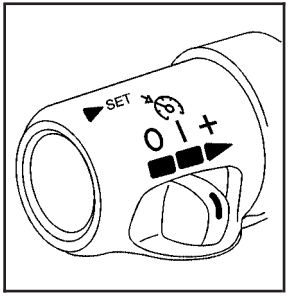

(Off): This position turns the system off.

(On): This position activates the system.

+ (Resume/Accelerate): Push the lever to this symbol to make the vehicle accelerate or resume to a previously set speed.

SET (Set): Press this button to set the speed.

With cruise control, you can maintain a speed of about 25 mph (40 km/h) or more without keeping your foot on the accelerator. This can really help on long trips. Cruise control does not work at speeds below about 25 mph (40 km/h).

If you apply your brakes, the cruise control will shut off.

⚠ CAUTION:

Cruise control can be dangerous where you cannot drive safely at a steady speed. So, do not use your cruise control on winding roads or in heavy traffic.

Cruise control can be dangerous on slippery roads. On such roads, fast changes in tire traction can cause needless wheel spinning, and you could lose control. Do not use cruise control on slippery roads.

Setting Cruise Control

⚠ CAUTION:

If you leave your cruise control on when you are not using cruise, you might hit a button and go into cruise when you do not want to. You could be startled and even lose control. Keep the cruise control switch off until you want to use cruise control.

1. Move the cruise control switch to on.
2. Get up to the speed you want.
3. Press in the set button at the end of the lever and release it.
4. Take your foot off the accelerator pedal.

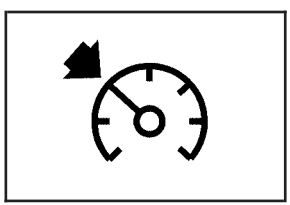

The cruise light on the instrument panel will illuminate when the cruise control is engaged.

Resuming a Set Speed

Suppose you set your cruise control at a desired speed and then you apply the brake. This, of course, disengages the cruise control. But you do not need to reset it.

Once you're going about 25 mph (40 km/h) or more, you can move the cruise control switch briefly from on to resume/accelerate.

You will go right back up to your chosen speed and stay there.

If you hold the switch at resume/accelerate the vehicle will keep going faster until you release the switch or apply the brake. So unless you want to go faster, do not hold the switch at resume/accelerate.

Increasing Speed While Using Cruise Control

There are two ways to go to a higher speed:

- Use the accelerator pedal to get to the higher speed. Press the set button at the end of the lever, then release the button and the accelerator pedal. You will now cruise at the higher speed. If the accelerator pedal is held longer than 60 seconds, cruise control will turn off.
- Move the cruise switch from on to resume/accelerate. Hold it there until you get up to the speed you want, and then release the switch. To increase your speed in very small amounts, move the switch briefly to resume/accelerate. Each time you do this, your vehicle will go about 1 mph (1.6 km/h) faster.

Reducing Speed While Using Cruise Control

- Press in the button at the end of the lever until you reach the lower speed you want, then release it.
- To slow down in very small amounts, briefly press the set button. Each time you do this, you will go about 1 mph (1.6 km/h) slower.

Passing Another Vehicle While Using Cruise Control

Use the accelerator pedal to increase your speed. When you take your foot off the pedal, your vehicle will slow down to the cruise control speed you set earlier.

Using Cruise Control on Hills

How well your cruise control will work on hills depends upon your speed, load and the steepness of the hills. When going up steep hills, you may want to step on the accelerator pedal to maintain your speed. When going downhill, you may have to brake or shift to a lower gear to keep your speed down. Of course, applying the brake takes you out of cruise control. Many drivers find this to be too much trouble and do not use cruise control on steep hills.

Ending Cruise Control

To turn off the cruise control, do one of the following:

- Step lightly on the brake pedal,
- move the cruise control switch to off, or
- shift the transmission to NEUTRAL (N).
- If your vehicle has the StabiliTrak® feature, cruise control will turn off if road conditions cause StabiliTrak® to activate.
- If the accelerator pedal is held longer than 60 seconds, cruise control will turn off.

The cruise control will turn off automatically if the traction control system or StabiliTrak® system activate, if your vehicle is equipped with either feature.

Erasing Speed Memory

When you turn off the cruise control or the ignition, your cruise control set speed memory is erased.

Exterior Lamps

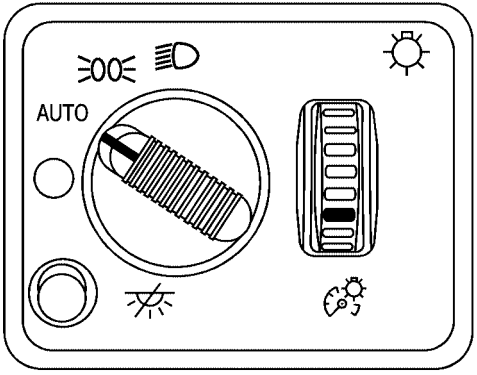

The control on the driver's side of your instrument panel operates the exterior lamps.

The exterior lamp control has four positions:

(Off): Turn the knob to this position and release it to turn off all exterior lamps including the DRL. To turn any lamps back on when in the off mode, turn the knob to the desired lamp mode. To return to the AUTO mode, turn the knob to the off position and release it. The off or AUTO mode will also cancel and the lamps will return to the AUTO when the vehicle is turned off. This mode is not available for vehicles sold in Canada.

AUTO: Turn the control to this position to put the system into automatic headlamp mode. The Daytime Running Lamps (DRL) will also be activated if it is light enough outside.

(Parking Lamps): Turn the control to this position to turn on the parking lamps, together with the following:

- Sidemarker Lamps
- Taillamps
- License Plate Lamps
- Instrument Panel Lights

(Headlamps): Turn the control to this position to turn on the headlamps, together with the previously listed lamps and lights.

When the vehicle is turned off and the headlamps are in AUTO, the headlamps may automatically remain on for a set time. You can change this delay time using the DIC. See *Driver Information Center (DIC) on page 3-46*.

You can switch your headlamps from low to high-beam by pushing the turn signal/multifunction lever toward the instrument panel.

Headlamps on Reminder

If a door is open, a reminder chime will sound when your headlamps or parking lamps are manually turned on and your key is out of the ignition. To turn off the chime, turn the headlamp switch to off or AUTO and then back on. In the AUTO mode, the headlamps turn off once the ignition is in LOCK or may remain on until the headlamp delay ends (if enabled in the DIC).

Daytime Running Lamps (DRL)

Daytime Running Lamps (DRL) can make it easier for others to see the front of your vehicle during the day. DRL can be helpful in many different driving conditions, but they can be especially helpful in the short periods after dawn and before sunset. Fully functional daytime running lamps are required on all vehicles first sold in Canada.

The DRL system will come on when the following conditions are met:

- The ignition is on,
- the exterior lamps control is in AUTO,
- the transmission is not in PARK (P), and
- the light sensor determines it is daytime.

When the DRL are on, only your DRL lamps will be on. The taillamps, sidemarker and other lamps won't be on. The instrument panel won't be lit up either.

When it begins to get dark, the automatic headlamp system will switch from DRL to the headlamps.

As with any vehicle, you should turn on the regular headlamp system when you need it.

Automatic Headlamp System

When it is dark enough outside and the headlamp switch is in AUTO, your automatic headlamp system will turn on your headlamps at the normal brightness along with other lamps such as the taillamps, sidemarker, parking lamps, roof marker lamps and the instrument panel lights. The radio lights will also be dim.

To turn off the automatic headlamp system, turn the exterior lamps switch to the off position and then release. Turning off the automatic headlamp system with the headlamp switch is not available for vehicles first sold in Canada. For vehicles first sold in Canada, you can turn off the automatic headlamp system when parked at night by applying the parking brake before starting your vehicle. The headlamps will remain off once the vehicle is started for as long as you are parked. If you release the parking brake, the lights will turn on. If the parking brake is not released before you begin to drive, the exterior lamps will turn on above 2 mph (3.2 km/h).

Your vehicle has a light sensor located on the top of the instrument panel. Be sure it is not covered, or the system will be on whenever the ignition is on.

The system may also turn on your headlamps when driving through a parking garage, heavy overcast weather or a tunnel. This is normal.

There is a delay in the transition between the daytime and nighttime operation of the Daytime Running Lamps (DRL) and the automatic headlamp systems so that driving under bridges or bright overhead street lights does not affect the system. The DRL and automatic headlamp system will only be affected when the light sensor sees a change in lighting lasting longer than the delay.

If you start your vehicle in a dark garage, the automatic headlamp system will come on immediately. Once you leave the garage, it will take approximately one minute for the automatic headlamp system to change to DRL if it is light outside. During that delay, your instrument panel cluster may not be as bright as usual. Make sure your instrument panel brightness control is in the full bright position. See *Instrument Panel Brightness on page 3-17*.

Fog Lamps

If your vehicle has fog lamps you can use them for better vision in foggy or misty conditions. Your parking lamps and/or low-beam headlamps must be on for your fog lamps to work.

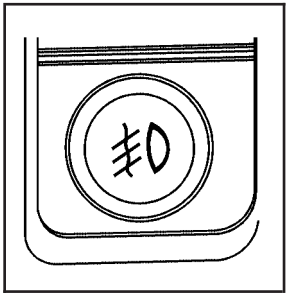

The fog lamp button is located on the left side of your instrument panel.

Press the button to turn the fog lamps on while the headlamps or parking lamps are on. Press the button again to turn them off. An indicator light will glow near the button when the fog lamps are on.

Remember, fog lamps alone will not give off as much light as your headlamps. Never use your fog lamps in the dark without turning on the headlamps.

The fog lamps will go off whenever your high-beam headlamps come on. When the high beams go off, the fog lamps will come on again.

The fog lamps will be cancelled after the ignition is turned off. If you still want to use the fog lamps after you restart the vehicle, you will need to press the fog lamp button again.

Some localities have laws that require the headlamps to be on along with the fog lamps.

Auxiliary Roof Mounted Lamp

If your vehicle has this feature, this button includes wiring provisions for a dealer or a qualified service center to install an auxiliary roof lamp.

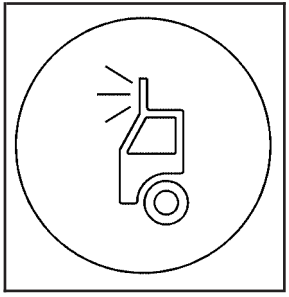

This button is located on the center of the instrument panel near the climate controls.

When the wiring is connected to an auxiliary roof mounted lamp, pressing the button will activate the lamp and illuminate an indicator light near the button. Pressing the button again will turn off the roof mounted lamp.

If your vehicle has this button, your vehicle may have the snow plow prep package. For further information see *Adding a Snow Plow or Similar Equipment on page 4-52*.

Exterior Cargo Lamps

You can use the cargo lamp if you need more light in the cargo area of your vehicle or in the top-box storage units. Some vehicles will only have a cargo lamp in the passenger side top box.

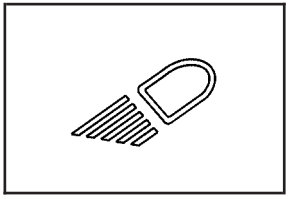

Press the button, with this symbol to turn the cargo lamps on or off.

The cargo lamps symbol light will come on in the instrument panel cluster when the cargo lamps are on and the ignition key is turned to run.

Instrument Panel Brightness

The thumbwheel for this feature is located next to the exterior lamps control.

(Instrument Panel Lights): Turn the thumbwheel up or down to brighten or dim the instrument panel lights and the radio display. This will only work if the headlamps or parking lamps are on.

To turn on the dome lamps, with the vehicle doors closed, turn the thumbwheel all the way up.

Dome Lamps

The dome lamps will come on when you open a door or the midgate, if equipped, and will turn off when all doors or midgate are closed.

You can also turn the dome lamps on by turning the thumbwheel, located next to the exterior lamp control, all the way up. In this position, the dome lamps will remain on whether a door is opened or closed.

Dome Lamp Override

(Dome Lamp Override): You can use the dome override button, located below the exterior lamps control, to set the dome lamps to come on automatically when a door is opened, or to remain off. To turn the lamps off, press the button into the in position. With the button in this position, the dome lamps will remain off when the doors are open. To return the lamps to automatic operation, press the button again and return it to the out position. With the button in this position, the dome lamps will come on when you open a door.

Entry/Exit Lighting

Your vehicle is equipped with an illuminated entry/exit feature.

When a door is opened or the key is removed from the ignition, the dome lamps will come on if the dome override button is in the out position.

Reading Lamps

If your vehicle has reading lamps, press the button located next to the lamp to turn it on or off. The lamps can be adjusted to point in the direction you want.

Your vehicle may also have reading lamps in other locations. To turn on or off, press the button located next to the lamp. The lamps cannot be adjusted.

Battery Run-Down Protection

This feature shuts off the dome lamps if they are left on for more than 10 minutes when the ignition is in LOCK. This will keep your battery from running down.

Accessory Power Outlet(s)

Your vehicle may be equipped with two accessory power outlets located on the instrument panel.

Your vehicle may also have an outlet on the back of the center console above the cupholder door.

Notice: **Adding any electrical equipment to your vehicle may damage it or keep other components from working as they should. The repairs would not be covered by your warranty. Do not use equipment exceeding maximum amperage rating. Check with your dealer before adding electrical equipment.**

Certain power accessory plugs may not be compatible to the accessory power outlets and could result in blown vehicle or adapter fuses. If you experience a problem, see your dealer for additional information on the accessory power plugs.

Notice: **Improper use of the power outlet can cause damage not covered by your warranty. Do not hang any type of accessory or accessory bracket from the plug because the power outlets are designed for accessory power plugs only.**

Ashtray(s) and Cigarette Lighter

If your vehicle has this feature it is located in the center console or on the instrument panel. Pull up on the ashtray door to open it if it is in the console or pull the door open it if it is on the instrument panel.

Notice: **If you put papers, pins, or other flammable items in the ashtray, hot cigarettes or other smoking materials could ignite them and possibly damage your vehicle. Never put flammable items in the ashtray.**

To remove the ashtray, pull it out from the console or from the slide out door. To reinstall the ashtray, slide it back to the original position.

To use the cigarette lighter, if equipped, push it in all the way, and let go. When it's ready, it will pop back out by itself.

Notice: **Holding a cigarette lighter in while it is heating will not allow the lighter to back away from the heating element when it is hot. Damage from overheating may occur to the lighter or heating element, or a fuse could be blown. Do not hold a cigarette lighter in while it is heating.**

Climate Controls

Dual Climate Control System

With this system you can control the heating, cooling and ventilation for your vehicle.

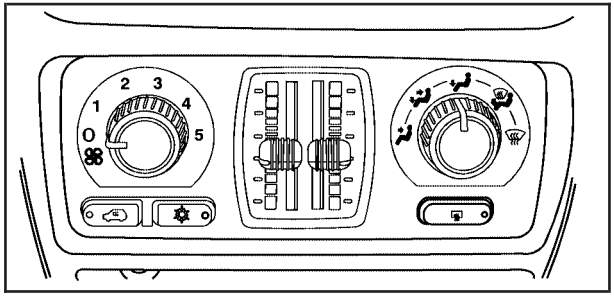

Fan Control

(Fan): Turn the left knob clockwise or counterclockwise to increase or decrease the fan speed. Turn the knob to the off position to turn off the fan. If the knob is in off outside air will still enter the vehicle, and will be directed based on the position of the mode knob. The temperature can also be adjusted using the temperature levers.

Mode Control

Turn the right knob clockwise or counterclockwise to direct the airflow inside of your vehicle.

To change the current mode, select one of the following:

(Vent): This mode directs air to the instrument panel vents.

(Bi-Level): This mode directs half of the air to the instrument panel vents; then directs most of the remaining air to the floor vents. A little air is directed toward the windshield and the side window vents. Cooler air is directed to the upper vents and warmer air to the floor vents.

(Floor): This mode directs most of the air to the floor vents with a little air directed to the windshield and the side window vents.

(Recirculation): The recirculation mode is used to recirculate the air inside of your vehicle. Use this mode to help prevent outside odors and/or dust from entering your vehicle or to help cool the air inside of your vehicle more quickly. Press this button to turn the recirculation mode on or off. The light on the recirculation button will illuminate. Recirculation cannot be used in floor, defog or defrost modes. An indicator on the button will light up, flash three times and turn off when recirculation is selected in these modes. The air-conditioning compressor will also come on when this mode is activated. While in recirculation mode the windows may fog when the weather is cold and damp. To clear the fog, select either the defog or defrost mode and increase fan speed.

Temperature Control

Driver's Side: The lever on the left side of the climate control panel is used to raise or lower the temperature on the driver's side of the vehicle. This lever also adjusts the temperature to the center console outlets (if equipped).

Passenger's Side: The lever on the right side of the climate control panel is used to raise or lower the temperature on the passenger's side of the vehicle.

(Air Conditioning): Press this button to turn the air-conditioning system on or off. When the button is pressed, an indicator light will come on and the system will begin to cool and dehumidify the air inside of your vehicle.

You may notice a slight change in engine performance when the air conditioning compressor shuts off and turns on again. This is normal.

Defogging and Defrosting

There are two modes to choose from to clear fog or frost from your windshield. Use the defog mode to clear the windows of fog or moisture and warm the passengers. Use the defrost mode to remove fog or frost from the windshield more quickly.

Turn the right knob clockwise or counterclockwise to select one of the following modes:

(Defog): This mode directs the air to the floor outlets, windshield and the side window vents. The air conditioning compressor will run automatically to dehumidify the air to prevent window fogging. The recirculation mode cannot be selected while in the defog mode.

(Defrost): This mode directs most of the air to the windshield and the side window vents, with only a little air directed to the floor vents. The air conditioning compressor will run automatically to dehumidify the air to prevent window fogging. The recirculation mode cannot be selected while in defrost mode.

Rear Window Defogger

If your vehicle has a rear defogger, the lines you see on the rear window warm the glass. The rear window defogger uses a warming grid to remove fog from the rear window.

(Rear): Press this button to turn the rear window defogger on or off. An indicator light in the button will come on to let you know that the rear window defogger is activated.

The rear window defogger will automatically turn off several minutes after the button is pressed. Pressing the button while the defogger is running can also turn off the defogger.

If your vehicle is equipped with heated mirrors this button will activate them.

Notice: **Do not use anything sharp on the inside of the rear window. If you do, you could cut or damage the warming grid, and the repairs would not be covered by your warranty. Do not attach a temporary vehicle license, tape, a decal or anything similar to the defogger grid.**

Dual Automatic Climate Control System

With this system, you can control the heating, cooling and ventilation in your vehicle.

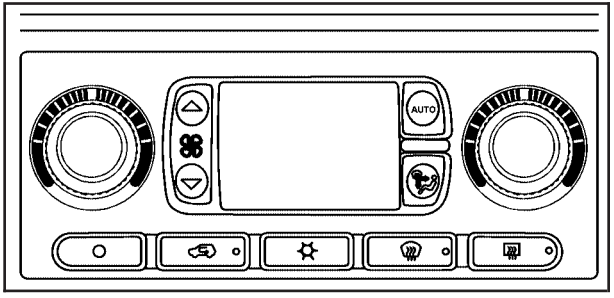

You can select different climate control settings for the driver and passengers.

Driver's Side Temperature Knob

The driver's side knob is used to adjust the temperature of the air coming through the system on the driver's side. The temperature can be adjusted even if the system is turned off. This is possible since outside air will always flow through the system as the vehicle is moving forward unless it is set to recirculation mode. See "Recirculation" later in this section.

Turn the knob counterclockwise or clockwise to lower or increase the cabin temperature. The display will show the temperature setting decreasing or increasing and an arrow pointing to the driver will be displayed under and to the left of the temperature setting.

Passenger's Side Temperature Knob

The passenger's side knob can be used to change the temperature of the air coming through the system on the passenger's side of the vehicle. The temperature can be adjusted even if the system is turned off. This is possible since outside air will always flow through the system as the vehicle is moving forward unless it is set to recirculation mode. See "Recirculation" later in this section.

Turn the knob counterclockwise or clockwise to lower or increase the cabin temperature. The display will show the temperature setting decreasing or increasing and an arrow pointing to the passenger will be displayed under and to the right of the temperature setting.

The passenger's temperature setting can be set to match the driver's temperature setting by pressing and holding the AUTO button for four seconds. Both the driver and passenger arrows will be displayed.

Automatic Operation

AUTO (Automatic): When automatic operation is active the system will control the inside temperature, the air delivery, and the fan speed.

Use the steps below to place the entire system in automatic mode:

1. Press the AUTO button.

   When AUTO is selected, the display will change to show the current driver's set temperature, delivery mode and fan speed. Press the AUTO button again within five seconds to display the passenger's set temperature.

   If the driver's and passenger's temperature settings are the same when AUTO is pressed, the temperature setting and both arrows will be displayed for five seconds along with the automatic air delivery mode and fan speed. After the five-second update, the display will change to show the temperature setting, both arrows and AUTO.

   If the driver's and passenger's temperature settings are not the same, the opposite side temperature setting will be displayed for an additional five seconds. To make the passenger's temperature the same as the driver's press and hold the AUTO button for about four seconds.

   When auto is selected, the air conditioning operation and air inlet will be automatically controlled. The air conditioning compressor will run when the outside temperature is over about 40°F (4°C). The air inlet will normally be set to outside air. If it's hot outside, the air inlet may automatically switch to recirculate inside air to help quickly cool down your vehicle. The light on the button will illuminate in recirculation.

2. Set the driver's and passenger's temperature.

   To find your comfort setting, start with a 74°F (23°C) temperature setting and allow about 20 minutes for the system to regulate. Turn the driver's or passenger's side temperature knob to adjust the temperature setting as necessary. If you choose the temperature setting of 60°F (15°C) the system will remain at the maximum cooling setting. If you choose the temperature setting of 90°F (32°C) the system will remain at the maximum heat setting. Choosing either maximum setting will not cause the vehicle to heat or cool any faster.

   Be careful not to cover the sensor located on the top of the instrument panel near the windshield. This sensor regulates air temperature based on sun load, and also turns on your headlamps.

   To avoid blowing cold air in cold weather, the system will delay turning on the fan until warm air is available. The length of delay depends on the engine coolant temperature. Pressing the fan switch will override this delay and change the fan to a selected speed.

(Off): Press this button to turn off the entire climate control system. Outside air will still enter the vehicle, and will be directed to the floor. This direction can be changed by pressing the mode button. The temperature can also be adjusted using either temperature knob. Press the up or down arrows on the fan switch, the defrost button, the AUTO button, or the air conditioning button to turn the system on when it is off.

Manual Operation

You may manually adjust the air delivery mode or fan speed.

(Fan): The switch with the fan symbol allows you to manually adjust the fan speed. Press the up arrow to increase fan speed and the down arrow to decrease fan speed.

Pressing this button when the system is off will turn the system on.

(Mode): Press this button to manually change the direction of the airflow in your vehicle. Repeatedly press the button until the desired mode appears on the display.

If you press the mode button to select an air delivery mode, the display will change to show you the selected air mode delivery. The display will then show the current status of the system. When the system is turned off, the display will go blank after displaying the current status of the system.

(Panel): This setting will deliver air to the instrument panel outlets.

(Bi-Level): This setting will deliver warmer air to the floor and cooler air to the instrument panel outlets.

(Floor): This setting will deliver air to the floor outlets.

(Defog): See “Defogging and Defrosting” later in this section.

(Recirculation): Press this button to limit the amount of outside air entering your vehicle. The light on the recirculation button will glow. This is helpful when you are trying to limit odors entering your vehicle and for maximum air conditioning performance in hot weather. Press this button again to allow outside air to enter the vehicle. The light on the recirculation button will go off.

Pressing this button also cancels the auto recirculation feature. To resume the auto recirculation function, press the AUTO button. Each time the vehicle is started, the system will revert to the auto recirculation function.

If you select recirculation while in defrost, defog or floor, the light in the button will flash and then go out to let you know that this is not allowed. This is normal and helps to prevent fogging.

When the weather is cool or damp, operating the system in recirculation for extended periods of time may cause fogging of the vehicle's windows. To clear the fog, select either defog or front defrost.

You may also notice that the A/C compressor will run while in recirculation mode. This is normal and helps to prevent fogging.

(Air Conditioning): Press this button to turn the air conditioning (A/C) compressor on and off. The snowflake symbol will appear on the display when the A/C is on and will turn off when the air conditioning is off.

Pressing this button when the outside temperature is too cool for air conditioning to be effective will make the snowflake symbol flash three times and then turn off to let you know that the air conditioning mode is not available. If the air conditioning is on and the outside temperature drops below a temperature which is too cool for air conditioning to be effective, the snowflake symbol will turn off to let you know that the air conditioning mode has been canceled.

When air conditioning is selected or in AUTO mode, the system will run the air conditioning automatically to cool and dehumidify the air entering the vehicle. If you select A/C off while in front defrost, defog or recirculation, the A/C snowflake symbol will turn off, but the A/C compressor will still run to help prevent fogging.

On hot days, open the windows long enough to let hot inside air escape. This reduces the time it takes for your vehicle to cool down. Then keep your windows closed for the air conditioner to work its best.

On cool, but sunny days while using manual operation of the automatic system, use bi-level to deliver warm air to the floor and cooler air to the instrument panel outlets. To warm or cool the air delivered, turn the temperature knob to the desired setting.

In AUTO mode the system will cool and dehumidify the air inside the vehicle. Also while in AUTO mode, the system will maximize its performance by using recirculation as necessary.

(Off): Press this button to turn off the entire climate control system. Outside air will still enter the vehicle, and will be directed to the floor. This direction can be changed by pressing the mode button. The temperature can also be adjusted using either temperature knob. Press the up or down arrows on the fan switch, the defrost button, the AUTO button, or the air conditioning button to turn the system on when it is off.

Defogging and Defrosting

You can use either defog or front defrost to clear fog or frost from your windshield. Use the defog mode to clear the windows of fog or moisture. Use the front defrost button to defrost the front windshield.

(Defog): Use this setting to clear the windows of fog or moisture. Press the mode button to select this setting. This setting will deliver air to the floor and windshield outlets.

(Defrost): Press this button to defrost the windshield. The system will automatically control the fan speed if you select defrost from AUTO mode. If the outside temperature is 40°F (4°C) or warmer, your air conditioning compressor will automatically run to help dehumidify the air and dry the windshield.

Rear Window Defogger

If your vehicle has this feature, the lines you see on the rear window warm the glass. The rear window defogger uses a warming grid to remove fog from the rear window.

(Rear): Press this button to turn the rear window defogger on or off. An indicator light in the button will come on to let you know that the rear window defogger is activated.

The rear window defogger will turn off about 10 minutes after the button is pressed. If you need additional warming time, press the button again. If your vehicle is equipped with heated mirrors, this button will also turn the heated mirrors on or off.

Notice: **Do not use a razor blade or sharp object to clear the inside rear window. Do not adhere anything to the defogger grid lines in the rear glass. These actions may damage the rear defogger. Repairs would not be covered by your warranty.**

Outlet Adjustment

Your vehicle has air outlets located in the center and on the side of your instrument panel that allow you to adjust the direction and amount of airflow inside the vehicle. Move the louvers up or down. Use the thumbwheel next to or underneath the outlet to close the louvers. For the most efficient airflow and temperature control, keep the outlet in the fully opened position.

Operation Tips

- Keep the hood and front air inlets free of ice, snow, or any other obstruction (such as leaves). The heater and defroster will work far better, reducing the chance of fogging the inside of your windows.
- Keep the air path under the front seats clear of objects. This helps air to circulate throughout your vehicle.
- Adding outside equipment to the front of your vehicle, such as hood-air deflectors, etc., may affect the performance of the heating and air conditioning system. Check with your dealer before adding equipment to the outside of your vehicle.

Warning Lights, Gages, and Indicators

This part describes the warning lights and gages on your vehicle. The pictures will help you locate them.

Warning lights and gages can signal that something is wrong before it becomes serious enough to cause an expensive repair or replacement. Paying attention to your warning lights and gages could also save you or others from injury.

Warning lights come on when there may be or is a problem with one of your vehicle's functions. As you will see in the details on the next few pages, some warning lights come on briefly when you start the engine just to let you know they are working. If you are familiar with this section, you should not be alarmed when this happens.

Gages can indicate when there may be or is a problem with one of your vehicle's functions. Often gages and warning lights work together to let you know when there is a problem with your vehicle.

When one of the warning lights comes on and stays on when you are driving, or when one of the gages shows there may be a problem, check the section that tells you what to do about it. Please follow this manual's advice. Waiting to do repairs can be costly – and even dangerous. So please get to know your warning lights and gages. They are a big help.

Your vehicle also has a Driver Information Center (DIC) that works along with warning lights and gages. See *DIC Warnings and Messages on page 3-50*.

Instrument Panel Cluster

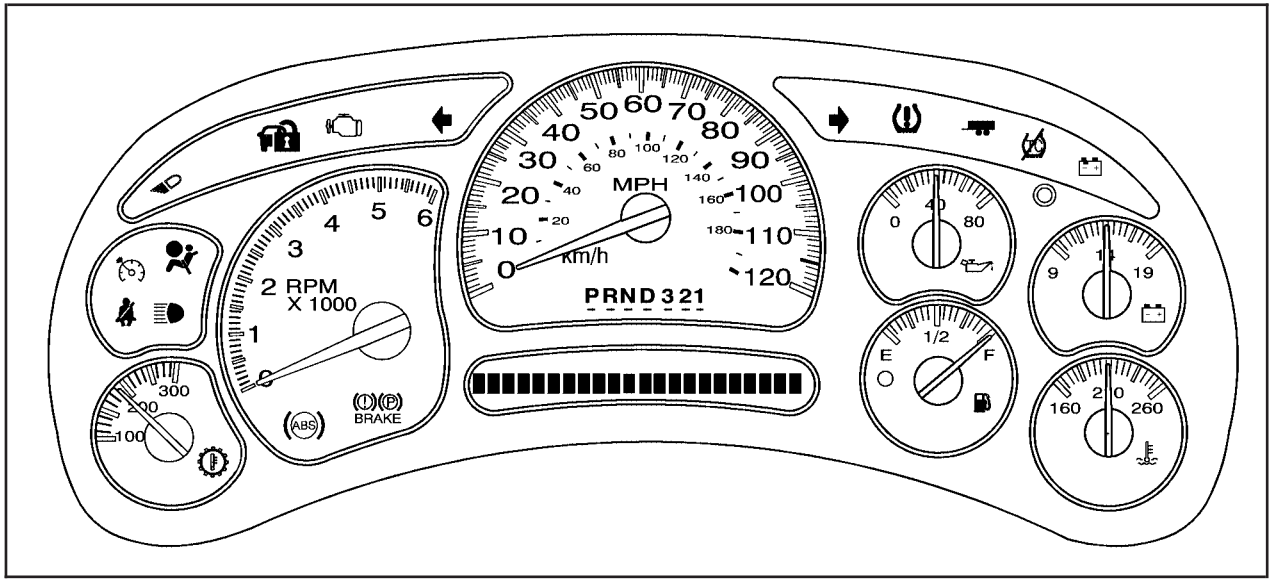

United States 2500 series shown, 1500 series and Canada similar

Your instrument cluster is designed to let you know at a glance how your vehicle is running. You'll know how fast you're going, about how much fuel you have and many other things you'll need to know to drive safely and economically.

Speedometer and Odometer

Your speedometer lets you see your speed in both miles per hour (mph) and kilometers per hour (km/h).

Your vehicle's odometer works together with the driver information center. You can set a Trip A and Trip B odometer. See "Trip Information" under *DIC Operation and Displays on page 3-47*.

The odometer mileage can be checked without the vehicle running. Simply press the trip stem on the instrument panel cluster.

If your vehicle ever needs a new odometer installed, the new one will be set to the correct mileage total of the old odometer.

Trip Odometer

The trip odometer can tell you how far your vehicle has been driven since you last set the trip odometer to zero.

Press the reset button, located on the instrument panel cluster next to the trip odometer display, to toggle between the trip odometer and the regular odometer. Holding the reset button for approximately one second while the trip odometer is displayed will reset it.

To display the odometer reading with the ignition off, press the reset button.

Tachometer

Your tachometer displays the engine speed in revolutions per minute (rpm).

Safety Belt Reminder Light

When the key is turned to RUN or START, a chime will be provided for several seconds to remind people to buckle their safety belts. The driver safety belt light will also be provided and stay on for several seconds, then it will flash for several more. You should buckle your seat belt.

This chime and light will be repeated if the driver remains unbuckled and the vehicle is in motion.

See *DIC Warnings and Messages on page 3-50* for more information on driver and passenger safety belt reminders.

If the driver's belt is buckled, neither the chime nor the light will come on.

See *Passenger Sensing System on page 1-61* for more information.

Airbag Readiness Light

There is an airbag readiness light on the instrument panel, which shows the airbag symbol. The system checks the airbag's electrical system for malfunctions. The light tells you if there is an electrical problem. The system check includes the airbag sensors, the airbag modules, the wiring and the crash sensing and diagnostic module. For more information on the airbag system, see *Airbag System on page 1-52*.

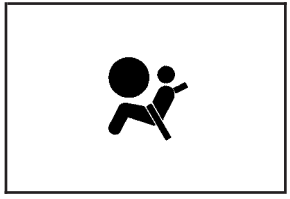

This light will come on when you start your vehicle, and it will flash for a few seconds. Then the light should go out. This means the system is ready.

If the airbag readiness light stays on after you start the vehicle or comes on when you are driving, your airbag system may not work properly. Have your vehicle serviced right away.

⚠ CAUTION:

If the airbag readiness light stays on after you start your vehicle, it means the airbag system may not be working properly. The airbags in your vehicle may not inflate in a crash, or they could even inflate without a crash. To help avoid injury to yourself or others, have your vehicle serviced right away if the airbag readiness light stays on after you start your vehicle.

The airbag readiness light should flash for a few seconds when you turn the ignition key to RUN. If the light doesn't come on then, have it fixed so it will be ready to warn you if there is a problem.

Passenger Airbag Status Indicator

If your vehicle has a passenger sensing system, your rearview mirror will have a passenger airbag status indicator.

Passenger Airbag Status Indicator – United States

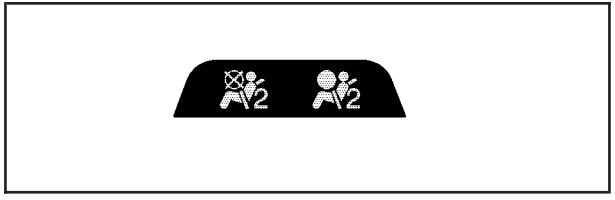

Passenger Airbag Status Indicator – Canada

When the ignition key is turned to RUN or START, the passenger airbag status indicator will light ON and OFF, or the symbol for on and off, for several seconds as a system check.

Then, after several more seconds, the status indicator will light either ON or OFF, or either the on or off symbol to let you know the status of the right front passenger's frontal airbag.

If the word ON or the on symbol is lit on the passenger airbag status indicator, it means that the right front passenger's frontal airbag is enabled (may inflate).

⚠ CAUTION:

If the on indicator comes on when you have a rear-facing child restraint installed in the right front passenger's seat, it means that the passenger sensing system has not turned off the passenger's frontal airbag. A child in a rear-facing child restraint can be seriously injured or killed if the right front passenger's airbag inflates. This is because the back of the rear-facing child restraint would be very close to the inflating airbag. Do not use a rear-facing child restraint in the right front passenger's seat if the airbag is turned on.

Your vehicle has a rear seat that will accommodate a rear-facing child restraint. A label on your sun visor says, “Never put a rear-facing child seat in the front.” This is because the risk to the rear-facing child is so great, if the airbag deploys.

⚠ CAUTION:

Even though the passenger sensing system is designed to turn off the passenger’s frontal airbag if the system detects a rear-facing child restraint, no system is failsafe, and no one can guarantee that an airbag will not deploy under some unusual circumstance, even though it is turned off. We recommend that rear-facing child restraints be secured in the rear seat, even if the airbag is off.

If the word OFF or the off symbol is lit on the airbag status indicator, it means that the passenger sensing system has turned off the right front passenger’s frontal airbag. See *Passenger Sensing System on page 1-61* for more on this, including important safety information.

If, after several seconds, all status indicator lights remain on, or if there are no lights at all, there may be a problem with the lights or the passenger sensing system. See your dealer for service.

⚠ CAUTION:

If the off indicator and the airbag readiness light ever come on together, it means that something may be wrong with the airbag system. If this ever happens, have the vehicle serviced promptly, because an adult-size person sitting in the right front passenger seat may not have the protection of the frontal airbag. See *Airbag Readiness Light on page 3-31*.

Charging System Light

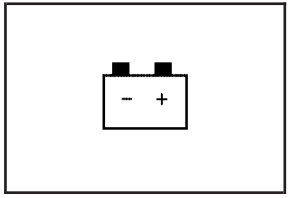

The charging system light will come on briefly when you turn on the ignition, but the engine is not running, as a check to show you it is working.

It should go out once the engine is running. If it stays on, or comes on while you are driving, you may have a problem with the charging system. It could indicate that you have problems with a generator drive belt, or another electrical problem. Have it checked right away. Driving while this light is on could drain your battery.

When this light comes on the DIC will also display the battery not charging message. See *DIC Warnings and Messages on page 3-50*.

If you must drive a short distance with the light on, be certain to turn off all your accessories, such as the radio and air conditioner.

Voltmeter Gage

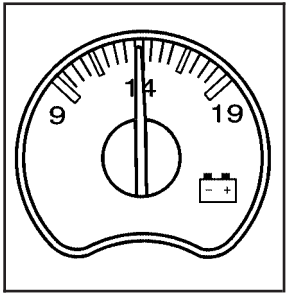

When your engine is not running, but the ignition is in RUN, this gage shows your battery's state of charge in DC volts.

When the engine is running, the gage shows the condition of the charging system. The gage may transition from a higher to lower or a lower to higher reading, this is normal. Readings between the low and high warning zones indicate the normal operating range.

Readings in the low warning zone may occur when a large number of electrical accessories are operating in the vehicle and the engine is left at an idle for an extended period. This condition is normal since the charging system is not able to provide full power at engine idle. As engine speeds are increased, this condition should correct itself as higher engine speeds allow the charging system to create maximum power.

You can only drive for a short time with the reading in either warning zone. If you must drive, turn off all unnecessary accessories.

Readings in either warning zone indicate a possible problem in the electrical system. Have the vehicle serviced as soon as possible.

Brake System Warning Light

With the ignition on, the brake system warning light will flash when you set the parking brake. The light will flash if the parking brake doesn't release fully. If you try to drive with the parking brake engaged, a chime will sound when the vehicle speed is greater than 3 mph (5 km/h).

Your vehicle's hydraulic brake system is divided into two parts. If one part isn't working, the other part can still work and stop you. For good braking, though, you need both parts working well.

If the warning light comes on and a chime sounds there could be a brake problem. Have your brake system inspected right away.

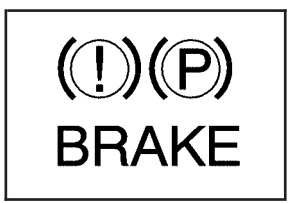

United States

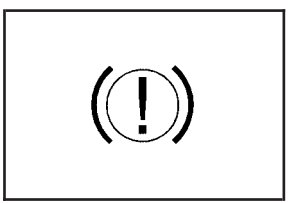

Canada

This light should come on briefly when you turn the ignition key to RUN. If it doesn't come on then, have it fixed so it will be ready to warn you if there's a problem.

If the light comes on while you are driving, pull off the road and stop carefully. You may notice that the pedal is harder to push or may go closer to the floor. It may take longer to stop. If the light is still on, have the vehicle towed for service. See *Towing Your Vehicle on page 4-57*.

⚠ CAUTION:

Your brake system may not be working properly if the brake system warning light is on. Driving with the brake system warning light on can lead to an accident. If the light is still on after you have pulled off the road and stopped carefully, have the vehicle towed for service.

Anti-Lock Brake System Warning Light

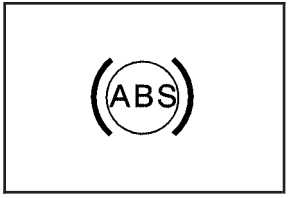

With the anti-lock brake system, this light will come on when you start your engine and may stay on for several seconds.

That's normal. If the light doesn't come on then, have it fixed so it will be ready to warn you if there is a problem.

If the light stays on, or comes on when you're driving, your vehicle needs service. You will also hear a chime sound when the light is on steady. If the regular brake system warning light isn't on, you still have brakes, but you don't have anti-lock brakes. If the regular brake system warning light is also on you don't have anti-lock brakes and there's a problem with your regular brakes. In addition to both lights, you will also hear a chime sound on the first occurrence of a problem and each time the vehicle is shut off and then restarted. See *Brake System Warning Light on page 3-35*.

Low Tire Pressure Warning Light

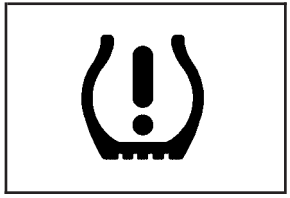

This light and a chime will come on along with the CHECK TIRE PRESSURE message in the DIC when one or more of your tires is significantly under-inflated.

This light will also come on briefly when you start the engine.

See “CHECK TIRE PRESSURE” under *DIC Warnings and Messages on page 3-50* for more information.

Stop and check your tires as soon as possible, and inflate them to the proper pressure as indicated on the vehicle’s certification/tire label. See *Tires on page 5-62* for more information on your vehicle’s tires.

Traction Off Light

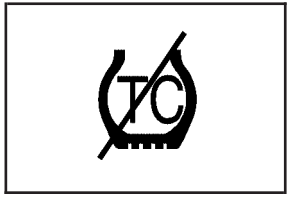

If you have the StabiliTrak® system, this light should come on briefly when you turn the ignition to RUN.

If the light does not come on then, the system may require service; have it fixed so it will be there to warn you if the system is turned off.

This light will also come on when the StabiliTrak® system is turned off.

For more information on StabiliTrak®, see *StabiliTrak® System on page 4-9*.

Engine Coolant Temperature Gage

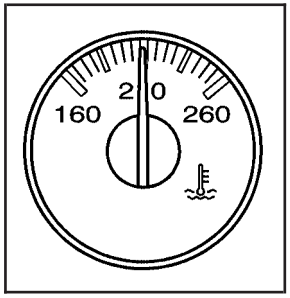

United States

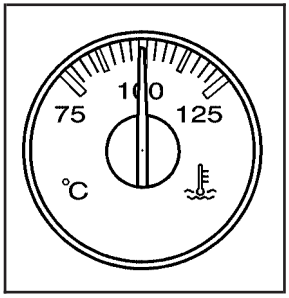

Canada

This gage shows the engine coolant temperature.

It also provides an indicator of how hard your vehicle is working. During a majority of the operation, the gage will read 210°F (100°C) or less. If you are pulling a load or going up hills, it is normal for the temperature to fluctuate and approach the 250°F (122°C) mark. If the gage reaches the 260°F (125°C) mark, it indicates that the cooling system is working beyond its capacity.

See *Engine Overheating on page 5-30*.

Transmission Temperature Gage

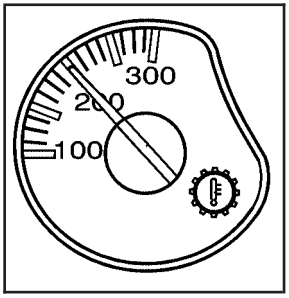

United States

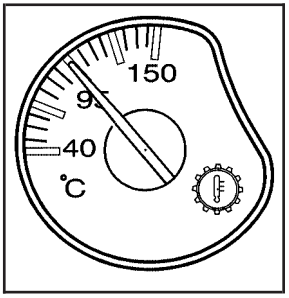

Canada

Your vehicle may be equipped with a transmission temperature gage.

When your ignition is on, the gage shows the temperature of the transmission fluid. The normal operating range is from 180°F (82°C) to about 200°F (93°C).

At approximately 265°F (130°C), the driver information center will display a TRANSMISSION HOT message and the transmission will enter a transmission protection mode. When the transmission enters the protection mode, you may notice a change in the transmission shifting patterns. The transmission will return to normal shifting patterns when the transmission fluid temperature falls below 260°F (127°C).

See *Driver Information Center (DIC) on page 3-46* for further information.

If your vehicle has an Allison transmission, and the fluid reaches temperatures of approximately 275°F (135°C) or greater, the driver information center will display a TRANS HOT IDLE ENGINE warning message and a chime will sound until the temperature falls below 265°F (129°C). Pull the vehicle off the roadway when it is safe to do so. Set the parking brake, place the transmission in PARK (P) and allow the engine to idle until the transmission temperature falls below 265°F (129°C). If the transmission continues to operate above 265°F (130°C), contact your nearest dealer or the GM Roadside Assistance Center. See *Roadside Assistance Program on page 7-6*.

Notice: **If you drive your vehicle with the transmission temperature gage above normal operating range, you can damage the transmission. This could lead to costly repairs that would not be covered by your warranty. Do not drive your vehicle while the transmission temperature gage reading is above normal. See your dealer for service.**

The following situations can cause the transmission to operate at higher temperatures:

- Towing a trailer
- Hot outside air temperatures
- Vehicle overloading
- Hauling a large or heavy load
- Low transmission fluid level
- High transmission fluid level
- Restricted air flow to the radiator and the auxiliary transmission oil cooler (if equipped).

A temporary solution to hotter transmission operating temperatures may be to let the transmission cool down. If the transmission is operated at higher temperatures on a frequent basis, see *Scheduled Maintenance on page 6-4* for the proper transmission maintenance intervals.

Malfunction Indicator Lamp

Check Engine Light

Your vehicle is equipped with a computer which monitors operation of the fuel, ignition, and emission control systems.

This system is called OBD II (On-Board Diagnostics-Second Generation) and is intended to assure that emissions are at acceptable levels for the life of the vehicle, helping to produce a cleaner environment. The check engine light comes on to indicate that there is a problem and service is required. Malfunctions often will be indicated by the system before any problem is apparent. This may prevent more serious damage to your vehicle. This system is also designed to assist your service technician in correctly diagnosing any malfunction.

Notice: **If you keep driving your vehicle with this light on, after awhile, your emission controls may not work as well, your fuel economy may not be as good, and your engine may not run as smoothly. This could lead to costly repairs that may not be covered by your warranty.**

Notice: **Modifications made to the engine, transmission, exhaust, intake, or fuel system of your vehicle or the replacement of the original tires with other than those of the same Tire Performance Criteria (TPC) can affect your vehicle's emission controls and may cause this light to come on. Modifications to these systems could lead to costly repairs not covered by your warranty. This may also result in a failure to pass a required Emission Inspection/Maintenance test. See *Accessories and Modifications on page 5-3*.**

This light should come on, as a check to show you it is working, when the ignition is on and the engine is not running. If the light does not come on, have it repaired. This light will also come on during a malfunction in one of two ways:

- **Light Flashing** — A misfire condition has been detected. A misfire increases vehicle emissions and may damage the emission control system on your vehicle. Diagnosis and service may be required.
- **Light On Steady** — An emission control system malfunction has been detected on your vehicle. Diagnosis and service may be required.

If the Light is Flashing

The following may prevent more serious damage to your vehicle:

- Reducing vehicle speed
- Avoiding hard accelerations
- Avoiding steep uphill grades
- If you are towing a trailer, reduce the amount of cargo being hauled as soon as it is possible

If the light stops flashing and remains on steady, see “If the Light Is On Steady” following.

If the light continues to flash, when it is safe to do so, stop the vehicle. Find a safe place to park your vehicle. Turn the key off, wait at least 10 seconds and restart the engine. If the light remains on steady, see “If the Light Is On Steady” following. If the light is still flashing, follow the previous steps, and see your dealer for service as soon as possible.

If the Light Is On Steady

You may be able to correct the emission system malfunction by considering the following:

Did you recently put fuel into your vehicle?

If so, reinstall the fuel cap, making sure to fully install the cap. See *Filling the Tank on page 5-9*. The diagnostic system can determine if the fuel cap has been left off or improperly installed. A loose or missing fuel cap will allow fuel to evaporate into the atmosphere. A few driving trips with the cap properly installed should turn the light off.

Did you just drive through a deep puddle of water?

If so, your electrical system may be wet. The condition will usually be corrected when the electrical system dries out. A few driving trips should turn the light off.

Have you recently changed brands of fuel?

If so, be sure to fuel your vehicle with quality fuel. See *Gasoline Octane on page 5-5*. Poor fuel quality will cause your engine not to run as efficiently as designed. You may notice this as stalling after start-up, stalling when you put the vehicle into gear, misfiring, hesitation on acceleration, or stumbling on acceleration. (These conditions may go away once the engine is warmed up.) This will be detected by the system and cause the light to turn on.

If you experience one or more of these conditions, change the fuel brand you use. It will require at least one full tank of the proper fuel to turn the light off.

If none of the above steps have made the light turn off, your dealer can check the vehicle. Your dealer has the proper test equipment and diagnostic tools to fix any mechanical or electrical problems that may have developed.

Emissions Inspection and Maintenance Programs

Some state/provincial and local governments have or may begin programs to inspect the emission control equipment on your vehicle. Failure to pass this inspection could prevent you from getting a vehicle registration.

Here are some things you need to know to help your vehicle pass an inspection:

Your vehicle will not pass this inspection if the check engine light is on or not working properly.

Your vehicle will not pass this inspection if the OBD (on-board diagnostic) system determines that critical emission control systems have not been completely diagnosed by the system. The vehicle would be considered not ready for inspection. This can happen if you have recently replaced your battery or if your battery has run down. The diagnostic system is designed to evaluate critical emission control systems during normal driving. This may take several days of routine driving. If you have done this and your vehicle still does not pass the inspection for lack of OBD system readiness, your GM dealer can prepare the vehicle for inspection.

Oil Pressure Gage

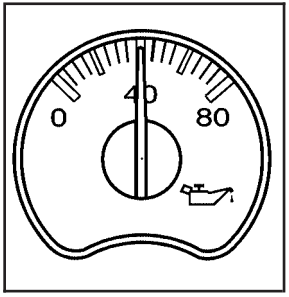

United States

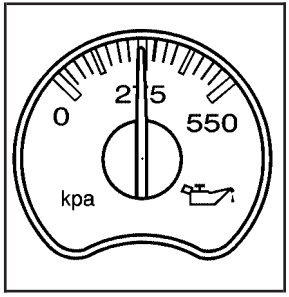

Canada

The oil pressure gage shows the engine oil pressure in psi (pounds per square inch) when the engine is running. Canadian vehicles indicate pressure in kPa (kilopascals).

Oil pressure may vary with engine speed, outside temperature and oil viscosity, but readings above the low pressure zone indicate the normal operating range.

A reading in the low pressure zone may be caused by a dangerously low oil level or some other problem causing low oil pressure. Check your oil as soon as possible. See *Engine Oil on page 5-17*.

⚠ CAUTION:

Do not keep driving if the oil pressure is low. If you do, your engine can become so hot that it catches fire. You or others could be burned. Check your oil as soon as possible and have your vehicle serviced.

Notice: **Lack of proper engine oil maintenance may damage the engine. The repairs would not be covered by your warranty. Always follow the maintenance schedule in this manual for changing engine oil.**

Security Light

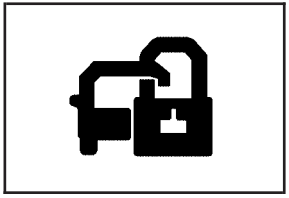

This light will come on briefly when you turn the key toward START. The light will stay on until the engine starts.

If the light flashes, the Passlock® system has entered a tamper mode. If the vehicle fails to start, see *Passlock® on page 2-26*.

If the light comes on continuously while driving and stays on, there may be a problem with the Passlock® system. Your vehicle will not be protected by Passlock®, and you should see your dealer.

Also, see *Content Theft-Deterrent on page 2-24* for additional information regarding the security light.

Cruise Control Light

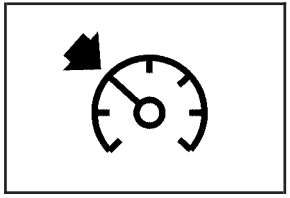

This light comes on whenever you set your cruise control.

The light will go out when the cruise control is turned off. See *Cruise Control on page 3-10* for more information.

Highbeam On Light

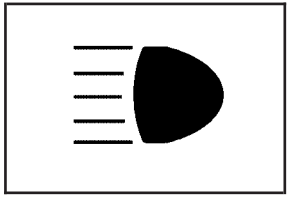

This light will come on when the high-beam headlamps are in use.

See *Headlamp High/Low-Beam Changer on page 3-9*.

Tow/Haul Mode Light

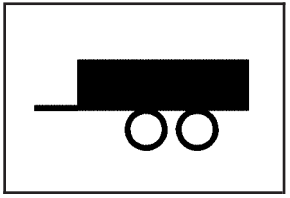

This light is displayed when the tow/haul mode has been activated.

For more information, see “Tow/Haul Mode” under *Towing a Trailer on page 4-62*.

Cargo Lamp Light

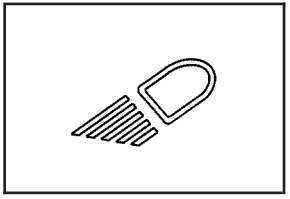

This light will come on when the cargo lamp is in use. For more information see *Exterior Cargo Lamps on page 3-17*.

Fuel Gage

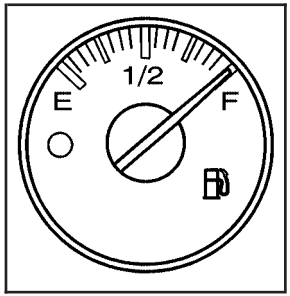

United States

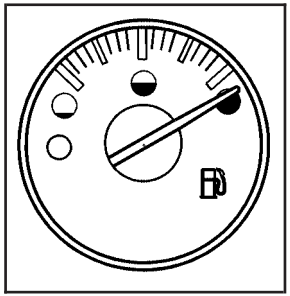

Canada

When the ignition is on, the fuel gage tells you about how much fuel you have left in your tank.

The gage will first indicate empty before you are out of fuel, and you should get more fuel as soon as possible.

When the fuel tank is low the FUEL LEVEL LOW message will appear. See *DIC Warnings and Messages on page 3-50* for more information.

Here are some situations you may experience with your fuel gage. None of these indicate a problem with the fuel gage.

- At the gas station, the fuel pump shuts off before the gage reads full.
- It takes a little more or less fuel to fill up than the fuel gage indicated. For example, the gage may have indicated the tank was half full, but it actually took a little more or less than half the tank's capacity to fill the tank.
- The gage goes back to empty when you turn off the ignition.

Low Fuel Warning Light

The light next to the fuel gage will come on briefly when you are starting the engine.

This light comes on when the fuel tank is low on fuel. To turn it off, add fuel to the fuel tank. See *Fuel on page 5-5*.

Driver Information Center (DIC)

The Driver Information Center (DIC) display is located on the instrument panel cluster, below the speedometer. If your vehicle has DIC buttons, they are located on the steering wheel. The DIC can display information such as the trip odometer, fuel economy, customization features, and warning/status messages.

If your vehicle does not have DIC steering wheel buttons, you will not have all of the features listed. Scroll through the odometer, trip odometer, and engine hours by pressing the trip odometer reset stem located on the instrument panel cluster. Turn off, or acknowledge, DIC messages by pressing the trip odometer reset stem. See *Speedometer and Odometer on page 3-30* for information on features for vehicles without DIC buttons.

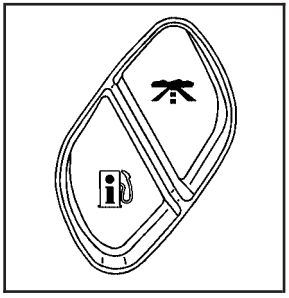

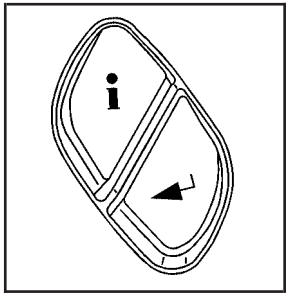

(Trip Information): Press this button to display the odometer, trip odometers, tire pressure for vehicles with a tire pressure monitor, timer, and engine hours.

(Fuel Information): Press this button to display the current range, fuel used, average fuel economy, and engine oil life.

(Customization): Press this button to access the vehicle settings menu and customize the personal settings on your vehicle.

(Select): Press this button to reset certain DIC functions and set your customization settings.

Pressing any of the four DIC buttons will acknowledge DIC messages and clear them from the DIC display.

DIC Operation and Displays

The Driver Information Center (DIC) comes on when the ignition is on. After a short delay, the DIC will display the information that was last displayed before the engine was turned off.

The DIC has different modes which can be accessed by pressing the four DIC buttons located on the steering wheel. These buttons are trip information, fuel information, customization, and select. The button functions are detailed in the following pages.

Trip Information Button

(Trip Information): Press the trip information button to scroll through the ODOMETER, TRIP A, TRIP B, TIRE PRESSURES, TIMER, and ENGINE HOURS.

Odometer: Press the trip information button until ODOMETER appears on the display. This mode shows the total distance the vehicle has been driven in either miles or kilometers. Pressing the reset stem located on the instrument cluster with the vehicle off will also display the odometer.

Trip A: Press the trip information button until TRIP A appears on the display. This mode shows the current distance traveled since the last reset for TRIP A in either miles or kilometers.

Trip B: Press the trip information button until TRIP B appears on the display. This mode shows the current distance traveled since the last reset for TRIP B in either miles or kilometers.

To reset TRIP A or TRIP B information, press and hold the select button for one second while in one of the trip modes. This will reset the information for TRIP A or TRIP B.

You can also reset TRIP A or TRIP B while they are displayed by pressing the reset stem on the cluster. If you press and hold the reset stem or the select button for four seconds, the display will show the distance traveled since the last ignition cycle for TRIP A or TRIP B.

See *Trip Odometer on page 3-30* for more information.

Tire Pressures: The tire pressure mode is available only on vehicles equipped with a tire pressure monitor. Press the trip information button until TIRE PRESSURES appears on the display. This mode shows the tire pressure in pounds per square inch (psi) or kilopascals (kPa). Press the select button to scroll through the following information:

- LF TIRE shows the tire pressure for the front driver's side tire.
- RF TIRE shows the tire pressure for the front passenger's side tire.
- LR TIRE shows the tire pressure for the rear driver's side tire.
- RR TIRE shows the tire pressure for the rear passenger's side tire.

Timer: The DIC can be used as a timer. Press the select button while TIMER is displayed to start the timer. The display will show the amount of time that has passed since the timer was last reset, not including time the ignition is off. Time will continue to be counted as long as the ignition is on, even if another display is being shown on the DIC. The timer will record up to 99 hours, 59 minutes and 59 seconds (99:59:59) after which the display will roll back to zero.

To stop the counting of time, press the select button briefly while TIMER is displayed.

To reset the timer to zero, press and hold the select button while TIMER is displayed.

Engine Hours: Press the trip information button until ENGINE HOURS appears on the display. This mode shows the total number of hours the engine has run. Pressing and holding the reset stem located on the instrument cluster for about four seconds will also display the engine hour information after the odometer is displayed when the vehicle is off.

Fuel Information Button

(Fuel Information): Press the fuel information button to scroll through the range, fuel used, average fuel economy, and the engine oil life system.

Fuel Range: Press the fuel information button until RANGE appears on the display. This mode shows the remaining distance you can drive without refueling. It is based on fuel economy and the fuel remaining in the fuel tank. The display will show LOW if the fuel level is low.

The fuel economy data used to determine fuel range is an average of recent driving conditions. As your driving conditions change, this data is gradually updated. Fuel range cannot be reset.

Fuel Used: Press the fuel information button until FUEL USED appears on the display. This mode shows the number of gallons or liters of fuel used since the last reset of this menu item. To reset the fuel used information, press and hold the select button for one second while FUEL USED is displayed.

Average Fuel Economy: Press the fuel information button until AVG ECON appears on the display. This mode shows how many miles per gallon (MPG) or liters per 100 kilometers (L/100 km) your vehicle is getting based on current and past driving conditions.

Press and hold the select button for one second while AVG ECON is displayed to reset the average fuel economy. Average fuel economy will then be calculated starting from that point. If the average fuel economy is not reset, it will be continually updated each time you drive.

Engine Oil Life System: Press the fuel information button until ENGINE OIL LIFE appears on the display. The engine oil life system shows an estimate of the oil's remaining useful life. It will show 100% when the system is reset after an oil change. It will alert you to change your oil on a schedule consistent with your driving conditions.

Always reset the engine oil life system after an oil change. To reset the engine oil life system, see *Engine Oil Life System on page 5-20*.

In addition to the engine oil life system monitoring the oil life, additional maintenance is recommended in the Maintenance Schedule in this manual. See *Engine Oil on page 5-17* and *Scheduled Maintenance on page 6-4*.

Customization Button

i (Customization): Press the customization button to access the VEHICLE SETTINGS menu and customize the settings to your vehicle. See *DIC Vehicle Customization on page 3-60* for more information.

Select Button

(Select): Press the select button to reset certain DIC functions and set your customization settings. For example, this button will reset the trip odometers and enables you to scroll through and select the language in which the DIC information will appear.

DIC Warnings and Messages

Warning messages are displayed on the Driver Information Center (DIC) to notify the driver that the status of the vehicle has changed and that some action may be needed by the driver to correct the condition. If there is more than one message that needs to be displayed, they will appear one after another. Some messages may not require immediate action, but you should press any of the four DIC buttons on the steering wheel to acknowledge that you received the messages and clear them from the display. If your vehicle does not have DIC buttons on the steering wheel, press the trip odometer reset stem located on the instrument panel cluster to acknowledge messages and to clear them from the display. Some messages cannot be cleared from the display because they are more urgent. These messages require action before they can be removed from the DIC display. You should take any messages that appear on the display seriously and remember that clearing the messages will only make the messages disappear, not correct the problem. The following are the possible messages that can be displayed and some information about them.

BATTERY NOT CHARGING

On some vehicles, if the battery is not charging during operation, this message will appear on the DIC. Driving with this problem could drain your battery. Have the electrical system checked by your GM dealer as soon as possible. Pressing any of the four DIC buttons will clear the message from the DIC display. If your vehicle does not have the four DIC buttons, pressing the trip odometer reset stem will clear the message from the DIC display. See *Charging System Light on page 3-34* and *Voltmeter Gage on page 3-34*.

BUCKLE PASSENGER

If your vehicle has the passenger sensing system, this message reminds you to buckle the passenger's seat belt. See *Passenger Sensing System on page 1-61*.

This message will display and a chime will sound when the ignition is on, the driver's seat belt is buckled, the passenger's seat belt is unbuckled with the passenger airbag enabled, and the vehicle is in motion. You should have the passenger buckle their seat belt.

This reminder will be repeated if the ignition is on, the vehicle is in motion, the driver is buckled and the passenger is still unbuckled, and the passenger airbag is enabled. If the passenger's seat belt is already buckled, this message and chime will not come on.

Pressing any of the four DIC buttons will acknowledge the message and clear it from the DIC display. If your vehicle does not have the four DIC buttons, pressing the trip odometer reset stem will acknowledge the message and clear it from the DIC display.

BUCKLE SEATBELT

If your vehicle has the passenger sensing system, this message reminds you to buckle the driver's seat belt. See *Passenger Sensing System on page 1-61*.

This message will display and a chime will sound when the ignition is on, the driver's seat belt is unbuckled, and the vehicle is in motion. You should buckle your seat belt.

If the driver remains unbuckled when the ignition is on and the vehicle is in motion, the reminder will be repeated. If the driver's seat belt is already buckled, this message and chime will not come on.

This message is an additional reminder to the Safety Belt Reminder Light in the instrument panel cluster. See *Safety Belt Reminder Light on page 3-30*.

Pressing any of the four DIC buttons will acknowledge the message and clear it from the DIC display. If your vehicle has the four DIC buttons, pressing the trip odometer reset stem will acknowledge the message and clear it from the DIC display.

CHANGE ENGINE OIL

This message is displayed when the engine oil needs to be changed and service is required for your vehicle. See your GM dealer. See *Scheduled Maintenance on page 6-4* and *Engine Oil on page 5-17* for more information. Also see *Engine Oil Life System on page 5-20* for information on how to reset the message. This message will clear itself after 10 seconds until the next ignition cycle.

CHARGING SYSTEM FAILURE

On some vehicles, if there is a problem with the generator and battery charging system, this message will appear on the DIC, a chime will sound and the charging system light on the instrument panel cluster will come on. See *Charging System Light on page 3-34* and *Voltmeter Gage on page 3-34* for more information. Driving with this problem could drain your battery. Turn off all unnecessary accessories. Stop and turn off the vehicle as soon as it is safe to do so. Have the electrical system checked by your GM dealer immediately.

CHECK OIL LEVEL

If the oil level in the vehicle is low, this message will appear on the DIC. Check the oil level and correct it as necessary. You may need to let the vehicle cool or warm up and cycle the ignition to be sure this message will clear. This message will clear itself after 10 seconds until the next ignition cycle. See *Engine Oil on page 5-17* for additional information.

CHECK TIRE PRESSURE

If a low tire pressure is detected in any of the vehicle's tires, this message will appear on the DIC, along with a chime and a low tire pressure warning light. See *Low Tire Pressure Warning Light on page 3-37*. Pressing any of the four DIC buttons will clear the message from the DIC display. If your vehicle does not have the four DIC buttons, pressing the trip odometer reset stem will clear the message from the DIC display. It will appear at each ignition cycle until the tires are inflated to the correct inflation pressure.

See *Tire Pressure Monitor System on page 5-70* for more information on tires and the correct inflation pressures.

CHECK WASHER FLUID

If the washer fluid level is low, this message will appear on the DIC. Adding washer fluid to the windshield washer reservoir will clear the message. See *Windshield Washer Fluid on page 5-39*. Pressing any of the four DIC buttons will clear the message from the DIC display. If your vehicle does not have the four DIC buttons, pressing the trip odometer reset stem will clear the message from the DIC display. If you do not clear this message, it will clear itself after 10 seconds until the next ignition cycle.

DRIVER DOOR AJAR

If the driver's door is not fully closed and the vehicle is in a drive gear, this message will appear on the display and you will hear a chime. Stop and turn off the vehicle, check the door for obstacles and close the door again. Check to see if the message still appears on the DIC. Pressing any of the four DIC buttons will clear the message from the DIC display. If your vehicle does not have the four DIC buttons, pressing the trip odometer reset stem will clear the message from the DIC display.

ENGINE COOLANT HOT

If the cooling system temperature gets hot, this message will appear in the DIC. Turn off the air conditioning. If the message is still on, or if the engine coolant temperature gage continues to rise, pull the vehicle over when it is safe to do so. See *Engine Coolant Temperature Gage on page 3-38* for more information. Stop the vehicle and let the engine idle in PARK (P) for a few minutes to allow the coolant to reach a safe temperature. This message will clear when the coolant temperature drops to a safe operating temperature. Pressing any of the four DIC buttons will clear the message from the DIC display. If your vehicle does not have the four DIC buttons, pressing the trip odometer reset stem will clear the message from the DIC display.

ENGINE OVERHEATED

Notice: **If you drive your vehicle while the engine is overheating, severe engine damage may occur. If an overheat warning appears on the instrument panel cluster and/or DIC, stop the vehicle as soon as possible. Do not increase the engine speed above normal idling speed. See *Engine Overheating on page 5-30* for more information.**

If the engine cooling system reaches unsafe temperatures for operation, this message will appear in the DIC and you will hear a chime. Stop and turn off the vehicle as soon as it is safe to do so to avoid severe damage. This message will clear when the engine has cooled to a safe operating temperature.

FUEL LEVEL LOW

If the fuel level is low, this message will appear on the DIC and you will hear a chime. Refuel as soon as possible. Pressing any of the four DIC buttons will clear the message from the DIC display. If your vehicle does not have the four DIC buttons, pressing the trip odometer reset stem will clear the message from the DIC display. It will also clear itself after 10 seconds until the next ignition cycle. The low fuel light near the fuel gage will still remain on in either case. See *Low Fuel Warning Light on page 3-45*, *Fuel Gage on page 3-45*, and *Fuel on page 5-5*.

KEYFOB X BATTERY LOW

If a remote keyless entry transmitter battery is low, this message will appear on the DIC. The battery needs to be replaced in the transmitter. See “Battery Replacement” under *Remote Keyless Entry System Operation on page 2-5*. Pressing any of the four DIC buttons will clear the message from the DIC display. If your vehicle does not have the four DIC buttons, pressing the trip odometer reset stem will clear the message from the DIC display.

LEFT REAR DOOR AJAR

If the driver's side rear door is not fully closed and the vehicle is in a drive gear, this message will appear on the display and you will hear a chime. Stop and turn off the vehicle, check the door for obstacles and close the door again. Check to see if the message still appears on the DIC. Pressing any of the four DIC buttons will clear the message from the DIC display. If your vehicle does not have the four DIC buttons, pressing the trip odometer reset stem will clear the message from the DIC display.

LOW COOLANT LEVEL

Notice: **Engine damage from running your engine without coolant is not covered by your warranty. See "Overheated Engine Protection Operating Mode" in the Index for information on driving to a safe place in an emergency.**

If your vehicle has a low coolant sensor and the engine coolant level is low, this message will appear on the DIC. Adding coolant to the coolant recovery tank will clear the message. See *Cooling System on page 5-32*. Pressing any of the four DIC buttons will clear the message from the DIC display. If your vehicle does not have the four DIC buttons, pressing the trip odometer reset stem will clear the message from the DIC display.

OIL LIFE RESET

This message will appear on the display for about 10 seconds after resetting the change engine oil message. See "Engine Oil Life System" under *DIC Operation and Displays on page 3-47* and *Engine Oil on page 5-17* for more information.

OIL PRESSURE LOW

Notice: **If you drive your vehicle while the engine oil pressure is low, severe engine damage may occur. If a low oil pressure warning appears on the Driver Information Center (DIC), stop the vehicle as soon as possible. Do not drive the vehicle until the cause of the low oil pressure is corrected. See *Engine Oil on page 5-17* for more information.**

If low oil pressure levels occur, this message will be displayed on the DIC and a chime will sound. Stop the vehicle as soon as safely possible and do not operate it until the cause of the low oil pressure has been corrected. Check your oil as soon as possible and have your vehicle serviced by your GM dealer.

PASSENGER DOOR AJAR

If the passenger's door is not fully closed and the vehicle is in a drive gear, this message will appear on the display and you will hear a chime. Stop and turn off the vehicle, check the door for obstacles and close the door again. Check to see if the message still appears on the DIC. Pressing any of the four DIC buttons will clear the message from the DIC display. If your vehicle does not have the four DIC buttons, pressing the trip odometer reset stem will clear the message from the DIC display.

REDUCED ENGINE POWER

This message is displayed and a chime will sound when the cooling system temperature gets too hot and the engine further enters the engine coolant protection mode.

See *Engine Overheating on page 5-30* for further information.

You may also see this message when the vehicle determines a problem with the electronic throttle control. See your GM dealer for service.

RIGHT REAR DOOR AJAR

If the passenger's side rear door is not fully closed and the vehicle is in a drive gear, this message will appear on the display and you will hear a chime. Stop and turn off the vehicle, check the door for obstacles and close the door again. Check to see if the message still appears on the DIC. Pressing any of the four DIC buttons will clear the message from the DIC display. If your vehicle does not have the four DIC buttons, pressing the trip odometer reset stem will clear the message from the DIC display.

SERVICE 4WD (Four-Wheel-Drive)

If a problem occurs with the four-wheel-drive system, this message will appear on the DIC. If this message appears, stop as soon as possible and turn off the vehicle. Restart the vehicle and check for the message on the DIC display. If the message is still displayed or appears again when you begin driving, the four-wheel-drive system needs service. See your GM dealer. Pressing any of the four DIC buttons will clear the message from the DIC display. If your vehicle does not have the four DIC buttons, pressing the trip odometer reset stem will clear the message from the DIC display.

SERVICE AIR BAG

If there is a problem with the airbag system, this message will be displayed on the DIC. Have your GM dealer inspect the system for problems. See *Airbag Readiness Light on page 3-31* and *Airbag System on page 1-52* for more information. Pressing any of the four DIC buttons will clear the message from the DIC display. If your vehicle does not have the four DIC buttons, pressing the trip odometer reset stem will clear the message from the DIC display.

SERVICE BRAKE SYSTEM

If a problem occurs with the brake system, this message will appear on the DIC. If this message appears, stop as soon as possible and turn off the vehicle. Restart the vehicle and check for the message on the DIC display. If the message is still displayed or appears again when you begin driving, the brake system needs service. See your GM dealer. Pressing any of the four DIC buttons will clear the message from the DIC display. If your vehicle does not have the four DIC buttons, pressing the trip odometer reset stem will clear the message from the DIC display.

SERVICE CHARGING SYSTEM

On some vehicles, if there is a problem with the battery charging system, this message will appear on the DIC. Under certain conditions, the charging system light may also turn on in the instrument panel cluster. See *Charging System Light on page 3-34*. The battery will not be charging at an optimal rate and the vehicle will lose the ability to enter the fuel economy mode. The vehicle is safe to drive, however you should have the electrical system checked by your GM dealer. Pressing any of the four DIC buttons will clear the message from the DIC display. If your vehicle does not have the four DIC buttons, pressing the trip odometer reset stem will clear the message from the DIC display.

SERVICE STABILITY

If you ever see the SERVICE STABILITY message, it means there may be a problem with your StabiliTrak® system. If you see this message, try to reset the system. Stop; turn off the engine; then start the engine again. If the SERVICE STABILITY message still comes on, it means there is a problem. You should see your GM dealer for service. The vehicle is safe to drive, however, you do not have the benefit of StabiliTrak®, so reduce your speed and drive accordingly.

For more information on the StabiliTrak® system, see *StabiliTrak® System on page 4-9*.

SERVICE TIRE MONITOR

This message will be displayed if any of the tire monitor sensors have malfunctioned, if the tire monitor sensors have not been programmed or if the recommended tire pressures are not programmed. See your GM dealer for service. Pressing any of the four DIC buttons will clear the message from the DIC display. If your vehicle does not have the four DIC buttons, pressing the trip odometer reset stem will clear the message from the DIC display.

STABILITY SYS (System) ACTIVE

You may see the STABILITY SYS ACTIVE message on the DIC. It means that an advanced computer-controlled system has come on to help your vehicle continue to go in the direction in which you are steering.

For more information on the StabiliTrak® system, see *StabiliTrak® System on page 4-9*.

STABILITY SYS (System) DISABLED

The STABILITY SYS DISABLED message will turn on when you press the StabiliTrak® button or when the stability control has been automatically disabled. There are four conditions that can cause this message to appear.

- One condition is overheating, which could occur if StabiliTrak® activates continuously for an extended period of time.
- The message will also be displayed if the brake system warning light is on. See *Brake System Warning Light on page 3-35*.
- The message could be displayed if the stability system takes longer than usual to complete its diagnostic checks due to driving conditions.
- Also, if an engine or vehicle related problem has been detected, and the vehicle needs service, the message will appear. See your GM dealer.

The message will turn off as soon as the conditions that caused the message to be displayed are no longer present.

For more information on the StabiliTrak® system, see *StabiliTrak® System on page 4-9*.

TIGHTEN FUEL CAP

If the vehicle's fuel cap is not tightened properly this message may appear along with the check engine light on the instrument panel. See *Malfunction Indicator Lamp on page 3-40*. Reinstall the fuel cap, making sure to fully install the cap. See *Filling the Tank on page 5-9*. The diagnostic system can determine if the fuel cap has been left off or improperly installed. A loose or missing fuel cap will allow fuel to evaporate into the atmosphere. A few driving trips with the cap properly installed should turn the light and message off.

TRACTION ACTIVE

When the traction control system has detected that any of the vehicle's wheels are slipping, the traction control system will activate and this message will appear on the DIC. See *StabiliTrak® System on page 4-9* for more information.

TRACTION SYS (System) LIMITED

If the brake traction control system activates constantly or if the brakes have heated up due to high-speed braking, brake traction control will be disabled and the TRACTION SYS LIMITED message will be displayed. The system will return to normal operation after the brakes have cooled. See *StabiliTrak® System on page 4-9* for more information.

TRANS (Transmission) HOT IDLE ENGINE

Notice: **If you drive your vehicle while the transmission fluid is overheating and the transmission temperature warning is displayed on the instrument panel cluster and/or DIC, you can damage the transmission. This could lead to costly repairs that would not be covered by your warranty. Do not drive your vehicle with overheated transmission fluid or while the transmission temperature warning is displayed.**

If the transmission fluid gets hot, this message will appear on the DIC along with a continuous chime. Driving with the transmission fluid temperature high can cause damage to the vehicle. Stop the vehicle and let it idle to allow the transmission to cool. This message will clear and the chime will stop when the fluid temperature reaches a safe level. See *Transmission Temperature Gage on page 3-38*.

TRANSMISSION HOT

Notice: **If you drive your vehicle while the transmission fluid is overheating and the transmission temperature warning is displayed on the instrument panel cluster and/or DIC, you can damage the transmission. This could lead to costly repairs that would not be covered by your warranty. Do not drive your vehicle with overheated transmission fluid or while the transmission temperature warning is displayed.**

If the transmission fluid temperature becomes high, this message will appear on the DIC display.

When the transmission enters the protection mode, you may notice a change in the transmission shifting patterns. When the transmission fluid temperature returns to normal, the display will turn off and the transmission shifting patterns will return to normal.

If the vehicle has the Tow/Haul mode, use this feature if the transmission is operating at higher temperatures and/or the following situations exist, which can cause the transmission to operate at higher temperatures:

- Towing a trailer
- Hot outside air temperatures
- Hauling a large or heavy load
- Over-loading
- Low transmission fluid level
- High transmission fluid level
- Restricted air flow to the radiator

A temporary solution to hotter transmission operating temperatures may be to let the transmission cool down. If the transmission is operated at higher temperatures on a frequent basis, see *Scheduled Maintenance on page 6-4* for the transmission your vehicle is equipped with for the proper transmission maintenance intervals. Also see *Transmission Temperature Gage on page 3-38* for more information.

TURN SIGNAL ON

If a turn signal is left on for 3/4 of a mile (1.2 km), this message will appear on the display and you will hear a chime. Move the turn signal/multifunction lever to the off position. Pressing any of the four DIC buttons will clear the message from the DIC display. If your vehicle does not have the four DIC buttons, pressing the trip odometer reset stem will clear the message from the DIC display.

DIC Vehicle Customization

Your vehicle may have customization capabilities that allow you to program some features to one setting based on your preference. All of the customizable options listed may not be available on your vehicle. Only the options available will be displayed on your Driver Information Center (DIC).

The default settings for the customization features were set when your vehicle left the factory, but may have been changed from their default state since then.

To change feature preferences, make sure the ignition is on and the vehicle is in PARK (P). Press the customization button to scroll through the available customizable options.

After pressing the customization button, VEHICLE SETTINGS will momentarily display before going to a customization option.

Lock Doors

Press the customization button until LOCK DOORS appears in the display. To select your preference for automatic locking, press the select button while LOCK DOORS is displayed on the DIC. Pressing the select button will scroll through the following choices:

LOCK DOORS: IN GEAR (default): The doors will lock when the vehicle is shifted out of PARK (P).

LOCK DOORS: WITH SPEED: The doors will lock when the vehicle speed is above 8 mph (13 km/h) for three seconds.

Choose one of the available options and press the customization button while it is displayed on the DIC to select it and move on to the next feature.

Unlock Doors

Press the customization button until UNLOCK DOORS appears in the display. To select your preference for automatic unlocking, press the select button while UNLOCK DOORS is displayed on the DIC. Pressing the select button will scroll through the following choices:

UNLOCK DOORS: IN PARK (default): All of the doors will unlock when the vehicle is shifted into PARK (P).

UNLOCK DRIVER: IN PARK: The driver's door will be unlocked when the vehicle is shifted into PARK (P).

UNLOCK DOORS: KEY OUT: All of the doors will unlock when the key is taken out of the ignition.

UNLOCK DOORS: MANUALLY: The doors will not be unlocked automatically.

Choose one of the available options and press the customization button while it is displayed on the DIC to select it and move on to the next feature.

Door Lock Delay

If your DIC does not have this feature, you can still program the delayed locking feature. See *Delayed Locking on page 2-9* for more information.

When locking the doors with the power lock switch or the remote keyless entry transmitter and a door or the tailgate is open, the delayed locking feature will delay locking the doors and tailgate until five seconds after the last door is closed.

Press the customization button until DOOR LOCK DELAY appears in the display. To select your preference for delayed locking, press the select button while DOOR LOCK DELAY is displayed on the DIC. Pressing the select button will scroll through the following choices:

DOOR LOCK DELAY: OFF (default): The doors will lock immediately when pressing the power lock switch or the lock button on the remote keyless entry transmitter.

DOOR LOCK DELAY: ON: The doors will not lock until five seconds after the last door or the tailgate is closed. You will hear three chimes to signal that the delayed locking feature is in use. You can temporarily override delayed locking by pressing the lock button on the door or the remote keyless entry transmitter a second time.

Choose one of the available options and press the customization button while it is displayed on the DIC to select it and move on to the next feature.

This feature will not operate if the key is in the ignition.

Lock Feedback

Press the customization button until LOCK FEEDBACK appears in the display. To select your preference for the feedback you receive when locking the vehicle with the remote keyless entry transmitter, press the select button while LOCK FEEDBACK is displayed on the DIC. Pressing the select button will scroll through the following choices:

LOCK FEEDBACK: BOTH (default): The parking lamps will flash each time you press the button with the lock symbol on the remote keyless entry transmitter and the horn will chirp the second time you press the lock button.

LOCK FEEDBACK: LAMPS: The parking lamps will flash each time you press the button with the lock symbol on the remote keyless entry transmitter.

LOCK FEEDBACK: HORN: The horn will chirp the second time you press the button with the lock symbol on the remote keyless entry transmitter.

LOCK FEEDBACK: OFF: There will be no feedback when locking the vehicle.

Choose one of the available options and press the customization button while it is displayed on the DIC to select it and move on to the next feature.

Unlock Feedback

Press the customization button until UNLOCK FEEDBACK appears in the display. To select your preference for the feedback you will receive when unlocking the vehicle with the remote keyless entry transmitter, press the select button while UNLOCK FEEDBACK is displayed on the DIC. Pressing the select button will scroll through the following choices:

UNLOCK FEEDBACK: LAMPS (default): The parking lamps will flash each time you press the button with the unlock symbol on the remote keyless entry transmitter.

UNLOCK FEEDBACK: HORN: The horn will chirp the second time you press the button with the unlock symbol on the remote keyless entry transmitter.

UNLOCK FEEDBACK: BOTH: The parking lamps will flash each time you press the button with the unlock symbol on the remote keyless entry transmitter and the horn will chirp the second time you press the unlock button.

UNLOCK FEEDBACK: OFF: There will be no feedback when unlocking the vehicle.

Choose one of the available options and press the customization button while it is displayed on the DIC to select it and move on to the next feature.

Headlamp Delay

Press the customization button until HEADLAMP DELAY appears in the display. To select your preference for how long the headlamps will stay on when you turn off the vehicle, press the select button while HEADLAMP DELAY is displayed on the DIC. Pressing the select button will scroll through the following choices:

- HEADLAMP DELAY: 10 SEC (Seconds) (default)
- HEADLAMP DELAY: 20 SEC
- HEADLAMP DELAY: 40 SEC
- HEADLAMP DELAY: 1 MIN (Minute)
- HEADLAMP DELAY: 2 MIN
- HEADLAMP DELAY: 3 MIN
- HEADLAMP DELAY: OFF

The amount of time you choose will be the amount of time that the headlamps stay on after you turn off the vehicle. If you choose off, the headlamps will turn off as soon as you turn off the vehicle.

Choose one of the available options and press the customization button while it is displayed on the DIC to select it and move on to the next feature.

Perimeter Lights

Press the customization button until PERIMETER LIGHTS appears in the display. To select your preference for perimeter lighting, press the select button while PERIMETER LIGHTS is displayed on the DIC. Pressing the select button will scroll through the following choices:

PERIMETER LIGHTS: ON (default): The headlamps and back-up lamps will come on for 40 seconds, if it is dark enough outside, when you unlock the vehicle with the remote keyless entry transmitter.

PERIMETER LIGHTS: OFF: The perimeter lights will not come on when you unlock the vehicle with the remote keyless entry transmitter.

Choose one of the available options and press the customization button while it is displayed on the DIC to select it and move on to the next feature.

Easy Exit Seat

Press the customization button until EASY EXIT SEAT appears in the display. To select your preference for seat position exit, press the select button while EASY EXIT SEAT is displayed on the DIC. Pressing the select button will scroll through the following choices:

EASY EXIT SEAT: OFF (default): No seat exit recall will occur.

EASY EXIT SEAT: ON: The driver's seat will move to the exit position when the key is removed from the ignition.

Choose one of the available options and press the customization button while it is displayed on the DIC to select it and move on to the next feature. For more information on seat position exit, see *Memory Seat on page 2-90*.

Curb View

Press the customization button until CURB VIEW appears in the display. To select your preference for curb view, press the select button while CURB VIEW is displayed on the DIC. Pressing the select button will scroll through the following choices:

CURB VIEW: OFF (default): Neither outside mirror will be tilted down when the vehicle is shifted into REVERSE (R).

CURB VIEW: PASSENGER: The passenger's outside mirror will be tilted down when the vehicle is shifted into REVERSE (R).

CURB VIEW: DRIVER: The driver's outside mirror will be tilted down when the vehicle is shifted into REVERSE (R).

CURB VIEW: BOTH: The driver's and passenger's outside mirrors will be tilted down when the vehicle is shifted into REVERSE (R).

Choose one of the available options and press the customization button while it is displayed on the DIC to select it and move on to the next feature. For more information on tilt mirror in reverse, see *Outside Automatic Dimming Mirror with Curb View Assist on page 2-55*.

Alarm Warning

Press the customization button until ALARM WARNING appears in the display. To select your preference for alarm warning, press the select button while ALARM WARNING is displayed on the DIC. Pressing the select button will scroll through the following choices:

ALARM WARNING: BOTH (default): The headlamps will flash and the horn will chirp when the alarm is active.

ALARM WARNING: OFF: There will be no alarm warning on activation.

ALARM WARNING: HORN: The horn will chirp when the alarm is active.

ALARM WARNING: LAMPS: The headlamps will flash when the alarm is active.

Choose one of the available options and press the customization button while your choice is displayed on the DIC to select it and move on to the next feature. For more information on alarm warning type, see *Content Theft-Deterrent on page 2-24*.

Language

To select your preference for display language, press the select button while LANGUAGE is displayed on the DIC. Pressing the select button will scroll through the following languages:

- ENGLISH
- FRANCAIS (French)
- ESPANOL (Spanish)

Choose one of the available options and press the customization button while it is displayed on the DIC to select it.

If you accidentally choose a language that you do not want or understand, press and hold the customization button and the trip information button at the same time. The DIC will begin scrolling through the languages in their particular language. English will be in English, Francais will be in French and Espanol will be in Spanish. When you see the language that you would like, release both buttons. The DIC will then display the information in the language you chose.

You can also scroll through the different languages by pressing and holding the trip reset stem for four seconds, as long as you are in the odometer mode.

Display Units

Press the customization button until DISPLAY UNITS appears in the display. To select English or metric, press the select button while DISPLAY UNITS is displayed on the DIC. Pressing the select button will scroll through the following choices:

- DISPLAY UNITS: ENGLISH
- DISPLAY UNITS: METRIC

If you choose English, all information will be displayed in English units. For example, distance in miles and fuel economy in miles per gallon. If you choose metric, all information will be displayed in metric units. For example, distance in kilometers and fuel economy in liters per 100 kilometers.

Choose one of the available options and press the customization button while it is displayed on the DIC to select it and end out of the customizable options.

Audio System(s)

Determine which radio your vehicle has and then read the pages following to familiarize yourself with its features.

Driving without distraction is a necessity for a safer driving experience. See *Defensive Driving on page 4-2*. By taking a few moments to read this manual and get familiar with your vehicle's audio system, you can use it with less effort, as well as take advantage of its features. While your vehicle is parked, set up your audio system by presetting your favorite radio stations, setting the tone and adjusting the speakers. Then, when driving conditions permit, you can tune to your favorite stations using the presets and steering wheel controls (if equipped).

⚠ CAUTION:

This system provides you with a far greater access to audio stations and song listings. Giving extended attention to entertainment tasks while driving can cause a crash and you or others can be injured or killed. Always keep your eyes on the road and your mind on the drive — avoid engaging in extended searching while driving.

Keeping your mind on the drive is important for safe driving. For more information, see *Defensive Driving on page 4-2*. Get familiar with your vehicle's audio system so you can use it with less effort and take full advantage of its features.

Here are some ways in which you can help avoid distraction while driving.

While your vehicle is parked:

- Familiarize yourself with all of its controls.
- Familiarize yourself with its operation.
- Set up your audio system by presetting your favorite radio stations, setting the tone, and adjusting the speakers. Then, when driving conditions permit, you can tune to your favorite radio stations using the presets and steering wheel controls (if equipped).

Notice: **Before adding any sound equipment to your vehicle, such as an audio system, CD player, CB radio, mobile telephone, or two-way radio, make sure that it can be added by checking with your dealer. Also, check federal rules covering mobile radio and telephone units. If sound equipment can be added, it is very important to do it properly. Added sound equipment may interfere with the operation of your vehicle's engine, radio, or other systems, and even damage them. Your vehicle's systems may interfere with the operation of sound equipment that has been added.**

Notice: **The chime signals related to safety belts, parking brake, and other functions of your vehicle operate through the GM radio/entertainment system. If that equipment is replaced or additional equipment is added to your vehicle, the chimes may not work. Make sure that replacement or additional equipment is compatible with your vehicle before installing it. See *Accessories and Modifications on page 5-3*.**

Your vehicle has a feature called Retained Accessory Power (RAP). With RAP, the audio system can be played even after the ignition is turned off. See *Retained Accessory Power (RAP) on page 2-27* for more information.

Setting the Time

The radio may have a button marked with an H or HR to represent hours and an M or MN to represent minutes.

Press and hold the hour button until the correct hour appears on the display. Press and hold the minute button until the correct minute appears on the display. The time can be set with the ignition on or off.

To synchronize the time with an FM station broadcasting Radio Data System (RDS) information, press and hold the hour and minute buttons at the same time until RDS TIME appears on the display. To accept this time, press and hold the hour and minute buttons, at the same time, for another two seconds. If the time is not available from the station, NO UPDAT will appear on the display.

RDS time is broadcast once a minute. After tuning to an RDS broadcast station, it may take a few minutes for the time to update.

Radio with CD

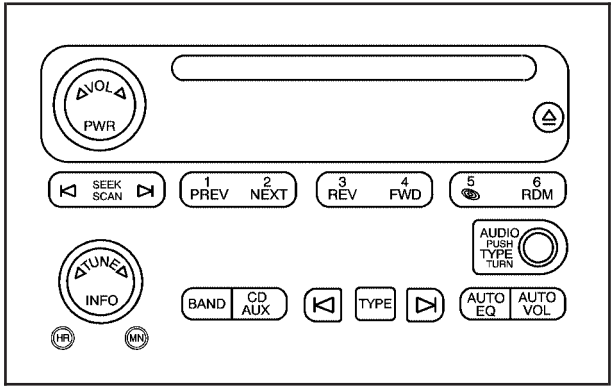

Base Radio Shown, Bose® Similar

If your vehicle has the Bose® audio system, your vehicle will have six Bose® amplified speakers.

Radio Data System (RDS)

The audio system has a Radio Data System (RDS). RDS features are available for use only on FM stations that broadcast RDS information.

With RDS, the radio can do the following:

- Seek to stations broadcasting the selected type of programming
- Receive announcements concerning local and national emergencies
- Display messages from radio stations

This system relies upon receiving specific information from these stations and will only work when the information is available. In rare cases, a radio station may broadcast incorrect information that will cause the radio features to work improperly. If this happens, contact the radio station.

While the radio is tuned to an RDS station, the station name or call letters will appear on the display instead of the frequency. RDS stations may also provide the time of day, a program type (PTY) for current programming, and the name of the program being broadcast.

XM™ Satellite Radio Service

XM™ is a satellite radio service that is based in the 48 contiguous United States and in Canada (if available). XM™ offers over 100 coast-to-coast channels including music, news, sports, talk, and children's programming. XM™ provides digital quality audio and text information that includes song title and artist name. A service fee is required in order to receive the XM™ service. For more information, contact XM™ at www.xmradio.com or call 1-800-852-XMXM (9696).

Playing the Radio

PWR (Power): Press this knob to turn the system on and off.

◁ **VOL** ▷ **(Volume):** Turn this knob to increase or to decrease the volume.

INFO (Information): When the ignition is off, press this knob to display the time.

For RDS, press the INFO knob to change what appears on the display while using RDS. The display options are station name, RDS station frequency, PTY, and the name of the program (if available).

For XM™ (if equipped), press the INFO knob while in XM™ mode to retrieve four different categories of information related to the current song or channel: Artist, Song Title, Category or PTY, Channel Number/Channel Name.

To change the default on the display, press the INFO knob until you see the display you want, then hold the knob until you hear a beep. The selected display will now be the default.

AUTO VOL (Automatic Volume): With automatic volume, the audio system will adjust automatically to make up for road and wind noise as you drive by increasing the volume as vehicle speed increases.

Set the volume at the desired level. Press this button to select LOW, MEDIUM, or HIGH. AVOL will appear on the display. Each higher setting will provide more volume compensation at faster vehicle speeds. To turn automatic volume off, press this button until AVOL OFF appears on the display.

Finding a Station

BAND: Press this button to switch between FM1, FM2, AM, or XM1 or XM2 (if equipped). The display will show the selection.

◁ **TUNE** ▷ **:** Turn this knob to select radio stations.

⊲ **SEEK** ⊳ **:** Press either the SEEK or the TYPE arrows to go to the next or to the previous station and stay there.

The radio will only seek stations with a strong signal that are in the selected band.

⊲ **SCAN** ⊳ **:** Press and hold either the SCAN or the TYPE arrows for two seconds until SCAN appears on the display and you hear a beep. The radio will go to a station, play for a few seconds, then go on to the next station. Press either the SCAN or the TYPE arrows again to stop scanning.

To scan preset stations, press and hold either the SCAN or the TYPE arrows for more than four seconds. PSCN will appear on the display and you will hear a double beep. The radio will go to a preset station, play for a few seconds, then go on to the next preset station. Press either the SCAN or the TYPE arrows again to stop scanning presets.

The radio will only scan stations with a strong signal that are in the selected band.

Setting Preset Stations

Up to 30 stations (six FM1, six FM2, and six AM, six XM1 and six XM2 (if equipped)), can be programed on the six numbered pushbuttons, by performing the following steps:

1. Turn the radio on.
2. Press BAND to select FM1, FM2, AM, or XM1 or XM2.
3. Tune in the desired station.
4. Press and hold one of the six numbered pushbuttons until you hear a beep. Whenever that numbered pushbutton is pressed, the station that was set will return for that pushbutton.
5. Repeat the steps for each pushbutton.

To store an equalization setting to a preset station perform the following:

1. Tune to the preset station.
2. Press and release the AUTO EQ button to select the equalization setting.

   Once the equalization no longer appears on the display, the equalization will be set for that preset station.

Setting the Tone (Bass/Treble)

AUDIO: Push and release the AUDIO knob until BASS or TREB appears on the display. Turn the knob to increase or to decrease. The display will show the bass or treble level. If a station is weak or noisy, decrease the treble.

To adjust the bass or treble to the middle position while it is displayed, push and hold the AUDIO knob. The radio will produce one beep and adjust the display level to the middle position.

To adjust all tone and speaker controls to the middle position, push and hold the AUDIO knob when no tone or speaker control is displayed. ALL CENTERED will appear on the display, you will hear a beep, and the display level will be adjusted to the middle position.

AUTO EQ (Automatic Equalization): Press this button to select customized equalization settings designed for country/western, jazz, talk, pop, rock, and classical. Selecting CUSTOM or changing bass or treble, returns the EQ to the manual bass and treble settings.

The radio will save separate AUTO EQ settings for each preset and source.

If the radio is equipped with the Bose® audio system, the equalization settings are either CUSTOM or TALK.

Adjusting the Speakers (Balance/Fade)

AUDIO: To adjust the balance between the right and the left speakers, push and release the AUDIO knob until BAL appears on the display. Turn the knob to move the sound toward the right or the left speakers.

To adjust the fade between the front and the rear speakers, push and release the AUDIO knob until FADE appears on the display. Turn the knob to move the sound toward the front or the rear speakers.

To adjust the balance or fade to the middle position while it is displayed, push the AUDIO knob, then push it again and hold it until the radio produces one beep. The balance or fade will be adjusted to the middle position and the display will show the speaker balance.

To adjust all tone and speaker controls to the middle position, push and hold the AUDIO knob when no tone or speaker control is displayed. ALL CENTERED will appear on the display, you will hear a beep, and the display level will be adjusted to the middle position.

Finding a Program Type (PTY) Station (RDS and XM™)

To select and find a desired PTY perform the following:

1. Press the TYPE button to activate program type select mode. TYPE and a PTY will appear on the display.
2. Turn the TYPE knob or press and release the TYPE button to select a PTY.
3. Once the desired PTY is displayed, press and release either the TYPE or the SEEK arrows to select and to take you to the PTY's first station.
4. To go to another station within that PTY and the PTY is displayed, press either the TYPE or the SEEK arrows once. If the PTY is not displayed, go back to Step 1.
5. Press either the TYPE or the SEEK arrows to exit program type select mode.

If the radio cannot find the desired program type, NONE will appear on the display and the radio will return to the last station you were listening to.

SCAN: Scan the stations within a PTY by performing the following:

1. Press the TYPE button to activate program type select mode. TYPE and the last selected PTY will appear on the display.
2. Turn the TYPE knob or press and release the TYPE button to select a PTY.
3. Once the desired PTY is displayed, press and hold either the TYPE or the SCAN arrows for two seconds, and the radio will begin scanning the stations in the PTY.
4. Press either the TYPE or the SCAN arrows to stop at a station.

BAND (Alternate Frequency): Alternate frequency allows the radio to switch to a stronger station with the same program type. To turn alternate frequency on, press and hold BAND for two seconds. AF ON will appear on the display. The radio may switch to stations with a stronger frequency.

To turn alternate frequency off, press and hold BAND again for two seconds. AF OFF will appear on the display. The radio will not switch to other stations.

This function does not apply for XM™ Satellite Radio Service.

Setting Preset PTYs (RDS Only)

These buttons have factory PTY presets. Up to 12 PTYs (six FM1 and six FM2), can be programmed on the six numbered pushbuttons, by performing the following steps:

1. Press BAND to select FM1 or FM2.
2. Press the TYPE button to activate program type select mode. TYPE and the last selected PTY will appear on the display.
3. Turn the TYPE knob or press and release the TYPE button to select a PTY.
4. Press and hold one of the six numbered pushbuttons until you hear a beep. Whenever that numbered pushbutton is pressed, the PTY that was set will return.
5. Repeat the steps for each pushbutton.

RDS Messages

INFO (Information): If the current station has a message, the information symbol will appear on the display. Press this button to see the message. The message may display the artist, song title, call in phone numbers, etc.

If the entire message is not displayed, parts of the message will appear every three seconds. To scroll through the message, press and release the INFO button. A new group of words will appear on the display after every press of the button. Once the complete message has been displayed, the information symbol will disappear from the display until another new message is received. The last message can be displayed by pressing the INFO button. You can view the last message until a new message is received or a different station is tuned to.

Radio Messages

CAL ERR (Calibration Error): The audio system has been calibrated for your vehicle from the factory. If CAL ERR appears on the display, it means that the radio has not been configured properly for the vehicle and must be returned to your GM dealer for service.

LOCKED: This message is displayed when the THEFTLOCK® system has locked up. Take the vehicle to your GM dealer for service.

If any error occurs repeatedly, or if an error cannot be corrected, contact your GM dealer.

XM™ Radio Messages

Radio Display Message	Condition	Action Required
XL (Explicit Language Channels)	XL on the radio display, after the channel name, indicates content with explicit language.	These channels, or any others, can be blocked at a customer's request, by calling 1-800-852-XMXM (9696).
Updating	Updating encryption code	The encryption code in the receiver is being updated, and no action is required. This process should take no longer than 30 seconds.
No Signal	Loss of signal	The system is functioning correctly, but the vehicle is in a location that is blocking the XM™ signal. When you move into an open area, the signal should return.
Loading XM	Acquiring channel audio (after 4 second delay)	The audio system is acquiring and processing audio and text data. No action is needed. This message should disappear shortly.
CH Off Air	Channel not in service	This channel is not currently in service. Tune to another channel.
CH Unavail	Channel no longer available	This previously assigned channel is no longer assigned. Tune to another station. If this station was one of the presets, choose another station for that preset button.
No Info	Artist Name/Feature not available	No artist information is available at this time on this channel. The system is working properly.
No Info	Song/Program Title not available	No song title information is available at this time on this channel. The system is working properly.

XM™ Radio Messages (cont'd)

Radio Display Message	Condition	Action Required
No Info	Category Name not available	No category information is available at this time on this channel. The system is working properly.
No Info	No Text/Informational message available	No text or informational messages are available at this time on this channel. The system is working properly.
Not Found	No channel available for the chosen category	There are no channels available for the selected category. The system is working properly.
XM Locked	Theft lock active	The XM™ receiver in the vehicle may have previously been in another vehicle. For security purposes, XM™ receivers cannot be swapped between vehicles. If this message is received after having your vehicle serviced, check with your GM dealer.
Radio ID	Radio ID label (channel 0)	If tuned to channel 0, this message will alternate with the XM™ Radio eight digit radio ID label. This label is needed to activate the service.
Unknown	Radio ID not known (should only be if hardware failure)	If this message is received when tuned to channel 0, there may be a receiver fault. Consult with your GM dealer.
Chk XMRcvr	Hardware failure	If this message does not clear within a short period of time, the receiver may have a fault. Consult with your GM dealer.

Playing a CD

Insert a CD part way into the slot, label side up. The player will pull it in and the CD should begin playing. If you want to insert a CD with the ignition off, first press the eject button or the INFO knob.

If the ignition or radio is turned off with the CD in the player, it will stay in the player. When the ignition or radio is turned on, the CD will start playing where it stopped, if it was the last selected audio source.

When a CD is inserted, the CD symbol will appear on the display. As each new track starts to play, the track number will appear on the display.

The CD player can play the smaller 3 inch (8 cm) single CDs with an adapter ring. Full-size CDs and the smaller CDs are loaded in the same manner.

If playing a CD-R, the sound quality may be reduced due to CD-R quality, the method of recording, the quality of the music that has been recorded, and the way the CD-R has been handled. There may be an increase in skipping, difficulty in finding tracks, and/or difficulty in loading and ejecting. If these problems occur, check the bottom surface of the CD. If the surface of the CD is damaged, such as cracked, broken, or scratched, the CD will not play properly. If the surface of the CD is soiled, see *Care of Your CDs and DVDs on page 3-107* for more information.

If there is no apparent damage, try a known good CD.

Do not add any label to a CD, it could get caught in the CD player. If a CD is recorded on a personal computer and a description label is needed, try labeling the top of the recorded CD with a marking pen instead.

Notice: **If you add any label to a CD, insert more than one CD into the slot at a time, or attempt to play scratched or damaged CDs, you could damage the CD player. When using the CD player, use only CDs in good condition without any label, load one CD at a time, and keep the CD player and the loading slot free of foreign materials, liquids, and debris.**

If an error appears on the display, see “CD Messages” later in this section.

1 PREV (Previous): Press this pushbutton to go to the beginning of the current track if more than eight seconds have played. TRACK and the track number will appear on the display. If this pushbutton is held or pressed more than once, the player will continue moving backward through the CD.

2 NEXT: Press this pushbutton to go to the next track. TRACK and the track number will appear on the display. If this pushbutton is held or pressed more than once, the player will continue moving forward through the CD.

3 REV (Reverse): Press and hold this pushbutton to quickly reverse within a track. Press and hold this pushbutton for less than two seconds to reverse at six times the normal playing speed. Press and hold it for more than two seconds to reverse at 17 times the normal playing speed. Release this pushbutton to play the passage. ET and the elapsed time of the track will appear on the display.

4 FWD (Forward): Press and hold this pushbutton to quickly advance within a track. Press and hold this pushbutton for less than two seconds to advance at six times the normal playing speed. Press and hold it for more than two seconds to advance at 17 times the normal playing speed. Release this pushbutton to play the passage. ET and the elapsed time of the track will appear on the display.

6 RDM (Random): Press this pushbutton to hear the tracks in random, rather than sequential, order. RDM ON will appear on the display. RDM T and the track number will appear on the display when each track starts to play. Press this pushbutton again to turn off random play. RDM OFF will appear on the display.

⏮ **SEEK** ⏭ **:** Press the left arrow to go to the start of the current or to the previous track. Press the right arrow to go to the start of the next track. If either arrow is held or pressed more than once, the player will continue moving backward or forward through the CD.

⏮ **SCAN** ⏭ **:** Press and hold either the SCAN or the TYPE arrows for more than two seconds until SCAN appears on the display and you hear a beep. The radio will go to the next track, play for 10 seconds, then go on to the next track. Press either the SCAN or the TYPE arrows again, to stop scanning.

INFO (Information): Press this knob to see how long the current track has been playing. ET and the elapsed time will appear on the display. To change the default on the display, track or elapsed time, press the knob until you see the display you want, then hold the knob for two seconds. The radio will produce one beep and the selected display will now be the default.

BAND: Press this button to listen to the radio when a CD is playing. The inactive CD will remain safely inside the radio for future listening.

CD AUX (Auxiliary): Press this button to play a CD when listening to the radio. The inactive CD will remain safely inside the radio for future listening.

⏏ **(Eject):** Press this button to stop and eject a CD when it is playing or to eject a CD when it is not playing. Eject may be activated with either the ignition or radio off. CDs may be loaded with the radio and ignition off if this button is pressed first.

CD Messages

If the CD comes out, it could be for one of the following reasons:

- It is very hot. When the temperature returns to normal, the CD should play.
- You are driving on a very rough road. When the road becomes smoother, the CD should play.
- The CD is dirty, scratched, wet, or upside down.
- The air is very humid. If so, wait about an hour and try again.
- There may have been a problem while burning the CD.
- The label may be caught in the CD player.

If the CD is not playing correctly, for any other reason, try a known good CD.

If any error occurs repeatedly or if an error cannot be corrected, contact your GM dealer. If the radio displays an error message, write it down and provide it to your GM dealer when reporting the problem.

Radio with Six-Disc CD

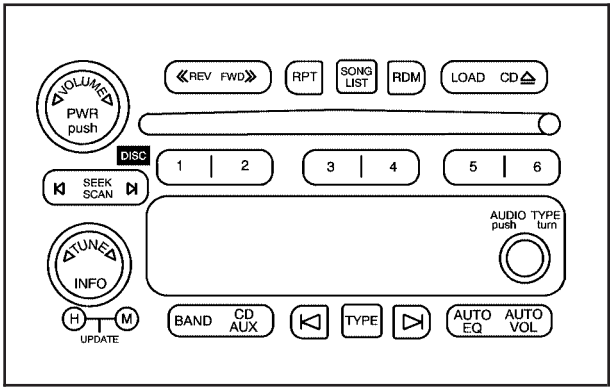

Base Radio Shown, Bose® Similar

If your vehicle has the Bose® audio system, your vehicle will have six Bose® amplified speakers.

Radio Data System (RDS)

The audio system has a Radio Data System (RDS). RDS features are available for use only on FM stations that broadcast RDS information.

With RDS, the radio can do the following:

- Seek to stations broadcasting the selected type of programming
- Receive announcements concerning local and national emergencies
- Display messages from radio stations

This system relies upon receiving specific information from these stations and will only work when the information is available. In rare cases, a radio station may broadcast incorrect information that will cause the radio features to work improperly. If this happens, contact the radio station.

While the radio is tuned to an RDS station, the station name or call letters will appear on the display instead of the frequency. RDS stations may also provide the time of day, a program type (PTY) for current programming, and the name of the program being broadcast.

XM™ Satellite Radio Service

XM™ is a satellite radio service that is based in the 48 contiguous United States and in Canada (if available). XM™ offers over 100 coast-to-coast channels including music, news, sports, talk, and children's programming. XM™ provides digital quality audio and text information that includes song title and artist name. A service fee is required in order to receive the XM™ service. For more information, contact XM™ at www.xmradio.com or call 1-800-852-XMXM (9696).

Playing the Radio

PWR (Power): Push this knob to turn the system on and off.

◁ **VOLUME** ▷ **:** Turn this knob to increase or to decrease the volume.

INFO (Information): When the ignition is off, press this knob to display the time.

For RDS, press the INFO knob to change what appears on the display while using RDS. The display options are station name, RDS station frequency, PTY, and the name of the program (if available).

For XM™ (if equipped), press the INFO knob while in XM™ mode to retrieve four different categories of information related to the current song or channel: Artist, Song Title, Category or PTY, Channel Number/ Channel Name.

To change the default on the display, press the INFO knob until you see the display you want, then hold the knob until you hear a beep. The selected display will now be the default.

AUTO VOL (Automatic Volume): With automatic volume, the audio system will adjust automatically to make up for road and wind noise as you drive by increasing the volume as vehicle speed increases.

Set the volume at the desired level. Press this button to select MIN, MED, or MAX. AUTO VOL will appear on the display. Each higher setting will provide more volume compensation at faster vehicle speeds. To turn automatic volume off, press this button until AUTO VOL OFF appears on the display.

Finding a Station

BAND: Press this button to switch between FM1, FM2, AM, or XM1 or XM2 (if equipped). The display will show the selection.

◁ **TUNE** ▷ **:** Turn this knob to select radio stations.

⊲ **SEEK** ⊳ **:** Press either the SEEK or the TYPE arrows to go to the next or to the previous station and stay there.

The radio will only seek stations with a strong signal that are in the selected band.

⊲ **SCAN** ⊳ **:** Press and hold either the SCAN or the TYPE arrows for two seconds until SCN appears on the display and you hear a beep. The radio will go to a station, play for a few seconds, then go on to the next station. Press either the SCAN or the TYPE arrows again to stop scanning.

To scan preset stations, press and hold either the SCAN or the TYPE arrows for more than four seconds. PSC will appear on the display and you will hear a double beep. The radio will go to a preset station, play for a few seconds, then go on to the next preset station. Press either the SCAN or the TYPE arrows again to stop scanning presets.

The radio will only scan stations with a strong signal that are in the selected band.

Setting Preset Stations

Up to 30 stations (six FM1, six FM2, and six AM, six XM1 and six XM2 (if equipped)), can be programed on the six numbered pushbuttons, by performing the following steps:

1. Turn the radio on.
2. Press BAND to select FM1, FM2, AM, or XM1 or XM2.
3. Tune in the desired station.
4. Press and hold one of the six numbered pushbuttons until you hear a beep. Whenever that numbered pushbutton is pressed, the station that was set will return for that pushbutton.
5. Repeat the steps for each pushbutton.

To store an equalization setting to a preset station perform the following:

1. Tune to the preset station.
2. Press and release the AUTO EQ button to select the equalization setting.

   Once the equalization no longer appears on the display, the equalization will be set for that preset station.

Setting the Tone (Bass/Treble)

AUDIO: Push and release the AUDIO knob until BASS or TREB appears on the display. Turn the knob to increase or to decrease. The display will show the bass or treble level. If a station is weak or noisy, decrease the treble.

To adjust the bass or treble to the middle position while it is displayed, push and hold the AUDIO knob. The radio will produce one beep and adjust the display level to the middle position.

To adjust all tone and speaker controls to the middle position, push and hold the AUDIO knob when no tone or speaker controls are displayed. ALL CENTERED will appear on the display and you will hear a beep.

AUTO EQ (Automatic Equalization): Press this button to select customized equalization settings designed for country/western, jazz, talk, pop, rock, and classical.

The radio will save separate AUTO EQ settings for each preset and source.

If the radio is equipped with the Bose® audio system, the equalization settings are either CUSTOM or TALK.

Adjusting the Speakers (Balance/Fade)

AUDIO: To adjust the balance between the right and the left speakers, push and release the AUDIO knob until BAL appears on the display. Turn the knob to move the sound toward the right or the left speakers.

To adjust the fade between the front and rear speakers, push and release the AUDIO knob until FAD appears on the display. Turn the knob to move the sound toward the front or the rear speakers.

To adjust the balance or fade to the middle position while it is displayed, push and hold the AUDIO knob. The radio will produce one beep and adjust the display level to the middle position.

To adjust all tone and speaker controls to the middle position, push and hold the AUDIO knob when no tone or speaker controls are displayed. ALL CENTERED will appear on the display and you will hear a beep.

Finding a Program Type (PTY) Station (RDS and XM™)

To select and find a desired PTY perform the following:

1. Press the TYPE button to activate program type select mode. P-TYPE and the last selected PTY will appear on the display.
2. Turn the TYPE knob or press and release the TYPE button to select a PTY.
3. Once the desired PTY is displayed, press either the TYPE or the SEEK arrows to select and to take you to the PTY's first station.
4. To go to another station within that PTY, press the TYPE button then, press either the TYPE or the SEEK arrows once. If the PTY is not displayed, go back to Step 1.
5. Press either the TYPE or the SEEK arrows twice to exit program type select mode.

SCAN: Scan the stations within a PTY by performing the following:

1. Press the TYPE button to activate program type select mode. P-TYPE and the last selected PTY will appear on the display.
2. Turn the TYPE knob or press and release the TYPE button to select a PTY.
3. Once the desired PTY is displayed, press and hold either the TYPE or the SCAN arrows for two seconds, and the radio will begin scanning the stations in the PTY.
4. Press either the TYPE or the SCAN arrows to stop scanning.

BAND (Alternate Frequency): Alternate frequency allows the radio to switch to a stronger station with the same program type. To turn alternate frequency on, press and hold BAND for two seconds. AF ON will appear on the display. The radio may switch to stations with a stronger frequency.

To turn alternate frequency off, press and hold BAND again for two seconds. AF OFF will appear on the display. The radio will not switch to other stations.

This function does not apply for XM™ Satellite Radio Service.

Setting Preset PTYs (RDS Only)

These pushbuttons have factory PTY presets. Up to 12 PTYs (six FM1 and six FM2), can be programmed on the six numbered pushbuttons, by performing the following steps:

1. Press BAND to select FM1 or FM2.
2. Press the TYPE button to activate program type select mode. P-TYPE and the last selected PTY will appear on the display.
3. Turn the TYPE knob or press and release the TYPE button to select a PTY.
4. Press and hold one of the six numbered pushbuttons until you hear a beep. Whenever that numbered pushbutton is pressed, while in PTY mode, the PTY that was set will return.
5. Repeat the steps for each pushbutton.

RDS Messages

INFO (Information): If the current station has a message, INFO will appear on the display. Press this button to see the message. The message may display the artist, song title, call in phone numbers, etc.

If the entire message is not displayed, parts of the message will appear every three seconds. To scroll through the message, press and release the INFO button. A new group of words will appear on the display after every press of this button. Once the complete message has been displayed, INFO will disappear from the display until another new message is received. The last message can be displayed by pressing the INFO button. You can view the last message until a new message is received or a different station is tuned to.

Radio Messages

CAL ERR (Calibration Error): The audio system has been calibrated for your vehicle from the factory. If CAL ERR appears on the display, it means that the radio has not been configured properly for the vehicle and must be returned to your GM dealer for service.

LOCKED: This message is displayed when the THEFTLOCK® system has locked up. Take the vehicle to your GM dealer for service.

If any error occurs repeatedly, or if an error cannot be corrected, contact your GM dealer.

XM™ Radio Messages

Radio Display Message	Condition	Action Required
XL (Explicit Language Channels)	XL on the radio display, after the channel name, indicates content with explicit language.	These channels, or any others, can be blocked at a customer's request, by calling 1-800-852-XMXM (9696).
Updating	Updating encryption code	The encryption code in the receiver is being updated, and no action is required. This process should take no longer than 30 seconds.
No Signal	Loss of signal	The system is functioning correctly, but the vehicle is in a location that is blocking the XM™ signal. When you move into an open area, the signal should return.
Loading XM	Acquiring channel audio (after 4 second delay)	The audio system is acquiring and processing audio and text data. No action is needed. This message should disappear shortly.
CH Off Air	Channel not in service	This channel is not currently in service. Tune to another channel.

XM™ Radio Messages (cont'd)

Radio Display Message	Condition	Action Required
CH Unavail	Channel no longer available	This previously assigned channel is no longer assigned. Tune to another station. If this station was one of the presets, choose another station for that preset button.
No Info	Artist Name/Feature not available	No artist information is available at this time on this channel. The system is working properly.
No Info	Song/Program Title not available	No song title information is available at this time on this channel. The system is working properly.
No Info	Category Name not available	No category information is available at this time on this channel. The system is working properly.
No Info	No Text/Informational message available	No text or informational messages are available at this time on this channel. The system is working properly.
Not Found	No channel available for the chosen category	There are no channels available for the selected category. The system is working properly.
XM Locked	Theft lock active	The XM™ receiver in the vehicle may have previously been in another vehicle. For security purposes, XM™ receivers cannot be swapped between vehicles. If this message is received after having your vehicle serviced, check with your GM dealer.
Radio ID	Radio ID label (channel 0)	If tuned to channel 0, this message will alternate with the XM™ Radio eight digit radio ID label. This label is needed to activate the service.

XM™ Radio Messages (cont'd)

Radio Display Message	Condition	Action Required
Unknown	Radio ID not known (should only be if hardware failure)	If this message is received when tuned to channel 0, there may be a receiver fault. Consult with your GM dealer.
Chk XMRcvr	Hardware failure	If this message does not clear within a short period of time, your receiver may have a fault. Consult with your GM dealer.

Playing a CD

If the ignition or radio is turned off, with a CD in the player, it will stay in the player. When the ignition or radio is turned on, the CD will start playing where it stopped, if it was the last selected audio source.

When a CD is inserted, the CD symbol will appear on the display. As each new track starts to play, the track number will appear on the display.

The CD player can play the smaller 3 inch (8 cm) single CDs with an adapter ring. Full-size CDs and the smaller CDs are loaded in the same manner.

If playing a CD-R, the sound quality may be reduced due to CD-R quality, the method of recording, the quality of the music that has been recorded, and the way the CD-R has been handled. There may be an increase in skipping, difficulty in finding tracks, and/or difficulty in loading and ejecting. If these problems occur, check the bottom surface of the CD. If the surface of the CD is damaged, such as cracked, broken, or scratched, the CD will not play properly. If the surface of the CD is soiled, see *Care of Your CDs and DVDs on page 3-107* for more information.

If there is no apparent damage, try a known good CD.

Do not add any label to a CD, it could get caught in the CD player. If a CD is recorded on a personal computer and a description label is needed, try labeling the top of the recorded CD with a marking pen instead.

Notice: **If you add any label to a CD, insert more than one CD into the slot at a time, or attempt to play scratched or damaged CDs, you could damage the CD player. When using the CD player, use only CDs in good condition without any label, load one CD at a time, and keep the CD player and the loading slot free of foreign materials, liquids, and debris.**

If an error appears on the display, see “CD Messages” later in this section.

LOAD: Press this button to load CDs into the CD player. This CD player will hold up to six CDs.

To insert one CD, do the following:

1. Turn the ignition on.
2. Press and release the LOAD button.
3. Wait for the indicator light, located to the right of the slot, to turn green.
4. Load a CD. Insert the CD part way into the slot, label side up. The player will pull the CD in.

To insert multiple CDs, do the following:

1. Turn the ignition on.
2. Press and hold the LOAD button for two seconds.

   You will hear a beep and the indicator light, located to the right of the slot, will begin to flash and MULTI LOAD # will appear on the display.
3. Once the light stops flashing and turns green, INSERT CD # will appear on the display, load a CD. Insert the CD part way into the slot, label side up. The player will pull the CD in.

   Once the CD is loaded, the indicator light will begin flashing again. Once the light stops flashing and turns green, you can load another CD. The CD player takes up to six CDs. Do not try to load more than six.

To load more than one CD but less than six, complete Steps 1 through 3. When finished loading CDs, press the LOAD button to cancel the loading function. The radio will begin to play the last CD loaded.

If more than one CD has been loaded, a number for each CD will appear on the display.

Playing a Specific Loaded CD

For every CD loaded, a number will appear on the display. To play a specific CD, first press the CD AUX button, then press the numbered pushbutton that corresponds to the CD. A small bar will appear under the CD number that is playing and the track number will appear on the display.

If an error appears on the display, see “CD Messages” later in this section.

CD ⏏ (Eject): Press this button to eject CD(s).

To eject the CD that is currently playing, press and release this button.

To eject multiple CDs, do the following:

1. Press and hold the CD eject button for two seconds.

   You will hear a beep and the indicator light, located to the right of the slot, will begin to flash and EJECT ALL will appear on the display.

2. Once the light stops flashing, REMOVE CD # will appear on the display. The CD will eject and can be removed.

   Once the CD is removed, the indicator light will begin flashing again and another CD will eject.

   To stop ejecting the CDs, press the LOAD or the eject button.

If the CD is not removed, after 25 seconds, the CD will be automatically pulled back into the player. If CD is pushed back into the player, before the 25-second time period is complete, the player will sense an error and will try to eject the CD several times before stopping.

Do not repeatedly press the CD eject button to eject a CD after you have tried to push it in manually. The player’s 25-second eject timer will reset at each press of eject, causing the player to not eject the CD until the 25-second time period has elapsed.

≪ REV (Reverse): Press and hold this button to reverse quickly within a track. You will hear sound at a reduced volume. Release the button to play the passage. The elapsed time of the track will appear on the display.

FWD ≫ (Forward): Press and hold this button to advance quickly within a track. You will hear sound at a reduced volume. Release the button to play the passage. The elapsed time of the track will appear on the display.

RPT (Repeat): With repeat, one track or an entire CD can be repeated.

To use repeat, do the following:

- To repeat the track you are listening to, press and release the RPT button. RPT will appear on the display. Press RPT again to turn off repeat play.
- To repeat the CD you are listening to, press and hold the RPT button for two seconds. RPT will appear on the display. Press RPT again to turn off repeat play.

RDM (Random): With random, you can listen to the tracks in random, rather than sequential, order, on one CD or on all of the CDs. To use random, do one of the following:

- To play the tracks on the CD you are listening to in random order, press and release the RDM button. RANDOM ONE will appear on the display. Press RDM again to turn off random play.
- To play the tracks on all of the CDs that are loaded in random order, press and hold RDM for more than two seconds. You will hear a beep and RANDOM ALL will appear on the display. Press RDM again to turn off random play.

AUTO EQ (Automatic Equalization): Press AUTO EQ to select the equalization setting while playing a CD. The equalization will be stored whenever a CD is played. For more information on AUTO EQ, see “AUTO EQ” listed previously in this section.

⏮ SEEK ⏭ : Press the left arrow to go to the start of the current track, if more than ten seconds have played. Press the right arrow to go to the next track. If either arrow is pressed more than once, the player will continue moving backward or forward through the CD.

⏮ SCAN ⏭ : To scan one CD, press and hold either SCAN arrow for more than two seconds until TRACK SCAN appears on the display and you hear a beep. The radio will go to the next track, play for 10 seconds, then go on to the next track. Press either SCAN arrow again, to stop scanning.

To scan all loaded CDs, press and hold either SCAN arrow for more than four seconds until ALL CD SCAN appears on the display and you hear a beep. Use this feature to listen to 10 seconds of the first track of each loaded CD. Press either SCAN arrow again, to stop scanning.

INFO (Information): Press this knob to see how long the current track has been playing. To change the default on the display, track or elapsed time, press the knob until you see the display you want, then press and hold the knob until you hear a beep. The selected display will now be the default.

BAND: Press this button to listen to the radio when a CD is playing. The inactive CD(s) will remain safely inside the radio for future listening.

CD AUX (Auxiliary): Press this button to play a CD when listening to the radio. Inactive CD(s) will remain safely inside the radio for future listening.

Using Song List Mode

The six-disc CD changer has a feature called song list. This feature is capable of saving 20 track selections.

To save tracks into the song list feature, perform the following steps:

1. Turn the CD player on and load it with at least one CD. See “LOAD CD” listed previously in this section for more information.
2. Check to see that the CD changer is not in song list mode. S-LIST should not appear on the display. If S-LIST is present, press the SONG LIST button to turn it off.
3. Select the desired CD by pressing the numbered pushbutton and then use the SEEK or TYPE right arrow to locate the track to be saved. The track will begin to play.
4. Press and hold the SONG LIST button to save the track into memory. When SONG LIST is pressed, one beep will be heard immediately. After two seconds of continuously pressing the SONG LIST button, two beeps will sound to confirm the track has been saved.
5. Repeat Steps 3 and 4 for saving other selections.

S-LIST FULL will appear on the display if you try to save more than 20 selections.

To play the song list, press the SONG LIST button. One beep will be heard and S-LIST will appear on the display. The recorded tracks will begin to play in the order they were saved.

Seek through the song list by using the SEEK or TYPE arrows. Seeking past the last saved track will return to the first saved track.

To delete tracks from the song list, perform the following steps:

1. Turn the CD player on.
2. Press the SONG LIST button to turn song list on. S-LIST will appear on the display.
3. Press either SEEK or TYPE arrow to select the desired track to be deleted.
4. Press and hold the SONG LIST button for two seconds. When SONG LIST is pressed, one beep will be heard immediately. After two seconds of continuously pressing the SONG LIST button, two beeps will be heard to confirm that the track has been deleted.

After a track has been deleted, the remaining tracks are moved up the list. When another track is added to the song list, the track will be added to the end of the list.

To delete the entire song list, perform the following steps:

1. Turn the CD player on.
2. Press the SONG LIST button to turn song list on. S-LIST will appear on the display.
3. Press and hold the SONG LIST button for more than four seconds. One beep will be heard, followed by two beeps after two seconds, and a final beep will be heard after four seconds. S-LIST EMPTY will appear on the display indicating the song list has been deleted.

If a CD is ejected, and the song list contains saved tracks from that CD, those tracks are automatically deleted from the song list. Any tracks saved to the song list again are added to the bottom of the list.

To end song list mode, press the SONG LIST button. One beep will be heard and S-LIST will be removed from the display.

CD Messages

CHECK CD: If this message appears on the display and/or the CD comes out, it could be for one of the following reasons:

- It is very hot. When the temperature returns to normal, the CD should play.
- You are driving on a very rough road. When the road becomes smoother, the CD should play.
- The CD is dirty, scratched, wet, or upside down.
- The air is very humid. If so, wait about an hour and try again.
- There may have been a problem while burning the CD.
- The label may be caught in the CD player.

If the CD is not playing correctly, for any other reason, try a known good CD.

If any error occurs repeatedly or if an error cannot be corrected, contact your GM dealer. If the radio displays an error message, write it down and provide it to your GM dealer when reporting the problem.

Listening to a DVD

If your vehicle has the Rear Seat Entertainment (RSE) system and a DVD is playing, the DVD symbol will appear on the radio display indicating that the DVD is available and can be listened to through your vehicle's speakers.

To listen to the DVD, press the CD AUX button until RSE appears on the radio display. The current radio source will stop and the DVD sound will come through the speakers.

To stop listening to the DVD, press the CD AUX button, if a CD is loaded, or press the BAND button to select a different source.

When the RSE system is turned off, the DVD symbol will go off of the radio display and RSE OFF will appear on the radio display. The radio will return to the last radio source that you were listening to.

See *Rear Seat Entertainment System on page 3-93* for more information.

Navigation/Radio System

Your vehicle may have a navigation radio system.

The navigation system has built-in features intended to minimize driver distraction. Technology alone, no matter how advanced, can never replace your own judgment. See the navigation system manual for some tips to help you reduce distractions while driving.

Rear Seat Entertainment System

Your vehicle may have a DVD Rear Seat Entertainment (RSE) system. The RSE system includes a DVD player, a video display screen, two sets of wireless headphones, and a remote control.

Parental Control

This button is located behind the video screen. Press this button while a DVD or CD is playing to freeze the video and mute the audio. The video screen will display Parental Control ON and the power indicator light on the DVD player will flash. It will also disable all other button operations from the remote control and the DVD player, with the exception of the eject button. Press this button again to restore operation of the DVD player.

This button may also be used to turn the DVD player power on and automatically resume play if the ignition is in RUN, ACCESSORY, or if RAP is active.

Before You Drive

The RSE system is for rear seat passengers only. The driver cannot safely view the video screen while driving and should not try to do so.

Headphones

The RSE system includes two sets of wireless headphones.

Each set of headphones has an ON/OFF control. An indicator light will illuminate on the headphones when they are on. If the light does not illuminate, the batteries may need to be replaced. See “Battery Replacement” following for more information.

Each set of headphones has a volume knob. To adjust the volume, adjust this knob.

The transmitters are located below the video display screen. The headphones will shut off automatically if they lose the signal from the system after about four minutes to save battery power. The signal may be lost if the system is turned off or if the headphones are out of range of the transmitters.

When using the wired headphones, if the front seat passengers play a CD in the Radio with Six-Disc CD (if equipped) or use XM™ Satellite Radio Service (if equipped), you will hear the audio for these sources, instead of the DVD or CD that is currently playing through the RSE.

Notice: **Do not store the headphones in heat or direct sunlight. This could damage the headphones and repairs will not be covered by your warranty. Keep the headphones stored in a cool, dry place.**

Both sets of rear seat headphones may include foam ear pads that can be replaced.

Foam ear pads on these headphones may become worn or damaged. The headphone foam ear pads can become damaged if they are not handled or stored properly. If the foam ear pads do become damaged or worn out, the pads can be replaced separately from the headphone set. It is not necessary to replace the complete headphone set.

The headphone replacement foam ear pads can be ordered in pairs. See your dealer for more information.

Battery Replacement

To change the batteries, do the following:

1. Loosen the screw on the battery compartment door located on the left side of the headphone earpiece.
2. Replace the two AAA batteries in the compartment. Make sure that they are installed correctly, using the diagram on the inside of the battery compartment.
3. Tighten the screw to close the compartment door.

If the headphones are to be stored for a long period of time, remove the batteries and keep them in a cool, dry place.

Stereo RCA Jacks

The RCA jacks are located behind the video screen. The RCA jacks allow audio and video signals to be connected from an auxiliary device such as a camcorder or a video game unit to the RSE system. Standard RCA cables, not included, are needed to connect the auxiliary device to the RCA jacks. The yellow connector inputs video and the red and white connectors input right and left audio. Refer to the manufacturer’s instructions for proper connection of the auxiliary device.

To use the auxiliary inputs on the RSE system, connect an external auxiliary device to the color-coded RCA jacks and turn both the auxiliary device and the RSE system power on. If the RSE system had been previously in the DVD player mode, pressing the SRCE button on the faceplate or the remote control will switch the RSE system between the auxiliary device and the DVD player.

How to Change the Video Format when in the Auxiliary Mode

The auxiliary input video format is preset to NTSC. In some countries, the video format may be in the PAL system. To change the video format, perform the following:

1. Press the display menu button.
2. Press the down arrow button to highlight the Video Format option.
3. Press the enter button to select Video Format.
4. Press the right or left arrow button to select the desired video format.
5. Press the enter button to accept the change.

Audio Output

Audio from the DVD player or auxiliary inputs may be heard through the following possible sources:

- Wireless Headphones
- Vehicle Speakers
- Vehicle wired headphone jacks on the Rear Seat Audio system (if equipped)

The RSE system will always transmit the audio signal by infrared to the wireless headphones, if there is audio available. See “Headphones” previously for more information.

The RSE system is capable of outputting audio to the vehicle speakers by using the radio. The RSE system may be selected as an audio source on the radio if the RSE system power is on. Once the RSE system is selected as an audio source on the radio, adjust the speaker volume on the radio, if necessary. If the RSE system power is not on, the RSE system will not be an available source on the radio. Refer to the radio information for the radio that your vehicle has for more information.

The RSE system is capable of outputting audio to the wired headphone jacks on the rear seat audio system (if equipped). The RSE system may be selected as an audio source on the rear seat audio system if the RSE system power is on. Refer to *Rear Seat Audio (RSA) on page 3-104* for more information.

Video Screen

The video screen is located in the overhead console. To use the video screen, push forward on the release latch and the screen will fold down. Adjust the screen's position as desired. When the video screen is not in use, push it up into its latched position.

The DVD player and display will continue to operate when the screen is in the up or the down position. The video screen contains the transmitters for the wireless headphones and the remote control. If the screen is in the closed position, the signals will not be available for the operation of the headphones or the remote control.

Notice: **Avoid directly touching the video screen, as damage may occur. See "Cleaning the Video Screen" later in this section for more information.**

DVD Player

The DVD player is located in the overhead console. The DVD player can be controlled by the buttons on the DVD player and/or by the buttons on the remote control. See "Remote Control" later in this section for more information.

The DVD player power may be turned on when the ignition is in RUN, ACCESSORY, or when Retained Accessory Power (RAP) is active.

The RSE system DVD player is only compatible with DVDs of the appropriate region code for the country that the vehicle was sold in. The DVD region code is printed on the jacket of most DVDs.

Standard audio CDs, CD-R, CD-RW, Video CD and Photo CD/CD-R media are fully supported by this DVD player. DVD-R and DVD-RW media is supported if formatted as DVD-Video. DVD+R and DVD+RW media may or may not be supported by the DVD player. The DVD player does not support DVD-RAM, DVD-ROM, and DVD Audio media. An error message will appear on the display if this type of media is inserted into the DVD player.

When using the wired headphones, not included, if the front seat passengers play a CD in the Radio with Six-Disc CD (if equipped) or use XM™ Satellite Radio Service (if equipped), you will hear the audio for these sources, instead of the DVD or CD that is currently playing through the RSE.

If an error message appears on the video screen, see "DVD Messages" later in this section.

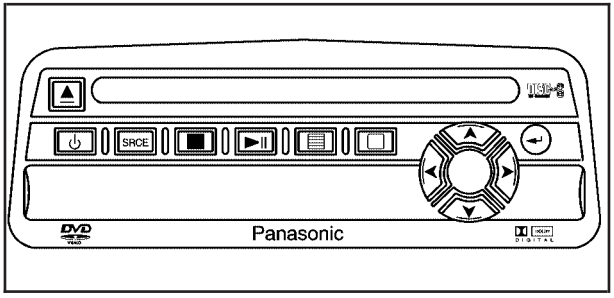

DVD Player Buttons

⏻ **(Power):** Press this button to turn the RSE system on and off. The power indicator light will illuminate when the power is on.

⏏ **(Eject):** Press this button to eject a DVD or CD.

SRCE (Source): Press this button to switch between the DVD player and an auxiliary source.

■ **(Stop):** Press this button to stop playing, rewinding, or fast forwarding a DVD or CD. Press this button twice to return to the beginning of the DVD.

►‖ **(Play/Pause):** Press this button to start play of a DVD or CD. Press this button while a DVD or CD is playing to pause it. Press this button again to continue the play of the DVD or CD.

▤ **(Main DVD Menu):** Press this button to access the DVD menu. The DVD menu is different on every DVD. Use the up, down, left, and right arrow buttons to move the cursor around the DVD menu. After making a selection press the enter button. This button only operates when playing a DVD.

▢ **(Set-up Menu):** Press this button to adjust the color, tint, brightness, contrast, display mode, and dynamic range compression. The dynamic range compression feature can be used to reduce loud audio and increase low audio produced by some DVDs.

To change a feature back to the factory default setting, press this button to display the feature, then press and hold this button. The default setting will appear on the display.

While playing an Audio or DVD disc, press and hold this button to display and to remove the track and time information.

▲, ▼, ◄, ► **(Menu Navigation Arrows):** Use the arrow buttons to navigate through a menu.

◄┘ **(Enter):** Press this button to select the choices that are highlighted in any menu.

Playing a Disc

To play a disc, gently insert the disc with the label side up into the loading slot. The DVD player will continue loading the disc and the player will automatically start, if the vehicle is in RUN, ACCESSORY, or when RAP is active.

If a disc is already in the player, press the play/pause button on the DVD player faceplate or on the remote control.

Some DVDs will not allow fast forwarding or skipping of the copyright information or the previews. Some DVDs will begin playing after the previews have finished. If the DVD does not begin to play the main title, refer to the on-screen instructions.

Stopping and Resuming Playback

To stop playing a disc, press and release the stop button on the DVD player faceplate or the remote control.

To resume playback, press the play/pause button on the DVD player faceplate or the remote control. The movie should resume play from where it was last stopped, if the disc has not been ejected and the stop button has not been pressed twice. If the disc has been ejected or if the stop button has been pressed twice, the disc will resume play at the beginning.

Ejecting a Disc

Press the eject button on the DVD player faceplate to eject the disc. There is not an eject button on the remote control.

If a disc is ejected from the player, but is not removed, the DVD player will reload the disc after a short period of time. The disc will be stored in the DVD player. The DVD player will not resume play of the disc automatically.

Remote Control

To use the remote control, aim it at the transmitter window below the video screen and press the desired button. Direct sunlight or very bright light may affect the ability of the RSE system to receive signals from the remote control. If the remote control does not seem to be working, the batteries may need to be replaced. See “Battery Replacement” later in this section.

Objects blocking the line of sight may also affect the function of the remote control.

Notice: **Storing the remote control in a hot area or in direct sunlight may damage it, and the repairs will not be covered by your warranty. Keep the remote control stored in a cool, dry place.**

To extend the life of the batteries, the remote control does not have a press and hold feature.

Remote Control Buttons

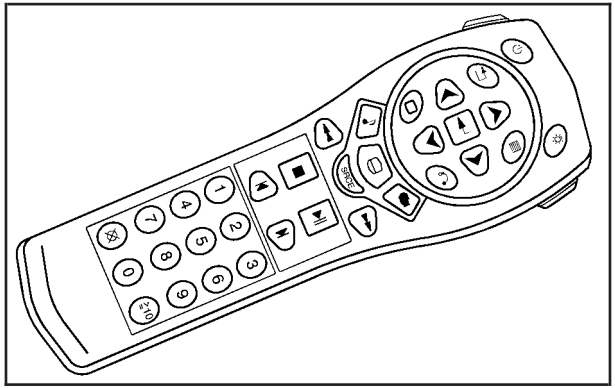

⏻ **(Power):** Press this button to turn the DVD player on and off.

(Title): Press this button to return the DVD to the main menu of the DVD.

▲, ▼, ◀, ▶ **(Menu Navigation Arrows):** Use the arrow buttons to navigate through a menu.

(Set-up Menu): Press this button to adjust the color, tint, brightness, contrast, display mode, and dynamic range compression. The dynamic range compression feature can be used to reduce loud audio and increase low audio produced by some DVDs.

♪ **(Audio):** Press this button to display a menu that will only appear when a DVD is being played. The format and content of this function will vary for each disc.

◀◀ **(Fast Reverse):** Press this button to fast reverse the DVD or CD. To stop fast reversing, press this button again. This button may not work when the DVD is playing the copyright information or the previews.

SRCE (Source): Press this button to switch between the DVD player and an auxiliary source.

■ **(Stop):** Press this button to stop playing, rewinding, or fast forwarding a DVD or CD. Press this button twice to return to the beginning of the DVD.

|◀ **(Previous Track/Chapter):** Press this button to return to the start of the current track or chapter. Press this button again to return to the previous track or chapter. This button may not work when the DVD is playing the copyright information or the previews.

1 through 0 (Numeric Keypad): The numeric keypad provides you with the capability of direct chapter, title, and track number selection.

≧**10 (Double Digit Entries):** Press this button to select chapter, title, and track numbers greater than 9. Press this button before inputting the number.

⊗ **(Clear):** Press this button within three seconds after inputting a number to clear the number(s).

☼ **(Illumination):** Press this button to turn the remote control backlight on. The backlight will time out after about 7 to 10 seconds if no other button is pressed while the backlight is on.

▤ **(Main DVD Menu):** Press this button to access the DVD menu. The DVD menu is different on every DVD. Use the up, down, left, and right arrow buttons to move the cursor around the DVD menu. After making a selection press the enter button. This button only operates when playing a DVD.

◀┘ **(Enter):** Press this button to select the choices that are highlighted in any menu.

↶● **(Return):** Press this button to exit the current active menu and return to the previous menu. This button will operate only when a DVD is playing and a menu is active.

(Camera Angle): Press this button to change camera angles on DVDs that have this feature when a DVD is playing. The format and content of this function will vary for each disc.

▭ **(Subtitle):** Press this button to turn on subtitles and to move through subtitle options when a DVD is playing. The format and content of this function will vary for each disc.

▶▶ **(Fast Forward):** Press this button to fast forward the DVD or CD. To stop fast forwarding, press this button again. This button may not work when the DVD is playing the copyright information or the previews.

▶‖ **(Play/Pause):** Press this button to start play of a DVD or CD. Press this button while a DVD or CD is playing to pause it. Press this button again to continue the play of the DVD or CD.

When the DVD is playing, press the pause button then press the fast forward button. The DVD will continue playing in a slow play mode. To cancel slow play mode, press the play/pause button.

▶| **(Next Track/Chapter):** Press this button to advance to the beginning of the next track or chapter. This button may not work when the DVD is playing the copyright information or the previews.

Battery Replacement

To change the batteries, do the following:

1. Remove the battery compartment door located on the bottom of the remote control.
2. Replace the two AA batteries in the compartment. Make sure that they are installed correctly, using the diagram on the inside of the battery compartment.
3. Close the battery door securely.

If the remote control is to be stored for a long period of time, remove the batteries and keep them in a cool, dry place.

Problem	Recommended Action
No power.	The ignition might not be in on or accessory. The parental control button might have been turned on. The power indicator light will flash.
Disc will not play.	The system might be off. The parental control button might have been turned on. The power indicator light will flash. The system might be in auxiliary mode. The disc is upside down or is not compatible.
The picture does not fill the screen. There are black borders on the top and bottom or on both sides or it looks stretched out.	Check the display mode settings in the display menu.
The disc was ejected, but it was pulled back into the DVD player.	The disc is being stored in the DVD player. Press the eject button again to eject the disc.

Problem	Recommended Action
In auxiliary mode, the picture moves or scrolls.	Check the auxiliary input connections at both devices. Change the Video Format to PAL or NTSC. See “Stereo RCA Jacks” previously for how to change the video format.
The language in the audio or on the screen is wrong.	Check the audio or language selection in the main DVD menu.
The remote control does not work.	Check to make sure there is no obstruction between the remote control and the transmitter window. Check the batteries to make sure they are not dead or installed incorrectly. The parental control button might have been turned on. The power indicator light will flash.

Problem	Recommended Action
After stopping the player, I push Play but sometimes the DVD starts where I left off and sometimes at the beginning.	If the stop button was pressed one time, the DVD player will resume playing where the DVD was stopped. If the stop button was pressed two times the DVD player will begin to play from the beginning of the DVD.
The auxiliary source is running but there is no picture or sound.	Check that the DVD player is in the auxiliary source mode. Check the auxiliary input connections at both devices.
My disc is stuck in the player. The Load/Eject button does not work.	Turn the DVD power off, then on, then press the load/eject button on the DVD player. Do not attempt to forcibly remove the disc from the DVD player. This could permanently damage the disc and DVD player.

Problem	Recommended Action
Sometimes the wireless headphone audio cuts out or buzzes.	Check for obstructions, low batteries, reception range, and interference from cellular telephone towers or by using your cellular telephone in the vehicle. Check that the headphones are facing the front of the vehicle.
I lost the remote and/or the headphones.	See your dealer for assistance.
The DVD is playing, but there is no picture or sound.	Check that the DVD player is in DVD mode.
The audio/video skips or jumps.	The DVD or CD could be dirty, scratched, or damaged.
The audio from the radio for the Radio with Six-Disc CD and XM™ has taken over the audio from the DVD or CD when using the wired headphones.	The RSE is working correctly. Use the wireless headphones or have the front seat passengers listen to another audio source.

DVD Messages

The following errors may be displayed on the video screen:

Disc Format Error: This message will be displayed if a disc is inserted upside down, if the disc is not readable, or if the format is not compatible with the DVD player.

Load/Eject Error: This message will be displayed if the disc is not properly loaded or ejected.

Disc Play Error: This message will be displayed if the DVD player cannot play the disc. Scratched or damaged discs will cause this error.

Region Code Error: This message will be displayed if the region code of the DVD is not compatible with the region code of the DVD player.

No Disc: This message will be displayed if any of the buttons on the DVD faceplate or remote control are pressed and no disc is present in the DVD player.

DVD Distortion

There may be an experience with audio distortion in the wireless headphones when operating cellular phones, scanners, CB radios, Global Positioning Systems (GPS)*, two-way radios, mobile fax, or walkie talkies.

It may be necessary to turn off the DVD player when operating one of these devices in or near the vehicle.

* Excludes the OnStar® System.

Cleaning the Video Screen

Pour some isopropyl or rubbing alcohol on a clean cloth and gently wipe the video screen. Do not spray directly onto the screen and do not press too hard or too long on the video screen.

Rear Seat Audio (RSA)

This feature allows rear seat passengers to listen to any of the sources: radio, CDs, or DVDs. However, the rear seat passengers can only control the sources that the front seat passengers are not listening to. For example, rear seat passengers may listen to and control CDs or DVDs through the headphones while the driver listens to the radio through the front speakers. The rear seat passengers have control of the volume for each set of headphones.

The front seat audio controls always have priority over the RSA controls. If the front seat passengers switch the source for the main radio to a remote source, the RSA will not be able to control the source. You can operate the rear seat audio when the main radio is off.

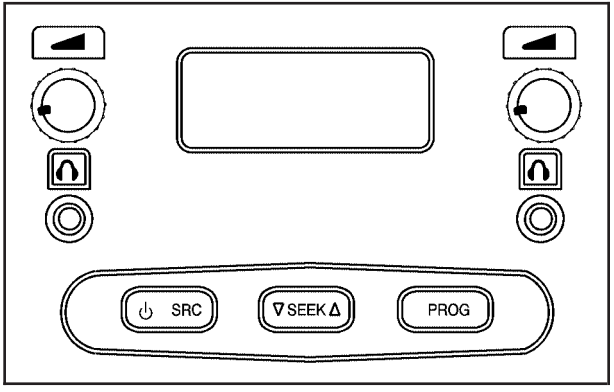

(Power): Press this button to turn the system on or off. The rear speakers will be muted when the power is turned on unless your vehicle is equipped with the Bose® audio system.

(Volume): Turn this knob to increase or to decrease the volume. The left knob controls the left headphones and the right knob controls the right headphones.

SRC (Source): Press this button to select a source: radio, CDs, or DVDs.

▽ **SEEK** △**:** When listening to FM1, FM2, or AM, press the up or the down arrow to go to the next or to the previous station and stay there. This function is inactive if the front seat passengers are listening to the radio.

When a CD is playing, press the up arrow to go to the next track on the CD. Press the down arrow to go to the start of the current track if more than eight seconds have played. This function is inactive if the front seat passengers are listening to a CD.

PROG (Program): Press this button to go to the next preset radio station set on the pushbuttons on the main radio. This function is inactive if the front seat passengers are listening to the radio.

When a cassette tape is playing, press this button to go to the other side of the tape. This function is inactive if the front seat passengers are listening to a cassette tape.

When a CD is playing, press this button to go to the beginning of the CD. This function is inactive if the front seat passengers are listening to a CD.

When a CD is playing in the six-disc CD changer, press this button to select the next CD, if multiple CDs are loaded. This function is inactive if the front seat passengers are listening to a CD.

Theft-Deterrent Feature

THEFTLOCK® is designed to discourage theft of your vehicle's radio. The feature works automatically by learning a portion of the Vehicle Identification Number (VIN). If the radio is moved to a different vehicle, it will not operate and LOCKED will appear on the display.

When the radio and vehicle are turned off, the blinking red light indicates that THEFTLOCK® is armed.

With THEFTLOCK® activated, the radio will not operate if stolen.

Audio Steering Wheel Controls

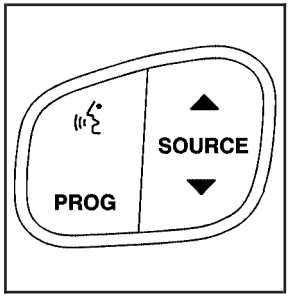

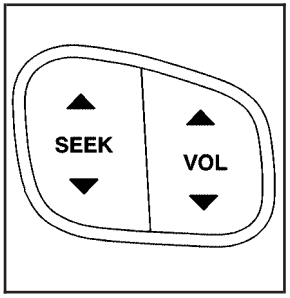

Some audio controls can be adjusted at the steering wheel. They include the following:

(OnStar®/Mute): If your vehicle has OnStar, press this button to interact with the OnStar system. See the *OnStar® System on page 2-55* in this manual for more information.

If your vehicle does not have OnStar, press this button to silence the system. Press it again, or any other radio button, to turn on the sound.

PROG (Program): Press this button to play a station you have programmed on the radio preset pushbuttons. The radio will only seek preset stations with a strong signal that are in the selected band.

When a CD is playing in the CD changer, press this button to go to the next available CD, if multiple CDs are loaded.

▲ SOURCE ▼: Press this button to switch between FM1, FM2, AM, or XM1 or XM2 (if equipped), or a CD. If a CD is loaded the CD symbol will appear on the display.

▲ SEEK ▼: Press the up or the down arrow to go to the next or to the previous radio station and stay there. The radio will only seek stations with a strong signal that are in the selected band.

When a CD is playing, press the up or the down arrow to fast forward or reverse.

▲ VOL ▼ (Volume): Press the up or the down arrow to increase or to decrease the volume.

Radio Reception

You may experience frequency interference and static during normal radio reception if items such as cellphone chargers, vehicle convenience accessories, and external electronic devices are plugged into the accessory power outlet. If there is interference or static, unplug the item from the accessory power outlet.

AM

The range for most AM stations is greater than for FM, especially at night. The longer range can cause station frequencies to interfere with each other. For better radio reception, most AM radio stations will boost the power levels during the day, and then reduce these levels during the night. Static can also occur when things like storms and power lines interfere with radio reception. When this happens, try reducing the treble on your radio.

FM Stereo

FM stereo will give the best sound, but FM signals will reach only about 10 to 40 miles (16 to 65 km). Tall buildings or hills can interfere with FM signals, causing the sound to fade in and out.

XM™ Satellite Radio Service

XM™ Satellite Radio Service gives digital radio reception from coast-to-coast in the 48 contiguous United States, and in Canada (if available). Just as with FM, tall buildings or hills can interfere with satellite radio signals, causing the sound to fade in and out. In addition, traveling or standing under heavy foliage, bridges, garages, or tunnels may cause loss of the XM™ signal for a period of time. The radio may display NO SIGNAL to indicate interference.

Care of Your CDs and DVDs

Handle CDs carefully. Store them in their original cases or other protective cases and away from direct sunlight and dust. The CD player scans the bottom surface of the disc. If the surface of a CD is damaged, such as cracked, broken, or scratched, the CD will not play properly or not at all. If the surface of a CD is soiled, take a soft, lint free cloth or dampen a clean, soft cloth in a mild, neutral detergent solution mixed with water, and clean it. Make sure the wiping process starts from the center to the edge.

Do not touch the bottom side of a CD while handling it; this could damage the surface. Pick up CDs by grasping the outer edges or the edge of the hole and the outer edge.

Care of the CD and DVD Player

The use of CD lens cleaners for CDs is not advised, due to the risk of contaminating the lens of the CD optics with lubricants internal to the CD mechanism.

Fixed Mast Antenna

The fixed mast antenna can withstand most car washes without being damaged. If the mast should ever become slightly bent, straighten it out by hand. If the mast is badly bent, replace it.

Check occasionally to make sure the mast is still tightened to the cowl. If tightening is required, tighten by hand, then with a wrench one quarter turn.

XM™ Satellite Radio Antenna System

The XM™ Satellite Radio antenna is located on the roof of your vehicle. Keep this antenna clear of snow and ice build up for clear radio reception.

If your vehicle has a sunroof, the performance of the XM™ system may be affected if the sunroof is open.

Loading items onto the roof of your vehicle can interfere with the performance of the XM™ system. Make sure the XM™ Satellite Radio antenna is not obstructed.

Chime Level Adjustment

The radio is used to adjust the vehicle's chime level. To change the volume level of the chime, press and hold pushbutton 6 with the ignition on and the radio power off. The volume level will change from the normal level to loud, and LOUD will appear on the radio display. To change back to the default or normal setting, press and hold pushbutton 6 again. The volume level will change from the loud level to normal, and NORMAL will appear on the radio display. Each time the chime volume is changed, three chimes will sound as an example of the new volume selected. Removing the radio and not replacing it with a factory radio or chime module will disable vehicle chimes.

Section 4 Driving Your Vehicle

Your Driving, the Road, and Your Vehicle 4-2
Defensive Driving 4-2
Drunken Driving 4-3
Control of a Vehicle 4-5
Braking 4-6
Anti-Lock Brake System (ABS) 4-7
Braking in Emergencies 4-8
Locking Rear Axle 4-9
StabiliTrak® System 4-9
Steering 4-12
Off-Road Recovery 4-14
Passing 4-14
Loss of Control 4-16
Off-Road Driving 4-17
Driving at Night 4-30
Driving in Rain and on Wet Roads 4-31
City Driving 4-34
Freeway Driving 4-35
Before Leaving on a Long Trip 4-36
Highway Hypnosis 4-37
Hill and Mountain Roads 4-38
Winter Driving 4-40
If Your Vehicle is Stuck in Sand, Mud, Ice or Snow 4-44
Rocking Your Vehicle to Get It Out 4-44
Recovery Hooks 4-45
Loading Your Vehicle 4-46
Adding a Snow Plow or Similar Equipment 4-52
Truck-Camper Loading Information 4-56
Towing 4-57
Towing Your Vehicle 4-57
Recreational Vehicle Towing 4-57
Level Control 4-62
Towing a Trailer 4-62
Trailer Recommendations 4-75

Your Driving, the Road, and Your Vehicle

Defensive Driving

The best advice anyone can give about driving is: Drive defensively.

Please start with a very important safety device in your vehicle: Buckle up. See *Safety Belts: They Are for Everyone on page 1-9*.

⚠ CAUTION:

Defensive driving really means "Be ready for anything." On city streets, rural roads, or expressways, it means "Always expect the unexpected." Assume that pedestrians or other drivers are going to be careless and make mistakes. Anticipate what they might do and be ready. Rear-end collisions are about the most preventable of accidents. Yet they are common. Allow enough following distance. Defensive driving requires that a driver concentrate on the driving task. Anything that distracts from the driving task makes proper defensive driving more difficult and can even cause a collision, with resulting injury. Ask a passenger to help do these things, or pull off the road in a safe place to do them. These simple defensive driving techniques could save your life.

Drunken Driving

Death and injury associated with drinking and driving is a national tragedy. It is the number one contributor to the highway death toll, claiming thousands of victims every year.

Alcohol affects four things that anyone needs to drive a vehicle:

- Judgment
- Muscular Coordination
- Vision
- Attentiveness

Police records show that almost half of all motor vehicle-related deaths involve alcohol. In most cases, these deaths are the result of someone who was drinking and driving. In recent years, more than 16,000 annual motor vehicle-related deaths have been associated with the use of alcohol, with more than 300,000 people injured.

Many adults — by some estimates, nearly half the adult population — choose never to drink alcohol, so they never drive after drinking. For persons under 21, it is against the law in every U.S. state to drink alcohol. There are good medical, psychological, and developmental reasons for these laws.

The obvious way to eliminate the leading highway safety problem is for people never to drink alcohol and then drive. But what if people do? How much is “too much” if someone plans to drive? It is a lot less than many might think. Although it depends on each person and situation, here is some general information on the problem.

The Blood Alcohol Concentration (BAC) of someone who is drinking depends upon four things:

- The amount of alcohol consumed
- The drinker’s body weight
- The amount of food that is consumed before and during drinking
- The length of time it has taken the drinker to consume the alcohol

According to the American Medical Association, a 180 lb (82 kg) person who drinks three 12 ounce (355 ml) bottles of beer in an hour will end up with a BAC of about 0.06 percent. The person would reach the same BAC by drinking three 4 ounce (120 ml) glasses of wine or three mixed drinks if each had 1-1/2 ounces (45 ml) of liquors like whiskey, gin, or vodka.

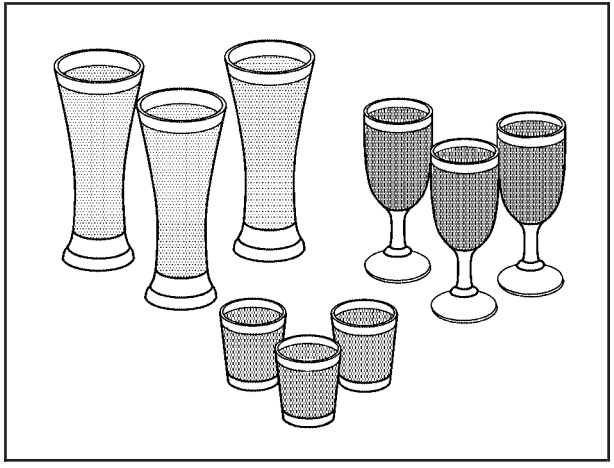

It is the amount of alcohol that counts. For example, if the same person drank three double martinis (3 ounces or 90 ml of liquor each) within an hour, the person's BAC would be close to 0.12 percent.

A person who consumes food just before or during drinking will have a somewhat lower BAC level.

There is a gender difference, too. Women generally have a lower relative percentage of body water than men. Since alcohol is carried in body water, this means that a woman generally will reach a higher BAC level than a man of her same body weight will when each has the same number of drinks.

The law in most U.S. states, and throughout Canada, sets the legal limit at 0.08 percent. In some other countries, the limit is even lower. For example, it is 0.05 percent in both France and Germany. The BAC limit for all commercial drivers in the United States is 0.04 percent.

The BAC will be over 0.10 percent after three to six drinks (in one hour). Of course, as we have seen, it depends on how much alcohol is in the drinks, and how quickly the person drinks them.

But the ability to drive is affected well below a BAC of 0.10 percent. Research shows that the driving skills of many people are impaired at a BAC approaching 0.05 percent, and that the effects are worse at night. All drivers are impaired at BAC levels above 0.05 percent. Statistics show that the chance of being in a collision increases sharply for drivers who have a BAC of 0.05 percent or above.

A driver with a BAC level of 0.06 percent has doubled his or her chance of having a collision. At a BAC level of 0.10 percent, the chance of this driver having a collision is 12 times greater; at a level of 0.15 percent, the chance is 25 times greater!

The body takes about an hour to rid itself of the alcohol in one drink. No amount of coffee or number of cold showers will speed that up. “I will be careful” is not the right answer. What if there is an emergency, a need to take sudden action, as when a child darts into the street? A person with even a moderate BAC might not be able to react quickly enough to avoid the collision.

There is something else about drinking and driving that many people do not know. Medical research shows that alcohol in a person’s system can make crash injuries worse, especially injuries to the brain, spinal cord, or heart. This means that when anyone who has been drinking — driver or passenger — is in a crash, that person’s chance of being killed or permanently disabled is higher than if the person had not been drinking.

⚠ CAUTION:

Drinking and then driving is very dangerous. Your reflexes, perceptions, attentiveness, and judgment can be affected by even a small amount of alcohol. You can have a serious — or even fatal — collision if you drive after drinking. Please do not drink and drive or ride with a driver who has been drinking. Ride home in a cab; or if you are with a group, designate a driver who will not drink.

Control of a Vehicle

You have three systems that make your vehicle go where you want it to go. They are the brakes, the steering, and the accelerator. All three systems have to do their work at the places where the tires meet the road.

Sometimes, as when you are driving on snow or ice, it is easy to ask more of those control systems than the tires and road can provide. That means you can lose control of your vehicle. See *StabiliTrak® System on page 4-9*.

Adding non-GM accessories can affect your vehicle’s performance. See *Accessories and Modifications on page 5-3*.

Braking

See *Brake System Warning Light on page 3-35*.

Braking action involves perception time and reaction time.

First, you have to decide to push on the brake pedal. That is perception time. Then you have to bring up your foot and do it. That is reaction time.

Average reaction time is about three-fourths of a second. But that is only an average. It might be less with one driver and as long as two or three seconds or more with another. Age, physical condition, alertness, coordination, and eyesight all play a part. So do alcohol, drugs, and frustration. But even in three-fourths of a second, a vehicle moving at 60 mph (100 km/h) travels 66 feet (20 m). That could be a lot of distance in an emergency, so keeping enough space between your vehicle and others is important.

And, of course, actual stopping distances vary greatly with the surface of the road, whether it is pavement or gravel; the condition of the road, whether it is wet, dry, or icy; tire tread; the condition of your brakes; the weight of the vehicle; and the amount of brake force applied.

Avoid needless heavy braking. Some people drive in spurts — heavy acceleration followed by heavy braking — rather than keeping pace with traffic. This is a mistake. Your brakes may not have time to cool between hard stops. Your brakes will wear out much faster if you do a lot of heavy braking. If you keep pace with the traffic and allow realistic following distances, you will eliminate a lot of unnecessary braking. That means better braking and longer brake life.

If your engine ever stops while you are driving, brake normally but do not pump your brakes. If you do, the pedal may get harder to push down. If your engine stops, you will still have some power brake assist. But you will use it when you brake. Once the power assist is used up, it may take longer to stop and the brake pedal will be harder to push.

Adding non-GM accessories can affect your vehicle's performance. See *Accessories and Modifications on page 5-3*.

Anti-Lock Brake System (ABS)

Your vehicle has anti-lock brakes. ABS is an advanced electronic braking system that will help prevent a braking skid.

When you start your engine and begin to drive away, your anti-lock brake system will check itself. You may hear a momentary motor or clicking noise while this test is going on. This is normal.

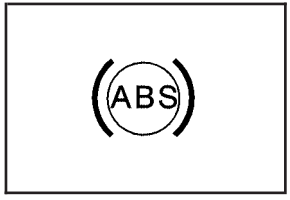

If there is a problem with the anti-lock brake system, this warning light will stay on. See *Anti-Lock Brake System Warning Light on page 3-36*.

Along with ABS, your vehicle has a Dynamic Rear Proportioning (DRP) system. If there is a DRP problem, both the brake and ABS warning lights will come on accompanied by a 10-second chime. The lights and chime will come on each time the ignition is turned on until the problem is repaired. See your dealer for service.

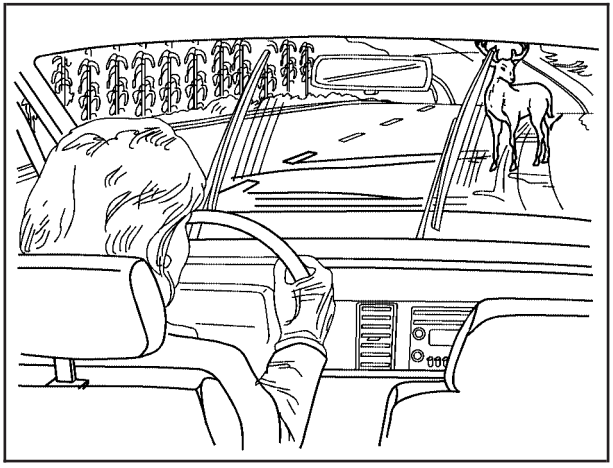

Let us say the road is wet and you are driving safely. Suddenly, an animal jumps out in front of you. You slam on the brakes and continue braking. Here is what happens with ABS:

A computer senses that wheels are slowing down. If one of the wheels is about to stop rolling, the computer will separately work the brakes at each front wheel and at both rear wheels.

The anti-lock system can change the brake pressure faster than any driver could. The computer is programmed to make the most of available tire and road conditions. This can help you steer around the obstacle while braking hard.

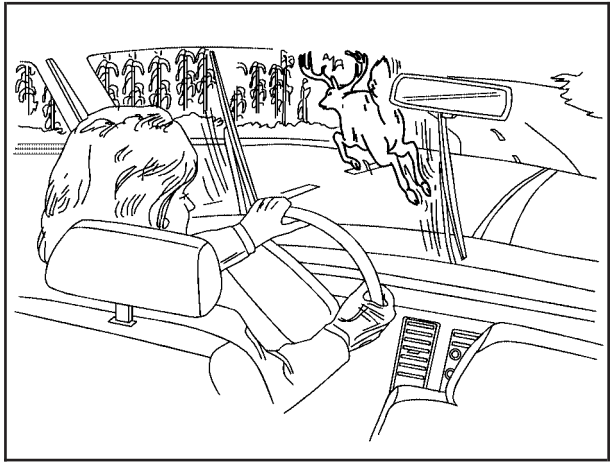

As you brake, your computer keeps receiving updates on wheel speed and controls braking pressure accordingly.

Remember: Anti-lock does not change the time you need to get your foot up to the brake pedal or always decrease stopping distance. If you get too close to the vehicle in front of you, you will not have time to apply your brakes if that vehicle suddenly slows or stops. Always leave enough room up ahead to stop, even though you have anti-lock brakes.

Using Anti-Lock

Do not pump the brakes. Just hold the brake pedal down firmly and let anti-lock work for you. You may feel the brakes vibrate, or you may notice some noise, but this is normal.

Braking in Emergencies

With anti-lock brakes, you can steer and brake at the same time. In many emergencies, steering can help you more than even the very best braking.

Locking Rear Axle

If your vehicle has this feature, it can give you additional traction on snow, mud, ice, sand or gravel. It works like a standard axle most of the time, but when one of the rear wheels has no traction and the other does, this feature will allow the wheel with traction to move the vehicle.

StabiliTrak® System

Your vehicle is equipped with StabiliTrak® which combines antilock brake, traction and stability control systems and helps the driver maintain directional control of the vehicle in most driving conditions.

When you first start your vehicle and begin to drive away, the system performs several diagnostic checks to insure there are no problems. You may hear or feel the system working. This is normal and does not mean there is a problem with your vehicle. The system should initialize before the vehicle reaches 20 mph (32 km/h). In some cases, it may take approximately two miles of driving before the system initializes.

If the system fails to turn on or activate, the STABILITY SYS DISABLED or SERVICE STABILITY message will be displayed. If the vehicle has gone through heavy acceleration or braking or multiple turns during the first two miles of driving after starting your vehicle, the STABILITY SYS DISABLED message may appear. If this is the case, your vehicle does not need servicing. You will need to turn the vehicle off and then restart it to initialize StabiliTrak®. If either message appears on the Driver Information Center (DIC), and your vehicle hasn't gone through hard acceleration, braking or multiple turns in the first two miles of driving, your vehicle should be taken in for service.

The STABILITY SYS ACTIVE message will appear on the Driver Information Center (DIC) only when the system is both on and activated. It means that an advanced computer-controlled system has come on to help your vehicle continue to go in the direction in which you're steering. StabiliTrak® activates when the computer senses that your vehicle is just starting to spin, as it might if you hit a patch of ice or other slippery spot on the road. When the system activates, you may hear a noise or feel a vibration in the brake pedal. This is normal. When the STABILITY SYS ACTIVE message is on, you should continue to steer in the direction you want to go. The system is designed to help you in bad weather or other difficult driving situations by making the most of whatever road conditions will permit. For more information on the stability messages, see *Driver Information Center (DIC) on page 3-46*.

StabiliTrak® and part of the traction control system can be turned off or back on by pressing the StabiliTrak® button on the instrument panel.

When the system is turned off, the traction off light will illuminate, and the STABILITY SYS DISABLED message will appear on the DIC to warn the driver that both the stability system and part of the traction control system are disabled. Your vehicle will still have brake-traction control when StabiliTrak® is off, but will not be able to use the engine speed management system. See “Traction Control Operation” next for more information.

When the StabiliTrak® system has been turned off you may still hear system noises as a result of the brake-traction control coming on.

To limit wheel spin and realize the full benefits of the stability enhancement system, you should normally leave StabiliTrak® on, but it may be necessary to turn the system off if your vehicle is stuck in sand, mud, ice or snow, and you want to “rock” your vehicle to attempt to free it. It may also be necessary to turn off the system when driving in extreme off-road conditions where high wheel spin is required. See *If Your Vehicle is Stuck in Sand, Mud, Ice or Snow on page 4-44*.

Traction Control Operation

The traction control system is part of the StabiliTrak® system. Traction control limits wheel spin by reducing engine power to the wheels (engine speed management) and by applying brakes to each individual wheel (brake-traction control) as necessary.

The traction control system is enabled automatically when you start your vehicle, and it will activate and display the TRACTION ACTIVE message in the Driver Information Center (DIC) if it senses that any of the wheels are spinning or beginning to lose traction while driving. If you turn off StabiliTrak®, only the brake-traction control portion of traction control will work. The engine speed management will be disabled. In this state, engine power is not reduced automatically and the driven wheels can spin more freely. This can cause the brake-traction control to activate constantly. For more information on the traction active message, see *DIC Warnings and Messages on page 3-50*.

Notice: **If the traction off light comes on due to heavy braking and/or because the traction control system has been continuously active, do not allow the wheel(s) of one axle to spin excessively. If you do, you may be causing damage to the transfer case. This could lead to costly repairs not covered by your warranty.**

If the brake traction-control system activates constantly or if the brakes have heated up due to high-speed braking, brake traction-control will be disabled and the TRACTION SYS LIMITED message will be displayed. In the limited mode, the traction control system will only use engine traction-control and is limited in its ability to provide optimal performance since the system will not utilize brake traction-control to control slip on the drive wheels. The system will return to normal operation after the brakes have cooled. This can take up to two minutes or longer depending on brake usage.

Notice: **If you allow the wheel(s) of one axle to spin excessively while the traction off, ABS and brake warning lights and the SERVICE STABILITY message are displayed, you could damage the transfer case. The repairs would not be covered by your warranty. Reduce engine power and do not spin the wheel(s) excessively while these lights and this message are displayed.**

The traction control system may activate on dry or rough roads or under conditions such as heavy acceleration while turning or abrupt upshifts/downshifts of the transmission. When this happens you may notice a reduction in acceleration, or may hear a noise or vibration. This is normal.

If your vehicle is in cruise control when the system activates, the STABILITY SYS ACTIVE message will appear on the Driver Information Center and the cruise control will automatically disengage. When road conditions allow you to use cruise again, you may re-engage the cruise control. See *Cruise Control on page 3-10*.

StabiliTrak® may also turn off automatically if it determines that a problem exists with the system. If the problem does not clear itself after restarting the vehicle, you should see your dealer for service.

Steering

Power Steering

If you lose power steering assist because the engine stops or the system is not functioning, you can steer but it will take much more effort.

Steering Tips

It is important to take curves at a reasonable speed.

A lot of the “driver lost control” accidents mentioned on the news happen on curves. Here is why:

Experienced driver or beginner, each of us is subject to the same laws of physics when driving on curves. The traction of the tires against the road surface makes it possible for the vehicle to change its path when you turn the front wheels. If there is no traction, inertia will keep the vehicle going in the same direction. If you have ever tried to steer a vehicle on wet ice, you will understand this.

The traction you can get in a curve depends on the condition of your tires and the road surface, the angle at which the curve is banked, and your speed. While you are in a curve, speed is the one factor you can control.

Suppose you are steering through a sharp curve. Then you suddenly accelerate. Both control systems — steering and acceleration — have to do their work where the tires meet the road. Adding the sudden acceleration can demand too much of those places. You can lose control. See *StabiliTrak® System on page 4-9*.

What should you do if this ever happens? Ease up on the accelerator pedal, steer the vehicle the way you want it to go, and slow down.

Speed limit signs near curves warn that you should adjust your speed. Of course, the posted speeds are based on good weather and road conditions. Under less favorable conditions you will want to go slower.

If you need to reduce your speed as you approach a curve, do it before you enter the curve, while your front wheels are straight ahead.

Try to adjust your speed so you can “drive” through the curve. Maintain a reasonable, steady speed. Wait to accelerate until you are out of the curve, and then accelerate gently into the straightaway.

Adding non-GM accessories can affect your vehicle’s performance. See *Accessories and Modifications on page 5-3*.

Steering in Emergencies

There are times when steering can be more effective than braking. For example, you come over a hill and find a truck stopped in your lane, or a car suddenly pulls out from nowhere, or a child darts out from between parked cars and stops right in front of you. You can avoid these problems by braking — if you can stop in time. But sometimes you cannot; there is not room. That is the time for evasive action — steering around the problem.

Your vehicle can perform very well in emergencies like these. First apply your brakes.

See *Braking on page 4-6*. It is better to remove as much speed as you can from a possible collision. Then steer around the problem, to the left or right depending on the space available.

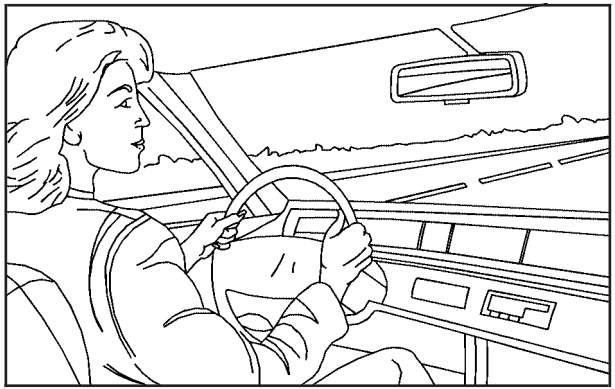

An emergency like this requires close attention and a quick decision. If you are holding the steering wheel at the recommended 9 and 3 o'clock positions, you can turn it a full 180 degrees very quickly without removing either hand. But you have to act fast, steer quickly, and just as quickly straighten the wheel once you have avoided the object.

The fact that such emergency situations are always possible is a good reason to practice defensive driving at all times and wear safety belts properly.

Off-Road Recovery

You may find that your right wheels have dropped off the edge of a road onto the shoulder while you are driving.

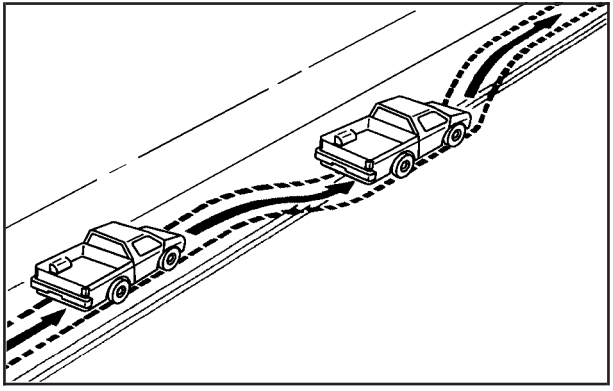

If the level of the shoulder is only slightly below the pavement, recovery should be fairly easy. Ease off the accelerator and then, if there is nothing in the way, steer so that your vehicle straddles the edge of the pavement. You can turn the steering wheel up to one-quarter turn until the right front tire contacts the pavement edge. Then turn your steering wheel to go straight down the roadway.

Passing

The driver of a vehicle about to pass another on a two-lane highway waits for just the right moment, accelerates, moves around the vehicle ahead, then goes back into the right lane again. A simple maneuver?

Not necessarily! Passing another vehicle on a two-lane highway is a potentially dangerous move, since the passing vehicle occupies the same lane as oncoming traffic for several seconds. A miscalculation, an error in judgment, or a brief surrender to frustration or anger can suddenly put the passing driver face to face with the worst of all traffic accidents — the head-on collision.

So here are some tips for passing:

- Drive ahead. Look down the road, to the sides and to crossroads for situations that might affect your passing patterns. If you have any doubt whatsoever about making a successful pass, wait for a better time.
- Watch for traffic signs, pavement markings and lines. If you can see a sign up ahead that might indicate a turn or an intersection, delay your pass. A broken center line usually indicates it is all right to pass, providing the road ahead is clear. Never cross a solid line on your side of the lane or a double solid line, even if the road seems empty of approaching traffic.

- Do not get too close to the vehicle you want to pass while you are awaiting an opportunity. For one thing, following too closely reduces your area of vision, especially if you are following a larger vehicle. Also, you will not have adequate space if the vehicle ahead suddenly slows or stops. Keep back a reasonable distance.
- When it looks like a chance to pass is coming up, start to accelerate but stay in the right lane and do not get too close. Time your move so you will be increasing speed as the time comes to move into the other lane. If the way is clear to pass, you will have a running start that more than makes up for the distance you would lose by dropping back. And if something happens to cause you to cancel your pass, you need only slow down and drop back again and wait for another opportunity.
- If other vehicles are lined up to pass a slow vehicle, wait your turn. But take care that someone is not trying to pass you as you pull out to pass the slow vehicle. Remember to glance over your shoulder and check the blind spot.
- Check your mirrors, glance over your shoulder and start your left lane change signal before moving out of the right lane to pass. When you are far enough ahead of the passed vehicle to see its front in your inside mirror, activate your right lane change signal and move back into the right lane. Remember that if your passenger side outside mirror is convex, the vehicle you just passed may seem to be farther away from you than it really is.
- Try not to pass more than one vehicle at a time on two-lane roads. Reconsider before passing the next vehicle.
- Do not overtake a slowly moving vehicle too rapidly. Even though the brake lamps are not flashing, it may be slowing down or starting to turn.
- If you are being passed, make it easy for the following driver to get ahead of you. Perhaps you can ease a little to the right.

Loss of Control

Let us review what driving experts say about what happens when the three control systems — brakes, steering, and acceleration — do not have enough friction where the tires meet the road to do what the driver has asked.

In any emergency, do not give up. Keep trying to steer and constantly seek an escape route or area of less danger.

Skidding

In a skid, a driver can lose control of the vehicle. Defensive drivers avoid most skids by taking reasonable care suited to existing conditions, and by not overdriving those conditions. But skids are always possible.

The three types of skids correspond to your vehicle's three control systems. In the braking skid, your wheels are not rolling. In the steering or cornering skid, too much speed or steering in a curve causes tires to slip and lose cornering force. And in the acceleration skid, too much throttle causes the driving wheels to spin.

A cornering skid is best handled by easing your foot off the accelerator pedal.

Remember: StabiliTrak® helps avoid only the acceleration skid. See *StabiliTrak® System on page 4-9*. If the StabiliTrak® System is off, then an acceleration skid is also best handled by easing your foot off the accelerator pedal.

If your vehicle starts to slide, ease your foot off the accelerator pedal and quickly steer the way you want the vehicle to go. If you start steering quickly enough, your vehicle may straighten out. Always be ready for a second skid if it occurs.

Of course, traction is reduced when water, snow, ice, gravel, or other material is on the road. For safety, you will want to slow down and adjust your driving to these conditions. It is important to slow down on slippery surfaces because stopping distance will be longer and vehicle control more limited.

While driving on a surface with reduced traction, try your best to avoid sudden steering, acceleration, or braking, including engine braking by shifting to a lower gear. Any sudden changes could cause the tires to slide. You may not realize the surface is slippery until your vehicle is skidding. Learn to recognize warning clues — such as enough water, ice, or packed snow on the road to make a mirrored surface — and slow down when you have any doubt.

Remember: Any Anti-Lock Brake System (ABS) helps avoid only the braking skid.

Off-Road Driving

This off-road guide is for vehicles that have four-wheel drive. Also, see *Braking on page 4-6*. If your vehicle does not have four-wheel drive, you should not drive off-road unless you are on a level, solid surface.

Off-road driving can be great fun. But it does have some definite hazards. The greatest of these is the terrain itself.

“Off-roading” means you have left the great North American road system behind. Traffic lanes are not marked. Curves are not banked. There are no road signs. Surfaces can be slippery, rough, uphill, or downhill. In short, you have gone right back to nature.

Off-road driving involves some new skills. And that is why it is very important that you read this guide. You will find many driving tips and suggestions. These will help make your off-road driving safer and more enjoyable.

Before You Go Off-Roading

There are some things to do before you go out. For example, be sure to have all necessary maintenance and service work done. Check to make sure all underbody shields, if equipped, are properly attached. Be sure you read all the information about your four-wheel-drive vehicle in this manual. Is there enough fuel? Is the spare tire fully inflated? Are the fluid levels up where they should be? What are the local laws that apply to off-roading where you will be driving? If you do not know, you should check with law enforcement people in the area. Will you be on someone’s private land? If so, be sure to get the necessary permission.

Loading Your Vehicle for Off-Road Driving

There are some important things to remember about how to load your vehicle.

- The heaviest things should be on the load floor and forward of the rear axle. Put heavier items as far forward as you can.
- Be sure the load is secured properly, so driving on the off-road terrain does not toss things around.

⚠ CAUTION:

- **Cargo on the load floor piled higher than the seatbacks can be thrown forward during a sudden stop. You or your passengers could be injured. Keep cargo below the top of the seatbacks.**
- **Unsecured cargo on the load floor can be tossed about when driving over rough terrain. You or your passengers can be struck by flying objects. Secure the cargo properly.**
- **Heavy loads on the roof raise the vehicle's center of gravity, making it more likely to roll over. You can be seriously or fatally injured if the vehicle rolls over. Put heavy loads inside the cargo area, not on the roof. Keep cargo in the cargo area as far forward and low as possible.**

You will find other important information in this manual. See *Loading Your Vehicle on page 4-46*, *Luggage Carrier on page 2-63*, and *Tires on page 5-62*.

Environmental Concerns

Off-road driving can provide wholesome and satisfying recreation. However, it also raises environmental concerns. We recognize these concerns and urge every off-roader to follow these basic rules for protecting the environment:

- Always use established trails, roads, and areas that have been specially set aside for public off-road recreational driving; obey all posted regulations.
- Avoid any driving practice that could damage the environment — shrubs, flowers, trees, grasses — or disturb wildlife (this includes wheel-spinning, breaking down trees, or unnecessary driving through streams or over soft ground).
- Always carry a litter bag — make sure all refuse is removed from any campsite before leaving.
- Take extreme care with open fires where permitted, camp stoves, and lanterns.
- Never park your vehicle over dry grass or other combustible materials that could catch fire from the heat of the vehicle's exhaust system.

Traveling to Remote Areas

It makes sense to plan your trip, especially when going to a remote area. Know the terrain and plan your route. You are much less likely to get bad surprises. Get accurate maps of trails and terrain. Try to learn of any blocked or closed roads.

It is also a good idea to travel with at least one other vehicle. If something happens to one of them, the other can help quickly.

Does your vehicle have a winch? If so, be sure to read the winch instructions. In a remote area, a winch can be handy if you get stuck. But you will want to know how to use it properly.

Getting Familiar with Off-Road Driving

It is a good idea to practice in an area that is safe and close to home before you go into the wilderness. Off-road driving does require some new and different skills. Here is what we mean.

Tune your senses to different kinds of signals. Your eyes, for example, need to constantly sweep the terrain for unexpected obstacles. Your ears need to listen for unusual tire or engine sounds. With your arms, hands, feet, and body, you will need to respond to vibrations and vehicle bounce.

Controlling your vehicle is the key to successful off-road driving. One of the best ways to control your vehicle is to control your speed. Here are some things to keep in mind. At higher speeds:

- You approach things faster and you have less time to scan the terrain for obstacles.
- You have less time to react.
- You have more vehicle bounce when you drive over obstacles.
- You will need more distance for braking, especially since you are on an unpaved surface.

⚠ CAUTION:

When you are driving off-road, bouncing and quick changes in direction can easily throw you out of position. This could cause you to lose control and crash. So, whether you are driving on or off the road, you and your passengers should wear safety belts.

Scanning the Terrain

Off-road driving can take you over many different kinds of terrain. You need to be familiar with the terrain and its many different features. Here are some things to consider.

Surface Conditions: Off-roading can take you over hard-packed dirt, gravel, rocks, grass, sand, mud, snow, or ice. Each of these surfaces affects the steering, acceleration, and braking of your vehicle in different ways. Depending upon the kind of surface you are on, you may experience slipping, sliding, wheel spinning, delayed acceleration, poor traction, and longer braking distances.

Surface Obstacles: Unseen or hidden obstacles can be hazardous. A rock, log, hole, rut, or bump can startle you if you are not prepared for them. Often these obstacles are hidden by grass, bushes, snow, or even the rise and fall of the terrain itself. Here are some things to consider:

- Is the path ahead clear?
- Will the surface texture change abruptly up ahead?
- Does the travel take you uphill or downhill? There is more discussion of these subjects later.
- Will you have to stop suddenly or change direction quickly?

When you drive over obstacles or rough terrain, keep a firm grip on the steering wheel. Ruts, troughs, or other surface features can jerk the wheel out of your hands if you are not prepared.

When you drive over bumps, rocks, or other obstacles, your wheels can leave the ground. If this happens, even with one or two wheels, you cannot control the vehicle as well or at all.

Because you will be on an unpaved surface, it is especially important to avoid sudden acceleration, sudden turns, or sudden braking.

In a way, off-road driving requires a different kind of alertness from driving on paved roads and highways. There are no road signs, posted speed limits, or signal lights. You have to use your own good judgment about what is safe and what is not.

Drinking and driving can be very dangerous on any road. And this is certainly true for off-road driving. At the very time you need special alertness and driving skills, your reflexes, perceptions, and judgment can be affected by even a small amount of alcohol. You could have a serious — or even fatal — accident if you drink and drive or ride with a driver who has been drinking. See *Drunken Driving on page 4-3*.

Driving on Off-Road Hills

Off-road driving often takes you up, down, or across a hill. Driving safely on hills requires good judgment and an understanding of what your vehicle can and cannot do. There are some hills that simply cannot be driven, no matter how well built the vehicle.

⚠ CAUTION:

Many hills are simply too steep for any vehicle. If you drive up them, you will stall. If you drive down them, you cannot control your speed. If you drive across them, you will roll over. You could be seriously injured or killed. If you have any doubt about the steepness, do not drive the hill.

Approaching a Hill

When you approach a hill, you need to decide if it is one of those hills that is just too steep to climb, descend, or cross. Steepness can be hard to judge. On a very small hill, for example, there may be a smooth, constant incline with only a small change in elevation where you can easily see all the way to the top. On a large hill, the incline may get steeper as you near the top, but you may not see this because the crest of the hill is hidden by bushes, grass, or shrubs.

Here are some other things to consider as you approach a hill.

- Is there a constant incline, or does the hill get sharply steeper in places?
- Is there good traction on the hillside, or will the surface cause tire slipping?
- Is there a straight path up or down the hill so you will not have to make turning maneuvers?
- Are there obstructions on the hill that can block your path, such as boulders, trees, logs, or ruts?
- What is beyond the hill? Is there a cliff, an embankment, a drop-off, a fence? Get out and walk the hill if you do not know. It is the smart way to find out.
- Is the hill simply too rough? Steep hills often have ruts, gullies, troughs, and exposed rocks because they are more susceptible to the effects of erosion.

Driving Uphill

Once you decide you can safely drive up the hill, you need to take some special steps.

- Use a low gear and get a firm grip on the steering wheel.
- Get a smooth start up the hill and try to maintain your speed. Do not use more power than you need, because you do not want your wheels to start spinning or sliding.
- Try to drive straight up the hill if at all possible. If the path twists and turns, you might want to find another route.

⚠ CAUTION:

Turning or driving across steep hills can be dangerous. You could lose traction, slide sideways, and possibly roll over. You could be seriously injured or killed. When driving up hills, always try to go straight up.

- Ease up on your speed as you approach the top of the hill.
- Attach a flag to the vehicle to make you more visible to approaching traffic on trails or hills.
- Sound the horn as you approach the top of the hill to let opposing traffic know you are there.
- Use your headlamps even during the day. They make you more visible to oncoming traffic.

⚠ CAUTION:

Driving to the top (crest) of a hill at full speed can cause an accident. There could be a drop-off, embankment, cliff, or even another vehicle. You could be seriously injured or killed. As you near the top of a hill, slow down and stay alert.

Q: What should I do if my vehicle stalls, or is about to stall, and I cannot make it up the hill?

A: If this happens, there are some things you should do, and there are some things you must not do. First, here is what you *should* do:

- Push the brake pedal to stop the vehicle and keep it from rolling backwards. Also, apply the parking brake.
- If the engine is still running, shift the transmission to REVERSE (R), release the parking brake, and slowly back down the hill in REVERSE (R).
- If the engine has stopped running, you will need to restart it. With the brake pedal pressed and the parking brake still applied, shift the transmission to PARK (P) and restart the engine. Then, shift to REVERSE (R), release the parking brake, and slowly back down the hill as straight as possible in REVERSE (R).
- As you are backing down the hill, put your left hand on the steering wheel at the 12 o'clock position. This way, you will be able to tell if the wheels are straight and maneuver as you back down. It is best that you back down the hill with the wheels straight rather than in the left or right direction. Turning the wheel too far to the left or right will increase the possibility of a rollover.

Here are some things you *must not* do if you stall, or are about to stall, when going up a hill.

- Never attempt to prevent a stall by shifting into NEUTRAL (N) to rev-up the engine and regain forward momentum. This will not work. Your vehicle will roll backwards very quickly and you could go out of control.

  Instead, apply the regular brake to stop the vehicle. Then apply the parking brake. Shift to REVERSE (R), release the parking brake, and slowly back straight down.
- Never attempt to turn around if you are about to stall when going up a hill. If the hill is steep enough to stall your vehicle, it is steep enough to cause you to roll over if you turn around. If you cannot make it up the hill, you must back straight down the hill.

Q: Suppose, after stalling, I try to back down the hill and decide I just cannot do it. What should I do?

A: Set the parking brake, put the transmission in PARK (P) and turn off the engine. Leave the vehicle and go get some help. Exit on the uphill side and stay clear of the path the vehicle would take if it rolled downhill. Do not shift the transfer case to NEUTRAL when you leave the vehicle. Leave it in some gear.

⚠ CAUTION:

Shifting the transfer case to NEUTRAL can cause your vehicle to roll even if the transmission is in PARK (P). This is because the NEUTRAL position on the transfer case overrides the transmission. You or someone else could be injured. If you are going to leave your vehicle, set the parking brake and shift the transmission to PARK (P). But do not shift the transfer case to NEUTRAL. Leave the transfer case in the Two-Wheel High, Four-Wheel High or Four-Wheel Low position.

Driving Downhill

When off-roading takes you downhill, you will want to consider a number of things:

- How steep is the downhill? Will I be able to maintain vehicle control?
- What is the surface like? Smooth? Rough? Slippery? Hard-packed dirt? Gravel?
- Are there hidden surface obstacles? Ruts? Logs? Boulders?
- What is at the bottom of the hill? Is there a hidden creek bank or even a river bottom with large rocks?

If you decide you can go down a hill safely, then try to keep your vehicle headed straight down, and use a low gear. This way, engine drag can help the brakes and they will not have to do all the work. Descend slowly, keeping your vehicle under control at all times.

⚠ CAUTION:

Heavy braking when going down a hill can cause your brakes to overheat and fade. This could cause loss of control and a serious accident. Apply the brakes lightly when descending a hill and use a low gear to keep vehicle speed under control.

Q: Are there some things I should not do when driving down a hill?

A: Yes! These are important because if you ignore them you could lose control and have a serious accident.

- When driving downhill, avoid turns that take you across the incline of the hill. A hill that is not too steep to drive down may be too steep to drive across. You could roll over if you do not drive straight down.
- Never go downhill with the transmission in NEUTRAL (N). This is called “free-wheeling.” The brakes will have to do all the work and could overheat and fade.

Q: Am I likely to stall when going downhill?

A: It is much more likely to happen going uphill. But if it happens going downhill, here is what to do.

1. Stop your vehicle by applying the regular brakes. Apply the parking brake.
2. Shift to PARK (P) and, while still braking, restart the engine.
3. Shift back to a low gear, release the parking brake, and drive straight down.
4. If the engine will not start, get out and get help.

Driving Across an Incline

Sooner or later, an off-road trail will probably go across the incline of a hill. If this happens, you have to decide whether to try to drive across the incline. Here are some things to consider:

- A hill that can be driven straight up or down may be too steep to drive across. When you go straight up or down a hill, the length of the wheel base — the distance from the front wheels to the rear wheels — reduces the likelihood the vehicle will tumble end over end. But when you drive across an incline, the much more narrow track width — the distance between the left and right wheels — may not prevent the vehicle from tilting and rolling over. Also, driving across an incline puts more weight on the downhill wheels. This could cause a downhill slide or a rollover.
- Surface conditions can be a problem when you drive across a hill. Loose gravel, muddy spots, or even wet grass can cause the tires to slip sideways, downhill. If the vehicle slips sideways, it can hit something that will trip it — a rock, a rut, etc. — and roll over.
- Hidden obstacles can make the steepness of the incline even worse. If you drive across a rock with the uphill wheels, or if the downhill wheels drop into a rut or depression, your vehicle can tilt even more.

For reasons like these, you need to decide carefully whether to try to drive across an incline. Just because the trail goes across the incline does not mean you have to drive it. The last vehicle to try it might have rolled over.

⚠ CAUTION:

Driving across an incline that is too steep will make your vehicle roll over. You could be seriously injured or killed. If you have any doubt about the steepness of the incline, do not drive across it. Find another route instead.

Q: What if I am driving across an incline that is not too steep, but I hit some loose gravel and start to slide downhill. What should I do?

A: If you feel your vehicle starting to slide sideways, turn downhill. This should help straighten out the vehicle and prevent the side slipping. However, a much better way to prevent this is to get out and “walk the course” so you know what the surface is like before you drive it.

Stalling on an Incline

If your vehicle stalls when you are crossing an incline, be sure you, and any passengers, get out on the uphill side, even if the door there is harder to open. If you get out on the downhill side and the vehicle starts to roll over, you will be right in its path.

If you have to walk down the slope, stay out of the path the vehicle will take if it does roll over.

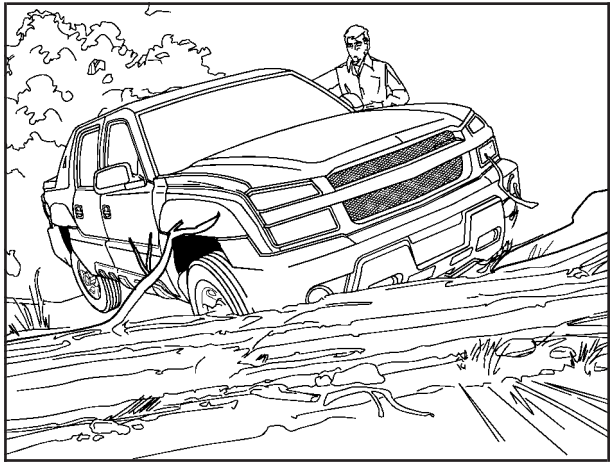

⚠ CAUTION:

Getting out on the downhill (low) side of a vehicle stopped across an incline is dangerous. If the vehicle rolls over, you could be crushed or killed. Always get out on the uphill (high) side of the vehicle and stay well clear of the rollover path.

Driving in Mud, Sand, Snow, or Ice

When you drive in mud, snow, or sand, the wheels will not get good traction. You cannot accelerate as quickly, turning is more difficult, and you will need longer braking distances.

It is best to use a low gear when you are in mud — the deeper the mud, the lower the gear. In really deep mud, the idea is to keep your vehicle moving so you do not get stuck.

When you drive on sand, you will sense a change in wheel traction. But it will depend upon how loosely packed the sand is. On loosely packed sand, such as on beaches or sand dunes, the tires will tend to sink into the sand. This has an effect on steering, accelerating, and braking. Drive at a reduced speed and avoid sharp turns or abrupt maneuvers.

Hard packed snow and ice offer the worst tire traction. On these surfaces, it is very easy to lose control. On wet ice, for example, the traction is so poor that you will have difficulty accelerating. And if you do get moving, poor steering and difficult braking can cause you to slide out of control.

⚠ CAUTION:

Driving on frozen lakes, ponds, or rivers can be dangerous. Underwater springs, currents under the ice, or sudden thaws can weaken the ice. Your vehicle could fall through the ice and you and your passengers could drown. Drive your vehicle on safe surfaces only.

Driving in Water

Heavy rain can mean flash flooding, and flood waters demand extreme caution.

Find out how deep the water is before you drive through it. If it is deep enough to cover the wheel hubs, axles or exhaust pipe, do not try — you probably will not get through. Also, water that deep can damage the axle and other vehicle parts.

If the water is not too deep, drive slowly through it. At faster speeds, water splashes on the ignition system and your vehicle can stall. Stalling can also occur if you get the tailpipe under water. And, as long as the tailpipe is under water, you will never be able to start the engine. When you go through water, remember that when the brakes get wet, it may take you longer to stop.

⚠ CAUTION:

Driving through rushing water can be dangerous. Deep water can sweep your vehicle downstream and you and your passengers could drown. If it is only shallow water, it can still wash away the ground from under your tires, and you could lose traction and roll the vehicle over. Do not drive through rushing water.

See *Driving in Rain and on Wet Roads on page 4-31* for more information on driving through water.

After Off-Road Driving

Remove any brush or debris that has collected on the underbody, chassis, or under the hood. These accumulations can be a fire hazard.

After operation in mud or sand, have the brake linings cleaned and checked. These substances can cause glazing and uneven braking. Check the body structure, steering, suspension, wheels, tires, and exhaust system for damage. Also, check the fuel lines and cooling system for any leakage.

Your vehicle will require more frequent service due to off-road use. Refer to the Maintenance Schedule for additional information.

Driving at Night

Night driving is more dangerous than day driving. One reason is that some drivers are likely to be impaired — by alcohol or drugs, with night vision problems, or by fatigue.

Here are some tips on night driving.

- Drive defensively.
- Do not drink and drive.
- Adjust the inside rearview mirror to reduce the glare from headlamps behind you.
- Since you cannot see as well, you may need to slow down and keep more space between you and other vehicles.
- Slow down, especially on higher speed roads. Your vehicle's headlamps can light up only so much road ahead.
- In remote areas, watch for animals.
- If you are tired, pull off the road in a safe place and rest.

No one can see as well at night as in the daytime. But as we get older these differences increase. A 50-year-old driver may require at least twice as much light to see the same thing at night as a 20-year-old.

What you do in the daytime can also affect your night vision. For example, if you spend the day in bright sunshine you are wise to wear sunglasses. Your eyes will have less trouble adjusting to night. But if you are driving, do not wear sunglasses at night. They may cut down on glare from headlamps, but they also make a lot of things invisible.

You can be temporarily blinded by approaching headlamps. It can take a second or two, or even several seconds, for your eyes to re-adjust to the dark. When you are faced with severe glare, as from a driver who does not lower the high beams, or a vehicle with misaimed headlamps, slow down a little. Avoid staring directly into the approaching headlamps.

Keep the windshield and all the glass on your vehicle clean — inside and out. Glare at night is made much worse by dirt on the glass. Even the inside of the glass can build up a film caused by dust. Dirty glass makes lights dazzle and flash more than clean glass would, making the pupils of your eyes contract repeatedly.

Remember that the headlamps light up far less of a roadway when you are in a turn or curve. Keep your eyes moving; that way, it is easier to pick out dimly lighted objects. Just as the headlamps should be checked regularly for proper aim, so should your eyes be examined regularly. Some drivers suffer from night blindness — the inability to see in dim light — and are not even aware of it.

Driving in Rain and on Wet Roads

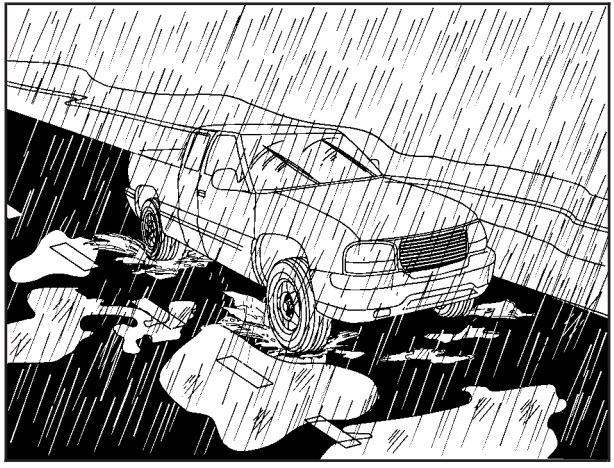

Rain and wet roads can mean driving trouble. On a wet road, you cannot stop, accelerate, or turn as well because your tire-to-road traction is not as good as on dry roads. And, if your tires do not have much tread left, you will get even less traction. It is always wise to go slower and be cautious if rain starts to fall while you are driving. The surface may get wet suddenly when your reflexes are tuned for driving on dry pavement.

The heavier the rain, the harder it is to see. Even if your windshield wiper blades are in good shape, a heavy rain can make it harder to see road signs and traffic signals, pavement markings, the edge of the road, and even people walking.

It is wise to keep your wiping equipment in good shape and keep your windshield washer fluid reservoir filled with washer fluid. Replace your windshield wiper inserts when they show signs of streaking or missing areas on the windshield, or when strips of rubber start to separate from the inserts.

⚠ CAUTION:

Wet brakes can cause accidents. They will not work as well in a quick stop and may cause pulling to one side. You could lose control of the vehicle.

After driving through a large puddle of water or a car wash, apply your brake pedal lightly until your brakes work normally.

Driving too fast through large water puddles or even going through some car washes can cause problems, too. The water may affect your brakes. Try to avoid puddles. But if you cannot, try to slow down before you hit them.

Hydroplaning

Hydroplaning is dangerous. So much water can build up under your tires that they can actually ride on the water. This can happen if the road is wet enough and you are going fast enough. When your vehicle is hydroplaning, it has little or no contact with the road.

Hydroplaning does not happen often. But it can if your tires do not have much tread or if the pressure in one or more is low. It can happen if a lot of water is standing on the road. If you can see reflections from trees, telephone poles, or other vehicles, and raindrops dimple the water's surface, there could be hydroplaning.

Hydroplaning usually happens at higher speeds. There just is not a hard and fast rule about hydroplaning. The best advice is to slow down when it is raining.

Driving Through Deep Standing Water

Notice: **If you drive too quickly through deep puddles or standing water, water can come in through your engine's air intake and badly damage your engine. Never drive through water that is slightly lower than the underbody of your vehicle. If you cannot avoid deep puddles or standing water, drive through them very slowly.**

Driving Through Flowing Water

⚠ CAUTION:

Flowing or rushing water creates strong forces. If you try to drive through flowing water, as you might at a low water crossing, your vehicle can be carried away. As little as six inches of flowing water can carry away a smaller vehicle. If this happens, you and other vehicle occupants could drown. Do not ignore police warning signs, and otherwise be very cautious about trying to drive through flowing water.

Some Other Rainy Weather Tips

- Turn on your low-beam headlamps — not just your parking lamps — to help make you more visible to others.
- Besides slowing down, allow some extra following distance. And be especially careful when you pass another vehicle. Allow yourself more clear room ahead, and be prepared to have your view restricted by road spray.
- Have good tires with proper tread depth. See *Tires on page 5-62*.

City Driving

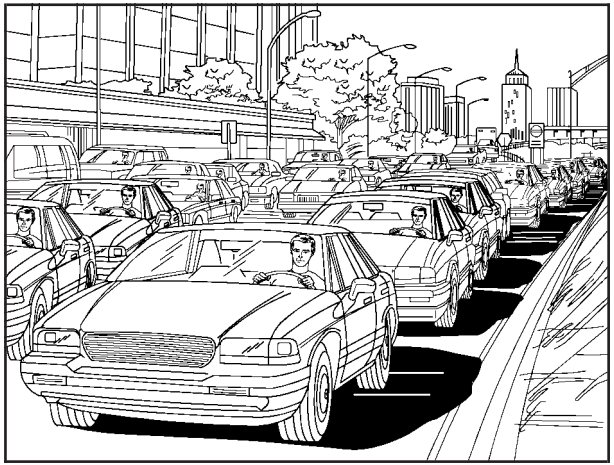

One of the biggest problems with city streets is the amount of traffic on them. You will want to watch out for what the other drivers are doing and pay attention to traffic signals.

Here are ways to increase your safety in city driving:

- Know the best way to get to where you are going. Get a city map and plan your trip into an unknown part of the city just as you would for a cross-country trip.
- Try to use the freeways that rim and crisscross most large cities. You will save time and energy. See *Freeway Driving on page 4-35*.
- Treat a green light as a warning signal. A traffic light is there because the corner is busy enough to need it. When a light turns green, and just before you start to move, check both ways for vehicles that have not cleared the intersection or may be running the red light.

Freeway Driving

Mile for mile, freeways — also called thruways, parkways, expressways, turnpikes, or superhighways — are the safest of all roads. But they have their own special rules.

The most important advice on freeway driving is: Keep up with traffic and keep to the right. Drive at the same speed most of the other drivers are driving. Too-fast or too-slow driving breaks a smooth traffic flow. Treat the left lane on a freeway as a passing lane.

At the entrance, there is usually a ramp that leads to the freeway. If you have a clear view of the freeway as you drive along the entrance ramp, you should begin to check traffic. Try to determine where you expect to blend with the flow. Try to merge into the gap at close to the prevailing speed. Switch on your turn signal, check your mirrors, and glance over your shoulder as often as necessary. Try to blend smoothly with the traffic flow.

Once you are on the freeway, adjust your speed to the posted limit or to the prevailing rate if it is slower. Stay in the right lane unless you want to pass.

Before changing lanes, check your mirrors. Then use your turn signal.

Just before you leave the lane, glance quickly over your shoulder to make sure there is not another vehicle in your blind spot.

Once you are moving on the freeway, make certain you allow a reasonable following distance. Expect to move slightly slower at night.

When you want to leave the freeway, move to the proper lane well in advance. If you miss your exit, do not, under any circumstances, stop and back up. Drive on to the next exit.

The exit ramp can be curved, sometimes quite sharply. The exit speed is usually posted.

Reduce your speed according to your speedometer, not to your sense of motion. After driving for any distance at higher speeds, you may tend to think you are going slower than you actually are.

Before Leaving on a Long Trip

Make sure you are ready. Try to be well rested. If you must start when you are not fresh — such as after a day's work — do not plan to make too many miles that first part of the journey. Wear comfortable clothing and shoes you can easily drive in.

Is your vehicle ready for a long trip? If you keep it serviced and maintained, it is ready to go. If it needs service, have it done before starting out. Of course, you will find experienced and able service experts in GM dealerships all across North America. They will be ready and willing to help if you need it.

Here are some things you can check before a trip:

- *Windshield Washer Fluid:* Is the reservoir full? Are all windows clean inside and outside?
- *Wiper Blades:* Are they in good shape?
- *Fuel, Engine Oil, Other Fluids:* Have you checked all levels?
- *Lamps:* Are they all working? Are the lenses clean?
- *Tires:* They are vitally important to a safe, trouble-free trip. Is the tread good enough for long-distance driving? Are the tires all inflated to the recommended pressure?
- *Weather Forecasts:* What is the weather outlook along your route? Should you delay your trip a short time to avoid a major storm system?
- *Maps:* Do you have up-to-date maps?

Highway Hypnosis

Is there actually such a condition as highway hypnosis? Or is it just plain falling asleep at the wheel? Call it highway hypnosis, lack of awareness, or whatever.

There is something about an easy stretch of road with the same scenery, along with the hum of the tires on the road, the drone of the engine, and the rush of the wind against the vehicle that can make you sleepy. Do not let it happen to you! If it does, your vehicle can leave the road in less than a second, and you could crash and be injured.

What can you do about highway hypnosis? First, be aware that it can happen.

Then here are some tips:

- Make sure your vehicle is well ventilated, with a comfortably cool interior.
- Keep your eyes moving. Scan the road ahead and to the sides. Check your mirrors and your instruments frequently.
- If you get sleepy, pull off the road into a rest, service, or parking area and take a nap, get some exercise, or both. For safety, treat drowsiness on the highway as an emergency.

Hill and Mountain Roads

Driving on steep hills or mountains is different from driving in flat or rolling terrain.

If you drive regularly in steep country, or if you are planning to visit there, here are some tips that can make your trips safer and more enjoyable. See *Off-Road Driving on page 4-17* for information about driving off-road.

- Keep your vehicle in good shape. Check all fluid levels and also the brakes, tires, cooling system, and transmission. These parts can work hard on mountain roads.

⚠ CAUTION:

If you do not shift down, your brakes could get so hot that they would not work well. You would then have poor braking or even none going down a hill. You could crash. Shift down to let your engine assist your brakes on a steep downhill slope.

⚠ CAUTION:

Coasting downhill in NEUTRAL (N) or with the ignition off is dangerous. Your brakes will have to do all the work of slowing down. They could get so hot that they would not work well. You would then have poor braking or even none going down a hill. You could crash. Always have your engine running and your vehicle in gear when you go downhill.

- Know how to go down hills. The most important thing to know is this: let your engine do some of the slowing down. Shift to a lower gear when you go down a steep or long hill.
- Know how to go uphill. You may want to shift down to a lower gear. The lower gears help cool your engine and transmission, and you can climb the hill better.
- Stay in your own lane when driving on two-lane roads in hills or mountains. Do not swing wide or cut across the center of the road. Drive at speeds that let you stay in your own lane.
- As you go over the top of a hill, be alert. There could be something in your lane, like a stalled car or an accident.
- You may see highway signs on mountains that warn of special problems. Examples are long grades, passing or no-passing zones, a falling rocks area, or winding roads. Be alert to these and take appropriate action.

Winter Driving

Here are some tips for winter driving:

- Have your vehicle in good shape for winter.
- You may want to put winter emergency supplies in your vehicle.

Also see *Tires on page 5-62*.

Include an ice scraper, a small brush or broom, a supply of windshield washer fluid, a rag, some winter outer clothing, a small shovel, a flashlight, a red cloth, and a couple of reflective warning triangles. And, if you will be driving under severe conditions, include a small bag of sand, a piece of old carpet, or a couple of burlap bags to help provide traction. Be sure you properly secure these items in your vehicle.

Driving on Snow or Ice

Most of the time, those places where the tires meet the road probably have good traction.

However, if there is snow or ice between the tires and the road, you can have a very slippery situation. You will have a lot less traction, or grip, and will need to be very careful.

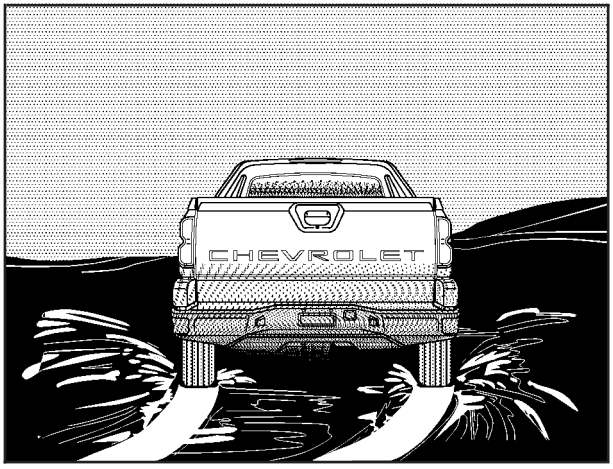

What is the worst time for this? Wet ice. Very cold snow or ice can be slick and hard to drive on. But wet ice can be even more trouble because it may offer the least traction of all. You can get wet ice when it is about freezing, 32°F (0°C), and freezing rain begins to fall. Try to avoid driving on wet ice until salt and sand crews can get there.

Whatever the condition — smooth ice, packed, blowing, or loose snow — drive with caution.

StabiliTrak® will improve your ability to accelerate when driving on a slippery road. But you can turn StabiliTrak® off if you ever need to. See *StabiliTrak® System on page 4-9* and *If Your Vehicle is Stuck in Sand, Mud, Ice or Snow on page 4-44*. Even with StabiliTrak®, you will want to slow down and adjust your driving to the road conditions. Under certain conditions, you may want to turn StabiliTrak® off, such as when driving through deep snow and loose gravel, to help maintain vehicle motion at lower speeds.

Your Anti-Lock Brake System (ABS) improves your vehicle's stability when you make a hard stop on a slippery road. Even though you have ABS, you will want to begin stopping sooner than you would on dry pavement. See *Anti-Lock Brake System (ABS) on page 4-7*.

- Allow greater following distance on any slippery road.
- Watch for slippery spots. The road might be fine until you hit a spot that is covered with ice. On an otherwise clear road, ice patches may appear in shaded areas where the sun cannot reach, such as around clumps of trees, behind buildings, or under bridges. Sometimes the surface of a curve or an overpass may remain icy when the surrounding roads are clear. If you see a patch of ice ahead of you, brake before you are on it. Try not to brake while you are actually on the ice, and avoid sudden steering maneuvers.

If You Are Caught in a Blizzard

If you are stopped by heavy snow, you could be in a serious situation. You should probably stay with your vehicle unless you know for sure that you are near help and you can hike through the snow.

Here are some things to do to summon help and keep yourself and your passengers safe:

- Turn on your hazard flashers.
- Tie a red cloth to your vehicle to alert police that you have been stopped by the snow.
- Put on extra clothing or wrap a blanket around you. If you do not have blankets or extra clothing, make body insulators from newspapers, burlap bags, rags, floor mats — anything you can wrap around yourself or tuck under your clothing to keep warm.

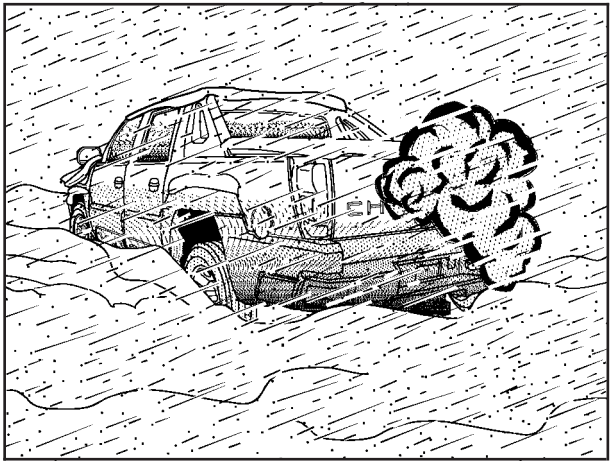

You can run the engine to keep warm, but be careful.

⚠ CAUTION:

Snow can trap exhaust gases under your vehicle. This can cause deadly CO (carbon monoxide) gas to get inside. CO could overcome you and kill you. You cannot see it or smell it, so you might not know it is in your vehicle. Clear away snow from around the base of your vehicle, especially any that is blocking your exhaust pipe. And check around again from time to time to be sure snow does not collect there.

Open a window just a little on the side of the vehicle that is away from the wind. This will help keep CO out.

Run your engine only as long as you must. This saves fuel. When you run the engine, make it go a little faster than just idle. That is, push the accelerator slightly. This uses less fuel for the heat that you get and it keeps the battery charged. You will need a well-charged battery to restart the vehicle, and possibly for signaling later on with your headlamps. Let the heater run for a while.

Then, shut the engine off and close the window almost all the way to preserve the heat. Start the engine again and repeat this only when you feel really uncomfortable from the cold. But do it as little as possible. Preserve the fuel as long as you can. To help keep warm, you can get out of the vehicle and do some fairly vigorous exercises every half hour or so until help comes.

If Your Vehicle is Stuck in Sand, Mud, Ice or Snow

In order to free your vehicle when it is stuck, you will need to spin the wheels, but you do not want to spin your wheels too fast. The method known as rocking can help you get out when you are stuck, but you must use caution.

⚠ CAUTION:

If you let your tires spin at high speed, they can explode, and you or others could be injured. And, the transmission or other parts of the vehicle can overheat. That could cause an engine compartment fire or other damage. When you are stuck, spin the wheels as little as possible. Do not spin the wheels above 35 mph (55 km/h) as shown on the speedometer.

Notice: **Spinning your wheels can destroy parts of your vehicle as well as the tires. If you spin the wheels too fast while shifting your transmission back and forth, you can destroy your transmission.**

For more information about using tire chains on your vehicle, see *Tire Chains on page 5-81*.

Rocking Your Vehicle to Get It Out

First, turn your steering wheel left and right. That will clear the area around your front wheels. If you have a four-wheel-drive vehicle, shift into Four-Wheel High or Four-Wheel Low. Turn the StabiliTrak® System off. See *StabiliTrak® System on page 4-9*. Then shift back and forth between REVERSE (R) and a forward gear, spinning the wheels as little as possible. Release the accelerator pedal while you shift, and press lightly on the accelerator pedal when the transmission is in gear. By slowly spinning your wheels in the forward and reverse directions, you will cause a rocking motion that may free your vehicle. If that does not get you out after a few tries, you may need to be towed out. Or, you can use your recovery hooks if your vehicle has them. If you do need to be towed out, see *Towing Your Vehicle on page 4-57*.

Recovery Hooks

⚠ CAUTION:

These hooks, when used, are under a lot of force. Always pull the vehicle straight out. Never pull on the hooks at a sideways angle. The hooks could break off and you or others could be injured from the chain or cable snapping back.

Notice: **Never use recovery hooks to tow the vehicle. Your vehicle could be damaged and it would not be covered by warranty.**

Your vehicle has recovery hooks at the front of the vehicle. You may need to use them if you are stuck off-road and need to be pulled to some place where you can continue driving.

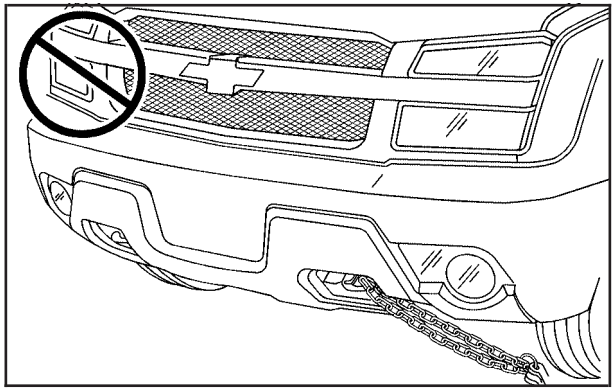

Loading Your Vehicle

It is very important to know how much weight your vehicle can carry. This weight is called the vehicle capacity weight and includes the weight of all occupants, cargo, and all nonfactory-installed options. Two labels on your vehicle show how much weight it was designed to carry, the Tire and Loading Information label and the Certification/Tire label.

⚠ CAUTION:

Do not load your vehicle any heavier than the Gross Vehicle Weight Rating (GVWR), or either the maximum front or rear Gross Axle Weight Rating (GAWR). If you do, parts on your vehicle can break, and it can change the way your vehicle handles. These could cause you to lose control and crash. Also, overloading can shorten the life of your vehicle.

Tire and Loading Information Label

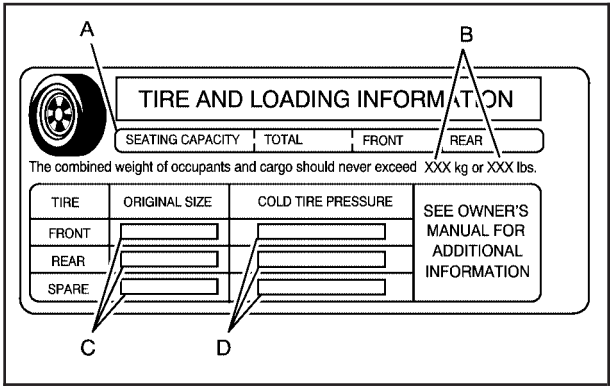

Label Example

A vehicle specific Tire and Loading Information label is attached to the center pillar (B-pillar). With the driver's door open, you will find the label attached below the door lock post (striker). The tire and loading information label shows the number of occupant seating positions (A), and the maximum vehicle capacity weight (B) in kilograms and pounds.

The Tire and Loading Information label also shows the size of the original equipment tires (C) and the recommended cold tire inflation pressures (D). For more information on tires and inflation see *Tires on page 5-62* and *Inflation - Tire Pressure on page 5-68*.

There is also important loading information on the vehicle Certification/Tire label. It tells you the Gross Vehicle Weight Rating (GVWR) and the Gross Axle Weight Rating (GAWR) for the front and rear axles. See “Certification/Tire Label” later in this section.

Steps for Determining Correct Load Limit

1. Locate the statement “The combined weight of occupants and cargo should never exceed XXX kg or XXX lbs” on your vehicle’s placard.
2. Determine the combined weight of the driver and passengers that will be riding in your vehicle.
3. Subtract the combined weight of the driver and passengers from XXX kg or XXX lbs.
4. The resulting figure equals the available amount of cargo and luggage load capacity. For example, if the “XXX” amount equals 1400 lbs and there will be five 150 lb passengers in your vehicle, the amount of available cargo and luggage load capacity is 650 lbs (1400 – 750 (5 x 150) = 650 lbs).
5. Determine the combined weight of luggage and cargo being loaded on the vehicle. That weight may not safely exceed the available cargo and luggage load capacity calculated in Step 4.
6. If your vehicle will be towing a trailer, the load from your trailer will be transferred to your vehicle. Consult this manual to determine how this reduces the available cargo and luggage load capacity of your vehicle. See *Towing a Trailer on page 4-62* for important information on towing a trailer, towing safety rules and trailering tips.

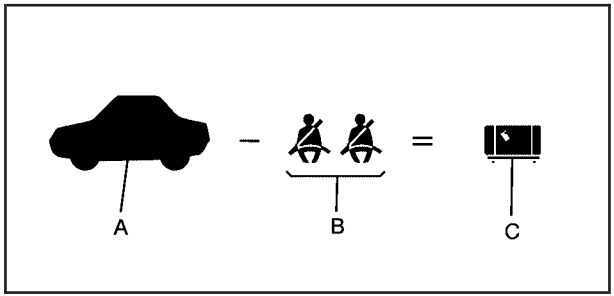

Example 1

Item	Description	Total
A	Vehicle Capacity Weight for Example 1 =	1,000 lbs (453 kg)
B	Subtract Occupant Weight 150 lbs (68 kg) × 2 =	300 lbs (136 kg)
C	Available Occupant and Cargo Weight =	700 lbs (317 kg)

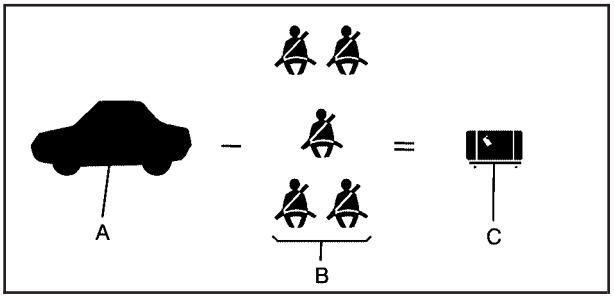

Example 2

Item	Description	Total
A	Vehicle Capacity Weight for Example 2 =	1,000 lbs (453 kg)
B	Subtract Occupant Weight 150 lbs (68 kg) × 5 =	750 lbs (136 kg)
C	Available Cargo Weight =	250 lbs (113 kg)

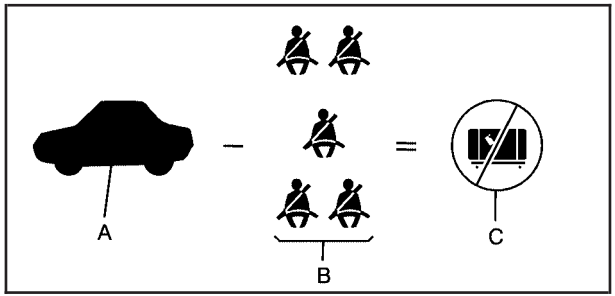

Example 3

Item	Description	Total
A	Vehicle Capacity Weight for Example 3 =	1,000 lbs (453 kg)
B	Subtract Occupant Weight 200 lbs (91 kg) × 5 =	1,000 lbs (453 kg)
C	Available Cargo Weight =	0 lbs (0 kg)

Refer to your vehicle's tire and loading information label for specific information about your vehicle's capacity weight and seating positions. The combined weight of the driver, passengers and cargo should never exceed your vehicle's capacity weight.

Certification/Tire Label

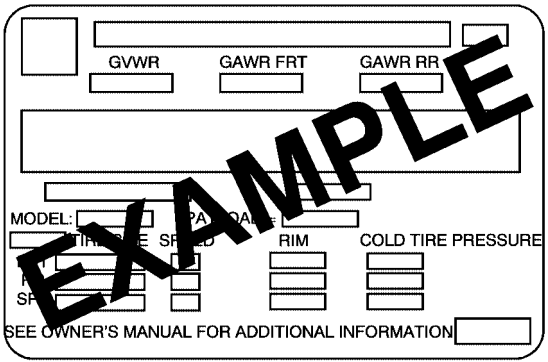

A vehicle specific Certification/Tire label is attached to the rear edge of the driver's door. The label shows the size of your vehicle's original tires and the inflation pressures needed to obtain the gross weight capacity of your vehicle. This is called Gross Vehicle Weight Rating (GVWR). The GVWR includes the weight of the vehicle, all occupants, fuel and cargo.

The Certification/Tire label also tells you the maximum weights for the front and rear axles, called Gross Axle Weight Rating (GAWR). To find out the actual loads on your front and rear axles, you need to go to a weigh station and weigh your vehicle. Your dealer can help you with this. Be sure to spread out your load equally on both sides of the centerline.

Never exceed the GVWR for your vehicle, or the GAWR for either the front or rear axle.

The Certification/Tire label also contains information about your Front Axle Reserve Capacity. See “What is front axle reserve capacity weight and how do I calculate it?” under *Adding a Snow Plow or Similar Equipment on page 4-52*.

And, if you do have a heavy load, you should spread it out.

⚠ CAUTION:

In the case of a sudden stop or collision, things carried in the bed of your truck could shift forward and come into the passenger area, injuring you and others. If you put things in the bed of your truck, you should make sure they are properly secured.

⚠ CAUTION:

Do not load your vehicle any heavier than the Gross Vehicle Weight Rating (GVWR), or either the maximum front or rear Gross Axle Weight Rating (GAWR). If you do, parts on your vehicle can break, and it can change the way your vehicle handles. These could cause you to lose control and crash. Also, overloading can shorten the life of your vehicle.

Your warranty does not cover parts or components that fail because of overloading.

The label will help you decide how much cargo and installed equipment your truck can carry.

Using heavier suspension components to get added durability might not change your weight ratings. Ask your dealer to help you load your vehicle the right way.

If you put things inside your vehicle — like suitcases, tools, packages, or anything else — they will go as fast as the vehicle goes. If you have to stop or turn quickly, or if there is a crash, they will keep going.

⚠ CAUTION:

Things you put inside your vehicle can strike and injure people in a sudden stop or turn, or in a crash.

- **Put things in the cargo area of your vehicle. Try to spread the weight evenly.**
- **Never stack heavier things, like suitcases, inside the vehicle so that some of them are above the tops of the seats.**
- **Do not leave an unsecured child restraint in your vehicle.**
- **When you carry something inside the vehicle, secure it whenever you can.**
- **Do not leave a seat folded down unless you need to.**

There is also important loading information for off-road driving in this manual. See “Loading Your Vehicle for Off-Road Driving” under *Off-Road Driving on page 4-17*.

Add-On Equipment

When you carry removable items, you may need to put a limit on how many people you can carry inside your vehicle. Be sure to weigh your vehicle before you buy and install the new equipment.

Notice: **Overloading your vehicle may cause damage. Repairs would not be covered by your warranty. Do not overload your vehicle.**

Remember not to exceed the Gross Axle Weight Rating (GAWR) of the front or rear axle. See *Adding a Snow Plow or Similar Equipment on page 4-52* for additional information.

The Cargo Weight Rating (CWR) is the maximum weight of the load your vehicle can carry. It does not include the weight of the people inside. But you can figure about 150 lbs (68 kg) for each seat.

The total cargo load must not be more than your vehicle’s CWR.

Adding a Snow Plow or Similar Equipment

Before installing a snow plow on your vehicle, here are some things you will need to know:

Notice: **If your vehicle does not have the snow plow prep package, adding a plow can damage your vehicle, and the repairs would not be covered by warranty. Unless your vehicle was built to carry a snow plow, do not add one to your vehicle. If your vehicle has the snow plow option called RPO VYU (snow plow prep package), then the payload your vehicle can carry will be reduced when a snow plow is installed. Your vehicle can be damaged if either the front or rear axle ratings or the gross vehicle weight (GVW) are exceeded.**

Q: How do I know if my vehicle can handle a snow plow?

A: Some vehicles are built with a special package, called RPO VYU (snow plow prep package). If your vehicle has this option, you can add a plow to it, provided certain weights, such as the weights on the vehicle's axles and the GVW, are not exceeded.

Q: How heavy can a snow plow safely be?

A: The plow your vehicle can carry depends on many things, such as:

- The options your vehicle came with, and the weight of those options.
- The weight and number of passengers you intend to carry.
- The weight of items you have added to your vehicle, like a tool box.
- The total weight of any additional cargo you intend to carry.

Say, for example, you have a 700 lb (318 kg) snow plow. The total weight of all occupants and cargo inside the cab should not exceed 300 lb (135 kg). This means that you may only be able to carry one passenger. But, even this may be too much if you have got other equipment already adding to the weight of your vehicle.

Here are some guidelines for safely carrying a snow plow on your vehicle:

- Make sure the weight on the front and rear axles does not exceed the axle rating for each.
- For the front axle, if more cargo or passengers must be carried, appropriate counter ballast must be installed rear of the rear axle. Counter ballast must be properly secured so it will not move during driving.
- Follow the snow plow manufacturer's recommendations regarding rear ballast. Rear ballast may be required to ensure a proper front and rear weight distribution ratio, even though the actual weight at the front axle may be less than the front axle rating.
- The snow plow manufacturer or installer can assist you in determining the amount of rear ballast required, to help make sure your snowplow/vehicle combination does not exceed the GVW rating, the front and rear axle ratings, and the front and rear weight distribution ratio.
- The total vehicle must not exceed the GVW rating.

Q: What is front axle reserve capacity, and how do I calculate it?

A: Front axle reserve capacity is the difference between your front gross axle weight rating (GAWR) and the front axle weight of your vehicle with full fuel and passengers. Basically, it is the amount of weight you can add to your front axle before reaching your front GAWR.

The front axle reserve capacity for your vehicle can be found in the lower right corner of the Certification/Tire label, as shown.

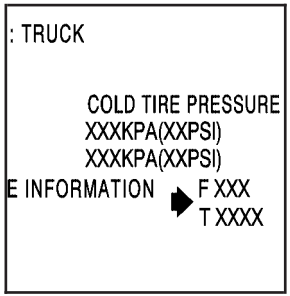

United States

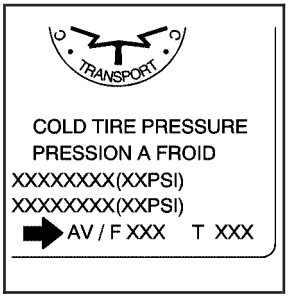

Canada

In order to calculate the amount of weight any front accessory, such as a snow plow, is adding to the front axle, use the following formula:

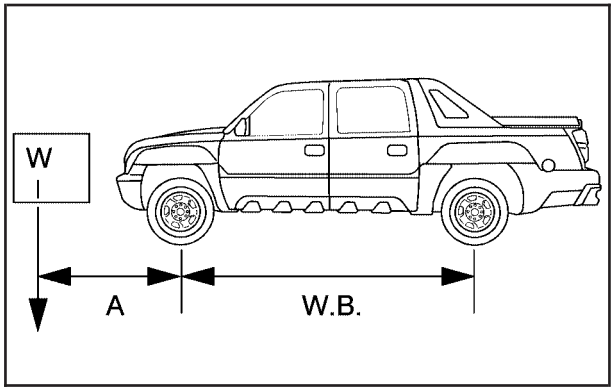

(W x (A + W.B.)) /W.B.= Weight the accessory is adding to the front axle.

Where:

W = Weight of added accessory

A = Distance that the accessory is in front of the front axle.

W.B. = Vehicle Wheelbase

For example, adding a 700 lb (318 kg) snow plow actually adds more than 700 lbs (318 kg) to the front axle. Using the formula, if the snow plow is 4 ft (122 cm) in front of the front axle and the wheel base is 10 ft (305 cm), then:

W = 700 lb (318 kg)

A = 4 ft (122 cm)

W.B. = 10 ft (305 cm)

(W x (A + W.B.))/W.B. = (700 x (4 + 10))/ 10 = 980 lbs (445 kg)

So, if your vehicle's front axle reserve capacity is more than 980 lbs (445 kg), you could add the snow plow without exceeding the front GAWR.

Q: What if I want to add heavier equipment to my vehicle?

A: You can add heavier equipment on the front of the vehicle if you compensate for it by carrying fewer passengers, less cargo, or by positioning cargo towards the rear. This has the effect of reducing the load on the front. However, the front GAWR, rear GAWR and the gross vehicle weight rating (GVWR) must never be exceeded.

⚠ CAUTION:

On some vehicles equipped with certain front mounted equipment, such as a snow plow, it may be possible to load the front axle to the front GAWR but not have enough weight on the rear axle to have proper braking performance. If your brakes can not work properly, you could have a crash. To help your brakes work properly when a snow plow is installed, always follow the snow plow manufacturer or installer's recommendation for rear ballast to ensure a proper front and rear weight distribution ratio, even though the actual front weight may be less than the front GAWR, and the total vehicle weight is less than the GVWR. Maintaining a proper front and rear weight distribution ratio is necessary to provide proper braking performance.

Q: What is total vehicle reserve capacity?

A: This is the difference between your GVWR and the weight of your vehicle with full fuel and passengers. It is the amount of weight you can add to your vehicle before reaching your GVWR. Keep in mind that reserve capacity numbers are intended as a guide when selecting the amount of equipment or cargo your vehicle can carry. If you are unsure of your vehicle's front, rear, or total weight, go to a weigh station and weigh your vehicle. Your dealer can also help you with this.

The total vehicle reserve capacity for your vehicle can be found in the lower right corner of the Certification/Tire label as shown previously.

See your dealer for additional advice and information about using a snow plow on your vehicle. Also, see *Loading Your Vehicle on page 4-46*.

Emergency Roof Lamp Provisions

Vehicles with the RPO VYU snow plow prep package also have an emergency roof lamp provision package, RPO TRW. Wiring for the emergency roof lamp is provided in the B-pillar as shown. See *Auxiliary Roof Mounted Lamp on page 3-17* for switch location.

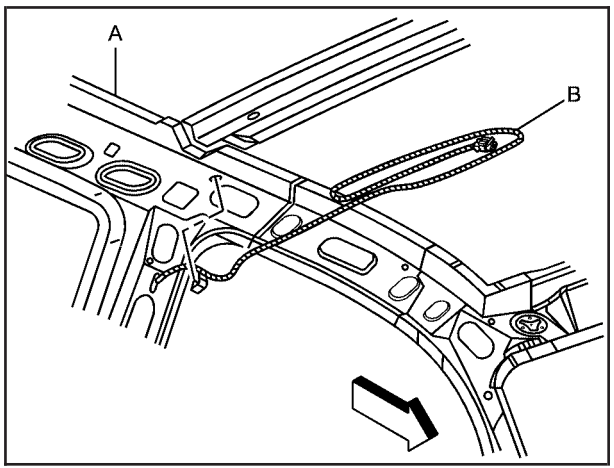

A. Body Side Inner Panel

B. Emergency Roof Lamp Harness

Truck-Camper Loading Information

Your vehicle was neither designed nor intended to carry a slide-in type camper.

Notice: **Adding a slide-in camper or similar equipment to your vehicle can damage it, and the repairs would not be covered by your warranty. Do not install a slide-in camper or similar equipment on your vehicle.**

Towing

Towing Your Vehicle

Consult your dealer or a professional towing service if you need to have your disabled vehicle towed. See *Roadside Assistance Program on page 7-6*.

If you want to tow your vehicle behind another vehicle for recreational purposes (such as behind a motorhome), see “Recreational Vehicle Towing” following.

Recreational Vehicle Towing

Recreational vehicle towing means towing your vehicle behind another vehicle – such as behind a motorhome. The two most common types of recreational vehicle towing are known as “dinghy towing” (towing your vehicle with all four wheels on the ground) and “dolly towing” (towing your vehicle with two wheels on the ground and two wheels up on a device known as a “dolly”).

With the proper preparation and equipment, many vehicles can be towed in these ways. See “Dinghy Towing” and “Dolly Towing,” following.

Here are some important things to consider before you do recreational vehicle towing:

- What’s the towing capacity of the towing vehicle? Be sure you read the tow vehicle manufacturer’s recommendations.
- How far will you tow? Some vehicles have restrictions on how far and how long they can tow.
- Do you have the proper towing equipment? See your dealer or trailering professional for additional advice and equipment recommendations.
- Is your vehicle ready to be towed? Just as you would prepare your vehicle for a long trip, you’ll want to make sure your vehicle is prepared to be towed. See *Before Leaving on a Long Trip on page 4-36*.

Dinghy Towing

Two-Wheel-Drive Vehicles

Notice: **If you tow your vehicle with all four wheels on the ground, the drivetrain components could be damaged. The repairs would not be covered by your warranty. Do not tow your vehicle with all four wheels on the ground.**

Two-wheel drive vehicles should not be towed with all four wheels on the ground. Two-wheel-drive transmissions have no provisions for internal lubrication while being towed.

Four-Wheel-Drive Vehicles

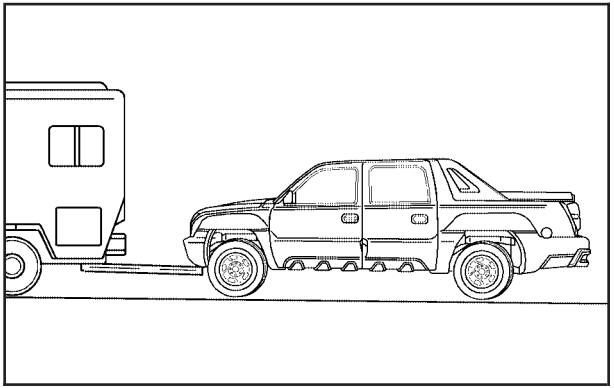

Use the following procedure to tow your vehicle:

1. Shift the transmission to PARK (P).
2. Turn the engine off, but leave the ignition on.
3. Firmly set the parking brake.
4. Securely attach the vehicle being towed to the tow vehicle.

⚠ CAUTION:

Shifting the transfer case to NEUTRAL can cause your vehicle to roll even if the transmission is in PARK (P). You or someone else could be seriously injured. Be sure to set the parking brake before placing the transfer case in NEUTRAL. See *Parking Brake on page 2-38*.

5. Shift the transfer case to NEUTRAL (N). See *Four-Wheel Drive on page 2-34* for the proper procedure to select the neutral position for your vehicle.
6. Release the parking brake only after the vehicle being towed is firmly attached to the towing vehicle.
7. Turn the ignition off to lock the steering column.

Dolly Towing

Front Towing (Front Wheels Off the Ground)

Two-Wheel-Drive Vehicles

Notice: **If you tow a two-wheel-drive vehicle with the rear wheels on the ground, the transmission could be damaged. The repairs would not be covered by your warranty. Never tow your vehicle with the rear wheels on the ground.**

Two-wheel drive vehicles should not be towed with the rear wheels on the ground. Two-wheel-drive transmissions have no provisions for internal lubrication while being towed. To dolly tow a two-wheel-drive vehicle, you must tow the vehicle with the rear wheels on the dolly. See “Rear Towing (Rear Wheels Off the Ground)” later in this section for more information.

Four-Wheel-Drive Vehicles

Use the following procedure to tow your vehicle:

1. Drive the vehicle up onto the tow dolly.
2. Firmly set the parking brake.
3. Shift the transmission to PARK (P).
4. Turn the engine off, but leave the ignition on.
5. Securely attach the vehicle being towed to the tow dolly.

⚠ CAUTION:

Shifting the transfer case to NEUTRAL can cause your vehicle to roll even if the transmission is in PARK (P). You or someone else could be seriously injured. Be sure to set the parking brake before placing the transfer case in NEUTRAL. See *Parking Brake on page 2-38*.

6. Shift the transfer case to NEUTRAL (N). See *Four-Wheel Drive on page 2-34* for the proper procedure to select the neutral position for your vehicle.
7. Release the parking brake only after the vehicle being towed is firmly attached to the towing vehicle.
8. Turn the ignition off to lock the steering column.

   If the tow vehicle will not be started or driven for six weeks or more, remove the battery cable from the negative terminal (post) of the battery to prevent your battery from draining while towing.

Rear Towing (Rear Wheels Off the Ground)

Two-Wheel-Drive Vehicles

Use the following procedure to tow your vehicle from the rear:

1. Drive the vehicle onto the dolly.
2. Firmly set the parking brake. See *Parking Brake on page 2-38* for more information.
3. Put the transmission in PARK (P).
4. Follow the dolly manufacturer's instructions to attach and secure the vehicle being towed to the dolly and then the loaded dolly to the tow vehicle.

   Make sure the wheels are straight before proceeding to the next steps.

5. Release the parking brake only after the vehicle being towed is firmly attached to the tow vehicle.
6. Turn the ignition off to lock the steering column.

   If the tow vehicle will not be started or driven for six weeks or more, remove the battery cable from the negative terminal (post) of the battery to prevent your battery from draining while towing.

Four-Wheel-Drive Vehicles

Use the following procedure to tow your vehicle from the rear:

1. Drive the vehicle onto the dolly.
2. Firmly set the parking brake.
3. Put the transmission in PARK (P).
4. Turn the engine off, but leave the ignition on.
5. Follow the dolly manufacturer's instructions to attach and secure the vehicle being towed to the dolly and then the loaded dolly to the tow vehicle.

   Make sure the wheels are straight before proceeding to the next steps.

⚠ CAUTION:

Shifting the transfer case to NEUTRAL can cause your vehicle to roll even if the transmission is in PARK (P). You or someone else could be seriously injured. Be sure to set the parking brake before placing the transfer case in NEUTRAL. See *Parking Brake on page 2-38*.

6. Shift the transfer case to NEUTRAL (N). See *Four-Wheel Drive on page 2-34* for the proper procedure to select the neutral position for your vehicle.
7. Release the parking brake only after the vehicle being towed is firmly attached to the tow vehicle.
8. Turn the ignition off to lock the steering column.

   If the tow vehicle will not be started or driven for six weeks or more, remove the battery cable from the negative terminal (post) of the battery to prevent your battery from draining while towing.

Level Control

The self-adjusting rear suspension may come as part of the premium smooth ride suspension package.

This type of level control will provide a leveled riding position as well as improved handling under a variety of passenger and loading conditions. A hydraulic pump inside each rear shock absorber raises the rear of the vehicle to the proper height, based on inputs from the road surface, while the vehicle is being driven. It take approximately 2 miles (3.2 km) of driving for the leveling to complete, depending on the road surface conditions.

If the loaded vehicle is not moved for approximately 12 hours, the leveling system may bleed down to a lower height. This can be especially apparent if a trailer is left attached to a parked vehicle for long periods of time. The vehicle must be driven to re-level the vehicle.

If a self-equalizing hitch is being used, the vehicle should be driven approximately 2 miles (3.2 km) with the trailer prior to adjusting (leveling) the hitch.

Towing a Trailer

Do not tow a trailer during break-in. See *New Vehicle Break-In on page 2-26* for more information.

⚠ CAUTION:

If you do not use the correct equipment and drive properly, you can lose control when you pull a trailer. For example, if the trailer is too heavy, the brakes may not work well — or even at all. You and your passengers could be seriously injured. Pull a trailer only if you have followed all the steps in this section. Ask your dealer for advice and information about towing a trailer with your vehicle.

Notice: **Pulling a trailer improperly can damage your vehicle and result in costly repairs not covered by your warranty. To pull a trailer correctly, follow the advice in this part, and see your dealer for important information about towing a trailer with your vehicle.**

To identify the trailering capacity of your vehicle, you should read the information in “Weight of the Trailer” that appears later in this section.

Trailering is different than just driving your vehicle by itself. Trailering means changes in handling, acceleration, braking, durability and fuel economy. Successful, safe trailering takes correct equipment, and it has to be used properly.

That's the reason for this part. In it are many time-tested, important trailering tips and safety rules. Many of these are important for your safety and that of your passengers. So please read this section carefully before you pull a trailer.

If You Do Decide To Pull A Trailer

If you do, here are some important points:

- There are many different laws, including speed limit restrictions, having to do with trailering. Make sure your rig will be legal, not only where you live but also where you'll be driving. A good source for this information can be state or provincial police.
- Consider using a sway control. See "Hitches" later in this section.
- Don't tow a trailer at all during the first 500 miles (800 km) your new vehicle is driven. Your engine, axle or other parts could be damaged.
- Then, during the first 500 miles (800 km) that you tow a trailer, don't drive over 50 mph (80 km/h) and don't make starts at full throttle. This helps your engine and other parts of your vehicle wear in at the heavier loads.
- You can tow in DRIVE (D). You may want to shift the transmission to THIRD (3) or, if necessary, a lower gear selection if the transmission shifts too often (e.g., under heavy loads and/or hilly conditions). See "Tow/Haul Mode" later in this section.

Three important considerations have to do with weight:

- the weight of the trailer,
- the weight of the trailer tongue
- and the weight on your vehicle's tires.

Tow/Haul Mode

Tow/haul is designed to assist while your vehicle is pulling a large or heavy load or trailer. Tow/haul is most useful while pulling such a load in rolling terrain, in stop-and-go traffic, or when you need improved low-speed control, such as when parking. The purpose of the tow/haul mode is to do the following:

- Reduce the frequency and improve the predictability of transmission shifts when pulling a heavy trailer or a large or heavy load.
- Provide the same solid shift feel when pulling a heavy trailer or a large or heavy load as when the vehicle is unloaded.
- Improve control of vehicle speed while requiring less throttle pedal activity when pulling a heavy trailer or a large or heavy load.

Tow/haul is designed to be most effective when the vehicle and trailer combined weight is at least 75 percent of the vehicle's Gross Combination Weight Rating (GCWR). See "Weight of the Trailer" later in this section.

Press the button at the end of the shift lever to enable/disable the tow/haul mode.

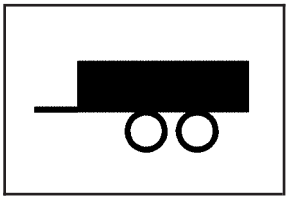

A light on the instrument panel will illuminate to indicate that tow/haul mode has been selected.

The vehicle will automatically turn off tow/haul every time it is started.

Driving with tow/haul activated without a heavy load or with no trailer will cause reduced fuel economy and unpleasant engine and transmission driving characteristics, but will not cause damage.

Operating the vehicle in tow/haul when lightly loaded or with no trailer at all will not cause damage. However, there is no benefit to the selection of tow/haul when the vehicle is unloaded. Such a selection when unloaded may result in unpleasant engine and transmission driving characteristics and reduced fuel economy. Tow/haul is recommended only when pulling a heavy trailer or a large or heavy load.

Weight of the Trailer

How heavy can a trailer safely be?

It depends on how you plan to use your rig. For example, speed, altitude, road grades, outside temperature and how much your vehicle is used to pull a trailer are all important. It can also depend on any special equipment that you have on your vehicle, and the amount of tongue weight the vehicle can carry. See “Weight of the Trailer Tongue” later in this section for more information.

Maximum trailer weight is calculated assuming only the driver is in the tow vehicle and it has all the required trailering equipment. The weight of additional optional equipment, passengers and cargo in the tow vehicle must be subtracted from the maximum trailer weight.

Above the 5,000 lb (2 268 kg) trailer rating, the handling/trailering suspension is required on two-wheel-drive 1500 series models and the handling/trailering or off-road suspension is required on four-wheel-drive 1500 series models.

Use one of the following charts to determine how much your vehicle can weigh, based upon your vehicle model and options.

Notice: **Using a fifth-wheel or goose-neck hitch device on your vehicle could damage the vehicle. The repairs would not be covered by your warranty. Do not use a fifth-wheel or goose-neck hitch device on your vehicle.**

Vehicle	Axle Ratio	Maximum Trailer Weight	**GCWR
C-1500 (2WD) 5300 V8	3.42	7,300 lbs (3 311 kg)	13,000 lbs (5 897 kg)
	4.10	8,200 lbs (3 719 kg)	14,000 lbs (6 350 kg)
K-1500 (4WD) 5300 V8	3.42	7,100 lbs (3 220 kg)	13,000 lbs (5 897 kg)
	4.10	7,900 lbs (3 583 kg)	14,000 lbs (6 350 kg)
**The Gross Combination Weight Rating (GCWR) is the total allowable weight of the completely loaded vehicle and trailer including any passengers, cargo, equipment and conversions. The GCWR for your vehicle should not be exceeded.			

Vehicle	Axle Ratio	Maximum Trailer Weight	**GCWR
K-2500 (4WD) 8100 V8	3.73	10,200 lbs (4 627 kg)	17,000 lbs (7 711 kg)
	4.10	12,000 lbs (5 443 kg)	19,000 lbs (8 618 kg)
**The Gross Combination Weight Rating (GCWR) is the total allowable weight of the completely loaded vehicle and trailer including any passengers, cargo, equipment and conversions. The GCWR for your vehicle should not be exceeded.			

You can ask your dealer for our trailering information or advice, or you can write us at the address listed in your Warranty and Owner Assistance Information Booklet.

In Canada, write to:

General Motors of Canada Limited
Customer Communication Centre, 163-005
1908 Colonel Sam Drive
Oshawa, Ontario L1H 8P7

Weight of the Trailer Tongue

The tongue load (A) of any trailer is an important weight to measure because it affects the total or gross weight of your vehicle. The Gross Vehicle Weight (GVW) includes the curb weight of the vehicle, any cargo you may carry in it, and the people who will be riding in the vehicle. If you have a lot of options, equipment, passengers or cargo in your vehicle, it will reduce the tongue weight your vehicle can carry, which will also reduce the trailer weight your vehicle can tow.

And if you will tow a trailer, you must add the tongue load to the GVW because your vehicle will be carrying that weight, too. See *Loading Your Vehicle on page 4-46* for more information about your vehicle's maximum load capacity.

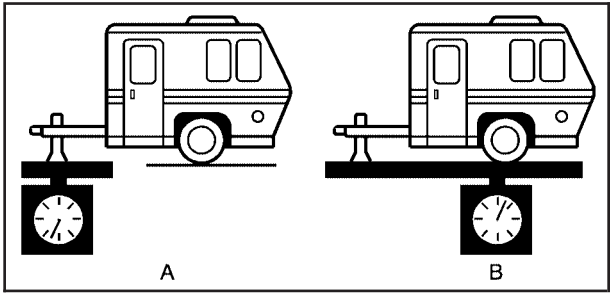

The trailer tongue weight (A) should be 10 percent to 15 percent of the total loaded trailer weight (B), up to a maximum of 600 lbs (272 kg) with a weight carrying hitch.

The trailer tongue weight (A) should be 10 percent to 15 percent of the total loaded trailer weight (B), up to a maximum of 1,000 lbs (454 kg) for the 1500 series and up to a maximum of 1,500 lbs (680 kg) for the 2500 series with a weight distributing hitch.

Do not exceed the maximum allowable tongue weight for your vehicle. Choose the shortest hitch extension that will position the hitch ball closest to the vehicle. This will help reduce the effect of trailer tongue weight on the rear axle.

After you've loaded your trailer, weigh the trailer and then the tongue, separately, to see if the weights are proper. If they aren't, you may be able to get them right simply by moving some items around in the trailer.

Trailering may be limited by the vehicle's ability to carry tongue weight. Tongue weight cannot cause the vehicle to exceed the GVWR (Gross Vehicle Weight Rating) or the RGAWR (Rear Gross Axle Weight Rating). The effect of additional weight may reduce your trailering capacity more than the total of the additional weight.

Consider the following example:

A vehicle model base weight is 5,500 lbs (2 495 kg); 2,800 lbs (1 270 kg) at the front axle and 2,700 lbs (1 225 kg) at the rear axle. It has a GVWR of 7,200 lbs (3 266 kg), a RGAWR of 4,000 lbs (1 814 kg) and a GCWR (Gross Combination Weight Rating) of 14,000 lbs (6 350 kg). The trailer rating should be:

14,000 lbs (6350 kg)	GCWR
–5,500 lbs (2495 kg)	Vehicle Weight
8,500 lbs (3855 kg)	Trailer Rating

You can expect tongue weight to be at least 10 percent of trailer weight (850 lbs (386 kg)) and because the weight is applied well behind the rear axle, the effect on the rear axle will be greater than just the weight itself, as much as 1.5 times as much. The weight at the rear axle could be 850 lbs (386 kg) X 1.5 = 1,275 lbs (578 kg). Since the rear axle already weighs 2,700 lbs (1 225 kg), adding 1,275 lbs (578 kg) brings the total to 3,975 lbs (1 803 kg). This is very close to, but within the limit for RGAWR as well. The vehicle is set to trailer up to 8,500 lbs (3 856 kg).

But let's say your specific vehicle is equipped with some of the latest options and you have a front seat passenger and two rear seat passengers with some luggage and gear in the vehicle as well. You may add 300 lbs (136 kg) to the front axle weight and 400 lbs (181 kg) to the rear axle weight. Your vehicle now weighs:

2,800 lbs (1270 kg)	+	300 lbs (136 kg)	Front
2,700 lbs (1225 kg)	+	400 lbs (181 kg)	Rear
6,200 lbs (2812 kg)			Total

Weight is still below 7,200 lbs (3 266 kg) and you may think that you should subtract 700 additional pounds (318 kg) from your trailering capacity to stay within GCWR limits. Your maximum trailer would only be 7,800 lbs (3 538 kg). You may go further and think you must limit tongue weight to less than 1,000 lbs (454 kg) to avoid exceeding GVWR. But, you must still consider the effect on the rear axle. Because your rear axle now weighs 3,100 lbs (1 406 kg), you can only put 900 lbs (408 kg) on the rear axle without exceeding RGAWR. The effect of tongue weight is about 1.5 times the actual weight. Dividing the 900 lbs (408 kg) by 1.5 leaves you with being able to handle only 600 lbs (272 kg) of tongue weight.

Since tongue weight is usually at least 10 percent of total loaded trailer weight, you can expect that the largest trailer your vehicle can properly handle is 6,000 lbs (2 721 kg).

It is important that you make sure your vehicle does not exceed any of its ratings — GCWR, GVWR, RGAWR, Maximum Trailer Rating or Tongue Weight. The only way to be sure you are not exceeding any of these ratings is to weigh your vehicle and trailer.

Total Weight on Your Vehicle's Tires

Be sure your vehicle's tires are inflated to the upper limit for cold tires. You'll find these numbers on the Certification label at the rear edge of the driver's door or see *Tires on page 5-62*. Then be sure you don't go over the GVW and rear axle limits for your vehicle, including the weight of the trailer tongue.

If you use a weight distributing hitch, make sure you don't go over the rear axle limit before you apply the weight distributing spring bars.

Hitches

It's important to have the correct hitch equipment. Crosswinds, large trucks going by and rough roads are a few reasons why you'll need the right hitch.

Weight-Distributing Hitches and Weight Carrying Hitches

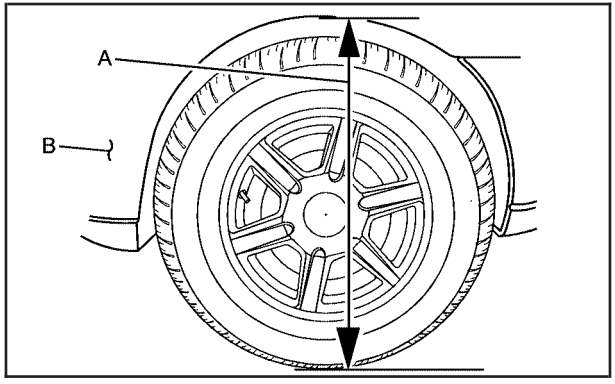

(A) Body-to-Ground Distance (B) Front of Vehicle

When using a weight-distributing hitch, the hitch must be adjusted so that the distance (A) remains the same both before and after coupling the trailer to the tow vehicle.

If you'll be pulling a trailer that, when loaded, will weigh more than 5,000 lbs (2 270 kg) be sure to use a properly mounted weight-distributing hitch and sway control of the proper size. This equipment is very important for proper vehicle loading and good handling when driving. You should always use a sway control if your trailer will weigh more than these limits. You can ask a hitch dealer about sway controls.

Safety Chains

You should always attach chains between your vehicle and your trailer. Cross the safety chains under the tongue of the trailer to help prevent the tongue from contacting the road if it becomes separated from the hitch. Always leave just enough slack so you can turn with your rig. Never allow safety chains to drag on the ground.

Trailer Brakes

If your trailer weighs more than 2,000 lbs (900 kg) loaded, then it needs its own brakes – and they must be adequate. Be sure to read and follow the instructions for the trailer brakes so you'll be able to install, adjust and maintain them properly.

Since your vehicle is equipped with the StabiliTrak® system, your trailer brake system cannot tap into the vehicle's hydraulic brake system.

Driving with a Trailer

Towing a trailer requires a certain amount of experience. Before setting out for the open road, you'll want to get to know your rig. Acquaint yourself with the feel of handling and braking with the added weight of the trailer. And always keep in mind that the vehicle you are driving is now a good deal longer and not nearly as responsive as your vehicle is by itself.

Before you start, check all trailer hitch parts and attachments, safety chains, electrical connector, lamps, tires and mirror adjustment. If the trailer has electric brakes, start your vehicle and trailer moving and then apply the trailer brake controller by hand to be sure the brakes are working. This lets you check your electrical connection at the same time.

During your trip, check occasionally to be sure that the load is secure, and that the lamps and any trailer brakes are still working.

Following Distance

Stay at least twice as far behind the vehicle ahead as you would when driving your vehicle without a trailer. This can help you avoid situations that require heavy braking and sudden turns.

Passing

You'll need more passing distance up ahead when you're towing a trailer. And, because you're a good deal longer, you'll need to go much farther beyond the passed vehicle before you can return to your lane.

Backing Up

Hold the bottom of the steering wheel with one hand. Then, to move the trailer to the left, just move that hand to the left. To move the trailer to the right, move your hand to the right. Always back up slowly and, if possible, have someone guide you.

Making Turns

Notice: **Making very sharp turns while trailering could cause the trailer to come in contact with the vehicle. Your vehicle could be damaged. Avoid making very sharp turns while trailering.**

When you're turning with a trailer, make wider turns than normal. Do this so your trailer won't strike soft shoulders, curbs, road signs, trees or other objects. Avoid jerky or sudden maneuvers. Signal well in advance.

Turn Signals When Towing a Trailer

The arrows on your instrument panel will flash whenever you signal a turn or lane change. Properly hooked up, the trailer lamps will also flash, telling other drivers you're about to turn, change lanes or stop.

When towing a trailer, the arrows on your instrument panel will flash for turns even if the bulbs on the trailer are burned out. Thus, you may think drivers behind you are seeing your signal when they are not. It's important to check occasionally to be sure the trailer bulbs are still working.

Driving On Grades

Reduce speed and shift to a lower gear *before* you start down a long or steep downgrade. If you don't shift down, you might have to use your brakes so much that they would get hot and no longer work well.

You can tow in DRIVE (D). You may want to shift the transmission to THIRD (3) or, if necessary, a lower gear selection if the transmission shifts too often (e.g., under heavy loads and/or hilly conditions).

You may also want to activate the tow/haul mode if the transmission shifts too often. See "Tow/Haul Mode" earlier in this section.

When towing at high altitude on steep uphill grades, consider the following: Engine coolant at or near sea level will boil at a lower temperature than at higher altitudes. If you turn your engine off immediately after towing at high altitude on steep uphill grades, your vehicle may show signs similar to engine overheating. To avoid this, let the engine run while parked (preferably on level ground) with the automatic transmission in PARK (P) for a few minutes before turning the engine off. If you do get the overheat warning, see *Engine Overheating on page 5-30*.

Parking on Hills

⚠ CAUTION:

You really should not park your vehicle, with a trailer attached, on a hill. If something goes wrong, your rig could start to move. People can be injured, and both your vehicle and the trailer can be damaged.

But if you ever have to park your rig on a hill, here's how to do it:

1. Apply your regular brakes, but don't shift into PARK (P) yet.
2. Have someone place chocks under the trailer wheels.
3. When the wheel chocks are in place, release the regular brakes until the chocks absorb the load.
4. Reapply the regular brakes. Then apply your parking brake and shift into PARK (P).
5. If you have a four-wheel-drive vehicle, be sure the transfer case is in a drive gear and not in NEUTRAL (N).
6. Release the regular brakes.

⚠ CAUTION:

It can be dangerous to get out of your vehicle if the shift lever is not fully in PARK (P) with the parking brake firmly set. Your vehicle can roll.

If you have left the engine running, the vehicle can move suddenly. You or others could be injured. To be sure your vehicle will not move, even when you are on fairly level ground, use the steps that follow.

Always put the shift lever fully in PARK (P) with the parking brake firmly set.

If the transfer case on four-wheel-drive vehicles is in NEUTRAL, your vehicle will be free to roll, even if your shift lever is in PARK (P). So, be sure the transfer case is in a drive gear — not in NEUTRAL.

When You Are Ready to Leave After Parking on a Hill

1. Apply your regular brakes and hold the pedal down while you:
   - start your engine,
   - shift into a gear, and
   - release the parking brake.
2. Let up on the brake pedal.
3. Drive slowly until the trailer is clear of the chocks.
4. Stop and have someone pick up and store the chocks.

Maintenance When Trailer Towing

Your vehicle will need service more often when you're pulling a trailer. See the Maintenance Schedule for more on this. Things that are especially important in trailer operation are automatic transmission fluid (don't overfill), engine oil, axle lubricant, belts, cooling system and brake system. Each of these is covered in this manual, and the Index will help you find them quickly. If you're trailering, it's a good idea to review these sections before you start your trip.

Check periodically to see that all hitch nuts and bolts are tight.

Trailer Wiring Harness

Heavy-Duty Trailer Wiring Package

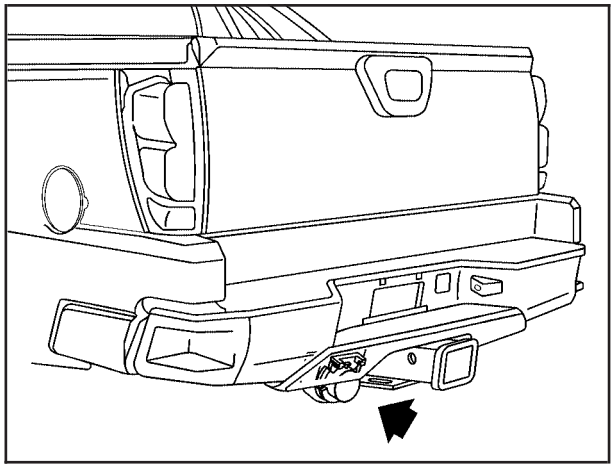

Your vehicle is equipped with the eight-wire trailer towing harness. This harness with a seven-pin universal heavy-duty trailer connector is attached to a bracket on the hitch platform.

The Center High-Mounted Stoplamp (CHMSL) wire is tied next to the trailer wiring harness for use with a trailer.

The eight-wire harness contains the following trailer circuits:

- Yellow: Left Stop/Turn Signal
- Dark Green: Right Stop/Turn Signal
- Brown: Taillamps
- White: Ground
- Light Green: Back-up Lamps
- Light Blue: CHMSL
- Red: Battery Feed**
- Dark Blue: Trailer Brake

**If you are charging a remote (non-vehicle) battery, turn on the headlamps to boost the vehicle system voltage and properly charge the battery.

Instrument Panel Jumper Wiring Harness

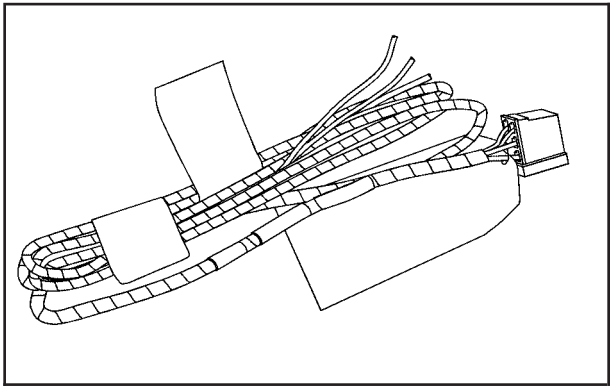

This harness may be included with your vehicle as part of the heavy-duty trailer wiring package.

This harness is for an electric brake controller and includes a trailer battery feed fuse. It should be installed by your dealer or a qualified service center.

Auxiliary Battery

The auxiliary battery provision, if equipped, can be used to supply electrical power to additional equipment that you may choose to add.

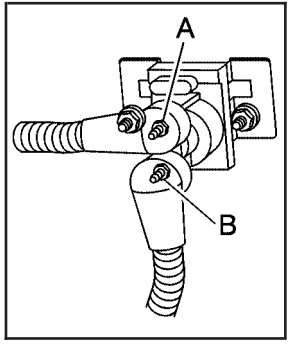

If your vehicle has this provision, this relay will be located on the passenger's side of the vehicle, next to the auxiliary battery.

When using this provision, connection should only be made to the upper stud (A) of the relay. Do not make connections to the lower stud (B) of the relay.

The auxiliary battery circuit is protected by a megafuse located behind the auxiliary battery.

Be sure to follow the proper installation instructions that are included with any electrical equipment that you install.

Notice: **Leaving electrical equipment on for extended periods will drain the battery. Always turn off electrical equipment when not in use and do not use equipment that exceeds the maximum amperage rating for the auxiliary battery provision.**

Trailer Recommendations

You must subtract your hitch loads from the Cargo Weight Rating (CWR). CWR is the maximum weight of the load your vehicle can carry. It doesn't include the weight of the people inside, but you can figure about 150 lbs. (68 kg) for each seat. The total cargo load must not be more than your vehicles CWR.

Weigh your vehicle with your trailer attached, so that you won't go over the GVWR or GAWR. If you are using a weight-distributing hitch, weigh the vehicle without the spring bars in place.

You'll get the best performance if you spread out the weight of your load the right way, and if you choose the correct hitch and trailer brakes.

For more information see *Towing a Trailer on page 4-62*.

NOTES

Section 5 Service and Appearance Care

Service 5-3
Accessories and Modifications 5-3
California Proposition 65 Warning 5-3
Doing Your Own Service Work 5-4
Adding Equipment to the Outside of Your Vehicle 5-4

Fuel 5-5
Gasoline Octane 5-5
Gasoline Specifications 5-5
California Fuel 5-6
Additives 5-6
Fuel E85 (85% Ethanol) 5-7
Fuels in Foreign Countries 5-8
Filling the Tank 5-9
Filling a Portable Fuel Container 5-11

Checking Things Under the Hood 5-11
Hood Release 5-12
Engine Compartment Overview 5-14
Engine Oil 5-17
Engine Oil Life System 5-20
Engine Air Cleaner/Filter 5-22
Automatic Transmission Fluid 5-25
Engine Coolant 5-28
Coolant Surge Tank Pressure Cap 5-30
Engine Overheating 5-30
Overheated Engine Protection Operating Mode ...5-32
Cooling System 5-32
Engine Fan Noise 5-37
Power Steering Fluid 5-38
Windshield Washer Fluid 5-39
Brakes 5-40
Battery 5-43
Jump Starting 5-44

Rear Axle 5-49

Four-Wheel Drive 5-50

Front Axle 5-51

Bulb Replacement 5-52
Halogen Bulbs 5-52
Headlamps 5-53
Front Turn Signal, Sidemarker and Parking Lamps 5-55
Front Turn Signal, Sidemarker and Daytime Running Lamps 5-56
Daytime Running Lamps (DRL) 5-58
Taillamps, Turn Signal, Stoplamps and Back-up Lamps 5-59
Replacement Bulbs 5-60

Windshield Wiper Blade Replacement 5-61

Tires 5-62
Tire Sidewall Labeling 5-63
Tire Terminology and Definitions 5-66

Section 5 Service and Appearance Care

Inflation - Tire Pressure 5-68
Tire Pressure Monitor System 5-70
Tire Inspection and Rotation 5-73
When It Is Time for New Tires 5-75
Buying New Tires 5-76
Different Size Tires and Wheels 5-77
Uniform Tire Quality Grading 5-78
Wheel Alignment and Tire Balance 5-79
Wheel Replacement 5-79
Tire Chains 5-81
If a Tire Goes Flat 5-82
Changing a Flat Tire 5-83
Removing the Spare Tire and Tools 5-84
Removing the Flat Tire and Installing the Spare Tire 5-88
Secondary Latch System 5-95
Storing a Flat or Spare Tire and Tools 5-99
Spare Tire 5-102

Appearance Care 5-103
Cleaning the Inside of Your Vehicle 5-103
Fabric/Carpet 5-104
Leather 5-105
Instrument Panel, Vinyl, and Other Plastic Surfaces 5-105
Care of Safety Belts 5-106
Weatherstrips 5-106
Washing Your Vehicle 5-106
Cleaning Exterior Lamps/Lenses 5-106
Finish Care 5-107
Windshield and Wiper Blades 5-107
Aluminum or Chrome-Plated Wheels 5-108
Tires 5-109
Sheet Metal Damage 5-109
Finish Damage 5-109
Underbody Maintenance 5-109
Chemical Paint Spotting 5-109
Vehicle Care/Appearance Materials 5-110

Vehicle Identification 5-111
Vehicle Identification Number (VIN) 5-111
Service Parts Identification Label 5-111

Electrical System 5-111
Windshield Wiper Fuses 5-112
Power Windows and Other Power Options 5-112
Fuses and Circuit Breakers 5-112
Instrument Panel Fuse Block 5-112
Center Instrument Panel Fuse Block 5-114
Underhood Fuse Block 5-115

Capacities and Specifications 5-120

Service

Your dealer knows your vehicle best and wants you to be happy with it. We hope you will go to your dealer for all your service needs. You will get genuine GM parts and GM-trained and supported service people.

We hope you will want to keep your GM vehicle all GM. Genuine GM parts have one of these marks:

Accessories and Modifications

When you add non-GM accessories to your vehicle they can affect your vehicle's performance and safety, including such things as, braking, stability, ride and handling, emissions systems, aerodynamics, durability, and electronic systems like antilock brakes, traction control and stability control. Some of these accessories may even cause malfunction or damage not covered by warranty.

GM Accessories are designed to complement and function with other systems on your vehicle. Your GM dealer can accessorize your vehicle using genuine GM Accessories. When you go to your GM dealer and ask for GM Accessories, you will know that GM-trained and supported service technicians will perform the work using genuine GM Accessories.

California Proposition 65 Warning

Most motor vehicles, including this one, contain and/or emit chemicals known to the State of California to cause cancer and birth defects or other reproductive harm. Engine exhaust, many parts and systems (including some inside the vehicle), many fluids, and some component wear by-products contain and/or emit these chemicals.

Doing Your Own Service Work

⚠ CAUTION:

You can be injured and your vehicle could be damaged if you try to do service work on a vehicle without knowing enough about it.

- **Be sure you have sufficient knowledge, experience, the proper replacement parts, and tools before you attempt any vehicle maintenance task.**
- **Be sure to use the proper nuts, bolts, and other fasteners. English and metric fasteners can be easily confused. If you use the wrong fasteners, parts can later break or fall off. You could be hurt.**

If you want to do some of your own service work, you will want to use the proper service manual. It tells you much more about how to service your vehicle than this manual can. To order the proper service manual, see *Service Publications Ordering Information on page 7-15*.

Your vehicle has an airbag system. Before attempting to do your own service work, see *Servicing Your Airbag-Equipped Vehicle on page 1-65*.

You should keep a record with all parts receipts and list the mileage and the date of any service work you perform. See *Maintenance Record on page 6-17*.

Adding Equipment to the Outside of Your Vehicle

Things you might add to the outside of your vehicle can affect the airflow around it. This may cause wind noise and affect windshield washer performance. Check with your dealer before adding equipment to the outside of your vehicle.

Fuel

The 8th digit of your vehicle identification number (VIN) shows the code letter or number that identifies your engine. You will find the VIN at the top left of the instrument panel. See *Vehicle Identification Number (VIN) on page 5-111*.

If your vehicle has the 5.3L V8 engine (Code Z), you may use either regular unleaded gasoline or ethanol fuel containing up to 85% ethanol (E85); also see *Fuel E85 (85% Ethanol) on page 5-7*. In all other engines, use only regular unleaded gasoline.

Gasoline Octane

Use regular unleaded gasoline with a posted octane rating of 87 or higher. If the octane rating is less than 87, you may notice an audible knocking noise when you drive, commonly referred to as spark knock. If this occurs, use a gasoline rated at 87 octane or higher as soon as possible. If you are using gasoline rated at 87 octane or higher and you hear heavy knocking, your engine needs service.

Gasoline Specifications

At a minimum, gasoline should meet ASTM specification D 4814 in the United States or CAN/CGSB-3.5 in Canada. Some gasolines may contain an octane-enhancing additive called methylcyclopentadienyl manganese tricarbonyl (MMT). General Motors recommends against the use of gasolines containing MMT. See *Additives on page 5-6* for additional information.

California Fuel

If your vehicle is certified to meet California Emissions Standards, it is designed to operate on fuels that meet California specifications. See the underhood emission control label. If this fuel is not available in states adopting California emissions standards, your vehicle will operate satisfactorily on fuels meeting federal specifications, but emission control system performance may be affected. The malfunction indicator lamp may turn on and your vehicle may fail a smog-check test. See *Malfunction Indicator Lamp on page 3-40*. If this occurs, return to your authorized GM dealer for diagnosis. If it is determined that the condition is caused by the type of fuel used, repairs may not be covered by your warranty.

Additives

To provide cleaner air, all gasolines in the United States are now required to contain additives that will help prevent engine and fuel system deposits from forming, allowing your emission control system to work properly. In most cases, you should not have to add anything to your fuel. However, some gasolines contain only the minimum amount of additive required to meet U.S. Environmental Protection Agency regulations. To help keep fuel injectors and intake valves clean, or if your vehicle experiences problems due to dirty injectors or valves, look for gasoline that is advertised as TOP TIER Detergent Gasoline. Also, your GM dealer has additives that will help correct and prevent most deposit-related problems.

Gasolines containing oxygenates, such as ethers and ethanol, and reformulated gasolines may be available in your area. General Motors recommends that you use these gasolines if they comply with the specifications described earlier. However, E85 (85% ethanol) and other fuels containing more than 10% ethanol must not be used in vehicles that were not designed for those fuels.

Notice: **Your vehicle was not designed for fuel that contains methanol. Do not use fuel containing methanol. It can corrode metal parts in your fuel system and also damage the plastic and rubber parts. That damage would not be covered under your warranty.**

Some gasolines that are not reformulated for low emissions may contain an octane-enhancing additive called methylcyclopentadienyl manganese tricarbonyl (MMT); ask the attendant where you buy gasoline whether the fuel contains MMT. General Motors recommends against the use of such gasolines. Fuels containing MMT can reduce the life of spark plugs and the performance of the emission control system may be affected. The malfunction indicator lamp may turn on. If this occurs, return to your authorized GM dealer for service.

Fuel E85 (85% Ethanol)

The 8th digit of your vehicle identification number (VIN) shows the code letter or number that identifies your engine. You will find the VIN at the top left of the instrument panel. See *Vehicle Identification Number (VIN) on page 5-111*.

If your vehicle has the 5.3L V8 engine (VIN Code Z only), you may use either regular unleaded gasoline or ethanol fuel containing up to 85% ethanol (E85); also see *Fuel on page 5-5*. In all other engines, including the 5.3L V8 (VIN Code T), use only regular unleaded gasoline.

Only vehicles that have the 5.3L V8 engine (VIN Code Z) may use 85% ethanol fuel (E85). General Motors encourages the use of E85 in vehicles that are designed to use it. The ethanol in E85 is a “renewable” fuel, meaning it is made from renewable sources such as corn and other crops.

Many service stations will not have an 85% ethanol fuel (E85) pump available. The U. S. Department of Energy has an alternative fuels website (http://www.eere.energy.gov/afdc/infrastructure/locator.html) that can help you find E85 fuel. Those stations that do have E85 should have a label indicating ethanol content. Do not use the fuel if the ethanol content is *greater* than 85%.

At a minimum, E85 should meet ASTM Specification D 5798.

To ensure quick starts in the wintertime, the E85 fuel must be formulated properly for your climate according to ASTM specification D 5798. If you have trouble starting on E85, it may be because your E85 fuel is not properly formulated for your climate. If this happens, switching to gasoline or adding gasoline to your fuel tank may improve starting. Your vehicle is designed to accommodate a mixture of gasoline and E85 fuel. For good starting and heater efficiency below 32°F (0°C), the fuel mix in the fuel tank should contain no more than 70% ethanol.

E85 has less energy per gallon than gasoline, so you will need to refill your fuel tank more often when using E85 than when you are using gasoline. Regular unleaded gasoline is recommended when pulling a trailer. For payload capacity with ethanol fuel, see *Loading Your Vehicle on page 4-46*.

Notice: **Some additives are not compatible with E85 fuel and may harm your fuel system. Damage caused by additives would not be covered by your new vehicle warranty. Do not use additives with E85 fuel.**

Notice: **Your vehicle was not designed for fuel that contains methanol. Do not use fuel containing methanol. It can corrode metal parts in your fuel system and also damage the plastic and rubber parts. That damage would not be covered under your warranty.**

Fuels in Foreign Countries

If you plan on driving in another country outside the United States or Canada, the proper fuel may be hard to find. Never use leaded gasoline or any other fuel not recommended in the previous text on fuel. Costly repairs caused by use of improper fuel would not be covered by your warranty.

To check the fuel availability, ask an auto club, or contact a major oil company that does business in the country where you will be driving.

Filling the Tank

⚠ CAUTION:

Fuel vapor burns violently and a fuel fire can cause bad injuries. To help avoid injuries to you and others, read and follow all the instructions on the pump island. Turn off your engine when you are refueling. Do not smoke if you are near fuel or refueling your vehicle. Keep sparks, flames, and smoking materials away from fuel. Do not leave the fuel pump unattended when refueling your vehicle — this is against the law in some places. Keep children away from the fuel pump; never let children pump fuel.

The tethered fuel cap is located behind a hinged fuel door on the driver's side of the vehicle.

To remove the fuel cap, turn it slowly counterclockwise. It will require more effort to turn the fuel cap on the last turn as you loosen it.

⚠ CAUTION:

If you spill fuel and then something ignites it, you could be badly burned. Fuel can spray out on you if you open the fuel cap too quickly. This spray can happen if your tank is nearly full, and is more likely in hot weather. Open the fuel cap slowly and wait for any hiss noise to stop. Then unscrew the cap all the way.

Be careful not to spill fuel. Do not top off or overfill the tank and wait a few seconds after you have finished pumping before removing the nozzle. Clean fuel from painted surfaces as soon as possible. See *Washing Your Vehicle on page 5-106*.

When replacing the fuel cap, turn it clockwise until it clicks. It will require more effort to turn the fuel cap on the last turn as you tighten it. Make sure the cap is fully installed. The diagnostic system can determine if the fuel cap has been left off or improperly installed. This would allow fuel to evaporate into the atmosphere. See *Malfunction Indicator Lamp on page 3-40*.

The TIGHTEN FUEL CAP message will be displayed on the Driver Information Center (DIC) if the fuel cap is not properly installed. See *DIC Warnings and Messages on page 3-50* for more information.

⚠ CAUTION:

If a fire starts while you are refueling, do not remove the nozzle. Shut off the flow of fuel by shutting off the pump or by notifying the station attendant. Leave the area immediately.

Notice: **If you need a new fuel cap, be sure to get the right type. Your dealer can get one for you. If you get the wrong type, it may not fit properly. This may cause your malfunction indicator lamp to light and may damage your fuel tank and emissions system. See *Malfunction Indicator Lamp on page 3-40*.**

Filling a Portable Fuel Container

⚠ CAUTION:

Never fill a portable fuel container while it is in your vehicle. Static electricity discharge from the container can ignite the gasoline vapor. You can be badly burned and your vehicle damaged if this occurs. To help avoid injury to you and others:

- **Dispense gasoline only into approved containers.**
- **Do not fill a container while it is inside a vehicle, in a vehicle's trunk, pickup bed, or on any surface other than the ground.**
- **Bring the fill nozzle in contact with the inside of the fill opening before operating the nozzle. Contact should be maintained until the filling is complete.**
- **Do not smoke while pumping gasoline.**

Checking Things Under the Hood

⚠ CAUTION:

An electric fan under the hood can start up and injure you even when the engine is not running. Keep hands, clothing and tools away from any underhood electric fan.

⚠ CAUTION:

Things that burn can get on hot engine parts and start a fire. These include liquids like fuel, oil, coolant, brake fluid, windshield washer and other fluids, and plastic or rubber. You or others could be burned. Be careful not to drop or spill things that will burn onto a hot engine.

Hood Release

To open the hood, do the following:

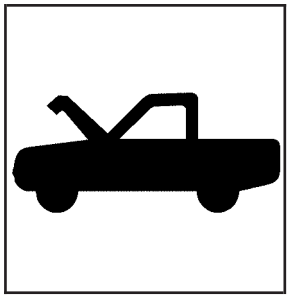

1. Pull the handle with this symbol on it. It is located inside the vehicle to the lower left of the steering column.

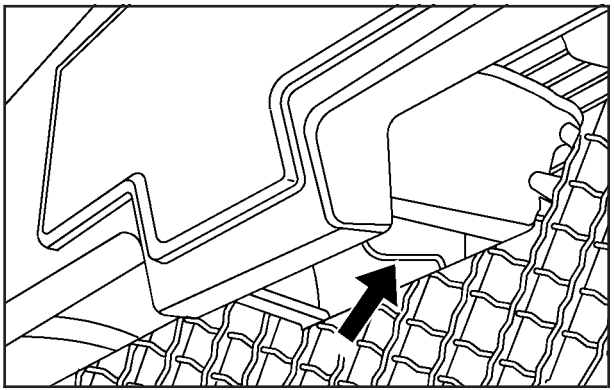

Vehicles with Body-Side Cladding

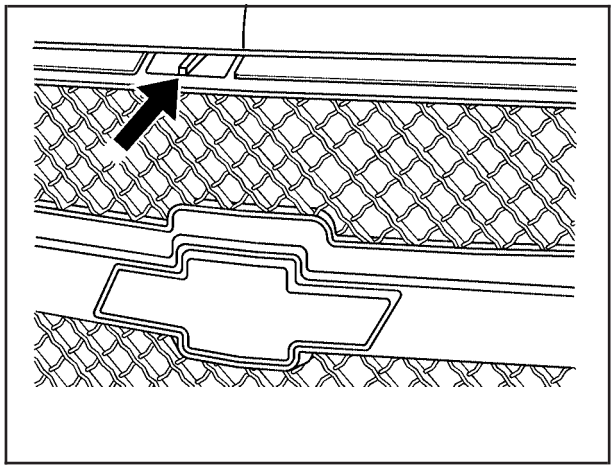

Vehicles without Body-Side Cladding

2. Then go to the front of the vehicle and push the secondary hood release lever to the left. This lever is located under the front emblem for vehicles with gray body – side cladding, and above the emblem for vehicles with no body – side cladding.
3. Lift the hood.

Before closing the hood, be sure all filler caps are on properly. Pull down the hood and close it firmly.

Engine Compartment Overview

When you open the hood on the 5.3L V8 engine, here is what you will see:

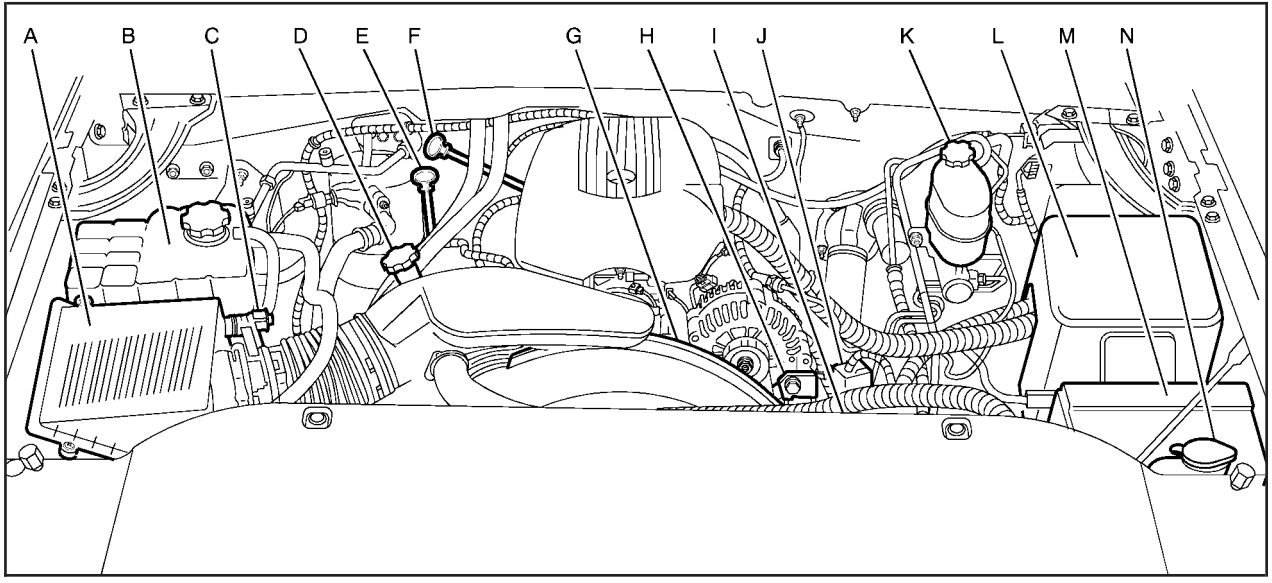

A. Engine Air Cleaner/Filter. See *Engine Air Cleaner/Filter on page 5-22*.

B. Coolant Surge Tank and Pressure Cap. See *Cooling System on page 5-32* and *Coolant Surge Tank Pressure Cap on page 5-30*.

C. Air Filter Restriction Indicator (If Equipped). See *Engine Air Cleaner/Filter on page 5-22*.

D. Engine Oil Fill Cap. See “When to Add Engine Oil” under *Engine Oil on page 5-17*.

E. Engine Oil Dipstick. See “Checking Engine Oil” under *Engine Oil on page 5-17*.

F. Automatic Transmission Fluid Dipstick. See “Checking the Fluid Level” under *Automatic Transmission Fluid on page 5-25*.

G. Engine Cooling Fan. See *Cooling System on page 5-32*.

H. Remote Negative (–) Terminal (GND). See *Jump Starting on page 5-44*.

I. Power Steering Fluid Reservoir (Out of View). See *Power Steering Fluid on page 5-38*.

J. Remote Positive (+) Terminal. See *Jump Starting on page 5-44*.

K. Brake Fluid Reservoir. See “Brake Fluid” under *Brakes on page 5-40*.

L. Underhood Fuse Block. See *Underhood Fuse Block on page 5-115*.

M. Battery. See *Battery on page 5-43*.

N. Windshield Washer Fluid Reservoir. See “Adding Washer Fluid” under *Windshield Washer Fluid on page 5-39*.

When you open the hood on the 8.1 V8 engine, here is what you will see:

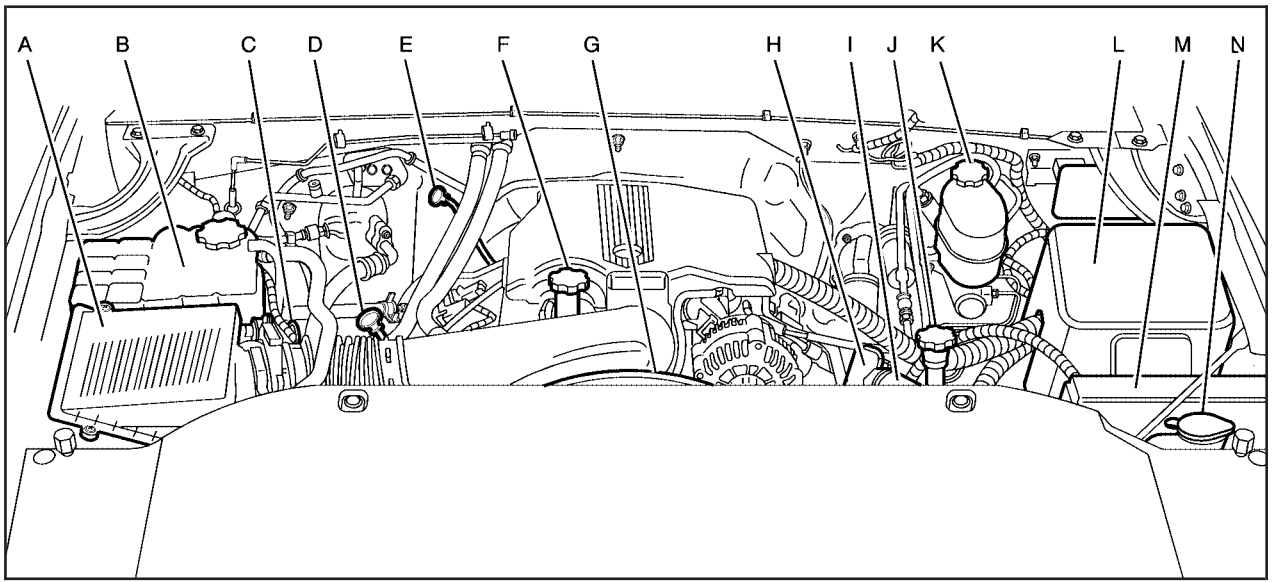

A. Engine Air Cleaner/Filter. See *Engine Air Cleaner/Filter on page 5-22*.

B. Coolant Surge Tank and Pressure Cap. See *Cooling System on page 5-32* and *Coolant Surge Tank Pressure Cap on page 5-30*.

C. Air Filter Restriction Indicator (If Equipped). See *Engine Air Cleaner/Filter on page 5-22*.

D. Engine Oil Dipstick. See “Checking Engine Oil” under *Engine Oil on page 5-17*.

E. Automatic Transmission Fluid Dipstick. See “Checking the Fluid Level” under *Automatic Transmission Fluid on page 5-25*.

F. Engine Oil Fill Cap. See “When to Add Engine Oil” under *Engine Oil on page 5-17*.

G. Engine Cooling Fan. See *Cooling System on page 5-32*.

H. Remote Negative (–) Terminal (GND). See *Jump Starting on page 5-44*.

I. Remote Positive (+) Terminal. See *Jump Starting on page 5-44*.

J. Power Steering Fluid Reservoir. See *Power Steering Fluid on page 5-38*.

K. Brake Fluid Reservoir. See “Brake Fluid” under *Brakes on page 5-40*.

L. Underhood Fuse Block. See *Underhood Fuse Block on page 5-115*.

M. Battery. See *Battery on page 5-43*.

N. Windshield Washer Fluid Reservoir. See “Adding Washer Fluid” under *Windshield Washer Fluid on page 5-39*.

Engine Oil

If the CHECK OIL LEVEL message appears on the instrument cluster, it means you need to check your engine oil level right away.

For more information, see CHECK OIL LEVEL under *DIC Warnings and Messages on page 3-50*.

You should check your engine oil level regularly; this is an added reminder.

Checking Engine Oil

It is a good idea to check your engine oil every time you get fuel. In order to get an accurate reading, the oil must be warm and the vehicle must be on level ground.

The engine oil dipstick handle is a yellow loop. See *Engine Compartment Overview on page 5-14* for the location of the engine oil dipstick.

1. Turn off the engine and give the oil several minutes to drain back into the oil pan. If you do not do this, the oil dipstick might not show the actual level.
2. Pull out the dipstick and clean it with a paper towel or cloth, then push it back in all the way. Remove it again, keeping the tip down, and check the level.

When to Add Engine Oil

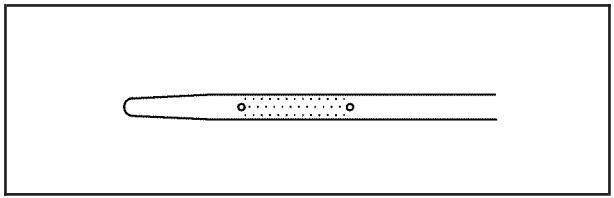

8.1L Engine

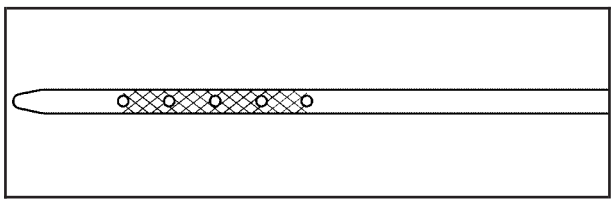

All Except 8.1L Engine

If the oil is below the cross-hatched area at the tip of the dipstick, you will need to add at least one quart/liter of oil. But you must use the right kind. This section explains what kind of oil to use. For engine oil crankcase capacity, see *Capacities and Specifications on page 5-120*.

Notice: **Do not add too much oil. If the engine has so much oil that the oil level gets above the cross-hatched area that shows the proper operating range, the engine could be damaged.**

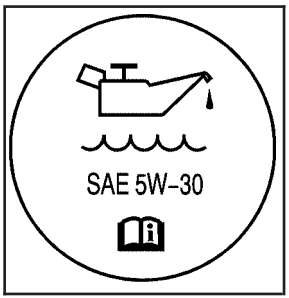

See *Engine Compartment Overview on page 5-14* for the location of the engine oil fill cap.

Be sure to add enough oil to put the level somewhere in the proper operating range. Push the dipstick all the way back in when you are through.

What Kind of Engine Oil to Use

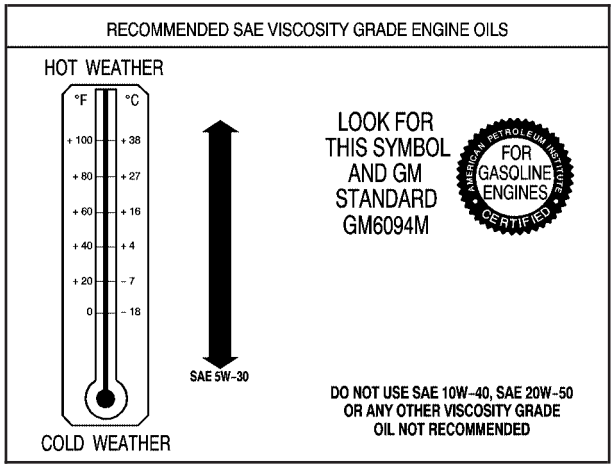

Look for two things:

- GM6094M

  Your vehicle's engine requires oil meeting GM Standard GM6094M. You should look for and use only an oil that meets GM Standard GM6094M.

- SAE 5W-30

  As shown in the viscosity chart, SAE 5W-30 is best for your vehicle.

  These numbers on an oil container show its viscosity, or thickness. Do not use other viscosity oils such as SAE 20W-50.

Oils meeting these requirements should also have the starburst symbol on the container. This symbol indicates that the oil has been certified by the American Petroleum Institute (API).

You should look for this information on the oil container, and use *only* those oils that are identified as meeting GM Standard GM6094M and have the starburst symbol on the front of the oil container.

Notice: **Use only engine oil identified as meeting GM Standard GM6094M and showing the American Petroleum Institute Certified For Gasoline Engines starburst symbol. Failure to use the recommended oil can result in engine damage not covered by your warranty.**

GM Goodwrench® oil meets all the requirements for your vehicle.

If you are in an area of extreme cold, where the temperature falls below –20°F (–29°C), it is recommended that you use either an SAE 5W-30 synthetic oil or an SAE 0W-30 oil. Both will provide easier cold starting and better protection for your engine at extremely low temperatures.

Engine Oil Additives

Do not add anything to your oil. The recommended oils with the starburst symbol that meet GM Standard GM6094M are all you will need for good performance and engine protection.

Engine Oil Life System

When to Change Engine Oil

Your vehicle has a computer system that lets you know when to change the engine oil and filter. This is based on engine revolutions and engine temperature, and not on mileage. Based on driving conditions, the mileage at which an oil change will be indicated can vary considerably. For the oil life system to work properly, you must reset the system every time the oil is changed.

When the system has calculated that oil life has been diminished, it will indicate that an oil change is necessary. A CHANGE ENGINE OIL message will come on. Change your oil as soon as possible within the next 600 miles (1 000 km). It is possible that, if you are driving under the best conditions, the oil life system may not indicate that an oil change is necessary for over a year. However, your engine oil and filter must be changed at least once a year and at this time the system must be reset. Your dealer has GM-trained service people who will perform this work using genuine GM parts and reset the system. It is also important to check your oil regularly and keep it at the proper level.

If the system is ever reset accidentally, you must change your oil at 3,000 miles (5 000 km) since your last oil change. Remember to reset the oil life system whenever the oil is changed.

How to Reset the Engine Oil Life System

The Engine Oil Life System calculates when to change your engine oil and filter based on vehicle use. Anytime your oil is changed, reset the system so it can calculate when the next oil change is required. If a situation occurs where you change your oil prior to a CHANGE ENGINE OIL message being turned on, reset the system.

To reset the CHANGE ENGINE OIL message, see "Engine Oil Life System" under *DIC Operation and Displays on page 3-47* for vehicles equipped with the DIC, or do the following:

1. Turn the ignition key to RUN with the engine off.
2. Fully press and release the accelerator pedal slowly three times within five seconds.

   If the OIL LIFE RESET message flashes for 10 seconds, the system is resetting.
3. Turn the key to LOCK.

If the CHANGE ENGINE OIL message comes back on when you start your vehicle, the engine oil life system has not reset. Repeat the procedure. If it still does not reset, see your dealer for service.

What to Do with Used Oil

Used engine oil contains certain elements that may be unhealthy for your skin and could even cause cancer. Do not let used oil stay on your skin for very long. Clean your skin and nails with soap and water, or a good hand cleaner. Wash or properly dispose of clothing or rags containing used engine oil. See the manufacturer's warnings about the use and disposal of oil products.

Used oil can be a threat to the environment. If you change your own oil, be sure to drain all the oil from the filter before disposal. Never dispose of oil by putting it in the trash, pouring it on the ground, into sewers, or into streams or bodies of water. Instead, recycle it by taking it to a place that collects used oil. If you have a problem properly disposing of your used oil, ask your dealer, a service station or a local recycling center for help.

Engine Air Cleaner/Filter

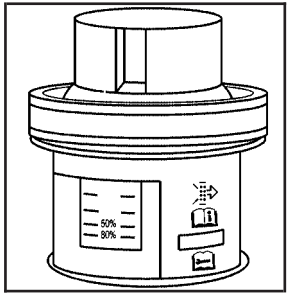

See *Engine Compartment Overview on page 5-14* for the location of the engine air cleaner/filter and the air filter restriction indicator, if equipped.

When to Inspect the Engine Air Cleaner/Filter

If your vehicle is equipped with an air filter restriction indicator, it lets you know when the engine air cleaner/filter needs to be replaced. On vehicles with a restriction indicator, you should inspect the air filter restriction indicator at every oil change and replace the engine air cleaner/filter when the indicator tells you to.

On vehicles without an air filter restriction indicator, inspect the air cleaner/filter at the Maintenance II intervals and replace it at the first oil change after each 50,000 mile (83 000 km) interval. See *Scheduled Maintenance on page 6-4* for more information. If you are driving in dusty/dirty conditions, inspect the filter at each engine oil change.

How to Inspect the Engine Air Cleaner/Filter

Vehicles With an Air Filter Restriction Indicator

Locate the air filter restriction indicator on the engine air cleaner/filter cover. When the indicator turns black or is in the red/orange “change” zone, replace the filter and reset the indicator. See the steps following to replace the engine air cleaner/filter and to reset the air filter restriction indicator.

Vehicles Without an Air Filter Restriction Indicator

To inspect the air cleaner/filter, remove the engine air cleaner/filter from the vehicle using the steps following. When you have the engine air cleaner/filter removed, lightly shake it to release loose dust and dirt. If the engine air cleaner/filter remains caked with dirt, a new filter is required.

Replacing the Engine Air Cleaner/Filter and Resetting the Air Filter Restriction Indicator

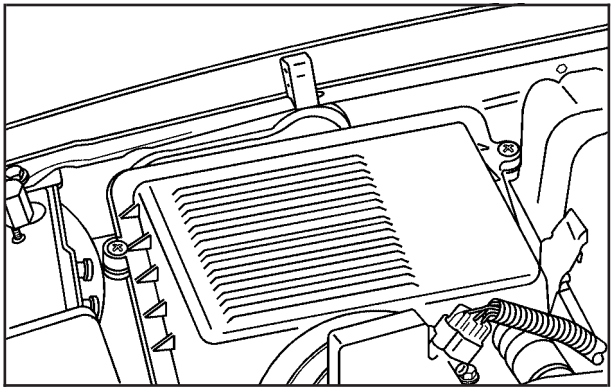

1. Locate the air cleaner/filter assembly on the front corner of the engine compartment on the passenger’s side of the vehicle.
2. Loosen the screws on the cover of the housing and lift up the cover.

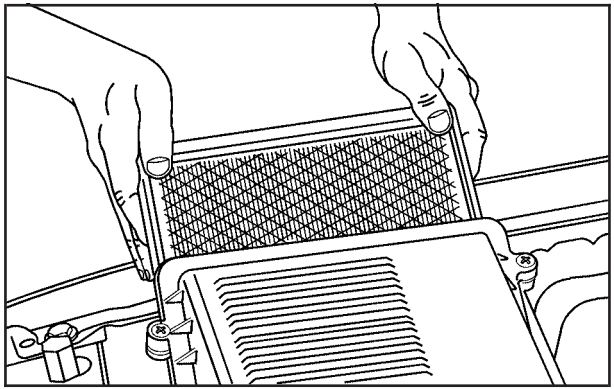

3. Remove the engine air cleaner/filter from the housing. Care should be taken to dislodge as little dirt as possible.
4. Clean the engine air cleaner/filter sealing surfaces and the housing.
5. Inspect or replace the engine air cleaner/filter.
6. Reinstall the cover and tighten the screws.
7. Reset the air filter restriction indicator, if equipped, by pressing the top button on the indicator.

⚠ CAUTION:

Operating the engine with the air cleaner/filter off can cause you or others to be burned. The air cleaner not only cleans the air; it helps to stop flames if the engine backfires. If it is not there and the engine backfires, you could be burned. Do not drive with it off, and be careful working on the engine with the air cleaner/filter off.

Automatic Transmission Fluid

When to Check and Change Automatic Transmission Fluid

A good time to check your automatic transmission fluid level is when the engine oil is changed.

Change the fluid and filter at the intervals listed in *Additional Required Services on page 6-6*, and be sure to use the transmission fluid listed in *Recommended Fluids and Lubricants on page 6-13*.

How to Check Automatic Transmission Fluid

Because this operation can be a little difficult, you may choose to have this done at the dealership service department.

If you do it yourself, be sure to follow all the instructions here, or you could get a false reading on the dipstick.

Notice: **Too much or too little fluid can damage your transmission. Too much can mean that some of the fluid could come out and fall on hot engine part or exhaust system parts, starting a fire. Too little fluid could cause the transmission to overheat. Be sure to get an accurate reading if you check your transmission fluid.**

Wait at least 30 minutes before checking the transmission fluid level if you have been driving:

- When outside temperatures are above 90°F (32°C).
- At high speed for quite a while.
- In heavy traffic — especially in hot weather.
- While pulling a trailer.

To get the right reading, the fluid should be at normal operating temperature, which is 180°F to 200°F (82°C to 93°C).

Get the vehicle warmed up by driving about 15 miles (24 km) when outside temperatures are above 50°F (10°C). If it is colder than 50°F (10°C), drive the vehicle in THIRD (3) until the engine temperature gage moves and then remains steady for 10 minutes.

A cold fluid check can be made after the vehicle has been sitting for eight hours or more with the engine off, but this is used only as a reference. Let the engine run at idle for five minutes if outside temperatures are 50°F (10°C) or more. If it is colder than 50°F (10°C), you may have to idle the engine longer. Should the fluid level be low during this cold check, you must check the fluid hot before adding fluid. Checking the fluid hot will give you a more accurate reading of the fluid level.

Checking the Fluid Level

Prepare your vehicle as follows:

1. Park your vehicle on a level place. Keep the engine running.
2. With the parking brake applied, place the shift lever in PARK (P).
3. With your foot on the brake pedal, move the shift lever through each gear range, pausing for about three seconds in each range. Then, position the shift lever in PARK (P).
4. Let the engine run at idle for three minutes or more.

Then, without shutting off the engine, follow these steps:

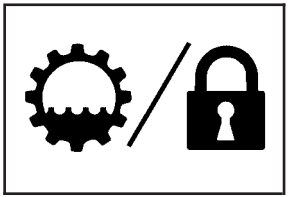

The transmission dipstick handle with this graphic is located at the rear of the engine compartment, on the passenger's side of the vehicle.

See *Engine Compartment Overview on page 5-14* for more information on location.

1. Flip the handle up and then pull out the dipstick and wipe it with a clean rag or paper towel.
2. Push it back in all the way, wait three seconds and then pull it back out again.

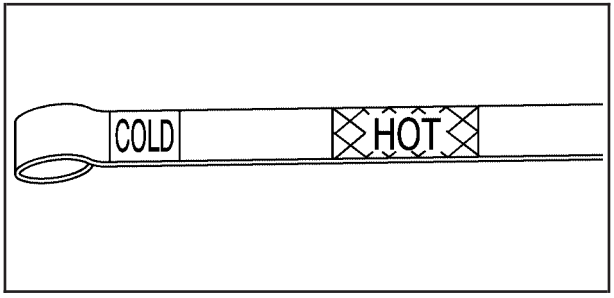

3. Check both sides of the dipstick, and read the lower level. The fluid level must be in the COLD area, below the cross-hatched area, for a cold check or in the HOT or cross-hatched area for a hot check. Be sure to keep the dipstick pointed down to get an accurate reading.
4. If the fluid level is in the acceptable range, push the dipstick back in all the way; then flip the handle down to lock the dipstick in place.

Consistency of Readings

Always check the fluid level at least twice using the procedure described previously. Consistency (repeatable readings) is important to maintaining proper fluid level. If inconsistent readings persist, check the transmission breather hose to be sure it is clean and unclogged. If readings are still inconsistent, contact your dealer.

How to Add Automatic Transmission Fluid

Refer to the Maintenance Schedule to determine what kind of transmission fluid to use. See *Recommended Fluids and Lubricants on page 6-13*.

Add fluid only after checking the transmission fluid while it is hot. A cold check is used only as a reference. If the fluid level is low, add only enough of the proper fluid to bring the level up to the HOT area for a hot check. It does not take much fluid, generally less than one pint (0.5 L). Do not overfill.

Notice: **Use of the incorrect automatic transmission fluid may damage your vehicle, and the damages may not be covered by your warranty. Always use the automatic transmission fluid listed in *Recommended Fluids and Lubricants on page 6-13*.**

- After adding fluid, recheck the fluid level as described under “How to Check Automatic Transmission Fluid,” earlier in this section.
- When the correct fluid level is obtained, push the dipstick back in all the way; then flip the handle down to lock the dipstick in place.

Engine Coolant

The cooling system in your vehicle is filled with DEX-COOL® engine coolant. This coolant is designed to remain in your vehicle for five years or 150,000 miles (240 000 km), whichever occurs first, if you add only DEX-COOL® extended life coolant.

The following explains your cooling system and how to add coolant when it is low. If you have a problem with engine overheating, see *Engine Overheating on page 5-30*.

A 50/50 mixture of clean, drinkable water and DEX-COOL® coolant will:

- Give freezing protection down to –34°F (–37°C).
- Give boiling protection up to 265°F (129°C).
- Protect against rust and corrosion.
- Help keep the proper engine temperature.
- Let the warning lights and gages work as they should.

Notice: **Using coolant other than DEX-COOL® may cause premature engine, heater core, or radiator corrosion. In addition, the engine coolant may require changing sooner, at the first maintenance service after each 25,000 miles (41 500 km) or 24 months, whichever occurs first. Any repairs would not be covered by your warranty. Always use DEX-COOL® (silicate-free) coolant in your vehicle.**

What to Use

Use a mixture of one-half clean, drinkable water and one-half DEX-COOL® coolant which will not damage aluminum parts. If you use this coolant mixture, you do not need to add anything else.

⚠ CAUTION:

Adding only plain water to your cooling system can be dangerous. Plain water, or some other liquid such as alcohol, can boil before the proper coolant mixture will. Your vehicle's coolant warning system is set for the proper coolant mixture. With plain water or the wrong mixture, your engine could get too hot but you would not get the overheat warning. Your engine could catch fire and you or others could be burned. Use a 50/50 mixture of clean, drinkable water and DEX-COOL® coolant.

Notice: **If you use an improper coolant mixture, your engine could overheat and be badly damaged. The repair cost would not be covered by your warranty. Too much water in the mixture can freeze and crack the engine, radiator, heater core and other parts.**

If you have to add coolant more than four times a year, have your dealer check your cooling system.

Notice: **If you use extra inhibitors and/or additives in your vehicle's cooling system, you could damage your vehicle. Use only the proper mixture of the engine coolant listed in this manual for the cooling system. See *Recommended Fluids and Lubricants on page 6-13* for more information.**

Checking Coolant

The coolant surge tank is located in the engine compartment on the passenger's side of the vehicle. See *Engine Compartment Overview on page 5-14* for more information on location.

⚠ CAUTION:

Turning the surge tank pressure cap when the engine and radiator are hot can allow steam and scalding liquids to blow out and burn you badly. Never turn the surge tank pressure cap — even a little — when the engine and radiator are hot.

The vehicle must be on a level surface. When your engine is cold, the coolant level should be at the FULL COLD mark.

If your vehicle is equipped with the LOW COOLANT LEVEL message and it comes on and stays on, it means you are low on engine coolant. See "LOW COOLANT LEVEL" under *DIC Warnings and Messages on page 3-50*.

Adding Coolant

If you need more coolant, add the proper DEX-COOL® coolant mixture at the surge tank, but only when the engine is cool.

⚠ CAUTION:

You can be burned if you spill coolant on hot engine parts. Coolant contains ethylene glycol, and it will burn if the engine parts are hot enough. Do not spill coolant on a hot engine.

When replacing the pressure cap, make sure it is hand-tight and fully seated.

Coolant Surge Tank Pressure Cap

Notice: **If the pressure cap is not tightly installed, coolant loss and possible engine damage may occur. Be sure the cap is properly and tightly secured.**

The coolant surge tank pressure cap must be fully installed on the coolant surge tank. See *Engine Compartment Overview on page 5-14* for more information on location.

Engine Overheating

You will find a coolant temperature gage on your vehicle's instrument panel. See *Engine Coolant Temperature Gage on page 3-38*.

In addition, you will find an ENGINE COOLANT HOT, ENGINE OVERHEATED and a REDUCED ENGINE POWER message in the Driver Information Center (DIC) on the instrument panel. See *DIC Warnings and Messages on page 3-50*.

If Steam Is Coming From Your Engine

⚠ CAUTION:

Steam from an overheated engine can burn you badly, even if you just open the hood. Stay away from the engine if you see or hear steam coming from it. Just turn it off and get everyone away from the vehicle until it cools down. Wait until there is no sign of steam or coolant before you open the hood.

If you keep driving when your engine is overheated, the liquids in it can catch fire. You or others could be badly burned. Stop your engine if it overheats, and get out of the vehicle until the engine is cool.

See *Overheated Engine Protection Operating Mode on page 5-32* for information on driving to a safe place in an emergency.

Notice: **If your engine catches fire because you keep driving with no coolant, your vehicle can be badly damaged. The costly repairs would not be covered by your warranty. See *Overheated Engine Protection Operating Mode on page 5-32* for information on driving to a safe place in an emergency.**

If No Steam Is Coming From Your Engine

The ENGINE COOLANT HOT message, along with a low coolant condition, can indicate a serious problem.

If you get an engine overheat warning, but see or hear no steam, the problem may not be too serious. Sometimes the engine can get a little too hot when you:

- Climb a long hill on a hot day.
- Stop after high-speed driving.
- Idle for long periods in traffic.
- Tow a trailer. See *Towing a Trailer on page 4-62*.

If you get the ENGINE COOLANT HOT message with no sign of steam, try this for a minute or so:

1. If your air conditioner is on, turn it off.
2. Turn on your heater to full hot at the highest fan speed and open the windows as necessary.
3. If you are in a traffic jam, shift to NEUTRAL (N); otherwise, shift to the highest gear while driving — DRIVE (D).

If you no longer have the overheat warning, you can drive. Just to be safe, drive slower for about 10 minutes. If the warning does not come back on, you can drive normally.

If the warning continues, pull over, stop, park, and fast idle your vehicle right away.

If there is still no sign of steam and your vehicle is equipped with an engine-driven cooling fan, push down the accelerator until the engine speed is about twice as fast as normal idle speed for at least three minutes while you are parked.

If there is still no sign of steam and your vehicle is equipped with an electric engine cooling fan, idle the engine for three minutes while you are parked.

If you still have the warning, turn off the engine and get everyone out of the vehicle until it cools down. Also, see “Overheated Engine Protection Operating Mode” later in this section.

You may decide not to lift the hood but to get service help right away.

Overheated Engine Protection Operating Mode

If an overheated engine condition exists and the REDUCED ENGINE POWER message is displayed, an overheat protection mode which alternates firing groups of cylinders helps prevent engine damage. In this mode, you will notice a loss in power and engine performance. This operating mode allows your vehicle to be driven to a safe place in an emergency. Driving extended miles (km) and/or towing a trailer in the overheat protection mode should be avoided.

Notice: **After driving in the overheated engine protection operating mode, to avoid engine damage, allow the engine to cool before attempting any repair. The engine oil will be severely degraded. Repair the cause of coolant loss, change the oil and reset the oil life system. See *Engine Oil on page 5-17*.**

Cooling System

When you decide it is safe to lift the hood, here is what you will see:

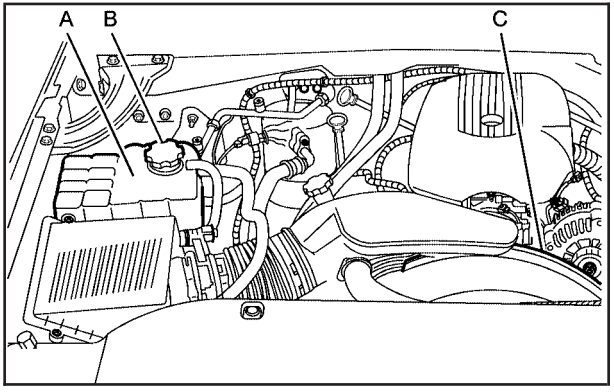

5.3L V8 Engine

A. Coolant Surge Tank

B. Coolant Surge Tank Pressure Cap

C. Engine Cooling Fan

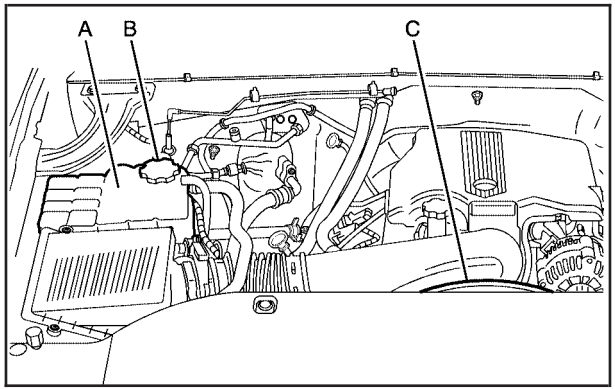

8.1L V8 Engine

A. Coolant Surge Tank

B. Coolant Surge Tank Pressure Cap

C. Engine Cooling Fan

⚠ CAUTION:

An electric engine cooling fan under the hood can start up even when the engine is not running and can injure you. Keep hands, clothing and tools away from any underhood electric fan.

If the coolant inside the coolant surge tank is boiling, do not do anything else until it cools down. The vehicle should be parked on a level surface. Check the coolant level after the system cools down. Some amount of coolant may be lost due to overheating.

When the engine is cold, the coolant level should be at or above the FULL COLD mark. If it is not, you may have a leak at the pressure cap or in the radiator hoses, heater hoses, radiator, water pump or somewhere else in the cooling system.

⚠ CAUTION:

Heater and radiator hoses, and other engine parts, can be very hot. Do not touch them. If you do, you can be burned.

Do not run the engine if there is a leak. If you run the engine, it could lose all coolant. That could cause an engine fire, and you could be burned. Get any leak fixed before you drive the vehicle.

Notice: **Engine damage from running your engine without coolant is not covered by your warranty. See *Overheated Engine Protection Operating Mode on page 5-32* for information on driving to a safe place in an emergency.**

Notice: **Using coolant other than DEX-COOL® may cause premature engine, heater core or radiator corrosion. In addition, the engine coolant may require changing sooner, at 30,000 miles (50 000 km) or 24 months, whichever occurs first. Any repairs would not be covered by your warranty. Always use DEX-COOL® (silicate-free) coolant in your vehicle.**

If your vehicle is equipped with an electric engine cooling fan, check the coolant temperature gage. If the coolant temperature is approximately 232°F (111°C), the electric cooling fan should be running. If it is not, your vehicle needs service. Turn off the engine.

If your vehicle is equipped with an engine-driven cooling fan, start the engine again and see if the fan speed increases when idle speed is doubled by pushing the accelerator pedal down. If it does not, your vehicle needs service. Turn off the engine.

How to Add Coolant to the Coolant Surge Tank

If you have not found a problem yet, check to see if coolant is visible in the surge tank. If coolant is visible but the coolant level is not at the FULL COLD mark, add a 50/50 mixture of clean, drinkable water and DEX-COOL® coolant at the coolant surge tank, but be sure the cooling system, including the coolant surge tank pressure cap, is cool before you do it. See *Engine Coolant on page 5-28* for more information.

If no coolant is visible in the surge tank, add coolant as follows:

⚠ CAUTION:

Steam and scalding liquids from a hot cooling system can blow out and burn you badly. They are under pressure, and if you turn the radiator pressure cap — even a little — they can come out at high speed. Never turn the cap when the cooling system, including the radiator pressure cap, is hot. Wait for the cooling system and radiator pressure cap to cool if you ever have to turn the pressure cap.

⚠ CAUTION:

Adding only plain water to your cooling system can be dangerous. Plain water, or some other liquid such as alcohol, can boil before the proper coolant mixture will. Your vehicle's coolant warning system is set for the proper coolant mixture. With plain water or the wrong mixture, your engine could get too hot but you would not get the overheat warning. Your engine could catch fire and you or others could be burned. Use a 50/50 mixture of clean, drinkable water and DEX-COOL® coolant.

Notice: **In cold weather, water can freeze and crack the engine, radiator, heater core and other parts. Use the recommended coolant and the proper coolant mixture.**

⚠ CAUTION:

You can be burned if you spill coolant on hot engine parts. Coolant contains ethylene glycol and it will burn if the engine parts are hot enough. Do not spill coolant on a hot engine.

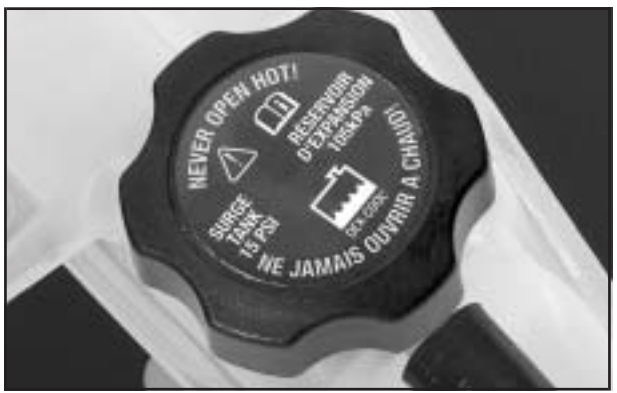

1. You can remove the coolant surge tank pressure cap when the cooling system, including the coolant surge tank pressure cap and upper radiator hose, is no longer hot. Turn the pressure cap slowly counterclockwise about one full turn.

   If you hear a hiss, wait for that to stop. A hiss means there is still some pressure left.

2. Then keep turning the pressure cap slowly, and remove it.

3. Fill the coolant surge tank with the proper mixture, to the FULL COLD mark.

4. With the coolant surge tank pressure cap off, start the engine and let it run until you can feel the upper radiator hose getting hot. Watch out for the engine cooling fan.

   By this time, the coolant level inside the coolant surge tank may be lower. If the level is lower, add more of the proper mixture to the coolant surge tank until the level reaches the FULL COLD mark.

5. Then replace the pressure cap. Be sure the pressure cap is hand-tight and fully seated.

Engine Fan Noise

If your vehicle is equipped with a clutched engine cooling fan, when the clutch is engaged, the fan spins faster to provide more air to cool the engine. In most everyday driving conditions, the fan is spinning slower and the clutch is not fully engaged. This improves fuel economy and reduces fan noise. Under heavy vehicle loading, trailer towing, and/or high outside temperatures, the fan speed increases as the clutch more fully engages, so you may hear an increase in fan noise. This is normal and should not be mistaken as the transmission slipping or making extra shifts. It is merely the cooling system functioning properly. The fan will slow down when additional cooling is not required and the clutch disengages.

You may also hear this fan noise when you start the engine. It will go away as the fan clutch partially disengages.

If your vehicle is equipped with electric cooling fans, you may hear the fans spinning at low speed during most everyday driving. The fans may turn off if no cooling is required. Under heavy vehicle loading, trailer towing, and/or high outside temperatures, or if you are operating your air conditioning system, the fans change to high speed and you may hear an increase in fan noise. This is normal and indicates that the cooling system is functioning properly. The fans will change to low speed when additional cooling is no longer required.

Power Steering Fluid

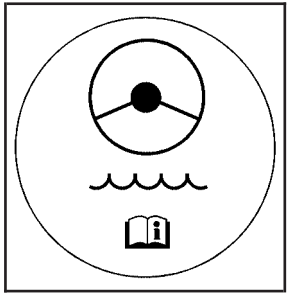

See *Engine Compartment Overview on page 5-14* for reservoir location.

When to Check Power Steering Fluid

It is not necessary to regularly check power steering fluid unless you suspect there is a leak in the system or you hear an unusual noise. A fluid loss in this system could indicate a problem. Have the system inspected and repaired.

How to Check Power Steering Fluid

To check the power steering fluid, do the following:

1. Turn the key off and let the engine compartment cool down.
2. Wipe the cap and the top of the reservoir clean.
3. Unscrew the cap and wipe the dipstick with a clean rag.
4. Replace the cap and completely tighten it.
5. Remove the cap again and look at the fluid level on the dipstick.

The level should be at the FULL COLD mark. If necessary, add only enough fluid to bring the level up to the mark.

What to Use

To determine what kind of fluid to use, see *Recommended Fluids and Lubricants on page 6-13*. Always use the proper fluid. Failure to use the proper fluid can cause leaks and damage hoses and seals.

Windshield Washer Fluid

What to Use

When you need windshield washer fluid, be sure to read the manufacturer's instructions before use. If you will be operating your vehicle in an area where the temperature may fall below freezing, use a fluid that has sufficient protection against freezing.

Adding Washer Fluid

Your vehicle has a message that comes on when the washer fluid is low. The message is displayed for 15 seconds at the start of each ignition cycle. When the CHECK WASHER FLUID message is displayed, you will need to add washer fluid to the windshield washer fluid reservoir. See *DIC Warnings and Messages on page 3-50* for more information.

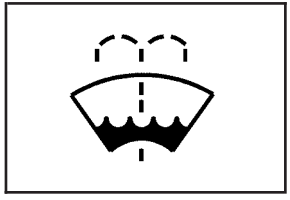

Open the cap with the washer symbol on it. Add washer fluid until the tank is full. See *Engine Compartment Overview on page 5-14* for reservoir location.

Notice:

- **When using concentrated washer fluid, follow the manufacturer's instructions for adding water.**
- **Do not mix water with ready-to-use washer fluid. Water can cause the solution to freeze and damage your washer fluid tank and other parts of the washer system. Also, water does not clean as well as washer fluid.**
- **Fill your washer fluid tank only three-quarters full when it is very cold. This allows for expansion if freezing occurs, which could damage the tank if it is completely full.**
- **Do not use engine coolant (antifreeze) in your windshield washer. It can damage your washer system and paint.**

Brakes

Brake Fluid

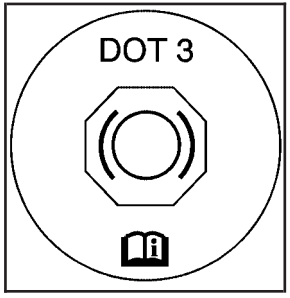

Your brake master cylinder reservoir is filled with DOT-3 brake fluid. See *Engine Compartment Overview on page 5-14* for the location of the reservoir.

There are only two reasons why the brake fluid level in the reservoir might go down. The first is that the brake fluid goes down to an acceptable level during normal brake lining wear. When new linings are put in, the fluid level goes back up. The other reason is that fluid is leaking out of the brake system. If it is, you should have your brake system fixed, since a leak means that sooner or later your brakes will not work well, or will not work at all.

So, it is not a good idea to top off your brake fluid. Adding brake fluid will not correct a leak. If you add fluid when your linings are worn, then you will have too much fluid when you get new brake linings. You should add or remove brake fluid, as necessary, only when work is done on the brake hydraulic system.

⚠ CAUTION:

If you have too much brake fluid, it can spill on the engine. The fluid will burn if the engine is hot enough. You or others could be burned, and your vehicle could be damaged. Add brake fluid only when work is done on the brake hydraulic system. See “Checking Brake Fluid” in this section.

Refer to the Maintenance Schedule to determine when to check your brake fluid. See *Scheduled Maintenance on page 6-4*.

Checking Brake Fluid

You can check the brake fluid without taking off the cap.

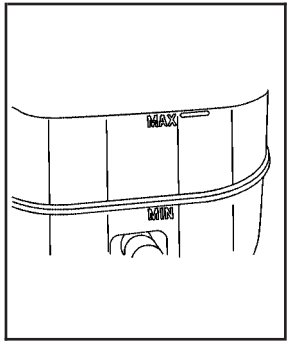

Look at the brake fluid reservoir. The fluid level should be above MIN. If it is not, have your brake system checked to see if there is a leak.

After work is done on the brake hydraulic system, make sure the level is above the MIN but not over the MAX mark.

What to Add

When you do need brake fluid, use only DOT-3 brake fluid. Use new brake fluid from a sealed container only. See *Recommended Fluids and Lubricants on page 6-13*.

Always clean the brake fluid reservoir cap and the area around the cap before removing it. This will help keep dirt from entering the reservoir.

⚠ CAUTION:

With the wrong kind of fluid in your brake system, your brakes may not work well, or they may not even work at all. This could cause a crash. Always use the proper brake fluid.

Notice:

- **Using the wrong fluid can badly damage brake system parts. For example, just a few drops of mineral-based oil, such as engine oil, in your brake system can damage brake system parts so badly that they will have to be replaced. Do not let someone put in the wrong kind of fluid.**
- **If you spill brake fluid on your vehicle's painted surfaces, the paint finish can be damaged. Be careful not to spill brake fluid on your vehicle. If you do, wash it off immediately. See *Washing Your Vehicle on page 5-106*.**

Brake Wear

Your vehicle has four-wheel disc brakes.

Disc brake pads have built-in wear indicators that make a high-pitched warning sound when the brake pads are worn and new pads are needed. The sound may come and go or be heard all the time your vehicle is moving, except when you are pushing on the brake pedal firmly.

⚠ CAUTION:

The brake wear warning sound means that soon your brakes will not work well. That could lead to an accident. When you hear the brake wear warning sound, have your vehicle serviced.

Notice: **Continuing to drive with worn-out brake pads could result in costly brake repair.**

Some driving conditions or climates may cause a brake squeal when the brakes are first applied or lightly applied. This does not mean something is wrong with your brakes.

Properly torqued wheel nuts are necessary to help prevent brake pulsation. When tires are rotated, inspect brake pads for wear and evenly tighten wheel nuts in the proper sequence to GM torque specifications.

Brake linings should always be replaced as complete axle sets.

Brake Pedal Travel

See your dealer if the brake pedal does not return to normal height, or if there is a rapid increase in pedal travel. This could be a sign of brake trouble.

Brake Adjustment

Every time you make a brake stop, your disc brakes adjust for wear.

Replacing Brake System Parts

The braking system on a vehicle is complex. Its many parts have to be of top quality and work well together if the vehicle is to have really good braking. Your vehicle was designed and tested with top-quality GM brake parts. When you replace parts of your braking system — for example, when your brake linings wear down and you need new ones put in — be sure you get new approved GM replacement parts. If you do not, your brakes may no longer work properly. For example, if someone puts in brake linings that are wrong for your vehicle, the balance between your front and rear brakes can change — for the worse. The braking performance you have come to expect can change in many other ways if someone puts in the wrong replacement brake parts.

Battery

Your vehicle has a maintenance free battery. When it is time for a new battery, get one that has the replacement number shown on the original battery's label. We recommend an ACDelco® replacement battery. See *Engine Compartment Overview on page 5-14* for battery location.

Warning: Battery posts, terminals, and related accessories contain lead and lead compounds, chemicals known to the State of California to cause cancer and reproductive harm. Wash hands after handling.

Vehicle Storage

If you are not going to drive your vehicle for 25 days or more, remove the black, negative (–) cable from the battery. This will help keep your battery from running down.

⚠ CAUTION:

Batteries have acid that can burn you and gas that can explode. You can be badly hurt if you are not careful. See *Jump Starting on page 5-44* for tips on working around a battery without getting hurt.

Jump Starting

If your vehicle's battery has run down, you may want to use another vehicle and some jumper cables to start your vehicle. Be sure to use the following steps to do it safely.

> **⚠ CAUTION:**
>
> **Batteries can hurt you. They can be dangerous because:**
>
> - **They contain acid that can burn you.**
> - **They contain gas that can explode or ignite.**
> - **They contain enough electricity to burn you.**
>
> **If you do not follow these steps exactly, some or all of these things can hurt you.**

Notice: **Ignoring these steps could result in costly damage to your vehicle that would not be covered by your warranty.**

Trying to start your vehicle by pushing or pulling it will not work, and it could damage your vehicle.

1. Check the other vehicle. It must have a 12-volt battery with a negative ground system.

Notice: **If the other vehicle's system is not a 12-volt system with a negative ground, both vehicles can be damaged. Only use vehicles with 12-volt systems with negative grounds to jump start your vehicle.**

2. Get the vehicles close enough so the jumper cables can reach, but be sure the vehicles are not touching each other. If they are, it could cause a ground connection you do not want. You would not be able to start your vehicle, and the bad grounding could damage the electrical systems.

   To avoid the possibility of the vehicles rolling, set the parking brake firmly on both vehicles involved in the jump start procedure. Put an automatic transmission in PARK (P) or a manual transmission in NEUTRAL before setting the parking brake.

Notice: **If you leave your radio or other accessories on during the jump starting procedure, they could be damaged. The repairs would not be covered by your warranty. Always turn off your radio and other accessories when jump starting your vehicle.**

3. Turn off the ignition on both vehicles. Unplug unnecessary accessories plugged into the cigarette lighter or the accessory power outlets. Turn off the radio and all lamps that are not needed. This will avoid sparks and help save both batteries. And it could save the radio!

4. Open the hood and locate the positive (+) and negative (–) terminal locations on the other vehicle.

   Your vehicle has a remote positive (+) jump starting terminal and a remote negative (–) jump starting terminal. You should always use these remote terminals instead of the terminals on the battery.

The remote positive (+) terminal is located near the engine accessory drive bracket. On some vehicles, the terminal may be under a red plastic cover. To access the remote positive (+) terminal, open the red plastic cover, if equipped.

Vortec 5300 Engine

The remote negative (–) terminal is located on the engine accessory drive bracket and is marked GND (Ground) for all Vortec 5300 engines.

Vortec 8100 Engine

The remote negative (–) terminal is located on the thermostat housing and is marked GND (Ground) for all Vortec 8100 engines.

See *Engine Compartment Overview on page 5-14* for more information on the location of the remote positive (+) and remote negative (–) terminals.

⚠ CAUTION:

An electric fan can start up even when the engine is not running and can injure you. Keep hands, clothing and tools away from any underhood electric fan.

⚠ CAUTION:

Using a match near a battery can cause battery gas to explode. People have been hurt doing this, and some have been blinded. Use a flashlight if you need more light.

Be sure the battery has enough water. You do not need to add water to the battery installed in your new vehicle. But if a battery has filler caps, be sure the right amount of fluid is there. If it is low, add water to take care of that first. If you do not, explosive gas could be present.

Battery fluid contains acid that can burn you. Do not get it on you. If you accidentally get it in your eyes or on your skin, flush the place with water and get medical help immediately.

⚠ CAUTION:

Fans or other moving engine parts can injure you badly. Keep your hands away from moving parts once the engine is running.

5. Check that the jumper cables do not have loose or missing insulation. If they do, you could get a shock. The vehicles could be damaged too.

   Before you connect the cables, here are some basic things you should know. Positive (+) will go to positive (+) or to a remote positive terminal (+) if the vehicle has one. Negative (–) will go to a heavy, unpainted metal engine part or to a remote negative (–) terminal if the vehicle has one.

   Do not connect positive (+) to negative (–) or you will get a short that would damage the battery and maybe other parts too.

6. Connect the red positive (+) cable to the positive (+) terminal of the dead battery. Use a remote positive (+) terminal if the vehicle has one.

7. Do not let the other end touch metal. Connect it to the positive (+) terminal of the good battery. Use a remote positive (+) terminal if the vehicle has one.

8. Now connect the black negative (–) cable to the negative (–) terminal of the good battery. Use a remote negative (–) terminal if the vehicle has one. Your vehicle's remote negative (–) terminal is marked GND.

   Do not let the other end touch anything until the next step. The other end of the negative (–) cable does not go to the dead battery. It goes to a heavy, unpainted metal engine part or to a remote negative (–) terminal on the vehicle with the dead battery.
9. Connect the other end of the negative (–) cable at least 18 inches (45 cm) away from the dead battery, but not near engine parts that move.

   The electrical connection is just as good there, and the chance of sparks getting back to the battery is much less.
10. Now start the vehicle with the good battery and run the engine for awhile.
11. Try to start the vehicle that had the dead battery. If it will not start after a few tries, it probably needs service.

Notice: **If the jumper cables are connected or removed in the wrong order, electrical shorting may occur and damage the vehicle. The repairs would not be covered by your warranty. Always connect and remove the jumper cables in the correct order, making sure that the cables do not touch each other or other metal.**

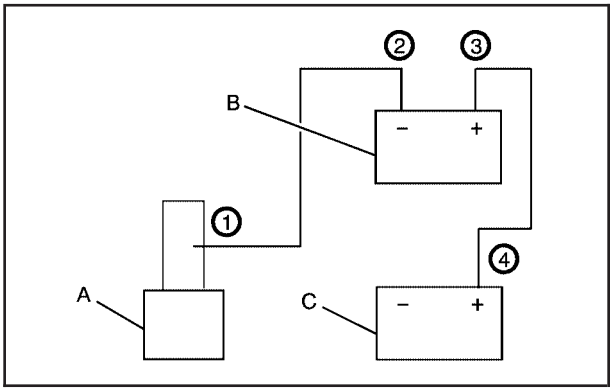

Jumper Cable Removal

A. Heavy, Unpainted Metal Engine Part or Remote Negative (–) Terminal
B. Good Battery or Remote Positive (+) and Remote Negative (–) Terminals
C. Dead Battery or Remote Positive (+) Terminal

To disconnect the jumper cables from both vehicles do the following:

1. Disconnect the black negative (–) cable from the vehicle that had the dead battery.
2. Disconnect the black negative (–) cable from the vehicle with the good battery.
3. Disconnect the red positive (+) cable from the vehicle with the good battery.
4. Disconnect the red positive (+) cable from the other vehicle.
5. Return the remote positive (+) terminal cover, if equipped, to its original position.

Rear Axle

When to Check Lubricant

It is not necessary to regularly check rear axle fluid unless you suspect there is a leak or you hear an unusual noise. A fluid loss could indicate a problem. Have it inspected and repaired.

All axle assemblies are filled by volume of fluid during production. They are not filled to reach a certain level. When checking the fluid level on any axle, variations in the readings can be caused by factory fill differences between the minimum and the maximum fluid volume. Also, if a vehicle has just been driven before checking the fluid level, it may appear lower than normal because fluid has traveled out along the axle tubes and has not drained back to the sump area. Therefore, a reading taken five minutes after the vehicle has been driven will appear to have a lower fluid level than a vehicle that has been stationary for an hour or two. Remember that the rear axle assembly must be supported to get a true reading.

How to Check Lubricant

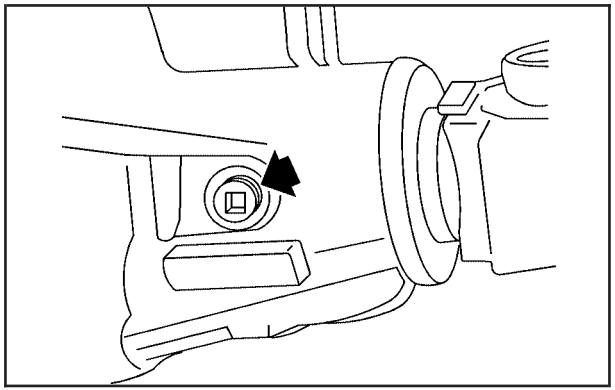

1500 Series shown, 2500 Series similar

To get an accurate reading, the vehicle should be on a level surface.

The proper level for the 1500 Series is from 5/8 inch to 1 5/8 inch (15 mm to 40 mm) below the bottom of the filler plug hole, located on the rear axle. The proper level for the 2500 Series is from 0 to 1/2 inch (0 to 13 mm) below the bottom of the filler plug hole. Add only enough fluid to reach the proper level.

What to Use

Refer to the Maintenance Schedule to determine what kind of lubricant to use. See *Recommended Fluids and Lubricants on page 6-13*.

Four-Wheel Drive

Transfer Case

It is not necessary to regularly check transfer case fluid unless you suspect there is a leak or you hear an unusual noise. A fluid loss could indicate a problem. Have it inspected and repaired.

Refer to the Maintenance Schedule to determine how often to change the lubricant. See *Scheduled Maintenance on page 6-4*.

How to Check Lubricant

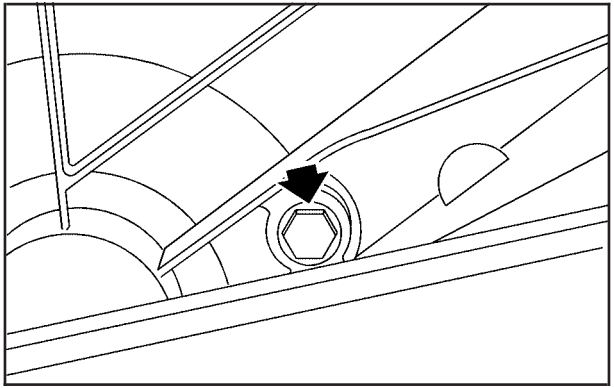

1. Remove the filler plug.
2. Add new fluid until the level is below the bottom of the filler plug hole, located on the transfer case. To get an accurate reading, the vehicle should be on a level surface.

   Refer to the Maintenance Schedule to determine what kind of lubricant to use. See *Recommended Fluids and Lubricants on page 6-13*.
3. Reinstall the filler plug. Use care not to overtighten the filler plug.

Front Axle

When to Check and Change Lubricant

It is not necessary to regularly check front axle fluid unless you suspect there is a leak or you hear an unusual noise. A fluid loss could indicate a problem. Have it inspected and repaired.

How to Check Lubricant

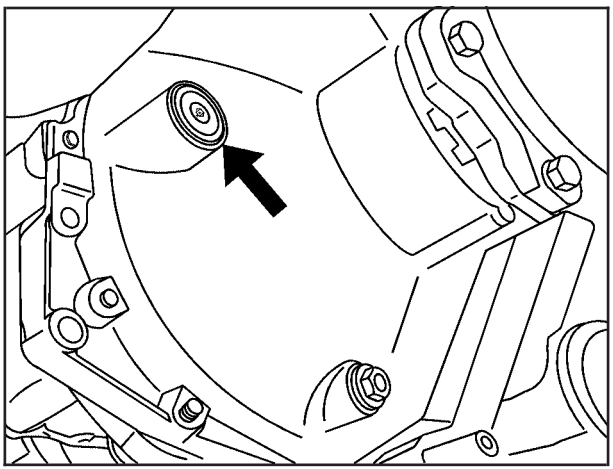

To get an accurate reading, the vehicle should be on a level surface.

If the level is below the bottom of the filler plug hole, located on the front axle, you may need to add some lubricant:

- When the differential is cold, add enough lubricant to raise the level from 1/2 inch (12 mm) to about 5/8 inch (18 mm) below the filler plug hole for the 1500 series, and from 1/4 inch (6 mm) to about 3/8 inch (10 mm) below the filler plug hole for 2500 series.
- When the differential is at operating temperature (warm), add enough lubricant to raise the level to the bottom of the filler plug hole.

What to Use

Refer to the Maintenance Schedule to determine what kind of lubricant to use. See *Recommended Fluids and Lubricants on page 6-13*.

Bulb Replacement

For the proper type of replacement bulbs, see *Replacement Bulbs on page 5-60*.

For any bulb changing procedure not listed in this section, contact your dealer.

Halogen Bulbs

⚠ CAUTION:

Halogen bulbs have pressurized gas inside and can burst if you drop or scratch the bulb. You or others could be injured. Be sure to read and follow the instructions on the bulb package.

Headlamps

Vehicles with Body-Side Cladding

To replace a headlamp bulb, do the following:

1. Open the hood. See *Hood Release on page 5-12* for more information.

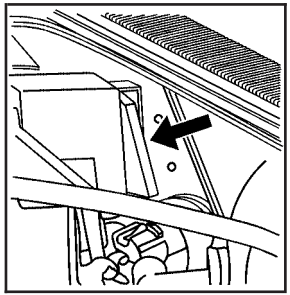

2. Remove the turn signal/parking lamp assembly by pressing the release clip on the outboard side of the assembly and pulling the outboard end toward you.

3. Pull the inboard side of the assembly out from the vehicle.

4. Pull the pins away from their clips and pull them up until they completely release from the vehicle.
5. Pull the headlamp assembly out of the vehicle.

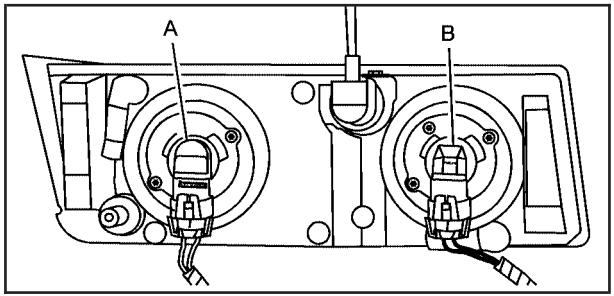

A. Low-Beam Headlamp
B. High-Beam Headlamp

6. Turn the bulb connector counterclockwise and pull it out of the assembly.
7. Unplug the electrical connector from the old bulb.
8. Plug in the electrical connector to the new bulb.
9. Place the connector with the new bulb into the headlamp assembly and turn it clockwise until it is tight.
10. Put the headlamp assembly back into the vehicle and reinstall the two pins.
11. Place the inboard end of the turn signal/parking lamp assembly into the pocket.
12. Push the outboard side of the assembly in until the release clip snaps into place.

Vehicles without Body-Side Cladding

To replace a headlamp bulb, do the following:

1. Open the hood. See *Hood Release on page 5-12* for more information.

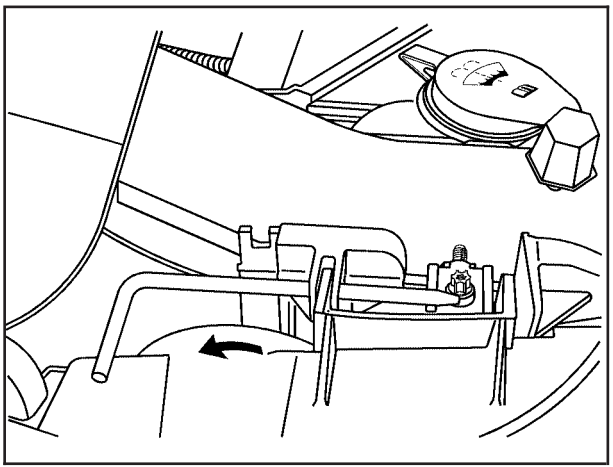

2. Remove the pin on the headlamp assembly by turning the pin up and pulling it straight out.
3. Pull the headlamp assembly out.

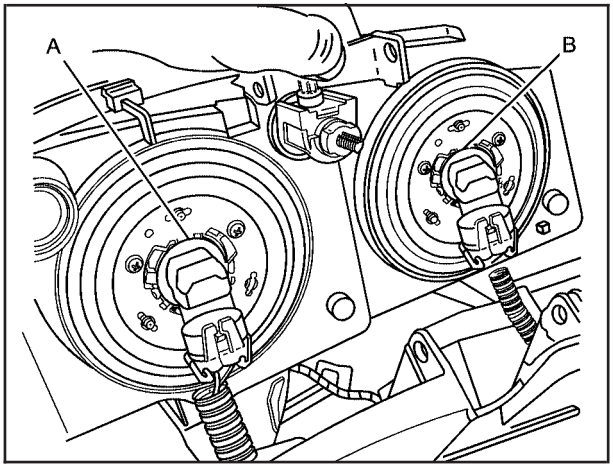

A. Low-Beam Headlamp
B. High-Beam Headlamp

4. Unplug the electrical connector.
5. Turn the old bulb counterclockwise and remove it from the headlamp assembly.
6. Put the new bulb into the assembly and turn it clockwise until it is tight.
7. Plug in the electrical connector.
8. Reinstall the headlamp assembly.
9. Install the pin and turn it into the locking feature.

Front Turn Signal, Sidemarker and Parking Lamps

Vehicles with Body-Side Cladding

To replace a front turn signal, sidemarker, or parking lamp bulb, do the following:

1. Open the hood. See *Hood Release on page 5-12* for more information.

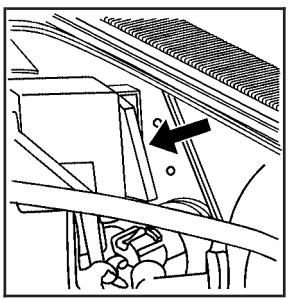

2. Remove the turn signal/parking lamp assembly by pressing the release clip on the outboard side of the assembly and pulling the outboard end of the assembly toward you.
3. Pull the inboard side of the assembly out from the vehicle.

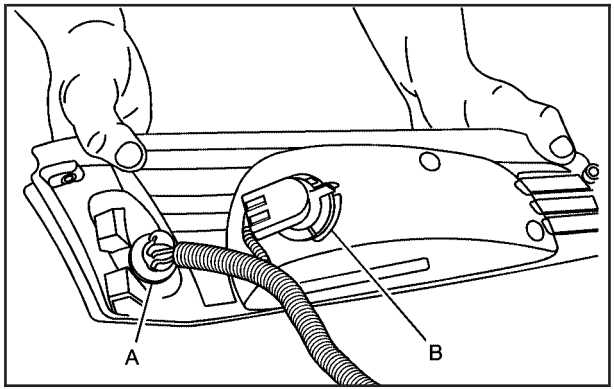

A. Sidemarker Lamp
B. Front Turn Signal/Parking Lamp

4. Press the locking release lever (the sidemarker lamp does not have a locking release lever), turn the bulb socket counterclockwise and remove it from the turn signal/parking lamp assembly.
5. Remove the old bulb from the bulb socket.
6. Put the new bulb into the bulb socket.
7. Put the bulb socket into the turn signal assembly and turn it clockwise until it locks (the sidemarker lamp does not lock into place).
8. Place the inboard end of the turn signal/parking lamp assembly into the pocket.
9. Push the outboard side of the assembly in until the release clip snaps into place.

Front Turn Signal, Sidemarker and Daytime Running Lamps

Vehicles without Body-Side Cladding

To replace a front turn signal, sidemarker, or DRL bulb, do the following:

1. Remove the headlamp assembly as mentioned previously. See *Headlamps on page 5-53* for more information.

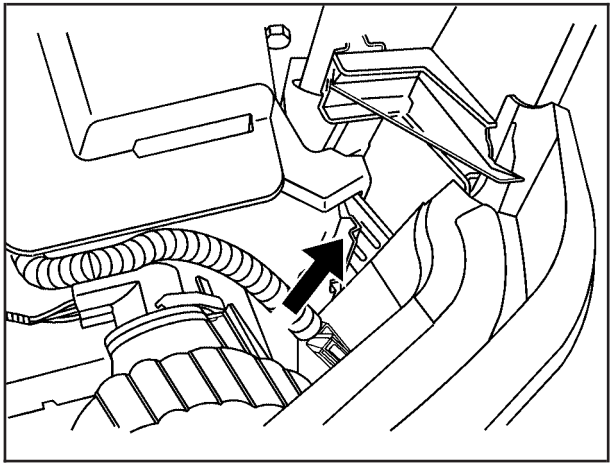

2. Press the retainer clip (arrow), located behind the turn signal assembly, towards the outside of the vehicle.

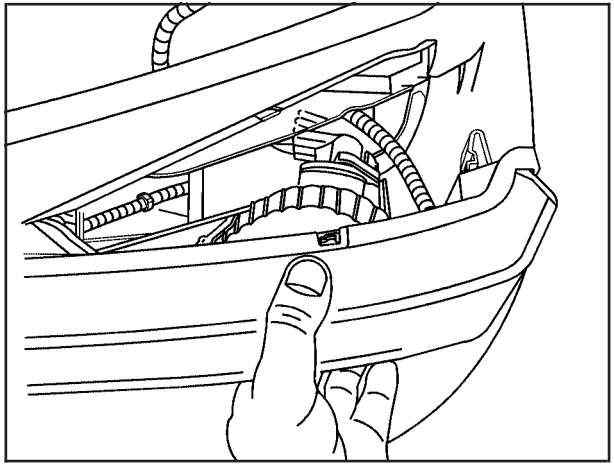

3. Pull the turn signal assembly out from the vehicle.

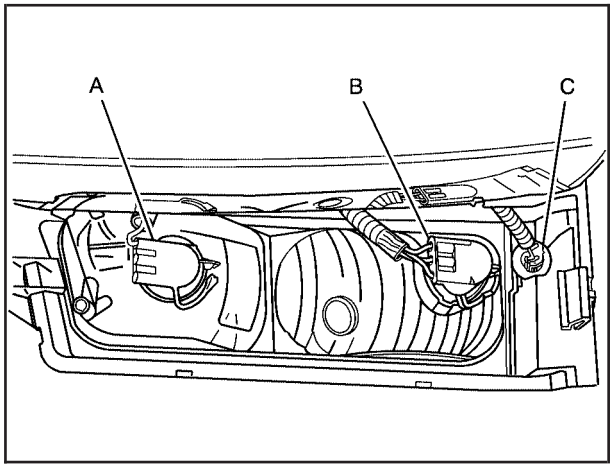

A. Daytime Running Lamp (DRL)
B. Front Turn Signal/Parking Lamp
C. Sidemarker Lamp

4. Press the locking release lever (the sidemarker lamp does not have a locking release lever), turn the bulb socket counterclockwise and remove it from the turn signal assembly.
5. Remove the old bulb from the bulb socket.
6. Install a new bulb into the bulb socket.
7. Reinstall the bulb socket into the turn signal assembly and turn it clockwise until it locks (the sidemarker lamps does not lock into place).
8. Reinstall the turn signal assembly back onto the vehicle placing the hook and posts on the inner side into the alignment holes first and then the outer side into the retainer bracket. Push until you hear a click.
9. Reinstall the headlamp assembly back into the vehicle.

Daytime Running Lamps (DRL)

Vehicles with Body-Side Cladding

The daytime running lamps (DRL) are located in the front fascia near the fog lamps. They can be identified by their square shape. To change a bulb, do the following:

1. Reach under the front fascia and locate the DRL assembly. Be sure you are not picking the fog lamp assembly, which is near the DRLs.

2. Turn the bulb socket counterclockwise and remove it from the DRL assembly.

3. Pull out the old bulb from the socket.
4. Install a new bulb.
5. Reinstall the bulb socket back into the DRL assembly and turn it clockwise until it is tight.

Taillamps, Turn Signal, Stoplamps and Back-up Lamps

To replace one of these bulbs, do the following:

1. Open the tailgate. See *Tailgate on page 2-20* for more information.

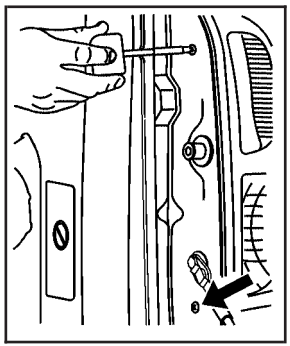

2. Remove the two rear lamp assembly screws near the tailgate latch and pull out the lamp assembly.

4. Locate the bulb you wish to change.

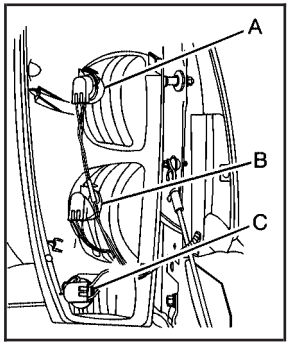

A. Stoplamp/Taillamp
B. Turn Signal Lamp
C. Back-up Lamp

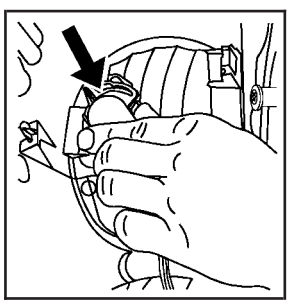

5. Press the release tab and turn the bulb socket counterclockwise to remove it from the taillamp assembly.
6. Pull the old bulb straight out from the socket.
7. Press a new bulb into the socket and turn the socket clockwise into the taillamp assembly until it clicks.
8. Reinstall the taillamp assembly and tighten the screws.

Replacement Bulbs

Exterior Lamp	Bulb Number
Back-up Lamp	3157
Daytime Running Lamps (DRL)	4114K
Front Parking and Turn Signal Lamp	3157A or 3457NA
Headlamps	
High-Beam	*9011 or 9005
Low-Beam	9006
Stoplamp, Taillamp and Turn Signal Lamp	3157
Sidemarker Lamp	194
*Vehicles with Body-Side Cladding	

For replacement bulbs not listed here, contact your dealer.

Windshield Wiper Blade Replacement

Windshield wiper blades should be inspected for wear and cracking. See *Scheduled Maintenance on page 6-4* for more information.

Replacement blades come in different types and are removed in different ways. For proper type and length, see *Normal Maintenance Replacement Parts on page 6-15*.

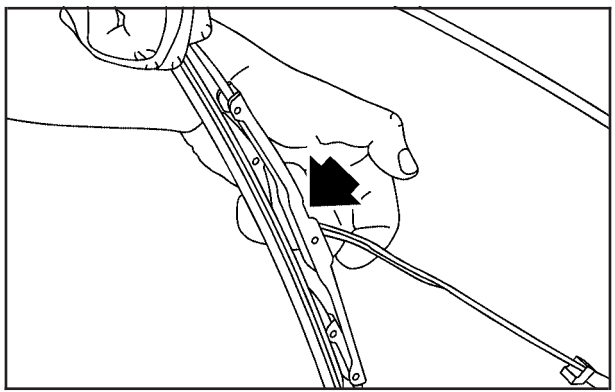

To replace the windshield wiper blade assembly do the following:

1. Lift the wiper arm away from the windshield.

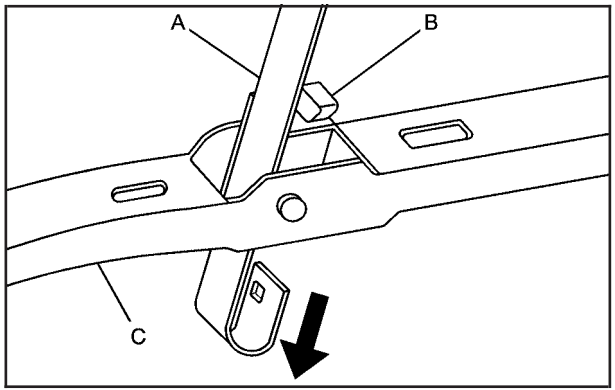

2. Push the release lever (B) to disengage the hook and push the wiper arm (A) out of the blade (C).
3. Push the new wiper blade securely on the wiper arm until you hear the release lever click into place.

Tires

Your new vehicle comes with high-quality tires made by a leading tire manufacturer. If you ever have questions about your tire warranty and where to obtain service, see your GM Warranty booklet for details. For additional information refer to the tire manufacturer's booklet included with your vehicle's Owner Manual.

⚠ CAUTION:

Poorly maintained and improperly used tires are dangerous.

- **Overloading your tires can cause overheating as a result of too much friction. You could have an air-out and a serious accident. See *Loading Your Vehicle on page 4-46*.**

CAUTION: (Continued)

CAUTION: (Continued)

- **Underinflated tires pose the same danger as overloaded tires. The resulting accident could cause serious injury. Check all tires frequently to maintain the recommended pressure. Tire pressure should be checked when your tires are cold. See *Inflation - Tire Pressure on page 5-68*.**
- **Overinflated tires are more likely to be cut, punctured, or broken by a sudden impact — such as when you hit a pothole. Keep tires at the recommended pressure.**
- **Worn, old tires can cause accidents. If your tread is badly worn, or if your tires have been damaged, replace them.**

Tire Sidewall Labeling

Useful information about a tire is molded into the sidewall. The following illustrations are examples of a typical P-Metric and a LT-Metric tire sidewall.

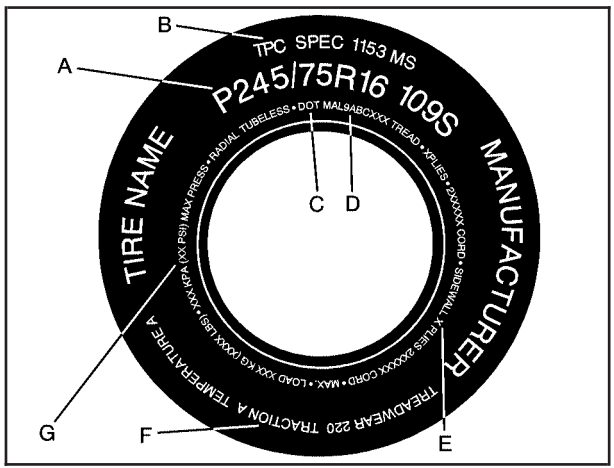

Passenger (P-Metric) Tire

(A) Tire Size: The tire size code is a combination of letters and numbers used to define a particular tire's width, height, aspect ratio, construction type and service description. See the "Tire Size" illustration later in this section for more detail.

(B) TPC Spec (Tire Performance Criteria Specification): Original equipment tires designed to GM's specific tire performance criteria have a TPC specification code molded onto the sidewall. GM's TPC specifications meet or exceed all federal safety guidelines.

(C) DOT (Department of Transportation): The Department of Transportation (DOT) code indicates that the tire is in compliance with the U.S. Department of Transportation Motor Vehicle Safety Standards.

(D) Tire Identification Number (TIN): The letters and numbers following DOT code are the Tire Identification Number (TIN). The TIN shows the manufacturer and plant code, tire size, and date the tire was manufactured. The TIN is molded onto both sides of the tire, although only one side may have the date of manufacture.

(E) Tire Ply Material: The type of cord and number of plies in the sidewall and under the tread.

(F) Uniform Tire Quality Grading (UTQG): Tire manufacturers are required to grade tires based on three performance factors: treadwear, traction and temperature resistance. For more information, see *Uniform Tire Quality Grading on page 5-78*.

(G) Maximum Cold Inflation Load Limit: Maximum load that can be carried and the maximum pressure needed to support that load. For information on recommended tire pressure see *Inflation - Tire Pressure on page 5-68* and *Loading Your Vehicle on page 4-46*.

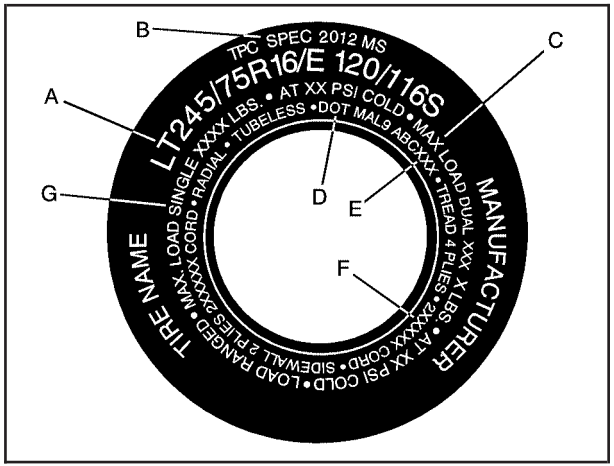

Light Truck (LT-Metric) Tire

(A) Tire Size: The tire size code is a combination of letters and numbers used to define a particular tire's width, height, aspect ratio, construction type and service description. See the "Tire Size" illustration later in this section for more detail.

(B) TPC Spec (Tire Performance Criteria Specification): Original equipment tires designed to GM's specific tire performance criteria have a TPC specification code molded onto the sidewall. GM's TPC specifications meet or exceed all federal safety guidelines.

(C) Dual Tire Maximum Load: Maximum load that can be carried and the maximum pressure needed to support that load when used in a dual configuration. For information on recommended tire pressure see *Inflation - Tire Pressure on page 5-68* and *Loading Your Vehicle on page 4-46*.

(D) DOT (Department of Transportation): The Department of Transportation (DOT) code indicates that the tire is in compliance with the U.S. Department of Transportation Motor Vehicle Safety Standards.

(E) Tire Identification Number (TIN): The letters and numbers following DOT code are the Tire Identification Number (TIN). The TIN shows the manufacturer and plant code, tire size, and date the tire was manufactured. The TIN is molded onto both sides of the tire, although only one side may have the date of manufacture.

(F) Tire Ply Material: The type of cord and number of plies in the sidewall and under the tread.

(G) Single Tire Maximum Load: Maximum load that can be carried and the maximum pressure needed to support that load when used as a single. For information on recommended tire pressure see *Inflation - Tire Pressure on page 5-68* and *Loading Your Vehicle on page 4-46*.

Tire Size

The following examples show the different parts of a tire size.

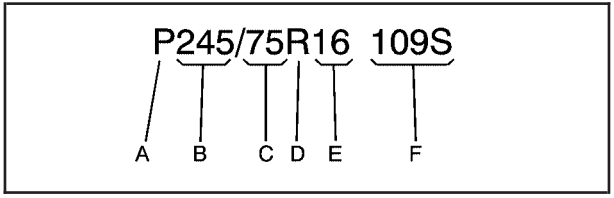

Passenger (P-Metric) Tire

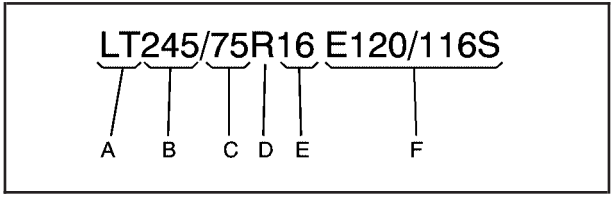

Light Truck (LT-Metric) Tire

(A) Passenger (P-Metric) Tire: The United States version of a metric tire sizing system. The letter P as the first character in the tire size means a passenger vehicle tire engineered to standards set by the U.S. Tire and Rim Association.

(A) Light Truck (LT-Metric) Tire: The United States version of a metric tire sizing system. The letters LT as the first two characters in the tire size means a light truck tire engineered to standards set by the U.S. Tire and Rim Association.

(B) Tire Width: The three-digit number indicates the tire section width in millimeters from sidewall to sidewall.

(C) Aspect Ratio: A two-digit number that indicates the tire height-to-width measurements. For example, if the tire size aspect ratio is 75, as shown in item C of the light truck (LT-Metric) tire illustration, it would mean that the tire's sidewall is 75% as high as it is wide.

(D) Construction Code: A letter code is used to indicate the type of ply construction in the tire. The letter R means radial ply construction; the letter D means diagonal or bias ply construction; and the letter B means belted-bias ply construction.

(E) Rim Diameter: Diameter of the wheel in inches.

(F) Service Description: The service description indicates the load range and speed rating of a tire. The load index can range from 1 to 279. Speed ratings range from A to Z.

Tire Terminology and Definitions

Air Pressure: The amount of air inside the tire pressing outward on each square inch of the tire. Air pressure is expressed in pounds per square inch (psi) or kilopascal (kPa).

Accessory Weight: This means the combined weight of optional accessories. Some examples of optional accessories are, automatic transmission, power steering, power brakes, power windows, power seats, and air conditioning.

Aspect Ratio: The relationship of a tire's height to its width.

Belt: A rubber coated layer of cords that is located between the plies and the tread. Cords may be made from steel or other reinforcing materials.

Bead: The tire bead contains steel wires wrapped by steel cords that hold the tire onto the rim.

Bias Ply Tire: A pneumatic tire in which the plies are laid at alternate angles less than 90 degrees to the centerline of the tread.

Cold Inflation Pressure: The amount of air pressure in a tire, measured in pounds per square inch (psi) or kilopascals (kPa) before a tire has built up heat from driving. See *Inflation - Tire Pressure on page 5-68*.

Curb Weight: This means the weight of a motor vehicle with standard and optional equipment including the maximum capacity of fuel, oil and coolant, but without passengers and cargo.

DOT Markings: A code molded into the sidewall of a tire signifying that the tire is in compliance with the U.S. Department of Transportation (DOT) motor vehicle safety standards. The DOT code includes the Tire Identification Number (TIN), an alphanumeric designator which can also identify the tire manufacturer, production plant, brand and date of production.

GVWR: Gross Vehicle Weight Rating, see *Loading Your Vehicle on page 4-46*.

GAWR FRT: Gross Axle Weight Rating for the front axle, see *Loading Your Vehicle on page 4-46*.

GAWR RR: Gross Axle Weight Rating for the rear axle, see *Loading Your Vehicle on page 4-46*.

Intended Outboard Sidewall: The side of an asymmetrical tire, that must always face outward when mounted on a vehicle.

Kilopascal (kPa): The metric unit for air pressure.

Light Truck (LT-Metric) Tire: A tire used on light duty trucks and some multipurpose passenger vehicles.

Load Index: An assigned number ranging from 1 to 279 that corresponds to the load carrying capacity of a tire.

Maximum Inflation Pressure: The maximum air pressure to which a cold tire may be inflated. The maximum air pressure is molded onto the sidewall.

Maximum Load Rating: The load rating for a tire at the maximum permissible inflation pressure for that tire.

Maximum Loaded Vehicle Weight: The sum of curb weight; accessory weight; vehicle capacity weight; and production options weight.

Normal Occupant Weight: The number of occupants a vehicle is designed to seat multiplied by 150 lbs (68 kg). See *Loading Your Vehicle on page 4-46*.

Occupant Distribution: Designated seating positions.

Outward Facing Sidewall: The side of an asymmetrical tire that has a particular side that faces outward when mounted on a vehicle. The side of the tire that contains a whitewall, bears white lettering, or bears manufacturer, brand, and/or model name molding that is higher or deeper than the same moldings on the other sidewall of the tire.

Passenger (P-Metric) Tire: A tire used on passenger cars and some light duty trucks and multipurpose vehicles.

Recommended Inflation Pressure: Vehicle manufacturer's recommended tire inflation pressure and shown on the tire placard. See *Inflation - Tire Pressure on page 5-68* and *Loading Your Vehicle on page 4-46*.

Radial Ply Tire: A pneumatic tire in which the ply cords that extend to the beads are laid at 90 degrees to the centerline of the tread.

Rim: A metal support for a tire and upon which the tire beads are seated.

Sidewall: The portion of a tire between the tread and the bead.

Speed Rating: An alphanumeric code assigned to a tire indicating the maximum speed at which a tire can operate.

Traction: The friction between the tire and the road surface. The amount of grip provided.

Tread: The portion of a tire that comes into contact with the road.

Treadwear Indicators: Narrow bands, sometimes called wear bars, that show across the tread of a tire when only 1/16 inch (1.6 mm) of tread remains. See *When It Is Time for New Tires on page 5-75*.

UTQGS (Uniform Tire Quality Grading Standards): A tire information system that provides consumers with ratings for a tire's traction, temperature, and treadwear. Ratings are determined by tire manufacturers using government testing procedures. The ratings are molded into the sidewall of the tire. See *Uniform Tire Quality Grading on page 5-78*.

Vehicle Capacity Weight: The number of designated seating positions multiplied by 150 lbs (68 kg) plus the rated cargo load. See *Loading Your Vehicle on page 4-46*.

Vehicle Maximum Load on the Tire: Load on an individual tire due to curb weight, accessory weight, occupant weight, and cargo weight.

Vehicle Placard: A label permanently attached to a vehicle showing the vehicle's capacity weight and the original equipment tire size and recommended inflation pressure. See "Tire and Loading Information Label" under *Loading Your Vehicle on page 4-46*.

Inflation - Tire Pressure

Tires need the correct amount of air pressure to operate effectively.

Notice: **Do not let anyone tell you that under-inflation or over-inflation is all right. It is not. If your tires do not have enough air (under-inflation), you can get the following:**

- **Too much flexing**
- **Too much heat**
- **Tire overloading**
- **Premature or irregular wear**
- **Poor handling**
- **Reduced fuel economy**

If your tires have too much air (over-inflation), you can get the following:

- **Unusual wear**
- **Poor handling**
- **Rough ride**
- **Needless damage from road hazards**

A Tire and Loading Information label is attached to the vehicle's center pillar (B-pillar), below the driver's door lock post (striker). This label lists your vehicle's original equipment tires and their recommended cold tire inflation pressures. The recommended cold tire inflation pressure, shown on the label, is the minimum amount of air pressure needed to support your vehicle's maximum load carrying capacity.

For additional information regarding how much weight your vehicle can carry, and an example of the tire and loading information label, see *Loading Your Vehicle on page 4-46*.

When to Check

Check your tires once a month or more. Do not forget to check the spare tire. For additional information regarding the spare tire, see *Spare Tire on page 5-102*.

How to Check

Use a good quality pocket-type gage to check tire pressure. You cannot tell if your tires are properly inflated simply by looking at them. Radial tires may look properly inflated even when they're underinflated. Check the tire's inflation pressure when the tires are cold. Cold means your vehicle has been sitting for at least three hours or driven no more than 1 mile (1.6 km).

Remove the valve cap from the tire valve stem. Press the tire gage firmly onto the valve to get a pressure measurement. If the cold tire inflation pressure matches the recommended pressure on the Tire and Loading Information label, no further adjustment is necessary. If the inflation pressure is low, add air until you reach the recommended amount.

If you overfill the tire, release air by pushing on the metal stem in the center of the tire valve. Recheck the tire pressure with the tire gage.

Be sure to put the valve caps back on the valve stems. They help prevent leaks by keeping out dirt and moisture.

Tire Pressure Monitor System

The Tire Pressure Monitor System (TPMS) uses radio and sensor technology to check tire pressure levels. If your vehicle has this feature, sensors are mounted on each tire and wheel assembly, except the spare tire. The TPMS sensors monitor the air pressure in your vehicle's tires and transmit tire pressure readings to a receiver located in the vehicle.

The TPMS is designed to alert the driver, if a low tire pressure condition exists. This system also allows the driver to check tire pressure levels using the Driver Information Center (DIC).

When a low tire pressure condition is detected, the TPMS displays the CHECK TIRE PRESSURE warning message on the DIC, and at the same time illuminates the low tire pressure warning symbol. For additional information and details about the DIC operation and displays see *DIC Operation and Displays on page 3-47* and *DIC Warnings and Messages on page 3-50*.

You may notice, during cooler weather conditions, that the tire pressure monitor light, located on the instrument panel cluster, and the CHECK TIRE PRESSURE message will appear when the vehicle is first started and then turn off as you start to drive the vehicle. This could be an early indicator that the tire pressures are getting low and need to be inflated to the proper pressure.

Each tire, including the spare (if provided), should be checked monthly when cold and inflated to the inflation pressure recommended by the vehicle manufacturer on the vehicle placard or tire inflation pressure label. (If your vehicle has tires of a different size than the size indicated on the vehicle placard or tire inflation pressure label, you should determine the proper inflation pressure for those tires.)

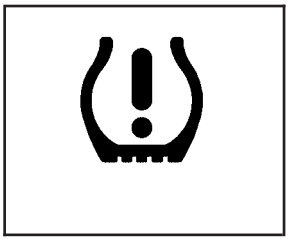

As an added safety feature, your vehicle has been equipped with a tire pressure monitoring system (TPMS) that illuminates a low tire pressure telltale when one or more of your tires is significantly under-inflated.

Accordingly, When the low tire pressure telltale illuminates, you should stop and check your tires as soon as possible, and inflate them to the proper pressure. Driving on a significantly under-inflated tire causes the tire to overheat and can lead to tire failure. Under-inflation also reduces fuel efficiency and tire tread life, and may affect the vehicle's handling and stopping ability.

Please note that the TPMS is not a substitute for proper tire maintenance, and it is the driver's responsibility to maintain correct tire pressure, even if under-inflation has not reached the level to trigger illumination of the TPMS low tire pressure telltale.

The CHECK TIRE PRESSURE warning message and low tire pressure light (telltale) will appear at each ignition cycle until the tires are inflated to the correct inflation pressure.

The Tire and Loading Information label (tire information placard) shows the size of your vehicle's original tires and the correct inflation pressure for your vehicle's tires when they are cold. See *Inflation - Tire Pressure on page 5-68*. For the location of the tire and loading information label, see *Loading Your Vehicle on page 4-46*.

Your vehicle's TPMS can alert you about a low tire pressure condition but it does not replace normal tire maintenance. See *Tire Inspection and Rotation on page 5-73* and *Tires on page 5-62*.

Notice: **Do not use a tire sealant if your vehicle has Tire Pressure Monitors. The liquid sealant can damage the tire pressure monitor sensors.**

Resetting the TPMS Identification Codes

Each TPMS sensor has a unique identification code. Any time you rotate your vehicle's tires or replace one or more of the TPMS sensors, the identification codes will need to be matched to the new tire/wheel position. Each tire/wheel position is matched to a sensor, by increasing or decreasing the tire's air pressure. The sensors are matched to the tire/wheel positions in the following order: LF TIRE (left front tire on the driver's side of the vehicle), RF TIRE (right front tire on the passengers side of the vehicle), RR TIRE (right rear tire on the passengers side of the vehicle), and LR TIRE (left rear tire on the driver's side of the vehicle).

You will have one minute to match the first tire/wheel position, and five minutes overall to match all four tire/wheel positions. If it takes longer than one minute, to match the first tire and wheel, or more than five minutes to match all four tire and wheel positions the matching process stops and you will need to start over.

The TPMS sensor matching process is outlined below:

1. Set the parking brake.
2. Turn the ignition switch to RUN with the engine off.
3. Turn the headlamp switch from off to the parking lamps setting four times within three seconds. A double horn chirp will sound and the TPMS low tire warning light will begin to flash. The double horn chirp and flashing TPMS warning light indicate that the TPMS matching process has started. The TPMS warning light should continue flashing throughout the matching procedure. The SERVICE TIRE MONITOR message will be displayed on the Driver Information Center (DIC).
4. Start with the driver's side front tire.
5. Remove the valve cap from the valve cap stem. Activate the TPMS sensor by increasing or decreasing the tire's air pressure for 10 seconds, then stop and listen for a single horn chirp. The single horn chirp should sound within 15 seconds, confirming that the sensor identification code has been matched to this tire and wheel position. If you do not hear the confirming single horn chirp, you will need to start over with Step 1. To let air-pressure out of a tire you can use the pointed end of the valve cap, a pencil-style air pressure gage or a key.
6. Proceed to the passenger's side front tire, and repeat the procedure in Step 5.
7. Proceed to the passenger's side rear tire, and repeat the procedure in Step 5.
8. Proceed to the driver's side rear tire, and repeat the procedure in Step 5.
9. After hearing the confirming horn chirp for the left rear tire, check to see if the TPMS warning light is still flashing. If it is, turn the ignition switch to LOCK to exit the sensor matching process. If the TPMS warning light is not flashing, the five minute time limit has passed and you will need to start the process over beginning with Step 1.
10. Set all four tires to the recommended air pressure level as indicated on the Tire and Loading Information label.
11. Put the valve caps back on the valve stems

The spare tire does not have a TPMS sensor. If you replace one of the road tires with the spare, the CHECK TIRE PRESSURE message will be displayed on the DIC screen. This message should go off once you re-install the road tire containing the TPMS sensor. The SERVICE TIRE MONITOR message is displayed when the TPMS is malfunctioning. One or more missing or inoperable TPMS sensors will cause the service tire monitor message to be displayed. See your dealer for service.

Federal Communications Commission (FCC) and Industry and Science Canada

The Tire Pressure Monitor System (TPMS) operates on a radio frequency and complies with Part 15 of the FCC Rules. Operation is subject to the following two conditions:

1. This device may not cause harmful interference.
2. This device must accept any interference received, including interference that may cause undesired operation.

The Tire Pressure Monitor System (TPMS) operates on a radio frequency and complies with RSS-210 of Industry and Science Canada. Operation is subject to the following two conditions:

1. This device may not cause interference.
2. This device must accept any interference received, including interference that may cause undesired operation of the device.

Changes or modifications to this system by other than an authorized service facility could void authorization to use this equipment.

Tire Inspection and Rotation

Tires should be rotated every 5,000 to 8,000 miles (8 000 to 13 000 km).

Any time you notice unusual wear, rotate your tires as soon as possible and check wheel alignment. Also check for damaged tires or wheels. See *When It Is Time for New Tires on page 5-75* and *Wheel Replacement on page 5-79* for more information.

Make sure the spare tire is stored securely. Push, pull, and then try to rotate or turn the tire. If it moves, use the ratchet/wheel wrench to tighten the cable. See *Changing a Flat Tire on page 5-83*.

The purpose of regular rotation is to achieve more uniform wear for all tires on the vehicle. The first rotation is the most important. See *Scheduled Maintenance on page 6-4*.

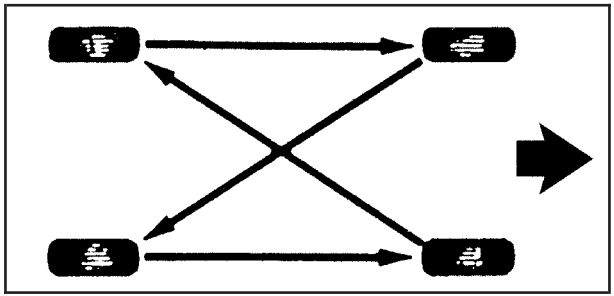

When rotating your vehicle's tires, always use the correct rotation pattern shown here.

Do not include the spare tire in the tire rotation.

After the tires have been rotated, adjust the front and rear inflation pressures as shown on the tire and loading information label. See *Loading Your Vehicle on page 4-46* and *Inflation - Tire Pressure on page 5-68*, for more information.

Vehicles that have the Tire Pressure Monitor System (TPMS) will need to have the TPMS sensors reset after a tire rotation. See "TPMS Sensor Identification Codes" under *Tire Pressure Monitor System on page 5-70*.

Make certain that all wheel nuts are properly tightened. See "Wheel Nut Torque" under *Capacities and Specifications on page 5-120*.

⚠ CAUTION:

Rust or dirt on a wheel, or on the parts to which it is fastened, can make wheel nuts become loose after a time. The wheel could come off and cause an accident. When you change a wheel, remove any rust or dirt from places where the wheel attaches to the vehicle. In an emergency, you can use a cloth or a paper towel to do this; but be sure to use a scraper or wire brush later, if needed, to get all the rust or dirt off. See *Changing a Flat Tire on page 5-83*.

When It Is Time for New Tires

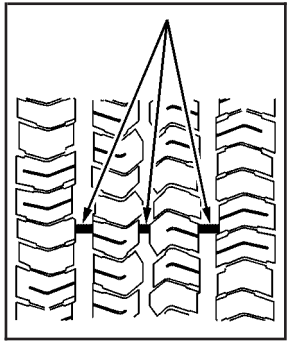

One way to tell when it is time for new tires is to check the treadwear indicators, which will appear when your tires have only 1/16 inch (1.6 mm) or less of tread remaining. Some commercial truck tires may not have treadwear indicators.

You need a new tire if any of the following statements are true:

- You can see the indicators at three or more places around the tire.
- You can see cord or fabric showing through the tire's rubber.
- The tread or sidewall is cracked, cut or snagged deep enough to show cord or fabric.
- The tire has a bump, bulge, or split.
- The tire has a puncture, cut, or other damage that cannot be repaired well because of the size or location of the damage.

Buying New Tires

GM has developed and matched specific tires for your vehicle. The original equipment tires installed on your vehicle, when it was new, were designed to meet General Motors Tire Performance Criteria Specification (TPC spec) system rating. If you need replacement tires, GM strongly recommends that you get tires with the same TPC Spec rating. This way, your vehicle will continue to have tires that are designed to give the same performance and vehicle safety, during normal use, as the original tires.

GM's exclusive TPC Spec system considers over a dozen critical specifications that impact the overall performance of your vehicle, including brake system performance, ride and handling, traction control, and tire pressure monitoring performance. GM's TPC Spec number is molded onto the tire's sidewall by the tire manufacturer. If the tires have an all-season tread design, the TPC spec number will be followed by an MS for mud and snow. See *Tire Sidewall Labeling on page 5-63* for additional information.

⚠ CAUTION:

Mixing tires could cause you to lose control while driving. If you mix tires of different sizes, brands or types (radial and bias-belted tires), the vehicle may not handle properly, and you could have a crash. Using tires of different sizes, brands or types may also cause damage to your vehicle. Be sure to use the same size, brand, and type tires on all wheels.

Your vehicle may have a different size spare than the road tires (those originally installed on your vehicle). When new, your vehicle included a spare tire and wheel assembly with a similar overall diameter as your vehicle's road tires and wheels, so it is all right to drive on it. Because this spare was developed for use on your vehicle, it will not affect vehicle handling.

⚠ CAUTION:

If you use bias-ply tires on your vehicle, the wheel rim flanges could develop cracks after many miles of driving. A tire and/or wheel could fail suddenly, causing a crash. Use only radial-ply tires with the wheels on your vehicle.

If you must replace your vehicle's tires with those that do not have a TPC Spec number, make sure they are the same size, load range, speed rating, and construction type (radial and bias-belted tires) as your vehicle's original tires.

Vehicles that have a tire pressure monitoring system may give an inaccurate low-pressure warning if non-TPC spec rated tires are installed on your vehicle. Non-TPC Spec rated tires may give a low-pressure warning that is higher or lower than the proper warning level you would get with TPC Spec rated tires. See *Tire Pressure Monitor System on page 5-70*.

Your vehicle's original equipment tires are listed on the Tire and Loading Information Label. This label is attached to the vehicle's center pillar (B-pillar). See *Loading Your Vehicle on page 4-46*, for more information about the Tire and Loading Information Label and its location on your vehicle.

Different Size Tires and Wheels

If you add wheels or tires that are a different size than your original equipment wheels and tires, this may affect the way your vehicle performs, including its braking, ride and handling characteristics, stability and resistance to rollover. Additionally, if your vehicle has electronic systems such as, antilock brakes; traction control; and electronic stability control, the performance of these systems can be affected.

⚠ CAUTION:

If you add different sized wheels, your vehicle may not provide an acceptable level of performance and safety if tires not recommended for those wheels are selected. You may increase the chance that you will crash and suffer serious injury. Only use GM specific wheel and tire systems developed for your vehicle, and have them properly installed by a GM certified technician.

See *Buying New Tires on page 5-76* and *Accessories and Modifications on page 5-3* for additional information.

Uniform Tire Quality Grading

Quality grades can be found where applicable on the tire sidewall between tread shoulder and maximum section width. For example:

Treadwear 200 Traction AA Temperature A

The following information relates to the system developed by the United States National Highway Traffic Safety Administration, which grades tires by treadwear, traction and temperature performance. (This applies only to vehicles sold in the United States.) The grades are molded on the sidewalls of most passenger car tires. The Uniform Tire Quality Grading system does not apply to deep tread, winter-type snow tires, space-saver or temporary use spare tires, tires with nominal rim diameters of 10 to 12 inches (25 to 30 cm), or to some limited-production tires.

While the tires available on General Motors passenger cars and light trucks may vary with respect to these grades, they must also conform to federal safety requirements and additional General Motors Tire Performance Criteria (TPC) standards.

Treadwear

The treadwear grade is a comparative rating based on the wear rate of the tire when tested under controlled conditions on a specified government test course. For example, a tire graded 150 would wear one and a half (1.5) times as well on the government course as a tire graded 100. The relative performance of tires depends upon the actual conditions of their use, however, and may depart significantly from the norm due to variations in driving habits, service practices and differences in road characteristics and climate.

Traction – AA, A, B, C

The traction grades, from highest to lowest, are AA, A, B, and C. Those grades represent the tire's ability to stop on wet pavement as measured under controlled conditions on specified government test surfaces of asphalt and concrete. A tire marked C may have poor traction performance. Warning: The traction grade assigned to this tire is based on straight-ahead braking traction tests, and does not include acceleration, cornering, hydroplaning, or peak traction characteristics.

Temperature – A, B, C

The temperature grades are A (the highest), B, and C, representing the tire's resistance to the generation of heat and its ability to dissipate heat when tested under controlled conditions on a specified indoor laboratory test wheel. Sustained high temperature can cause the material of the tire to degenerate and reduce tire life, and excessive temperature can lead to sudden tire failure. The grade C corresponds to a level of performance which all passenger car tires must meet under the Federal Motor Vehicle Safety Standard No. 109. Grades B and A represent higher levels of performance on the laboratory test wheel than the minimum required by law.

Warning: The temperature grade for this tire is established for a tire that is properly inflated and not overloaded. Excessive speed, underinflation, or excessive loading, either separately or in combination, can cause heat buildup and possible tire failure.

Wheel Alignment and Tire Balance

The tires and wheels on your vehicle were aligned and balanced carefully at the factory to give you the longest tire life and best overall performance. Adjustments to wheel alignment and tire balancing will not be necessary on a regular basis. However, if you notice unusual tire wear or your vehicle pulling to one side or the other, the alignment may need to be checked. If you notice your vehicle vibrating when driving on a smooth road, your tires and wheels may need to be rebalanced. See your dealer for proper diagnosis.

Wheel Replacement

Replace any wheel that is bent, cracked or badly rusted or corroded. If wheel nuts keep coming loose, the wheel, wheel bolts and wheel nuts should be replaced. If the wheel leaks air, replace it (except some aluminum wheels, which can sometimes be repaired). See your dealer if any of these conditions exist.

Your dealer will know the kind of wheel you need.

Each new wheel should have the same load-carrying capacity, diameter, width, offset and be mounted the same way as the one it replaces.

If you need to replace any of your wheels, wheel bolts or wheel nuts, replace them only with new GM original equipment parts. This way, you will be sure to have the right wheel, wheel bolts and wheel nuts for your vehicle.

⚠ CAUTION:

Using the wrong replacement wheels, wheel bolts, or wheel nuts on your vehicle can be dangerous. It could affect the braking and handling of your vehicle, make your tires lose air and make you lose control. You could have a collision in which you or others could be injured. Always use the correct wheel, wheel bolts and wheel nuts for replacement.

Notice: **The wrong wheel can also cause problems with bearing life, brake cooling, speedometer or odometer calibration, headlamp aim, bumper height, vehicle ground clearance, and tire or tire chain clearance to the body and chassis.**

See *Changing a Flat Tire on page 5-83* for more information.

Used Replacement Wheels

⚠ CAUTION:

Putting a used wheel on your vehicle is dangerous. You cannot know how it has been used or how far it has been driven. It could fail suddenly and cause a crash. If you have to replace a wheel, use a new GM original equipment wheel.

Tire Chains

⚠ CAUTION:

If your vehicle is a 1500 Series, don't use tire chains. They can damage your vehicle because there's not enough clearance. Tire chains used on a vehicle without the proper amount of clearance can cause damage to the brakes, suspension or other vehicle parts. The area damaged by the tire chains could cause you to lose control of your vehicle and you or others may be injured in a crash.

Use another type of traction device only if its manufacturer recommends it for use on your vehicle and tire size combination and road conditions. Follow that manufacturer's instructions. To help avoid damage to your vehicle, drive slowly, readjust or remove the device if it's contacting your vehicle, and don't spin your wheels.

If you do find traction devices that will fit, install them on the rear tires.

Notice: **If your vehicle is a 2500 Series, use tire chains only where legal and only when you must. Use chains that are the proper size for your tires. Install them on the tires of the rear axle. Don't use chains on the tires of the front axle. Tighten them as tightly as possible with the ends securely fastened. Drive slowly and follow the chain manufacturer's instructions. If you can hear the chains contacting your vehicle, stop and retighten them. If the contact continues, slow down until it stops. Driving too fast or spinning the wheels with chains on will damage your vehicle.**

If a Tire Goes Flat

It is unusual for a tire to blowout while you are driving, especially if you maintain your vehicle's tires properly. If air goes out of a tire, it is much more likely to leak out slowly. But if you should ever have a blowout, here are a few tips about what to expect and what to do:

If a front tire fails, the flat tire will create a drag that pulls the vehicle toward that side. Take your foot off the accelerator pedal and grip the steering wheel firmly. Steer to maintain lane position, and then gently brake to a stop well out of the traffic lane.

A rear blowout, particularly on a curve, acts much like a skid and may require the same correction you would use in a skid. In any rear blowout remove your foot from the accelerator pedal. Get the vehicle under control by steering the way you want the vehicle to go. It may be very bumpy and noisy, but you can still steer. Gently brake to a stop, well off the road if possible.

⚠ CAUTION:

Lifting a vehicle and getting under it to do maintenance or repairs is dangerous without the appropriate safety equipment and training. The jack provided with your vehicle is designed only for changing a flat tire. If it is used for anything else, you or others could be badly injured or killed if the vehicle slips off the jack. Use the jack provided with your vehicle only for changing a flat tire.

If a tire goes flat, the next part shows how to use the jacking equipment to change a flat tire safely.

Changing a Flat Tire

If a tire goes flat, avoid further tire and wheel damage by driving slowly to a level place. Turn on your hazard warning flashers. See *Hazard Warning Flashers on page 3-6* for more information.

⚠ CAUTION:

Changing a tire can be dangerous. The vehicle can slip off the jack and roll over or fall on you or other people. You and they could be badly injured or even killed. Find a level place to change your tire. To help prevent the vehicle from moving:

1. **Set the parking brake firmly.**
2. **Put the shift lever in PARK (P).**
3. **If you have a four-wheel-drive vehicle, be sure the transfer case is in a drive gear — not in NEUTRAL.**

CAUTION: (Continued)

CAUTION: (Continued)

4. **Turn off the engine and do not restart while the vehicle is raised.**
5. **Do not allow passengers to remain in the vehicle.**
6. **Put the wheel blocks at the front and rear of the tire farthest away from the one being changed. That would be the tire on the other side, at the opposite end of the vehicle.**

When your vehicle has a flat tire, use the following example as a guide to assist you in the placement of wheel blocks.

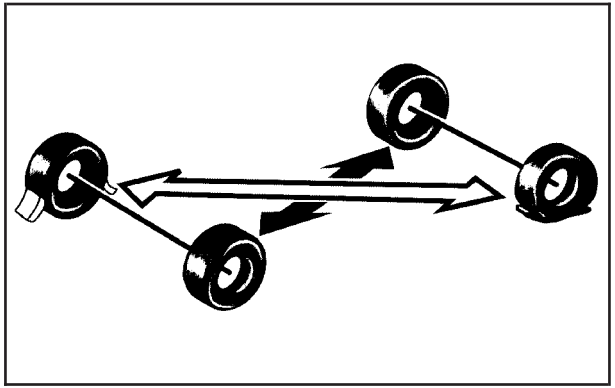

The following information will tell you how to use the jack and change a tire.

Removing the Spare Tire and Tools

The jack and the wheel blocks are located under a cover near the passenger side rear seat.

To remove the jack and wheel blocks, do the following:

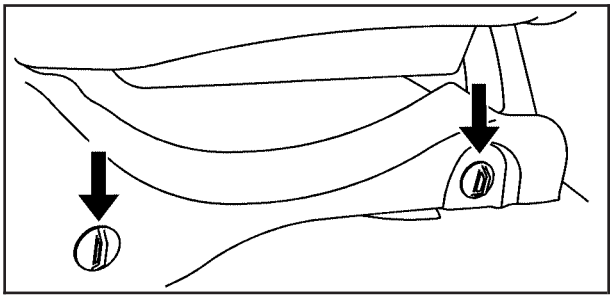

Rear Seat (Passenger Side) Jack Cover

1. Remove the jack cover by turning the two wing nuts one-quarter turn counterclockwise and pulling the jack cover off.

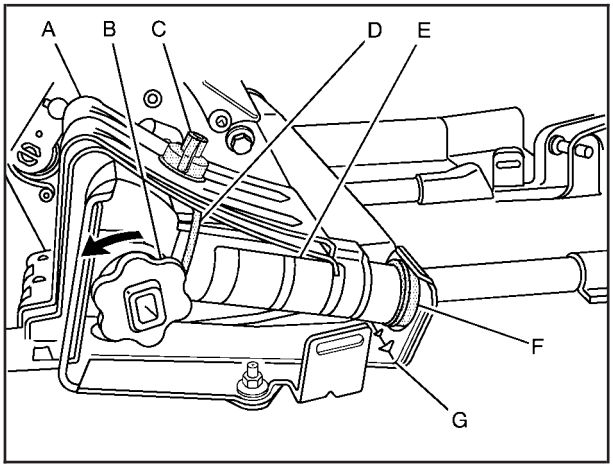

A. Wheel Blocks
B. Knob
C. Wing Nut
D. Retaining Hook
E. Jack
F. Jack Head
G. Mounting Bracket

2. Release the jack (E) from the mounting bracket (G) by turning the knob (B) on the jack counterclockwise to lower the jack head (F) from the mounting bracket.
3. Remove the wheel blocks (A) attached to the jack (E) by turning the wing nut (C) counterclockwise. Place the wheel blocks where needed as indicated in previously in this section.

The tools for changing a flat tire are located in the passenger's side top-box storage unit.

To remove the tools, do the following:

1. Open the top door on the passenger's side top-box storage unit. Use the ignition/door key to unlock it if it is locked. See *Top-Box Storage on page 2-82* for more information.

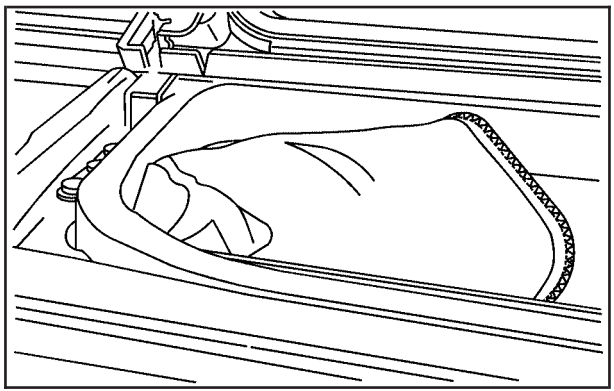

Top-Box Storage Unit (Passenger's Side)

2. Remove the black pouch from the storage box. You now have all of the tools you will need to lower the spare tire and change a flat.

You will use the jack handle extensions and the wheel wrench to remove the underbody-mounted spare tire.

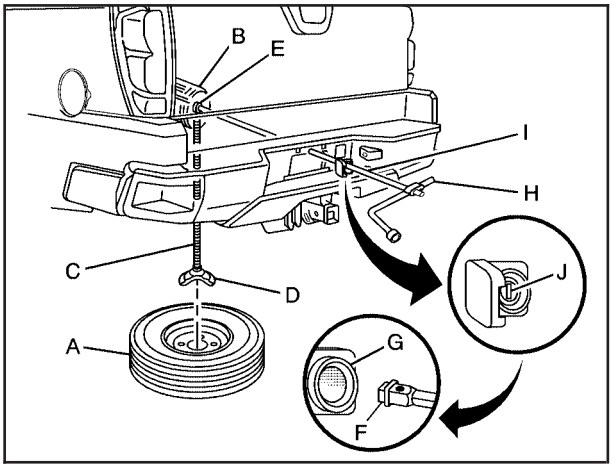

A. Spare Tire (Valve Stem Pointed Down)
B. Hoist Assembly
C. Hoist Cable
D. Tire Retainer
E. Hoist Shaft
F. Hoist End of Extension Tool
G. Hoist Shaft Access Hole
H. Wheel Wrench
I. Jack Handle Extensions
J. Spare Tire Lock (If Equipped)

Follow these instructions to lower the spare tire:

1. Your vehicle may be equipped with a spare tire lock (J). Open the spare tire lock cover on the bumper and use the ignition key to remove the lock.

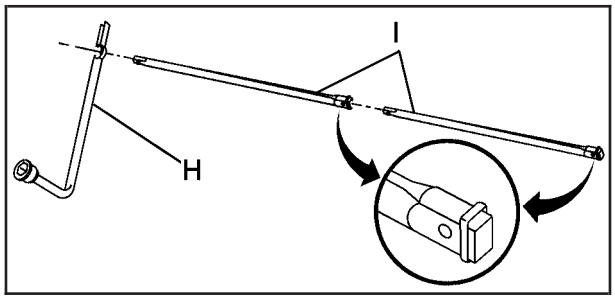

2. Assemble the wheel wrench (H) and the two jack handle extensions (I) as shown.

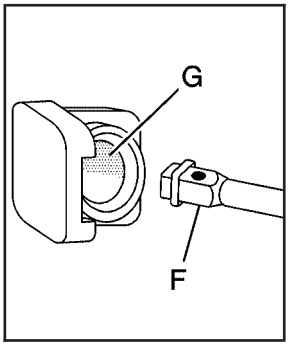

3. Insert the hoist end (open end) (F) of the extension through the hole (G) in the rear bumper.

   Be sure the hoist end of the extension connects to the hoist shaft (E). The ribbed square end of the extension is used to lower the spare tire.

4. Turn the wheel wrench (H) counterclockwise to lower the spare tire to the ground. Continue to turn the wheel wrench until the spare tire can be pulled out from under the vehicle.

   If the spare tire does not lower to the ground, the secondary latch is engaged causing the tire not to lower. See *Secondary Latch System on page 5-95* for more information.

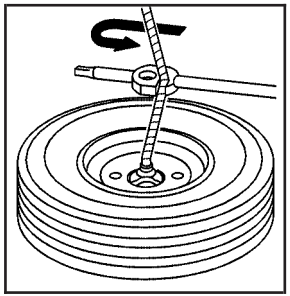

5. Use the hook on the wheel wrench to pull the hoist cable towards you to assist in reaching the spare tire.

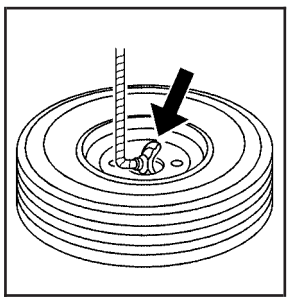

6. Tilt the retainer at the end of the cable when the tire has been lowered, so it can be pulled up through the wheel opening.

7. Put the spare tire near the flat tire.

Removing the Flat Tire and Installing the Spare Tire

Use the following pictures and instructions to remove the flat tire and raise the vehicle.

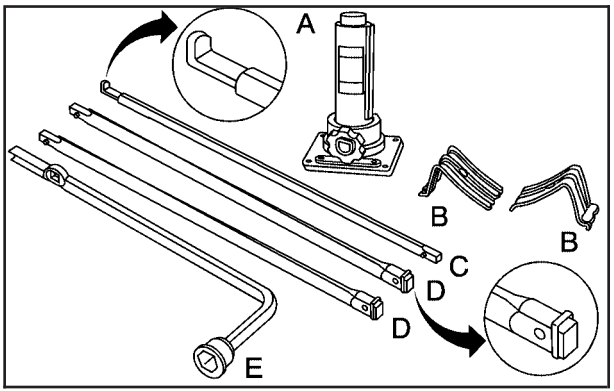

The tools you will be using include the jack (A), the wheel blocks (B), the jack handle (C), the jack handle extensions (D), and the wheel wrench (E).

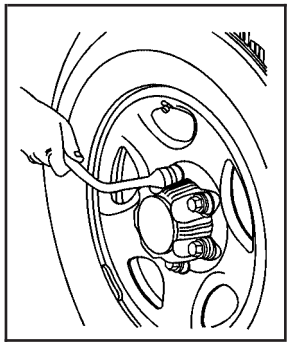

1. If your vehicle has wheel nut caps, loosen them by turning the wheel wrench counterclockwise. If the vehicle has a center cap with wheel nut caps, the wheel nut caps are designed to stay with the center cap after they are loosened. Remove the entire center cap.

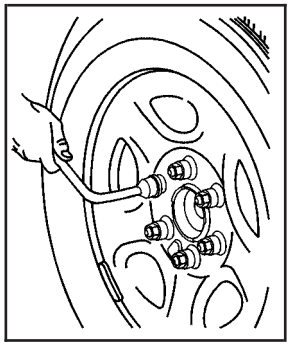

2. Use the wheel wrench to loosen all the wheel nuts. Turn the wheel wrench counterclockwise to loosen the wheel nuts. Do not remove the wheel nuts yet.

If the wheel has a smooth center cap, place the chisel end of the wheel wrench in the slot on the wheel and gently pry it out.

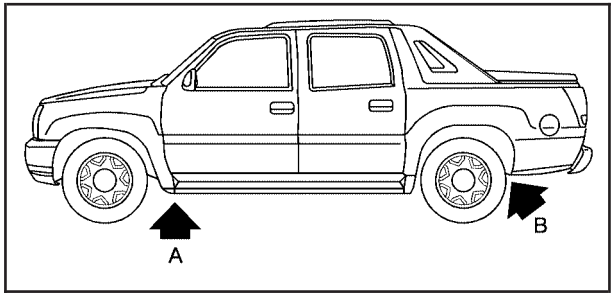

Jack Positions (Overall View)

Refer to the above graphic which shows the general area of jack placement, front position (A), and rear position (B). See the text and art following for the exact jack placement.

⚠ CAUTION:

Getting under a vehicle when it is jacked up is dangerous. If the vehicle slips off the jack you could be badly injured or killed. Never get under a vehicle when it is supported only by a jack.

⚠ CAUTION:

Raising your vehicle with the jack improperly positioned can damage the vehicle and even make the vehicle fall. To help avoid personal injury and vehicle damage, be sure to fit the jack lift head into the proper location before raising the vehicle.

3. Position the jack under the vehicle.

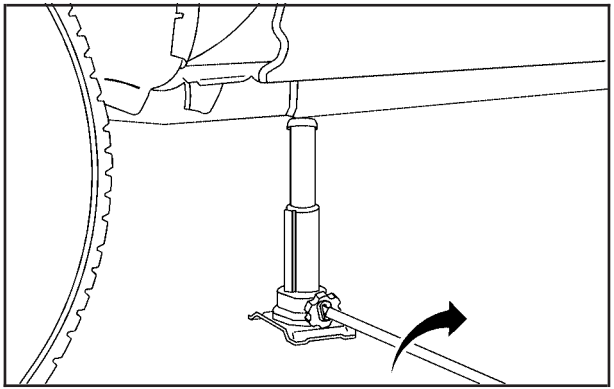

Front Position

Front Tire Flat: If the flat tire is on a front tire of the vehicle, you will need to use the jack handle and only one jack handle extension. Attach the wheel wrench to the jack handle extension. Attach the jack handle to the jack. Position the jack on the frame behind the flat tire where the frame sections overlap.

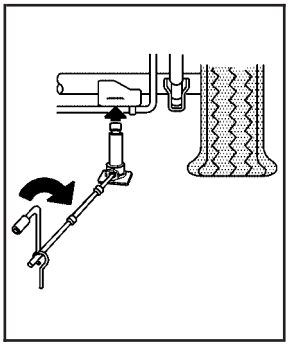

Rear Position — 1500 Series

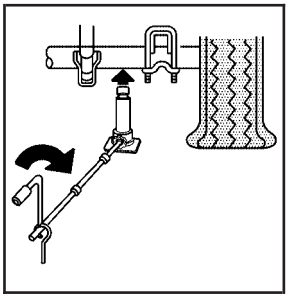

Rear Position — 2500 Series

Rear Tire Flat: If the flat tire is on a rear tire of the vehicle, you will need to use the jack handle and both jack handle extensions. Attach the wheel wrench to the jack handle extensions. Attach the jack handle to the jack. On all 1500 Series vehicles, use the jacking pad provided on the rear axle. On 2500 series vehicles, use the axle between the spring and shock bracket.

4. Turn the wheel wrench clockwise to raise the vehicle. Raise the vehicle far enough off the ground so there is enough room for the spare tire to clear the vehicle.

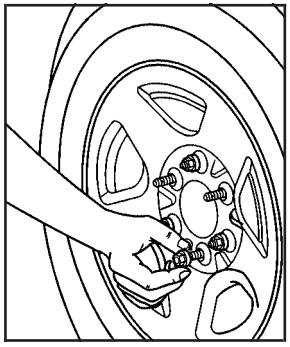

5. Remove all the wheel nuts and take off the flat tire.

⚠ CAUTION:

Rust or dirt on the wheel, or on the parts to which it is fastened, can make the wheel nuts become loose after a time. The wheel could come off and cause an accident. When you change a wheel, remove any rust or dirt from the places where the wheel attaches to the vehicle. In an emergency, you can use a cloth or a paper towel to do this; but be sure to use a scraper or wire brush later, if needed, to get all the rust or dirt off.

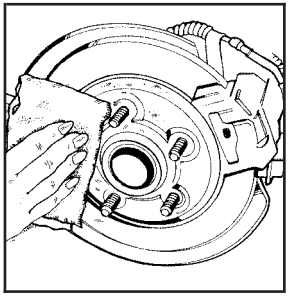

6. Remove any rust or dirt from the wheel bolts, mounting surfaces, and spare wheel.

7. Install the spare tire.

⚠ CAUTION:

Never use oil or grease on studs or nuts. If you do, the nuts might come loose. Your wheel could fall off, causing a serious accident.

8. Put the wheel nuts back on with the rounded end of the nuts toward the wheel after mounting the spare.

9. Tighten each wheel nut by hand. Then use the wheel wrench to tighten the wheel nuts until the wheel is held against the hub.

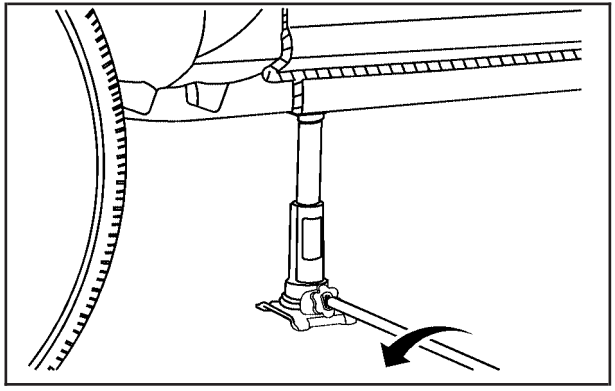

Front Position

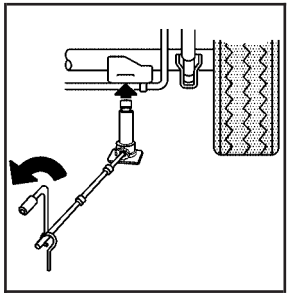

Rear Position — 1500 Series

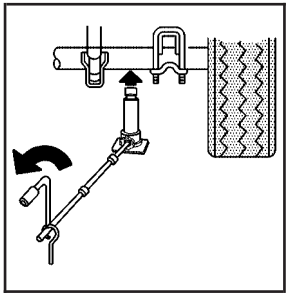

Rear Position — 2500 Series

10. Turn the wheel wrench counterclockwise to lower the vehicle. Lower the jack completely.

⚠ CAUTION:

Incorrect wheel nuts or improperly tightened wheel nuts can cause the wheel to come loose and even come off. This could lead to an accident. Be sure to use the correct wheel nuts. If you have to replace them, be sure to get new GM original equipment wheel nuts. Stop somewhere as soon as you can and have the nuts tightened with a torque wrench to the proper torque specification. See *Capacities and Specifications on page 5-120* for wheel nut torque specification.

Notice: **Improperly tightened wheel nuts can lead to brake pulsation and rotor damage. To avoid expensive brake repairs, evenly tighten the wheel nuts in the proper sequence and to the proper torque specification. See *Capacities and Specifications on page 5-120* for the wheel nut torque specification.**

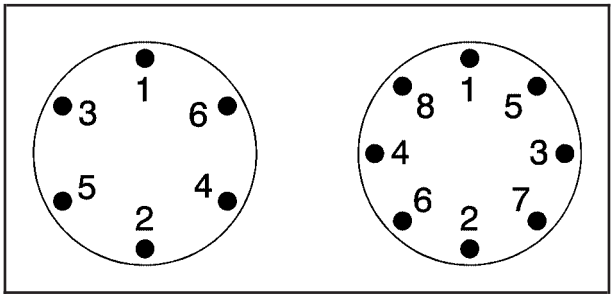

11. Tighten the nuts firmly in a crisscross sequence as shown by turning the wheel wrench clockwise.

When you reinstall the full-size wheel and tire, you must also reinstall the wheel cover with attached plastic nuts, the plastic nut caps, or the smooth center cap.

- If you are reinstalling a wheel cover with attached plastic nuts, place it on the wheel and tighten the nuts by hand to get them started. Then tighten the nut caps with the wheel wrench until they are snug. Do not overtighten the nut caps or they may break.
- If you are reinstalling plastic nut caps, tighten the nuts by hand to get them started. Then tighten the nut caps with the wheel wrench until they are snug. Do not overtighten the nut caps or they may break.
- If you are reinstalling the smooth center cap, place it on the wheel and tap it into place until it seats flush with the wheel.

Secondary Latch System

Your vehicle has an underbody-mounted tire hoist assembly equipped with a secondary latch system. It is designed to stop the spare tire from suddenly falling off your vehicle. For the secondary latch to work, the spare must be installed with the valve stem pointing down. See *Storing a Flat or Spare Tire and Tools on page 5-99*.

⚠ CAUTION:

Before beginning this procedure read all the instructions. Failure to read and follow the instructions could damage the hoist assembly and you and others could get hurt. Read and follow the instructions listed below.

To release the spare tire from the secondary latch, do the following:

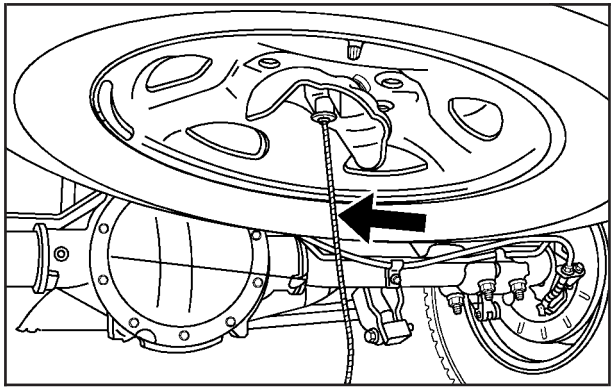

1. Check under the vehicle to see if the cable end is visible.

   If the cable is not visible, proceed to Step 6.

2. If it is visible, first try to tighten the cable by turning the wheel wrench clockwise until you hear two clicks or feel it skip twice. You cannot overtighten the cable.

3. Loosen the cable by turning the wheel wrench counterclockwise three or four turns.

4. Repeat this procedure at least two times. If the spare tire lowers to the ground, continue with Step 5 of *Removing the Spare Tire and Tools on page 5-84*.

5. Turn the wrench counterclockwise until approximately 6 inches (15 cm) of cable is exposed.

6. Stand the wheel blocks on their shortest ends, with the backs facing each other.

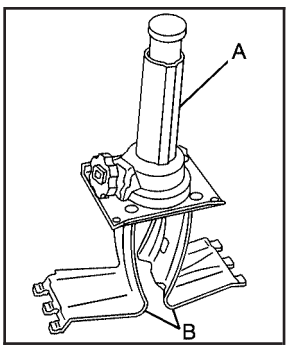

7. Place the bottom edge of the jack (A) on the wheel blocks (B), separating them so that the jack is balanced securely.

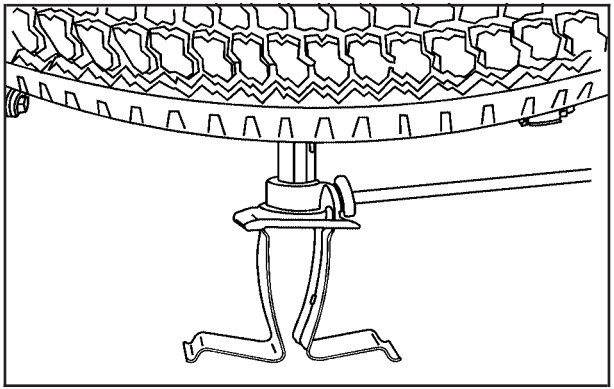

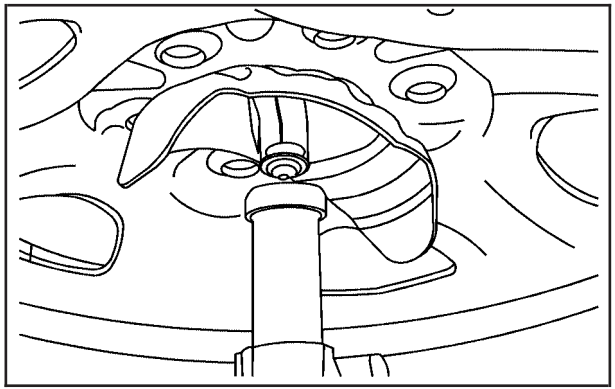

8. Attach the jack handle, extension, and wheel wrench to the jack and place it (with the wheel blocks) under the vehicle towards the front of the rear bumper.
9. Position the center lift point of the jack under the center of the spare tire.
10. Turn the wheel wrench clockwise to raise the jack until it lifts the end fitting.
11. Continue raising the jack until the spare tire stops moving upward and is held firmly in place. The secondary latch has released and the spare tire is balancing on the jack.

12. Lower the jack by turning the wheel wrench counterclockwise. Keep lowering the jack until the spare tire slides off the jack or is hanging by the cable.

⚠ CAUTION:

Someone standing too close during the procedure could be injured by the jack. If the spare tire does not slide off the jack completely, make sure no one is behind you or on either side of you as you pull the jack out from the spare.

13. Disconnect the jack handle from the jack. Carefully remove the jack from underneath the vehicle.
14. Use one hand to push against the spare while firmly pulling the jack out from under the spare tire with the other hand.

    If the spare tire is hanging from the cable, insert the hoist handle, extension and wheel wrench into the hoist shaft hole in the bumper and turn the wheel wrench counterclockwise to lower the spare the rest of the way.

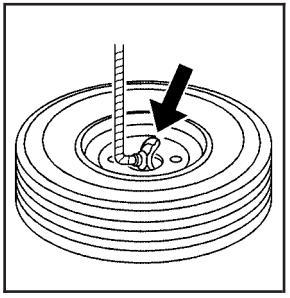

15. Tilt the retainer at the end of the cable and pull it through the wheel opening. Pull the tire out from under the vehicle.
16. Turn the wheel wrench clockwise to raise the cable back up if the cable is hanging under the vehicle.

Have the hoist assembly inspected as soon as you can. You will not be able to store a spare or flat tire using the hoist assembly until it has been replaced.

To continue changing the flat tire, see *Removing the Flat Tire and Installing the Spare Tire on page 5-88*.

Storing a Flat or Spare Tire and Tools

⚠ CAUTION:

Storing a jack, a tire, or other equipment in the passenger compartment of the vehicle could cause injury. In a sudden stop or collision, loose equipment could strike someone. Store all these in the proper place.

Notice: **Storing an aluminum wheel with a flat tire under your vehicle for an extended period of time or with the valve stem pointing up may damage the wheel. Always stow the wheel with the valve stem pointing down and have the wheel/tire repaired as soon as possible.**

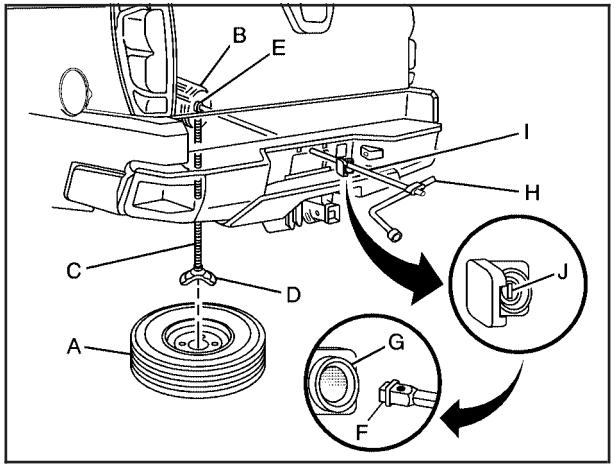

A. Spare Tire (Valve Stem Pointed Down)
B. Hoist Assembly
C. Hoist Cable
D. Tire Retainer
E. Hoist Shaft
F. Hoist End of Extension Tool
G. Hoist Shaft Access Hole
H. Wheel Wrench
I. Jack Handle Extensions
J. Spare Tire Lock (If Equipped)

To store the flat or spare tire, do the following:

1. Put the tire on the ground at the rear of the vehicle with the valve stem pointed down and toward the rear of the vehicle.

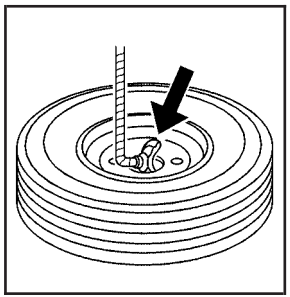

2. Tilt the retainer downward and through the wheel opening. Make sure the retainer is fully seated across the underside of the wheel.

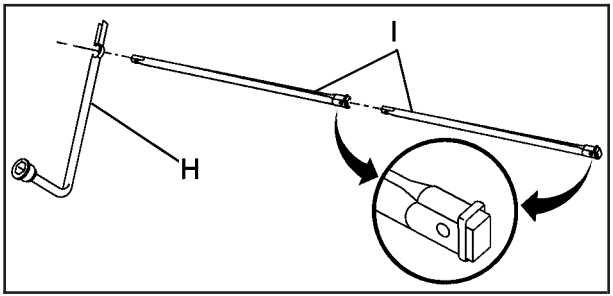

3. Attach the wheel wrench (H) and extensions (I) together.

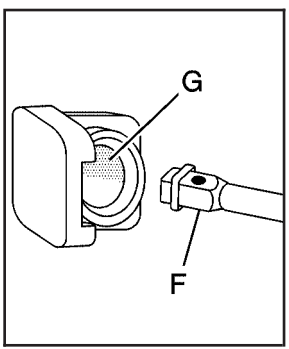

4. Insert the hoist end (F) through the hole (G) in the rear bumper and into the hoist shaft.

5. Raise the tire part way upward. Make sure the retainer is seated in the wheel opening.
6. Raise the tire fully against the underside of the vehicle by turning the wheel wrench clockwise until you hear two clicks or feel it skip twice. You cannot overtighten the cable.

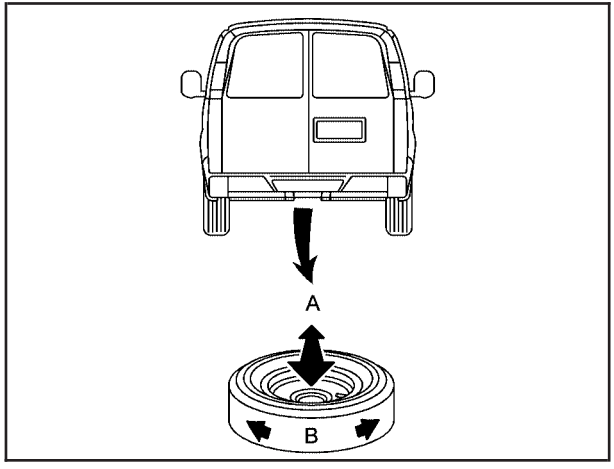

7. Make sure the tire is stored securely. Push, pull (A), and then try to turn (B) the tire. If the tire moves, use the wheel wrench to tighten the cable. Reinstall the spare tire lock (if equipped).

To store the tools, follow these steps:

1. Return the tools to the tool bag and place it back in the top-box storage unit.
2. Assemble the wheel blocks and jack together with the wing nut by reversing Step 2 under *Removing the Spare Tire and Tools on page 5-84*.
3. Replace the jack cover and tighten the jack-cover wing nuts.

Spare Tire

Your vehicle, when new, had a fully-inflated spare tire. A spare tire may lose air over time, so check its inflation pressure regularly. See *Inflation - Tire Pressure on page 5-68* and *Loading Your Vehicle on page 4-46* for information regarding proper tire inflation and loading your vehicle. For instruction on how to remove, install or store a spare tire, see *Removing the Flat Tire and Installing the Spare Tire on page 5-88* and *Storing a Flat or Spare Tire and Tools on page 5-99*.

Your vehicle may have a different size spare tire than the road tires originally installed on your vehicle. This spare tire was developed for use on your vehicle, so it is all right to drive on it. If your vehicle has four-wheel drive and the different size spare tire is installed, keep the vehicle in two-wheel drive.

Notice: **If your vehicle has four-wheel drive and the different size spare tire is installed on your vehicle, do not drive in four-wheel drive until you can have your flat tire repaired and/or replaced. You could damage your vehicle, and the repair costs would not be covered by your warranty. Never use four-wheel drive when the different size spare tire is installed on your vehicle.**

After installing the spare tire on your vehicle, you should stop as soon as possible and make sure the spare tire is correctly inflated. Have the damaged or flat road tire repaired or replaced as soon as you can and installed back onto your vehicle. This way, the spare tire will be available in case you need it again.

Do not mix tires and wheels of different sizes, because they will not fit. Keep your spare tire and its wheel together. If your vehicle has a spare tire that does not match your vehicle's original road tires and wheels in size and type, do not include the spare in the tire rotation.

Appearance Care

Cleaning the Inside of Your Vehicle

Your vehicle's interior will continue to look its best if it is cleaned often. Although not always visible, dust and dirt can accumulate on your upholstery. Dirt can damage carpet, fabric, leather, and plastic surfaces. Regular vacuuming is recommended to remove particles from your upholstery. It is important to keep your upholstery from becoming and remaining heavily soiled. Soils should be removed as quickly as possible. Your vehicle's interior may experience extremes of heat that could cause stains to set rapidly.

Lighter colored interiors may require more frequent cleaning. Use care because newspapers and garments that transfer color to your home furnishings may also transfer color to your vehicle's interior.

When cleaning your vehicle's interior, only use cleaners specifically designed for the surfaces being cleaned. Permanent damage may result from using cleaners on surfaces for which they were not intended. Use glass cleaner only on glass. Remove any accidental over-spray from other surfaces immediately. To prevent over-spray, apply cleaner directly to the cleaning cloth.

Notice: **If you use abrasive cleaners when cleaning glass surfaces on your vehicle, you could scratch the glass and/or cause damage to the rear window defogger. When cleaning the glass on your vehicle, use only a soft cloth and glass cleaner.**

Many cleaners contain solvents that may become concentrated in your vehicle's breathing space. Before using cleaners, read and adhere to all safety instructions on the label. While cleaning your vehicle's interior, maintain adequate ventilation by opening your vehicle's doors and windows.

Dust may be removed from small buttons and knobs using a small brush with soft bristles.

Your GM dealer has a product for cleaning your vehicle's glass. Should it become necessary, you can also obtain a product from your GM dealer to remove odors from your vehicle's upholstery.

Do not clean your vehicle using the following cleaners or techniques:

- Never use a knife or any other sharp object to remove a soil from any interior surface.
- Never use a stiff brush. It can cause damage to your vehicle's interior surfaces.
- Never apply heavy pressure or rub aggressively with a cleaning cloth. Use of heavy pressure can damage your interior and does not improve the effectiveness of soil removal.

- Use only mild, neutral-pH soaps. Avoid laundry detergents or dishwashing soaps with degreasers. Using too much soap will leave a residue that leaves streaks and attracts dirt. For liquid cleaners, about 20 drops per gallon (3.78 L) of water is a good guide.
- Do not heavily saturate your upholstery while cleaning.
- Damage to your vehicle's interior may result from the use of many organic solvents such as naptha, alcohol, etc.

Fabric/Carpet

Use a vacuum cleaner with a soft brush attachment frequently to remove dust and loose dirt. A canister vacuum with a beater bar in the nozzle may only be used on floor carpet and carpeted floor mats. For soils, always try to remove them first with plain water or club soda. Before cleaning, gently remove as much of the soil as possible using one of the following techniques:

- For liquids: gently blot the remaining soil with a paper towel. Allow the soil to absorb into the paper towel until no more can be removed.
- For solid dry soils: remove as much as possible and then vacuum.

To clean, use the following instructions:

1. Saturate a lint-free, clean white cloth with water or club soda.
2. Wring the cloth to remove excess moisture.
3. Start on the outside edge of the soil and gently rub toward the center. Continue cleaning, using a clean area of the cloth each time it becomes soiled.
4. Continue to gently rub the soiled area until the cleaning cloth remains clean.
5. If the soil is not completely removed, use a mild soap solution and repeat the cleaning process that was used with plain water.

If any of the soil remains, a commercial fabric cleaner or spot lifter may be necessary. When a commercial upholstery cleaner or spot lifter is to be used, test a small hidden area for colorfastness first. If the locally cleaned area gives any impression that a ring formation may result, clean the entire surface.

After the cleaning process has been completed, a paper towel can be used to blot excess moisture from the fabric or carpet.

Leather

A soft cloth dampened with water may be used to remove dust. If a more thorough cleaning is necessary, a soft cloth dampened with a mild soap solution can be used. Allow the leather to dry naturally. Do not use heat to dry. Never use steam to clean leather. Never use spot lifters or spot removers on leather. Many commercial leather cleaners and coatings that are sold to preserve and protect leather may permanently change the appearance and feel of your leather and are not recommended. Do not use silicone or wax-based products, or those containing organic solvents to clean your vehicle's interior because they can alter the appearance by increasing the gloss in a non-uniform manner. Never use shoe polish on your leather.

Instrument Panel, Vinyl, and Other Plastic Surfaces

A soft cloth dampened with water may be used to remove dust. If a more thorough cleaning is necessary, a clean soft cloth dampened with a mild soap solution can be used to gently remove dust and dirt. Never use spot lifters or removers on plastic surfaces. Many commercial cleaners and coatings that are sold to preserve and protect soft plastic surfaces may permanently change the appearance and feel of your interior and are not recommended. Do not use silicone or wax-based products, or those containing organic solvents to clean your vehicle's interior because they can alter the appearance by increasing the gloss in a non-uniform manner.

Some commercial products may increase gloss on your instrument panel. The increase in gloss may cause annoying reflections in the windshield and even make it difficult to see through the windshield under certain conditions.

Care of Safety Belts

Keep belts clean and dry.

⚠ CAUTION:

Do not bleach or dye safety belts. If you do, it may severely weaken them. In a crash, they might not be able to provide adequate protection. Clean safety belts only with mild soap and lukewarm water.

Weatherstrips

Silicone grease on weatherstrips will make them last longer, seal better, and not stick or squeak. Apply silicone grease with a clean cloth. During very cold, damp weather frequent application may be required. See *Recommended Fluids and Lubricants on page 6-13*.

Washing Your Vehicle

The paint finish on the vehicle provides beauty, depth of color, gloss retention, and durability.

The best way to preserve the vehicle's finish is to keep it clean by washing it often with lukewarm or cold water.

Do not wash the vehicle in the direct rays of the sun. Use a car washing soap. Do not use strong soaps or chemical detergents. Be sure to rinse the vehicle well, removing all soap residue completely. GM-approved cleaning products can be obtained from your dealer. See *Vehicle Care/Appearance Materials on page 5-110*. Do not use cleaning agents that are petroleum based, or that contain acid or abrasives. All cleaning agents should be flushed promptly and not allowed to dry on the surface, or they could stain. Dry the finish with a soft, clean chamois or an all-cotton towel to avoid surface scratches and water spotting.

High pressure car washes may cause water to enter the vehicle.

Cleaning Exterior Lamps/Lenses

Use only lukewarm or cold water, a soft cloth and a car washing soap to clean exterior lamps and lenses. Follow instructions under *Washing Your Vehicle on page 5-106*.

Finish Care

Occasional waxing or mild polishing of your vehicle by hand may be necessary to remove residue from the paint finish. You can get GM-approved cleaning products from your dealer. See *Vehicle Care/Appearance Materials on page 5-110*.

If your vehicle has a “basecoat/clearcoat” paint finish, the clearcoat gives more depth and gloss to the colored basecoat. Always use waxes and polishes that are non-abrasive and made for a basecoat/clearcoat paint finish.

Notice: **Machine compounding or aggressive polishing on a basecoat/clearcoat paint finish may damage it. Use only non-abrasive waxes and polishes that are made for a basecoat/clearcoat paint finish on your vehicle.**

Foreign materials such as calcium chloride and other salts, ice melting agents, road oil and tar, tree sap, bird droppings, chemicals from industrial chimneys, etc., can damage your vehicle’s finish if they remain on painted surfaces. Wash the vehicle as soon as possible. If necessary, use non-abrasive cleaners that are marked safe for painted surfaces to remove foreign matter.

Exterior painted surfaces are subject to aging, weather and chemical fallout that can take their toll over a period of years. You can help to keep the paint finish looking new by keeping your vehicle garaged or covered whenever possible.

Protecting Exterior Bright Metal Parts

Bright metal parts should be cleaned regularly to keep their luster. Washing with water is all that is usually needed. However, you may use chrome polish on chrome or stainless steel trim, if necessary.

Use special care with aluminum trim. To avoid damaging protective trim, never use auto or chrome polish, steam or caustic soap to clean aluminum. A coating of wax, rubbed to high polish, is recommended for all bright metal parts.

Windshield and Wiper Blades

If the windshield is not clear after using the windshield washer, or if the wiper blade chatters when running, wax, sap, or other material may be on the blade or windshield.

Clean the outside of the windshield with a glass cleaning liquid or powder and water solution. The windshield is clean if beads do not form when it is rinsed with water.

Grime from the windshield will stick to the wiper blades and affect their performance. Clean the blade by wiping vigorously with a cloth soaked in full-strength windshield washer solvent. Then rinse the blade with water.

Check the wiper blades and clean them as necessary; replace blades that look worn.

Aluminum or Chrome-Plated Wheels

The vehicle may be equipped with either aluminum or chrome-plated wheels.

Keep the wheels clean using a soft clean cloth with mild soap and water. Rinse with clean water. After rinsing thoroughly, dry with a soft clean towel. A wax may then be applied.

Notice: **If you use strong soaps, chemicals, abrasive polishes, cleaners, brushes, or cleaners that contain acid on aluminum or chrome-plated wheels, you could damage the surface of the wheel(s). The repairs would not be covered by your warranty. Use only GM-approved cleaners on aluminum or chrome-plated wheels.**

The surface of these wheels is similar to the painted surface of your vehicle. Do not use strong soaps, chemicals, abrasive polishes, abrasive cleaners, cleaners with acid, or abrasive cleaning brushes on them because you could damage the surface. Do not use chrome polish on aluminum wheels.

Notice: **Using chrome polish on aluminum wheels could damage the wheels. The repairs would not be covered by your warranty. Use chrome polish on chrome wheels only.**

Use chrome polish only on chrome-plated wheels, but avoid any painted surface of the wheel, and buff off immediately after application.

Notice: **If you drive your vehicle through an automatic car wash that has silicone carbide tire cleaning brushes, you could damage the aluminum or chrome-plated wheels. The repairs would not be covered by your warranty. Never drive a vehicle equipped with aluminum or chrome-plated wheels through an automatic car wash that uses silicone carbide tire cleaning brushes.**

Do not take your vehicle through an automatic car wash that has silicone carbide tire cleaning brushes. These brushes can also damage the surface of these wheels.

Tires

To clean the tires, use a stiff brush with tire cleaner.

Notice: **Using petroleum-based tire dressing products on your vehicle may damage the paint finish and/or tires. When applying a tire dressing, always wipe off any overspray from all painted surfaces on your vehicle.**

Sheet Metal Damage

If the vehicle is damaged and requires sheet metal repair or replacement, make sure the body repair shop applies anti-corrosion material to parts repaired or replaced to restore corrosion protection.

Original manufacturer replacement parts will provide the corrosion protection while maintaining the warranty.

Finish Damage

Any stone chips, fractures or deep scratches in the finish should be repaired right away. Bare metal will corrode quickly and may develop into major repair expense.

Minor chips and scratches can be repaired with touch-up materials available from your GM dealer. Larger areas of finish damage can be corrected in your GM dealer's body and paint shop.

Underbody Maintenance

Chemicals used for ice and snow removal and dust control can collect on the underbody. If these are not removed, corrosion and rust can develop on the underbody parts such as fuel lines, frame, floor pan, and exhaust system even though they have corrosion protection.

At least every spring, flush these materials from the underbody with plain water. Clean any areas where mud and debris can collect. Dirt packed in close areas of the frame should be loosened before being flushed. Your dealer or an underbody car washing system can do this for you.

Chemical Paint Spotting

Some weather and atmospheric conditions can create a chemical fallout. Airborne pollutants can fall upon and attack painted surfaces on the vehicle. This damage can take two forms: blotchy, ring-shaped discolorations, and small, irregular dark spots etched into the paint surface.

Although no defect in the paint job causes this, GM will repair, at no charge to the owner, the surfaces of new vehicles damaged by this fallout condition within 12 months or 12,000 miles (20 000 km) of purchase, whichever occurs first.

Vehicle Care/Appearance Materials

Description	Usage
Polishing Cloth Wax-Treated	Interior and exterior polishing cloth.
Tar and Road Oil Remover	Removes tar, road oil, and asphalt.
Chrome Cleaner and Polish	Use on chrome or stainless steel.
White Sidewall Tire Cleaner	Removes soil and black marks from whitewalls.
Vinyl Cleaner	Cleans vinyl.
Glass Cleaner	Removes dirt, grime, smoke and fingerprints.
Chrome and Wire Wheel Cleaner	Removes dirt and grime from chrome wheels and wire wheel covers.
Finish Enhancer	Removes dust, fingerprints, and surface contaminants. Spray on and wipe off.

Description	Usage
Swirl Remover Polish	Removes swirl marks, fine scratches, and other light surface contamination.
Cleaner Wax	Removes light scratches and protects finish.
Foaming Tire Shine Low Gloss	Cleans, shines, and protects in one step. No wiping necessary.
Wash Wax Concentrate	Medium foaming shampoo. Cleans and lightly waxes. Biodegradable and phosphate free.
Spot Lifter	Quickly removes spots and stains from carpets, vinyl, and cloth upholstery.
Odor Eliminator	Odorless spray odor eliminator used on fabrics, vinyl, leather and carpet.

Vehicle Identification

Vehicle Identification Number (VIN)

This is the legal identifier for your vehicle. It appears on a plate in the front corner of the instrument panel, on the driver's side. You can see it if you look through the windshield from outside your vehicle. The VIN also appears on the Vehicle Certification and Service Parts labels and the certificates of title and registration.

Engine Identification

The eighth character in the VIN is the engine code. This code will help you identify your vehicle's engine, specifications, and replacement parts.

Service Parts Identification Label

You will find this label on the inside of the glove box. It is very helpful if you ever need to order parts. On this label, you will find the following:

- VIN
- Model designation
- Paint information
- Production options and special equipment

Be sure that this label is not removed from the vehicle.

Electrical System

Notice: **Don't add anything electrical to your vehicle unless you check with your dealer first. Some electrical equipment can damage your vehicle and the damage wouldn't be covered by your warranty. Some add-on electrical equipment can keep other components from working as they should.**

Your vehicle has an air bag system. Before attempting to add anything to your vehicle, see *Servicing Your Airbag-Equipped Vehicle on page 1-65*.

Windshield Wiper Fuses

The windshield wiper motor is protected by an internal circuit breaker and a fuse. If the motor overheats due to heavy snow, etc., the wiper will stop until the motor cools. If the overload is caused by some electrical problem and not snow, etc., be sure to get it fixed.

Power Windows and Other Power Options

Circuit breakers protect the power windows and other power accessories. When the current load is too heavy, the circuit breaker opens and closes, protecting the circuit until the problem is fixed or goes away.

Fuses and Circuit Breakers

The wiring circuits in your vehicle are protected from short circuits by a combination of fuses, circuit breakers and fusible thermal links. This greatly reduces the chance of fires caused by electrical problems.

Look at the silver-colored band inside the fuse. If the band is broken or melted, replace the fuse. Be sure you replace a bad fuse with a new one of the identical size and rating.

If you ever have a problem on the road and don't have a spare fuse, you can borrow one that has the same amperage. Just pick some feature of your vehicle that you can get along without – like the radio or cigarette lighter – and use its fuse, if it is the correct amperage. Replace it as soon as you can.

Instrument Panel Fuse Block

The fuse block access door is on the driver's side edge of the instrument panel. Pull off the cover to access the fuse block.

To remove fuses if you don't have a fuse extractor, hold the end of the fuse between your thumb and index finger and pull straight out.

You may have spare fuses located behind the fuse block access door. These can be used to replace a bad fuse. However, make sure it is of the correct amperage.

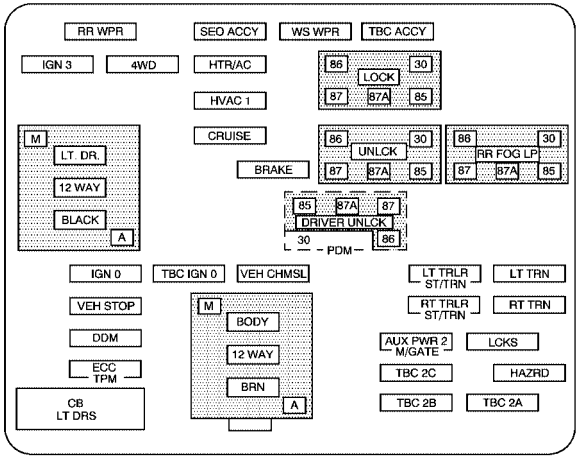

Fuses	Usage
RR Wiper	Not Used
SEO ACCY	Special Equipment Option Accessory
WS WPR	Windshield Wipers
TBC ACCY	Truck Body Controller Accessory
IGN 3	Ignition, Heated Seats
4WD	Four-Wheel Drive System
HTR A/C	Climate Control System

Fuses	Usage
LCK	Power Door Lock Relay (Lock Function)
HVAC 1	Inside Rearview Mirror, Climate Control System
LT DR	Driver's Door Harness Connection
CRUISE	Cruise Control
UNLCK	Power Door Lock Relay (Unlock Function)
RR FOG LP	Rear Fog Lamp (Export Only)
BRAKE	Anti-lock Brake System
DRIVER UNLCK	Power Door Lock Relay (Driver's Door Unlock Function)
IGN 0	Powertrain Control Module, Transmission Control Module
TBC IGN 0	Truck Body Controller
VEH CHMSL	Vehicle and Trailer High Mounted Stoplamp
LT TRLR ST/TRN	Left Turn Signal/Stop Trailer
LT TRN	Left Turn Signals and Sidemarkers

Fuses	Usage
VEH STOP	Vehicle Stoplamps, Brake Module, Electronic Throttle Control Module
BODY	Harness Connector
RT TRLR ST/TRN	Right Turn Signal/Stop Trailer
RT TRN	Right Turn Signals and Sidemarkers
DDM	Driver Door Module
AUX PWR 2, M/GATE	Rear Cargo Area Power Outlets, Midgate
LCKS	Power Door Lock System
ECC, TPM	Rear Electronic Climate Control, Tire Pressure Monitoring System (If Equipped)
TBC 2C	Truck Body Controller
HAZRD	Flasher Module
CB LT DRS	Left Power Window Circuit Breaker
TBC 2B	Truck Body Controller
TBC 2A	Truck Body Controller

Center Instrument Panel Fuse Block

The center instrument panel utility block is located underneath the instrument panel, to the left of the steering column.

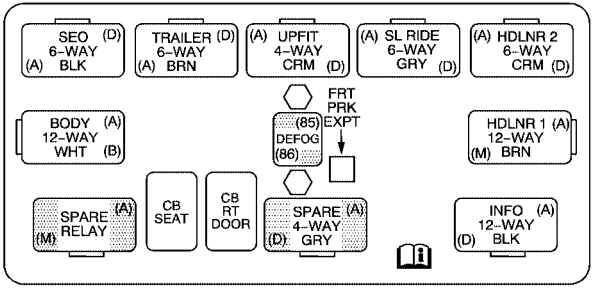

Device	Usage
SEO	Special Equipment Option/Off-road Lamps Harness Connector
TRAILER	Trailer Brake Wiring
UPFIT	Upfitter (Not Used)
SL RIDE	Ride Control (Not Used)
HDLR 2	Headliner Wiring Connector 2
BODY	Body Wiring Connector
DEFOG	Rear Defogger Relay

Device	Usage
HDLNR 1	Headliner Wiring Connector 1
SPARE RELAY	Not Used
CB SEAT	Driver and Passenger Seat Module Circuit Breaker
CB RT DOOR	Rear Right Power Window, Passenger Door Module
SPARE	Not Used
INFO	Not Used

Underhood Fuse Block

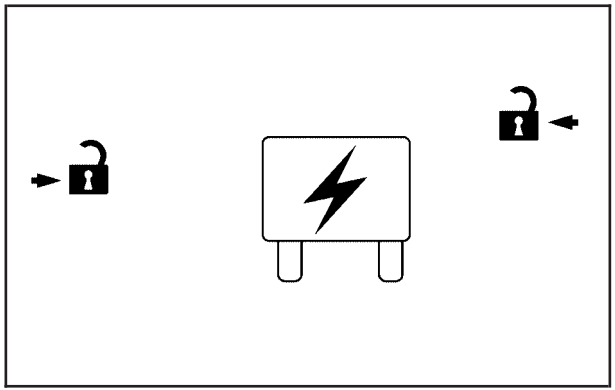

The underhood fuse block is located in the engine compartment on the driver's side of the vehicle, near the battery. Lift the cover for access to the fuse/relay block.

To remove fuses, hold the end of the fuse between your thumb and index finger and pull straight out.

See *Engine Compartment Overview on page 5-14* for more information on its location.

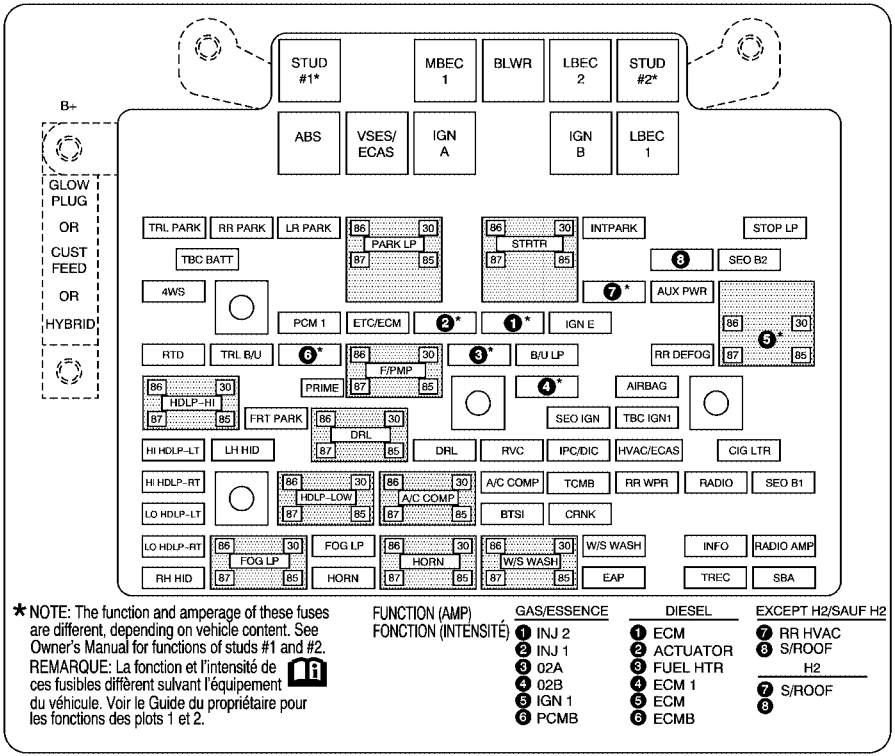

*NOTE: The function and amperage of these fuses are different, depending on vehicle content. See Owner's Manual for functions of studs #1 and #2.
REMARQUE: La fonction et l'intensité de ces fusibles diffèrent suivant l'équipement du véhicule. Voir le Guide du propriétaire pour les fonctions des plots 1 et 2.

FUNCTION (AMP)
FONCTION (INTENSITÉ)

GAS/ESSENCE	DIESEL	EXCEPT H2/SAUF H2
1 INJ 2	1 ECM	7 RR HVAC
2 INJ 1	2 ACTUATOR	8 S/ROOF
3 02A	3 FUEL HTR	H2
4 02B	4 ECM 1	7 S/ROOF
5 IGN 1	5 ECM	8
6 PCMB	6 ECMB	

***1** — Gasoline Engine and Fuel Injection Rail #2.

***2** — Gasoline Engine and Fuel Injection Rail #1.

***3** — Gasoline Engine; Oxygen Sensors.

***4** — Gasoline Engine; Oxygen Sensors.

***5** — Ignition 1

***6** — Powertrain Control Module, Fuel Pump.

***7** — Rear Climate Control.

***8** — Sunroof.

Fuses	Usage
GLOW PLUG	Not Used
CUST FEED	Accessory Power
HYBRID	Not Used
STUD #1	Auxiliary Power
MBEC	Mid-Bussed Electrical Center Power Feed, Front Seats, Right Doors
BLWR	Front Climate Control Fan
LBEC	Left Bussed Electrical Center, Door Modules, Door Locks, Auxiliary Power Outlet — Rear Cargo Area and Instrument Panel
STUD #2*	Accessory Power/Trailer Wiring Brake Feed
ABS	Anti-lock Brakes

Fuses	Usage
VSES/ECAS	Automatic Level Control (ALC) Compressor
IGN A	Ignition Power
IGN B	Ignition Power
LBEC 1	Left Bussed Electrical Center, Left Doors, Truck Body Controller, Flasher Module
TRL PARK	Parking Lamps Trailer Wiring
RR PARK	Right Rear Parking and Sidemarker Lamps
LR PARK	Left Rear Parking and Sidemarker Lamps
PARK LP	Parking Lamps Relay
STRTR	Starter Relay
INTPARK	Interior Lamps
STOP LP	Stoplamps
TBC BATT	Truck Body Controller Battery Feed
SEO B2	Off-Road Lamps
4WS	Not Used
AUX PWR	Accessory Power Outlet — Console
PCM 1	Powertrain Control Module
ETC/ECM	Electronic Throttle Control, Electronic Brake Controller

Fuses	Usage
IGN E	Instrument Panel Cluster, Air Conditioning Relay, Turn Signal/Hazard Switch, Starter Relay
RTD	Electronic Suspension Control, Automatic Level Control (ALC) Exhaust
TRL B/U	Backup Lamps Trailer Wiring
F/PMP	Fuel Pump (Relay)
B/U LP	Back-up Lamps, Automatic Transmission Shift Lock Control System
RR DEFOG	Rear Window Defogger
HDLP-HI	Headlamp High Beam Relay
PRIME	Not Used
AIRBAG	Supplemental Inflatable Restraint System
FRT PARK	Front Parking Lamps, Sidemarker Lamps
DRL	Daytime Running Lamps Relay
SEO IGN	Rear Defog Relay
TBC IGN1	Truck Body Controller Ignition
HI HDLP-LT	Driver's Side High Beam Headlamp

Fuses	Usage
LH HID	Left Hand High Intensity Discharge Lamps
DRL	Daytime Running Lamps
RVC	Regulated Voltage Control
IPC/DIC	Instrument Panel Cluster/Driver Information Center
HVAC/ECAS	Climate Control Controller
CIG LTR	Cigarette Lighter
HI HDLP-RT	Passenger's Side High Beam Headlamp
HDLP-LOW	Headlamp Low Beam Relay
A/C COMP	Air Conditioning Compressor Relay
A/C COMP	Air Conditioning Compressor
TCMB	Transmission Control Module
RR WPR	Not Used
RADIO	Audio System
SEO B1	Mid Bussed Electrical Center, Universal Home Remote System, Rear Heated Seats
LO HDLP-LT	Driver's Side Headlamp Low Beam
BTSI	Brake Transmission Shift Interlock System

Fuses	Usage
CRNK	Starting System
LO HDLP-RT	Passenger's Side Headlamp Low Beam
FOG LP	Fog Lamp Relay
FOG LP	Fog Lamps
HORN	Horn Relay
W/S WASH	Not Used
W/S WASH	Not Used
INFO	OnStar®/Rear Seat Entertainment
RADIO AMP	Radio Amplifier
RH HID	Right Hand High Intensity Discharge Lamp
HORN	Horn Fuse
EAP	Electric Adjustable Pedals
TREC	All-Wheel Drive Module (If Equipped)
SBA	Supplemental Brake Assist

Auxiliary Electric Cooling Fan Fuse Block

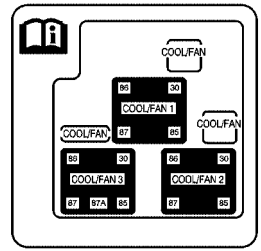

The auxiliary electric cooling fan fuse block is located in the engine compartment on the driver's side of the vehicle next to the underhood fuse block.

Lift the cover for access to the fuse/relay block.

Fuses	Usage
COOL/FAN	Cooling Fan
COOL/FAN	Cooling Fan Relay Fuse
COOL/FAN	Cooling Fan Fuse

Relays	Usage
COOL/FAN 1	Cooling Fan Relay 1
COOL/FAN 3	Cooling Fan Relay 3
COOL/FAN 2	Cooling Fan Relay 2

Capacities and Specifications

The following approximate capacities are given in English and metric conversions. See *Recommended Fluids and Lubricants on page 6-13* for more information.

Application	Capacities	
	English	Metric
Engine Cooling System		
5.3L V8 with Front A/C (Engine Fan Driven Cooling System)	16.5 qt	15.6 L
5.3L V8 with Front A/C* (Electric Cooling Fan System)*	17.2 qt	16.3 L
5.3L V8 with Front A/C (Electric Cooling Fan System)**	17.4 qt	16.5 L
8.1L V8 (Engine Fan Driven Cooling System	25.0 qt	23.7 L
*Vehicles with a cladded front. **Vehicles with an uncladded front.		
Engine Oil with Filter		
5.3L V8	6.0 qt	5.7 L
8.1L V8	6.5 qt	6.1 L
Fuel Tank Capacity		
1500	31.0 gal	117.0 L
2500	37.5 gal	142.0 L
Transfer Case Fluid	2.0 qt	1.9 L
Wheel Nut Torque	140 lb ft	190 N•m
All capacities are approximate. When adding, be sure to fill to the approximate level as recommended in this manual. Recheck fluid level after filling.		

Engine Specifications

Engine	VIN Code	Transmission	Spark Plug Gap
VORTEC™ 5.3L V8	T	Automatic	0.040 inches (1.01 mm)
VORTEC™ 5.3L V8	Z	Automatic	0.040 inches (1.01 mm)
VORTEC™ 8.1L V8	G	Automatic	0.060 inches (1.52 mm)

NOTES

Section 6 Maintenance Schedule

Maintenance Schedule 6-2
Introduction 6-2
Maintenance Requirements 6-2
Your Vehicle and the Environment 6-2
Using the Maintenance Schedule 6-2
Scheduled Maintenance 6-4
Additional Required Services 6-6
Maintenance Footnotes 6-7
Owner Checks and Services 6-9
At Each Fuel Fill 6-9
At Least Once a Month 6-10
At Least Once a Year 6-10
Recommended Fluids and Lubricants 6-13
Normal Maintenance Replacement Parts 6-15
Engine Drive Belt Routing 6-16
Maintenance Record 6-17

Maintenance Schedule

Introduction

Important: Keep engine oil at the proper level and change as recommended.

Have you purchased the GM Protection Plan? The Plan supplements your new vehicle warranties. See your Warranty and Owner Assistance booklet or your dealer for details.

Maintenance Requirements

Notice: **Maintenance intervals, checks, inspections, replacement parts, and recommended fluids and lubricants as prescribed in this manual are necessary to keep your vehicle in good working condition. Any damage caused by failure to follow scheduled maintenance may not be covered by warranty.**

Your Vehicle and the Environment

Proper vehicle maintenance not only helps to keep your vehicle in good working condition, but also helps the environment. All recommended maintenance is important. Improper vehicle maintenance can even affect the quality of the air we breathe. Improper fluid levels or the wrong tire inflation can increase the level of emissions from your vehicle. To help protect our environment, and to keep your vehicle in good condition, be sure to maintain your vehicle properly.

Using the Maintenance Schedule

We at General Motors want to help you keep your vehicle in good working condition. But we do not know exactly how you will drive it. You may drive very short distances only a few times a week. Or you may drive long distances all the time in very hot, dusty weather. You may use your vehicle in making deliveries. Or you may drive it to work, to do errands, or in many other ways.

Because of all the different ways people use their vehicles, maintenance needs vary. You may need more frequent checks and replacements. So please read the following and note how you drive. If you have any questions on how to keep your vehicle in good condition, see your GM Goodwrench® dealer.

This schedule is for vehicles that:

- carry passengers and cargo within recommended limits. You will find these limits on the tire and loading information label. See *Loading Your Vehicle on page 4-46*.
- are driven on reasonable road surfaces within legal driving limits.
- are driven off-road in the recommended manner. See *Off-Road Driving on page 4-17*.
- use the recommended fuel. See *Gasoline Octane on page 5-5*.

The services in *Scheduled Maintenance on page 6-4* should be performed when indicated. See *Additional Required Services on page 6-6* and *Maintenance Footnotes on page 6-7* for further information.

⚠ CAUTION:

Performing maintenance work on a vehicle can be dangerous. In trying to do some jobs, you can be seriously injured. Do your own maintenance work only if you have the required know-how and the proper tools and equipment for the job. If you have any doubt, see your GM Goodwrench® dealer to have a qualified technician do the work. See *Doing Your Own Service Work on page 5-4*.

Some maintenance services can be complex. So, unless you are technically qualified and have the necessary equipment, you should have your GM Goodwrench® dealer do these jobs.

When you go to your GM Goodwrench® dealer for your service needs, you will know that GM-trained and supported service technicians will perform the work using genuine GM parts.

If you want to purchase service information, see *Service Publications Ordering Information on page 7-15*.

Owner Checks and Services on page 6-9 tells you what should be checked, when to check it, and what you can easily do to help keep your vehicle in good condition.

The proper replacement parts, fluids, and lubricants to use are listed in *Recommended Fluids and Lubricants on page 6-13* and *Normal Maintenance Replacement Parts on page 6-15*. When your vehicle is serviced, make sure these are used. All parts should be replaced and all necessary repairs done before you or anyone else drives the vehicle. We recommend the use of genuine GM parts.

Scheduled Maintenance

When the CHANGE ENGINE OIL message comes on, it means that service is required for your vehicle. Have your vehicle serviced as soon as possible within the next 600 miles (1 000 km). It is possible that, if you are driving under the best conditions, the engine oil life system may not indicate that vehicle service is necessary for over a year. However, your engine oil and filter must be changed at least once a year and at this time the system must be reset. Your GM Goodwrench® dealer has GM-trained service technicians who will perform this work using genuine GM parts and reset the system.

If the engine oil life system is ever reset accidentally, you must service your vehicle within 3,000 miles (5 000 km) since your last service. Remember to reset the oil life system whenever the oil is changed. See *Engine Oil Life System on page 5-20* for information on the Engine Oil Life System and resetting the system.

When the CHANGE ENGINE OIL message appears, certain services, checks, and inspections are required. Required services are described in the following for “Maintenance I” and “Maintenance II.” Generally, it is recommended that your first service be Maintenance I, your second service be Maintenance II, and that you alternate Maintenance I and Maintenance II thereafter. However, in some cases, Maintenance II may be required more often.

Maintenance I — Use Maintenance I if the CHANGE ENGINE OIL message comes on within 10 months since the vehicle was purchased or Maintenance II was performed.

Maintenance II — Use Maintenance II if the previous service performed was Maintenance I. Always use Maintenance II whenever the message comes on 10 months or more since the last service or if the message has not come on at all for one year.

Scheduled Maintenance

Service	Maintenance I	Maintenance II
Change engine oil and filter. See *Engine Oil on page 5-17*. Reset oil life system. See *Engine Oil Life System on page 5-20*. *An Emission Control Service.*	•	•
Lubricate chassis components. *See footnote #.*	•	•
Visually check for any leaks or damage. *See footnote (j).*	•	•
Inspect engine air cleaner filter or change indicator (if equipped). If necessary, replace filter. See *Engine Air Cleaner/Filter on page 5-22*. *See footnote (l).*		•
Rotate tires and check inflation pressures and wear. See *Tire Inspection and Rotation on page 5-73* and “Tire Wear Inspection” in *At Least Once a Month on page 6-10*.	•	•
Inspect brake system. *See footnote (a).*	•	•
Check engine coolant and windshield washer fluid levels and add fluid as needed.	•	•
Perform any needed additional services. See “Additional Required Services” in this section.	•	•
Inspect suspension and steering components. *See footnote (b).*		•
Inspect engine cooling system. *See footnote (c).*		•
Inspect wiper blades. *See footnote (d).*		•
Inspect restraint system components. *See footnote (e).*		•
Lubricate body components. *See footnote (f).*		•
Check transmission fluid level and add fluid as needed.		•

Additional Required Services

The following services should be performed at the first maintenance service (I or II) after the indicated miles (kilometers) shown for each item.

Additional Required Services

Service and Miles (Kilometers)	25,000 (41 500)	50,000 (83 000)	75,000 (125 000)	100,000 (166 000)	125,000 (207 500)	150,000 (240 000)
Inspect fuel system for damage or leaks.	•	•	•	•	•	•
Inspect exhaust system for loose or damaged components.	•	•	•	•	•	•
Vehicles without a filter restriction indicator: Replace engine air cleaner filter. See *Engine Air Cleaner/Filter on page 5-22*.		•		•		•
Change automatic transmission fluid and filter (severe service). *See footnote (h).*		•		•		•
Change automatic transmission fluid and filter (normal service).				•		
Change transfer case fluid. *See footnote (g).*		•		•		•
Inspect evaporative control system. *An Emission Control Service. See footnotes † and (k).*		•		•		•

Additional Required Services (cont'd)

Service and Miles (Kilometers)	25,000 (41 500)	50,000 (83 000)	75,000 (125 000)	100,000 (166 000)	125,000 (207 500)	150,000 (240 000)
Replace spark plugs and inspect spark plug wires. *An Emission Control Service.*				•		
Engine cooling system service (or every five years, whichever occurs first). *An Emission Control Service. See footnote (i).*						•
Inspect engine accessory drive belt. *An Emission Control Service. See footnote (m).*						•

Maintenance Footnotes

† *The U.S. Environmental Protection Agency or the California Air Resources Board has determined that the failure to perform this maintenance item will not nullify the emission warranty or limit recall liability prior to the completion of the vehicle's useful life. We, however, urge that all recommended maintenance services be performed at the indicated intervals and the maintenance be recorded.*

Lubricate the front suspension, ball joints, steering linkage, transmission shift linkage, and parking brake cable guides. Ball joints should not be lubricated unless their temperature is 10°F (-12°C) or higher, or they could be damaged.

(a) *Visually inspect brake lines and hoses for proper hook-up, binding, leaks, cracks, chafing, etc. Inspect disc brake pads for wear and rotors for surface condition. Inspect other brake parts, including calipers, parking brake, etc.*

(b) *Visually inspect front and rear suspension and steering system for damaged, loose, or missing parts, signs of wear or lack of lubrication. Inspect power steering lines and hoses for proper hook-up, binding, leaks, cracks, chafing, etc. Visually check constant velocity joints, rubber boots, and axle seals for leaks.*

(c) *Visually inspect hoses and have them replaced if they are cracked, swollen, or deteriorated. Inspect all pipes, fittings, and clamps; replace with genuine GM parts as needed. To help ensure proper operation, a pressure test of the cooling system and pressure cap and cleaning the outside of the radiator and air conditioning condenser is recommended at least once a year.*

(d) *Visually inspect wiper blades for wear or cracking. Replace wiper blades that appear worn or damaged or that streak or miss areas of the windshield.*

(e) *Make sure the safety belt reminder light and all your belts, buckles, latch plates, retractors, and anchorages are working properly. Look for any other loose or damaged safety belt system parts. If you see anything that might keep a safety belt system from doing its job, have it repaired. Have any torn or frayed safety belts replaced. Also look for any opened or broken airbag coverings, and have them repaired or replaced. The airbag system does not need regular maintenance.*

(f) *Lubricate all key lock cylinders, hood latch assembly, secondary latch, pivots, spring anchor, release pawl, midgate hinges, side storage box door hinges, tailgate hinges, tailgate linkage, outer tailgate handle pivot points, latch bolt, fuel door hinge, locks, and folding seat hardware. More frequent lubrication may be required when exposed to a corrosive environment. Applying silicone grease on weatherstrips with a clean cloth will make them last longer, seal better, and not stick or squeak.*

(g) *Check vent hose at transfer case for kinks and proper installation.*

(h) *Change automatic transmission fluid and filter if the vehicle is mainly driven under one or more of these conditions:*

- *In heavy city traffic where the outside temperature regularly reaches 90°F (32°C) or higher.*
- *In hilly or mountainous terrain.*
- *When doing frequent trailer towing.*
- *Uses such as found in taxi, police, or delivery service.*

(i) *Drain, flush, and refill cooling system. This service can be complex; you should have your dealer perform this service. See Engine Coolant on page 5-28 for what to use. Inspect hoses. Clean radiator, condenser, pressure cap, and filler neck. Pressure test the cooling system and pressure cap.*

(j) *A fluid loss in any vehicle system could indicate a problem. Have the system inspected and repaired and the fluid level checked. Add fluid if needed.*

(k) *Inspect system. Check all fuel and vapor lines and hoses for proper hook-up, routing, and condition. Check that the purge valve works properly, if equipped. Replace as needed.*

(l) *If you drive regularly under dusty conditions, inspect the filter at each engine oil change.*

(m) *Visually inspect belt for fraying, excessive cracks, or obvious damage. Replace belt if necessary.*

Owner Checks and Services

These owner checks and services should be performed at the intervals specified to help ensure the safety, dependability, and emission control performance of your vehicle. Your GM Goodwrench® dealer can assist you with these checks and services.

Be sure any necessary repairs are completed at once. Whenever any fluids or lubricants are added to your vehicle, make sure they are the proper ones, as shown in *Recommended Fluids and Lubricants on page 6-13*.

At Each Fuel Fill

It is important to perform these underhood checks at each fuel fill.

Engine Oil Level Check

Check the engine oil level and add the proper oil if necessary. See *Engine Oil on page 5-17* for further details.

Notice: **It is important to check your oil regularly and keep it at the proper level. Failure to keep your engine oil at the proper level can cause damage to your engine not covered by your warranty.**

Engine Coolant Level Check

Check the engine coolant level and add DEX-COOL® coolant mixture if necessary. See *Engine Coolant on page 5-28* for further details.

Windshield Washer Fluid Level Check

Check the windshield washer fluid level in the windshield washer fluid reservoir and add the proper fluid if necessary.

At Least Once a Month

Tire Inflation Check

Visually inspect your vehicle's tires and make sure they are inflated to the correct pressures. Do not forget to check the spare tire. See *Tires on page 5-62* for further details. Check to make sure the spare tire is stored securely. See *Changing a Flat Tire on page 5-83*.

Tire Wear Inspection

Tire rotation may be required for high mileage highway drivers prior to the Engine Oil Life System service notification. Check the tires for wear and, if necessary, rotate the tires. See *Tire Inspection and Rotation on page 5-73*.

At Least Once a Year

Starter Switch Check

⚠ CAUTION:

When you are doing this inspection, the vehicle could move suddenly. If the vehicle moves, you or others could be injured.

1. Before you start, be sure you have enough room around the vehicle.
2. Firmly apply both the parking brake and the regular brake. See *Parking Brake on page 2-38*.

   Do not use the accelerator pedal, and be ready to turn off the engine immediately if it starts.
3. Try to start the engine in each gear. The vehicle should start only in PARK (P) or NEUTRAL (N). If the vehicle starts in any other position, contact your GM Goodwrench® dealer for service.

Automatic Transmission Shift Lock Control System Check

⚠ CAUTION:

When you are doing this inspection, the vehicle could move suddenly. If the vehicle moves, you or others could be injured.

1. Before you start, be sure you have enough room around the vehicle. It should be parked on a level surface.
2. Firmly apply the parking brake. See *Parking Brake on page 2-38*.

   Be ready to apply the regular brake immediately if the vehicle begins to move.
3. With the engine off, turn the ignition to RUN, but do not start the engine. Without applying the regular brake, try to move the shift lever out of PARK (P) with normal effort. If the shift lever moves out of PARK (P), contact your GM Goodwrench® dealer for service.

Ignition Transmission Lock Check

While parked, and with the parking brake set, try to turn the ignition to LOCK in each shift lever position.

- The ignition should turn to LOCK only when the shift lever is in PARK (P).
- The key should come out only in LOCK.

Contact your GM Goodwrench® dealer if service is required.

Parking Brake and Automatic Transmission Park (P) Mechanism Check

⚠ CAUTION:

When you are doing this check, your vehicle could begin to move. You or others could be injured and property could be damaged. Make sure there is room in front of your vehicle in case it begins to roll. Be ready to apply the regular brake at once should the vehicle begin to move.

Park on a fairly steep hill, with the vehicle facing downhill. Keeping your foot on the regular brake, set the parking brake.

- To check the parking brake's holding ability: With the engine running and transmission in NEUTRAL (N), slowly remove foot pressure from the regular brake pedal. Do this until the vehicle is held by the parking brake only.
- To check the PARK (P) mechanism's holding ability: With the engine running, shift to PARK (P). Then release the parking brake followed by the regular brake.

Contact your GM Goodwrench® dealer if service is required.

Underbody Flushing Service

At least every spring, use plain water to flush any corrosive materials from the underbody. Take care to clean thoroughly any areas where mud and other debris can collect.

Recommended Fluids and Lubricants

Fluids and lubricants identified below by name, part number, or specification may be obtained from your dealer.

Usage	Fluid/Lubricant
Engine Oil	Engine oil which meets GM Standard GM6094M and displays the American Petroleum Institute Certified for Gasoline Engines starburst symbol. GM Goodwrench® oil meets all the requirements for your vehicle. To determine the proper viscosity for your vehicle's engine, see *Engine Oil on page 5-17*.
Engine Coolant	50/50 mixture of clean, drinkable water and use only DEX-COOL® Coolant. See *Engine Coolant on page 5-28*.
Hydraulic Brake System	Delco® Supreme 11 Brake Fluid or equivalent DOT-3 brake fluid.
Windshield Washer	GM Optikleen® Washer Solvent.
Power Steering System	GM Power Steering Fluid (GM Part No. U.S. 89021184, in Canada 89021186).
Automatic Transmission	DEXRON®-VI Automatic Transmission Fluid.
Key Lock Cylinders	Multi-Purpose Lubricant, Superlube (GM Part No. U.S. 12346241, in Canada 10953474).
Chassis Lubrication	Chassis Lubricant (GM Part No. U.S. 12377985, in Canada 88901242) or lubricant meeting requirements of NLGI #2, Category LB or GC-LB.
Front Axle	SAE 80W-90 Axle Lubricant (GM Part No. U.S. 1052271, in Canada 10950849).

Usage	Fluid/Lubricant
Rear Axle	SAE 75W-90 Synthetic Axle Lubricant (GM Part No. U.S. 12378261, in Canada 10953455) meeting GM Specification 9986115.
Automatic Transfer Case	AUTO-TRAK II Fluid (GM Part No. U.S. 12378508, in Canada 10953626).
Front Axle Propshaft Spline or One-Piece Propshaft Spline (Two-Wheel Drive with Auto. Trans.)	Spline Lubricant, Special Lubricant (GM Part No. U.S. 12345879, in Canada 10953511) or lubricant meeting requirements of GM 9985830.

Usage	Fluid/Lubricant
Hood Hinges	Multi-Purpose Lubricant, Superlube (GM Part No. U.S. 12346241, in Canada 10953474).
Outer Tailgate Handle Pivot Points	Multi-Purpose Lubricant, Superlube (GM Part No. U.S. 12346241, in Canada 10953474).
Weatherstrip Conditioning	Dielectric Silicone Grease (GM Part No. U.S. 12345579, in Canada 992887).
Weatherstrip Squeaks	Synthetic Grease with Teflon, Superlube (GM Part No. U.S. 12371287, in Canada 10953437).

Normal Maintenance Replacement Parts

Replacement parts identified below by name, part number or specification can be obtained from your GM dealer.

Part	GM Part Number	ACDelco® Part Number
Engine Air Cleaner/Filter		
High Capacity	10368768	A1518C
Standard	25311916*	A1519C*
Oil Filter		
5.3L V8	88984215	PF46
8.1L V8	25324052	PF454
Spark Plugs		
5.3L V8	12571164	41-985
8.1L V8	12578277	41-983
Wiper Blades 22 inches (56.0 cm)	15153642	—
*High-capacity engine air cleaner/filter 25313349 (A1518C) may be substituted.		

Engine Drive Belt Routing

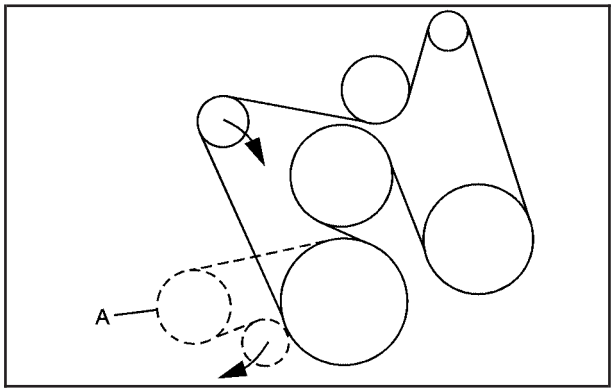

(A) Air Conditioning Compressor

Maintenance Record

After the scheduled services are performed, record the date, odometer reading, who performed the service, and the type of services performed in the boxes provided. See *Maintenance Requirements on page 6-2*. Any additional information from *Owner Checks and Services on page 6-9* can be added on the following record pages. You should retain all maintenance receipts.

Maintenance Record

Date	Odometer Reading	Serviced By	Maintenance I or Maintenance II	Services Performed

Maintenance Record (cont'd)

Date	Odometer Reading	Serviced By	Maintenance I or Maintenance II	Services Performed

Maintenance Record (cont'd)

Date	Odometer Reading	Serviced By	Maintenance I or Maintenance II	Services Performed

Maintenance Record (cont'd)

Date	Odometer Reading	Serviced By	Maintenance I or Maintenance II	Services Performed

Section 7 Customer Assistance and Information

Customer Assistance and Information 7-2
Customer Satisfaction Procedure 7-2
Online Owner Center 7-3
Customer Assistance for Text Telephone (TTY) Users 7-4
Customer Assistance Offices 7-4
GM Mobility Reimbursement Program 7-5
Roadside Assistance Program 7-6
Courtesy Transportation 7-7
Vehicle Data Collection and Event Data Recorders 7-9
Collision Damage Repair 7-10
Reporting Safety Defects 7-14
Reporting Safety Defects to the United States Government 7-14
Reporting Safety Defects to the Canadian Government 7-14
Reporting Safety Defects to General Motors 7-15
Service Publications Ordering Information 7-15

Customer Assistance and Information

Customer Satisfaction Procedure

Your satisfaction and goodwill are important to your dealer and to Chevrolet. Normally, any concerns with the sales transaction or the operation of your vehicle will be resolved by your dealer's sales or service departments. Sometimes, however, despite the best intentions of all concerned, misunderstandings can occur. If your concern has not been resolved to your satisfaction, the following steps should be taken:

STEP ONE: Discuss your concern with a member of dealership management. Normally, concerns can be quickly resolved at that level. If the matter has already been reviewed with the sales, service or parts manager, contact the owner of the dealership or the general manager.

STEP TWO: If after contacting a member of dealership management, it appears your concern cannot be resolved by the dealership without further help, contact the Chevrolet Customer Assistance Center by calling 1-800-222-1020. In Canada, contact GM of Canada Customer Communication Centre by calling 1-800-263-3777 (English) or 1-800-263-7854 (French).

We encourage you to call the toll-free number in order to give your inquiry prompt attention. Please have the following information available to give the Customer Assistance Representative:

- Vehicle Identification Number (VIN). This is available from the vehicle registration or title, or the plate at the top left of the instrument panel and visible through the windshield.
- Dealership name and location.
- Vehicle delivery date and present mileage (kilometers).

When contacting Chevrolet, please remember that your concern will likely be resolved at a dealer's facility. That is why we suggest you follow Step One first if you have a concern.

STEP THREE: Both General Motors and your dealer are committed to making sure you are completely satisfied with your new vehicle. However, if you continue to remain unsatisfied after following the procedure outlined in Steps One and Two, you should file with the BBB Auto Line Program to enforce any additional rights you may have. Canadian owners refer to your Warranty and Owner Assistance Information booklet for information on the Canadian Motor Vehicle Arbitration Plan (CAMVAP).

The BBB Auto Line Program is an out of court program administered by the Council of Better Business Bureaus to settle automotive disputes regarding vehicle repairs or the interpretation of the New Vehicle Limited Warranty. Although you may be required to resort to this informal dispute resolution program prior to filing a court action, use of the program is free of charge and your case will generally be heard within 40 days. If you do not agree with the decision given in your case, you may reject it and proceed with any other venue for relief available to you.

You may contact the BBB Auto Line Program using the toll-free telephone number or write them at the following address:

BBB Auto Line Program
Council of Better Business Bureaus, Inc.
4200 Wilson Boulevard
Suite 800
Arlington, VA 22203-1838

Telephone: 1-800-955-5100

This program is available in all 50 states and the District of Columbia. Eligibility is limited by vehicle age, mileage, and other factors. General Motors reserves the right to change eligibility limitations and/or discontinue its participation in this program.

Online Owner Center

The Owner Center is a resource for your GM ownership needs. Specific vehicle information can be found in one place.

The Online Owner Center allows you to:

- Get e-mail service reminders.
- Access information about your specific vehicle, including tips and videos and an electronic version of this owner's manual (United States only).
- Keep track of your vehicle's service history and maintenance schedule.
- Find GM dealers for service nationwide.
- Receive special promotions and privileges only available to members (United States only).

Refer to the web for updated information.

To register your vehicle, visit www.MyGMLink.com (United States) or My GM Canada within www.gmcanada.com (Canada).

Customer Assistance for Text Telephone (TTY) Users

To assist customers who are deaf, hard of hearing, or speech-impaired and who use Text Telephones (TTYs), Chevrolet has TTY equipment available at its Customer Assistance Center. Any TTY user can communicate with Chevrolet by dialing: 1-800-833-CHEV (2438). (TTY users in Canada can dial 1-800-263-3830.)

Customer Assistance Offices

Chevrolet encourages customers to call the toll-free number for assistance. However, if a customer wishes to write or e-mail Chevrolet, refer to the addresses below.

United States — Customer Assistance

Chevrolet Motor Division
Chevrolet Customer Assistance Center
P.O. Box 33170
Detroit, MI 48232-5170

www.Chevrolet.com
1-800-222-1020
1-800-833-2438 (For Text Telephone devices (TTYs))
Roadside Assistance: 1-800-CHEV-USA (243-8872)
Fax Number: 313-381-0022

From Puerto Rico:
1-800-496-9992 (English)
1-800-496-9993 (Spanish)
Fax Number: 313-381-0022

From U.S. Virgin Islands:
1-800-496-9994
Fax Number: 313-381-0022

Canada — Customer Assistance

General Motors of Canada Limited
Customer Communication Centre, 163-005
1908 Colonel Sam Drive
Oshawa, Ontario L1H 8P7

1-800-263-3777 (English)
1-800-263-7854 (French)
1-800-263-3830 (For Text Telephone devices (TTYs))
Roadside Assistance: 1-800-268-6800

Overseas — Customer Assistance

Please contact the local General Motors Business Unit.

Mexico, Central America and Caribbean Islands/Countries (Except Puerto Rico and U.S. Virgin Islands) — Customer Assistance

General Motors de Mexico, S. de R.L. de C.V.
Customer Assistance Center
Paseo de la Reforma # 2740
Col. Lomas de Bezares
C.P. 11910, Mexico, D.F.
01-800-508-0000
Long Distance: 011-52-53 29 0 800

GM Mobility Reimbursement Program

GM MOBILITY℠

This program, available to qualified applicants, can reimburse you up to $1,000 of the cost of eligible aftermarket adaptive equipment required for your vehicle, such as hand controls or a wheelchair/scooter lift.

The offer is available for a very limited period of time from the date of vehicle purchase/lease. For more details, or to determine your vehicle's eligibility, visit gmmobility.com or call the GM Mobility Assistance Center at 1-800-323-9935. Text telephone (TTY) users, call 1-800-833-9935.

GM of Canada also has a Mobility Program. Call 1-800-GM-DRIVE (463-7483) for details. TTY users call 1-800-263-3830.

Roadside Assistance Program

As the owner of a new Chevrolet vehicle, you are automatically enrolled in the Chevrolet Roadside Assistance program. This value-added service is intended to provide you with peace of mind as you drive in the city or travel the open road. Call Chevrolet's Roadside Assistance at **1-800-CHEV-USA, (1-800-243-8872)** 24 hours a day, 365 days a year to speak with a Chevrolet Roadside Assistance representative.

We will provide the following services during the Bumper-to-Bumper warranty period, at no expense to you:

- **Fuel Delivery:** Delivery of enough fuel ($5 maximum) for the customer to get to the nearest service station.
- **Lock-out Service (identification required):** Replacement keys or locksmith service will be covered at no charge if you are unable to gain entry into your vehicle. Delivery of the replacement key will be covered within 10 miles (16 km).
- **Emergency Tow:** Tow to the nearest dealership for warranty service or in the event of a vehicle-disabling accident. Assistance provided when the vehicle is mired in sand, mud, or snow.
- **Flat Tire Change:** Installation of a spare tire will be covered at no charge. The customer is responsible for the repair or replacement of the tire if not covered by a warrantable failure.
- **Jump Start:** No-start occurrences which require a battery jump start will be covered at no charge.
- **Dealer Locator Service**

In many instances, mechanical failures are covered under Chevrolet's Bumper-to-Bumper warranty. However, when other services are utilized, our Roadside Assistance Representatives will explain any payment obligations you might incur.

For prompt and efficient assistance when calling, please provide the following to the Roadside Assistance Representative:

- Your name, home address, and home telephone number.
- Telephone number of your location.
- Location of the vehicle.
- Model, year, color, and license plate number.
- Mileage, Vehicle Identification Number (VIN), and delivery date of the vehicle.
- Description of the problem.

While we hope you never have the occasion to use our service, it is added security while traveling for you and your family. Remember, we are only a phone call away. Chevrolet Roadside Assistance: **1-800-CHEV-USA (1-800-243-8872)**, text telephone (TTY) users, call **1-888-889-2438**.

Chevrolet reserves the right to limit services or reimbursement to an owner or driver when, in Chevrolet's judgement, the claims become excessive in frequency or type of occurrence.

Roadside Assistance is not part of or included in the coverage provided by the New Vehicle Limited Warranty. Chevrolet reserves the right to make any changes or discontinue the Roadside Assistance program at any time without notification.

Canadian Roadside Assistance

Vehicles purchased in Canada have an extensive roadside assistance program accessible from anywhere in Canada or the United States. Please refer to the Warranty and Owner Assistance Information book.

Courtesy Transportation

To enhance your ownership experience, we and our participating dealers are proud to offer Courtesy Transportation, a customer support program for new vehicles.

The Courtesy Transportation program is offered to customers in conjunction with the Bumper-to-Bumper coverage provided by the New Vehicle Limited Warranty. Several transportation options are available when warranty repairs are required. This will reduce your inconvenience during warranty repairs.

Scheduling Service Appointments

When your vehicle requires warranty service, you should contact your dealer and request an appointment. By scheduling a service appointment and advising your service consultant of your transportation needs, your dealer can help minimize your inconvenience.

If your vehicle cannot be scheduled into the service department immediately, keep driving it until it can be scheduled for service, unless, of course, the problem is safety-related. If it is, please call your dealership, let them know this, and ask for instructions.

If the dealer requests that you simply drop the vehicle off for service, you are urged to do so as early in the work day as possible to allow for the same day repair.

Transportation Options

Warranty service can generally be completed while you wait. However, if you are unable to wait, GM helps to minimize your inconvenience by providing several transportation options. Depending on the circumstances, your dealer can offer you one of the following:

Shuttle Service

Participating dealers can provide you with shuttle service to get you to your destination with minimal interruption of your daily schedule. This includes one-way or round trip shuttle service to a destination up to 10 miles (16 km) from the dealership.

Public Transportation or Fuel Reimbursement

If your vehicle requires overnight warranty repairs, reimbursement of public transportation expenses may be available, for up to a maximum of five days. In addition, should you arrange transportation through a friend or relative, reimbursement for reasonable fuel expenses may be available, up to a five-day maximum. Claim amounts should reflect actual costs and be supported by original receipts.

Courtesy Rental Vehicle

Your dealer may arrange to provide you with a courtesy rental vehicle or reimburse you for a rental vehicle that you obtain if your vehicle is kept for a warranty repair. Reimbursement will be limited to a maximum amount per day and must be supported by receipts. This requires that you sign and complete a rental agreement and meet state, local and rental vehicle provider requirements. Requirements vary and may include minimum age requirements, insurance coverage, credit card, etc. You are responsible for fuel usage charges and may also be responsible for taxes, levies, usage fees, excessive mileage or rental usage beyond the completion of the repair.

Generally it is not possible to provide a like-vehicle as a courtesy rental.

Additional Program Information

Courtesy Transportation is available during the Bumper-to-Bumper warranty coverage period, but it is not part of the New Vehicle Limited Warranty. A separate booklet entitled *Warranty and Owner Assistance Information* furnished with each new vehicle provides detailed warranty coverage information.

Courtesy Transportation is available only at participating dealers and all program options, such as shuttle service, may not be available at every dealer. Please contact your dealer for specific information about availability. All Courtesy Transportation arrangements will be administered by appropriate dealer personnel.

Canadian Vehicles: For warranty repairs during the Complete Vehicle Coverage period of the General Motors of Canada New Vehicle Limited Warranty, alternative transportation may be available under the Courtesy Transportation Program. Please consult your dealer for details.

General Motors reserves the right to unilaterally modify, change or discontinue Courtesy Transportation at any time and to resolve all questions of claim eligibility pursuant to the terms and conditions described herein at its sole discretion.

Vehicle Data Collection and Event Data Recorders

Your vehicle, like other modern motor vehicles, has a number of sophisticated computer systems that monitor and control several aspects of the vehicle's performance. Your vehicle uses on-board vehicle computers to monitor emission control components to optimize fuel economy, to monitor conditions for airbag deployment and, if so equipped, to provide anti-lock braking and to help the driver control the vehicle in difficult driving situations. Some information may be stored during regular operations to facilitate repair of detected malfunctions; other information is stored only in a crash event by computer systems, such as those commonly called event data recorders (EDR).

In a crash event, computer systems, such as the Airbag Sensing and Diagnostic Module (SDM) in your vehicle may record information about the condition of the vehicle and how it was operated, such as data related to engine speed, brake application, throttle position, vehicle speed, safety belt usage, airbag readiness, airbag performance, and the severity of a collision. If your vehicle is equipped with StabiliTrak®, steering performance, including yaw rate, steering wheel angle, and lateral acceleration, is also recorded. This information has been used to improve vehicle crash performance and may be used to improve crash performance of future vehicles and driving safety.

Unlike the data recorders on many airplanes, these on-board systems do not record sounds, such as conversation of vehicle occupants.

To read this information, special equipment is needed and access to the vehicle or the device that stores the data is required. GM will not access information about a crash event or share it with others other than:

- with the consent of the vehicle owner or, if the vehicle is leased, with the consent of the lessee,
- in response to an official request of police or similar government office,
- as part of GM's defense of litigation through the discovery process, or
- as required by law.

In addition, once GM collects or receives data, GM may:

- use the data for GM research needs,
- make it available for research where appropriate confidentiality is to be maintained and need is shown, or
- share summary data which is not tied to a specific vehicle with non-GM organizations for research purposes.

Others, such as law enforcement, may have access to the special equipment that can read the information if they have access to the vehicle or the device that stores the data.

If your vehicle is equipped with OnStar®, please check the OnStar® subscription service agreement or manual for information on its operations and data collection.

Collision Damage Repair

If your vehicle is involved in a collision and it is damaged, have the damage repaired by a qualified technician using the proper equipment and quality replacement parts. Poorly performed collision repairs will diminish your vehicle's resale value, and safety performance can be compromised in subsequent collisions.

Collision Parts

Genuine GM Collision parts are new parts made with the same materials and construction methods as the parts with which your vehicle was originally built. Genuine GM Collision parts are your best choice to assure that your vehicle's designed appearance, durability and safety are preserved. The use of Genuine GM parts can help maintain your GM New Vehicle Warranty.

Recycled original equipment parts may also be used for repair. These parts are typically removed from vehicles that were total losses in prior accidents. In most cases, the parts being recycled are from undamaged sections of the vehicle. A recycled original equipment GM part, may be an acceptable choice to maintain your vehicle's originally designed appearance and safety performance, however, the history of these parts is not known. Such parts are not covered by your GM New Vehicle Limited Warranty, and any related failures are not covered by that warranty.

Aftermarket collision parts are also available. These are made by companies other than GM and may not have been tested for your vehicle. As a result, these parts may fit poorly, exhibit premature durability/corrosion problems, and may not perform properly in subsequent collisions. Aftermarket parts are not covered by your GM New Vehicle Limited Warranty, and any vehicle failure related to such parts are not covered by that warranty.

Repair Facility

GM also recommends that you choose a collision repair facility that meets your needs before you ever need collision repairs. Your GM dealer may have a collision repair center with GM-trained technicians and state of the art equipment, or be able to recommend a collision repair center that has GM-trained technicians and comparable equipment.

Insuring Your Vehicle

Protect your investment in your GM vehicle with comprehensive and collision insurance coverage. There are significant differences in the quality of coverage afforded by various insurance policy terms. Many insurance policies provide reduced protection to your GM vehicle by limiting compensation for damage repairs by using aftermarket collision parts. Some insurance companies will not specify aftermarket collision parts. When purchasing insurance, we recommend that you assure your vehicle will be repaired with GM original equipment collision parts. If such insurance coverage is not available from your current insurance carrier, consider switching to another insurance carrier.

If your vehicle is leased, the leasing company may require you to have insurance that assures repairs with Genuine GM Original Equipment Manufacturer (OEM) parts or Genuine Manufacturer replacement parts. Read your lease carefully, as you may be charged at the end of your lease for poor quality repairs.

If an Accident Occurs

Here is what to do if you are involved in an accident.

- Try to relax and then check to make sure you are all right. If you are uninjured, make sure that no one else in your vehicle, or the other vehicle, is injured.
- If there has been an injury, call 911 for help. Do not leave the scene of an accident until all matters have been taken care of. Move your vehicle only if its position puts you in danger or you are instructed to move it by a police officer.
- Give only the necessary and requested information to police and other parties involved in the accident. Do not discuss your personal condition, mental frame of mind, or anything unrelated to the accident. This will help guard against post-accident legal action.
- If you need roadside assistance, call GM Roadside Assistance. See *Roadside Assistance Program on page 7-6* for more information.
- If your vehicle cannot be driven, know where the towing service will be taking it. Get a card from the tow truck operator or write down the driver's name, the service's name, and the phone number.
- Remove any valuables from your vehicle before it is towed away. Make sure this includes your insurance information and registration if you keep these items in your vehicle.
- Gather the important information you will need from the other driver. Things like name, address, phone number, driver's license number, vehicle license plate, vehicle make, model and model year, Vehicle Identification Number (VIN), insurance company and policy number, and a general description of the damage to the other vehicle.
- If possible, call your insurance company from the scene of the accident. They will walk you through the information they will need. If they ask for a police report, phone or go to the police department headquarters the next day and you can get a copy of the report for a nominal fee. In some states with "no fault" insurance laws, a report may not be necessary. This is especially true if there are no injuries and both vehicles are driveable.

- Choose a reputable collision repair facility for your vehicle. Whether you select a GM dealer or a private collision repair facility to fix the damage, make sure you are comfortable with them. Remember, you will have to feel comfortable with their work for a long time.
- Once you have an estimate, read it carefully and make sure you understand what work will be performed on your vehicle. If you have a question, ask for an explanation. Reputable shops welcome this opportunity.

Managing the Vehicle Damage Repair Process

In the event that your vehicle requires damage repairs, GM recommends that you take an active role in its repair. If you have a pre-determined repair facility of choice, take your vehicle there, or have it towed there. Specify to the facility that any required replacement collision parts be original equipment parts, either new Genuine GM parts or recycled original GM parts. Remember, recycled parts will not be covered by your GM vehicle warranty.

Insurance pays the bill for the repair, but you must live with the repair. Depending on your policy limits, your insurance company may initially value the repair using aftermarket parts. Discuss this with your repair professional, and insist on Genuine GM parts. Remember if your vehicle is leased you may be obligated to have the vehicle repaired with Genuine GM parts, even if your insurance coverage does not pay the full cost.

If another party's insurance company is paying for the repairs, you are not obligated to accept a repair valuation based on that insurance company's collision policy repair limits, as you have no contractual limits with that company. In such cases, you can have control of the repair and parts choices as long as cost stays within reasonable limits.

Reporting Safety Defects

Reporting Safety Defects to the United States Government

If you believe that your vehicle has a defect which could cause a crash or could cause injury or death, you should immediately inform the National Highway Traffic Safety Administration (NHTSA), in addition to notifying General Motors.

If NHTSA receives similar complaints, it may open an investigation, and if it finds that a safety defect exists in a group of vehicles, it may order a recall and remedy campaign. However, NHTSA cannot become involved in individual problems between you, your dealer, or General Motors.

To contact NHTSA, you may either call the Auto Safety Hotline toll-free at 1-800-424-9393 (or 366-0123 in the Washington, D.C. area) or write to:

NHTSA, U.S. Department of Transportation
Washington, D.C. 20590

You can also obtain other information about motor vehicle safety from the hotline.

Reporting Safety Defects to the Canadian Government

If you live in Canada, and you believe that your vehicle has a safety defect, you should immediately notify Transport Canada, in addition to notifying General Motors of Canada Limited. You may call them at 1-800-333-0510 or write to:

Transport Canada
Place de Ville Tower C
330 Sparks Street
Ottawa, Ontario K1A 0N5

Reporting Safety Defects to General Motors

In addition to notifying NHTSA (or Transport Canada) in a situation like this, we certainly hope you will notify General Motors. Please call the Chevrolet Customer Assistance Center at 1-800-222-1020, or write:

Chevrolet Motor Division
Chevrolet Customer Assistance Center
P.O. Box 33170
Detroit, MI 48232-5170

In Canada, please call us at 1-800-263-3777 (English) or 1-800-263-7854 (French). Or, write:

General Motors of Canada Limited
Customer Communication Centre, 163-005
1908 Colonel Sam Drive
Oshawa, Ontario L1H 8P7

Service Publications Ordering Information

Service Manuals

Service Manuals have the diagnosis and repair information on engines, transmission, axle suspension, brakes, electrical, steering, body, etc.

Transmission, Transaxle, Transfer Case Unit Repair Manual

This manual provides information on unit repair service procedures, adjustments, and specifications for GM transmissions, transaxles, and transfer cases.

Service Bulletins

Service Bulletins give technical service information needed to knowledgeably service General Motors cars and trucks. Each bulletin contains instructions to assist in the diagnosis and service of your vehicle.

In Canada, information pertaining to Product Service Bulletins can be obtained by contacting your General Motors dealer or by calling 1-800-GM-DRIVE (1-800-463-7483).

Owner's Information

Owner publications are written specifically for owners and intended to provide basic operational information about the vehicle. The owner's manual will include the Maintenance Schedule for all models.

In-Portfolio: Includes a Portfolio, Owner's Manual, and Warranty Booklet.

RETAIL SELL PRICE: $35.00

Without Portfolio: Owner's Manual only.

RETAIL SELL PRICE: $25.00

Current and Past Model Order Forms

Service Publications are available for current and past model GM vehicles. To request an order form, please specify year and model name of the vehicle.

ORDER TOLL FREE: 1-800-551-4123
Monday-Friday 8:00 AM - 6:00 PM
Eastern Time

For Credit Card Orders Only
(VISA-MasterCard-Discover), visit Helm, Inc. on the World Wide Web at: www.helminc.com

Or you can write to:

Helm, Incorporated
P.O. Box 07130
Detroit, MI 48207

Prices are subject to change without notice and without incurring obligation. Allow ample time for delivery.

Note to Canadian Customers: All listed prices are quoted in U.S. funds. Canadian residents are to make checks payable in U.S. funds.

A

Accessories and Modifications 5-3
Accessory Power Outlet(s) 3-19
Adding a Snow Plow or Similar Equipment 4-52
Adding Equipment to Your Airbag-Equipped
  Vehicle 1-66
Additives, Fuel 5-6
Adjustable Throttle and Brake Pedal 2-29
Air Cleaner/Filter, Engine 5-22
Air Conditioning 3-20, 3-22
Airbag
  Passenger Status Indicator 3-32
  Readiness Light 3-31
Airbag Sensing and Diagnostic Module (SDM) 7-9
Airbag System 1-52
  Adding Equipment to Your Airbag-Equipped
    Vehicle 1-66
  How Does an Airbag Restrain? 1-59
  Passenger Sensing System 1-61
  Servicing Your Airbag-Equipped Vehicle 1-65
  What Makes an Airbag Inflate? 1-59
  What Will You See After an Airbag Inflates? 1-60
  When Should an Airbag Inflate? 1-58
  Where Are the Airbags? 1-55
Antenna, Fixed Mast 3-108
Antenna, XM™ Satellite Radio Antenna System ... 3-108
Anti-Lock Brake System (ABS) 4-7
Anti-Lock Brake, System Warning Light 3-36
Appearance Care
  Aluminum or Chrome-Plated Wheels 5-108
  Care of Safety Belts 5-106
  Chemical Paint Spotting 5-109
  Cleaning Exterior Lamps/Lenses 5-106
  Cleaning the Inside of Your Vehicle 5-103
  Fabric/Carpet 5-104
  Finish Care 5-107
  Finish Damage 5-109
  Instrument Panel, Vinyl, and Other Plastic
    Surfaces 5-105
  Leather 5-105
  Sheet Metal Damage 5-109
  Tires 5-109
  Underbody Maintenance 5-109
  Vehicle Care/Appearance Materials 5-110
  Washing Your Vehicle 5-106
  Weatherstrips 5-106
  Windshield and Wiper Blades 5-107
Ashtray(s) 3-19
Audio System(s) 3-66
  Audio Steering Wheel Controls 3-106
  Care of Your CD and DVD Player 3-108
  Care of Your CDs and DVDs 3-107
  Chime Level Adjustment 3-108
  Fixed Mast Antenna 3-108
  Navigation/Radio System, see Navigation
    Manual 3-93

Audio System(s) (cont.)
Radio with CD 3-68
Radio with Six-Disc CD 3-78
Rear Seat Audio (RSA) 3-104
Setting the Time 3-67
Theft-Deterrent Feature 3-105
Understanding Radio Reception 3-107
XM™ Satellite Radio Antenna System 3-108
Automatic Headlamp System 3-15
Automatic Transmission
Fluid 5-25
Operation 2-30
Auxiliary Roof Mounted Lamp Switch 3-17

B

Battery 5-43
Run-Down Protection 3-18
Before Leaving on a Long Trip 4-36
Brake
Anti-Lock Brake System (ABS) 4-7
Emergencies 4-8
Parking 2-38
System Warning Light 3-35
Brake Pedal, Throttle 2-29
Brakes 5-40
Braking 4-6
Braking in Emergencies 4-8
Break-In, New Vehicle 2-26
Bulb Replacement 5-52
Daytime Running Lamps 5-58
Front Turn Signal, Sidemarker and Daytime
Running Lamps 5-56
Front Turn Signal, Sidemarker and Parking
Lamps 5-55
Halogen Bulbs 5-52
Headlamps 5-53
Replacement Bulbs 5-60
Taillamps, Turn Signal, Stoplamps and
Back-up Lamps 5-59
Buying New Tires 5-76

C

California Fuel 5-6
California Proposition 65 Warning 5-3
Canadian Owners ii
Capacities and Specifications 5-120
Carbon Monoxide 2-11, 2-20, 2-42, 4-40, 4-62
Care of
Safety Belts 5-106
Your CD and DVD Player 3-108
Your CDs and DVDs 3-107
Cargo Area, All-Weather 2-77
Cargo Cover Panels 2-64
Cargo Lamp Light 3-44
Center Console Storage Area 2-63
Center Front Passenger Position, Safety Belts 1-23

Center Overhead Console 2-62
Chains, Tire 5-81
Charging System Light 3-34
Check
  Engine Light 3-40
Checking Things Under the Hood 5-11
Chemical Paint Spotting 5-109
Child Restraints
  Child Restraint Systems 1-36
  Infants and Young Children 1-33
  Lower Anchors and Tethers for Children 1-41
  Older Children 1-30
  Securing a Child Restraint in a Rear Seat
    Position 1-46
  Securing a Child Restraint in the Center
    Front Seat Position 1-48
  Securing a Child Restraint in the Right
    Front Seat Position 1-49
  Where to Put the Restraint 1-40
Chime Level Adjustment 3-108
Cigarette Lighter 3-19
Cleaning
  Aluminum or Chrome-Plated Wheels 5-108
  Exterior Lamps/Lenses 5-106
  Fabric/Carpet 5-104
  Finish Care 5-107
  Inside of Your Vehicle 5-103
  Instrument Panel, Vinyl, and Other Plastic
    Surfaces 5-105
  Leather 5-105
Cleaning (cont.)
  Tires 5-109
  Underbody Maintenance 5-109
  Washing Your Vehicle 5-106
  Weatherstrips 5-106
  Windshield and Wiper Blades 5-107
Climate Control System
  Dual 3-20
  Dual Automatic 3-22
  Outlet Adjustment 3-27
Collision Damage Repair 7-10
Comfort Guides, Rear Safety Belt 1-27
Content Theft-Deterrent 2-24
Control of a Vehicle 4-5
Coolant
  Engine Temperature Gage 3-38
  Heater, Engine 2-29
  Surge Tank Pressure Cap 5-30
Cooling System 5-32
Cruise Control 3-10
Cruise Control Light 3-44
Cupholder(s) 2-62
Customer Assistance Information
  Courtesy Transportation 7-7
  Customer Assistance for Text Telephone (TTY)
    Users 7-4
  Customer Assistance Offices 7-4
  Customer Satisfaction Procedure 7-2
  GM Mobility Reimbursement Program 7-5
  Reporting Safety Defects to General Motors 7-15

Customer Assistance Information (cont.)
Reporting Safety Defects to the Canadian Government 7-14
Reporting Safety Defects to the United States Government 7-14
Roadside Assistance Program 7-6
Service Publications Ordering Information 7-15

D

Daytime Running Lamps 3-15
Defensive Driving 4-2
Delayed Locking 2-9
Doing Your Own Service Work 5-4
Dome Lamp Override 3-18
Dome Lamps 3-18
Door
Delayed Locking 2-9
Locks 2-8
Power Door Locks 2-9
Programmable Automatic Door Locks 2-10
Rear Door Security Locks 2-10
Driver
Position, Safety Belt 1-14
Driver Information Center (DIC) 3-46
DIC Operation and Displays 3-47
DIC Vehicle Customization 3-60
DIC Warnings and Messages 3-50
Driving
At Night 4-30
City 4-34
Defensive 4-2
Drunken 4-3
Freeway 4-35
Hill and Mountain Roads 4-38
In Rain and on Wet Roads 4-31
Off-Road 4-17
Recovery Hooks 4-45
Rocking Your Vehicle to Get it Out 4-44
Winter 4-40
Dual Automatic Climate Control System 3-22
Dual Climate Control System 3-20
DVD
Rear Seat Entertainment System 3-93

E

Electrical System 5-111
Center Instrument Panel Fuse Block 5-114
Fuses and Circuit Breakers 5-112
Instrument Panel Fuse Block 5-112
Power Windows and Other Power Options 5-112
Underhood Fuse Block 5-115
Windshield Wiper Fuses 5-112
Engine
Air Cleaner/Filter 5-22
Battery 5-43

Engine (cont.)
Check and Service Engine Soon Light 3-40
Coolant 5-28
Coolant Heater 2-29
Coolant Temperature Gage 3-38
Drive Belt Routing 6-16
Engine Compartment Overview 5-14
Exhaust 2-42
Fan Noise 5-37
Oil 5-17
Oil Life System 5-20
Overheated Protection Operating Mode 5-32
Overheating 5-30
Starting 2-28
Entry/Exit Lighting 3-18
Event Data Recorders (EDR) 7-9
Extender, Safety Belt 1-29
Exterior Cargo Lamps 3-17
Exterior Lamps 3-14

F

Filter
Engine Air Cleaner 5-22
Finish Damage 5-109
Fixed Mast Antenna 3-108
Flash-to-Pass 3-9
Flat Tire 5-82
Flat Tire, Changing 5-83
Flat Tire, Storing 5-99
Fluid
Automatic Transmission 5-25
Power Steering 5-38
Windshield Washer 5-39
Fog Lamps 3-16
Four-Wheel Drive 2-34, 5-50
Front Armrest Storage Area 2-63
Front Axle 5-51
Fuel 5-5
Additives 5-6
California Fuel 5-6
E85 (85% Ethanol) 5-7
Filling a Portable Fuel Container 5-11
Filling Your Tank 5-9
Fuels in Foreign Countries 5-8
Gage 3-45
Gasoline Octane 5-5
Gasoline Specifications 5-5
Low Warning Light 3-45
Fuses
Center Instrument Panel Fuse Block 5-114
Fuses and Circuit Breakers 5-112
Instrument Panel Fuse Block 5-112
Underhood Fuse Block 5-115
Windshield Wiper 5-112

G

Gage
Engine Coolant Temperature 3-38
Fuel 3-45
Oil Pressure 3-42
Speedometer 3-30
Tachometer 3-30
Transmission Temperature 3-38
Voltmeter Gage 3-34
Garage Door Opener 2-58
Gasoline
Octane 5-5
Specifications 5-5
Glove Box 2-62
GM Mobility Reimbursement Program 7-5

H

Hazard Warning Flashers 3-6
Head Restraints 1-7
Headlamps 5-53
Automatic Headlamp System 3-15
Bulb Replacement 5-52
Daytime Running Lamps 3-15, 5-58
Flash-to-Pass 3-9
Front Turn Signal, Sidemarker and
Daytime Running Lamps 5-56
Front Turn Signal, Sidemarker and
Parking Lamps 5-55
Headlamps (cont.)
Halogen Bulbs 5-52
High/Low Beam Changer 3-9
On Reminder 3-15
Heated Seats 1-4
Heater 3-20
Heater 3-22
Highbeam On Light 3-44
Highway Hypnosis 4-37
Hill and Mountain Roads 4-38
Hood
Checking Things Under 5-11
Release 5-12
Horn 3-6
How to Use This Manual ii
How to Wear Safety Belts Properly 1-14

I

Ignition Positions 2-27
Infants and Young Children, Restraints 1-33
Inflation – Tire Pressure 5-68
Instrument Panel
Overview 3-4
Instrument Panel (I/P)
Brightness 3-17
Cluster 3-29

J

Jump Starting 5-44

K

Keyless Entry System 2-4
Keys 2-3

L

Labeling, Tire Sidewall 5-63
Lamps
  Auxiliary Roof Mounted Lamp 3-17
  Battery Run-Down Protection 3-18
  Dome 3-18
  Dome Lamp Override 3-18
  Exterior 3-14
  Exterior Cargo 3-17
  Fog 3-16
  Reading 3-18
LATCH System
  Child Restraints 1-41
Level Control 4-62
Light
  Airbag Readiness 3-31
  Anti-Lock Brake System Warning 3-36
Light (cont.)
  Brake System Warning 3-35
  Cargo Lamp 3-44
  Charging System 3-34
  Cruise Control 3-44
  Highbeam On 3-44
  Low Fuel Warning 3-45
  Low Tire Pressure Warning Light 3-37
  Malfunction Indicator 3-40
  Passenger Airbag Status Indicator 3-32
  Safety Belt Reminder 3-30
  Security 3-43
  Tow/Haul Mode 3-44
  Traction Off 3-37
Lighting
  Entry/Exit 3-18
Loading Your Vehicle 4-46
Locking Rear Axle 4-9
Lockout Protection 2-10
Locks
  Delayed Locking 2-9
  Door 2-8
  Lockout Protection 2-10
  Power Door 2-9
  Programmable Automatic Door Locks 2-10
  Rear Door Security Locks 2-10
Loss of Control 4-16
Low Fuel Warning Light 3-45

Luggage Carrier 2-63
Lumbar
Power Controls 1-3

M

Maintenance Schedule
Additional Required Services 6-6
At Each Fuel Fill 6-9
At Least Once a Month 6-10
At Least Once a Year 6-10
Introduction 6-2
Maintenance Footnotes 6-7
Maintenance Record 6-17
Maintenance Requirements 6-2
Normal Maintenance Replacement Parts 6-15
Owner Checks and Services 6-9
Recommended Fluids and Lubricants 6-13
Scheduled Maintenance 6-4
Using 6-2
Your Vehicle and the Environment 6-2
Malfunction Indicator Light 3-40
Manual Passenger Seat 1-2
Memory Seat 2-90
Message
DIC Warnings and Messages 3-50
Midgate 2-11
Mirrors
Automatic Dimming Rearview with Compass 2-48
Automatic Dimming Rearview with Compass and Temperature Display 2-50
Automatic Dimming Rearview with OnStar® and Compass 2-43
Automatic Dimming Rearview with OnStar®, Compass and Temperature Display 2-45
Outside Automatic Dimming Mirror with Curb View Assist 2-55
Outside Camper-Type Mirrors 2-52
Outside Convex Mirror 2-54
Outside Heated Mirrors 2-54
Outside Power Mirrors 2-53
MyGMLink.com 7-3

N

Navigation/Radio System, see Navigation Manual 3-93
New Vehicle Break-In 2-26
Normal Maintenance Replacement Parts 6-15

O

Odometer 3-30
Odometer, Trip 3-30
Off-Road Driving 4-17
Off-Road Recovery 4-14
Oil
  Engine 5-17
  Pressure Gage 3-42
Oil, Engine Oil Life System 5-20
Older Children, Restraints 1-30
Online Owner Center 7-3
OnStar® System, see OnStar® Manual 2-55
Other Warning Devices 3-6
Outlet Adjustment 3-27
Outside
  Automatic Dimming Mirror with Curb View
    Assist 2-55
  Camper-Type Mirrors 2-52
  Convex Mirror 2-54
  Heated Mirrors 2-54
  Power Mirrors 2-53
Overheated Engine Protection Operating Mode ... 5-32
Owner Checks and Services 6-9
Owners, Canadian ii

P

Park (P)
  Shifting Into 2-39
  Shifting Out of 2-41
Parking
  Brake 2-38
  Over Things That Burn 2-41
Passenger Airbag Status Indicator 3-32
Passenger Sensing System 1-61
Passing 4-14
Passlock® 2-26
Power
  Accessory Outlet(s) 3-19
  Door Locks 2-9
  Electrical System 5-112
  Lumbar Controls 1-3
  Retained Accessory (RAP) 2-27
  Seat 1-2
  Steering Fluid 5-38
  Windows 2-23
Programmable Automatic Door Locks 2-10

Q

Questions and Answers About Safety Belts 1-13

R

Radios 3-66
Care of Your CD and DVD Player 3-108
Care of Your CDs and DVDs 3-107
Navigation/Radio System, see Navigation Manual 3-93
Radio with CD 3-68
Radio with Six-Disc CD 3-78
Rear Seat Audio 3-104
Setting the Time 3-67
Theft-Deterrent 3-105
Understanding Reception 3-107
Reading Lamps 3-18
Rear Axle 5-49
Locking 4-9
Rear Door Security Locks 2-10
Rear Safety Belt Comfort Guides 1-27
Rear Seat Audio (RSA) 3-104
Rear Seat Entertainment System 3-93
Rear Seat Operation 1-7
Rear Seat Passengers, Safety Belts 1-24
Rear Storage Area 2-64
Rearview Mirror, Automatic Dimming with Compass 2-48
Rearview Mirror, Automatic Dimming with Compass and Temperature Display 2-50
Rearview Mirror, Automatic Dimming with OnStar® and Compass 2-43
Rearview Mirror, Automatic Dimming with OnStar®, Compass and Temperature Display 2-45
Reclining Seatbacks 1-5
Recommended Fluids and Lubricants 6-13
Recovery Hooks 4-45
Recreational Vehicle Towing 4-57
Remote Keyless Entry System 2-4
Remote Keyless Entry System, Operation 2-5
Removing the Flat Tire and Installing the Spare Tire 5-88
Removing the Spare Tire and Tools 5-84
Replacement Bulbs 5-60
Reporting Safety Defects
Canadian Government 7-14
General Motors 7-15
United States Government 7-14

Restraint System Check
Checking the Restraint Systems 1-67
Replacing Restraint System Parts After a Crash 1-68
Retained Accessory Power (RAP) 2-27
Right Front Passenger Position, Safety Belts 1-23
Roadside
Assistance Program 7-6
Rocking Your Vehicle to Get it Out 4-44
Routing, Engine Drive Belt 6-16
Running the Engine While Parked 2-42

S

Safety Belt
Reminder Light 3-30
Safety Belts
Care of 5-106
Center Front Passenger Position 1-23
Driver Position 1-14
How to Wear Safety Belts Properly 1-14
Questions and Answers About Safety Belts 1-13
Rear Safety Belt Comfort Guides 1-27
Rear Seat Passengers 1-24
Right Front Passenger Position 1-23
Safety Belt Extender 1-29
Safety Belts (cont.)
Safety Belt Use During Pregnancy 1-22
Safety Belts Are for Everyone 1-9
Safety Warnings and Symbols iii
Scheduled Maintenance 6-4
Seats
Head Restraints 1-7
Heated Seats 1-4
Manual Passenger 1-2
Memory 2-90
Power Lumbar 1-3
Power Seats 1-2
Rear Seat Operation 1-7
Reclining Seatbacks 1-5
Secondary Latch System 5-95
Securing a Child Restraint
Center Front Seat Position 1-48
Rear Seat Position 1-46
Right Front Seat Position 1-49
Security Light 3-43
Service 5-3
Accessories and Modifications 5-3
Adding Equipment to the Outside of Your Vehicle 5-4
California Proposition 65 Warning 5-3
Doing Your Own Work 5-4

Service (cont.)
Engine Soon Light 3-40
Publications Ordering Information 7-15
Servicing Your Airbag-Equipped Vehicle 1-65
Setting the Time 3-67
Sheet Metal Damage 5-109
Shifting Into Park (P) 2-39
Shifting Out of Park (P) 2-41
Signals, Turn and Lane-Change 3-8
Snow Plow 4-52
Spare Tire 5-102
Installing 5-88
Removing 5-84
Storing 5-99
Specifications, Capacities 5-120
Speedometer 3-30
StabiliTrak® System 4-9
Starting Your Engine 2-28
Steering 4-12
Steering Wheel Controls, Audio 3-106
Steering Wheel, Tilt Wheel 3-7
Storage Areas
All-Weather Cargo Area 2-77
Center Console Storage Area 2-63
Center Overhead Console 2-62
Cupholder(s) 2-62
Front Armrest Storage Area 2-63
Storage Areas (cont.)
Glove Box 2-62
Luggage Carrier 2-63
Rear Storage Area 2-64
Top-Box Storage 2-82
Stuck in Sand, Mud, Ice or Snow 4-44
Sun Visors 2-24
Sunroof 2-89

T

Tachometer 3-30
Tailgate 2-20
Taillamps
Turn Signal, Stoplamps and Back-up Lamps 5-59
Theft-Deterrent, Radio 3-105
Theft-Deterrent Systems 2-24
Content Theft-Deterrent 2-24
Passlock® 2-26
Throttle, Adjustable 2-29
Tilt Wheel 3-7
Tires 5-62
Aluminum or Chrome-Plated Wheels,
Cleaning 5-108
Buying New Tires 5-76
Chains 5-81

Tires (cont.)
Changing a Flat Tire 5-83
Cleaning 5-109
Different Size 5-77
If a Tire Goes Flat 5-82
Inflation – Tire Pressure 5-68
Inspection and Rotation 5-73
Installing the Spare Tire 5-88
Pressure Monitor System 5-70
Removing the Flat Tire 5-88
Removing the Spare Tire and Tools 5-84
Secondary Latch System 5-95
Spare Tire 5-102
Storing a Flat or Spare Tire and Tools 5-99
Tire Sidewall Labeling 5-63
Tire Terminology and Definitions 5-66
Uniform Tire Quality Grading 5-78
Wheel Alignment and Tire Balance 5-79
Wheel Replacement 5-79
When It Is Time for New Tires 5-75
Tonneau Cover 2-83
Top-Box Storage 2-82
Tow/Haul Mode 2-33
Tow/Haul Mode Light 3-44
Towing
Recreational Vehicle 4-57
Towing a Trailer 4-62
Your Vehicle 4-57
Traction
Off Light 3-37
StabiliTrak® System 4-9
Trailer
Recommendations 4-75
Transmission
Fluid, Automatic 5-25
Temperature Gage 3-38
Transmission Operation, Automatic 2-30
Trip Odometer 3-30
Truck-Camper Loading Information 4-56
Turn and Lane-Change Signals 3-8
Turn Signal/Multifunction Lever 3-7

U

Understanding Radio Reception 3-107
Uniform Tire Quality Grading 5-78
Universal Home Remote System 2-58
Operation 2-59

V

Vehicle
Control 4-5
Damage Warnings iv
Loading 4-46
Symbols iv
Vehicle Customization, DIC 3-60
Vehicle Data Collection and Event Data
Recorders 7-9
Vehicle Identification
Number (VIN) 5-111
Service Parts Identification Label 5-111
Vehicle Personalization 2-90
Memory Seat 2-90
Ventilation Adjustment 3-27
Visors 2-24
Voltmeter Gage 3-34

W

Warning Lights, Gages and Indicators 3-28
Warnings
DIC Warnings and Messages 3-50
Hazard Warning Flashers 3-6
Other Warning Devices 3-6
Safety and Symbols iii
Vehicle Damage iv
Wheels
Alignment and Tire Balance 5-79
Different Size 5-77
Replacement 5-79
Where to Put the Restraint 1-40
Windows 2-22
Power 2-23
Windshield
Washer 3-10
Washer Fluid 5-39
Wiper Blade Replacement 5-61
Wiper Blades, Cleaning 5-107
Wiper Fuses 5-112
Wipers 3-9
Winter Driving 4-40

X

XM™ Satellite Radio Antenna System 3-108

Y

Your Vehicle and the Environment 6-2