Contents

Introduction 2
In brief 6
Keys, doors and windows 19
Seats, restraints 30
Storage 50
Instruments and controls 54
Lighting 75
Infotainment system 80
Climate control 83
Driving and operating 88
Vehicle care 106
Service and maintenance 136
Technical data 145
Customer information 158
Index 160

Introduction

Fuel	Designation			
Engine oil	Grade			
	Viscosity			
Tyre pressure		Tyre size	Front	Rear
	Summer tyres			
	Winter tyres			
Weights				
	Gross vehicle weight rating			
	- Kerb weight, basic model			
	- Additional weight			
	- Heavy accessories			
	= Loading			

Vehicle specific data

Please enter your vehicle’s data on the previous page to keep it easily accessible. This information is available under the chapters "Service and maintenance" and "Technical data" as well as on the identification plate.

Introduction

Your vehicle is a designed combination of advanced technology, safety, environmental friendliness and economy.

This Owner’s Manual provides you with all the necessary information to enable you to drive your vehicle safely and efficiently.

Make sure your passengers are aware of the possible risk of accident and injury which may result from improper use of the vehicle.

You must always comply with the specific laws and regulations of the country that you are in. These laws may differ from the information in this Owner’s Manual.

When this Owner’s Manual refers to a workshop visit, we recommend your Opel Service Partner.

All Opel Service Partners provide first-class service at reasonable prices. Experienced mechanics trained by Opel work according to specific Opel instructions.

The customer literature pack should always be kept ready to hand in the vehicle.

Using this manual

- The "In brief" section will give you an initial overview.
- The table of contents at the beginning of this manual and within each chapter shows where the information is located.
- The index will enable you to search for specific information.
- This Owner's Manual depicts left-hand drive vehicles. Operation is similar for right-hand drive vehicles.
- The Owner's Manual uses the factory engine designations. The corresponding sales designations can be found in the chapter "Technical data".
- Directional data, e.g. left or right, or front or back, always relate to the direction of travel.
- The display may not support your language.
- Depending on the model variant, country variant, integrated special equipment and accessories, the scope of equipment in the vehicle can differ from the items mentioned in this Owner's Manual.
- Display messages and interior labelling are written in **bold** letters.

Danger, Warnings and Cautions

⚠Danger

Text marked ⚠**Danger** provides information on risk of fatal injury. Disregarding this information may endanger life.

⚠Warning

Text marked ⚠**Warning** provides information on risk of accident or injury. Disregarding this information may lead to injury.

Caution

Text marked **Caution** provides information on possible damage to the vehicle. Disregarding this information may lead to vehicle damage.

Symbols

Page references are indicated with ⇨. ⇨ means "see page".

We wish you many hours of pleasurable driving.

Adam Opel GmbH

In brief

Initial drive information

Vehicle unlocking

Unlocking with key

Turn the key in the driver's door lock. Open the doors by pulling the handles.

Unlocking with radio remote control

Press button 🔓, pull door handle.

Radio remote control ⇨ 19, Central locking system ⇨ 20, Load compartment ⇨ 24.

Seat adjustment

Seat positioning

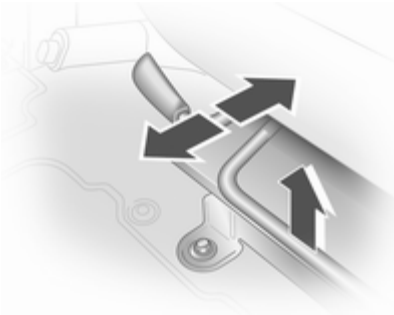

Pull handle, slide seat, release handle.

Seat adjustment ⇨ 32, Seat position ⇨ 31.

⚠ Danger

Do not sit nearer than 25 cm (10 inches) from the steering wheel, to permit safe airbag deployment.

Seat backrests

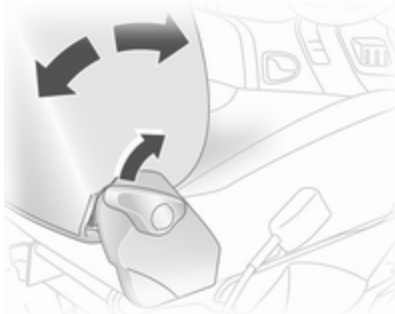

Pull lever, adjust inclination and release lever. Allow the seat to engage. Do not lean on backrest when adjusting.

Seat adjustment ⇨ 32, Seat position ⇨ 31.

Seat height

Lift lever and adjust body weight on seat to raise or lower it.

Seats ⇨ 32, Seat position ⇨ 31.

Head restraint adjustment

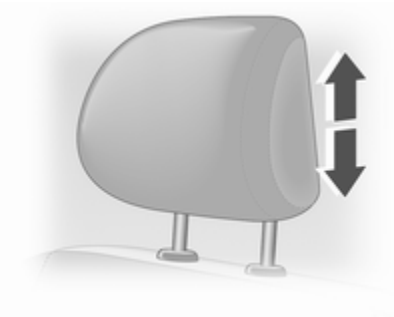

Raise or lower head restraint to the desired height.

Head restraints ⇨ 30.

Seat belt

Pull out the seat belt and engage in belt buckle. The seat belt must not be twisted and must fit close against the body. The backrest must not be tilted back too far (maximum approx. 25 °).

To release belt, press red button on belt buckle.

Seat belts ⇨ 37, Airbag system ⇨ 40, Seat position ⇨ 31.

Mirror adjustment

Interior mirror

Turn the lever on the underside to reduce dazzle.

Interior mirror ⇨ 28.

Exterior mirrors

Manual adjustment

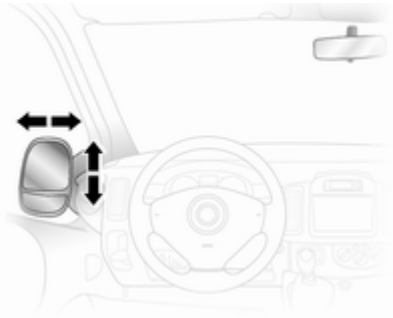

Swivel mirror in required direction.

Exterior mirrors ⇨ 26.

Electric adjustment

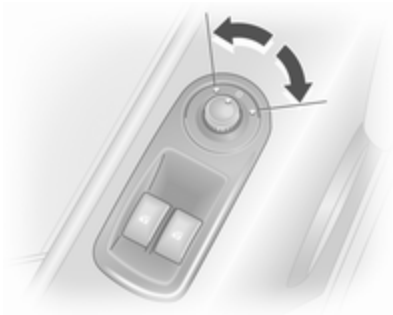

Select the relevant exterior mirror and adjust.

Electric adjustment ⇨ 27, Convex exterior mirrors ⇨ 26, Heated exterior mirrors ⇨ 27.

Steering wheel adjustment

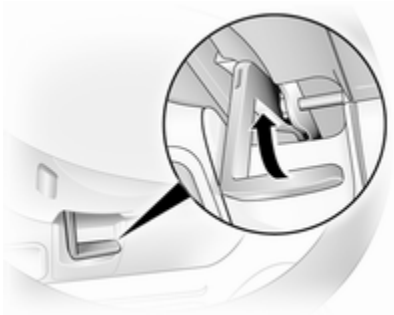

Unlock lever, adjust steering wheel, then engage lever and ensure it is fully locked.

Do not adjust steering wheel unless vehicle is stationary and steering wheel lock has been released.

Airbag system ⇨ 40, Ignition positions ⇨ 89.

Instrument panel overview

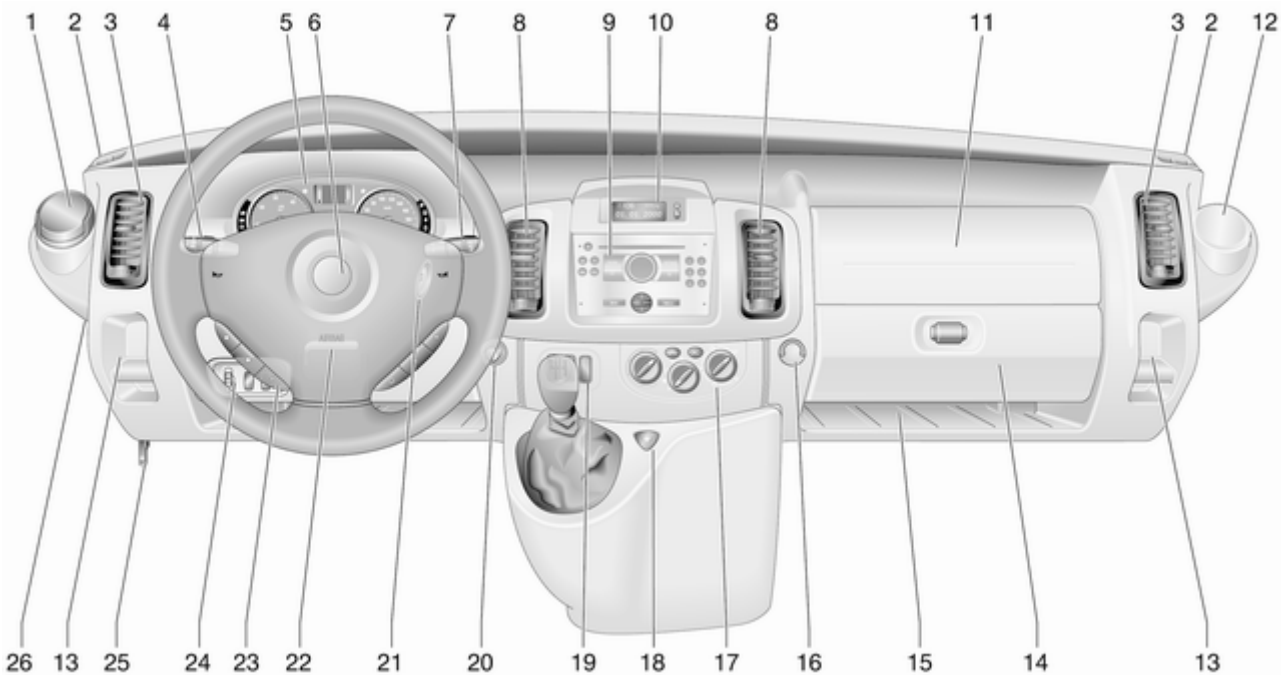

1 Ashtray 59
Cupholders 50

2 Fixed air vents 86

3 Side air vents 86

4 Light switch 75
Rear fog light 77
Front fog lights 77
Exit lighting 79
Turn and lane-change signals, sidelights, headlight flash, low beam and high beam 77

5 Instruments 59

6 Horn 55
Driver airbag 40

7 Windscreen wiper, windscreen washer system 55
Rear window wiper, rear window washer system 56
Trip computer 72

8 Centre air vents 86

9 Infotainment system 80
Tachograph 73

10 Colour-Info-Display 68
Triple-Info-Display 67

11 Front passenger airbag 40

12 Ashtray 59
Cupholders 50

13 Coin tray 50

14 Glovebox 50

15 Storage tray 50

16 Utility hook, AUX input 81

17 Climate control system 83

18 Hazard warning flashers 77

19 Central locking system 20
Heated exterior mirrors 27
Heated rear window 29
Manual transmission automated, Winter and Laden modes 94

20 Power outlet 58
Cigarette lighter 59

21 Ignition switch with steering wheel lock 89

22 Steering wheel adjustment 54

23 Remote control on steering wheel 54

24 Ultrasonic parking assist 100
Headlight range adjustment 76
Electronic stability program 98

25 Bonnet release lever 107

26 Fuse box 120

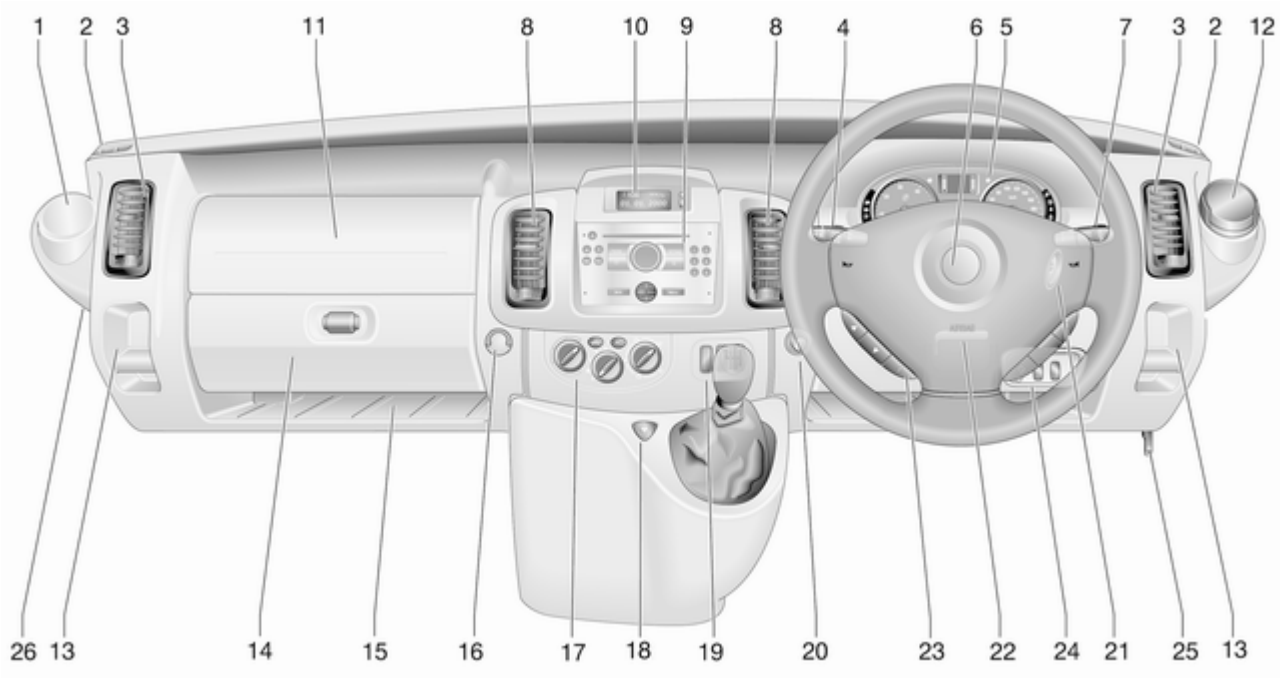
1
2
3
11
8
10
9
8
4
6
5
7
3
2
12
26
13
14
15
16
17
18
19
20
23
22
24
21
25
13

Exterior lighting

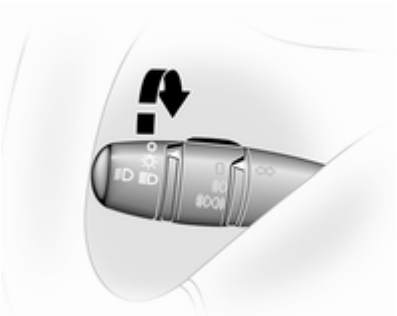

Turn light switch

0 = Off
☼ = Side lights
≡D≡D = Headlights
≠D = Front fog lights
≠D≠ = Front and rear fog lights

Lighting ⇨ 75, Headlight warning device ⇨ 71.

Front and rear fog lights

Turn light switch

≠D = Front fog lights
≠D≠ = Front and rear fog lights

Headlight flash, high beam and low beam

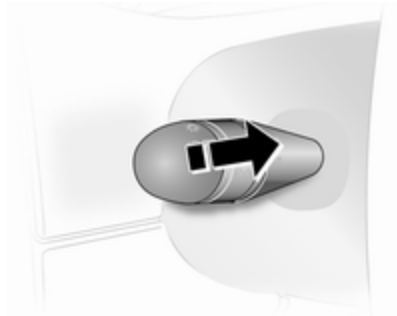

Pull lever

High beam ⇨ 76, Headlight flash ⇨ 76.

Turn and lane-change signals

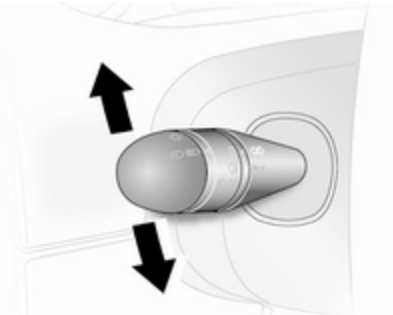

right = lever up
left = lever down

Turn and lane-change signals
⇨ 77.

Hazard warning flashers

Operated with the ⚠ button.

Hazard warning flashers ⇨ 77.

Horn

Press 📯.

Washer and wiper systems

Windscreen wiper

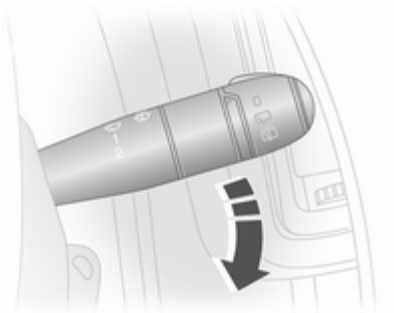

= timed interval wipe
1 = slow
2 = fast

Windscreen wiper ⇨ 55, Wiper blade replacement ⇨ 114.

Windscreen and headlight washer systems

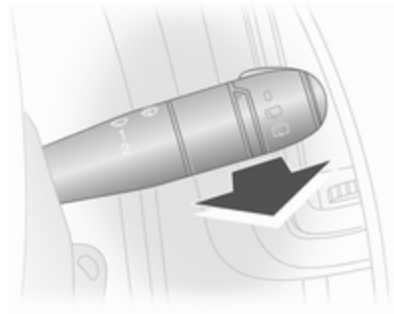

Pull lever.

short pull	=	wiper swipes once
long pull	=	wiper swipes for a few strokes and washer fluid is sprayed onto the windscreen

Windscreen and headlight washer system ⇨ 55, Washer fluid ⇨ 112.

Rear window wiper and washer system

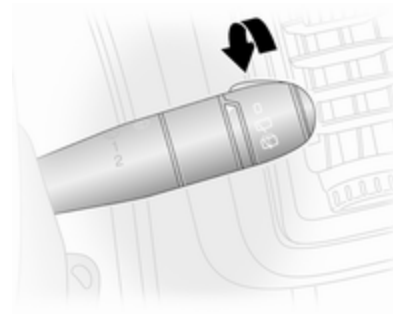

Turn lever.

0 = off
= wiper
= washer

Rear window wiper and washer system ⇨ 56, Wiper blade replacement ⇨ 114, Washer fluid ⇨ 112.

Climate control

Heated rear window, heated exterior mirrors

Heating is operated by pressing the button.

Heated exterior mirrors ⇨ 27, Heated rear window ⇨ 29.

Demisting and defrosting the windows

Air distribution to .

Set temperature control to warmest level.

Set fan speed to highest level.

Cooling **AC** on.

Climate control system ⇨ 83.

Transmission

Manual transmission

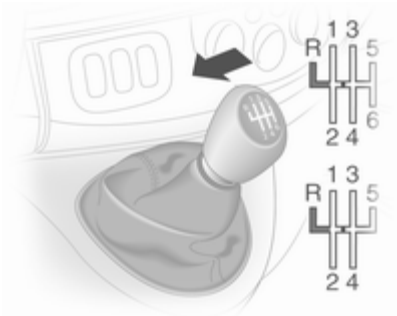

Reverse: with the vehicle stationary, wait 3 seconds after depressing clutch pedal and then pull up the collar on the selector lever and engage the gear.

If the gear does not engage, set the lever to neutral, release the clutch pedal and depress again; then repeat gear selection.

Manual transmission automated

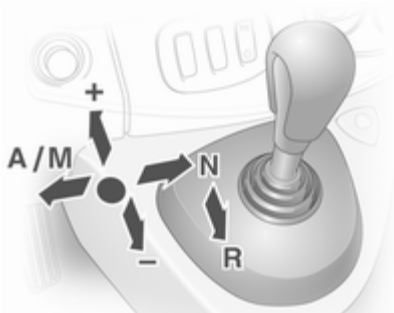

N	=	neutral
●	=	drive
+	=	higher gear
-	=	lower gear
A/M	=	switch between automatic and manual mode
R	=	reverse gear

Manual transmission automated ⇨ 92.

Starting off

Check before starting off

- Tyre pressure and condition ⇨ 122, ⇨ 156.
- Engine oil level and fluid levels ⇨ 108.
- All windows, mirrors, exterior lighting and number plates are free from dirt, snow and ice and are operational.
- Proper position of mirrors, seats and seat belts ⇨ 27, ⇨ 31, ⇨ 38.
- Brake function at low speed, particularly if the brakes are wet.

Starting the engine

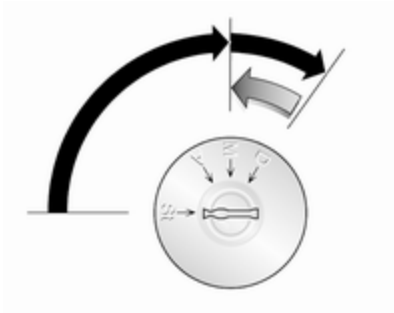

Turn key to position **A**. Move the steering wheel slightly to release the steering wheel lock. Operate clutch and brake, do not accelerate; for diesel engines, turn the key to position **M** for preheating and wait until control indicator goes out; turn key to **D** and release key.

Starting the engine ⇨ 89.

Parking

- Always apply parking brake without pressing release button. Apply as firmly as possible on adownhill or uphill slopes. Operate the foot brake at the same time to reduce operating force.
- Switch off the engine and ignition. Turn the ignition key to **St** and remove. Turn the steering wheel until the steering wheel lock is felt to engage.
- If the vehicle is on a level surface or uphill slope, engage first gear before switching off the ignition. On an uphill slope, turn the front wheels away from the kerb.

  If the vehicle is on a downhill slope, engage reverse gear before switching off the ignition. Turn the front wheels towards the kerb.
- Lock the vehicle and activate the anti-theft alarm system with button on the radio remote control.
- Do not park the vehicle on an easily ignitable surface. The high temperature of the exhaust system could ignite the surface.
- Close windows.
- The engine cooling fans may run after the engine has been switched off ⇨ 107.
- After running at high engine speeds or with high engine loads, operate the engine briefly at a low load or run in neutral for approx.
  30 seconds, before switching off in order to protect the turbocharger.

Keys, locks ⇨ 19, Laying the vehicle up for a long period of time ⇨ 106.

Keys, doors and windows

Keys, locks 19
Doors 23
Vehicle security 25
Exterior mirrors 26
Interior mirrors 28
Windows 28

Keys, locks

Keys

Replacement keys

The key number is specified on the key or on a detachable tag.

The key number must be quoted when ordering replacement keys as it is a component of the immobiliser system.

Locks ⇨ 133.

Car Pass

The Car Pass contains security related vehicle data and should therefore be kept in a safe place.

When the vehicle is taken to a workshop, this vehicle data is needed in order to perform certain operations.

Radio remote control

Used to operate:

- Central locking system
- Anti-theft locking system
- Anti-theft alarm system

Depending on model the vehicle may use a remote control with two or three buttons (selective door locking).

The radio remote control has a range of approx. 5 metres (16 ft). This range can be affected by outside influences. The hazard warning flashers confirm operation.

Handle with care, protect it from moisture and high temperatures and avoid unnecessary operation.

Fault

If the central locking system cannot be operated with the radio remote control, it may be due to the following:

- Range exceeded.
- Battery voltage too low.
- Frequent, repeated operation of the radio remote control while not in range, which will require reprogramming by a workshop.
- Interference from higher-power radio waves from other sources.

Unlocking ⇨ 20.

Radio remote control battery replacement

Replace the battery as soon as the range reduces.

Batteries do not belong in household waste. They must be disposed of at an appropriate recycling collection point.

Two function remote control

Open battery compartment by inserting a coin into the slot and twisting.

Replace the battery, paying attention to the installation position.

Reattach both halves of cover ensuring it engages correctly.

Selective door locking remote control

Remove screw and open battery compartment by inserting a coin into the slot and twisting.

Replace the battery, paying attention to the installation position.

Reattach both halves of cover ensuring it engages correctly.

Replace screw and tighten.

Central locking system

Unlocks and locks doors, load compartment and fuel filler flap.

With selective door locking, the passenger compartment and load compartment are unlocked and locked separately.

For safety reasons, the vehicle cannot be locked if the key is in the ignition switch.

Unlocking

Central locking system with key activation

Turn the key in the driver's door lock to the front.

Central locking system with radio remote control

Press button 🔓.

On vehicles with selective door locking only the passenger compartment doors are unlocked.

If no door is opened within approx. 30 seconds after the vehicle has been unlocked via the remote control the vehicle is re-locked automatically.

Locking

Close doors, load compartment and fuel filler flap. If the doors are not closed properly, the central locking system will not work.

Central locking system with key activation

Turn the key in the driver's door lock rearwards.

Central locking system with radio remote control

Press button 🔒.

On vehicles with selective door locking only the passenger compartment doors are locked.

Load compartment

With two function remote control all doors are locked or unlocked in conjunction with each other.

With selective door locking the load compartment is locked or unlocked independently.

Press button .

Central locking button

Press button.

 = lock
 = unlock

Slam door locks

Certain models feature load compartment locks which are isolated for added security.

While the front doors are locked and unlocked using the radio remote control, load compartment must be manually opened by turning the key in the lock.

Automatic locking

This security feature can be configured to automatically lock all doors, load compartment and fuel filler flap as soon as the vehicle is driven.

To activate:

With the ignition switched on, press on the central locking button and hold for approx. 5 seconds until an audible confirmation is heard.

To deactivate:

With the ignition switched on, press on the central locking button and hold for approx. 5 seconds until an audible confirmation is heard.

Child locks

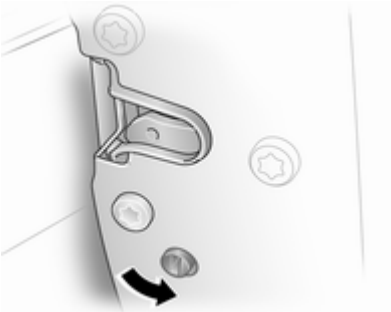

⚠Warning

Use the child locks whenever children are occupying the rear seats.

The child safety lock for the sliding door is located on its rearward facing edge.

To engage lock, open door and turn knob from the vertical position. Door cannot then be opened from inside.

Doors

Sliding door

Ensure the side door is fully closed and secure before driving the vehicle.

The door can be locked from inside the vehicle with the interior lock switch.

Rear doors

To open the left hand rear door pull the outside handle. The door is opened from inside the vehicle by pulling the interior handle.

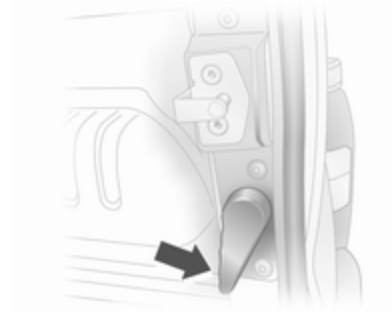

The right hand rear door is released using the lever.

⚠Warning

The rear lights may be obscured if the rear doors are open and the vehicle is parked on the roadside.

Make other road users aware of the vehicle, by using a warning triangle or other equipment specified in the road traffic regulations.

The doors are retained in the 90º position by locking stays. To open the doors to 180º or further, pull the door release handles and swing open to the desired position.

⚠ Warning

Ensure extended opening doors are secured when fully opened.

Opened doors may slam closed due to the force of the wind!

Always close the right hand door before the left hand door.

Load compartment

Tailgate

Press button and lift tailgate to fully open position.

In very cold climates, the opening assistance provided by the tailgate hydraulic struts may be reduced.

The tailgate can be also opened from inside the vehicle by pushing down the tailgate interior release.

⚠ Warning

Do not drive with the tailgate open or ajar, e.g. when transporting bulky objects, since toxic exhaust gases, could enter the vehicle.

Caution

Ensure there is adequate clearance both above (at least 2.15 m / 7 ft) and behind when opening tailgate.

Close tailgate using the interior strap. Ensure tailgate is fully closed.

Vehicle security

Anti-theft locking system

⚠Warning

Do not use the system if there are people in the vehicle! The doors cannot be unlocked from the inside.

The system deadlocks all the doors. All doors must be closed or the system cannot be activated.

Unlocking the doors with the radio remote control or the key disables the mechanical anti-theft locking system. Unlocking is not possible with the central locking button.

When the hazard warning flashers or sidelights are switched on, the system cannot be activated.

Activating

Press 🔒 on the radio remote control twice within 10 seconds.

- or -

Turn key in driver's door lock towards front of vehicle twice within 10 seconds, turn it back to the vertical position and remove.

Anti-theft alarm system

The anti-theft alarm system is operated in conjunction with the central locking system.

It monitors:

- Doors, load compartment, bonnet
- Passenger compartment

Activation

All doors and the bonnet must be closed.

Press button 🔒.

If the hazard warning flashers do not flash upon activation, a door or the bonnet is not fully closed.

Activation without monitoring of passenger compartment

Switch off monitoring of the passenger compartment when people or animals are being left in the vehicle:

Press and hold button 🔒. An audible beep will sound to confirm that the function has been disabled.

The status will remain until the anti-theft alarm system is deactivated or the doors are unlocked.

Deactivation

Unlocking the vehicle deactivates the anti-theft alarm system. Turn signal lights flash once upon deactivation.

If the alarm has been triggered, the hazard warning flashers will not flash upon deactivation.

When unlocking the vehicle using the key, the alarm siren will sound. To stop the siren, switch on the ignition.

Alarm

When triggered, the alarm sounds via a separate battery-backed power sounder, and the hazard warning lights flash simultaneously. The number and duration of alarm signals are stipulated by legislation.

In the event of its power supply being disconnected or disconnection of the vehicle battery, the alarm siren will

sound. If vehicle battery is to be disconnected, first deactivate the anti-theft alarm system. To silence the alarm siren if activated, reconnect vehicle battery and unlock vehicle with radio remote control.

The siren is silenced and the anti-theft alarm system is deactivated by pressing button 🔓 or by switching on the ignition.

Immobiliser

The system checks whether the vehicle is allowed to start with the key being used. If the transponder in the key is recognised, the engine can be started.

The electronic immobiliser activates itself automatically after the key has been removed from the ignition switch and also if the key is left in the ignition switch when the engine is turned off.

If the LED flashes in the instrument cluster when the ignition is on, there is a fault in the system; the engine cannot be started. Switch off the ignition off and remove key, wait approx. 2 seconds and then repeat the start attempt.

If the LED continues flashing, attempt to start the engine using the spare key and seek the assistance of a workshop.

Note
The immobiliser does not lock the doors. You should always lock the vehicle after leaving it and switch on the anti-theft alarm system ⇨ 20, ⇨ 25.

Exterior mirrors

Convex shape

The convex exterior mirror reduces blind spots. The shape of the mirror makes objects appear smaller, which will affect the abilty to estimate distances.

Manual adjustment

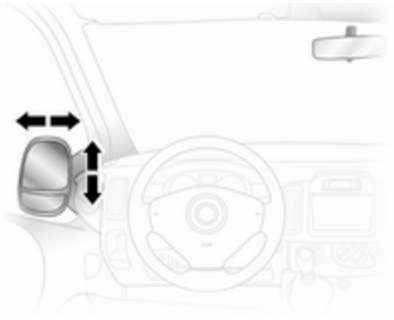

Adjust mirrors by swivelling in required direction.

The lower mirrors are not adjustable.

Electric adjustment

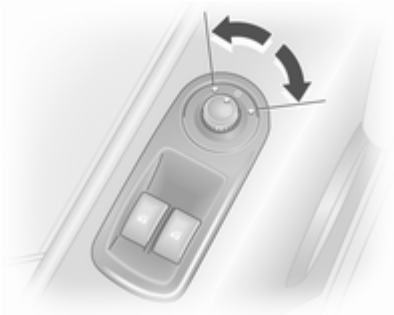

Select the relevant exterior mirror by turning the control to left or right. In the central position no mirror is selected.

Then swivel the control to adjust the mirror.

The lower mirrors are not adjustable.

Folding

For pedestrian safety, the exterior mirrors will swing out of their normal mounting position if they are struck with sufficient force. Reposition the mirror by applying slight pressure to the mirror housing.

Heated

Operated by pressing the button.

Heating functions with the engine running. It is switched off automatically after a short time.

Interior mirrors

Manual anti-dazzle

To reduce dazzle, adjust the lever on the underside of the mirror housing.

Windows

Manual windows

The door windows can be opened or closed with the window winders.

Power windows

⚠ Warning

Take care when operating the power windows. Risk of injury, particularly to children.

Keep a close watch on the windows when closing them. Ensure that nothing becomes trapped in them as they move.

Power windows can be operated with the ignition on.

Operate the control to open or close the window.

For vehicles with automatic feature pull or press the switch again to stop window movement.

In the event of closing difficulties due to frost or the like, operate the switch several times to close the window in stages.

Rear windows

Sliding side windows

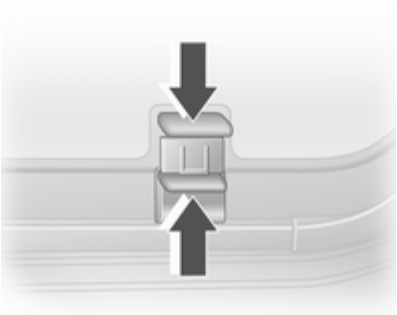

To open, pull up catch and slide open.

To close, pull up catch and slide window until catch engages.

Note
During window opening or closing, keep the catch raised to allow the glass sufficient clearance.

Heated rear window

Operated by pressing the button.

Heating functions with the engine running and is switched off automatically after a short time.

Sun visors

The sun visors can be folded down or swivelled to the side to prevent dazzling.

If the sun visors have integral mirrors, the mirror covers should be closed when driving.

Seats, restraints

Head restraints 30
Front seats 31
Rear seats 34
Seat belts 37
Airbag system 40
Child restraints 43

Head restraints

Position

⚠ Warning

Only drive with the head restraint set to the proper position.

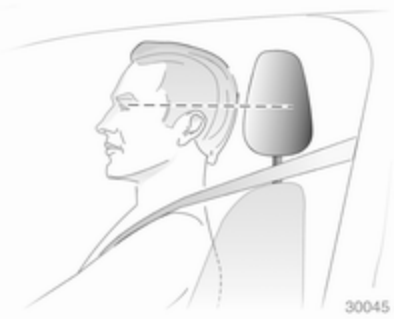

The middle of the head restraint should be at eye level. If this is not possible for extremely tall people, set to highest position, and set to lowest position for small people.

Adjustment

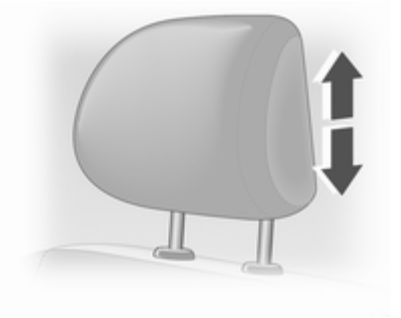

Pull the head restraint upwards or push the head restraint downwards.

Note
Approved accessories may only be attached to the front passenger seat head restraint if the seat is not in use.

Head restraint removal

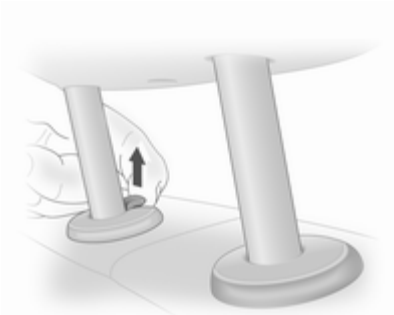

To remove the head restraints, pull lock tab and pull the restraint upwards.

Stow head restraints securely in load compartment. Do not drive with head restraints removed if the seat is occupied.

Front seats

Seat position

⚠ Warning

Only drive with the seat correctly adjusted.

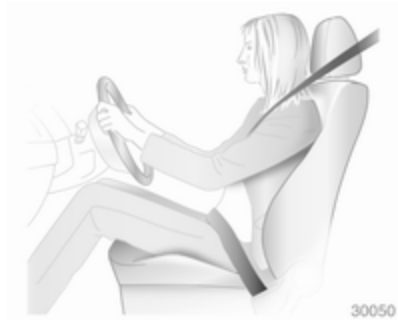

- Sit with buttocks as far back against the backrest as possible. Adjust the distance between the seat and the pedals so that legs are slightly angled when pressing the pedals. Slide the front passenger seat as far back as possible.
- Sit with shoulders as far back against the backrest as possible. Set the backrest rake so that it is possible to reach the steering wheel with arms slightly bent. Maintain contact between shoulders and the backrest when turning the steering wheel. Do not angle the backrest too far back. We recommend a maximum rake of approx. 25°.
- Adjust the steering wheel ⇨ 54.
- Set seat height high enough to have a clear field of vision on all sides and of all display instruments. There should be at least one hand of clearance between head and the roof frame. Thighs should rest lightly on the seat without pressing into it.
- Adjust the head restraint ⇨ 30.
- Adjust the height of the seat belt ⇨ 38.

Seat adjustment

⚠ Danger

Do not sit nearer than 25 cm (10 inches) from the steering wheel, to permit safe airbag deployment.

⚠ Warning

Never adjust seats while driving as they could move uncontrollably.

Seat positioning

Pull handle, slide seat, release handle.

Seat backrests

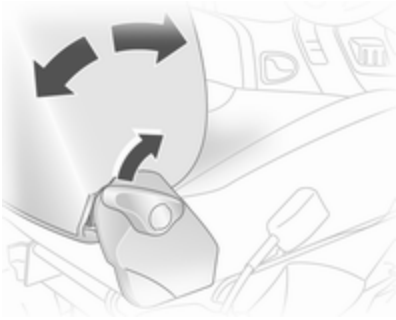

Pull lever, adjust inclination and release lever. Allow the seat to engage.

Do not lean on seat when adjusting.

Seat height

Lift lever and adjust body weight on seat to adjust height.

Lumbar support

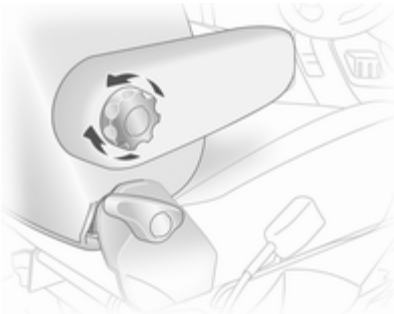

Adjust lumbar support using handwheel to suit personal requirements.

Rotate handwheel to increase and decrease support.

Armrest

Adjust armrest support to suit personal requirements.

- Raise armrest in increments to desired height.
- To reposition, fully raise armrest before lowering.

Heating

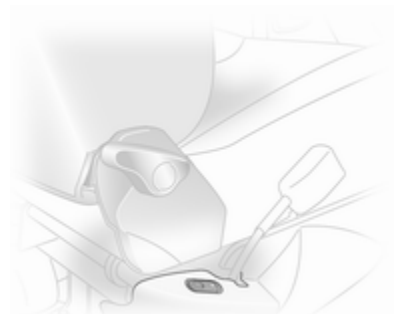

Press the button for the respective seat with the engine running. Press the button again to switch off.

Seat heating is thermostatically controlled and switches off automatically when seat temperature is sufficient.

Control indicator in the button illuminates when the system is on, not just when heating is active.

Rear seats

Second row seats

When folding or removing the rear seat ensure the armrests are folded away in their most upright position.

Also remove the lower seat trim side pockets disconnecting them from the locating clips.

To enable long items to be stored under the seats the centre seat trim cover can be unclipped.

Rear seat access

To facilitate access to the rear seats, fold the seat backrest forwards. If necessary release the two-latch seat belt from its buckles.

⚠ Warning

Ensure that the backrest returns to its correct position and the seat belt buckles engage securely.

Fitting seat belt ⇨ 38.

Folding seats

On some variants, the cargo area can be increased by folding up the rear seats.

Remove the head restraints ⇨ 30. Pull the side handle to release the backrest and fold forward onto the seat base, if necessary releasing the two-latch seat belts from their buckles.

Release both locking bars at the rear base of the seat by pulling rearwards.

Lift and fold the seat assembly, until the seat frame rests in place.

⚠Warning

When folding the seat use caution - beware of moving parts. Ensure the seat is secure when completely folded.

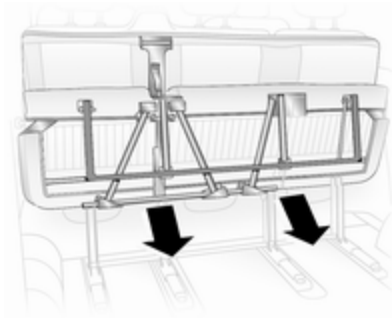

To return the folding seat to the upright position, support the seat assembly and release the bar by pulling the bar directly towards you.

Gradually lower the seat assembly, allowing the rear support legs to fold down. Lower the seat completely, ensuring the rear support legs are located, and latched.

Raise the backrest, reinstall head restraints and connect the seat belts.

⚠Warning

When installing the seat, ensure that the seat is properly located on the anchor points and that the locking catches are fully engaged, the backrest is returned to the correct position and the seat belts are engaged securely.

Removable rear seats

On some variants, the cargo area can be increased by removing the rear seats.

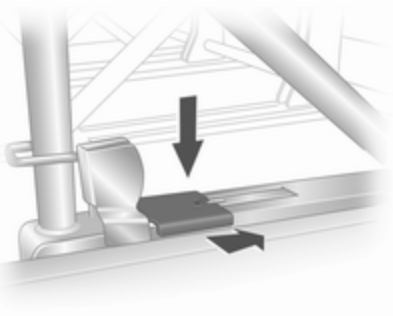

Release the seats by pressing down and sliding forward the locking catch located on the left and right hand seat mountings.

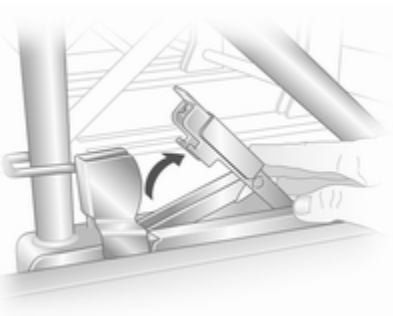

With both catches raised, push the seat unit towards the rear and release them from the floor anchor points. The seat can then be lifted out.

The seats must be removed through the sliding door only.

⚠ Warning

Removable seats are heavy! Do not attempt to remove without assistance.

When installing the seats, ensure that the seats are properly located on the anchor points and that the locking catches are fully engaged.

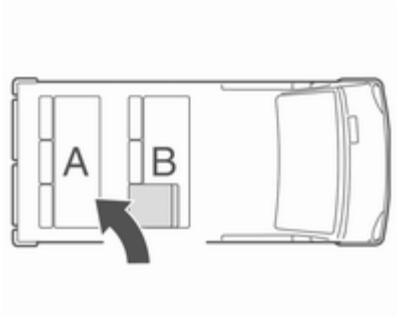

⚠ Warning

When re-installing seats always ensure that the row with the folding access seat **B** is positioned correctly in front of the fixed seat row **A**.

If the seats are incorrectly positioned, access for passengers is seriously impeded.

Seat belts

The belts are locked during heavy acceleration or deceleration of the vehicle for the safety of the occupants.

⚠ Warning

Fasten seat belt before each trip.

In the event of an accident, people not wearing seat belts endanger their fellow occupants and themselves.

Seat belts are only designed for use by one person at a time. They are not suitable for people younger than 12 years of age or smaller than 150 cm (5 ft).

Periodically check all parts of the belt system for damage and proper functionality.

Have damaged components replaced. After an accident, have the belts and triggered belt tensioners replaced by a workshop.

Note
Make sure that the belts are not damaged by shoes or sharp-edged objects or trapped. Prevent dirt from getting into the belt retractors.

Belt tensioners

In the event of a head-on or rear-end collision of a certain severity, the front seat belts are tightened.

⚠ Warning

Incorrect handling (e.g. removal or fitting of belts) can trigger the belt tensioners with risk of injury.

Deployment of the belt tensioners is indicated by continuous illumination of control indicator ⇨ 64.

Triggered belt tensioners must be replaced by a workshop. Belt tensioners can only be triggered once.

Note
Do not affix or install accessories or other objects that may interfere with the operation of the belt tensioners. Do not make any modifications to belt tensioner components as this will invalidate the vehicle type approval.

Three-point seat belt

Fitting

Withdraw belt from retractor, guide it untwisted across the body and insert the latch plate in the buckle. Tension the lap belt regularly whilst driving by tugging the shoulder belt.

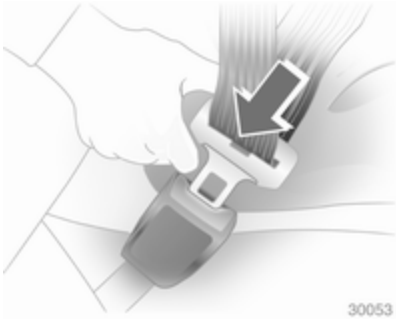

Loose or bulky clothing prevents the belt from fitting snugly. Do not place objects such as handbags or mobile phones between the belt and your body.

⚠ Warning

The belt must not rest against hard or fragile objects in the pockets of your clothing.

Height adjustment

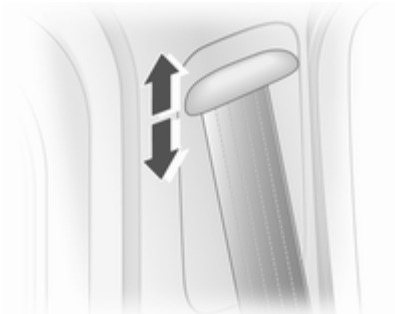

1. Pull belt out slightly.
2. Slide adjuster up or down to desired position.

Adjust the height so that the belt lies across the shoulder. It must not lie across the throat or upper arm.

Do not adjust while driving.

Removing

To release belt, press red button on belt buckle.

Seat belts on the rear seats

Two-latch belt

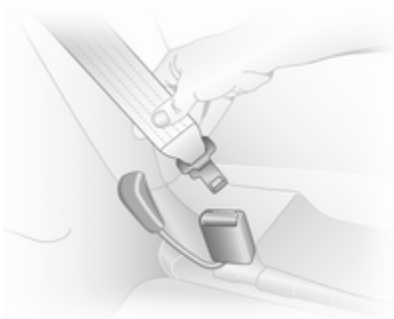

Before fitting the belt, first insert lower latch plate into the buckle on the outside of the seat.

The belt can now be used in the same way as a standard seat belt.

⚠Warning

The seat belt will not be effective in the event of an accident if the lower latch is not correctly fitted.

When releasing the seat belt, ensure that the central buckle is always released before the buckle on the side of the seat.

Always remove the lower latch plate from the outside buckle before removing seats from the vehicle or to facilitate access to the rear seats.

Second row seats ⇨ 34.

Using the seat belt while pregnant

⚠Warning

The lap belt must be positioned as low as possible across the pelvis to prevent pressure on the abdomen.

Airbag system

The airbag system consists of a number of individual systems.

When triggered the airbags inflate within milliseconds. They also deflate so quickly that it is often unnoticeable during the collision.

⚠ Warning

If handled improperly the airbag systems can be triggered in an explosive manner.

Note

The airbag systems and belt tensioner control electronics are located in the centre console area. Do not put any magnetic objects in this area.

Do not stick anything on the airbag covers and do not cover them with other materials.

Each airbag is triggered only once. Have deployed airbags replaced by a workshop.

Do not make any modifications to the airbag system as this will invalidate the vehicle type approval.

In the event of airbag deployment have the steering wheel, the instrument panel, all panelling parts, the door seals, the handles and the seats removed by a workshop.

Control indicator for airbag systems ⇨ 64.

Front airbag system

The front airbag system consists of one airbag in the steering wheel and one in the instrument panel on the front passenger side. These can be identified by the word **AIRBAG**.

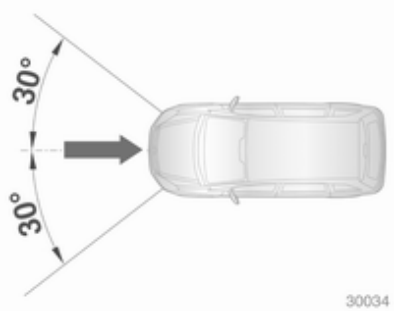

The front airbag system is triggered in the event of an accident of a certain severity severity in the depicted area. The ignition must be on.

The forward movement of the front seat occupants is decelerated, thereby considerably reducing the risk of injury to the upper body and head.

⚠ Warning

Optimum protection is only provided when the seat is in the proper position ⇨ 31.

Keep the area in which the airbag inflates clear of obstructions.

Fit the seat belt correctly and engage securely. Only then the airbag is able to protect.

Side airbag system

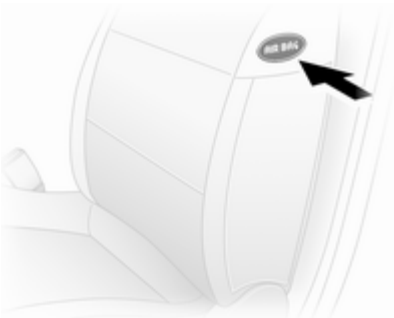

The side airbag system consists of an airbag in each front seat backrest. This can be identified by the words AIRBAG.

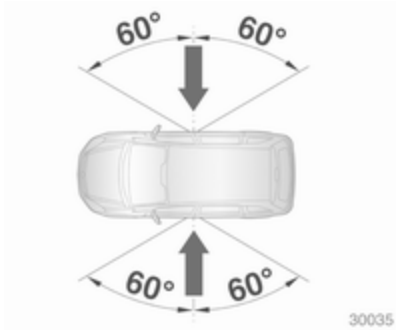

The side airbag system is triggered in the event of an accident of a certain severity in the depicted area. The ignition must be on.

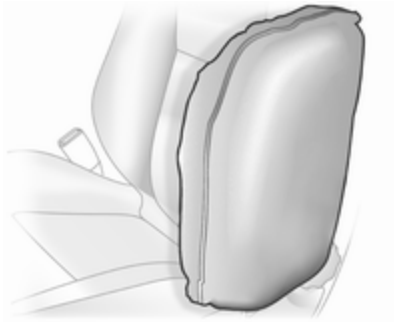

The risk of injury to the upper body and pelvis in the event of a side-on collision is considerably reduced.

⚠ Warning

Keep the area in which the airbag inflates clear of obstructions.

Note
Only use protective seat covers that have been approved for the vehicle. Be careful not to cover the airbags.

Curtain airbag system

The curtain airbag system consists of an airbag in the roof frame on each side. This can be identified by the words **AIRBAG** on the headlining trim.

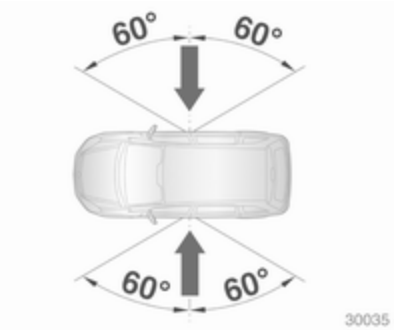

The curtain airbag system is triggered in the event of an accident of a certain severity severity in the depicted area. The ignition must be on.

The risk of injury to the head in the event of a side impact is considerably reduced.

⚠ Warning
Keep the area in which the airbag inflates clear of obstructions.

Airbag deactivation

Front airbag and side airbag systems for the front passenger seat have to be deactivated if a child restraint system is to be fitted on this seat. The curtain airbag system, the belt tensioners and all driver airbag systems will remain active.

The airbag deactivation system is indicated by a label on the side of the instrument panel, visible when the front passenger door is open.

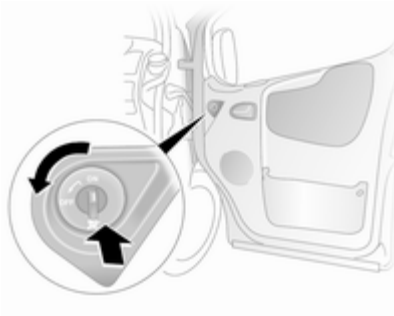

Front passenger airbag system can be deactivated via a switch located on the front passenger door.

With the front passenger door open, press switch in and rotate anti-clockwise to the **OFF** position.

Front passenger seat airbags are deactivated and will not inflate in the event of a collision. Control indicator illuminates continuously in the instrument cluster. A child restraint system can be installed in accordance with the installation locations chart ⇨ 45.

As long as control indicator is not illuminated, the airbag systems for the front passenger seat will inflate in the event of a collision.

Change status only when the vehicle is stopped with the ignition off. Status remains until the next change.

If control indicator remains illuminated together with , this indicates a fault within the system. Seek the assistance of a workshop.

Control indicator for airbag deactivation ⇨ 64.

Child restraints

Child restraint systems

When a child restraint system is being used, pay attention to the following usage and installation instructions and also those supplied with the child restraint system.

Always comply with local or national regulations. In some countries, the use of child restraint systems is forbidden on certain seats.

⚠ Warning

When using a child restraint system on the front passenger seat, the airbag systems for the front passenger seat must be deactivated; if not, the triggering of the airbags poses a risk of fatal injury to the child.

This is especially the case if rear-facing child restraint systems are used on the front passenger seat.

Selecting the right system

Children should travel in a rear-facing child restraint until as old as possible. It is appropriate to change the system when the child's head can no longer be properly supported at eye height. The child's cervical vertebrae are still very weak and in an accident they suffer less stress in the semi-prone rearward position than when sitting upright.

Children under 12 years or under 150 cm (5 ft) tall should only travel in an appropriate child restraint system.

Never hold a child whist travelling in the vehicle. The child will become too heavy to be held in the event of a collision.

When transporting children, use the child restraint system suitable for the child's weight.

Ensure that the child restraint system to be installed is compatible with the vehicle type.

Ensure that the mounting location of the child restraint system within the vehicle is correct.

Only allow children to enter and exit the vehicle at the side facing away from the traffic.

When the child restraint system is not in use, secure the seat with a seat belt or remove it from the vehicle.

Note

Do not stick anything on the child restraint systems and do not cover them with any other materials.

A child restraint system which has been subjected to stress in an accident must be replaced.

Child restraint installation locations

Permissible options for fitting a child restraint system

Front seats - all variants

Weight and age class	Single seat - front passenger[1]		Bench seat - front passenger			
	without airbag	with airbag	without airbag		with airbag	
			centre	outer	centre	outer
Group 0: up to 10 kg or approx. 10 months **Group 0+: up to 13 kg** or approx. 2 years	U	U[2]	X	U	X	U[2]
Group I: 9 to 18 kg or approx. 8 months to 4 years	U	U[2]	UF	U	UF	U[2]
Group II: 15 to 25 kg or approx. 3 to 7 years **Group III: 22 to 36 kg** or approx. 6 to 12 years	U	U[2]	UF	U	UF	U[2]

[1] If adjustable, ensure seat is in its rearmost position. Make sure vehicle seat belt is as straight as possible between shoulder and upper anchorage point.

[2] Ensure the front passenger airbag system is deactivated when installing a child restraint in this position.

U = Suitable for universal category restraint systems for use in this mass group, in conjunction with three-point seat belt.
UF = Suitable for universal category forward-facing restraint systems for use in this mass group, in conjunction with three-point seat belt.
X = Seat position not suitable for children of this mass group.

Combi - rear seats

Weight and age class	2nd row bench seat		3rd row bench seat[3)]	
	Outer	Centre	Outer	Centre
Group 0: up to 10 kg or approx. 10 months **Group 0+: up to 13 kg** or approx. 2 years	U	U, +	X	X
Group I: 9 to 18 kg or approx. 8 months to 4 years	U	U, +	X	X
Group II: 15 to 25 kg or approx. 3 to 7 years **Group III: 22 to 36 kg** or approx. 6 to 12 years	U	U	X	X

3) It is permissible to install a universal child seat to the third seat row if the second row seats have been removed and the seat belts are of sufficient length for the child seat type. Similarly, on left hand drive models with a 2 seat bench in the second row, it is permissible to install a universal child restraint on the third seat row but only on the right hand outboard side, due to increased clearance in front of it.

U = Suitable for universal category restraint systems for use in this mass group, in conjunction with three-point seat belt.
+ = Seat with ISOFIX mounting available. When mounting an ISOFIX child restraint system, only systems that have been approved for the vehicle may be used.
X = Seat position not suitable for children of this mass group.

Tour - rear seats

Weight and age class	2nd row bench seat		3rd row bench seat[3)]	
	Outer	Centre	Outer	Centre
Group 0: up to 10 kg or approx. 10 months **Group 0+: up to 13 kg** or approx. 2 years	U	U, +	X	X
Group I: 9 to 18 kg or approx. 8 months to 4 years	U	U, +	X	X
Group II: 15 to 25 kg or approx. 3 to 7 years **Group III: 22 to 36 kg** or approx. 6 to 12 years	U	U	X	X

3) It is permissible to install a universal child seat to the third seat row if the second row seats have been removed and the seat belts are of sufficient length for the child seat type. Similarly, on left hand drive models with a 2 seat bench in the second row, it is permissible to install a universal child restraint on the third seat row but only on the right hand outboard side, due to increased clearance in front of it.

U = Suitable for universal category restraint systems for use in this mass group, in conjunction with three-point seat belt.
+ = Seat with ISOFIX mounting available. When mounting an ISOFIX child restraint system, only systems that have been approved for the vehicle may be used.
X = Seat position not suitable for children of this mass group.

Isofix child restraint systems

Fasten vehicle-approved ISOFIX child restraint systems to the mounting brackets.

When using ISOFIX mounting brackets for seat mounting, universally approved child restraint systems for ISOFIX may be used.

Storage

Storage compartments 50
Load compartment 51
Roof rack system 52
Loading information 53

Storage compartments

Instrument panel storage

Storage and coin trays are located in the instrument panel.

Glovebox

The glovebox features a pen holder.

The glovebox should be closed whilst driving.

Cupholders

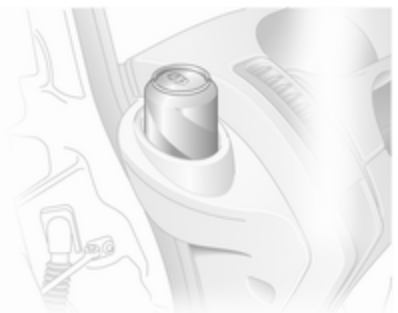

Cupholders are located at either end of the instrument panel.

To use cupholders remove the ashtray unit.

Overcab storage

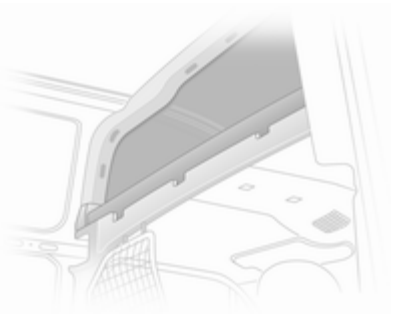

The total weight in this compartment must not exceed 30 kg.

Load compartment

Load compartment cover

Do not place any objects on the cover.

Removing

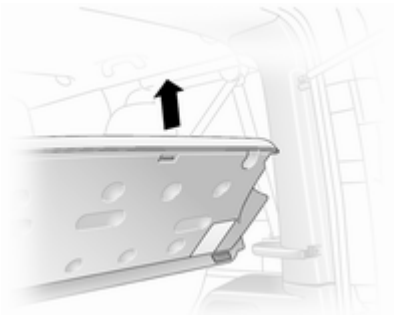

Lift cover and disconnect from the side guides.

Load rails and hooks

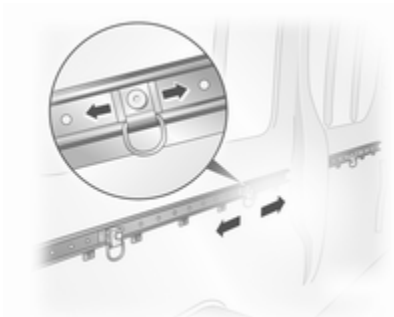

Load anchorage rails mounted in the load compartment provide adjustable anchorage points for securing cargo.

- Release centre pin of the anchorage point by pulling out against spring tension,
- slide the anchorage point to the required position, directly over a suitable locking hole,
- release the centre pin of the anchorage point, ensuring the pin is located correctly and the anchorage point is securely locked,
- cargo can then be secured in position using lashing straps attached to the anchorage point.

The maximum load of each anchorage point is 75 kg. To prevent the possibility of exceeding this maximum, the use of ratchet type lashing straps is to be avoided.

Lashing eyes

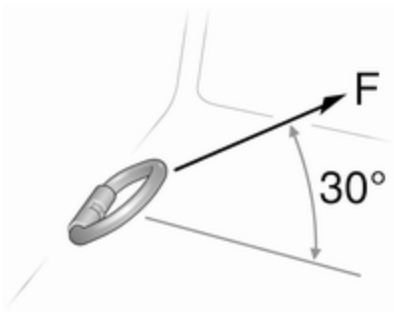

Lashing eyes are mounted in the load compartment to enable cargo to be secured in position using lashing straps or a luggage floor net.

The maximum force applied to the lashing eyes should not exceed 5000 N at 30°.

Safety net

The safety net can be installed behind the front seats or the rear seats.

Passengers must not be transported behind the safety net.

Installing (front or rear position)

Lift the covers to access the mountings, insert the load compartment net rod into the mounts and secure. Attach the straps to the lashing eyes behind the front seats; or to the rings on the rear seat frame, then tension the straps.

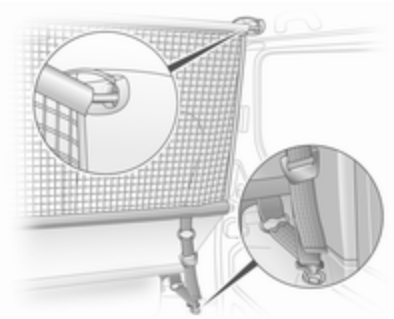

Removal

Tilt strap length adjuster upwards and unhook strap.

Warning triangle

The warning triangle can be accommodated in the space under the front seats.

First aid kit

The first aid kit can be accommodated in the space under the front seats.

Roof rack system

Roof rack

For safety reasons and to avoid damage to the roof, the vehicle approved roof rack system is recommended.

Note
The front roof rack fixing points located above the cab area are for installation of the full roof rack system only and must not be used to attach roof bars.

Follow the installation instructions and remove the roof rack when not in use.

Further information ⇨ 53.

Loading information

- Heavy objects in the load compartment should be placed as far forward as possible. If objects can be stacked, the heavier objects should be placed at the bottom.
- Secure objects with lashing straps attached to lashing eyes.
- Secure loose objects in load compartment to prevent sliding.
- Do not place any objects on the load compartment cover or the instrument panel.
- The load must not obstruct the operation of the pedals, parking brake and gear selector, or hinder the freedom of movement of the driver. Do not place any unsecured objects in the interior.
- Do not drive with an open load compartment. In addition, the number plate is only distinguishable and illuminated correctly if the doors are closed.
- The payload is the difference between the permitted gross vehicle weight (see identification plate ⇨ 146) and the EC kerb weight.

  To calculate the EC kerb weight, enter the data for your vehicle in the Weights table, on page ⇨ 3.

  The EC kerb weight includes weights for the driver (68 kg), luggage (7 kg) and all fluids (tank 90 % full).

  Optional equipment and accessories increase the kerb weight.
- Driving with a roof load increases the sensitivity of the vehicle to cross-winds and has a detrimental effect on vehicle handling due to the vehicle's higher centre of gravity. Distribute the load evenly and secure it properly with retaining straps. Adjust the tyre pressure and vehicle speed according to the load conditions. Check and retighten the straps frequently.

  The permissible roof load (which includes the weight of the roof rack) is 280 kg for standard roof variants and 210 kg for high roof variants (excludes Platform cab conversions). The roof load is the combined weight of the roof rack and the load.

  The permissible roof load on the approved full length roof rack system is 210 kg for standard roof variants and 140 kg for high roof variants (excludes Platform cab conversions). The roof load is the combined weight of the roof rack and the load.

Instruments and controls

Controls 54
Warning lights, gauges and indicators 59
Information displays 67
Vehicle messages 71
Trip computer 72
Tachograph 74

Controls

Steering wheel adjustment

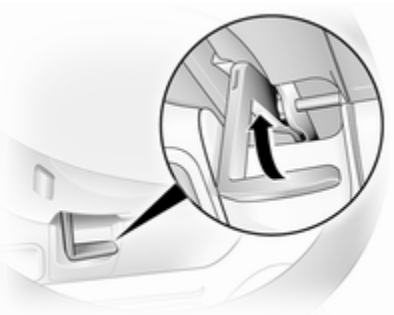

Unlock lever, adjust steering wheel, then engage lever and ensure it is fully locked.

Do not adjust steering wheel unless vehicle is stationary and steering wheel lock has been released.

Steering wheel controls

The infotainment system can be operated via the controls on the steering wheel.

Infotainment system ⇨ 80.

Further information is available in the Infotainment system manual.

Horn

Press .

Windscreen wiper/washer

Windscreen wiper

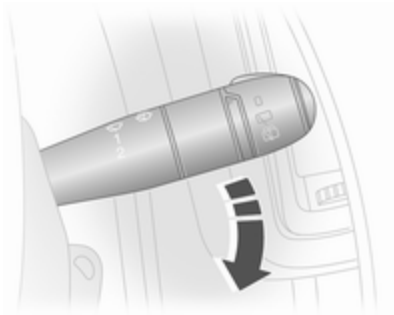

= timed interval wipe
1 = slow
2 = fast

Do not use if the windscreen is frozen.

Switch off in car washes.

Automatic wiping with rain sensor

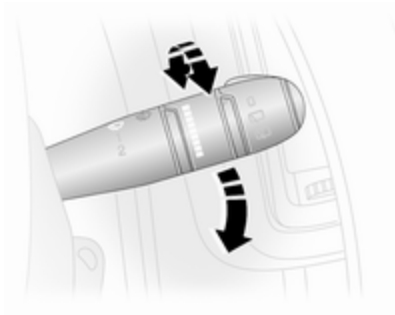

= automatic wiping with rain sensor

The rain sensor detects the amount of water on the windscreen and automatically regulates the frequency of the windscreen wipers.

Upon starting the engine, automatic wiping will need to be reselected.

Adjustable sensitivity of the rain sensor

Turn the adjuster wheel to adjust the sensitivity:

low sensitivity	=	turn adjuster wheel downwards
high sensitivity	=	turn adjuster wheel upwards

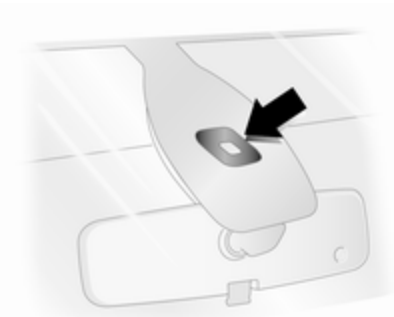

Keep the sensor free from dust, dirt and ice.

Windscreen washer

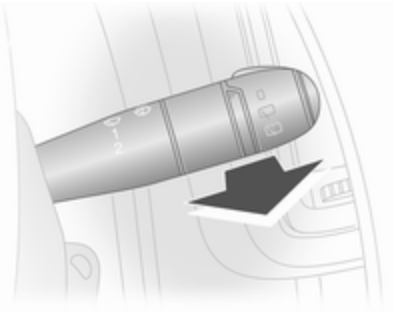

Pull lever. Washer fluid is sprayed onto the windscreen.

short pull	=	wiper swipes once
long pull	=	wiper swipes for a few strokes

Rear window wiper/washer

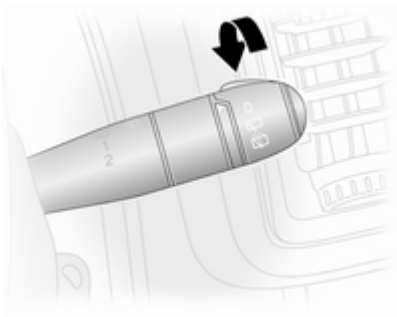

Turn:

0	=	off
	=	wiper operation
	=	washer fluid is sprayed onto the rear window

Outside temperature

A drop in temperature is indicated immediately and a rise in temperature after a time delay.

If outside temperatures drop to 3 °C, the symbol ❄ illuminates in the Triple-Info-Display as a warning for icy road conditions. ❄ remains illuminated until temperatures reach at least 5 °C.

In vehicles with Colour-Info-Display, a warning message appears in the display as a warning for icy road conditions. There is no message below -5 °C.

⚠ Warning
The road surface may already be icy even though the display indicates a few degrees above 0 °C.

Clock

Date and time are shown in the Info-Display or time only in the odometer display.

Colour-Info-Display ⇨ 68.

Set date and time in Triple-Info-Display

The Infotainment system must be off. Activate setting mode by holding the ◴ button depressed for approx. 2 seconds. The flashing value is adjusted using the ⊙ button. The ◴ button is used to switch to the next mode and to exit setting mode.

Automatic time synchronisation

The RDS signal of most VHF transmitters automatically sets the time, identified by in the display.

Some transmitters do not send a correct time signal. In such cases, it is recommend to switch off automatic time synchronisation.

Activate setting mode and set it to year setting. Hold the button depressed for approx. 3 seconds until flashes in the display and "RDS TIME" appears. The function is activated (RDS TIME 1) or deactivated (RDS TIME 0) with the button. Exit setting mode using the button.

Set time in odometer display

With the time displayed press and hold the reset button located alongside the speedometer and the minutes reading will increase.

After the button is released the clock will continue to flash for a further 5 seconds to enable further adjustments to be made.

Power outlets

12 V power outlets are located in the instrument panel and in the rear of the vehicle.

Connecting electrical accessories while the engine is off will discharge the battery. Do not exceed the maximum power consumption of 120 watts. Do not connect any current-delivering accessories, e.g. electrical charging devices or batteries.

Electrical accessories that are connected must comply with the electromagnetic compatibility requirements laid down in DIN VDE 40 839.

Do not connect any current-delivering accessories, e.g. electrical charging devices or batteries.

Caution
Do not damage the outlet by using unsuitable plugs.

Cigarette lighter

The cigarette lighter is located in the instrument panel.

Press in cigarette lighter. It switches off automatically once the element is glowing. Pull out lighter.

Ashtrays

Caution
To be used only for ash and not for combustible rubbish.

Portable ashtray

Ashtray container for mobile use in the vehicle. To use, open cover.

Warning lights, gauges and indicators

Speedometer

Indicates vehicle speed.

A speed regulator which restricts maximum speed.

As a visible indication of this, a warning label is located on the instrument panel.

Note
Under certain conditions (e.g. steep inclines) the vehicle speed may exceed the set limit.

Odometer

Displays the recorded distance.

Trip odometer

Press reset button once to display the trip odometer.

To reset, hold the reset button depressed for a few seconds with the ignition on. The display will flash and after 1 second will reset to zero.

Press the reset button again to return to the odometer.

Tachometer

Displays the engine speed.

Drive in a low engine speed range for each gear as much as possible.

Caution
If the needle is in the red warning zone, the maximum permitted engine speed is exceeded. Engine at risk.

Fuel gauge

Displays the fuel level in the tank.

Illumination of bars displays fuel level.

Control indicator ⛽ illuminates if the level in the tank is low. Refuel immediately.

Never run the tank dry.

Because of the fuel remaining in the tank, the top-up quantity may be less than the specified tank capacity.

Engine coolant temperature gauge

Displays the coolant temperature.

Illumination of bars displays the coolant temperature.

lower area	=	engine operating temperature not yet reached
central area	=	normal operating temperature
top area	=	temperature too high

illuminates if the temperature is too high ⇨ 65.

Caution

If engine coolant temperature is too high, stop vehicle, switch off engine. Danger to engine. Check coolant level.

For physical reasons, the coolant temperature gauge shows the coolant temperature only if the coolant level is adequate.

Engine oil level monitor

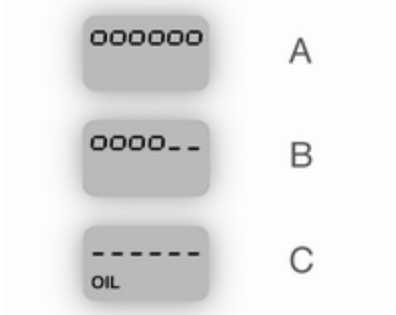

To access the oil level monitor display, press and hold the trip odometer reset button within 30 seconds of the ignition being switched on.

The squares that appear on the display indicate the engine oil level. As the oil level diminishes, the squares in the display disappear and are replaced with dashes.

A	=	Maximum level
B	=	Intermediate level
C	=	Minimum level. Check and top up engine oil ⇨ 108

Vehicle message **OIL** appears in the display if engine oil level is too low. Engine oil level ⇨ 72.

To exit the oil level monitor display, press the reset button again. Reset trip computer information ⇨ 72.

Service display

Each time the ignition is switched on, the remaining distance before the next engine oil and filter change is due may be shown in the display for approx. 5 seconds.

Within 3000 km (1800 miles) of the next engine oil change being due, the remaining distance and 🔧 will illuminate for approx. 30 seconds as a reminder. Have the next service performed by a workshop within one week or 500 km (300 miles) (whichever occurs first).

Change engine oil ⇨ 66.

Transmission display

The mode or selected gear of the manual transmission automated is shown in the transmission display.

R = Reverse gear
N = Neutral
A = Automatic mode
kg = Laden mode
❄ = Winter mode
= Apply footbrake
= Transmission electronics

Control indicators

The control indicators described are not present in all vehicles. The description applies to all instrument versions. When the ignition is switched on, most control indicators will illuminate briefly as a functionality test.

The control indicator colours mean:

red = danger, important reminder
yellow = warning, information, fault
green = confirmation of activation
blue = confirmation of activation

Control indicators in the instrument cluster

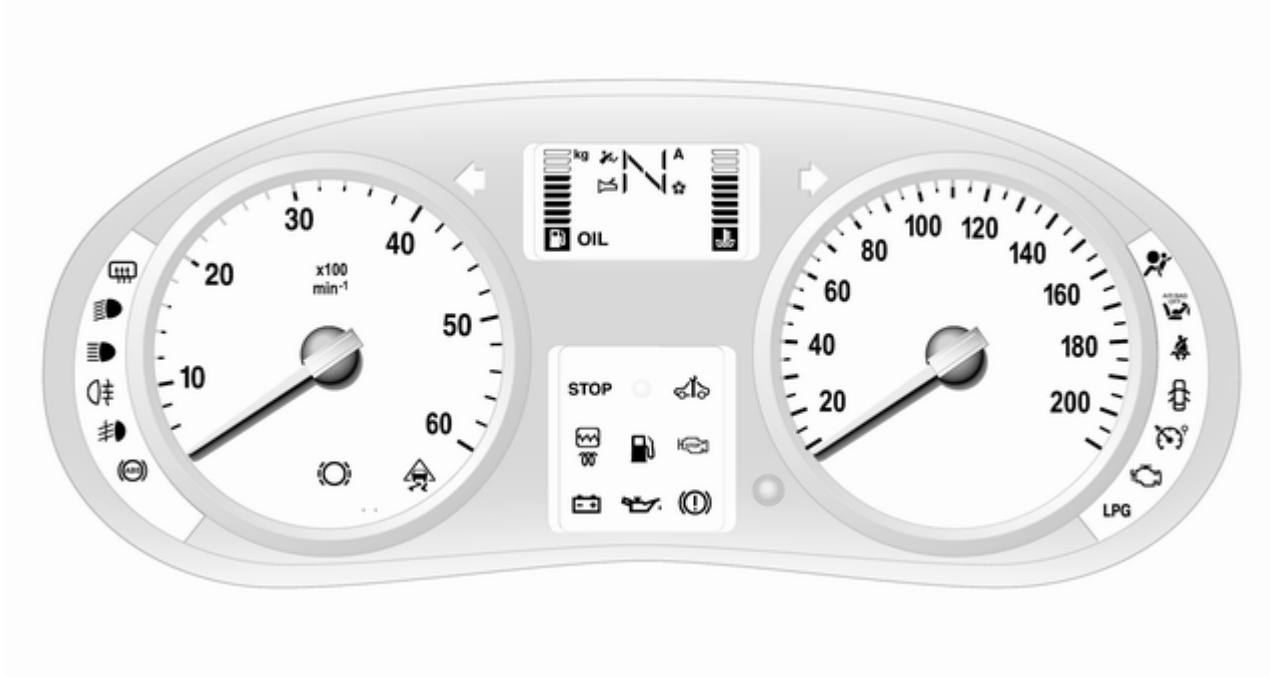

Turn signal

⇦⇨ flashes green.

Flashes if a turn signal or the hazard warning flashers are activated.

Rapid flashing: failure of a turn signal light or associated fuse.

An audible warning can be heard when the turn signals are on. When towing a trailer, the pitch of the audible warning changes.

Bulb replacement ⇨ 115.

Fuses ⇨ 119.

Turn signals ⇨ 77.

Airbag and belt tensioners

illuminates yellow.

When the ignition is switched on, the control indicator illuminates briefly. If it does not illuminate or illuminates whilst driving, there is a fault in the belt tensioner or the airbag system. The airbags and belt tensioners may fail to trigger in the event of an accident.

Deployment of the belt tensioners or airbags is indicated by continuous illumination of .

⚠Warning
Have the cause of the fault remedied immediately by a workshop.

Belt tensioners, airbag system ⇨ 37, ⇨ 40.

Airbag deactivation

illuminates yellow when the ignition is switched on and remains illuminated when the front passenger airbag has been deactivated.

If control indicator is illuminated in conjunction with or , seek the assistance of a workshop.

Airbag system ⇨ 40, belt tensioners ⇨ 37.

Charging system

illuminates red.

Illuminates when the ignition is switched on and goes out shortly after the engine starts.

Illuminates when the engine is running

Stop, switch off engine. Battery is not charging. Engine cooling may be interrupted. Power to the brake servo unit may be cut. Seek the assistance of a workshop.

Malfunction indicator light

illuminates or flashes yellow.

Illuminates when the ignition is switched on and goes out shortly after the engine starts.

Illuminates when the engine is running

Fault in the emission control system. The permitted emission limits may be exceeded. Seek the assistance of a workshop immediately.

Flashes when the engine is running

Fault that could lead to catalytic converter damage. Ease up on the accelerator until the flashing stops. Seek the immediate assistance of a workshop.

Service vehicle soon

Diesel engines

illuminates in yellow.

If illuminates in combination with or (ABS) there is a fault in the engine electronics. Seek the assistance of a workshop immediately.

Stop engine

STOP illuminates red, together with , , (STOP) or (!), stop engine immediately and seek the assistance of a workshop.

Engine stop

(STOP) illuminates together with STOP if coolant temperature is too high. Stop engine immediately and seek the assistance of a workshop.

Brake system

(!) illuminates red.

Illuminates when the parking brake is released if the brake fluid level is too low ⇨ 112.

⚠Warning
Stop. Do not continue your journey. Consult a workshop.

Illuminates after the ignition is switched on if the parking brake is applied ⇨ 97.

Antilock brake system (ABS)

(ABS) illuminates yellow.

Illuminates briefly after the ignition is switched on. The system is ready for operation when the (ABS) goes out.

If (ABS) does not go out after a few seconds, or if it illuminates while driving, there is a fault in the ABS. The brake system remains operational but without ABS regulation.

Antilock brake system ⇨ 96.

Electronic Stability Program

flashes or illuminates yellow.

Illuminates for a few seconds when the ignition is switched on.

Flashing during driving

The system is actively engaged. Engine output may be reduced and the vehicle may be braked automatically to a small degree ⇨ 98.

Illuminates while driving

The system is switched off or a fault is present if illuminates together with .

ESP®Plus ⇨ 98.

Preheating, drain fuel filter and engine electronics

illuminates yellow during engine preheating.

Illuminates when the engine is running

Water is present in the diesel fuel filter. Drain fuel filter of residual water ⇨ 113.

Indicates a fault in the electronic system, seek the assistance of a workshop.

Diesel particle filter

illuminates yellow.

Illuminates when the diesel particle filter requires cleaning ⇨ 90.

Engine oil pressure

illuminates red.

Illuminates when the ignition is switched on and goes out shortly after the engine starts.

Illuminates when the engine is running

Caution
Engine lubrication may be interrupted. This may result in damage to the engine and/or locking of the drive wheels.

1. Depress clutch.
2. Select neutral gear, set selector lever to **N**.
3. Move out of the flow of traffic as quickly as possible without impeding other vehicles.
4. Switch off ignition.

⚠Warning
When the engine is off, considerably more force is needed to brake and steer. Do not remove key until vehicle is stationary, otherwise the steering wheel lock could engage unexpectedly.

Check oil level before seeking assistance of a workshop ⇨ 108.

Change engine oil

If control indicator illuminates and flashes continuously in the display, the engine oil has become oxidized.

If the engine oil has become diluted, control indicator will illuminate together with . The engine oil and oil filter must be changed and the service display reset.

The service display reset procedure must be completed within 100 seconds after switching on ignition.

1. Switch on the ignition, but do not start the engine.
2. Depress accelerator pedal fully and hold in this position.
3. Apply brake pedal three times consecutively.
4. Release accelerator and brake pedals, then wait 10 seconds (with ignition on). extinguishes from the service display.
5. Turn ignition off and back on quickly, i.e. within 3 seconds.

If does not extinguish from the service display, drive a minimum of 15 km (10 miles) then switch off ignition for at least 1 minute before repeating procedure.

Service display ⇨ 61.

Low fuel

illuminates yellow.

Illuminates when level in fuel tank is too low.

Catalytic converter ⇨ 91.

Bleeding the diesel fuel system ⇨ 114.

Exterior light

illuminates green.

Illuminated when the exterior lights are on ⇨ 75.

High beam

illuminates blue.

Illuminated when high beam is on and during headlight flash ⇨ 76.

Fog light

illuminates green.

Illuminated when the front fog lights are on ⇨ 77.

Rear fog light

illuminates yellow.

Illuminated when the rear fog light is on ⇨ 77.

Door open

illuminates red.

Illuminates when a door is open.

Information displays

Triple-Info-Display

Displays time, outside temperature and date or Infotainment system (when it is on).

When the ignition is off, the time, date and outside temperature can be displayed by briefly pressing one of the two buttons below the display.

Fault display

The appearance of --.-°C or F in the display indicates a fault. Consult a workshop to have the cause of the fault remedied.

Colour-Info-Display

Displays time, outside temperature, date or Infotainment system (when it is on).

The Colour-Info-Display displays the information in colour.

The type of information and how it is displayed depends on the equipment of the vehicle and the settings made.

Selecting functions

Functions and settings of the Infotainment system are accessed via the display.

Selections are made via the menus and buttons, the multifunction control of the Infotainment system or the buttons on the steering wheel.

Selecting with the multifunction control

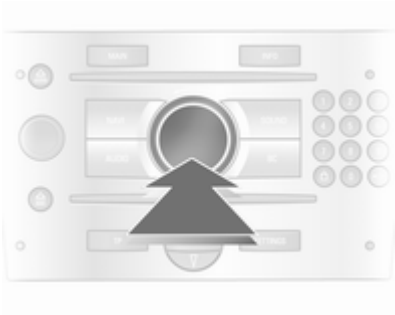

Turn the multifunction control to highlight menu items or commands and to select function areas.

Press the multifunction control to select the highlighted item or confirm a command.

To exit a menu, turn the multifunction control until **Return** or **Main** appear and select.

Selecting with the buttons on the steering wheel

Select menu options via menus and with the buttons.

Function areas

For each function area there is a main page (Main), which is selected at the top edge of the display (not with Infotainment system CD 30 or the Mobile Phone Portal):

- Audio,
- Navigation

System settings

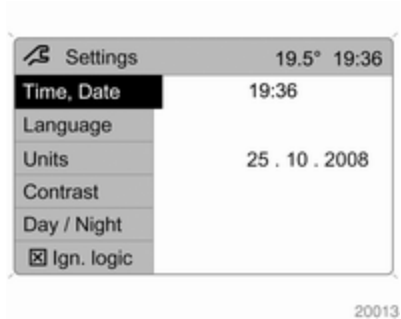

Press the **Main** button of the Infotainment system.

Press the **Settings** button on the Infotainment system. For Infotainment system CD 30, no menu may be selected.

Setting date and time

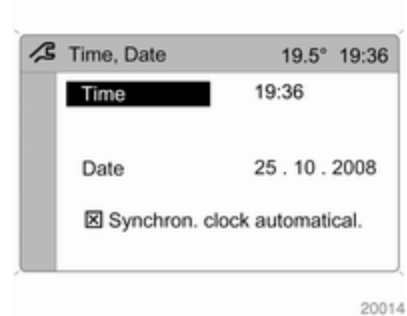

Select menu item **Time, Date** from the **Settings** menu.

Select the required menu items and make settings.

Automatic time synchronisation

The RDS signal of most VHF transmitters automatically sets the time.

Some transmitters do not send a correct time signal. In such cases, we recommend to switch off automatic time synchronisation.

The function is activated by ticking the field in front of **Synchron. clock automatical.** in the **Time, Date** menu.

Language selection

The display language for some functions can be selected.

Select menu item **Language** from the **Settings** menu.

Select the desired language.

Selection is indicated by a ▶ in front of the menu item.

In systems with voice output, when the language setting of the display is changed the system will ask whether the announcement language should also be changed - see Infotainment system manual.

Setting units of measure

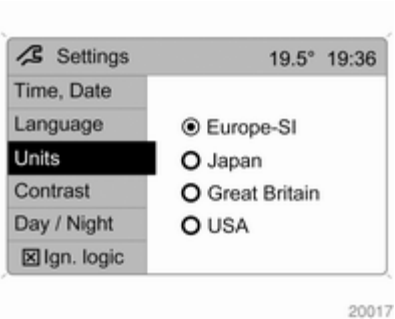

Select menu item **Units** from the **Settings** menu.

Select the desired unit.

Selections are indicated by a ● in front of the menu item.

Setting display mode

Display brightness is dependent of vehicle lighting. Additional settings can be made as follows:

Select menu item **Day/Night** from the **Settings** menu.

Automatic: The colours are adapted to the exterior lights.

Always day design: black or coloured text on light background.

Always night design: white or coloured text on dark background.

Selection is indicated by a ● in front of the menu item.

Stop watch

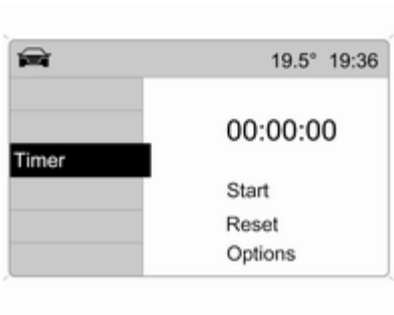

Press **BC** button on the infotainment system.

The **Timer** menu is displayed.

To start, select menuu item **Start**. To stop, select menu item **Stop**.

To reset, select menu item **Reset**.

The relevant stop watch display can be selected in the **Options** menu:

Driving Time excl. Stops
The time the vehicle is in motion is recorded. Stationary time is not included.

Driving Time incl. Stops
The time the vehicle is in motion is recorded. The time the vehicle is stationary with the ignition switched on is included.

Travel Time
Measurement of the time from manual activation via **Start** to manual deactivation via **Reset**.

Ignition logic
See Infotainment system manual.

Vehicle messages

Warning chimes

When starting the engine or whilst driving

- During operation of the turn and lane-change signals.
- If the low fuel control indicator illuminates.
- If seat belt is not fastened.
- If the vehicle has manual transmission automated and the clutch temperature is too high.

When the vehicle is parked and the driver's door is opened

- With exterior lights on.
- If the vehicle has manual transmission automated, and the parking brake is not applied, neutral not selected or foot brake not depressed.

Engine oil level

The oil level display is correct only if the vehicle is parked on a level surface with a cold engine.

The oil level message will only reset if the ignition has been switched off for more than 2 minutes.

If **OIL** message appears in the display the oil level may need topping up. To gain a more accurate indication of the oil level, press and hold the reset button. Engine oil level monitor ⇨ 61.

Trip computer

The trip computer provides information on driving data, which is continually recorded and evaluated electronically.

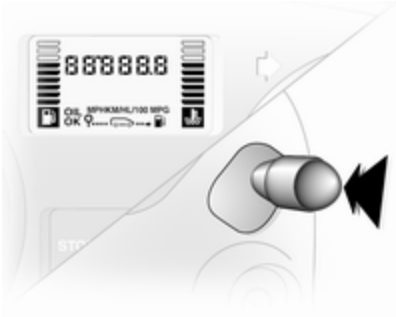

The functions can be selected by pressing the button repeatedly on the end of the wiper lever.

Press the button to select one of the functions:

- Fuel used
- Average consumption
- Instantaneous consumption
- Range
- Distance travelled
- Average speed

Fuel used

Displays the amount of fuel consumed since the last reset.

The measurement can be restarted at any time by pressing the trip computer reset button.

Average consumption

Average consumption is displayed, taking into consideration the distance travelled and the fuel used since the last reset.

The measurement can be restarted at any time.

Instantaneous consumption

The value is displayed after reaching a speed of 25 km/h (15 mph).

Range

The range is calculated from the current contents of the fuel tank and the average consumption since the last reset.

The range will not display if ⛽ is illuminated ⇨ 67.

The measurement can be restarted at any time.

Distance travelled

Displays the distance driven since the last reset.

The measurement can be restarted at any time.

Average speed

The average speed is displayed, since the last reset.

The measurement can be restarted at any time.

Interuptions in the journey with the ignition off are not included in the calculations.

Reset trip computer information

To reset the trip computer select one of its functions then press the reset button.

The following trip computer information will be reset:

- Fuel used
- Average consumption
- Range
- Distance travelled
- Average speed

Interruption of power supply

If the power supply has been interrupted or if the battery voltage has dropped too low, the values stored in the trip computer will be lost.

Tachograph

The tachograph is operated as described in the operating instructions supplied. Observe regulations regarding use.

Tachograph

The tachograph is operated as described in the operating instructions supplied. Observe regulations regarding use.

Lighting

Exterior lighting 75
Interior lighting 78
Lighting features 79

Exterior lighting

Light switch

Turn light switch:

0 = Off
☼ = Side lights
≡D≡D = Headlights

High beam control indicator ≡D ⇨ 67.

Low beam control indicator ≡D ⇨ 67.

Automatic light control

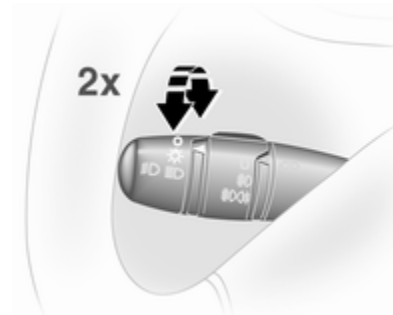

When the engine is running, headlights are switched on when external light conditions are poor.

To activate:

1. Switch on the ignition.
2. Turn light switch to ☼ and return to **0**.
3. Repeat step 2 within approx. 5 seconds.
4. A double acoustic signal sounds for confirmation.

Repeat the operation to deactivate.

For reasons of safety, it is advisable to have the function activated.

During poor lighting conditions, e.g. fog or mist, manually switch on the headlights.

High beam

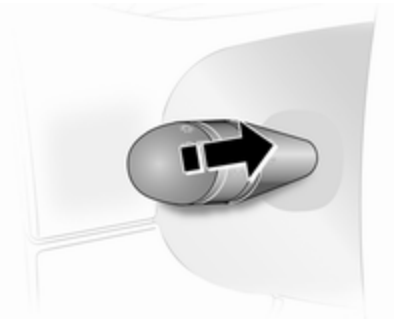

To change between low and high beam, pull lever until a click is felt.

Headlight flash

To activate the headlight flash, pull lever.

Headlight range adjustment

Manual headlight range adjustment

Adapt the headlight range to suit the vehicle load to prevent dazzling of oncoming traffic.

Turn knurled wheel to required position:

0 = No load
4 = Loaded up to permissible maximum weight

Headlights when driving abroad

The asymmetrical headlight beam extends visibility at the edge of the road at the passenger side.

However, when driving in countries where traffic drives on the opposite side of the road, adjust the headlights to prevent dazzling.

Have the headlights adjusted by a workshop.

Daytime running lights

Daytime running lights increase visibility of the vehicle during daylight.

When the ignition is on, the headlights come on and instrument illumination is subdued.

The daytime running lights switch off when the ignition is switched off.

Hazard warning flashers

Operated with the ⚠ button.

Turn and lane-change signals

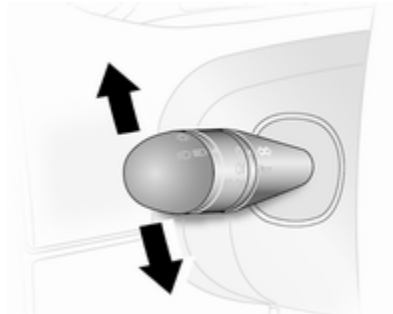

Lever up = right turn signal
Lever down = left turn signal

When the steering wheel is turned back, the lever automatically returns to its original position and the indicator is deactivated. This will not happen when making a minor steering manoeuvre such as lane changing.

When lane changing, move lever part way to first stop. When released, lever will spring back.

If the lever is moved past the first stop, the indicator is switched on constantly. Switch the indicator off manually by moving the lever to its original position.

Front fog lights

Turn inner switch to position ≢D.

Front fog lights will only operate when the ignition and headlights are switched on.

Rear fog lights

Turn inner switch to position ≢DO≡.

Rear fog light comes on in conjunction with front fog lights and will only operate when the ignition and headlights are switched on.

Reversing lights

The reversing lights come on when the ignition is on and reverse gear is selected.

Misted light covers

The inside of the light covers may mist up briefly in poor, wet and cold weather conditions, in heavy rain or after washing. The mist disappears quickly by itself; to help, switch on the headlights.

Interior lighting

Interior lights

Operated by tilting the lens.

With the lens in its central position, the light functions as a courtesy light and illuminates when the front doors are opened. Once the front doors are closed, the courtesy light goes out after approx. 15 seconds.

The interior light extinguishes immediately when the ignition is switched on.

Load compartment lighting

The lighting can be switched on when the load compartment is opened.

Operated by tilting the lens.

Operated by tilting the lens to one of 3 positions:

- On constantly
- Controlled by the function of the interior light
- Off constantly

Lighting features

Exit lighting

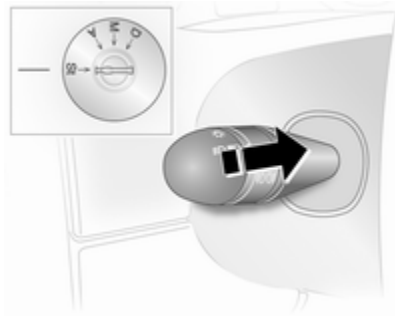

Headlights come on for approx. 30 seconds after the vehicle is parked and the system is activated.

Activating

1. Switch off ignition.
2. Remove ignition key.
3. Open driver's door.
4. Pull turn signal lever towards steering wheel.

This action can be repeated up to four times to a maximum period of 2 minutes.

The lighting is turned off immediately by switching on the ignition or turning the light switch.

Infotainment system

Introduction 80
Radio 80
Audio players 81
Navigation 81
Phone 81

Introduction

Operation

The Infotainment system is operated as described in the Infotainment system manual.

Radio

Radio reception

Radio reception may be disrupted by static, noise, distortion or loss of reception due to:

- changes in distance from the transmitter,
- multi-path reception due to reflection,
- shadowing.

Audio players

Auxiliary devices

The AUX input is on the instrument panel.

An external audio source such as a portable CD player can be connected using a 3.5 mm jack plug via the AUX input.

Always keep the AUX input clean and dry.

Navigation

Obtaining navigation CDs/ DVDs

The navigation system is supplied with a CD detailing the local territory. For additional countries/territories, separate CDs are available from Opel Service Partners.

Phone

Mobile phones and CB radio equipment

Installation instructions and operating guidelines

The vehicle specific installation instructions and the operating guidelines of the mobile phone and handsfree manufacturer must be observed when installing and operating a mobile telephone. Failure to do so could invalidate the vehicle type approval (EU directive 95/54/ EC).

Recommendations for fault-free operation:

- Professionally installed exterior antenna to obtain the maximum range possible,
- Maximum transmission power 10 watts,
- Installation of the phone in a suitable spot, consider relevant Note ⇨ 40.

Seek advice on predetermined installation points for the external antenna or equipment holder and ways of using devices with a transmission power exceeding 10 watts.

Use of a handsfree attachment without external antenna with mobile telephone standards GSM 900/1800/1900 and UMTS is only permitted if the maximum transmission power of the mobile telephone is 2 watts for GSM 900 or 1 watt for the other types.

For reasons of safety, do not use the phone while driving. Even use of a handsfree set can be a distraction while driving.

⚠ Warning

Operation of radio equipment and mobile telephones which fail to meet above mentioned mobile telephone standards is only permitted using an antenna located outside of the vehicle.

Caution

Mobile telephones and radio equipment may lead to malfunctions in the vehicle electronics when operated inside the vehicle with no exterior antenna, unless the above mentioned regulations are observed.

Climate control

Climate control systems 83
Air vents 86
Maintenance 87

Climate control systems

Heating and ventilation system

Controls for:

- Temperature
- Fan speed
- Air distribution

Heated rear window ⇨ 29.

Temperature

red = warm
blue = cold

Heating will not be fully effective until the engine has reached normal operating temperature.

Fan speed

Adjust the air flow by switching the fan to the desired speed.

Air distribution

= to head area
= to head area and foot well
= to foot well
= to windscreen, front door windows and foot well
= to windscreen and front door windows

Intermediate settings are possible.

Demisting and defrosting the windows

- Set temperature control to warmest level.
- Set fan speed to highest level.
- Set air distribution control to .
- Switch on heated rear window .

- Open side air vents as required and direct them towards door windows.
- For simultaneous warming of the foot well, set air distribution control to .

Air conditioning system

Additional to the heating and ventilation system, the air conditioning system has:

AC = cooling
= air recirculation

Cooling (AC)

Operated with the AC button and functional only when the engine and fan are running.

The air conditioning system cools and dehumidifies (dries) the air when outside temperature is a little above the freezing point. Therefore condensation may form and drip from under the vehicle.

If no cooling or drying is required, switch the cooling system off to save fuel.

Air recirculation system

Operated with the button.

⚠ Warning

The exchange of fresh air is reduced in air recirculation mode. In operation without cooling the air humidity increases, so the windows may mist up. The quality of the passenger compartment air deteriorates, which may cause the vehicle occupants to feel drowsy.

Maximum cooling

Briefly open the windows so that hot air can disperse quickly.

- Cooling AC on.
- Air recirculation system on.
- Set air distribution control to .
- Set temperature control to coldest level.
- Set fan speed to highest level.
- Open all air vents.

Rear heating system

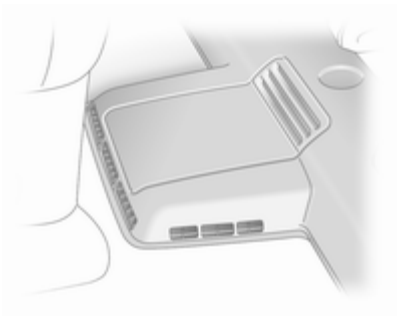

The rear passenger compartment heating fan assists air flow to the rear passenger compartment via the rear air vents.

Note
Country-specific version: Heating will cease to operate if the vehicle fuel level drops below 11 litres.

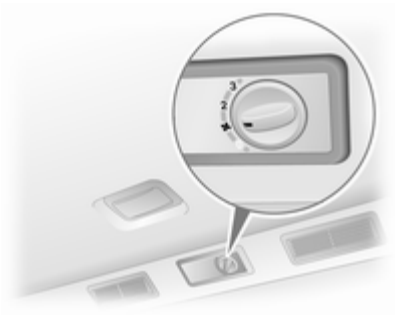

The rate of air flow is determined by the fan. Air temperature is controlled using the temperature control on the instrument panel.

The fan has 3 speeds:

0 = off
3 = high speed

Rear air conditioning system

The rear air conditioning system is actuated in conjunction with the front passenger compartment air conditioning system.

Rear air conditioning fan switch

The rear air conditioning fan assists air flow to the rear passenger compartment via the rear air vents.

Switch on the fan while the air conditioning system is operating to allow cooled and dehumidified (dried) air to be distributed.

The rate of air flow is determined by the fan.

The fan has 3 speeds:

0 = off
3 = high speed

Air vents

Adjustable air vents

At least one air vent must be open while cooling is on in order to prevent the evaporator from icing up due to lack of air movement.

Centre air vents

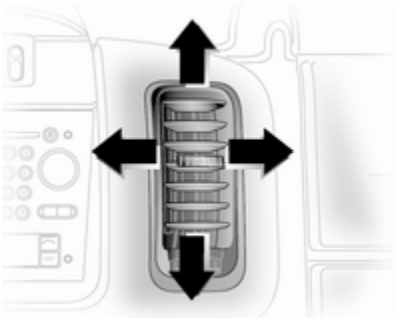

To open or close the vent, turn the adjuster wheel left or right.

Direct the flow of air by tilting and swivelling the slats.

Side air vents

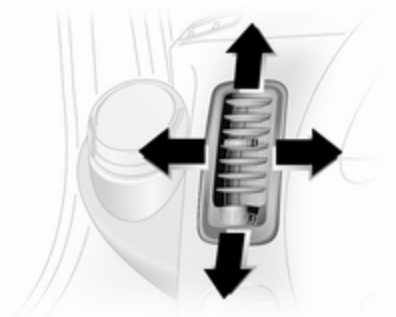

To open or close the side air vents, turn the adjuster wheel left or right.

Direct the flow of air by tilting and swivelling the slats.

Depending upon the position of the temperature control, air will be directed into the vehicle via the side air vents.

Fixed air vents

Additional air vents are located beneath the windscreen and door windows and in the foot wells.

Rear passenger compartment air vents

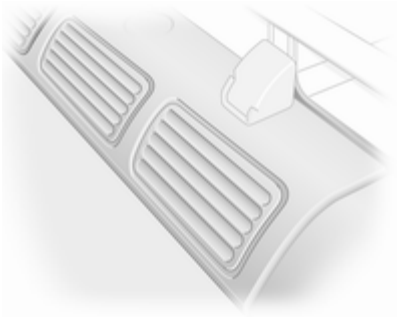

The air flow is biased towards the central and right hand air vents for optimum distribution.

Glovebox cooler

Slide the control upwards to allow the air conditioning system to also keep the contents of the glovebox cool.

Maintenance

Air conditioning regular operation

In order to ensure continuously efficient performance, cooling must be operated for a few minutes once a month, irrespective of the weather and time of year. Operation with cooling is not possible when outside temperature is too low.

Service

For optimal cooling performance, it is recommended that the climate control system be checked annually, starting three years after initial vehicle registration, including:

- Functionality and pressure test
- Heating functionality
- Leakage check
- Check of drive belts
- Cleaning of condenser and evaporator drainage
- Performance check

Driving and operating

Driving hints 88
Starting and operating 88
Engine exhaust 90
Manual transmission 92
Manual transmission automated 92
Brakes 96
Ride control systems 98
Object detection systems 100
Fuel 101
Towing 104

Driving hints

Control of the vehicle

Never coast with engine not running

Many systems will not function in this situation (e.g. brake servo unit, power steering). Driving in this manner is a danger to yourself and others.

Pedals

To ensure the pedal travel is uninhibited, there must be no mats in the area of the pedals.

Power steering

Never leave the steering wheel on full lock when the vehicle is stationary as this may damage the power steering pump.

Starting and operating

New vehicle running-in

Do not brake unnecessarily hard for the first few journeys and after new disc brake pads have been fitted.

During the first drive, smoke may occur because of wax and oil evaporating off the exhaust system. Park the vehicle in the open for a while after the first drive and avoid inhaling the fumes.

Fuel and engine oil consumption may be higher during the running-in period.

Ignition switch positions

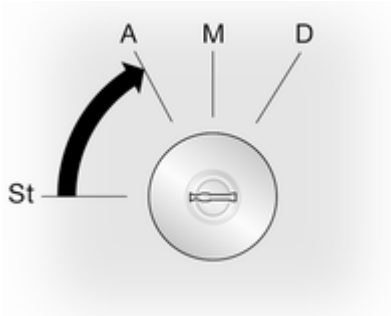

St = Ignition off
A = Steering wheel lock released, ignition off
M = Ignition on, for diesel engine: preheating
D = Starting

Starting the engine

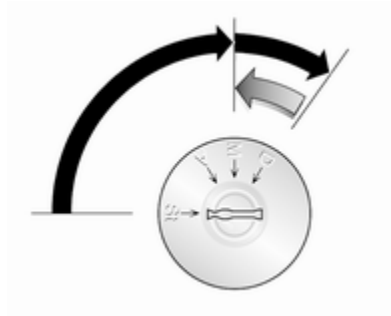

Manual transmission: operate clutch.

Manual transmission automated: operate brake; transmission automatically shifts to **N**.

Do not accelerate.

Diesel engines: turn the key to position **M** for preheating until control indicator goes out.

Turn key to position **D** and release.

The increased engine speed automatically returns to normal idling speed as the engine temperature rises.

Start attempts should not last longer than 15 seconds. If engine does not start, wait 15 seconds before repeating starting procedure. If necessary, depress accelerator before repeating starting procedure.

Before restarting or to switch off the engine, turn key back to **St**.

Overrun cut-off

The fuel supply is automatically cut off during overrun, i.e. when the vehicle is driven with a gear engaged but accelerator is released.

Parking

- Do not park the vehicle on an easily ignitable surface. The high temperature of the exhaust system could ignite the surface.
- Always apply parking brake without pressing release button. Apply as firmly as possible on a downhill or uphill slopes. Operate the foot brake at the same time to reduce operating force.

- Switch off the engine and ignition. Turn the steering wheel until the steering wheel lock is felt to engage.
- If the vehicle is on a level surface or uphill slope, engage first gear before switching off the ignition. On an uphill slope, turn the front wheels away from the kerb.

  If the vehicle is on a downhill slope, engage reverse gear before switching off the ignition. Turn the front wheels towards the kerb.
- Lock the vehicle and activate the anti-theft locking and anti-theft alarm systems.

Engine exhaust

⚠ Danger

Engine exhaust gases contain poisonous carbon monoxide, which is colourless and odourless and could be fatal if inhaled.

If exhaust gases enter the interior of the vehicle, open the windows. Have the cause of the fault rectified by a workshop.

Avoid driving with an open load compartment, otherwise exhaust gases could enter the vehicle.

Diesel particle filter

The diesel particle filter system filters harmful soot particles out of the exhaust gases. The system includes a self-cleaning function that runs automatically during driving. The filter is cleaned by burning off the soot particles at high temperature. This process takes place automatically under set driving conditions and may take up to 20 minutes. Fuel consumption may be higher during this period. The emission of smells and smoke during this process is normal.

Under certain driving conditions, e.g. short distances, the system cannot clean itself automatically.

If control indicator illuminates, continue driving, and as soon as the road and traffic situation permits it, increase speed to more than 60 km/h (40 mph) and diesel particle filter cleaning will start.

Stopping the journey or switching off the engine during cleaning is not recommended.

Caution

If the cleaning process is interrupted more than once, there is a great risk of provoking severe engine damage.

Cleaning takes place quickest at high engine speeds and loads.

The control indicator extinguishes as soon as the self-cleaning operation is complete.

If control indicator fails to extinguish or illuminates in conjunction with , consult a workshop to have the cause of the fault remedied.

Control indicator ⇨ 65.

Catalytic converter

The catalytic converter reduces the amount of harmful substances in the exhaust gases.

Caution

Fuel grades other than those listed on pages ⇨ 101, ⇨ 148 could damage the catalytic converter or electronic components.

Unburnt petrol will overheat and damage the catalytic converter. Therefore avoid excessive use of the starter, running the fuel tank dry and starting the engine by pushing or towing.

In the event of misfiring, uneven engine running, a reduction in engine performance or other unusual problems, have the cause of the fault rectified by a workshop as soon as possible. In an emergency, driving can be continued for a short period, keeping vehicle speed and engine speed low.

If control indicator flashes, the permitted emission limits may be exceeded. Lift your foot off the accelerator until stops flashing and is steadily illuminated. Contact a workshop immediately.

Malfunction indicator light ⇨ 64

Manual transmission

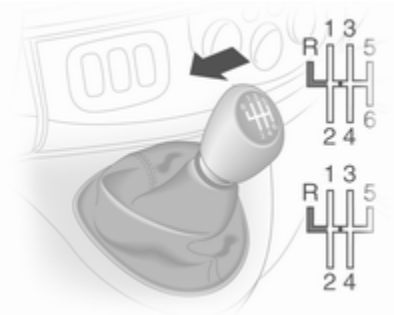

To engage reverse, with the vehicle stationary depress the clutch pedal, pull up the collar on the selector lever and engage the gear against the resistance.

If the gear does not engage, set the lever in neutral, release the clutch pedal and depress again; then repeat gear selection.

Do not grind the clutch unnecessarily.

When operating, depress the clutch pedal completely. Do not use the pedal as a foot rest.

Caution
It is inadvisable to drive with hand resting on the selector lever.

Manual transmission automated

The Easytronic transmission permits manual (manual mode) or automatic gear shifting (automatic mode), both with automatic clutch control.

Transmission display

Shows the mode and current gear.

Starting the engine

Depress the foot brake when starting the engine. If the foot brake is not depressed, illuminates in the transmission display and the engine cannot be started.

When the foot brake is depressed, the transmission automatically shifts to **N** (neutral); "N" appears in the transmission display and the engine can be started. There may be a slight delay.

Selector lever

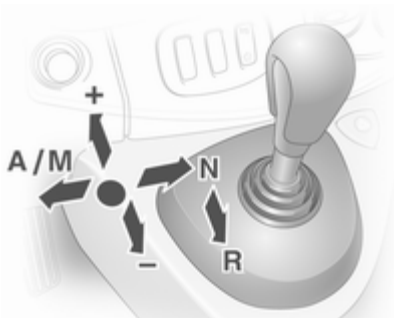

Always move the selector lever in the appropriate direction as far as it will go. Upon release, it automatically returns to the centre position.

N	=	Neutral.
A/M	=	Switch between automatic and manual mode. The transmission display shows "A" when in automatic mode.
R	=	Reverse gear. Engage only when vehicle is stationary. The transmission display shows "R" when reverse gear is engaged.
+	=	Shift to a higher gear.
-	=	Shift to a lower gear.

Starting off

When the engine is started, the transmission is in automatic mode. Depress the foot brake and move the selector lever towards **+** to engage 1st gear. If **R** is selected, reverse gear is engaged. The vehicle starts to move when the foot brake is released. To start off quickly, release the foot brake and accelerate immediately after engaging a gear.

In automatic mode the transmission shifts to other gears automatically, dependent on driving conditions.

To engage manual mode, move the selector lever towards **A/M**. The current gear will appear in the transmission display. To engage 1st gear, depress foot brake and move selector lever towards **+** or **-**. Shift to a higher or lower gear by moving selector lever to **+** or **-**. Gears can be skipped by moving the selector lever repeatedly at short intervals.

Stopping the vehicle

In automatic or manual mode, first gear is engaged and the clutch is released when the vehicle is stopped. In **R**, reverse gear remains engaged.

When stopping on gradients, engage parking brake or depress the foot brake. To prevent overheating of the clutch, an intermittent audible warning may sound as a signal to depress the foot brake or apply the parking brake.

Switch off engine if stopping for a lengthy period, e.g. in traffic jams.

Engine braking

Automatic mode

When driving downhill, the manual transmission automated does not shift into higher gears until a fairly high engine speed has been reached. It shifts down in good time when braking.

Manual mode

To utilise the engine braking effect, select a lower gear in good time when driving downhill.

Rocking the vehicle

Rocking the vehicle is only permissible if the vehicle is stuck in sand, mud, snow or a hole. Move the selector lever between R and A/M (or between + and -) in a repeat pattern, while applying light pressure to the accelerator pedal. Do not race the engine and avoid sudden acceleration.

Parking

Apply the parking brake. The most recently engaged gear (see transmission display) remains engaged. With N, no gear is engaged.

When the ignition is switched off, the transmission no longer responds to movement of the selector lever.

Manual mode

If a higher gear is selected when the engine speed is too low, or a lower gear when the speed is too high, the shift is not executed. This prevents the engine from running at too low or too high an engine speed.

If engine speed is too low, the transmission automatically shifts to a lower gear.

If engine speed is too high, the transmission only switches to a higher gear via kickdown.

Electronic driving programmes

Winter mode ❄

Activate the Winter mode if you have problems starting off on a slippery road surface.

Activation

Press the ❄ button. ❄ is shown in the transmission display. The transmission switches to automatic mode and the vehicle starts off in a suitable gear.

Deactivation

The Winter mode is switched off by:

- pressing the ❄ button again,
- turning off the ignition,
- switching to manual mode.

In order to protect the transmission at extremely high clutch temperatures, an intermittent audible warning may sound. In such cases, depress the foot brake, select "N" and apply the parking brake to allow the clutch to cool down.

Laden mode kg

It is possible to use the Laden mode in both manual and automatic modes. In both cases, the gear shifting patterns are adapted automatically for carrying an increased payload.

Activation

Press the **kg** button. **kg** is shown in the transmission display. The transmission will then select optimized gear shift patterns.

Deactivation

The Laden mode is switched off by:

- pressing the **kg** button again,
- turning off the ignition.

Kickdown

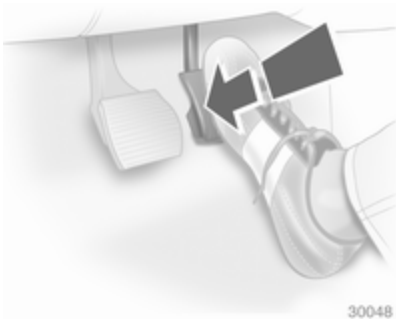

If the accelerator pedal is pressed past the pressure point, the transmission shifts to a lower gear depending on engine speed. Full engine power is available for acceleration.

If engine speed is too high the transmission switches to a higher gear, even in manual mode. Without kickdown this automatic shift is not effected in manual mode.

Fault

In the event of a fault, is shown in the transmission display. Continued driving is possible provided the vehicle is driven with care and anticipation.

Have the cause of the fault remedied by a workshop.

Interruption of power supply

The clutch is not disengaged if there is an interruption of the power supply when a gear is engaged. The vehicle cannot move.

If the battery is discharged, start the vehicle using jump leads ⇨ 130.

If the cause of the fault is not a discharged battery, seek the assistance of a workshop.

Brakes

The brake system comprises two independent brake circuits.

If a brake circuit fails, the vehicle can still be braked using the other brake circuit. However, braking effect is achieved only when you depress the brake pedal firmly. You need to use considerably more force for this. The braking distance is extended. Seek the assistance of a workshop before continuing your journey.

When the engine is not running, the support of the brake servo unit disappears once the brake pedal has been depressed once or twice. Braking effect is not reduced, but braking requires significantly greater force. It is especially important to bear this in mind when being towed.

Control indicator ⇨ 65.

Antilock brake system

Antilock brake system (ABS) prevents the wheels from locking.

ABS starts to regulate brake pressure as soon as a wheel shows a tendency to lock. The vehicle remains steerable, even during hard braking.

ABS control is made apparent through a pulse in the brake pedal and the noise of the regulation process.

For optimum braking, keep the brake pedal fully depressed throughout the braking process, despite the fact that the pedal is pulsating. Do not reduce the pressure on the pedal.

Control indicator ⇨ 65.

Fault

⚠ Warning

If there is a fault in the ABS, the wheels may be liable to lock due to braking that is heavier than normal. The advantages of ABS are no longer available. During hard braking, the vehicle can no longer be steered and may swerve.

Have the cause of the fault remedied by a workshop.

Parking brake

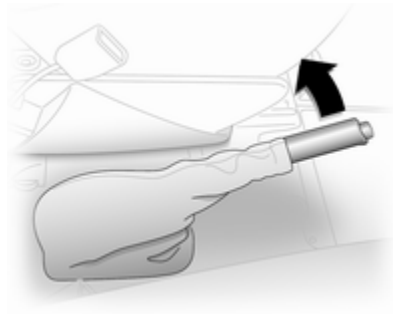

Always apply parking brake firmly without operating the release button, and apply as firmly as possible on a downhill or uphill slope.

To release the parking brake, pull the lever up slightly, press the release button and fully lower the lever.

To reduce the operating forces of the parking brake, depress the foot brake at the same time.

Control indicator (!) ⇨ 65.

Brake assist

If the brake pedal is depressed quickly and forcefully, maximum brake force is automatically applied (full braking).

Maintain steady pressure on the brake pedal for as long as full braking is required. Maximum brake force is automatically reduced when the brake pedal is released.

Ride control systems

Traction Control system

The Traction Control system (TC) is a component part of the Electronic Stability Program (ESP®Plus) which improves driving stability when necessary, regardless of the type of road surface or tyre grip, by preventing the drive wheels from spinning.

As soon as the drive wheels starts to spin, engine output is reduced and the wheel spinning the most is braked individually. This considerably improves the driving stability of the vehicle on slippery road surfaces.

TC is operational as soon as the ignition is switched on and control indicator extinguishes in the instrument cluster.

When TC is active flashes.

⚠Warning

Do not let this special safety feature tempt you into taking risks when driving.

Adapt speed to the road conditions.

Control indicator ➪ 65.

Deactivation

When spinning of the drive wheels is required TC can be deactivated:

Press the button. Control indicator illuminates in the instrument cluster.

TC is reactivated by pressing the button again. Control indicator extinguishes in the instrument cluster. TC is also reactivated the next time the ignition is switched on.

When vehicle speed reaches 50 km/h (30 mph) the TC function will be restored automatically.

Electronic stability program

The Electronic Stability Program (ESP®Plus) improves driving stability when necessary, regardless of the type of road surface or tyre grip. It also prevents the drive wheels from spinning.

As soon as the vehicle starts to swerve (understeer/oversteer), engine output is reduced and the wheels are braked individually. This considerably improves the driving stability of the vehicle on slippery road surfaces.

ESP®Plus is operational as soon as the ignition is switched on and control indicator extinguishes in the instrument cluster.

When ESP®Plus comes into action flashes.

⚠Warning

Do not let this special safety feature tempt you into taking risks when driving.

Adapt speed to the road conditions.

Control indicator ⇨ 65.

Deactivation

When spinning of the drive wheels is required ESP®Plus can be deactivated:

Press the button. Control indicator illuminates in the instrument cluster.

ESP®Plus is reactivated by pressing the button again. Control indicator extinguishes in the instrument cluster. ESP®Plus is also reactivated the next time the ignition is switched on.

When vehicle speed reaches 50 km/h (30 mph) the ESP®Plus function will be restored automatically.

Object detection systems

Parking assist

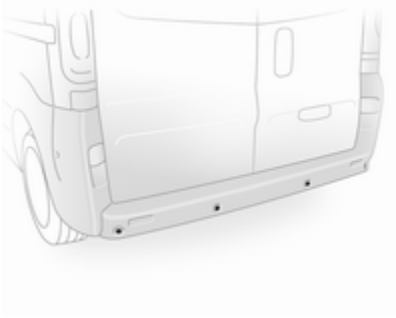

The parking assist makes reverse parking easier by measuring the distance between the rear of the vehicle and obstacles. It is the driver, however, who bears full responsibility for parking.

The system consists of four ultrasonic parking sensors in the rear bumper.

Note
Attached parts in the detection area cause system malfunction.

Activation

When reverse gear is engaged, the system switches itself on automatically. Readiness for operation is indicated by a brief acoustic alarm.

An obstacle is indicated by buzzers. The interval between the buzzers becomes shorter as the vehicle gets closer to the obstacle. When the distance is less than 30 cm (1 ft), the buzzer is continuous.

⚠ Warning

Under certain circumstances, various reflective surfaces on objects or clothing as well as external noise sources may cause the system to fail to detect obstacles.

Deactivation

It is possible to permanently or temporarily deactivate the system.

Temporary deactivation
Temporarily deactivate the system by pressing the button on the instrument panel with the ignition on and reverse gear engaged. When reverse gear is selected no acoustic signal will sound, indicating deactivation.

The function is reactivated by pressing button again or the next time the ignition is switched on.

Permanent deactivation

Permanently deactivate the system by pressing and holding the button on the instrument panel for approx. 3 seconds with the ignition on and reverse gear engaged. The system is deactivated and will not operate. When reverse gear is selected no acoustic signal will sound, indicating deactivation.

The function is reactivated by pressing and holding button for approx. 3 seconds.

Fault

If the system detects an operating fault, a continuous acoustic alarm will sound for approx. 5 seconds when selecting reverse gear. Consult a workshop to have the cause of the fault remedied.

Fuel

Fuel for petrol engines

Only use unleaded fuel that complies with DIN EN 228.

Fuels with ethanol content greater than 5 % may only be used if the vehicle has been specifically developed and approved for these fuels.

Use fuel with the recommended octane rating ⇨ 148. Use of fuel with too low an octane rating can reduce engine power and torque and slightly increases fuel consumption.

Caution
Use of fuel with too low an octane rating could lead to uncontrolled combustion and engine damage.

Fuel for diesel engines

Only use diesel fuel that complies with DIN EN 590. The fuel must have low sulphur content (max. 50 ppm). Equivalent standardised fuels with a biodiesel (= FAME according to EN14214) content of max. 10% by volume (like DIN 51628 or equivalent standards) may be used.

Do not use marine diesel oils, heating oils or entirely plant-based diesel fuels, such as rape seed oil or bio diesel, Aquazole and similar diesel-water emulsions. Diesel fuels must not be diluted with fuels for petrol engines.

The flow and filterability of diesel fuels are temperature-dependent. When temperatures are low, refuel with diesel fuel with guaranteed winter properties.

Refuelling

⚠ Danger

Before refuelling, switch off engine and any external heaters with combustion chambers (identified by sticker on fuel filler flap). Switch off any mobile phones.

Follow the operating and safety instructions of the filling station when refuelling.

⚠ Danger

Fuel is flammable and explosive. No smoking. No naked flames or sparks.

If you can smell fuel in your vehicle, have the cause of this remedied immediately by a workshop.

The fuel tank filler neck with bayonet cap is located on the left hand side of the vehicle.

The fuel filler flap can only be opened if the vehicle is unlocked.

To unlock and open the fuel filler cap, insert key and turn anticlockwise. When refuelling is complete, replace the filler cap and turn key clockwise as far as it will go.

Caution

Wipe off any overflowing fuel immediately.

Fault

Should an interruption to the power supply occur, central locking will not unlock the fuel filler flap. In such cases release manually.

To open

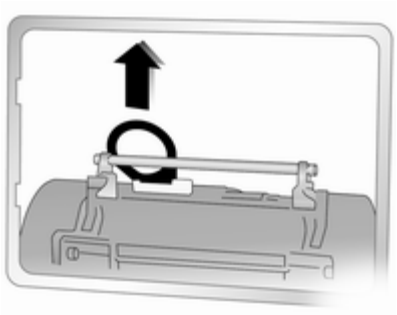

- Reposition left front seat to access the release cover.
- Remove the release cover and position the seat belt to one side.
- Raise fuel filler release to unlock the fuel filler flap.

To close

- Close the fuel filler flap and lower fuel filler release to lock the fuel filler flap.
- Replace the release cover.
- Reposition left front seat.

If the cause of the interruption to the power supply is not a discharged battery, consult a workshop.

Fuel consumption - CO_2-Emissions

The determination of fuel consumption is regulated by European directive 80/1268/EEC (latest edition 2004/3/EC).

The directive is oriented to actual driving practices: Urban driving is rated at approx. $^1/_3$ and extra urban driving with approx. $^2/_3$. Cold starts and acceleration phases are also taken into consideration.

The specification of CO_2 emission is also a constituent of the directive.

Fuel consumption is dependent on personal driving style as well as road and traffic conditions.

The calculation of fuel consumption takes account of the vehicle's kerb weight, ascertained in accordance with the regulations. Optional equipment may result in slightly higher fuel consumption and CO_2 emission levels and a lower maximum speed.

Towing

General information

Only use towing equipment that has been approved for your vehicle. Entrust retrofitting of towing equipment to a workshop. It may be necessary to make changes that affect the cooling system, heat shields or other equipment.

Installation dimensions of factory-fitted towing equipment ⇨ 157.

Driving characteristics and towing tips

In the case of trailers with brakes, attach the breakaway stopping cable.

Before attaching a trailer, lubricate the coupling ball. However, do not do so if a stabiliser, which acts on the coupling ball, is being used to reduce snaking movements. For trailers with low driving stability the use of a stabiliser is recommended.

A maximum speed of 80 km/h (50 mph)must not be exceeded, even in countries where higher speeds are permitted.

If the trailer starts snaking, drive more slowly, do not attempt to correct the steering and brake sharply if necessary.

When driving downhill, drive in the same gear as if driving uphill and drive at a similar speed.

Adjust tyre pressure to the value specified for full load ⇨ 156.

Trailer towing

Trailer loads

The permissible trailer loads are vehicle and engine-dependent maximum values which must not be exceeded. The actual trailer load is the difference between the actual gross weight of the trailer and the actual coupling socket load with the trailer coupled.

The permissible trailer loads are specified in the vehicle documents. In general, they are valid for gradients up to max. 12 %.

The permitted trailer load applies up to the specified incline and up to an altitude of 1000 metres above sea level. Since engine power decreases as altitude increases due to the air becoming thinner, therefore reducing climbing ability, the permissible gross train weight also decreases by 10 % for every 1000 metres of additional altitude. The gross train weight does not have to be reduced when driving on roads with slight inclines (less than 8 %, e.g. motorways).

The permissible gross train weight must not be exceeded. This weight is specified on the identification plate ⇨ 146.

Vertical coupling load

The vertical coupling load is the load exerted by the trailer on the coupling ball. It can be varied by changing the weight distribution when loading the trailer.

The maximum permissible vertical coupling load is specified on the towing equipment identification plate and in the vehicle documents. Always aim for the maximum load, especially in the case of heavy trailers. The vertical coupling load should never fall below 25 kg.

In the case of trailer loads of 1200 kg or more, the vertical coupling load should not be less than 50 kg.

Rear axle load

When the trailer is coupled and the towing vehicle fully loaded (including all occupants), the permissible rear axle load (see identification plate or vehicle documents) must not be exceeded.

Towing equipment

Caution
When operating without a trailer, remove the coupling ball bar.

Towing equipment audible warning

For vehicles fitted with towing equipment, when connected to a trailer the pitch of the audible warning changes upon operation of the turn signals.

The pitch of the audible warning will change if a turn signal light on the trailer or the towing vehicle fails.

Vehicle care

General Information 106
Vehicle checks 107
Bulb replacement 115
Electrical system 119
Vehicle tools 121
Wheels and tyres 122
Jump starting 130
Towing 132
Appearance care 133

General Information

Accessories and vehicle modifications

We recommend using Genuine Parts and Accessories and factory approved parts specific for your vehicle type. We cannot assess or guarantee reliability of other products - even if they have a regulatory or otherwise granted approval.

Do not make any modifications to the electrical system, e.g. changes of electronic control units (chip tuning).

Vehicle storage

Storage for a long period of time

The following tasks must be carried out if the vehicle is to be stored for several months:

- Wash and wax the vehicle.
- Have the wax in the engine compartment and underbody checked.
- Clean and preserve rubber seals.
- Change engine oil.
- Drain washer fluid reservoir.
- Check coolant antifreeze.
- Adjust tyre pressure to the value specified for full load.
- Park vehicle in a dry, well ventilated place. Engage first or reverse gear. Prevent the vehicle from rolling.
- Do not apply parking brake.
- Open bonnet, close all doors and lock the vehicle.
- Disconnect the clamp from the negative terminal of the vehicle battery. Beware that all systems are not functional, e.g. anti-theft alarm system.

Putting back into operation

The following tasks must be carried out if the vehicle is being put back into operation:

- Connect the clamp to the negative terminal of the vehicle battery. Activate the electronics of the power windows.
- Check tyre pressure.
- Fill up the washer fluid reservoir.

- Check the engine oil level.
- Check the coolant level.
- Fit the number plate, if necessary.

End-of-life vehicle recovery

Information on end-of-life vehicle recovery centres and the recycling of end-of-life vehicles is available on our website. Only entrust this work to an authorised recycling centre.

Vehicle checks

Performing work

⚠ Warning

Only perform engine compartment checks when the ignition is off.

The cooling fan may start operating even if the ignition is off.

⚠ Danger

The ignition system generates extremely high voltages. Do not touch.

The caps for topping up the engine oil, the coolant, the washer fluid and the oil dipstick handle are yellow for ease of identification.

Bonnet

Opening

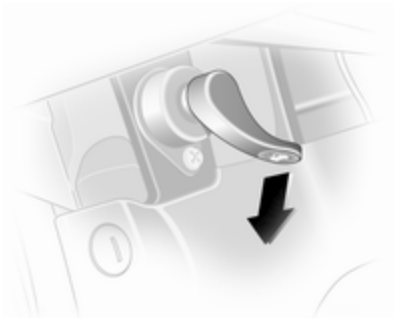

Pull the release lever and return it to its original position.

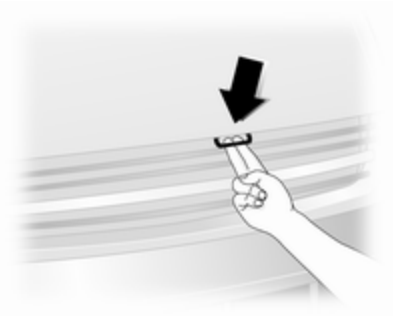

Pull the safety catch and open the bonnet.

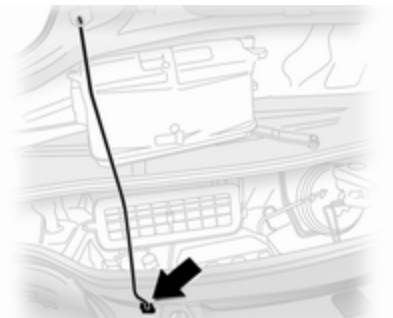

Secure the bonnet support.

Closing

Before closing the bonnet, press the support into the holder.

Lower the bonnet and allow it to drop into the catch. Check that the bonnet is engaged.

Engine oil

It is advisable to check the engine oil level manually before embarking on a long journey.

Check with the vehicle on a level surface. The engine must be at operating temperature and switched off for at least 10 minutes.

Pull out the dipstick, wipe it clean, insert it to the stop on the handle, pull out and read the engine oil level.

Caution
It is the owner's responsibility to maintain the proper level of an appropriate quality oil in the engine.

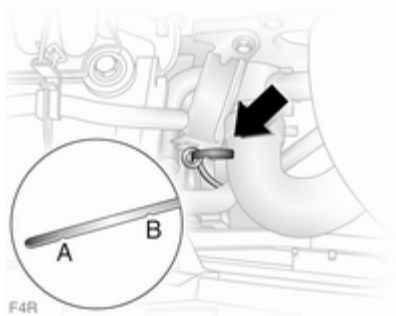

Different dipsticks are used depending on engine variant. The illustrations show checking and replenishing the engine oil in the petrol and diesel engines respectively.

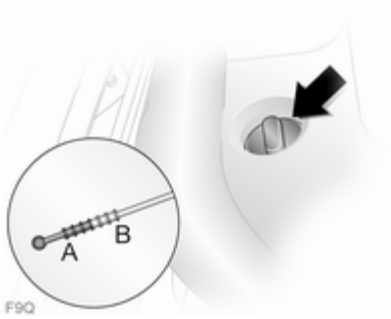

On F9Q engines, the dipstick is mounted on the oil filler cap which must be rotated anticlockwise to open.

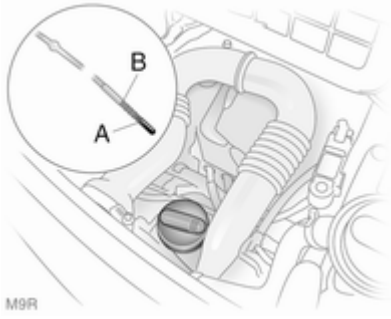

For M9R engines, rotate cap anticlockwise, remove the dipstick, wipe it clean and re-insert it as far as it will go.

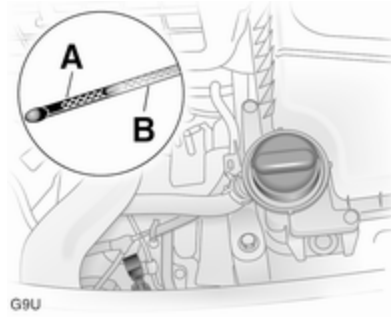

When the engine oil level has dropped to the "add oil" mark **A**, top up engine oil.

Caution
Do not allow the engine oil level to drop below the minimum level!

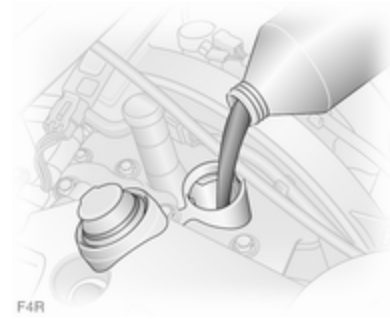

We recommend the use of the same type of engine oil that was used at the last change.

The engine oil level must not exceed the maximum mark **B** on the dipstick.

Caution
Overfilled engine oil must be drained or suctioned out.

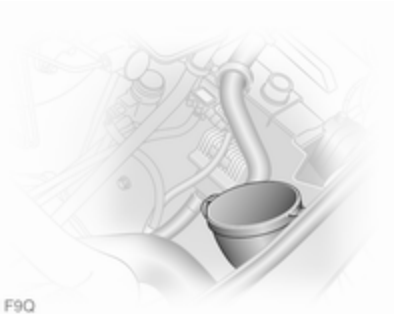

To prevent spillage when replenishing the engine oil on F9Q engines, use the funnel stored in the front of the engine compartment.

To release the funnel, raise the plastic catch on the funnel and lift upwards.

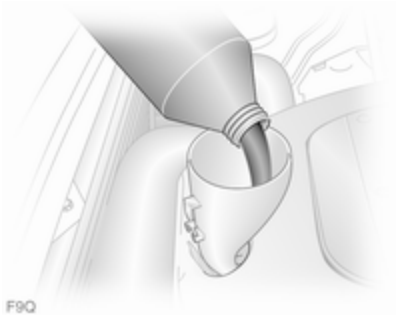

Remove the caps and ensure funnel is securely located onto the filler pipe.

Ensure the funnel is replaced securely together with both end caps fitted.

A stabilization of the engine oil consumption will not take place until the vehicle has been driven several thousand kilometres/miles. Only then can the actual degree of consumption be established.

If consumption exceeds more than 0.5 litres every 1000 km (600 miles) after this running-in period, consult a workshop.

Capacities ⇨ 155, Change engine oil ⇨ 66.

Fit the cap on straight and tighten it.

Engine air filter

Engine air flow indicator

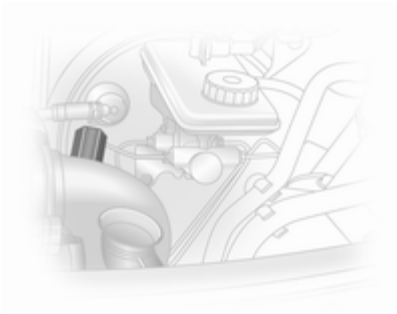

On certain models, an indicator is located in the engine induction system and indicates if the air-intake to the engine is restricted.

Clear	=	No restriction
Red tell-tale	=	Restricted

If the red tell-tale is displayed when the engine is running, consult a workshop.

Engine coolant

The coolant provides freeze protection down to approx. -28 °C.

Caution
Only use approved antifreeze.

Coolant level

Caution
Too low a coolant level can cause engine damage.

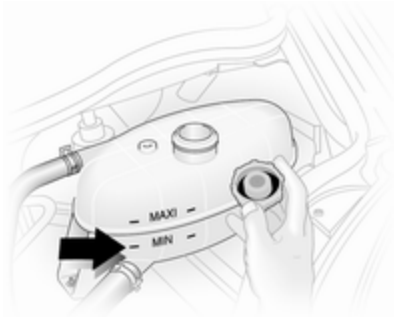

If the cooling system is cold, the coolant level should be just above the **MIN** mark. Top up if the level is low.

⚠ Warning
Allow the engine to cool before opening the cap. Carefully open the cap, relieving the pressure slowly.

Top up with antifreeze. If no antifreeze is available, use clean tap water or distilled water. Install the cap tightly. Have the antifreeze concentration checked and have the cause of the coolant loss remedied by a workshop.

If a substantial amount of coolant is required, it will be necessary to bleed any trapped air from the cooling system. Seek the assistance of a workshop.

Power steering fluid

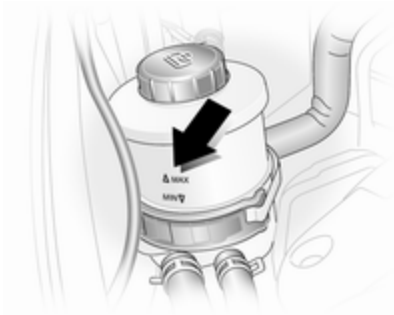

The power steering fluid does not require any additional maintenance than that detailed in the chapter "Service and maintenance" ⇨ 137.

If the fluid level in the reservoir falls below the **MIN** mark consult a workshop.

Washer fluid

Fill with clean water mixed with a suitable quantity of windscreen washer fluid which contains antifreeze.

Brakes

A squealing noise indicates that the brake lining is at its minimum thickness. Continued driving is possible but have the brake lining replaced as soon as possible.

Once new brake linings are installed, do not brake unnecessarily hard for the first few journeys.

Brake fluid

⚠ Warning

Brake fluid is poisonous and corrosive. Avoid contact with eyes, skin, fabrics and painted surfaces.

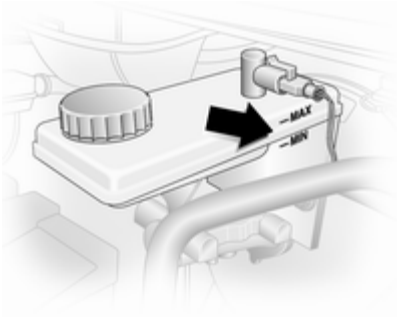

The brake fluid level must be between the **MIN** and **MAX** marks.

When topping up, ensure maximum cleanliness as contamination of the brake fluid can lead to brake system malfunctions. Have the cause of the loss of brake fluid remedied by a workshop.

Only use high-performance brake fluid approved for your vehicle.

Brake and clutch fluid ⇨ 142.

Battery

The vehicle battery is maintenance-free.

Batteries do not belong in household waste. They must be disposed of at an appropriate recycling collection point.

Laying up the vehicle for more than 4 weeks can lead to battery discharge. Disconnect the clamp from the negative terminal of the vehicle battery.

Ensure the ignition is switched off before connecting or disconnecting the vehicle battery.

The anti-theft alarm siren must be deactivated as follows: switch the ignition on then off, disconnect the vehicle's battery within 15 seconds.

Battery access

The battery is located beneath the front left hand seat floor panel ⇨ 130.

Battery maintenance

⚠ Danger

Ensure adequate ventilation when charging the battery. There is a risk of explosion if gases generated during charging are allowed to accumulate!

Replacing the battery

When the battery is being replaced, please ensure that there are no open ventilation holes in the vicinity of the positive terminal. If a ventilation hole is open in this area, it must be closed off with a dummy cap, and the ventilation in the vicinity of the negative terminal must be opened.

Only use batteries that allow the fuse box to be mounted above the battery. We recommend that you have the battery replaced by a workshop.

Additional battery

Depending on the vehicle's auxiliary equipment certain models may have an additional battery located next to the vehicle battery.

Diesel fuel filter

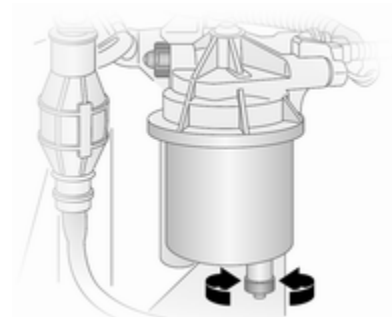

Drain diesel fuel filter of residual water at every engine oil change.

Place a container underneath the filter housing. Loosen the knurled screws on the filter cover and on the lower part of the filter by approx. one turn, to drain off the water.

The filter is drained as soon as diesel fuel emerges from the knurled screw at the bottom. Retighten the two screws.

Check diesel fuel filter at shorter intervals if the vehicle is subjected to extreme operating conditions ⇨ 142.

Diesel fuel system bleeding

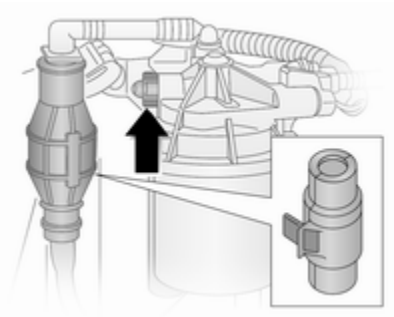

If the fuel tank has been run dry, it will be necessary to air vent or bleed the diesel fuel system.

Fill the tank with fuel and proceed as follows:

1. Remove the protective cover from the in-line supply pump.
2. Place a suitable container underneath the fuel filter vent screw to collect fuel.
3. Loosen the vent screw (arrowed) by one turn.
4. Manually operate the in-line supply pump slowly and steadily until fuel discharging from the loosened vent screw is free of air bubbles.
5. Retighten the vent screw.
6. Refit the protective cover to the in-line supply pump.

Wiper blade replacement

Wiper blades on the windscreen

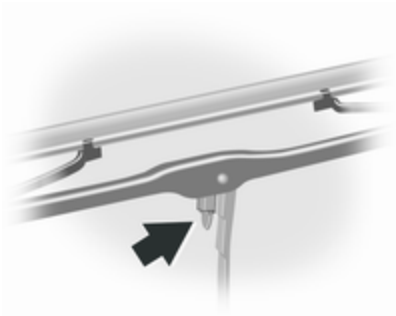

Lift wiper arm, press retaining clip towards wiper arm and detach wiper blade.

Wiper blade on the rear window

Lift wiper arm, rotate wiper blade and detach.

Bulb replacement

Switch off the ignition and turn off the relevant switch or close the doors.

Only hold a new bulb at the base! Do not touch the bulb glass with bare hands.

Use only the same bulb type for replacement.

Headlights

Low beam and high beam

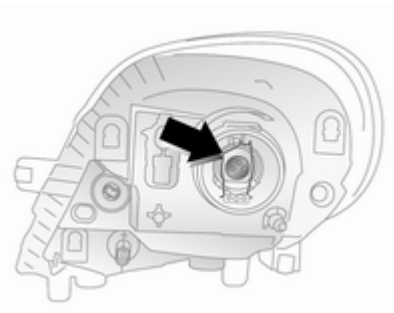

1. Remove harness connector.
2. Remove rubber seal.
3. Release retaining clip and remove bulb.
4. Renew bulb and install retaining clip ensuring that bulb is in correct orientation.
5. Install rubber seal and harness connector.

Sidelights

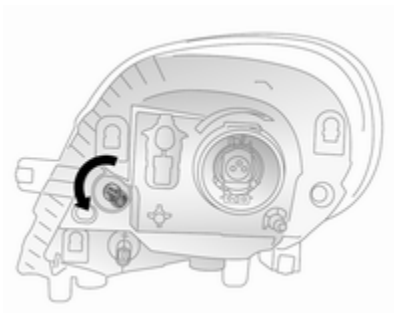

1. Remove bulb holder from reflector housing by rotating through 90°.
2. Renew bulb.
3. Install bulb holder in reflector housing.

Fog lights

Have bulbs replaced by a workshop.

Front turn signal lights

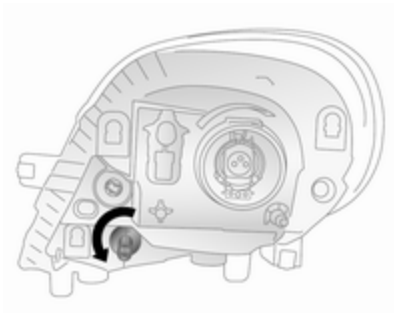

1. Remove bulb holder from reflector housing by rotating through 90°.
2. Renew bulb.
3. Install bulb holder in reflector housing.

Tail lights

Rear brake, turn signal and tail lights

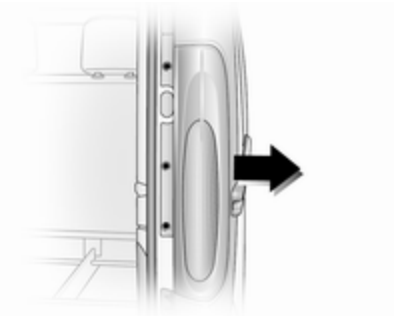

1. Remove 3 screws (using the tool supplied).
2. Carefully pull lamp assembly from retaining pins on the outer side and remove.

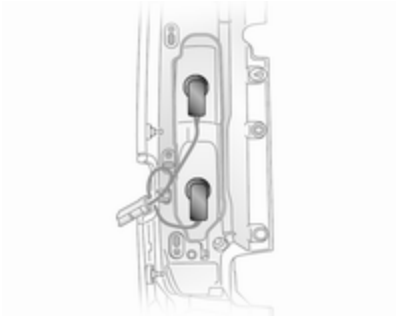

3. Twist bulb holder to separate from lamp assembly.
4. Renew bulb.
5. Push to install the bulb holder into the lamp assembly - then twist to secure.
6. Check that the wiring harness is located correctly.
7. Replace lamp assembly into original position, ensuring that it is seated correctly.
8. Fit lamp assembly onto retaining pins and replace 3 screws.

Side turn signal lights

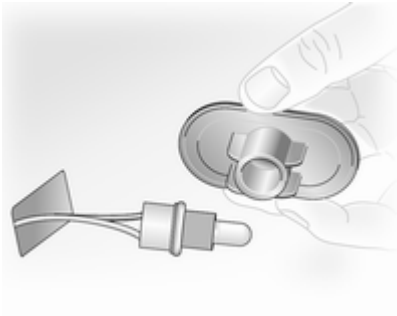

1. Release clips from wing using a flat blade screwdriver and lift out lamp assembly from aperture.
2. Remove bulb holder from lamp assembly by rotating through 90° and renew bulb.
3. Install bulb holder in lamp assembly and install lamp assembly into aperture.

Centre high-mounted brake light

Have bulbs replaced by a workshop.

Reversing light

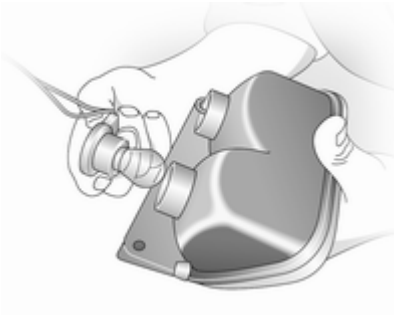

1. Remove 2 screws (using the tool supplied) and remove lamp assembly.
2. Twist bulb housing to separate from lamp assembly.
3. Renew bulb.
4. Push to install the bulb holder into the lamp assembly - then twist to secure.
5. Install lamp assembly with 2 screws.

Number plate light

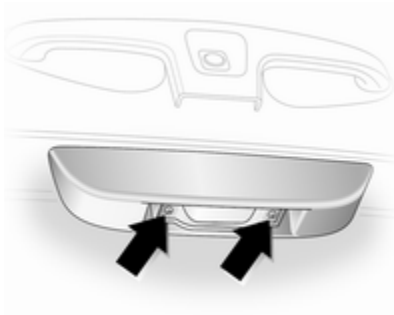

1. Remove 2 screws (arrowed) and remove lens.
2. Renew bulb.
3. Re-install lens and replace screws.

Fog tail light

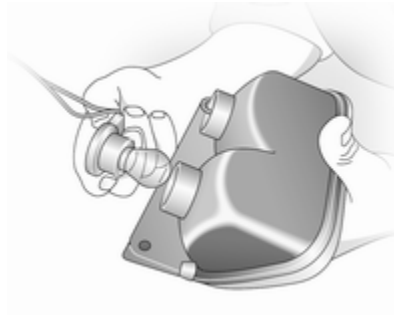

1. Remove 2 screws (using the tool supplied) and remove lamp assembly.
2. Twist bulb housing to separate from lamp assembly.
3. Renew bulb.
4. Push to install the bulb holder into the lamp assembly - then twist to secure.
5. Install lamp assembly with 2 screws.

Interior lights

Front courtesy light

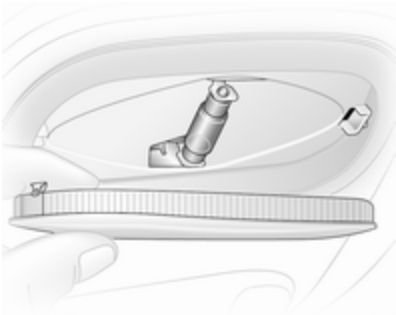

1. Remove lens using a flat blade screwdriver.
2. Renew bulb.
3. Reinstall lens assembly.

Load compartment light

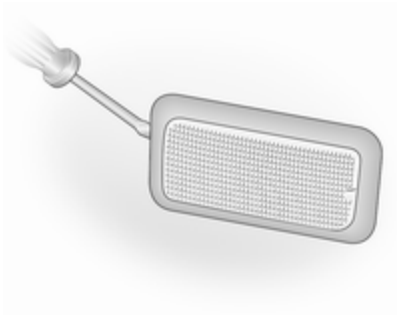

1. Remove lamp assembly using a flat blade screwdriver.
2. Gain access to bulb by removing rear cover on lamp assembly.
3. Renew bulb and install rear cover.
4. Reinstall lamp assembly.

Rear courtesy lights

Have bulbs replaced by a workshop.

Glovebox light

Have bulbs replaced by a workshop.

Instrument panel illumination

Have bulbs replaced by a workshop.

Electrical system

Fuses

Data on the replacement fuse must match the data on the defective fuse.

The fuse box is located on the left-hand side of the instrument panel, below the cupholder.

Before replacing a fuse, turn off the respective switch and the ignition.

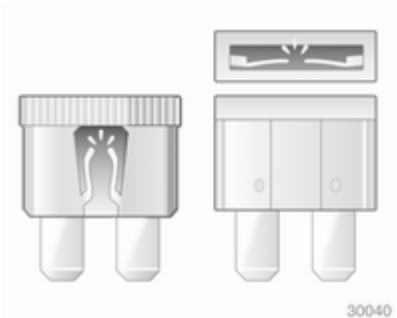

A blown fuse can be recognised by its melted wire. Do not replace the fuse until the cause of the fault has been remedied.

It is advisable to carry a full set of fuses. Provision is made in the fuse box for the storing of spare fuses.

Some functions are protected by several fuses.

Fuses may also be inserted without existence of a function.

Fuse extractor

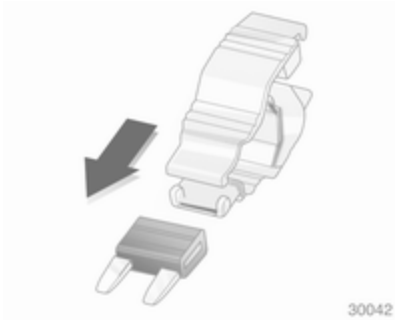

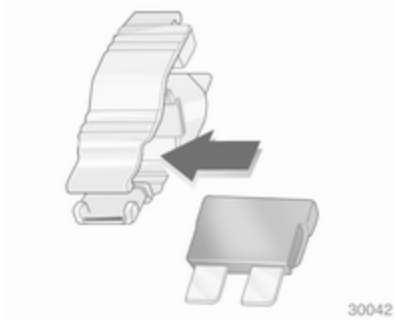

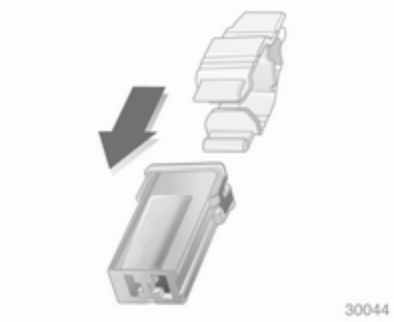

To help in replacing fuses, a fuse extractor is located in the fuse box.

Place the fuse extractor on the various types of fuse from the top or side, and withdraw fuse.

Instrument panel fuse box

Located on the left-hand side of the instrument panel, below the cupholder.

Remove the ashtray from the left-hand cup holder and pull open the fuse box cover. Do not store any objects behind the cover.

Some circuits may be protected by several fuses.

Symbol	Application
	Air conditioning
	Heated exterior mirrors
	Heated front seats
	Power windows
	Left-hand high beam
	Right-hand high beam
	Windscreen wiper
	Radio/Infotainment system
	Cigarette lighter
Boiler	Rear passenger compartment heater
	Horn
	Left-hand low beam
	Right-hand low beam
	Instrument panel

Symbol	Application
	Heating
	Interior lamp
	Antilock brake system
	Heated rear windows
	Clock, interior lights, radio, Infotainment system
UCH INJ	Fuel injection system
	Rear window washer
	Rear widow wiper
	Left-hand sidelight
	Right-hand sidelight
	Central locking
	Electrically adjustable exterior mirrors
STOP	Stop control indicator, daytime running lights
	Rear fog lights

Symbol	Application
	Front fog lights
	Power outlet
T	Tachograph

Vehicle tools

Tools

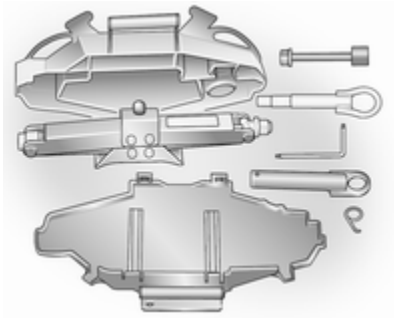

The jack, adapters, ratchet, torx key, hub cap hook, towing eye and spare wheel security tool are contained in a unit, stowed under the driver's seat.

Spare wheel ⇨ 129.

Vehicles with a tyre repair kit: The towing eye and torx key are stored within the tyre repair kit case, stowed under the front seat.

Tyre repair kit ⇨ 124.

Wheels and tyres

Tyre condition, wheel condition

Drive over edges slowly and at right angles if possible. Driving over sharp edges can cause tyre and wheel damage. Do not trap tyres on the kerb when parking.

Regularly check the wheels for damage. Seek the assistance of a workshop in the event of damage or unusual wear.

Tyres

Factory-fitted tyres are matched to the chassis and offer optimum driving comfort and safety.

Winter tyres

Winter tyres improve driving safety at temperatures below 7 °C and should therefore be fitted on all wheels.

In accordance with country-specific regulations, a notice indicating the maximum permissible speed for the tyres must be affixed within the driver's field of vision.

Tyre designations

E.g. **195/65 R 16 C 88 Q**

195 = Tyre width, mm
65 = Cross-section ratio (tyre height to tyre width), %
R = Belt type: Radial
RF = Type: RunFlat
16 = Wheel diameter, inches
C = Cargo or commercial use
88 = Load index e.g. 88 is equivalent to 567 kg
Q = Speed code letter

Speed code letter:

Q = up to 160 km/h (100 mph)
S = up to 180 km/h (112 mph)
T = up to 190 km/h (118 mph)
H = up to 210 km/h (130 mph)
V = up to 240 km/h (150 mph)
W = up to 270 km/h (168 mph)

Tyre pressure

Check the pressure of cold tyres at least every 14 days and before any long journey. Do not forget the spare wheel.

Tyre pressures ⇨ 156.

The tyre pressure data refers to cold tyres. It applies to summer and winter tyres.

Always inflate the spare tyre to the pressure specified for full load.

Incorrect tyre pressures will impair safety, vehicle handling, comfort and fuel economy and will increase tyre wear.

⚠ Warning

If the pressure is too low, this can result in considerable tyre warm-up and internal damage, leading to tread separation and even to tyre blow-out at high speeds.

Tread depth

Check tread depth at regular intervals.

Tyres should be replaced for safety reasons at a tread depth of 2-3 mm (4 mm for winter tyres).

The legally permissible minimum tread depth (1.6 mm) has been reached when the tread has worn down as far as one of the tread wear indicators (TWI). Their position is indicated by markings on the sidewall.

If there is more wear at the front than the rear, swap round front wheels and rear wheels. Ensure that the direction of rotation of the wheels is the same as before.

Tyres age, even if they are not used. We recommend tyre replacement every 6 years.

Changing tyre and wheel size

If tyres of a different size than those fitted at the factory are used, it may be necessary to reprogramme the speedometer and make other vehicle modifications.

⚠ Warning

Use of unsuitable tyres or wheels may lead to accidents and will invalidate the vehicle type approval.

Wheel covers

Wheel covers and tyres that are factory approved for the respective vehicle and comply with all of the relevant wheel and tyre combination requirements must be used.

If the wheel covers and tyres used are not factory approved, the tyres must not have a rim protection ridge.

Wheel covers must not impair brake cooling.

⚠ Warning

Use of unsuitable tyres or wheel covers could lead to sudden pressure loss and thereby accidents.

Tyre chains

Tyre chains are only permitted on the front wheels.

Always use fine mesh chains that add no more than 15 mm to the tyre tread and the inboard sides (including chain lock).

⚠Warning
Damage may lead to tyre blowout.

Wheel covers on steel wheels may come into contact with parts of the chains. In such cases, remove the wheel covers.

Tyre chains may only be used at speeds up to 50 km/h (30 mph) and, when travelling on roads that are free of snow, they may only be used for brief periods since they are subject to rapid wear on a hard road and may snap.

The use of tyre chains is not permitted on the temporary spare wheel.

Tyre repair kit

Minor damage to the tyre tread or sidewall can be repaired with the tyre repair kit.

Do not remove foreign bodies from the tyres.

Tyre damage exceeding 4 mm or that is at tyre's sidewall near the rim cannot be repaired with the tyre repair kit.

⚠Warning
Do not drive faster than 80 km/h (50 mph). Do not use for a lengthy period. Steering and handling may be affected.

If the vehicle has a flat tyre:

Apply the parking brake and engage first gear or reverse gear.

The tyre repair kit is located under the front seat.

1. Remove the compressor from the tyre repair kit.
2. Remove the electrical connection cable and air hose from the compartments on the underside of the compressor.

3. Screw the compressor air hose to the connection on the sealant bottle.
4. Fit the sealant bottle into the retainer on the compressor.

   Set the compressor near the tyre in such a way that the sealant bottle is upright.
5. Unscrew valve cap from defective tyre.

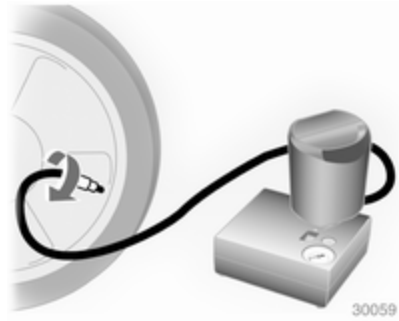

6. Screw the filler hose to the tyre valve.
7. The switch on the compressor must be set to **O**.
8. Connect the compressor plug to the power outlet or cigarette lighter socket.

   To avoid discharging the battery, we recommend running the engine.

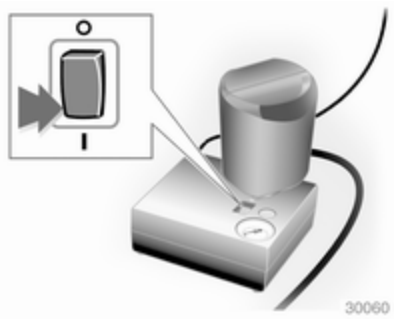

9. Set the rocker switch on the compressor to **I**. The tyre is filled with sealant.
10. The compressor pressure gauge briefly indicates up to 6 bar (600 kPa/87 psi). Then the pressure starts to drop.
11. All of the sealant is pumped into the tyre. Then the tyre is inflated.

12. The prescribed tyre pressure should be obtained within 10 minutes. Tyre pressure ⇨ 156. When the correct pressure is obtained, switch off the compressor.

    If the prescribed tyre pressure is not obtained within 10 minutes, remove the tyre repair kit. Move the vehicle one tyre rotation (approx. 2 metres). Reattach the tyre repair kit and continue the filling procedure for 10 minutes. If the prescribed tyre pressure is still not obtained, the tyre is too badly damaged. Seek the assistance of a workshop.

    Drain excess tyre pressure with the button above the pressure indicator.

    Do not run the compressor for longer than 10 minutes.
13. Detach the tyre repair kit. Screw the tyre inflation hose to the free connection on the sealant bottle. This prevents sealant from escaping. Stow tyre repair kit under the front seat.
14. Remove any excess sealant using a cloth.
15. Take the label indicating maximum permitted speed from the tyre repair kit and affix in the driver's field of view.

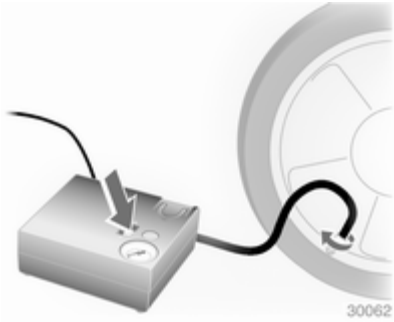

16. Continue driving immediately so that the sealant is evenly distributed throughout the tyre. After driving approx. 10 km (6 miles), but no more than 10 minutes, stop and check tyre pressure using the compressor. Screw compressor air hose directly onto tyre valve and compressor when doing this.
17. If the tyre pressure is more than 3.1 bar (310 kPa/45 psi), set it to the correct value. Repeat the procedure until there is no more loss of pressure.

    If the tyre pressure has fallen below 3.1 bar (310 kPa/45 psi), the vehicle must not be driven. Seek the assistance of a workshop.
18. Stow tyre repair kit under the front seat.

⚠Warning

Do not allow the sealant to contact skin, eyes or clothing. If swallowed seek medical assistance immediately.

Note

The driving characteristics of the repaired tyre is severely affected, therefore have this tyre replaced.

If unusual noise is heard or the compressor becomes hot, turn compressor off for at least 30 minutes.

The built-in safety valve opens at a pressure of 7 bar.

Note the expiry date of the kit. After this date its sealing capability is no longer guaranteed. Pay attention to storage information on sealant bottle.

Replace the used sealant bottle. Dispose of the bottle as prescribed by applicable laws.

The compressor and sealant can be used from approx. -30 °C.

The adapters supplied can be used to pump up other items e.g. footballs, air mattresses, inflatable dinghies etc. They are located on the underside of the compressor. To remove, screw on compressor air hose and withdraw adapter.

Wheel changing

Some vehicles are equipped with a tyre repair kit instead of a spare wheel ⇨ 124.

Make the following preparations and observe the following information:

- Park the vehicle on a level, firm and non-slippery surface. The front wheels must be in the straight-ahead position.
- Apply the parking brake and engage first gear or reverse gear.
- Remove the spare wheel ⇨ 129.
- Never change more than one wheel at a time.
- Use the jack only to change wheels in case of puncture, not for seasonal winter or summer tyre change.
- If the ground on which the vehicle is standing is soft, a solid board (max. 1 cm/0.4 inches thick) should be placed under the jack.
- No people or animals may be in the vehicle when it is jacked-up.
- Never crawl under a jacked-up vehicle.
- Do not start the engine when the vehicle is raised on the jack.
- Before screwing in the wheel bolts, clean them and lightly coat the taper of each wheel bolt with commercially available grease.

1. Pull off the wheel cover ⇨ 121.

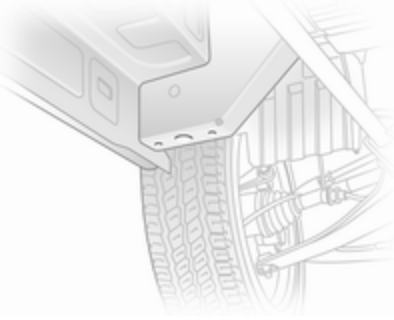

2. Loosen each of the wheel bolts by half a turn using the ratchet and adapter. The ratchet should turn anti-clockwise to loosen the bolts. Invert the ratchet if necessary.

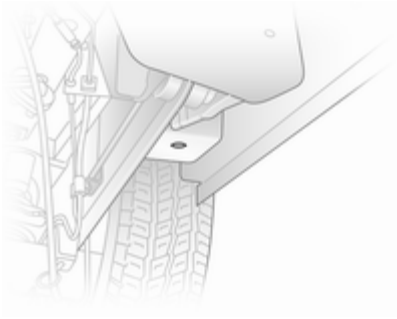

3. Raise vehicle by placing lifting pad spigot of the jack under the jacking hole located nearest the wheel concerned.

   Ensure the jack is positioned correctly. The jack base must be on the ground directly below the jacking hole in a manner that prevents it from slipping.
4. Install adapter onto the jack and raise the vehicle by turning the ratchet until the wheel is clear of the ground.

5. Unscrew wheel bolts completely by turning anti-clockwise and wipe clean with a cloth.

   Put wheel bolts somewhere where the threads will not be soiled.
6. Change the wheel.
7. Screw in the wheel bolts.
8. Lower vehicle.
9. Tighten each wheel bolt in a crosswise sequence. Tightening torque is 140 Nm.
10. Refit wheel cover
11. Change the wheel.
12. Stow the replaced wheel ⇨ 129 and the vehicle tools ⇨ 121.
13. Have the new wheel balanced on the vehicle. Check the tyre pressure of the installed tyre ⇨ 156 and also the wheel bolt torque as soon as possible.

Have the defective tyre renewed or repaired.

Spare wheel

Some vehicles are equipped with a tyre repair kit instead of a spare wheel ⇨ 124.

Use of a spare wheel that is smaller than the other wheels or together with winter tyres could affect driveability. Have the defective tyre replaced as soon as possible.

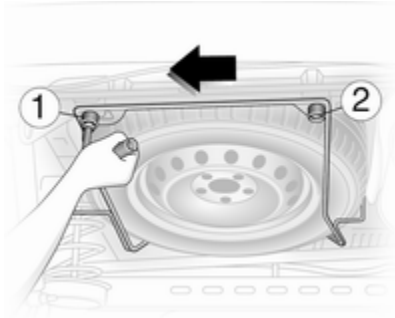

The spare wheel is mounted under the rear underbody and may be secured using a security bolt that can only be removed using the tool supplied.

⚠ Warning

Due to the weight of the tyre assembly, exercise caution when releasing the spare wheel carrier. Do not fully remove bolt **1**.

Support the spare wheel with a suitable object to prevent the wheel falling suddenly when loosening the carrier bolts - risk of injury!

It may be necessary to jack the vehicle up to gain access to the spare wheel on a fully loaded vehicle with a flat rear tyre.

To release the spare wheel carrier, loosen bolt **1**, ensuring it is not fully removed. Fully remove bolt **2**, then pull the carrier to the left, until it clears bolt **1**, and lower the carrier assembly.

When installing the wheel ensure that the spare wheel carrier is correctly positioned before tightening the bolts.

Summer and winter tyres

If you use winter tyres, the spare wheel may still be fitted with a summer tyre.

If you use the spare wheel when it is fitted with a summer tyre the vehicle's driveability may be affected, especially on slippery road surfaces.

Directional tyres

Fit directional tyres such that they roll in the direction of travel. The rolling direction is indicated by a symbol (e.g. an arrow) on the sidewall.

The following applies to tyres fitted opposing the rolling direction:

- Driveability may be affected. Have the defective tyre renewed or repaired as soon as possible.
- Do not drive faster than 80 km/h (50 mph).
- Drive particularly carefully on wet and snow-covered road surfaces.

Jump starting

Do not start with a quick charger.

A vehicle with a discharged battery can be started using jump leads and the battery of another vehicle.

⚠ Warning

Be extremely careful when starting with jump leads. Any deviation from the following instructions can lead to injuries or damage caused by battery explosion or damage to the electrical systems of both vehicles.

- Never expose the battery to naked flames or sparks.
- A discharged battery can already freeze at a temperature of 0 °C. Defrost the frozen battery before connecting jump leads.
- Avoid contact with eyes, skin, fabrics and painted surfaces. The fluid contains sulphuric acid which can cause injuries and damage in the event of direct contact.
- Wear eye protection and protective clothing when handling a battery.
- Use a booster battery with the same voltage (12 volts). Its capacity (Ah) must not be much less than that of the discharged battery.
- Use jump leads with insulated terminals and a cross section of at least 16 mm^2 (25 mm^2 for diesel engines).
- Do not disconnect the discharged battery from the vehicle.
- Switch off all unnecessary electrical consumers.
- Do not lean over the battery during jump starting.
- Do not allow the terminals of one lead to touch those of the other lead.
- The vehicles must not come into contact with each other during the jump starting process.
- Apply the parking brake, transmission in neutral.

Battery access

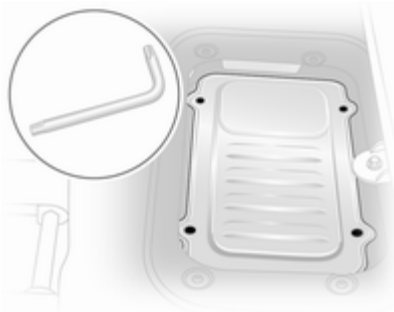

The battery is located beneath the front left hand seat floor panel. Lift the floor covering and use the tool supplied in the tool kit (or the tyre repair kit) to loosen the 4 screws.

Note the position of the arrow facing forwards on the battery cover when replacing.

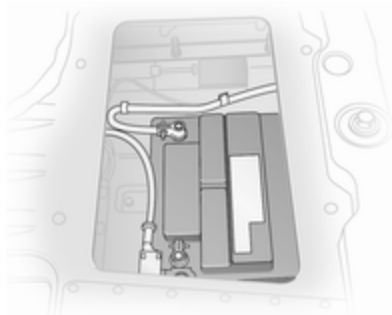

Remove cover plate to access the battery.

Jump starting procedure

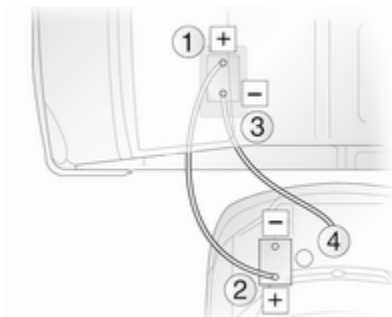

Lead connection order:

1. Connect the red lead to the positive terminal **1** of the discharged battery (identified by "**+**" sign on battery case or terminal).
2. Connect the other end of the red lead to the positive terminal **2** of the booster battery ("**+**" sign).
3. Connect the black lead to the negative terminal **3** of the discharged battery ("**−**" sign).
4. Connect the other end of the black lead **4** to a grounding point on the vehicle providing the jump start, such as the engine block or an engine mounting bolt.

   Connect as far away from the discharged battery as possible.

Route the leads so that they cannot catch on rotating parts in the engine compartment.

To start the engine:

1. Start the engine of the vehicle providing the jump start.

2. After 5 minutes, start the other engine. Start attempts should be made for no longer than 15 seconds at an interval of 1 minute.
3. Allow both engines to idle for approx. 3 minutes with the leads connected.
4. Switch on electrical consumers (e.g. headlights, heated rear window) of the vehicle receiving the jump start.
5. Reverse above sequence exactly when removing leads.

Towing

Towing the vehicle

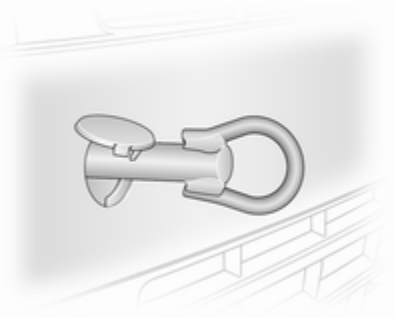

The towing eye is stowed with the vehicle tools ⇨ 121.

Screw the towing eye fully into the front towing point.

Attach a tow rope - or better still a tow rod - to the towing eye, never to the bumper or front suspension units.

Do not tow the vehicle from the rear. The front towing eye must only be used for towing and not recovering a vehicle.

Switch on ignition to release steering wheel lock and to permit operation of brake lights, horn and windscreen wipers.

Transmission in neutral.

Caution
Drive slowly. Do not drive jerkily. Excessive tractive force can damage the vehicle.

When the engine is not running, considerably more force is needed to brake and steer.

To prevent the entry of exhaust fumes from the towing vehicle, switch on the air recirculation system and close the windows.

Seek the assistance of a workshop.

Towing another vehicle

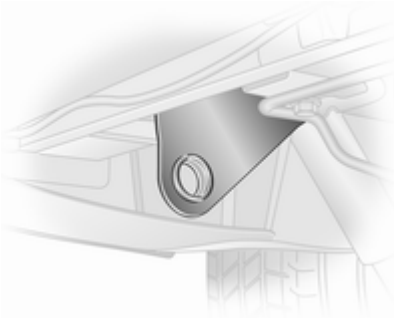

Attach a tow rope - or better still a tow rod - to the rear towing eye, never to the rear axle and suspension units.

The rear towing eye must only be used for towing and not recovering a vehicle.

Caution
Drive slowly. Do not drive jerkily. Excessive tractive force can damage the vehicle.

Appearance care

Exterior care

Locks

The locks are lubricated at the factory using a high quality lock cylinder grease. Use de-icing agent only when absolutely necessary, as this has a degreasing effect and impairs lock function. After using de-icing agent, have the locks regreased by a workshop.

Washing

The paintwork of your vehicle is exposed to environmental influences. Wash and wax your vehicle regularly. When using automatic vehicle washes, select a programme that includes waxing.

Bird droppings, dead insects, resin, pollen and the like should be cleaned off immediately, as they contain aggressive constituents which can cause paint damage.

If using a vehicle wash, comply with the vehicle wash manufacturer's instructions. The windscreen wipers and rear window wiper must be switched off. Remove antenna and external accessories such as roof racks etc.

If you wash your vehicle by hand, make sure that the insides of the wheel housings are also thoroughly rinsed out.

Clean edges and folds on opened doors and the bonnet as well as the areas they cover.

Have the door hinges of all doors greased by a workshop.

Do not clean the engine compartment with a steam-jet or high-pressure jet cleaner.

Thoroughly rinse and leather-off the vehicle. Rinse leather frequently. Use separate leathers for painted and glass surfaces: remnants of wax on the windows will impair vision.

Do not use hard objects to remove spots of tar. Use tar removal spray on painted surfaces.

Exterior lights

Headlight and other light covers are made of plastic. Do not use any abrasive or caustic agents, do not use an ice scraper, and do not clean them dry.

Polishing and waxing

Wax the vehicle regularly (at the latest when water no longer beads). Otherwise, the paintwork will dry out.

Polishing is necessary only if the paint has become dull or if solid deposits have become attached to it.

Paintwork polish with silicone forms a protective film, making waxing unnecessary.

Plastic body parts must not be treated with wax or polishing agents.

Windows and windscreen wiper blades

Use a soft lint-free cloth or chamois leather together with window cleaner and insect remover.

When cleaning the rear window, make sure the heating element inside is not damaged.

For mechanical removal of ice, use a sharp-edged ice scraper. Press the scraper firmly against the glass so that no dirt can get under it and scratch the glass.

Clean smearing wiper blades with a soft cloth and window cleaner.

Wheels and tyres

Do not use high-pressure jet cleaners.

Clean rims with a pH-neutral wheel cleaner.

Rims are painted and can be treated with the same agents as the body.

Paintwork damage

Rectify minor paintwork damage with a touch-up pen before rust forms. Have more extensive damage or rust areas repaired by a workshop.

Underbody

Some areas of the vehicle underbody have a PVC undercoating while other critical areas have a durable protective wax coating.

After the underbody is washed, check the underbody and have it waxed if necessary.

Bitumen/rubber materials could damage the PVC coating. Have underbody work carried out by a workshop.

Before and after winter, wash the underbody and have the protective wax coating checked.

Engine compartment

It is advisable to wash the engine compartment before and after winter and preserve it with wax. Protect the alternator and brake fluid reservoir with plastic sheets before washing the engine.

When washing the engine with a steam-jet cleaner, do not direct the steam jet towards components of the antilock brake system, air conditioning system or the belt drive and its components.

After an engine wash, have all engine compartment components preserved thoroughly by a workshop using protective wax.

Do not use high-pressure jet cleaners.

Towing equipment

Do not clean the coupling ball bar with a steam-jet or high-pressure jet cleaner.

Interior care

Interior and upholstery

Only clean the vehicle interior, including the instrument panel fascia and panelling, with a dry cloth or interior cleaner.

The instrument panel should only be cleaned using a soft damp cloth.

Clean fabric upholstery with a vacuum cleaner and brush. Remove stains with an upholstery cleaner.

Clean seat belts with lukewarm water or interior cleaner.

Caution

Close Velcro fasteners as open Velcro fasteners on clothing could damage seat upholstery.

Plastic and rubber parts

Plastic and rubber parts can be cleaned with the same cleaner as used to clean the body. Use interior cleaner if necessary. Do not use any other agent. Avoid solvents and petrol in particular. Do not use high-pressure jet cleaners.

Service and maintenance

General information 136
Scheduled maintenance 137
Recommended fluids, lubricants and parts 142

General information

Service information

In order to ensure economical and safe vehicle operation and to maintain the value of your vehicle, it is of vital importance that all maintenance work is carried out at the proper intervals as specified.

European service interval

Due every 30 000 km (18 000 miles) or 1 year, whichever occurs first.

Service display ⇨ 61.

International service interval

The standard service items listed in the European service schedule remain valid but with reduced intervals ⇨ 137.

Confirmations

Confirmation of service is recorded in the Service and Warranty Booklet. The date and mileage is completed with the stamp and signature of the servicing workshop.

Make sure that the Service and Warranty Booklet is completed correctly as continuous proof of service is essential if any warranty or goodwill claims are to be met, and is also a benefit when selling the vehicle.

Scheduled maintenance

Service schedules

European service schedule

The European service intervals are valid for the following countries:

Andorra, Austria, Belgium, Croatia, Czech Republic, Denmark, Estonia, Finland, France, Germany, Greece, Hungary, Iceland, Ireland, Israel, Italy, Latvia, Liechtenstein, Lithuania, Luxembourg, Netherlands, Norway, Poland, Portugal, Slovakia, Slovenia, Spain, Sweden, Switzerland, United Kingdom.

For countries not listed above, the servicing requirement is defined according to location, operating conditions and materials.

Service operations	Every Service
Engine oil and oil filter: change[1)]	X
Diesel fuel filter: drain water	X
Pollen filter: replace	X
Brake and clutch fluid level(s): check, correct	X
Hydraulic operating fluid levels: check, correct - MTA transmissions only	X
Power steering fluid level: check, correct; visual check for leaks	X
Washer and wiper systems: check, correct	X
Coolant level and antifreeze: check, correct	X
Brakes, front and rear: inspect	X

1) Flexible interval on vehicles with service display.

Service operations	Every Service
Wheel attachment: check, correct. Tyre condition and pressures (including spare): check, correct	X
Tyre repair kit (if fitted), lashing eyes: visual check	X
Engine, transmission and clutch system: inspect for leaks	X
Front/rear suspension, steering, all sealing bellows: check	X
Brake lines, fuel lines and exhaust system: visual check	X
Lighting, signalling, monitoring equipment and airbags: visual check	X
Anti-corrosion protection: check and record damage in Service and Warranty Booklet	X
Door hinges, stops, locks, bonnet catch and tailgate/rear door hinges: lubricate	X
Test drive, including brake efficiency and instrument check, final inspection. Stamp Service and Warranty Booklet. Service display: reset - if fitted	X

Additional operations ⊕

Diesel fuel filter: replace	90 000 km/54 000 miles
Air cleaner element: replace - petrol engines	60 000 km/36 000 miles/4 years
- diesel engines	90 000 km/54 000 miles/4 years
Accessory belt and tension roller: replace - only G9U, F4R	120 000 km/72 000 miles/6 years

Accessory belt, tensioner and crankshaft pulley: replace - only M9R	150 000 km/90 000 miles/6 years
Timing belt: replace - only F4R	120 000 km/72 000 miles/6 years
Timing belt: replace - only G9U	150 000 km/90 000 miles/6 years
Spark plugs: replace	90 000 km/54 000 miles
Brake and clutch fluid: change	120 000 km/72 000 miles/4 years
Coolant: change	120 000 km/72 000 miles/4 years

International service schedule

The standard service items listed in the European service schedule remain valid but with the reduced intervals shown below:

Diesel engines	Service interval	Diesel fuel filter	Air cleaner element	Timing and accessory belts	Coolant and brake fluid change
Romania, Bulgaria - M9R and G9U	20 000 km/1 year	40 000 km	20 000 km/2 years	80 000 km/4 years[4)]	100 000 km/3 years
Romania, Bulgaria - only F9Q	15 000 km/1 year	45 000 km	15 000 km/1 year	75 000 km/4 years	90 000 km/3 years
Turkey	15 000 km/1 year	45 000 km	15 000 km/2 years	60 000 km/4 years[2)]	90 000 km/3 years
Russia, Ukraine	15 000 km/1 year	30 000 km	15 000 km/2 years	60 000 km/4 years[2)]	90 000 km/3 years

4) Accessory belt only for 2.0 M9R engine.
2) 75 000 km/4 years - accessory belt only for 2.0 M9R engine.

Diesel engines	Service interval	Diesel fuel filter	Air cleaner element	Timing and accessory belts	Coolant and brake fluid change
Gulf countries	10 000 km/1 year	40 000 km	20 000 km/2 years[3)]	80 000 km/4 years	80 000 km/3 years
International	10 000 km/1 year	40 000 km	20 000 km/1 year	60 000 km/4 years[4)]	90 000 km/3 years
International +	8 000 km/1 year	24 000 km	16 000 km/1 year	64 000 km/4 years[4)]	64 000 km/2 years
International ++	5 000 km/6 months	10 000 km	10 000 km/1 year	60 000 km/4 years[4)]	60 000 km/2 years

Petrol engines	Service interval	Spark plugs	Air cleaner element	Timing and accessory belts	Coolant and brake fluid change
Turkey	15 000 km/1 year	60 000 km	15 000 km/1 year	60 000 km/4 years	90 000 km/3 years
Russia, Ukraine	15 000 km/1 year	60 000 km	15 000 km/1 year	60 000 km/4 years	90 000 km/3 years
Gulf countries	10 000 km/1 year	60 000 km	10 000 km/2 years	80 000 km/4 years	80 000 km/3 years
International	15 000 km/1 year	60 000 km	15 000 km/1 year	60 000 km/4 years	90 000 km/3 years
International +	10 000 km/1 year	60 000 km	20 000 km/1 year	60 000 km/4 years	60 000 km/2 years
International ++	5 000 km/6 months	60 000 km	10 000 km/1 year	60 000 km/4 years	60 000 km/2 years

Gulf countries: United Arab Emirates.

International: Albania, Australia, Bosnia-Herzegovina, Cyprus, Kosovo, Macedonia, Malta, Montenegro, New Zealand, Serbia, Singapore, South Africa.

3) 10 000 km/2 years - 1.9 F9Q engine.
4) Accessory belt only for 2.0 M9R engine.

International +: Belarus, Moldova.

International ++: Hong Kong, Kazakhstan.

Additional servicing

Additional operations ⊕

Additional operations are not required every service but can be performed in conjunction with a regular service.

Time allowances for such work are not included in the scope of regular services and will be charged for additionally. It is more economic if these operations are performed as part of a scheduled service than having them performed separately.

Extreme operating conditions ●

Operating conditions are classified as extreme when at least one of the following occurs frequently:

- cold starts,
- stop and go,
- trailer towing,
- gradients and/or high altitudes,
- poor road surfaces,
- sand and dust,
- extreme temperature fluctuations.

Police vehicles, taxis and driving school vehicles are also classified as operating under extreme conditions.

Under extreme operating conditions, it may be necessary to have certain scheduled service work done more frequently than the scheduled intervals.

For example, if fuel is used that does not comply with required standards, the fuel filter may need more frequent draining or replacement and it may also be necessary to change other components more often (e.g. spark plugs).

Seek technical advice on the servicing requirements dependent on the specific operating conditions.

Recommended fluids, lubricants and parts

Recommended fluids and lubricants

Only use products that have been tested and approved. Damage resulting from the use of non-approved materials will not be covered by the warranty.

⚠ Warning

Operating materials are hazardous and could be poisonous. Handle with care. Pay attention to information given on the containers.

Checking and topping up fluids

⇨ 108.

Engine oil

Engine oil is identified by its quality and also its viscosity. Quality is more important than viscosity when selecting which engine oil to use.

Engine oil quality for European service schedules

ACEA-C3	=	Diesel engines with DPF
ACEA-A3/B4	=	Diesel engines without DPF
ACEA-A3/B3	=	Petrol engines

GM-LL-A/B-025 quality oil exceeds ACEA specification A3/B4 and can therefore be used in both petrol engines and diesel engines without DPF.

Engine oil quality for International service schedules

ACEA-C3	=	Diesel engines with DPF
ACEA-A3/B3 or API-CF	=	Diesel engines without DPF
ACEA-A3/B3 or API-SL orAPI-SM	=	Petrol engines

These oil qualities must only be used with the international service schedule.

Topping up engine oil

Engine oils of different manufacturers and brands can be mixed as long as they comply with the required engine oil specifications (quality and viscosity).

Use of ACEA A1/B1 and A5/B5 engine oil is expressly forbidden, since they can cause long-term engine damage under certain operating conditions.

Engine oil additives

The use of engine oil additives could cause damage and invalidate the warranty.

Engine oil viscosity

For diesel engines use SAE viscosity 0W-30, 0W-40, 5W-30 or 5W-40.

For petrol engines use SAE viscosity 0W-30, 0W-40, 5W-30, 5W-40 or 10W-40.

The SAE viscosity rating defines the ability of an oil to flow. When cold, oil is more viscous than when hot.

Multigrade oil is indicated by two figures. The first figure, followed by a W, indicates low temperature viscosity and the second figure the high temperature viscosity.

Coolant and antifreeze

Use only silicate-free long life coolant (LLC) antifreeze.

The system is factory filled with coolant designed for frost protection down to approx. -28 °C. This concentration should be maintained all year round.

Coolant additives intended to give additional corrosion protection or seal against minor leaks can cause function problems. Liability for consequences resulting from the use of coolant additives will be rejected.

Brake and clutch fluid

Only use DOT4 brake fluid.

Over time, brake fluid absorbs moisture which will reduce braking effectiveness. The brake fluid should therefore be replaced at the specified interval.

Brake fluid should be stored in a sealed container to avoid water absorption.

Ensure brake fluid does not become contaminated.

Technical data

Vehicle identification 145
Vehicle data 148

Vehicle identification

Vehicle Identification Number

The Vehicle Identification Number is visible through the windscreen.

The VIN is also displayed behind a removable plastic cover on the right hand side door step.

Identification plate

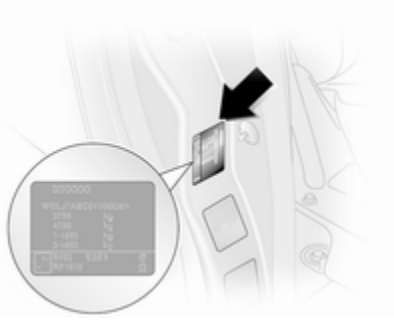

The identification plate is located on the right hand door pillar.

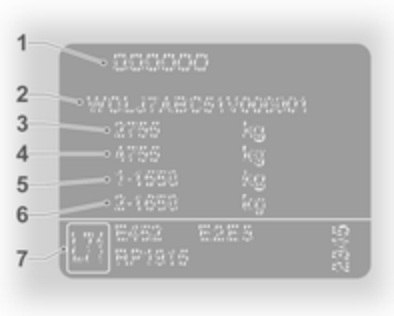

Information on identification plate[1]:

1 = Manufacturer, type approval number
2 = Vehicle Identification Number
3 = Permissible gross vehicle weight rating
4 = Permissible gross combination weight
5 = Maximum permissible front axle load
6 = Maximum permissible rear axle load
7 = Vehicle-specific or country specific data

The combined total of front and rear axle loads must not exceed the permissible gross vehicle weight. For example, if the front axle is bearing its maximum permissible load, the rear axle can only bear a load that is equal to the gross vehicle weight minus the front axle load.

The technical data is determined in accordance with European Community standards. We reserve the right to make modifications. Specifications in the vehicle documents always have priority over those given in this manual.

[1] The VIN plate on your vehicle may differ from the illustration shown.

Engine identification

It is possible, using the Vehicle Identification Number (VIN), to determine the engine type that is installed in your vehicle. The seventh digit denotes the engine type:

Digit	Engine
C:	1.9 Diesel, F9Q 760 - 74 kW[2)]
H:	2.0 Diesel, M9R 782/786 - 84 kW[3)]
J:	2.5 Diesel, G9U 630 - 107 kW[4)]
K:	1.9 Diesel, F9Q 760 - 74 kW (Turkey only)[2)]
L:	2.0 Petrol, F4R 820 - 86 kW[3)]
M:	2.0 Diesel, M9R 782/786 - 66 kW[3)]
N:	2.0 Petrol, F4R 820 - 86 kW[3)]
R:	2.5 Diesel, G9U 630 - 84 kW[4)]
U:	2.0 Diesel, M9R 784/788 - 84 kW[3)]
V:	2.5 Diesel, G9U 630 - 107 kW[3)]
W:	2.0 Petrol, F4R 820 - 86 kW[2)]

Engine identifier code and engine number

Stamped on the lower rear of the engine block on an identification plate.

2) Euro III.
3) Euro IV.
4) Euro IV with diesel particle filter (DPF).

Vehicle data

Engine data

Sales designation	2.0	1.9	2.0	2.0
Engine identifier code	**F4R 820**	**F9Q 760**	**M9R 782/786[5]**	**M9R 782/786[6]**
Number of cylinders	4	4	4	4
Piston displacement [cm^3]	1998	1870	1995	1995
Engine power [kW]	86	74	66	84
at rpm	4700	3500	3500	3500
Torque [Nm]	186	240	290	310
at rpm	3750	1800	1600	2100
Fuel type	Petrol	Diesel	Diesel	Diesel
Octane rating RON				
recommended	**95**			
possible	98			
possible	91[7]			

[5] Low output.
[6] High output.
[7] If no unleaded premium-grade fuels are available, 91 RON can be used, taking care to avoid severe engine loads and driving at full throttle.

Sales designation	2.0	2.5	2.5	2.5
Engine identifier code	M9R 784/788	G9U 630[8)9)]	G9U 630[10)]	G9U 630[8)10)]
Number of cylinders	4	4	4	4
Piston displacement [cm^3]	1995	2464	2464	2464
Engine power [kW]	84	84	107	107
at rpm	3500	3500	3500	3500
Torque [Nm]	290	290	310	310
at rpm	1600	1600	2100	2100
Fuel type	Diesel	Diesel	Diesel	Diesel

8) With diesel particle filter (DPF).
9) Low output.
10) High output.

Vehicle weight

Kerb weight, basic model

Model	Wheelbase	Roof	Payload Class	Engine	Kerb weight[11)]
Van	Short	Standard	1000	F4R	1660
				F9Q	1660
				M9R	1678
				G9U	1736
		Standard	1200	F4R	1660
				F9Q	1669
				M9R	1688
				G9U	1737
		High	1200	F4R	1695
				F9Q	1713
				M9R	1760
				G9U	1810

[11)] Kerb weight and gross vehicle weight increase on models fitted with bad road equipment package - refer to VIN plate.

Model	Wheelbase	Roof	Payload Class	Engine	Kerb weight[11)]
Van	Long	Standard	1200	F4R	1660
				F9Q	1676
				M9R	1724
				G9U	1772
		High	1200	F4R	1745
				F9Q	1761
				M9R	1810
				G9U	1860

[11)] Kerb weight and gross vehicle weight increase on models fitted with bad road equipment package - refer to VIN plate.

Model	Wheelbase	Roof	Payload Class	Engine	Kerb weight[11)]
Combi	Short	Standard	1000	F4R	1818
				F9Q	1835
				M9R	1883
				G9U	1940
		Standard	1200	F4R	1829
				F9Q	1846
				M9R	1893
				G9U	1942
	Long	Standard	1200	F4R	1890
				F9Q	1906
				M9R	1954
				G9U	2003

11) Kerb weight and gross vehicle weight increase on models fitted with bad road equipment package - refer to VIN plate.

Model	Wheelbase	Roof	Payload Class	Engine	Kerb weight[11)]
Platform cab	Long	Standard	1200	F4R	1449[12)]
				F9Q	1467[12)]
				M9R	1515[12)]
				G9U	1563[12)]
Tour	Short	Standard	900	F4R	1879
				M9R	1944
				G9U	2018

Vehicle dimensions

Type	Van		Combi/Tour[13)]		Platform cab
Wheelbase	Short	Long	Short	Long	Long
Length [mm]	4782	5182	4782	5182	5130
Width without exterior mirrors [mm]	1904	1904	1904	1904	1904
Width with two exterior mirrors [mm]	2232	2232	2232	2232	2232/2434[14)]

11) Kerb weight and gross vehicle weight increase on models fitted with bad road equipment package - refer to VIN plate.
12) Vehicle without body conversion.
13) Tour available with short wheel base only.
14) With wide arm exterior mirrors.

Type	Van		Combi/Tour[13)]		Platform cab
Wheelbase	Short	Long	Short	Long	Long
Height - unladen (without antenna) [mm][15)]					
Standard roof	1968	1968	1968	1968	1981
High roof	2492	2492	-	-	-
Wheelbase [mm]	3098	3498	3098	3498	3498
Track width [mm]					
Front	1615	1615	1615	1615	1615
Rear	1630	1630	1630	1630	1630

Loadspace dimensions

	Van			
Wheelbase	Short		Long	
Roof height	Standard	High	Standard	High
Maximum rear door aperture height [mm]	1335	1818	1335	1818
Rear door aperture width (at floor) [mm]	1390	1390	1390	1390
Maximum load area height [mm]	1387	1913	1387	1913
Maximum load area width [mm]	1690	1690	1690	1690

15) Vehicle height without body conversion.

	Van			
Wheelbase	Short		Long	
Roof height	Standard	High	Standard	High
Width between wheel arches [mm]	1268	1268	1268	1268
Maximum load floor length [mm]	2400	2400	2800	2800
Loading height unladen [mm]	543	547	542	548
Sliding side door aperture width [mm]	1000	1000	1000	1000
Sliding side door aperture height [mm]	1285	1285	1285	1285

Capacities

Engine oil

Engine	F4R	F9Q	M9R	G9U
Engine oil including filter [l]	5.5	4.8	7.7	7.5
between MIN and MAX [l]	1.5 - 2.0	1.5 - 2.0	1.5 - 2.0	1.5 - 2.0

Fuel tank

Engine	F4R	F9Q	M9R	G9U
Fuel tank, nominal capacity [l]	90	90	90	90

Tyre pressures

Tyre	Tyre pressure with full load[16]	
	Front [kPa/bar] (psi)	Rear [kPa/bar] (psi)
195/65 R16 C	340/3.4 (49)	370/3.7 (54)
195/75 R16 C	380/3.8 (55)	420/4.2 (61)
205/65 R16 C	380/3.8 (55)	420/4.2 (61)
215/65 R16 C	310/3.1 (45)	340/3.4 (49)

[16] The spare wheel should be set to the highest applicable pressure shown in the table.

Towing hitch installation dimensions

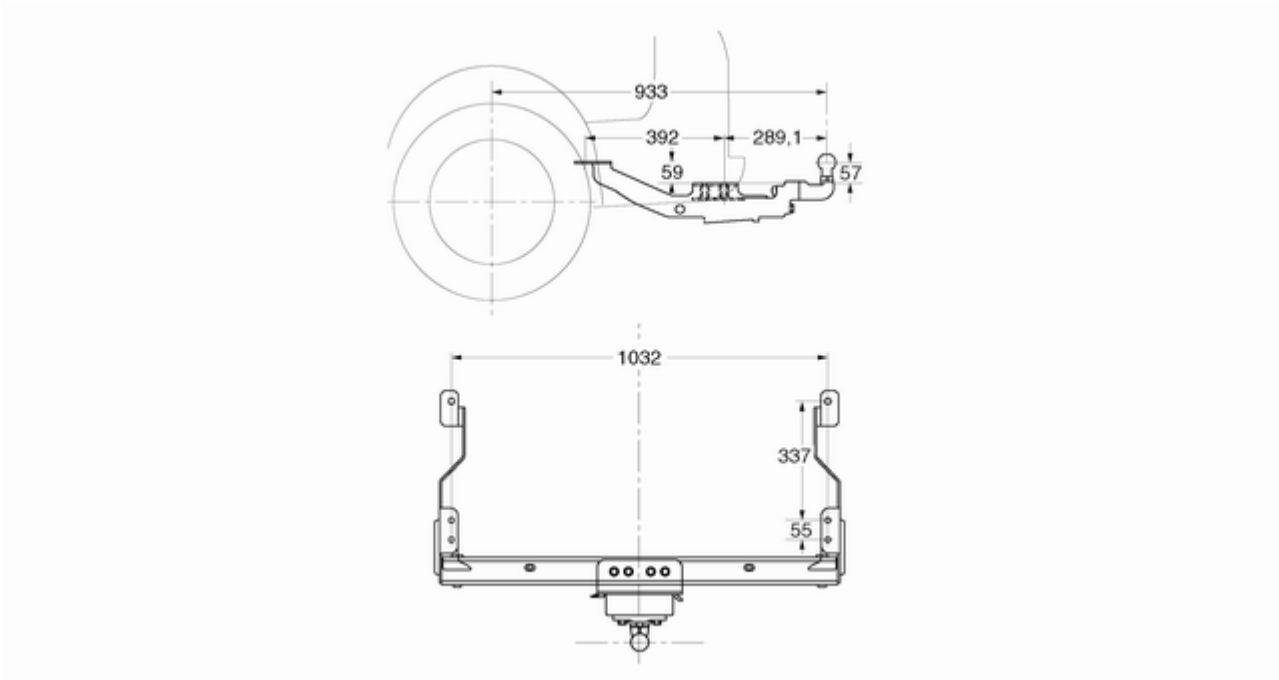

Customer information

Vehicle data recording and privacy 158

Vehicle data recording and privacy

Event data recorders

The vehicle has a number of sophisticated systems that monitor and control several vehicle data. Some data may be stored during regular operation to facilitate repair of detected malfunctions, other data is stored only in a crash or near crash event by systems commonly called event data recorders (EDR).

The systems may record data about the condition of the vehicle and how it was operated (e.g. engine speed, brake application, seat belt usage). To read this data special equipment and access to the vehicle is required. This will take place when the vehicle is serviced in a workshop. Some data is electronically fed into GM global diagnostic systems. The manufacturer will not access information about a crash event or share it with others except

- with the consent of the vehicle owner or, if the vehicle is leased, with the consent of the lessee,
- in response to an official request of police or similar government office,
- as part of the manufacturer’s defense in case of legal proceedings,
- as required by law.

In addition, the manufacturer may use the collected or received data

- for the manufacturer's research needs,
- to make it available for research needs where appropriate confidentiality is maintained and need is shown,
- to share summary data which is not tied to a specific vehicle with other organisations for research purposes.

Index

A

Accessories and vehicle modifications 106
Additional servicing 142
Adjustable air vents 86
Airbag and belt tensioners 64
Airbag deactivation 42, 64
Airbag system 40
Air conditioning regular operation 87
Air conditioning system 84
Antilock brake system 96
Antilock brake system (ABS) 65
Anti-theft alarm system 25
Anti-theft locking system 25
Armrest 33
Ashtrays 59
Automatic light control 75
Automatic locking 22
Auxiliary devices 81

B

Battery 112
Bonnet 107
Brake assist 97
Brake fluid 112
Brakes 96, 112
Brake system 65
Bulb replacement 115

C

Capacities 155
Car Pass 19
Catalytic converter 91
Central locking system 20
Centre high-mounted brake light 116
Change engine oil 66
Changing tyre and wheel size ... 123
Charging system 64
Child locks 23
Child restraint installation locations 45
Child restraint systems 43
Cigarette lighter 59
Climate control 16
Clock 57
Colour-Info-Display..... 68
Control indicators..... 62
Control of the vehicle 88
Convex shape 26
Cupholders 50
Curtain airbag system 42

D

Danger, Warnings and Cautions ... 4
Daytime running lights 76
Diesel fuel filter 113
Diesel fuel system bleeding 114

Diesel particle filter..... 66, 90
Door open 67
Driving characteristics and towing tips 104

E
Electric adjustment 27
Electronic driving programmes 94
Electronic Stability Program . . 65, 98
End-of-life vehicle recovery 107
Engine air filter..... 110
Engine coolant 111
Engine coolant temperature gauge 61
Engine data 148
Engine exhaust 90
Engine oil 108
Engine oil level 72
Engine oil level monitor..... 61
Engine oil pressure 66
Event data recorders..... 158
Exit lighting 79
Exterior care 133
Exterior light 67
Exterior lighting 13

F
Fault 96
First aid kit 52
Fixed air vents 86
Fog light 67
Fog lights 115
Fog tail light 117
Folding 27
Front airbag system 40
Front fog lights 77
Front turn signal lights 115
Fuel consumption - CO_2-Emissions 103
Fuel for diesel engines 101
Fuel for petrol engines 101
Fuel gauge 60
Fuses 119

G
General information 104
Glovebox 50
Glovebox cooler 87

H
Hand brake - see Parking brake... 97
Hazard warning flashers 77
Headlight flash 76
Headlight range adjustment 76
Headlights 115
Headlights when driving abroad . . 76
Head restraint adjustment 8
Head restraints 30
Heated exterior mirrors..... 27
Heated rear window 29
Heating 33
Heating and ventilation system . . . 83
High beam 67, 76
Horn 14, 55

I
Identification plate 146
Ignition switch positions 89
Immobiliser 26
Instrument panel fuse box 120
Instrument panel illumination 118
Instrument panel overview 10
Instrument panel storage..... 50
Interior care 135
Interior lights 78, 118
Interruption of power supply 96
Introduction 3
Isofix child restraint systems 49

J
Jump starting 130

K
Keys 19

L
Lashing eyes 51
Light switch 75
Load compartment 24
Load compartment cover 51

Load compartment lighting..... 78
Loading information 53
Load rails and hooks 51
Low fuel 67

M
Malfunction indicator light 64
Manual adjustment 26
Manual anti-dazzle 28
Manual mode 94
Manual transmission 92
Manual transmission automated . 92
Manual windows 28
Mirror adjustment 8
Misted light covers 78
Mobile phones and CB radio equipment 81

N
New vehicle running-in 88
Number plate light 117

O
Obtaining navigation CDs/DVDs . 81
Odometer 60
Operation 80
Outside temperature 57
Overcab storage 50
Overrun cut-off 89

P
Parking 18, 89
Parking assist 100
Performing work 107
Power outlets 58
Power steering fluid..... 111
Power windows 28
Preheating, drain fuel filter and engine electronics..... 65

R
Radio reception 80
Radio remote control 19
Rear air conditioning system 85
Rear doors 23
Rear fog light 67
Rear fog lights 77
Rear heating system 84
Rear windows 29
Rear window wiper/washer 56
Recommended fluids and lubricants 142
Refuelling 102
Reversing light 117
Reversing lights 78
Roof rack 52

S
Safety net 52
Seat adjustment 7, 32
Seat belt 8
Seat belts 37
Seat position 31
Second row seats 34
Selector lever 93
Service 87, 136
Service display 61
Service schedules..... 137
Service vehicle soon 65
Side airbag system 41
Side turn signal lights 116
Sliding door 23
Spare wheel 129
Speedometer 59
Starting off 17
Starting the engine 89, 93
Steering wheel adjustment 9, 54
Steering wheel controls 54
Stop engine..... 65
Sun visors 29
Symbols 4

T
Tachograph..... 73, 74
Tachometer 60
Tail lights 116
Three-point seat belt 38
Tools 121
Towing another vehicle 133
Towing equipment 105

Towing hitch installation dimensions 157
Towing the vehicle 132
Traction Control system 98
Trailer towing 104
Transmission 16
Transmission display 62, 92
Tread depth 123
Trip computer 72
Triple-Info-Display 67
Turn and lane-change signals 77
Turn signal 64
Tyre chains 124
Tyre designations 122
Tyre pressure 122
Tyre pressures 156
Tyre repair kit 124
Tyres 122

U

Using this manual 3

V

Vehicle dimensions 153
Vehicle Identification Number 145
Vehicle specific data 3
Vehicle storage..... 106
Vehicle unlocking 6
Vehicle weight 150

W

Warning chimes 71
Warning triangle 52
Washer and wiper systems 15
Washer fluid 112
Wheel changing 128
Wheel covers 123
Wheels and tyres 122
Windscreen wiper/washer 55
Winter tyres 122
Wiper blade replacement 114