ANTI-LOCK BRAKE SYSTEM

PRECAUTION

1. TROUBLESHOOTING PRECAUTION

- When there are malfunctions in the contact points of the terminals or installation problems with any parts, removal and installation of the suspected problem parts may return the system to its normal condition, either entirely or temporarily.
- In order to determine the location of the malfunction, be sure to check the conditions from the time the malfunction occurred, through data such as DTC and freeze frame data outputs. Record this information before disconnecting any connectors and removing or installing any parts.
- Since the anti-lock brake system may be influenced by malfunctions in other systems, be sure to check for DTCs in other systems.
- Be sure to remove and install the brake actuator and each sensor with the ignition switch off, unless specified in the inspection procedures.
- When removing and installing the brake actuator and each sensor, be sure to check that the normal display is output during a test mode inspection and a DTC output inspection after reinstalling all the parts.
- If the DTC of the CAN communication line is output, repair the malfunction in the communication line and then troubleshoot the anti-lock brake system.
- Since the CAN communication line has its own length and route, it cannot be repaired temporarily with a bypass wire, etc.

PARTS LOCATION

HATCHBACK:

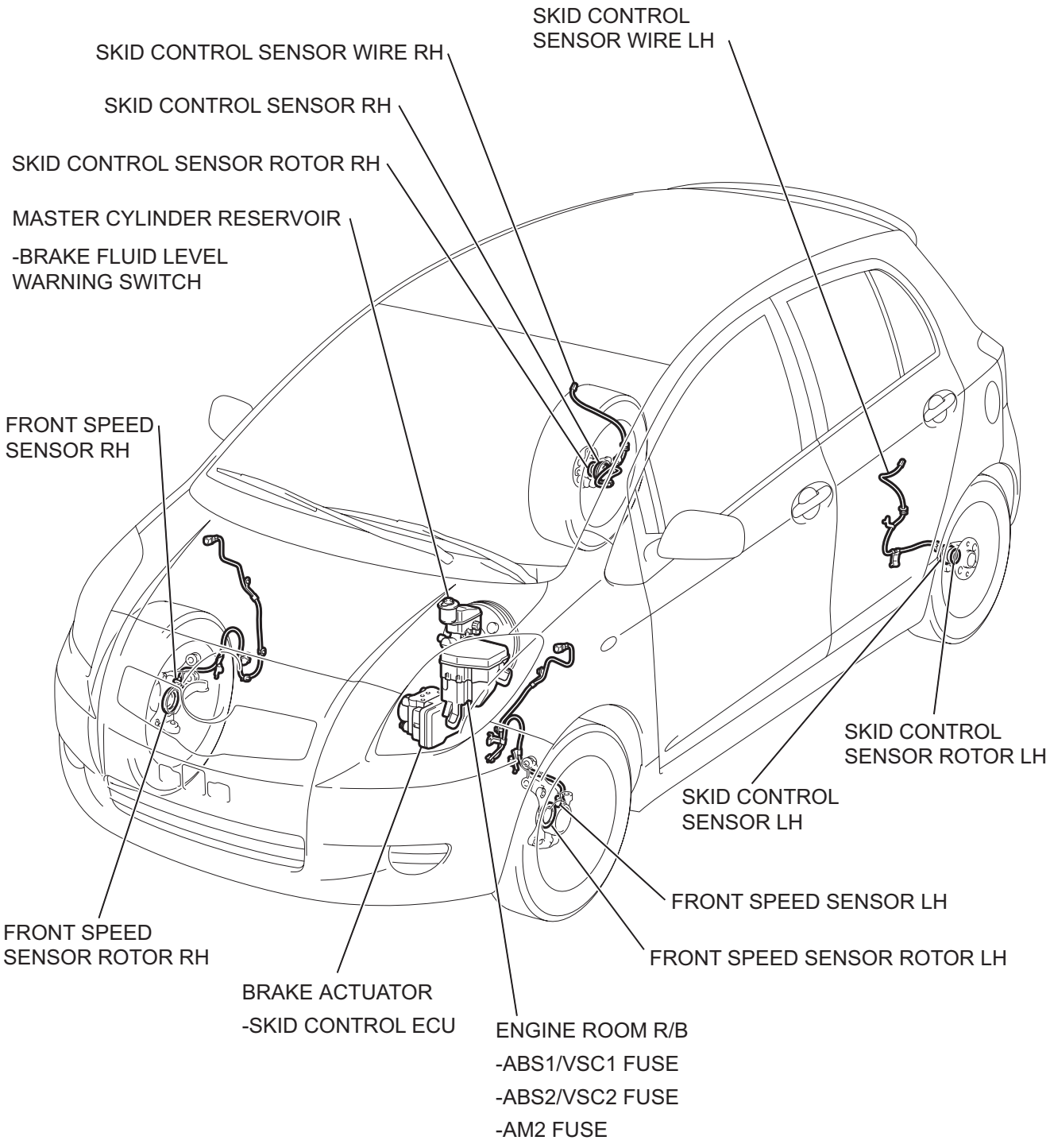

P

C117856E04

BC

HATCHBACK:

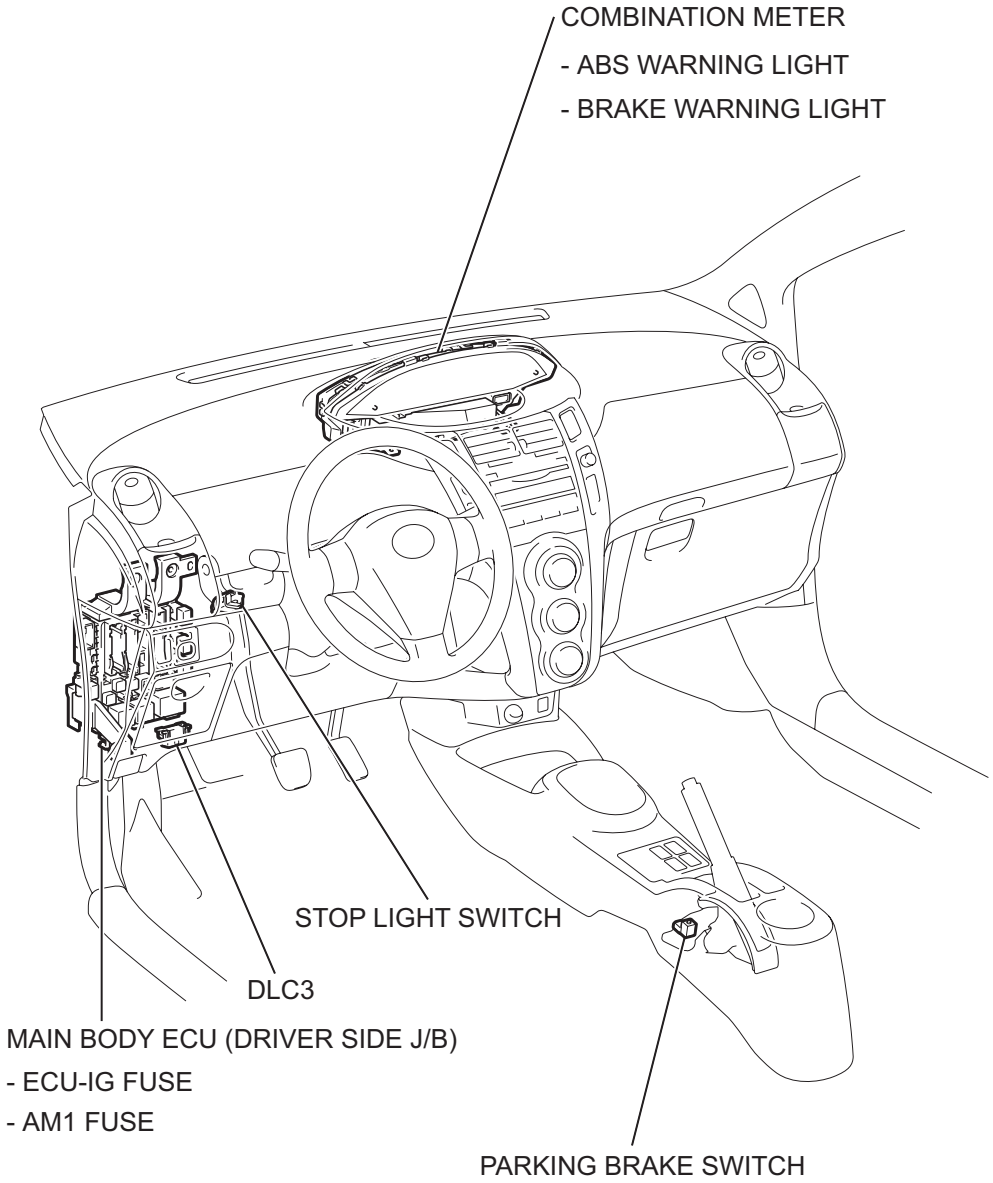

P

C118692E04

SEDAN:

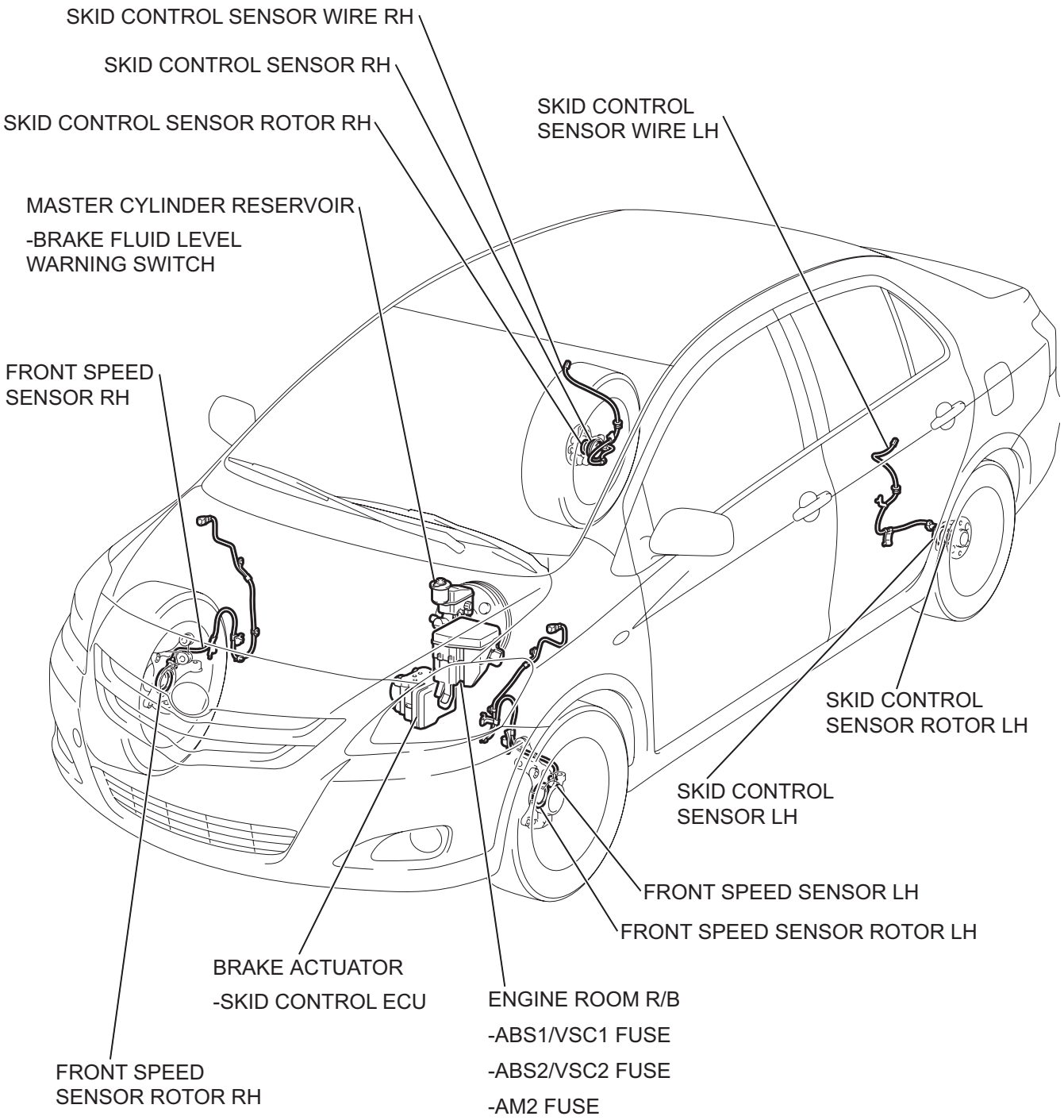

P

C139617E01

BC

SEDAN:

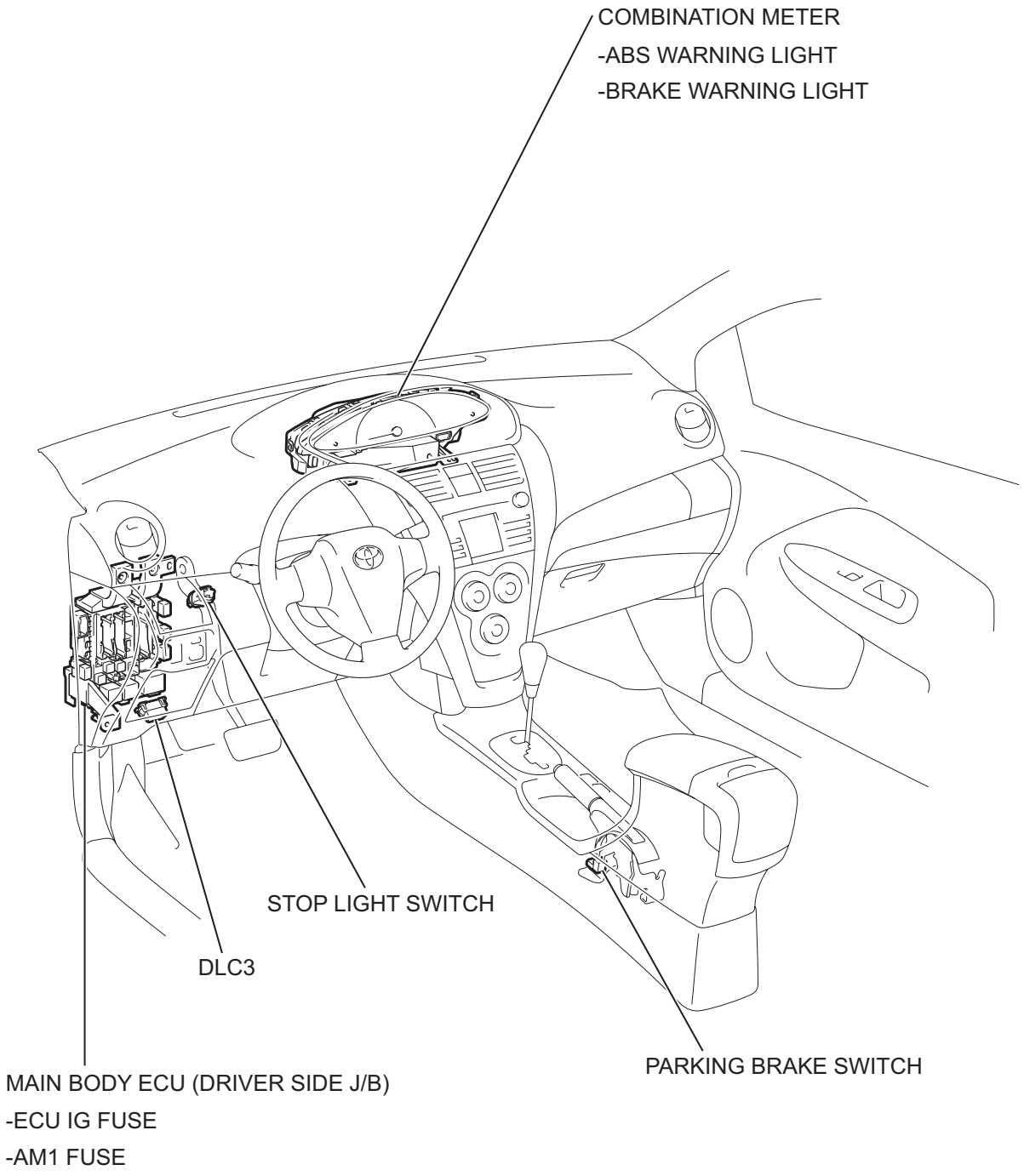

P

C139619E01

SYSTEM DIAGRAM

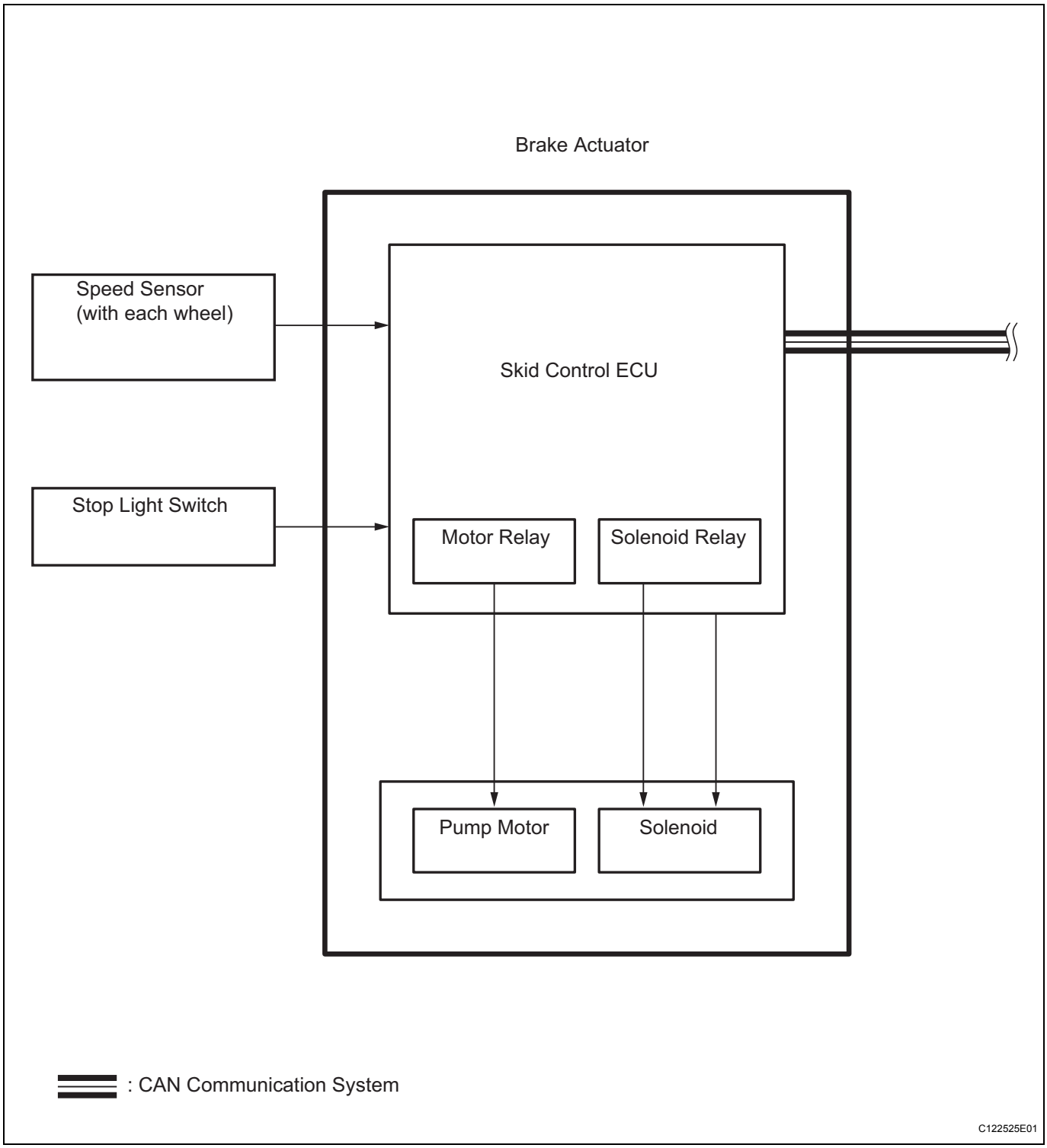

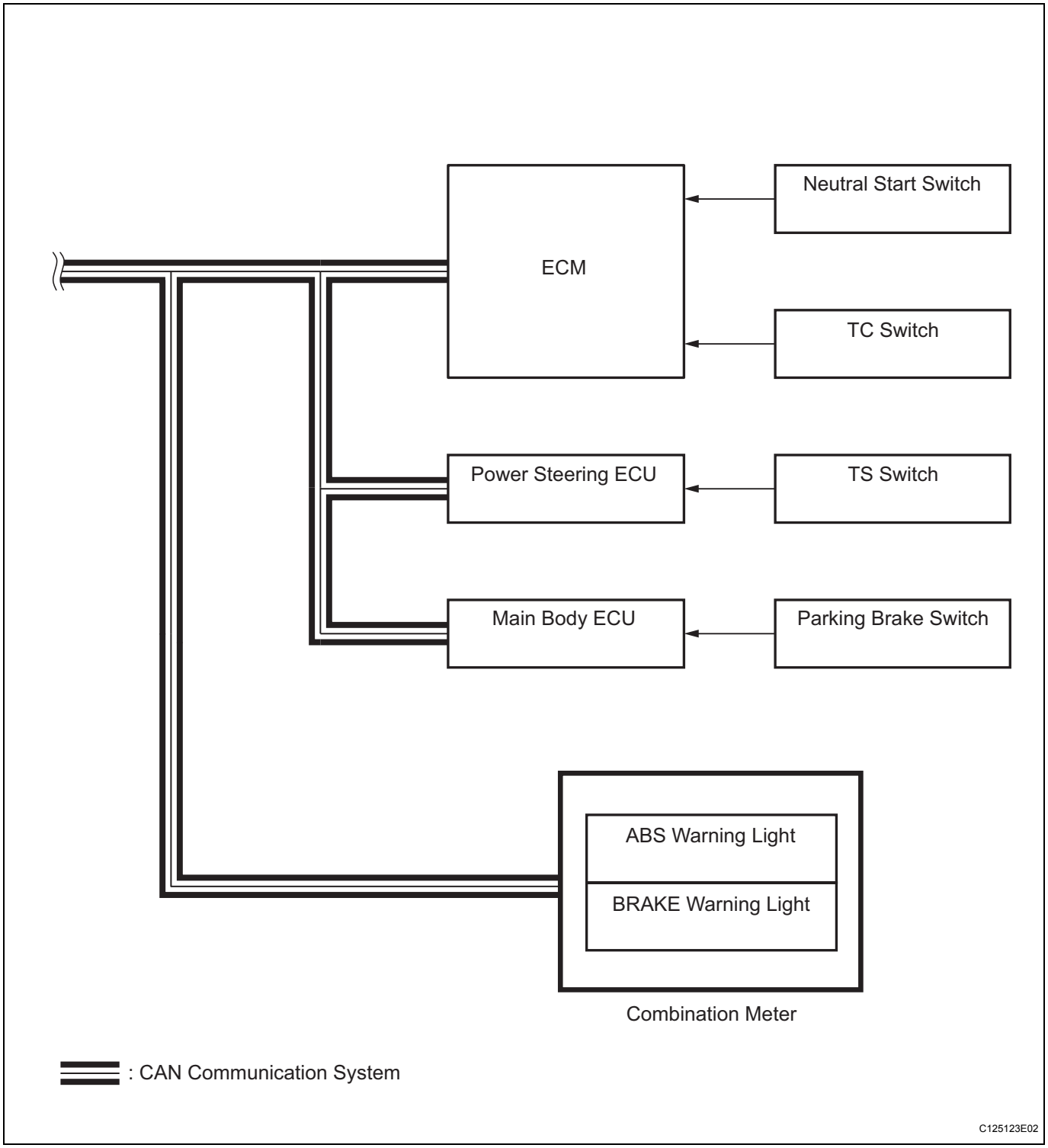
ECM
Neutral Start Switch
TC Switch
Power Steering ECU
TS Switch
Main Body ECU
Parking Brake Switch
ABS Warning Light
BRAKE Warning Light
Combination Meter
: CAN Communication System
C125123E02

SYSTEM DESCRIPTION

1. SYSTEM DESCRIPTION

HINT:
The skid control ECU forms a single unit with the brake actuator.

(a) ABS (Anti-lock Brake System)
The ABS helps prevent the wheels from locking when the brakes are applied firmly or on a slippery surface.

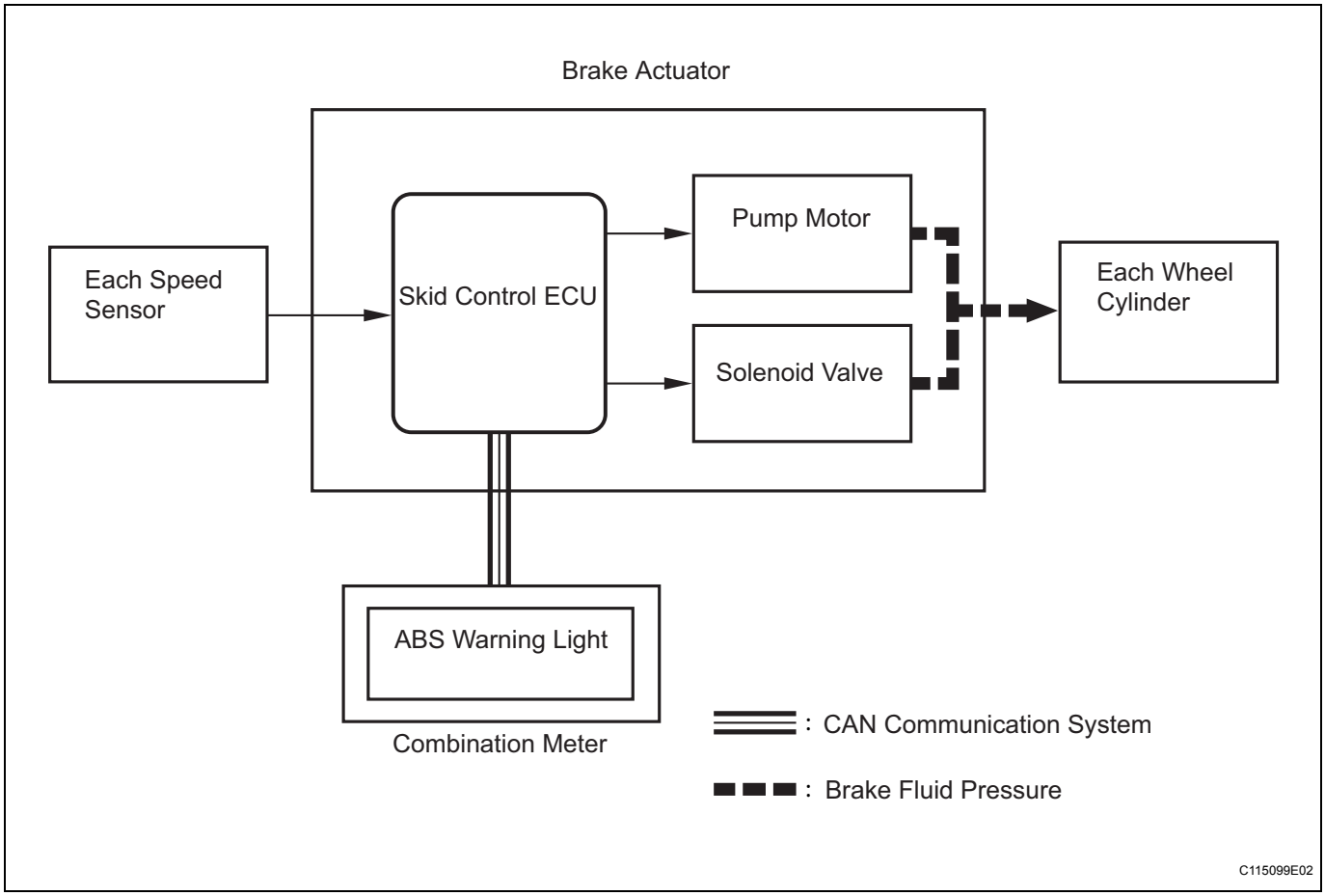

(1) Operation description
The skid control ECU detects wheel lock conditions by receiving vehicle speed signals from each speed sensor, and sends control signals to the pump motor and solenoid valve to prevent the wheels from locking by controlling the brake fluid pressure of each wheel cylinder. The ABS warning light comes on when the ABS system malfunctions.

(b) EBD (Electronic Brake force Distribution)
The EBD control utilizes the ABS, realizing the proper brake force distribution between the front and rear wheels in accordance with the driving conditions and vehicle load. In addition, when the brakes are applied while cornering, it also controls the braking forces of the right and left wheels, helping to maintain vehicle stability.

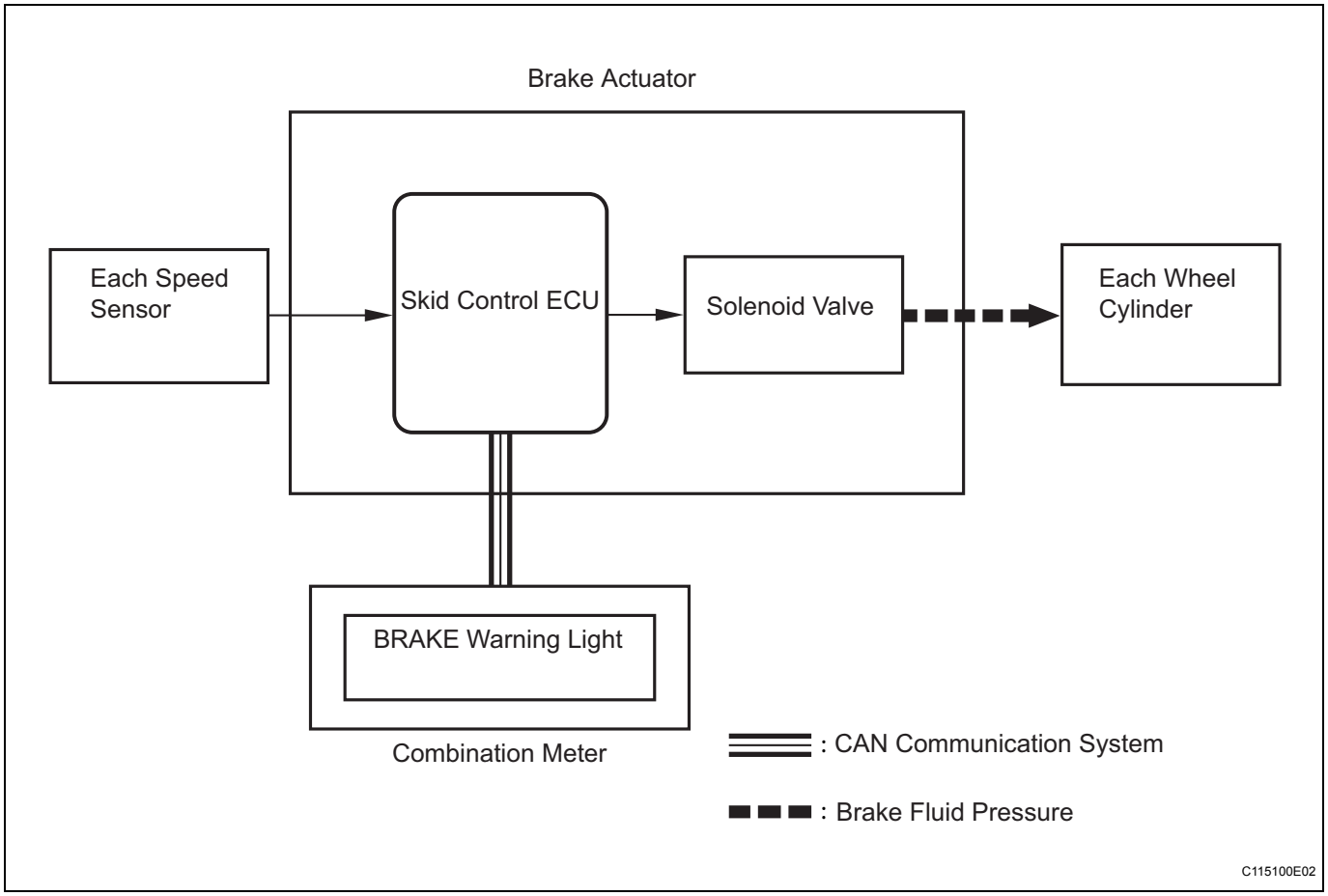

(1) Operation description
The skid control ECU receives speed signals from each speed sensor to detect the slip conditions of the wheels and sends control signals to the solenoid.
The solenoid valve controls the brake fluid pressure of each wheel cylinder and divides the control power properly between the front and rear wheels and the right and left wheels.
The BRAKE warning light comes on to indicate malfunctions in the EBD system.

2. ABS with EBD OPERATION

(a) Based on the signals received from each of the 4 wheel speed sensors, the skid control ECU calculates the speed and deceleration of each wheel, and checks the wheel slippage conditions. The ECU controls the pressure holding valve and pressure reduction valve in order to adjust the brake fluid pressure of each wheel cylinder in accordance with the slippage conditions.

3. FAIL SAFE FUNCTION

(a) When a failure occurs in the ABS system, the ABS warning light comes on and its operation is prohibited. In addition to this, when a failure which disables the EBD operation occurs, the brake warning light comes on and its operation is prohibited.
If control is prohibited due to a malfunction during operation, control is disabled gradually to avoid sudden vehicle instability.

4. INITIAL CHECK

(a) When the vehicle speed first reaches approximately 4 mph (6 km/h) or more after the ignition switch is turned on, each solenoid valve and the motor of the brake actuator are sequentially activated to perform electrical checks. During the initial check, the operating sound of the solenoid valve and motor can be heard from the engine compartment, but this does not indicate a malfunction.

5. FUNCTION OF COMPONENTS

Components	Functions
Front speed sensor (Semiconductor speed sensor, magnetic sensor rotor)	• Detects the wheel speed and sends a signal to the skid control ECU. • The front speed sensor (semiconductor speed sensor) with the integrated bearing and the sensor rotor (magnetic sensor rotor) are installed on the front axle hub. • The magnetic sensor rotor is equipped with north and south poles (48 of each), which are evenly spaced around its circumference. • The magnetic field changes as the magnetic sensor rotor rotates. The semiconductor speed sensor detects the change and outputs it as the vehicle speed pulse.
Skid control sensor (Semiconductor speed sensor, magnetic sensor rotor)	• The skid control sensor (semiconductor speed sensor) and the sensor rotor (magnetic sensor rotor) are installed on the rear axle carrier. • The skid control sensor has the same structure and functions as the front speed sensor.
Skid control ECU (Housed in brake actuator)	• Processes the signals from the sensors to control the ABS. • Sends and receives control signals to and from the ECM via CAN communication.
Brake actuator	• Consists of the master cylinder cut solenoid valve, holding solenoid valve, pump motor, and reservoir, and adjusts the brake fluid pressure applied to each wheel cylinder. • Houses the skid control ECU.
Solenoid relay	• Supplies power to each solenoid. • Housed in the skid control ECU.
ABS warning light	• Illuminates to inform the driver that a malfunction in the ABS has occurred. • Blinks to indicate DTCs that relate to the ABS.
BRAKE warning light	• Illuminates to inform the driver that the parking brake is ON when the system is normal, and when the brake fluid has decreased. • Illuminates to inform the driver that a malfunction in the EBD has occurred.

HOW TO PROCEED WITH TROUBLESHOOTING

HINT:
*: Use the intelligent tester.

1	VEHICLE BROUGHT TO WORKSHOP

NEXT

2	CUSTOMER PROBLEM ANALYSIS

NEXT

3	DTCS AND FREEZE FRAME DATA CHECK AND CLEARANCE*

NEXT

4	PROBLEM SYMPTOM CONFIRMATION

Result

Result	Proceed to
Symptom does not occur	A
Symptom occurs	B

B → SYMPTOM SIMULATION

A

5	CAN COMMUNICATION SYSTEM CHECK*

(a) Check for the output DTC relating to the CAN communication system.
HINT:
The ECU of this system is connected to the CAN communication system. Therefore, before starting troubleshooting, be sure to check that there is no trouble in the CAN communication system.

Result

Result	Proceed to
CAN communication system DTC not output	A
CAN communication system DTC output	B

B → CAN COMMUNICATION SYSTEM

A

6 **DTC CHECK***

HINT:
See page BC-25.

Result

Result	Proceed to
DTC output	A
DTC not output	B

B → **PROBLEM SYMPTOM TABLE**

A

7 **DTC CHART**

HINT:
See page BC-31.

NEXT

8 **CIRCUIT INSPECTION**

HINT:
When 2 or more DTCs are detected, perform circuit inspections one by one until the problem is identified.

NEXT

9 **PROBLEM IDENTIFICATION**

NEXT

10 **REPAIR OR REPLACEMENT**

NEXT

BC

11 **CONFIRMATION TEST**

NEXT

END

CHECK FOR INTERMITTENT PROBLEMS

1. CHECK FOR INTERMITTENT PROBLEMS

HINT:
A momentary interruption (open circuit) in the connectors and/or wire harness between the sensors and ECUs can be detected by using the ECU data list function of an intelligent tester.

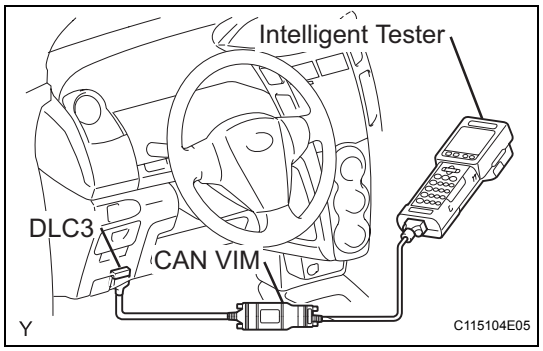

(a) Turn the ignition switch off and connect the intelligent tester to the DLC3.
(b) Turn the ignition switch on.

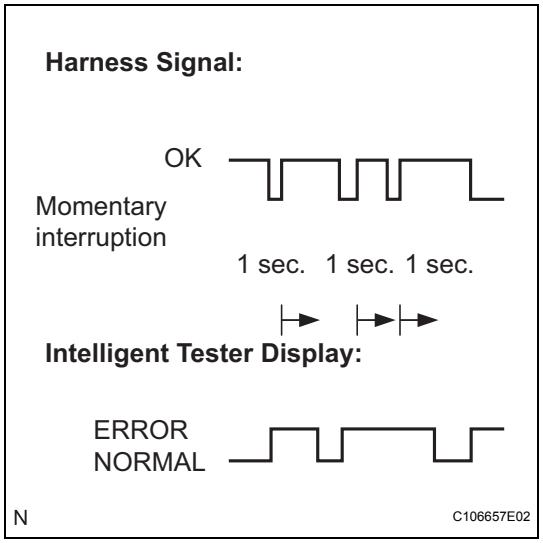

(c) Follow the prompts on the intelligent tester to display the DATA LIST and select areas where a momentary interruption should be monitored.
HINT:
- A momentary interruption (open circuit) cannot be detected for 3 seconds after the ignition switch is turned on (initial check).
- If the status remains on the ERROR display, check for continuity between the ECU and the sensors, or between ECUs.
- The ERROR display on the intelligent tester remains on for 1 second after the harness signal changes from a momentary interruption (open circuit) to normal condition.

Item (Display)	Measurement Item / Range (Display)	Normal Condition	Diagnostic Note
FR SPD OPN	FR speed sensor open detection / ERROR or NORMAL	ERROR: Momentary interruption NORMAL: Normal	-
FL SPD OPN	FL speed sensor open detection / ERROR or NORMAL	ERROR: Momentary interruption NORMAL: Normal	-
RR SPD OPN	RR speed sensor open detection / ERROR or NORMAL	ERROR: Momentary interruption NORMAL: Normal	-
RL SPD OPN	RL speed sensor open detection / ERROR or NORMAL	ERROR: Momentary interruption NORMAL: Normal	-

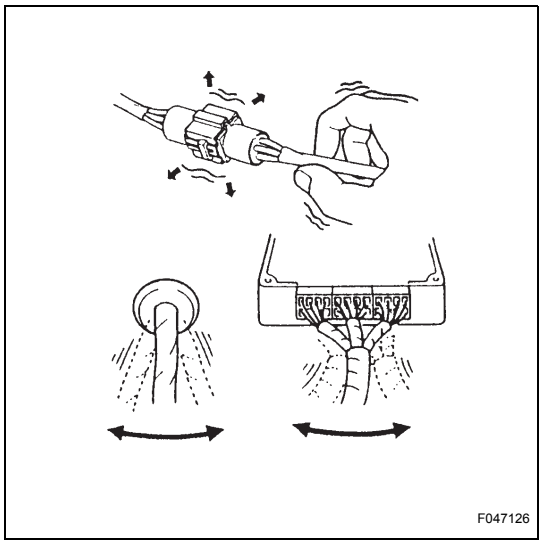

(d) While observing the screen, gently jiggle the connector or wire harness between the ECU and sensors, or between ECUs.

OK:

Display does not change.

HINT:

The connector and/or wire harness have a momentary interruption (open circuit) if the display changes. Repair or replace the connector and wire harness if either of them is faulty.

TEST MODE PROCEDURE

HINT:

- By switching the skid control ECU from normal mode to test mode, abnormality detection sensitivity is enhanced and troubleshooting can be conducted efficiently.
- Perform a sensor check in test mode after the speed sensor or sensor rotor has been repaired or replaced.
- If the ignition switch is turned from on to ACC or off during test mode, DTCs related to the signal check function will be erased.
- During test mode, the skid control ECU stores all DTCs related to the signal check function, and the DTCs are erased if normality is confirmed. Any remaining DTCs are those indicating abnormalities that were found.

1. TEST MODE (SIGNAL CHECK) PROCEDURE (USING INTELLIGENT TESTER)

(a) Turn the ignition switch off.

(b) Check that the steering wheel is in the straight-ahead position.

(c) A/T: Check that the shift lever is in the P position and apply the parking brake.

(d) M/T: Check that the shift lever is in neutral and apply the parking brake.

(e) Connect the intelligent tester to the DLC3.

(f) Turn the ignition switch on.

(g) Turn the tester on.

(h) Switch the skid control ECU to test mode using the intelligent tester.
Select the following menu items: DIAGNOSIS / OBD/MOBD /select vehicle / ABS / SIGNAL CHECK.

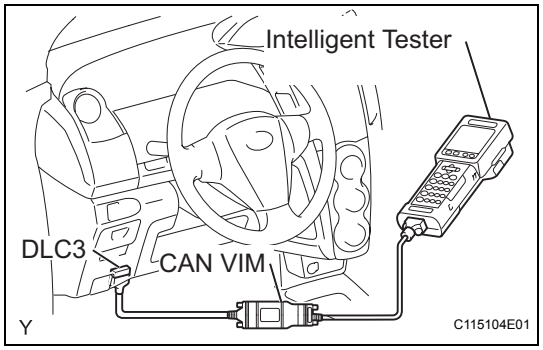

(i) Check that the ABS warning light blinks as shown in the illustration.
HINT:
If the ABS warning light does not blink, perform relevant troubleshooting procedures. The relevant troubleshooting procedures are described in the sections listed in the table below.

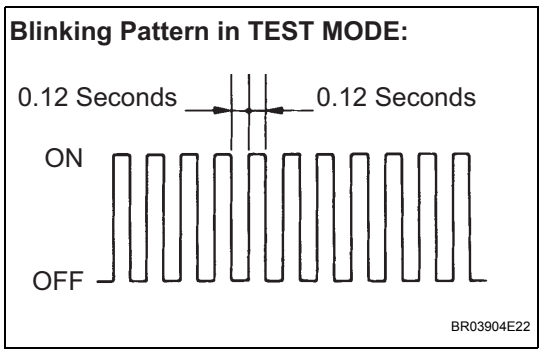

Section Title	See Page
ABS Warning Light does not Come ON	BC-73
TS and CG Terminal Circuit	BC-84

(j) Start the engine.

BC

Blinking Pattern in TEST MODE:

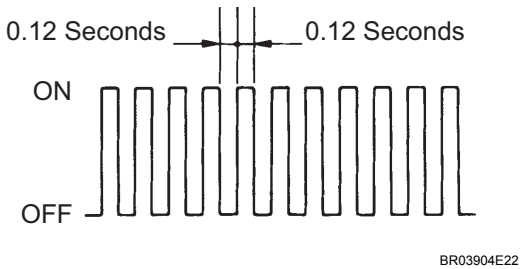

2. SPEED SENSOR CHECK (USING INTELLIGENT TESTER)

(a) Check that the ABS warning light is blinking as shown in the illustration.

(b) Check the speed sensor signal.

(1) Drive the vehicle straight forward at a speed of 28 mph (45 km/h) or more for several seconds.

(2) Check that the ABS warning light goes off.

HINT:

- The sensor check may not be completed if one or more wheels spin or the steering wheel is turned.
- If the speed sensor check is commenced while the steering wheel is turned, the ABS warning light may come on after the low speed check is finished.
- The ABS warning light comes on immediately when an abnormality is detected.
- When the speed sensor signal is normal, the ABS warning light goes off while the vehicle is driven at 28 mph (45 km/h) or more and blinks in the test mode pattern while stationary.
- Do not drive the vehicle at a speed of 50 mph (80 km/h) or more after the ABS warning light turns off, because test mode DTCs are set again when the vehicle speed exceeds 50 mph (80km/h).

Blinking pattern in speed sensor check:

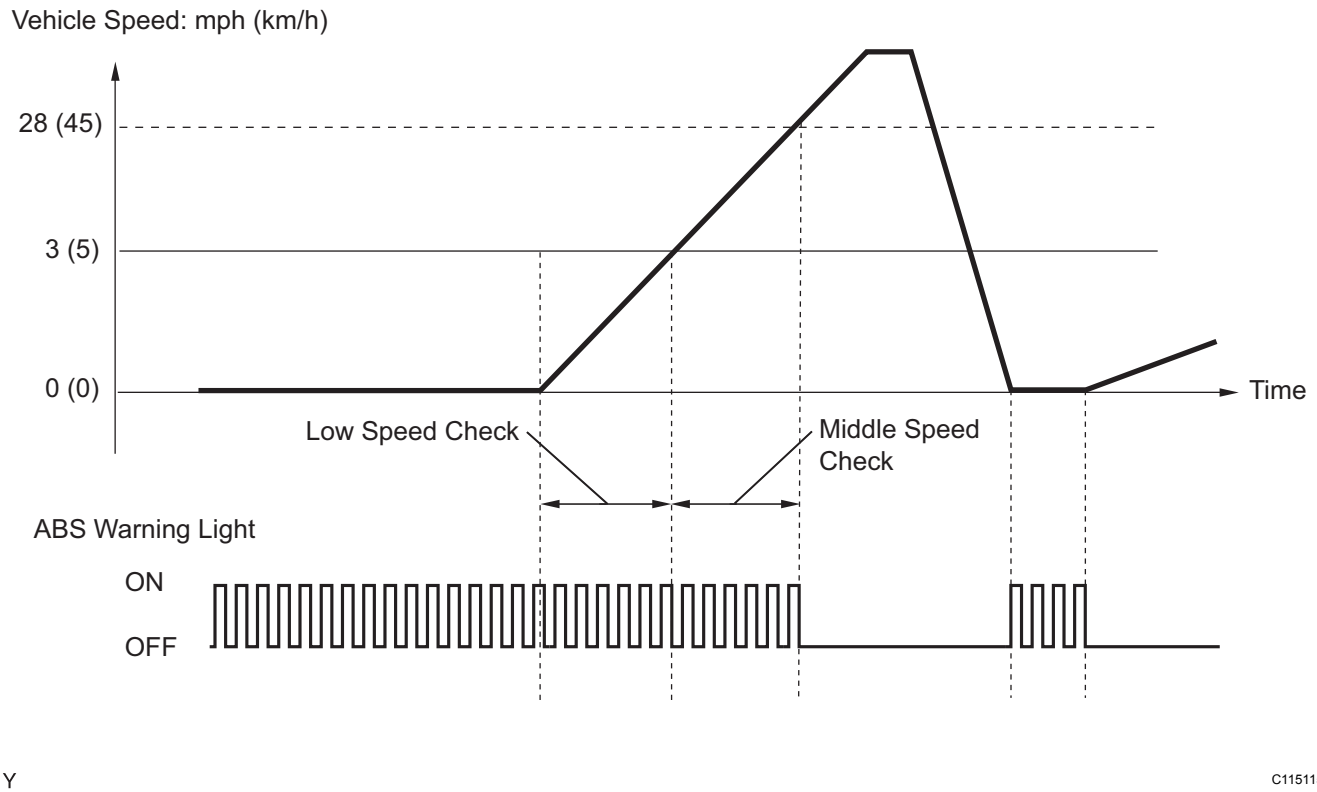

(3) Stop the vehicle.

3. **END SENSOR CHECK (USING INTELLIGENT TESTER)**
   (a) When the sensor check is successfully completed, the ABS warning light blinks in the test mode pattern when the vehicle is stopped, and goes off when the vehicle is driven.
   NOTICE:
   If the sensor check is not completed, the ABS warning light blinks even while the vehicle is driven and the ABS does not operate.
4. **READ SIGNAL CHECK FUNCTION DTCS (USING INTELLIGENT TESTER)**
   (a) Read the DTC(s) by following the instructions on the tester screen.
   HINT:
   See the list of DTCs (refer to step 9).
5. **TEST MODE (SIGNAL CHECK) PROCEDURE (USING SST CHECK WIRE)**
   (a) Turn the ignition switch off.
   (b) Check that the steering wheel is in the straight-ahead position.
   (c) A/T: Check that the shift lever is in the P position and apply the parking brake.
   (d) M/T: Check that the shift lever is in neutral and apply the parking brake.

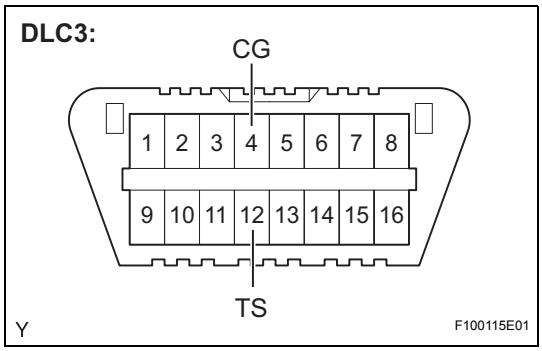

(e) Using SST, connect terminals TS and CG of the DLC3.
SST 09843-18040

(f) Turn the ignition switch on.

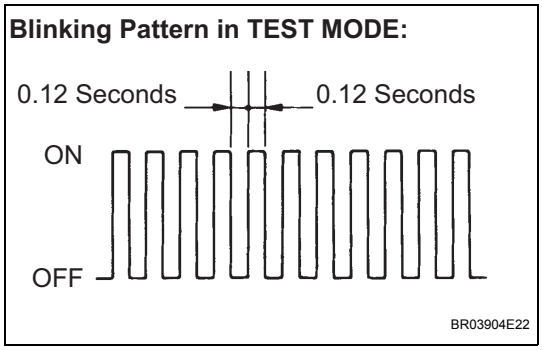

(g) Check that the ABS warning light blinks as shown in the illustration.
HINT:
If the ABS warning light does not blink, perform relevant troubleshooting procedures. The relevant troubleshooting procedures are described in the sections listed in the table below.

Section Title	See Page
ABS Warning Light does not Come ON	BC-73
TS and CG Terminal Circuit	BC-84

(h) Start the engine.

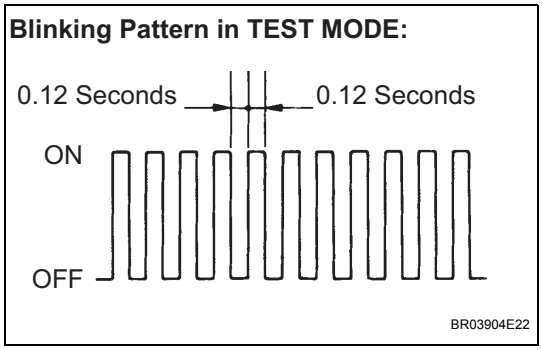

6. SPEED SENSOR CHECK (USING SST CHECK WIRE)

(a) Check that the ABS warning light blinks as shown in the illustration.

(b) Check the speed sensor signal.

(1) Drive the vehicle straight forward at a speed of 28 mph (45km/h) or more for several seconds, and then step on the brake pedal.

(2) Check that the ABS warning light goes off.
HINT:
- The sensor check may not be completed if one or more wheels spin or the steering wheel is turned.
- If the speed sensor check is commenced while the steering wheel is turned, the ABS warning light may come on after the low speed check is finished.
- The ABS warning light comes on immediately when an abnormality is detected.
- When the speed sensor signal is normal, the ABS warning light goes off while the vehicle is driven at 28 mph (45 km/h) or more and blinks in the test mode pattern while stationary.
- Do not drive the vehicle at a speed of 50 mph (80 km/h) or more after the ABS warning light turns off, because test mode DTCs are set again when the vehicle speed exceeds 50 mph (80km/h).

Blinking pattern in speed sensor check:

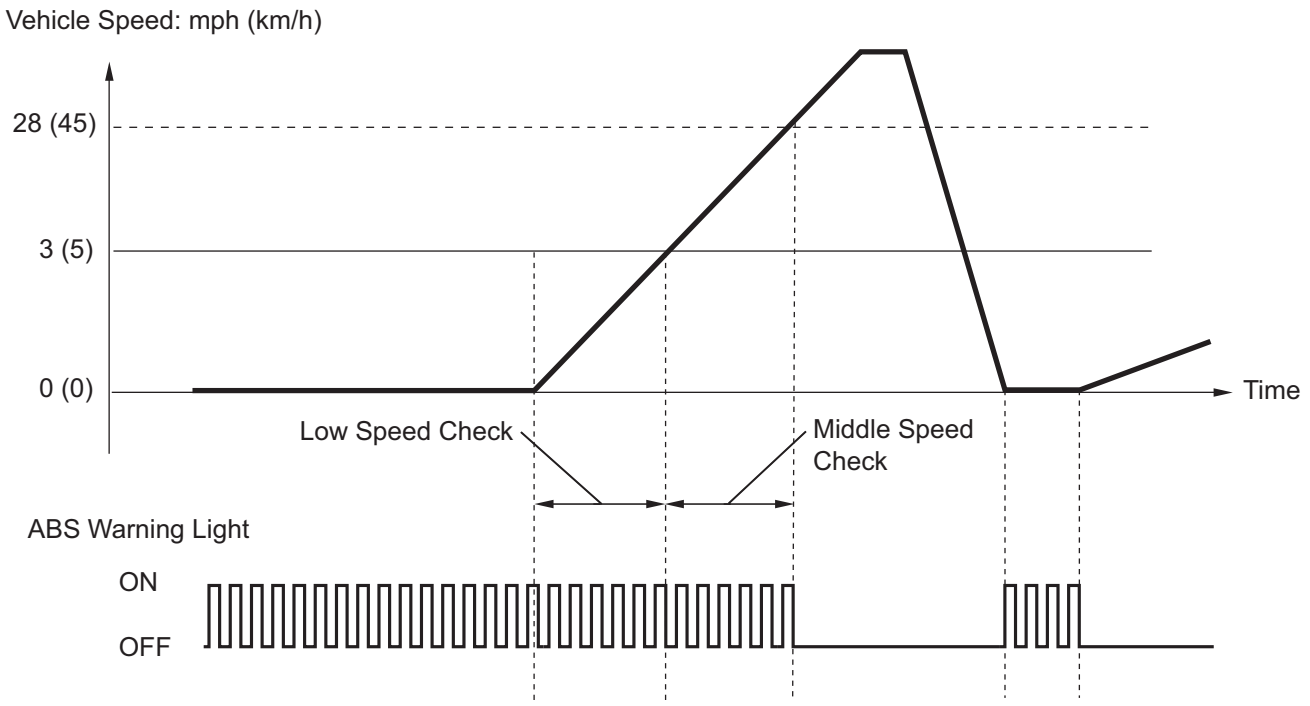

Y C115115E01

(3) Stop the vehicle.

7. END SENSOR CHECK (USING SST CHECK WIRE)

(a) When the sensor check is successfully completed, the ABS warning light blinks in the test mode pattern when the vehicle is stopped, and goes off when the vehicle is driven.

NOTICE:

If the sensor check is not completed, the ABS warning light blinks even while the vehicle is driven and the ABS does not operate.

8. READ SIGNAL CHECK FUNCTION DTCS (USING SST CHECK WIRE)

(a) Using SST, connect terminals TC and CG of the DLC3.

SST 09843-18040

(b) Turn the ignition switch on.

(c) Read the number of blinks of the ABS warning light.

HINT:

- See the list of DTCs (refer to step 9).

DLC3:

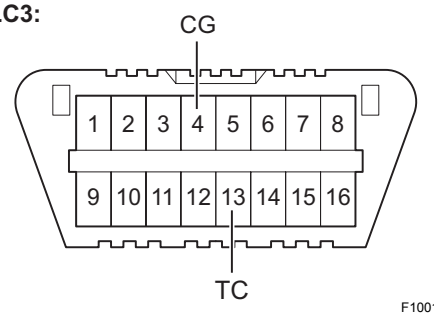

Y F100115E02

BC

Blinking Pattern in TEST MODE:

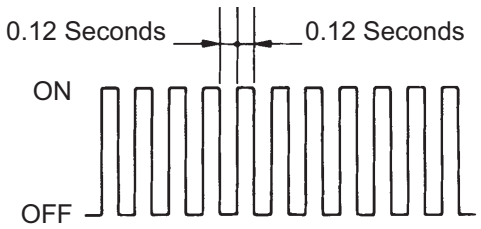

BR03904E22

- If all the sensors are normal, a normal system code is output (the light comes on for 0.25 seconds at intervals of 0.25 seconds).

(d) After the check, disconnect the SST from terminals TC and CG of the DLC3.

(e) Turn the ignition switch off.

9. SPEED SENSOR CHECK FUNCTION DTCs

Code No.	Diagnosis	Trouble Areas
C1271/71	Low output signal of front speed sensor RH	• Front speed sensor RH • Front speed sensor RH circuit • Sensor installation • Foreign matter on sensor tip or sensor rotor
C1272/72	Low output signal of front speed sensor LH	• Front speed sensor LH • Front speed sensor LH circuit • Sensor installation • Foreign matter on sensor tip or sensor rotor
C1273/73	Low output signal of rear speed sensor RH	• Skid control sensor RH • Skid control sensor RH circuit • Sensor installation
C1274/74	Low output signal of rear speed sensor LH	• Skid control sensor LH • Skid control sensor LH circuit • Sensor installation
C1275/75	Abnormal change in output signal of front speed sensor RH	• Front speed sensor RH • Front speed sensor RH circuit • Foreign matter on sensor tip or sensor rotor
C1276/76	Abnormal change in output signal of front speed sensor LH	• Front speed sensor LH • Front speed sensor LH circuit • Foreign matter on sensor tip or sensor rotor
C1277/77	Abnormal change in output signal of rear speed sensor RH	• Skid control sensor RH • Skid control sensor RH circuit
C1278/78	Abnormal change in output signal of rear speed sensor LH	• Skid control sensor LH • Skid control sensor LH circuit

HINT:

- The DTCs in this table are only output in test mode.
- Detection of DTCs from C1271/71 to C1274/74 is completed before the vehicle speed reaches 3 mph (5 km/h).
- Detection of DTCs from C1275/75 to C1278/78 is completed several seconds after the vehicle speed exceeds 28 mph (45 km/h).
- C1271/71 - C1274/74: Speed output from only one wheel is extremely low despite other wheel speed outputs reaching 3 mph (5 km/h).
- C1275/75 - C1278/78: Abnormal speed sensor output frequency is as shown in the illustration.

Example:

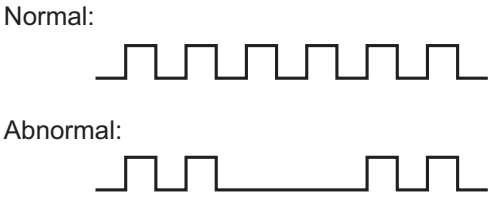

P

F100272E01

PROBLEM SYMPTOMS TABLE

If no DTCs are displayed during the DTC check but the problem still occurs, check the circuits for each problem symptom in the order given in the table below and proceed to the relevant troubleshooting page.

NOTICE:

When replacing the brake actuator or sensor, turn the ignition switch off.

ANTI-LOCK BRAKE SYSTEM

Symptom	Suspected area	See page
ABS and/or EBD does not operate	1. Check DTC again and make sure that normal system code displayed.	BC-25
	2. IG power source circuit	BC-59
	3. Front speed sensor circuit	BC-37
	4. Skid control sensor circuit	BC-44
	5. Check brake actuator using intelligent tester. (Check brake actuator operation using active test function.) If abnormal, check hydraulic circuit for leakage.	BC-34
	6. If symptoms still occur even after above circuits in suspected areas inspected and proved to be normal, replace brake actuator (skid control ECU).	BC-89
ABS and/or EBD does not operate efficiently	1. Check DTC again and make sure that normal system code displayed.	BC-25
	2. Front speed sensor circuit	BC-37
	3. Skid control circuit	BC-44
	4. Stop light switch circuit	BC-64
	5. Check brake actuator using intelligent tester. (Check brake actuator operation using active test function.) If abnormal, check hydraulic circuit for leakage.	BC-34
	6. If symptoms still occur even after above circuits in suspected areas inspected and proved to be normal, replace brake actuator (skid control ECU).	BC-89
Sensor signal check cannot be done	1. TS and CG terminal circuit	BC-84
	2. Brake actuator (skid control ECU)	BC-89
DTC check cannot be done	1. Check DTC again and make sure that normal system code displayed.	BC-25
	2. TC and CG terminal circuit	BC-81
	3. If symptoms still occur even after above circuits in suspected areas inspected and proved to be normal, replace brake actuator (skid control ECU).	BC-89
ABS warning light remains on	1. ABS warning light circuit	BC-70
	2. Brake actuator (skid control ECU)	BC-89
ABS warning light does not come on	1. ABS warning light circuit	BC-73
	2. Brake actuator (skid control ECU)	BC-89
BRAKE warning light remains on	1. BRAKE waning light circuit	BC-74
	2. Brake actuator (skid control ECU)	BC-89
BRAKE warning light does not come on	1. BRAKE warning light circuit	BC-79
	2. Brake actuator (skid control ECU)	BC-89

TERMINALS OF ECU

1. Terminals of ECU

Skid Control ECU:

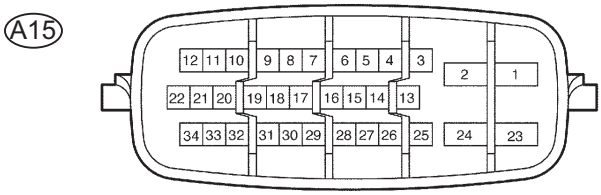

C110609E01

Symbols (Terminals No.)	Terminal Description
+BS (A15-1)	Solenoid valve power supply
GND1 (A15-2)	Skid control ECU ground
CANL (A15-5)	CAN communication line L
CANH (A15-6)	CAN communication line H
FL- (A15-8)	Front LH wheel speed signal input
FL+ (A15-9)	Front LH wheel speed sensor power supply
STP (A15-10)	Stop light switch input
RL+ (A15-11)	Rear LH wheel speed sensor power supply
RL- (A15-12)	Rear LH wheel speed signal input
+BM (A15-23)	Motor relay power supply
GND2 (A15-24)	Actuator pump motor ground
IG1 (A15-25)	ECU power supply
FR- (A15-30)	Front RH wheel speed signal input
FR+ (A15-31)	Front RH wheel speed sensor power supply
RR+ (A15-33)	Rear RH wheel speed sensor power supply
RR- (A15-34)	Rear RH wheel speed signal input

Main Body ECU (Rear View):

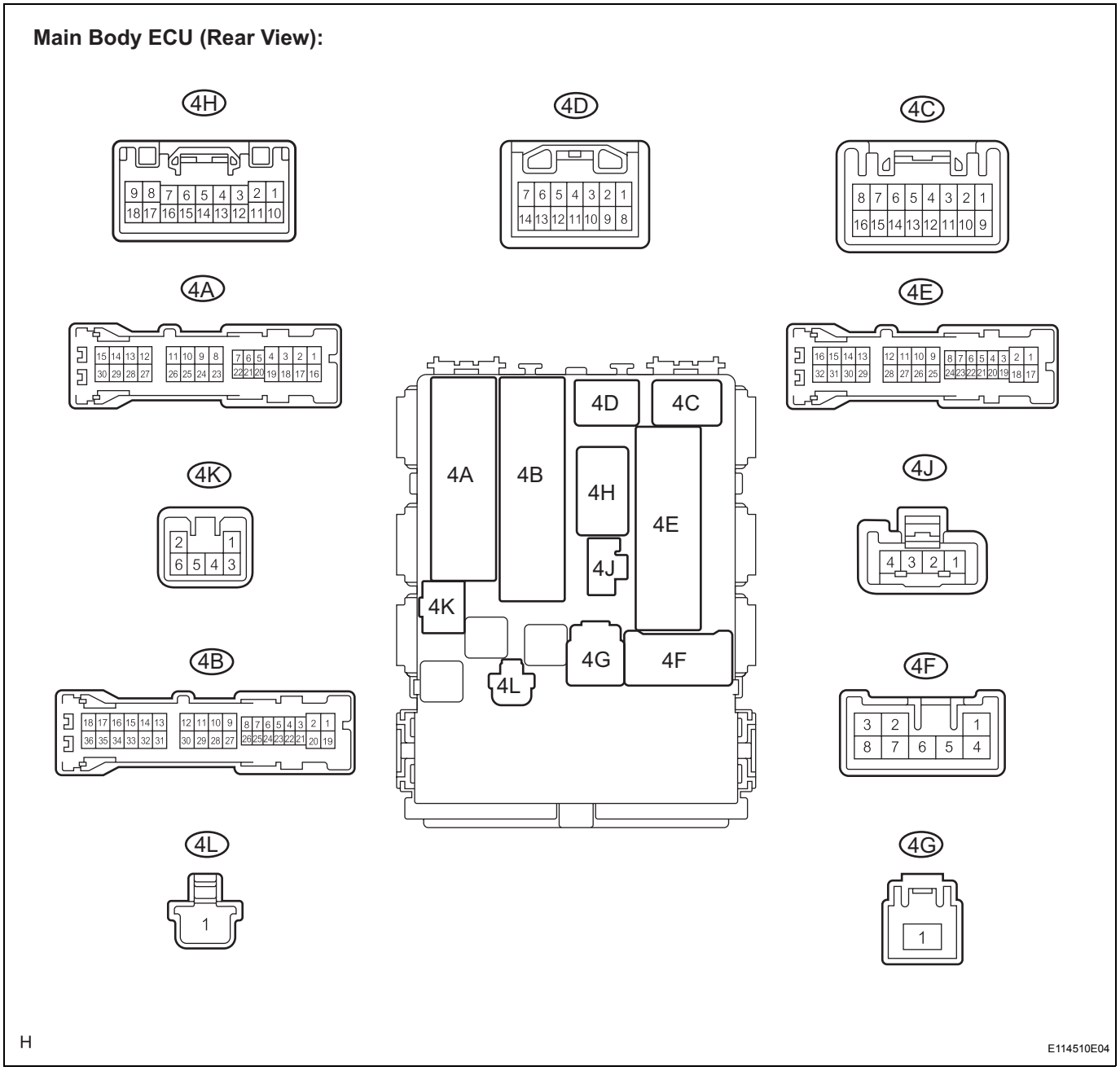

Symbols (Terminals No.)	Terminal Description
PKB (4C-2)	Parking brake switch input

2. Terminal inspection

(a) Disconnect the connector and measure the resistance and voltage on the wire harness side.
HINT:
The voltage cannot be measured with the connector connected to the skid control ECU as the connector is water resistant.

BC

Skid Control ECU (harness side connector):

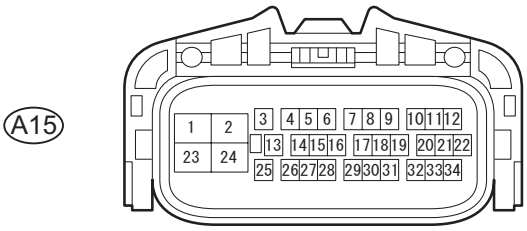

C107496E01

Standard:

Symbols	Wiring Color	Terminal Description	Conditions	Specified Conditions
+BS (A15-1) - Body ground	W - Body ground	Solenoid valve power supply	Always	11 to 14 V
GND1 (A15-2) - Body ground	W-B - Body ground	Skid control ECU ground	Always	Below 1 Ω
STP (A15-10) - Body ground	G - Body ground	Stop light switch input	Stop light switch ON Brake pedal depressed	8 to 14 V
STP (A15-10) - Body ground	G - Body ground	Stop light switch input	Stop light switch OFF Brake pedal released	Below 1.5 V
+BM (A15-23) - Body ground	B - Body ground	Motor relay power supply	Always	11 to 14 V
GND2 (A15-24) - Body ground	W-B - Body ground	Actuator pump motor ground	Always	Below 1 Ω
IG1 (A15-25) - Body ground	B - Body ground	ECU power supply	Ignition switch on	11 to 14 V

Main Body ECU (harness side connector):

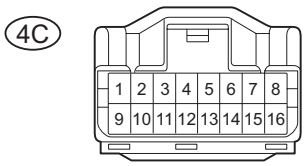

Y

C118700E01

Standard resistance:

Symbols	Wiring Color	Terminal Description	Conditions	Specified Conditions
PKB (4C-2) - Body ground	Y - Body ground	Parking brake switch input	Parking brake switch ON	Below 1 Ω
PKB (4C-2) - Body ground	Y - Body ground	Parking brake switch input	Parking brake switch OFF	10 kΩ or higher

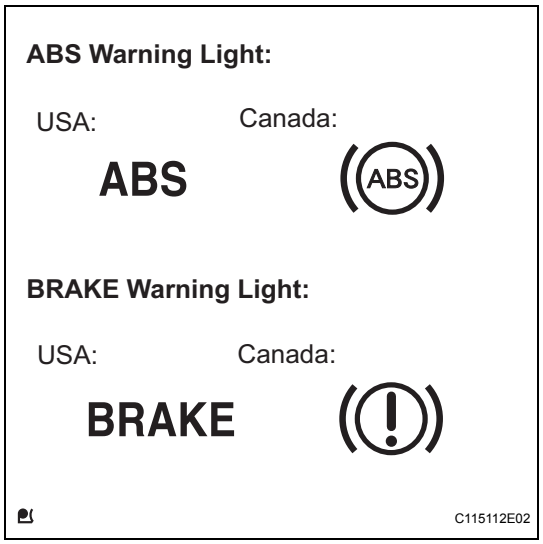

DIAGNOSIS SYSTEM

1. DIAGNOSIS

If the skid control ECU detects a malfunction, the ABS and/or BRAKE warning lights come on in accordance with the trouble area, to warn the driver.
The table below indicates which lights come on when there are malfunctions in particular functions.

Item / Trouble Area	ABS System	EBD System	Skid Control ECU
ABS warning light	○	○	○
Brake warning light	-	○	○

○: Light ON, -: Light OFF

HINT:

- The DTCs can be read by connecting SST (09843-18040) between the TC and CG terminals of the DLC3 and observing the blinking pattern of the ABS warning light, or by using an intelligent tester (See page BC-25).
- This system has a sensor signal check function (See page BC-14).

2. WARNING LIGHT CHECK

(a) Release the parking brake lever.

NOTICE:
Before releasing the parking brake lever, set chocks to hold the vehicle for safety.

HINT:
When the parking brake is applied or the brake fluid level is low, the brake warning light comes on.

(b) When the ignition switch is turned on, check that the ABS warning light and brake warning light come on and go off in approximately 3 seconds.

HINT:
If the warning lights do not illuminate, confirm whether the bulbs have burned out, and also check for CAN communication system DTCs, since the skid control ECU and combination meter are connected by the CAN communication line.
If the warning light remains on, perform the relevant troubleshooting procedures. The relevant troubleshooting procedures are described in the sections listed in the table below.

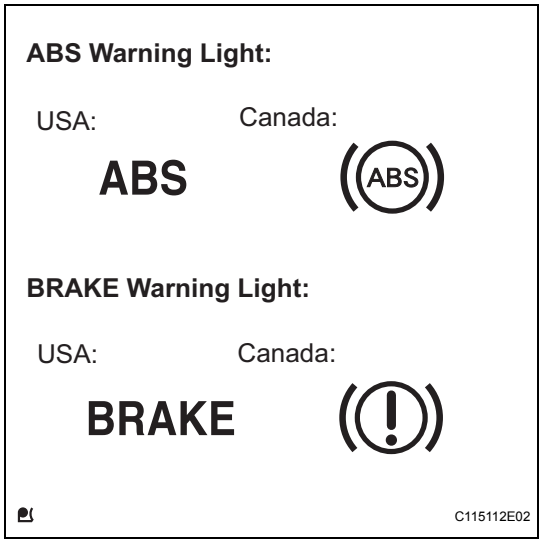

Section Title	See Page
ABS Warning Light Remains ON	BC-70
Brake Warning Light Remains ON	BC-74

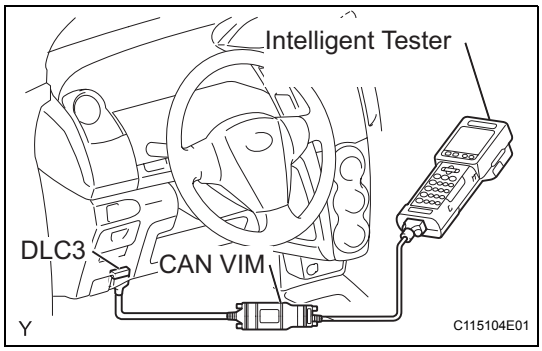

DTC CHECK / CLEAR

1. DTC CHECK (USING INTELLIGENT TESTER)

(a) Check DTCs.
- (1) Connect the intelligent tester to the DLC3.
- (2) Turn the ignition switch on.
- (3) Turn the tester on.
- (4) Read the DTCs using the intelligent tester. Select the following menu items: DIAGNOSIS / OBD/MOBD / select vehicle / ABS / DTC INFO / TROUBLE CODES.

2. DTC CLEAR (USING INTELLIGENT TESTER)

(a) Clear the DTCs.
- (1) Connect the intelligent tester to the DLC3.
- (2) Turn the ignition switch on.
- (3) Turn the tester on.
- (4) Clear the DTCs using the intelligent tester. Select the following menu items: DIAGNOSIS / OBD/MOBD / select vehicle / ABS / DTC INFO / CLEAR CODES.

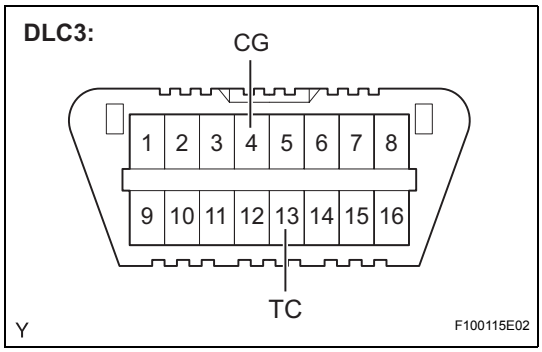

3. DTC CHECK (USING SST CHECK WIRE)

(a) Check DTCs.
- (1) Using SST, connect terminals TC and CG of the DLC3.
  SST 09843-18040
- (2) Turn the ignition switch on.
- (3) Read 2-digit DTCs indicated by the blinking of the ABS warning light on the combination meter.
  HINT:
  - If the ABS warning light does not blink, perform relevant troubleshooting procedures. The relevant troubleshooting procedures are described in the sections listed in the table below.

Section Title	See Page
ABS Warning Light does not Come ON	BC-73
TC and CG Terminal Circuit	BC-81

- As an example, the blinking patterns of the normal system code and DTCs 11 and 21 are shown below.

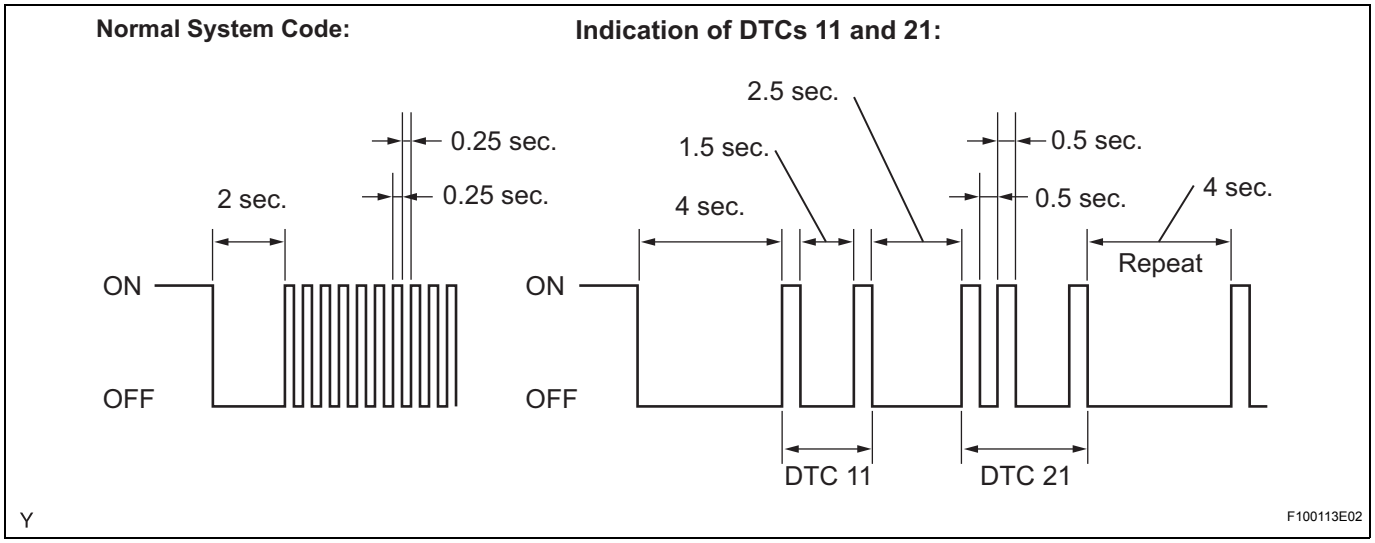

- DTCs are explained in "DIAGNOSTIC TROUBLE CODE CHART" (See page BC-31).

(4) After completing the check, disconnect SST from terminals TC and CG of the DLC3, and turn the ignition switch off.
HINT:
If 2 or more malfunctions are detected at the same time, the lowest numbered DTC is displayed first.

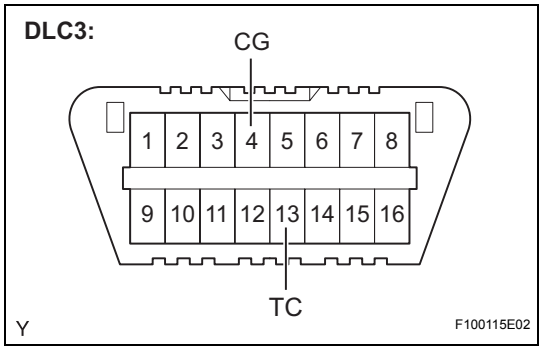

4. DTC CLEAR (USING SST CHECK WIRE)

(a) Clear the DTCs.

(1) Using SST, connect terminals TC and CG of the DLC3.
SST 09843-18040

(2) Turn the ignition switch on.

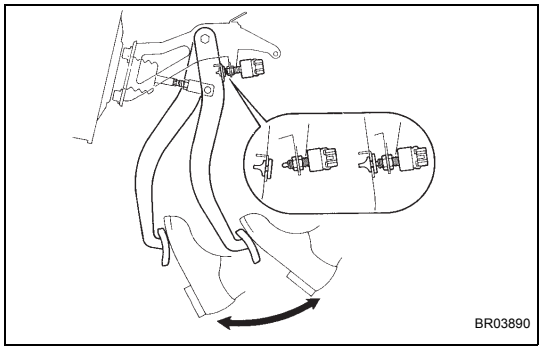

(3) Clear the DTCs stored in the skid control ECU by depressing the brake pedal 8 times or more within 5 seconds.

(4) Check that the warning light blinks in the normal system code pattern.

(5) Remove SST from the terminals of the DLC3.

(6) Turn the ignition switch off.
HINT:
The DTCs cannot be cleared by removing the battery cable or ECU-IG fuse.

5. END OF DTC CHECK/CLEAR

(a) Turn the ignition switch on.

(b) Check that the ABS warning light goes off within approximately 3 seconds.

(c) Turn the ignition switch off.

FREEZE FRAME DATA

1. FREEZE FRAME DATA

HINT:

- Whenever a DTC is detected or the ABS operates, the skid control ECU stores the current vehicle (sensor) state as freeze frame data.
- The skid control ECU stores the number of times (maximum: 31) the ignition switch has been turned from off to on since the last time the ABS was activated. However, if the vehicle was stationary or running at a low speed (4.3 mph [7 km/h] or less), or if a DTC is detected, the skid control ECU stops counting.
- Freeze frame data at the time the ABS operates: The skid control ECU stores and updates the data whenever the ABS system operates.
  When the ECU stores data at the time a DTC is detected, the data stored when the ABS operated is erased.
- Freeze frame data at the time a DTC is detected: When the skid control ECU stores data at the time a DTC is detected, no updates are performed until the data is cleared.

(a) Connect the intelligent tester to the DLC3.
(b) Turn the ignition switch on.
(c) Turn the tester on.
(d) From the display on the tester, select "FREEZE FRAME DATA".

Item (Display)	Measurement Item	Reference Values
FREEZE TIME	Elapsed time since freeze frame data stored	Min.: 0 ms Max.: 500 ms
#IG ON	Number of ignition switch on operations since freeze frame data stored	0 to 31
STOP LAMP SW	Stop light switch signal	ON: Stop light switch ON OFF: Stop light switch OFF
PARKING BRAKE SW	Parking brake switch signal	ON: Parking brake switch ON OFF: Parking brake switch OFF
OPERATED SYSTEM	Operated system status	ABS: ABS activated FAIL: Fail safe mode activated SYS: System prohibited NON: No system activated
FORWARD&REA G	Forward and backward G	Min.: -25.11 m/s^2 Max.: 24.91 m/s^2
FR WHEEL SPD	FR wheel speed	Min.: 0 mph (0 km/h) Max.: 202 mph (326.4 km/h)
FL WHEEL SPD	FL wheel speed	Min.: 0 mph (0 km/h) Max.: 202 mph (326.4 km/h)
RR WHEEL SPD	RR wheel speed	Min.: 0 mph (0 km/h) Max.: 202 mph (326.4 km/h)
RL WHEEL SPD	RL wheel speed	Min.: 0 mph (0 km/h) Max.: 202 mph (326.4 km/h)
VEHICLE SPD	Vehicle speed	Min.: 0 mph (0 km/h) Max.: 202 mph (326.4 km/h)
SPD GRADE	Vehicle speed grade	Min.: -25.11 m/s^2 Max.: 24.91 m/s^2

FAIL-SAFE CHART

1. FAIL SAFE OPERATION

- If there is a problem with any sensor signals or actuator systems, the skid control ECU prohibits the power supply to the brake actuator.
  ABS control is prohibited, but EBD control continues as far as possible. If EBD control is impossible, the BRAKE warning light comes on to warn the driver (See page BC-24).
- If any system components have malfunctions before starting control, the operation stops immediately. If any system components have malfunctions during control, the control stops gradually so as not to trigger any sudden changes in the vehicle conditions.
  If it is impossible to control the systems, the warning light comes on to inform the driver of the malfunctions in the systems (See page BC-24).

HINT:

- If the ABS system malfunctions, the brake system operates normally without the ABS system control.
- If the brake actuator malfunctions, a gradual loss of brake performance is expected, and ABS system control is prohibited.

ABS and EBD system

Malfunction Area	Fail-Safe Operation
ABS system	ABS control prohibited
EBD system	ABS and EBD control prohibited

DATA LIST / ACTIVE TEST

1. DATA LIST

HINT:
By referring to the DATA LIST displayed on the intelligent tester, the values and status of parts such as switches, sensors and actuators can be read without removing any parts. Reading the DATA LIST as the first step of troubleshooting is one method of shortening diagnostic time.

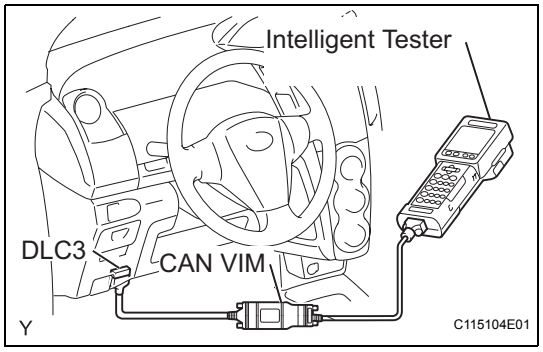

(a) Connect the intelligent tester to the DLC3.
(b) Turn the ignition switch on.
(c) Turn the intelligent tester on.
(d) Select the following menu items: DIAGNOSIS / OBD / MOBD / select vehicle / ABS / DATA LIST.

Item (Display)	Measurement Item / Range (Display)	Normal Condition	Diagnostic Notes
ABS WARN LAMP	ABS warning light / ON or OFF	ON: ABS warning light ON OFF: ABS warning light OFF	-
BRAKE WARN LAMP	BRAKE warning light / ON or OFF	ON: BRAKE warning light ON OFF: BRAKE warning light OFF	-
STOP LAMP SW	Stop light switch / ON or OFF	ON: Brake pedal depressed OFF: Brake pedal released	-
PARKING BRAKE SW	Parking brake switch / ON or OFF	ON: Parking brake applied OFF: Parking brake released	-
DECELERAT SEN	Deceleration sensor reading / min.: -25.11 m/s, max.: 24.91 m/s	Approximately 0+-0.13 while stationary	-
FORWARD&REA G	Forward and rearward G	min.: -25.11 m/s^2 max.: 24.91 m/s^2	-
FR WHEEL SPD	Wheel speed sensor (FR) reading / min.: 0 mph (0 km/h), max.: 202 mph (326 km/h)	Actual wheel speed	Similar to speed indicated on speedometer
FL WHEEL SPD	Wheel speed sensor (FL) reading / min.: 0 mph (0 km/h), max.: 202 mph (326 km/h)	Actual wheel speed	Similar to speed indicated on speedometer
RR WHEEL SPD	Wheel speed sensor (RR) reading / min.: 0 mph (0 km/h), max.: 202 mph (326 km/h)	Actual wheel speed	Similar to speed indicated on speedometer
RL WHEEL SPD	Wheel speed sensor (RL) reading / min.: 0 mph (0 km/h), max.: 202 mph (326 km/h)	Actual wheel speed	Similar to speed indicated on speedometer
VEHICLE SPD	Maximum speed sensor reading / min.: 0 mph (0 km/h), max.: 202 mph (326 km/h)	Actual wheel speed	Similar to speed indicated on speedometer
FR WHEEL ACCEL	FR wheel acceleration / min.: -25.11 m/s^2, max.: 24.91 m/s^2	min.: -200.84 m/s^2 max.: 199.27 m/s^2	-
FL WHEEL ACCEL	FL wheel acceleration / min.: -25.11 m/s^2, max.: 24.91 m/s^2	min.: -200.84 m/s^2 max.: 199.27 m/s^2	-
RR WHEEL ACCEL	RR wheel acceleration / min.: -25.11 m/s^2, max.: 24.91 m/s^2	min.: -200.84 m/s^2 max.: 199.27 m/s^2	-

Item (Display)	Measurement Item / Range (Display)	Normal Condition	Diagnostic Notes
RL WHEEL ACCEL	RL wheel acceleration / min.: -25.11 m/s^2, max.: 24.91 m/s^2	min.: -200.84 m/s^2 max.: 199.27 m/s^2	-
FR ABS STATUS	FR wheel ABS control status / ON or OFF	ON: During control	-
FL ABS STATUS	FL wheel ABS control status / ON or OFF	ON: During control	-
RR ABS STATUS	RR wheel ABS control status / ON or OFF	ON: During control	-
RL ABS STATUS	RL wheel ABS control status / ON or OFF	ON: During control	-
SOL RELAY	Solenoid relay / ON or OFF	ON: Solenoid relay ON OFF: Solenoid relay OFF	-
ECB MTR RELAY	ABS Motor relay / ON or OFF	ON: Motor relay ON OFF: Motor relay OFF	-
SFRH (*1)	ABS solenoid (SFRH) / ON or OFF	ON: Operates OFF: Does not operate	-
SFRR (*2)	ABS solenoid (SFRR) / ON or OFF	ON: Operates OFF: Does not operate	-
SFLH (*3)	ABS solenoid (SFLH) / ON or OFF	ON: Operates OFF: Does not operate	-
SFLR (*4)	ABS solenoid (SFLR) / ON or OFF	ON: Operates OFF: Does not operate	-
SRRH (*5)	ABS solenoid (SRRH) / ON or OFF	ON: Operates OFF: Does not operate	-
SRRR (*6)	ABS solenoid (SRRR) / ON or OFF	ON: Operates OFF: Does not operate	-
SRLH (*7)	ABS solenoid (SRLH) / ON or OFF	ON: Operates OFF: Does not operate	-
SRLR (*8)	ABS solenoid (SRLR) / ON or OFF	ON: Operates OFF: Does not operate	-
FR SPD OPN	FR speed sensor open detection / ERROR or NORMAL	ERROR: Momentary interruption NORMAL: Normal	-
FL SPD OPN	FL speed sensor open detection / ERROR or NORMAL	ERROR: Momentary interruption NORMAL: Normal	-
RR SPD OPN	RR speed sensor open detection / ERROR or NORMAL	ERROR: Momentary interruption NORMAL: Normal	-
RL SPD OPN	RL speed sensor open detection / ERROR or NORMAL	ERROR: Momentary interruption NORMAL: Normal	-
#DTC	Number of recorded DTCs / min.: 0, max.: 255	min.: 0 max.: 255	-

HINT:

- *1: SFRH (S: Solenoid, F: Front, R: Right, H: Holding)
- *2: SFRR (S: Solenoid, F: Front, R: Right, R: Reduction)
- *3: SFLH (S: Solenoid, F: Front, L: Left, H: Holding)
- *4: SFLR (S: Solenoid, F: Front, L: Left, R: Reduction)
- *5: SRRH (S: Solenoid, R: Rear, R: Right, H: Holding)
- *6: SRRR (S: Solenoid, R: Rear, R: Right, R: Reduction)

- *7: SRLH (S: Solenoid, R: Rear, L: Left, H: Holding)
- *8: SRLR (S: Solenoid, R: Rear, L: Left, R: Reduction)

2. ACTIVE TEST

HINT:
Performing the ACTIVE TEST using the intelligent tester allows parts such as relays and actuators to be operated without removing any parts. Performing the ACTIVE TEST as the first step of troubleshooting is one method of shortening diagnostic time.
It is possible to display the DATA LIST during the ACTIVE TEST.

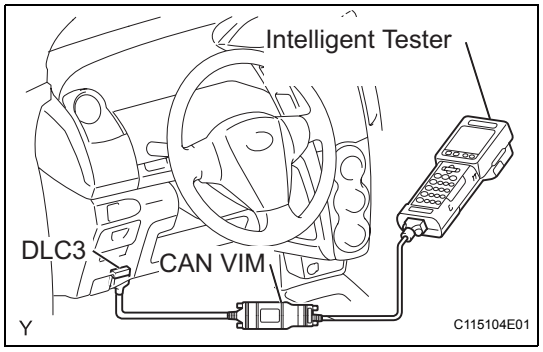

(a) Connect the intelligent tester to the DLC3.
(b) Turn the ignition switch on.
(c) Turn the intelligent tester on.
(d) By following the prompts on the tester, perform the ACTIVE TEST.
HINT:
- The ignition switch must be turned on to proceed to the ACTIVE TEST using the intelligent tester.
- The ACTIVE TESTs of the ABS solenoid, ABS motor relay, ABS warning light and BRAKE warning light are available when the vehicle is stopped.
- The motors stop automatically after 5 seconds of activation to prevent them from being damaged. When the motors are operated repeatedly, certain intervals are required between operations.
- Solenoids stop automatically after 2 seconds of activation to prevent them from being damaged, and can only be operated again after a certain interval.
- Do not depress the brake pedal while only the pressure reduction solenoid valves are on.
- Do not drive 2 or more solenoids simultaneously except to operate the pressure holding solenoid valves and pressure reduction solenoid valves of the wheels.

Item (Display)	Test Details	Diagnostic Notes
ABS WARN LAMP	Turns ABS warning light ON or OFF	Observe combination meter
BRAKE WARN LAMP	Turns BRAKE warning light ON or OFF	Observe combination meter
SOL RELAY	Turns ABS solenoid relay ON or OFF	-
MOTOR RELAY	Turns ABS motor relay ON or OFF	Operation sound of motor can be heard
SRLR	Turns ABS solenoid (SRLR) ON or OFF	Operation sound of solenoid (clicking sound) can be heard
SRLH	Turns ABS solenoid (SRLH) ON or OFF	Operation sound of solenoid (clicking sound) can be heard
SRRR	Turns ABS solenoid (SRRR) ON or OFF	Operation sound of solenoid (clicking sound) can be heard
SRRH	Turns ABS solenoid (SRRH) ON or OFF	Operation sound of solenoid (clicking sound) can be heard

Item (Display)	Test Details	Diagnostic Notes
SFLR	Turns ABS solenoid (SFLR) ON or OFF	Operation sound of solenoid (clicking sound) can be heard
SFLH	Turns ABS solenoid (SFLH) ON or OFF	Operation sound of solenoid (clicking sound) can be heard
SFRR	Turns ABS solenoid (SFRR) ON or OFF	Operation sound of solenoid (clicking sound) can be heard
SFRH	Turns ABS solenoid (SFRH) ON or OFF	Operation sound of solenoid (clicking sound) can be heard

DIAGNOSTIC TROUBLE CODE CHART

NOTICE:
When replacing any parts, turn the ignition switch off.
HINT:
- If no abnormality is found when inspecting parts, check the skid control ECU and check for poor contact at ground points.
- If a DTC is displayed during the DTC check, check the circuit for the DTC listed in the table below. For details of each DTC, refer to the page indicated.
- When 2 or more DTCs are detected, perform circuit inspections one by one until the problem is identified.
- All DTCs in the table below are detected in accordance with 1 trip detection logic.

DTC chart:

DTC No.	Detection Item	Trouble Areas	See page
C0200/31 (*1)	Right Front Wheel Speed Sensor Signal	1. Front speed sensor RH 2. Front speed sensor RH circuit 3. Sensor installation 4. Foreign matter on sensor tip or sensor rotor 5. Brake actuator (skid control ECU)	BC-37
C0205/32 (*1)	Left Front Wheel Speed Sensor Signal	1. Front speed sensor LH 2. Front speed sensor LH circuit 3. Sensor installation 4. Foreign matter on sensor tip or sensor rotor 5. Brake actuator (skid control ECU)	BC-37
C0210/33 (*1)	Right Rear Wheel Speed Sensor Signal	1. Skid control sensor RH 2. Skid control sensor RH circuit 3. Sensor installation 4. Brake actuator (skid control ECU)	BC-44
C0215/34 (*1)	Left Rear Wheel Speed Sensor Signal	1. Skid control sensor LH 2. Skid control sensor LH circuit 3. Sensor installation 4. Brake actuator (skid control ECU)	BC-44
C0226/21	SFR Solenoid Circuit	Brake actuator	BC-51
C0236/22	SFL Solenoid Circuit	Brake actuator	BC-51
C0246/23	SRR Solenoid Circuit	Brake actuator	BC-51
C0256/24	SRL Solenoid Circuit	Brake actuator	BC-51
C0273/13	Open in ABS Motor Relay Circuit	1. ABS1/VSC1 fuse 2. Wire harness (+ BM circuit) 3. Brake actuator (skid control ECU)	BC-54
C0274/14	Short to B+ in ABS Motor Relay Circuit	1. ABS1/VSC1 fuse 2. Wire harness (+ BM circuit) 3. Brake actuator (skid control ECU)	BC-54
C0278/11	Open in ABS Solenoid Relay Circuit	1. ABS2/VSC2 fuse 2. Wire harness (+BS) 3. Brake actuator (skid control ECU)	BC-57
C0279/12	Short to B+ in ABS Solenoid Relay Circuit	1. ABS2/VSC2 fuse 2. Wire harness (+BS) 3. Brake actuator (skid control ECU)	BC-57

DTC No.	Detection Item	Trouble Areas	See page
C1235/35	Foreign Object is Attached on Tip of Front Speed Sensor RH	1. Front speed sensor RH 2. Front speed sensor RH circuit 3. Foreign matter on sensor tip or sensor rotor 4. Brake actuator (skid control ECU)	BC-37
C1236/36	Foreign Object is Attached on Tip of Front Speed Sensor LH	1. Front speed sensor LH 2. Front speed sensor LH circuit 3. Foreign matter on sensor tip or sensor rotor 4. Brake actuator (skid control ECU)	BC-37
C1238/38	Foreign Object is Attached on Tip of Rear Speed Sensor RH	1. Skid control sensor RH 2. Skid control sensor RH circuit 3. Brake actuator (skid control ECU)	BC-44
C1239/39	Foreign Object is Attached on Tip of Rear Speed Sensor LH	1. Skid control sensor LH 2. Skid control sensor LH circuit 3. Brake actuator (skid control ECU)	BC-44
C1241/41	Low Battery Positive Voltage or Abnormally High Battery Positive Voltage	1. Battery 2. Charging system 3. ECU-IG fuse 4. AM1 fuse 5. IG1 relay 6. Brake actuator (skid control ECU)	BC-59
C1249/49	Open in Stop Light Switch Circuit	1. Stop light switch 2. Stop light switch circuit 3. Brake actuator (skid control ECU)	BC-64
C1251/51 (*1)	Open in Pump Motor Circuit	Brake actuator	BC-68
U0073/94	Control Module Communication Bus OFF	CAN communication system	BC-69

HINT:
*1:
Even after the trouble areas are repaired, the ABS warning light will not go off unless the following operations are performed.
1. Drive the vehicle at 12 mph (20 km/h) for 30 seconds or more and check that the ABS warning light goes off.
2. Clear the DTC(s).

Test Mode DTC:

DTC No.	Detection Item	Trouble Areas	See page
C1271/71	Low Output Signal of Front Speed Sensor RH (Test Mode DTC)	1. Front speed sensor RH 2. Front speed sensor RH circuit 3. Sensor installation 4. Foreign matter on sensor tip or sensor rotor	BC-37
C1272/72	Low Output Signal of Front Speed Sensor LH (Test Mode DTC)	1. Front speed sensor LH 2. Front speed sensor LH circuit 3. Sensor installation 4. Foreign matter on sensor tip or sensor rotor	BC-37
C1273/73	Low Output Signal of Rear Speed Sensor RH (Test Mode DTC)	1. Skid control sensor RH 2. Skid control sensor RH circuit 3. Sensor installation	BC-44
C1274/74	Low Output Signal of Rear Speed Sensor LH (Test Mode DTC)	1. Skid control sensor LH 2. Skid control sensor LH circuit 3. Sensor installation	BC-44

DTC No.	Detection Item	Trouble Areas	See page
C1275/75	Abnormal Change in Output Signal of Front Speed Sensor RH (Test Mode DTC)	1. Front speed sensor RH 2. Front speed sensor RH circuit 3. Foreign matter on sensor tip or sensor rotor	BC-37
C1276/76	Abnormal Change in Output Signal of Front Speed Sensor LH (Test Mode DTC)	1. Front speed sensor LH 2. Front speed sensor LH circuit 3. Foreign matter on sensor tip or sensor rotor	BC-37
C1277/77	Abnormal Change in Output Signal of Rear Speed Sensor RH (Test Mode DTC)	1. Skid control sensor RH 2. Skid control sensor RH circuit	BC-44
C1278/78	Abnormal Change in Output Signal of Rear Speed Sensor LH (Test Mode DTC)	1. Skid control sensor LH 2. Skid control sensor LH circuit	BC-44

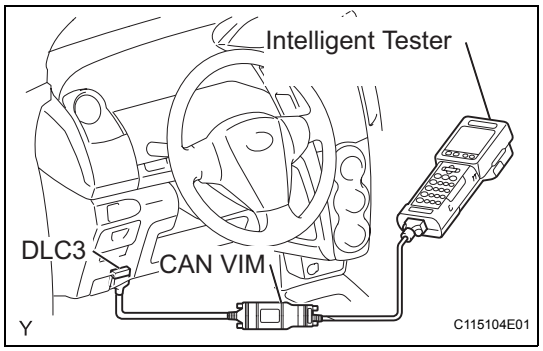

ON-VEHICLE INSPECTION

1. CONNECT INTELLIGENT TESTER

(a) Connect the intelligent tester to the DLC3.
(b) Start the engine and allow it to idle.
(c) Turn the tester on.
(d) Perform the active test using the intelligent tester. Select the following menu items: DIAGNOSIS / OBD/MOBD / select vehicle / ABS / ACTIVE TEST.

2. INSPECT BRAKE ACTUATOR MOTOR

(a) With the motor relay ON, check the actuator motor operation sound.
(b) Turn the motor relay OFF.
(c) Depress the brake pedal and hold it for approximately 15 seconds. Check that the brake pedal cannot be depressed further.
(d) With the motor relay ON, check that the pedal does not pulsate.
NOTICE:
Do not keep the motor relay ON for more than 5 seconds continuously. Allow intervals of at least 20 seconds between consecutive operations.
(e) Turn the motor relay OFF and release the brake pedal.

3. INSPECT BRAKE ACTUATOR SOLENOID (for Front Right Wheel)

NOTICE:
Never turn ON a solenoid in any manner other than described below.

(a) With the brake pedal depressed, perform the following operations.
(b) Turn the SFRH and SFRR solenoids ON simultaneously, and check that the pedal cannot be depressed further.
NOTICE:
Do not keep the motor relay ON for more than 5 seconds continuously. Allow intervals of at least 20 seconds between consecutive operations.

(c) Turn the SFRH and SFRR solenoids OFF simultaneously, and check that the pedal can be depressed further.

(d) Turn the motor relay ON, and check that the pedal can be depressed.
NOTICE:
Do not keep the motor relay ON for more than 5 seconds continuously. Allow intervals of at least 20 seconds between consecutive operations.

(e) Turn the motor relay OFF and release the brake pedal.

4. INSPECT BRAKE ACTUATOR SOLENOID (for Front Left Wheel)
NOTICE:
Never turn ON a solenoid in any manner other than described below.

(a) With the brake pedal depressed, perform the following operations.

(b) Turn the SFLH and SFLR solenoids ON simultaneously, and check that the pedal cannot be depressed further.
NOTICE:
Do not keep the motor relay ON for more than 5 seconds continuously. Allow intervals of at least 20 seconds between consecutive operations.

(c) Turn the SFLH and SFLR solenoids OFF simultaneously, and check that the pedal can be depressed further.

(d) Turn the motor relay ON, and check that the pedal can be depressed.
NOTICE:
Do not keep the motor relay ON for more than 5 seconds continuously. Allow intervals of at least 20 seconds between consecutive operations.

(e) Turn the motor relay OFF and release the brake pedal.

5. INSPECT BRAKE ACTUATOR SOLENOID (for Rear Right Wheel)
NOTICE:
Never turn ON a solenoid in any manner other than described below.

(a) With the brake pedal depressed, perform the following operations.

(b) Turn the SRRH and SRRR solenoids ON simultaneously, and check that the pedal cannot be depressed further.
NOTICE:
Do not keep the motor relay ON for more than 5 seconds continuously. Allow intervals of at least 20 seconds between consecutive operations.

(c) Turn the SRRH and SRRR solenoids OFF simultaneously, and check that the pedal can be depressed further.

(d) Turn the motor relay ON, and check that the pedal can be depressed.
NOTICE:
Do not keep the motor relay ON for more than 5 seconds continuously. Allow intervals of at least 20 seconds between consecutive operations.

(e) Turn the motor relay OFF and release the brake pedal.

6. INSPECT BRAKE ACTUATOR SOLENOID (for Rear Left Wheel)
NOTICE:
Never turn ON a solenoid in any manner other than described below.

(a) With the brake pedal depressed, perform the following operations.

(b) Turn the SRLH and SRLR solenoids ON simultaneously, and check that the pedal cannot be depressed further.
NOTICE:
Do not keep the motor relay ON for more than 5 seconds continuously. Allow intervals of at least 20 seconds between consecutive operations.

(c) Turn the SRLH and SRLR solenoids OFF simultaneously, and check that the pedal can be depressed further.

(d) Turn the motor relay ON, and check that the pedal can be depressed.
NOTICE:
Do not keep the motor relay ON for more than 5 seconds continuously. Allow intervals of at least 20 seconds between consecutive operations.

(e) Turn the motor relay OFF and release the brake pedal.

DTC	C0200/31	Right Front Wheel Speed Sensor Signal
DTC	C0205/32	Left Front Wheel Speed Sensor Signal
DTC	C1235/35	Foreign Object is Attached on Tip of Front Speed Sensor RH
DTC	C1236/36	Foreign Object is Attached on Tip of Front Speed Sensor LH
DTC	C1271/71	Low Output Signal of Front Speed Sensor RH (Test Mode DTC)
DTC	C1272/72	Low Output Signal of Front Speed Sensor LH (Test Mode DTC)
DTC	C1275/75	Abnormal Change in Output Signal of Front Speed Sensor RH (Test Mode DTC)
DTC	C1276/76	Abnormal Change in Output Signal of Front Speed Sensor LH (Test Mode DTC)

DESCRIPTION

The speed sensors detect the wheel speeds and send appropriate signals to the skid control ECU. Speed sensor rotors have rows of alternating N and S magnetic poles, and their magnetic fields change as the rotors turn.
The speed sensors detect those magnetic changes and send pulse signals to the skid control ECU. The ECU monitors the wheel speeds through these pulse signals to control the ABS control system.

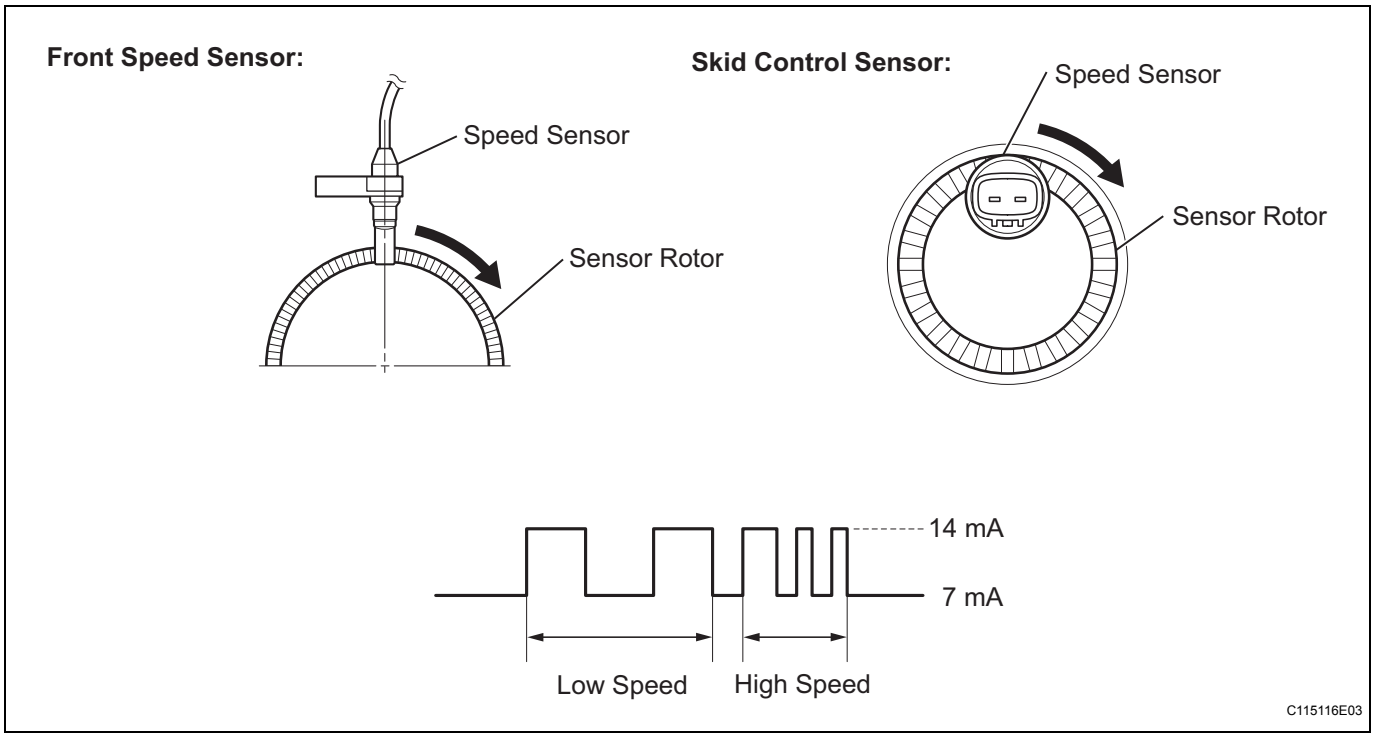

DTC No.	DTC Detecting Conditions	Trouble Areas
C0200/31 C0205/32	When any of following conditions detected: 1. At vehicle speed of 6 mph (10 km/h) or more, open or short in sensor signal circuit continues for 1 second or more. 2. Momentary interruption of sensor signal from abnormal wheel occurs 255 times or more. 3. Open in speed sensor signal circuit continues for 0.5 seconds or more. 4. With IG1 terminal voltage 9.5 V or more, sensor power supply voltage decreases for 0.5 seconds or more. 5. When vehicle driven at speed of more than 6 mph (10 km/h), speed of one wheel below one-seventh of other wheel speeds for 15 seconds or more.	• Front speed sensor • Front speed sensor circuit • Sensor installation • Foreign matter on sensor tip or sensor rotor • Brake actuator (skid control ECU)
C1235/35 C1236/36	When either of following conditions detected: 1. At vehicle speed of 12 mph (20 km/h) or more, noise occurs 75 times or more in sensor signal from abnormal wheel within 5 seconds. 2. At vehicle speed of 6 mph (10 km/h) or more, noise input once per rotor rotation for 15 seconds or more.	• Front speed sensor • Front speed sensor circuit • Foreign matter on sensor tip or sensor rotor • Brake actuator (skid control ECU)
C1271/71 C1272/72	Detected only during test mode.	• Front speed sensor • Front speed sensor circuit • Sensor installation • Foreign matter on sensor tip or sensor rotor
C1275/75 C1276/76	Detected only during test mode.	• Front speed sensor • Front speed sensor circuit • Foreign matter on sensor tip or sensor rotor

HINT:
- DTCs C0200/31 and C1235/35 relate to the front speed sensor RH.
- DTCs C0205/32 and C1236/36 relate to the front speed sensor LH.

WIRING DIAGRAM

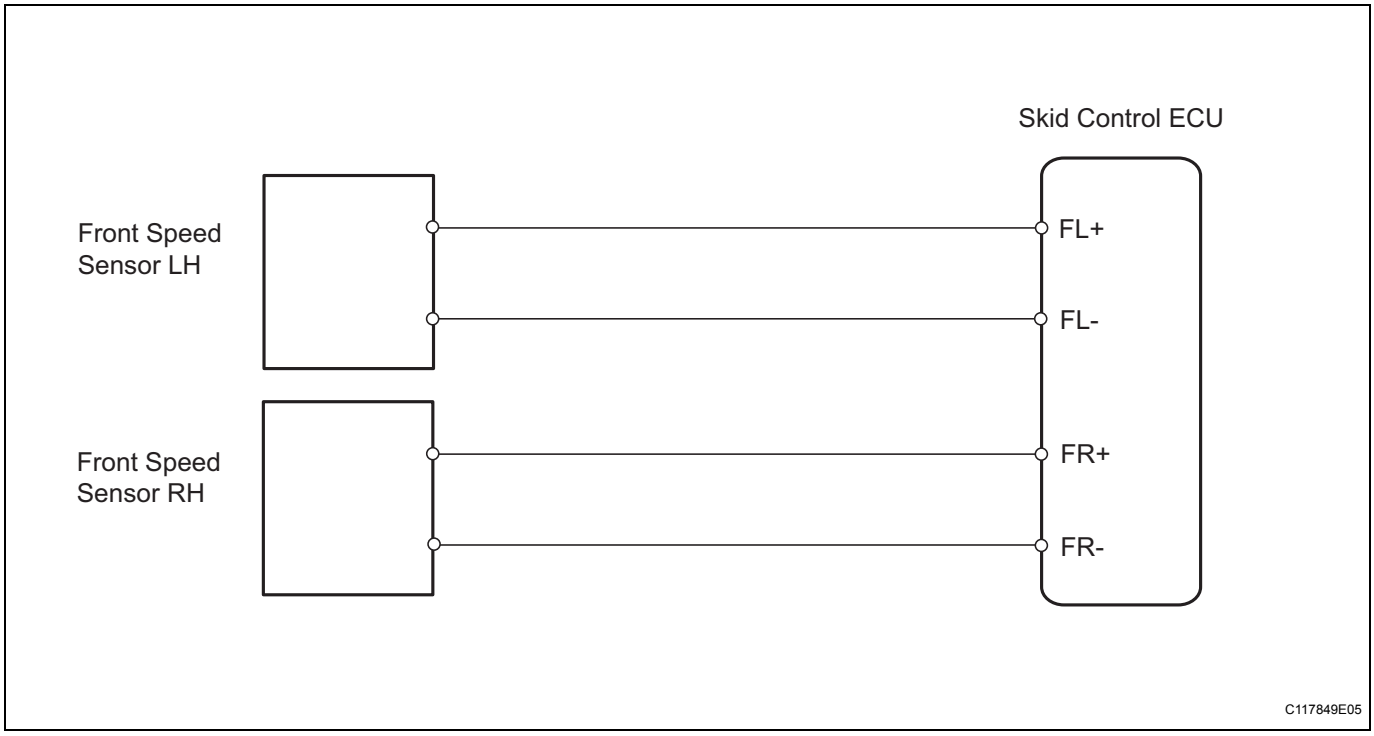

INSPECTION PROCEDURE

NOTICE:

Check the speed sensor signal in test mode after cleaning or replacement (See page BC-14).

1	CHECK HARNESS AND CONNECTOR (MOMENTARY INTERRUPTION)

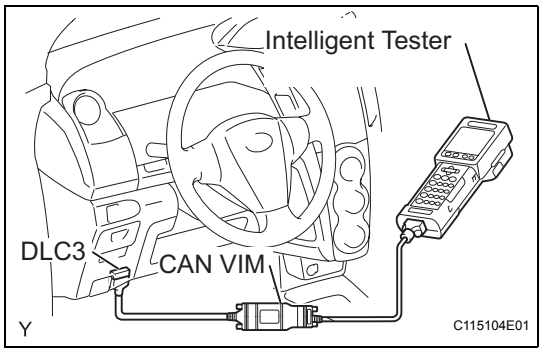

(a) Connect the intelligent tester to the DLC3.
(b) Turn the ignition switch on.
(c) Turn the tester on.
(d) Using the intelligent tester, check for any momentary interruption in the wire harness and connector of the speed sensor.
Select the following menu items: DIAGNOSIS / OBD/ MOBD / select vehicle / ABS / DATA LIST.

DATA LIST: ABS

Item (Display)	Measurement Item / Range (Display)	Normal Condition
FR SPD OPN	FR speed sensor open detection / ERROR or NORMAL	ERROR: Momentary interruption NORMAL: Normal
FL SPD OPN	FL speed sensor open detection / ERROR or NORMAL	ERROR: Momentary interruption NORMAL: Normal

OK:

There are no momentary interruptions.

HINT:

Perform the above inspection before removing the sensor and connector.

NG → **REPAIR OR REPLACE HARNESS OR CONNECTOR**

OK

2 READ VALUE OF DATA LIST (FRONT SPEED SENSOR)

(a) Connect the intelligent tester to the DLC3.
(b) Start the engine and drive the vehicle.
(c) Turn the tester on.
(d) Select the following menu items: DIAGNOSIS / OBD/ MOBD / select vehicle / ABS / DATA LIST.
(e) Select the item "FR (FL) WHEEL SPD" in the DATA LIST and read the value displayed on the intelligent tester.

DATA LIST: ABS

Item (Display)	Measurement Item / Range (Display)	Normal Condition
FR WHEEL SPD	Wheel speed sensor (FR) reading : min.: 0 mph (0 km/h), max.: 202 mph (326 km/h)	Similar to speed indicated on speedometer
FL WHEEL SPD	Wheel speed sensor (FL) reading : min.: 0 mph (0 km/h), max.: 202 mph (326 km/h)	Similar to speed indicated on speedometer

(f) Check that there is no significant difference between the speed value displayed on the intelligent tester and the speed value displayed on the speedometer when driving the vehicle.
OK:
There is no significant difference in the displayed speed values.
HINT:
There is a tolerance of +- 10% in the speedometer indication.

NG → **Go to step 5**

OK

3 PERFORM TEST MODE INSPECTION (SIGNAL CHECK)

(a) Perform a TEST MODE inspection and check for DTCs (See page BC-14).
OK:
No DTC output.

NG → **REPLACE FRONT SPEED SENSOR**

OK

4 RECONFIRM DTC

(a) Clear the DTC(s) (See page BC-25).
(b) Start the engine.
(c) Drive the vehicle at a speed of 12 mph (20 km/h) or more for at least 60 seconds.
(d) Check if the same DTC(s) is output (See page BC-25).

Result

Result	Proceed to
DTC not output	A
DTC output	B

B → **Go to step 11**

A

END

5 CHECK FRONT SPEED SENSOR INSTALLATION

(a) Check that the speed sensor installation bolt is tightened properly.
OK:
The installation bolt is tightened properly.
Torque: 8.5 N*m (87 kgf*cm, 75 in.*lbf)

NG → **TIGHTEN BOLT PROPERLY**

OK

6 CHECK FRONT SPEED SENSOR

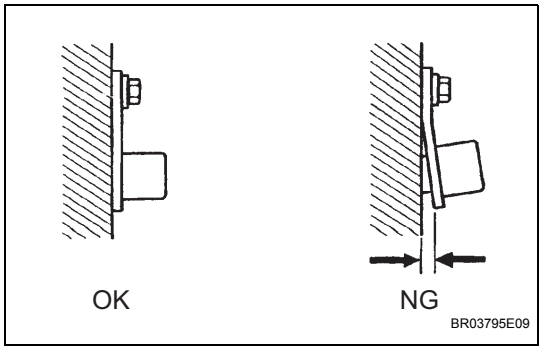

(a) Visually check the speed sensor for deformation and damage.
OK:
No deformation or damage.
No gap between the sensor and front steering knuckle.

NG → **REPLACE FRONT SPEED SENSOR**

OK

7 CHECK SPEED SENSOR TIP

(a) Remove the speed sensor (See page BC-95).
(b) Check the sensor tip.
OK:
No scratches or foreign matter on the sensor tip.

NG → **CLEAN OR REPLACE SPEED SENSOR**

OK

BC

8 CHECK HARNESS AND CONNECTOR (SKID CONTROL ECU - FRONT SPEED SENSOR)

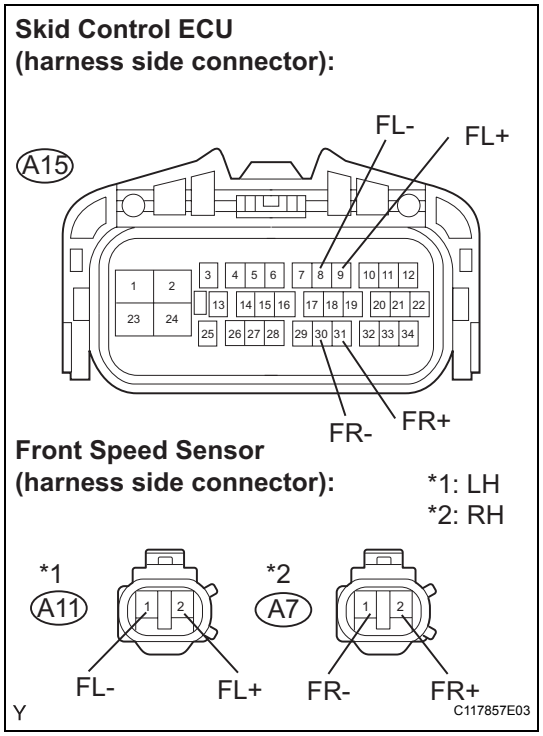

(a) Disconnect the skid control ECU connector.
(b) Disconnect the front speed sensor connector.
(c) Measure the resistance.

Standard resistance (LH)

Tester Connection	Specified Condition
A15-9 (FL+) - A11-2 (FL+)	Below 1 Ω
A15-8 (FL-) - A11-1 (FL-)	Below 1 Ω

Standard resistance (RH)

Tester Connection	Specified Condition
A15-31 (FR+) - A7-2 (FR+)	Below 1 Ω
A15-30 (FR-) - A7-1 (FR-)	Below 1 Ω

NG → **REPAIR OR REPLACE HARNESS OR CONNECTOR**

OK

9 INSPECT FRONT SPEED SENSOR (INPUT VOLTAGE)

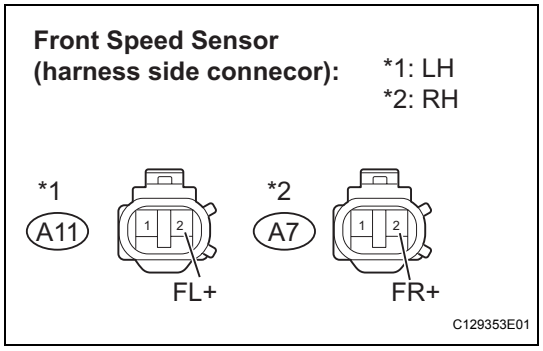

(a) Disconnect the speed sensor connector.
(b) Turn the ignition switch on.
(c) Measure the voltage.

Standard voltage

Tester Connection	Specified Condition
A11-2 (FL+) - Body ground	5.7 to 17.3 V
A7-2 (FR+) - Body ground	5.7 to 17.3 V

NG → **REPLACE BRAKE ACTUATOR**

OK

BC

10 RECONFIRM DTC

(a) Clear the DTC(s) (See page BC-25).
(b) Start the engine.
(c) Drive the vehicle at a speed of 12 mph (20 km/h) or more for at least 60 seconds.
(d) Check if the same DTC(s) is output (See page BC-25).

Result

Result	Proceed to
DTC output	A

Result	Proceed to
DTC not output	B

B → END

A

11 REPLACE FRONT SPEED SENSOR

(a) Replace the front speed sensor (See page BC-95).

NEXT

12 RECONFIRM DTC

(a) Clear the DTC(s) (See page BC-25).
(b) Start the engine.
(c) Drive the vehicle at a speed of 12 mph (20 km/h) or more for at least 60 seconds.
(d) Check if the same DTC(s) is output (See page BC-25).

Result

Result	Proceed to
DTC output	A
DTC not output	B

B → END

A

REPLACE BRAKE ACTUATOR

DTC	C0210/33	Right Rear Wheel Speed Sensor Signal

DTC	C0215/34	Left Rear Wheel Speed Sensor Signal

DTC	C1238/38	Foreign Object is Attached on Tip of Rear Speed Sensor RH

DTC	C1239/39	Foreign Object is Attached on Tip of Rear Speed Sensor LH

DTC	C1273/73	Low Output Signal of Rear Speed Sensor RH (Test Mode DTC)

DTC	C1274/74	Low Output Signal of Rear Speed Sensor LH (Test Mode DTC)

DTC	C1277/77	Abnormal Change in Output Signal of Rear Speed Sensor RH (Test Mode DTC)

DTC	C1278/78	Abnormal Change in Output Signal of Rear Speed Sensor LH (Test Mode DTC)

DESCRIPTION

Refer to DTC C0200/31 (See page BC-37).

DTC No.	DTC Detecting Conditions	Trouble Areas
C0210/33 C0215/34	When any of following conditions detected: 1. At vehicle speed of 6 mph (10 km/h) or more, open or short in sensor signal circuit continues for 1 second or more. 2. Momentary interruption of sensor signal from abnormal wheel occurs 255 times or more. 3. Open in speed sensor signal circuit continues for 0.5 seconds or more. 4. With IG1 terminal voltage 9.5 V or more, sensor power supply voltage decreases for 0.5 seconds or more. 5. When vehicle driven at speed of more than 6 mph (10 km/h), one of wheel speeds below one-seventh of other wheel speeds for 15 seconds or more.	• Skid control sensor • Skid control sensor circuit • Sensor installation • Brake actuator (skid control ECU)
C1238/38 C1239/39	When either of following conditions detected: 1. At vehicle speed of 12 mph (20 km/h) or more, noise occurs 75 times or more in sensor signal from abnormal wheel in 5 seconds. 2. At vehicle speed of 6 mph (10 km/h) or more, noise input once per rotor rotation for 15 seconds or more.	• Skid control sensor • Skid control sensor circuit • Brake actuator (skid control ECU)
C1273/73 C1274/74	Detected only during test mode.	• Skid control sensor • Skid control sensor circuit • Sensor installation
C1277/77 C1278/78	Detected only during test mode.	• Skid control sensor • Skid control sensor circuit

HINT:
- DTC C0210/33 and C1238/38 relate to the skid control sensor RH.
- DTC C0215/34 and C1239/39 relate to the skid control sensor LH.

WIRING DIAGRAM

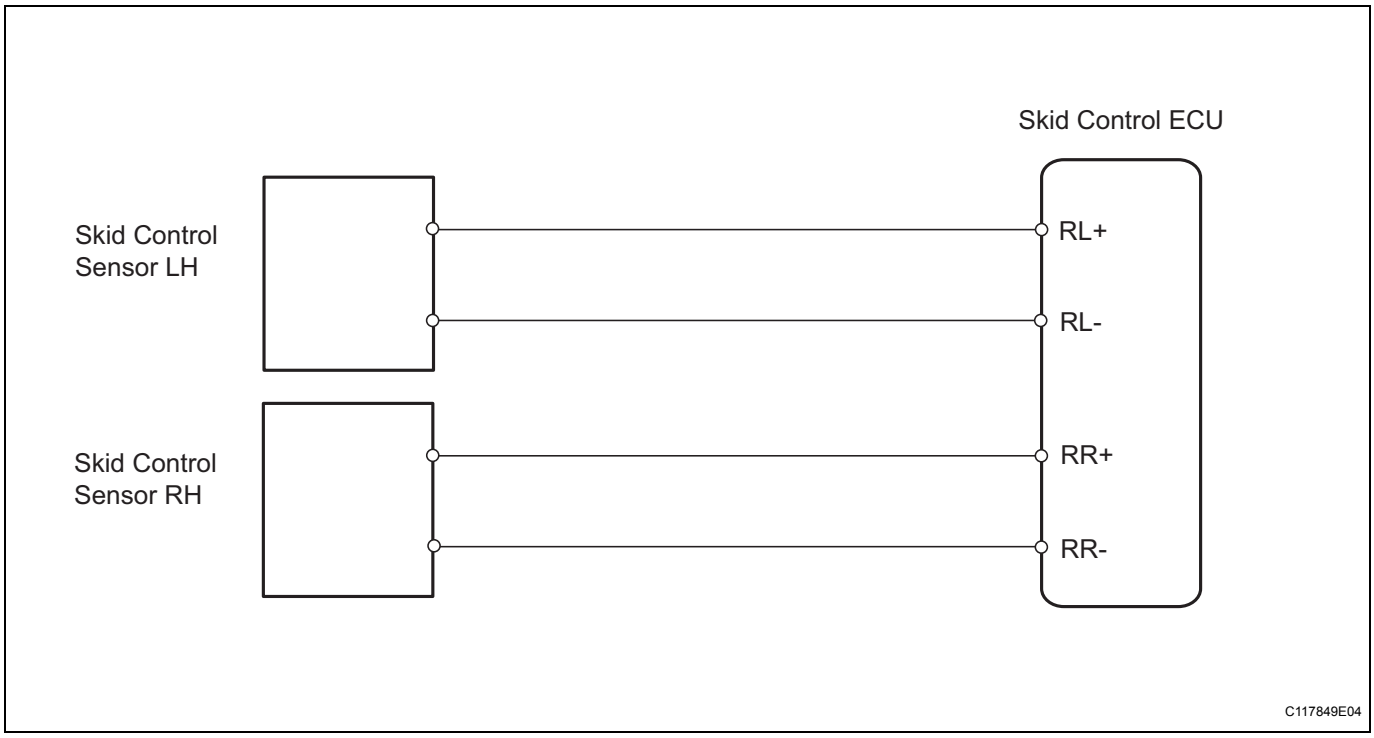

INSPECTION PROCEDURE

NOTICE:

Check the speed sensor signal in test mode after cleaning or replacement (See page BC-14).

1	CHECK HARNESS AND CONNECTOR (MOMENTARY INTERRUPTION)

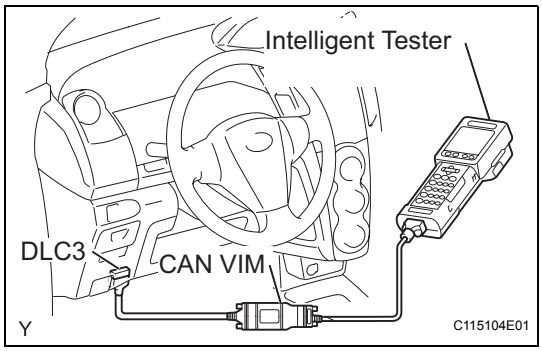

(a) Connect the intelligent tester to the DLC3.
(b) Turn the ignition switch on.
(c) Turn the tester on.
(d) Using the intelligent tester, check for any momentary interruptions in the wire harness of the speed sensor. Select the following menu items: DIAGNOSIS / OBD/ MOBD / select vehicle / ABS / DATA LIST.

BC

DATA LIST: ABS

Item (Display)	Measurement Item / Range (Display)	Normal Condition
RR SPD OPN	RR speed sensor open detection / ERROR or NORMAL	ERROR: Momentary interruption NORMAL: Normal
RL SPD OPN	RL speed sensor open detection / ERROR or NORMAL	ERROR: Momentary interruption NORMAL: Normal

OK:

There are no momentary interruptions.

HINT:
Perform this inspection before removing the sensor and connector.

NG → **REPAIR OR REPLACE HARNESS OR CONNECTOR**

OK

2 READ VALUE OF DATA LIST (SKID CONTROL SENSOR)

(a) Connect the intelligent tester to the DLC3.
(b) Start the engine and drive the vehicle.
(c) Turn the tester on.
(d) Select the following menu items: DIAGNOSIS / OBD/ MOBD / select vehicle / ABS / DATA LIST.
(e) Select the item "RR (RL) WHEEL SPD" in the DATA LIST and read the value displayed on the intelligent tester.

DATA LIST: ABS

Item (Display)	Measurement Item / Range (Display)	Normal Condition
RR WHEEL SPD	Wheel speed sensor (RR) reading : min.: 0 mph (0 km/h), max.: 202 mph (326 km/h)	Similar to speed indicated on speedometer
RL WHEEL SPD	Wheel speed sensor (RL) reading : min.: 0 mph (0 km/h), max.: 202 mph (326 km/h)	Similar to speed indicated on speedometer

(f) Check that there is no significant difference between the speed value displayed on the intelligent tester and the speed value displayed on the speedometer when driving the vehicle.
OK:
There is no significant difference in the displayed speed values.
HINT:
There is a tolerance of +- 10% in the speedometer indication.

NG → **Go to step 5**

OK

3 PERFORM TEST MODE INSPECTION (SIGNAL CHECK)

(a) Perform a TEST MODE inspection and check for DTCs (See page BC-14).
OK:
No DTCs output.

NG → **REPAIR OR REPLACE HARNESS OR CONNECTOR**

OK

BC

4 RECONFIRM DTC

(a) Clear the DTC(s) (See page BC-25).
(b) Start the engine.
(c) Drive the vehicle at a speed of 12 mph (20 km/h) or more for at least 60 seconds.
(d) Check if the same DTC(s) is output (See page BC-25).

Result

Result	Proceed to
DTC not output	A
DTC output	B

B → **Go to step 10**

A

END

5 CHECK SKID CONTROL SENSOR

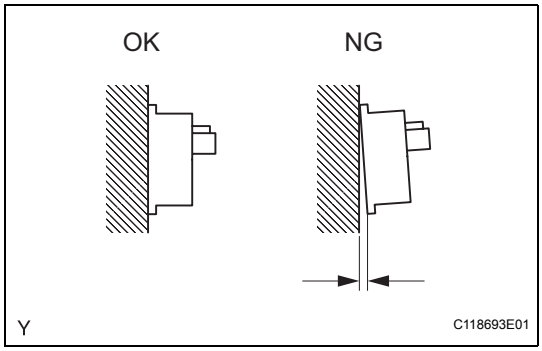

(a) Visually check the skid control sensor for deformation and damage.
OK:
No deformation or damage.
No gap between the sensor and rear axle carrier.

NG → **REPLACE SKID CONTROL SENSOR**

OK

6 INSPECT SKID CONTROL SENSOR WIRE

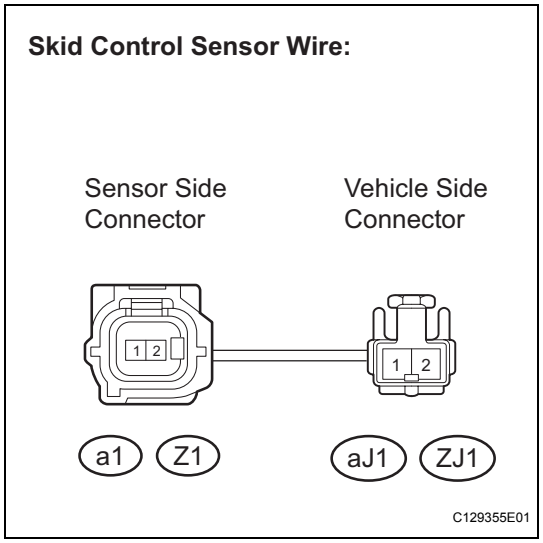

(a) Disconnect the skid control sensor wire.
(b) Measure the resistance.

Standard resistance (LH)

Tester Connection	Specified Condition
a1-1 - aJ1-1	Below 1 Ω
a1-1 - aJ1-2	10 kΩ or higher
a1-1 - Body ground	10 kΩ or higher
a1-2 - aJ1-1	10 kΩ or higher
a1-2 - aJ1-2	Below 1 Ω
a1-2 - Body ground	10 kΩ or higher

Standard resistance (RH)

Tester Connection	Specified Condition
Z1-1 - ZJ1-1	Below 1 Ω
Z1-1 - ZJ1-2	10 kΩ or higher
Z1-1 - Body ground	10 kΩ or higher
Z1-2 - ZJ1-1	10 kΩ or higher
Z1-2 - ZJ1-2	Below 1 Ω
Z1-2 - Body ground	10 kΩ or higher

NG → **REPLACE SKID CONTROL SENSOR WIRE**

OK

7 CHECK HARNESS AND CONNECTOR (SKID CONTROL ECU - REAR SPEED SENSOR)

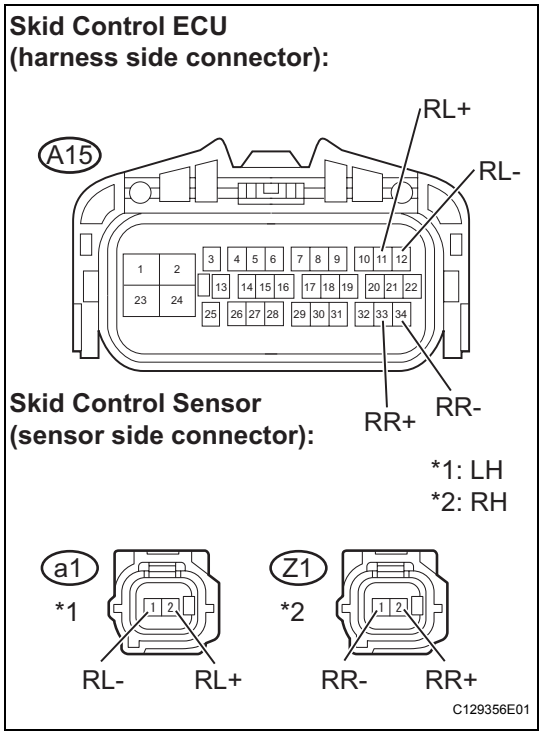

(a) Disconnect the skid control ECU connector.
(b) Disconnect the skid control sensor connector.
(c) Measure the resistance.

Standard resistance (LH)

Tester Connection	Specified Condition
A15-11 (RL+) - a1-2 (RL+)	Below 1 Ω
A15-12 (RL-) - a1-1 (RL-)	Below 1 Ω

Standard resistance (RH)

Tester Connection	Specified Condition
A15-33 (RR+) - Z1-2 (RR+)	Below 1 Ω
A15-34 (RR-) - Z1-1 (RR-)	Below 1 Ω

NG → **REPAIR OR REPLACE HARNESS OR CONNECTOR**

BC

OK

8 CHECK SKID CONTROL SENSOR (INPUT VOLTAGE)

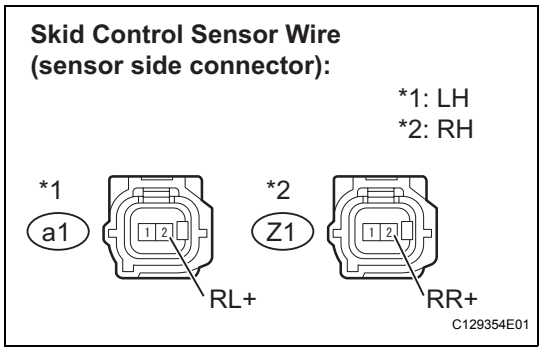

(a) Disconnect the skid control sensor connector.
(b) Turn the ignition switch on.
(c) Measure the voltage.

Standard voltage

Tester Connection	Specified Condition
a1-2 (RL+) - Body ground	5.7 to 17.3 V
Z1-2 (RR+) - Body ground	5.7 to 17.3 V

NG → **REPLACE BRAKE ACTUATOR**

OK

9 RECONFIRM DTC

(a) Clear the DTC(s) (See page BC-25).
(b) Start the engine.
(c) Drive the vehicle at a speed of 12 mph (20 km/h) or more for at least 60 seconds.
(d) Check if the same DTC(s) is output (See page BC-25).

Result

Result	Proceed to
DTC output	A
DTC not output	B

B → **END**

A

10 REPLACE SKID CONTROL SENSOR

(a) Replace the rear speed sensor.

NEXT

BC

11 RECONFIRM DTC

(a) Clear the DTC(s) (See page BC-25).
(b) Start the engine.
(c) Drive the vehicle at a speed of 12 mph (20 km/h) or more for at least 60 seconds.
(d) Check if the same DTC(s) is output (See page BC-25).

Result

Result	Proceed to
DTC output	A
DTC not output	B

B → **END**

A

REPLACE BRAKE ACTUATOR

DTC	C0226/21	SFR Solenoid Circuit

DTC	C0236/22	SFL Solenoid Circuit

DTC	C0246/23	SRR Solenoid Circuit

DTC	C0256/24	SRL Solenoid Circuit

DESCRIPTION

This solenoid is turned on in accordance with signals from the skid control ECU and controls the pressure on the wheel cylinders to control the braking force.

DTC No.	DTC Detecting Condition	Trouble Area
C0226/21 C0236/22 C0246/23 C0256/24	Open or short in solenoid circuit continues for 0.05 seconds or more.	Brake actuator

HINT:
C0226/21, C0236/22, C0246/23 and C0256/24:
The skid control ECU begins to detect these DTCs when the vehicle speed exceeds 4 mph (6 km/h).

WIRING DIAGRAM

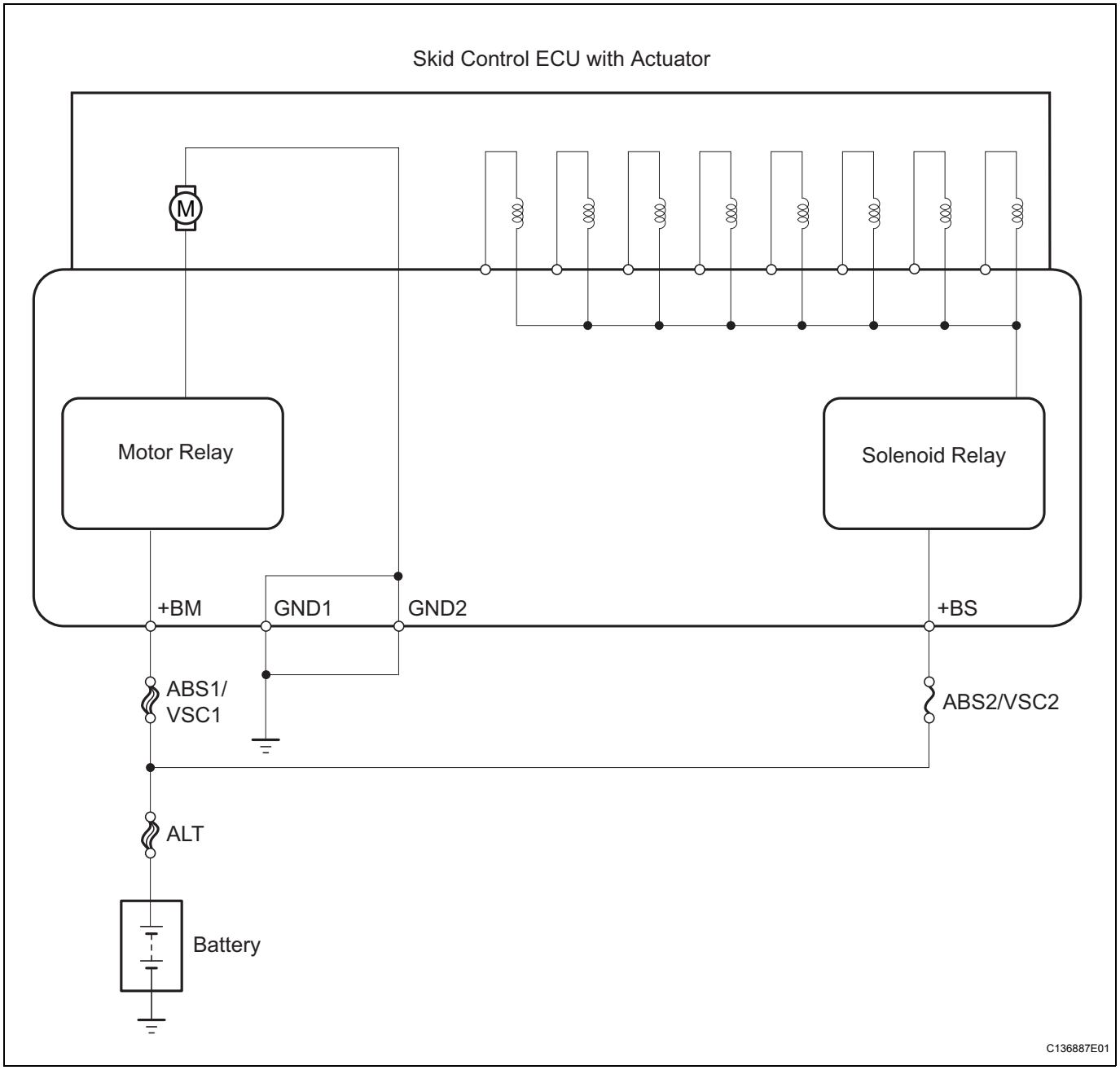

INSPECTION PROCEDURE

BC

1	RECONFIRM DTC

(a) Clear the DTC(s) (See page BC-25).
(b) Start the engine.
(c) Drive the vehicle at 4 mph (6 km/h) or more to activate the initial check.
(d) Check if the same DTC(s) is output (See page BC-25).

Result

Result	Proceed to
DTC output	A

Result	Proceed to
DTC not output	B

HINT:
The DTCs may be stored due to a malfunction in the connector terminal.

B → **END**

A

REPLACE BRAKE ACTUATOR

DTC	C0273/13	Open in ABS Motor Relay Circuit

DTC	C0274/14	Short to B+ in ABS Motor Relay Circuit

DESCRIPTION

The ABS motor relay supplies the power to the ABS pump motor. While the ABS is activated, the skid control ECU switches the motor relay ON and operates the ABS pump motor.

DTC No.	DTC Detecting Conditions	Trouble Areas
C0273/13	When either of following conditions (1 or 2) detected: 1. All of following conditions continue for 0.2 seconds or more. (a) IG1 terminal voltage between 9.5 V and 17.2 V. (b) During initial check or ABS operation. (c) Relay contact open when relay on. 2. Both of following conditions continue for 0.2 seconds or more. (a) IG1 terminal voltage 9.5 V or less. (b) Relay contact remains open when relay on.	• ABS1/VSC1 fuse • Wire harness (+BM circuit) • Brake actuator (skid control ECU)
C0274/14	When motor relay off, motor relay remains closed for 4 seconds or more.	• ABS1/VSC1 fuse • Wire harness (+BM circuit) • Brake actuator (skid control ECU)

HINT:
C0273/13 and C0274/14: The skid control ECU begins to detect these DTCs when the vehicle speed exceeds 4 mph (6 km/h).

WIRING DIAGRAM

See page BC-52.

INSPECTION PROCEDURE

1	INSPECT FUSE (ABS1/VSC1)

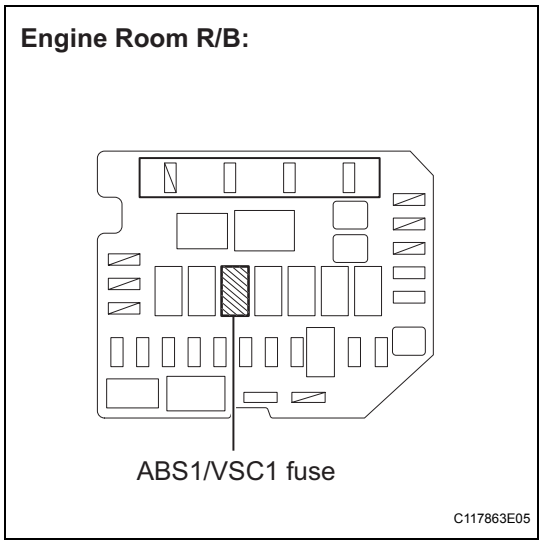

(a) Remove the ABS1/VSC1 fuse from the engine room R/B.
(b) Measure the resistance.
Standard resistance:
Below 1 Ω

NG → **CHECK FOR SHORTS IN ALL HARNESSES AND CONNECTORS CONNECTED TO FUSE AND REPLACE FUSE**

OK

BC

2 CHECK HARNESS AND CONNECTOR (BATTERY - SKID CONTROL ECU - BODY GROUND)

Skid Control ECU (harness side connector):

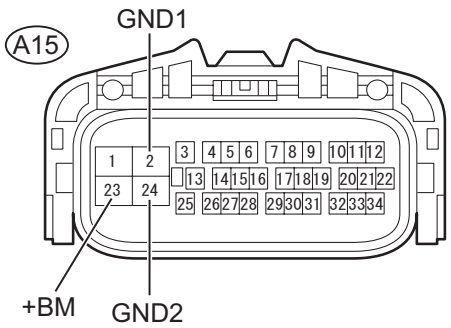

(a) Disconnect the skid control ECU connector.
(b) Measure the voltage.
Standard voltage

Tester Connection	Specified Condition
A15-23 (+BM) - Body ground	11 to 14 V

(c) Measure the resistance
Standard resistance

Tester Connection	Specified Condition
A15-2 (GND1) - Body ground	Below 1 Ω
A15-24 (GND2) - Body ground	Below 1 Ω

NG → **REPAIR OR REPLACE HARNESS OR CONNECTOR**

OK

3 PERFORM ACTIVE TEST USING INTELLIGENT TESTER (ABS MOTOR RELAY)

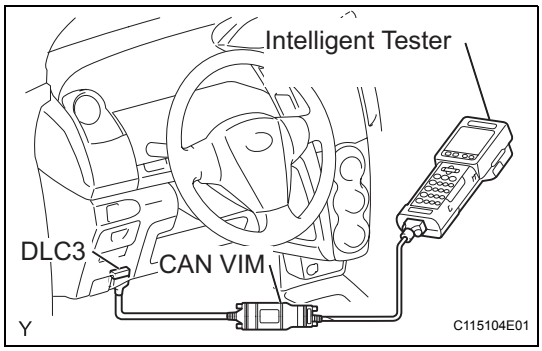

(a) Connect the intelligent tester to the DLC3.
(b) Turn the ignition switch on.
(c) Turn the tester on.
(d) Clear the DTCs (See page BC-25).
(e) Perform the active test using the intelligent tester. Select the following menu items: Chassis / ABS/VSC/ TRC / Active Test.

ACTIVE TEST: ABS

Item (Display)	Vehicle Condition / Test Details	Diagnostic Note
MOTOR RELAY	Turns ABS motor relay ON / OFF	Operating sound of motor can be heard

(f) Check for the operation sound of the ABS motor when operating it with the intelligent tester.
OK:
The operation sound of the ABS motor can be heard.

NG → **REPLACE BRAKE ACTUATOR**

OK

4 RECONFIRM DTC

(a) Clear the DTC(s) (See page BC-25).
(b) Start the engine.

BC

(c) Drive the vehicle at 4 mph (6 km/h) or more to activate the initial check.
(d) Check if the same DTC(s) is output (See page BC-25).

Result

Result	Proceed to
DTC output	A
DTC not output	B

B → **END**

A

REPLACE BRAKE ACTUATOR

DTC	C0278/11	Open in ABS Solenoid Relay Circuit

DTC	C0279/12	Short to B+ in ABS Solenoid Relay Circuit

DESCRIPTION

The solenoid relay supplies power to the ABS solenoid.
After the ignition switch is turned on, the vehicle speed has reached 3 mph (5 km/h) and the solenoid is determined to be normal by the initial check self-diagnosis, the relay switches on. If any open or short circuits are detected, the relay switches off.
These DTCs may be set if the voltage supply to the solenoid relay (+BS) falls below the DTC detection threshold due to the battery or alternator outputs being insufficient.

DTC No.	DTC Detecting Condition	Trouble Areas
C0278/11	When either of following conditions (1 or 2) detected: 1. Both of following conditions continue for 0.2 seconds or more. (a) IG1 terminal voltage between 9.5 V and 17.2 V. (b) Solenoid relay contact open when relay on. 2. Both of following conditions continue for 0.2 seconds or more. (a) IG1 terminal voltage becomes lower than 9.5 V when relay turned on. (b) Relay contact remains open.	• ABS2/VSC2 fuse • Wire harness (+BS) • Brake actuator (skid control ECU)
C0279/12	Immediately after ignition switch turned on, solenoid relay contact closed for 0.2 seconds or more when relay off.	• ABS2/VSC2 fuse • Wire harness (+BS) • Brake actuator (skid control ECU)

HINT:
C0278/11 and C0279/12: The skid control ECU begins to detect these DTCs when the vehicle speed exceeds 4 mph (6 km/h).

WIRING DIAGRAM

See page BC-52.

INSPECTION PROCEDURE

1	INSPECT FUSE (ABS2/VSC2)

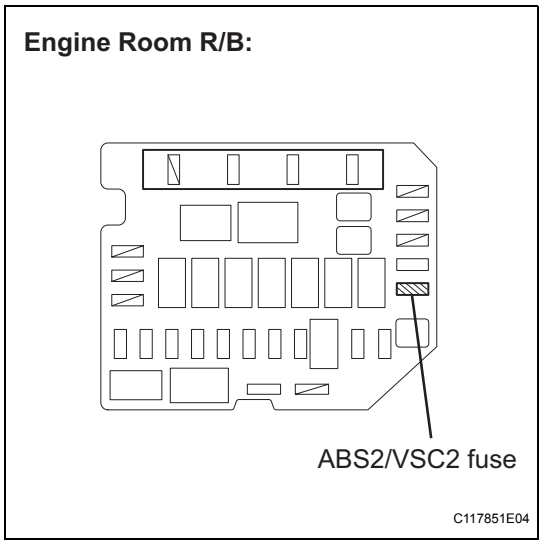

(a) Remove the ABS2/VSC2 fuse from the engine room R/B.
(b) Measure the resistance.
Standard resistance:
Below 1 Ω

NG → **CHECK FOR SHORTS IN ALL HARNESSES AND CONNECTORS CONNECTED TO FUSE AND REPLACE FUSE**

BC

OK

2	CHECK HARNESS AND CONNECTOR (BATTERY - SKID CONTROL ECU - BODY GROUND)

Skid Control ECU (harness side connector):

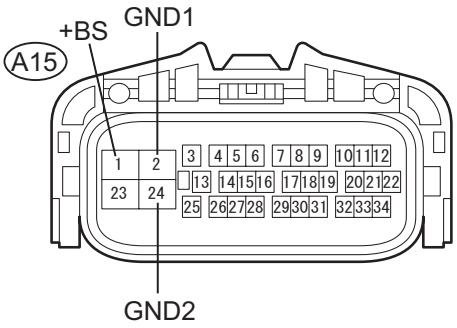

(a) Disconnect the skid control ECU connector.
(b) Measure the voltage.
Standard voltage

Tester Connection	Specified Condition
A15-1 (+BS) - Body ground	11 to 14 V

(c) Measure the resistance.
Standard resistance

Tester Connection	Specified Condition
A15-2 (GND1) - Body ground	Below 1 Ω
A15-24 (GND2) - Body ground	Below 1 Ω

NG → **REPAIR OR REPLACE HARNESS OR CONNECTOR**

OK

3	RECONFIRM DTC

(a) Clear the DTC(s) (See page BC-25).
(b) Start the engine.
(c) Drive the vehicle at 4 mph (6 km/h) or more to activate the initial check.
(d) Check if the same DTC(s) is output (See page BC-25).

Result

Result	Proceed to
DTC output	A
DTC not output	B

B → **END**

A

REPLACE BRAKE ACTUATOR

DTC	C1241/41	Low Battery Positive Voltage or Abnormally High Battery Positive Voltage

DESCRIPTION

When there is an abnormality in the power supply circuit of the brake actuator (skid control ECU), the skid control ECU sets a DTC and the operation is prohibited by the fail-safe function. This DTC is set when the voltage supplied to terminal IG1 is outside the DTC detection threshold, due to abnormalities in the battery, power source circuits or charging circuits such as the alternator circuit.
The fail-safe function is canceled when the voltage to terminal IG1 returns to normal.

DTC No.	DTC Detecting Conditions	Trouble Areas
C1241/41	When any of following conditions detected: 1. At vehicle speed of 2 mph (3 km/h) or more, IG1 terminal voltage 9.5 V or less for 10 seconds or more. 2. When IG1 terminal voltage below 9.5 V, relay off condition continues for 0.2 seconds or more despite ECU turning motor relay on. 3. When IG1 terminal voltage below 9.5 V, wheel speed sensor power source voltage decreases for 60 seconds or more.	• Battery • Charging system • ECU-IG fuse • AM1 fuse • IG1 relay • Brake actuator (skid control ECU)

WIRING DIAGRAM

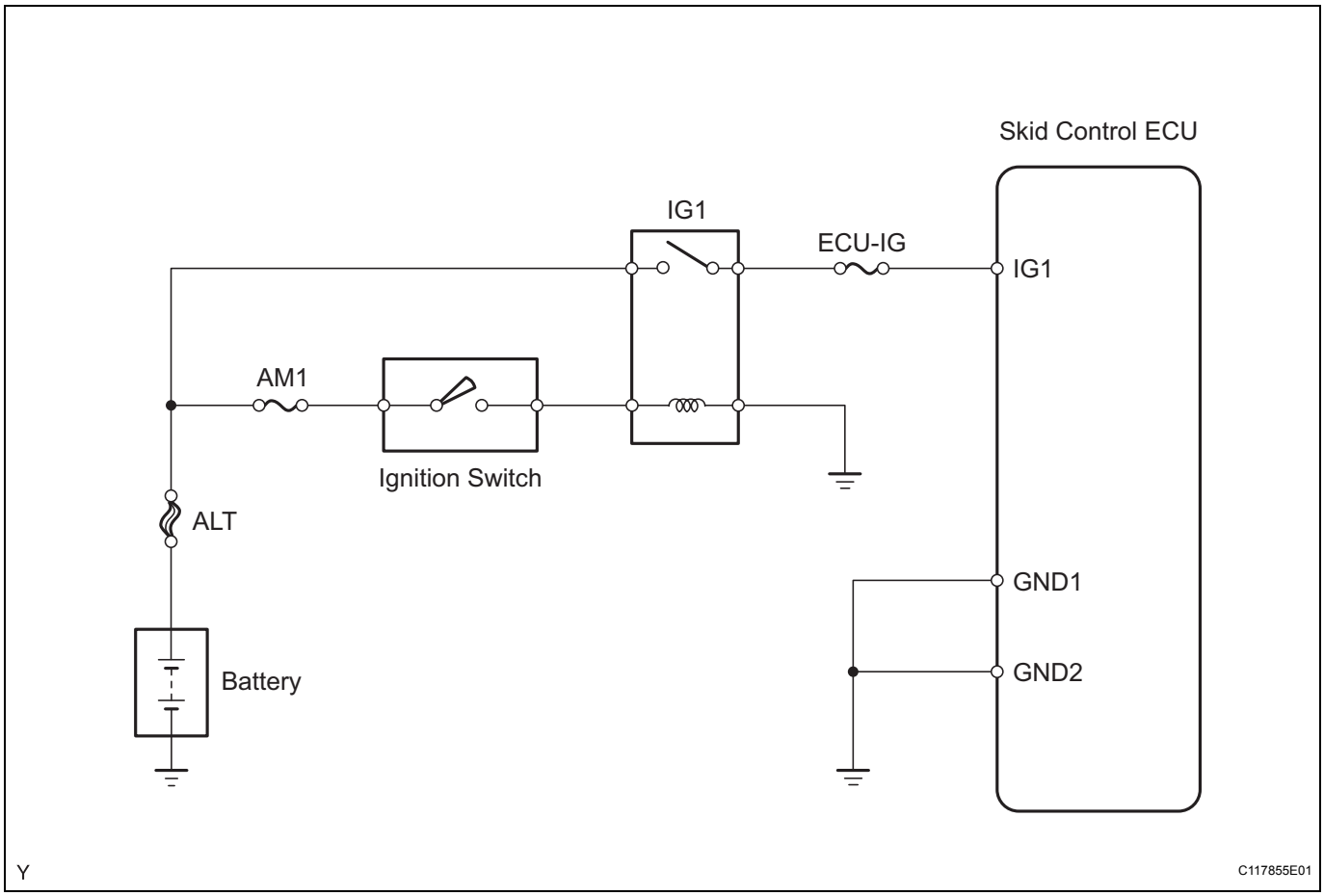

INSPECTION PROCEDURE

1 CHECK SKID CONTROL ECU TERMINAL VOLTAGE

Skid Control ECU (harness side connector):

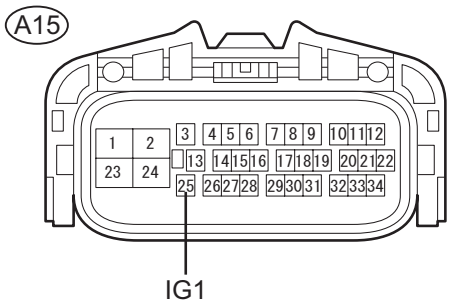

C117862E04

(a) Disconnect the skid control ECU connector.
(b) Turn the ignition switch on.
(c) Measure the voltage.
Standard voltage

Tester Connection	Specified Condition
A15-25 (IG1) - Body ground	11 to 14 V

NG → **Go to step 3**

OK

2 RECONFIRM DTC

(a) Clear the DTC (See page BC-25).
(b) Drive the vehicle at 2 mph (3 km/h) or more for several seconds.
(c) Check if the same DTC is output (See page BC-25).

Result

Result	Proceed to
DTC output	A
DTC not output	B

B → **END**

A

REPLACE BRAKE ACTUATOR

3	INSPECT FUSES (ECU-IG, AM1)

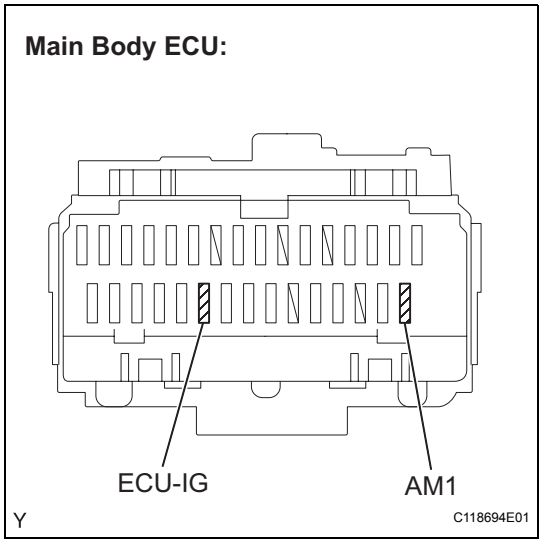

(a) Remove the ECU-IG fuse and AM1 fuse from the main body ECU.
(b) Measure the resistance.
Standard resistance:
Below 1 Ω

NG → **CHECK FOR SHORTS IN ALL HARNESSES AND CONNECTORS CONNECTED TO FUSE AND REPLACE FUSE**

OK

4	INSPECT BATTERY

(a) Check the battery voltage.
Standard voltage:
11 to 14 V

NG → **CHECK CHARGING SYSTEM**

OK

5 INSPECT IG1 RELAY

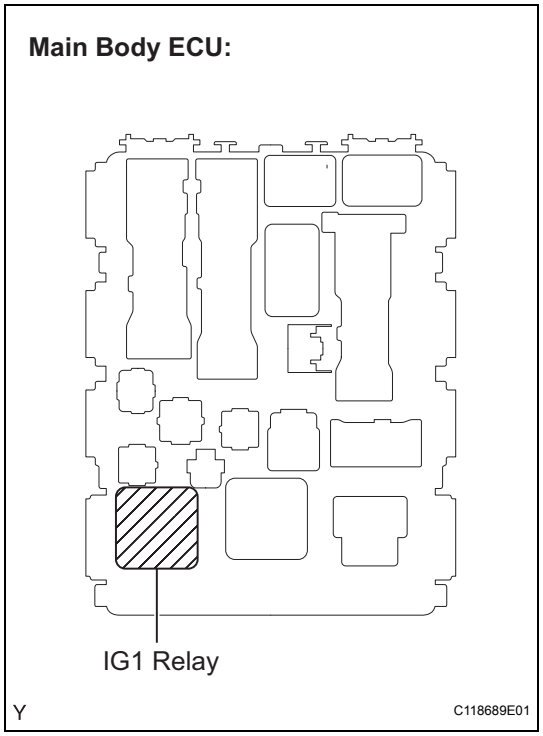

(a) Remove the IG1 relay from the main body ECU.

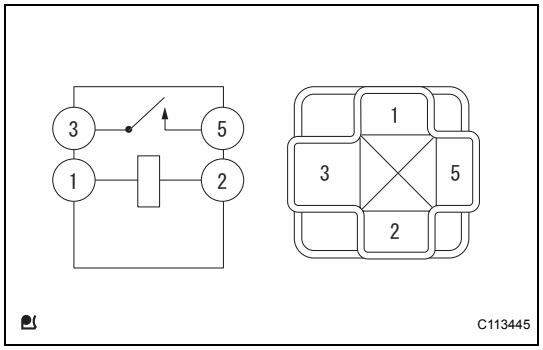

(b) Measure the resistance.
Standard resistance

Tester Connection	Condition	Specified Condition
3 - 5	Always	10 kΩ or higher
3 - 5	Apply B+ between terminals 1 and 2	Below 1 Ω

NG → **REPLACE IG1 RELAY**

OK

BC

6 CHECK HARNESS AND CONNECTOR (SKID CONTROL ECU - BODY GROUND)

Skid Control ECU (harness side connector):

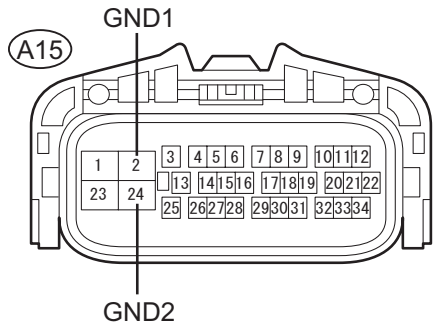

C117862E03

(a) Disconnect the skid control ECU connector.
(b) Measure the resistance.
Standard resistance

Tester Connection	Specified Condition
A15-2 (GND1) - Body ground	Below 1 Ω
A15-24 (GND2) - Body ground	Below 1 Ω

NG → **REPAIR OR REPLACE HARNESS OR CONNECTOR**

OK

REPLACE BRAKE ACTUATOR

DTC	C1249/49	Open in Stop Light Switch Circuit

DESCRIPTION

The skid control ECU detects the brake operating conditions through a signal transmitted by the stop light switch. The skid control ECU incorporates an open circuit detection circuit. This DTC is set under either of the following conditions:

- An open is detected in the stop light signal input line when the stop light switch is off.
- An open is detected in the stop light circuit lead to the ground when the stop light switch is off.

DTC No.	DTC Detecting Conditions	Trouble Areas
C1249/49	When IG1 terminal voltage 9.5 to 17.2 V, open circuit of stop light switch continues for 0.3 seconds or more.	• Stop light switch • Stop light switch circuit • Brake actuator (skid control ECU)

WIRING DIAGRAM

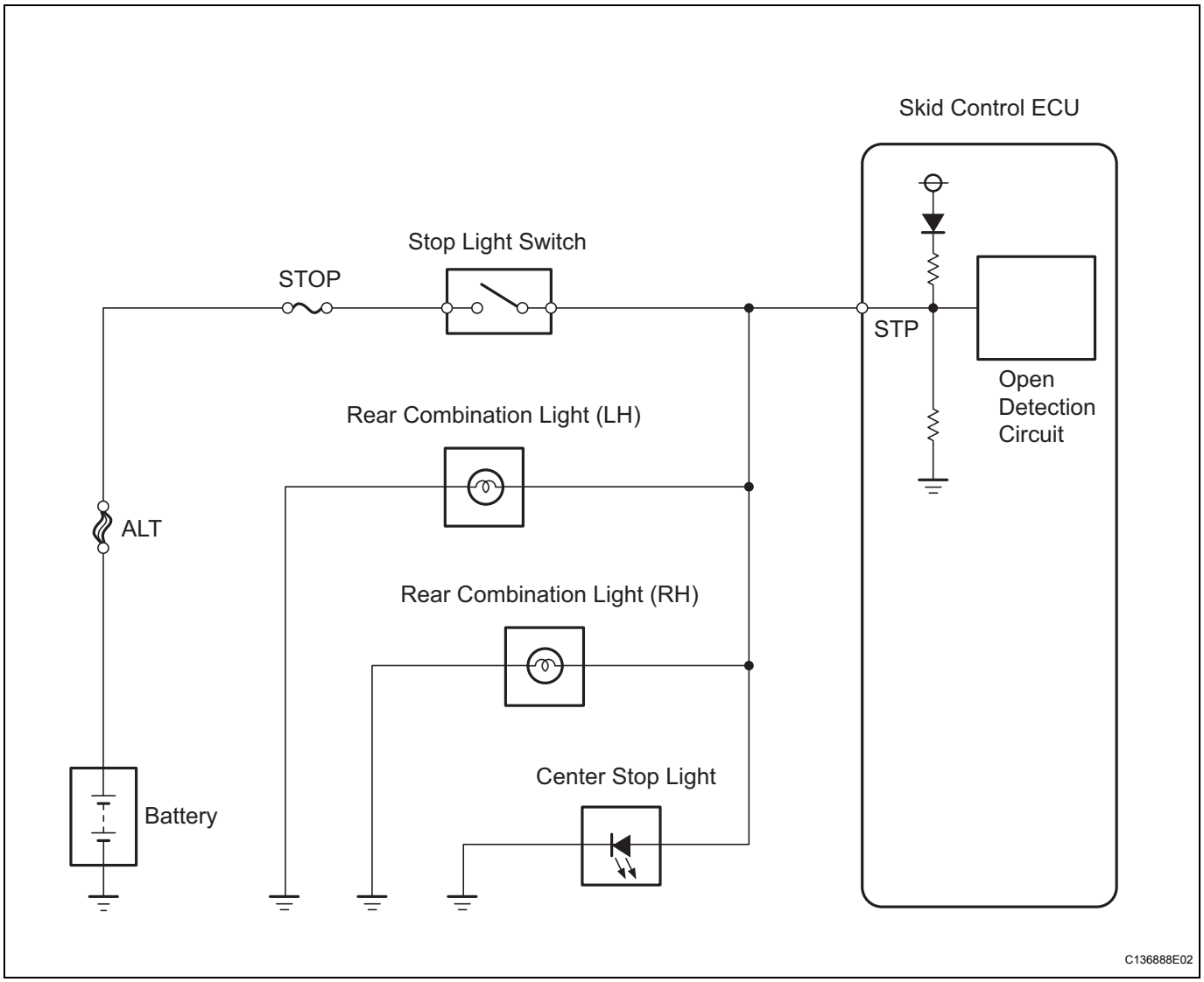

INSPECTION PROCEDURE

1 CHECK STOP LIGHT SWITCH OPERATION

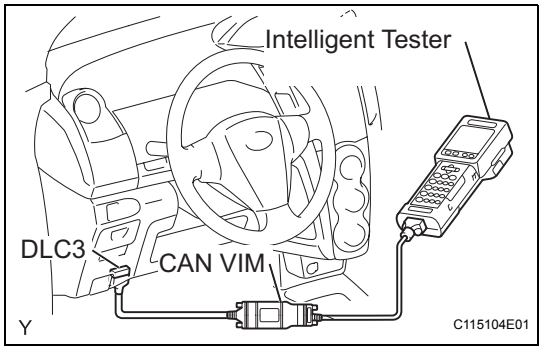

(a) Connect the intelligent tester to the DLC3.
(b) Turn the ignition switch on.
(c) Turn the tester on.
(d) Select the following menu items: DIAGNOSIS / OBD/ MOBD / select vehicle / ABS / DATA LIST.

DATA LIST: ABS

Item (Display)	Measurement Item / Range (Display)	Normal Conditions
STOP LAMP SW	Stop light switch / ON or OFF	ON: Brake pedal depressed OFF: Brake pedal released

(e) Check that "STOP LAMP SW" is turned ON and OFF when the brake pedal is depressed and released.
OK:
"STOP LAMP SW" is turned ON and OFF in accordance with the operation of the brake pedal.

NG → **Go to step 3**

OK

2 CHECK SKID CONTROL ECU TERMINAL VOLTAGE (STP)

Skid Control ECU (harness side connector):

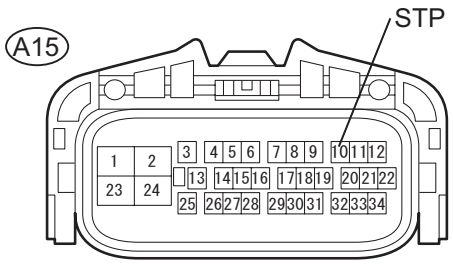

(a) Disconnect the skid control ECU connector.
(b) Measure the voltage.
Standard voltage

Tester Connection	Switch Condition	Specified Condition
A15-10 (STP) - Body ground	Brake pedal depressed	8 to 14 V
A15-10 (STP) - Body ground	Brake pedal released	Below 4.0 V

NG → **Go to step 5**

OK

REPLACE BRAKE ACTUATOR

BC

3 INSPECT FUSE (STOP)

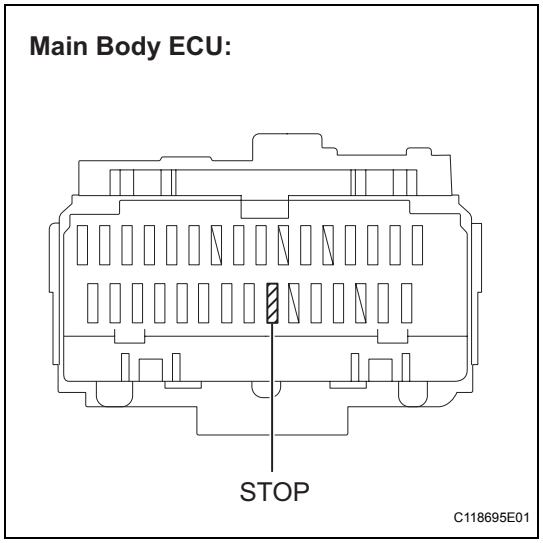

(a) Remove the STOP fuse from the main body ECU.
(b) Measure the resistance.
Standard resistance:
Below 1 Ω

NG → **CHECK FOR SHORTS IN ALL HARNESSES AND CONNECTORS CONNECTED TO FUSE AND REPLACE FUSE**

OK

4 INSPECT STOP LIGHT SWITCH ASSEMBLY

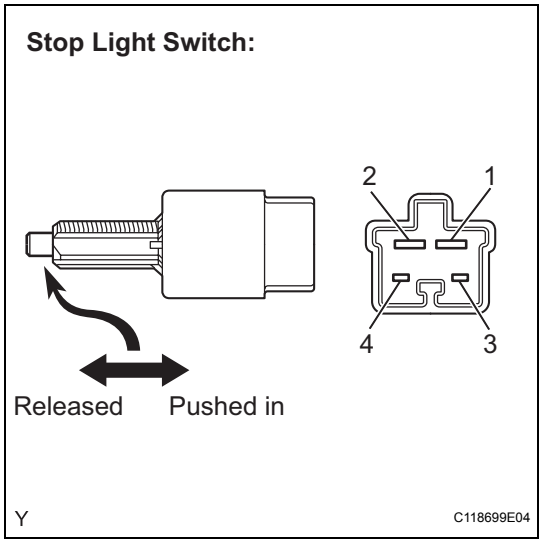

(a) Disconnect the stop light switch connector.
(b) Measure the resistance.
Standard resistance

Tester Connection	Switch Condition	Specified Condition
1 - 2	Switch pin released	Below 1 Ω
3 - 4	Switch pin released	10 kΩ or higher
1 - 2	Switch pin pushed in	10 kΩ or higher
3 - 4	Switch pin pushed in	Below 1 Ω

NG → **REPLACE STOP LIGHT SWITCH ASSEMBLY**

OK

5 CHECK HARNESS AND CONNECTOR (SKID CONTROL ECU - STOP LIGHT SWITCH)

Skid Control ECU (harness side connector):

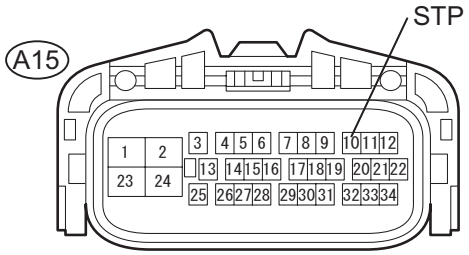

Stop Light Switch (harness side connector):

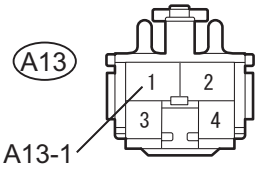

C118696E01

(a) Disconnect the skid control ECU connector.
(b) Disconnect the stop light switch connector.
(c) Measure the resistance.

Standard resistance

Tester Connection	Specified Condition
A15-10 (STP) - A13-1	Below 1 Ω

NG → **REPAIR OR REPLACE HARNESS OR CONNECTOR**

OK

6 RECONFIRM DTC

(a) Clear the DTC (See page BC-25).
(b) Check if the same DTC is output (See page BC-25).

Result

Result	Proceed to
DTC output	A
DTC not output	B

B → **END**

A

BC

REPLACE BRAKE ACTUATOR

DTC	C1251/51	Open in Pump Motor Circuit

DESCRIPTION

The motor relay (semiconductor relay) is housed in the skid control ECU and drives the pump motor based on a signal from the skid control ECU.

DTC No.	DTC Detecting Conditions	Trouble Areas
C1251/51	When either of following conditions detected: 1. Actuator pump motor does not operate properly. 2. Open in actuator pump motor circuit continues for at least 2 seconds.	Brake actuator

WIRING DIAGRAM

See page BC-52.

INSPECTION PROCEDURE

1 CHECK POWER SOURCE CIRCUIT

(a) Check that the battery voltage, power source voltage, and the ground condition of the skid control ECU are normal.

OK:

The battery voltage, power source voltage, and the ground condition of the skid control ECU are normal.

NG → **REPAIR POWER SOURCE CIRCUIT**

OK ↓

2 RECONFIRM DTC

(a) Clear the DTC (See page BC-25).
(b) Start the engine.
(c) Drive the vehicle at a speed of 4 mph (6 km/h) or more for several seconds.
(d) Check if the same DTC is output (See pageBC-25).

Result

Result	Proceed to
DTC output	A
DTC not output	B

B → **END**

A ↓

REPLACE BRAKE ACTUATOR

BC

DTC	U0073/94	Control Module Communication Bus OFF

DESCRIPTION

DTC No.	DTC Detecting Conditions	Trouble Areas
U0073/94	When either of following conditions detected: 1. After data output from skid control ECU completed, output continues for 5 seconds or more. 2. Bus off condition occurs once or more per 0.1 second 10 times in succession.	CAN communication system

INSPECTION PROCEDURE

1	RECONFIRM DTC

(a) Clear the DTC (See page BC-25).
(b) Check if the same DTC is output (See page BC-25).

Result

Result	Proceed to
DTC output	A
DTC not output	B

B → END

A

REPAIR CAN COMMUNICATION SYSTEM

ABS Warning Light Remains ON

DESCRIPTION

If any of the following conditions are detected, the ABS warning light remains on:

1. The ECU connectors are disconnected from the skid control ECU.
2. There is a malfunction in the skid control ECU internal circuit.
3. There is an open or short in the wire harness between the combination meter and the skid control ECU.

HINT:

The intelligent tester may not be used when there is a malfunction in the skid control ECU.

WIRING DIAGRAM

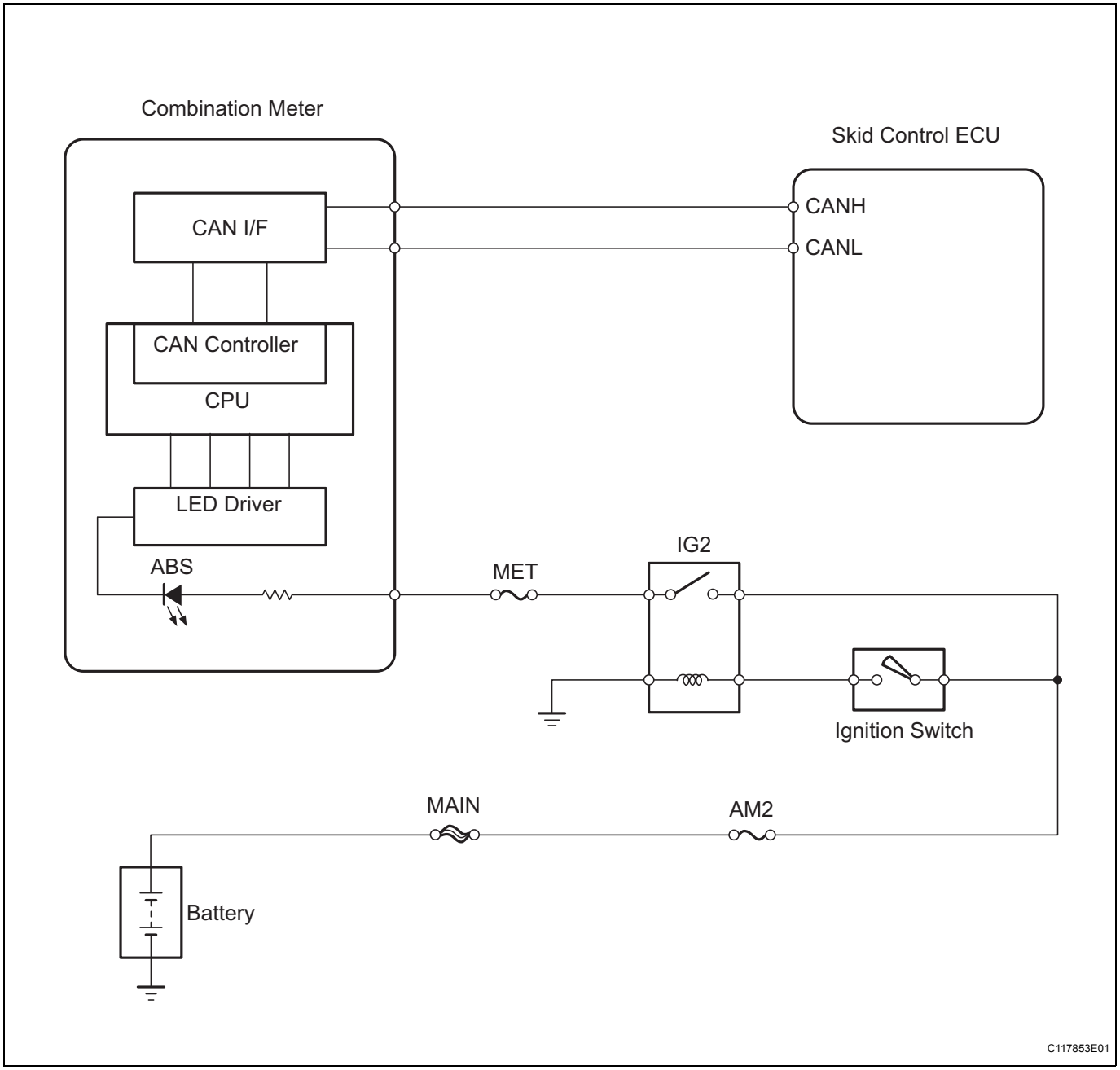

INSPECTION PROCEDURE

1	CHECK CAN COMMUNICATION SYSTEM

(a) Check if the CAN communication system DTC is output (See page CA-22).

Result

Result	Proceed to
DTC not output	A
DTC output	B

B → **REPAIR CAN COMMUNICATION SYSTEM**

A

2	CHECK CONNECTOR CONNECTION CONDITION

(a) Check the skid control ECU connector condition.
OK:
The connector is securely connected.

NG → **CONNECT CONNECTOR CORRECTLY**

OK

3	PERFORM ACTIVE TEST USING INTELLIGENT TESTER (ABS WARNING LIGHT)

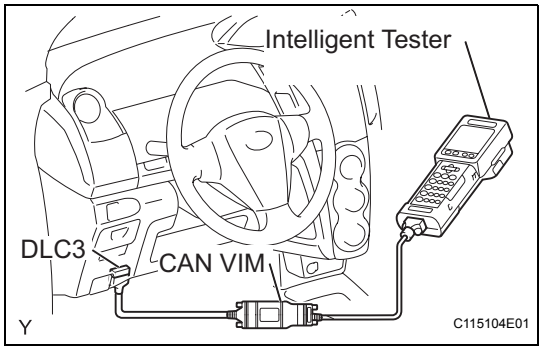

(a) Connect the intelligent tester to the DLC3.
(b) Turn the ignition switch on.
(c) Turn the tester on.
(d) Select the following menu items: DIAGNOSIS / OBD/ MOBD / select vehicle / ABS / ACTIVE TEST / ABS WARN LAMP.

ACTIVE TEST: ABS

Item (Display)	Test Details	Diagnostic Notes
ABS WARN LAMP	Turns ABS warning light ON and OFF	Observe combination meter

BC

(e) Check that the ABS warning light turns on and off in the combination meter using the intelligent tester.
OK:
The ABS warning light turns ON and OFF in accordance with the intelligent tester operation.
HINT:
When the ABS warning light remains illuminated, an open in the wire harness of the combination meter or abnormalities in the meter circuit should be considered.

NG → **CHECK COMBINATION METER CIRCUIT**

OK

REPLACE BRAKE ACTUATOR

ABS Warning Light does not Come ON

WIRING DIAGRAM

See page BC-70.

INSPECTION PROCEDURE

1	CHECK CAN COMMUNICATION SYSTEM

(a) Check if the CAN communication system DTC is output (See page CA-22).

Result

Result	Proceed to
DTC not output	A
DTC output	B

B → **REPAIR CAN COMMUNICATION SYSTEM**

A

2	PERFORM ACTIVE TEST USING INTELLIGENT TESTER (ABS WARNING LIGHT)

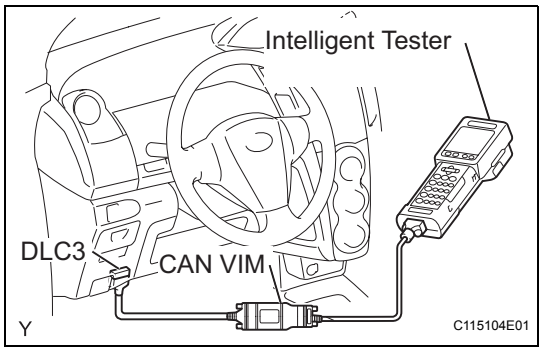

(a) Connect the intelligent tester to the DLC3.
(b) Turn the ignition switch on.
(c) Turn the tester on.
(d) Select the following menu items: DIAGNOSIS / OBD/ MOBD / select vehicle / ABS / ACTIVE TEST / ABS WARN LAMP.

ACTIVE TEST: ABS

Item (Display)	Test Details	Diagnostic Notes
ABS WARN LAMP	Turns ABS warning light ON and OFF	Observe combination meter

(e) Check that the ABS warning light turns on and off in the combination meter using the intelligent tester.
OK:
The ABS warning light turns ON and OFF in accordance with the intelligent tester operation.

NG → **CHECK COMBINATION METER CIRCUIT**

OK

REPLACE BRAKE ACTUATOR

Brake Warning Light Remains ON

DESCRIPTION

If any of the following conditions are detected, the BRAKE warning light remains on:
1. The ECU connectors are disconnected from the skid control ECU.
2. The brake fluid level is insufficient.
3. The parking brake is applied.
4. The EBD is defective.

WIRING DIAGRAM

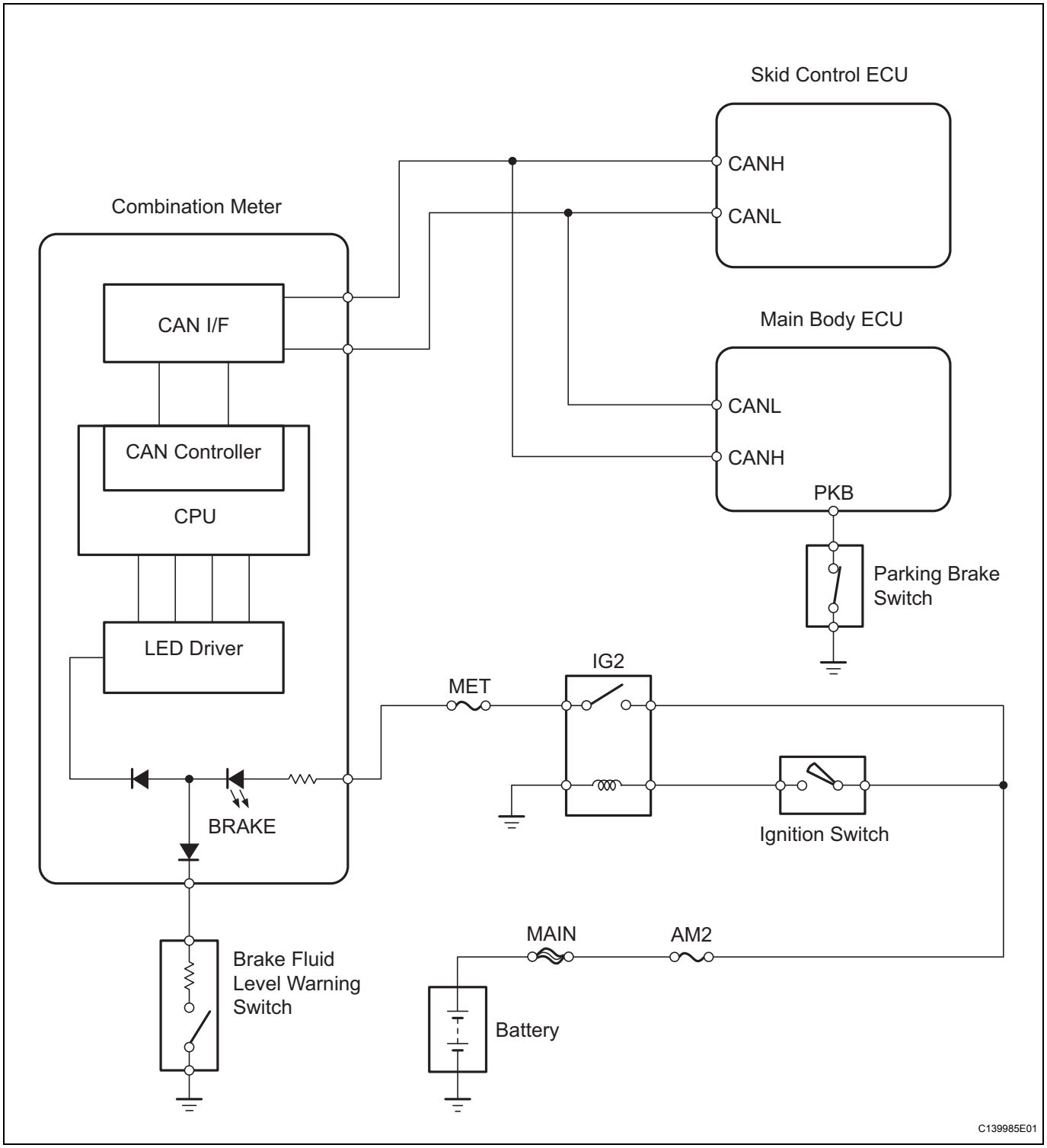

INSPECTION PROCEDURE

1 PREPARE FOR INSPECTION

(a) Check that both of the following conditions are satisfied.
- The brake fluid level in the brake master cylinder reservoir is correct.
- The parking brake is released.

HINT:
When the ABS warning light remains illuminated, repair the malfunctions in the ABS system first.

NEXT

2 CHECK DTC

(a) Check if any ABS DTCs are output (See page BC-25).

Result

Result	Proceed to
DTC not output	A
DTC output	B

B → **REPAIR CIRCUITS INDICATED BY OUTPUT DTCS**

A

3 CHECK CAN COMMUNICATION SYSTEM

(a) Check if the CAN communication system DTC is output (See page CA-22).

Result

Result	Proceed to
DTC not output	A
DTC output	B

B → **REPAIR CAN COMMUNICATION SYSTEM**

A

BC

4 CHECK CONNECTOR CONNECTION CONDITION

(a) Check if the skid control ECU connector is connected securely.

OK:

The connector is connected securely.

NG → **CONNECTOR CORRECTLY**

OK

5 CHECK PARKING BRAKE SWITCH ASSEMBLY

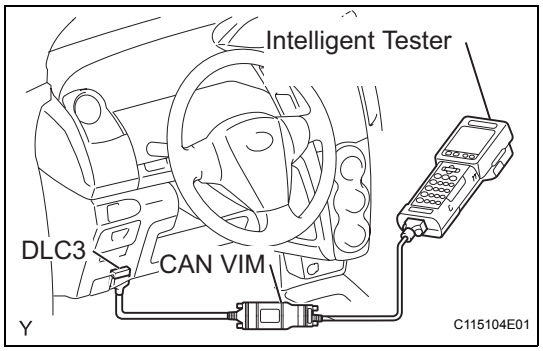

(a) Connect the intelligent tester to the DLC3.
(b) Turn the ignition switch on.
(c) Turn the tester on.
(d) Select the following menu items: DIAGNOSIS / OBD/ MOBD / select vehicle / ABS / DATA LIST / PARKING BRAKE SW.

DATA LIST: ABS

Item (Display)	Measurement Item / Range (Display)	Normal Condition
PARKING BRAKE SW	Parking brake switch / ON or OFF	ON: Parking brake applied OFF: Parking brake released

(e) Check that "ON" and "OFF" are properly indicated on the tester display in accordance with the parking brake lever operation.
OK:
Tester display changes in accordance with the parking brake lever operation.

NG → **Go to step 9**

OK

6 INSPECT BRAKE FLUID LEVEL WARNING SWITCH

Brake Fluid Level Warning Switch:

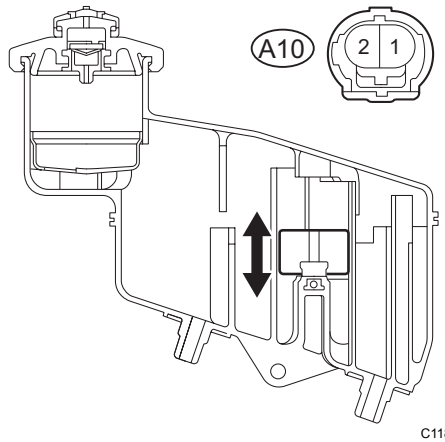

(a) Remove the reservoir tank cap and strainer.
(b) Disconnect the brake fluid level warning switch connector.
(c) Measure the resistance.
HINT:
There is a float inside the reservoir. Its position can be changed by increasing or decreasing the brake fluid level.
Standard resistance

Tester Connection	Condition	Specified Condition
A10-1 - A10-2	Float up (Switch OFF)	1.9 to 2.1 kΩ
A10-1 - A10-2	Float down (Switch ON)	Below 1 Ω

HINT:
If there is no problem after the above check is finished, adjust the brake fluid level to the MAX level.

NG → **REPLACE BRAKE MASTER CYLINDER RESERVOIR SUB-ASSEMBLY**

BC

OK

7	CHECK HARNESS AND CONNECTOR (COMBINATION METER - BRAKE FLUID LEVEL WARNING SWITCH)

(a) Disconnect the D2 combination meter connector.
(b) Disconnect the brake fluid level warning switch connector.
(c) Measure the resistance.
Standard resistance

Tester Connection	Specified Condition
D2-2 - A10-1	Below 1 Ω
D2-2 - Body ground	10 kΩ or higher
A10-2 - Body ground	10 kΩ or higher

Brake Fluid Level Warning Switch (harness side connector):

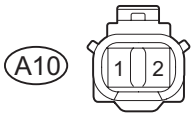

Combination Meter (harness side connector):

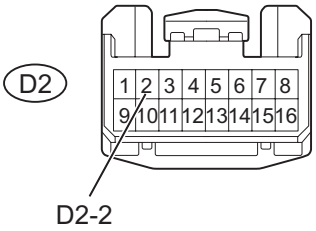

C118702E01

NG → **REPAIR OR REPLACE HARNESS OR CONNECTOR**

OK

8	INSPECT COMBINATION METER

(a) Inspect the combination meter assembly (See page ME-24 or ME-88).

NG → **REPLACE COMBINATION METER**

OK

REPLACE BRAKE ACTUATOR

9	INSPECT PARKING BRAKE SWITCH ASSEMBLY

(a) Disconnect the parking brake switch connector.

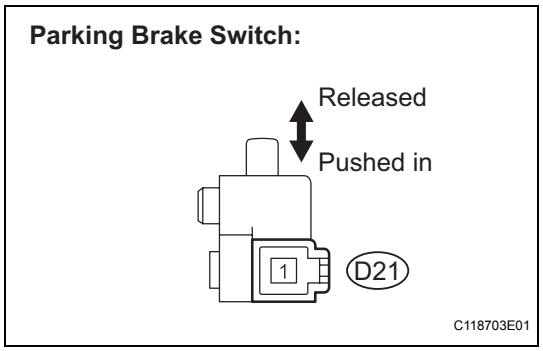

(b) Measure the resistance.
Standard resistance

Tester Connection	Condition	Specified Condition
D21-1 - Body ground	Parking brake switch ON (Switch pin released)	Below 1 Ω
D21-1 - Body ground	Parking brake switch OFF (Switch pin pushed in)	10 kΩ or higher

NG → **REPLACE PARKING BRAKE SWITCH ASSEMBLY**

OK

10 CHECK HARNESS AND CONNECTOR (MAIN BODY ECU - PARKING BRAKE SWITCH ASSEMBLY)

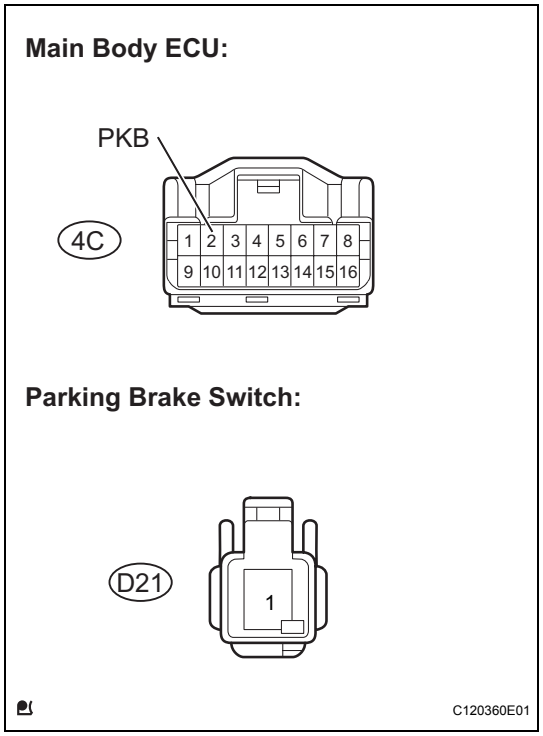

(a) Disconnect connector 4C of the main body ECU (See page BC-21).
(b) Disconnect the parking brake switch connector.
(c) Measure the resistance.
Standard resistance

Tester Connection	Specified Condition
4C-2 (PKB) - D21-1	Below 1 Ω
4C-2 (PKB) - Body ground	10 kΩ or higher

NG → **REPAIR OR REPLACE HARNESS OR CONNECTOR**

OK

REPLACE MAIN BODY ECU

Brake Warning Light does not Come ON

WIRING DIAGRAM

See page BC-74.

INSPECTION PROCEDURE

1	CHECK CAN COMMUNICATION SYSTEM

(a) Check if the CAN communication system DTC is output (See page CA-22).

Result

Result	Proceed to
DTC not output	A
DTC output	B

B → **REPAIR CAN COMMUNICATION SYSTEM**

A

2	PERFORM ACTIVE TEST USING INTELLIGENT TESTER (BRAKE WARNING LIGHT)

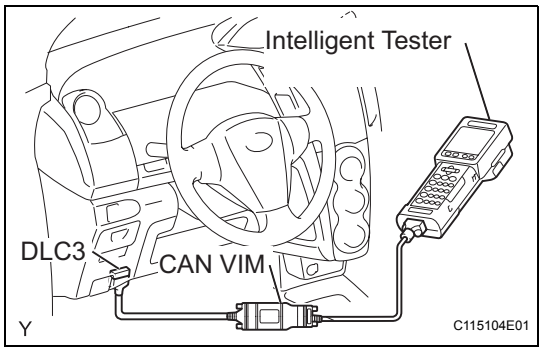

(a) Connect the intelligent tester to the DLC3.
(b) Turn the ignition switch on.
(c) Turn the tester on.
(d) Select the following menu items: DIAGNOSIS / OBD/ MOBD / select vehicle /ACTIVE TEST / BRAKE WARN LAMP.

ACTIVE TEST: ABS

Item (Display)	Test Details	Diagnostic Note
BRAKE WARN LAMP	Turns BRAKE warning light ON and OFF	Observe combination meter

(e) Check that the BRAKE warning light turns on and off in the combination meter using the intelligent tester.
OK:
The BRAKE warning light turns ON and OFF in accordance with the intelligent tester operation.

OK → **REPLACE BRAKE ACTUATOR**

NG

3	INSPECT COMBINATION METER

(a) Inspect the combination meter (See page ME-24 or ME-84).

BC

NG → **REPLACE COMBINATION METER**

OK

REPLACE BRAKE ACTUATOR

TC and CG Terminal Circuit

DESCRIPTION

Connecting terminals TC and CG of the DLC3 causes the skid control ECU to display 2-digit DTCs by flashing the ABS warning light.

WIRING DIAGRAM

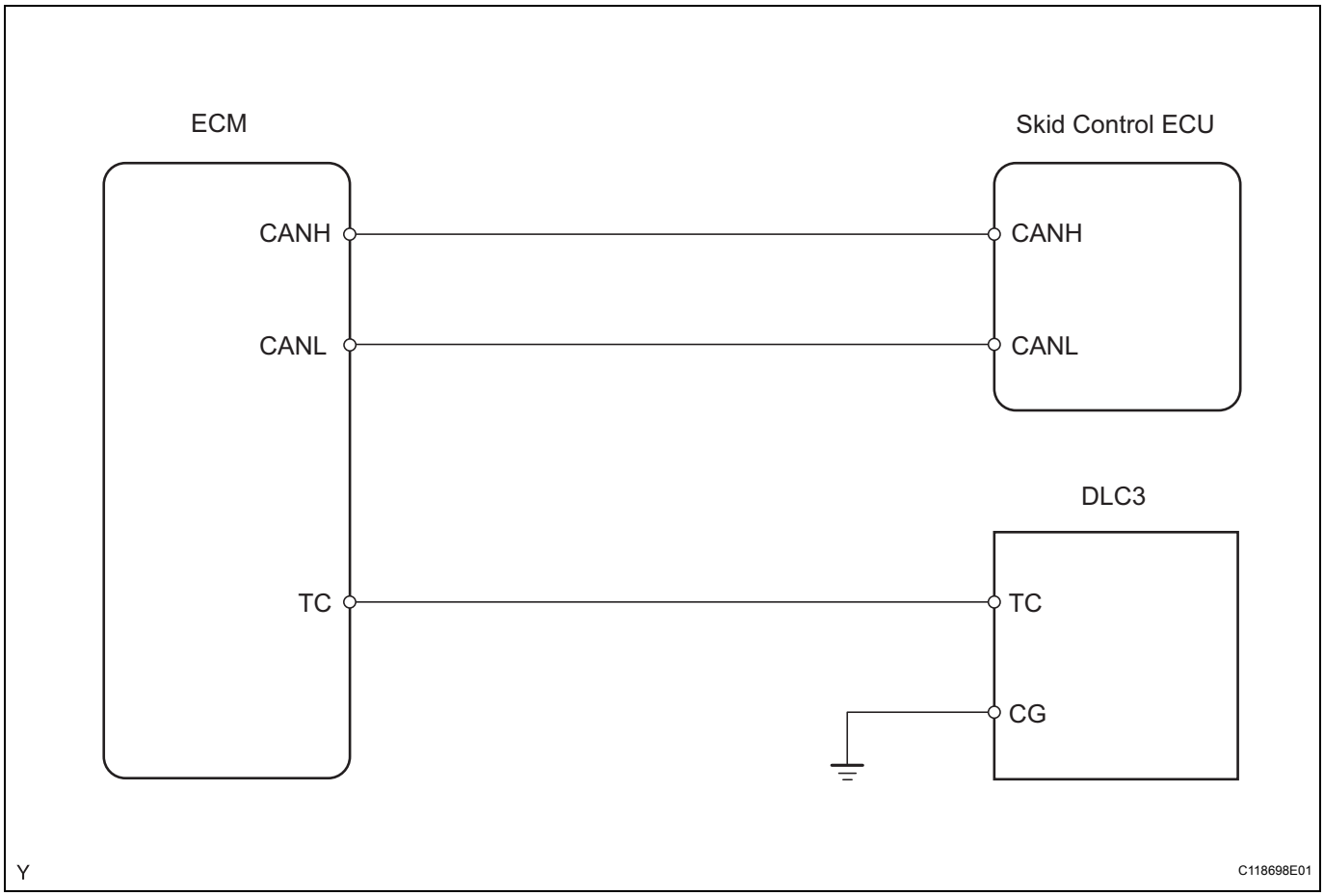

INSPECTION PROCEDURE

1	CHECK HARNESS AND CONNECTOR (DLC3 - ECM)

(a) Turn the ignition switch off.
(b) Disconnect the ECM connector.

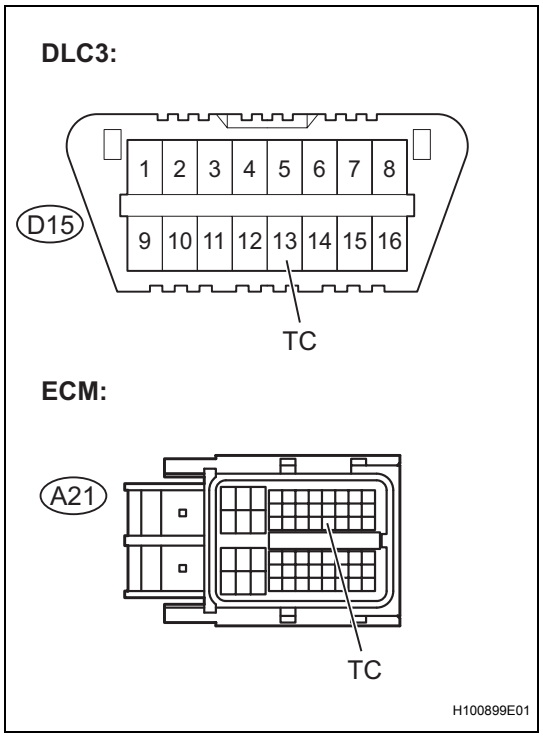

(c) Measure the resistance.
Standard resistance

Tester Connection	Specified Condition
D15-13 (TC) - A21-27 (TC)	Below 1 Ω

NG → **REPAIR OR REPLACE HARNESS OR CONNECTOR**

OK

2 CHECK HARNESS AND CONNECTOR (DLC3 - BODY GROUND)

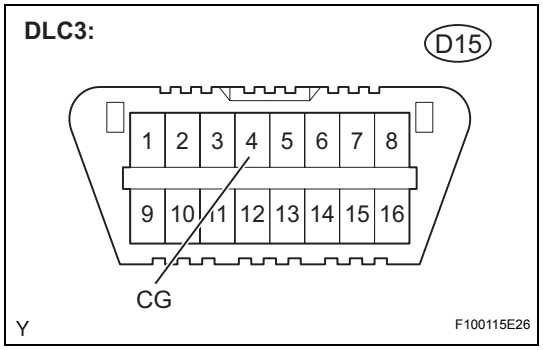

(a) Measure the resistance.
Standard resistance

Tester Connection	Specified Condition
D15-4 (CG) - Body ground	Below 1 Ω

NG → **REPAIR OR REPLACE HARNESS OR CONNECTOR**

OK

3 CHECK HARNESS AND CONNECTOR (ECM - BODY GROUND)

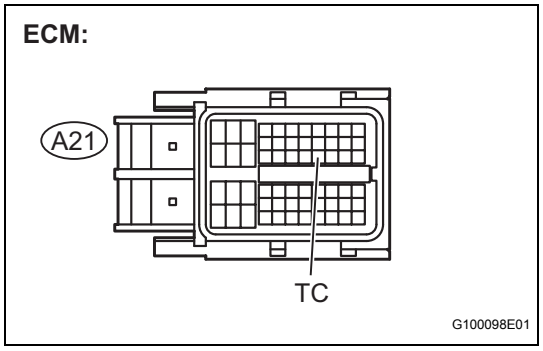

(a) Disconnect the ECM connector.
(b) Measure the resistance.
Standard resistance

Tester Connection	Specified Condition
A21-27 (TC) - Body ground	10 kΩ or higher

NG → **REPAIR OR REPLACE HARNESS OR CONNECTOR**

OK

4	REPLACE ECM

(a) Replace the ECM.
(b) Check for DTCs of the ECM (See page ES-34).

Result

Result	Proceed to
DTC not output	A
DTC output	B

B → **REPAIR CIRCUITS INDICATED BY OUTPUT DTCS**

A

END

TS and CG Terminal Circuit

DESCRIPTION

In sensor check mode, malfunctions of the speed sensor that cannot be detected when the vehicle is stopped can be detected by driving the vehicle.
Transition to sensor check mode can be performed by connecting terminals TS and CG of the DLC3 and turning the ignition switch from off to on.

WIRING DIAGRAM

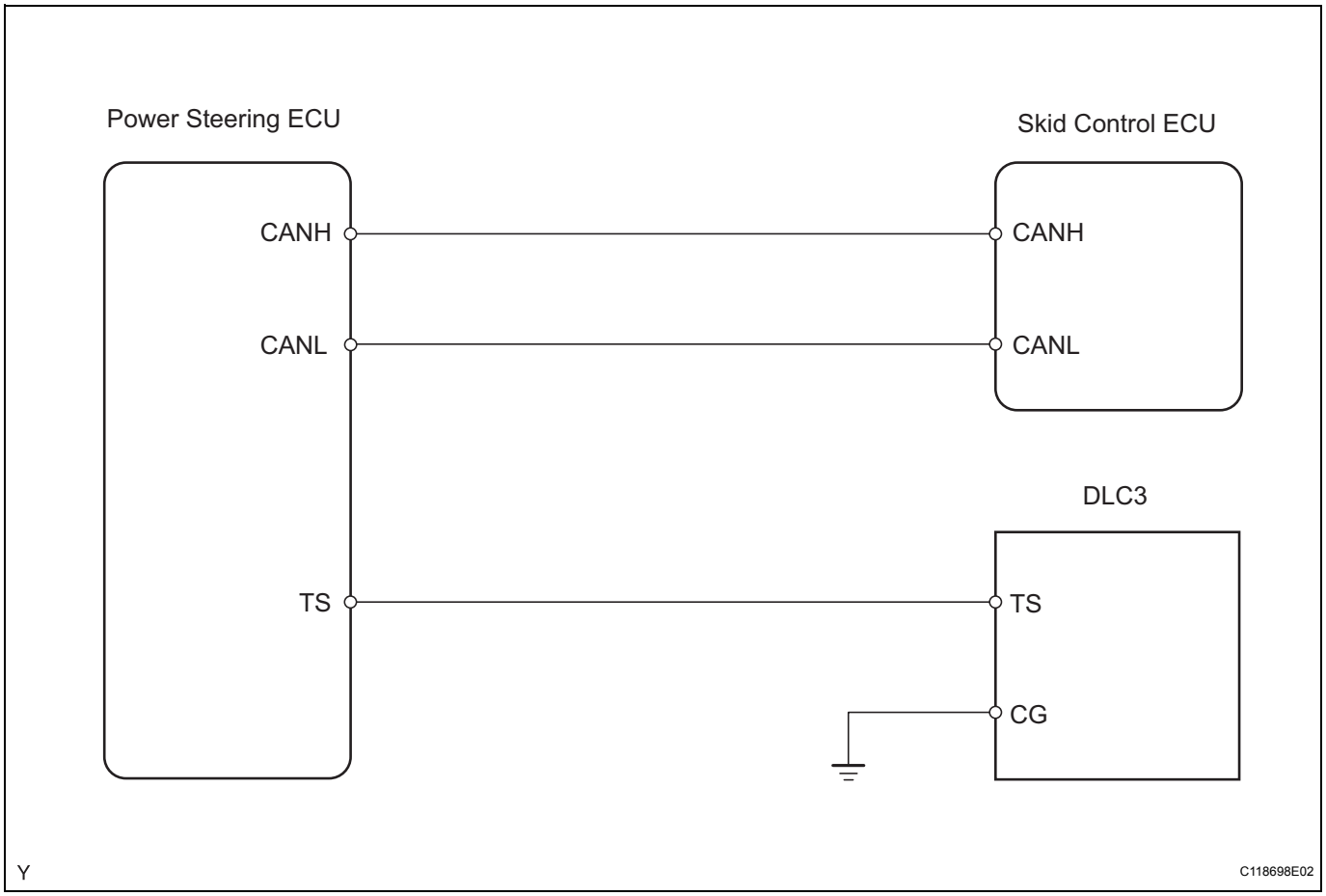

INSPECTION PROCEDURE

1	CHECK HARNESS AND CONNECTOR (DLC3 - POWER STEERING ECU)

(a) Turn the ignition switch off.
(b) Disconnect the power steering ECU connector.

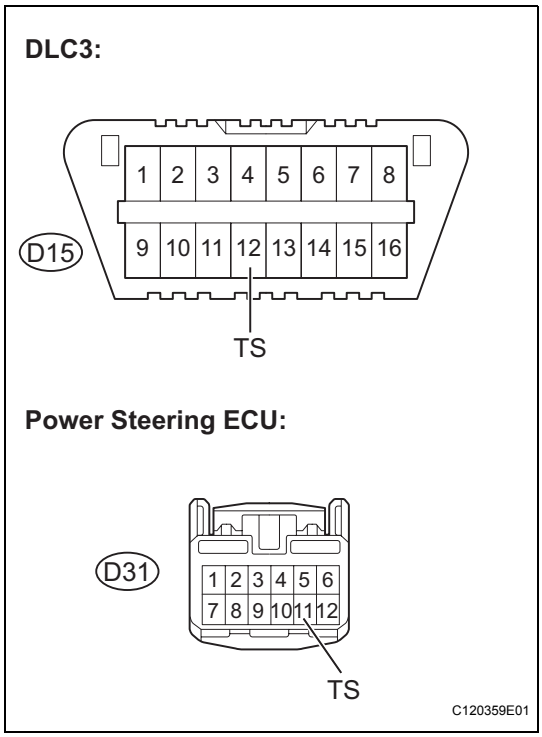

(c) Measure the resistance.
Standard resistance

Tester Connection	Specified Condition
D15-12 (TS) - D31-11 (TS)	Below 1 Ω

NG → **REPAIR OR REPLACE HARNESS OR CONNECTOR**

OK

2 CHECK HARNESS AND CONNECTOR (DLC3 - BODY GROUND)

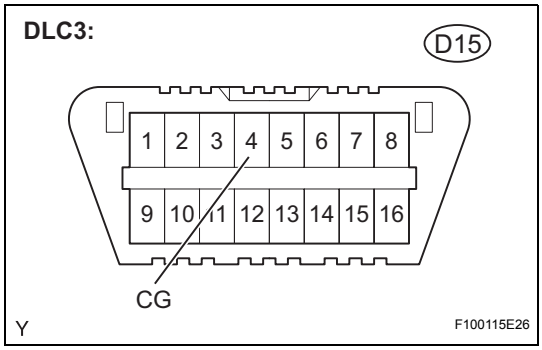

(a) Measure the resistance.
Standard resistance

Tester Connection	Specified Condition
D15-4 (CG) - Body ground	Below 1 Ω

NG → **REPAIR OR REPLACE HARNESS OR CONNECTOR**

OK

3 CHECK HARNESS AND CONNECTOR (POWER STEERING ECU - BODY GROUND)

BC

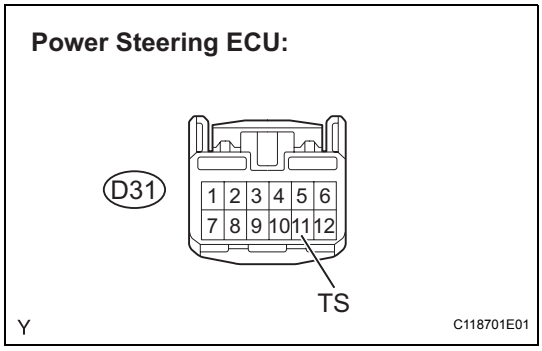

(a) Disconnect the power steering ECU connector.
(b) Measure the resistance.
Standard resistance

Tester Connection	Specified Condition
D31-11 (TS) - Body ground	10 kΩ or higher

NG → **REPAIR OR REPLACE HARNESS OR CONNECTOR**

OK

4	REPLACE POWER STEERING ECU

(a) Replace the power steering ECU.
(b) Check for DTCs of the power steering ECU (See page PS-25).

Result

Result	Proceed to
DTC not output	A
DTC output	B

B → **REPAIR CIRCUITS INDICATED BY OUTPUT DTCS**

A

END

BRAKE ACTUATOR

COMPONENTS

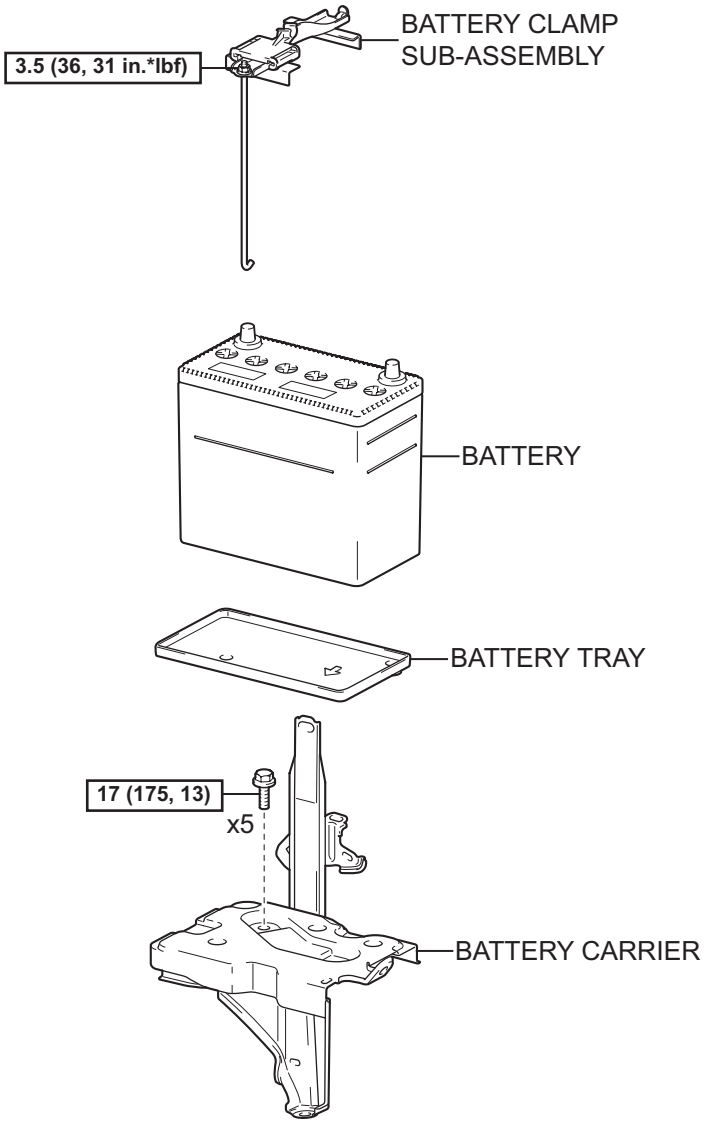

N*m (kgf*cm, ft*lbf) : Specified torque

P

C107526E05

BC

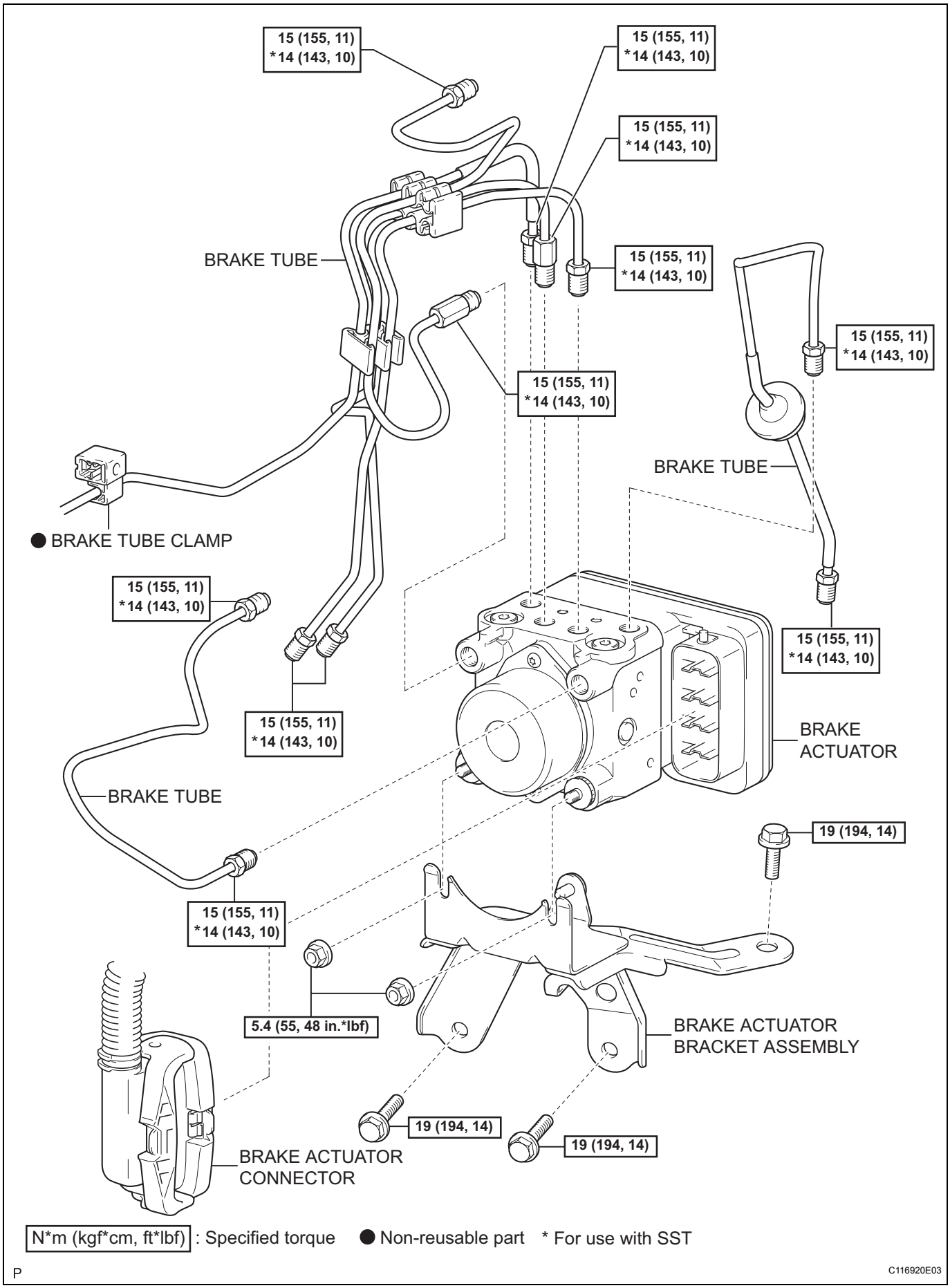
15 (155, 11)
*14 (143, 10)
15 (155, 11)
*14 (143, 10)
15 (155, 11)
*14 (143, 10)
BRAKE TUBE
15 (155, 11)
*14 (143, 10)
15 (155, 11)
*14 (143, 10)
15 (155, 11)
*14 (143, 10)
BRAKE TUBE
● BRAKE TUBE CLAMP
15 (155, 11)
*14 (143, 10)
15 (155, 11)
*14 (143, 10)
15 (155, 11)
*14 (143, 10)
BRAKE ACTUATOR
BRAKE TUBE
19 (194, 14)
15 (155, 11)
*14 (143, 10)
5.4 (55, 48 in.*lbf)
BRAKE ACTUATOR
BRACKET ASSEMBLY
19 (194, 14)
19 (194, 14)
BRAKE ACTUATOR
CONNECTOR
N*m (kgf*cm, ft*lbf) : Specified torque
● Non-reusable part
* For use with SST
P
C116920E03

REMOVAL

1. **DRAIN BRAKE FLUID**
   NOTICE:
   Immediately wash off any brake fluid that comes into contact with any painted surfaces.
2. **REMOVE BATTERY (See page EM-122)**
3. **REMOVE BATTERY TRAY**
4. **REMOVE BATTERY CARRIER (See page EM-125)**
5. **REMOVE BRAKE ACTUATOR**
   (a) Remove the clip and disconnect the wire harness.
   (b) Move the lock lever in the direction indicated by the arrow to release the lock and disconnect the brake actuator connector from the actuator.

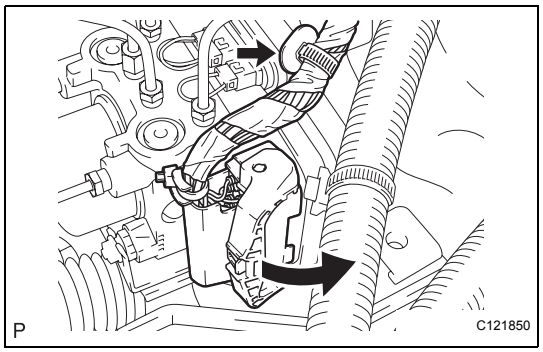

(c) Using SST, separate the brake tube from the front flexible hose.
SST 09023-00100

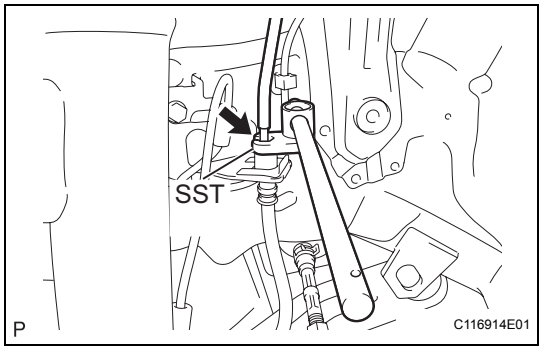

(d) Using SST, separate the 2 brake tubes from the brake tube No. 1 way.
SST 09023-00100

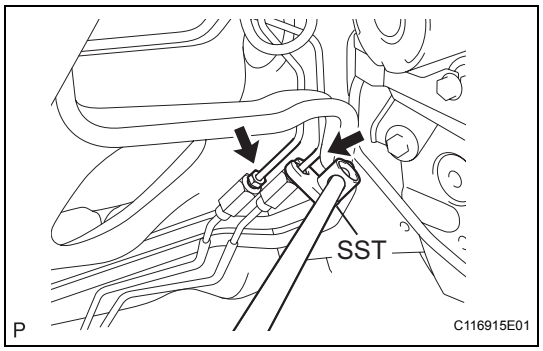

(e) Using SST, separate the 2 brake tubes from the brake master cylinder.
SST 09023-00100

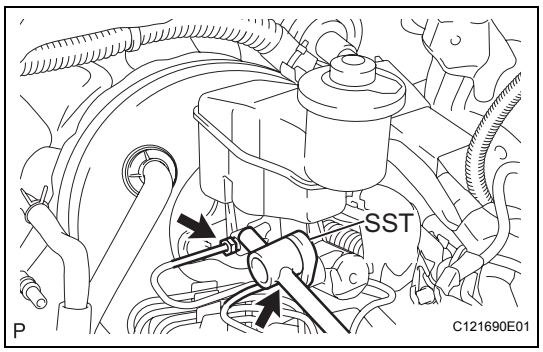

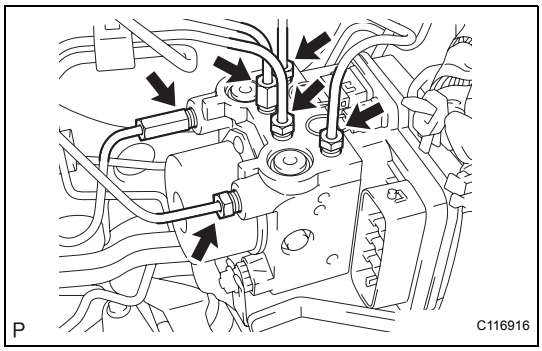

(f) Using SST, separate the 6 brake tubes from the brake actuator.
SST 09023-00100

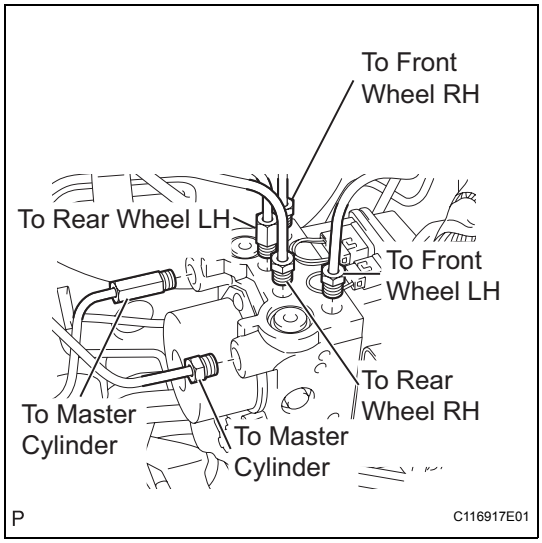

(g) Use tags or labels to identify the place to reconnect each brake tube.

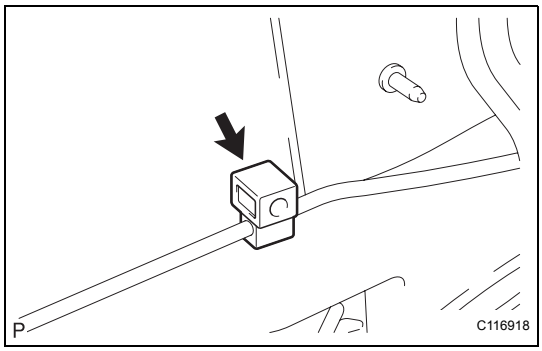

(h) Disconnect the brake tube clamp.

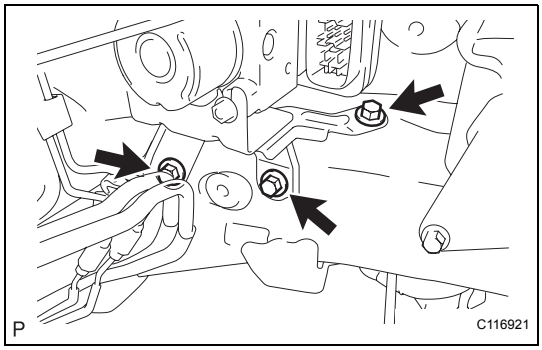

(i) Remove the 3 bolts and the actuator with bracket.

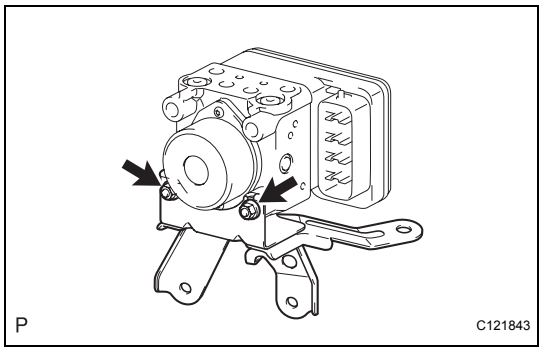

6. REMOVE BRAKE ACTUATOR BRACKET ASSEMBLY

(a) Remove the 2 nuts and the bracket.

INSTALLATION

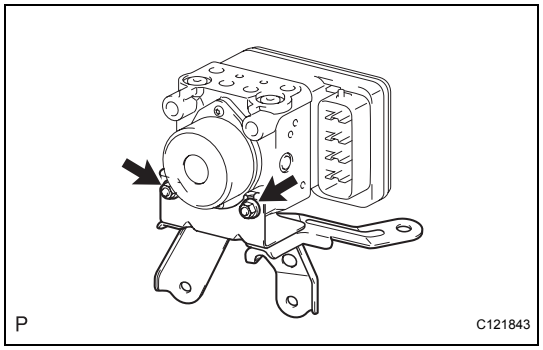

1. INSTALL BRAKE ACTUATOR BRACKET ASSEMBLY

(a) Install the actuator bracket with the 2 nuts.
Torque: 5.4 N*m (55 kgf*cm, 48 in.*lbf)
NOTICE:
Do not remove the hole plug before connecting the brake tube. New actuators are filled with brake fluid.

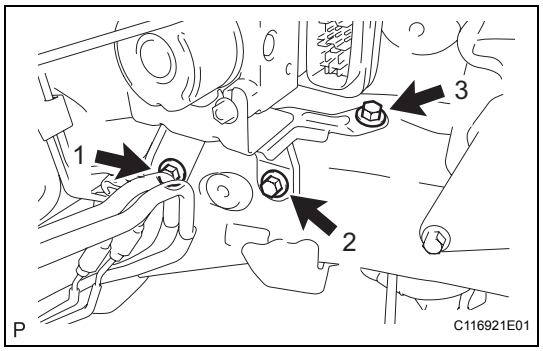

2. INSTALL BRAKE ACTUATOR

(a) Provisionally install the 3 bolts onto the actuator bracket in the sequence shown in the illustration.

(b) Tighten the 3 bolts in the sequence shown in the illustration.
Torque: 19 N*m (194 kgf*cm, 14 ft.*lbf)

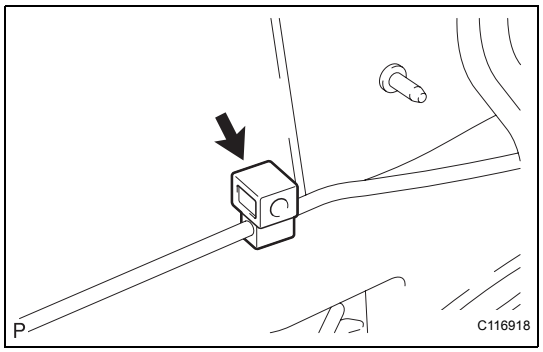

(c) Connect a new brake tube clamp.

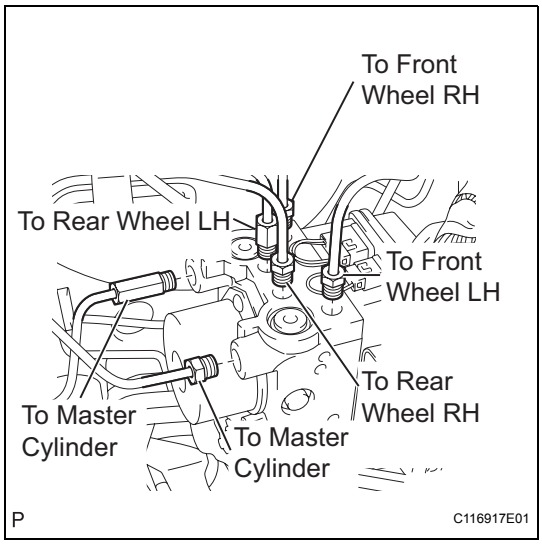

(d) Using SST, install each brake tube into the correct position of the actuator, as shown in the illustration.
SST 09023-00100
Torque: for use without SST
15 N*m (155 kgf*cm, 11 ft.*lbf)
for use with SST
14 N*m (143 kgf*cm, 10 ft.*lbf)
HINT:
- Use a torque wrench with a fulcrum length of 300 mm (11.81 in.).
- This torque value is effective when SST is parallel to a torque wrench.

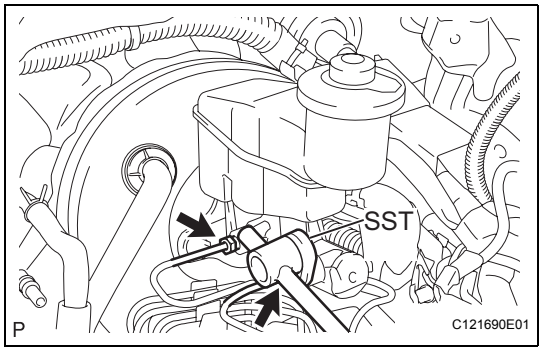

(e) Using SST, install the 2 brake tubes onto the brake master cylinder.
SST 09023-00100
Torque: for use without SST
15 N*m (155 kgf*cm, 11 ft.*lbf)
for use with SST
14 N*m (143 kgf*cm, 10 ft.*lbf)
HINT:
- Use a torque wrench with a fulcrum length of 300 mm (11.81 in.).
- This torque value is effective when SST is parallel to a torque wrench.

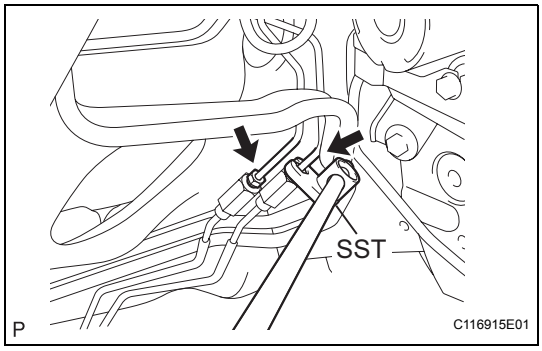

(f) Using SST, install the 2 brake tubes onto the brake tube No. 1 way.
SST 09023-00100
Torque: for use without SST
15 N*m (155 kgf*cm, 11 ft.*lbf)
for use with SST
14 N*m (143 kgf*cm, 10 ft.*lbf)
HINT:
- Use a torque wrench with a fulcrum length of 300 mm (11.81 in.).
- This torque value is effective when SST is parallel to a torque wrench.

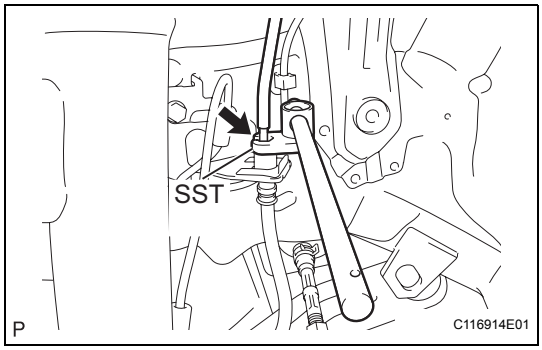

(g) Using SST, install the brake tube onto the front flexible hose.
SST 09023-00100
Torque: for use without SST
15 N*m (155 kgf*cm, 11 ft.*lbf)
for use with SST
14 N*m (143 kgf*cm, 10 ft.*lbf)
HINT:
- Use a torque wrench with a fulcrum length of 300 mm (11.81 in.).
- This torque value is effective when SST is parallel to a torque wrench.

(h) Connect the brake actuator connector.

3. **INSTALL BATTERY CARRIER (See page EM-145)**
4. **INSTALL BATTERY TRAY**
5. **INSTALL BATTERY (See page EM-148)**
6. **FILL RESERVOIR WITH BRAKE FLUID (See page BR-10)**
7. **BLEED MASTER CYLINDER (See page BR-10)**
8. **BLEED BRAKE LINE (See page BR-12)**
9. **CHECK FLUID LEVEL IN RESERVOIR (See page BR-12)**
10. **CHECK FOR BRAKE FLUID LEAKAGE**
11. **CHECK ACTUATOR WITH INTELLIGENT TESTER** (See page BC-14)

FRONT SPEED SENSOR

COMPONENTS

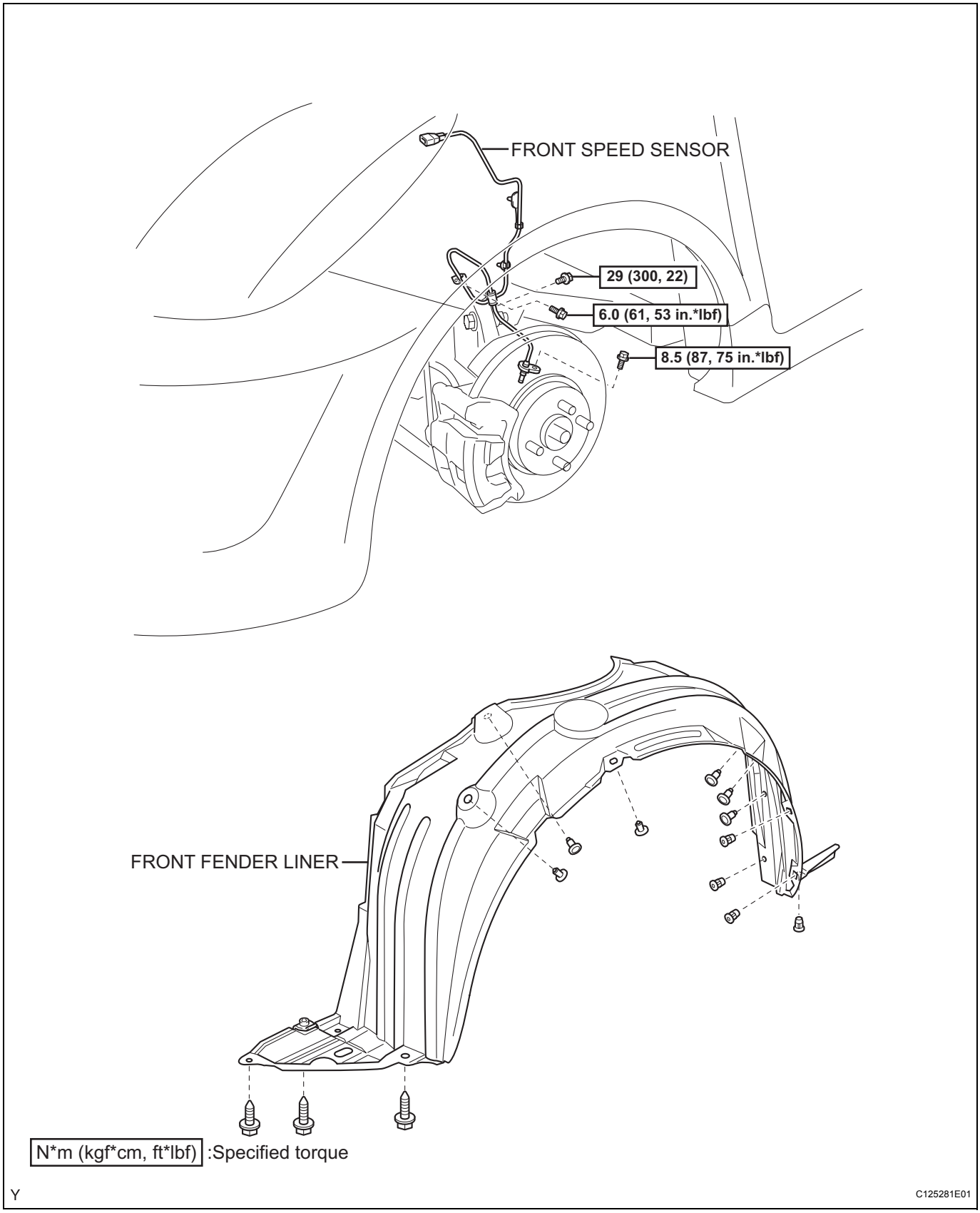

REMOVAL

1. **DISCONNECT CABLE FROM NEGATIVE BATTERY TERMINAL**
2. **REMOVE FRONT WHEEL**
3. **REMOVE FRONT FENDER LINER**
   (a) Remove the 3 screws, 6 clips and 4 grommets and remove the front fender liner.
4. **REMOVE FRONT SPEED SENSOR**

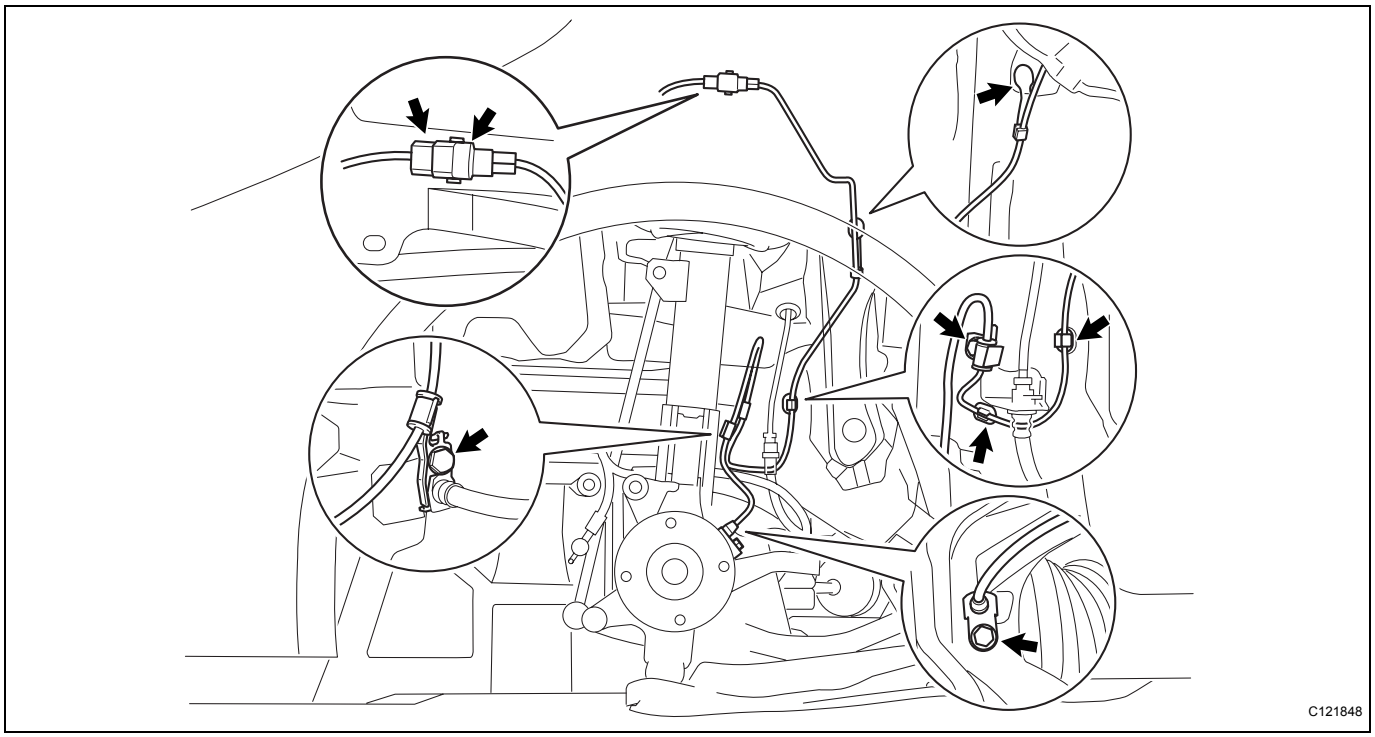

(a) Remove the speed sensor clip from the body.
(b) Disconnect the speed sensor connector.
(c) Remove the 3 clips.
(d) Remove the bolt and separate the clamp from the body.
(e) Remove the bolt and separate the clamp from the shock absorber.
(f) Remove the bolt and remove the speed sensor from the steering knuckle.
NOTICE:
- **Keep the speed sensor tip and installation portion free of foreign matter.**
- **Remove the speed sensor without turning it from its original installation angle.**

INSPECTION

1. INSPECT FRONT SPEED SENSOR

(a) Check the connector case and terminals for any deformation or corrosion.

Standard:

No deformation or corrosion.

If necessary, replace the speed sensor.

INSTALLATION

1. INSTALL FRONT SPEED SENSOR

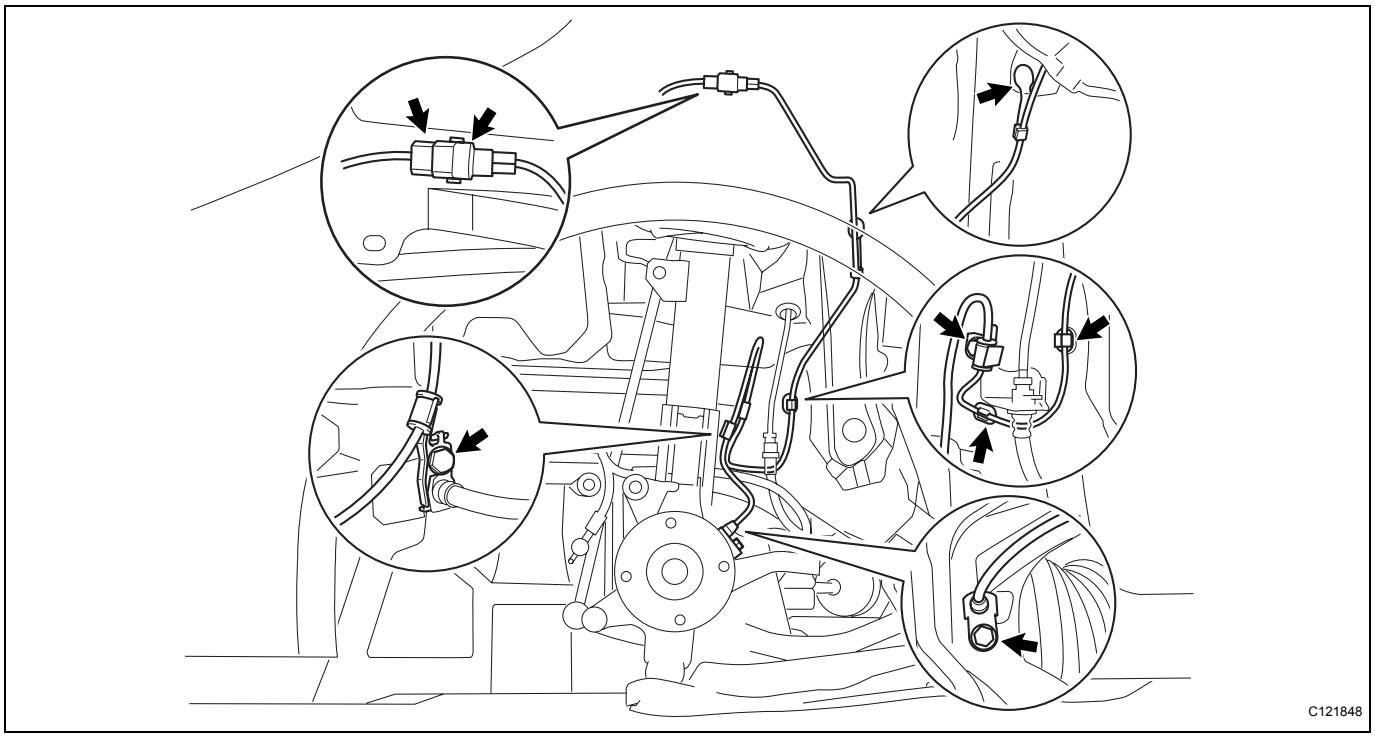

(a) Install the speed sensor onto the steering knuckle with the bolt.
Torque: 8.5 N*m (87 kgf*cm, 75 in.*lbf)
NOTICE:
- **Check that the speed sensor tip and installation portion are free of foreign matter.**
- **Install the speed sensor without turning it from its original installation angle.**

(b) Install the clamp onto the shock absorber with the bolt.
Torque: 29 N*m (300 kgf*cm, 22 ft.*lbf)

(c) Install the clamp onto the body with the bolt.
Torque: 6.0 N*m (61 kgf*cm, 53 in.*lbf)

(d) Install the 3 clips.

(e) Connect the speed sensor connector.

(f) Install the speed sensor clip onto the body.

2. INSTALL FRONT FENDER LINER

(a) Install the front fender liner with the 3 screws, 6 clips and 4 grommets.
NOTICE:
The speed sensor wire should not protrude beyond the front fender liner.

3. INSTALL FRONT WHEEL
Torque: 103 N*m (1,050 kgf*cm, 76 ft.*lbf)

4. CONNECT CABLE TO NEGATIVE BATTERY TERMINAL
Torque: 5.4 N*m (55 kgf*cm, 48 in.*lbf)

5. CHECK ABS SENSOR SIGNAL
(See page BC-14)

SKID CONTROL SENSOR

COMPONENTS

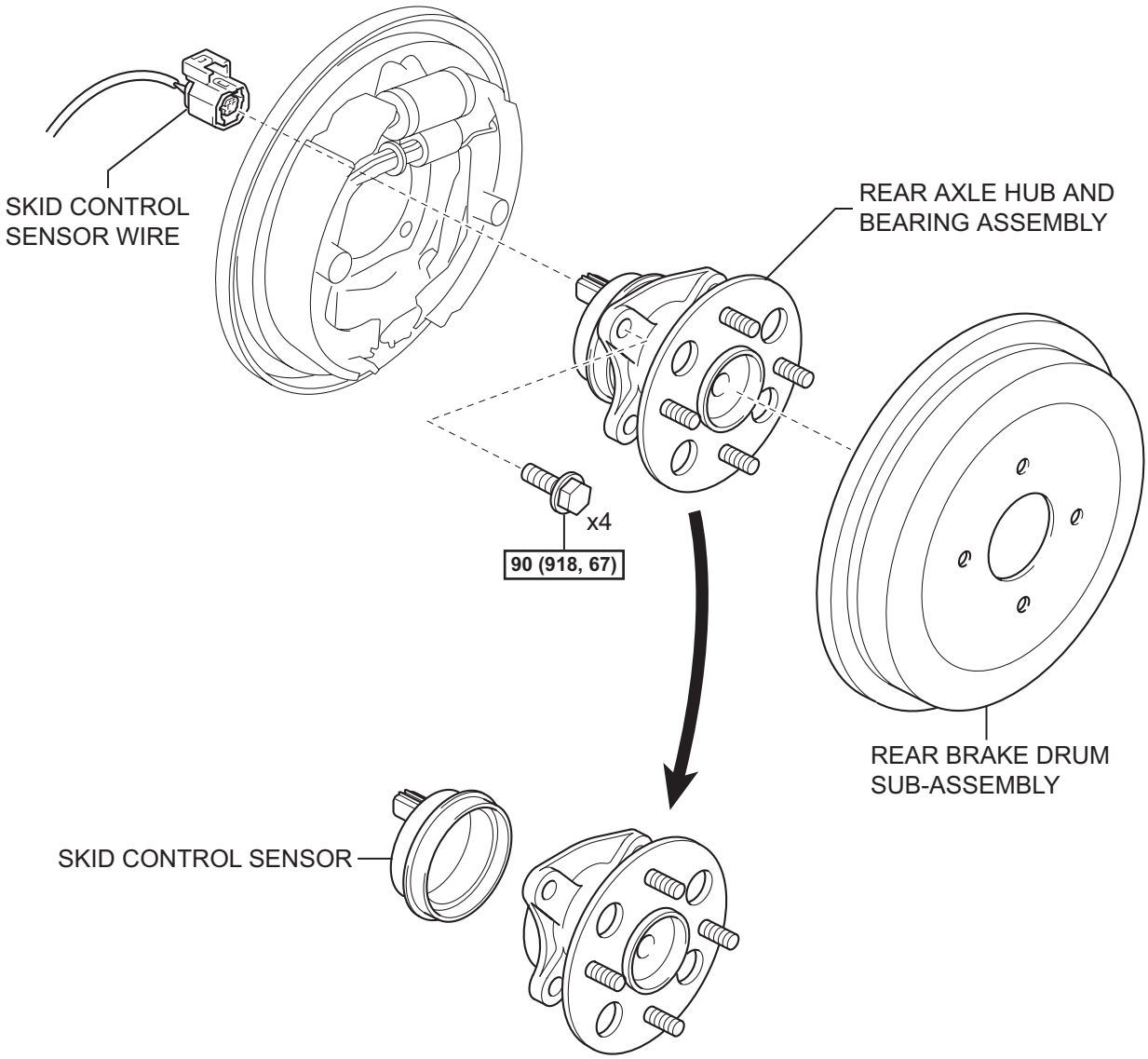

N*m (kgf*cm, ft*lbf) :Specified torque

Y

C108980E02

REMOVAL

1. **DISCONNECT CABLE FROM NEGATIVE BATTERY TERMINAL**
2. **REMOVE REAR WHEEL**
3. **REMOVE REAR BRAKE DRUM SUB-ASSEMBLY (See page BR-60)**
4. **DISCONNECT SKID CONTROL SENSOR WIRE (See page AH-14)**
5. **REMOVE REAR AXLE HUB AND BEARING ASSEMBLY (See page AH-14)**
6. **REMOVE SKID CONTROL SENSOR**
   (a) Install the 4 hub nuts and the 4 hub bolts onto the rear axle hub, and then fix the rear axle hub in a vice between aluminum plates.
   NOTICE:
   If the skid control sensor is dropped or heavily damaged, replace the rear axle hub and bearing.
   (b) Using a 3 mm pin punch and hammer, remove the 2 pins from SST (09520-00031) and remove the attachment (09521-00010).
   (c) Using SST and the 2 bolts (90101-12007), remove the skid control sensor from the rear axle hub.
   SST 09520-00031 (09520-00040), 09521-00020, 09950-00020
   NOTICE:
   - **Pull the skid control sensor off straight, being careful not to make contact with the skid control sensor rotor.**
   - **If the skid control sensor rotor is damaged or deformed, replace the rear axle hub and bearing.**
   - **Do not damage the skid control sensor or rear axle hub contact surfaces.**
   - **Keep the sensor rotor free of foreign matter.**

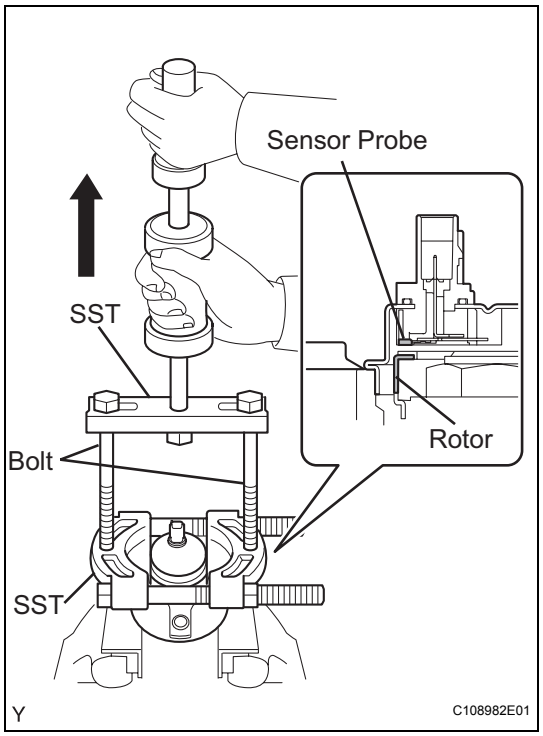

INSPECTION

1. INSPECT SKID CONTROL SENSOR

(a) Check the connector case and terminals for any deformation or corrosion.

Standard:

No deformation or corrosion.

If necessary, replace the speed sensor.

INSTALLATION

1. **INSTALL SKID CONTROL SENSOR**
   (a) Wipe the sealant off the skid control sensor installation surface using white gasoline.
   NOTICE:
   Keep the sensor rotor free of foreign matter.

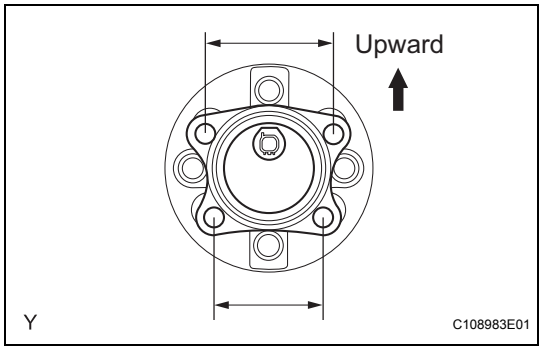

   (b) Install the skid control sensor onto the rear axle hub in the highest possible installation position.
   HINT:
   The distance between the installation holes should be larger on the upper side than the lower side.

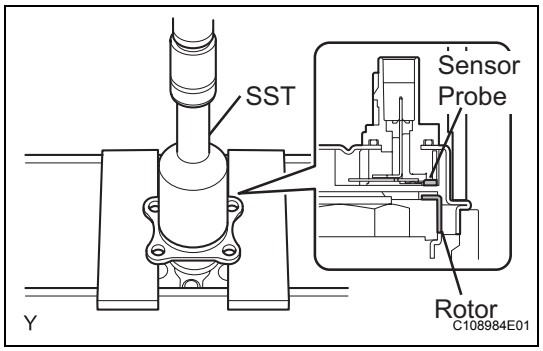

   (c) Using SST and a press, install a new skid control sensor into the rear axle hub until it is flush with the end.
   SST 09214-76011
   NOTICE:
   - **Do not use a hammer when installing.**
   - **Check for any foreign matter on the sensor probe.**
   - **Press the skid control sensor in slowly without turning it.**

2. **INSTALL REAR AXLE HUB AND BEARING ASSEMBLY (See page AH-14)**
3. **INSPECT REAR AXLE HUB BEARING (See page AH-2)**
4. **CONNECT SKID CONTROL SENSOR WIRE (See page AH-14)**
5. **INSTALL REAR BRAKE DRUM SUB-ASSEMBLY**
6. **ADJUST REAR DRUM BRAKE SHOE CLEARANCE (See page BR-67)**
7. **INSTALL REAR WHEEL**
   Torque: 103 N*m (1,050 kgf*cm, 76 ft.*lbf)
8. **CONNECT CABLE TO NEGATIVE BATTERY TERMINAL**
   Torque: 5.4 N*m (55 kgf*cm, 48 in.*lbf)
9. **CHECK ABS SENSOR SIGNAL**
   (See page BC-14)