FOREWORD

This repair manual has been prepared to provide essential information on body panel repair methods (including cutting and welding operations, but excluding painting) for the TOYOTA CAMRY.

Applicable models: ACV 40 series
GSV 40 series

This manual consists of body repair methods, exploded diagrams and illustrations of the body components and other information relating to body panel replacement such as handling precautions, etc. However, it should be noted that the front fenders of this TOYOTA model are bolted on and require no welding.

When repairing, don't cut and join areas that are not shown in this manual. Only work on the specified contents to maintain body strength.

Body construction will sometimes differ depending on specifications and country of destination. Therefore, please keep in mind that the information contained herein is based on vehicles for general destinations.

For the repair procedures and specifications other than collision-damaged body components of the TOYOTA CAMRY refer to the repair manuals.

If you require the above manuals, please contact your TOYOTA dealer.

All information contained in this manual is the most up-to-date at the time of publication. However, specifications and procedures are subject to change without prior notice.

TOYOTA MOTOR CORPORATION

ABOUT THIS MANUAL

Scope of the repair work explanation

- This text explains the welding panel replacement instructions from the vehicle's white body condition. We have abbreviated the explanations of the removal and reinstallation of the equipment parts up to the white body condition and of the installation, inspection, adjustment and final inspection of equipment parts after replacing the weld panel.

Section categories

- This manual has been divided as shown below.

Section Title	Contents	Examples
INTRODUCTION	Explanation of general body repair. Views of weld panel replacement instructions.	Cautionary items. Views of weld panel replacement instructions.
BODY PANEL REPLACEMENT	Instructions for replacing the weld panels from the white body condition, from which bolted parts have been removed, with individual supply parts.	Front side member replacement. Quarter panel replacement.
BODY DIMENSIONS	Body aligning measurements.	Dimension diagrams.
PAINT • COATING	Scope and type of anti-rust treatment, etc. together with weld panel replacement.	Under coating. Body sealer.

Contents omitted in this manual.

- Make sure to perform the following essential procedures, although they are omitted in this manual.
  (1) Clean and wash removed parts, if necessary.
  (2) Visual inspection.

PRECAUTION

GENERAL REPAIR INSTRUCTIONS

1. WORK PRECAUTIONS

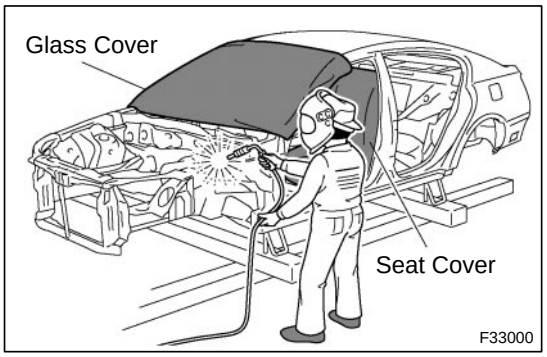

(a) VEHICLE PROTECTION

(1) When welding, protect the painted surfaces, windows, seats and carpet with heat resistant, fireproof covers.

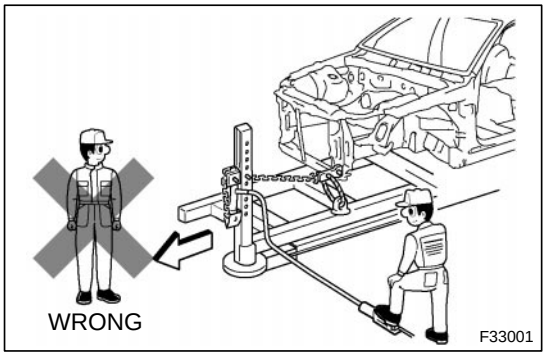

(b) SAFETY

(1) Never stand in a direct line with the chain when using a puller on the body or frame, and be sure to attach a safety cable.

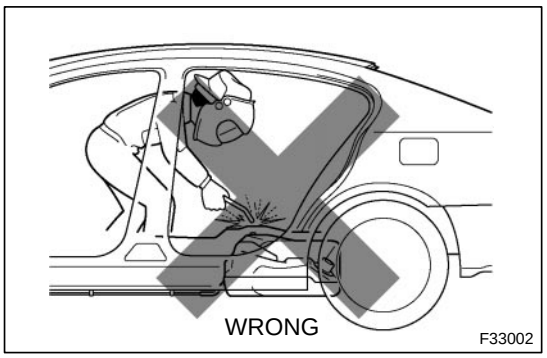

(2) Before performing repair work, check for fuel leaks. If a leak is found, be sure to close the opening completely.

(3) If it is necessary to use a flame in the area of the fuel tank, first remove the tank and plug the fuel line.

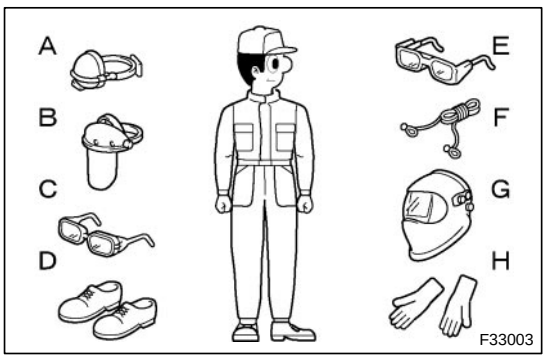

(c) SAFETY WORK CLOTHES

(1) In addition to the usual mechanic's wear, cap and safety shoes, the appropriate gloves, head protector, glasses, ear plugs, face protector, dust-prevention mask, etc. should be worn as the situation demands.

Code	Name
A	Dust-Prevention Mask
B	Face Protector
C	Eye Protector
D	Safety Shoes
E	Welder's Glasses
F	Ear Plugs
G	Head Protector
H	Welder's Gloves

PRECAUTIONS FOR REPAIRING BODY STRUCTURE PANELS

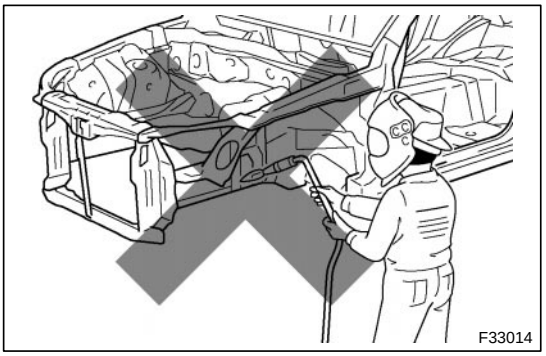

1. HEAT REPAIR FOR BODY STRUCTURE PANELS

Toyota prohibits the use of the heat repair method on body structure panels when repairing a vehicle damaged in a collision.
Panels that have high strength and rigidity, as well as a long life span for the automobile body are in high demand.
At Toyota, in order to fulfill these requirements, we use high tensile strength steel sheets and rust preventive steel sheets on the body. High tensile steel sheets are made with alloy additives and a special heat treatment in order to improve their strength.
To prevent the occurrence of rust for a long period of time, the surface of the steel is coated with a zinc alloy.
If body structure parts are heat repaired with an acetylene torch or other heating source, the crystalline organization of the steel sheet will change and their strength of the steel sheet will be reduced. The ability of the body to resist rust is significantly lowered as well since the rust resistant zinc coating is destroyed by heat and the steel sheet surface is oxidized.

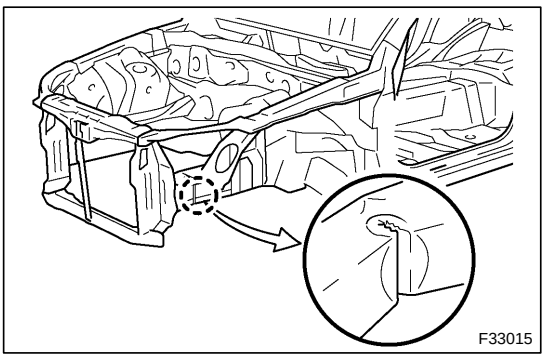

2. STRUCTURE PANEL KINKS

A sharp deformation angle on a panel that cannot be returned to its original shape by pulling or hammering is called a kink.
Structural parts are designed to perform in their original shape. If parts are deformed in an accident, or if the deformed parts are repaired and reused, the parts may be unable to perform as intended.
It is necessary to replace the part where the kink has occurred.

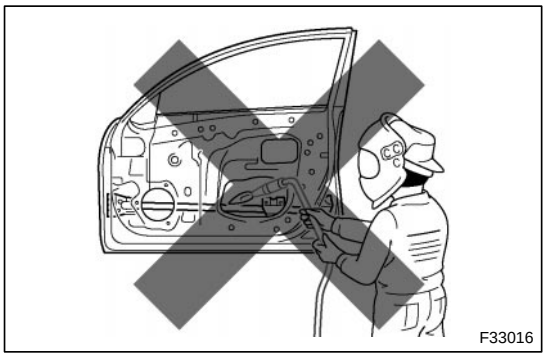

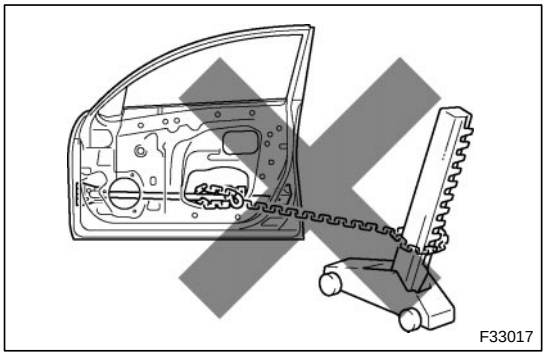

3. IMPACT BEAM REPAIR

The impact beam and bracket are necessary and important parts that help reduce the probability of injury to passengers in side collisions.
For impact beams, we use special high tensile strength steel.
The high tensile strength steel maintains its special crystalline organization by heat treatment or alloy additives.
Structural parts are designed to perform in their original shape. If parts are deformed in an accident, or if the deformed parts are repaired and reused, the parts may be unable to perform as intended.
If the impact beam or bracket is damaged, replace the door assembly that has the damaged beam.
Also, the bumper reinforcement is a necessary and important part that helps reduce the probability of injury to passengers in front collisions, and for the same reasons explained above, should be replaced if damaged.

PROPER AND EFFICIENT WORK PROCEDURES

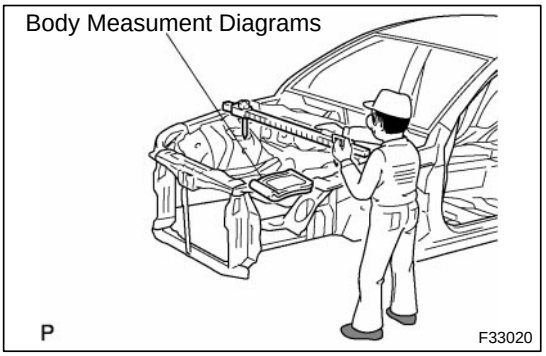

1. REMOVAL

(a) PRE-REMOVAL MEASURING

(1) Before removal or cutting operations, take measurements in accordance with the dimensions diagram. Always use a puller to straighten a damaged body or frame.

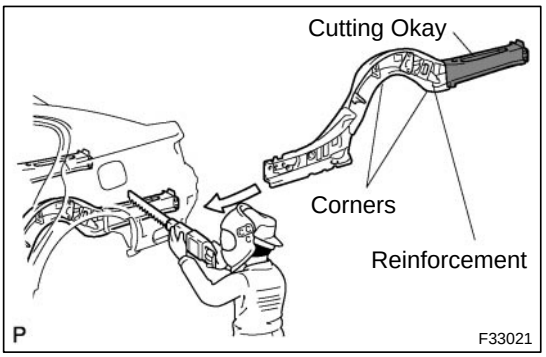

(b) CUTTING AREA

(1) Always cut in a straight line and avoid cutting reinforced areas.

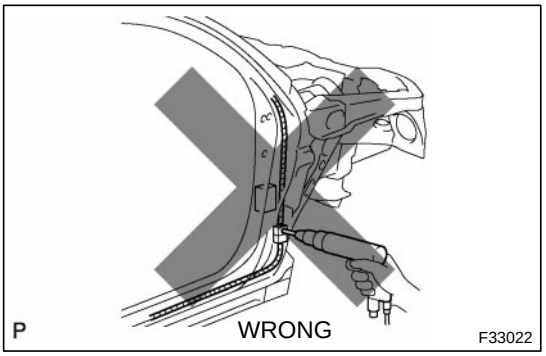

(c) PRECAUTIONS FOR DRILLING OR CUTTING

(1) Check behind any area to be drilled or cut to ensure that there are no hoses, wires, etc., that may be damaged.

HINT: See “Handling Precautions on Related Components” on page IN-9.

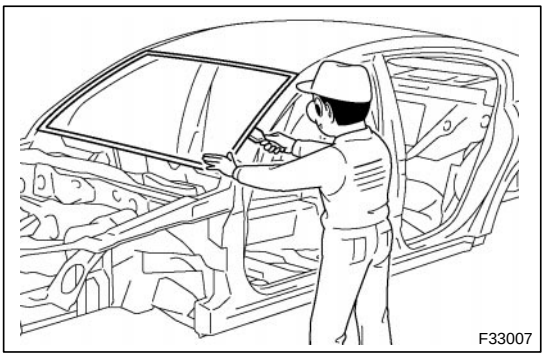

(d) REMOVAL OF ADJACENT COMPONENTS

(1) When removing adjacent components, apply protective tape to the surrounding body and your tools to prevent damage.

HINT: See “Handling Precautions on Related Components” on page IN-9.

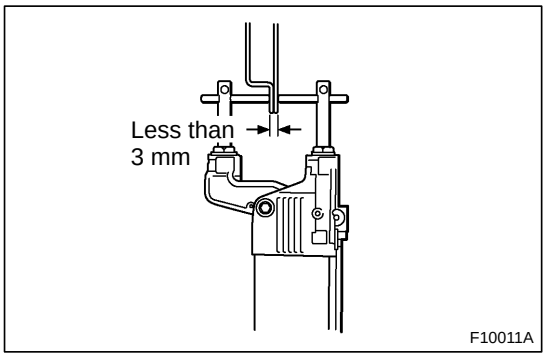

2. PREPARATION FOR INSTALLATION

(a) SPOT WELD POINTS

(1) When welding panels with a combined thickness of over 3 mm (0.12 in.), use a MIG (Metal Inert Gas) welder for plug welding.

HINT: Spot welding does not provide sufficient durability for panels with a combined thickness of over 3 mm (0.12 in.)

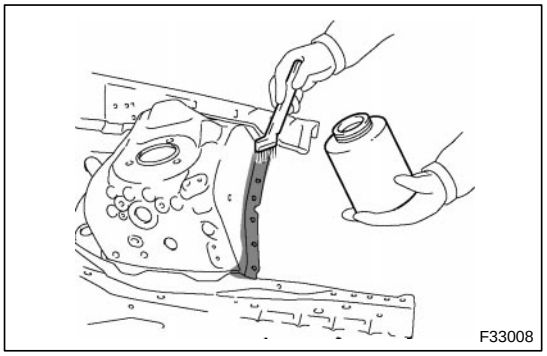

(b) APPLICATION OF WELD-THROUGH PRIMER (SPOT SEALER)

(1) Remove the paint from the portion of the new parts and body to be welded, and apply weld-through primer.

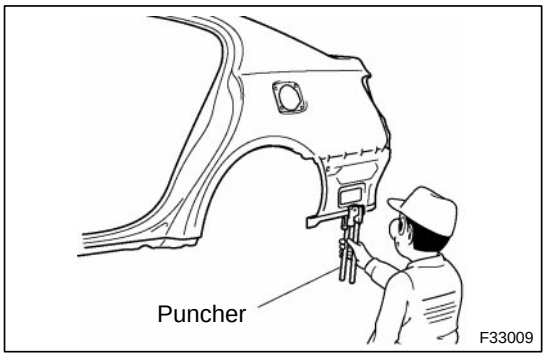

(c) MAKING HOLES FOR PLUG WELDING

(1) For areas where a spot welder cannot be used, use a puncher or drill to make holes for plug welding.

REFERENCE: mm (in.)

Thickness of welded portion	Size of plug hole
1.0 (0.04) under	ø 5 (0.20) over
1.0 (0.04) − 1.6 (0.06)	ø 6.5 (0.26) over
1.7 (0.07) − 2.3 (0.09)	ø 8 (0.31) over
2.4 (0.09) over	ø 10 (0.39) over

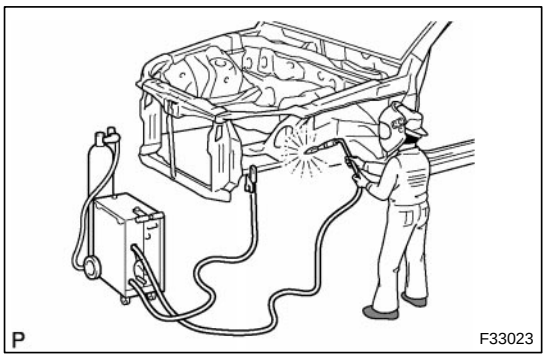

(d) SAFETY PRECAUTIONS FOR ELECTRICAL COMPONENTS

(1) When welding, there is a danger that electrical components will be damaged by the electrical current flowing through the body.

(2) Before starting work, disconnect the negative terminal of the battery and ground the welder near the welding location of the body.

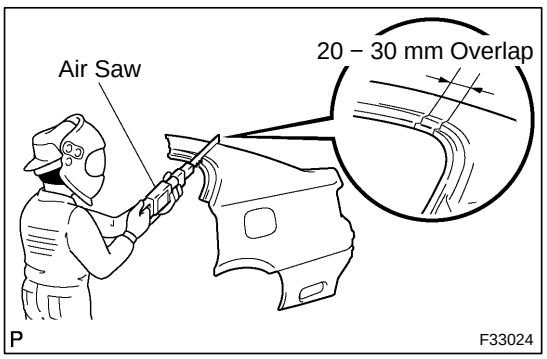

(e) ROUGH CUTTING OF JOINTS

(1) For joint areas, rough cut the new parts, leaving 20 − 30 mm (0.79 − 1.18 in.) of overlap.

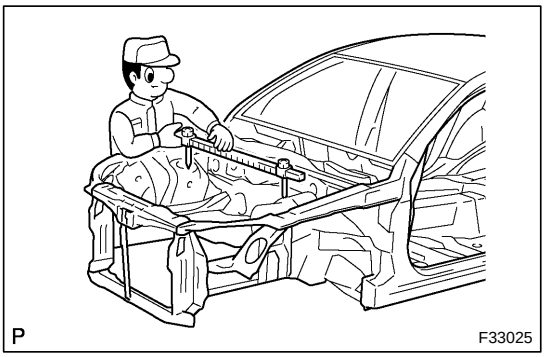

3. INSTALLATION

(a) PRE-WELDING MEASUREMENTS

(1) Always take measurements before installing underbody or engine components to ensure correct assembly. After installation, confirm proper fit.

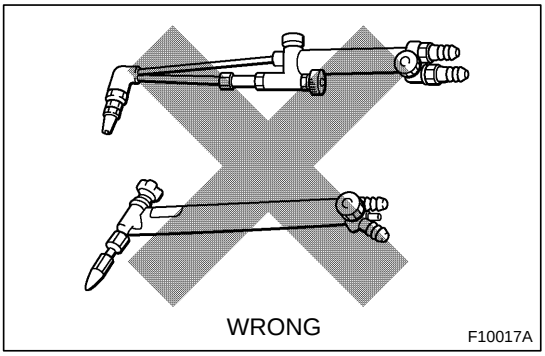

(b) WELDING PRECAUTIONS

(1) The number of welding spots should be as follows.

Spot weld: 1.3 X No. of manufacturer's spots.
Plug weld: More than No. of manufacturer's plugs.

(2) Plug welding should be done with a MIG (Metal Inert Gas) welder. Do not gas weld or braze panels at areas other than where specified.

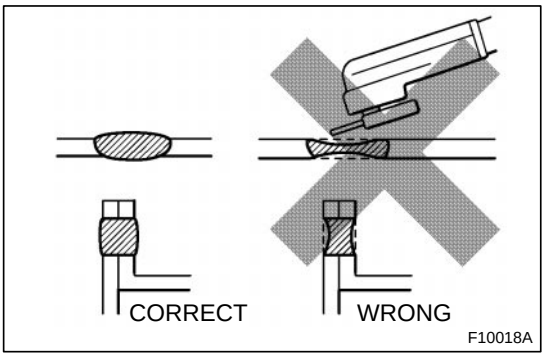

(c) POST-WELDING REFINISHING

(1) Always check the welded spots to ensure that they are secure.

(2) When smoothing out the weld spots with a disc grinder, be careful not to grind off too much as this will weaken the weld.

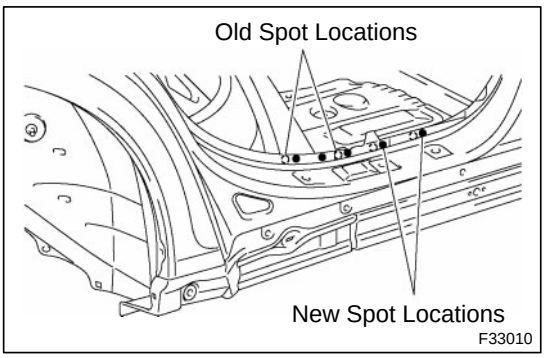

(d) SPOT WELD LOCATIONS

(1) Avoid welding over previously welded areas.

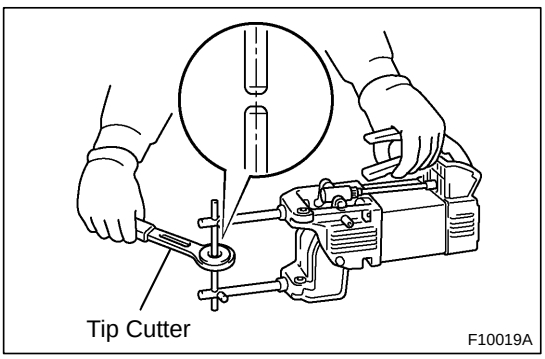

(e) SPOT WELDING PRECAUTIONS

(1) The shape of the tip point of the spot welder significantly affects the strength of the weld. Therefore, maintain the tip point in the proper shape, and allow it to cool after every five or six spots.

(2) Completely remove the paint from the areas to be spot welded, including the seams and the surfaces that come in contact with the welding tip.

(3) Use a sander to remove any burrs that are created during spot welding.

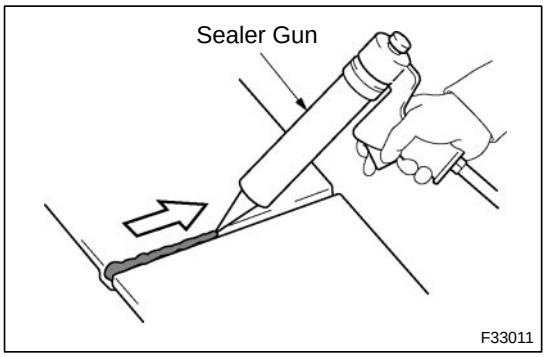

4. ANTI-RUST TREATMENT AFTER INSTALLATION (BEFORE PAINTING PROCESS)

(a) BODY SEALER APPLICATION

(1) For water-proofing and anti-corrosion measures, always apply the body sealer to the body panel seams and hems of the doors, hood, etc.

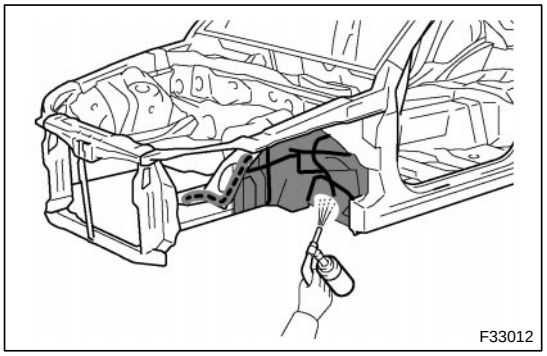

(b) UNDERCOAT APPLICATION

(1) To prevent corrosion and protect the body from damage by flying stones, always apply sufficient under coating to the bottom surface of the under body and inside of the wheel housings.

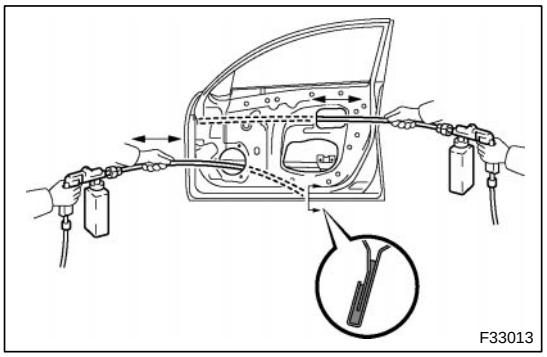

5. ANTI-RUST TREATMENT AFTER INSTALLATION (AFTER PAINTING PROCESS)

(a) ANTI-RUST AGENT (WAX) APPLICATION

(1) To preserve impossible to paint areas from corrosion, always apply sufficient anti-rust agent (wax) to the inside of the hemming areas of the doors and hood, and around the hinges, or the welded surfaces inside the box-shaped cross sections of the side members, body pillars, etc.

6. ANTI-RUST TREATMENT BY PAINTING

REFERENCE:

Painting prevents corrosion and protects the sheet metal from damage. In this section, anti-chipping paint only for anti-corrosion purposes is described.

(a) ANTI-CHIPPING PAINT

(1) To prevent corrosion and protect the body from damage by flying stones, etc., apply anti-chipping paint to the rocker panel, wheel arch areas, balance panel, etc.

HINT:
Depending on the model or the application area, there are cases where the application of anti-chipping paint is necessary before the second coat or after the top coat.

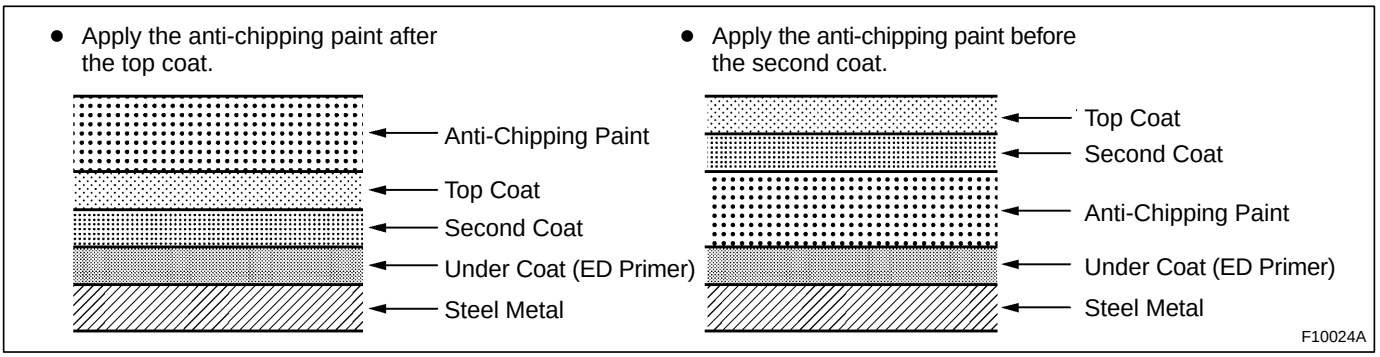

HANDLING PRECAUTIONS ON RELATED COMPONENTS

1. BRAKE SYSTEM

The brake system is one of the most important safety components. Always follow the directions and notes given in the brake section of the repair manual for the relevant model year when handling brake system parts.

NOTICE: When repairing the brake master cylinder or TRAC system, bleed the air out of the TRAC system.

2. DRIVE TRAIN AND CHASSIS

The drive train and chassis are components that can have great effects on the running performance and vibration resistance of the vehicle. After installing components in the sections listed in the table below, perform alignments to ensure correct mounting angles and dimensions. Body repair must be particularly accurate to ensure correct alignment.

HINT: Correct procedures and special tools are required for alignment. Always follow the directions given in the repair manual for the relevant model year during alignment and in section DI of this section.

Component to be aligned	Section of repair manual for relevant model
Front Wheels	Front Suspension section
Rear Wheels	Rear Suspension section

3. COMPONENTS ADJACENT TO THE BODY PANELS

Various types of component parts are mounted directly on or adjacently to the body panels. Strictly observe the following precautions to prevent damaging these components and the body panels during handling.

- Before repairing the body panels, remove their components or apply protective covers over the components.
- Before prying components off using a screwdriver or a scraper, etc., attach protective tape to the tool tip or blade to prevent damaging the components and the body paint.
- Before removing components from the outer surface of the body, attach protective tape to the body to ensure no damage to painted areas.

  HINT: Apply touch-up paint to any damaged paint surfaces.
- Before drilling or cutting sections, make sure that there are no wires, etc., on the reverse side.

4. ECU (ELECTRONIC CONTROL UNIT)

Many ECUs are mounted in this vehicle.
Take the following precautions during body repair to prevent damage to the ECUs.

- Before starting electric welding operations, disconnect the negative (−) terminal cable from the battery.
  When the negative (−) terminal cable is disconnected from the battery, the memory of the clock and audio systems will be erased. So, before starting work, make a record of the contents memorized by each memory system. Then when work is finished, reset the clock and audio systems as before.
  When the vehicle has tilt and telescopic steering, power seats and outside rear view mirrors, which are all equipped with a memory function, it is not possible to make a record of the memory contents.
  When the operation is finished, it will be necessary to explain this fact to the customer, and request the customer to adjust the features and reset the memory.
- Do not expose the ECUs to ambient temperatures above 80°C (176°F).

  NOTICE: Since it is possible that the ambient temperature may reach 80° C (176° F) or more, remove the ECUs from the vehicle before starting work.
- Be careful not to drop the ECUs and not to apply physical shocks to them.

DAMAGED VEHICLE DISPOSAL PRECAUTION (SRS AIRBAG SYSTEM)

For SRS airbag system adjustment methods, refer to the TOYOTA Repair Manual.

(1) When using an electric welder, first remove all airbags and the seat belt pretensioner.

(2) If impacts are likely to occur to the front airbag sensor, side airbag sensor, rear airbag sensor or seat position sensor, remove each sensor as necessary beforehand.

(3) Do not allow the front airbag sensor, side airbag sensor, rear airbag sensor or seat position sensor to become heated to high temperatures.

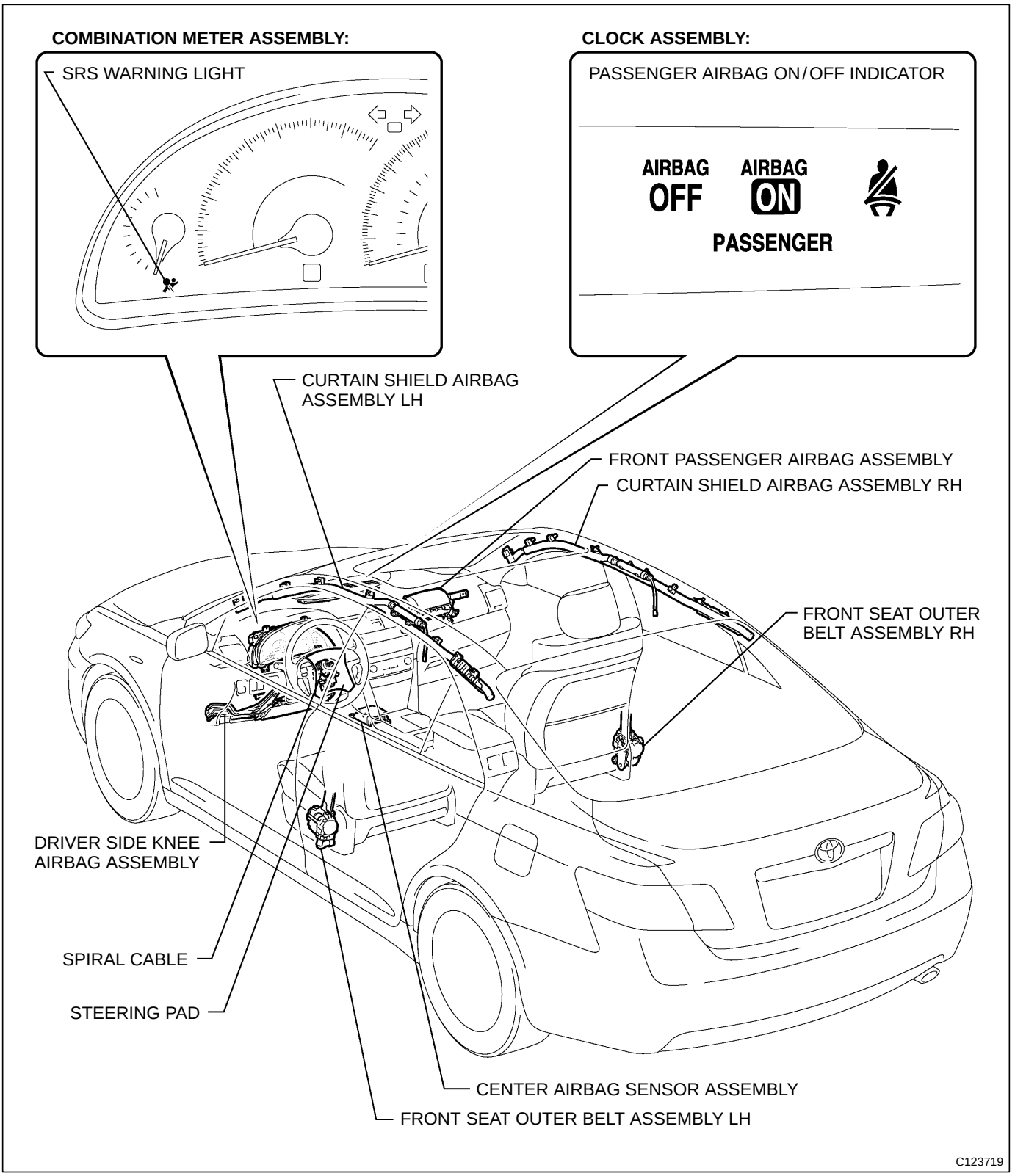

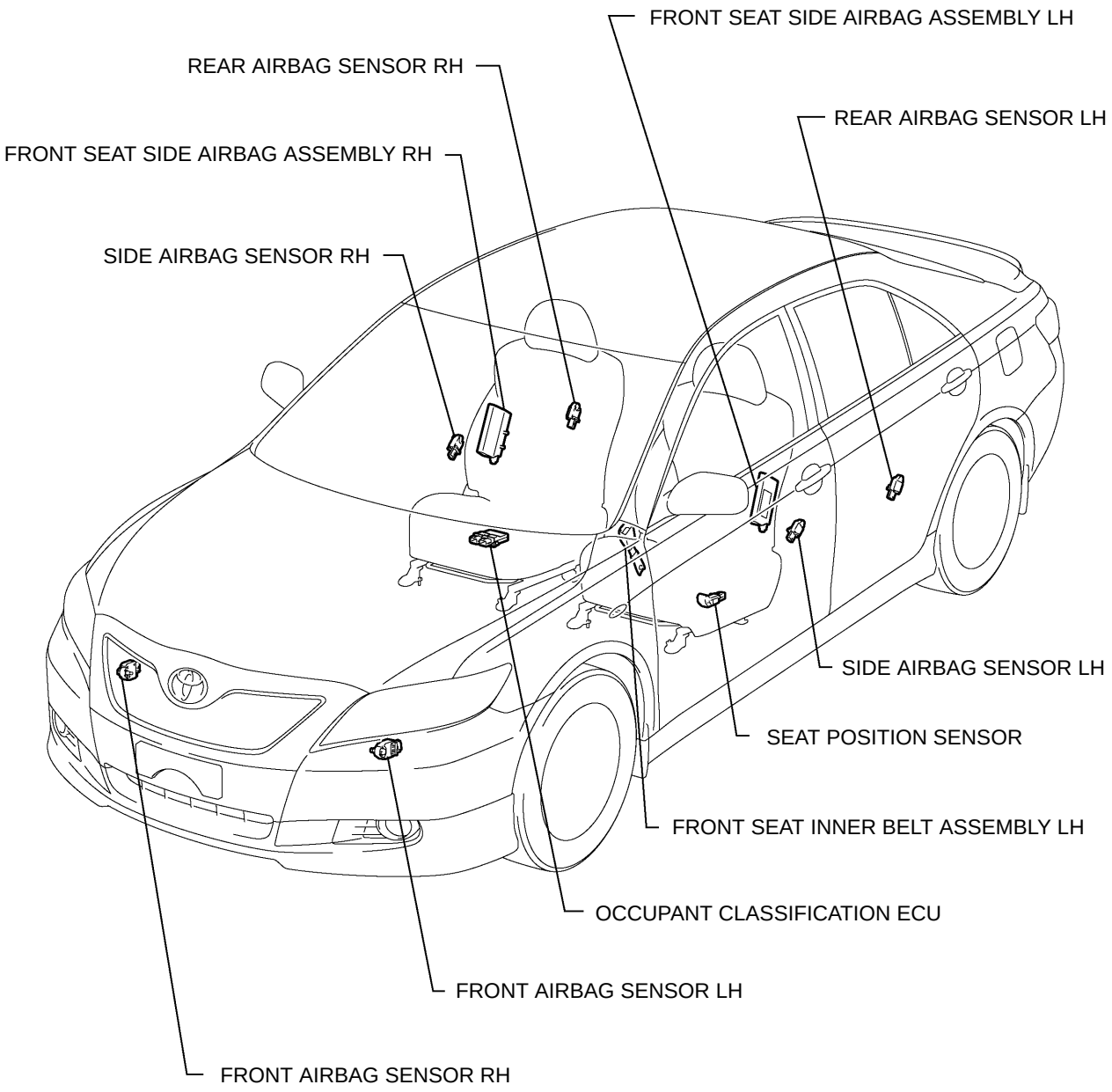
FRONT SEAT SIDE AIRBAG ASSEMBLY LH
REAR AIRBAG SENSOR RH
REAR AIRBAG SENSOR LH
FRONT SEAT SIDE AIRBAG ASSEMBLY RH
SIDE AIRBAG SENSOR RH
SIDE AIRBAG SENSOR LH
SEAT POSITION SENSOR
FRONT SEAT INNER BELT ASSEMBLY LH
OCCUPANT CLASSIFICATION ECU
FRONT AIRBAG SENSOR LH
FRONT AIRBAG SENSOR RH

C123718

HANDLING PRECAUTIONS OF PLASTIC BODY PARTS

1. The repair procedure for plastic body parts must conform with the type of plastic material.
2. Plastic body parts are identified by the codes in the following table.
3. When repairing metal body parts adjoining plastic body parts (by brazing, frame cutting, welding, painting etc.), consideration must be given to the properties of the plastic.

Code	Material name	Heat* resistant temperature limit ●C (●F)	Resistance to alcohol or gasoline	Notes
AAS	Acrylonitrile Acrylic Styrene	80 (176)	Alcohol is harmless if applied only for short time in small amounts (e.g., quick wiping to remove grease).	Avoid gasoline and organic or aromatic solvents.
ABS	Acrylonitrile Butadiene Styrene	80 (176)	Alcohol is harmless if applied only for short time in small amounts (e.g., quick wiping to remove grease).	Avoid gasoline and organic or aromatic solvents.
AES	Acrylonitrile Ethylene Styrene	80 (176)	Alcohol is harmless if applied only for short time in small amounts (e.g., quick wiping to remove grease).	Avoid gasoline and organic or aromatic solvents.
ASA	Acrylonitrile Styrene Acrylate	80 (176)	Alcohol is harmless if applied only for short time in small amounts (e.g., quick wiping to remove grease).	Avoid gasoline and organic or aromatic solvents.
EPDM	Ethylene Propylene	100 (212)	Alcohol is harmless. Gasoline is harmless if applied only for short time in small amounts.	Most solvents are harmless but avoid dipping in gasoline, solvents, etc.
PA	Polyamide (Nylon)	80 (176)	Alcohol and gasoline are harmless.	Avoid battery acid.
PBT	Polybutylene Terephthalate	160 (320)	Alcohol and gasoline are harmless.	Most solvents are harmless.
PC	Polycarbonate	120 (248)	Alcohol is harmless.	Avoid gasoline, brake fluid, wax, wax removers and organic solvents. Avoid alkali.
POM	Polyoxymethylene (Polyacetal)	100 (212)	Alcohol and gasoline are harmless.	Most solvents are harmless.
PP	Polypropylene	80 (176)	Alcohol and gasoline are harmless.	Most solvents are harmless.
PMMA	Polymethyl Methacrylate	80 (176)	Alcohol is harmless if applied only for short time in small amounts.	Avoid dipping or immersing in alcohol, gasoline, solvents, etc.
PVC	Polyvinylchloride (Vinyl)	80 (176)	Alcohol and gasoline are harmless if applied only for short time in small amounts (e.g., quick wiping to remove grease).	Avoid dipping or immersing in alcohol, gasoline, solvents, etc.
TPO	Thermoplastic Olefine	80 (176)	Alcohol is harmless. Gasoline is harmless if applied only for short time in small amounts.	Most solvents are harmless but avoid dipping in gasoline, solvents, etc.
TSOP	TOYOTA Super Olefine Polymer	80 (176)	Alcohol and gasoline are harmless.	Most solvents are harmless.

*Temperatures higher than those listed here may result in material deformation during repair.

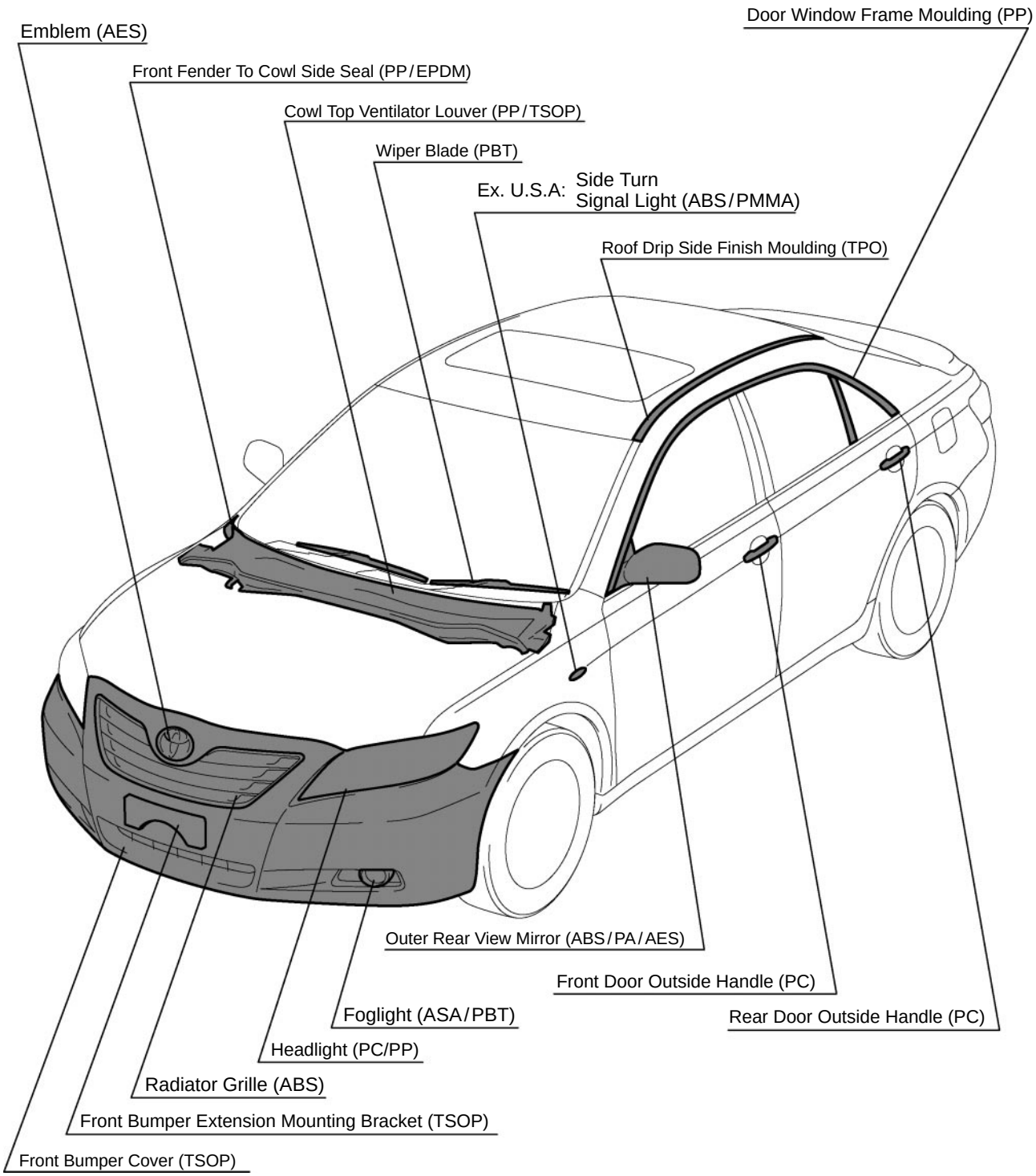
Emblem (AES)
Front Fender To Cowl Side Seal (PP/EPDM)
Cowl Top Ventilator Louver (PP/TSOP)
Wiper Blade (PBT)
Ex. U.S.A: Side Turn Signal Light (ABS/PMMA)
Roof Drip Side Finish Moulding (TPO)
Door Window Frame Moulding (PP)
Outer Rear View Mirror (ABS/PA/AES)
Front Door Outside Handle (PC)
Rear Door Outside Handle (PC)
Foglight (ASA/PBT)
Headlight (PC/PP)
Radiator Grille (ABS)
Front Bumper Extension Mounting Bracket (TSOP)
Front Bumper Cover (TSOP)

F30269

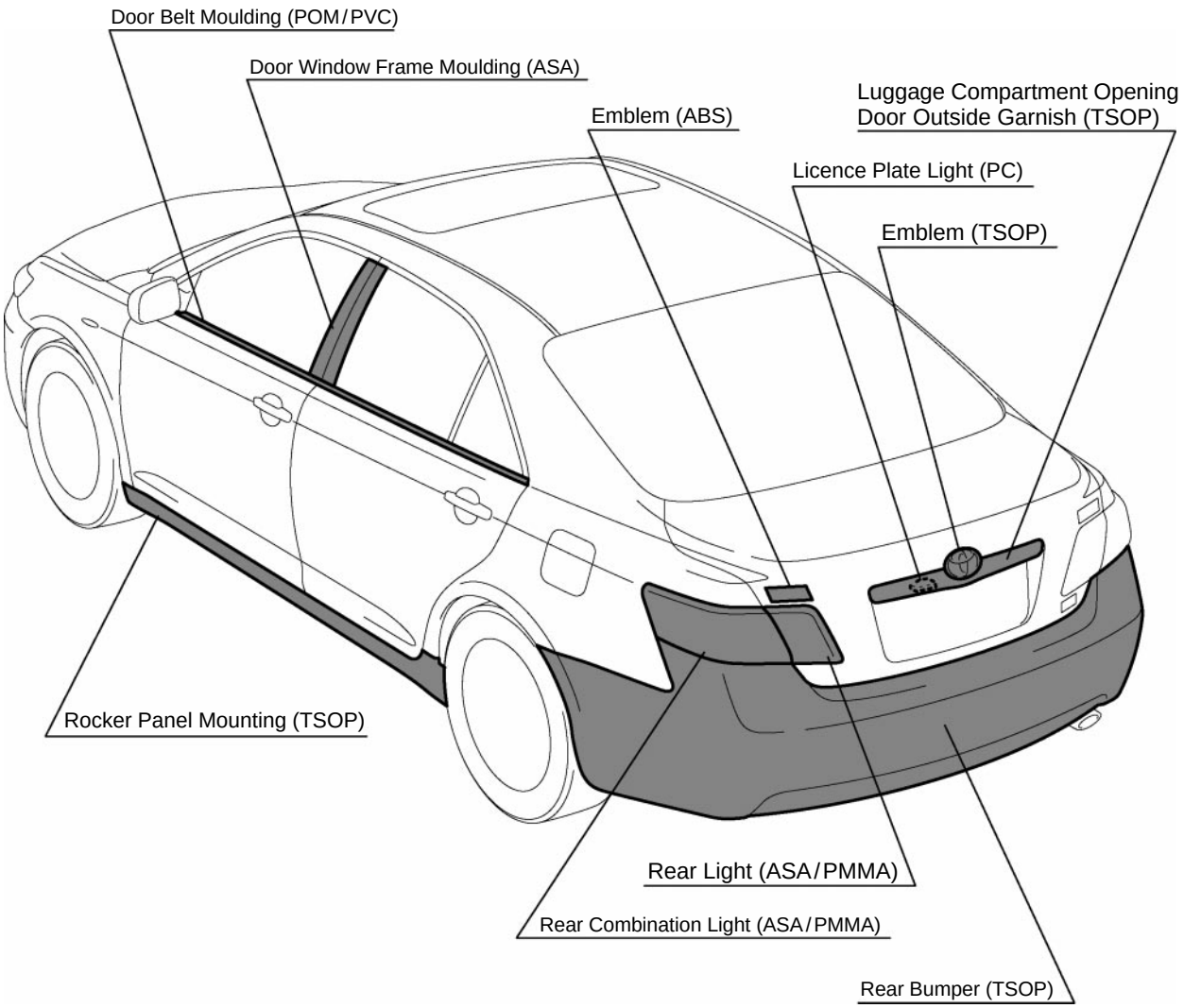
Door Belt Moulding (POM/PVC)
Door Window Frame Moulding (ASA)
Emblem (ABS)
Luggage Compartment Opening Door Outside Garnish (TSOP)
Licence Plate Light (PC)
Emblem (TSOP)
Rocker Panel Mounting (TSOP)
Rear Light (ASA/PMMA)
Rear Combination Light (ASA/PMMA)
Rear Bumper (TSOP)

F30269A

ABOUT THIS VEHICLE

STRUCTUAL OUTLINE

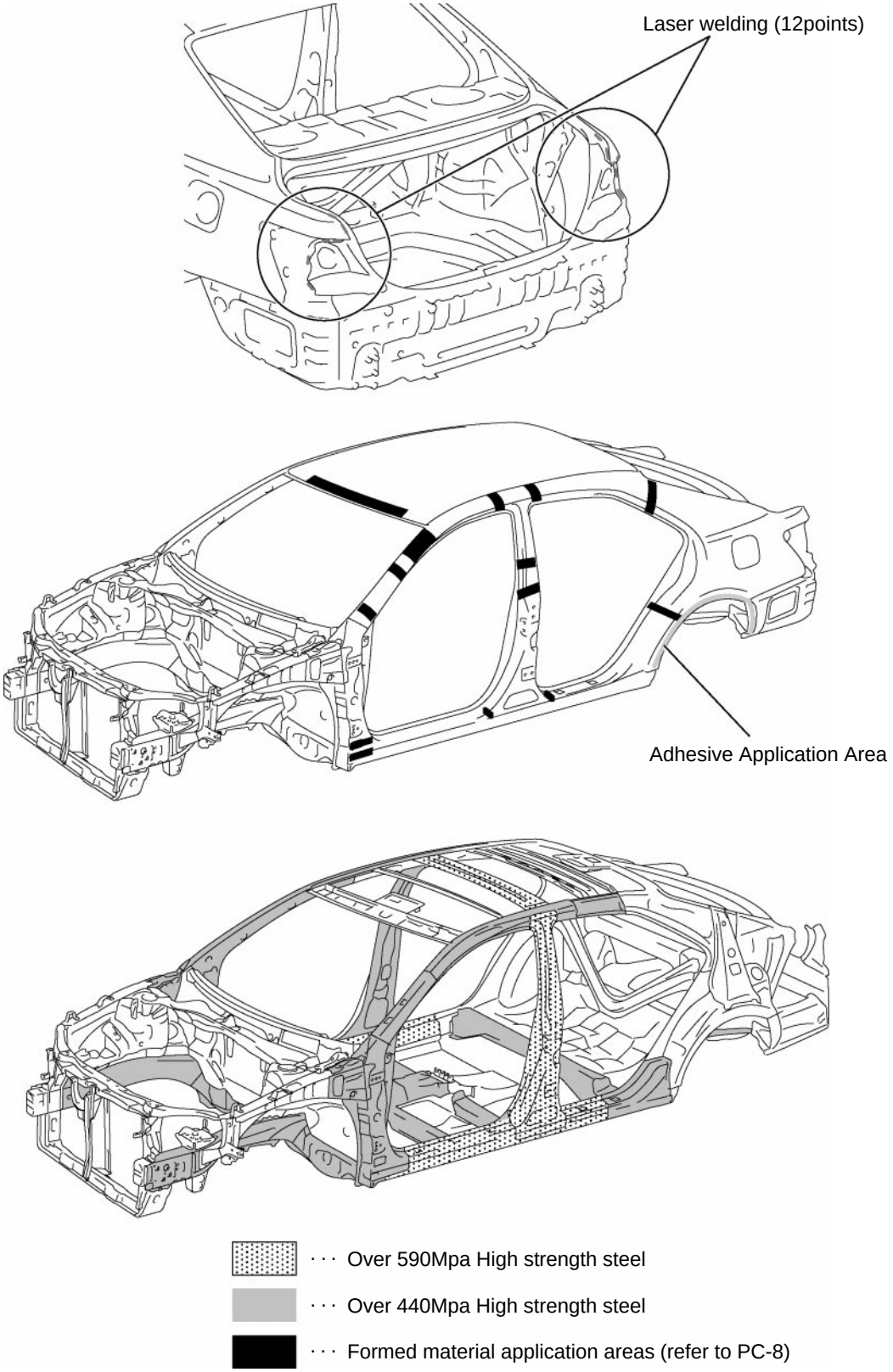

F30267

NOTICE ABOUT VEHICLE CONDITION WHEN JACKING UP VEHICLE

1. NOTICE FOR USING JACK AND SAFETY STAND

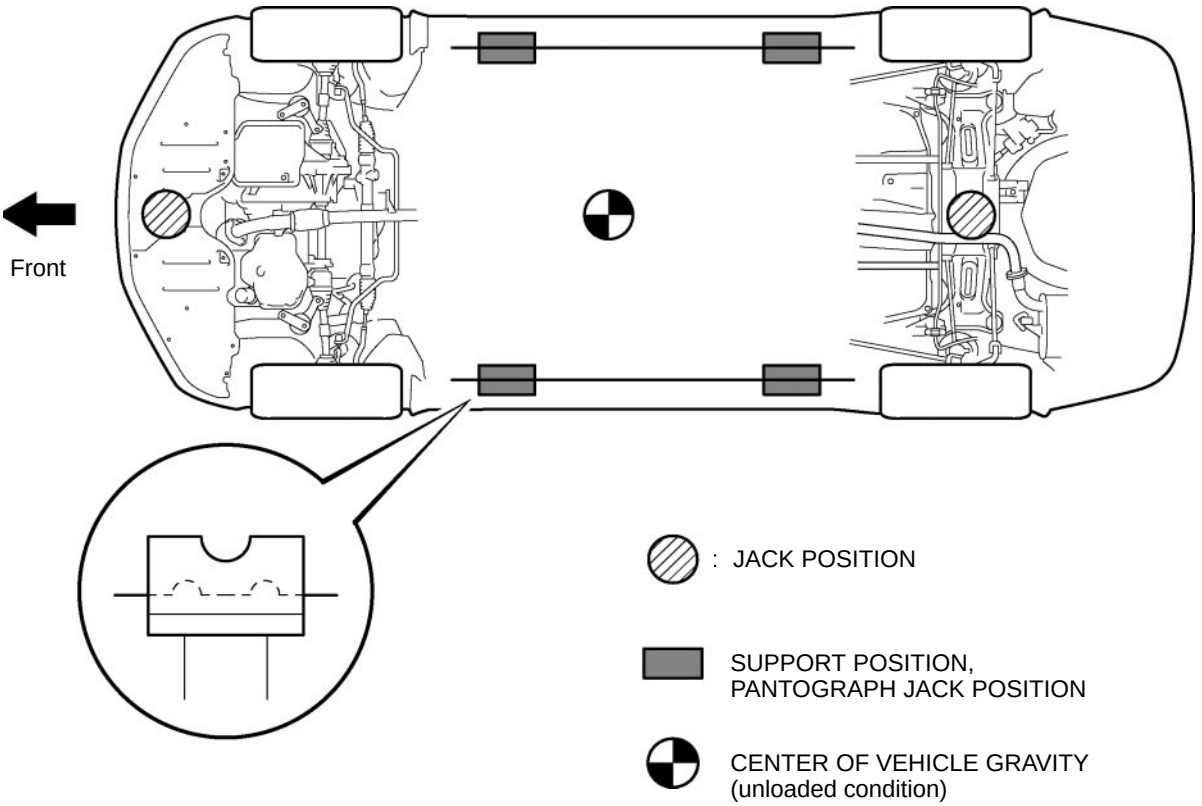

D100366

2. NOTICE FOR USING SWING ARM TYPE LIFT

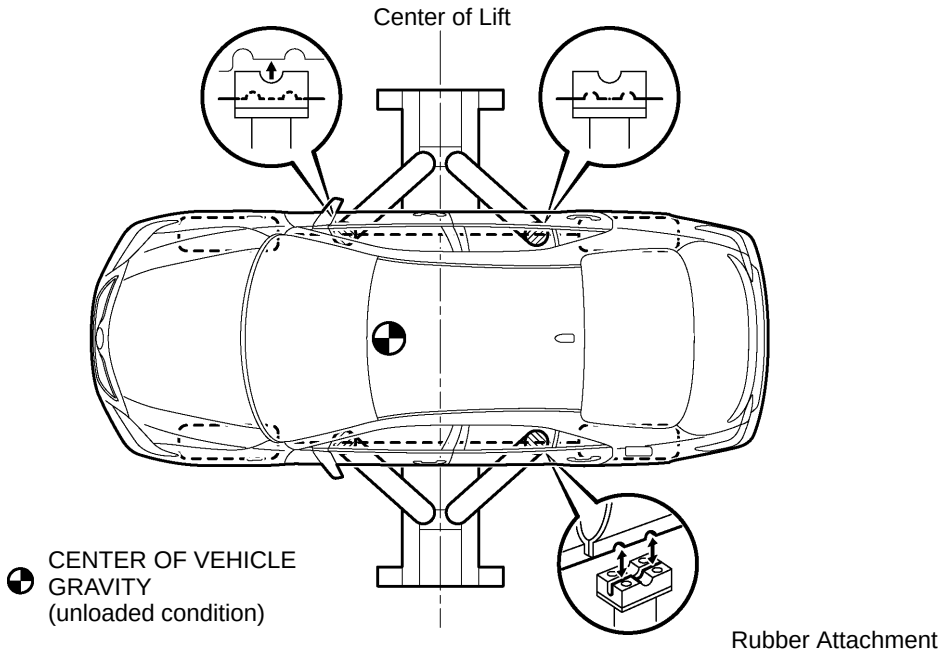

D100367

3. NOTICE FOR USING PLATE TYPE LIFT

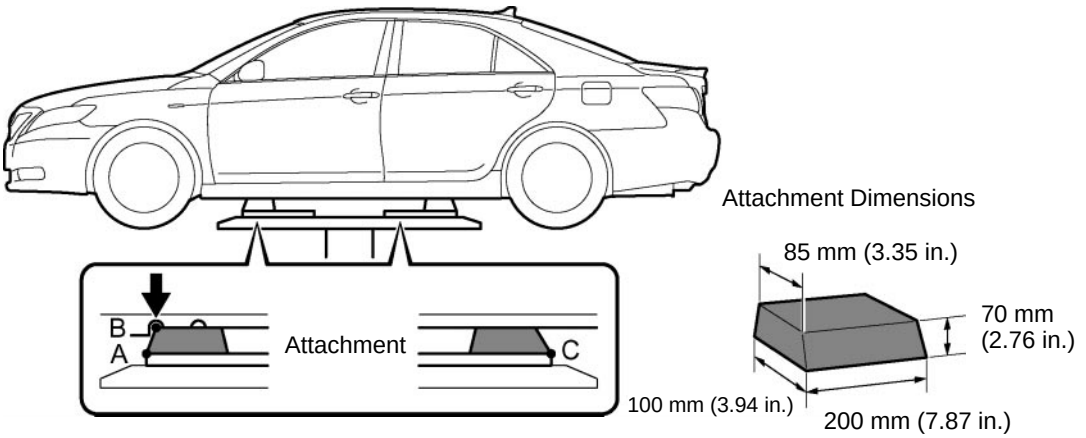

HINT:
Right and left set position
Place the vehicle over the center of the lift.

mm (in.)

HINT:
Front and left set position
Place the attachments at the ends of the rubber plate surface, under the vehicle lift pad (A and C in the illustration). Raise the plate slightly and reposition the vehicle so the top of the attachment (B in the illustration) is aligned with the front side notch in the vehicle rocker flange.

F30268

DAMAGE DIAGNOSIS

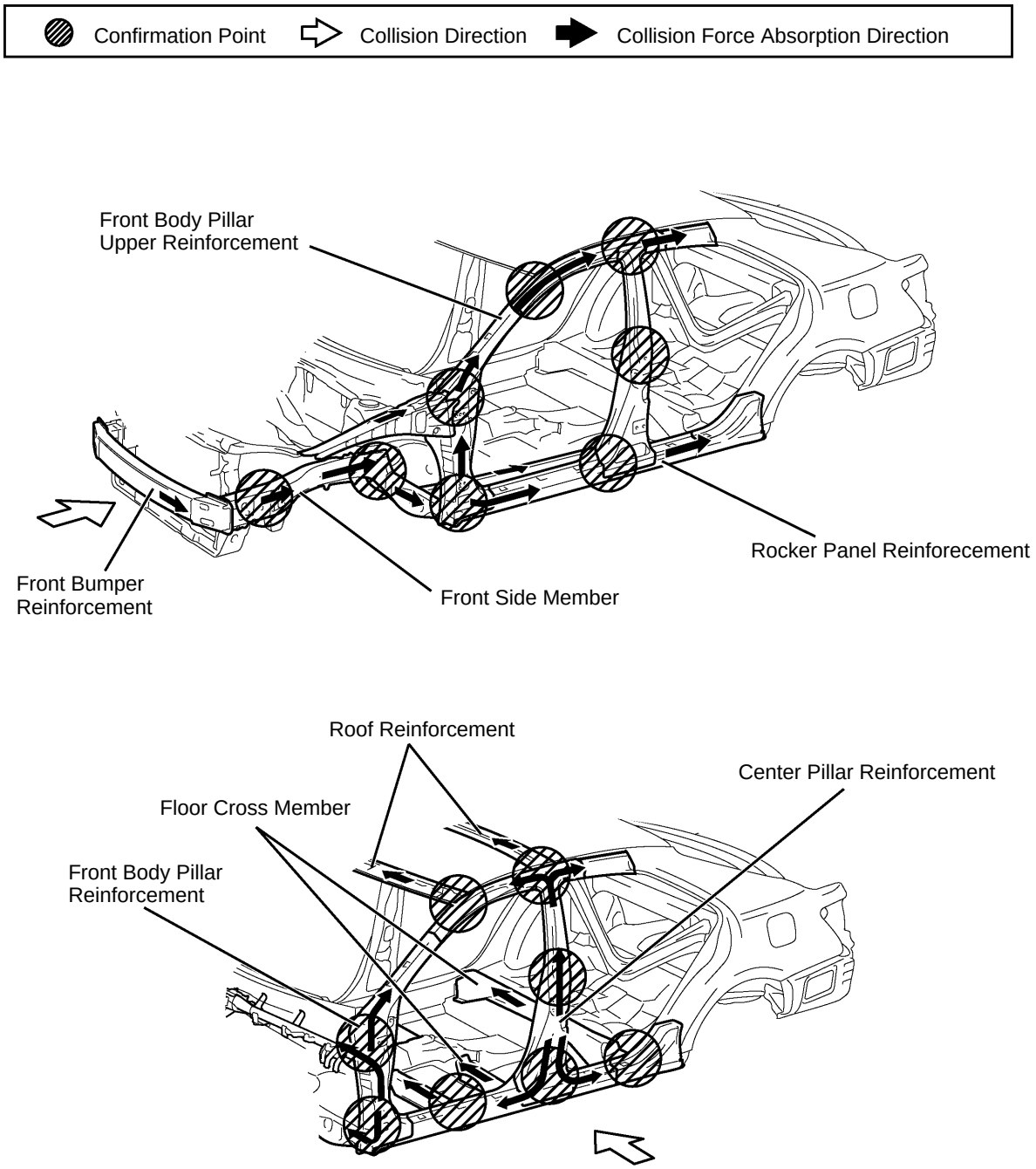

COMPORNENTS

1. Front bumper

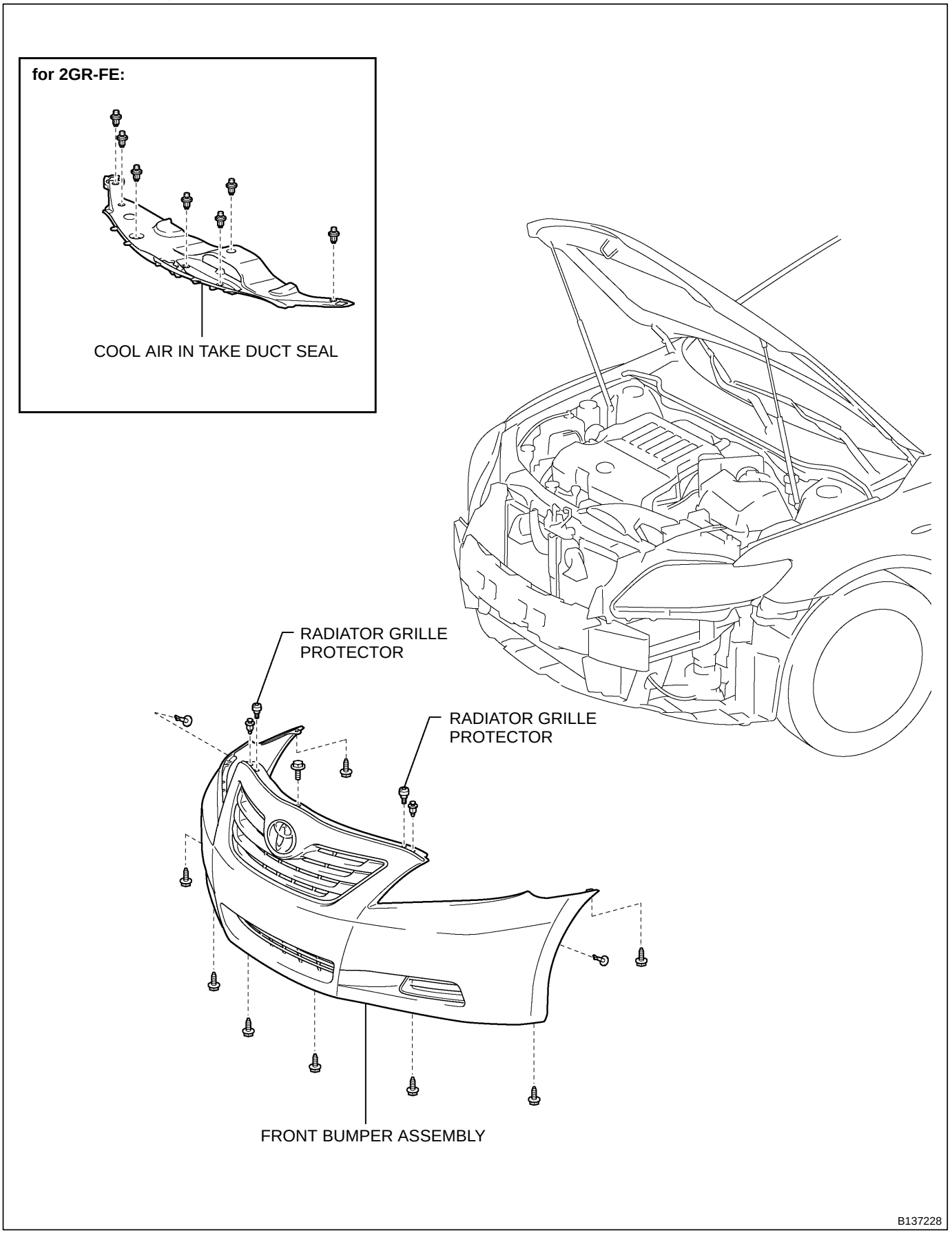

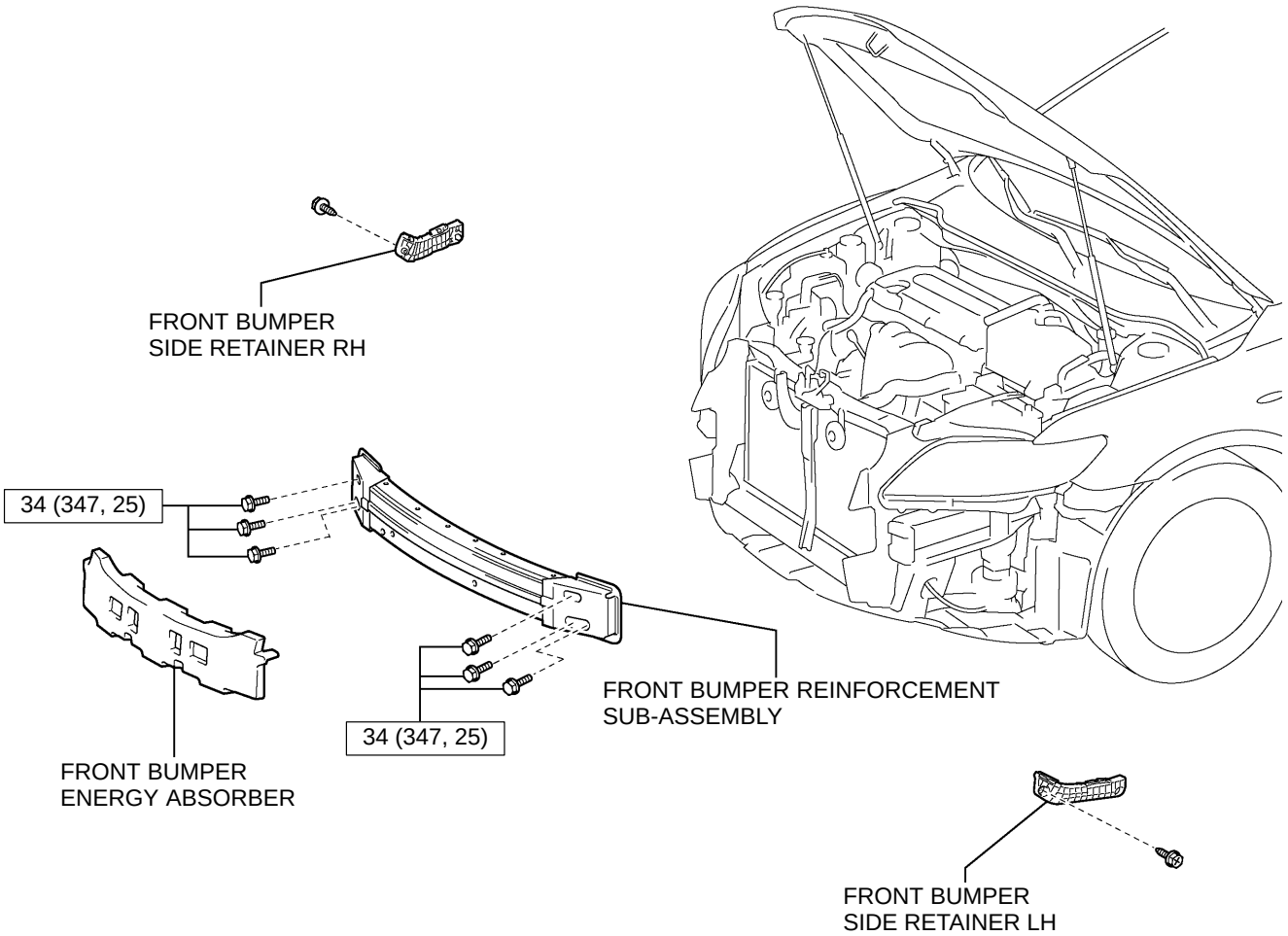

CAUTION:
The bolts and nuts must be tightened to the torque specification, as they are related to vehicle safety during a collision.

N·m (kgf·cm, ft.·lbf) : Specified torque

B137743

2. Rear bumper

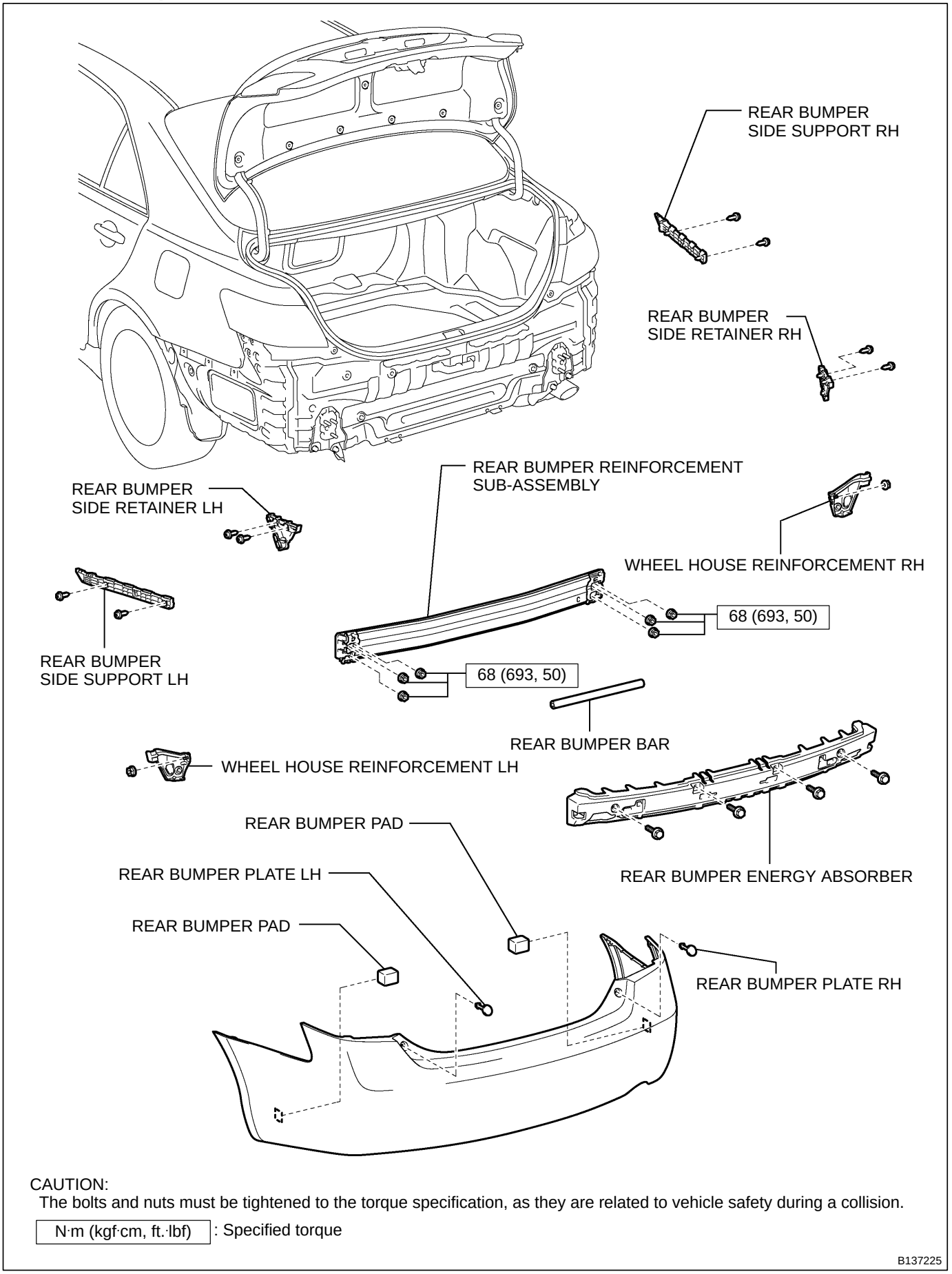

CAUTION:
The bolts and nuts must be tightened to the torque specification, as they are related to vehicle safety during a collision.

N·m (kgf·cm, ft.·lbf) : Specified torque

3. Instrument panel

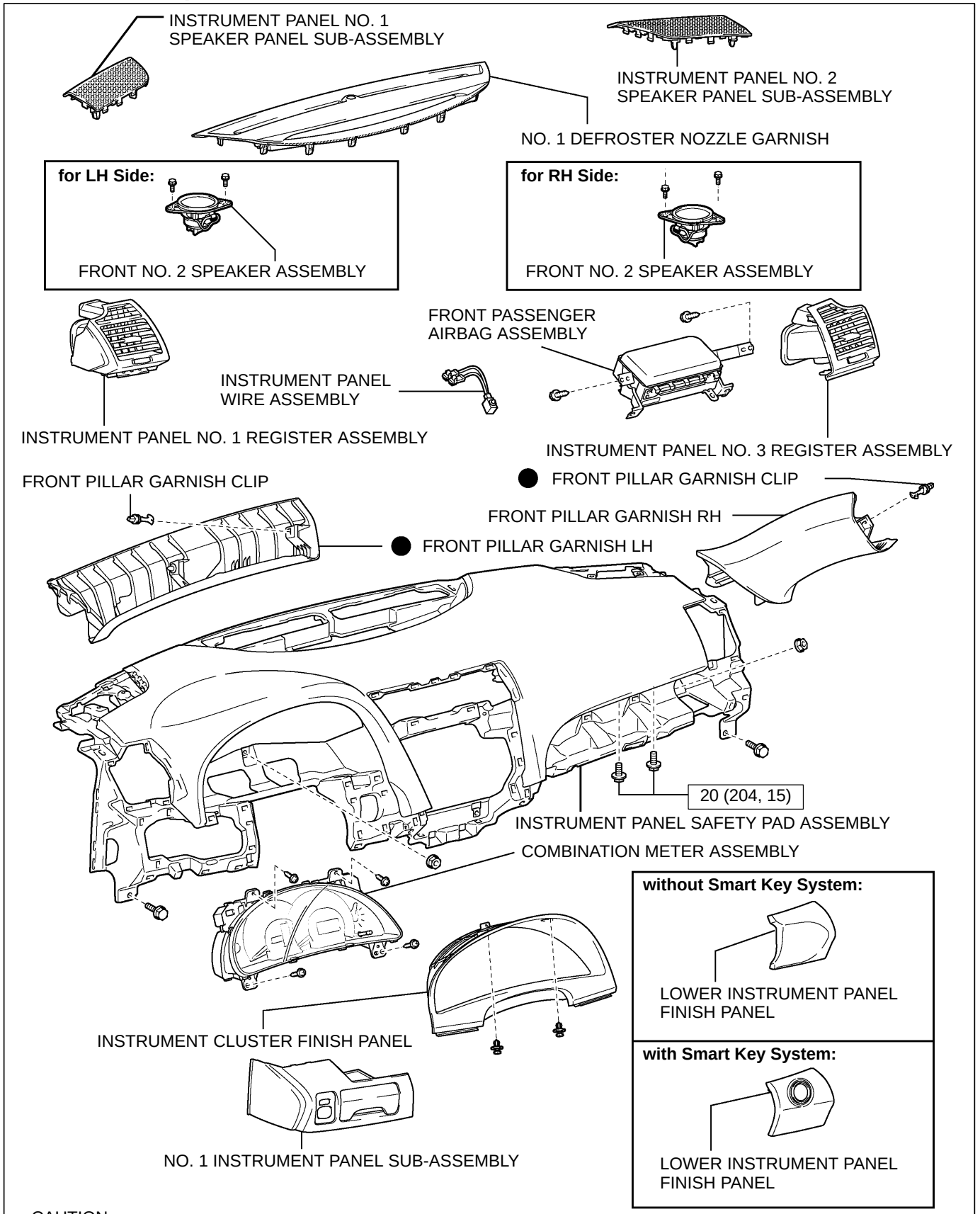

CAUTION:
The bolts and nuts must be tightened to the torque specification, as they are related to vehicle safety during a collision.

N·m (kgf·cm, ft.·lbf) : Specified torque ● Non-reusable part

B137286

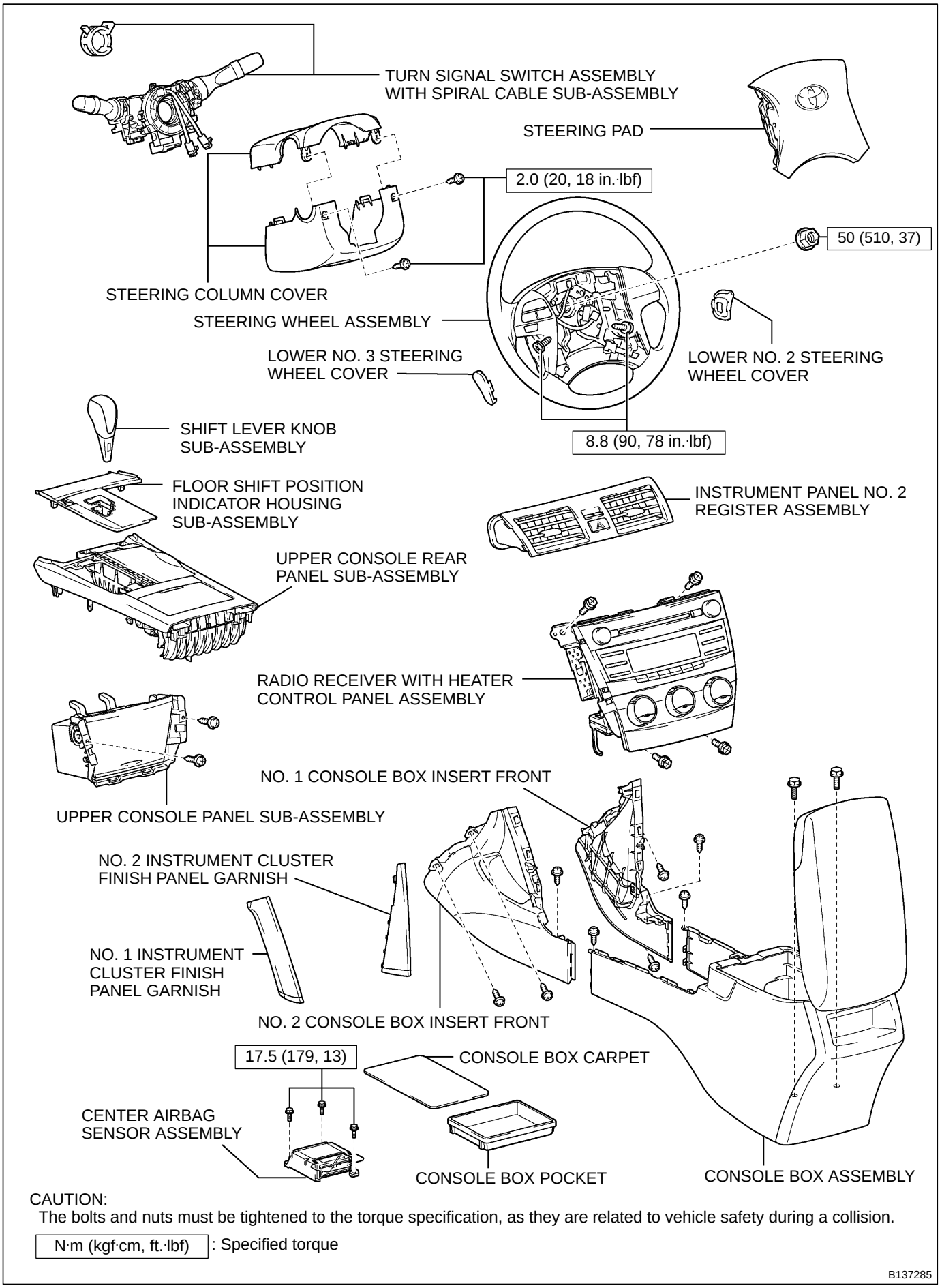

CAUTION:
The bolts and nuts must be tightened to the torque specification, as they are related to vehicle safety during a collision.

N·m (kgf·cm, ft.·lbf) : Specified torque

B137285

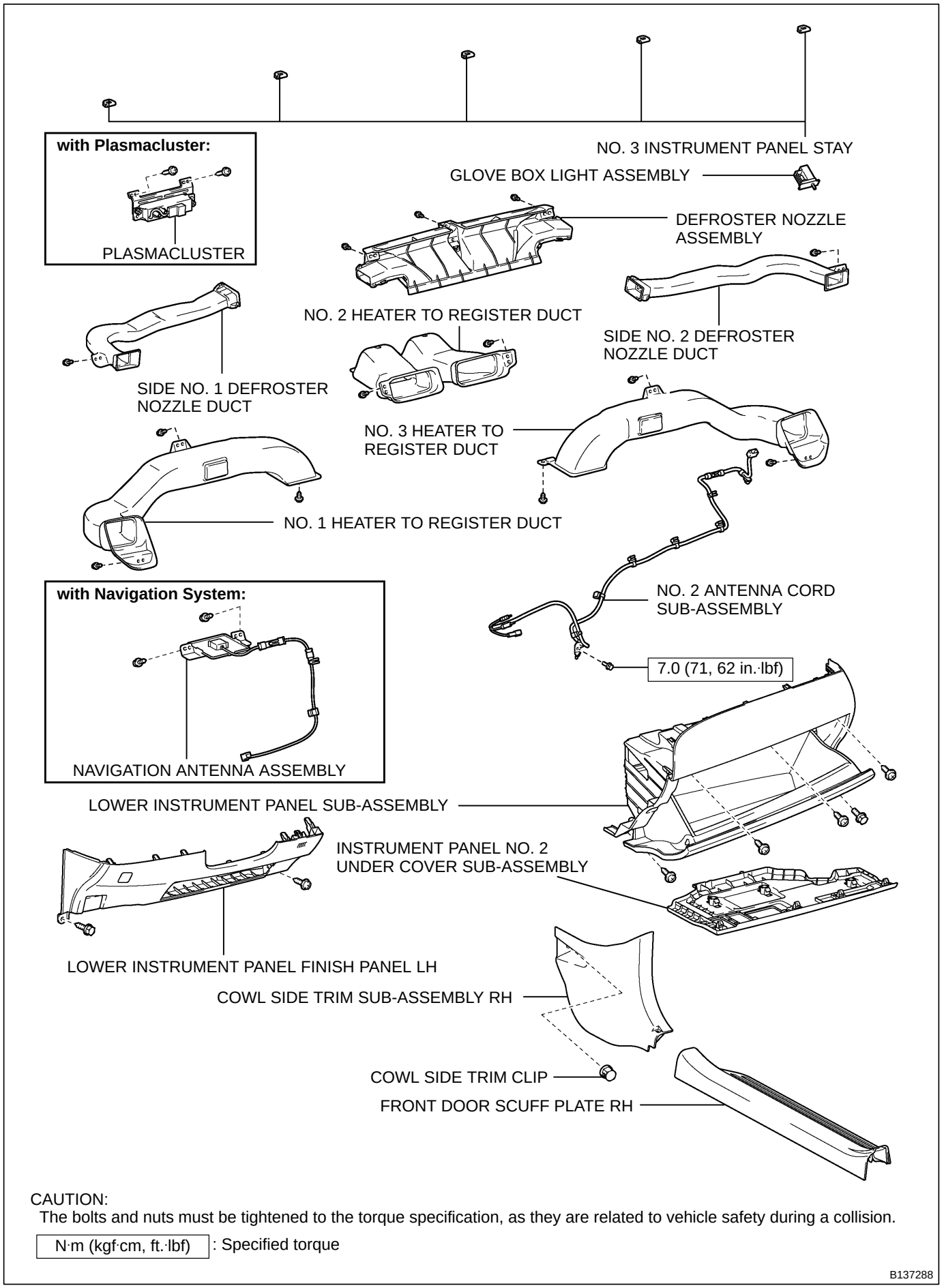

CAUTION:
The bolts and nuts must be tightened to the torque specification, as they are related to vehicle safety during a collision.

N·m (kgf·cm, ft.·lbf) : Specified torque

4. Interior trim

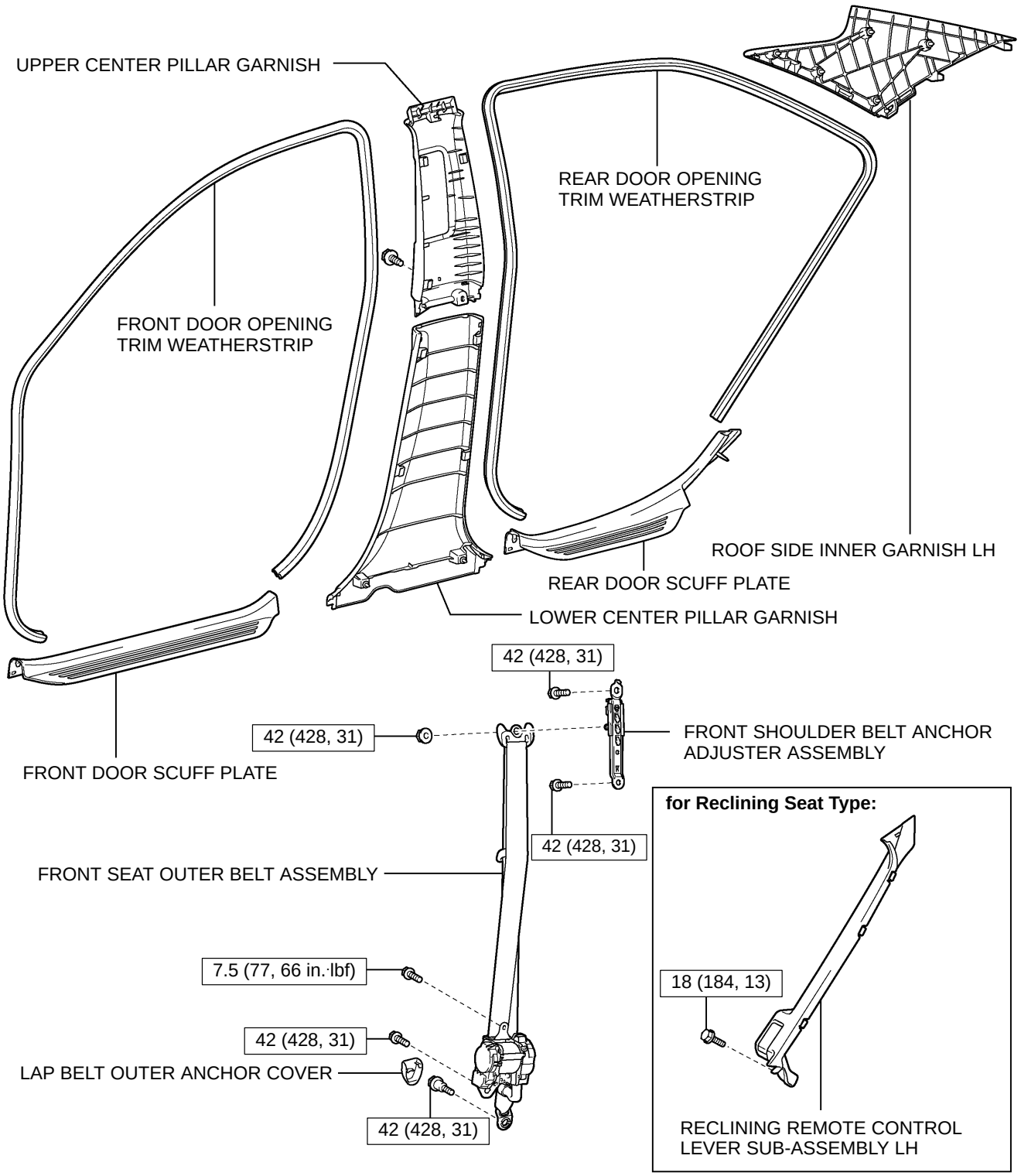

CAUTION:
The bolts and nuts must be tightened to the torque specification, as they are related to vehicle safety during a collision.

N·m (kgf·cm, ft.·lbf) : Specified torque

B132005

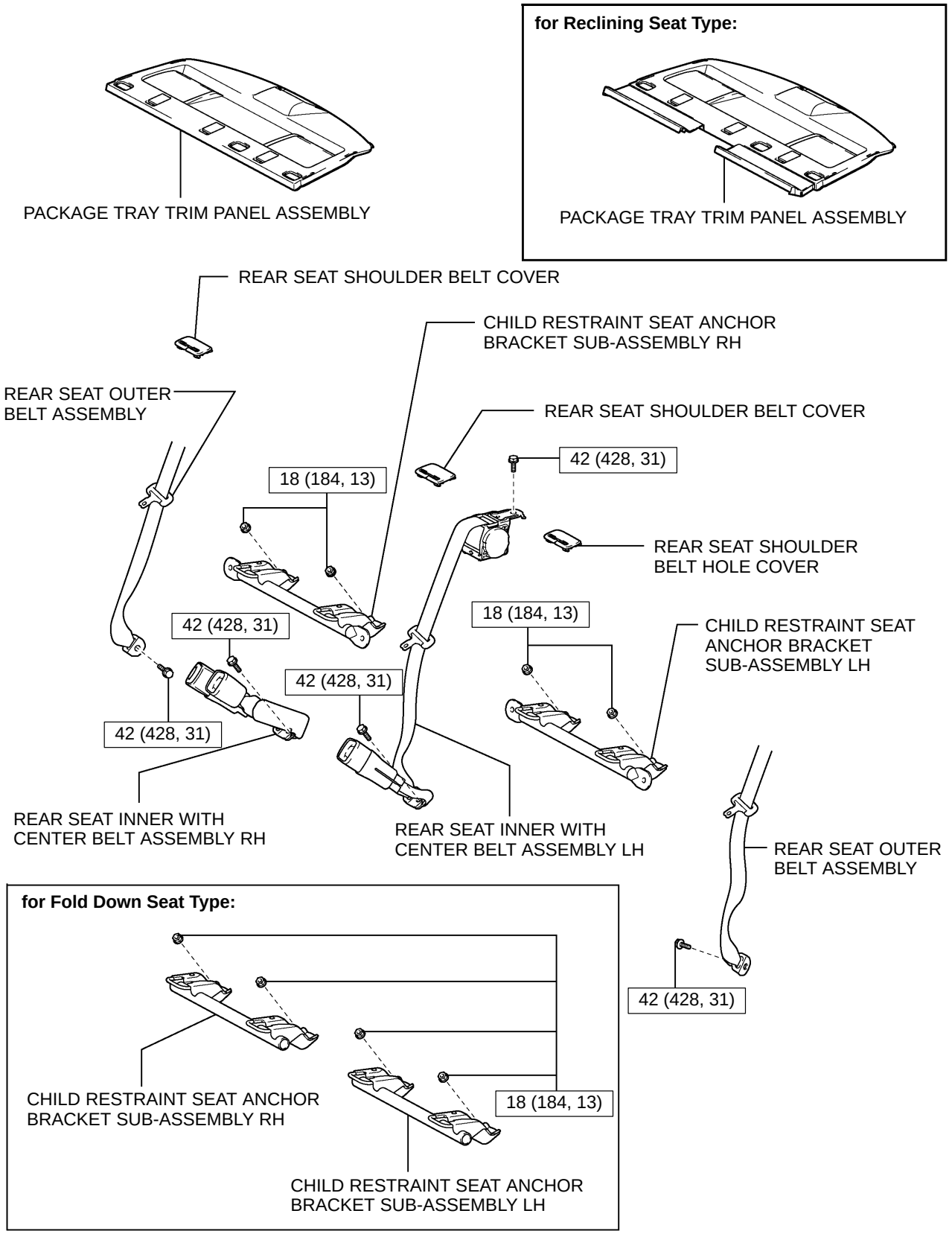

CAUTION:
The bolts and nuts must be tightened to the torque specification, as they are related to vehicle safety during a collision.

N·m (kgf·cm, ft.·lbf) : Specified torque

B132019

without Sliding Roof:

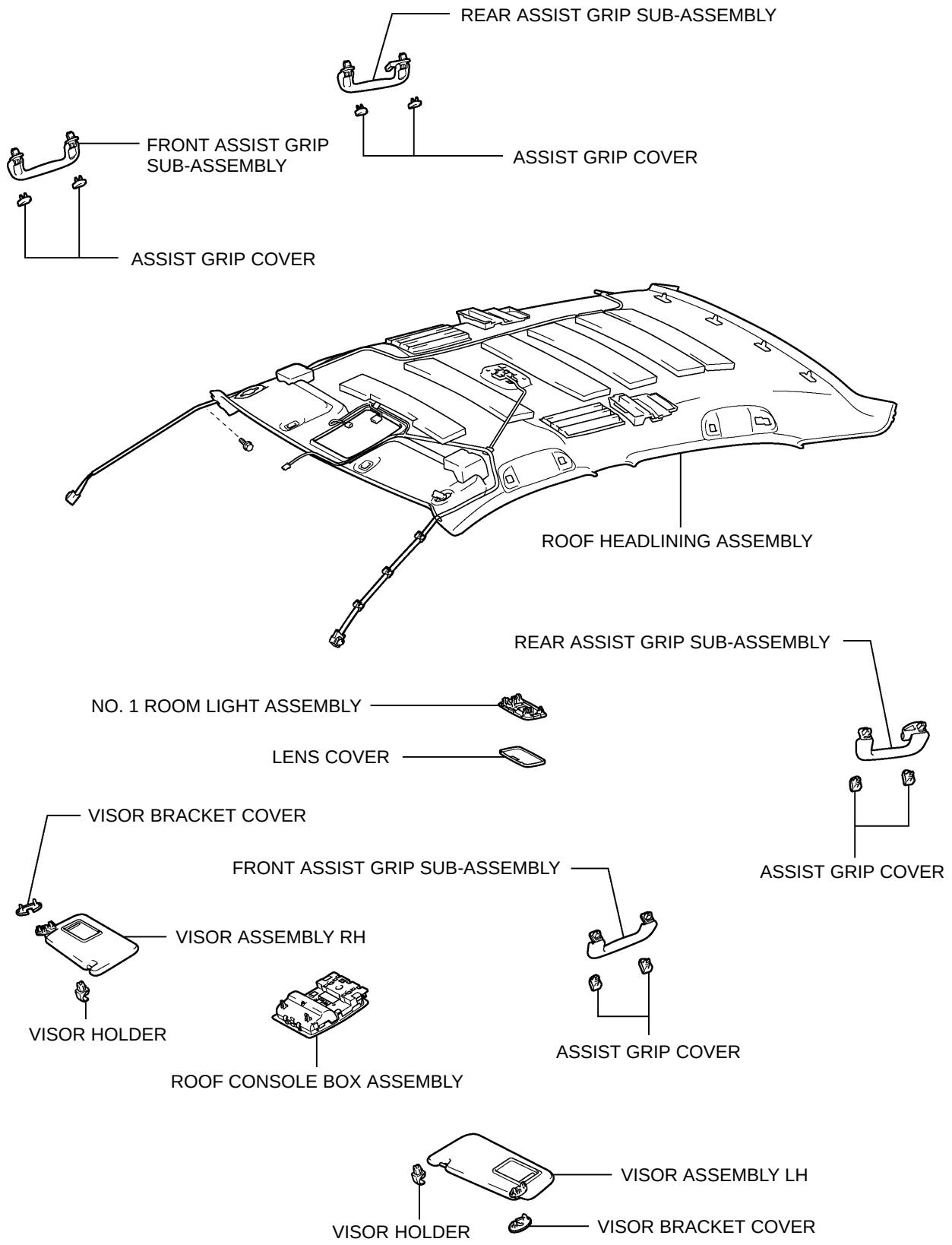

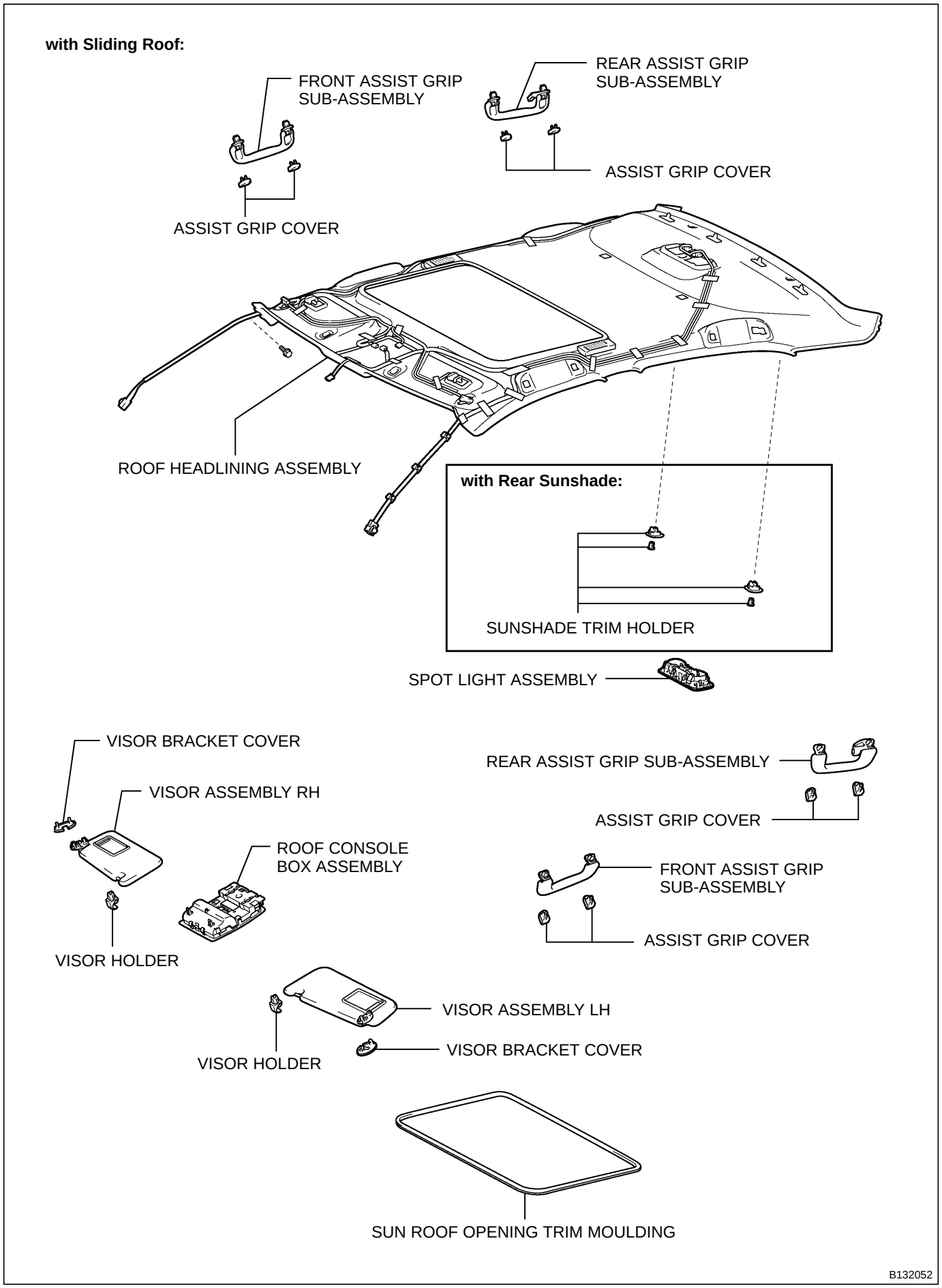
with Sliding Roof:
FRONT ASSIST GRIP SUB-ASSEMBLY
REAR ASSIST GRIP SUB-ASSEMBLY
ASSIST GRIP COVER
ASSIST GRIP COVER
ROOF HEADLINING ASSEMBLY
with Rear Sunshade:
SUNSHADE TRIM HOLDER
SPOT LIGHT ASSEMBLY
VISOR BRACKET COVER
VISOR ASSEMBLY RH
ROOF CONSOLE BOX ASSEMBLY
VISOR HOLDER
REAR ASSIST GRIP SUB-ASSEMBLY
ASSIST GRIP COVER
FRONT ASSIST GRIP SUB-ASSEMBLY
ASSIST GRIP COVER
VISOR ASSEMBLY LH
VISOR BRACKET COVER
VISOR HOLDER
SUN ROOF OPENING TRIM MOULDING
B132052

5. Front seat

for Manual Seat:

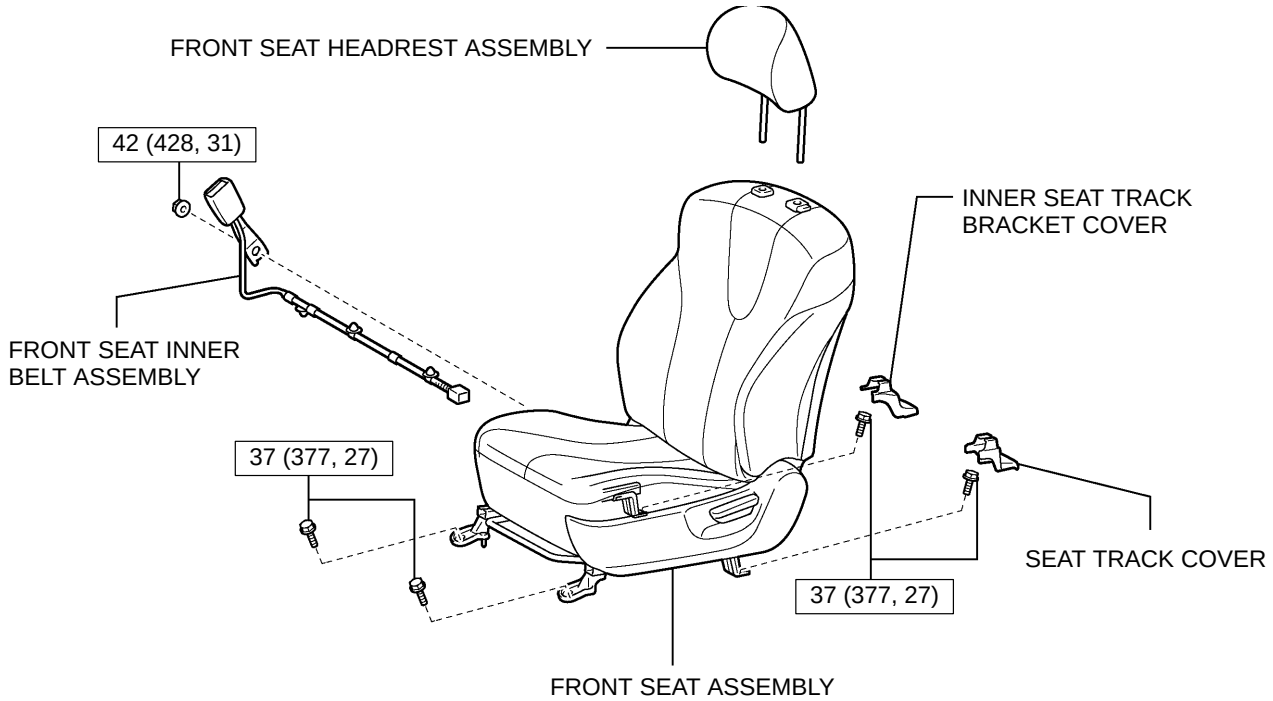

for Power Seat:

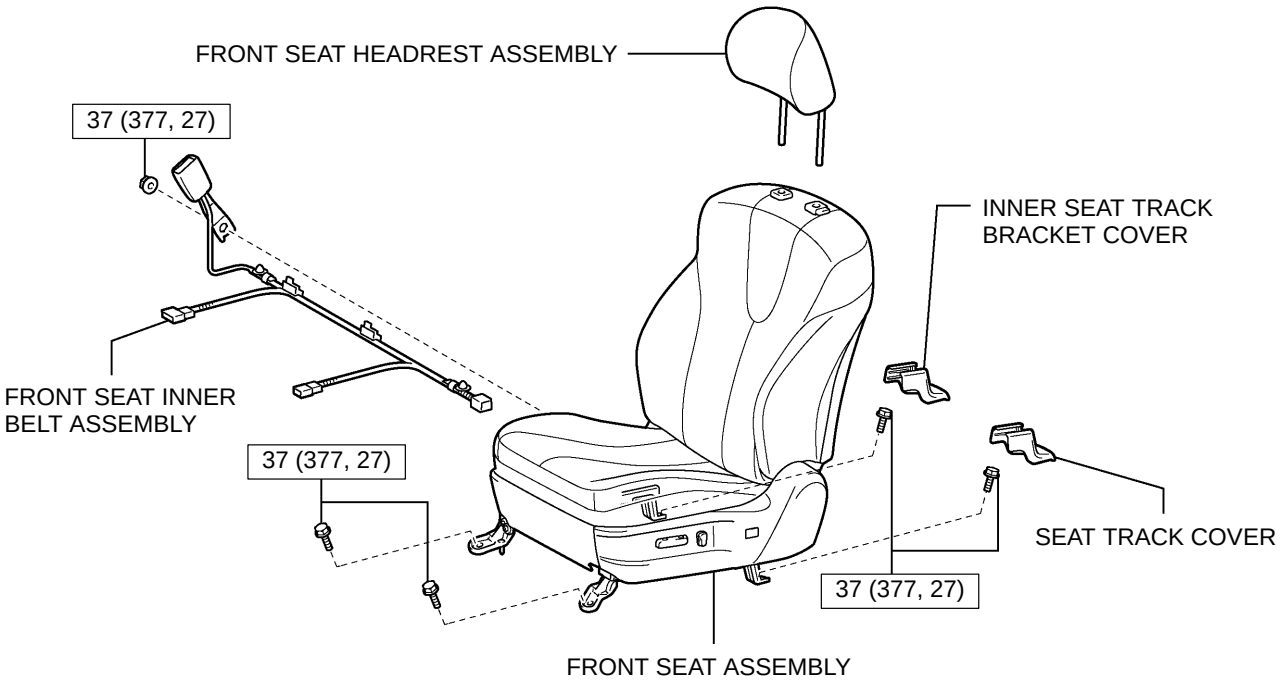

CAUTION:
The bolts and nuts must be tightened to the torque specification, as they are related to vehicle safety during a collision.

N·m (kgf·cm, ft.·lbf) : Specified torque

B132031

6. Rear seat

for Fixed Seat Type:

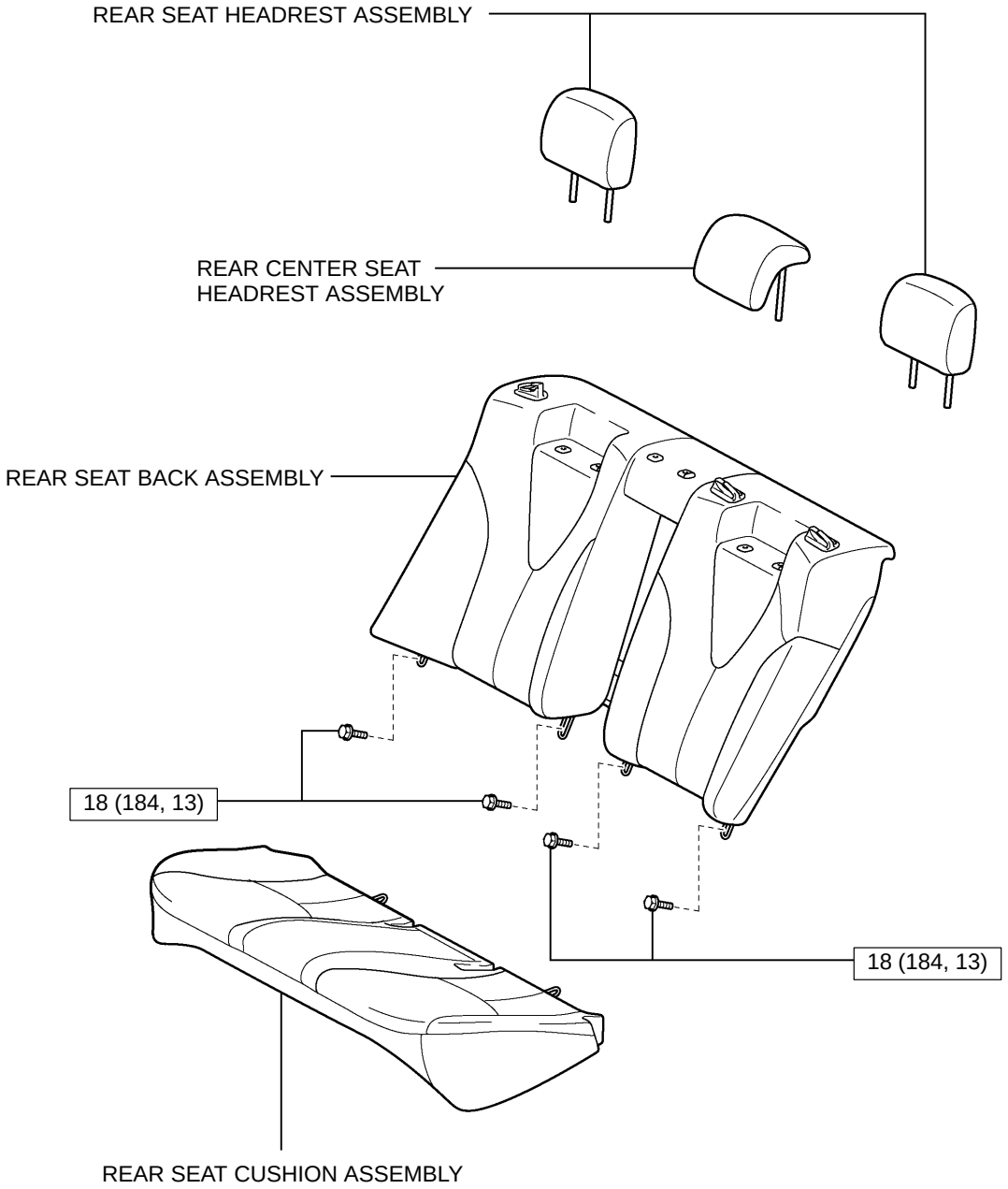

CAUTION:
The bolts and nuts must be tightened to the torque specification, as they are related to vehicle safety during a collision.

N·m (kgf·cm, ft.·lbf) : Specified torque

B136589

for Fold Down Seat Type:

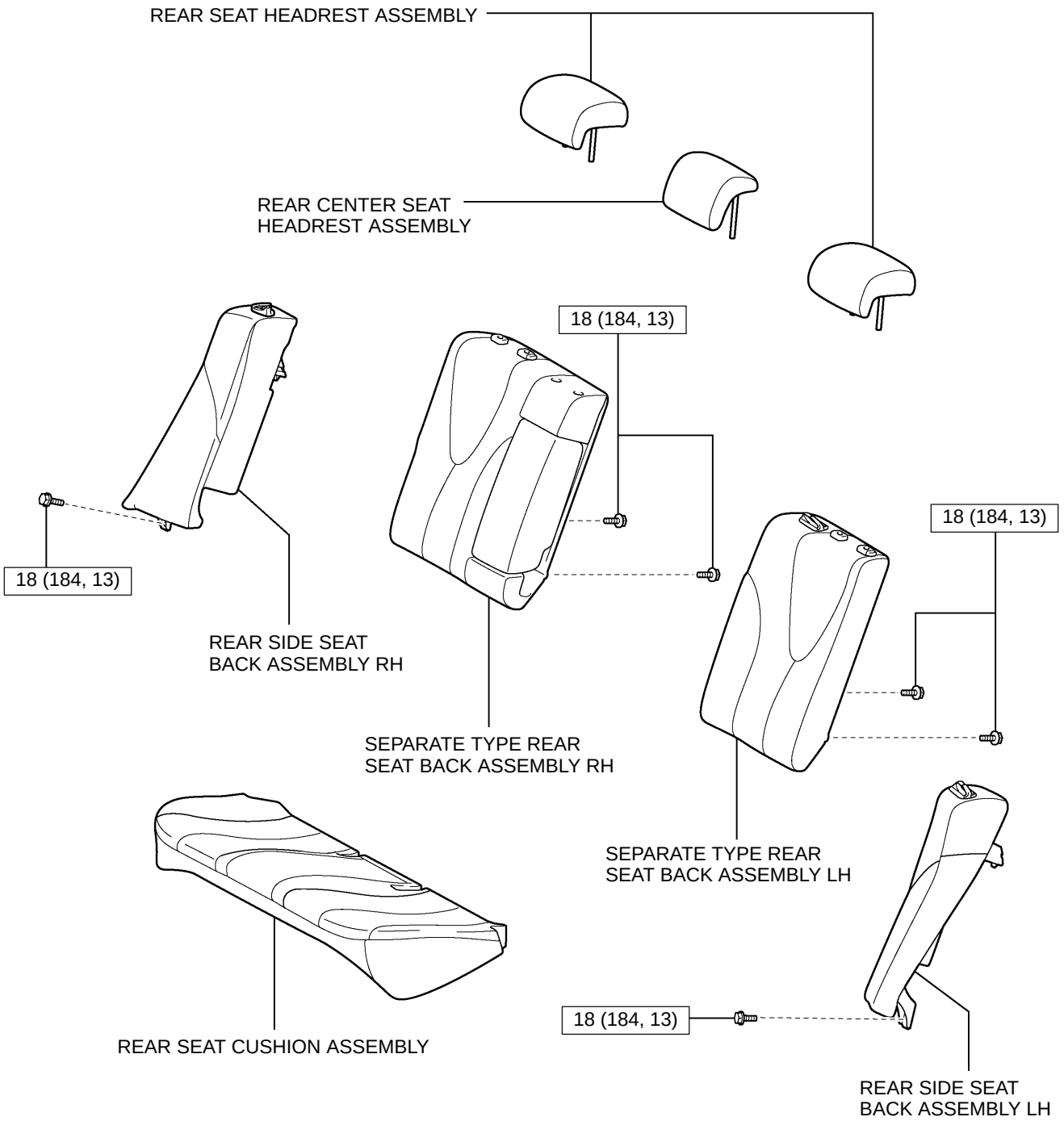

CAUTION:
The bolts and nuts must be tightened to the torque specification, as they are related to vehicle safety during a collision.

N·m (kgf·cm, ft.·lbf)	: Specified torque

B135415

for Reclining Seat Type:

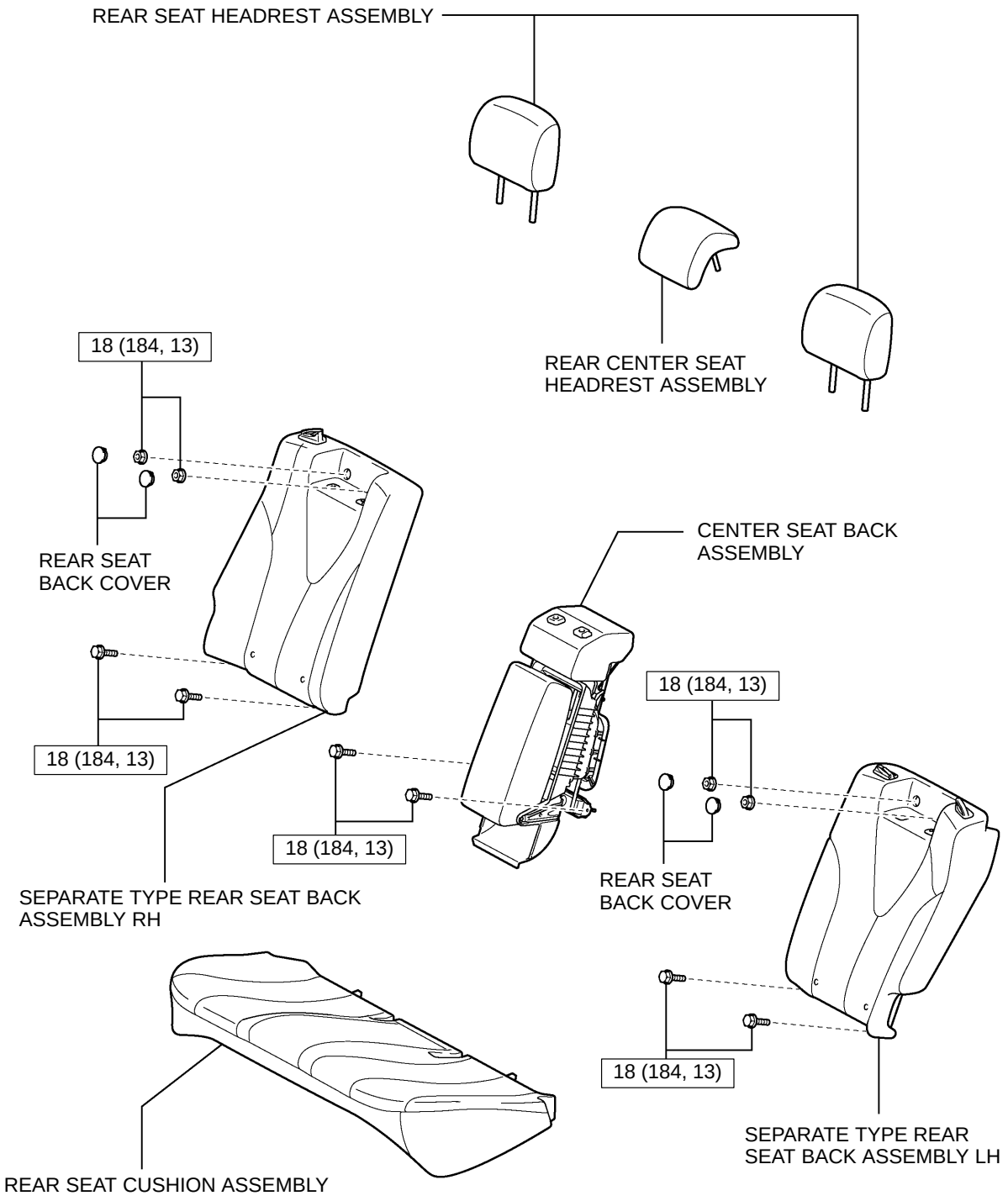

CAUTION:
The bolts and nuts must be tightened to the torque specification, as they are related to vehicle safety during a collision.

N·m (kgf·cm, ft.·lbf) : Specified torque

B139095

WHEEL ALIGNMENT STANDARD

1. FRONT WHEEL ALIGNMENT

Standard vehicle height:

for USA and Canada:

Model	Front A − B	Rear C − D
ACV40L-CEAGKA	125 mm (4.92 in.)	54 mm (2.13 in.)
GSV40L-CETGKA	126 mm (4.96 in.)	55 mm (2.17 in.)
ACV40L-AEAGKA	125 mm (4.92 in.)	53 mm (2.09 in.)
GSV40L-AETGKA	126 mm (4.96 in.)	54 mm (2.13 in.)
ACV40L-CEANKA	125 mm (4.92 in.)	54 mm (2.13 in.)
ACV40L-CEMNKA	125 mm (4.92 in.)	53 mm (2.09 in.)
GSV40L-CETNKA	126 mm (4.96 in.)	55 mm (2.17 in.)
ACV40L-AEANKA	125 mm (4.92 in.)	53 mm (2.09 in.)
ACV40L-AEMNKA	125 mm (4.92 in.)	52 mm (2.05 in.)
GSV40L-AETNKA	126 mm (4.96 in.)	54 mm (2.13 in.)
ACV40L-CEASKA	128 mm (5.04 in.)	57 mm (2.24 in.)
ACV40L-CEMSKA	127 mm (5.00 in.)	55 mm (2.17 in.)
GSV40L-CETSKA	129 mm (5.08 in.)	58 mm (2.28 in.)

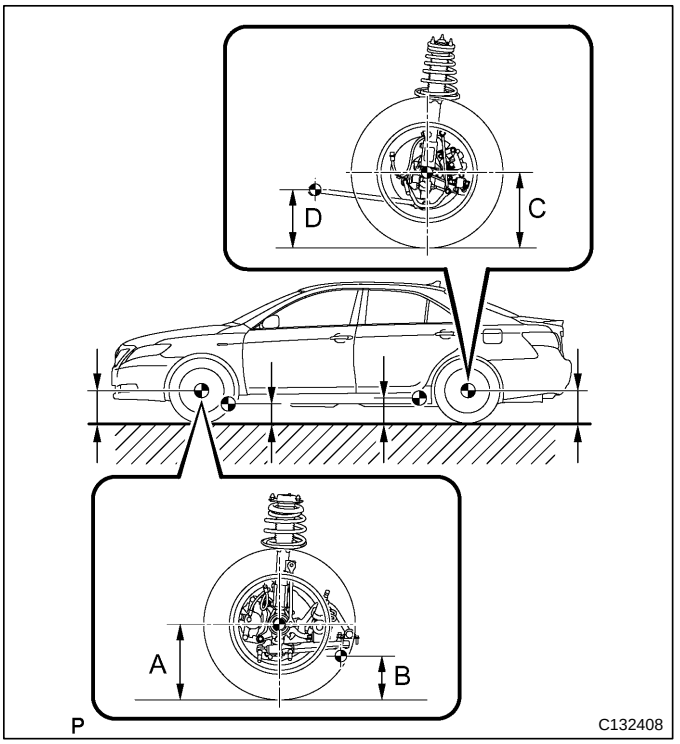

for Mexico:

Model	Front A − B	Rear C − D
ACV40L-CEAGKA	115 mm (4.53 in.)	40 mm (1.57 in.)
GSV40L-CETGKA	116 mm (4.57 in.)	41 mm (1.61 in.)
ACV40L-CEANKA	115 mm (4.53 in.)	40 mm (1.57 in.)

for General export:

Model	Front A − B	Rear C − D
ACV40L-AEANKW	115 mm (4.53 in.)	38 mm (1.50 in.)
ACV40R-AEANKW	115 mm (4.53 in.)	38 mm (1.50 in.)
ACV40L-AEMNKW	117 mm (4.61 in.)	42 mm (1.65 in.)
ACV40R-AEMNKW	117 mm (4.61 in.)	42 mm (1.65 in.)
GSV40L-AETGKW	117 mm (4.61 in.)	42 mm (1.65 in.)
GSV40R-AETGKW	117 mm (4.61 in.)	42 mm (1.65 in.)

Standard wheel angle:

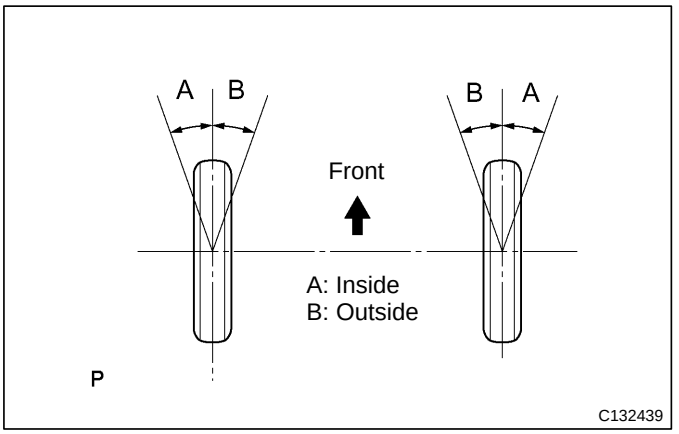

for USA and Canada:

Model	Inside wheel	Outside wheel (reference)
ACV40L-CEAGKA	38●22’ +−2● (38.37● +−2●)	33●33’ (33.55●)
GSV40L-CETGKA	38●22’ +−2● (38.37● +−2●)	33●33’ (33.55●)
ACV40L-AEAGKA	38●22’ +−2● (38.37● +−2●)	33●33’ (33.55●)
GSV40L-AETGKA	38●22’ +−2● (38.37● +−2●)	33●33’ (33.55●)
ACV40L-CEANKA	38●22’ +−2● (38.37● +−2●)	33●33’ (33.55●)
ACV40L-CEMNKA	38●22’ +−2● (38.37● +−2●)	33●33’ (33.55●)
GSV40L-CETNKA	38●22’ +−2● (38.37● +−2●)	33●33’ (33.55●)
ACV40L-AEANKA	38●22’ +−2● (38.37● +−2●)	33●33’ (33.55●)
ACV40L-AEMNKA	38●22’ +−2● (38.37● +−2●)	33●33’ (33.55●)
GSV40L-AETNKA	38●22’ +−2● (38.37● +−2●)	33●33’ (33.55●)
ACV40L-CEASKA	38●42’ +−2● (38.70● +−2●)	33●46’ (33.77●)
ACV40L-CEMSKA	38●42’ +−2● (38.70● +−2●)	33●46’ (33.77●)
GSV40L-CETSKA	38●18’ +−2● (38.30● +−2●)	33●32’ (33.53●)

for Mexico:

Model	Inside wheel	Outside wheel (reference)
ACV40L-CEAGKA	38●18’ +−2● (38.30● +−2●)	33●41’ (33.68●)
GSV40L-CETGKA	38●18’ +−2● (38.30● +−2●)	33●41’ (33.68●)
ACV40L-CEANKA	38●18’ +−2● (38.30● +−2●)	33●41’ (33.68●)

for General export:

Model	Inside wheel	Outside wheel (reference)
for General export	38●42’ +−2● (38.70●+− 2●)	33●46’ (33.77●)

Standard camber inclination:

for USA and Canada:

Model	Camber	Right-left difference
ACV40L-CEAGKA	−0●40’ +−45’ (−0.67● +−0.75●)	45’ (0.75●) or less
GSV40L-CETGKA	−0●40’ +−45’ (−0.67● +−0.75●)	45’ (0.75●) or less
ACV40L-AEAGKA	−0●40’ +−45’ (−0.67● +−0.75●)	45’ (0.75●) or less
GSV40L-AETGKA	−0●40’ +−45’ (−0.67● +−0.75●)	45’ (0.75●) or less
ACV40L-CEANKA	−0●40’ +−45’ (−0.67● +−0.75●)	45’ (0.75●) or less
ACV40L-CEMNKA	−0●40’ +−45’ (−0.67● +−0.75●)	45’ (0.75●) or less
GSV40L-CETNKA	−0●40’ +−45’ (−0.67● +−0.75●)	45’ (0.75●) or less
ACV40L-AEANKA	−0●40’ +−45’ (−0.67● +−0.75●)	45’ (0.75●) or less
ACV40L-AEMNKA	−0●40’ +−45’ (−0.67● +−0.75●)	45’ (0.75●) or less
GSV40L-AETNKA	−0●40’ +−45’ (−0.67● +−0.75●)	45’ (0.75●) or less
ACV40L-CEASKA	−0●40’ +−45’ (−0.67● +−0.75●)	45’ (0.75●) or less
ACV40L-CEMSKA	−0●40’ +−45’ (−0.67● +−0.75●)	45’ (0.75●) or less
GSV40L-CETSKA	−0●40’ +−45’ (−0.67● +−0.75●)	45’ (0.75●) or less

for Mexico:

Model	Camber	Right-left difference
ACV40L-CEAGKA	−0●35’ +−45’ (−0.58● +−0.75●)	45’ (0.75●) or less
GSV40L-CETGKA	−0●35’ +−45’ (−0.58● +−0.75●)	45’ (0.75●) or less
ACV40L-CEANKA	−0●35’ +−45’ (−0.58● +−0.75●)	45’ (0.75●) or less

for General export:

Model	Camber	Right-left difference
for General export	−0●30’ +−45’ (−0.50●+− 0.75●)	45’ (0.75●) or less

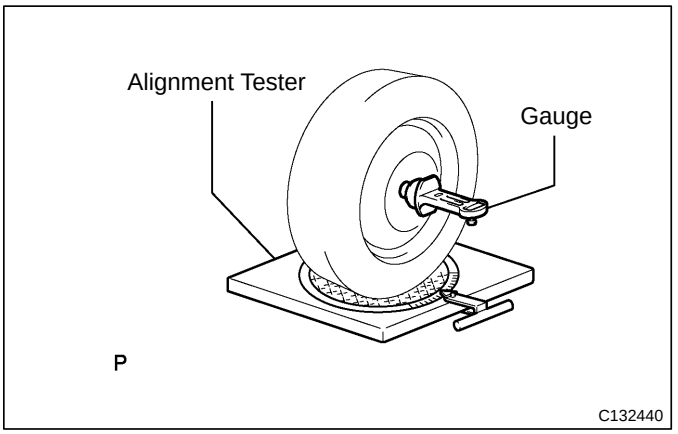

Standard caster inclination:

for USA and Canada:

Model	Caster	Right-left difference
ACV40L-CEAGKA	3●00’ +−45’ (3.00● +−0.75●)	45’ (0.75●) or less
GSV40L-CETGKA	2●55’ +−45’ (2.92● +−0.75●)	45’ (0.75●) or less
ACV40L-AEAGKA	2●55’ +−45’ (2.92● +−0.75●)	45’ (0.75●) or less
GSV40L-AETGKA	2●55’ +−45’ (2.92● +−0.75●)	45’ (0.75●) or less
ACV40L-CEANKA	3●00’ +−45’ (3.00● +−0.75●)	45’ (0.75●) or less
ACV40L-CEMNKA	2●55’ +−45’ (2.92● +−0.75●)	45’ (0.75●) or less
GSV40L-CETNKA	2●55’ +−45’ (2.92● +−0.75●)	45’ (0.75●) or less
ACV40L-AEANKA	2●55’ +−45’ (2.92● +−0.75●)	45’ (0.75●) or less
ACV40L-AEMNKA	2●55’ +−45’ (2.92● +−0.75●)	45’ (0.75●) or less
GSV40L-AETNKA	2●55’ +−45’ (2.92● +−0.75●)	45’ (0.75●) or less
ACV40L-CEASKA	3●00’ +−45’ (3.00● +−0.75●)	45’ (0.75●) or less
ACV40L-CEMSKA	2●55’ +−45’ (2.92● +−0.75●)	45’ (0.75●) or less
GSV40L-CETSKA	2●55’ +−45’ (2.92● +−0.75●)	45’ (0.75●) or less

for Mexico:

Model	Caster	Right-left difference
ACV40L-CEAGKA	2●45’ +−45’ (2.75● +−0.75●)	45’ (0.75●) or less
GSV40L-CETGKA	2●40’ +−45’ (2.67● +−0.75●)	45’ (0.75●) or less
ACV40L-CEANKA	2●45’ +−45’ (2.75● +−0.75●)	45’ (0.75●) or less

for General export:

Model	Caster	Right-left difference
for General export	2●40’ +− 45’ (2.67●+− 0.75●)	45’ (0.75●) or less

Steering axis inclination:

for USA and Canada:

Model	Steering axis inclination	Right-left difference
ACV40L-CEAGKA	12●15’ +−45’ (12.25● +−0.75●)	45’ (0.75●) or less
GSV40L-CETGKA	12●15’ +−45’ (12.25● +−0.75●)	45’ (0.75●) or less
ACV40L-AEAGKA	12●15’ +−45’ (12.25● +−0.75●)	45’ (0.75●) or less
GSV40L-AETGKA	12●15’ +−45’ (12.25● +−0.75●)	45’ (0.75●) or less
ACV40L-CEANKA	12●15’ +−45’ (12.25● +−0.75●)	45’ (0.75●) or less
ACV40L-CEMNKA	12●15’ +−45’ (12.25● +−0.75●)	45’ (0.75●) or less
GSV40L-CETNKA	12●15’ +−45’ (12.25● +−0.75●)	45’ (0.75●) or less
ACV40L-AEANKA	12●15’ +−45’ (12.25● +−0.75●)	45’ (0.75●) or less
ACV40L-AEMNKA	12●15’ +−45’ (12.25● +−0.75●)	45’ (0.75●) or less
GSV40L-AETNKA	12●15’ +−45’ (12.25● +−0.75●)	45’ (0.75●) or less
ACV40L-CEASKA	12●15’ +−45’ (12.25● +−0.75●)	45’ (0.75●) or less
ACV40L-CEMSKA	12●15’ +−45’ (12.25● +−0.75●)	45’ (0.75●) or less
GSV40L-CETSKA	12●15’ +−45’ (12.25● +−0.75●)	45’ (0.75●) or less

for Mexico:

Model	Steering axis inclination	Right-left difference
ACV40L-CEAGKA	12●00’ +−45’ (12.00● +−0.75●)	45’ (0.75●) or less
GSV40L-CETGKA	12●00’ +−45’ (12.00● +−0.75●)	45’ (0.75●) or less
ACV40L-CEANKA	12●00’ +−45’ (12.00● +−0.75●)	45’ (0.75●) or less

for General export:

Model	Steering axis inclination	Right-left difference
for General export	12●00’ +− 45’ (12.00●+− 0.75●)	45’ (0.75●) or less

Standard Toe-in (total):

A − B:	0 +− 2 mm (0 +− 0.08 in.)

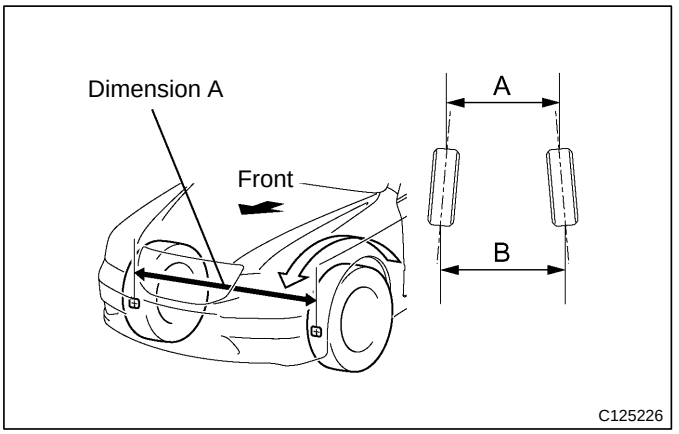

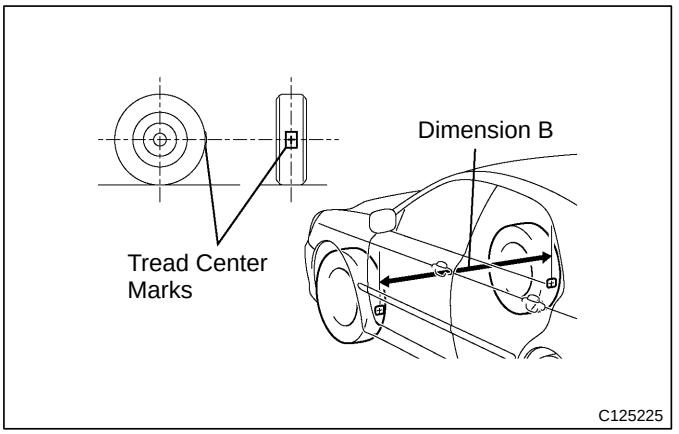

2. REAR WHEEL ALIGNMENT

Standard toe-in:

Toe−in (total)	—
A + B: C − D:	0● +− 24’ (0● +− 0.4●) 4 +− 2 mm (0.16 +− 0.08 in.)

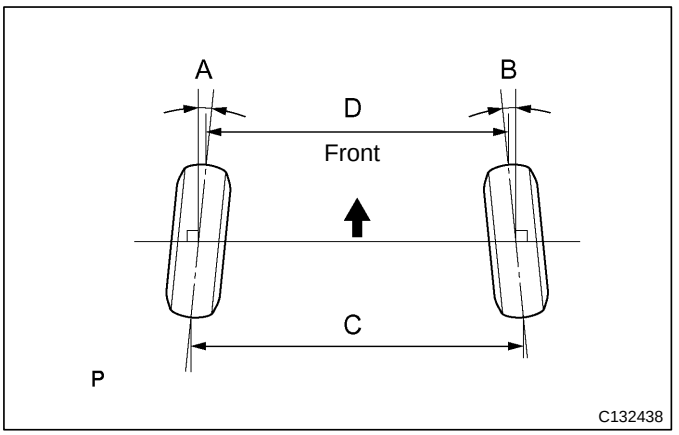

Standard camber:

for USA and Canada:

Model	Camber	Right-left difference
ACV40L-CEAGKA	−1●18’ +−45’ (−1.30● +−0.75●)	45’ (0.75●) or less
GSV40L-CETGKA	−1●18’ +−45’ (−1.30● +−0.75●)	45’ (0.75●) or less
ACV40L-AEAGKA	−1●15’ +−45’ (−1.25● +−0.75●)	45’ (0.75●) or less
GSV40L-AETGKA	−1●15’ +−45’ (−1.25● +−0.75●)	45’ (0.75●) or less
ACV40L-CEANKA	−1●18’ +−45’ (−1.30● +−0.75●)	45’ (0.75●) or less
ACV40L-CEMNKA	−1●18’ +−45’ (−1.30● +−0.75●)	45’ (0.75●) or less
GSV40L-CETNKA	−1●18’ +−45’ (−1.30● +−0.75●)	45’ (0.75●) or less
ACV40L-AEANKA	−1●15’ +−45’ (−1.25● +−0.75●)	45’ (0.75●) or less
ACV40L-AEMNKA	−1●15’ +−45’ (−1.25● +−0.75●)	45’ (0.75●) or less
GSV40L-AETNKA	−1●15’ +−45’ (−1.25● +−0.75●)	45’ (0.75●) or less
ACV40L-CEASKA	−1●18’ +−45’ (−1.30● +−0.75●)	45’ (0.75●) or less
ACV40L-CEMSKA	−1●18’ +−45’ (−1.30● +−0.75●)	45’ (0.75●) or less
GSV40L-CETSKA	−1●18’ +−45’ (−1.30● +−0.75●)	45’ (0.75●) or less

for Mexico:

Model	Camber	Right-left difference
ACV40L-CEAGKA	−1●06’ +−45’ (−1.10● +−0.75●)	45’ (0.75●) or less
GSV40L-CETGKA	−1●06’ +−45’ (−1.10● +−0.75●)	45’ (0.75●) or less
ACV40L-CEANKA	−1●06’ +−45’ (−1.10● +−0.75●)	45’ (0.75●) or less

for General export:

Model	Camber	Right-left difference
for General export	−1●00’ +−45’ (−1.00● +−0.75●)	45’ (0.75●) or less

HOW TO USE THIS MANUAL

1. BODY PANEL REPLACEMENT THIS MANUAL

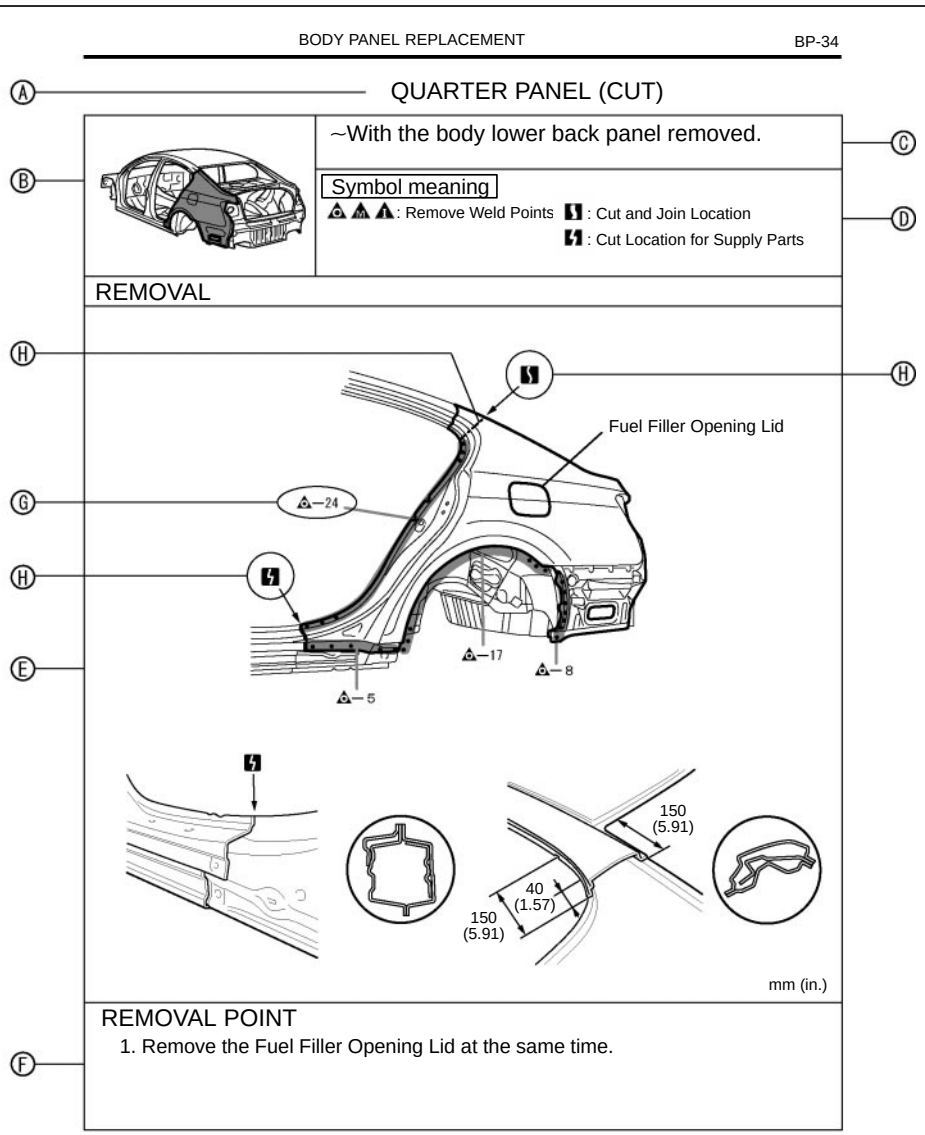

Ⓐ REPLACEMENT PART AND METHOD

QUARTER PANEL (CUT)

- Replacement method
  - (ASSY)...Assembly replacement
  - (CUT)...Major cutting (less than 1/2 of part used)
  - (CUT-H)...Half cutting (about 1/2 of part used)
  - (CUT-P)...Partial cutting (most of part used)
- Replacement part

Ⓑ PART LOCATION

Ⓒ REMOVAL CONDITIONS

Ⓓ SYMBOL MEANING

Ⓔ REMOVAL DIAGRAM
Describes in detail the removal of the damaged part involving repair by cutting.

Ⓕ REMOVAL GUIDE
Provides additional information to more efficiently help you perform the removal.

Ⓖ INSTALLATION OF WELD POINTS
Weld method and panel position symbols (See page IN-44)

Ⓗ SYMBOLS (See page IN-42)

F33027

BP-36 BODY PANEL REPLACEMENT

Symbol meaning

: Mig Plug Weld
: Body Sealer
: Spot Weld
: Butt Weld

INSTALLATION

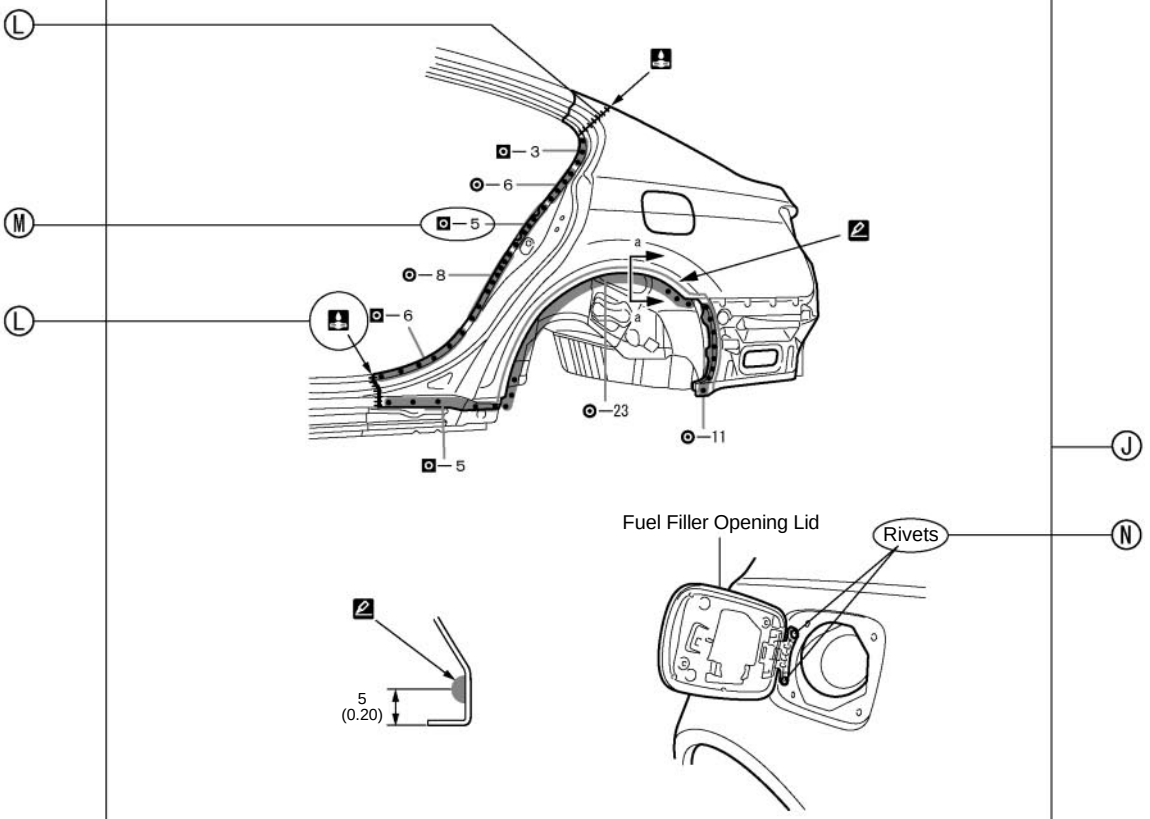

mm (in.)

POINT

1. Before temporarily installing the new parts, apply body sealer to the wheel arch.
   HINT
   1) Apply body sealer evenly about 5 mm (0.20 in.) from the flange, avoiding any oozing.
   2) Apply sealer evenly, about 3 − 4 mm (0.12 − 0.16 in.) in diameter.
2. Temporarily install the new parts and measure each part of the new parts in accordance with the body dimension diagram. (See the body dimension diagram)
3. After welding, apply body sealer and undercoating to the corresponding parts.

Ⓘ SYMBOLS

Ⓙ INSTALLATION DIAGRAM
Describes in detail the installation to the new parts involving repair by welding and/or cutting, but excluding painting.

Ⓚ INSTALLATIOLN GUIDE
Provides additional information to more efficiently help you perform the installation.

Ⓛ SYMBOLS (See page IN-42)

Ⓜ INSTALLATION OF WELD POINTS (See page IN-44)
Weld method and panel position symbols

Ⓝ PART NAME

F33026

2. SYMBOLS

The following symbols are used in the welding diagrams in section BP of this manual to indicate cutting areas and the types of weld required.

SYMBOLS	MEANING	SYMBOLS	MEANING	ILLUSTRATION
	CUT		CUT AND JOIN LOCATION (Saw Cut)	
			CUT AND JOIN LOCATION (Cut Location for Supply Parts)	
			CUT LOCATION	
			CUT WITH DISC SANDER ETC.	
	BRAZE		BRAZE (Removal)	
	BRAZE		BRAZE (Installation)	
O M I O I O M I	WELD POINTS	—	SPOT WELD OR MIG PLUG WELD	
	WELDING		CONTINUOUS MIG WELD (BUTT WELD) CONTINUOUS MIG WELD (TACK WELD)	
	SEALER		BODY SEALER	F33004

SYMBOLS	MEANING	SYMBOLS	MEANING	ILLUSTRATION
—			Assembly Mark	—
	—	—	BODY SEALER (Flat Finishing)	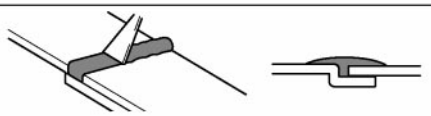
	—		BODY SEALER (Flat Finishing)	F33005

3. ILLUSTRATION OF WELD POINT SYMBOLS

EXAMPLE:

REMOVAL

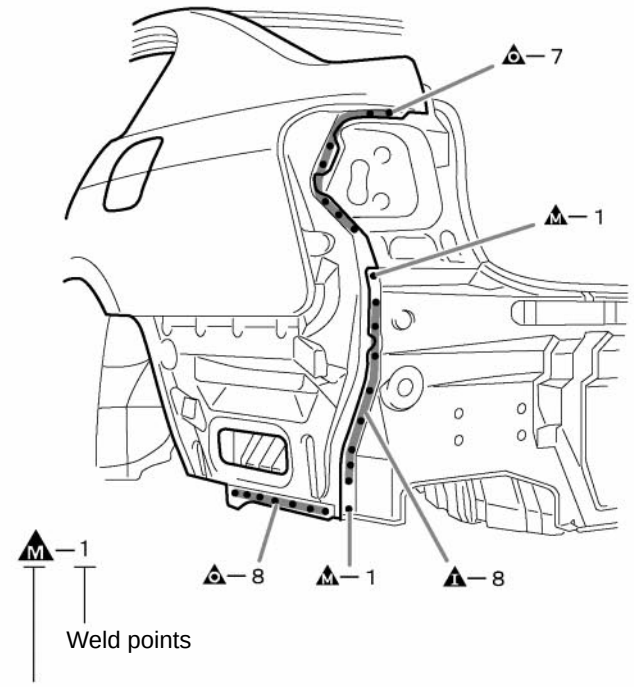

INSTALLATION

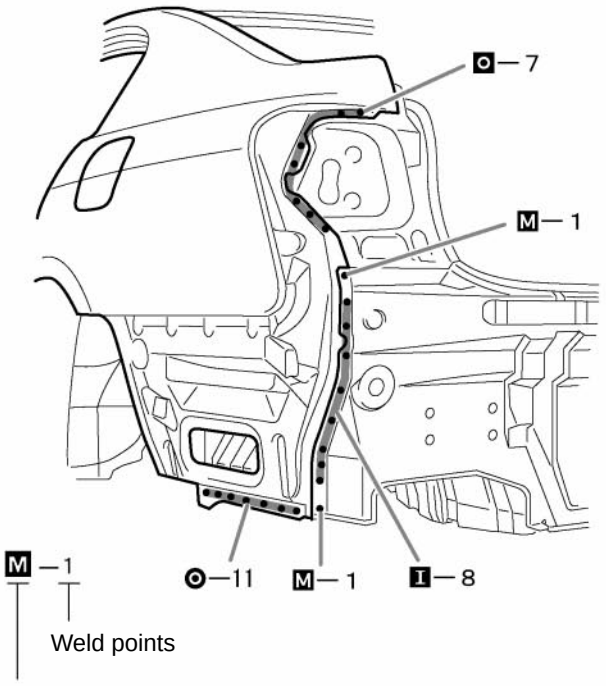

SYMBOLS	MEANING	ILLUSTRATION
▲	Remove Weld Points	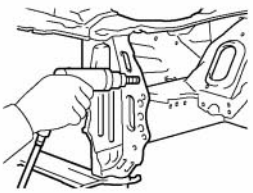
○	(Outside)	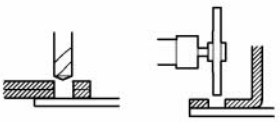
M	(Middle)	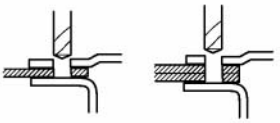
I	(Inside)	

SYMBOLS	MEANING	ILLUSTRATION
●	Spot Weld	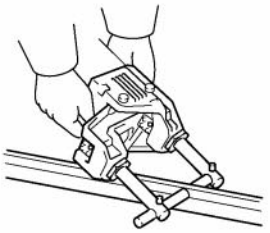
■	MIG Plug Weld	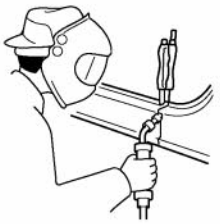
+	Spot MIG Weld	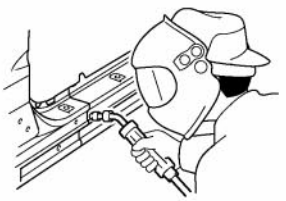

F33006

ABBREVIATIONS USED IN THIS MANUAL

For convenience, the following abbreviations are used in this manual.

ABS	Antilock Brake System
A/C	Air Conditioner
assy	assembly
ECT	Electronic Controlled Transmission
ECU	Electronic Control Unit
e.g.	Exempli Gratia (for Example)
Ex.	Except
FWD	Front Wheel Drive Vehicles
2WD	Two Wheel Drive Vehicles
4WD	Four Wheel Drive Vehicles
in.	inch
LH	Left-hand
LHD	Left-hand Drive
MIG	Metal Inert Gas
M/Y	Model Year
PPS	Progressive Power Steering
RH	Right-hand
RHD	Right-hand Drive
SRS	Supplemental Restraint System
SSM	Special Service Materials
w/	with
w/o	without

RADIATOR UPPER SUPPORT (ASSY): TMC made

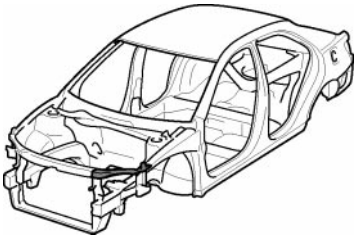

F25701A

Symbol meaning

REMOVAL	: Remove Weld Points
INSTALLATION	: MIG Plug Weld

F25701B

REMOVAL·INSTALLATION

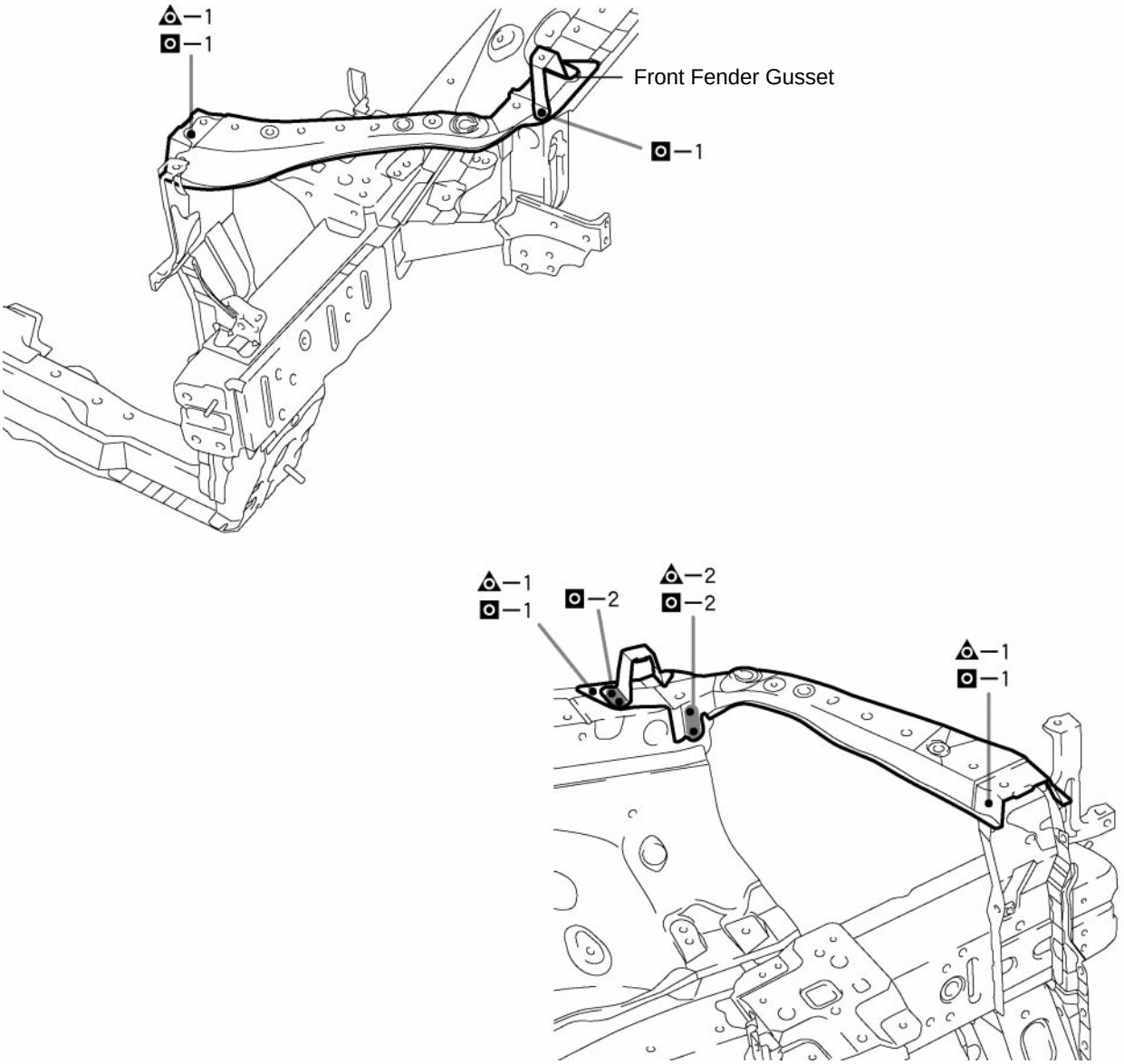

F25701

INSTALLATION POINT

1 Inspect the fitting of the related parts around the new parts before welding. This affects the appearance of the finish.
2 Temporarily install the new parts and measure each part of the new parts in accordance with the body dimension diagram. (See the body dimension diagram)
3 After applying the top coat, apply anti-rust agent to the internal panel portion of the closed section structural weld points.

RADIATOR SUPPORT UPPER BRACE (ASSY): TMC made

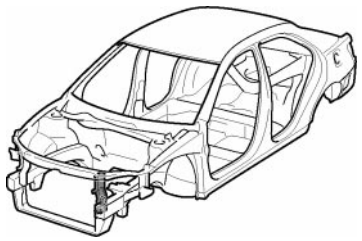

F25702A

With the radiator upper support removed.

Symbol meaning

REMOVAL	◎ ▲ : Remove Weld Points
INSTALLATION	■ I : MIG Plug Weld

F25702B

REMOVAL·INSTALLATION

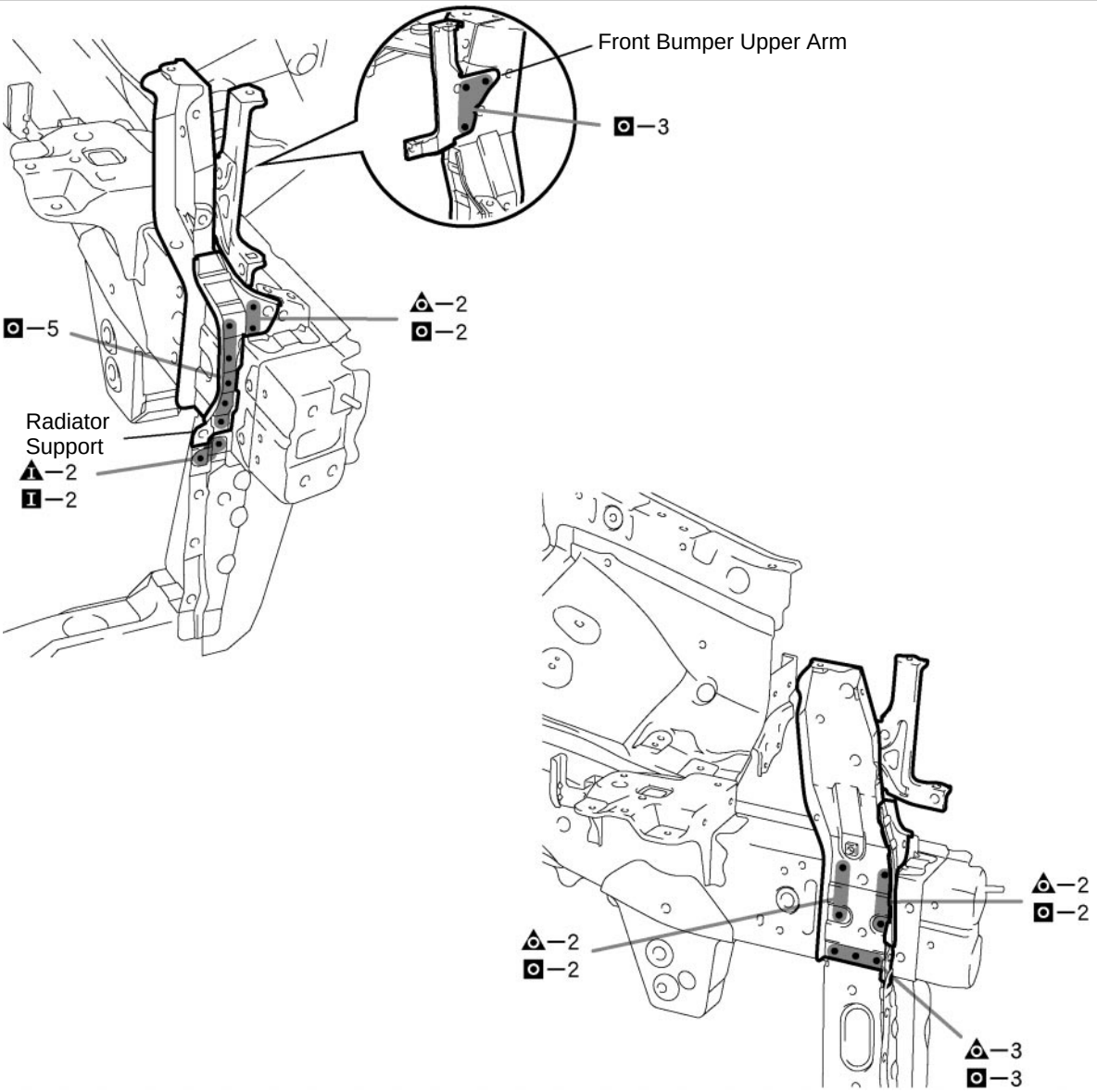

F25702

REMOVAL POINT

1 Remove the radiator support at the same time.

INSTALLATION POINT

1 Inspect the fitting of the related parts around the new parts before welding. This affects the appearance of the finish.

2 Temporarily install the new parts and measure each part of the new parts in accordance with the body dimension diagram. (See the body dimension diagram)

3 After applying the top coat, apply anti-rust agent to the internal panel portion of the closed section structural weld points.

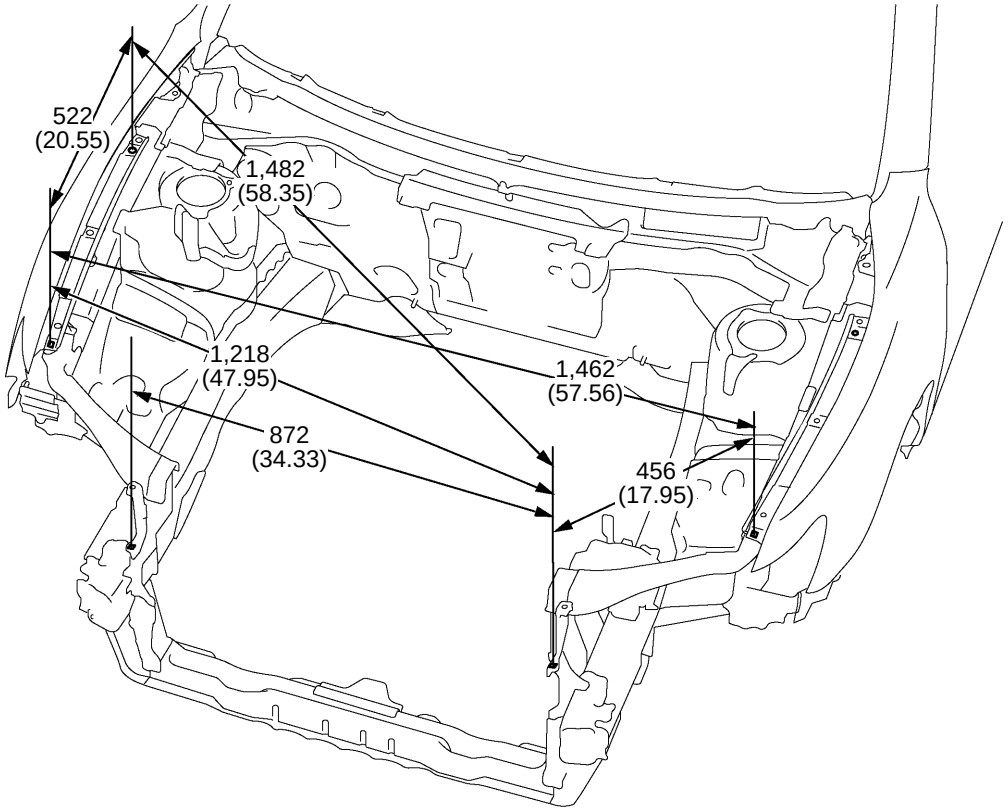

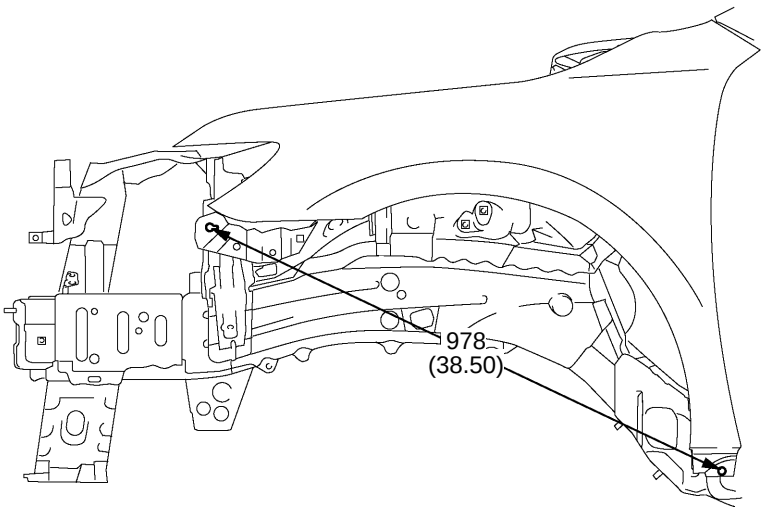

mm (in.)

F25704

INSTALLATION POINT

1 Measure the dimensions before installing the headlights.
2 These values are reference values.

RADIATOR SIDE SUPPORT (ASSY): TMMK made

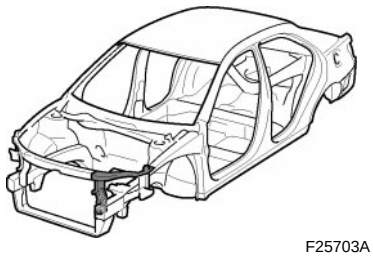

F25703A

Symbol meaning

REMOVAL	◬ : Remove Weld Points
INSTALLATION	◘ : MIG Plug Weld

F25703B

REMOVAL·INSTALLATION

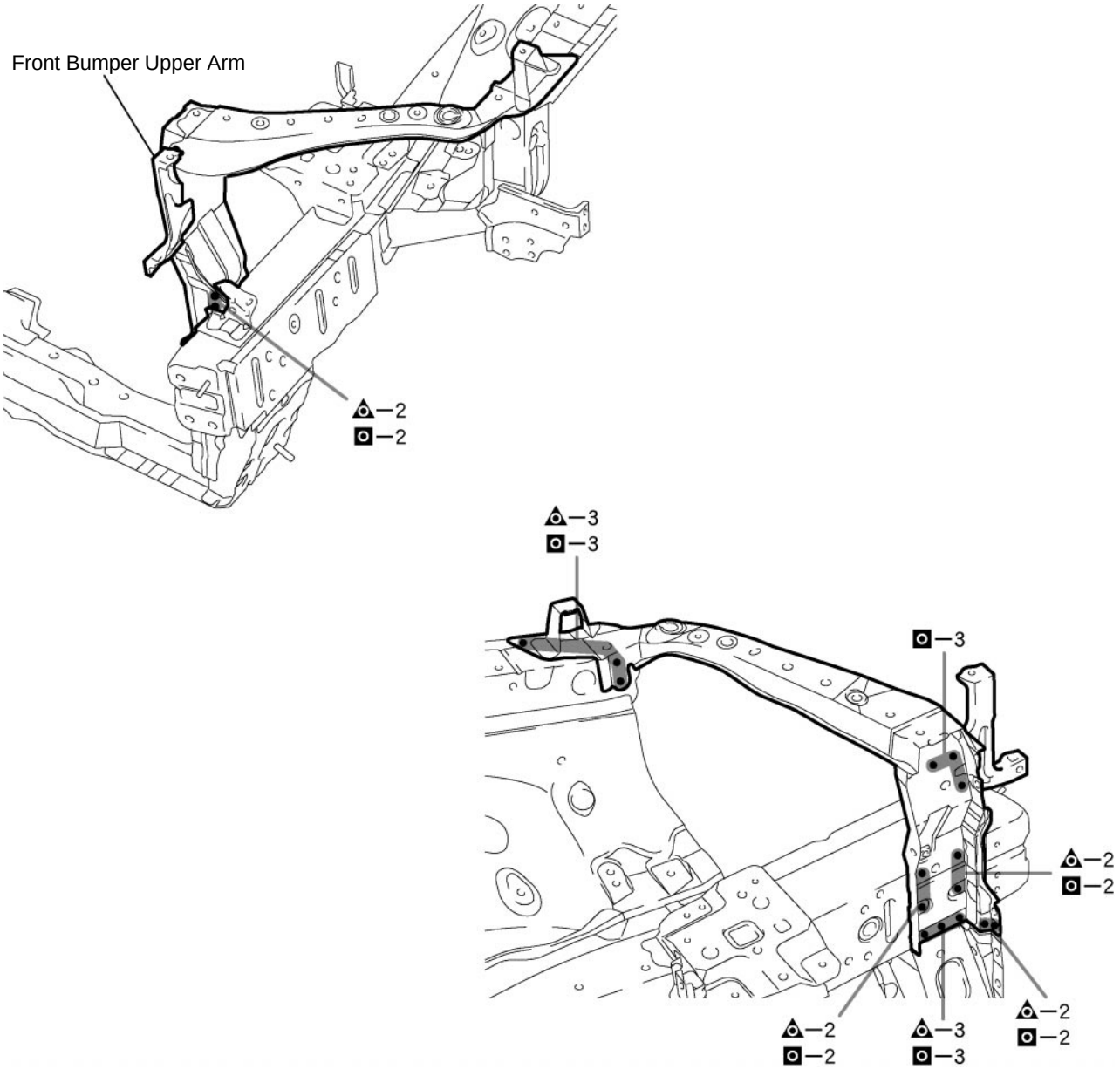

F25703

INSTALLATION POINT

1 Inspect the fitting of the related parts around the new parts before welding. This affects the appearance of the finish.
2 Temporarily install the new parts and measure each part of the new parts in accordance with the body dimension diagram. (See the body dimension diagram)
3 After applying the top coat, apply anti-rust agent to the internal panel portion of the closed section structural weld points.

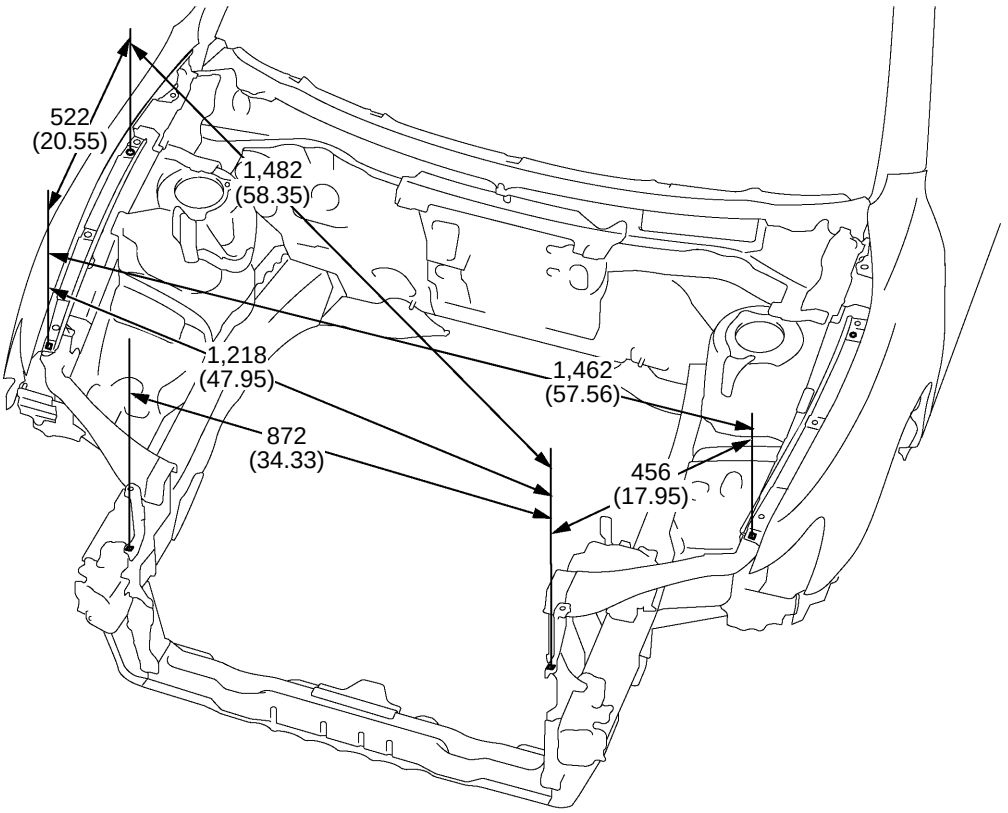

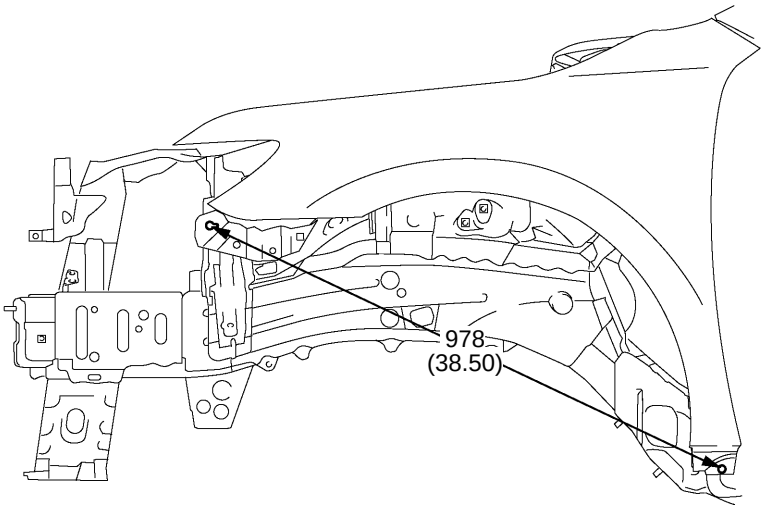

mm (in.)

F25704

INSTALLATION POINT

1 Measure the dimensions before installing the headlights.
2 These values are reference values.

FRONT CROSSMEMBER (ASSY)

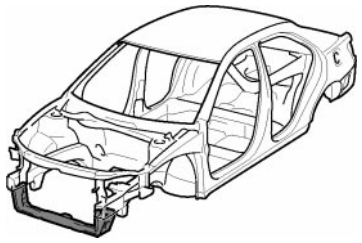

F25705A

Symbol meaning

REMOVAL	: Remove Weld Points	: Cut with disc sander, etc.
INSTALLATION	: MIG Plug Weld	: Tack Weld

F25705B

REMOVAL·INSTALLATION

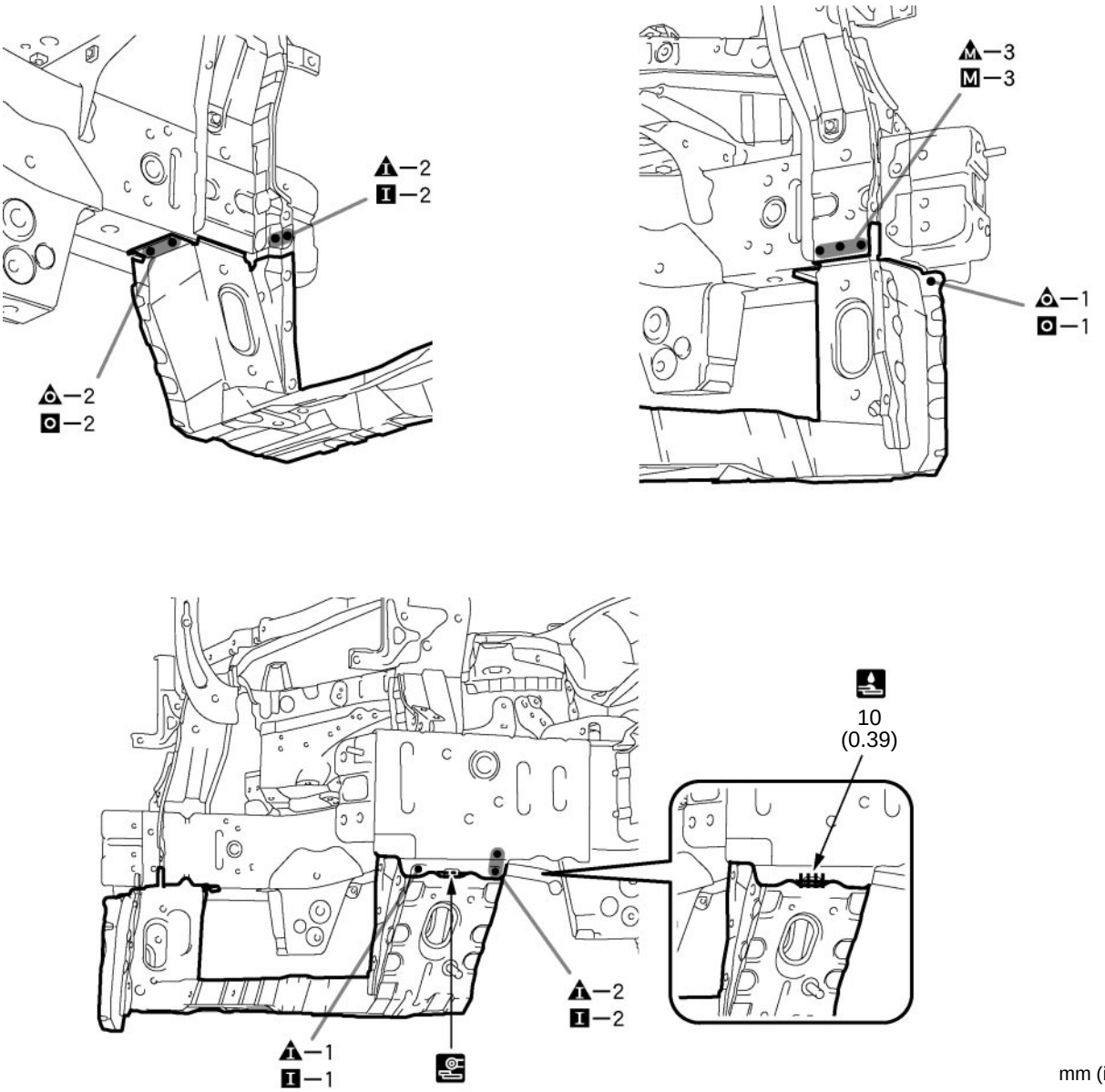

F25705

INSTALLATION POINT

1 Inspect the fitting of the related parts around the new parts before welding. This affects the appearance of the finish.
2 Temporarily install the new parts and measure each part of the new parts in accordance with the body dimension diagram. (See the body dimension diagram)
3 After applying the top coat, apply anti-rust agent to the internal panel portion of the closed section structural weld points.

RADIATOR SUPPORT (ASSY)

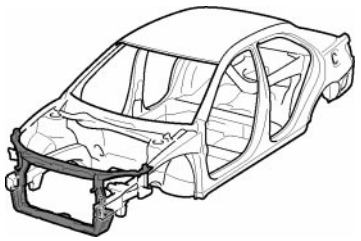

F25706A

Symbol meaning

REMOVAL	: Remove Weld Points	: Cut with disc sander, etc.
INSTALLATION	: MIG Plug Weld	: Tack Weld

F25706B

REMOVAL·INSTALLATION

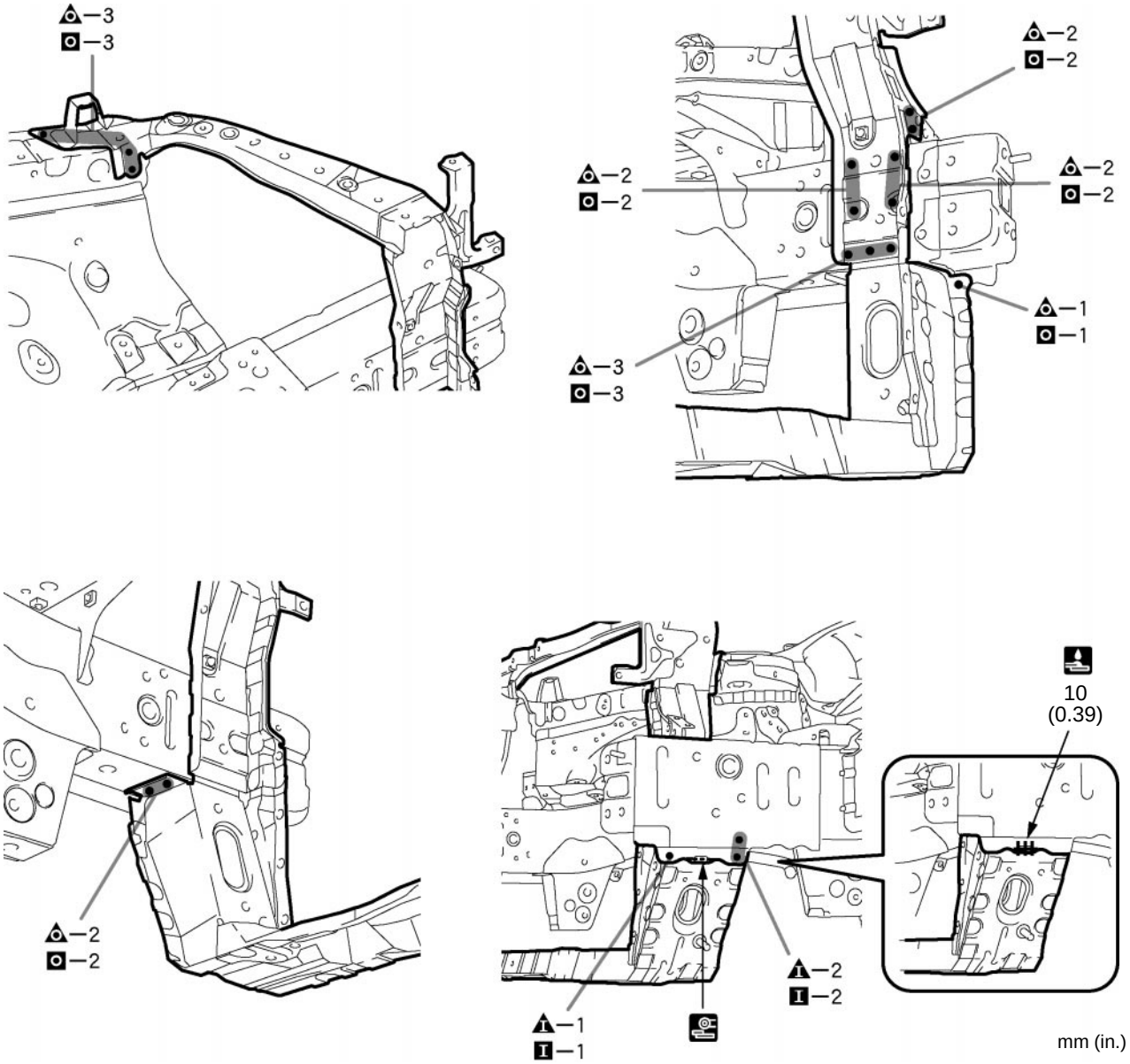

F25706

INSTALLATION POINT

1 Inspect the fitting of the related parts around the new parts before welding. This affects the appearance of the finish.
2 Temporarily install the new parts and measure each part of the new parts in accordance with the body dimension diagram. (See the body dimension diagram)
3 After applying the top coat, apply anti-rust agent to the internal panel portion of the closed section structural weld points.

FRONT FENDER FRONT APRON (ASSY)

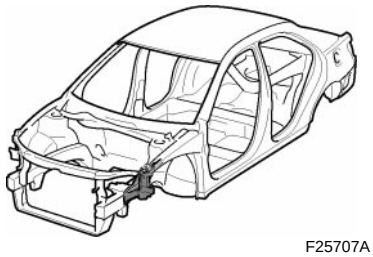

F25707A

With the radiator support removed.

Symbol meaning

REMOVAL	: Remove Weld Points	: Cut with disc sander, etc.
INSTALLATION	: MIG Plug Weld	: Tack Weld

F25707B

REMOVAL·INSTALLATION

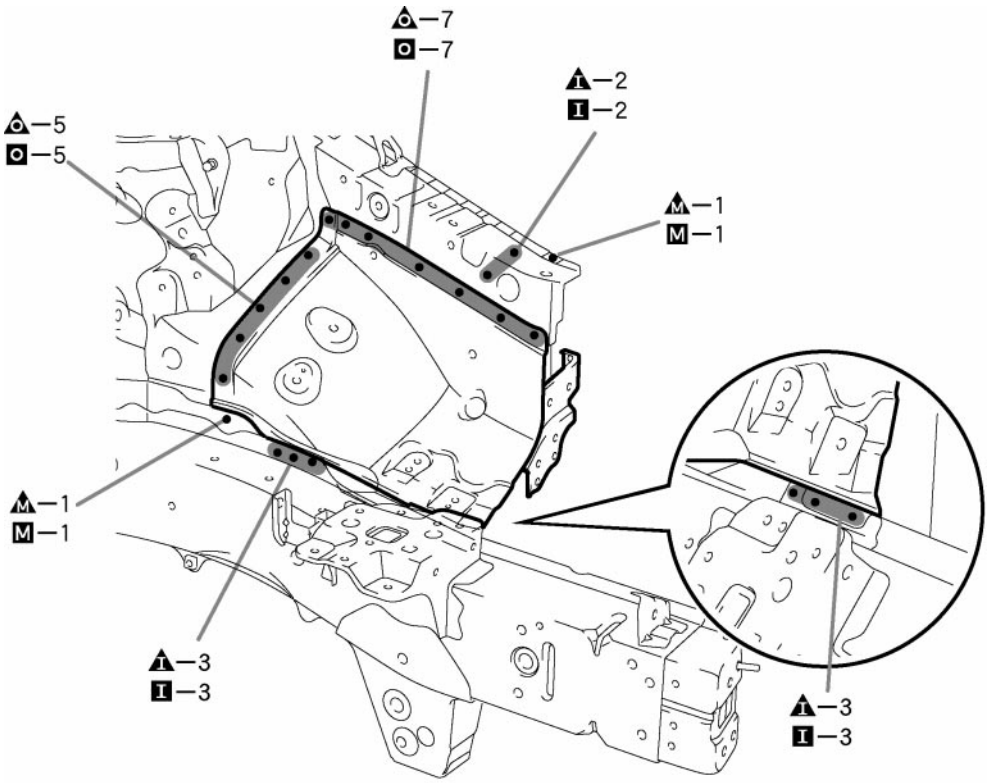

F25707

INSTALLATION POINT

1 Inspect the fitting of the related parts around the new parts before welding. This affects the appearance of the finish.

2 Temporarily install the new parts and measure each part of the new parts in accordance with the body dimension diagram. (See the body dimension diagram)

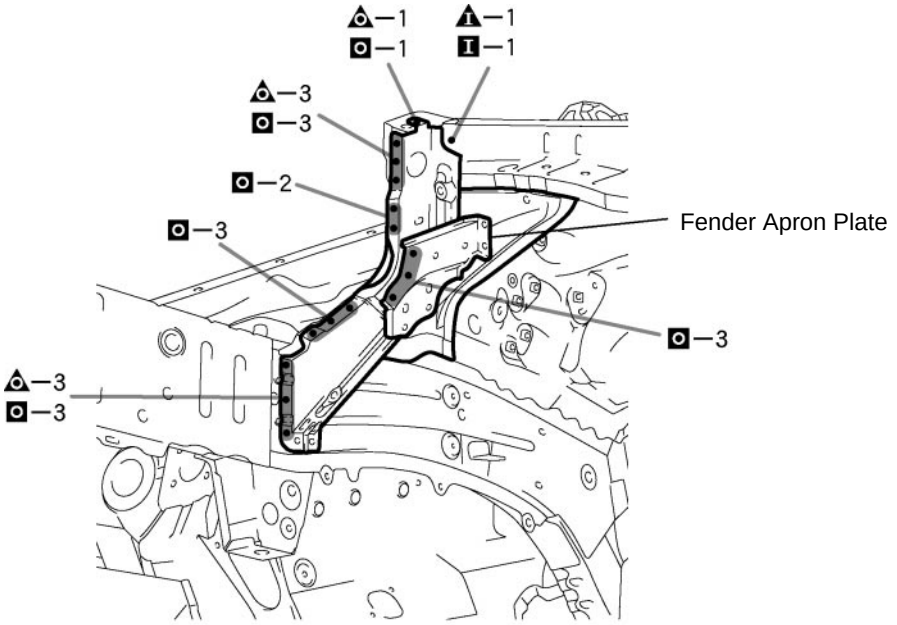

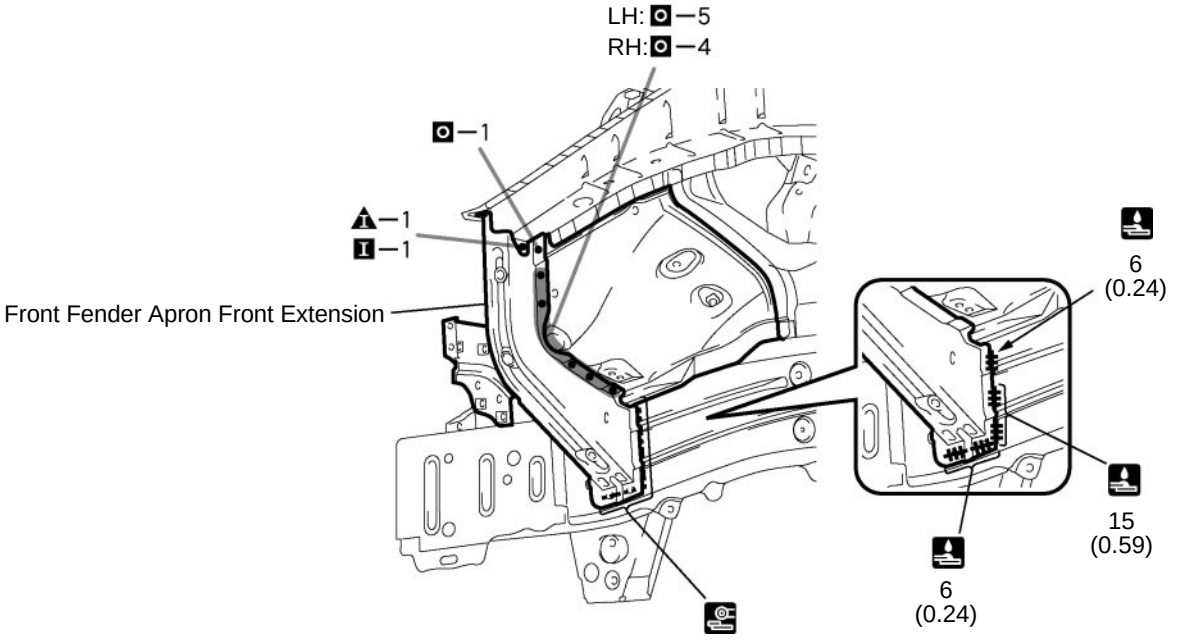

REMOVAL POINT

1 Remove the front fender apron front extension at the same time.

INSTALLATION POINT

1 Inspect the fitting of the related parts around the new parts before welding. This affects the appearance of the finish.
2 Temporarily install the new parts and measure each part of the new parts in accordance with the body dimension diagram. (See the body dimension diagram)
3 After welding, apply body sealer and undercoating to the corresponding parts. (See the paint·coating)
4 After applying the top coat, apply anti-rust agent to the internal panel portion of the closed section structural weld points.

FRONT APRON TO COWL SIDE UPPER MEMBER (ASSY)

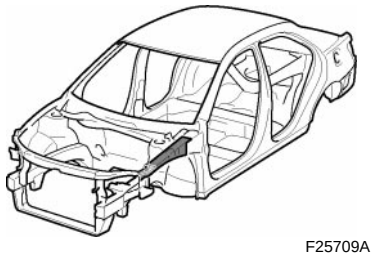

F25709A

With the front fender front apron and front body pillar lower gusset removed.

Symbol meaning

REMOVAL	: Remove Weld Points
INSTALLATION	M I : MIG Plug Weld

F25709B

REMOVAL·INSTALLATION

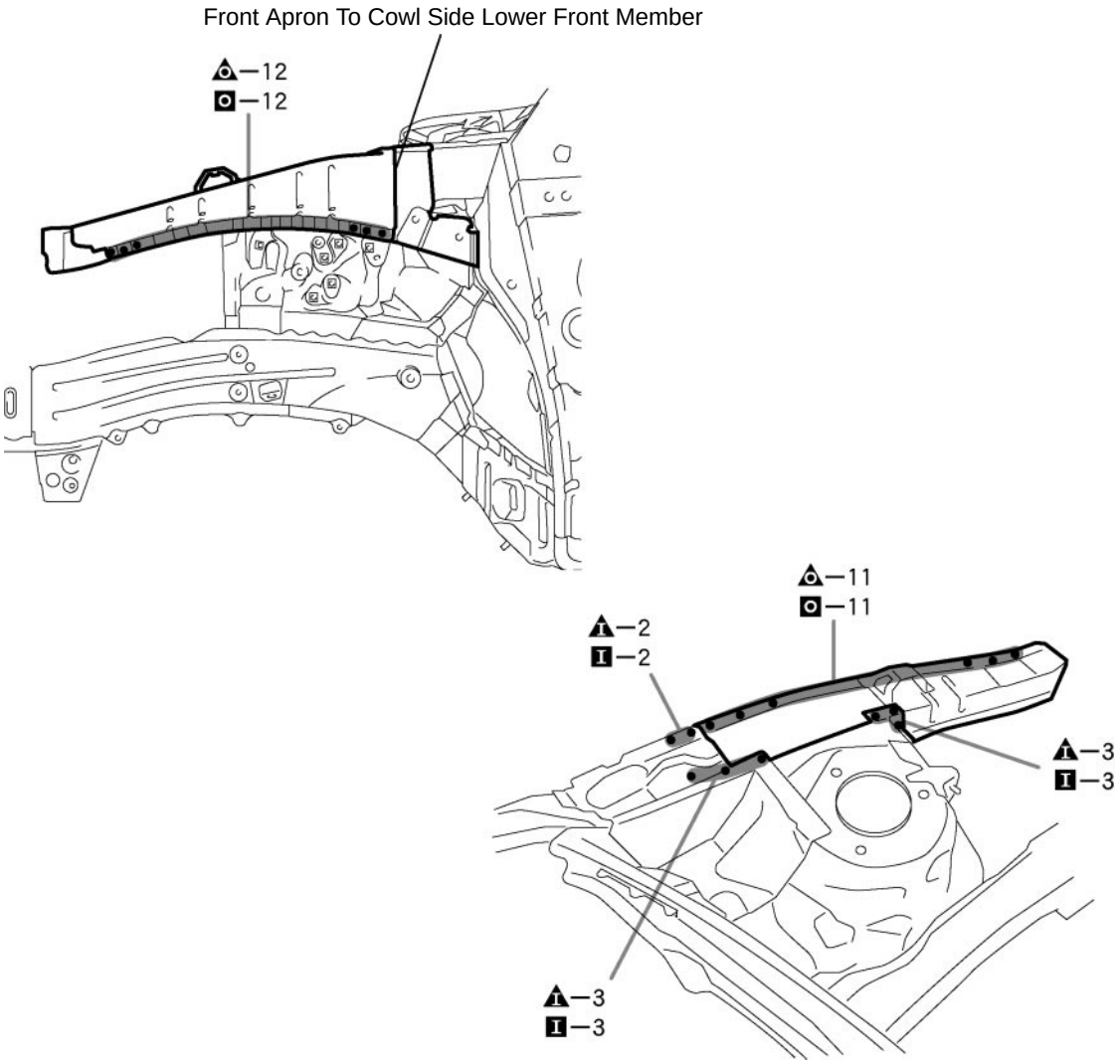

F25709

REMOVAL POINT

1 After removing the front apron to cowl side lower front member, remove the front apron to cowl side upper member.

INSTALLATION POINT

1 Inspect the fitting of the related parts around the new parts before welding. This affects the appearance of the finish.

2 Temporarily install the new parts and measure each part of the new parts in accordance with the body dimension diagram. (See the body dimension diagram)

3 After welding the to the front apron to cowl side upper member vehicle side, install the front apron to cowl side lower front member.

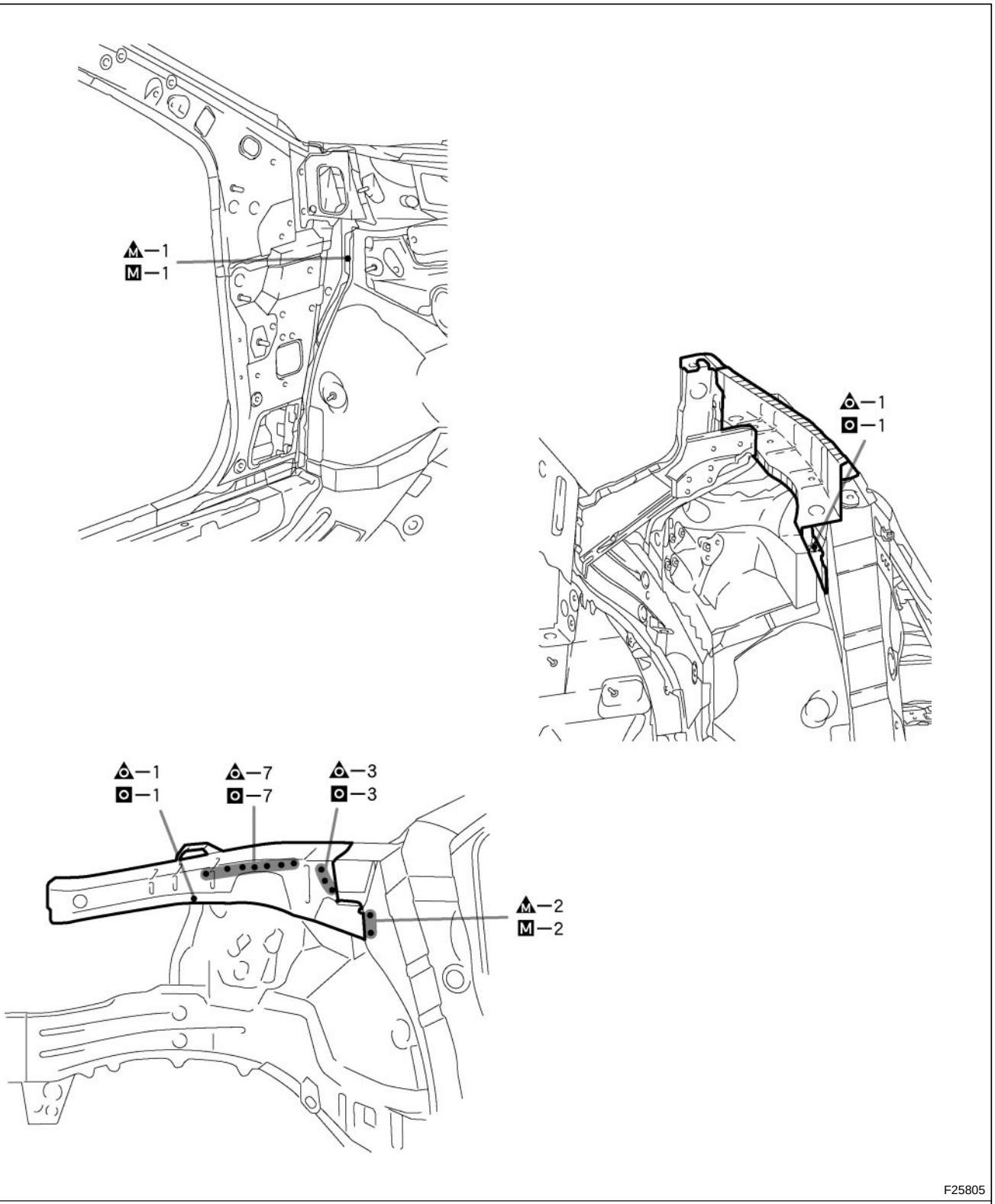

INSTALLATION POINT

1 Inspect the fitting of the related parts around the new parts before welding. This affects the appearance of the finish.

2 Temporarily install the new parts and measure each part of the new parts in accordance with the body dimension diagram. (See the body dimension diagram)

3 After welding, apply body sealer and undercoating to the corresponding parts. (See the paint·coating)

4 After applying the top coat, apply anti-rust agent to the internal panel portion of the closed section structural weld points.

FRONT FENDER APRON (ASSY)

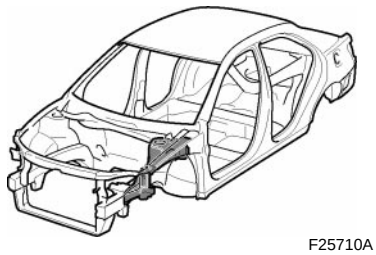

F25710A

With the radiator support and front body pillar lower gusset removed.

Symbol meaning

REMOVAL	: Remove Weld Points	: Cut with disc sander, etc.
INSTALLATION	: MIG Plug Weld	: Tack Weld

F25710B

REMOVAL·INSTALLATION

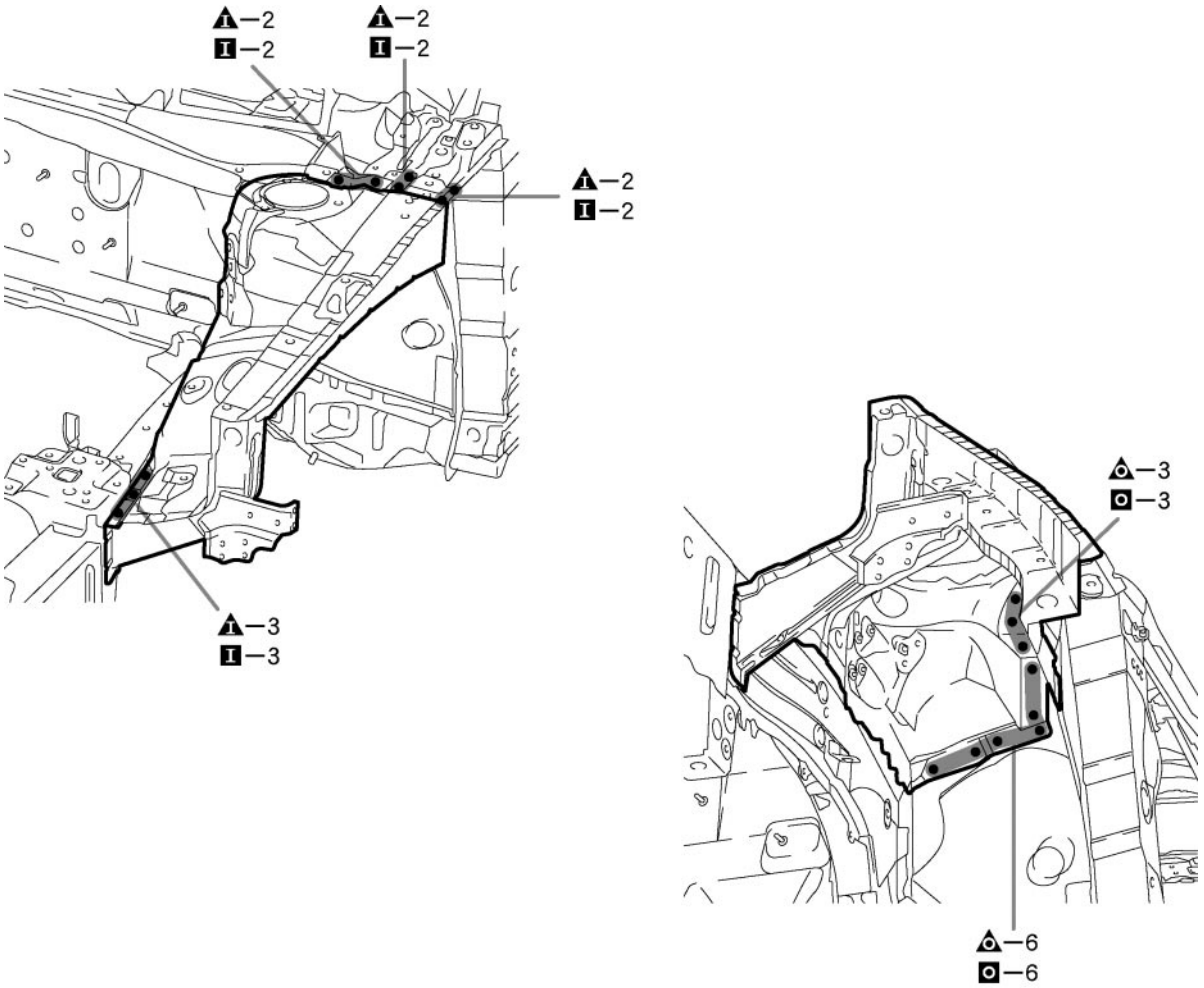

CAUTION

Make sure to attach correctly in accordance with the body dimension diagram as this part affects the front wheel alignment.

F25710

INSTALLATION POINT

1 Inspect the fitting of the related parts around the new parts before welding. This affects the appearance of the finish.

2 Temporarily install the new parts and measure each part of the new parts in accordance with the body dimension diagram. (See the body dimension diagram)

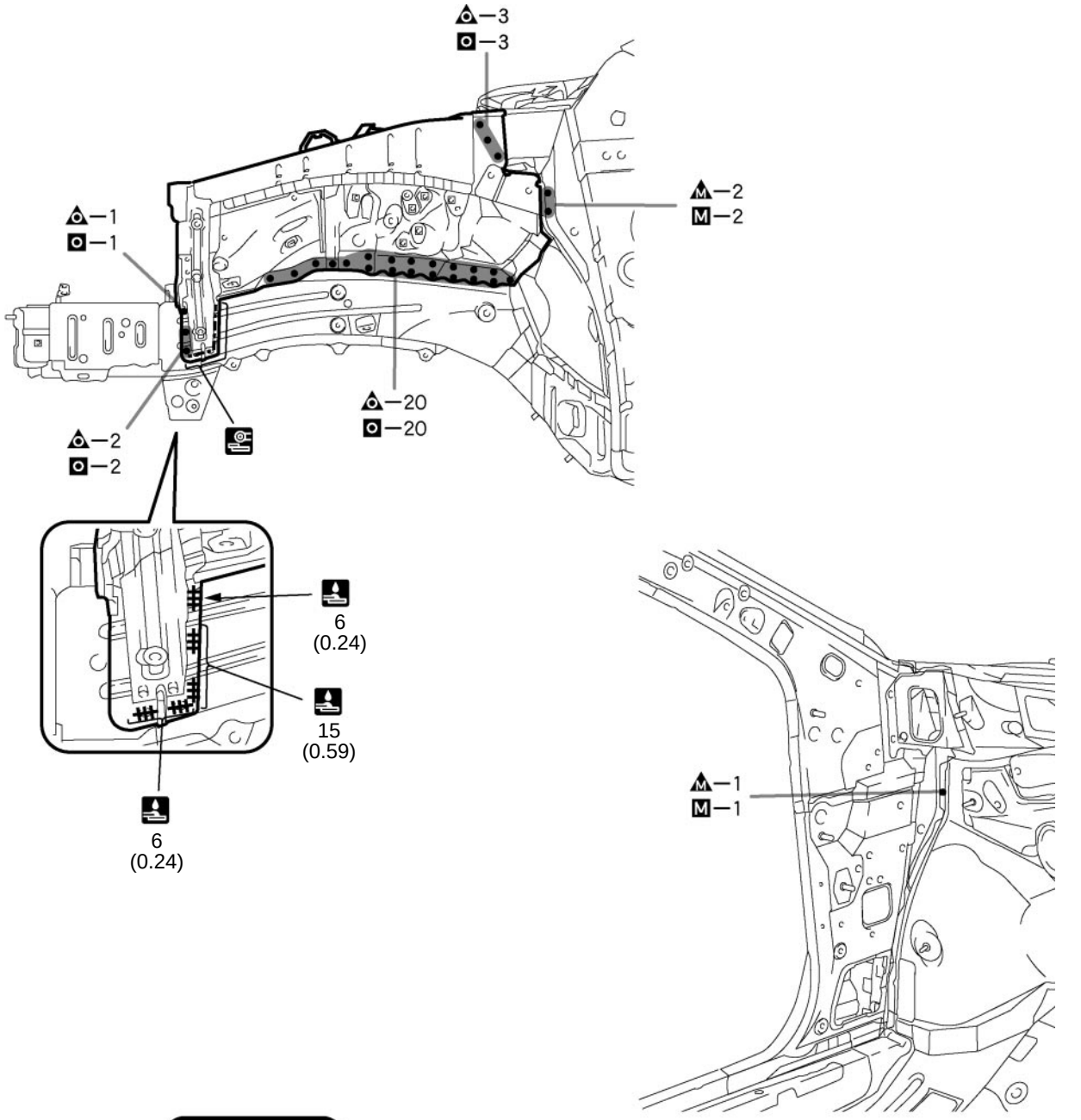

CAUTION

Make sure to attach correctly in accordance with the body dimension diagram as this part affects the front wheel alignment.

mm (in.)

F25711

INSTALLATION POINT

1 Inspect the fitting of the related parts around the new parts before welding. This affects the appearance of the finish.
2 Temporarily install the new parts and measure each part of the new parts in accordance with the body dimension diagram. (See the body dimension diagram)
3 After welding, apply body sealer and undercoating to the corresponding parts. (See the paint·coating)
4 After applying the top coat, apply anti-rust agent to the internal panel portion of the closed section structural weld points.

FRONT SIDE MEMBER (CUT-P)

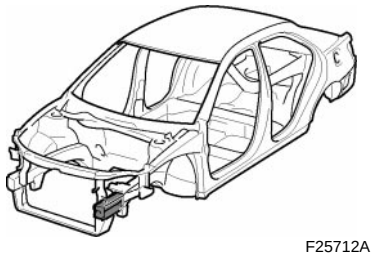

F25712A

With the radiator support removed.

Symbol meaning

: Remove Weld Points : Cut and Join Location

F25712B

REMOVAL

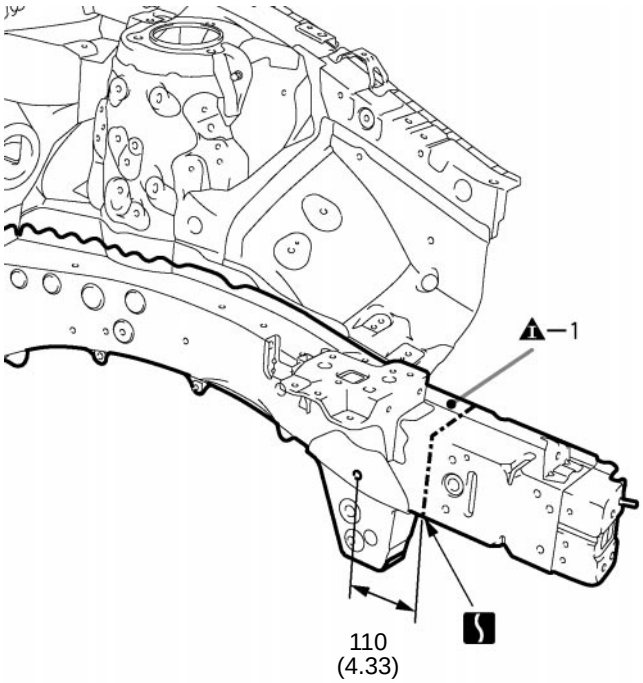

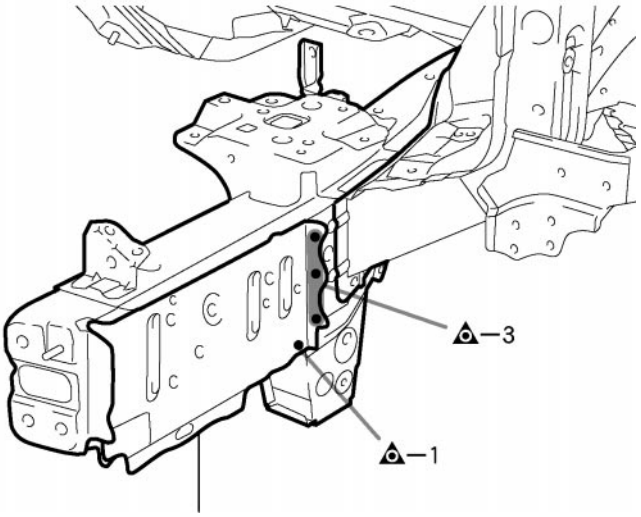

Front Side Member Extension

mm (in.)

F25712

REMOVAL POINT

1 Remove the front side member extension at the same time.

Symbol meaning

: MIG Plug Weld : Butt Weld

F25713B

INSTALLATION

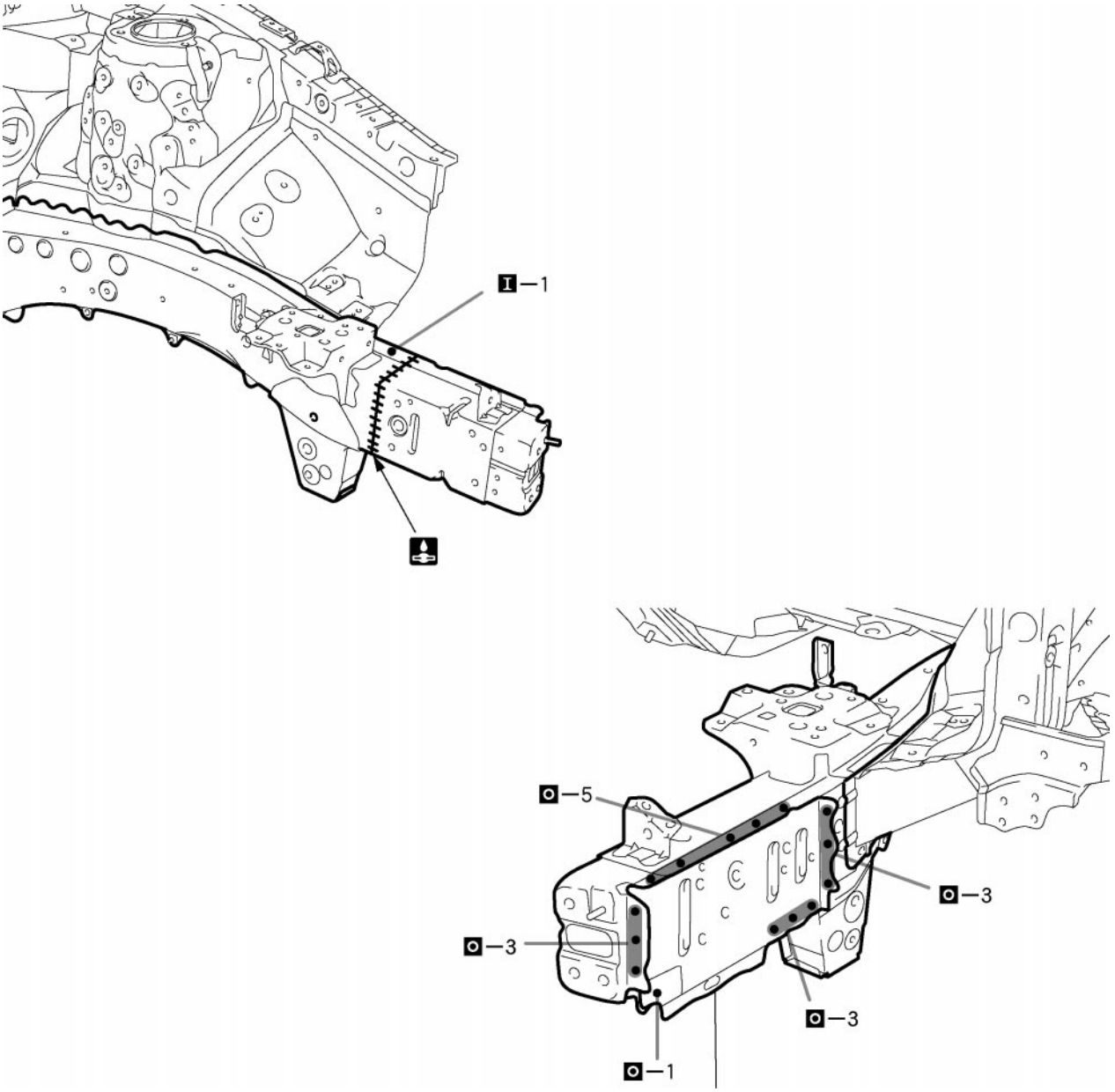

F25713

INSTALLATION POINT

1 Temporarily install the new parts and measure each part of the new parts in accordance with the body dimension diagram. (See the body dimension diagram)
2 After welding, apply undercoating to the corresponding parts.(See the paint·coating)
3 After applying the top coat, apply anti-rust agent to the internal panel portion of the closed section structural weld points.

FRONT SIDE MEMBER (CUT-H): TMC made

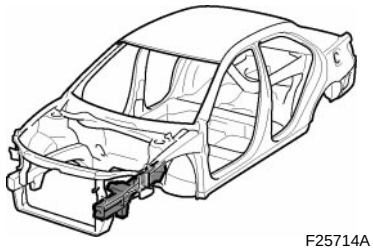

F25714A

With the front fender apron removed.

Symbol meaning

◬ : Remove Weld Points

F25714B

REMOVAL

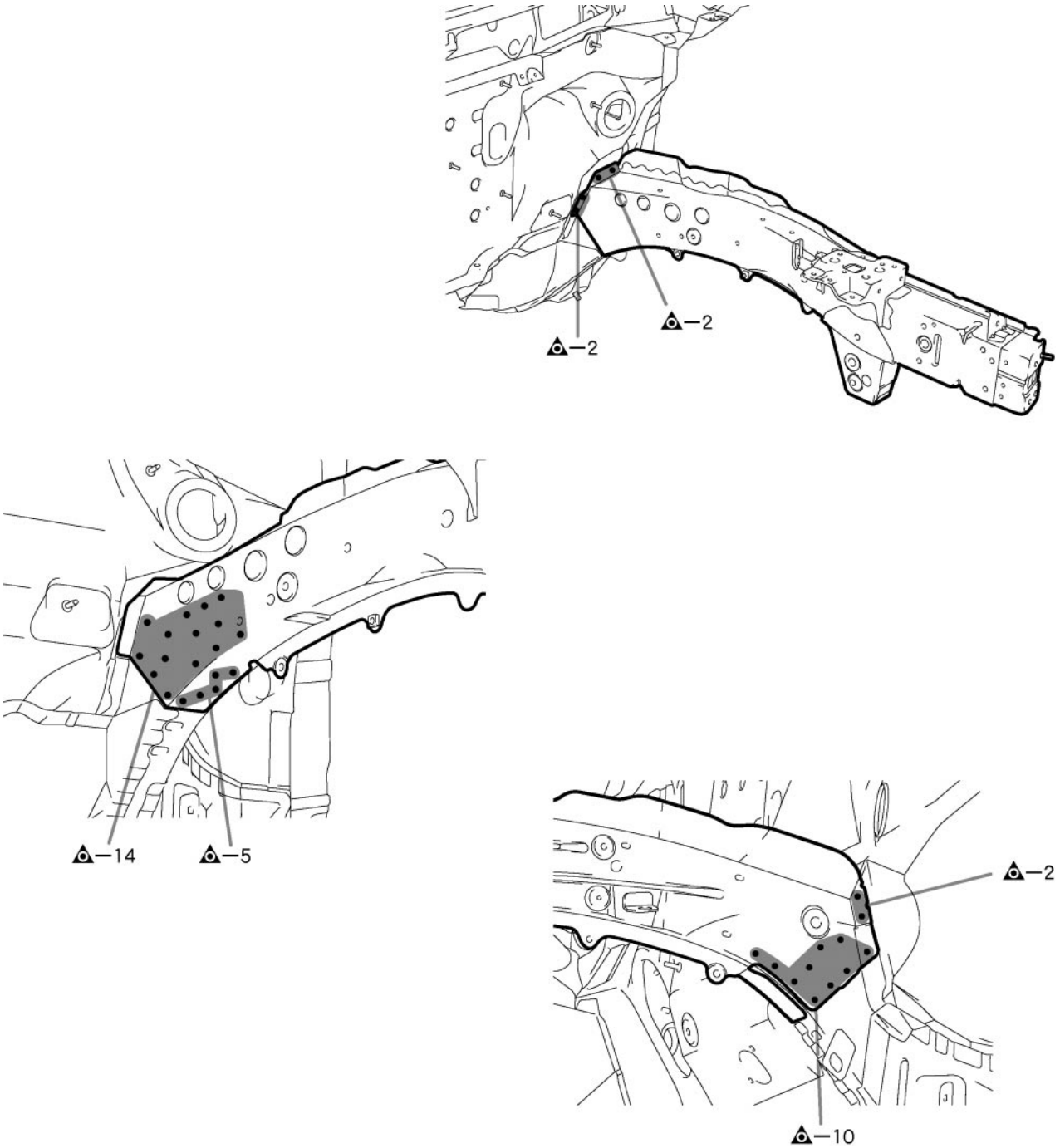

F25714

Symbol meaning

: MIG Plug Weld

F25715B

INSTALLATION

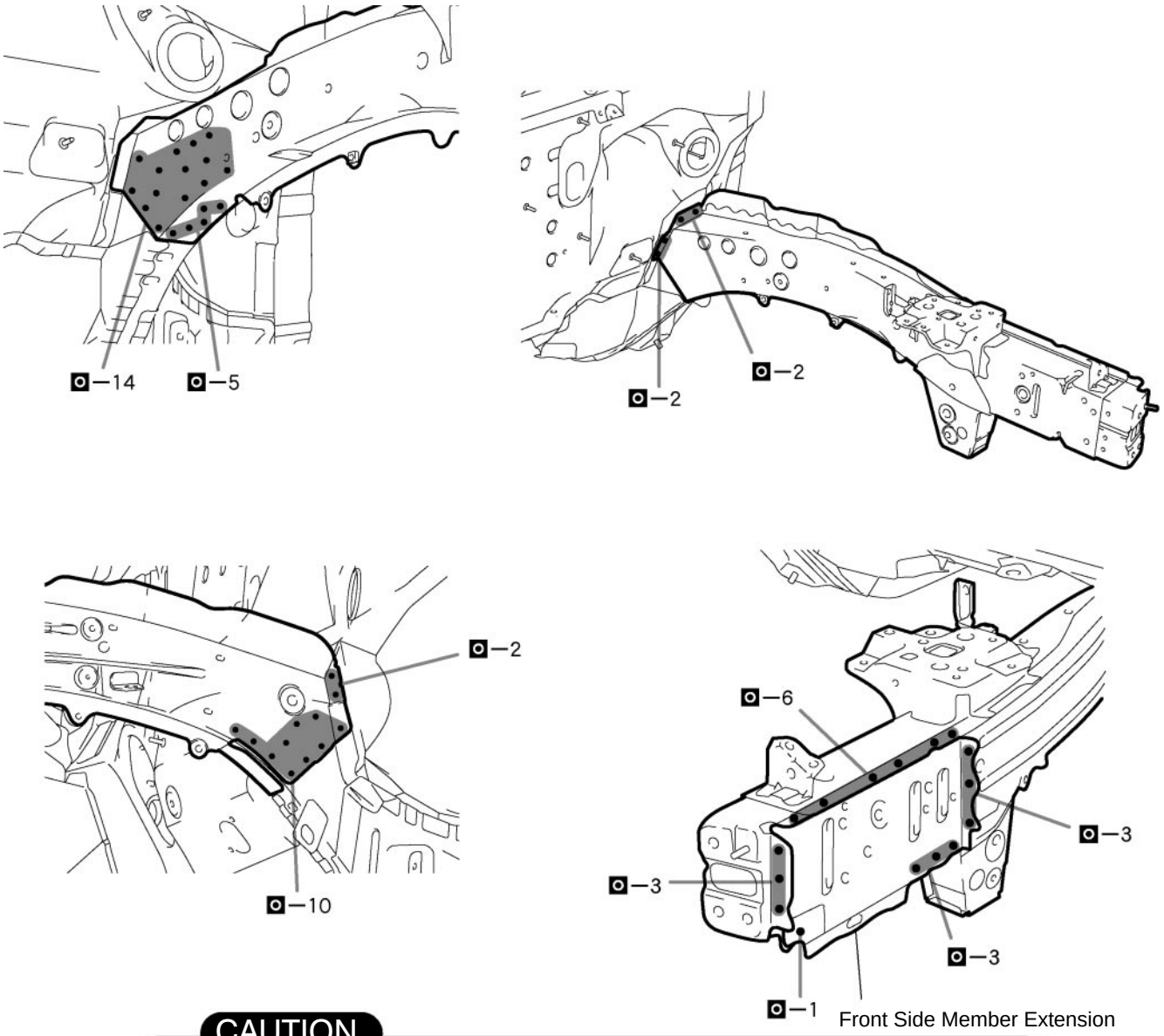

CAUTION

Make sure to attach correctly in accordance with the body dimension diagram as this part affects the front wheel alignment.

F25715

INSTALLATION POINT

1 Temporarily install the new parts and measure each part of the new parts in accordance with the body dimension diagram. (See the body dimension diagram)
2 After welding, apply body sealer and undercoating to the corresponding parts.(See the paint·coating)
3 After applying the top coat, apply anti-rust agent to the internal panel portion of the closed section structural weld points.

FRONT SIDE MEMBER (CUT-H): TMMK made

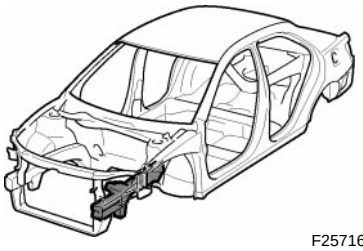

F25716A

With the front fender apron removed.

Symbol meaning

◬ : Remove Weld Points

F25716B

REMOVAL

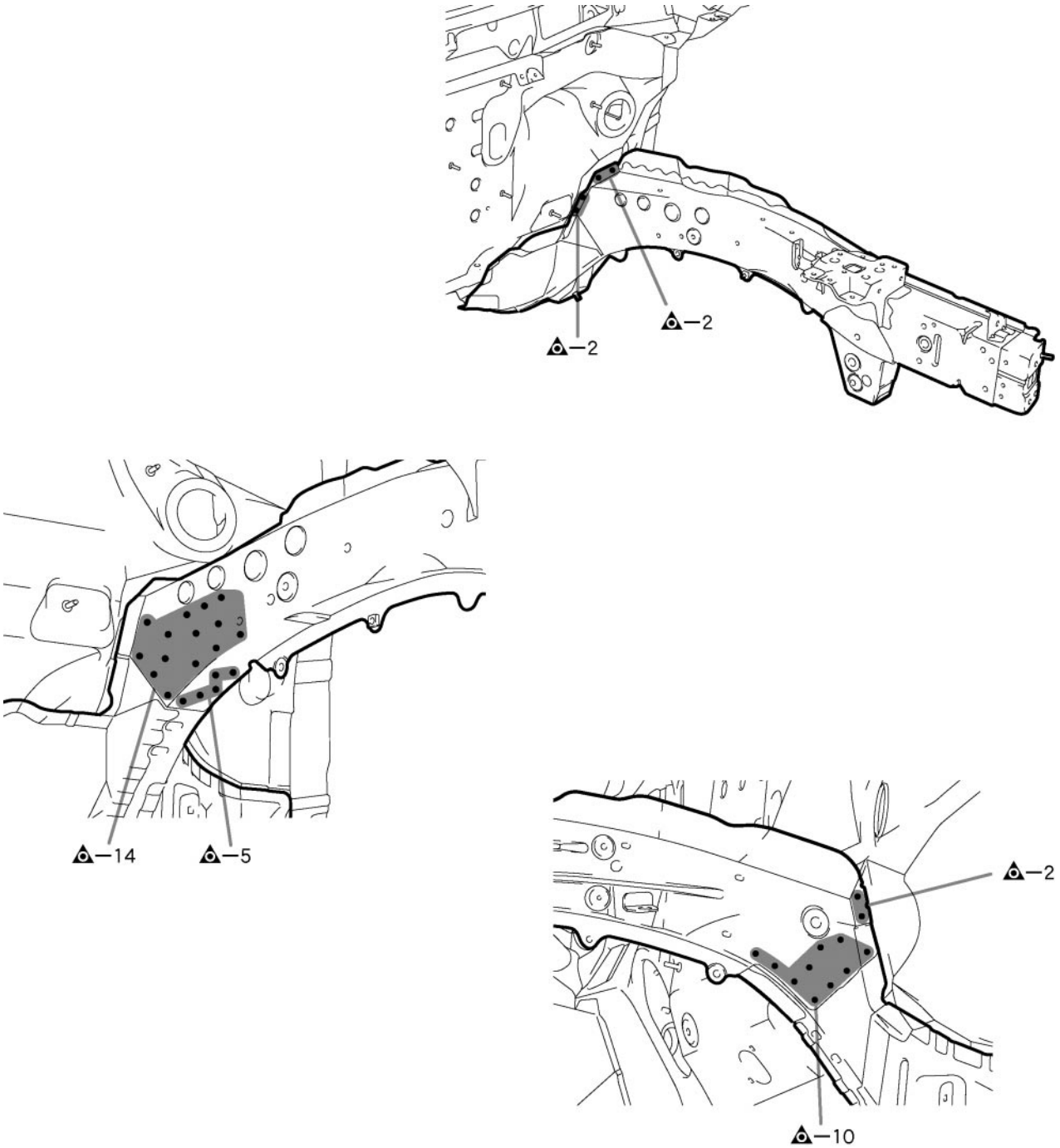

F25716

Symbol meaning

: MIG Plug Weld

F25718B

INSTALLATION

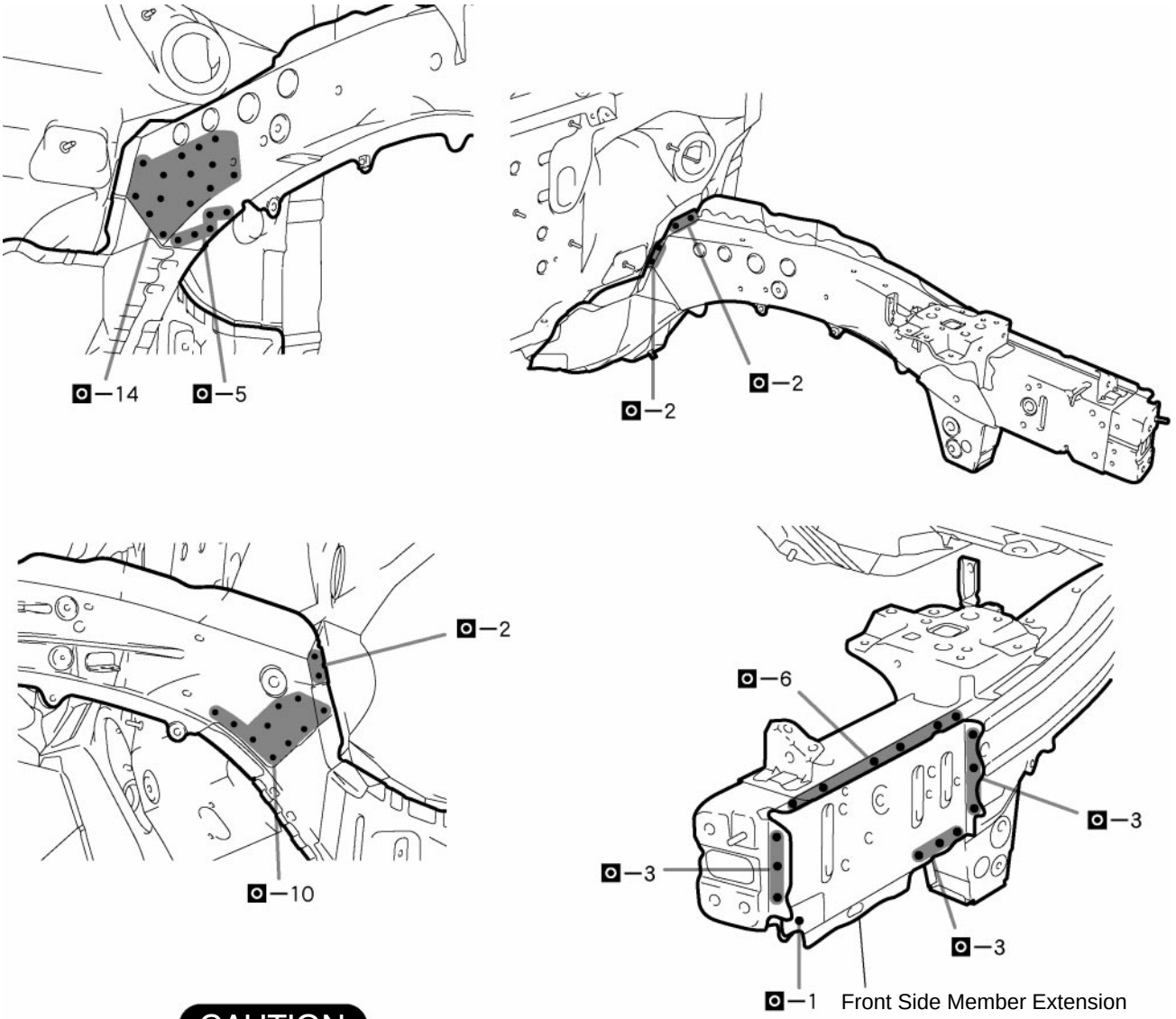

CAUTION

Make sure to attach correctly in accordance with the body dimension diagram as this part affects the front wheel alignment.

F25718

INSTALLATION POINT

1 Temporarily install the new parts and measure each part of the new parts in accordance with the body dimension diagram. (See the body dimension diagram)
2 After welding, apply body sealer and undercoating to the corresponding parts. (See the paint·coating)
3 After applying the top coat, apply anti-rust agent to the internal panel portion of the closed section structural weld points.

COWL TOP SIDE REINFORCEMENT (ASSY)

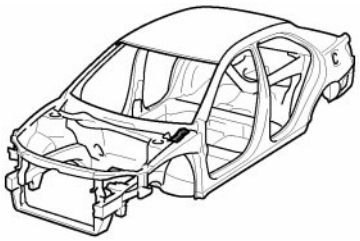

F25720A

Symbol meaning

REMOVAL	: Cut with disc sander, etc.
INSTALLATION	: Tack Weld

F25720B

REMOVAL·INSTALLATION

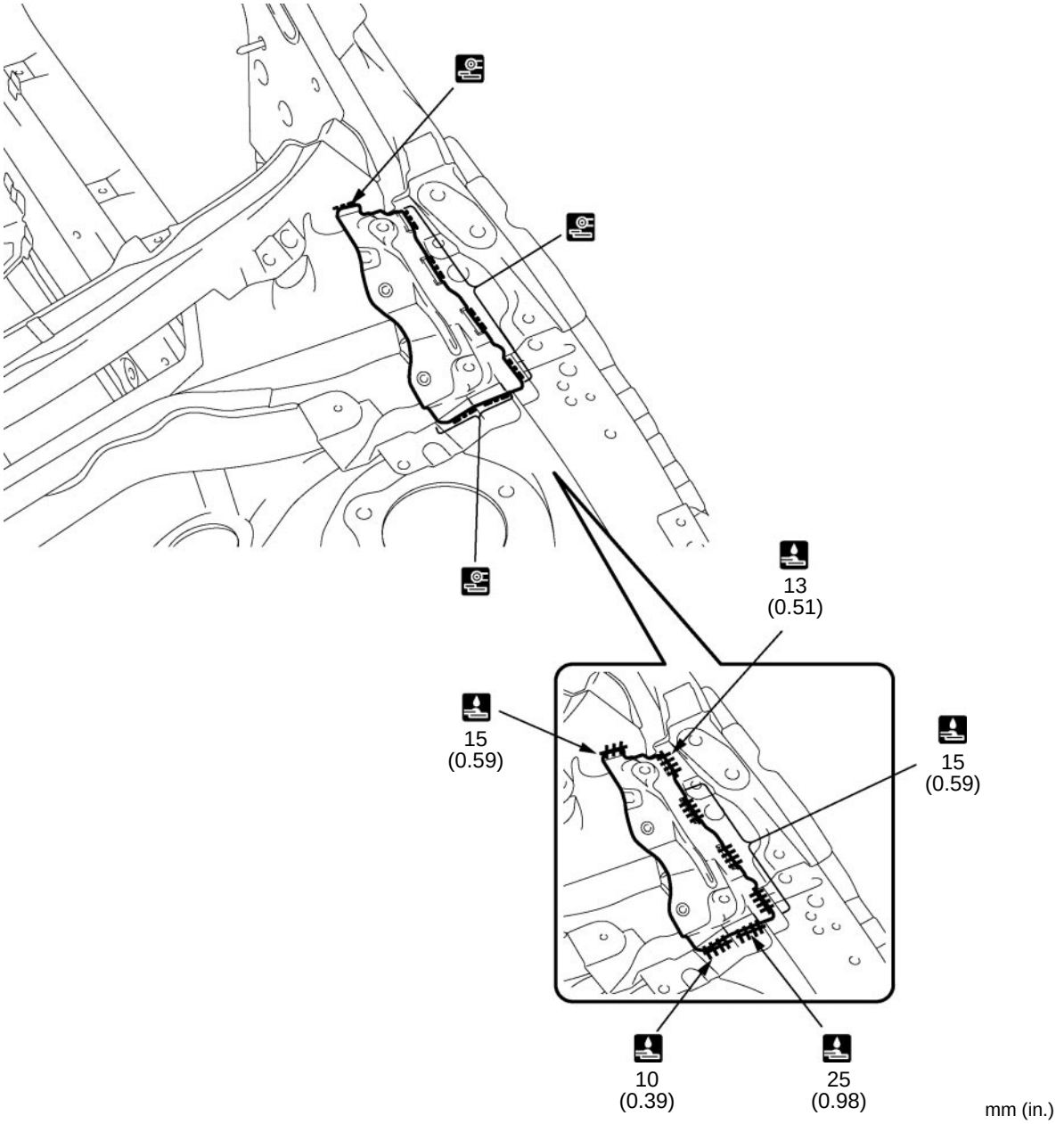

F25720

INSTALLATION POINT

1 After welding, apply body sealer to the corresponding parts. (See the paint·coating)
2 After applying the top coat, apply anti-rust agent to the internal panel portion of the closed section structural weld points.

FRONT BODY PILLAR LOWER GUSSET (ASSY)

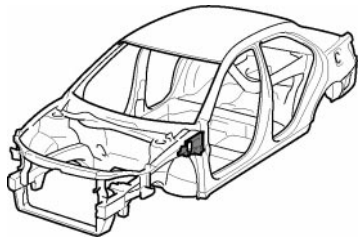

F25719A

Symbol meaning

REMOVAL	: Remove Weld Points
INSTALLATION	: MIG Plug Weld

F25719B

REMOVAL·INSTALLATION

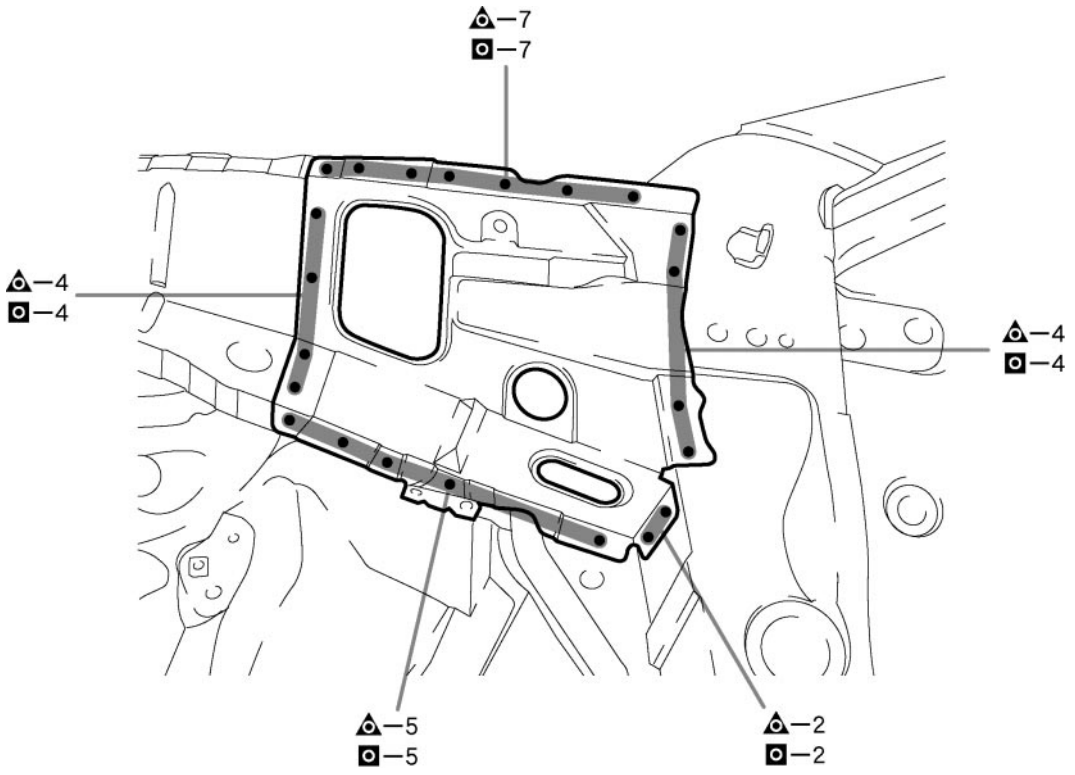

F25719

INSTALLATION POINT

1 After applying the top coat, apply anti-rust agent to the internal panel portion of the closed section structural weld points.

COWL TOP OUTER PANEL (ASSY)

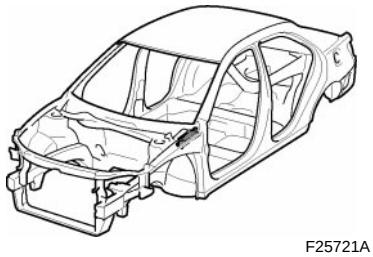

F25721A

With the cowl top side reinforcement and front body pillar lower gusset removed.

Symbol meaning

REMOVAL	: Remove Weld Points	: Cut with disc sander, etc.
INSTALLATION	: MIG Plug Weld	: Tack Weld

F25721B

REMOVAL·INSTALLATION

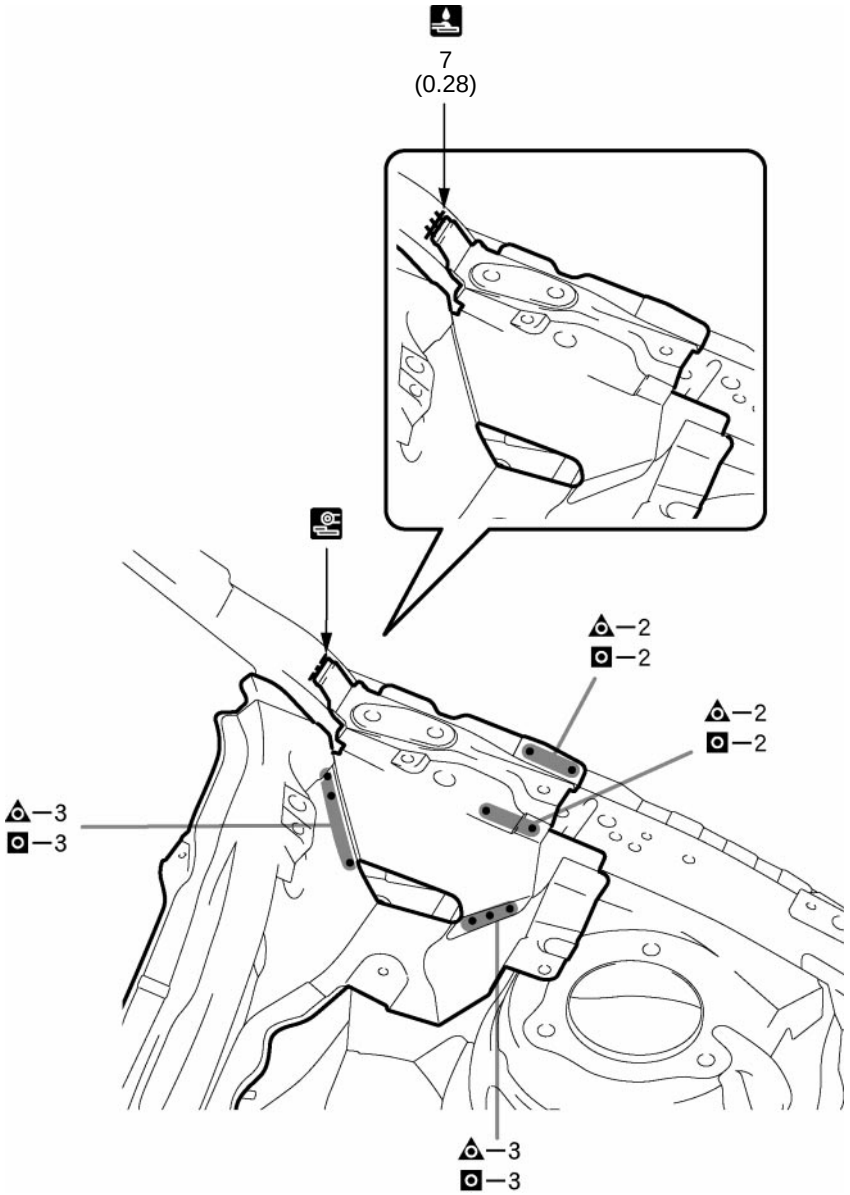

mm (in.)

F25721

INSTALLATION POINT

1 Temporarily install the new parts and measure each part of the new parts in accordance with the body dimension diagram. (See the body dimension diagram)
2 After welding, apply body sealer to the corresponding parts. (See the paint·coating)
3 After applying the top coat, apply anti-rust agent to the internal panel portion of the closed section structural weld points.

FRONT BODY PILLAR (CUT)

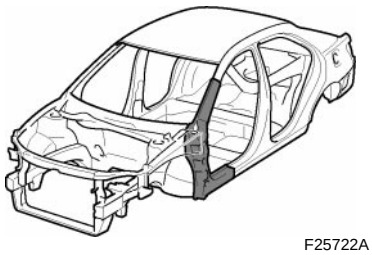

F25722A

With the cowl top outer panel removed.

Symbol meaning

: Cut with disc sander, etc.

: Cut and Join Location

: Remove Weld Points

: Cut Location for Supply Parts

F25722B

REMOVAL

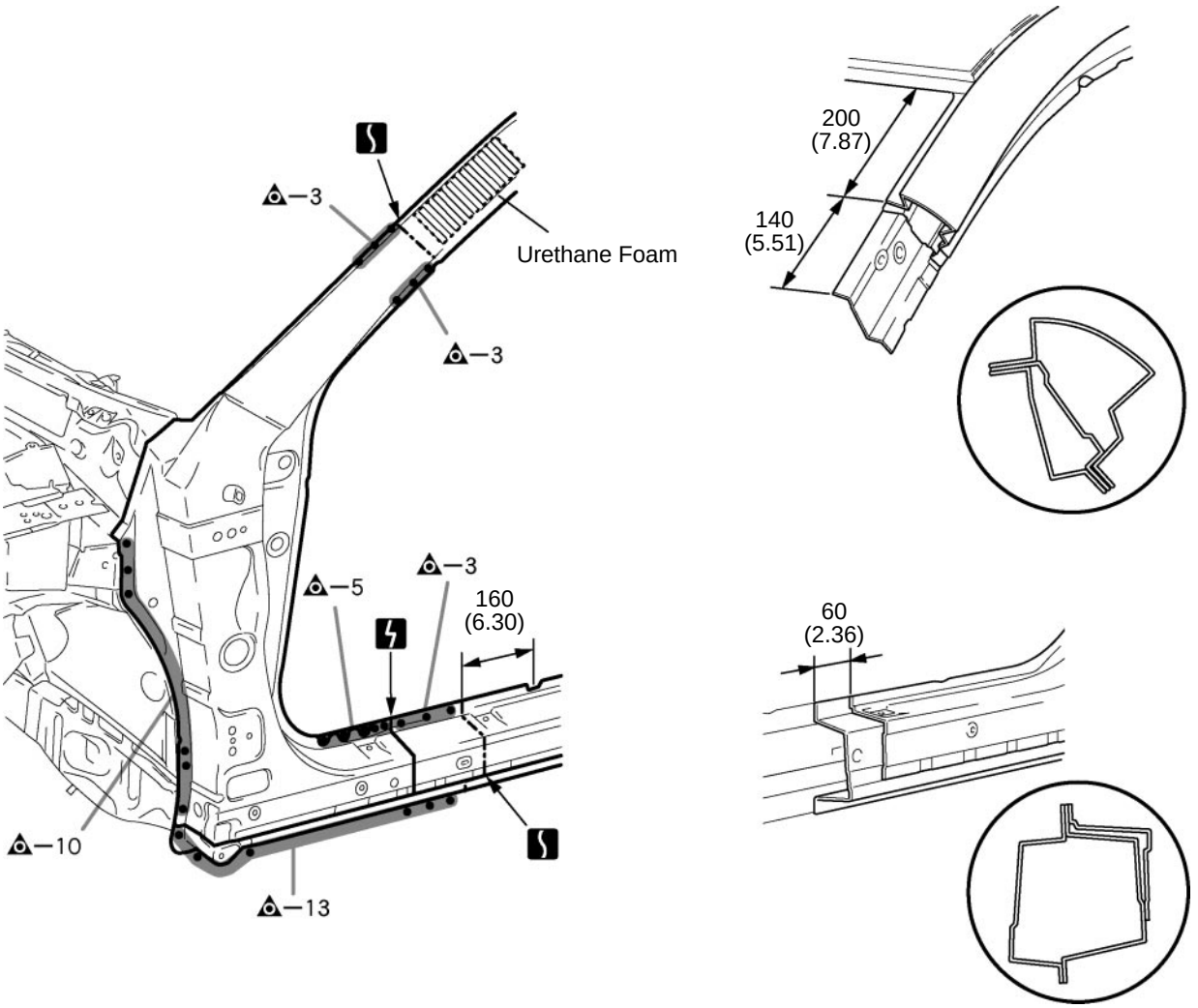

mm (in.)

F25722

Symbol meaning

: Cut with disc sander, etc.

: Cut and Join Location

: Remove Weld Points

: Cut Location for Supply Parts

F25722B

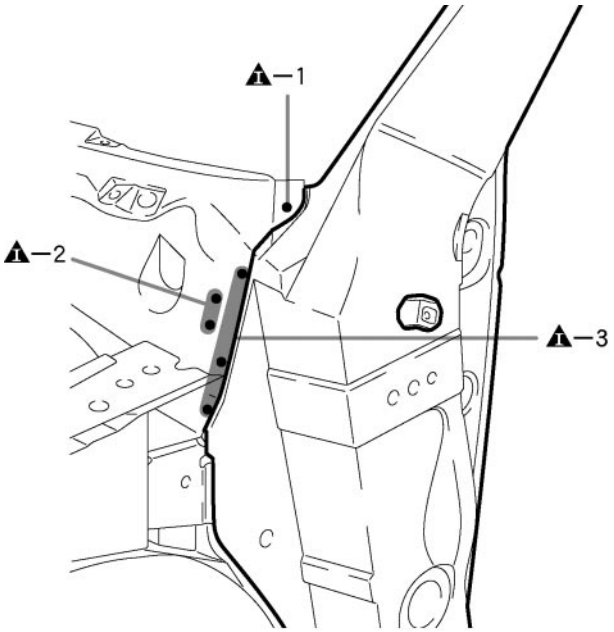

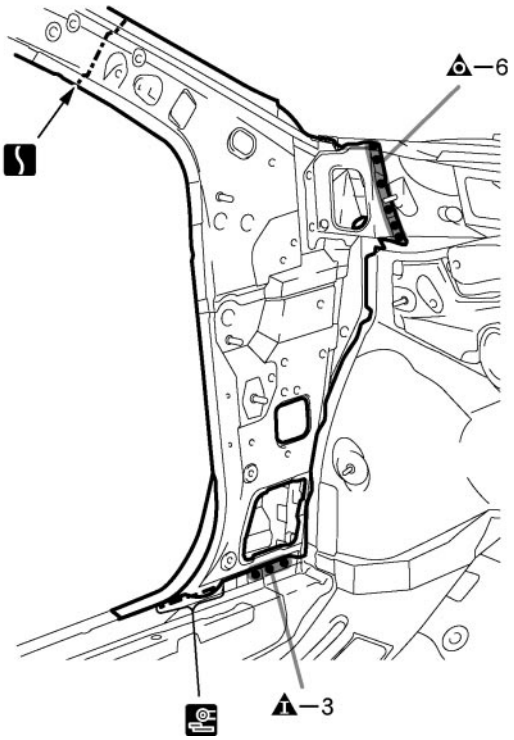

F25723

Symbol meaning

: MIG Plug Weld : Cut and Join Location

: Tack Weld : Butt Weld : Body Sealer

F25724B

INSTALLATION

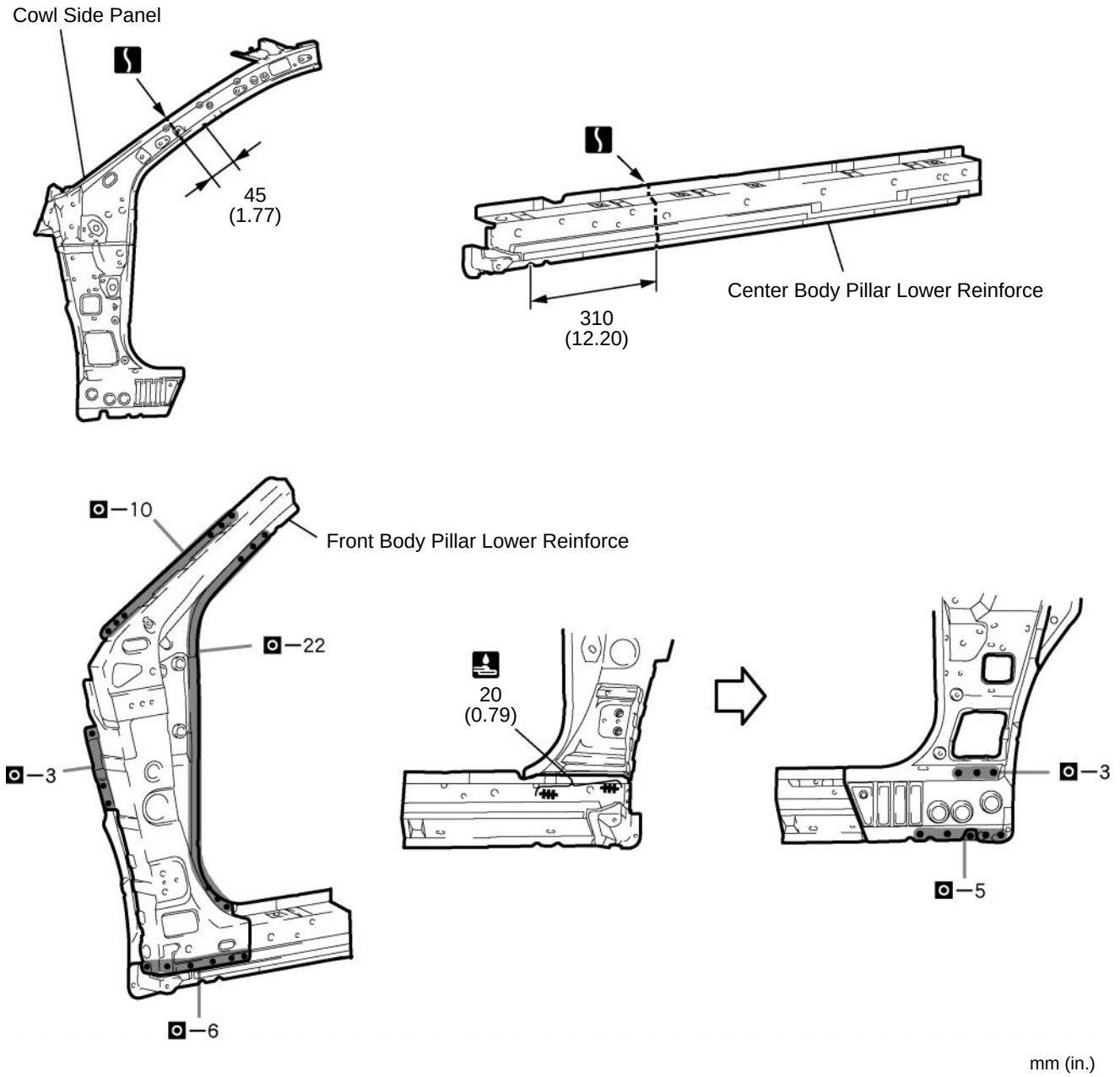

F25724

INSTALLATION POINT

1 Before temporarily installing the new parts, weld the center body pillar lower reinforce, front body pillar lower reinforce and cowl side panel with the standard number of welding points.

Symbol meaning

: MIG Plug Weld : Cut and Join Location

: Tack Weld : Butt Weld : Body Sealer

F25724B

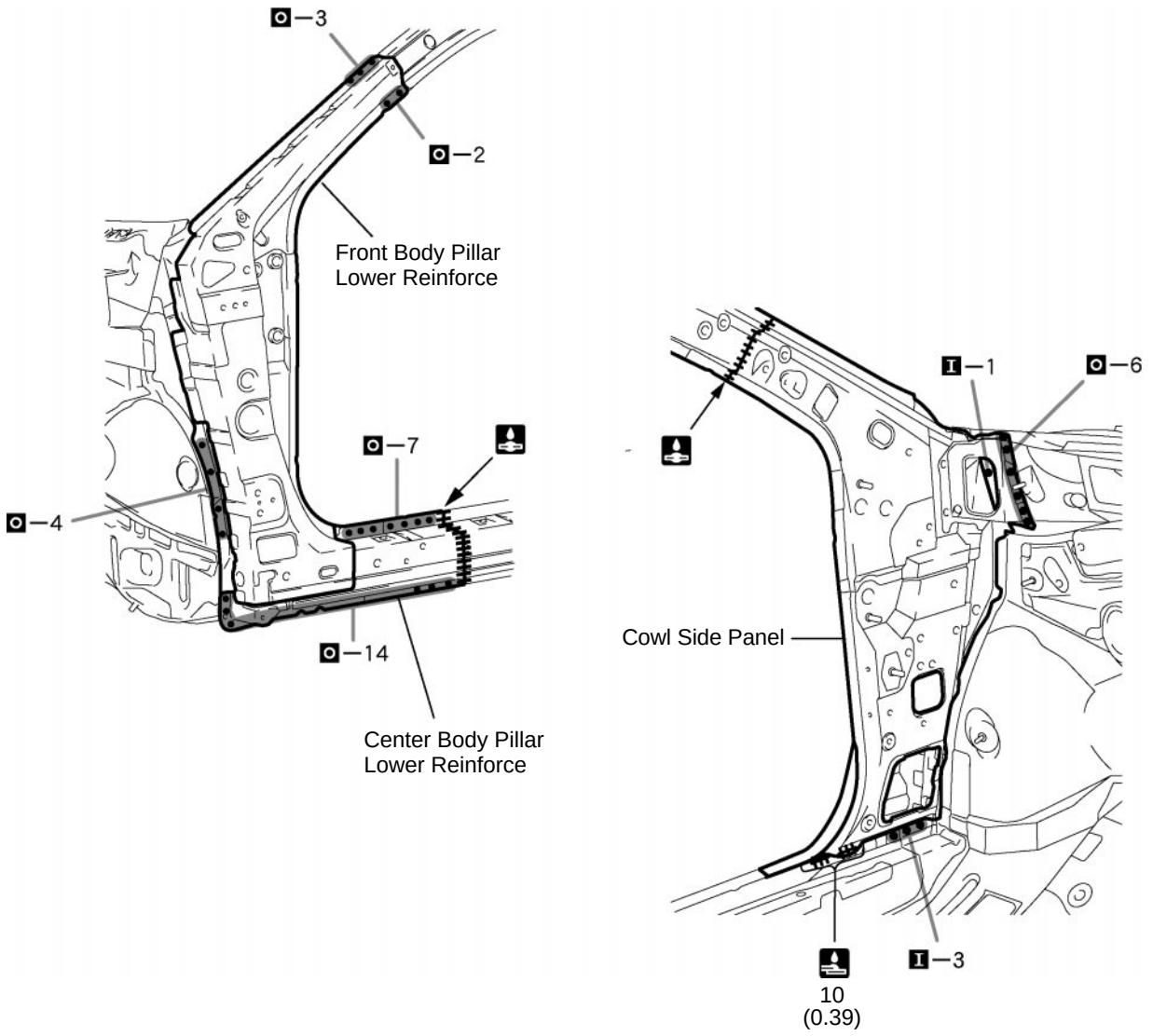

F25725

INSTALLATION POINT

1 Inspect the fitting of the related parts around the new parts before welding. This affects the appearance of the finish.
2 Temporarily install the new parts and measure each part of the new parts in accordance with the body dimension diagram. (See the body dimension diagram)
3 After welding the center body pillar lower reinforce, front body pillar lower reinforce and cowl side panel to the vehicle side, install the front body upper outer pillar and center body outer pillar.

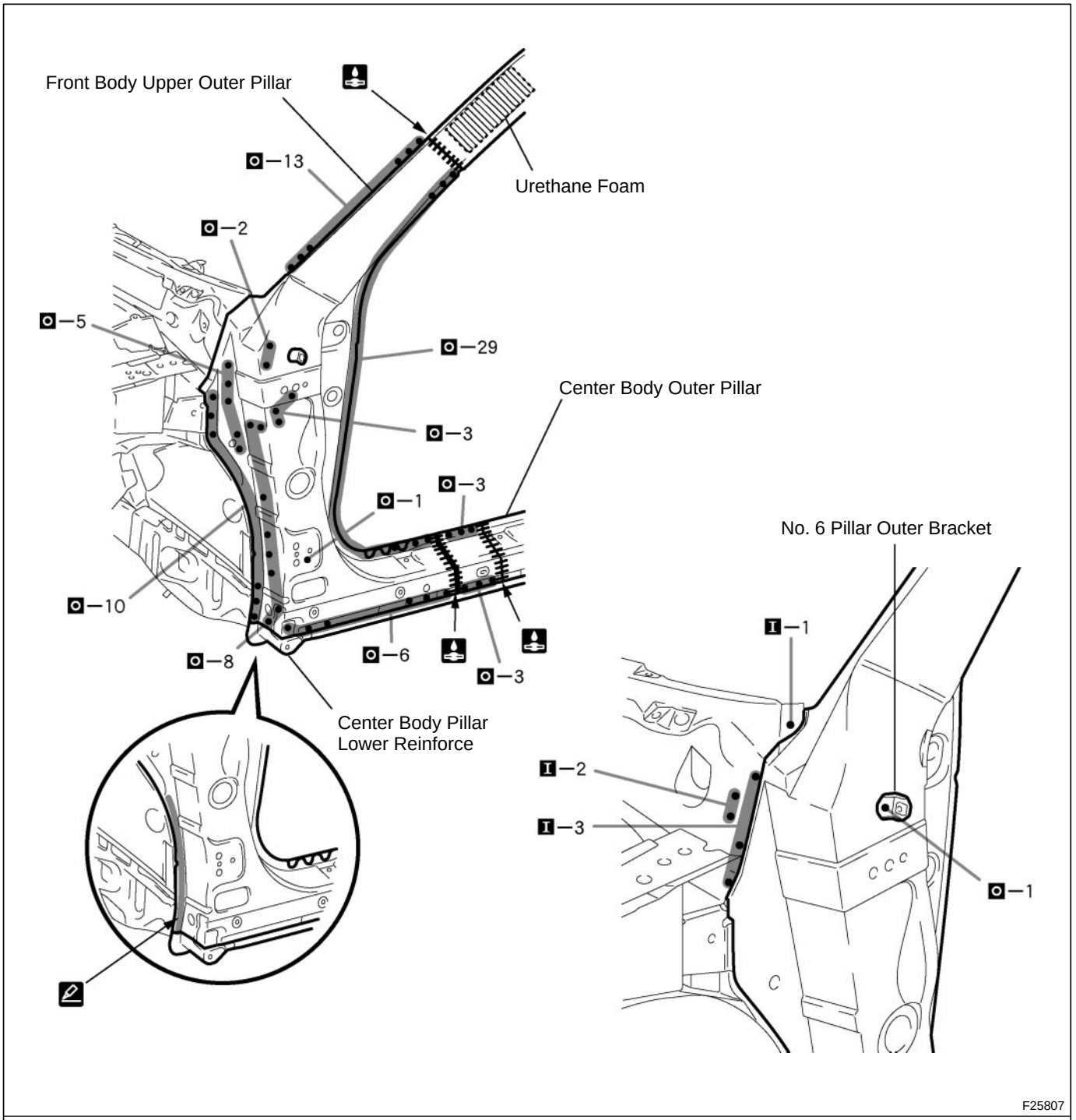

INSTALLATION POINT

1 Inspect the fitting of the related parts around the new parts before welding. This affects the appearance of the finish.
2 Temporarily install the new parts and measure each part of the new parts in accordance with the body dimension diagram. (See the body dimension diagram)
3 Before installing a new part, apply body sealer.
HINT:
1) Apply sealer in an even, continuous bead.
4 After welding the center body pillar lower reinforce and front body pillar lower reinforce to the vehicle side, install the front body upper outer pillar, center body outer pillar and No.6 pillar outer bracket.
5 After welding, apply the polyurethane foam to the corresponding parts.(See the paint·coating)
6 After welding, apply body sealer and undercoating to the corresponding parts.(See the paint·coating)
7 After applying the top coat, apply anti-rust agent to the internal panel portion of the closed section structural weld points.

CENTER BODY PILLAR (CUT)

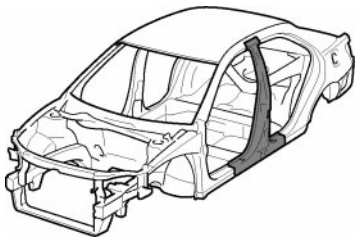

F25726A

Symbol meaning

: Cut with disc sander, etc.

: Remove Weld Points : Cut and Join Location : Cut Location for Supply Parts

F25726B

REMOVAL

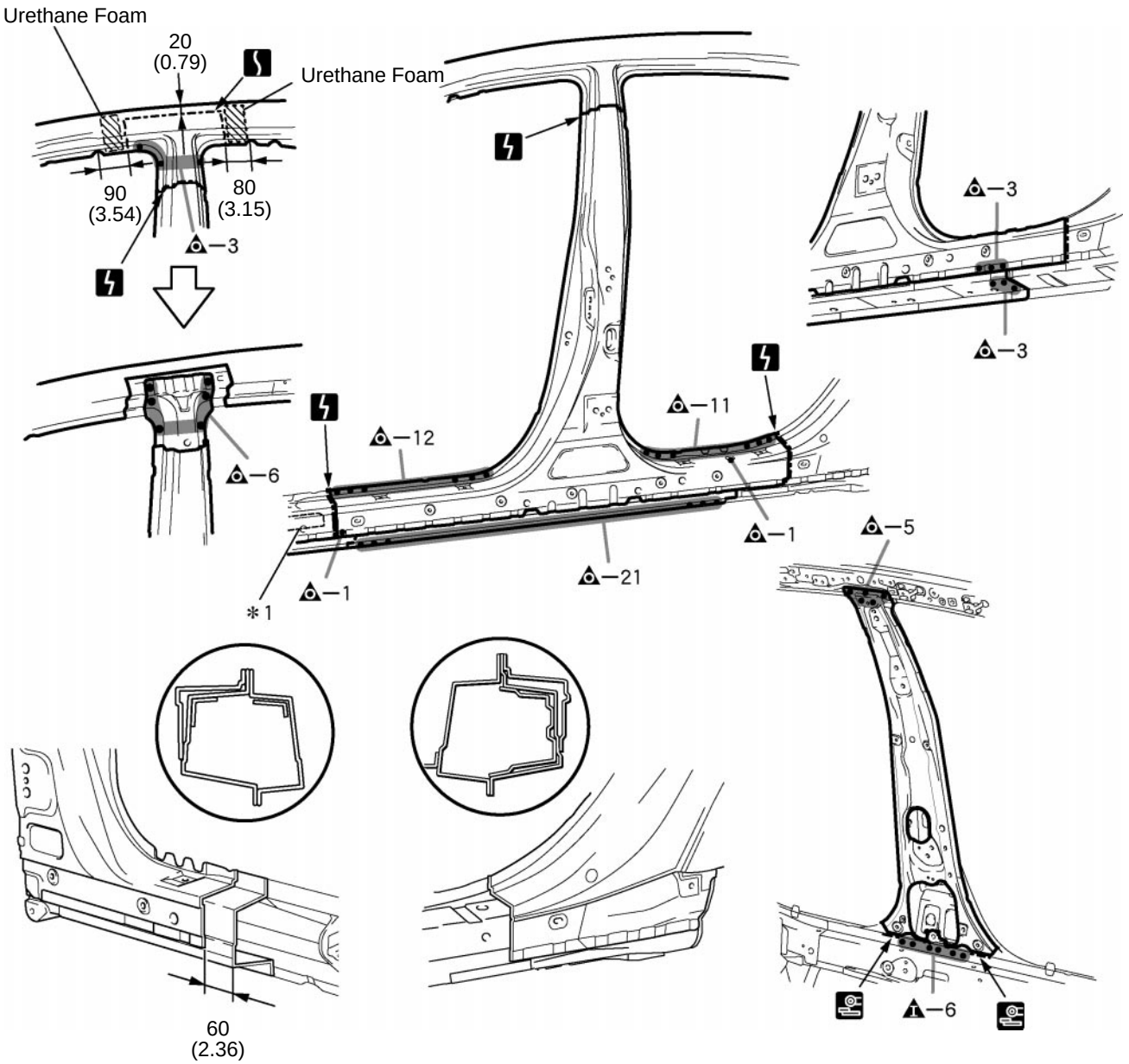

mm (in.)

F25726

REMOVAL POINT

1 *1: Take care not to damage the internal reinforcement.

Symbol meaning

: MIG Plug Weld : Cut and Join Location

: Tack Weld : Butt Weld

F25727B

INSTALLATION

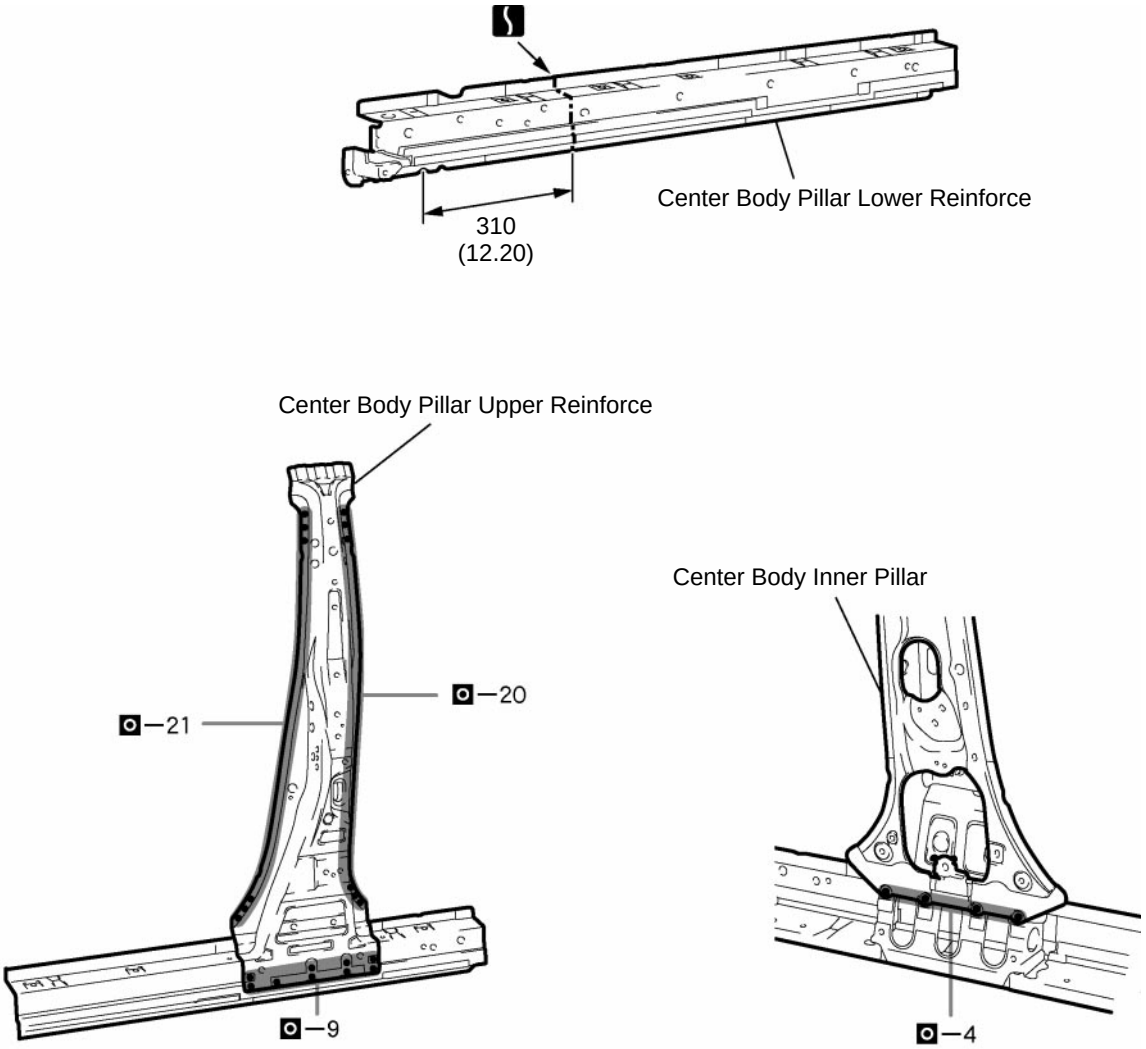

mm (in.)

F25727

INSTALLATION POINT

1 Before temporarily installing the new parts, weld the center body pillar lower reinforce, center body pillar upper reinforce and center body inner pillar with the standard number of welding points.

Symbol meaning

: MIG Plug Weld : Cut and Join Location

: Tack Weld : Butt Weld

F25727B

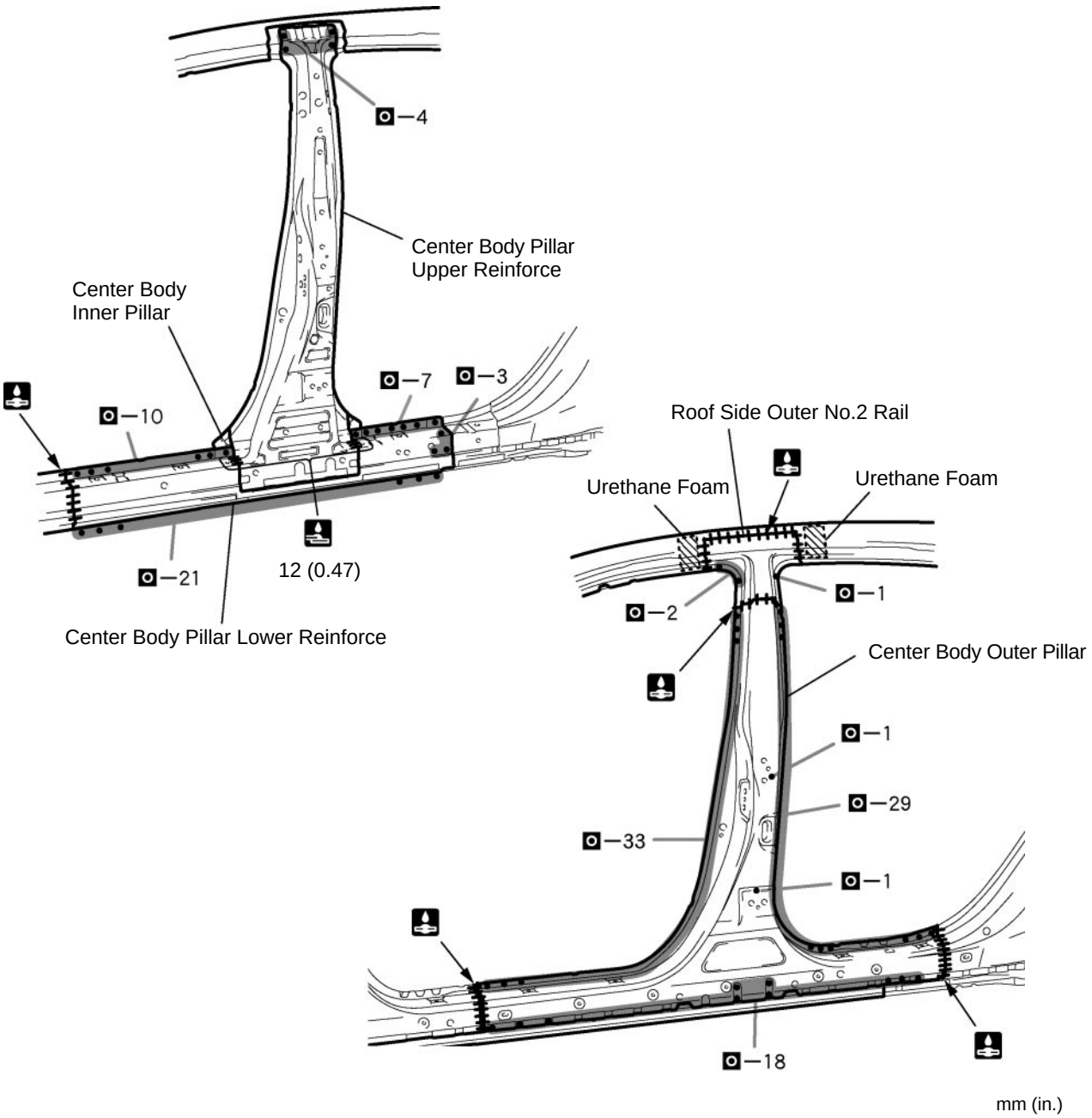

F25728

INSTALLATION POINT

1 Inspect the fitting of the related parts around the new parts before welding. This affects the appearance of the finish.

2 Temporarily install the new parts and measure each part of the new parts in accordance with the body dimension diagram. (See the body dimension diagram)

3 After welding the center body pillar lower reinforce, center body pillar upper reinforce and center body inner pillar to the vehicle side, install the center body outer pillar and roof side outer No.2 rail.

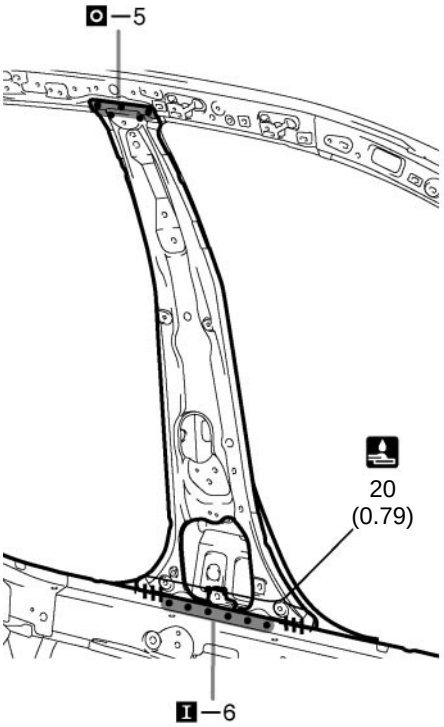

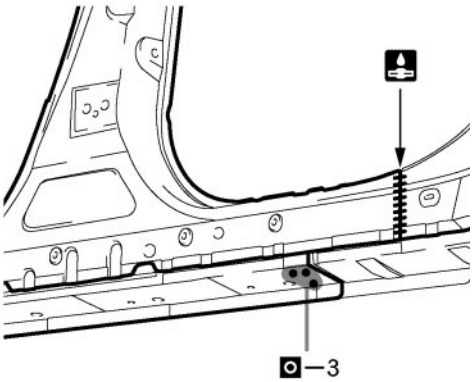

F25808

INSTALLATION POINT

1 Inspect the fitting of the related parts around the new parts before welding. This affects the appearance of the finish.
2 Temporarily install the new parts and measure each part of the new parts in accordance with the body dimension diagram. (See the body dimension diagram)
3 After welding, apply the polyurethane foam to the corresponding parts. (See the paint·coating)
4 After welding, apply body sealer and undercoating to the corresponding parts. (See the paint·coating)
5 After applying the top coat, apply anti-rust agent to the internal panel portion of the closed section structural weld points.

FRONT DOOR OUTER PANEL (ASSY)

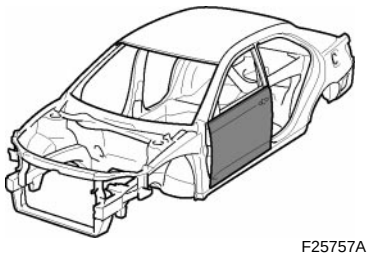

F25757A

Symbol meaning

: Remove Weld Points

F25757B

REMOVAL

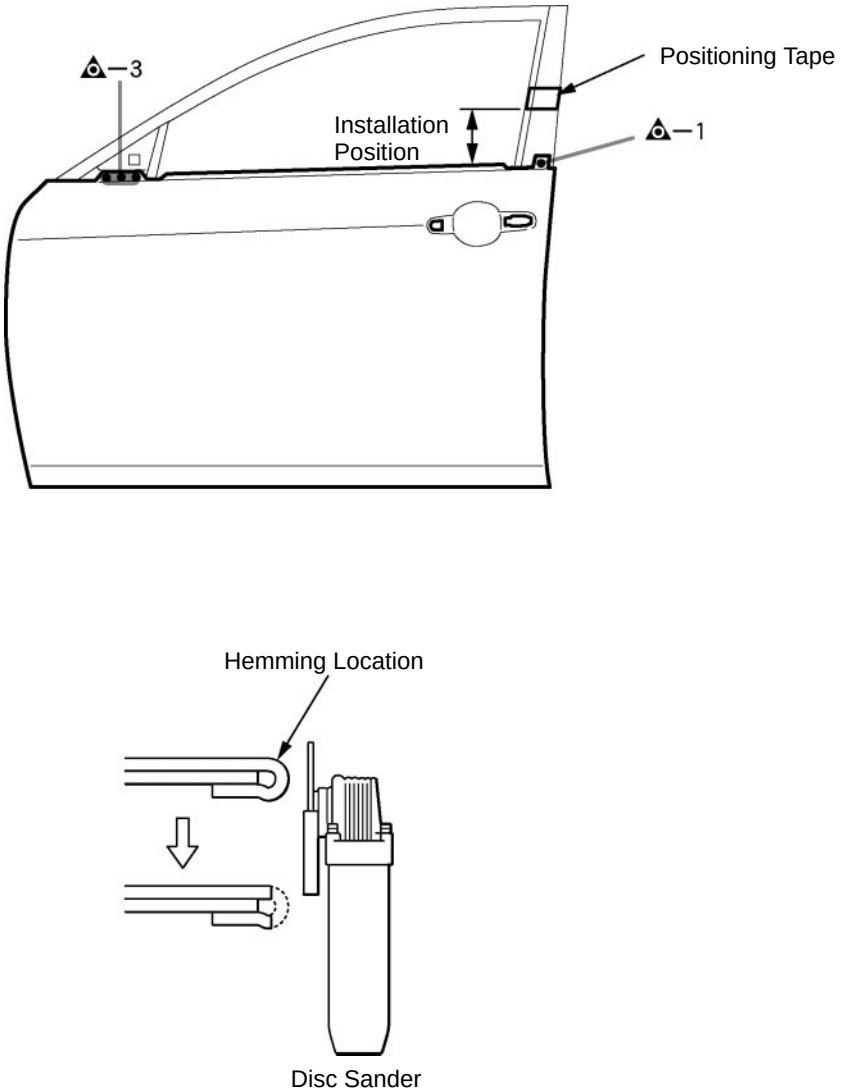

F25757

REMOVAL POINT

1 Before removing the outer panel, mark the installation position with tape.
2 Before removing the outer panel, establish its exact position in relation to the window frame using a reference marker, etc.
3 After grinding off the hemming location, remove the outer panel.

Symbol meaning

: MIG Plug Weld : Spot MIG Weld : Body Sealer

F25758B

INSTALLATION

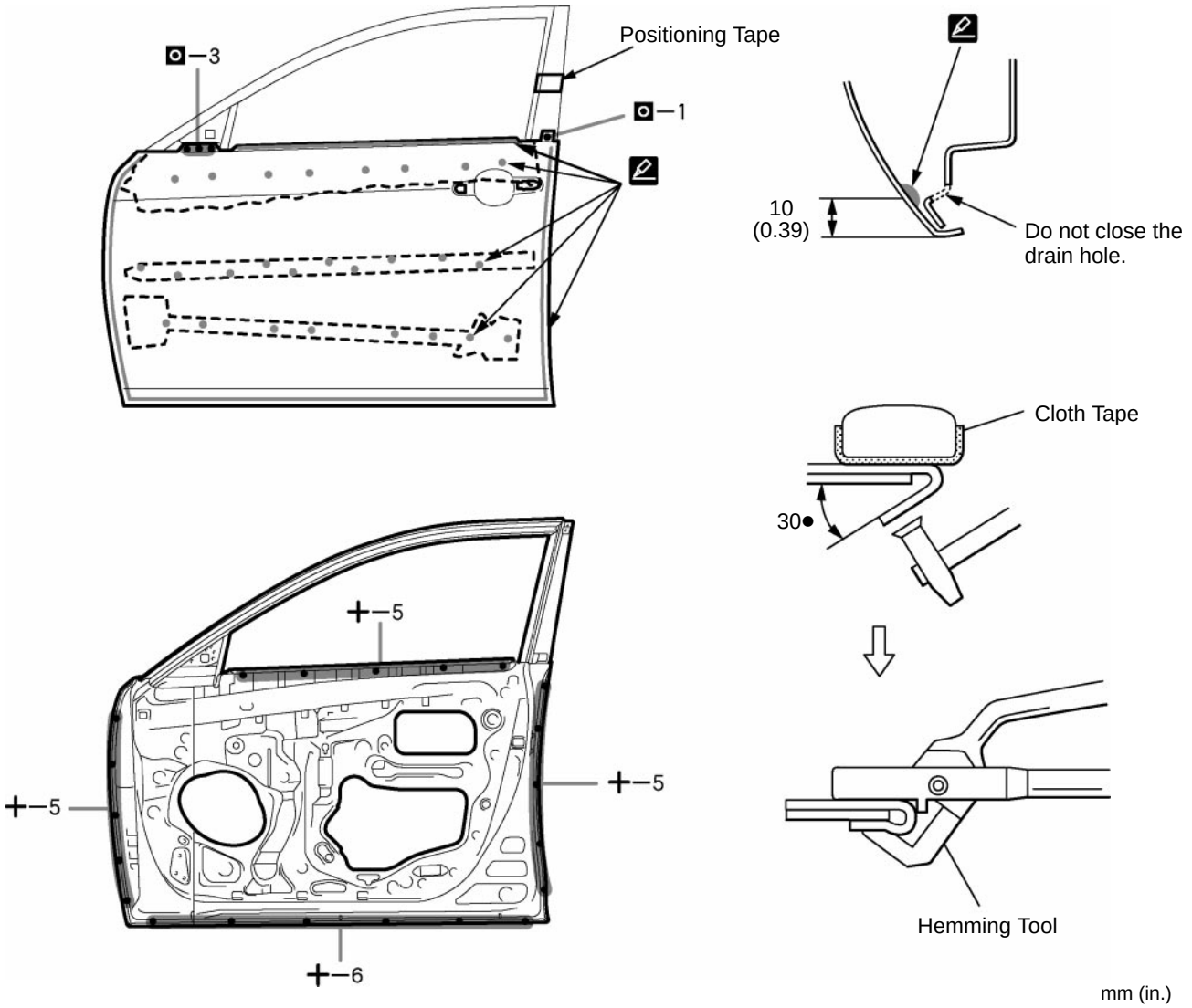

F25758

INSTALLATION POINT

1 Before temporarily installing the new parts, apply body sealer to the reinforcement, side impact protection beam and backside of the new parts.
HINT:
1) Apply sealer evenly about 10 mm (0.39 in.) from the flange and 3 mm (0.12 in.) in diameter on the outer panel and apply just enough sealer for the reinforcement and side impact protection beam to make contact.

2 Bend the flange hem about 30● with a hammer and dolly. Then, fasten tightly with a hemming tool.
HINT:
1) Perform hemming in three steps, being careful not to warp the panel.
2) If a hemming tool cannot be used, hem with a hammer and dolly.

3 After applying the top coat, apply anti-rust agent to the internal panel portion of the closed section structural weld points.

REAR DOOR OUTER PANEL (ASSY)

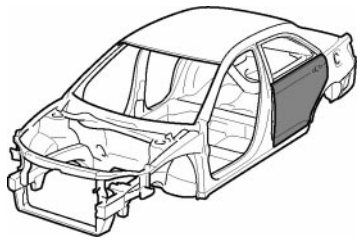

F25759A

Symbol meaning

: Remove Weld Points

F25759B

REMOVAL

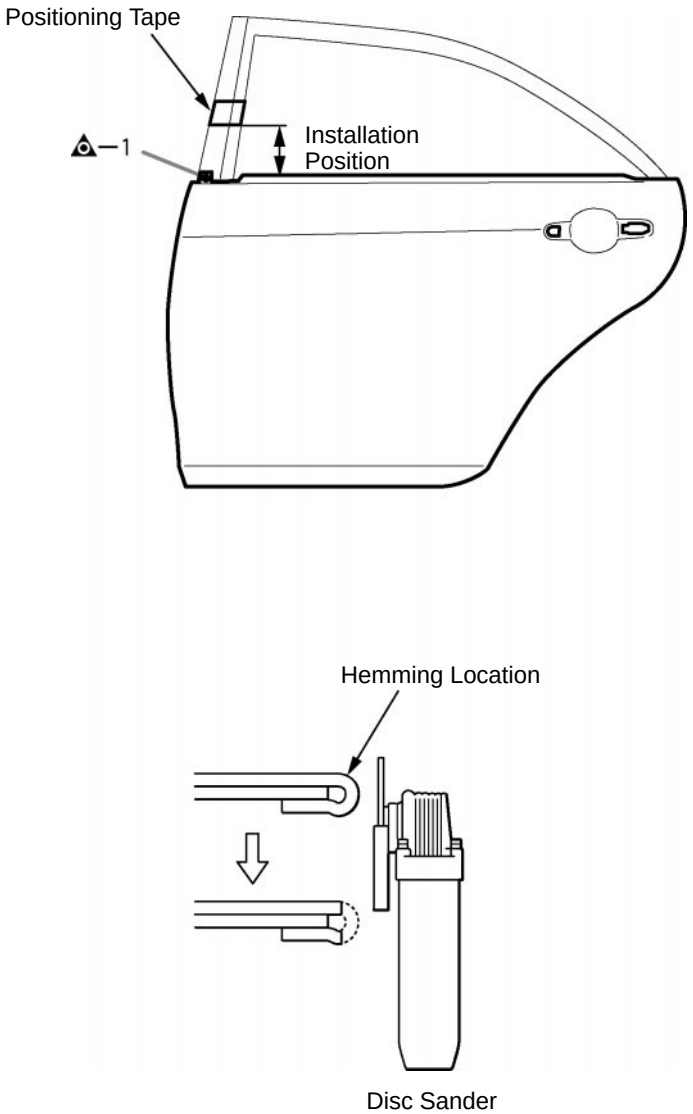

F25759

REMOVAL POINT

1 Before removing the outer panel, mark the installation position with tape.
2 Before removing the outer panel, establish its exact position in relation to the window frame using a reference marker, etc.
3 After grinding off the hemming location, remove the outer panel.

Symbol meaning

: MIG Plug Weld : Spot MIG Weld : Body Sealer

F25760B

INSTALLATION

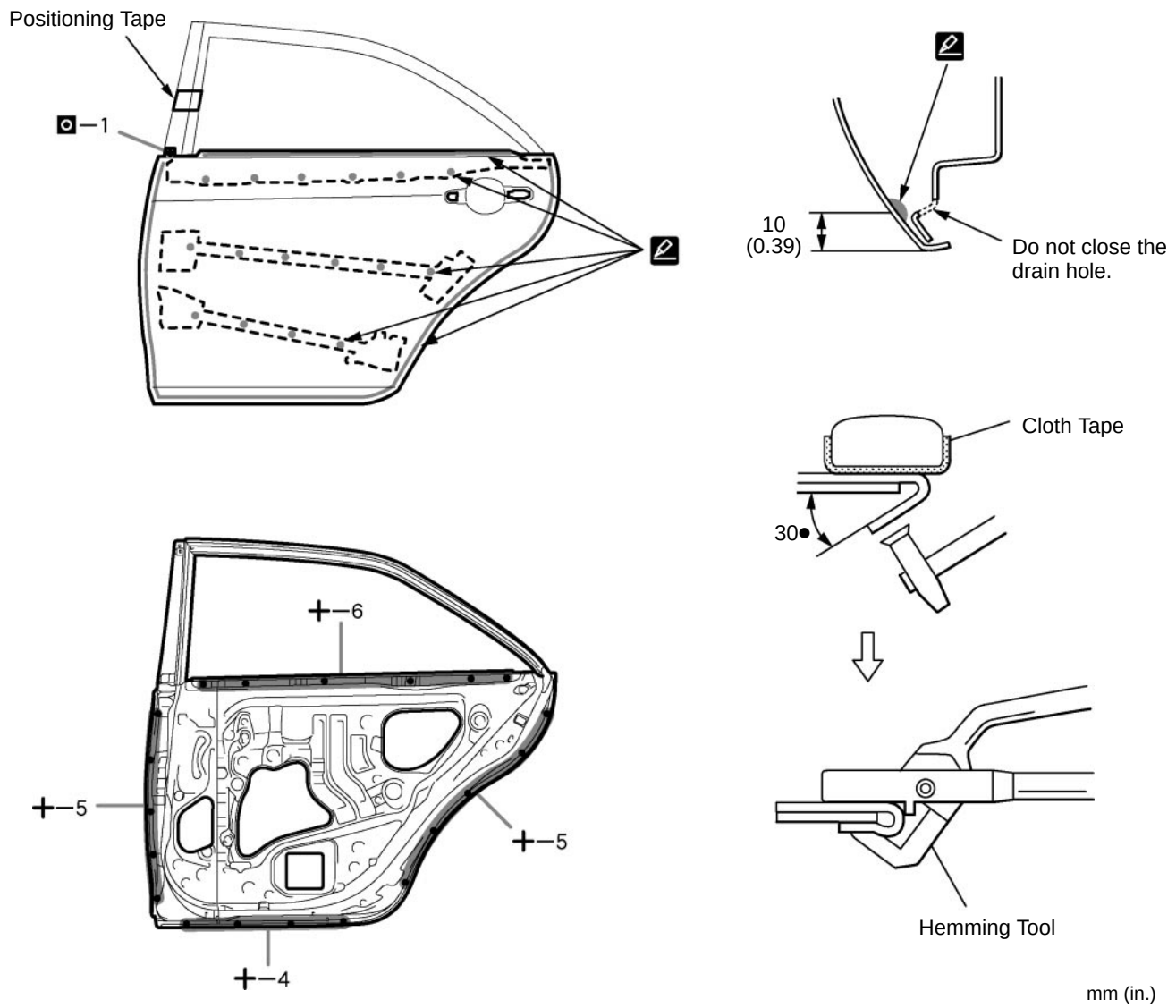

F25760

INSTALLATION POINT

1 Before temporarily installing the new parts, apply body sealer to the reinforcement, side impact protection beam and backside of the new parts.
HINT:
1) Apply sealer evenly about 10 mm (0.39 in.) from the flange and 3 mm (0.12 in.) in diameter on the outer panel and apply just enough sealer for the reinforcement and side impact protection beam to make contact.

2 Bend the flange hem about 30● with a hammer and dolly. Then, fasten tightly with a hemming tool.
HINT:
1) Perform hemming in three steps, being careful not to warp the panel.
2) If a hemming tool cannot be used, hem with a hammer and dolly.

3 After applying the top coat, apply anti-rust agent to the internal panel portion of the closed section structural weld points.

ROCKER OUTER PANEL (CUT-P)

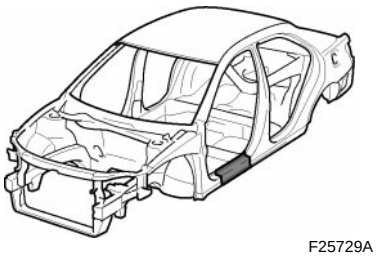

F25729A

Symbol meaning

: Remove Weld Points

: Cut and Join Location

: Cut Location for Supply Parts

F25729B

REMOVAL

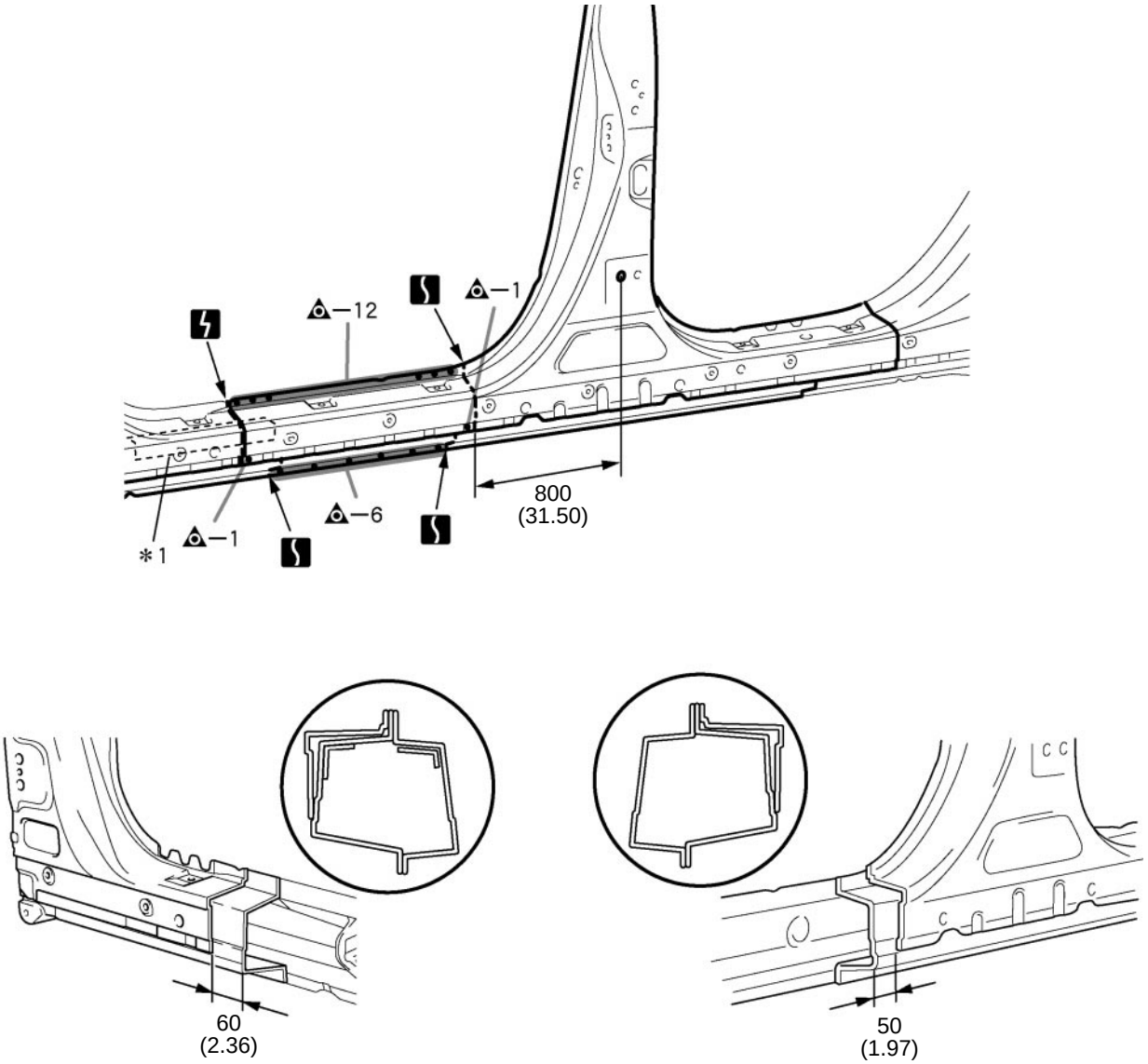

F25729

REMOVAL POINT

1 *1: Take care not to damage the internal reinforcement.

Symbol meaning

: MIG Plug Weld : Cut and Join Location : Butt Weld

F25730B

INSTALLATION

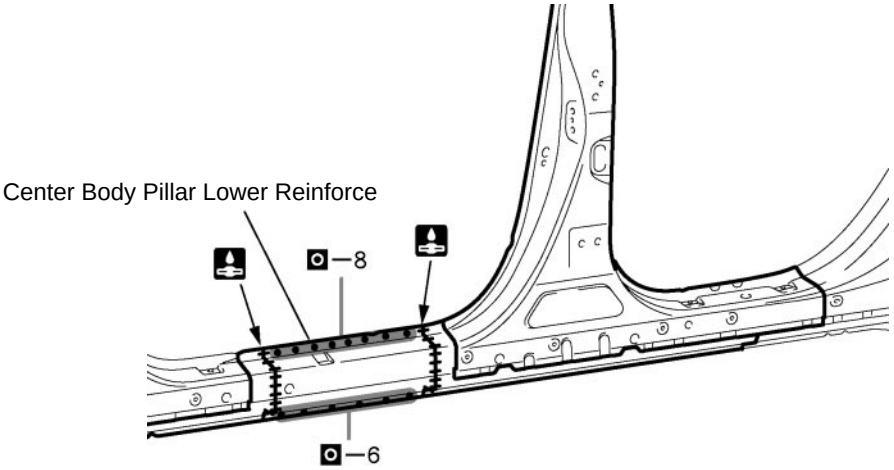

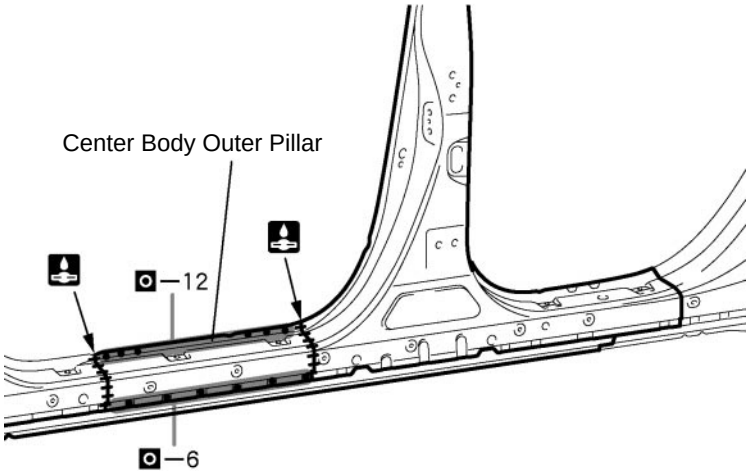

mm (in.)

F25730

INSTALLATION POINT

1 Inspect the fitting of the related parts around the new parts before welding. This affects the appearance of the finish.
2 Temporarily install the new parts and measure each part of the new parts in accordance with the body dimension diagram. (See the body dimension diagram)
3 After welding the center body pillar lower reinforce to the vehicle side, install the center body outer pillar.
4 After applying the top coat, apply anti-rust agent to the internal panel portion of the closed section structural weld points.

ROCKER OUTER EXTENSION (ASSY): TMC made

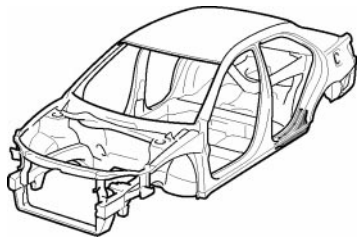

F25731A

Symbol meaning

: Remove Weld Points : Cut and Join Location : Cut Location for Supply Parts

F25731B

REMOVAL

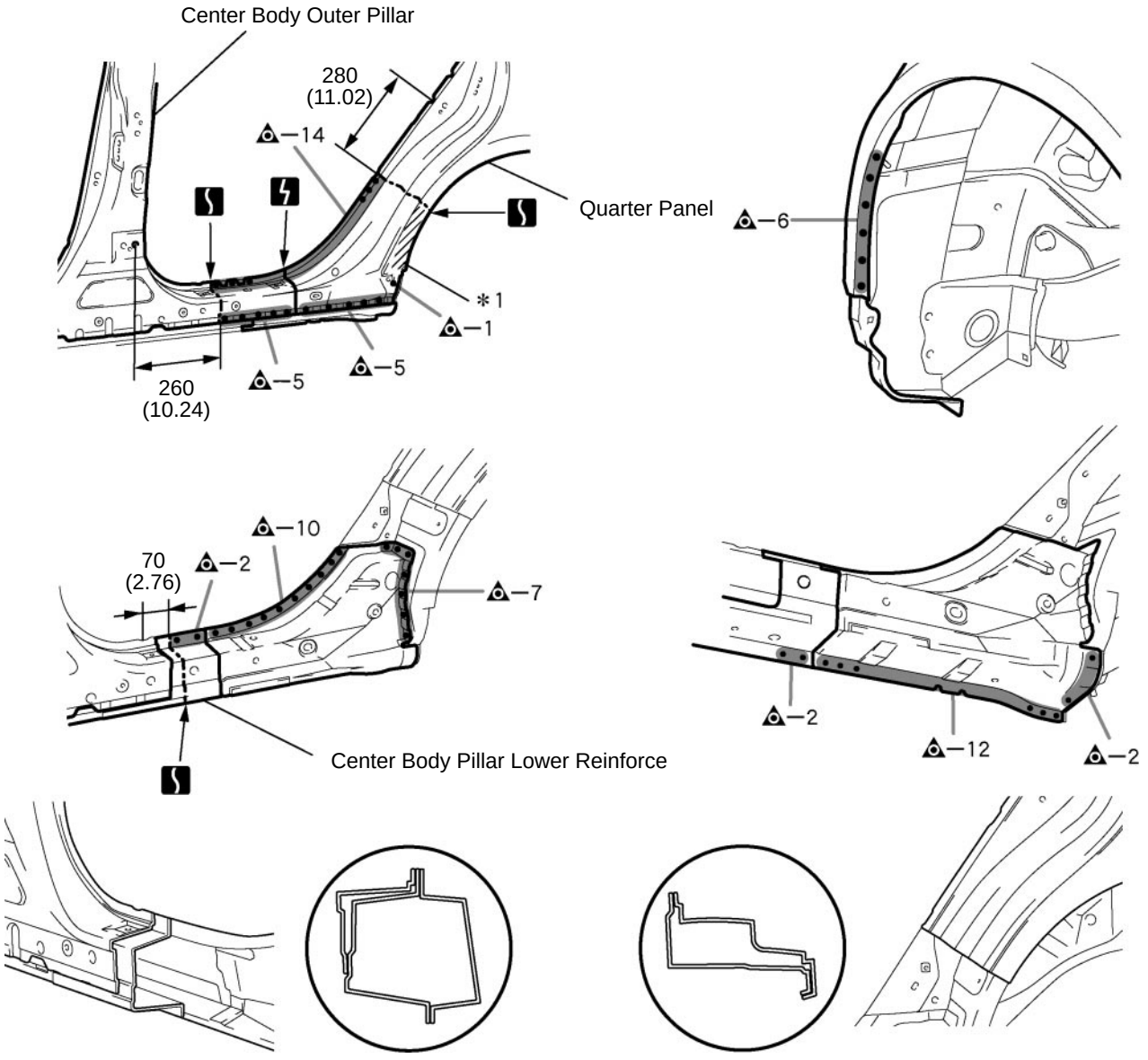

mm (in.)

F25731

REMOVAL POINT

1 *1 in illustration above indicates where the adhesive is.

2 After removing the center body outer pillar and quarter panel, remove the rocker outer extension and center body pillar lower reinforce.

Symbol meaning

: MIG Plug Weld : Butt Weld : Body Sealer

F25732B

INSTALLATION

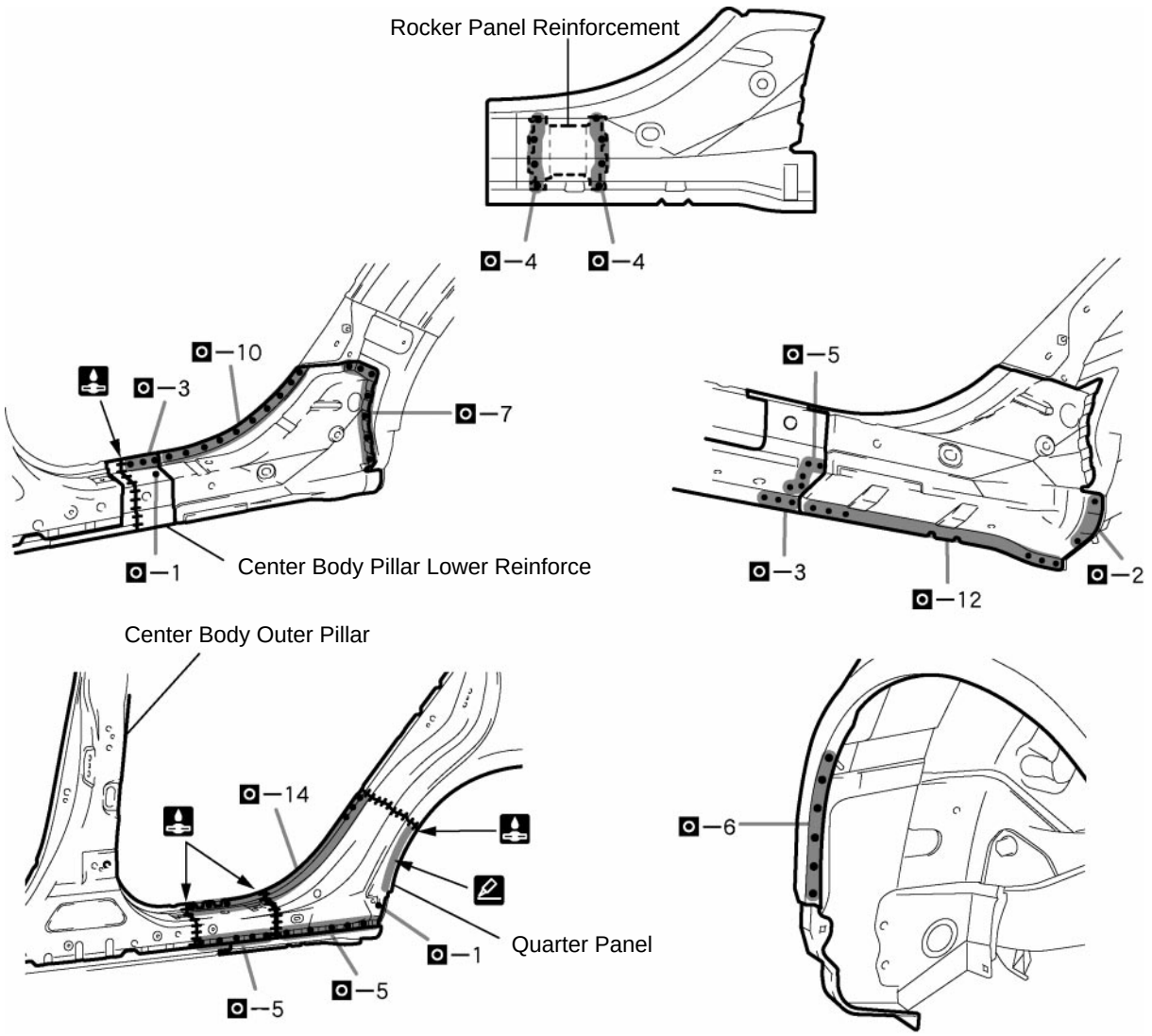

F25732

INSTALLATION POINT

1 Inspect the fitting of the related parts around the new parts before welding. This affects the appearance of the finish.
2 Temporarily install the new parts and measure each part of the new parts in accordance with the body dimension diagram. (See the body dimension diagram)
3 Before temporarily installing the new parts, weld the rocker panel reinforcement and rocker outer extension with the standard number of welding points.
4 Before installing a new part, apply body sealer.
HINT:
1) Apply sealer in an even, continuous bead.
5 After welding the center body pillar lower reinforce and rocker outer extension to the vehicle side, install the center body outer pillar and quarter panel.
6 After welding, apply body sealer and undercoating to the corresponding parts.(See the paint·coating)
7 After applying the top coat, apply anti-rust agent to the internal panel portion of the closed section structural weld points.

QUARTER WHEEL HOUSING OUTER PANEL (ASSY): TMC made

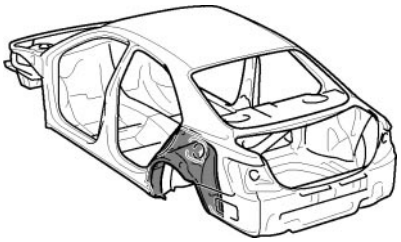

F25739A

With the quarter panel removed.

Symbol meaning

REMOVAL	: Remove Weld Points	: Cut with disc sander, etc.
		: Cut and Join Location
INSTALLATION	: MIG Plug Weld	: Tack Weld : Butt Weld

F25739B

REMOVAL·INSTALLATION

[LH]

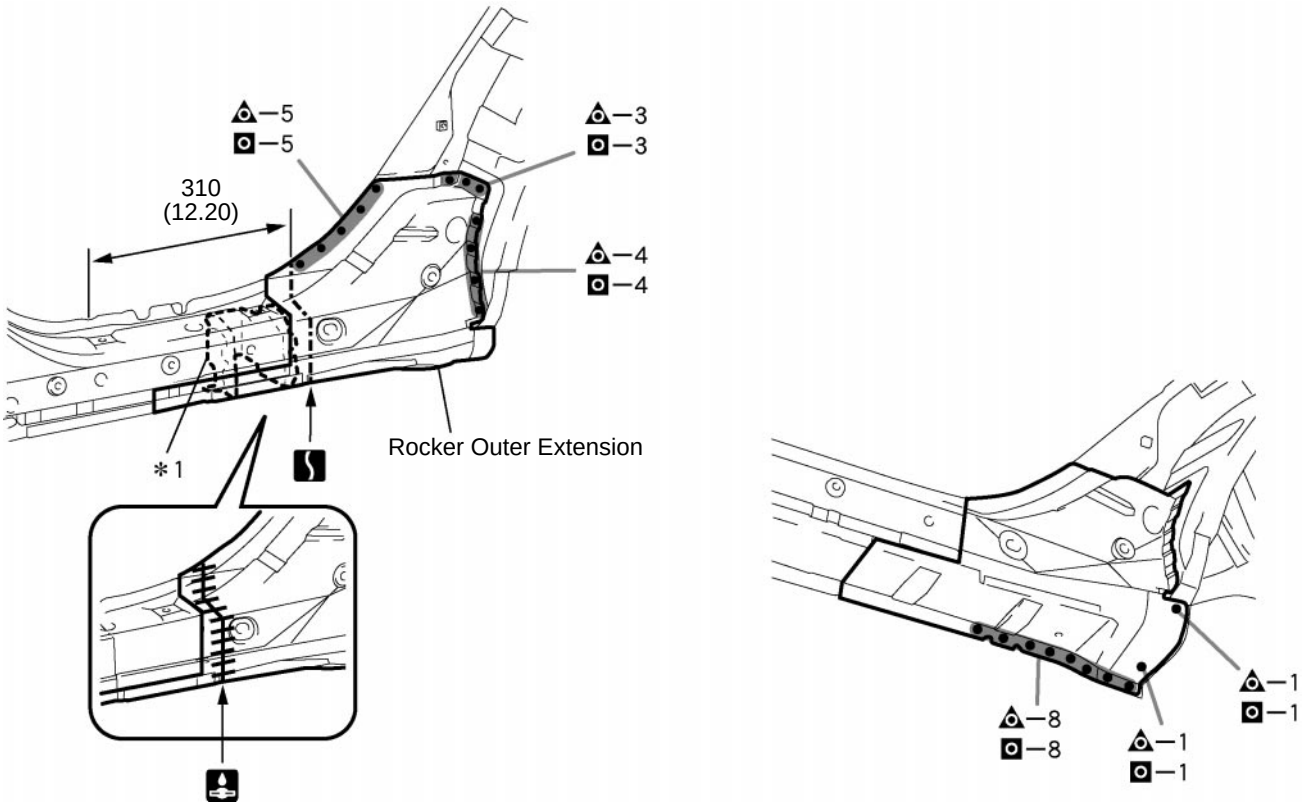

mm (in.)

F25739

REMOVAL POINT

1 *1: Take care not to damage the internal reinforcement.

2 After removing the rocker outer extension, remove the quarter wheel housing outer panel.

INSTALLATION POINT

1 After welding the quarter wheel housing outer panel to the vehicle side, install the rocker outer extension.

Symbol meaning

REMOVAL	: Remove Weld Points	: Cut with disc sander, etc.
		: Cut and Join Location
INSTALLATION	: MIG Plug Weld	: Tack Weld : Butt Weld

F25739B

[LH]

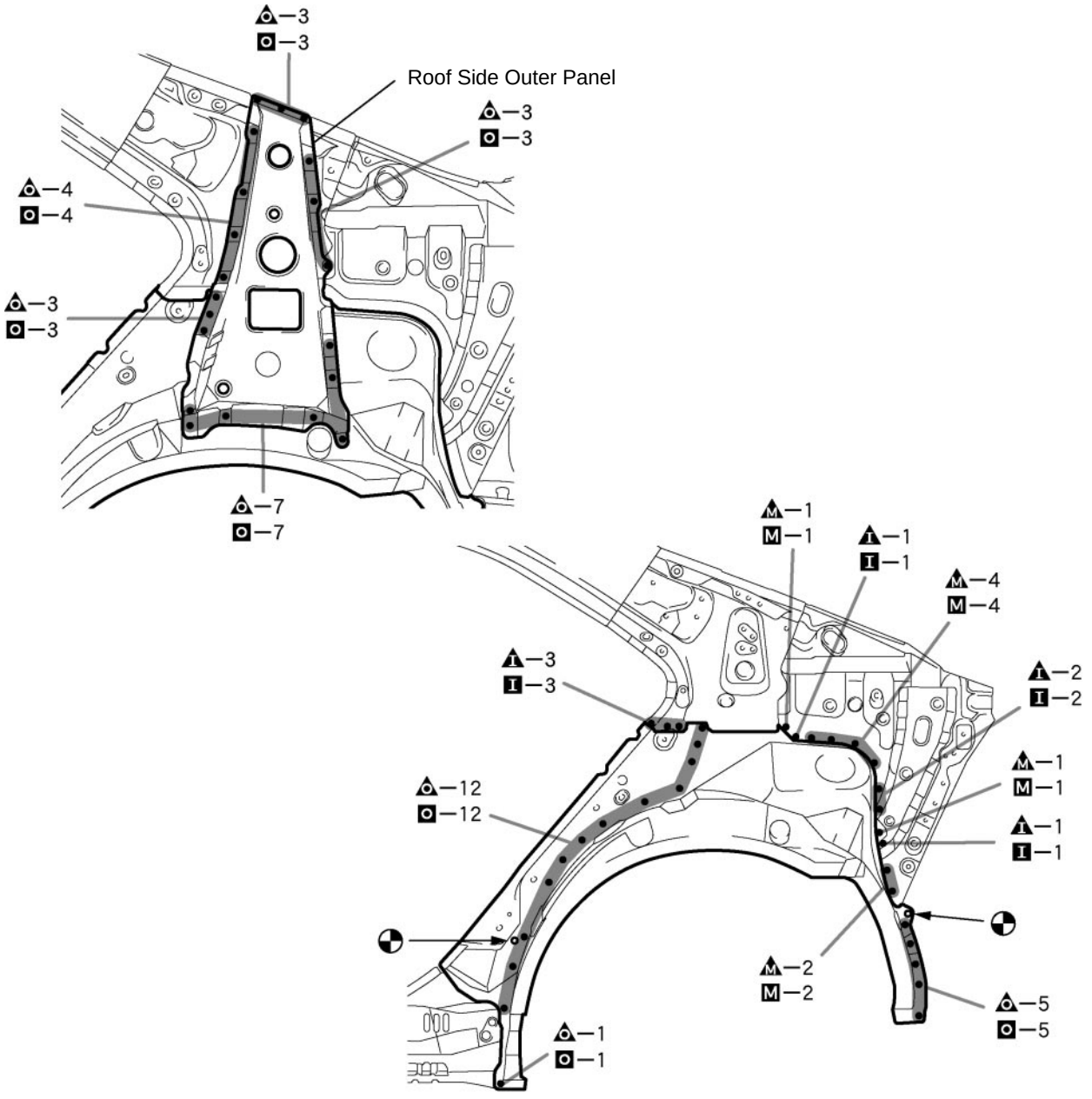

F25740

REMOVAL POINT

1 After removing the roof side outer panel, remove the quarter wheel housing outer panel.

INSTALLATION POINT

1 After welding the quarter wheel housing outer panel to the vehicle side, install the roof side outer panel.

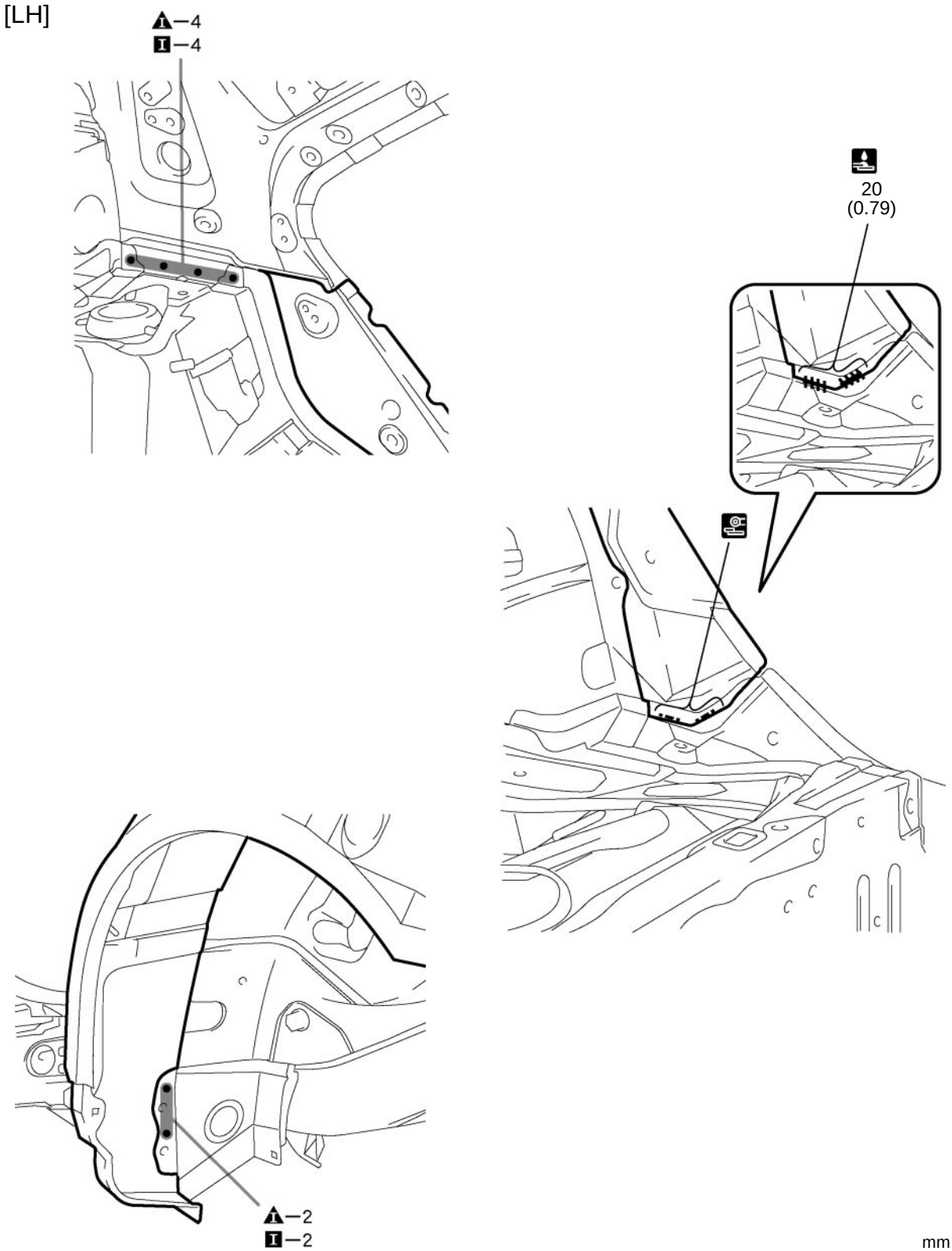

INSTALLATION POINT

1 After welding, apply body sealer and undercoating to the corresponding parts. (See the paint·coating)

2 After applying the top coat, apply anti-rust agent to the internal panel portion of the closed section structural weld points.

Symbol meaning

REMOVAL	: Remove Weld Points	: Cut with disc sander, etc.
		: Cut and Join Location
INSTALLATION	: MIG Plug Weld	: Tack Weld : Butt Weld

F25739B

[RH]

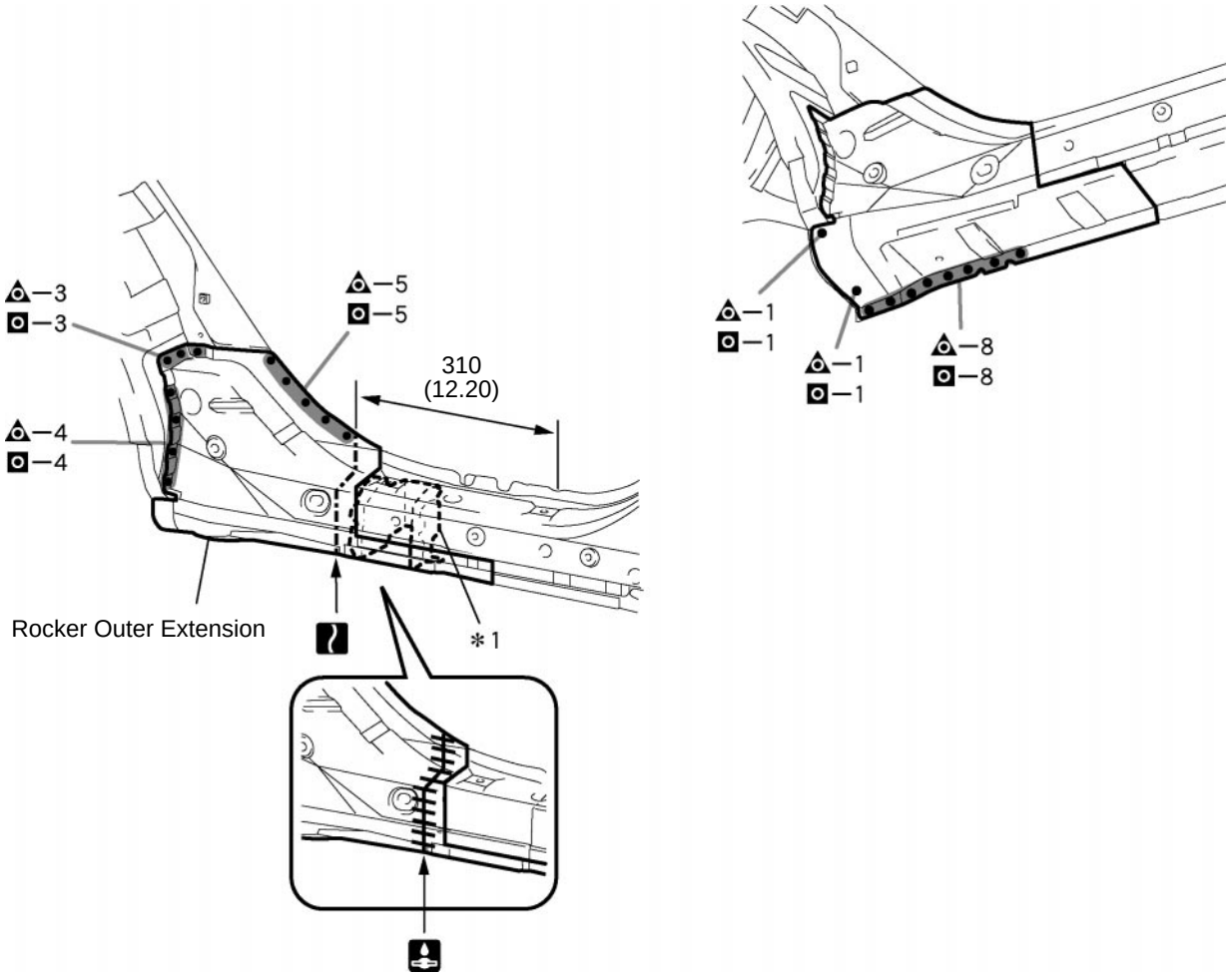

mm (in.)

F25795

REMOVAL POINT

1 *1: Take care not to damage the internal reinforcement.

2 After removing the rocker outer extension, remove the quarter wheel housing outer panel.

INSTALLATION POINT

1 After welding the quarter wheel housing outer panel to the vehicle side, install the rocker outer extension.

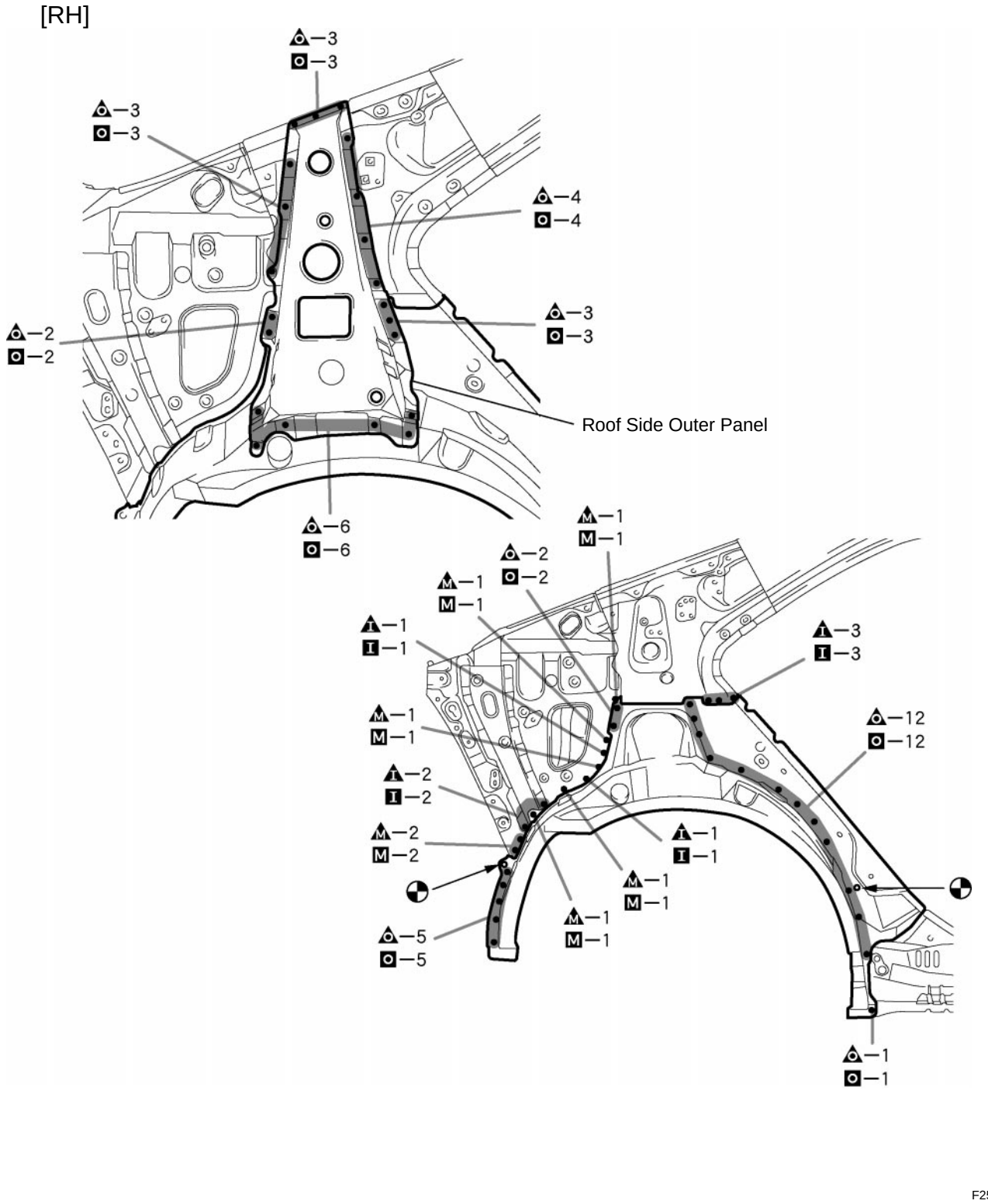

REMOVAL POINT

1 After removing the roof side outer panel, remove the quarter wheel housing outer panel.

INSTALLATION POINT

1 After welding the quarter wheel housing outer panel to the vehicle side, install the roof side outer panel.

Symbol meaning

REMOVAL	: Remove Weld Points	: Cut with disc sander, etc.
		: Cut and Join Location
INSTALLATION	: MIG Plug Weld	: Tack Weld : Butt Weld

F25739B

[RH]

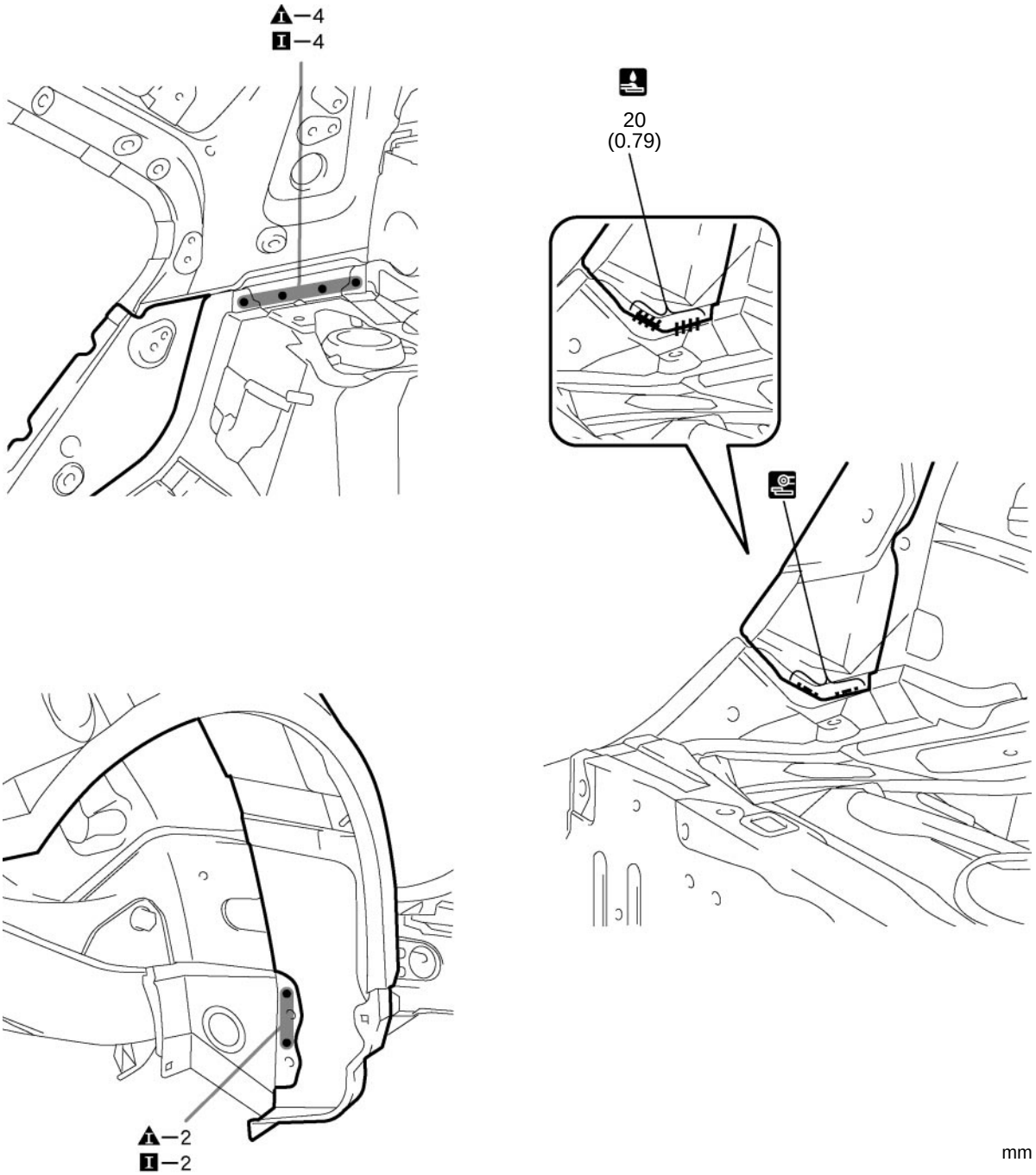

F25796

INSTALLATION POINT

1 After welding, apply body sealer and undercoating to the corresponding parts. (See the paint·coating)
2 After applying the top coat, apply anti-rust agent to the internal panel portion of the closed section structural weld points.

ROCKER OUTER REINFORCE (ASSY): TMMK made

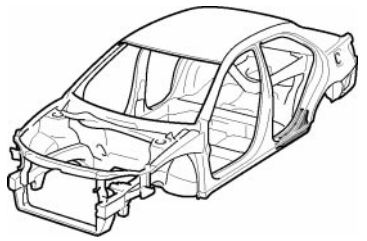

F25733A

Symbol meaning

: Remove Weld Points : Cut and Join Location : Cut Location for Supply Parts

F25733B

REMOVAL

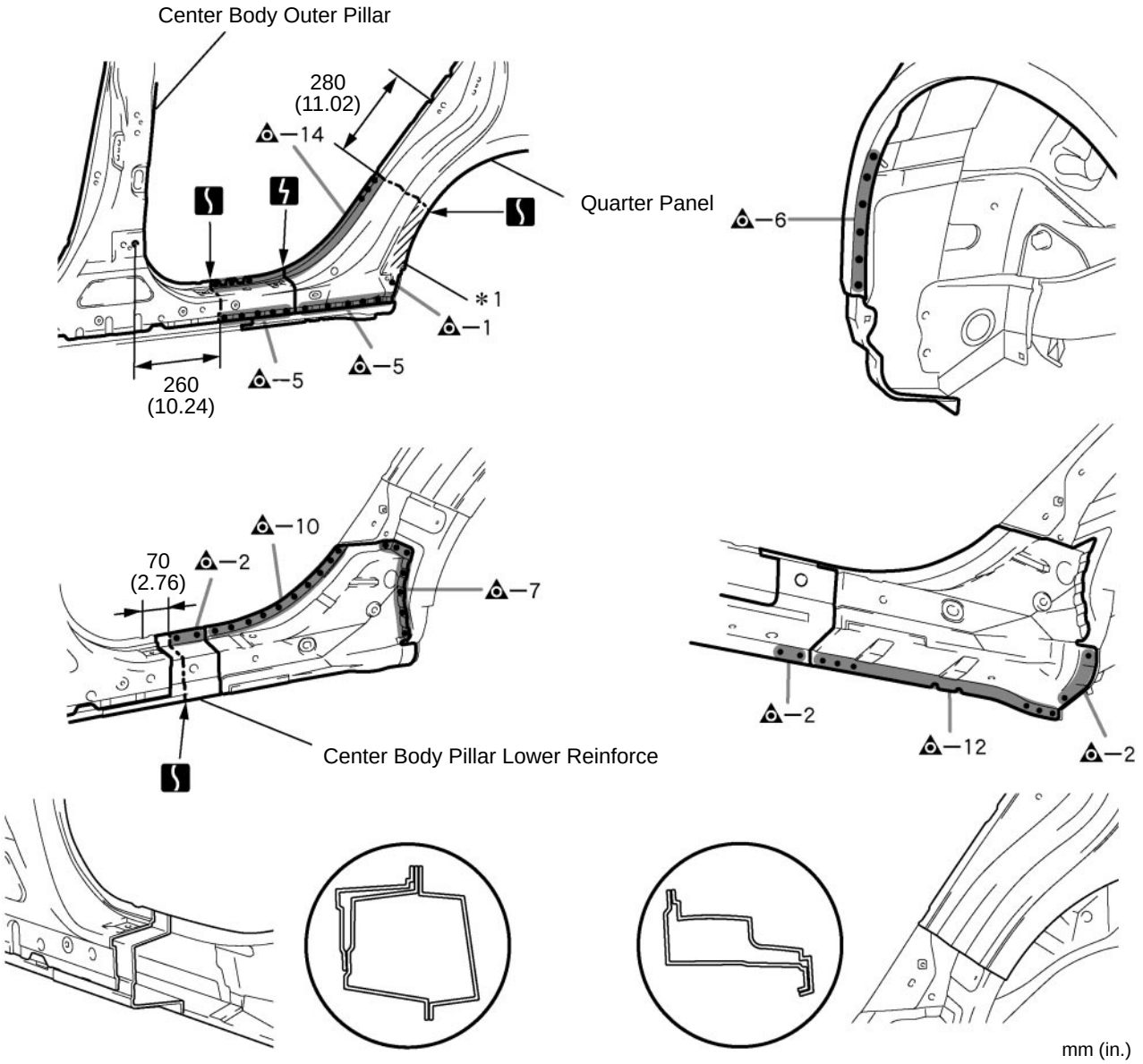

F25733

INSTALLATION POINT

1 *1 in illustation above indicates where the adhesive is.

2 After removing the center body outer pillar and quarter panel, remove the rocker outer reinforce and center body pillar lower reinforce.

Symbol meaning

: MIG Plug Weld : Butt Weld : Body Sealer

F25734B

INSTALLATION

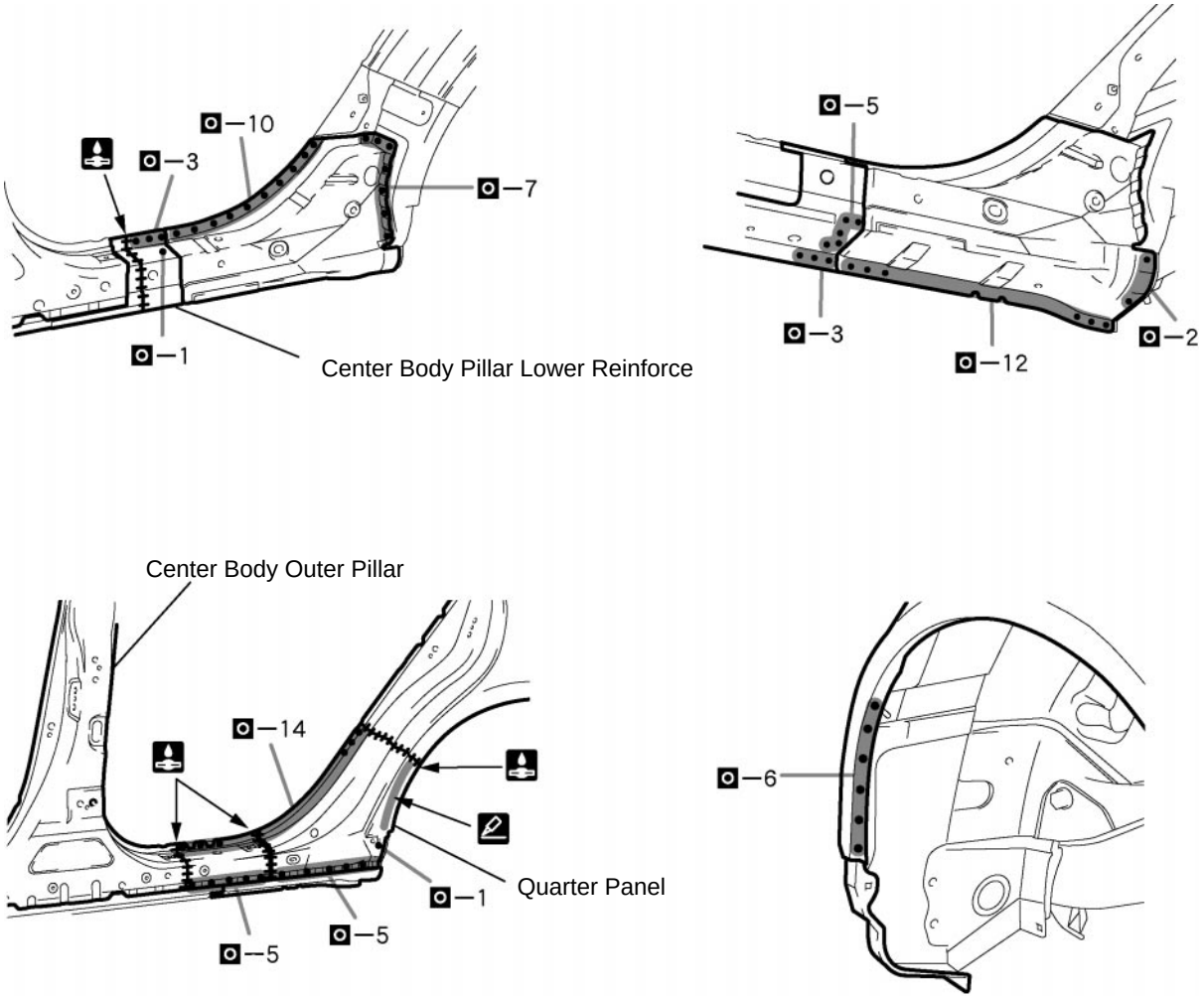

F25734

INSTALLATION POINT

1 Inspect the fitting of the related parts around the new parts before welding. This affects the appearance of the finish.
2 Temporarily install the new parts and measure each part of the new parts in accordance with the body dimension diagram. (See the body dimension diagram)
3 Before installing a new part, apply body sealer.
HINT:
1) Apply sealer in an even, continuous bead.
4 After welding the rocker outer reinforce to the vehicle side, install the center body outer pillar and quarter panel.
5 After welding, apply body sealer and undercoating to the corresponding parts.(See the paint·coating)
6 After applying the top coat, apply anti-rust agent to the internal panel portion of the closed section structural weld points.

QUARTER WHEEL HOUSING OUTER PANEL (ASSY): TMMK made

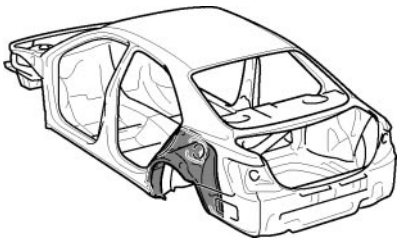

F25797A

With the quarter panel removed.

Symbol meaning

REMOVAL : Remove Weld Points

INSTALLATION : MIG Plug Weld

: Cut with disc sander, etc.

: Cut and Join Location

: Tack Weld : Butt Weld

F25797B

REMOVAL·INSTALLATION

[LH]

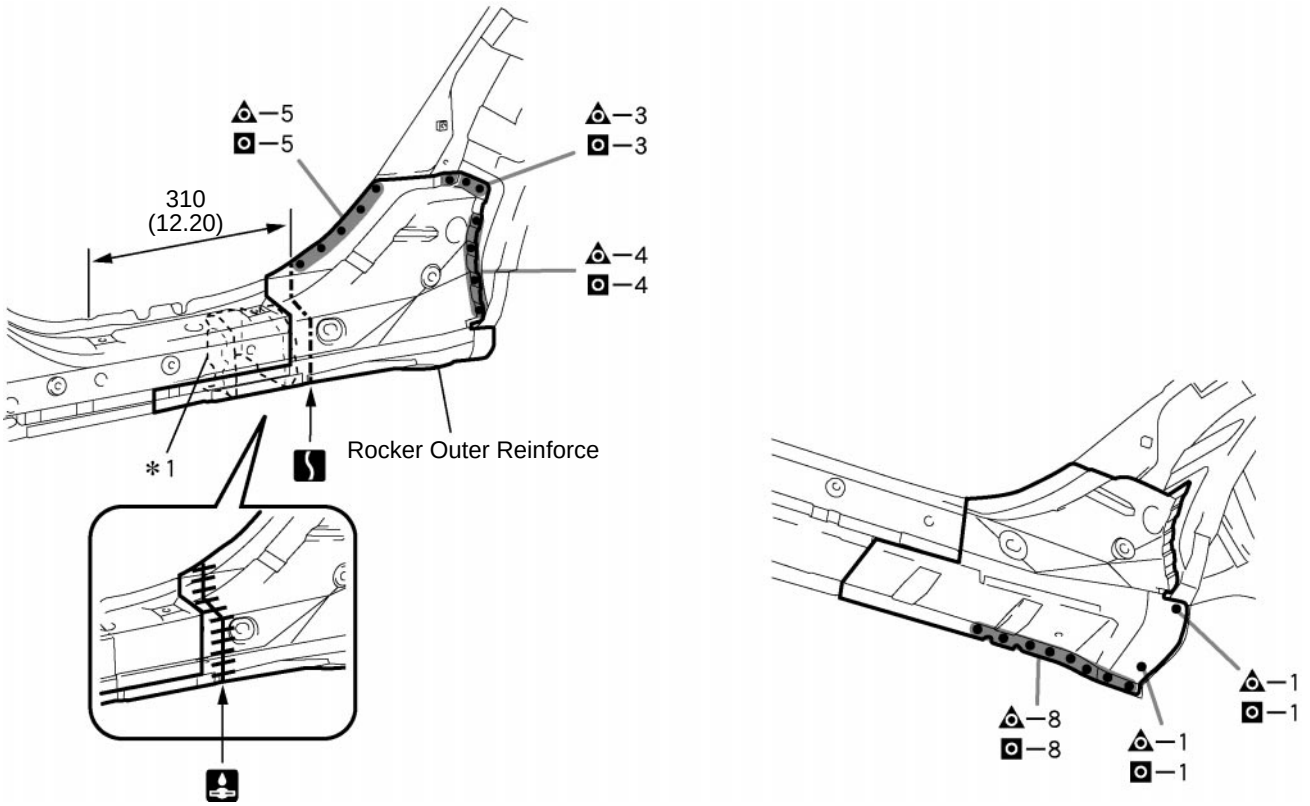

mm (in.)

F25797

REMOVAL POINT

1 *1: Take care not to damage the internal reinforcement.

2 After removing the rocker outer reinforce, remove the quarter wheel housing outer panel.

INSTALLATION POINT

1 After welding the quarter wheel housing outer panel to the vehicle side, install the rocker outer reinforce.

Symbol meaning

REMOVAL	: Remove Weld Points	: Cut with disc sander, etc.
		: Cut and Join Location
INSTALLATION	: MIG Plug Weld	: Tack Weld : Butt Weld

F25797B

[LH]

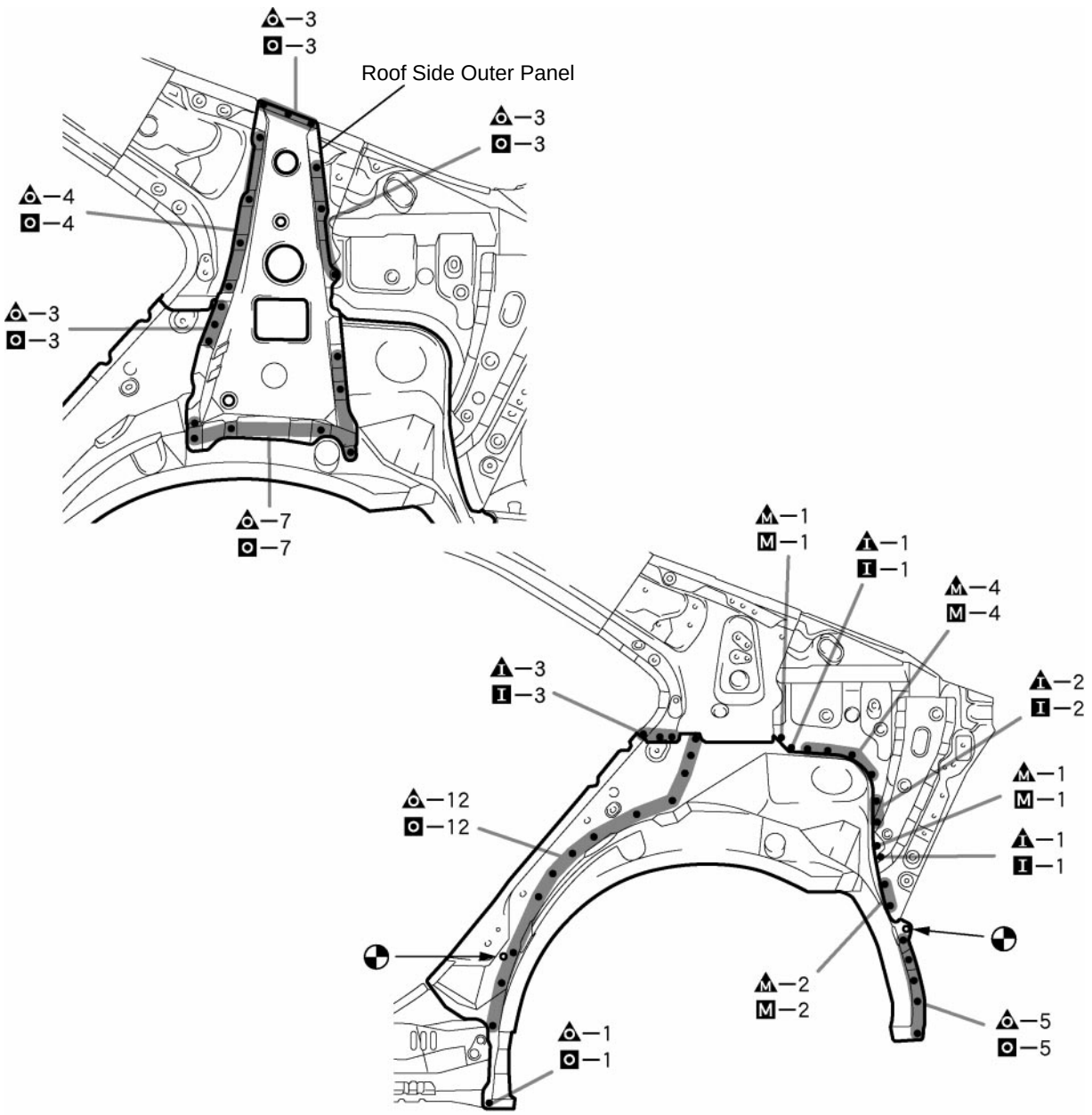

F25798

REMOVAL POINT

1 After removing the roof side outer panel, remove the quarter wheel housing outer panel.

INSTALLATION POINT

1 After welding the quarter wheel housing outer panel to the vehicle side, install the roof side outer panel.

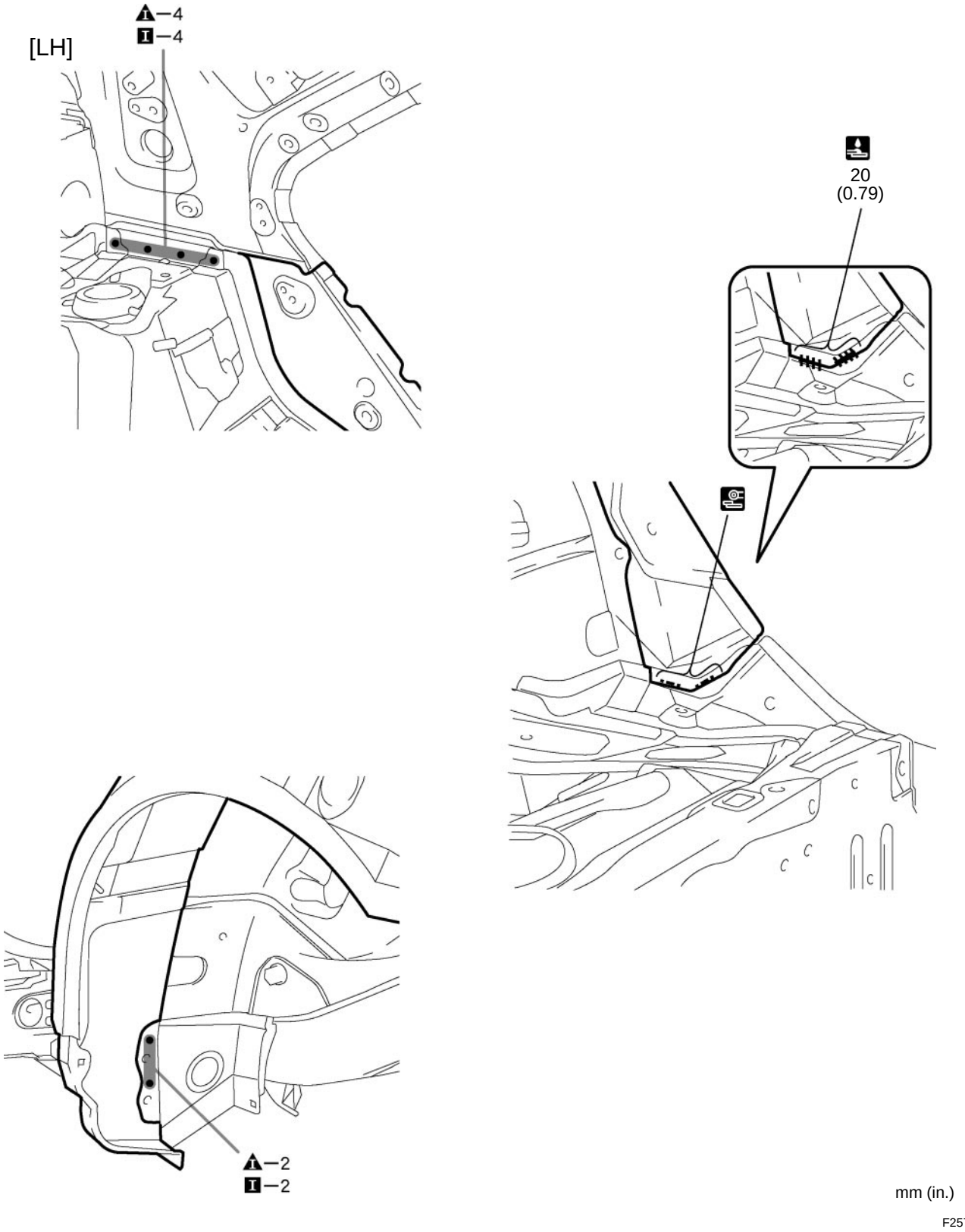

INSTALLATION POINT

1 After welding, apply body sealer and undercoating to the corresponding parts. (See the paint·coating)

2 After applying the top coat, apply anti-rust agent to the internal panel portion of the closed section structural weld points.

Symbol meaning

REMOVAL	: Remove Weld Points	: Cut with disc sander, etc. : Cut and Join Location
INSTALLATION	: MIG Plug Weld	: Tack Weld : Butt Weld

F25797B

[RH]

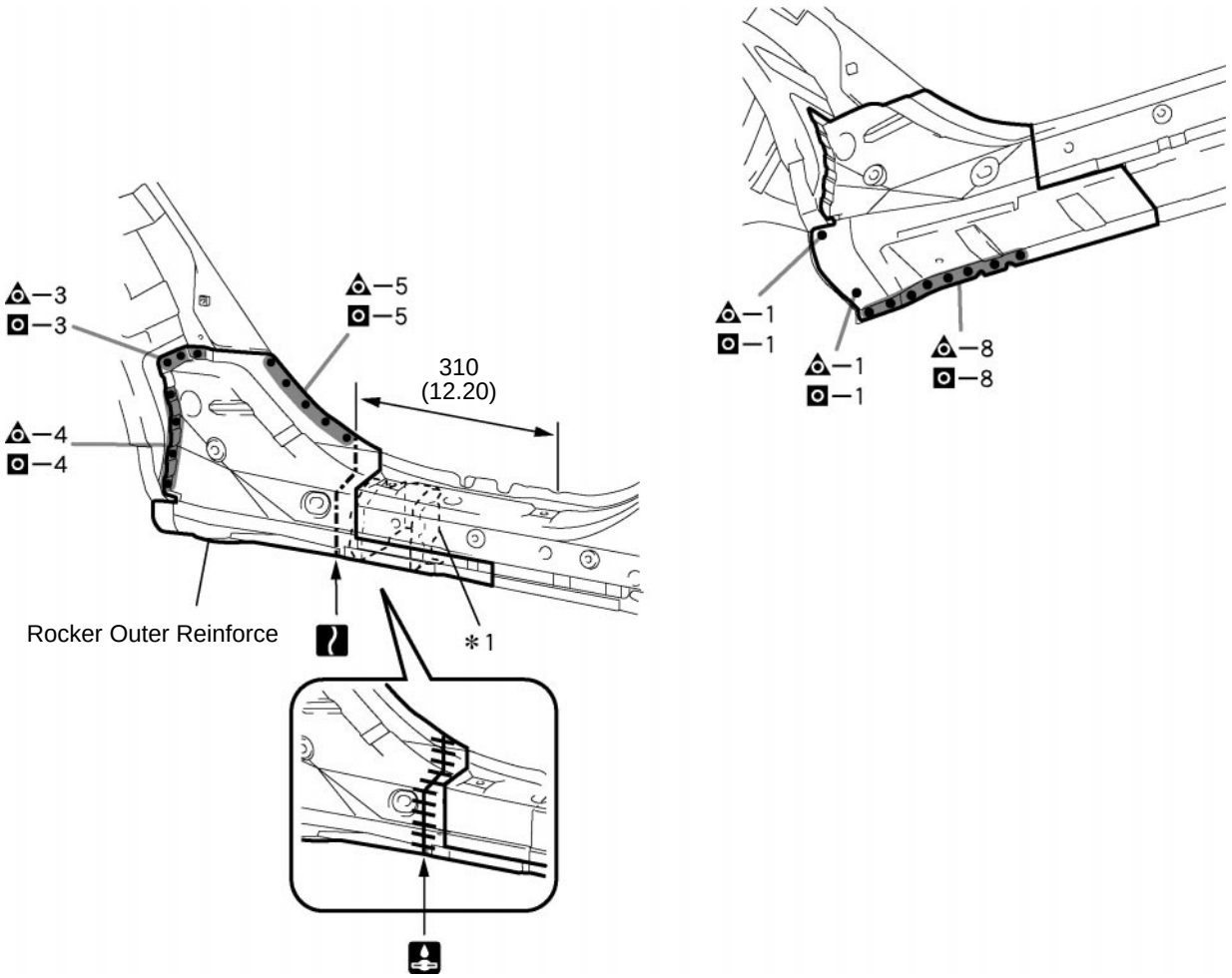

mm (in.)

F25800

REMOVAL POINT

1 *1: Take care not to damage the internal reinforcement.
2 After removing the rocker outer reinforce, remove the quarter wheel housing outer panel.

INSTALLATION POINT

1 After welding the quarter wheel housing outer panel to the vehicle side, install the rocker outer reinforce.

[RH]

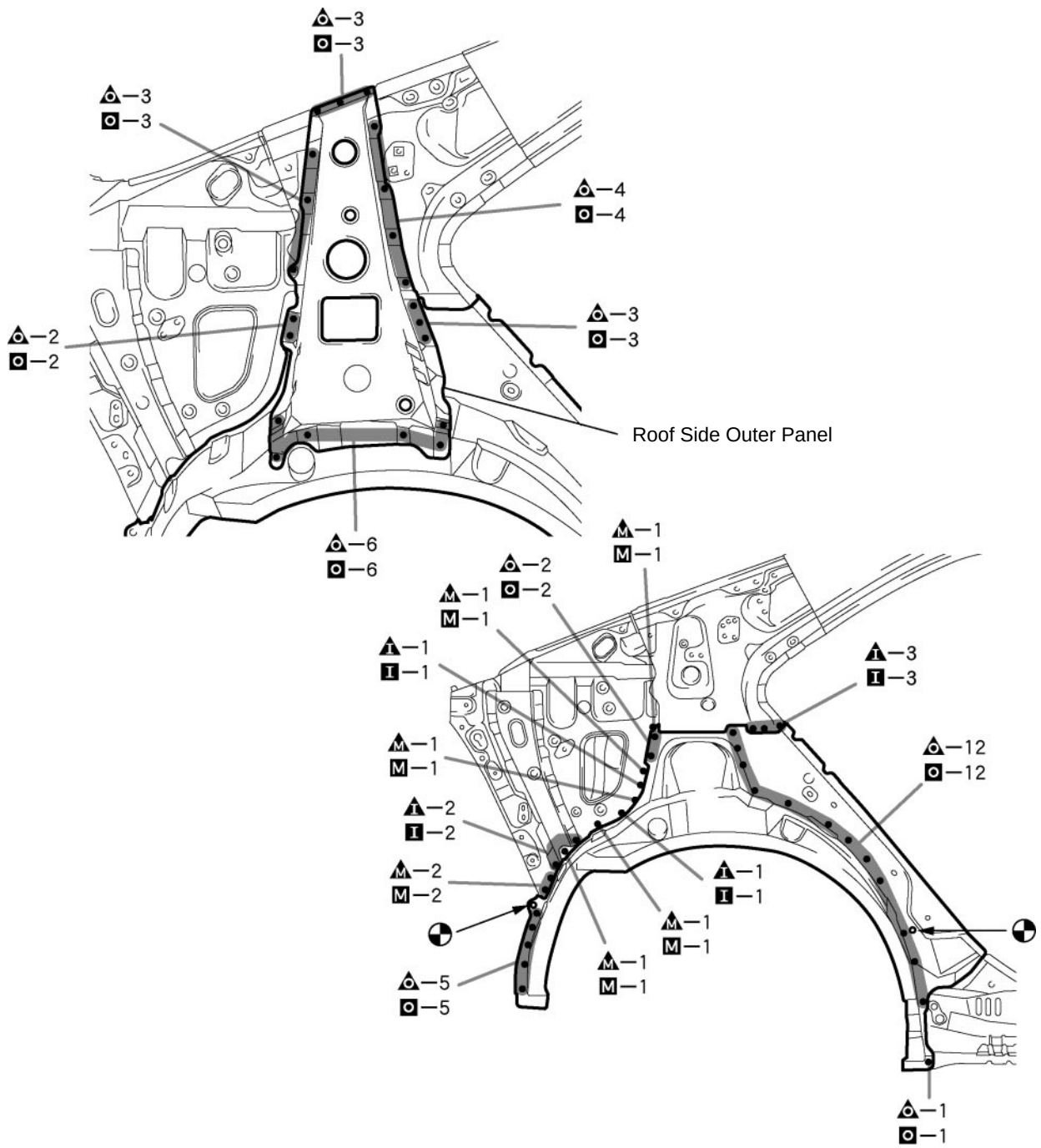

REMOVAL POINT

1 After removing the roof side outer panel, remove the quarter wheel housing outer panel.

INSTALLATION POINT

1 After welding the quarter wheel housing outer panel to the vehicle side, install the roof side outer panel.

Symbol meaning

REMOVAL	: Remove Weld Points	: Cut with disc sander, etc.
		: Cut and Join Location
INSTALLATION	: MIG Plug Weld	: Tack Weld : Butt Weld

F25797B

[RH]

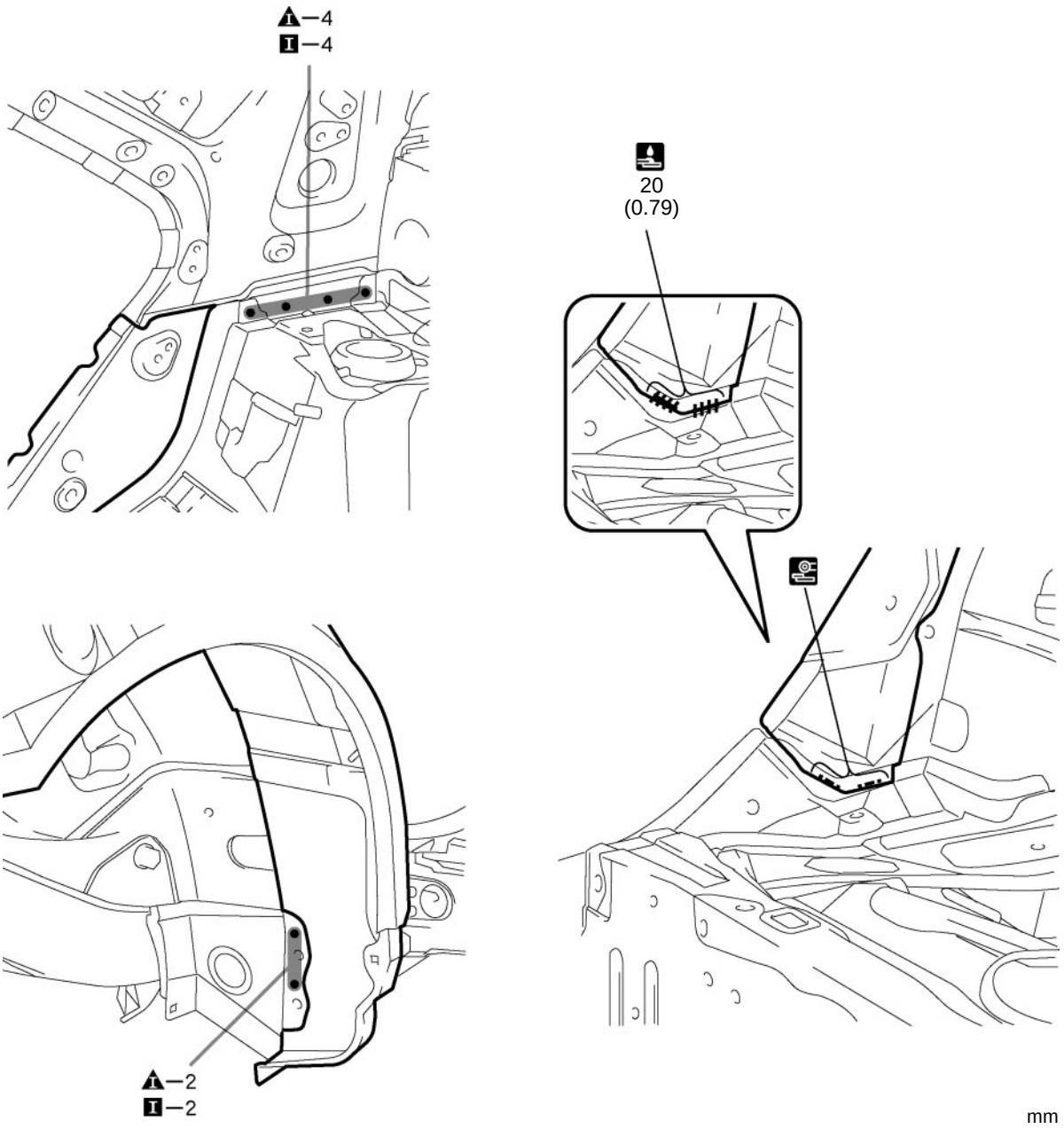

F25802

INSTALLATION POINT

1 After welding, apply body sealer and undercoating to the corresponding parts. (See the paint·coating)

2 After applying the top coat, apply anti-rust agent to the internal panel portion of the closed section structural weld points.

QUARTER PANEL (CUT)

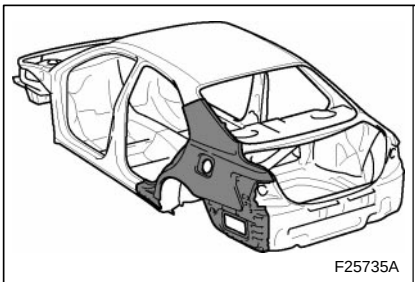

Quarter Panel Replacement Using Adhesive

Work Procedure	Precaution
1 Cut the wheel arch portion.	
2 Heat the quarter panel adhesive area and remove the quarter panel.	(1) Using an industrial dryer or oxygen acetylene burner, heat the quarter panel to 110 to 140●C. Make sure the quarter panel does not warp.
3 Clean off any adhesive that remains on the vehicle.	(1) Using a gas burner, heat the adhesive to 110 to 140●C. (2) Using a scraper, scrape away the adhesive. (3) If adhesive remains, the strength of any subsequently applied adhesive will be weak.
4 Using a disc grinder or belt sander, scuff and sand any adhesive that remains on the vehicle.	(1) Scuff at a width of approximately 10 mm over the previous adhesive coating.
5 Apply adhesive to the exposed metal areas on the vehicle. Using a spatula, spread the adhesive evenly.	
6 Apply adhesive to the vehicle again.	
7 Using #60-240 grit sandpaper, scuff the adhesive application area on the new quarter panel.	
8 Apply adhesive to the new quarter panel. Using a spatula, spread the adhesive evenly.	
9 Using a vise or the palms of your hands, press the quarter panel so that the thickness of the adhesive is even.	
10 Complete installation the new quarter panel.	
11 Dry the adhesive areas of the new quarter panel.	(1) Hardening Time Estimation With dryer or equivalent (60●C) : 60 minutes (complete hardening: 90 minutes) Ambient temperature (25●C) : 12 hours (complete hardening: 24 hours)

Symbol meaning

: Remove Weld Points

: Cut with disc sander, etc.

: Cut and Join Location

: Cut Location for Supply Parts

: Braze

F25735B

REMOVAL

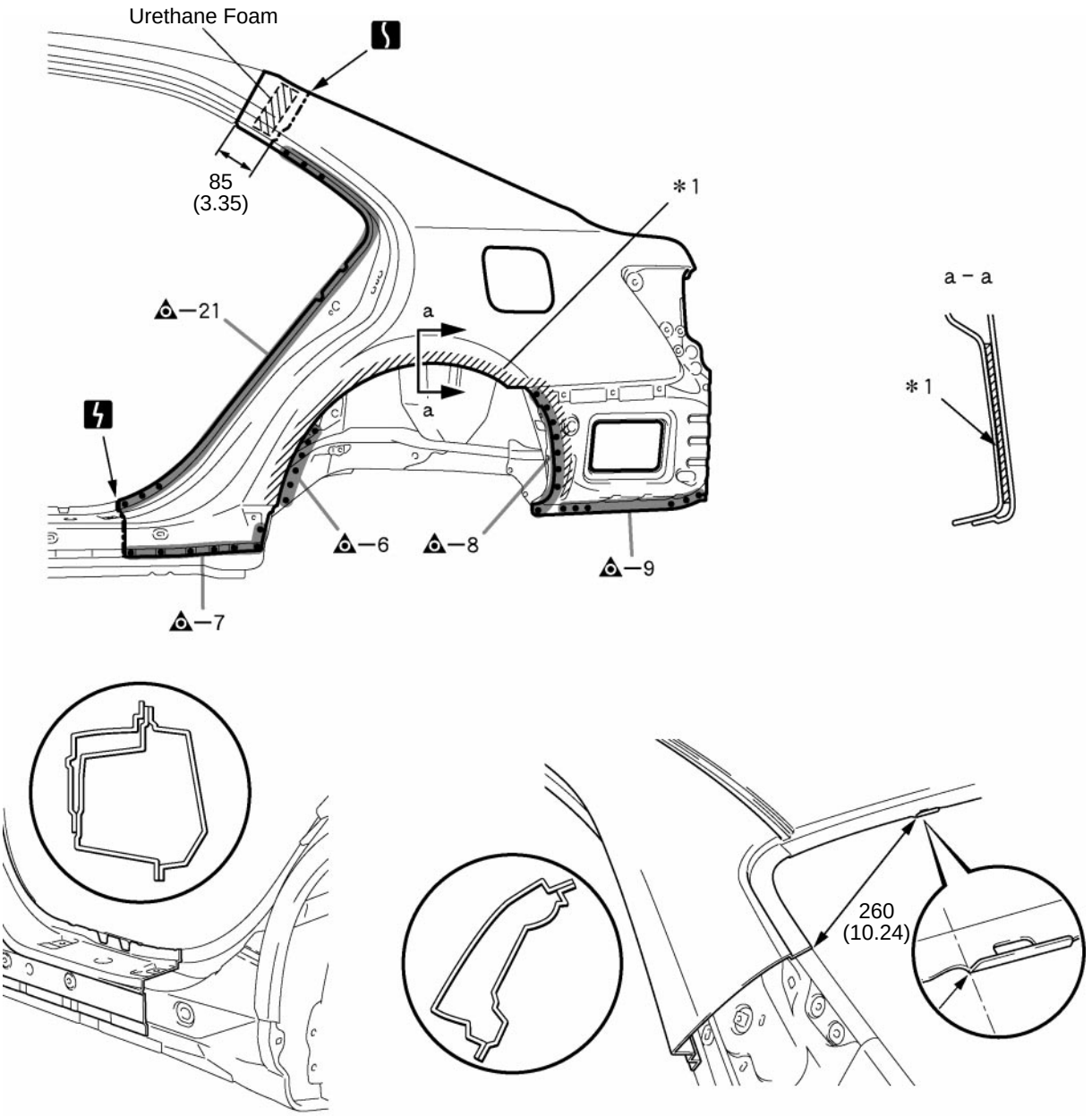

F25735

REMOVAL POINT

1 *1 in illustration above indicates where the adhesive is.

2 Roughly cut open the wheel arch of the panel so that the adhesive can be reached. Cut through the adhesive with a cut chisel to remove the panel.

HINT:

1) If the cut chisel cannot reach the adhesive, heat the adhesive with a heat gun, oxygen-acetylene burner. When heating, do not deform the quarter housing outer panel.

Symbol meaning

: Cut with disc sander, etc.

: Cut Location for Supply Parts

: Remove Weld Points

: Cut and Join Location

: Braze

F25735B

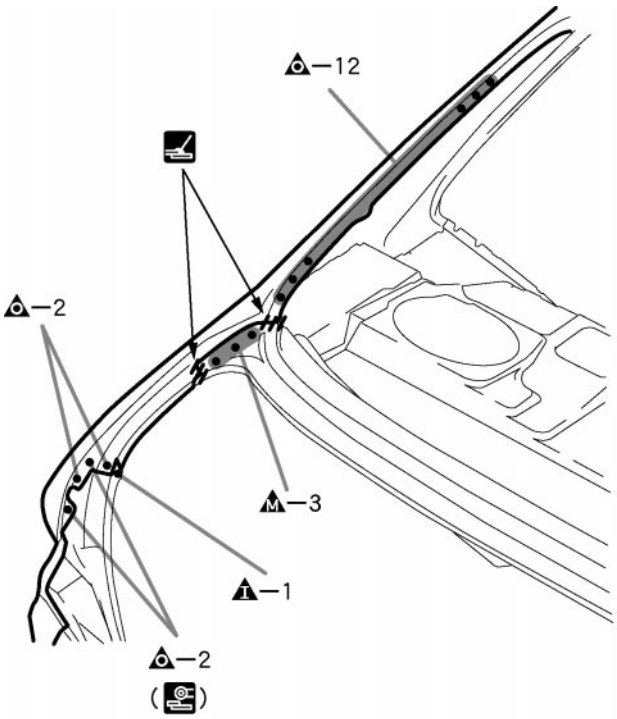

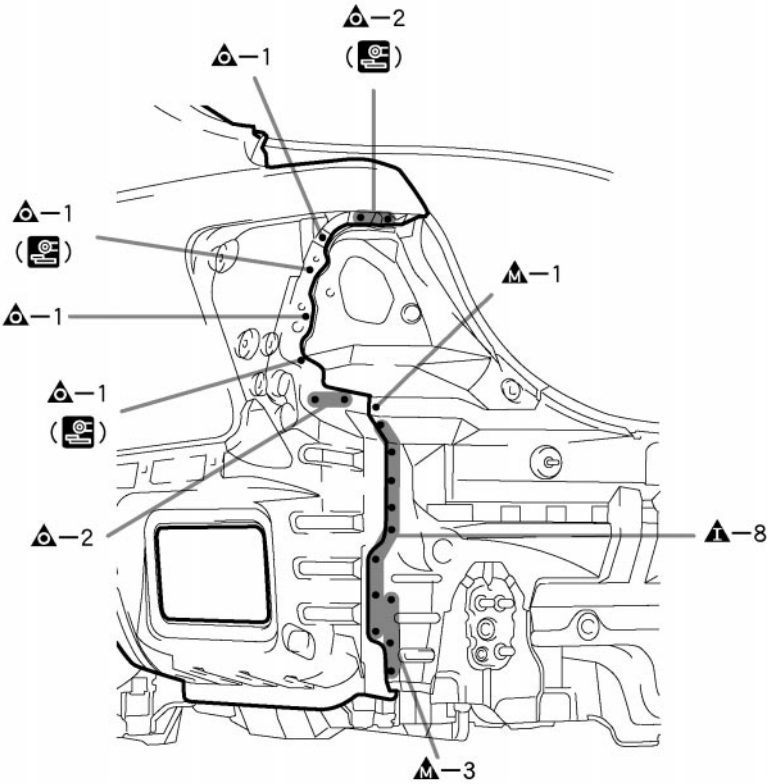

F25736

Symbol meaning

⊙ : Spot Weld ⊡ M I : MIG Plug Weld : Butt Weld : Body Sealer : Braze

F25737B

INSTALLATION

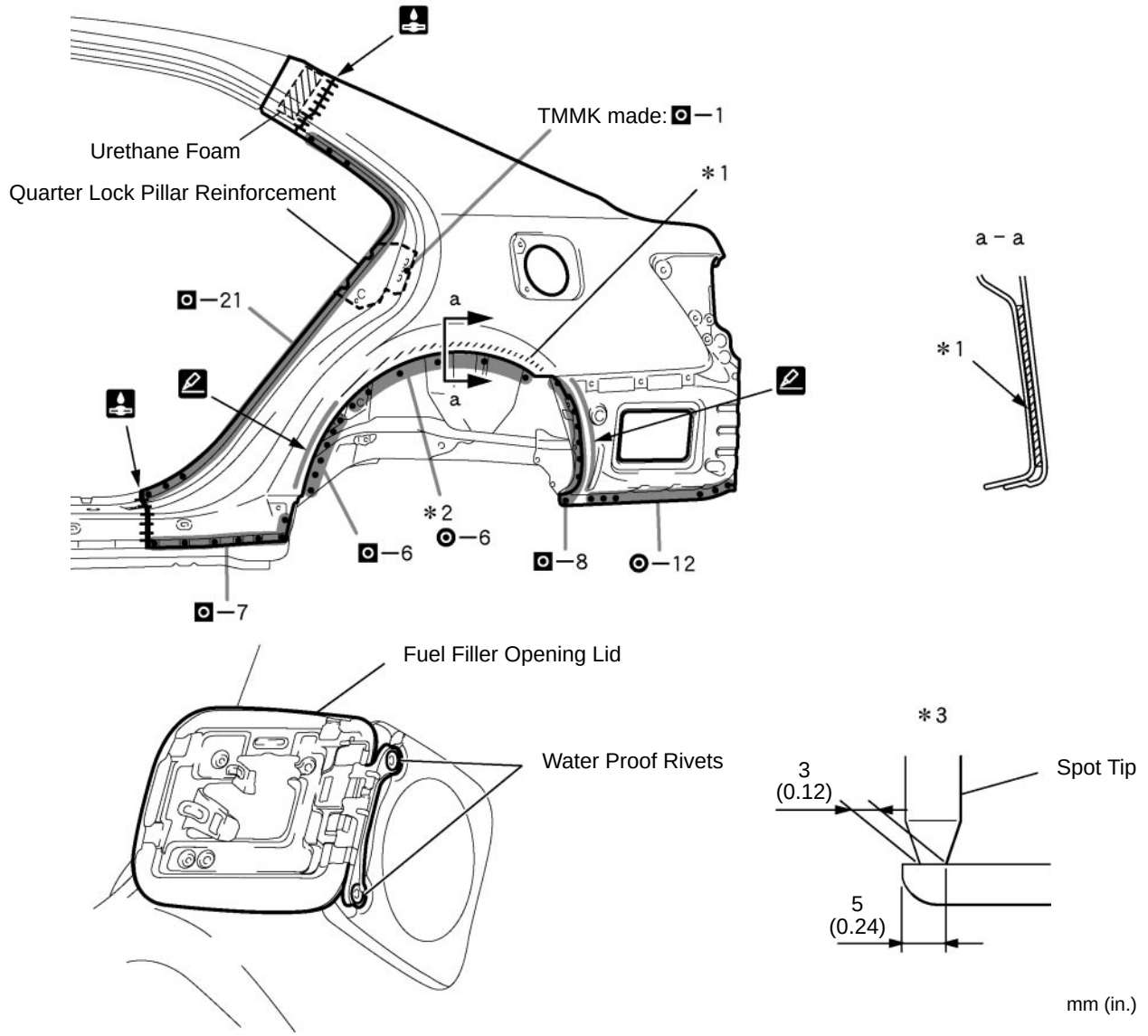

F25737

INSTALLATION POINT

1 Inspect the fitting of the related parts around the new parts before welding. This affects the appearance of the finish.

2 Temporarily install the new parts and measure each part of the new parts in accordance with the body dimension diagram. (See the body dimension diagram)

3 Apply adhesive(3M™ Automix™ Panel Bonding Adhesive #8115) to the area indicated by *1 in illustration.
HINT:
1) Apply enough adhesive for the panels to sick to each other.

4 Perform spot-welding on the flange indicated by *2 in the illustration. Modify/cut the spot tip as shown in the illustration (*3) so that it can fit into the narrow flange.

5 Before installing a new part, apply body sealer.
HINT:
1) Apply sealer in an even, continuous bead.

Symbol meaning

: Spot Weld O M I : MIG Plug Weld : Butt Weld : Body Sealer : Braze

F25737B

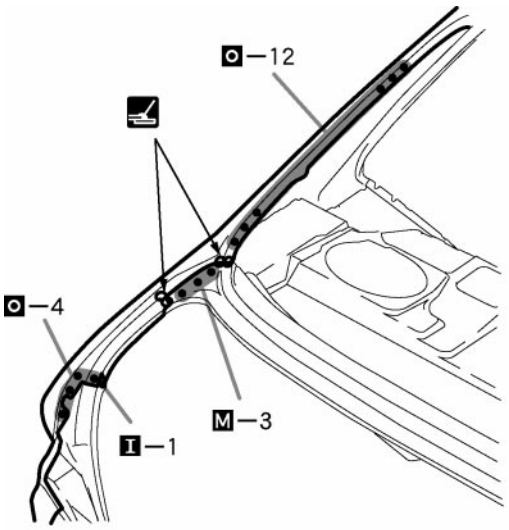

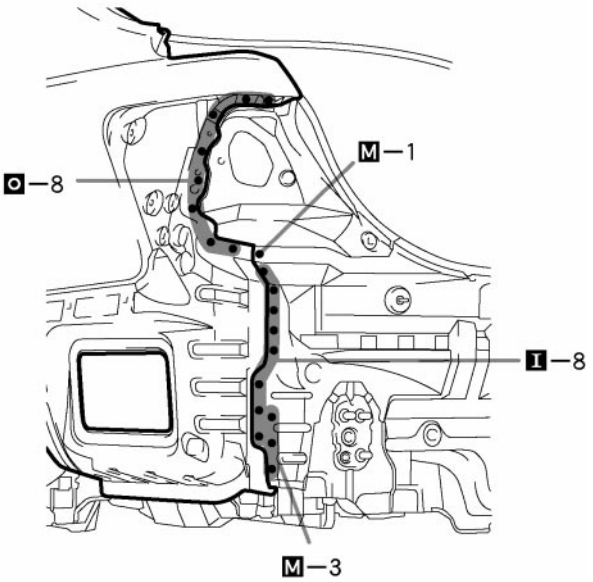

F25738

INSTALLATION POINT

1 Inspect the fitting of the related parts around the new parts before welding. This affects the appearance of the finish.
2 Temporarily install the new parts and measure each part of the new parts in accordance with the body dimension diagram. (See the body dimension diagram)
3 After welding, apply the polyurethane foam to the corresponding parts. (See the paint·coating)
4 After welding, apply body sealer and undercoating to the corresponding parts. (See the paint·coating)
5 After applying the top coat, apply anti-rust agent to the internal panel portion of the closed section structural weld points.

BODY LOWER BACK PANEL (ASSY)

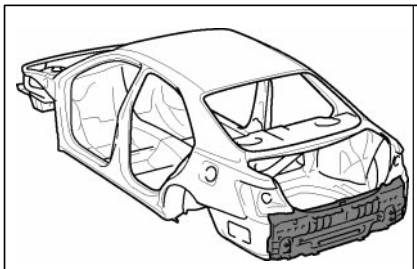

F25743A

Symbol meaning

REMOVAL	: Remove Weld Points
INSTALLATION	: MIG Plug Weld

F25743B

REMOVAL·INSTALLATION

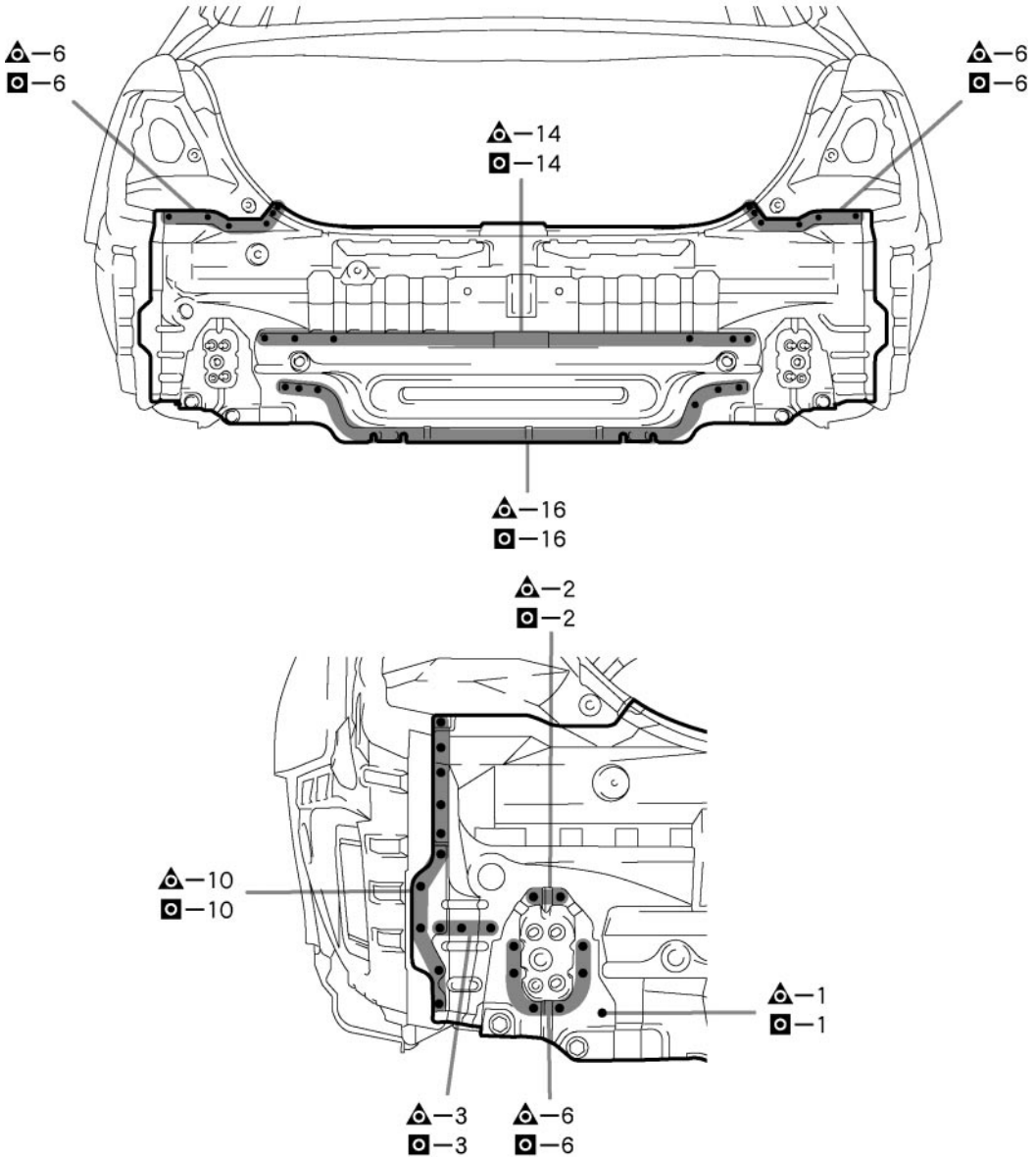

F25743

INSTALLATION POINT

1 Inspect the fitting of the related parts around the new parts before welding. This affects the appearance of the finish.
2 Temporarily install the new parts and measure each part of the new parts in accordance with the body dimension diagram. (See the body dimension diagram)
3 After welding, apply body sealer and undercoating to the corresponding parts. (See the paint·coating)
4 After applying the top coat, apply anti-rust agent to the internal panel portion of the closed section structural weld points.

QUARTER PANEL END HOUSING (ASSY): TMC made

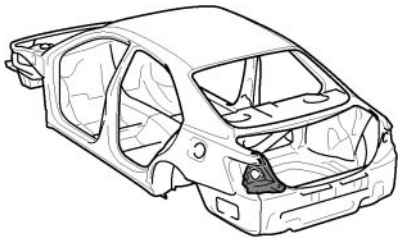

F25744A

Symbol meaning

REMOVAL	: Remove Weld Points	: Cut with disc sander, etc.
INSTALLATION	: MIG Plug Weld	

F25744B

REMOVAL·INSTALLATION

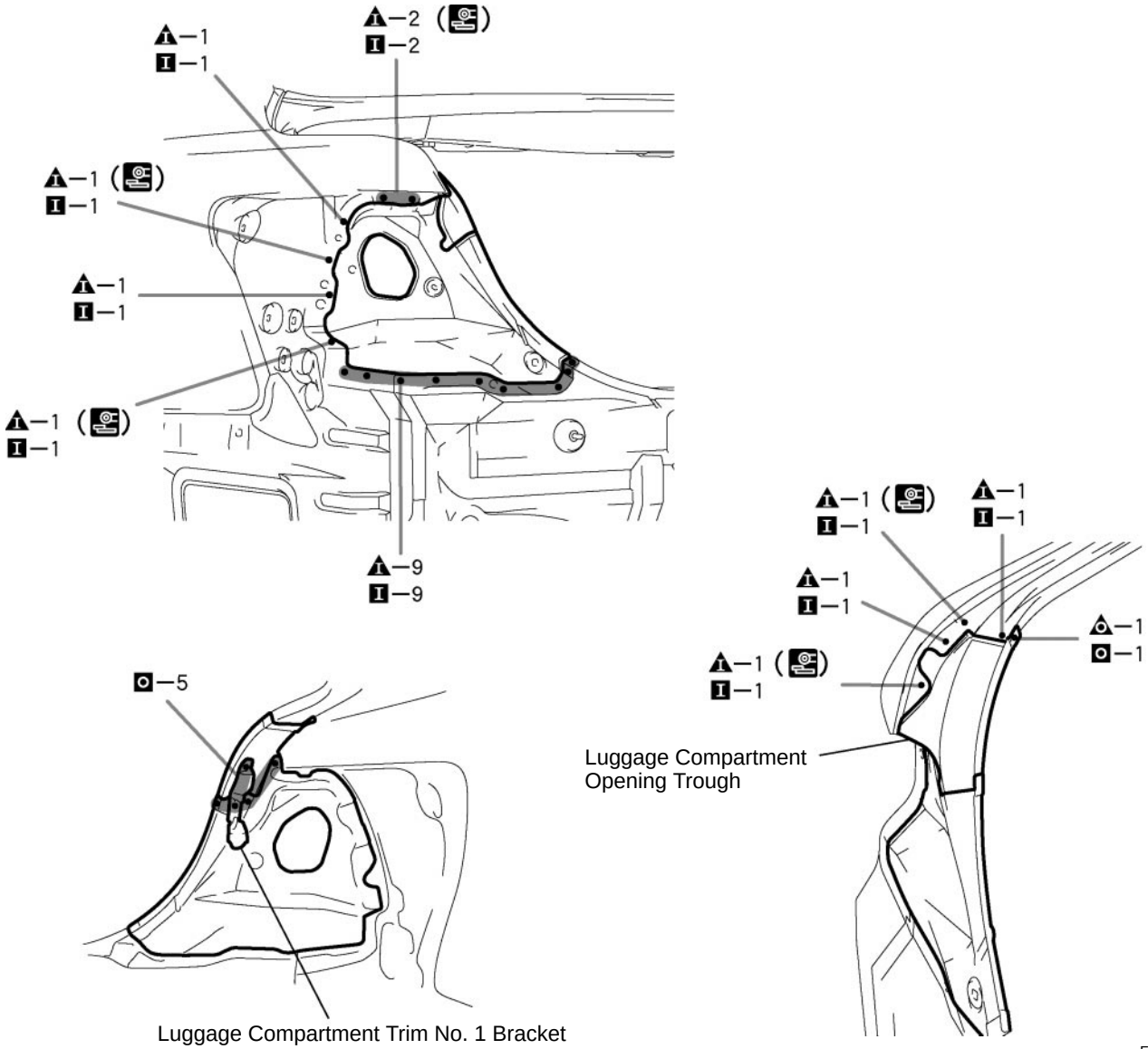

F25744

REMOVAL POINT

1 Remove the luggage compartment opening trough at the same time.

INSTALLATION POINT

1 Inspect the fitting of the related parts around the new parts before welding. This affects the appearance of the finish.
2 Temporarily install the new parts and measure each part of the new parts in accordance with the body dimension diagram. (See the body dimension diagram)
3 After welding, apply body sealer to the corresponding parts. (See the paint·coating)
4 After applying the top coat, apply anti-rust agent to the internal panel portion of the closed section structural weld points.

QUARTER PANEL END HOUSING (ASSY): TMMK made

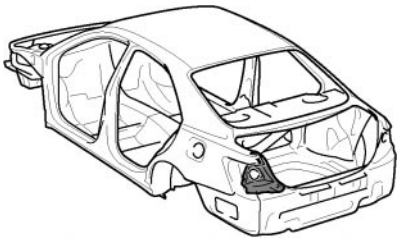

F25745A

Symbol meaning

REMOVAL	: Remove Weld Points	: Cut with disc sander, etc.
INSTALLATION	: MIG Plug Weld	

F25745B

REMOVAL·INSTALLATION

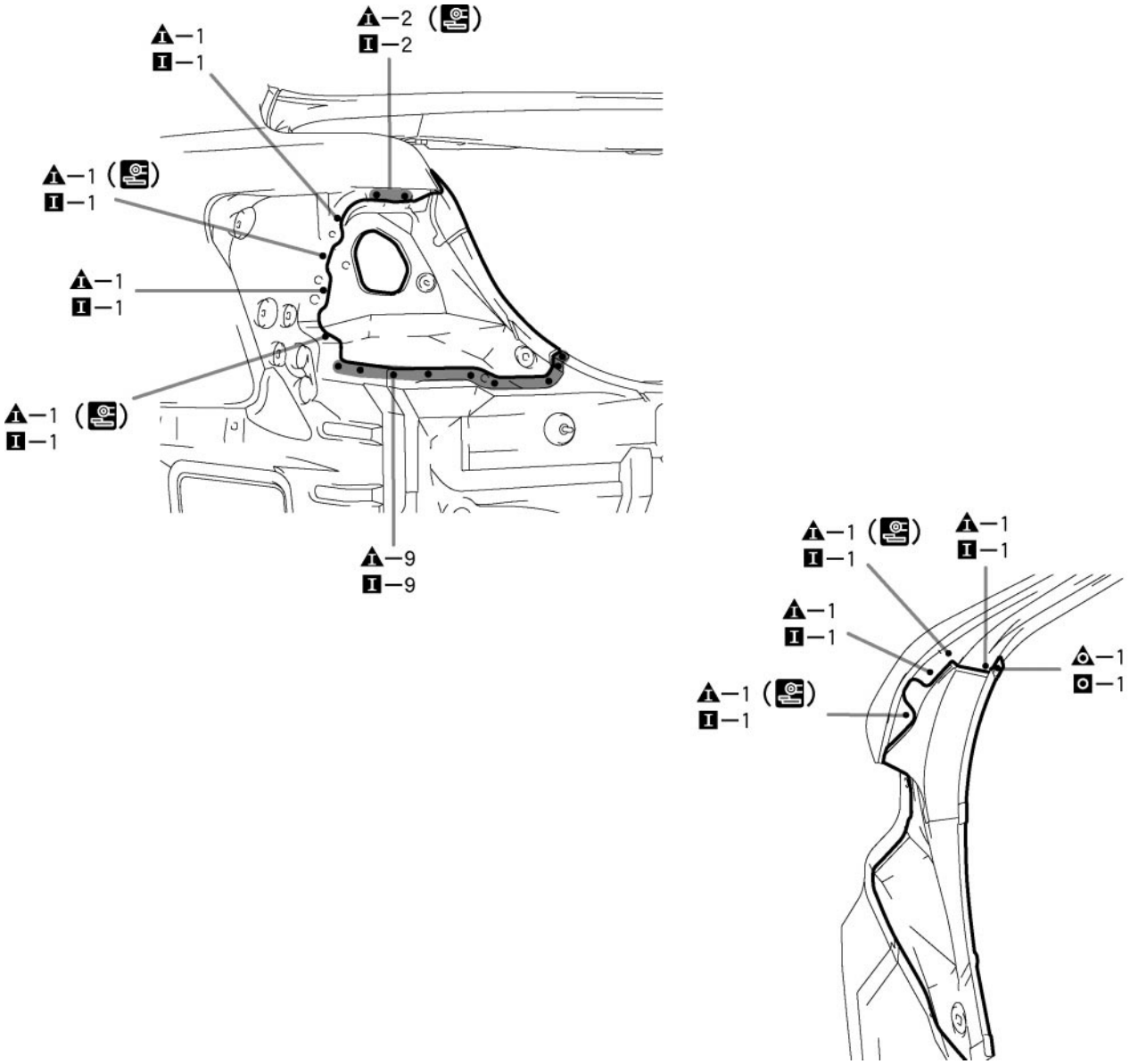

F25745

INSTALLATION POINT

1 Inspect the fitting of the related parts around the new parts before welding. This affects the appearance of the finish.
2 Temporarily install the new parts and measure each part of the new parts in accordance with the body dimension diagram. (See the body dimension diagram)
3 After welding, apply body sealer to the corresponding parts. (See the paint·coating)
4 After applying the top coat, apply anti-rust agent to the internal panel portion of the closed section structural weld points.

REAR FLOOR NO. 3 CROSSMEMBER (ASSY)

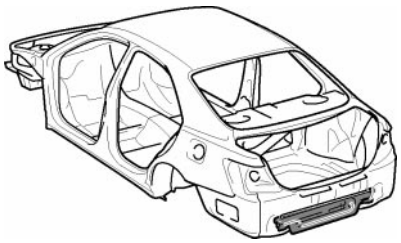

F25746A

With the body lower back panel removed.

Symbol meaning

REMOVAL	◬ : Remove Weld Points
INSTALLATION	⊙ : Spot Weld ◘ : MIG Plug Weld

F25746B

REMOVAL·INSTALLATION

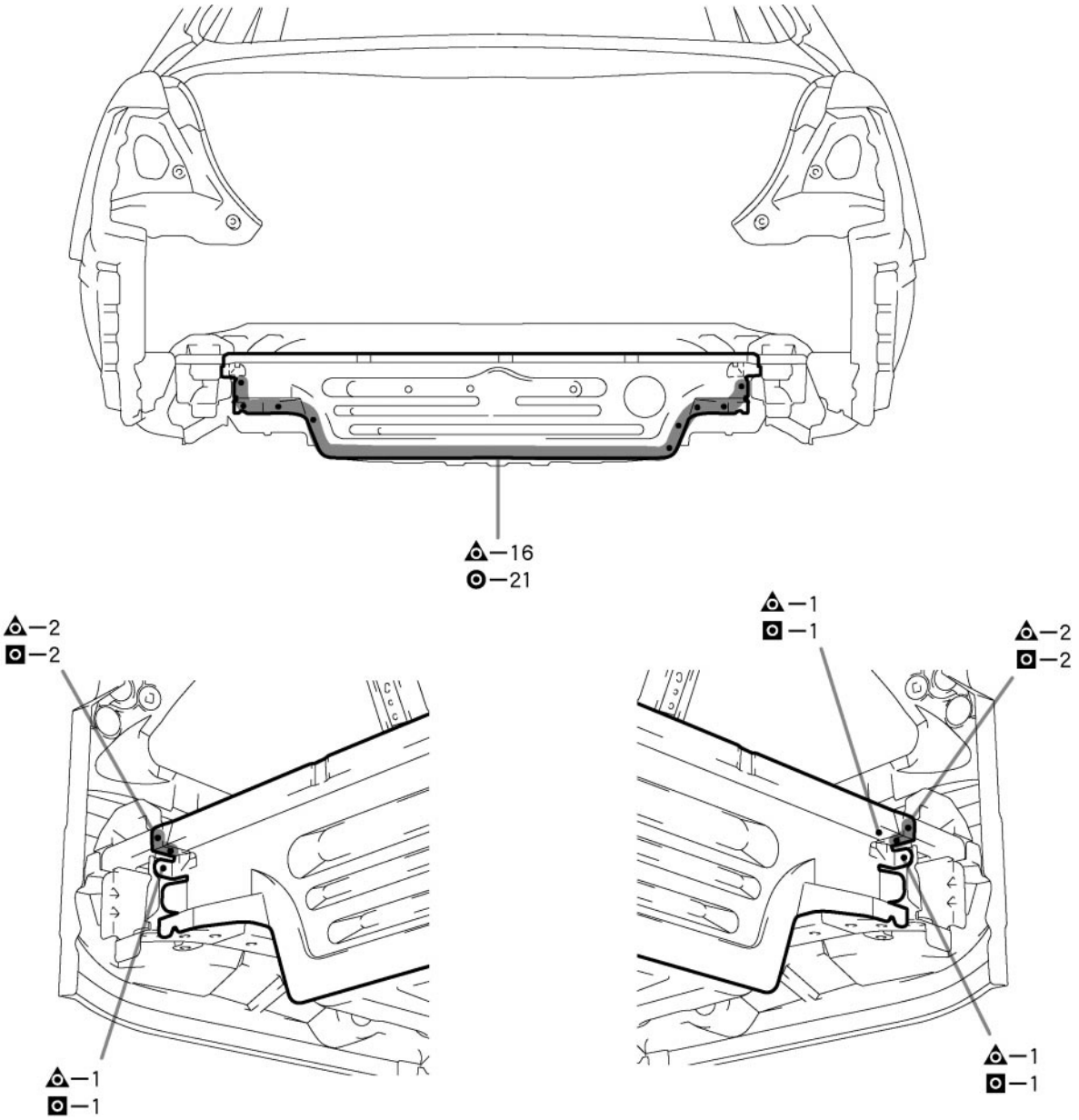

F25746

INSTALLATION POINT

1 Inspect the fitting of the related parts around the new parts before welding. This affects the appearance of the finish.
2 After welding, apply body sealer and undercoating to the corresponding parts. (See the paint·coating)
3 After applying the top coat, apply anti-rust agent to the internal panel portion of the closed section structural weld points.

REAR FLOOR PAN (ASSY)

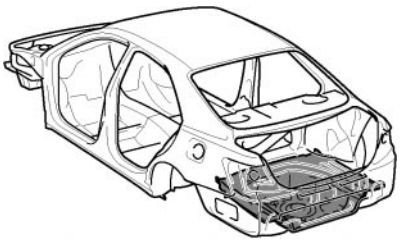

F25747A

With the rear floor no.3 crossmember removed.

Symbol meaning

◎ Ⓜ ❶ : Remove Weld Points

F25747B

REMOVAL

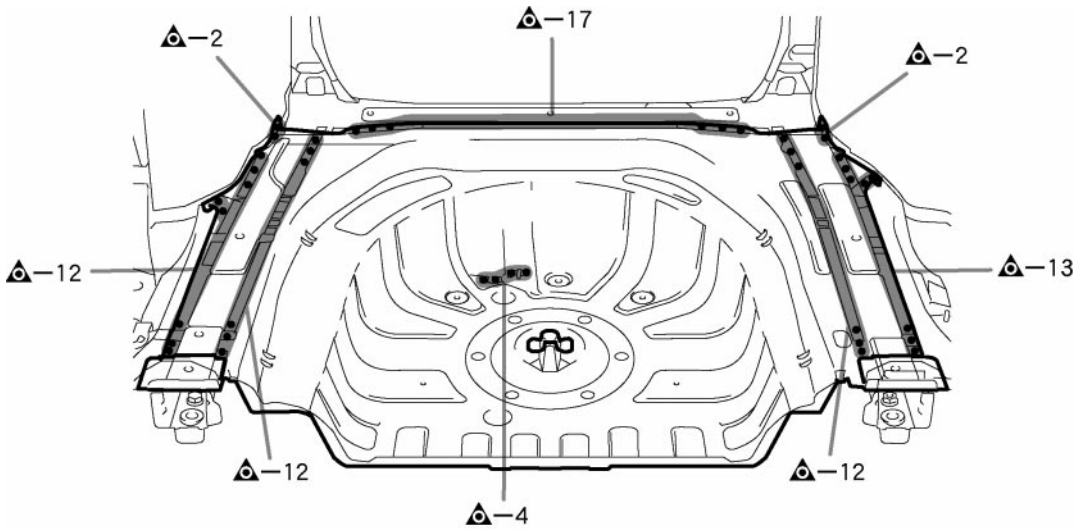

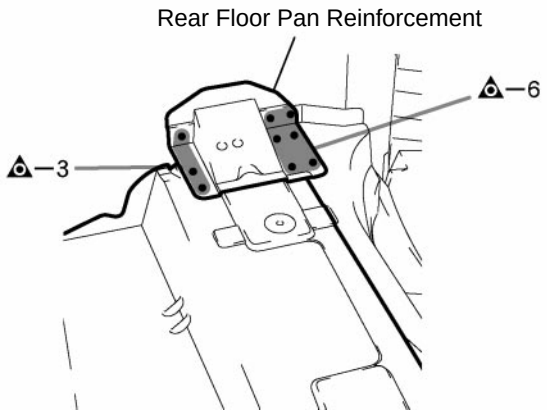

F25747

REMOVAL POINT

1 Remove the rear floor pan reinforcement at the same time.

Symbol meaning

: Remove Weld Points

F25747B

[LH]

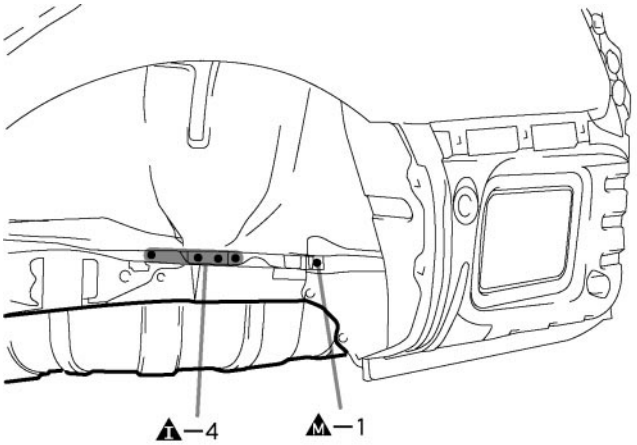

[RH]

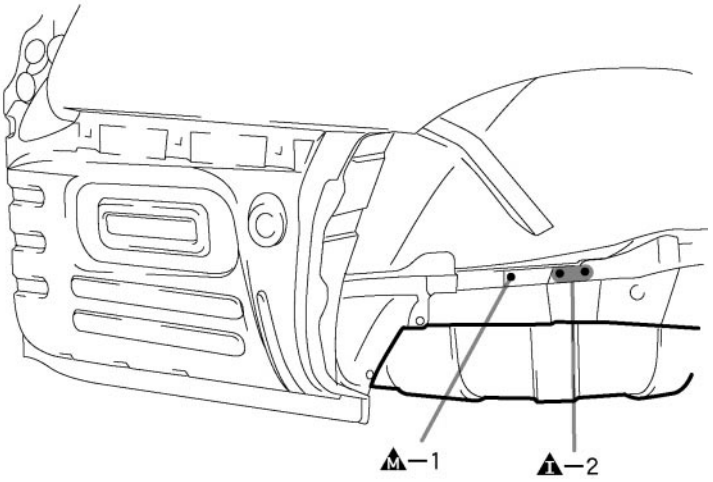

F285748

Symbol meaning

O M I : MIG Plug Weld

F25749B

INSTALLATION

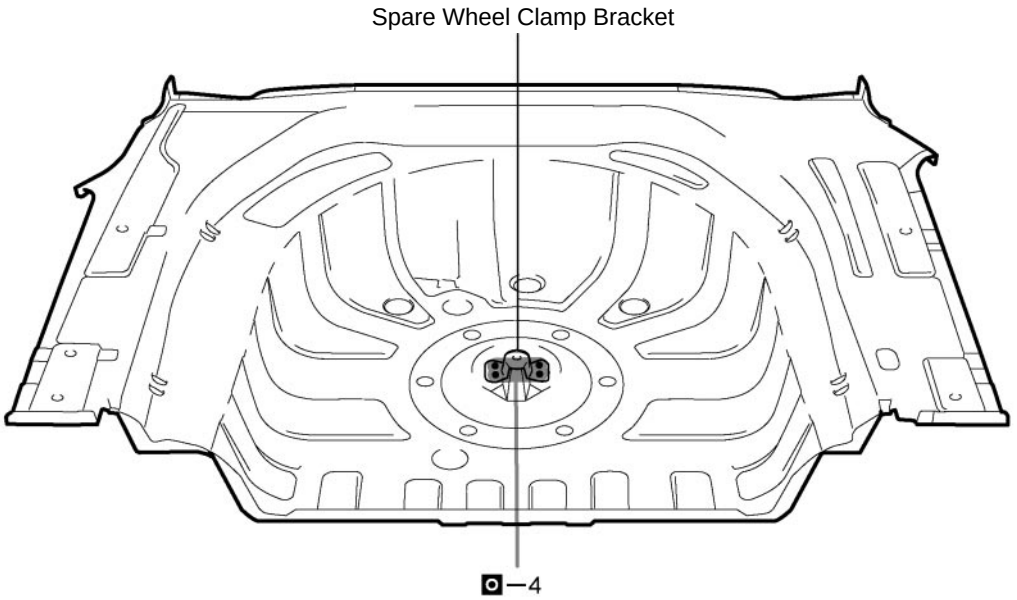

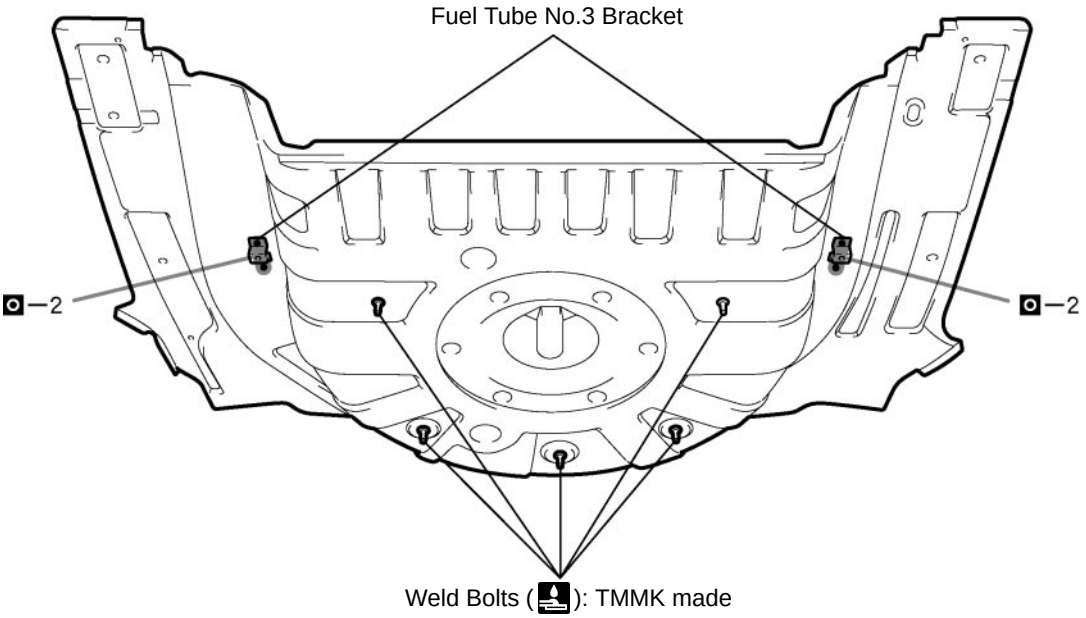

F25749

INSTALLATION POINT

1 Before temporarily installing the new parts, weld the spare wheel clamp bracket and fuel tube No.3 bracket with the standard number of welding points.

Symbol meaning

O M I : MIG Plug Weld : Tack Weld

F25749B

[LH]

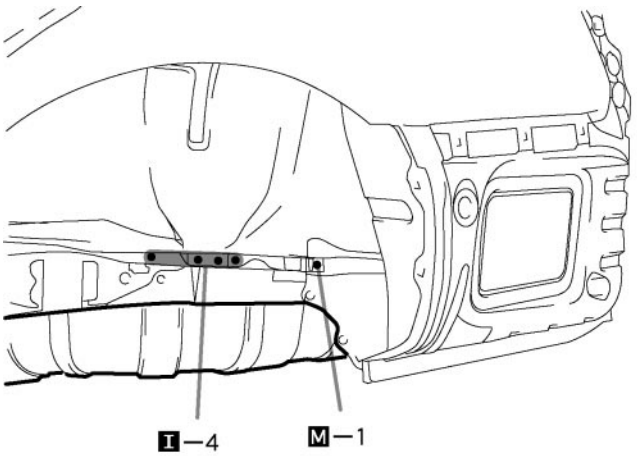

[RH]

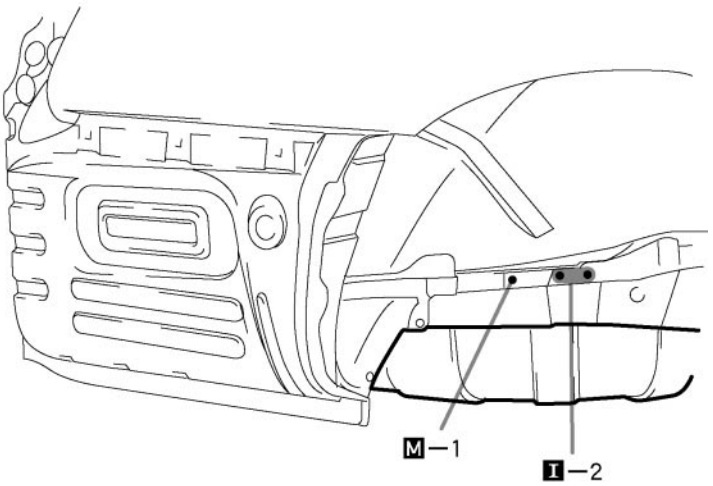

F25804

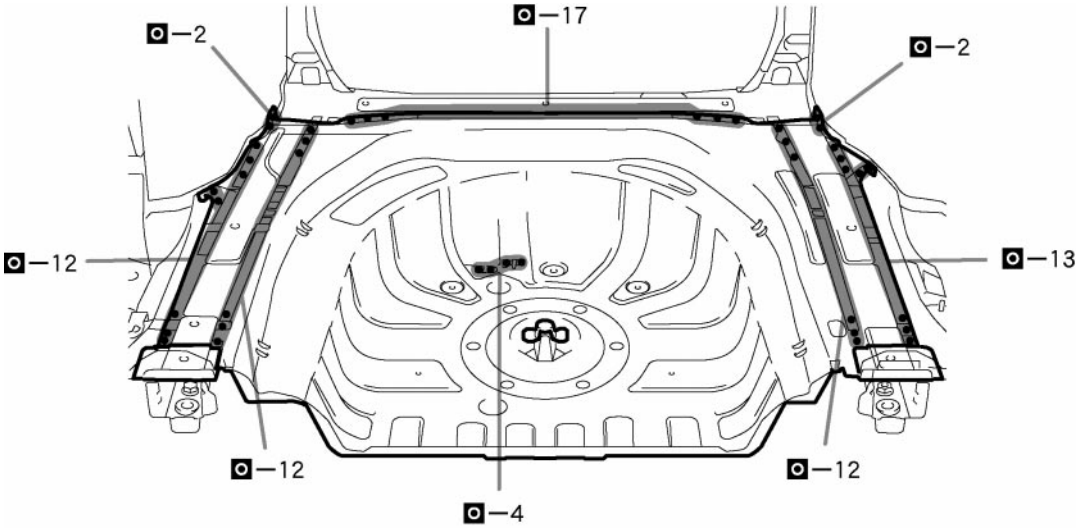

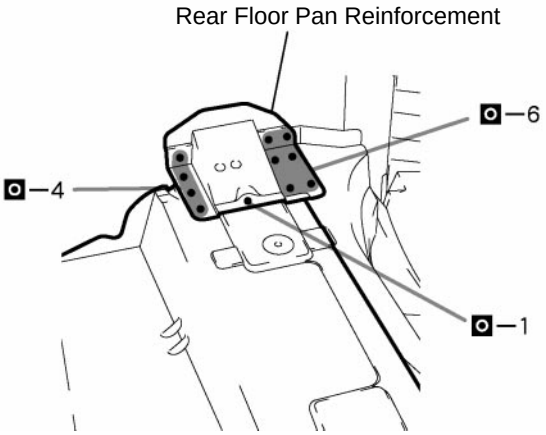

F25803

INSTALLATION POINT

1 After welding, apply body sealer and undercoating to the corresponding parts.(See the paint·coating)

2 After applying the top coat, apply anti-rust agent to the internal panel portion of the closed section structural weld points.

REAR FLOOR SIDE PANEL (ASSY)

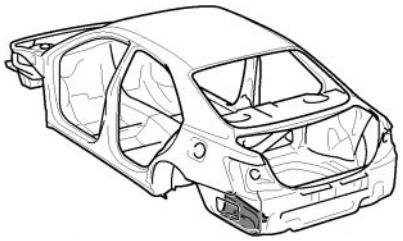

F25750A

With the rear floor pan removed.

Symbol meaning

REMOVAL	◎ ▲ : Remove Weld Points
INSTALLATION	■ I : MIG Plug Weld

F25750B

REMOVAL·INSTALLATION

[LH]

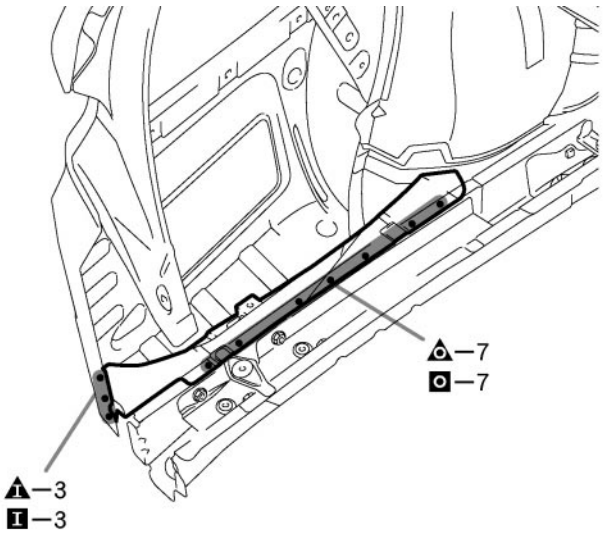

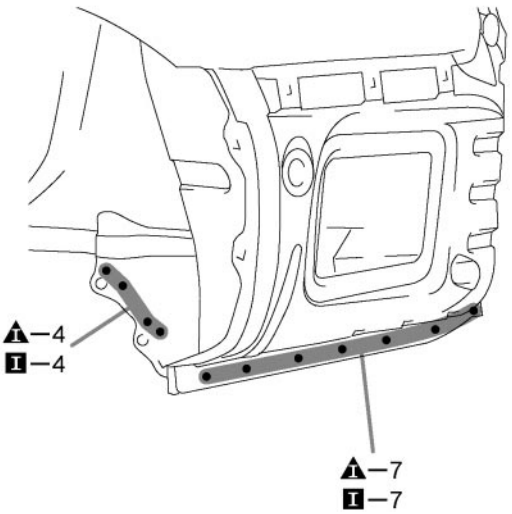

F25750

INSTALLATION POINT

1 After welding, apply body sealer and undercoating to the corresponding parts. (See the paint·coating)
2 After applying the top coat, apply anti-rust agent to the internal panel portion of the closed section structural weld points.

[RH]

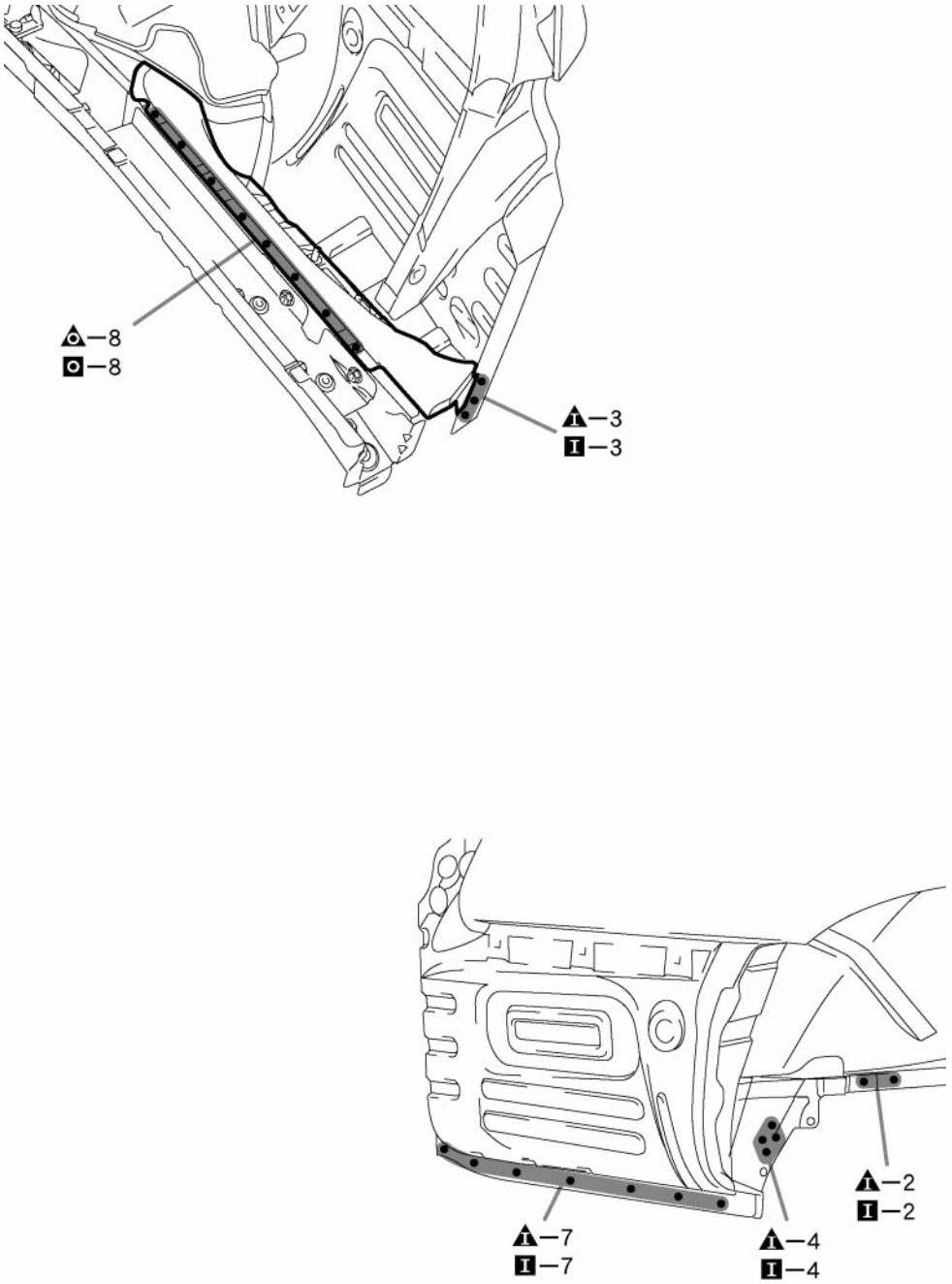

INSTALLATION POINT

1 After welding, apply body sealer and undercoating to the corresponding parts. (See the paint·coating)

2 After applying the top coat, apply anti-rust agent to the internal panel portion of the closed section structural weld points.

REAR FLOOR SIDE REAR MEMBER (ASSY)

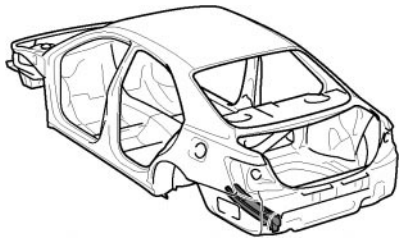

F25752A

With the rear floor no.3 crossmember removed.

Symbol meaning

REMOVAL	◆ ▲ : Remove Weld Points
INSTALLATION	■ I : MIG Plug Weld

F25752B

REMOVAL·INSTALLATION

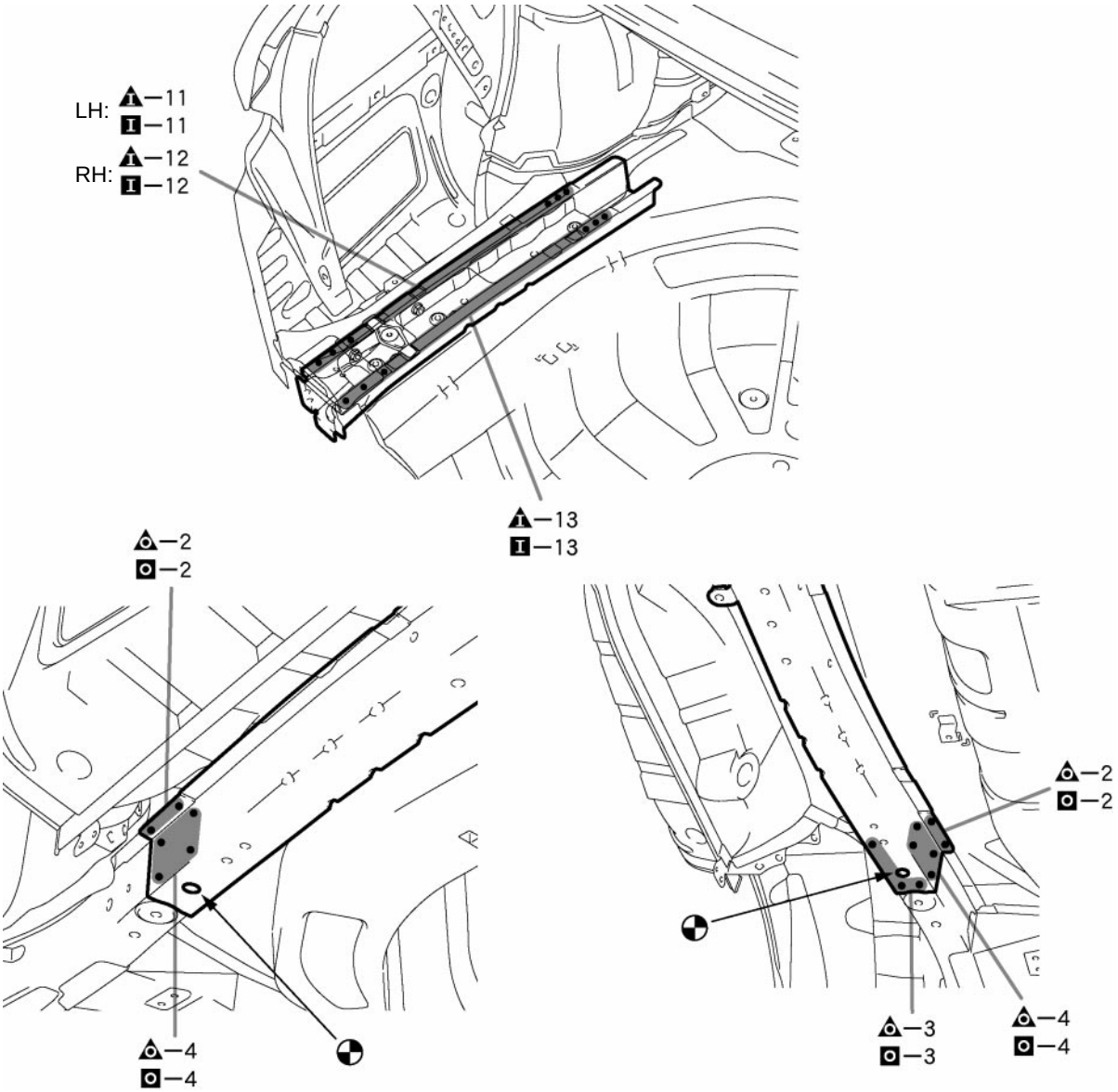

F25752

INSTALLATION POINT

1 Temporarily install the new parts and measure each part of the new parts in accordance with the body dimension diagram. (See the body dimension diagram)
2 After welding, apply undercoating to the corresponding parts.(See the paint·coating)
3 After applying the top coat, apply anti-rust agent to the internal panel portion of the closed section structural weld points.

REAR FLOOR NO. 2 CROSSMEMBER (ASSY)

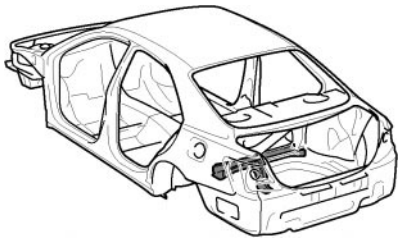

F25753A

Symbol meaning

REMOVAL	◎ ▲ : Remove Weld Points
INSTALLATION	◘ I : MIG Plug Weld

F25753B

REMOVAL·INSTALLATION

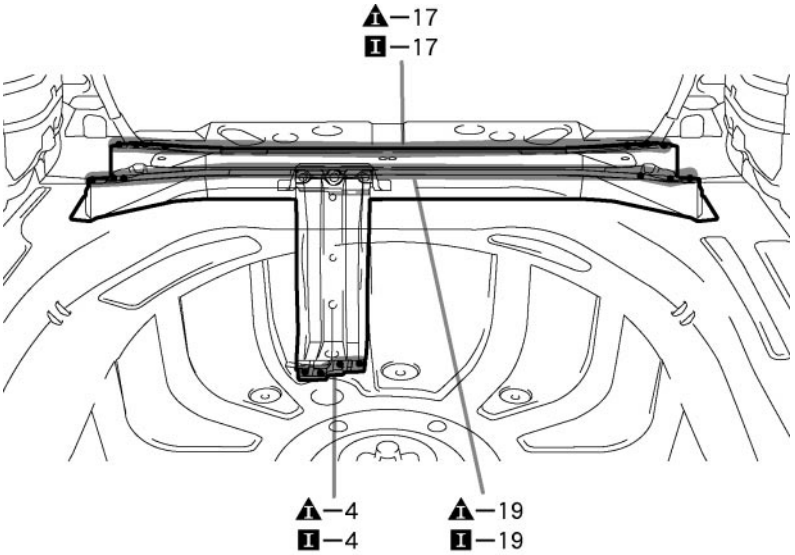

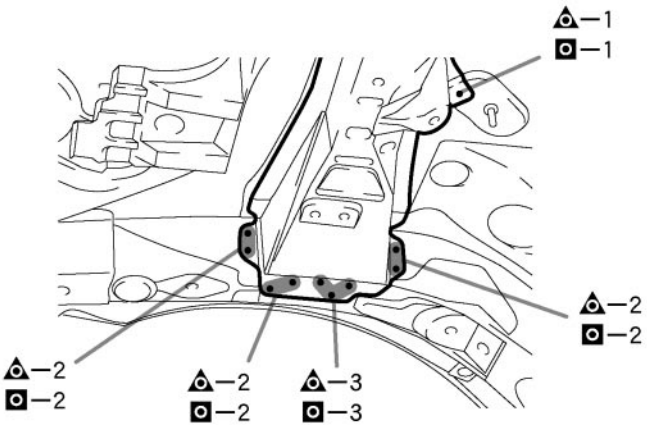

F25753

INSTALLATION POINT

1 Temporarily install the new parts and measure each part of the new parts in accordance with the body dimension diagram. (See the body dimension diagram)
2 After welding, apply undercoating to the corresponding parts.(See the paint·coating)
3 After applying the top coat, apply anti-rust agent to the internal panel portion of the closed section structural weld points.

ROOF PANEL (ASSY): Nomal Roof

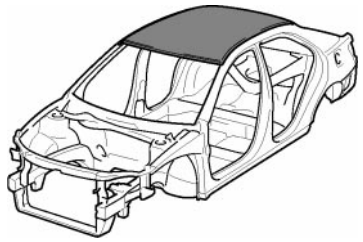

F25754A

Symbol meaning

REMOVAL	: Remove Weld Points		
INSTALLATION	: Spot Weld	: MIG Plug Weld	: Body Sealer

F25754B

REMOVAL·INSTALLATION

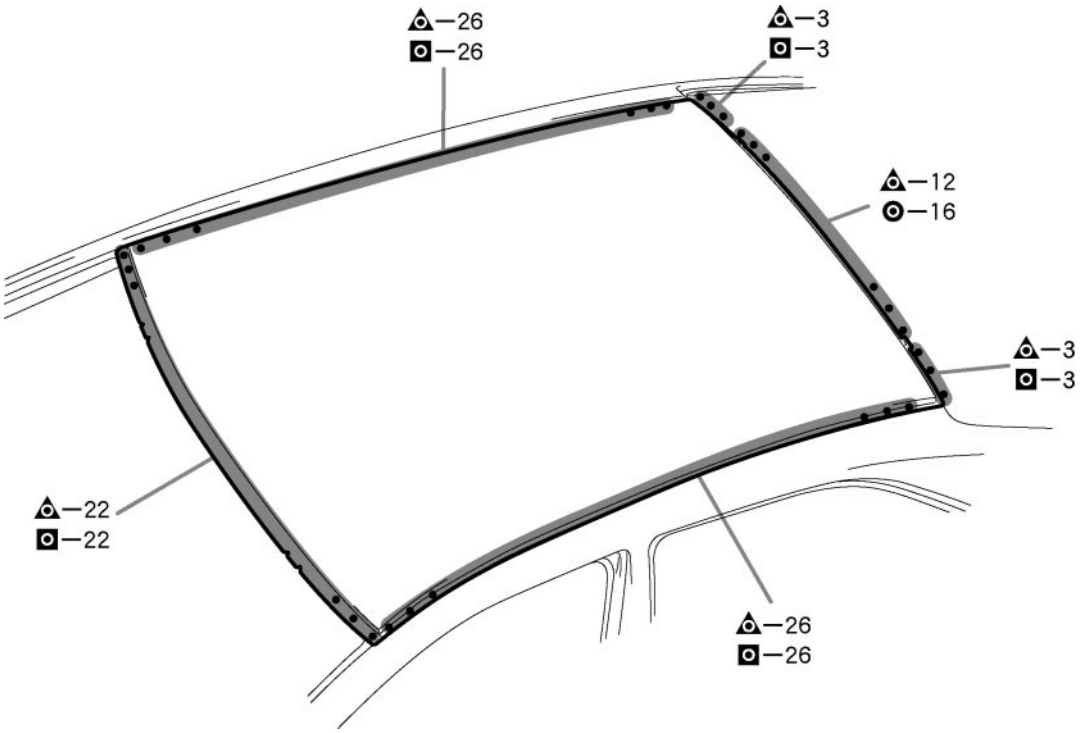

F25754

INSTALLATION POINT

1 Inspect the fitting of the related parts around the new parts before welding. This affects the appearance of the finish.
2 Temporarily install the new parts and measure each part of the new parts in accordance with the body dimension diagram. (See the body dimension diagram)
3 After welding, apply body sealer to the corresponding parts.(See the paint·coating)
4 After applying the top coat, apply anti-rust agent to the internal panel portion of the closed section structural weld points.

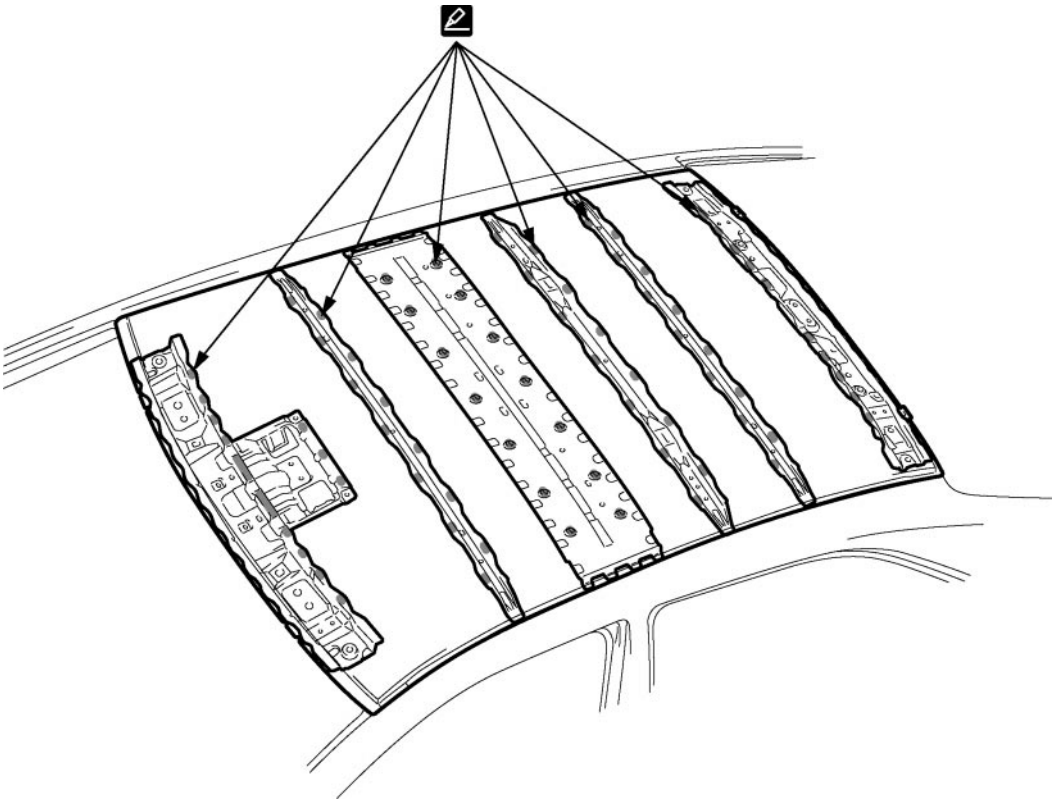

F25806

INSTALLATION POINT

1 Before temporarily installing the new parts, apply body sealer to the windshield header panel, roof panel reinforcement and back door opening frame.

HINT:

1) Apply just enough sealer for the new parts to make contact.

ROOF PANEL (ASSY): Moon Roof

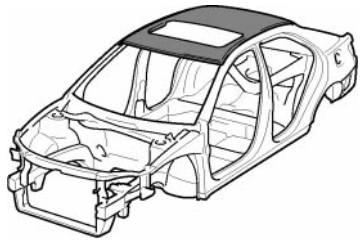

F25755A

Symbol meaning

REMOVAL	: Remove Weld Points		
INSTALLATION	: Spot Weld	: MIG Plug Weld	: Body Sealer

F25755B

REMOVAL·INSTALLATION

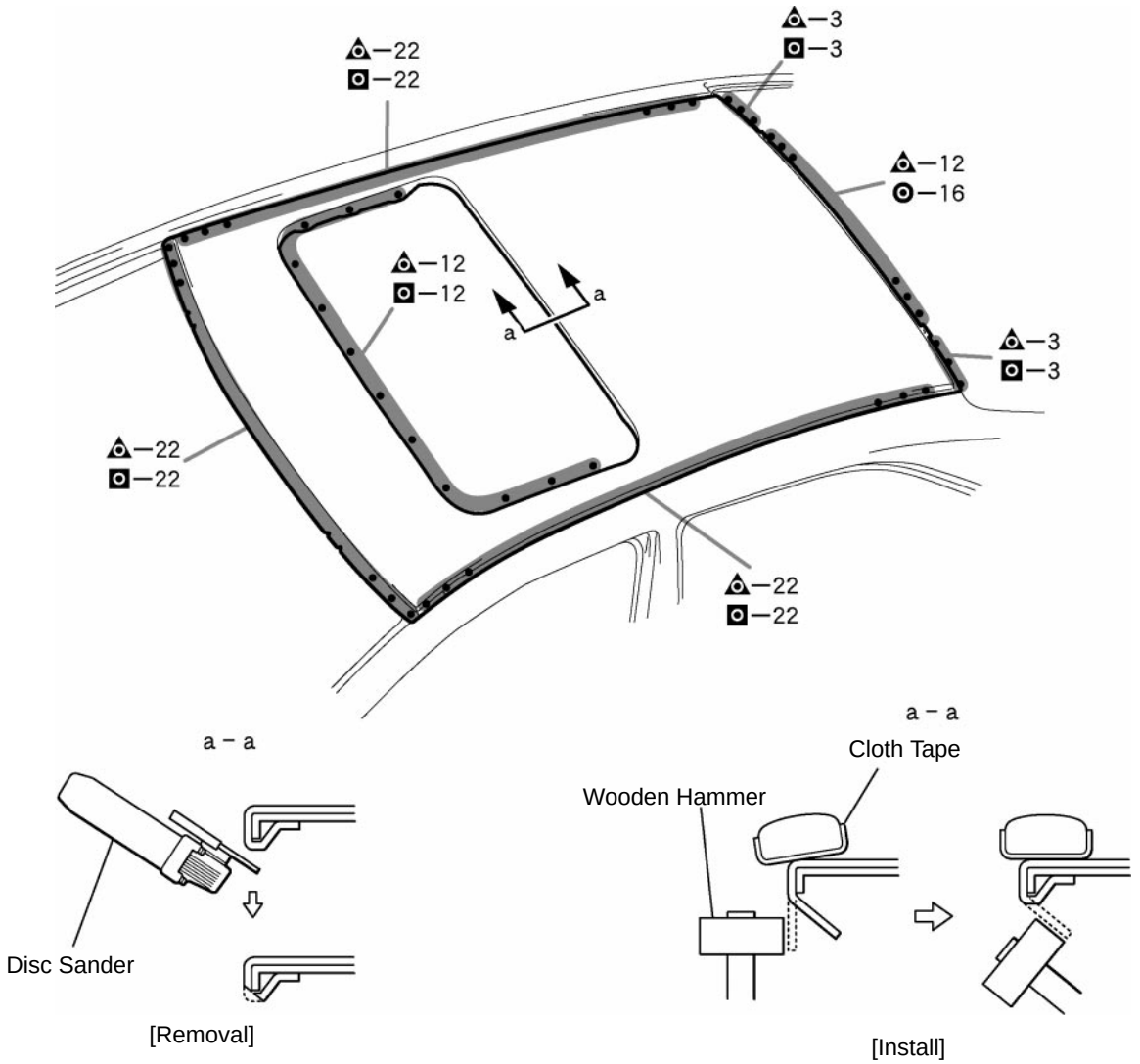

F25755

INSTALLATION POINT

1 Inspect the fitting of the related parts around the new parts before welding. This affects the appearance of the finish
2 Temporarily install the new parts and measure each part of the new parts in accordance with the body dimension diagram. (See the body dimension diagram)
3 After welding, apply body sealer to the corresponding parts.(See the paint·coating)
4 After applying the top coat, apply anti-rust agent to the internal panel portion of the closed section structural weld points.

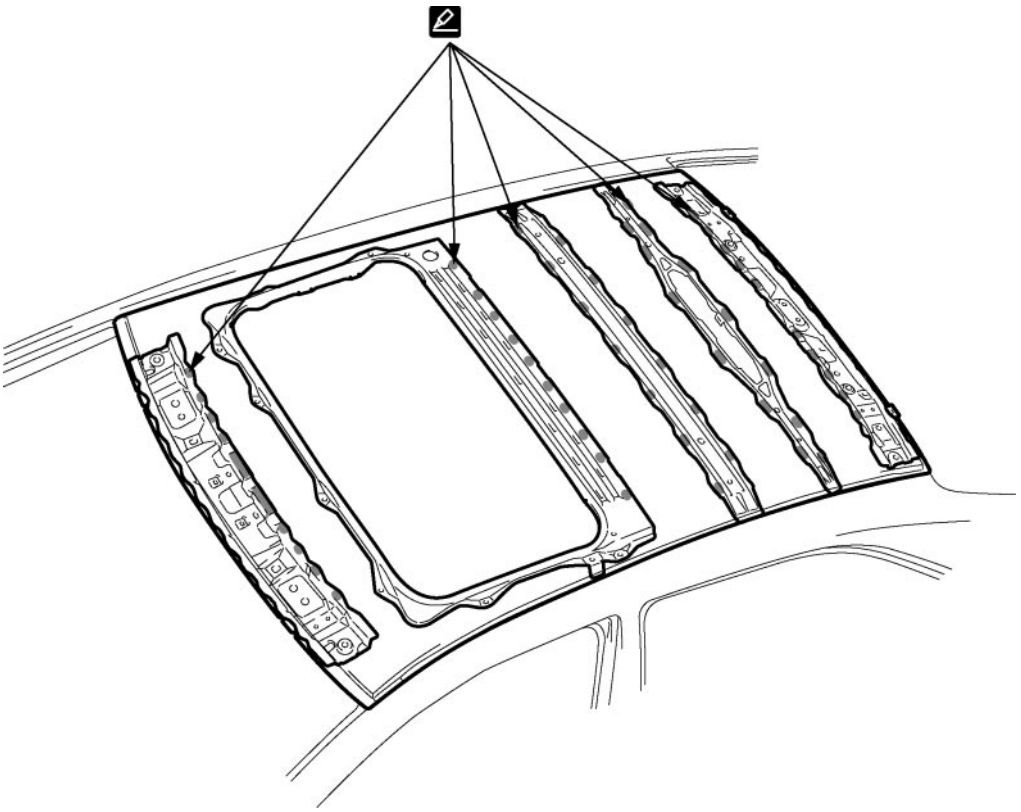

F25756

INSTALLATION POINT

1 Before temporarily installing the new parts, apply body sealer to the windshield header panel, roof panel reinforcement and back door opening frame.

HINT:

1) Apply just enough sealer for the new parts to make contact.

OUTER PANEL INSTALLATION TORQUE

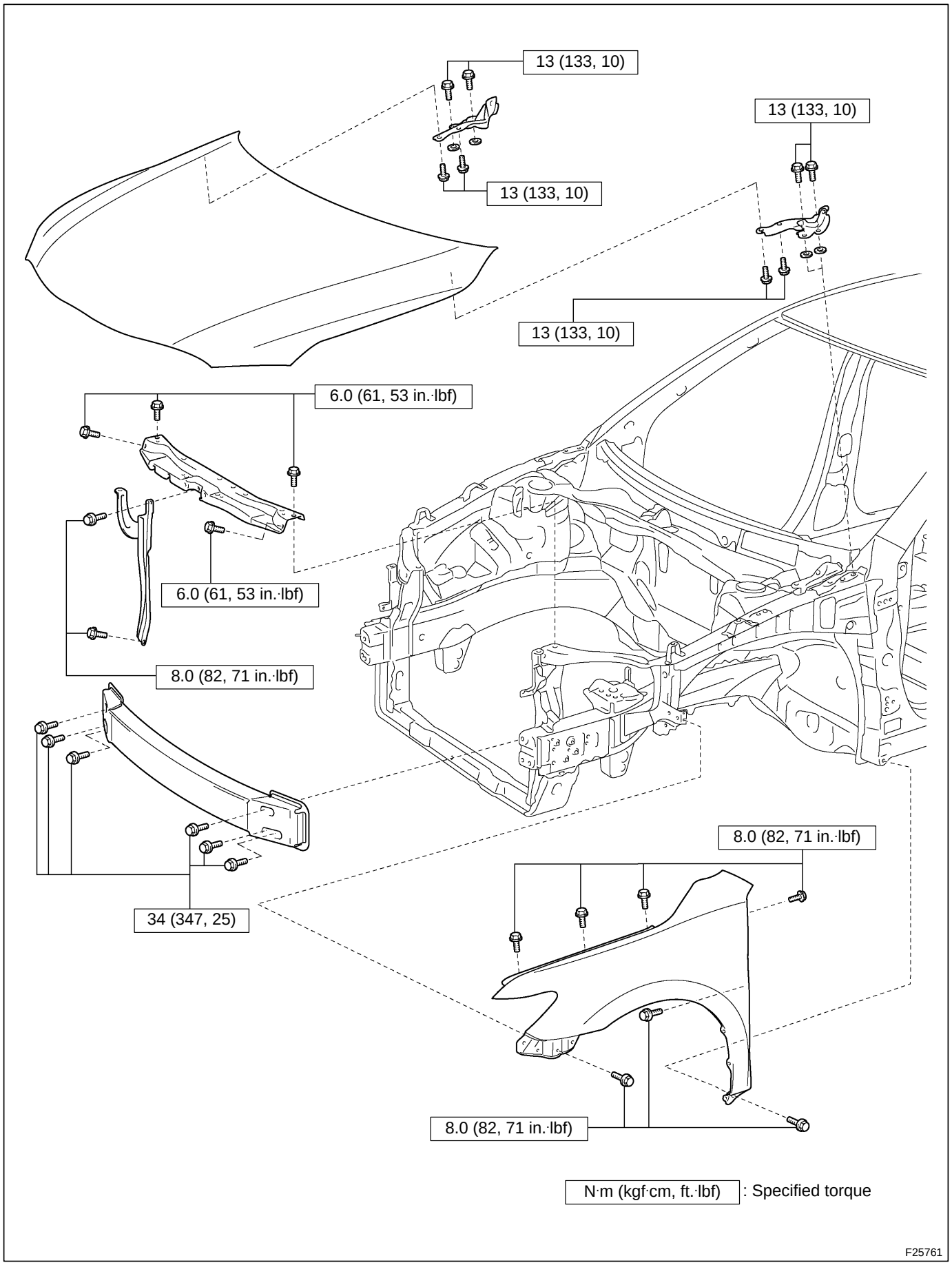

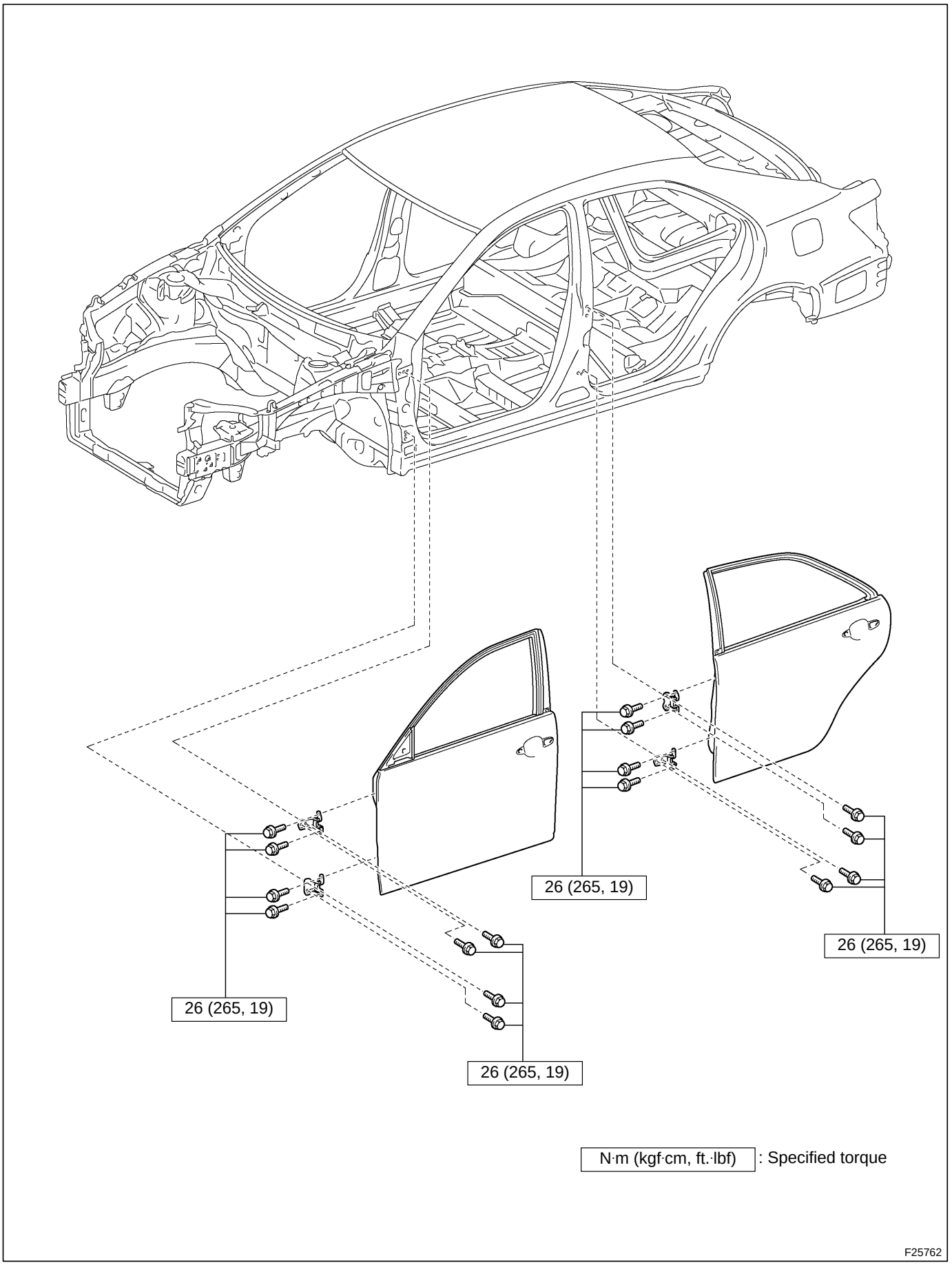
26 (265, 19)
26 (265, 19)
26 (265, 19)
26 (265, 19)
N·m (kgf·cm, ft.·lbf) : Specified torque
F25762

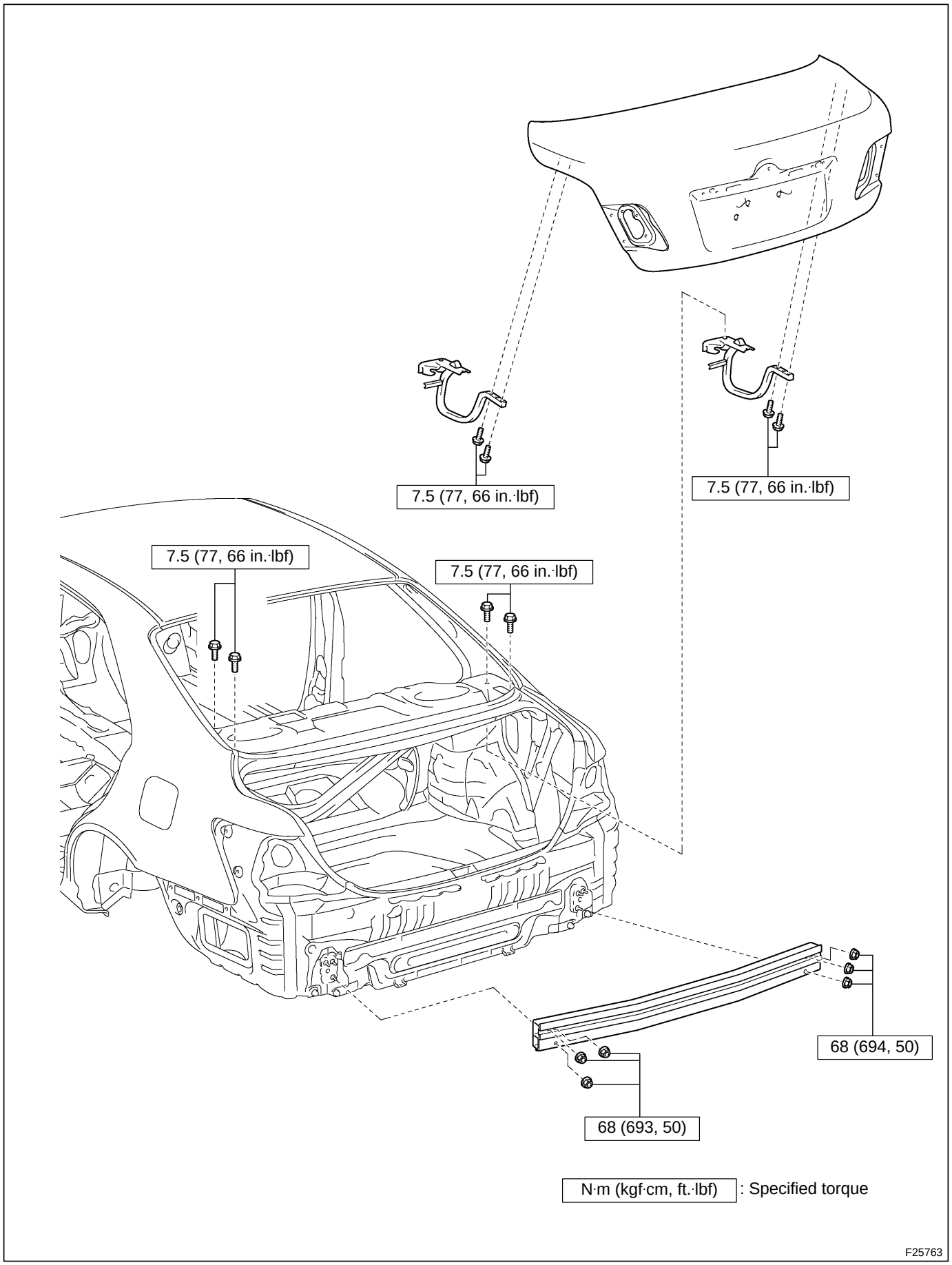
7.5 (77, 66 in.·lbf)
7.5 (77, 66 in.·lbf)
7.5 (77, 66 in.·lbf)
7.5 (77, 66 in.·lbf)
68 (694, 50)
68 (693, 50)
N·m (kgf·cm, ft.·lbf) : Specified torque
F25763

FIT STANDARD/ADJUSTMENT METHOD/TORQUE SPECIFICATION

HOOD SUB-ASSEMBLY

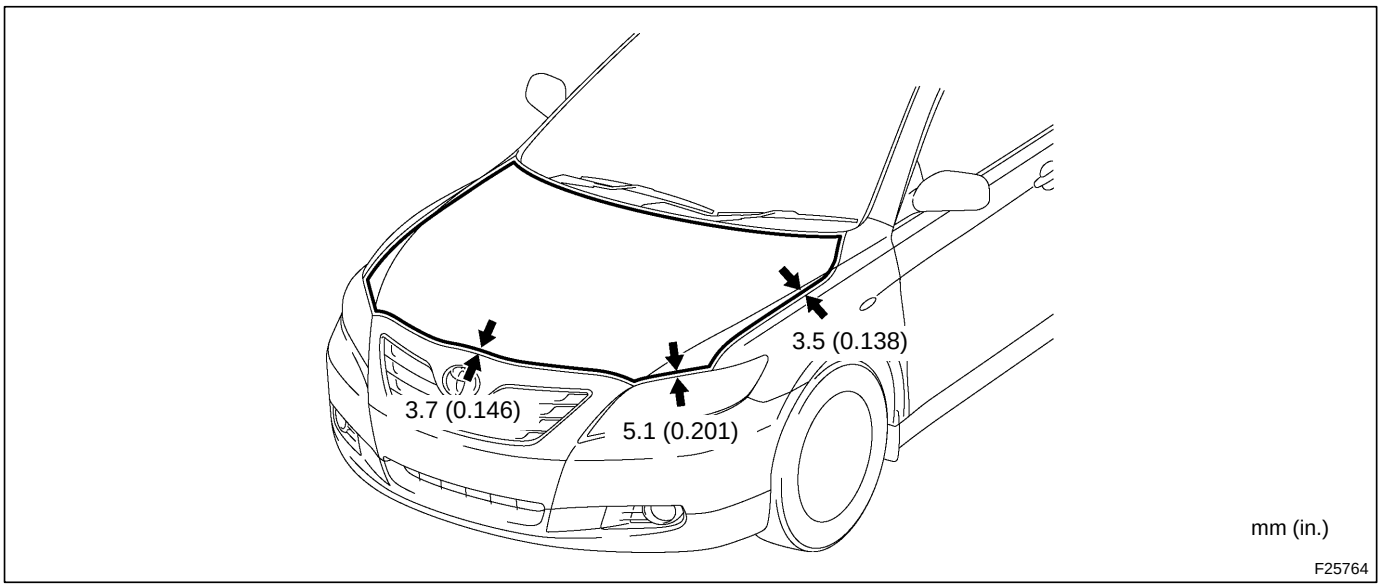

1. ADJUST HOOD SUB-ASSEMBLY

HINT:

- *Centering bolts are used to mount the hood hinge and hood lock. The hood and hood lock cannot be adjusted with the centering bolts on. Substitute the centering bolts with standard bolts (with washers) when making adjustments.*

a. Horizontally and vertically adjust the hood.

i. Loosen the hood's 4 hinge bolts.

ii. Move the hood and adjust the clearance between the hood and front fender.

iii. Tighten the hood's 4 hinge bolts after the adjustment.

Torque:
13 N·m (133 kgf·cm, 10 ft.·lbf)

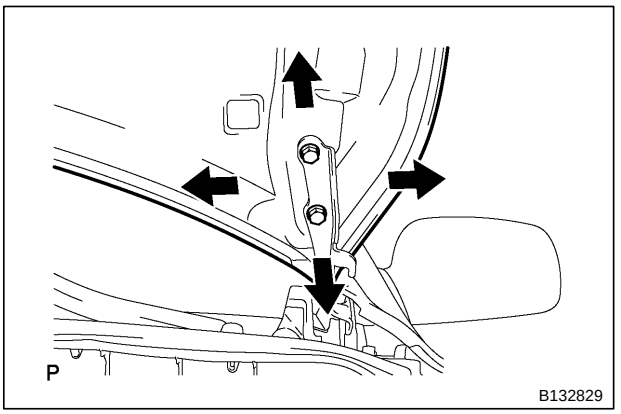

b. Adjust the height of the hood front end using the cushion rubber.

i. Adjust the cushion rubber so that the height of the hood and fender are aligned.

HINT:

Raise or lower the hood's front end by turning the cushion rubber.

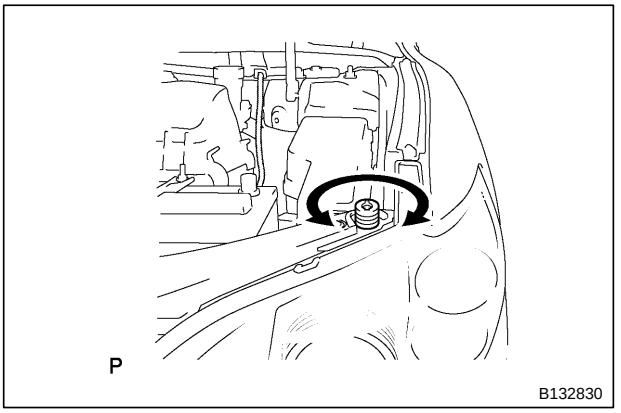

c. Adjust the hood lock.

i. Loosen the 3 bolts.

ii. Tighten the bolts after the adjustment.

Torque:
7.5 N·m (77 kgf·cm, 66 in.·lbf)

iii. Adjust the hood lock position so that the striker can enter it smoothly.

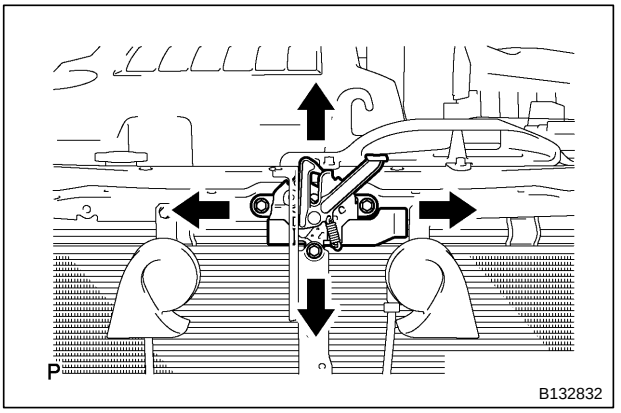

FRONT DOOR

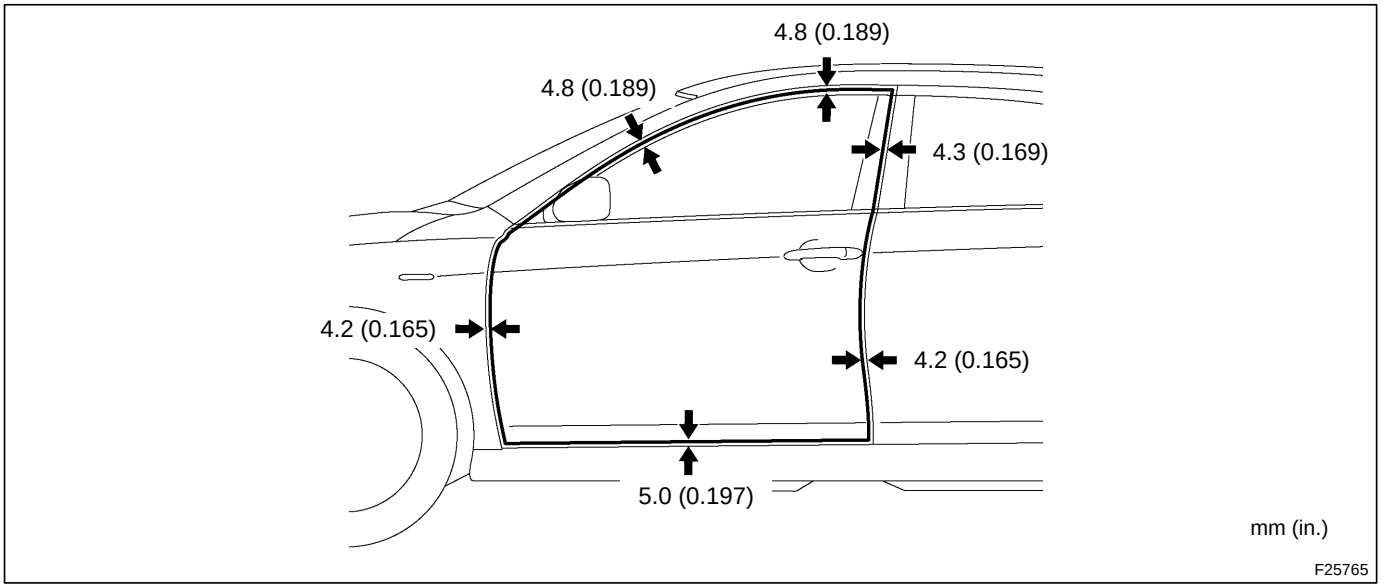

1. ADJUST FRONT DOOR

HINT:

- *Before adjusting the door position for vehicles equipped with side airbags and curtain shield airbags, be sure to disconnect the battery. After adjustment, inspect the SRS warning light, the side airbag system, and the curtain shield airbag system for normal operation. Then initialize both airbag systems.*
- *Use the same procedures for the RH side and LH side.*
- *The procedures listed below are for the LH side.*
- *Centering bolts are used to mount the door hinge to the vehicle body and door. The door cannot be adjusted with the centering bolts on. Substitute the centering bolts with standard bolts (with washers) when making adjustment.*

a. Using SST, loosen the body's hinge bolts and adjust the door position.

SST
09812-00010

b. Tighten the body's hinge bolts after the adjustment.

Torque:
26 N·m (265 kgf·cm, 19 ft.·lbf)

c. Loosen the door's hinge bolts and adjust the door position.

d. Tighten the door's hinge bolts after the adjustment.

Torque:
26 N·m (265 kgf·cm, 19 ft.·lbf)

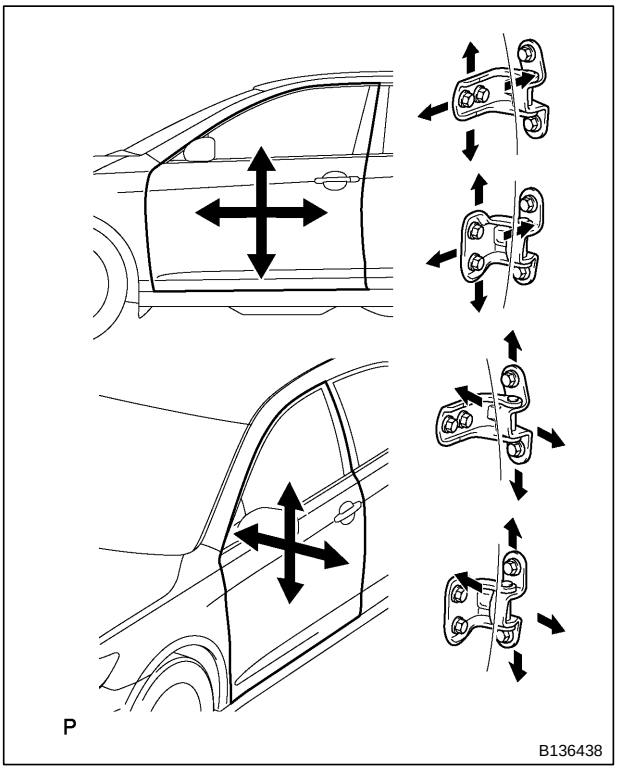

e. Using a "torx" socket wrench (T40), adjust the striker position by slightly loosening the striker mounting screws and hitting the striker with a plastic hammer.

f. Using a "torx" socket wrench (T40), tighten the striker mounting screws after the adjustment.

Torque:
23 N·m (235 kgf·cm, 17 ft.·lbf)

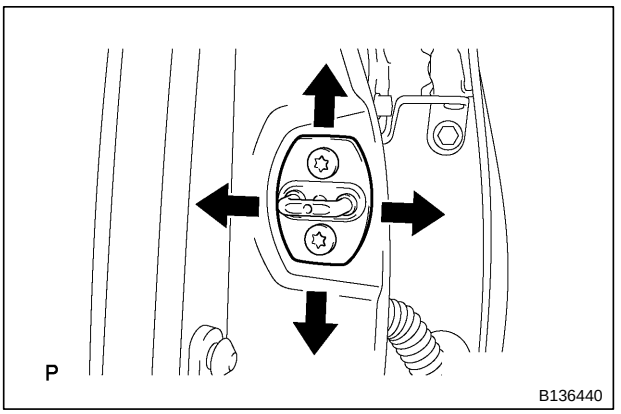

REAR DOOR

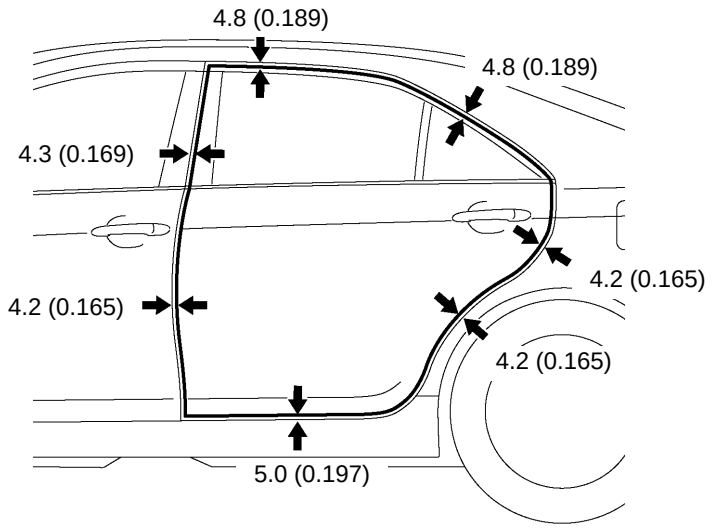

1. ADJUST REAR DOOR

HINT:

- *Before adjusting the door position for vehicles equipped with side airbags and curtain shield airbags, be sure to disconnect the battery. After adjustment, inspect the SRS warning light, the side airbag system, and the curtain shield airbag system for normal operation. Then initialize both airbag systems.*
- *Use the same procedures for the RH side and LH side.*
- *The procedures listed below are for the LH side.*
- *Centering bolts are used to mount the door hinge to the vehicle body and door. The door cannot be adjusted with the centering bolts on. Substitute the centering bolts with standard bolts (with washers) when making adjustments.*

a. Loosen the body's hinge bolts and adjust the door position.

SST
09812-00010

b. Tighten the body's hinge bolts after the adjustment.

Torque:
26 N·m (265 kgf·cm, 19 ft.·lbf)

c. Loosen the door's hinge bolts and adjust the door position.

d. Tighten the door's hinge bolts after the adjustment.

Torque:
26 N·m (265 kgf·cm, 19 ft.·lbf)

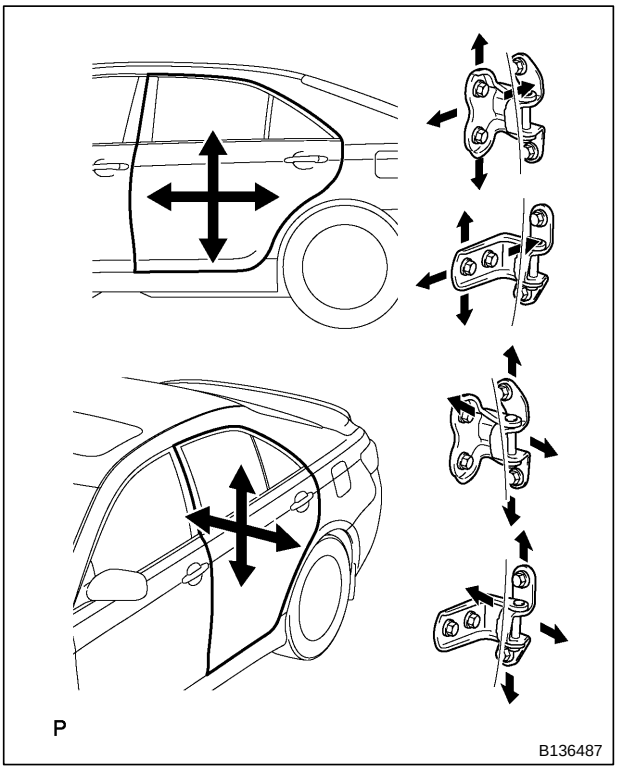

e. Using a "torx" socket wrench (T40), adjust the striker position by slightly loosening the striker mounting screws and hitting the striker with a plastic hammer.

f. Using a "torx" socket wrench (T40), tighten the striker mounting screws after the adjustment.

Torque:
23 N·m (235 kgf·cm, 17 ft.·lbf)

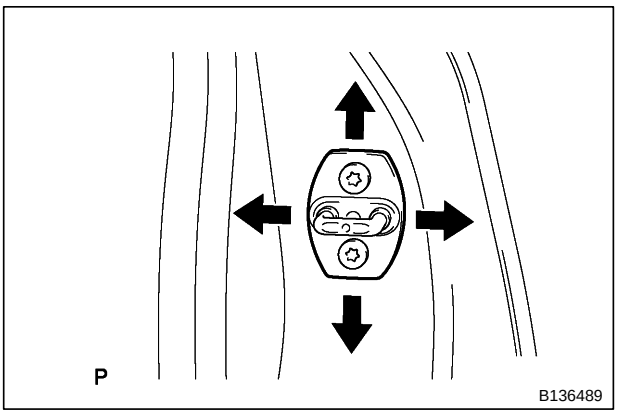

LUGGAGE COMPARTMENT DOOR

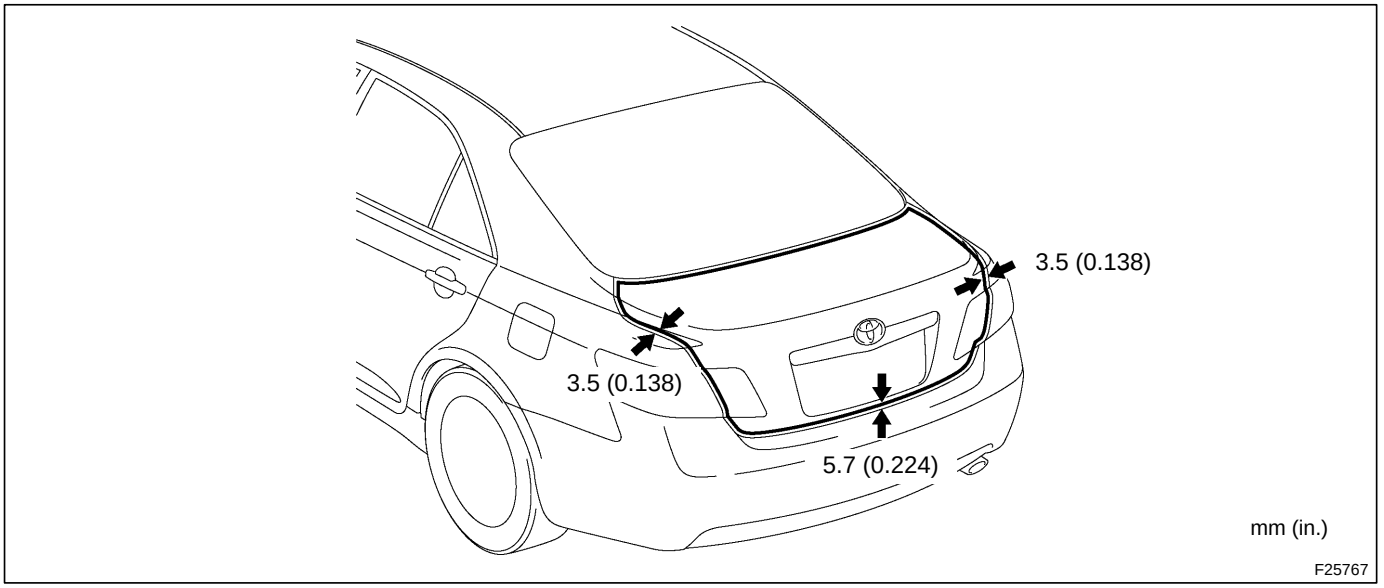

1. ADJUST LUGGAGE COMPARTMENT DOOR

HINT:

- *Centering bolts are used to mount the door hinge to the door. The door cannot be adjusted with the centering bolts on. Substitute the centering bolts with standard bolts (with washers) when making adjustments.*

a. Horizontally and vertically adjust the door by loosening the door side hinge bolts.

Torque:
7.5 N·m (77 kgf·cm, 66 in.·lbf)

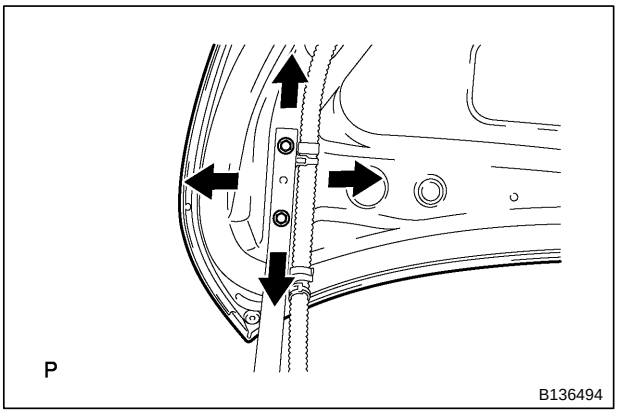

b. Adjust the striker position by slightly loosening the 2 striker mounting screws and hitting the striker with a plastic-faced hammer.

c. Tighten the striker mounting screws after the adjustment.

Torque:
5.5 N·m (56 kgf·cm, 49 in.·lbf)

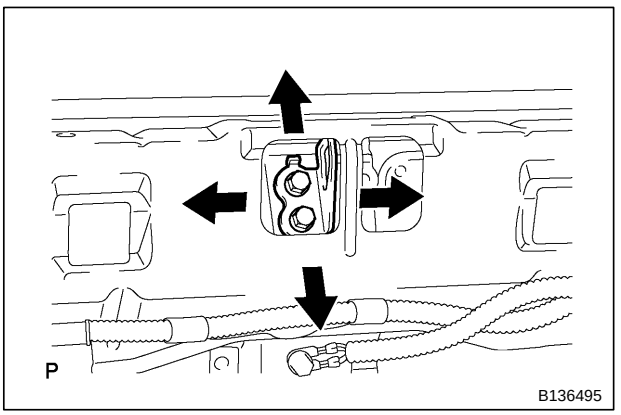

NAME PLATE APPLICATION PROCEDURE

(a) Heat the double-sided tape remaining on the body with an infrared lamp or equivalent.
HINT:
Heat the tape to 40 to 60●C for approximately 1 to 2 minutes.

(b) Wipe off the remaining double-sided tape using a clean cloth or equivalent.
HINT:
If a name plate is installed without thoroughly removing the remaining double-sided tape from the body, the name plate will not adhere properly. Make sure to thoroughly wipe off the double-sided tape.

(c) After cleaning the installation area of the body with degreasing agent, attach the name plate to the position shown in the illustration.
HINT:
The working environment should be 20●C when installing the name plate. If the working environment is below 20●C, heat the installation area of the body to 20 to 30●C and then install the name plate.

[GENERAL EXPORT]

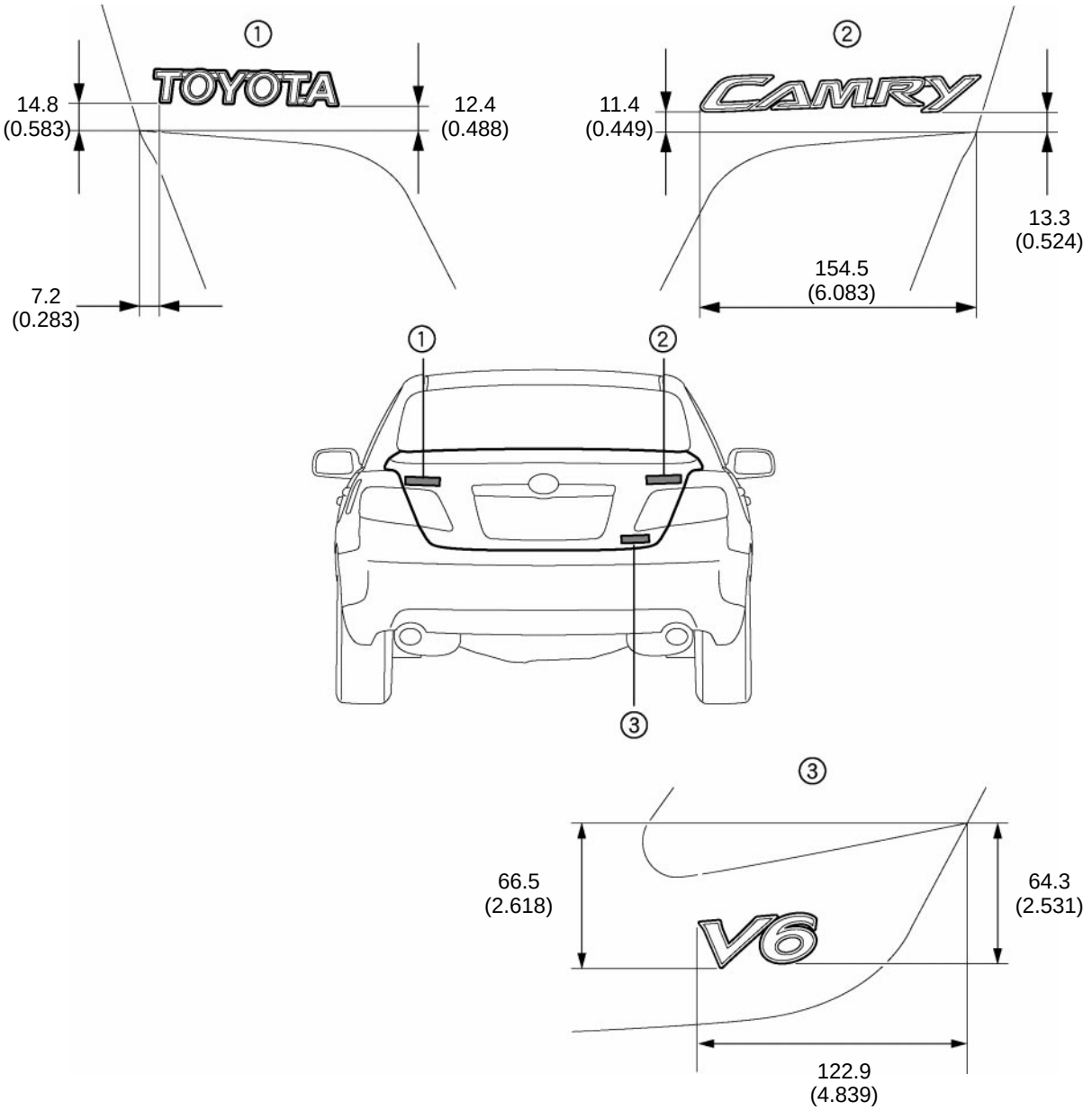

mm (in.)

F25809

[U.S.A., CANADA]

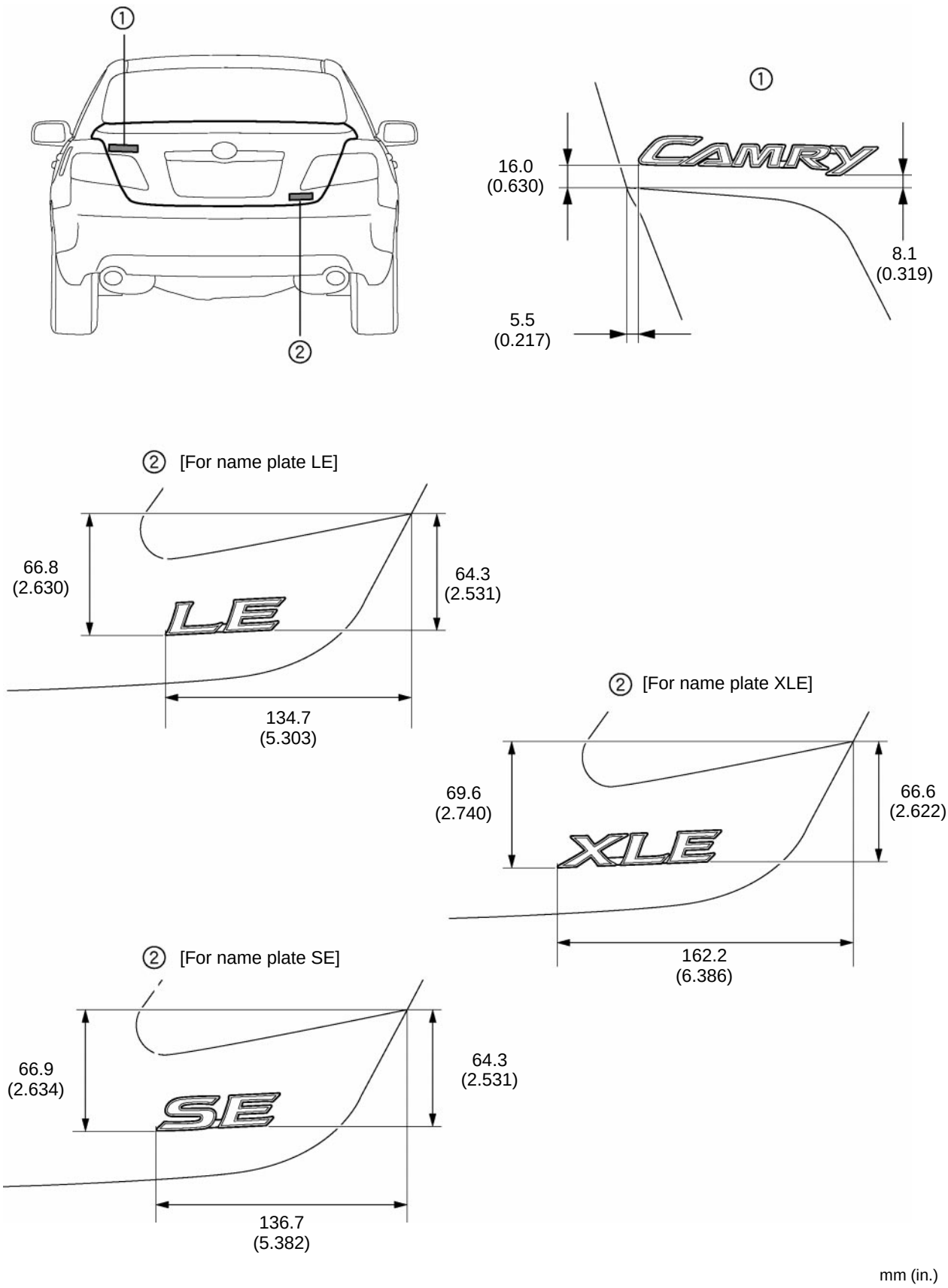
①
②
①
16.0
(0.630)
8.1
(0.319)
5.5
(0.217)
② [For name plate LE]
66.8
(2.630)
64.3
(2.531)
134.7
(5.303)
② [For name plate XLE]
69.6
(2.740)
66.6
(2.622)
162.2
(6.386)
② [For name plate SE]
66.9
(2.634)
64.3
(2.531)
136.7
(5.382)
mm (in.)
F25810

CAUTION LABEL ATTACHMENT POSITION

After using a degreasing agent to clean the surfaces of the body where the caution labels will be attached, attach the caution labels to the positions shown in the illustration.

HINT:
1) *Attach each caution label with its orientation the same as the numbers shown in the illustration.*
2) *Make sure the caution label is not attached over a spot weld.*
3) *When attaching the caution label, make sure not to touch the label's adhesive surface.*
4) *To prevent the edges of the caution label from peeling, apply extra pressure to the label's periphery.*
5) *If the work area's temperature is 5●C or less, the caution label's adhesive will deteriorate. It is recommended that you heat the label to 20 to 40●C.*

[GENERAL EXPORT]

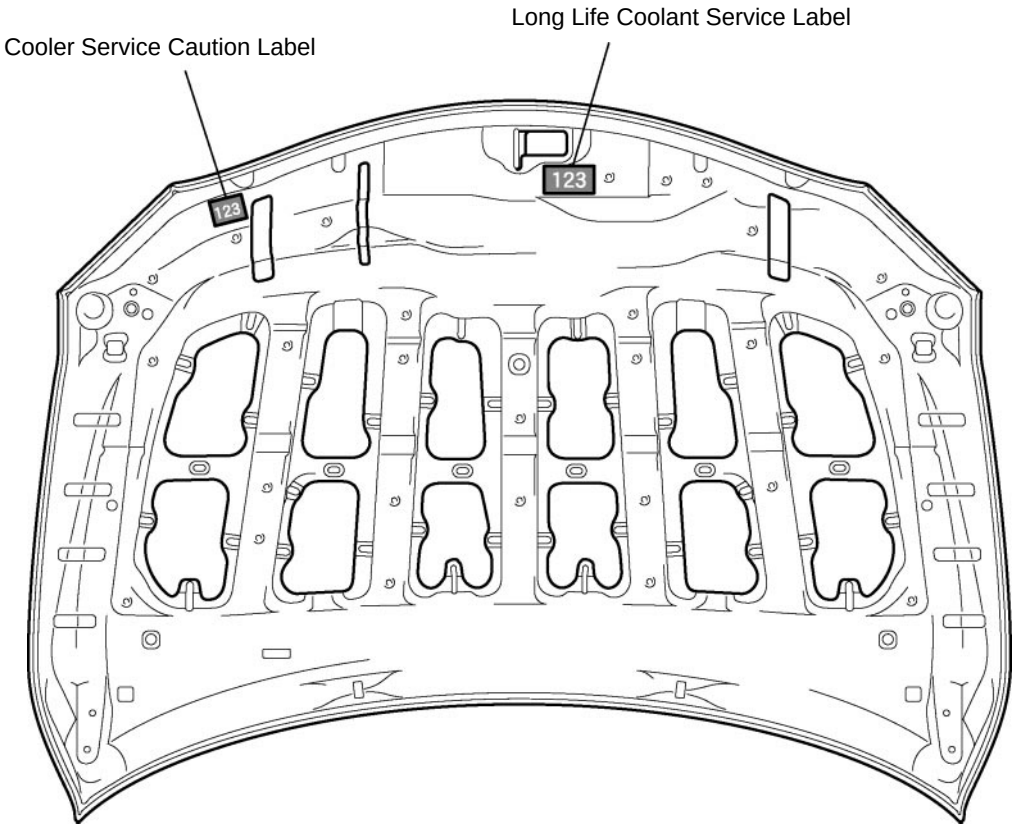

F25768

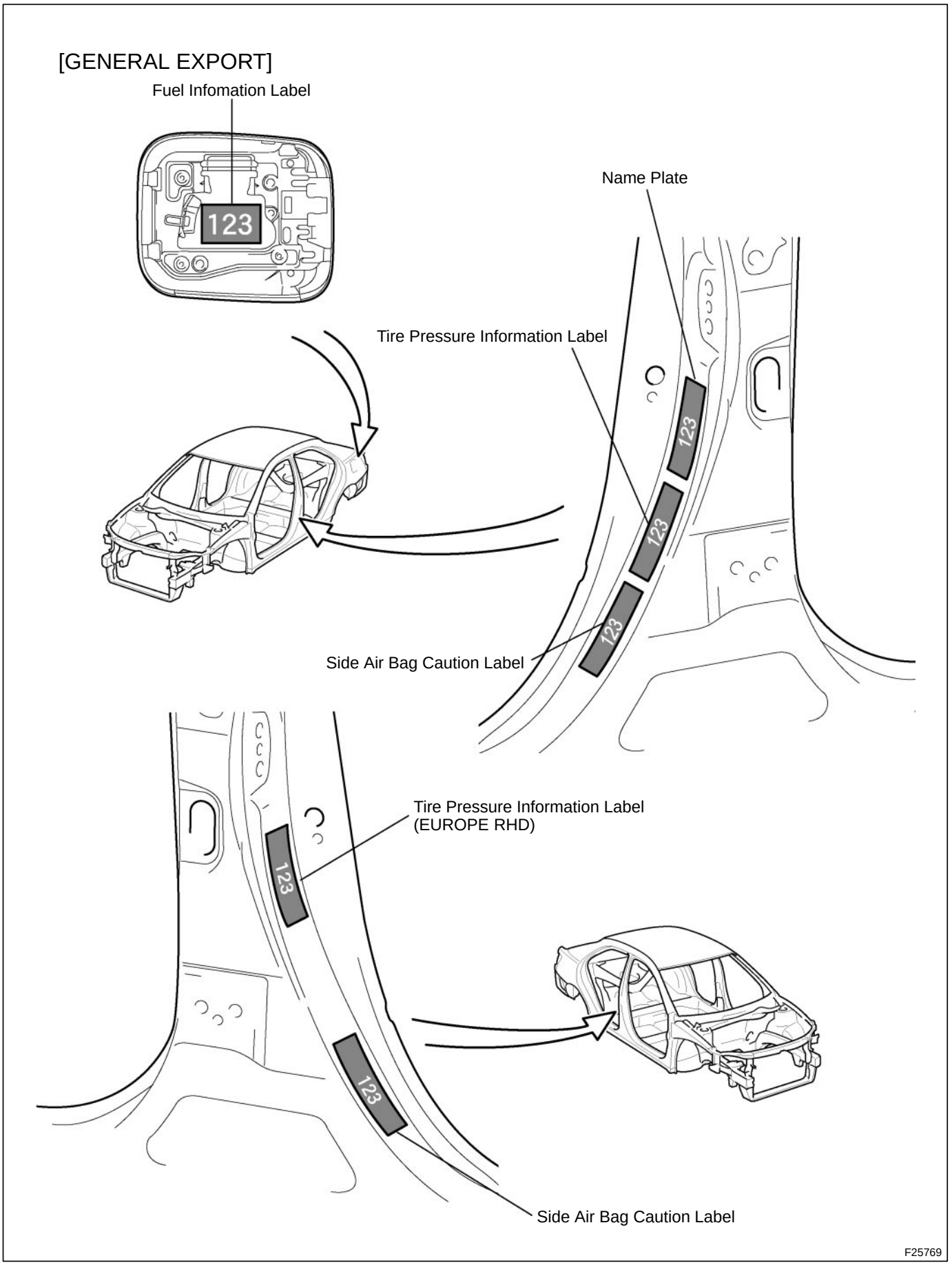
[GENERAL EXPORT]
Fuel Infomation Label
123
Name Plate
Tire Pressure Information Label
123
123
123
Side Air Bag Caution Label
Tire Pressure Information Label
(EUROPE RHD)
123
123
Side Air Bag Caution Label
F25769

[U.S.A., CANADA]

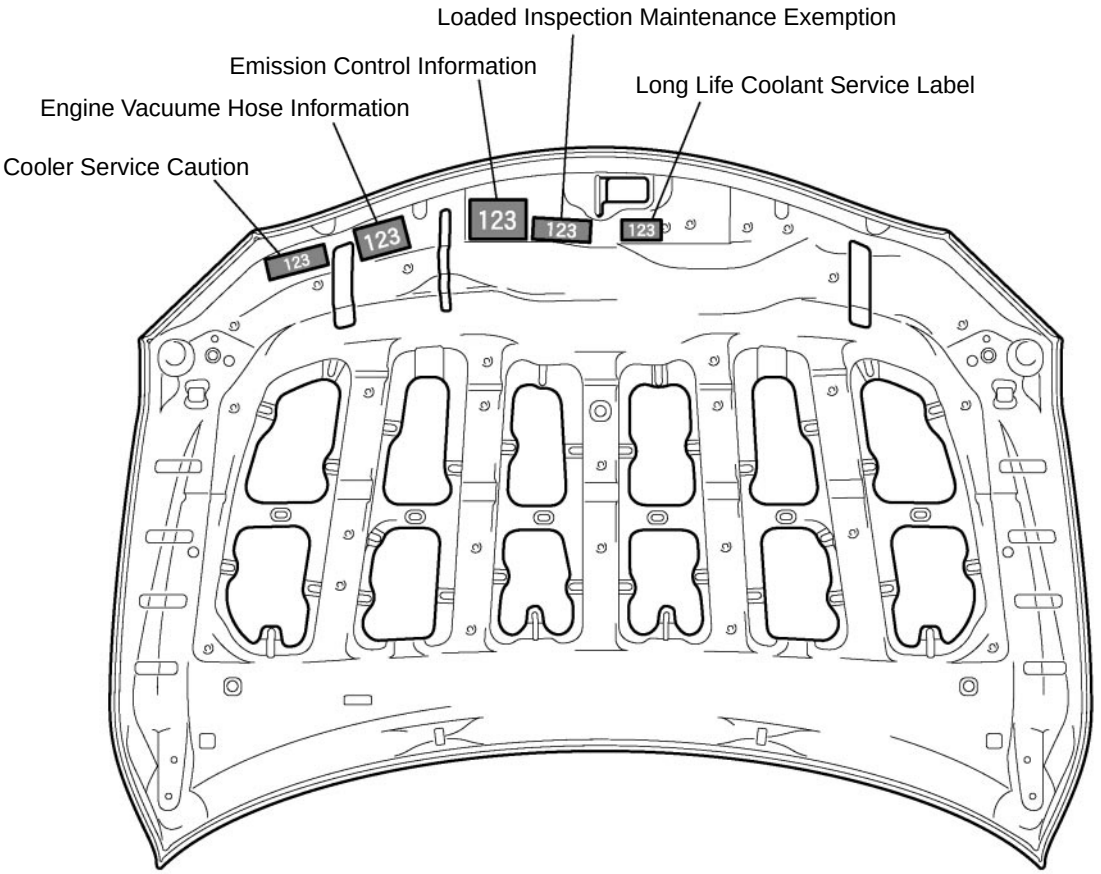

F25770

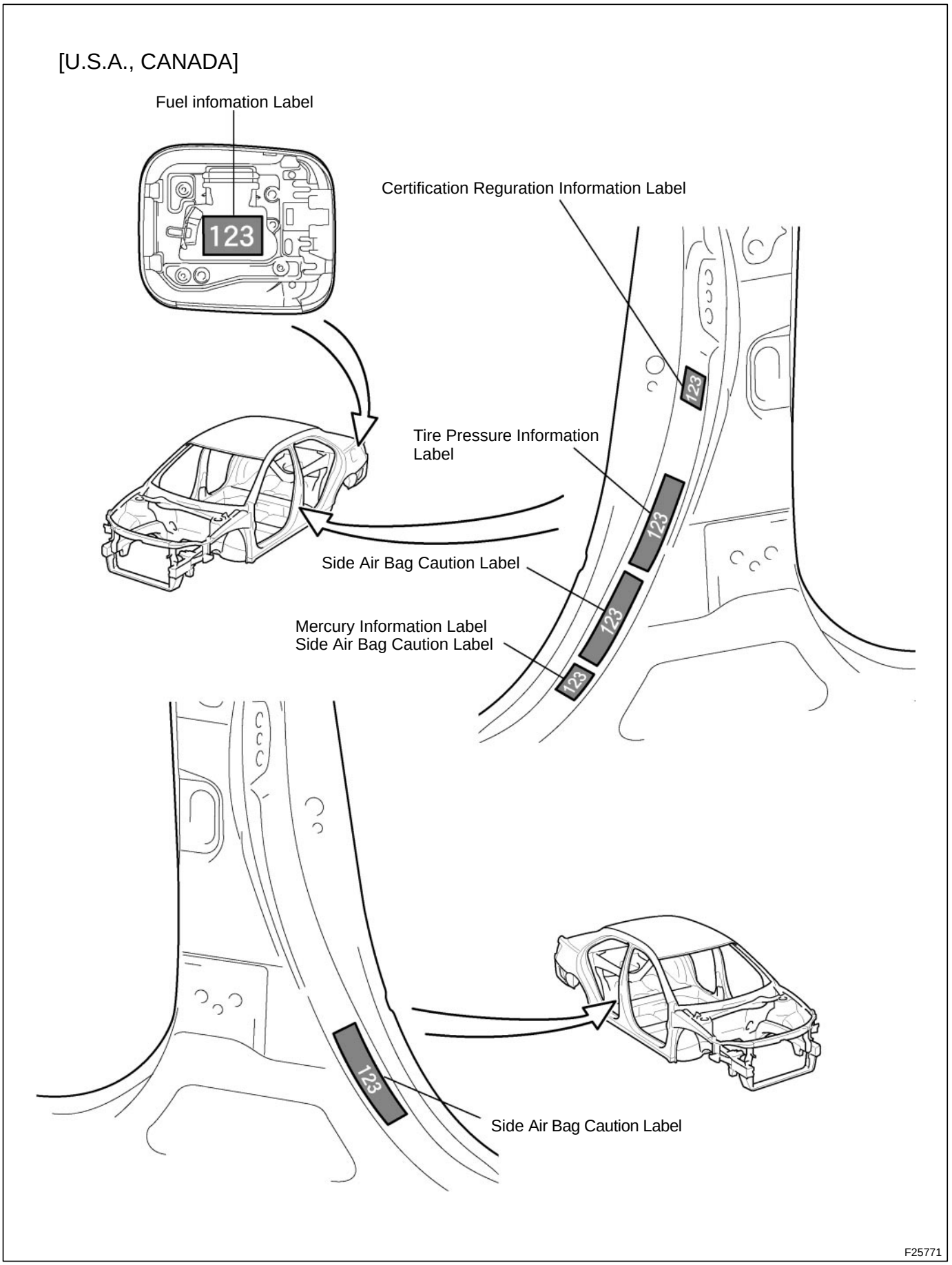
[U.S.A., CANADA]
Fuel infomation Label
123
Certification Reguration Information Label
123
Tire Pressure Information Label
123
Side Air Bag Caution Label
123
Mercury Information Label
Side Air Bag Caution Label
123
123
Side Air Bag Caution Label
F25771

BODY PANEL SEALING AREAS

Be sure to apply body sealer to the body panel joints and door edges (tip of outer panel folded part), etc., to waterproof and rustproof them.

HINT:

1) *Apply degreasing agent to a clean cloth and clean the sealer application areas.*
2) *After removing the applied spot sealer from the sealer application areas using thinner or equivalent, rustproof the areas by applying primer or equivalent. Then apply body sealer.*
3) *If sealer is unnecessarily applied to an area, apply degreasing agent to a clean cloth and clean off the sealer immediately.*

++++++++++	Flat Finishing	————	No Flat Finishing

1. ENGINE COMPARTMENT

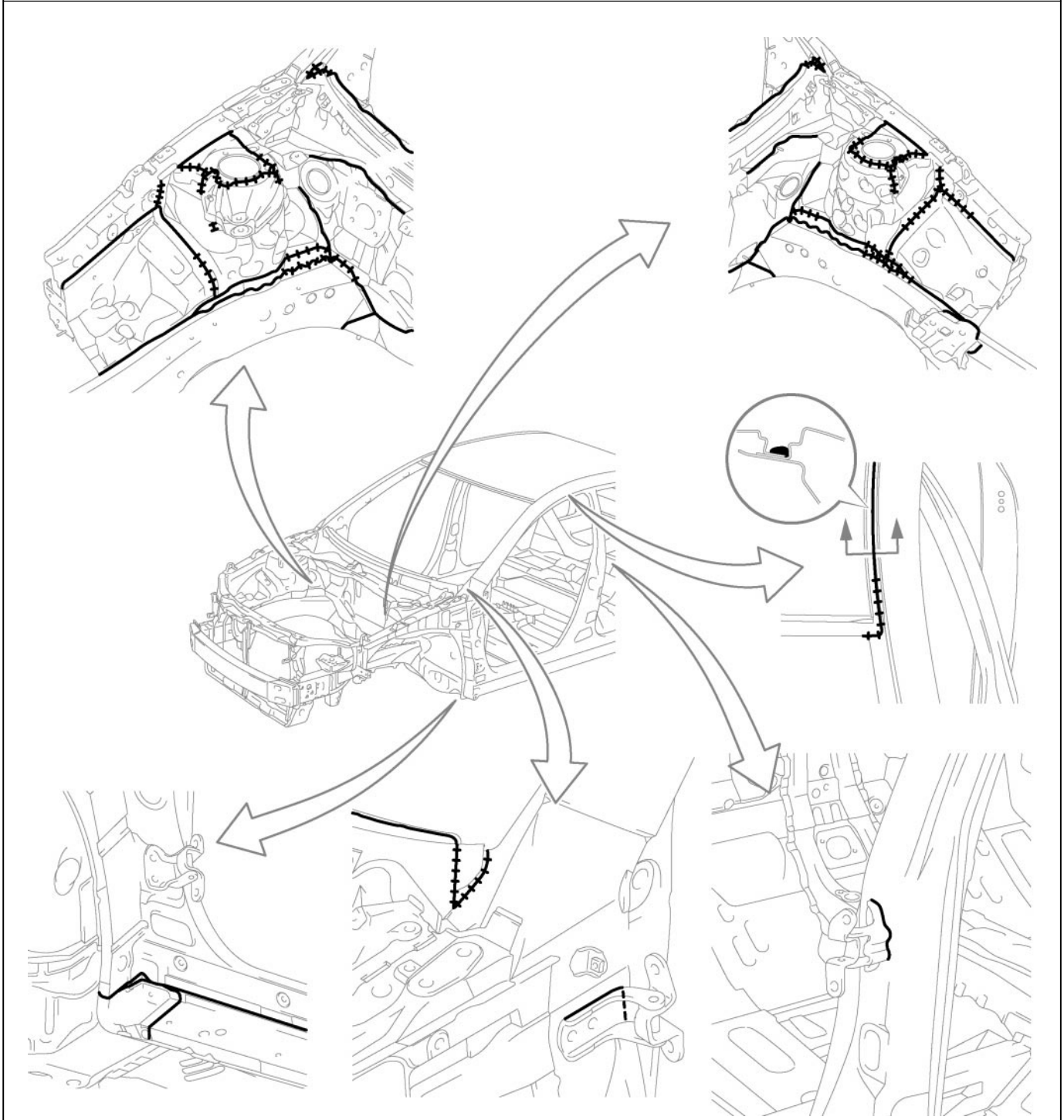

2. INSIDE

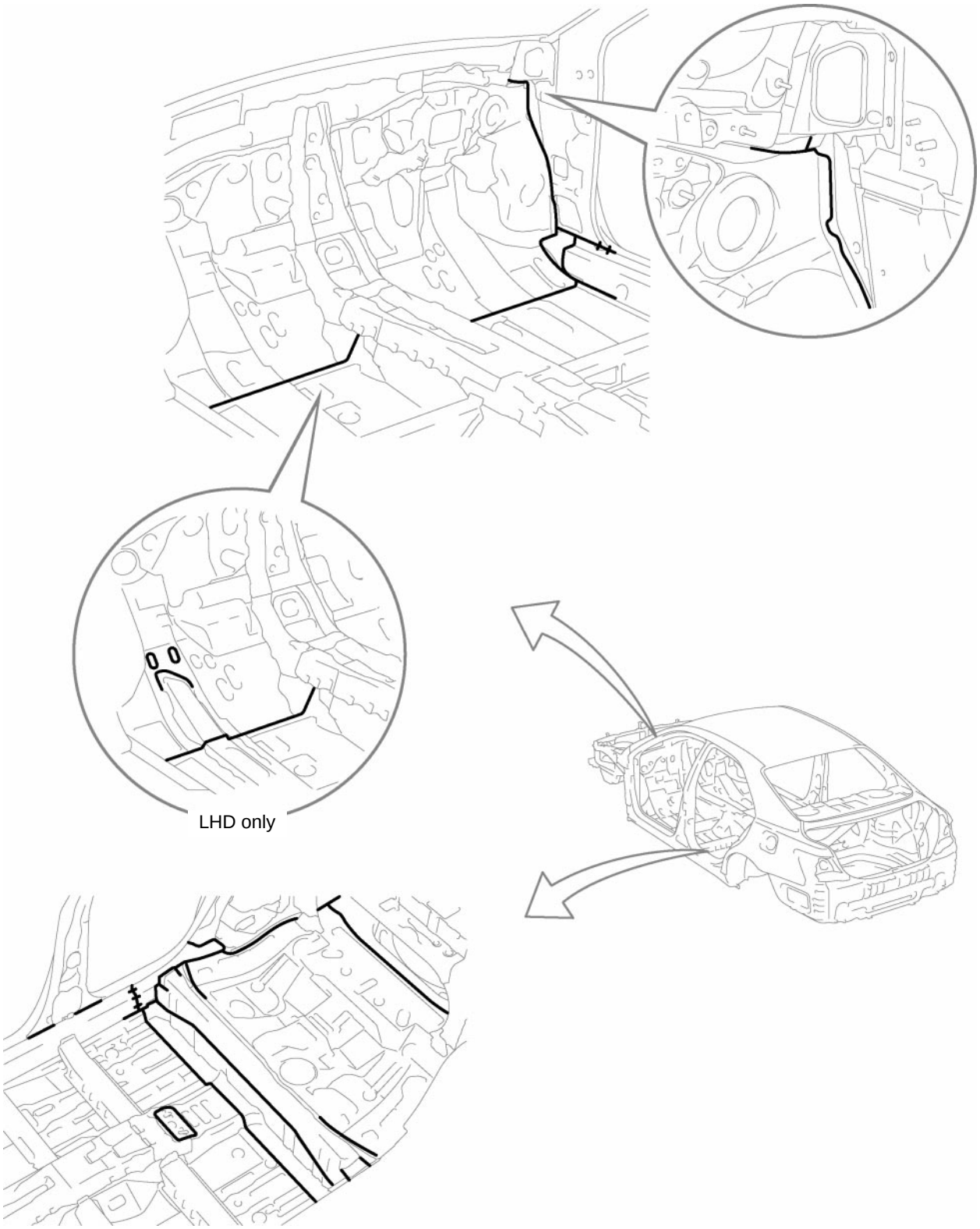

F25782

3. OUTSIDE

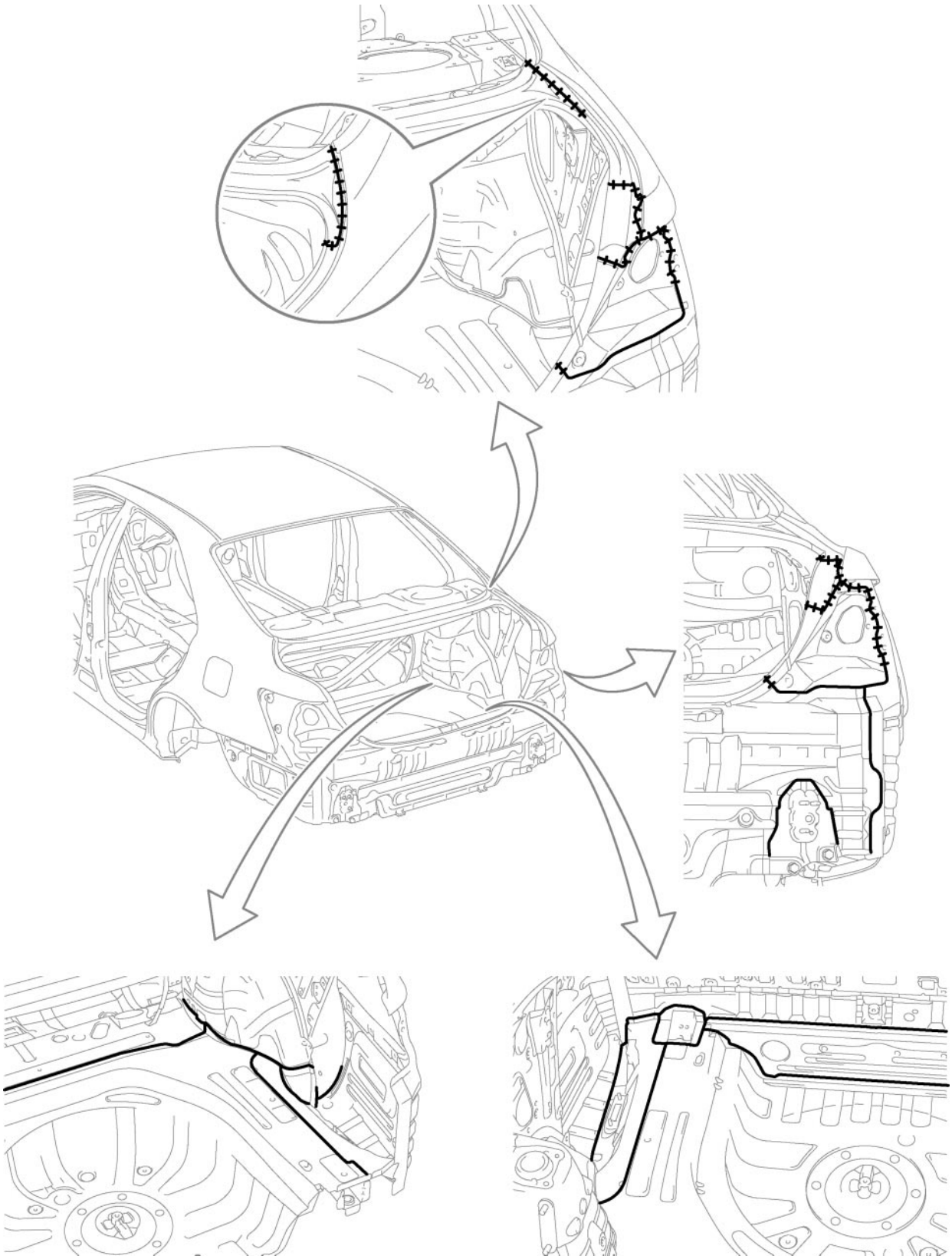

F25783

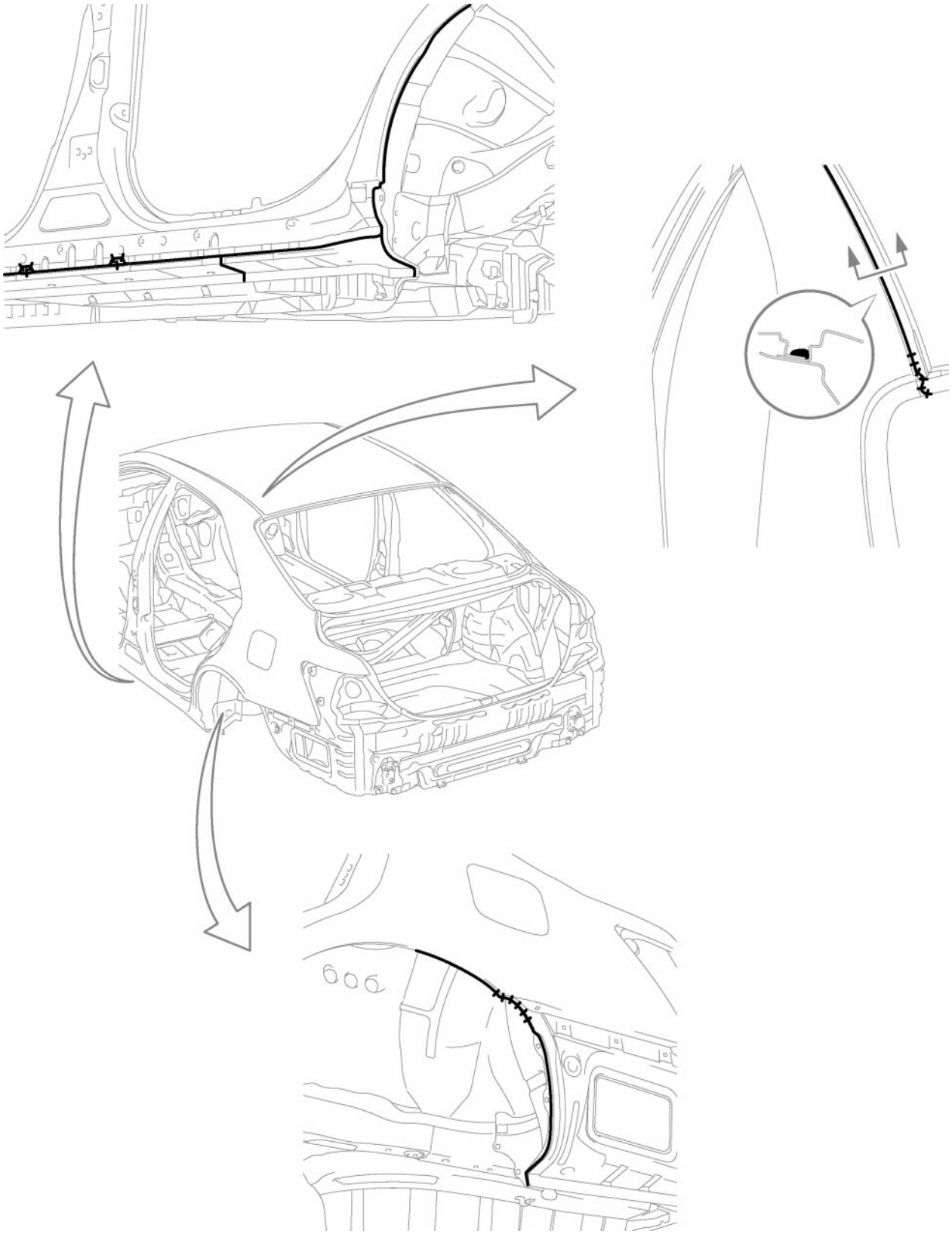

F25784

4. DOOR PARTS

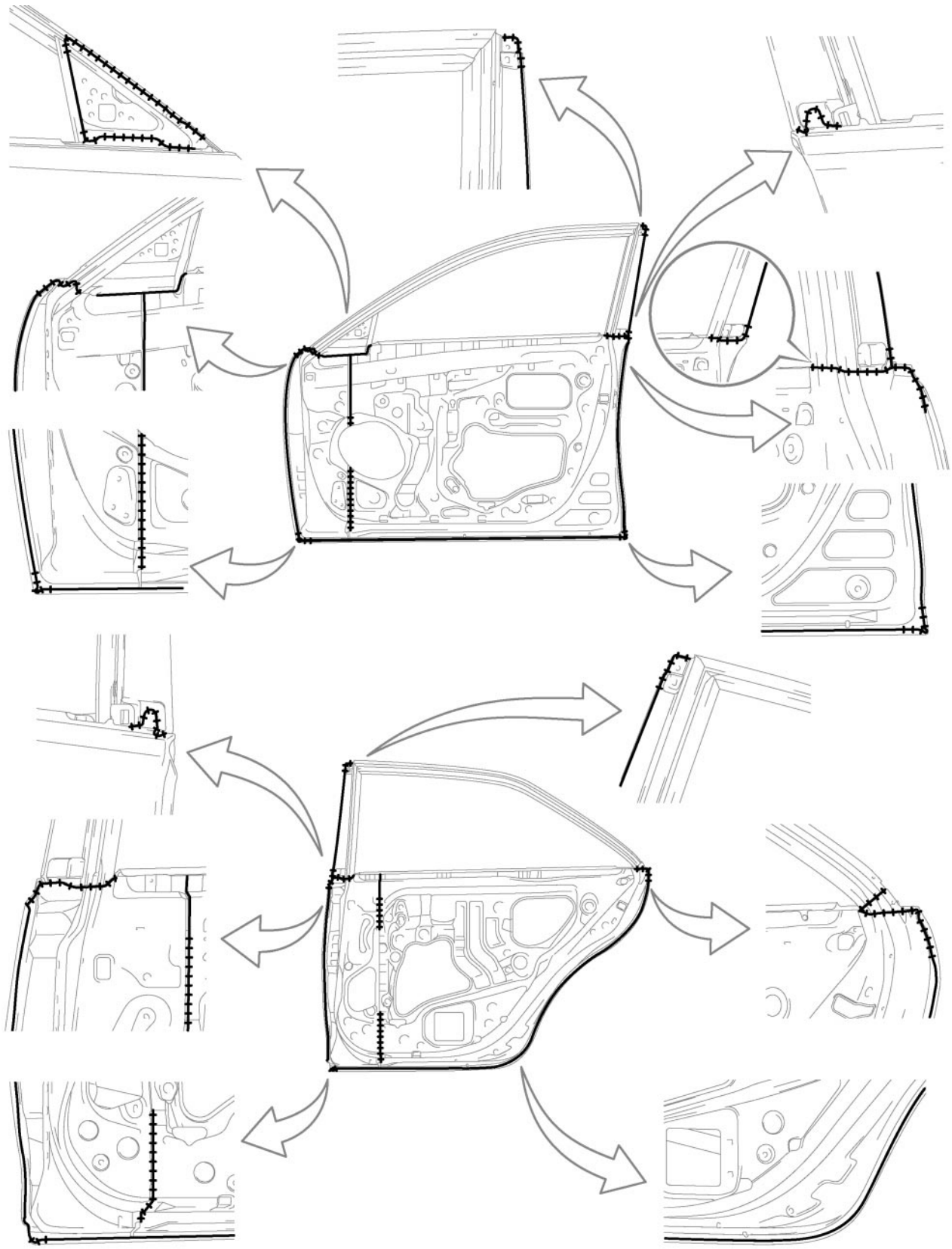

F25785

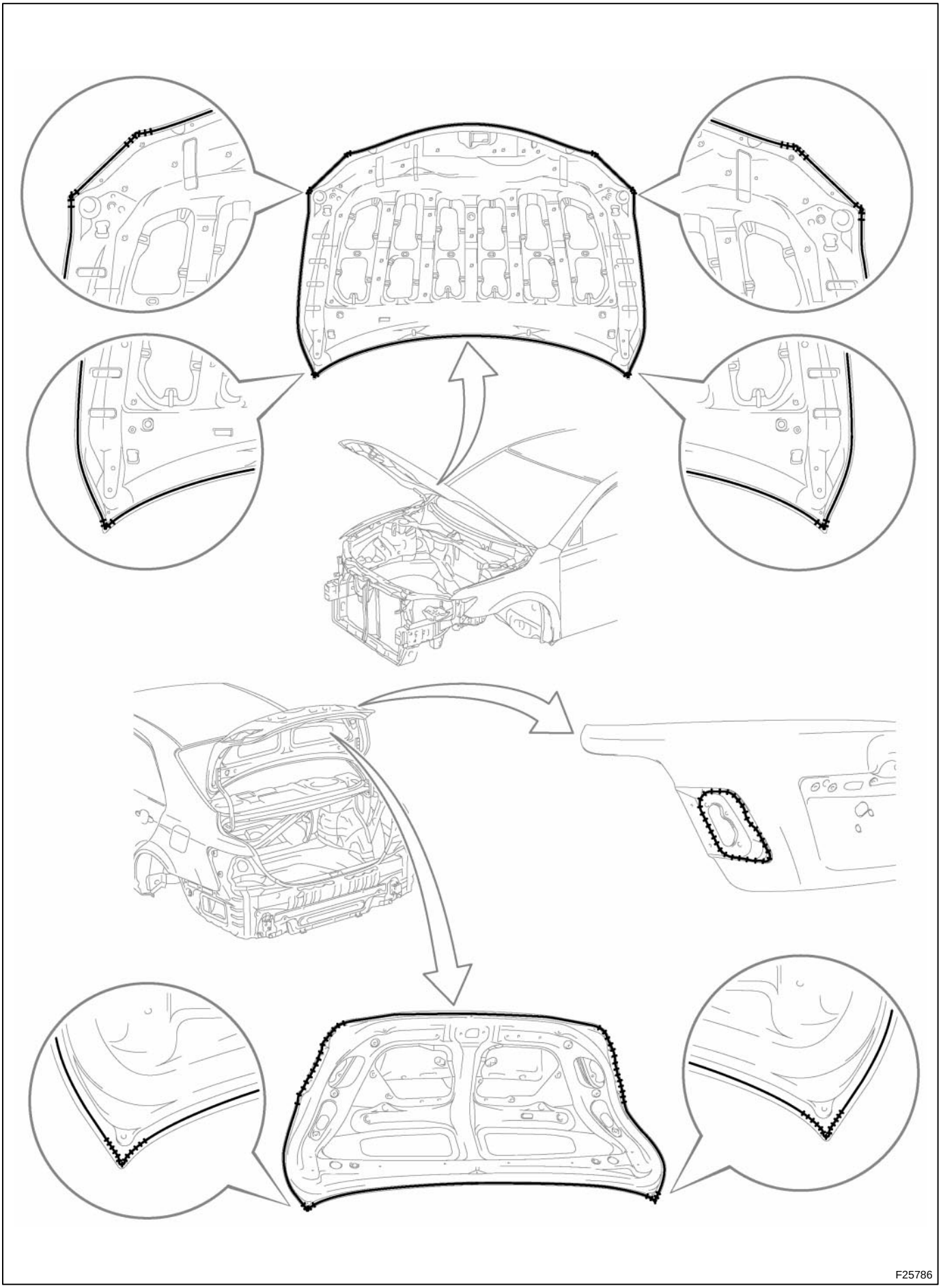
F25786

BODY PANEL UNDERCOATING AREAS

Apply PASTAR UWE or PASTAR UC to the chassis, floor underside, sheet metal fitting weld points of the body, and inside of the wheel house to prevent rust and noise, as well protect the body from flying rocks.

HINT:

1) Work must be performed while wearing the appropriate protective gear and in a well-ventilated area.
2) Apply degreasing agent to a clean cloth and clean any dirt and oil from the application areas.
3) Cover the surrounding areas of the application areas with masking paper to avoid coating unnecessary areas.
4) Do not coat high temperature areas, such as the tailpipe, or moving parts, such as the driveshaft.
5) Do not leave any gaps between the panel joints.
6) Apply sealer to the panel joints in advance.

HINT:

1) Parts coated using the PASTAR UWE should be left until dry to the touch in a 25°C environment for 60 to 75 minutes. Parts coated using PASTAR UC should be left until dry to the touch in a 25°C environment for 15 to 30 minutes.
2) If using a PASTAR gun, one spray applies a 0.5 mm thick coating.
3) PASTAR UWE: Part number V9240 − 0025 PASTAR UC: Spray type: Part number V9240 − 0008
Aerosol type: Part number V9240 − 0021

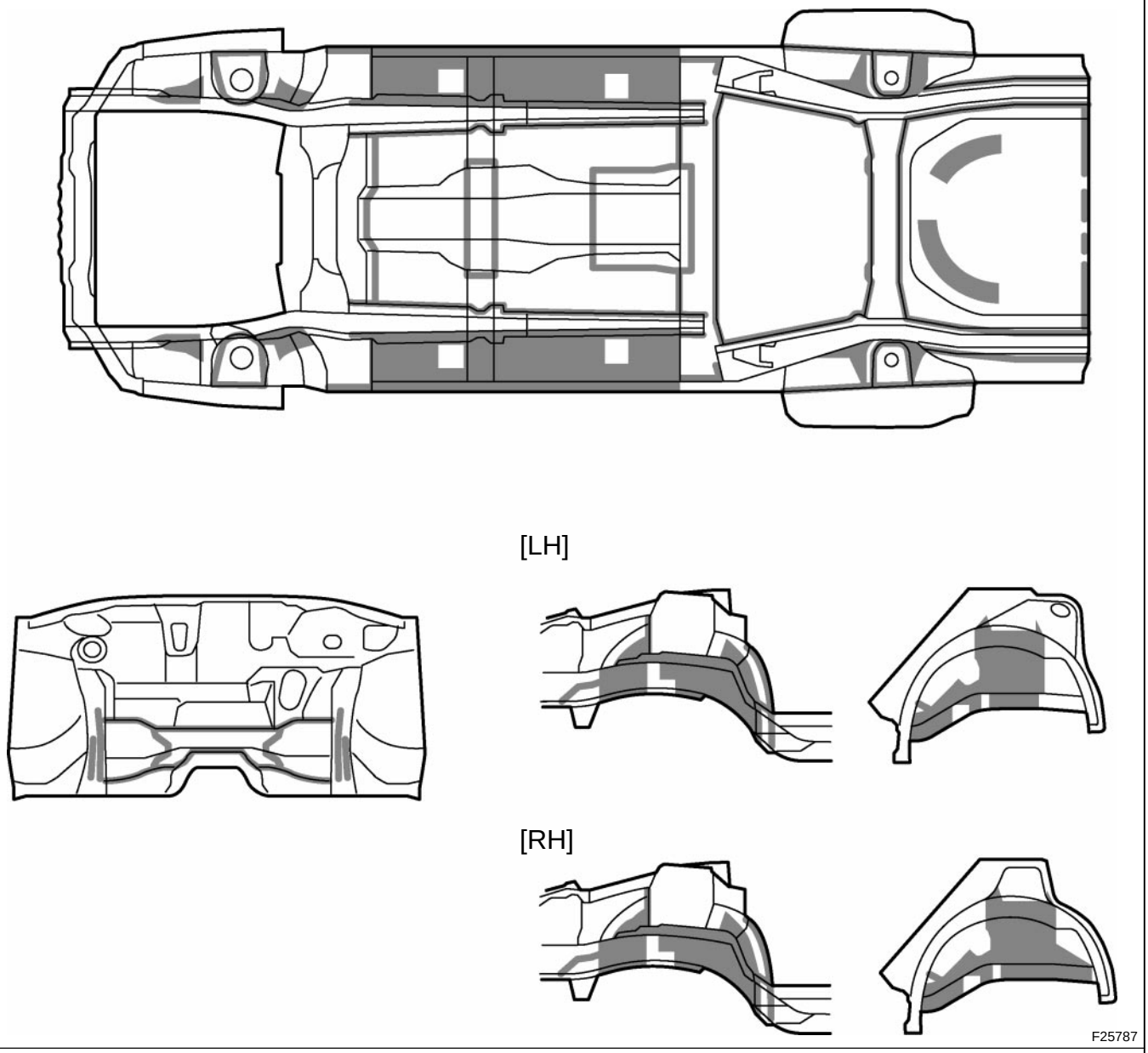

REFERENCE

The undercoating should be applied according to the specifications for your country while referring to the notes above.

FOAMED MATERIAL APPLICATION AREAS

If an increase in temperature or other condition damages the foamed material when repairing or replacing the panel, fill in the insufficient areas with urethane foam. The following illustration shows the areas for one side, but the foamed material must be applied equally to both the left and right sides.

HINT:

1) Work must be performed while wearing the appropriate protective gear and in a well-ventilated area.

2) Apply tape or equivalent to any holes, nuts, etc., near the areas to be filled.

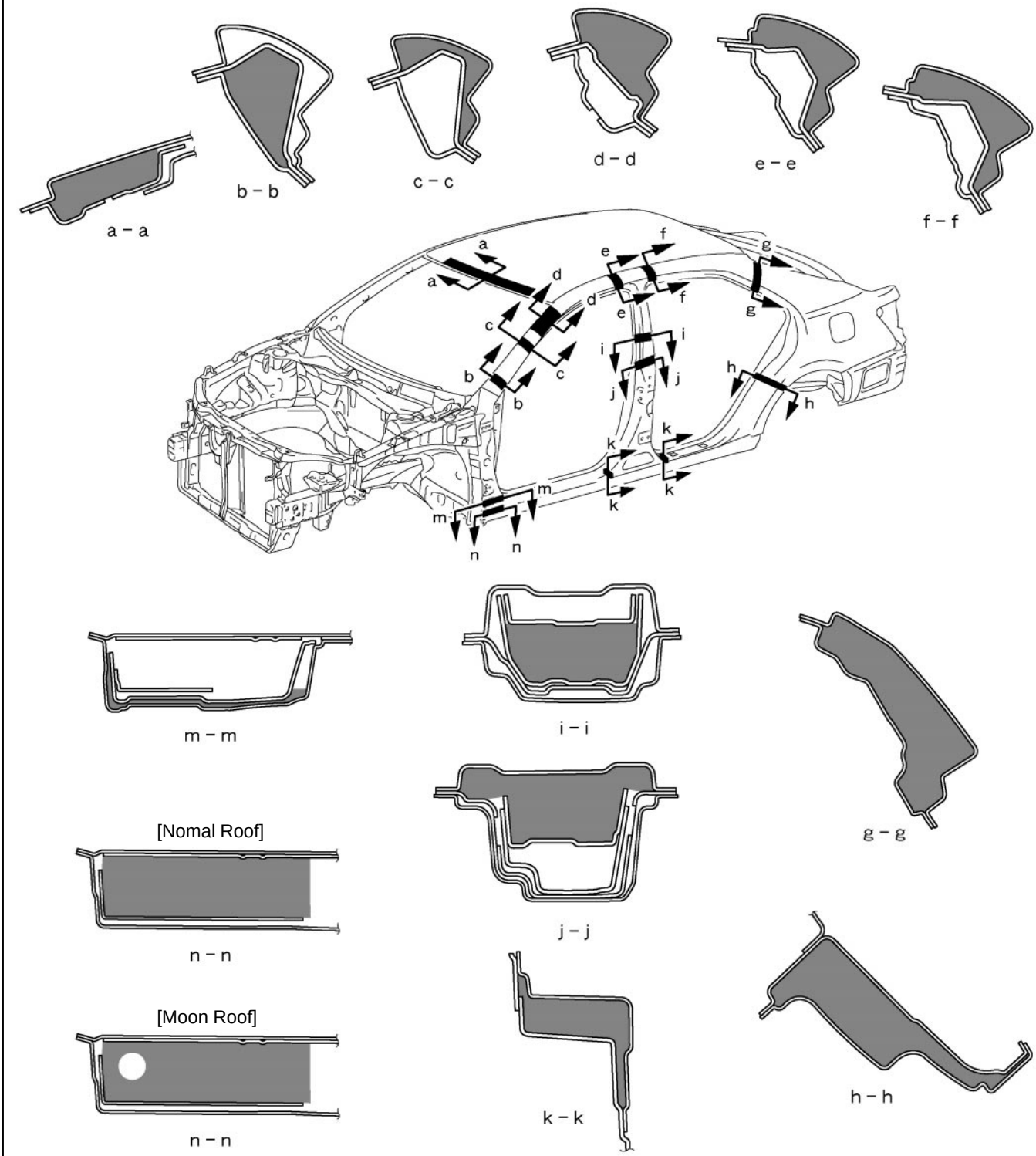

BODY PANEL ANTI-RUST AGENT (WAX) APPLICATION AREAS

Apply RUSTOP W to the doors and hood edges (tips of outer panel folded parts) and undersides, areas around hinges, etc., to prevent rust. Coat the undersides of the edges using a nozzle and air gun, and coat the areas around the hinges using a brush.

HINT:

1) If RUSTOP is unnecessarily applied to an area, apply degreasing agent to a clean cloth and clean off the RUSTOP immediately.

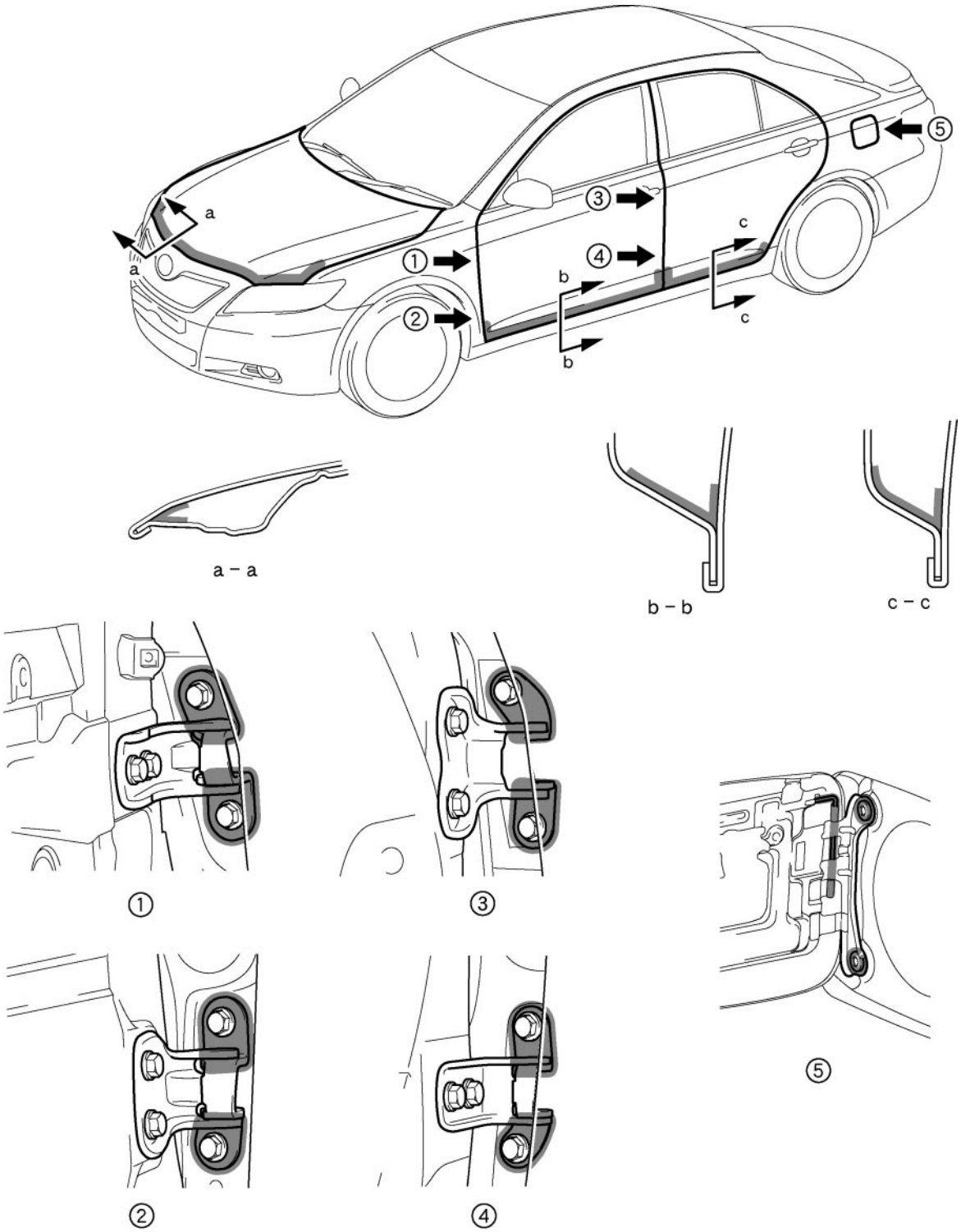

F25789

SILENCER SHEET INSTALLATION AREAS

Substitute silencer sheets for the laminate coat application areas.

[TMC made]

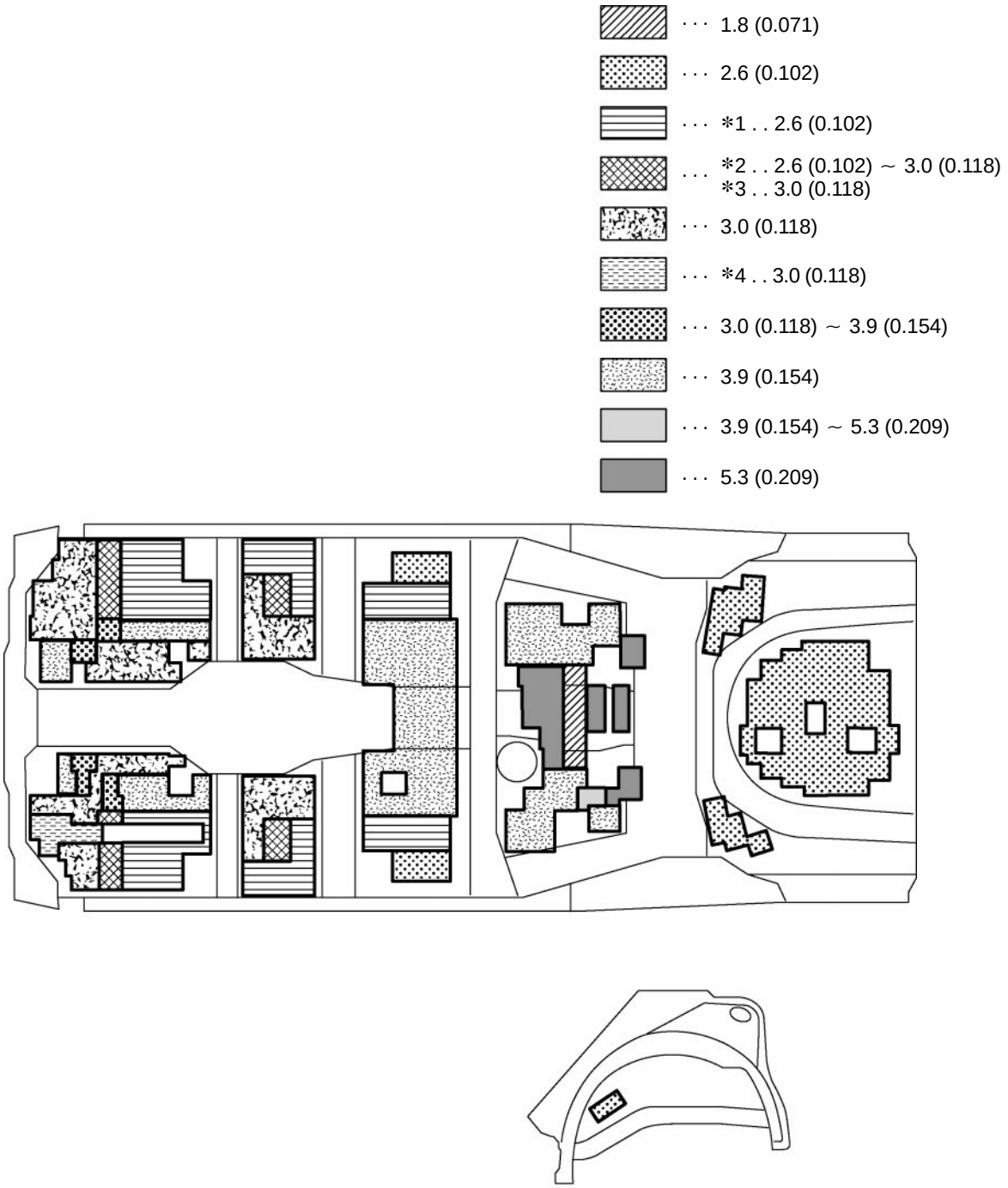

*1 U.S.A., CANADA, RHD
*2 U.S.A., CANADA
*3 Ex. U.S.A., CANADA
*4 RHD

mm (in.)

F25790

Substitute silencer sheets for the laminate coat application areas.

[TMMK made]

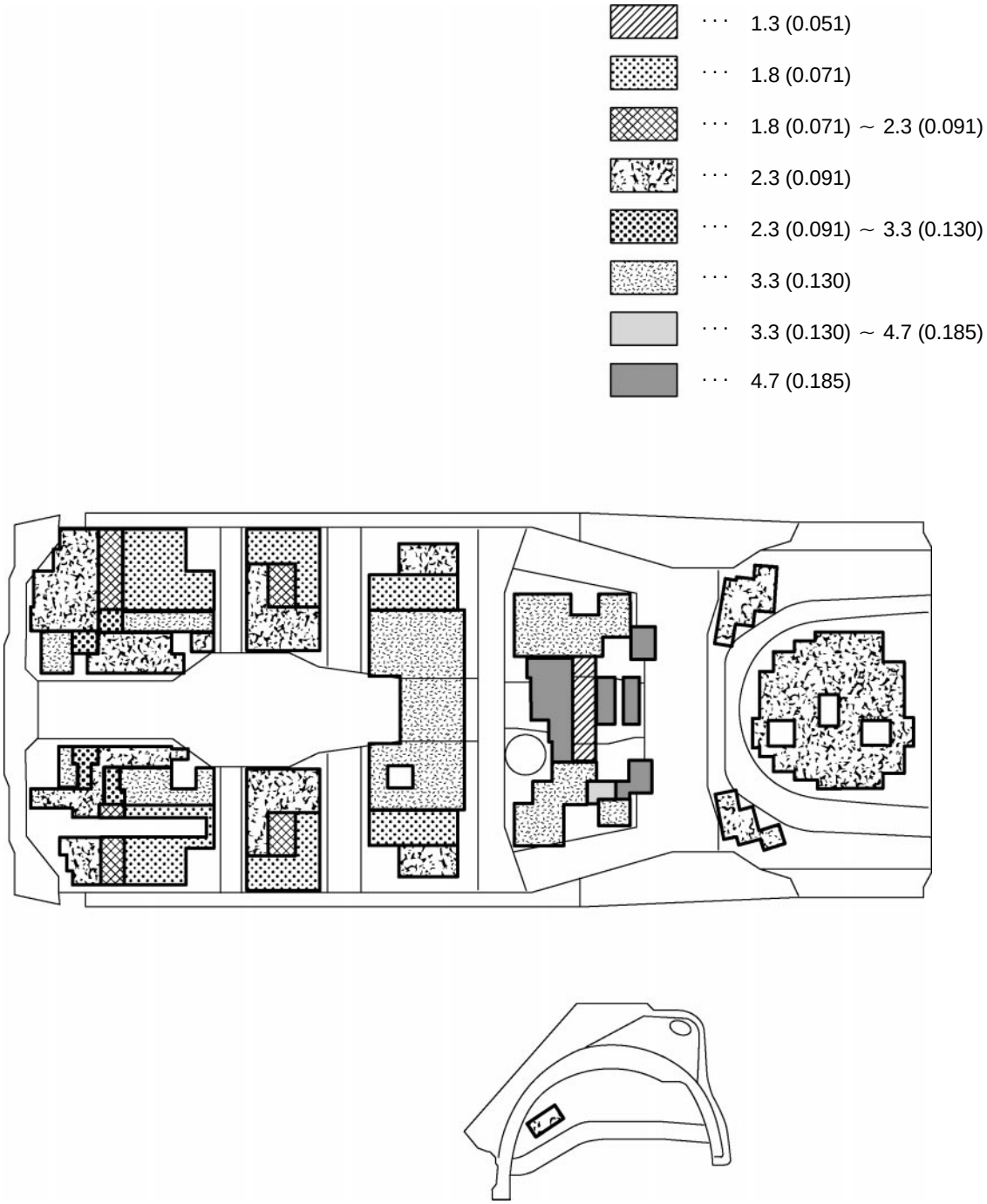

mm (in.)

F25791

BODY PANEL ANTI-CHIPPING PAINT APPLICATION AREAS

To protect the body from damage due to flying rocks, apply the anti-chipping paint to the rocker panels, wheel arches, and lower parts of the doors.

HINT:

1) *Work must be performed while wearing the appropriate protective gear and in a well-ventilated area.*
2) *Apply anti-chipping paint to the indicated areas first, before applying the top coat.*
3) *If anti-chipping paint is unnecessarily applied to an area, apply degreasing agent to a clean cloth and clean the paint off immediately.*

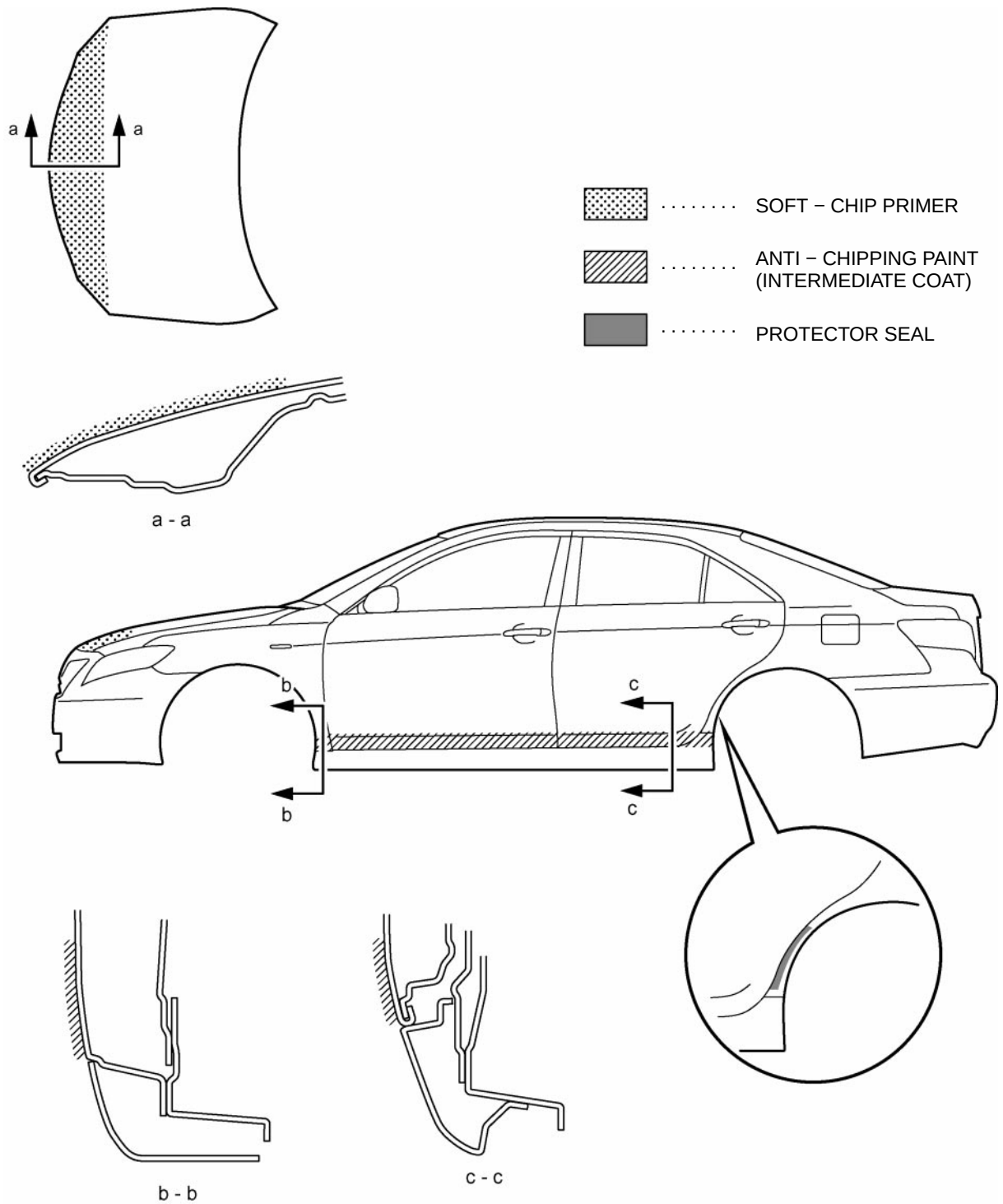

F25792

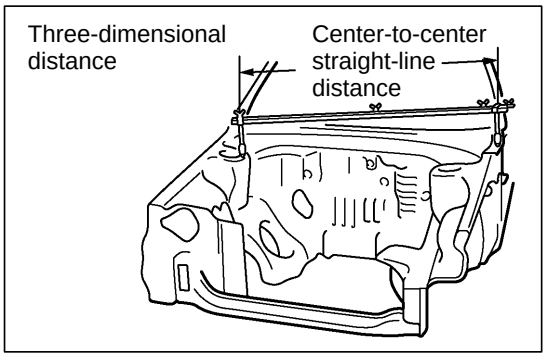

GENERAL INFORMATION

1. BASIC DIMENSIONS

(a) There are two types of dimensions in the diagram.

(1) (Three-dimensional distance)

- Straight-line distance between the centers of two measuring points.

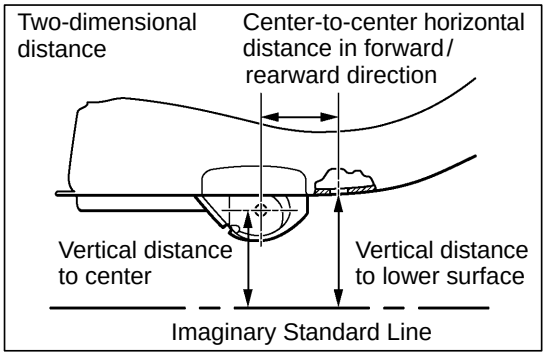

(2) (Two-dimensional distance)

- Horizontal distance in forward/rearward between the centers of two measuring points.
- The height from an imaginary standard line.

(b) In cases in which only one dimension is given, left and right are symmetrical.

(c) The dimensions in the following drawing indicate actual distance. Therefore, please use the dimensions as a reference.

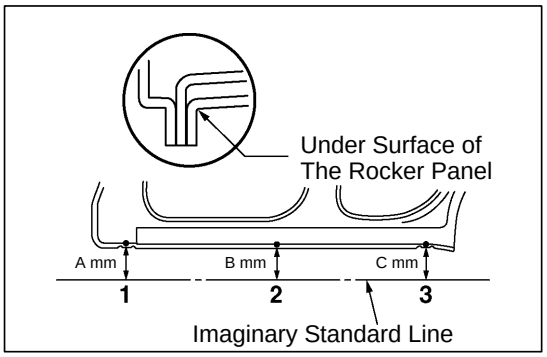

(d) The line that connects the places listed below is the imaginary standard line when measuring the height. (The dimensions are printed in the text.)

SYMBOL	Name
1	The place that was lowered A mm from the under surface of the rocker panel centered on the front jack up point.
2	The place that was lowered B mm from the under surface of the rocker panel centered between 1 and 3.
3	The place that was lowered C mm from the under surface of the rocker panel centered on the rear jack up point.

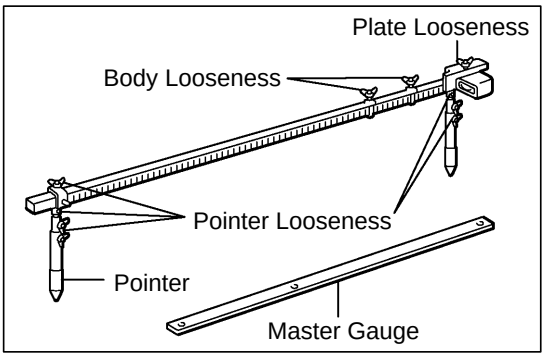

2. MEASURING

(a) Basically, all measurements are to be done with a tracking gauge. For portions where it is not possible to use a tracking gauge, a tape measure should be used.

(b) Use only a tracking gauge that has no looseness in the body, measuring plate, or pointers.

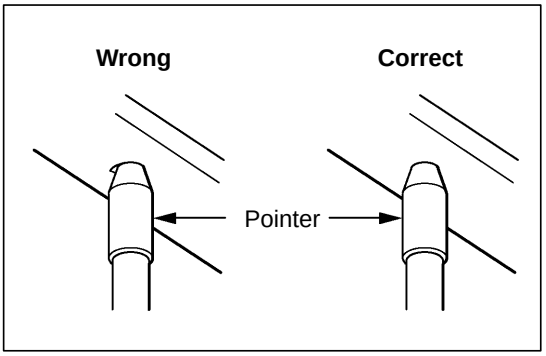

HINT:

1) The height of the left and right pointers must be equal.

2) Always calibrate the tracking gauge before measuring or after adjusting the pointer height.

3) Take care not to drop the tracking gauge or otherwise shock it.

4) Confirm that the pointers are securely in the holes.

(c) When using a tape measure, avoid twists and bends in the tape.

BODY DIMENSION DRAWINGS
ENGINE COMPARTMENT (for LHD)

(Three-Dimensional Distance)

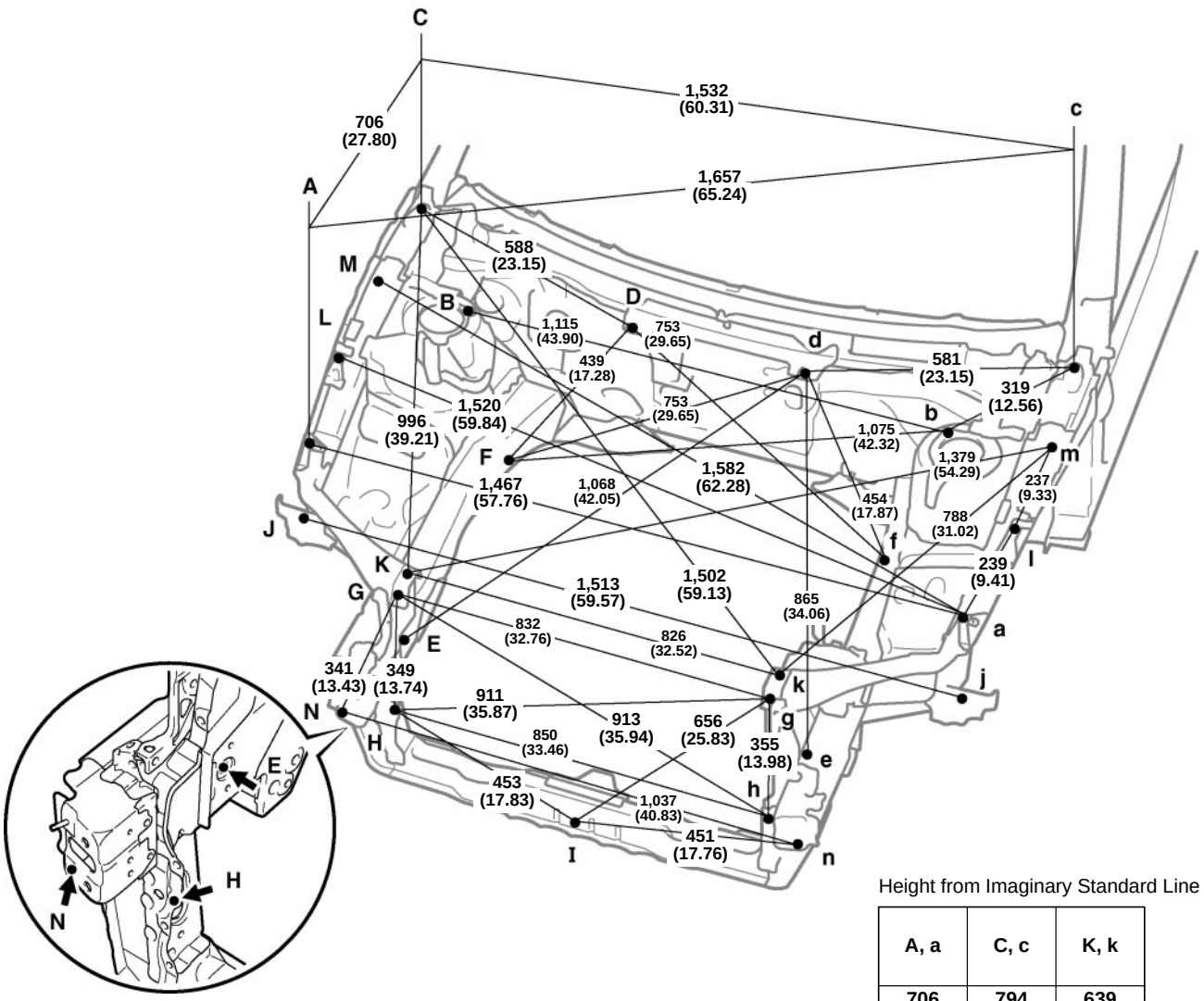

Height from Imaginary Standard Line

A, a	C, c	K, k
706 (27.80)	794 (31.26)	639 (25.16)

Vehicle Dimensions

A-M or a-m	B-c or b-C	B-f	D-E	D-e	G-n or g-N	L-l	L-m or l-M	M-m
475 (18.70)	1,345 (52.95)	1,078 (42.44)	869 (34.21)	1,060 (41.73)	989 (38.94)	1,536 (60.47)	1,562 (61.50)	1,552 (61.10)

HINT: For symbols, capital letters indicate right side of vehicle, small letters indicate left side of vehicle (seen from rear).

mm (in.)

Symbol	Name	Hole dia.			
A, a	Front fender installation nut	M6 (0.24)	H, h	Radiator support standard hole	ø10 (0.39)
B, b	Front spring support hole-inner	ø12.5 (0.492)	I	Hood lock support installation nut	M6 (0.24)
C, c	Hood hinge installation nut	M8 (0.31)	J, j	Front fender bracket installation nut	M6 (0.24)
D, d	Cowl panel installation nut	M6 (0.24)	K, k	Radiator upper support installation nut	M6 (0.24)
E, e	Front side member standard hole	ø18 (0.71)	L, l	Front fender installation nut	M6 (0.24)
F, f	Front side member standard hole	ø18 (0.71)	M, m	Front fender installation nut	M6 (0.24)
G, g	Radiator upper support installation nut	M6 (0.24)	N, n	Front bumper reinforcement installation nut	M10 (0.39)
			—	—	—

BODY DIMENSION DRAWINGS

ENGINE COMPARTMENT (for RHD)

(Three-Dimensional Distance)

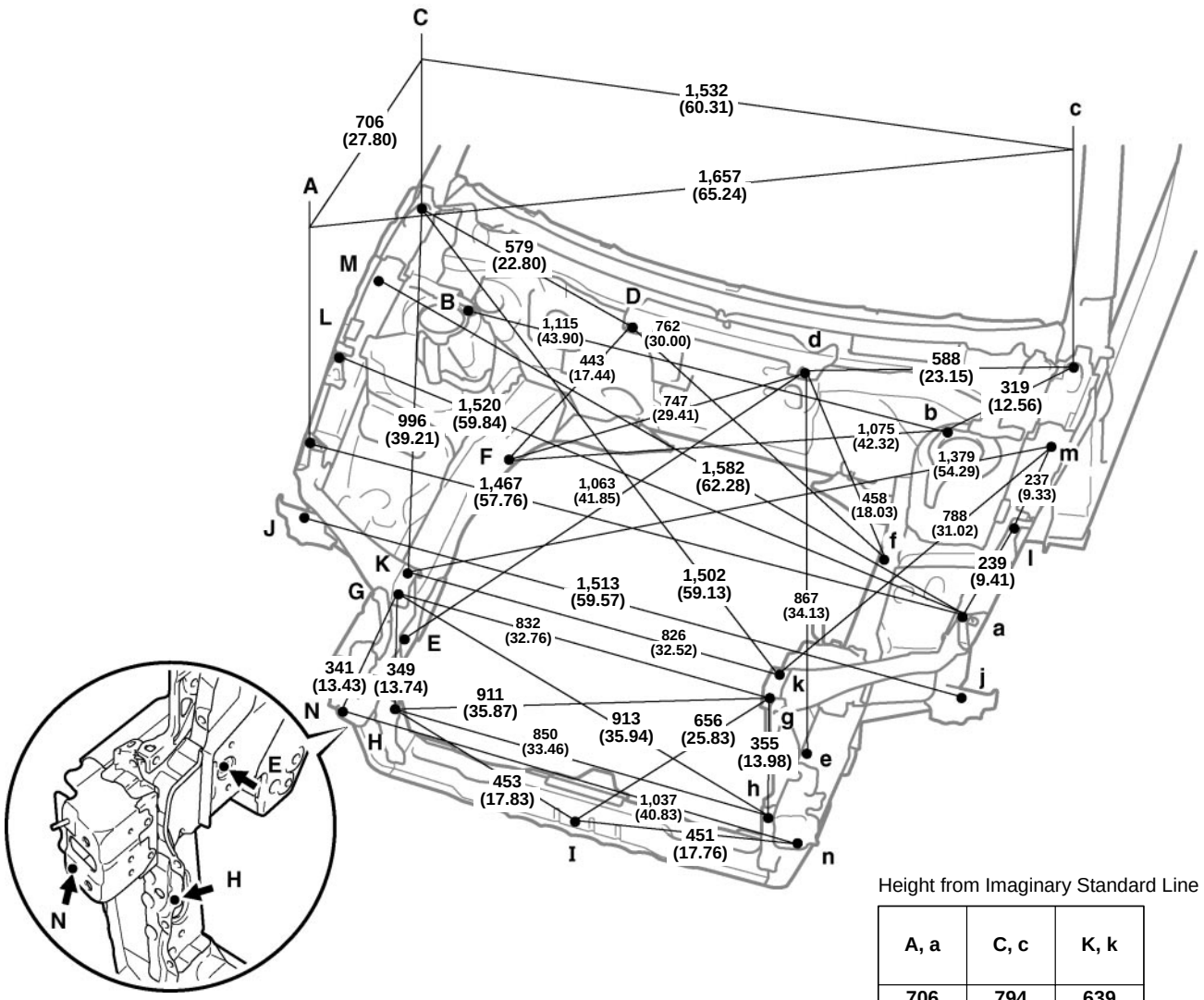

Height from Imaginary Standard Line

A, a	C, c	K, k
706 (27.80)	794 (31.26)	639 (25.16)

Vehicle Dimensions

A-M or a-m	B-c or b-C	B-f	D-E	D-e	G-n or g-N	L-l	L-m or l-M	M-m
475 (18.70)	1,345 (52.95)	1,078 (42.44)	875 (34.45)	1,071 (42.17)	989 (38.94)	1,536 (60.47)	1,562 (61.50)	1,552 (61.10)

HINT: For symbols, capital letters indicate right side of vehicle, small letters indicate left side of vehicle (seen from rear).

mm (in.)

Symbol	Name	Hole dia.			
A, a	Front fender installation nut	M6 (0.24)	H, h	Radiator support standard hole	ø10 (0.39)
B, b	Front spring support hole-inner	ø12.5 (0.492)	I	Hood lock support installation nut	M6 (0.24)
C, c	Hood hinge installation nut	M8 (0.31)	J, j	Front fender bracket installation nut	M6 (0.24)
D, d	Cowl panel installation nut	M6 (0.24)	K, k	Radiator upper support installation nut	M6 (0.24)
E, e	Front side member standard hole	ø18 (0.71)	L, l	Front fender installation nut	M6 (0.24)
F, f	Front side member standard hole	ø18 (0.71)	M, m	Front fender installation nut	M6 (0.24)
G, g	Radiator upper support installation nut	M6 (0.24)	N, n	Front bumper reinforcement installation nut	M10 (0.39)
			—	—	—

BODY OPENING AREAS (Side View: Front)

(Three-Dimensional Distance)

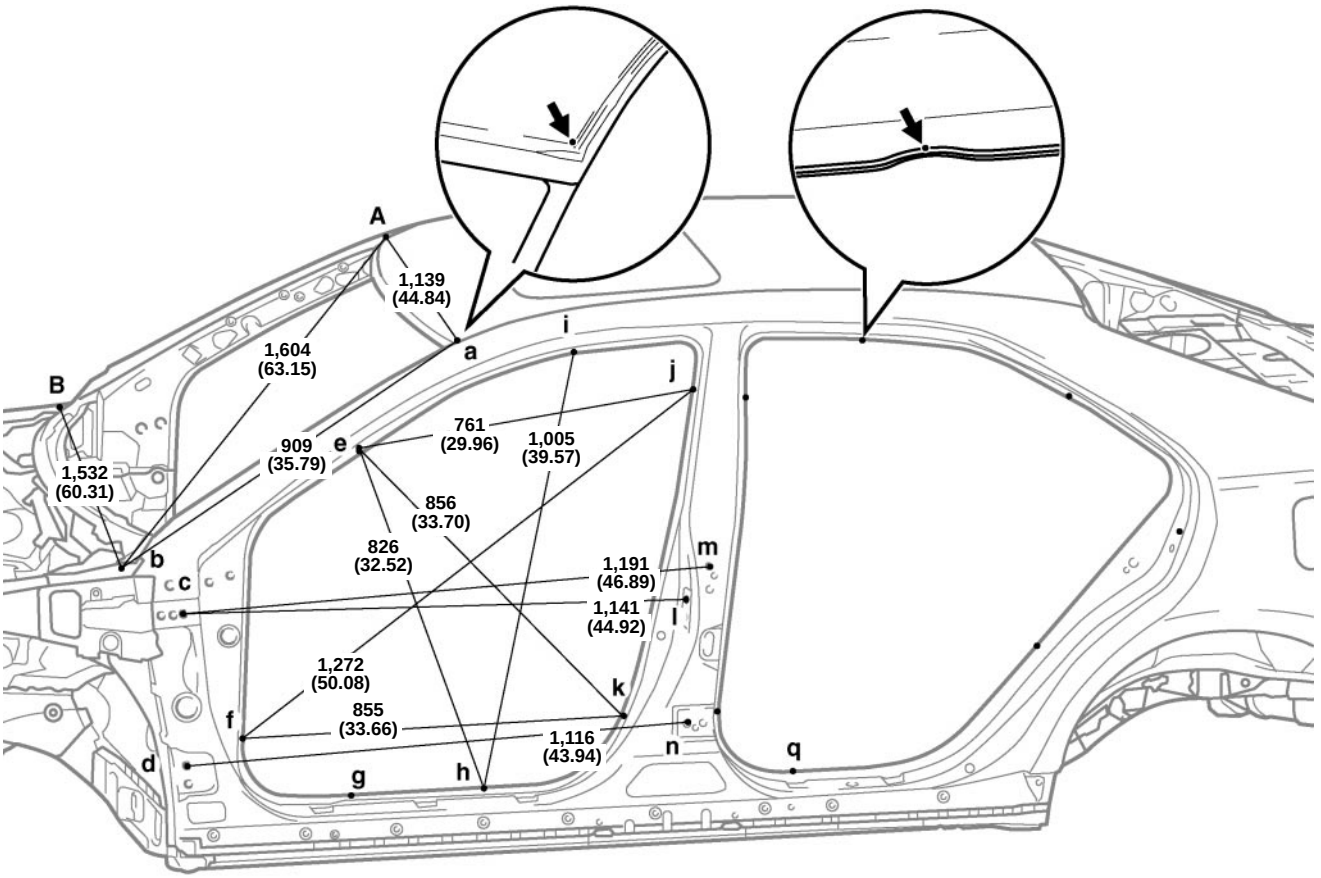

Vehicle Dimensions

E-e	F-f	G-g	H-h	I-i	J-j	K-k
1,345 (52.95)	1,493 (58.78)	1,491 (58.70)	1,491 (58.70)	1,176 (46.30)	1,288 (50.71)	1,491 (58.70)

E-f or e-F	E-h or e-H	E-j or e-J	F-j or f-J	F-k or f-K	G-q or g-Q	H-I or h-i	J-k or j-K
1,579 (62.17)	1,640 (64.57)	1,520 (59.84)	1,881 (74.06)	1,720 (67.72)	1,795 (70.67)	1,663 (65.47)	1,579 (62.17)

HINT: For symbols, capital letters indicate right side of vehicle, small letters indicate left side of vehicle (seen from rear).

mm (in.)

Symbol	Name	Hole dia.			
A, a	Roof panel corner	—	H, h	Rocker panel assemby mark	—
B, b	Hood hinge installation nut	M8 (0.31)	I, i	Roof side rail assembly mark	—
C, c	Front door hinge installation nut	M8 (0.31)	J, i	Center body pillar assembly mark	—
D, d	Front door hinge installation nut	M8 (0.31)	K, k	Center body pillar assembly mark	—
E, e	Front body pillar assembly mark	—	L, l	Front door lock striker installation nut	M8 (0.31)
F, f	Front body pillar assembly mark	—	M, m	Rear door hinge installation nut	M8 (0.31)
G, g	Rocker panel assembly mark	—	N, n	Rear door hinge installation nut	M8 (0.31)
			Q, q	Rocker panel assembly mark	—

BODY OPENING AREAS (Side View: Rear)

(Three-Dimensional Distance)

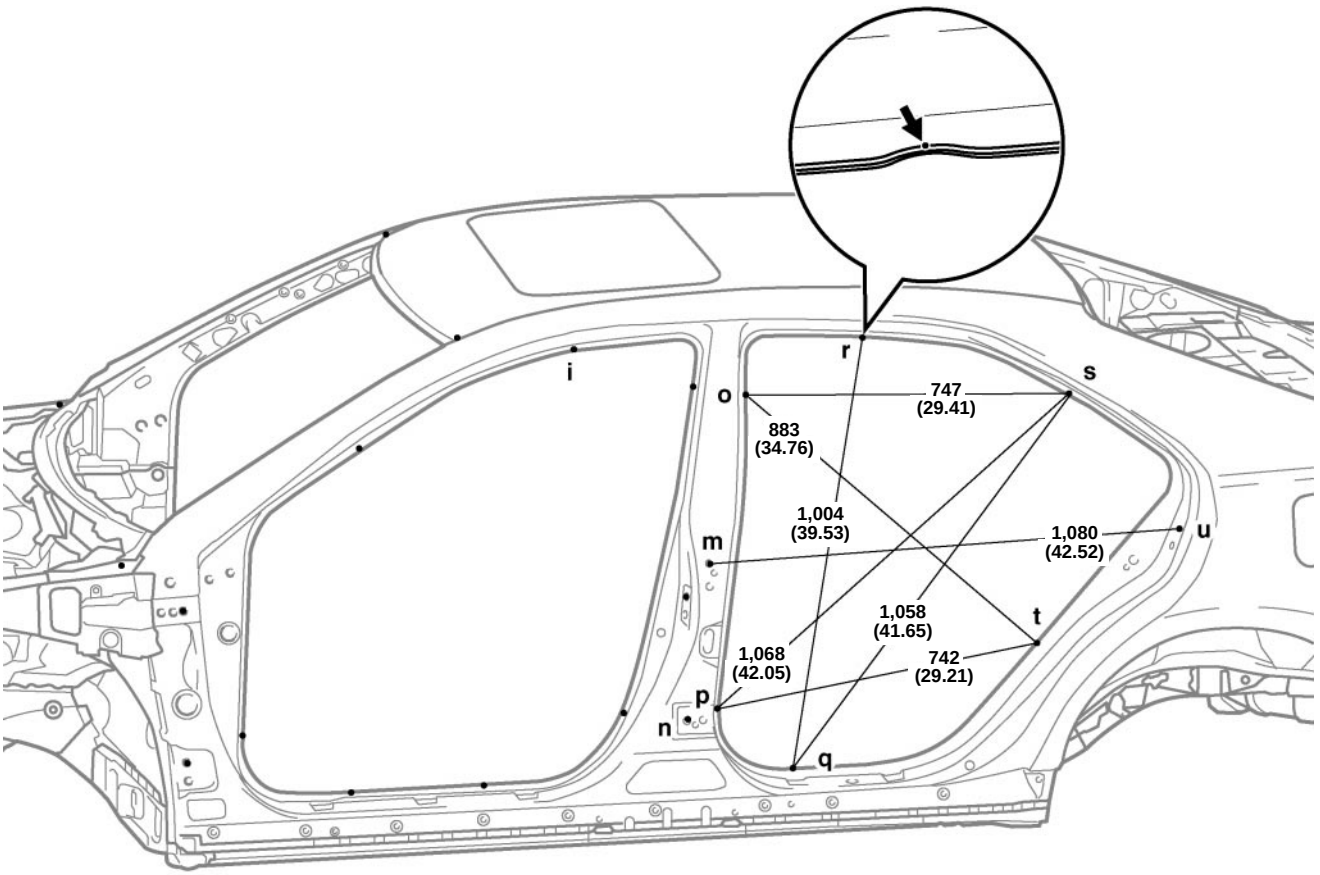

Vehicle Dimensions

O-o	P-p	Q-q	R-r	S-s	T-t	U-u
1,311 (51.61)	1,491 (58.70)	1,491 (58.70)	1,172 (46.14)	1,298 (51.10)	1,492 (58.74)	1,576 (62.05)

I-r or i-R	O-s or o-S	O-t or o-T	P-t or P-T	Q-r or q-R	S-t or s-T
1,362 (53.62)	1,503 (59.17)	1,654 (65.12)	1,666 (65.59)	1,584 (62.36)	1,516 (59.69)

HINT: For symbols, capital letters indicate right side of vehicle, small letters indicate left side of vehicle (seen from rear).

mm (in.)

Symbol	Name	Hole dia.			
I, i	Roof side rail assembly mark	—	Q, q	Rocker panel assembly mark	—
M, m	Rear door hinge installation nut	M8 (0.31)	R, r	Roof side rail assembly mark	—
N, n	Rear door hinge installation nut	M8 (0.31)	S, s	Quarter panel assembly mark	—
O, o	Center body pillar assembly mark	—	T, t	Quarter panel assembly mark	—
P, p	Center body pillar assembly mark	—	U, u	Rear door lock striker installation nut	M8 (0.31)
			—	—	—

BODY OPENING AREAS (Rear View)

(Three-Dimensional Distance)

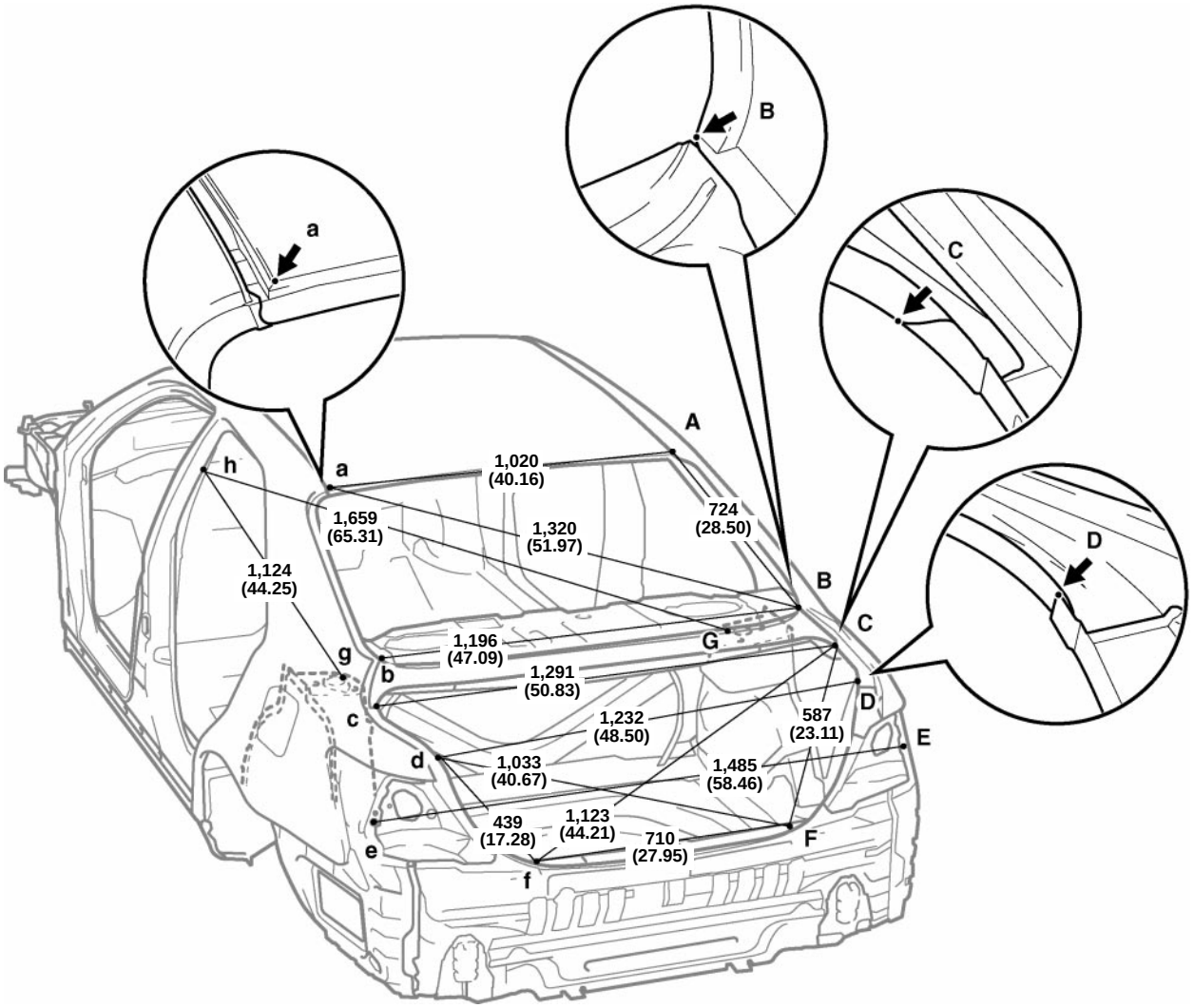

Vehicle Dimensions

G-g
1,137 (44.76)

HINT: For symbols, capital letters indicate right side of vehicle, small letters indicate left side of vehicle (seen from rear).

mm (in.)

Symbol	Name	Hole dia.			
A, a	Roof panel corner	—	D, d	Luggage opening trough / Quarter panel adjoining point	—
B, b	Upper back reinforcement / Quarter panel adjoining point	—	E, e	Quarter panel standard hole	ø13 (0.51)
			F, f	Luggage trim installation hole	ø8.5 (0.335)
			G, g	Rear spring support hole inner-front	ø9.5 (0.374)
C, c	Upper back reinforcement / Quarter panel adjoining point	—	H, h	Center body pillar assembly mark	—

UNDER BODY

(Three-Dimensional Distance)

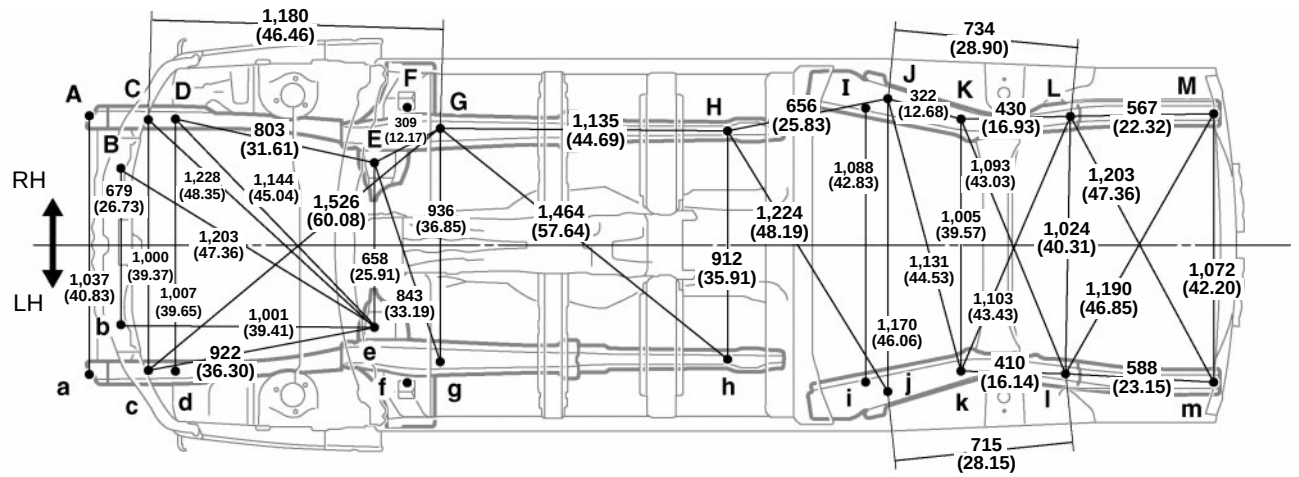

Front

F-f	F-G or f-g	F-g or f-G
1,100 (43.31)	158 (6.22)	1,027 (40.43)

1	2	3
100 (3.94)	100 (3.94)	98 (3.86)

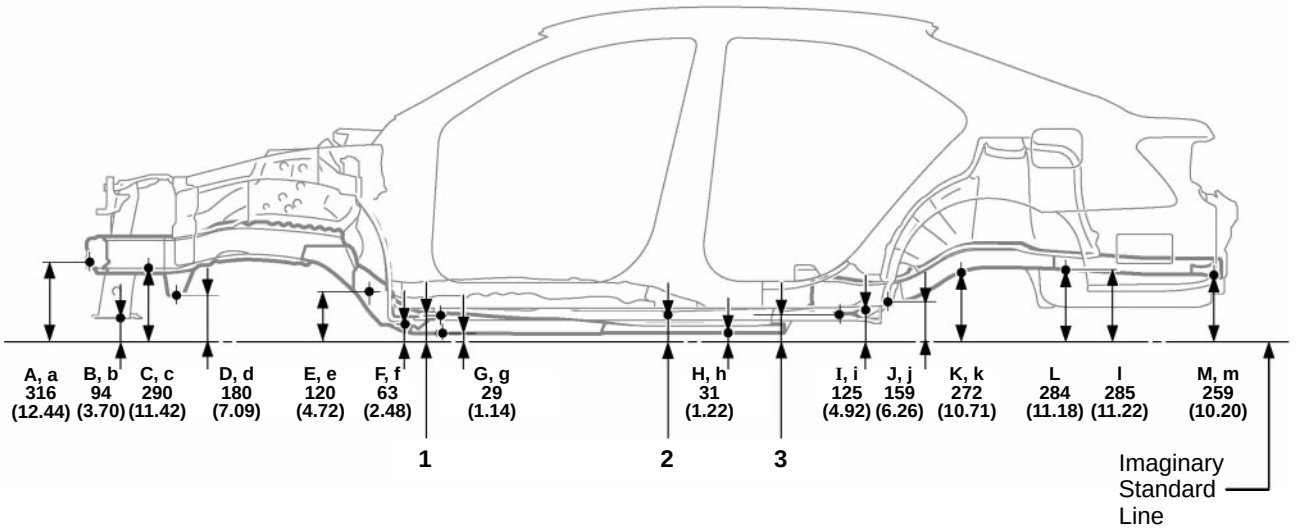

mm (in.)

Symbol	Name	Hole dia.			
A, a	Front bumper reinforcement installation nut	M10 (0.39)	G, g	Front side member standard hole	ø18 (0.71)
B, b	Front crossmember standard hole	ø18 (0.71)	H, h	Front floor under reinforcement standard hole	ø15 (0.59)
C, c	Front side member standard hole	ø18 (0.71)	I, i	Strut bar installation hole-inner	ø12 (0.47)
D, d	Front suspension member installation nut-front	M16 (0.63)	J, j	Rear floor side member standard hole	ø18 (0.71)
E, e	Front suspension member installation nut-rear	M16 (0.63)	K, k	Rear suspension member installation nut	M12 (0.47)
F, f	Torque box front standard hole	ø25 (0.98)	L, l	Rear floor side member standard hole	ø18 (0.71)
			M, m	Rear floor side member standard hole	ø18 (0.71)

UNDER BODY

(Two-Dimensional Distance)

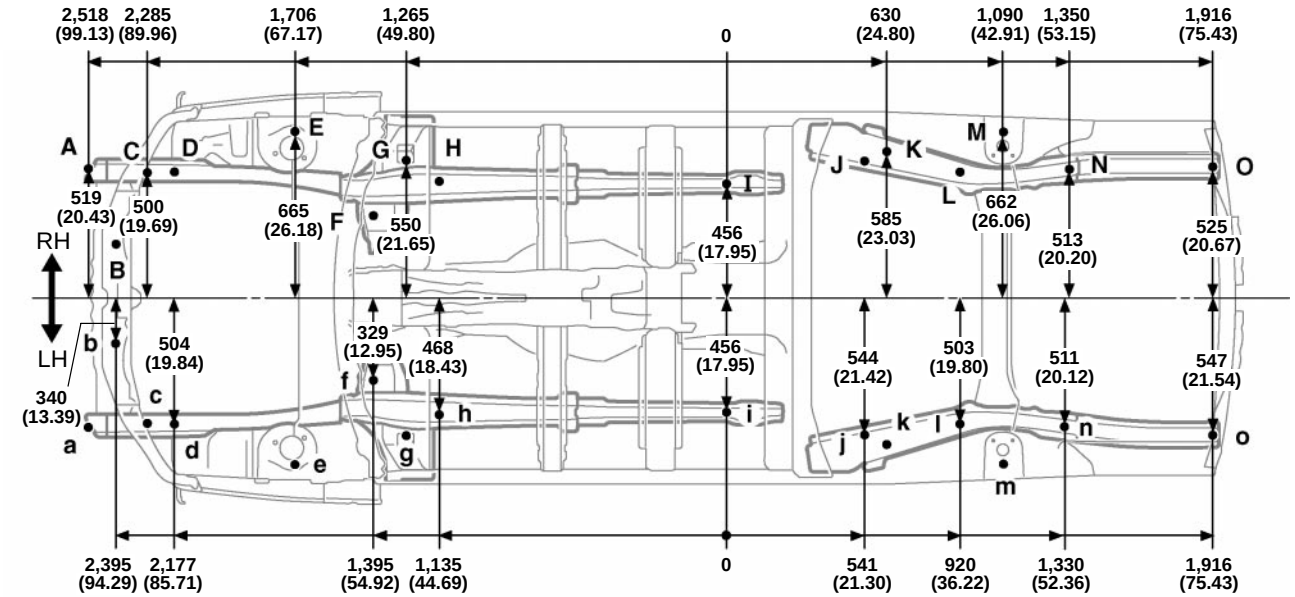

Front

Wheel base	2,775 (109.25)

1	2	3
100 (3.94)	100 (3.94)	98 (3.86)

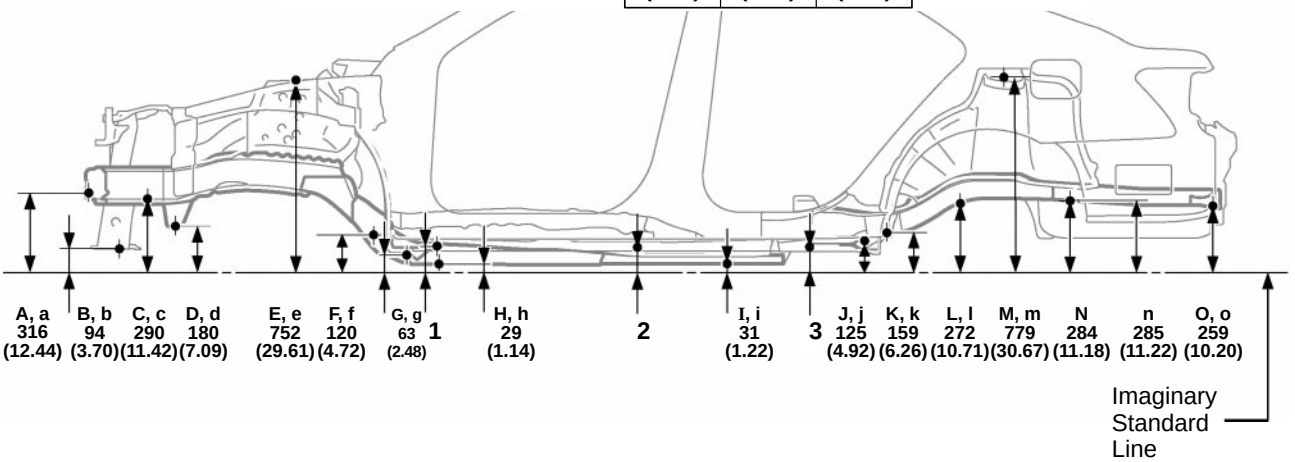

mm (in.)

Symbol	Name	Hole dia.			
A, a	Front bumper reinforcement installation nut	M10 (0.39)	H, h	Front side member standard hole	ø18 (0.71)
B, b	Front crossmember standard hole	ø18 (0.71)	I, i	Front floor under reinforcement standard hole	ø15 (0.59)
C, c	Front side member standard hole	ø18 (0.71)	J, j	Strut bar installation hole-inner	ø12 (0.47)
D, d	Front suspension member installation nut-front	M16 (0.63)	K, k	Rear floor side member standard hole	ø18 (0.71)
E, e	Front spring support hole-outer	ø12.5 (0.492)	L, l	Rear suspension member installation nut	M12 (0.47)
F, f	Front suspension member installation nut-rear	M16 (0.63)	M, m	Rear spring support hole-outer	ø9.5 (0.374)
G, g	Torque box front standard hole	ø25 (0.98)	N, n	Rear floor side member standard hole	ø18 (0.71)
			O, o	Rear floor side member standard hole	ø18 (0.71)

SUSPENSION CROSSMEMBER

(Three-Dimensional Distance)

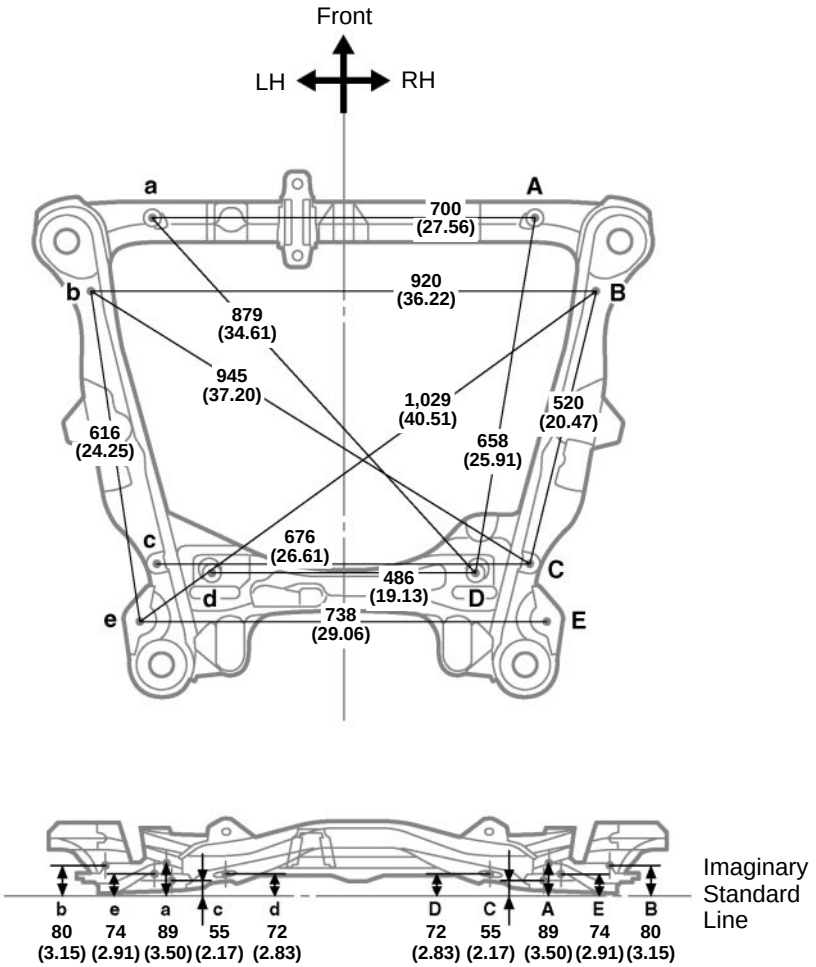

HINT: For sysmbols, capital letters indicate right side of vehicle, small letters indicate left side of vehicle (Seen from rear).

mm (in.)

Symbol	Name	Hole dia.			
A, a	Front frame standard hole	ø13 (0.51)	C, c	Front frame standard hole	ø13 (0.51)
B, b	Front frame standard hole	ø13 (0.51)	D, d	Front frame standard hole	ø13 (0.51)
			E, e	Lower arm installation hole-lower	ø15 (0.59)

SUSPENSION CROSSMEMBER

(Two-Dimensional Distance)

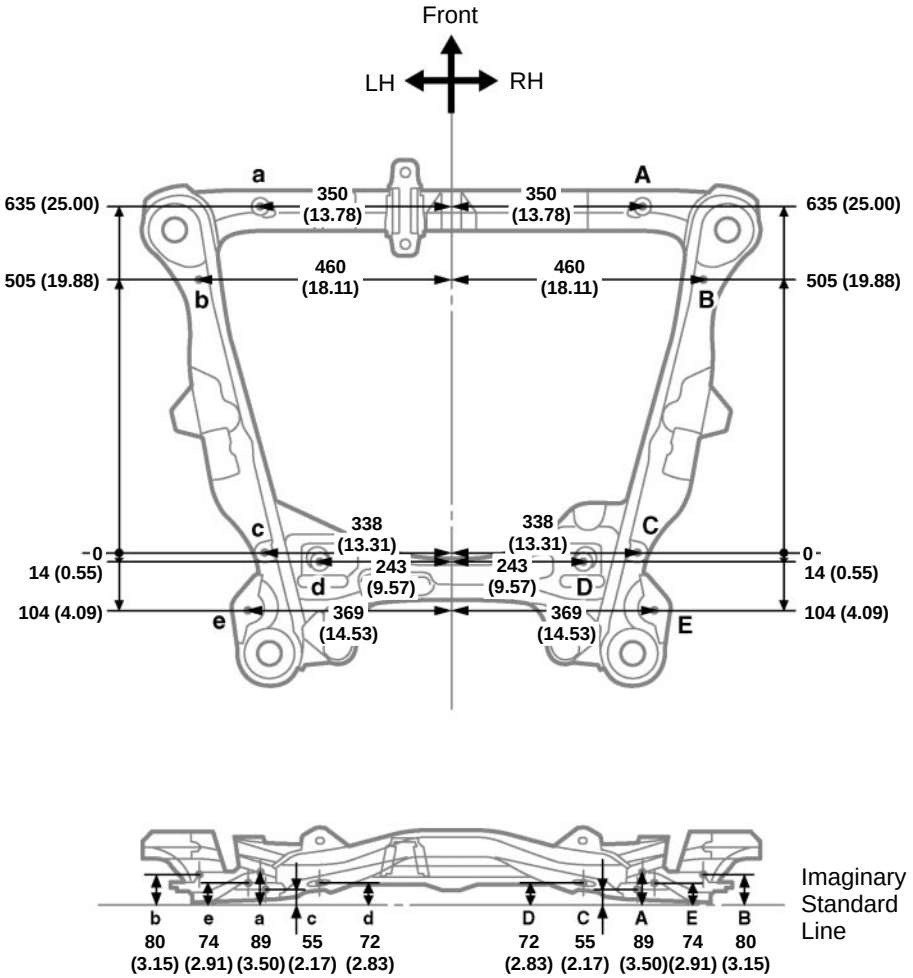

HINT: For sysmbols, capital letters indicate right side of vehicle, small letters indicate left side of vehicle (Seen from rear).

mm (in.)

Symbol	Name	Hole dia.			
A, a	Front frame standard hole	ø13 (0.51)	C, c	Front frame standard hole	ø13 (0.51)
B, b	Front frame standard hole	ø13 (0.51)	D, d	Front frame standard hole	ø13 (0.51)
			E, e	Lower arm installation hole-lower	ø15 (0.59)

REFERENCE VALUE
ENGINE COMPARTMENT

(Three-Dimensional Distance)

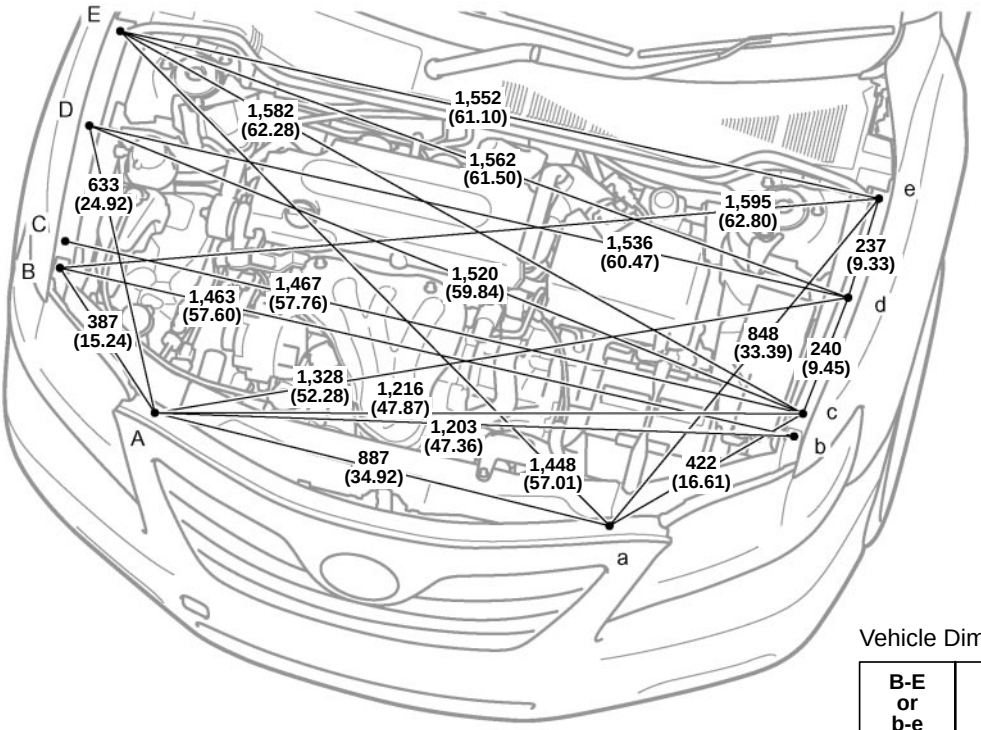

Vehicle Dimensions

B-E or b-e	C-E or c-e
524 (20.63)	476 (18.74)

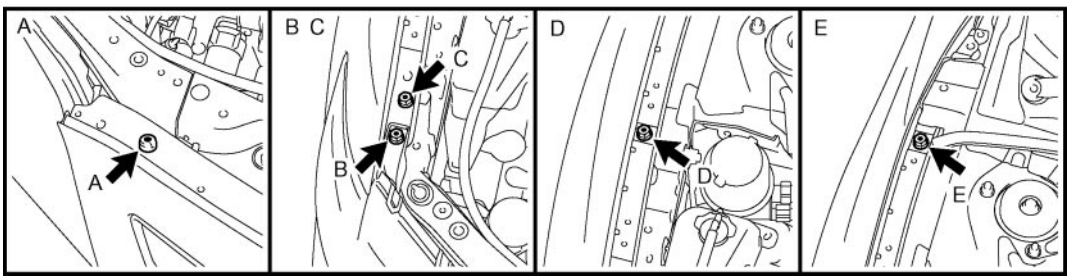

HINT:

1) For symbols, capital letters indicate right side of vehicle, small letters indicate left side of vehicle (seen from rear).
2) These values are actual measurements made on model. Use these reference values.
3) Measure point with the Front fender to cowl side seal and Cool air intake dust seal removed.

mm (in.)

Symbol	Name	Hole dia.			
			C, c	Front fender installation bolt	—
A, a	Front bumper cover installation bolt	—	D, d	Front fender installation bolt	—
B, b	Headlight installation bolt	—	E, e	Front fender installation bolt	—

UNDER BODY

(Three-Dimensional Distance)

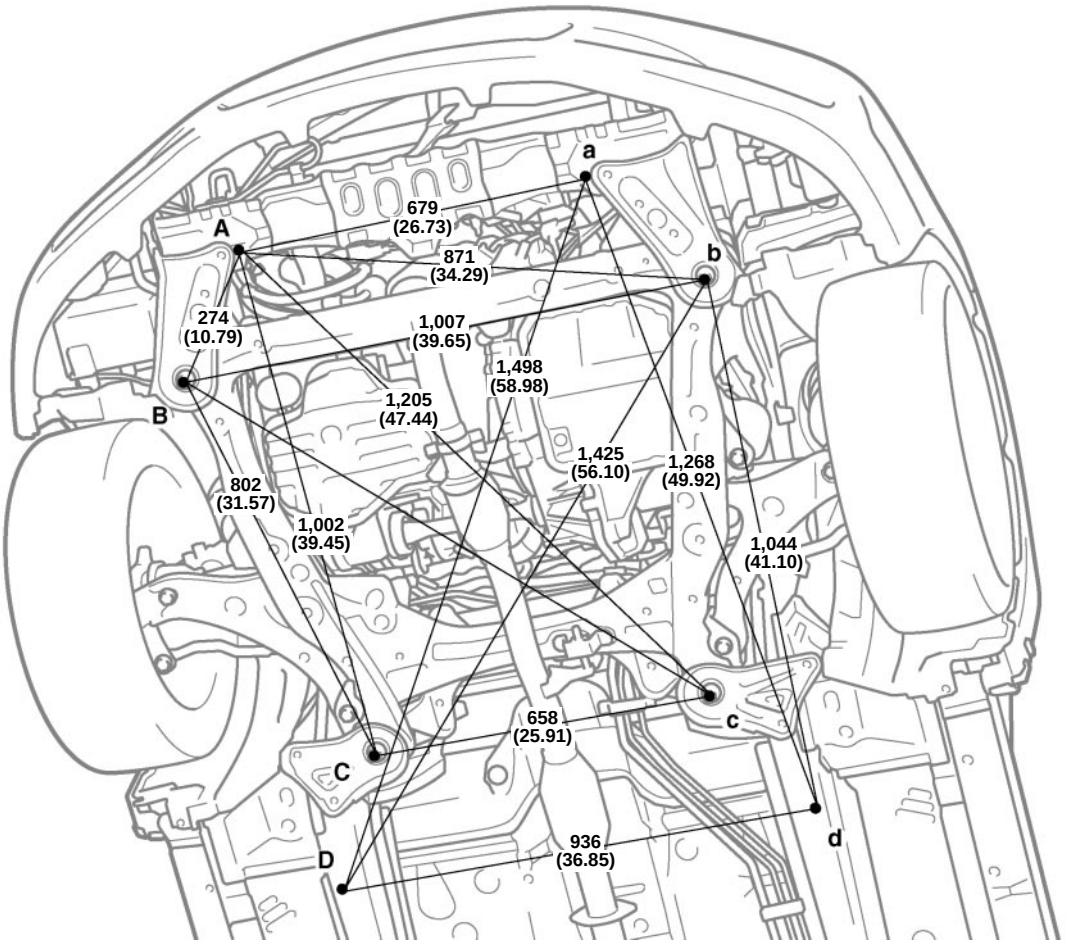

HINT:

1) For symbols, capital letters indicate right side of vehicle, small letters indicate left side of vehicle (seen from rear).
2) These values are actual measurements made on model. Use these reference values.
3) Measure point with the Engine under cover removed.

mm (in.)

Symbol	Name	Hole dia.			
A, a	Front crossmember reinforcement No.2 standard hole	ø10 (0.39)	C, c	Front suspension member installation bolt	—
B, b	Front suspension member installation bolt	—	D, d	Front side member standard hole	—
			—	—	—

UNDER BODY

(Two-Dimensional Distance)

Front bumper reinforcement

[RH]

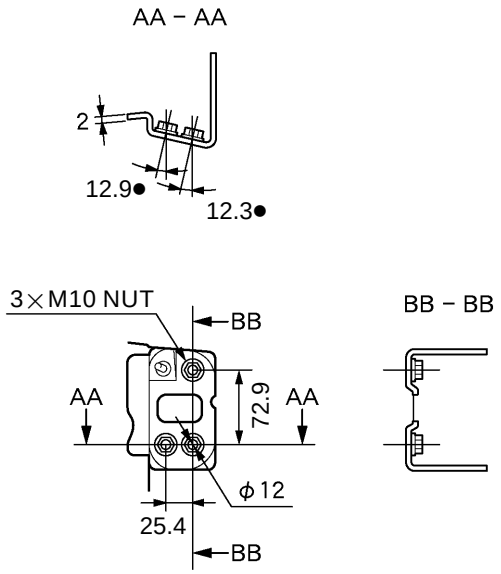

[LH]

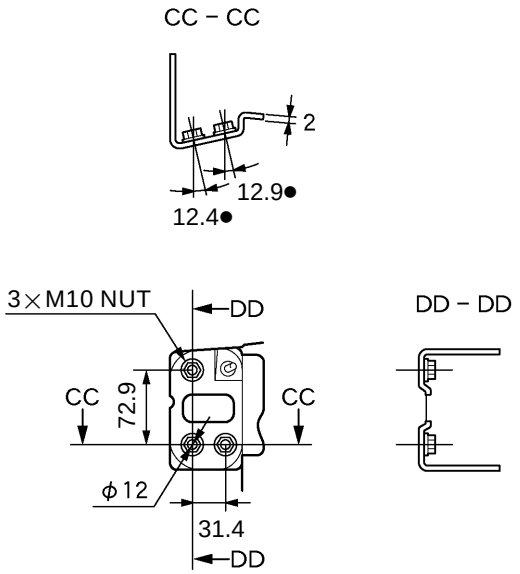

Front spring support

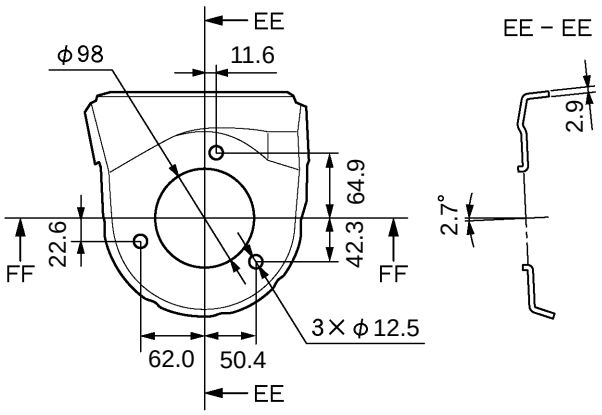

Rear spring support

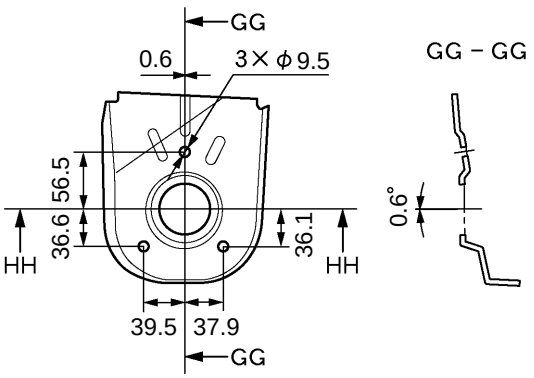

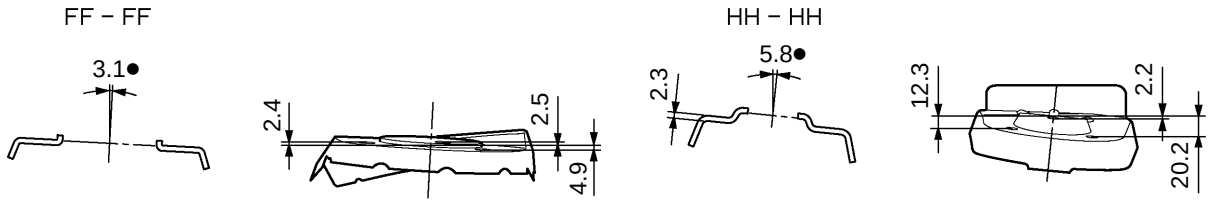

mm