STARTING SYSTEM (for 0.8 kW Type)

PARTS LOCATION

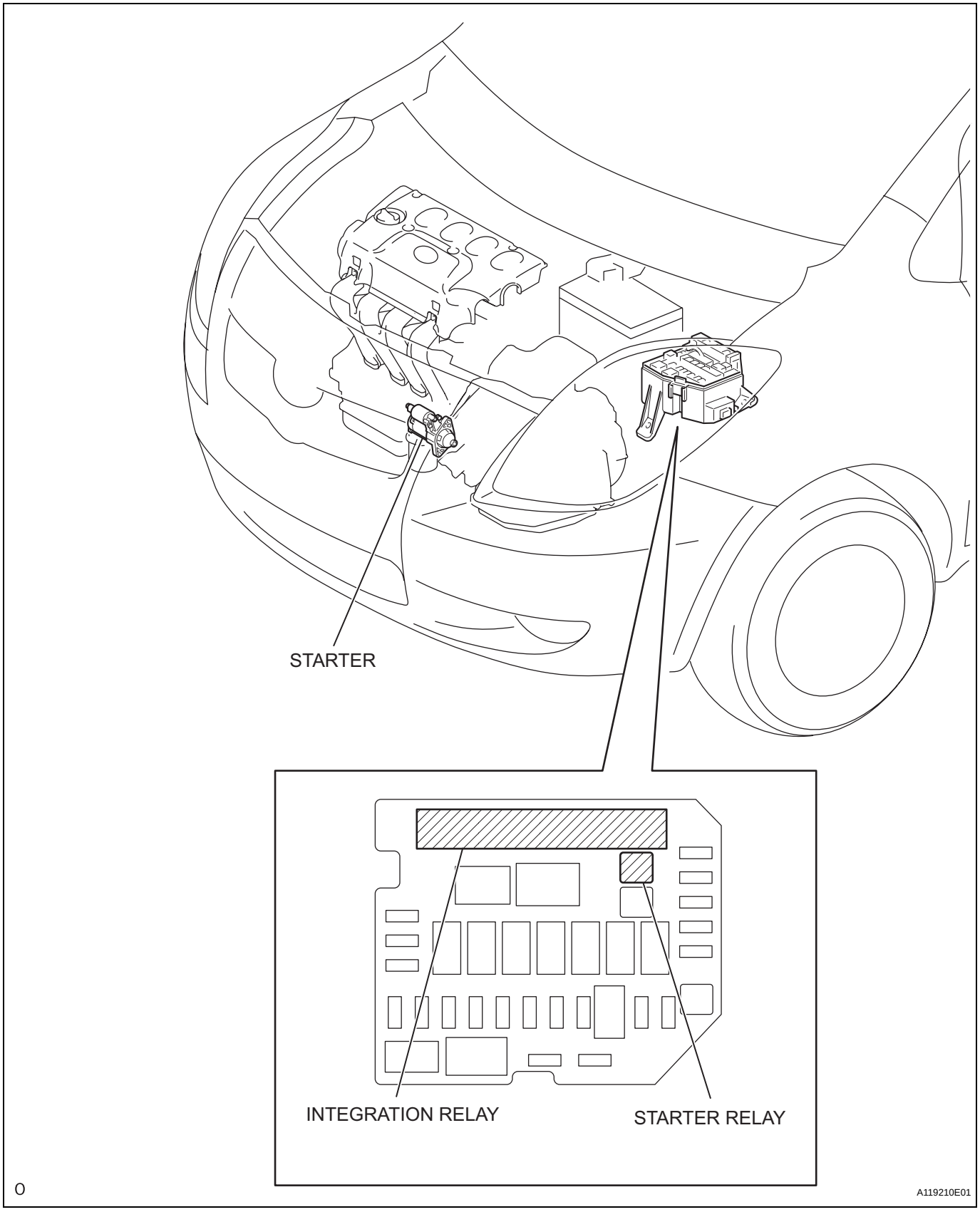

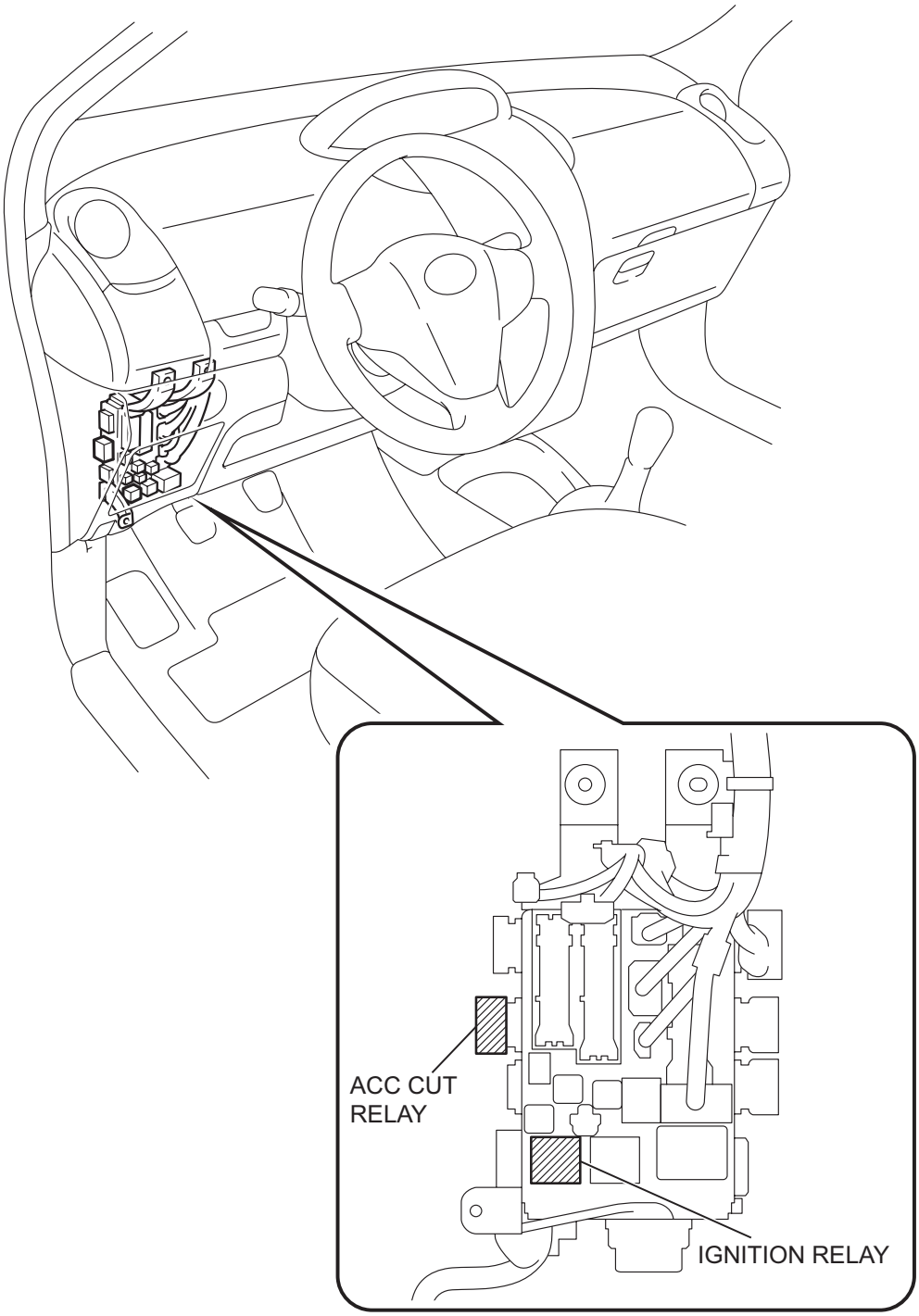

N

A119205E01

SYSTEM DIAGRAM

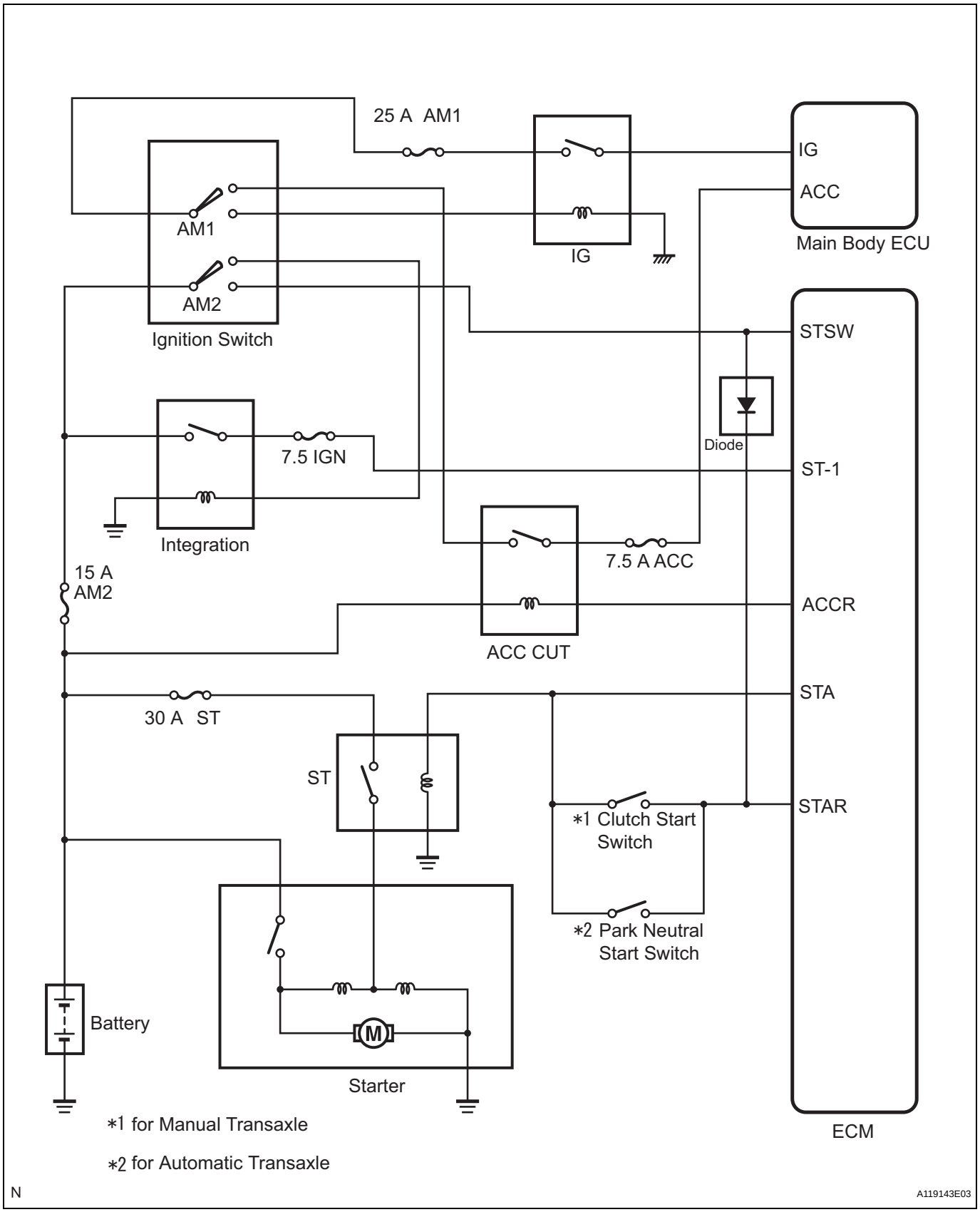

ST

STARTING SYSTEM (for 1.6 kW Type)

PARTS LOCATION

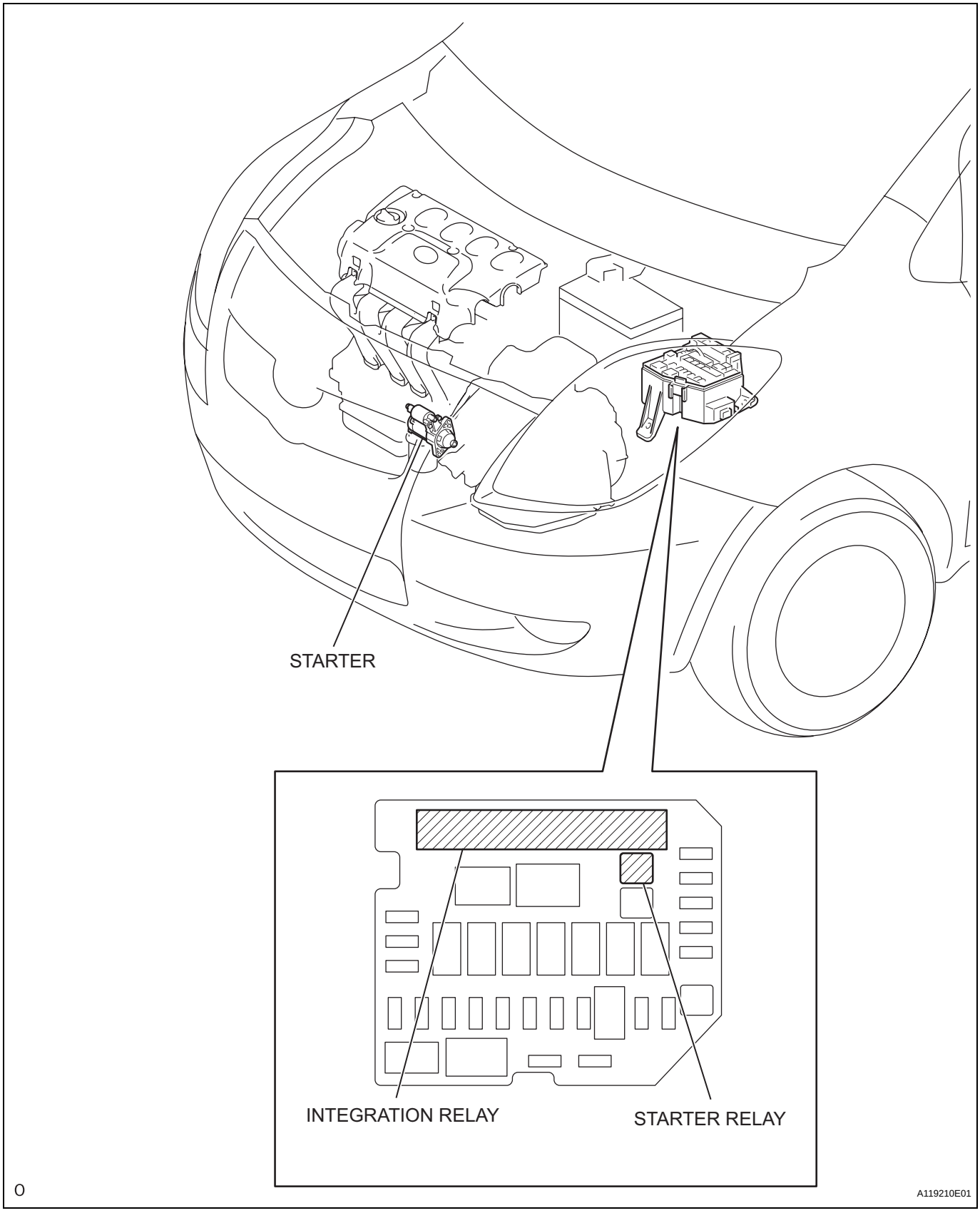

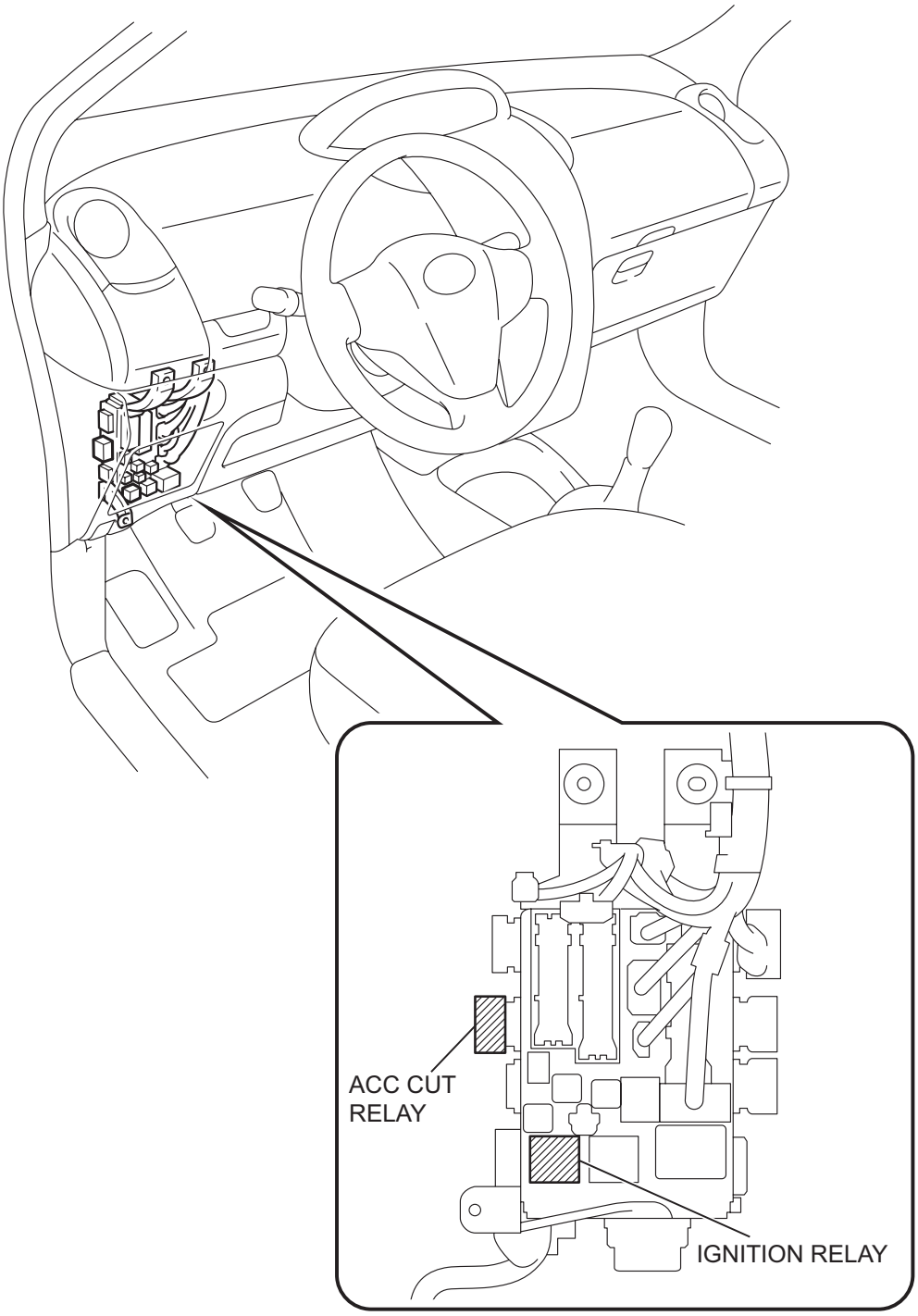

N

A119205E01

SYSTEM DIAGRAM

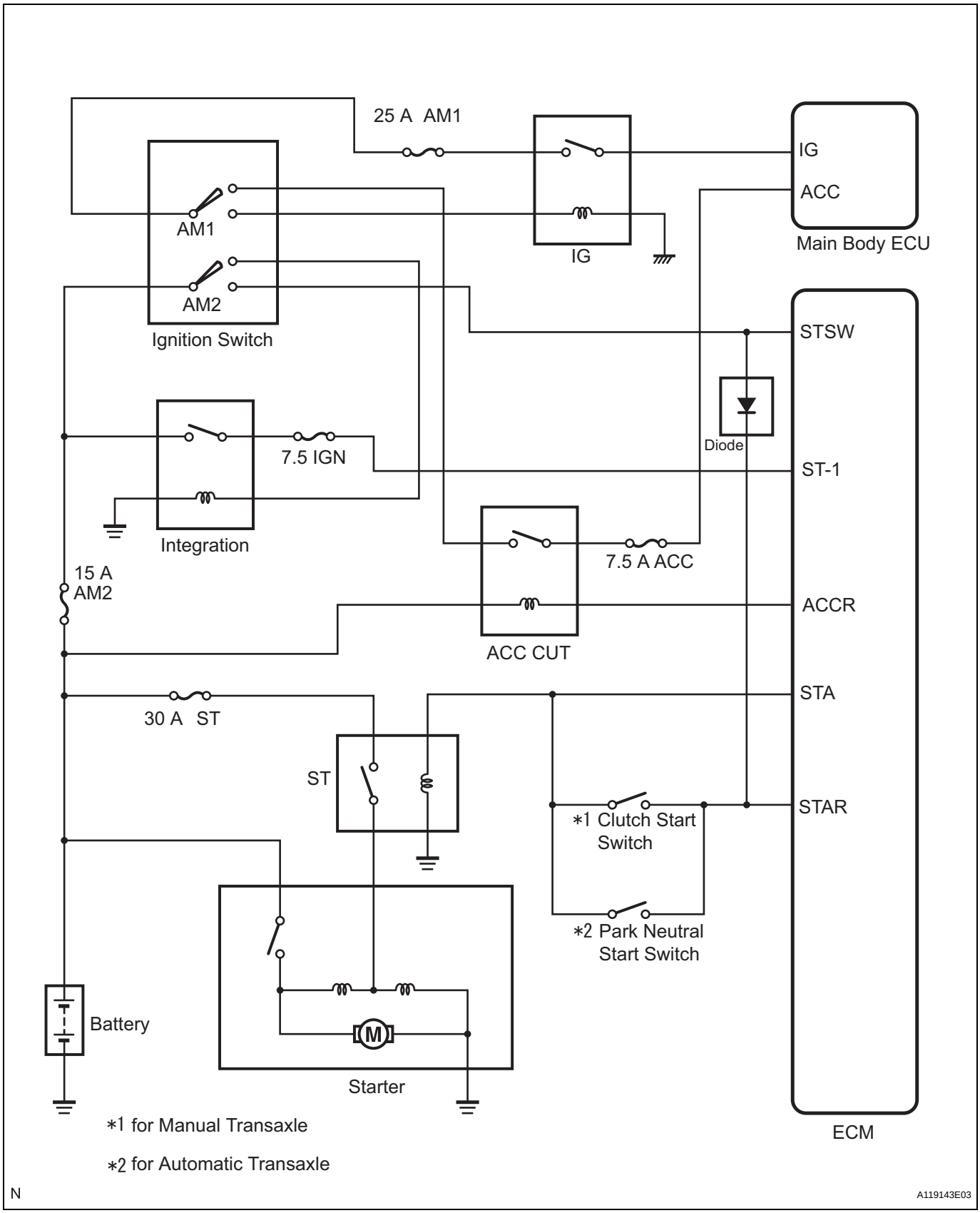

ST

STARTER (for 0.8 kW Type)

COMPONENTS

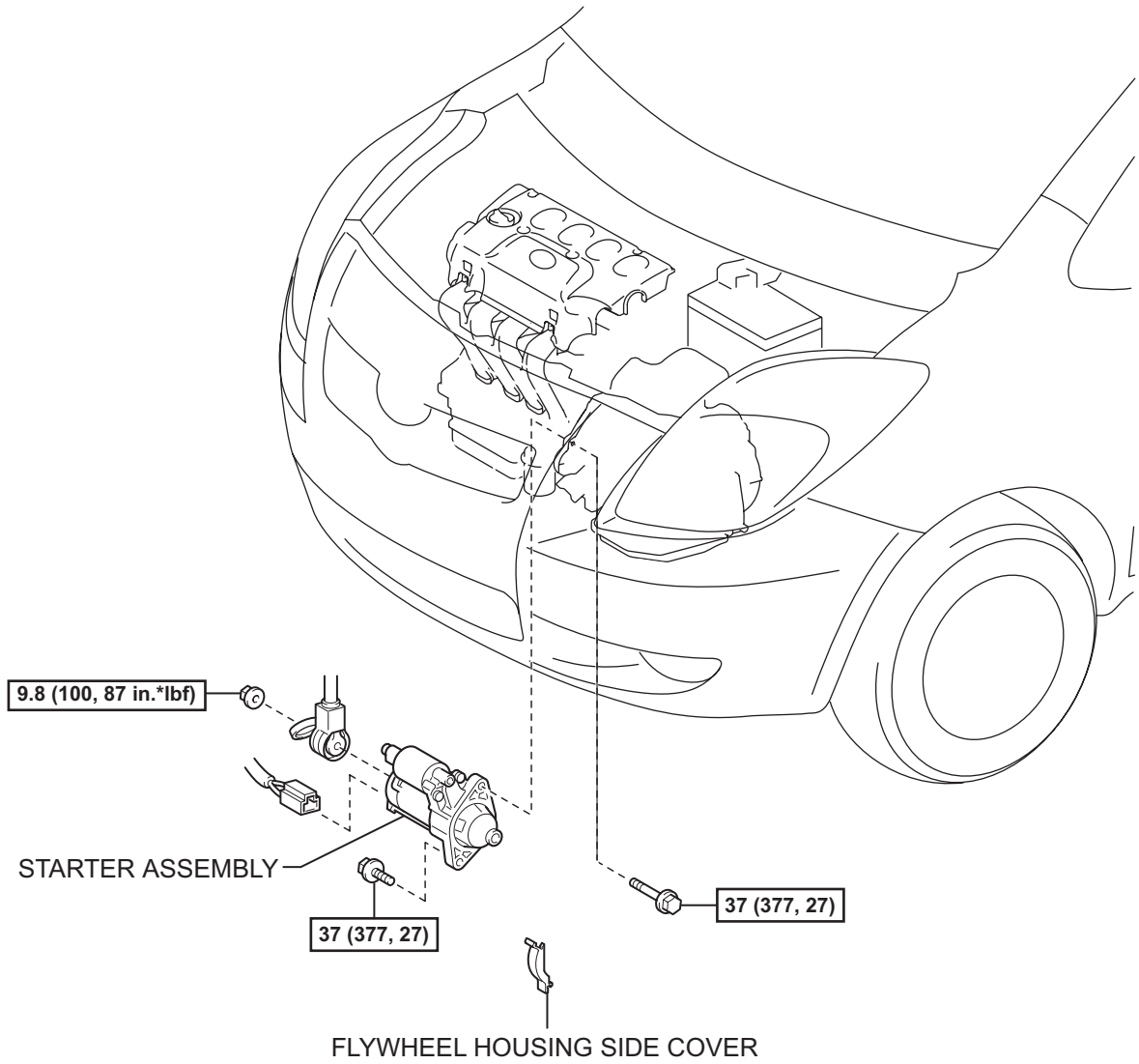

N*m (kgf*cm, ft*lbf) : Specified torque

O

A119211E02

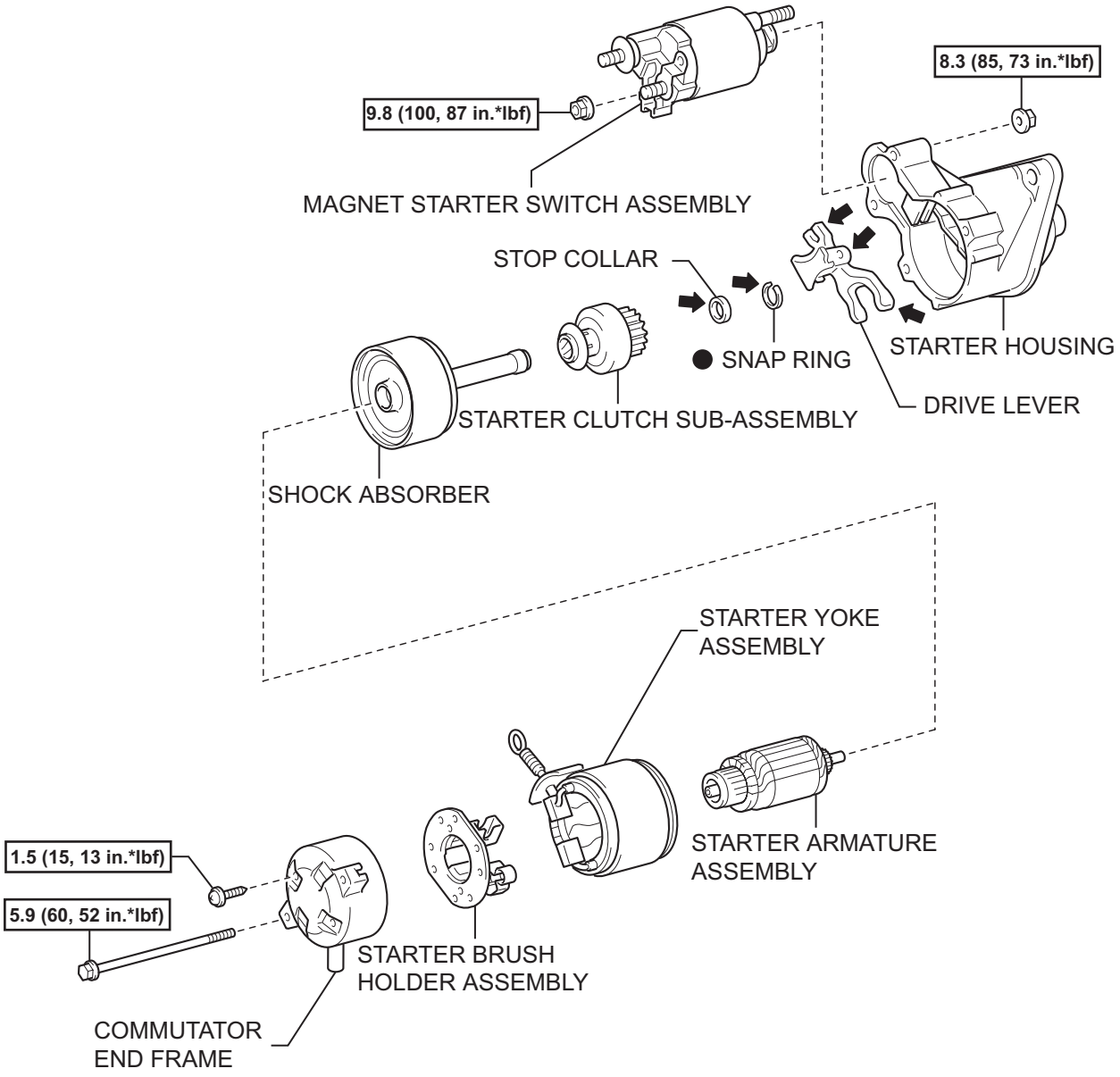

N*m (kgf*cm, ft.*lbf) : Specified torque ● Non-reusable part ⬅ Apply grease

O

A104524E06

ST

REMOVAL

1. DISCONNECT CABLE FROM NEGATIVE BATTERY TERMINAL

2. REMOVE FLYWHEEL HOUSING SIDE COVER

(a) Disengage the claw while pushing it upward and remove the flywheel housing side cover.

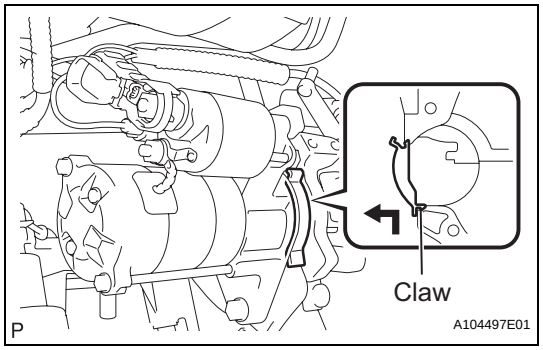

3. REMOVE STARTER ASSEMBLY

(a) Remove the terminal cap.
(b) Remove the nut and remove terminal 30.
(c) Disconnect the connector.
(d) Remove the 2 bolts and remove the starter assembly.

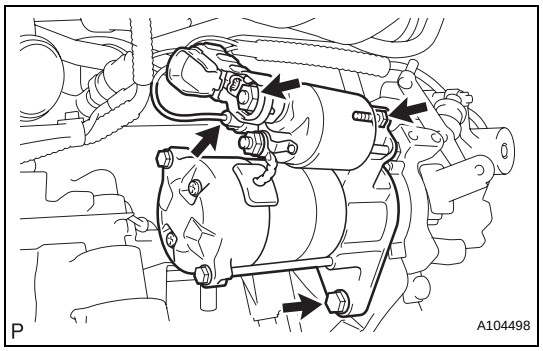

DISASSEMBLY

1. REMOVE MAGNET STARTER SWITCH ASSEMBLY

(a) Remove the nut, and disconnect the lead wire from the magnet starter switch assembly terminal.

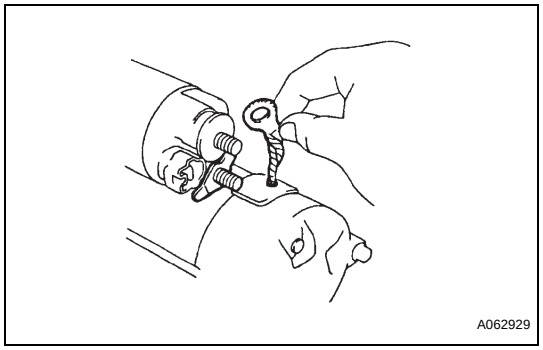

(b) Loosen the 2 nuts holding the magnet starter switch assembly onto the starter housing.

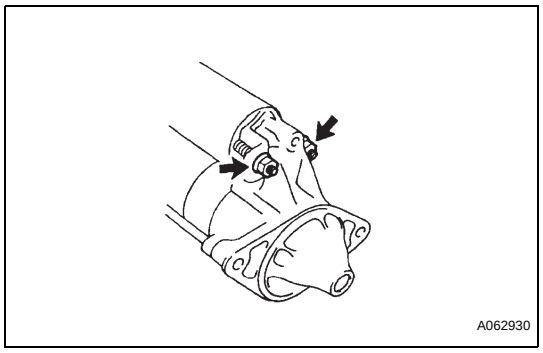

ST

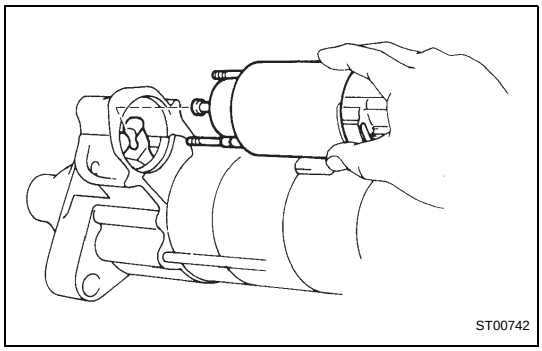

(c) Pull the magnet starter switch assembly and while lifting the front part of the magnet starter switch assembly, release the plunger hook from the driver lever, then remove the magnet starter switch assembly.

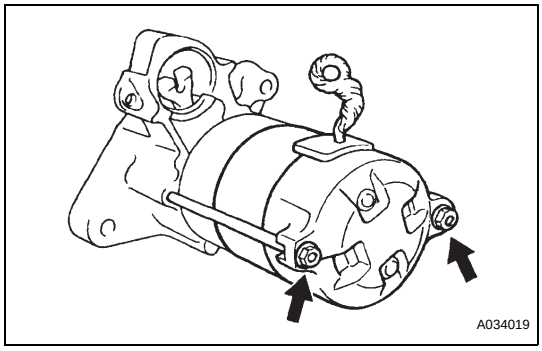

2. REMOVE STARTER YOKE ASSEMBLY

(a) Remove the 2 through bolts, and pull out the field frame together with the armature.

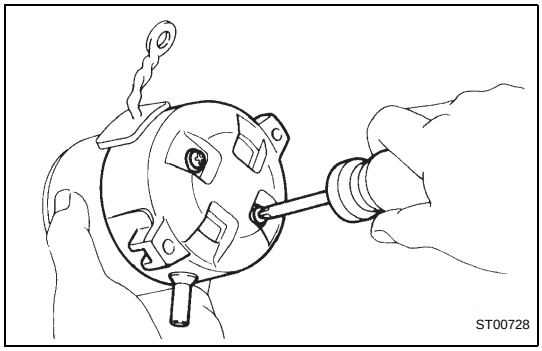

3. REMOVE STARTER BRUSH HOLDER ASSEMBLY

(a) Remove the 2 screws and the commutator end frame, and hold down the lead wire while releasing the commutator end frame.

NOTICE:

To avoid interference between the brush holder and the dust protector, pull the commutator end frame away at an angle.

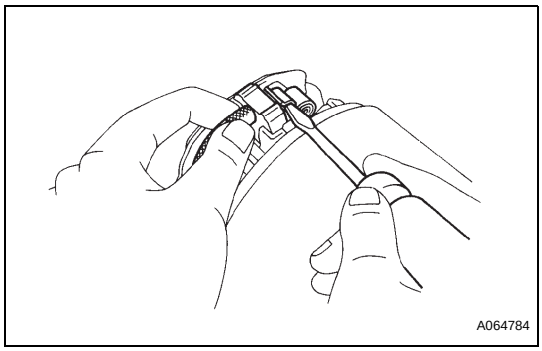

(b) Using a screwdriver, hold the spring back and disconnect the brush holder.

(c) Disconnect the 4 brushes, and remove the brush holder.

4. REMOVE STARTER ARMATURE ASSEMBLY

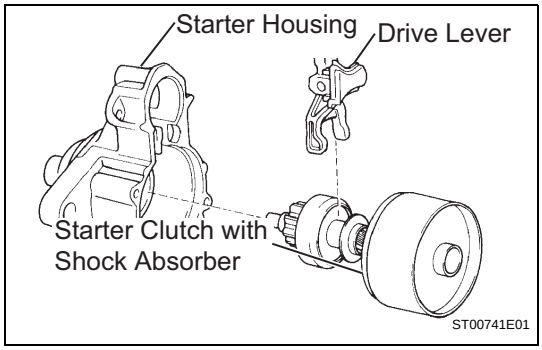

5. REMOVE STARTER CLUTCH SUB-ASSEMBLY

(a) Remove the drive lever and starter clutch with shock absorber from starter housing.

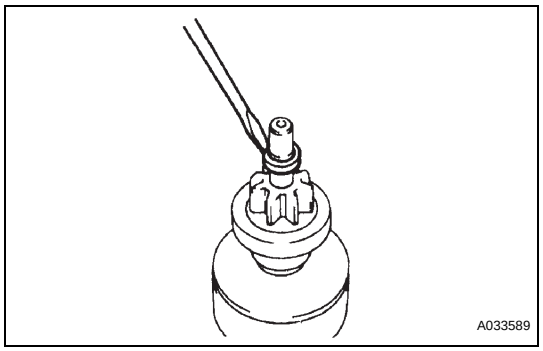

(b) Using a screwdriver, tap in the stop collar toward the starter clutch.

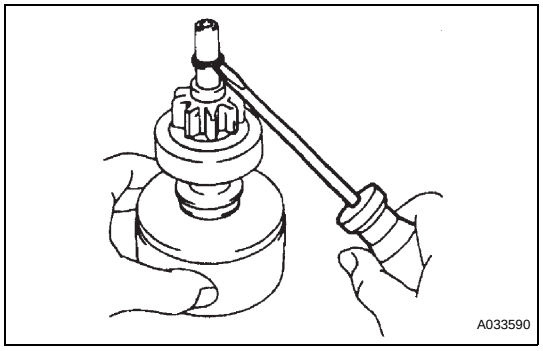

(c) Using a screwdriver, pry off the snap ring.
(d) Remove the stop collar and starter clutch from the planetary shaft.

INSPECTION

1. INSPECT STARTER ASSEMBLY

NOTICE:

Perform each of the following tests within 3 to 5 seconds.

(a) Perform pull-in test.

(1) Disconnect the field coil lead wire from terminal C.

(2) Connect the battery to the starter magnetic switch as shown in the illustration and check that the pinion gear is extended.

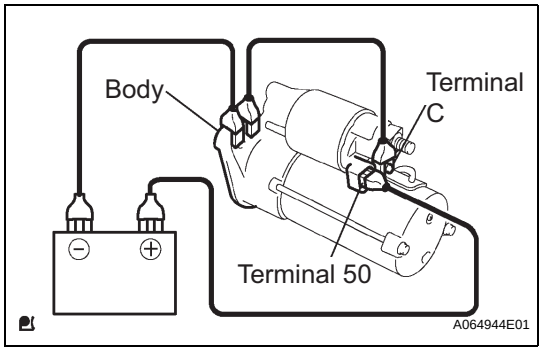

(b) Perform holding test.

(1) Check that the pinion gear does not return inward after the cable of terminal C is disconnected.

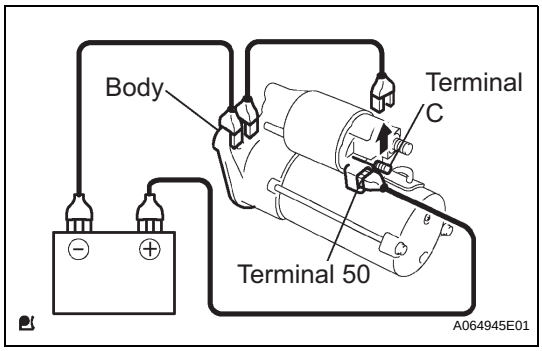

(c) Inspect the clutch pinion gear return.

(1) Disconnect the negative (-) lead from the starter body and move the pinion gear toward the armature.

(d) Perform the operation test without load.

(1) Connect the field coil lead wire to terminal C.
Torque: 9.8 N*m (100 kgf*cm, 87 in.*lbf)

(2) Clamp the starter in a vise.

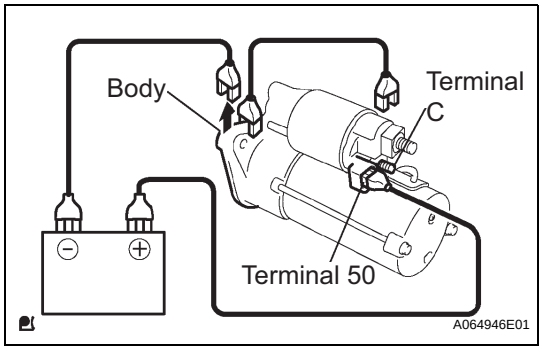

ST

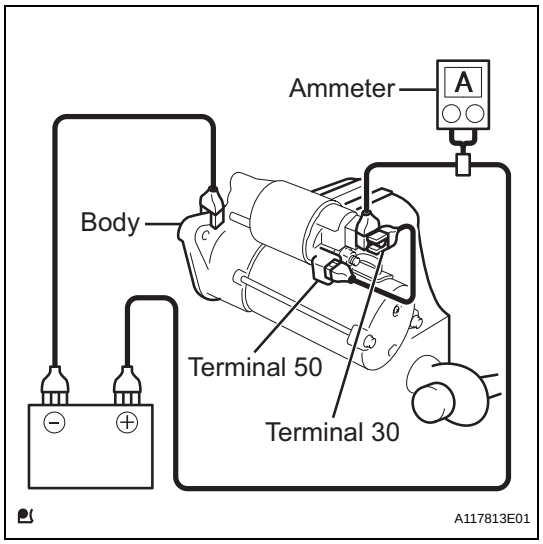

(3) Connect the battery and ammeter to the starter as shown in the illustration.

(4) Check that the ammeter indicates the specified current.

Standard current:
90A or less at 11.5V

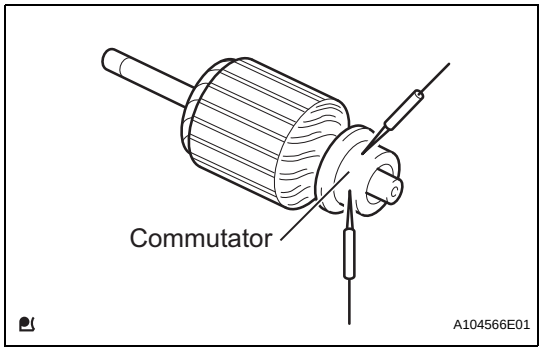

2. INSPECT STARTER ARMATURE ASSEMBLY

(a) Check the commutator for open circuits.

(1) Using an ohmmeter, check the resistance between the segments of the commutator.

Standard resistance:
Below 1 Ω

If the result is not as specified, replace the starter armature assembly.

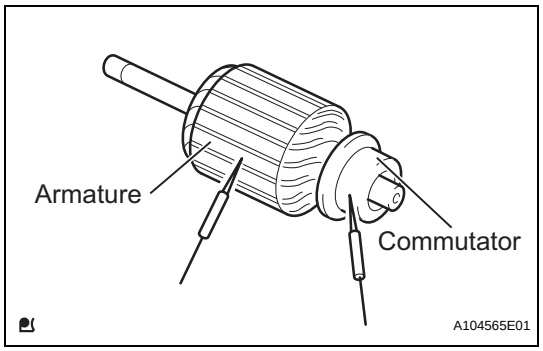

(b) Check the commutator for ground.

(1) Using an ohmmeter, check the resistance between the commutator and the armature core.

Standard resistance:
10 kΩ or higher

If the result is not as specified, replace the starter armature assembly.

(c) Check the commutator surface for dirt and burns. If the surface is dirty or burnt, restore it with sandpaper (No. 400) or a lathe.

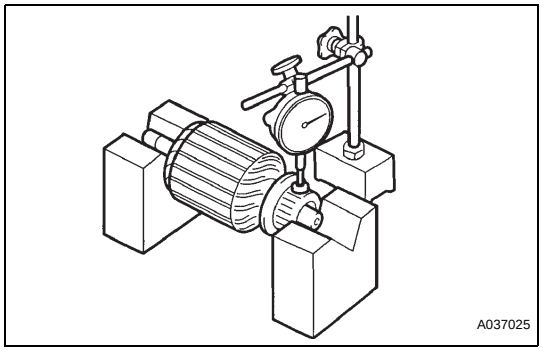

(d) Check for the commutator cirumference runout.

(1) Place the commutator on V-blocks.

(2) Using a dial indicator, measure the cirumference runout.

Maximum runout:
0.05 mm (0.0020 in.)

If the runout is greater than the maximum, replace the starter armature assembly.

ST

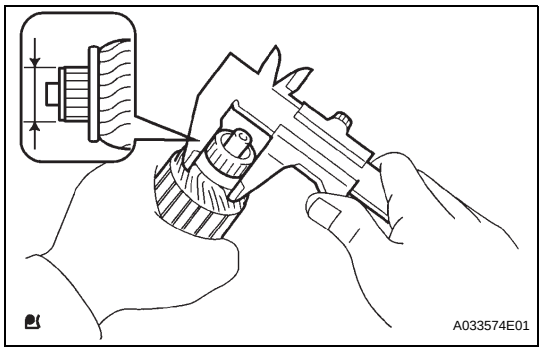

(e) Using vernier calipers, measure the commutator diameter.
Standard diameter:
28.0 mm (1.1024 in.)
Minimum diameter:
27.0 mm (1.0630 in.)
If the diameter is less than the minimum, replace the starter armature assembly.

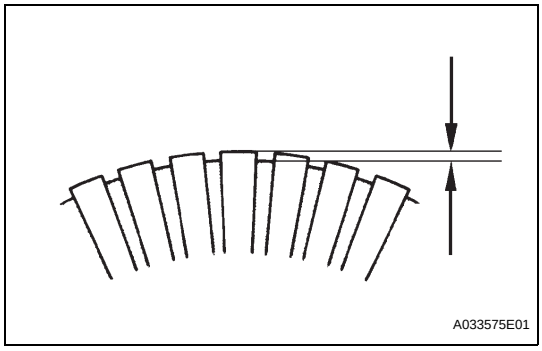

(f) Check that the undercut portion between the segments is free of foreign matter and measure its depth.
Standard undercut depth:
0.6 mm (0.0236 in.)
Minimum undercut depth:
0.2 mm (0.0079 in.)
If the undercut depth is less than the minimum, adjust it with a hacksaw blade.

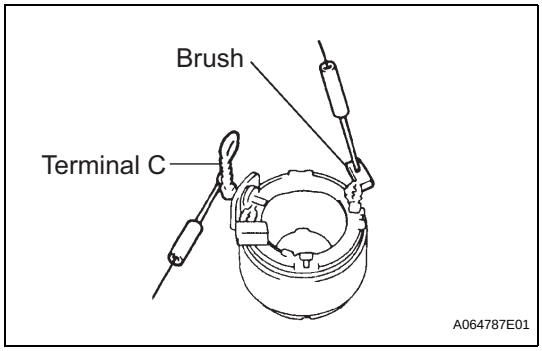

3. INSPECT STARTER YOKE ASSEMBLY

(a) Using an ohmmeter, check the resistance between terminal C and the field coil brush lead.
Standard resistance:
Below 1 Ω
If the result is not as specified, replace the starter yoke assembly.

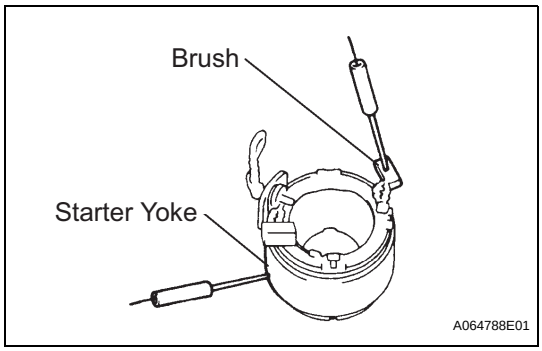

(b) Using an ohmmeter, check the resistance between the brush lead and the starter yoke.
Standard resistance:
10 kΩ or higher
If the result is not as specified, replace the starter yoke assembly.

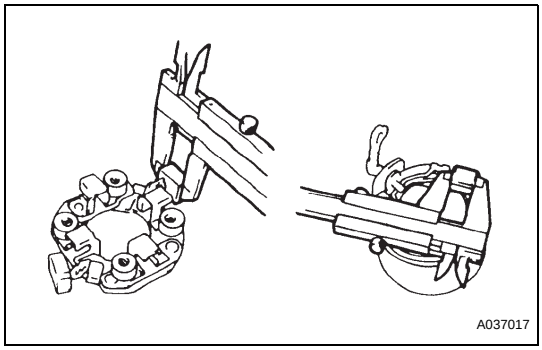

4. INSPECT BRUSH

(a) Using vernier calipers, measure the brush length.
Standard length:
14 mm (0.5511 in.)
Minimum length:
9 mm (0.3543 in.)
If the length is less than the minimum, replace the starter brush holder assembly and the starter yoke assembly.

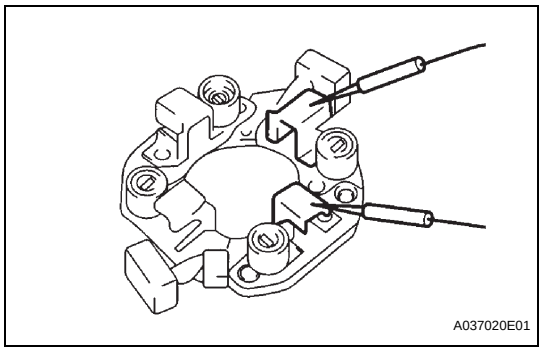

5. INSPECT STARTER BRUSH HOLDER ASSEMBLY

(a) Using an ohmmeter, measure the resistance between the positive (+) and negative (-) brush holders.

Standard resistance:

10 kΩ or higher

If the result is not as specified, replace the starter brush holder assembly.

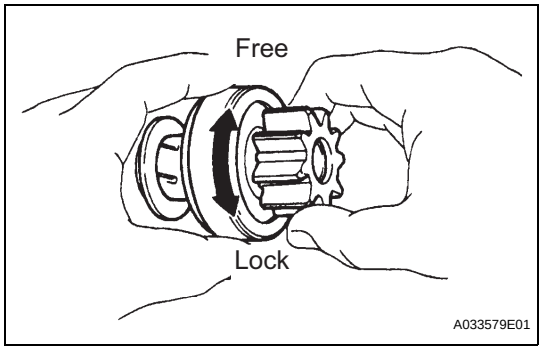

6. INSPECT STARTER CLUTCH SUB-ASSEMBLY

(a) Hold the starter clutch and rotate the pinion gear clockwise, and check that it turns freely. Try to rotate the pinion gear counterclockwise and check that it locks.

If necessary, replace the starter clutch sub-assembly.

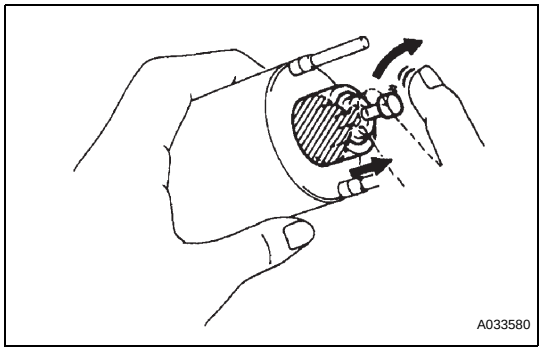

7. INSPECT MAGNET STARTER SWITCH ASSEMBLY

(a) Check the plunger.

(1) Push in the plunger and check that it returns quickly to its original position.

If necessary, replace the magnet starter switch assembly.

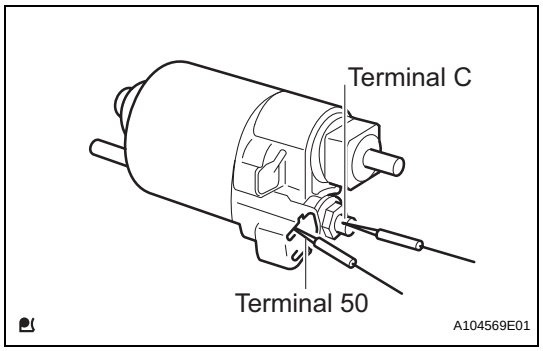

(b) Check the pull-in coil for open circuits.

(1) Using an ohmmeter, check the resistance between terminals 50 and C.

Standard resistance:

Below 1 Ω

If the result is not as specified, replace the magnet starter switch assembly.

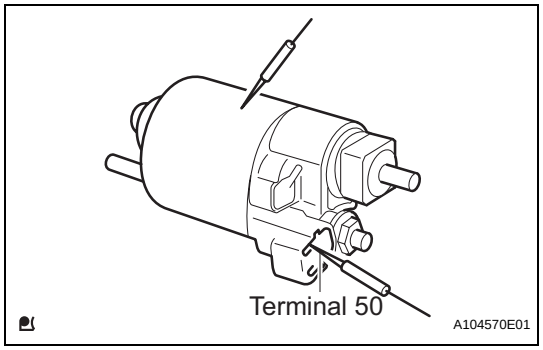

(c) Check whether the holding coil has open circuit.

(1) Using an ohmmeter, check the resistance between terminal 50 and the switch body.

Standard resistance:

Below 2 Ω

If the result is not as specified, replace the magnet starter switch assembly.

REASSEMBLY

1. INSTALL STARTER CLUTCH SUB-ASSEMBLY

(a) Apply grease to the bushing and spline of the starter clutch and stop collar.

(b) Place the starter clutch and stop collar on the planetary shaft.

(c) Apply grease to a new snap ring, and install it onto the planetary shaft groove.

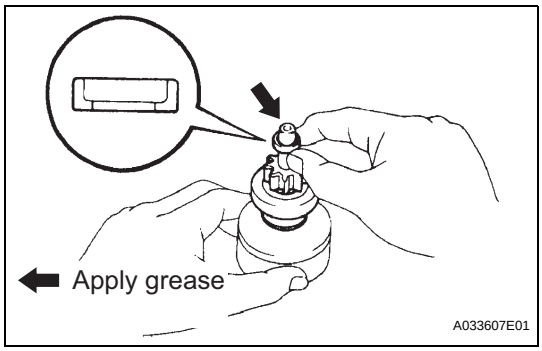

(d) Using a vise, compress the snap ring.

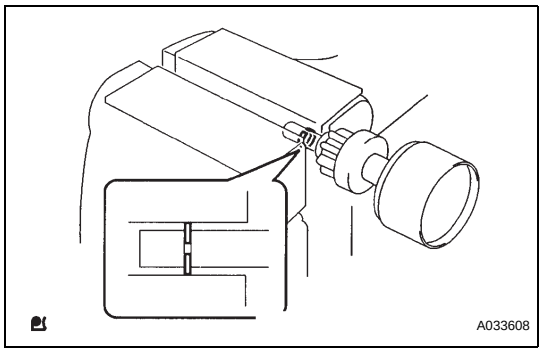

ST

(e) Hold the starter clutch, tap the planetary shaft and install the stop collar onto the snap ring with a plastic-faced hammer.

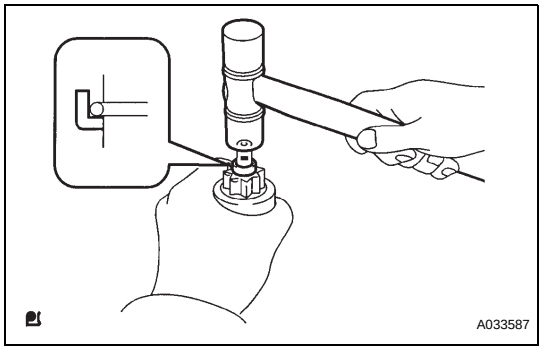

(f) Apply grease to the drive lever which is in contact with the starter pivot part of the drive lever.

(g) Install the drive lever onto the starter clutch.

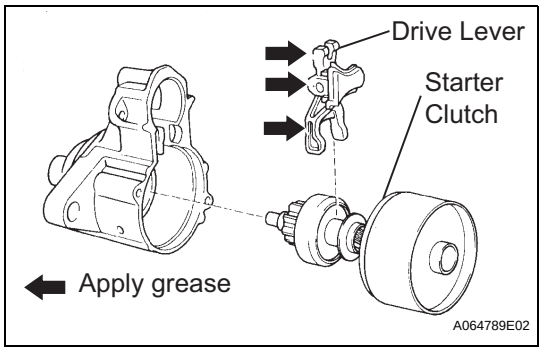

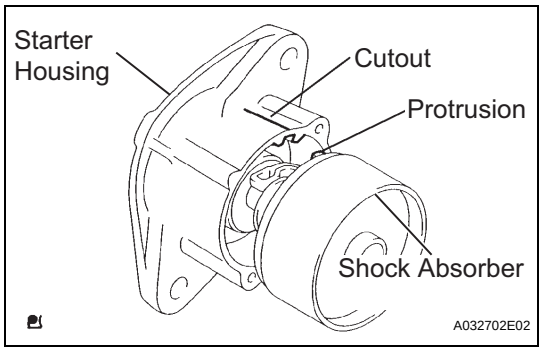

(h) Align the protrusion of the shock absorber with the cutout of the starter housing and install it.

2. INSTALL STARTER ARMATURE ASSEMBLY

3. INSTALL STARTER BRUSH HOLDER ASSEMBLY

(a) Install the brush holder.

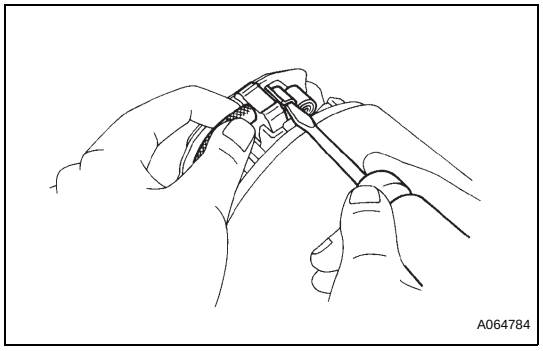

(b) Using a screwdriver, hold the brush spring back, and install the 4 brushes into the brush holder.

(c) Apply turbine oil with additives to the bearing of the end frame.

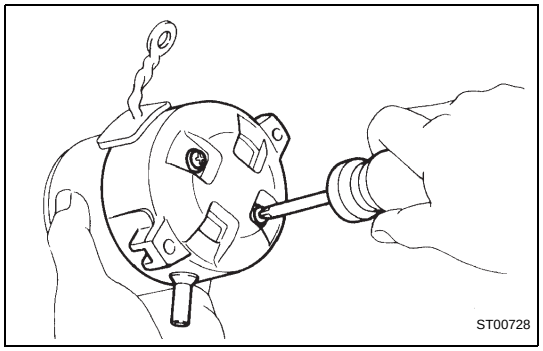

(d) Install the end frame with 2 new screws.
Torque: 1.5 N*m (15 kgf*cm, 13 in.*lbf)
NOTICE:
To avoid interference between the brush holder and the dust protector, push the commutator end frame away at an angle.

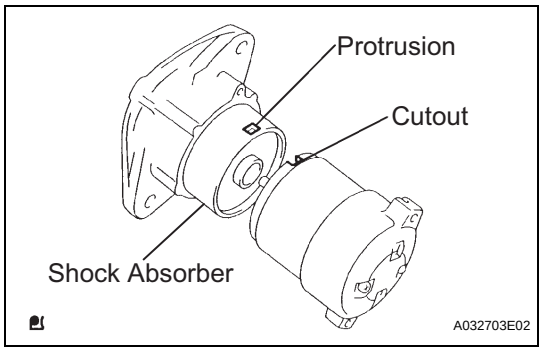

4. INSTALL STARTER YOKE ASSEMBLY

(a) Align the cutout of the field frame with the protrusion of the shock absorber.

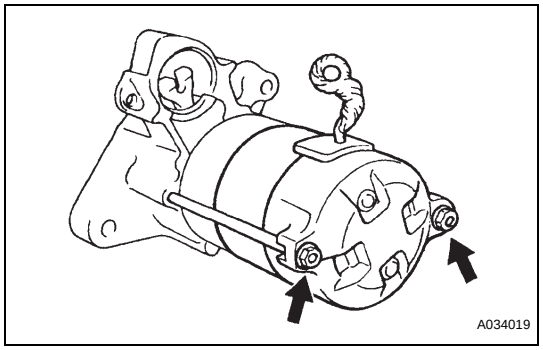

(b) Install the field frame and the armature assembly with the 2 through bolts.
Torque: 5.9 N*m (60 kgf*cm, 52 in.*lbf)

ST

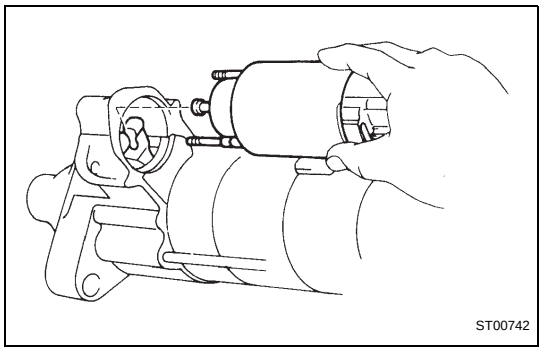

5. INSTALL MAGNET STARTER SWITCH ASSEMBLY

(a) Hang the plunger of the magnet starter switch assembly onto the driver lever from the upper side.

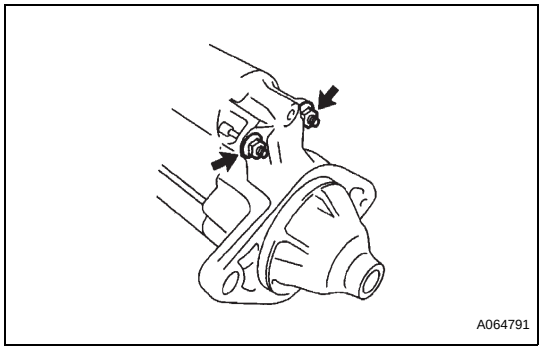

(b) Install the magnet starter switch assembly with the 2 nuts.
Torque: 8.3 N*m (85 kgf*cm, 73 in.*lbf)

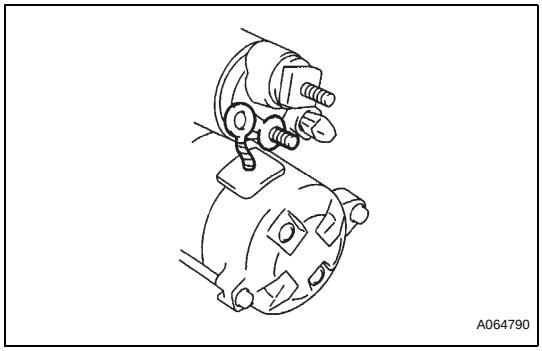

(c) Connect the lead wire to the terminal with the nut.
Torque: 9.8 N*m (100 kgf*cm, 87 in.*lbf)

ST

INSTALLATION

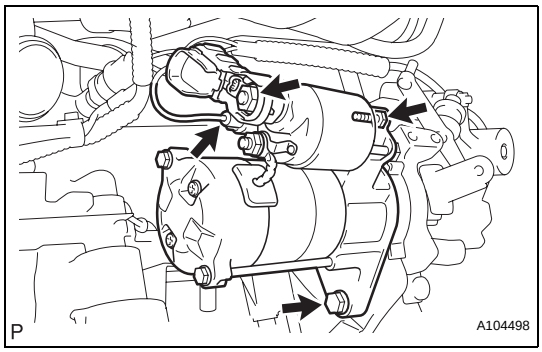

1. INSTALL STARTER ASSEMBLY

(a) Install the starter assembly with the 2 bolts.
Torque: 37 N*m (377 kgf*cm, 27 ft.*lbf)

(b) Connect the connector.

(c) Connect terminal 30 with the nut.
Torque: 9.8 N*m (100 kgf*cm, 87 in.*lbf)

(d) Close the terminal cap.

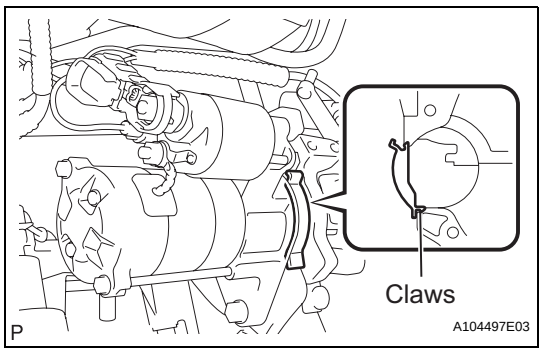

2. INSTALL FLYWHEEL HOUSING SIDE COVER

(a) Insert the protruding portion into the end of the cylinder block and while pushing it along the cylinder block, fit the 2 claws into the cylinder block.
NOTICE:
- **Make sure that the claw makes a click sound, indicating that it fits tightly.**
- **Replace the claw with a new one if it does not fit tightly or is deformed.**

3. CONNECT CABLE TO NEGATIVE BATTERY TERMINAL
Torque: 5.4 N*m (55 kgf*cm, 48 in.*lbf)

STARTER (for 1.6 kW Type)

COMPONENTS

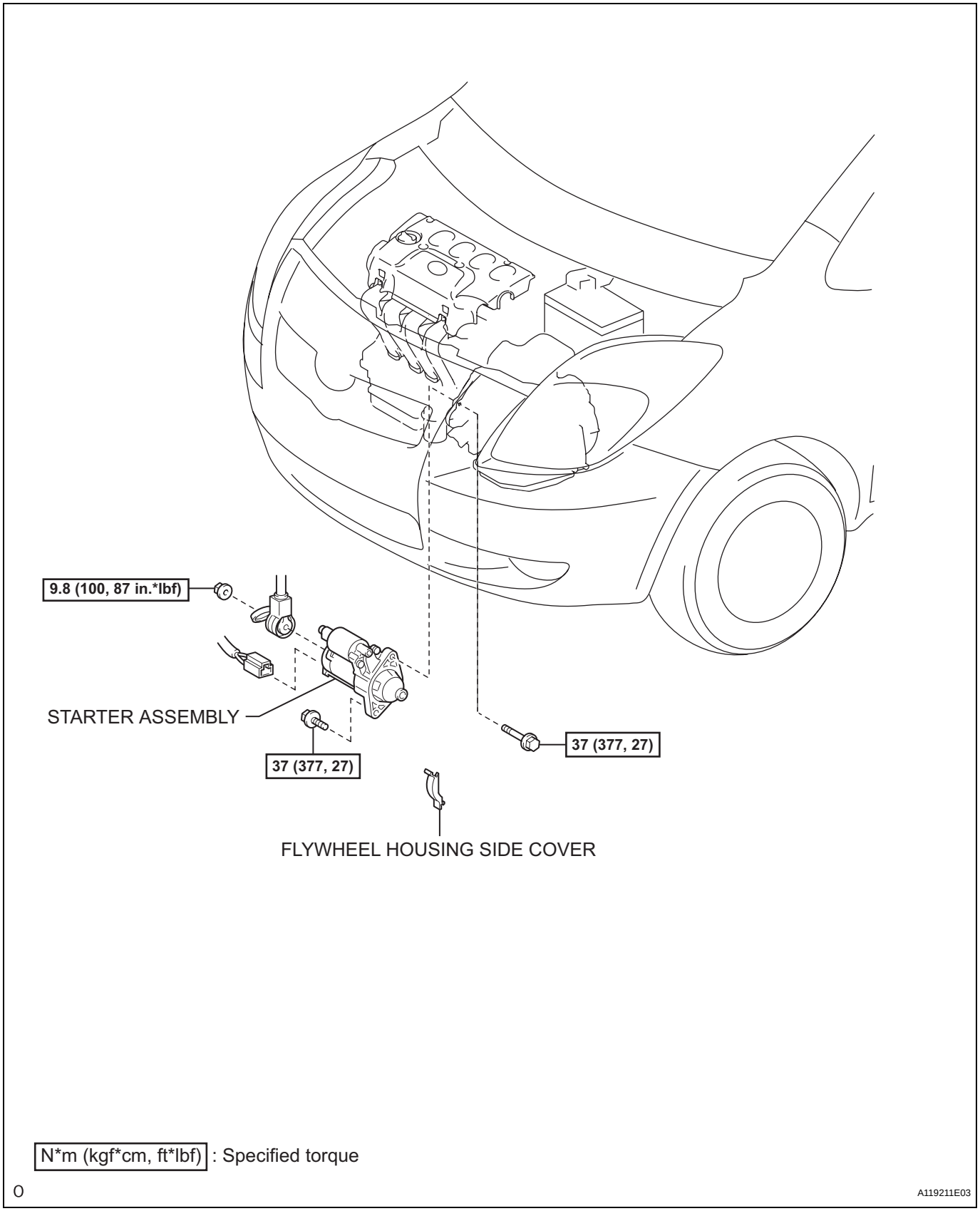

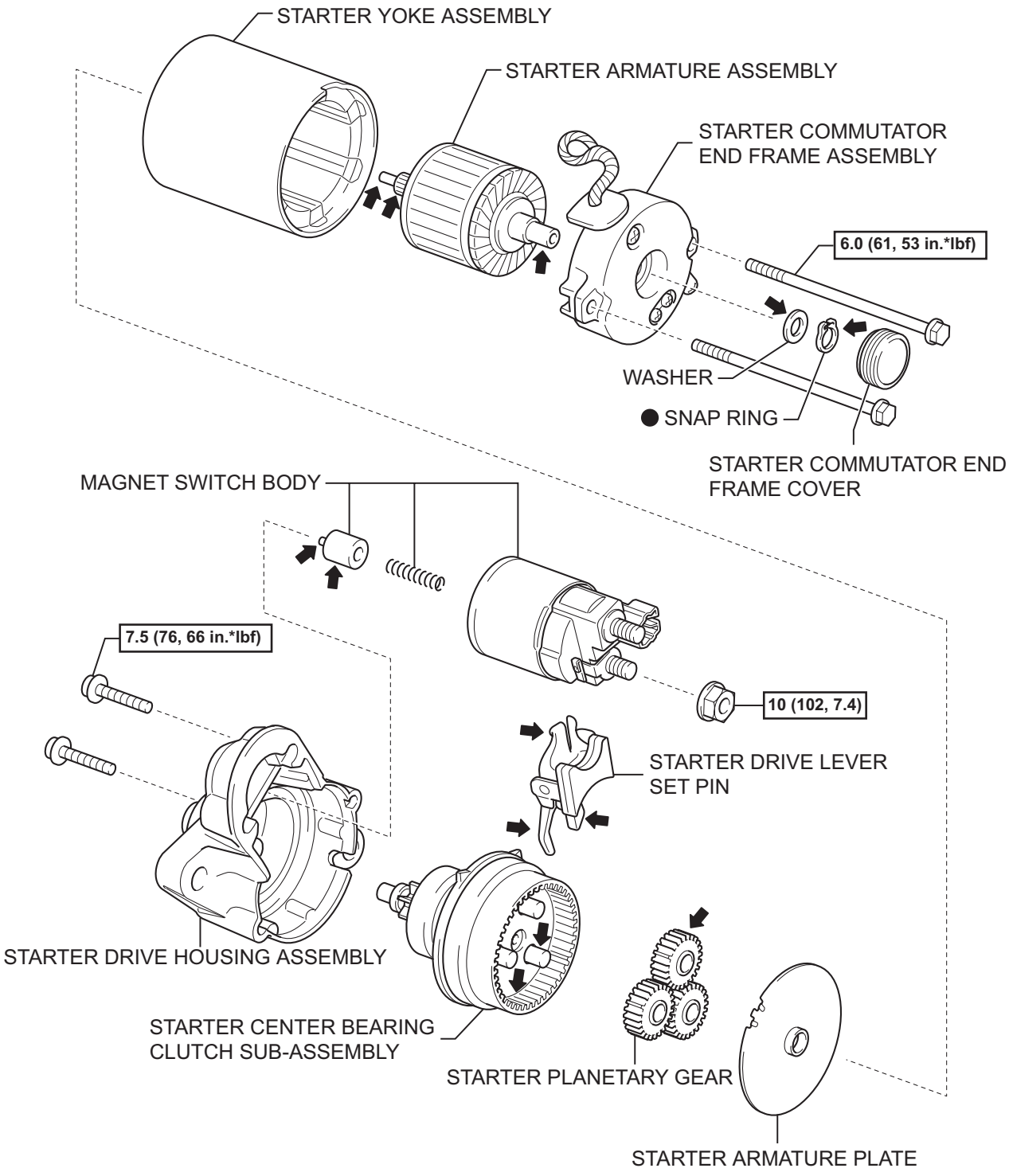

N*m (kgf*cm, ft.*lbf) : Specified torque ⬅ Apply grease ● Non-reusable part

Y

A117346E03

ST

REMOVAL

1. DISCONNECT CABLE FROM NEGATIVE BATTERY TERMINAL

2. REMOVE FLYWHEEL HOUSING SIDE COVER

(a) Disengage the claw while pushing it upward and remove the flywheel housing side cover.

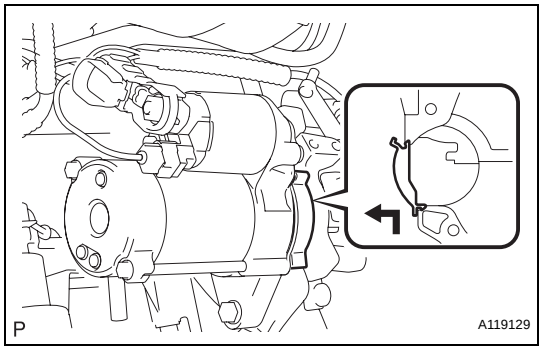

3. REMOVE STARTER ASSEMBLY

(a) Remove the terminal cap.
(b) Remove the nut and remove terminal 30.
(c) Disconnect the connector.
(d) Remove the 2 bolts and remove the starter assembly.

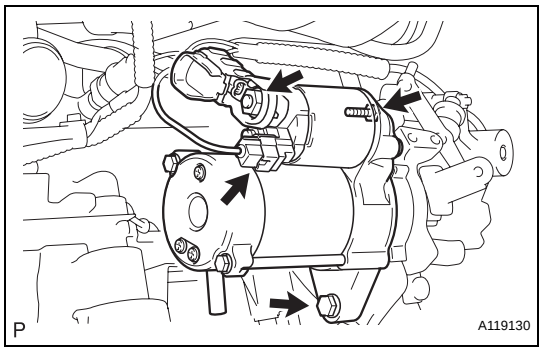

DISASSEMBLY

1. REMOVE MAGNET SWITCH BODY

(a) Remove the nut, and disconnect the lead wire from the magnet switch body.

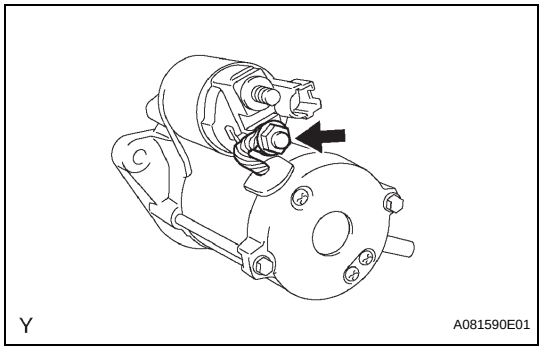

(b) Remove the 2 screws holding the magnet switch body onto the starter drive housing assembly.
(c) Remove the magnet switch body.
(d) Remove the return spring and the plunger.

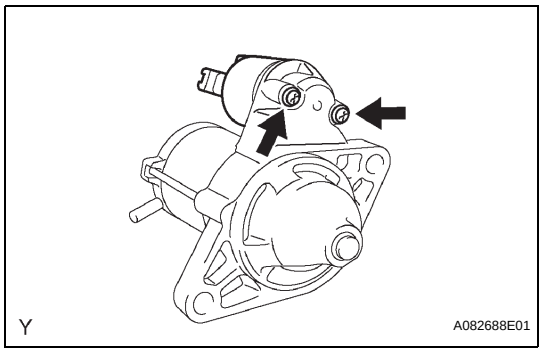

ST

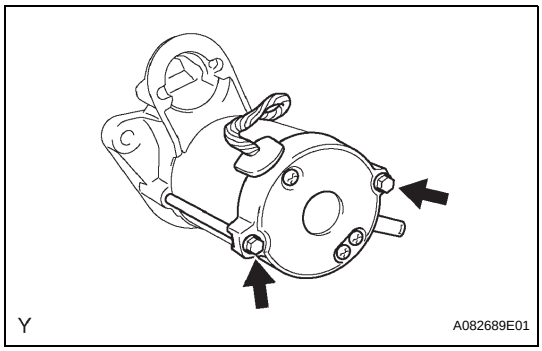

2. REMOVE STARTER YOKE ASSEMBLY

(a) Remove the 2 through bolts, and pull out the starter yoke assembly and starter commutator end frame assembly together.

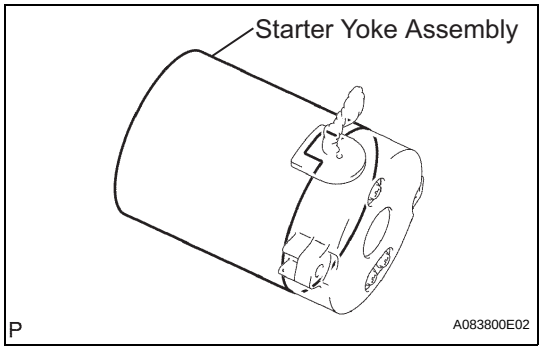

(b) Remove the starter yoke assembly from the starter commutator end frame assembly.

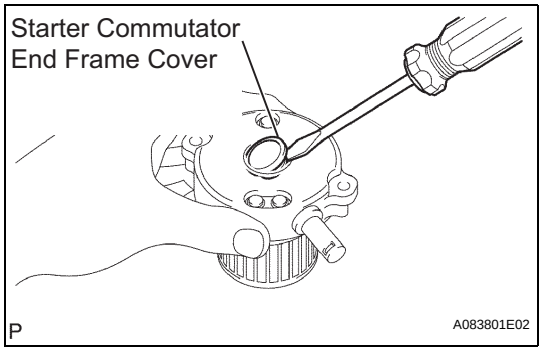

3. REMOVE STARTER COMMUTATOR END FRAME COVER

(a) Using a screwdriver, remove the starter commutator end frame cover.

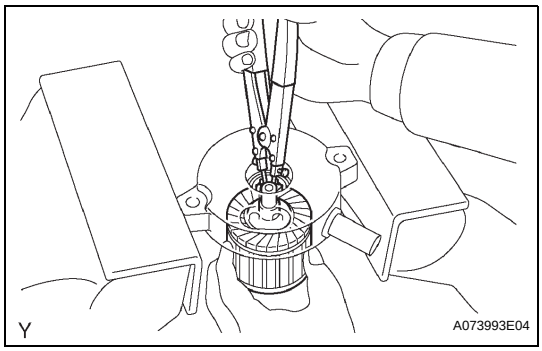

4. REMOVE STARTER ARMATURE ASSEMBLY

(a) Using snap ring pliers, remove the snap ring and the plate washer.

(b) Remove the starter armature assembly from the commutator end frame assembly.

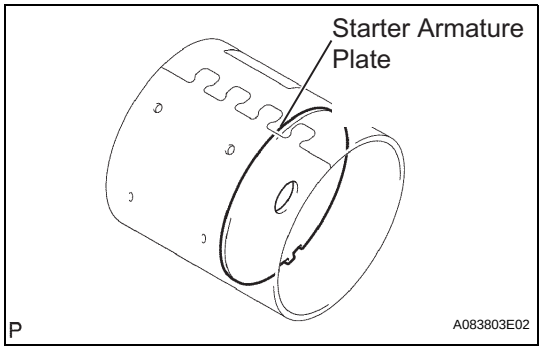

5. REMOVE STARTER ARMATURE PLATE

(a) Remove the starter armature plate from the starter yoke assembly.

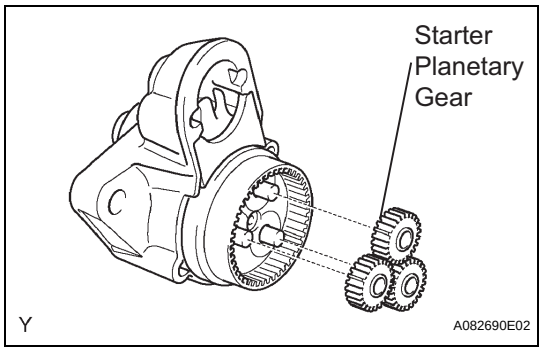

6. REMOVE STARTER PLANETARY GEAR

(a) Remove the 3 planetary gears.

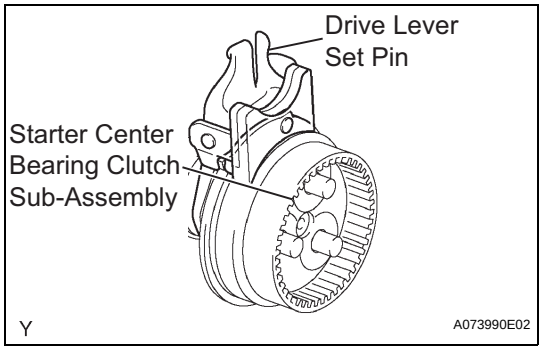

7. REMOVE STARTER CENTER BEARING CLUTCH SUB-ASSEMBLY

(a) Remove the starter center bearing clutch sub-assembly with drive lever set pin from the starter drive housing assembly.

(b) Remove the drive lever set pin from the starter center bearing clutch sub-assembly.

INSPECTION

1. INSPECT STARTER ASSEMBLY
CAUTION:
Perform each of the following tests within 3 to 5 seconds to prevent the coil from burning out.

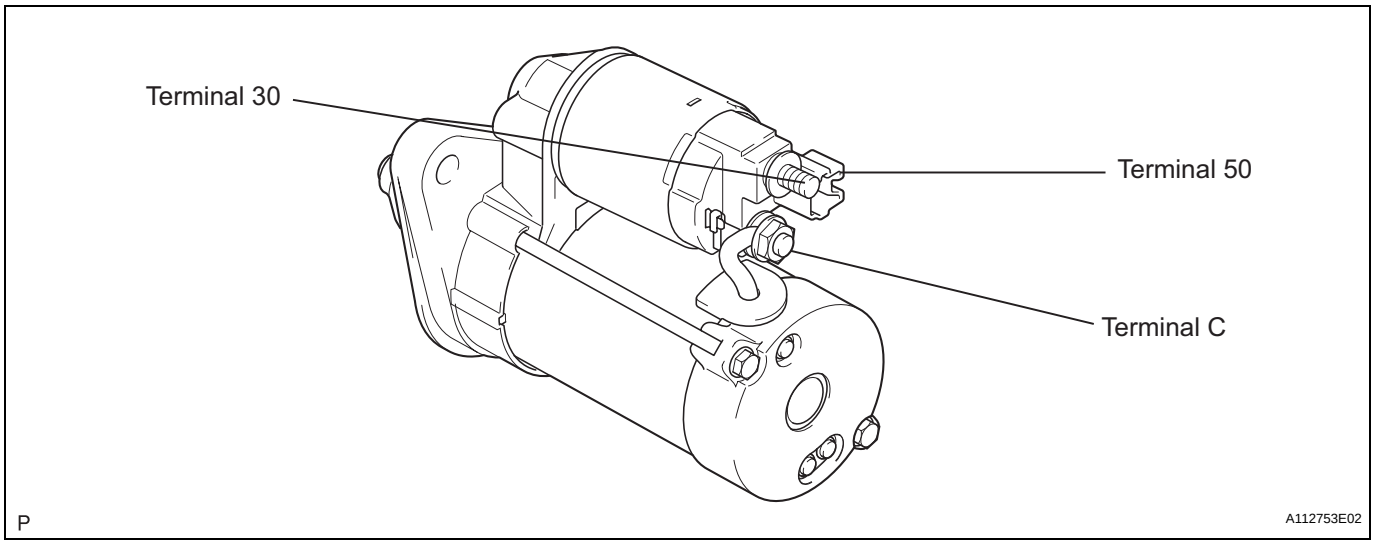

(a) Perform pull-in / holding test.

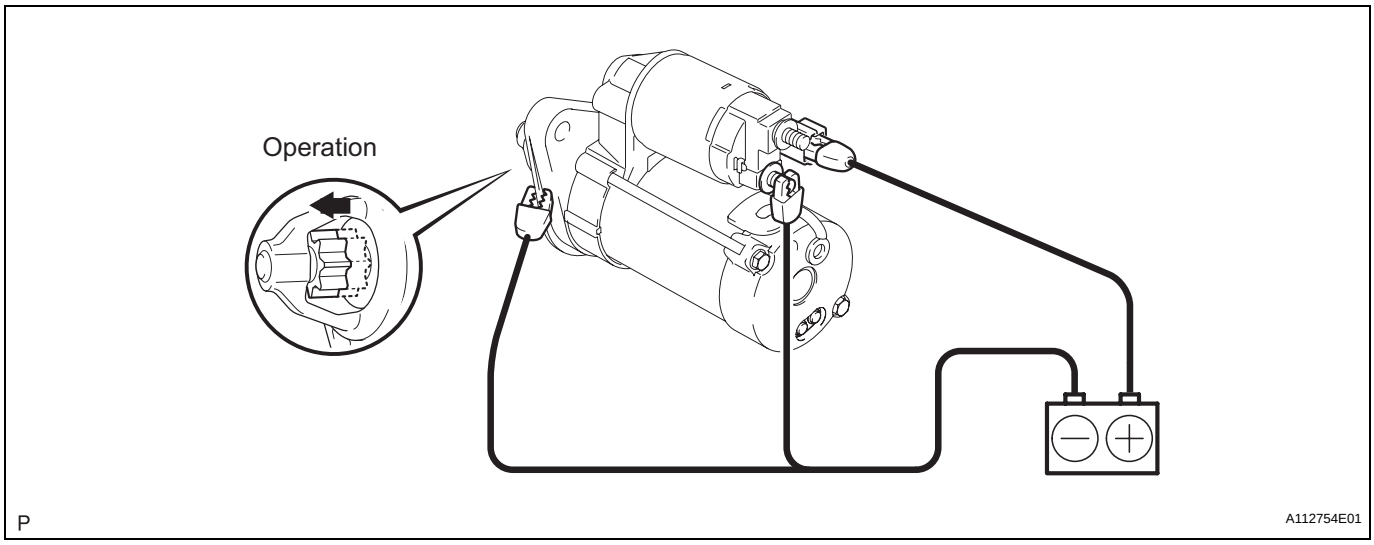

(1) Disconnect the lead wire from terminal C.
(2) Connect the battery to the magnet switch body as shown in the illustration. Then check that the clutch pinion gear moves outward.
If the result is not as specified, replace the magnet switch body.
(3) Disconnect the negative (-) lead from terminal C. Check that the pinion gear remains extended.
If the result is not as specified, replace the magnet switch body.

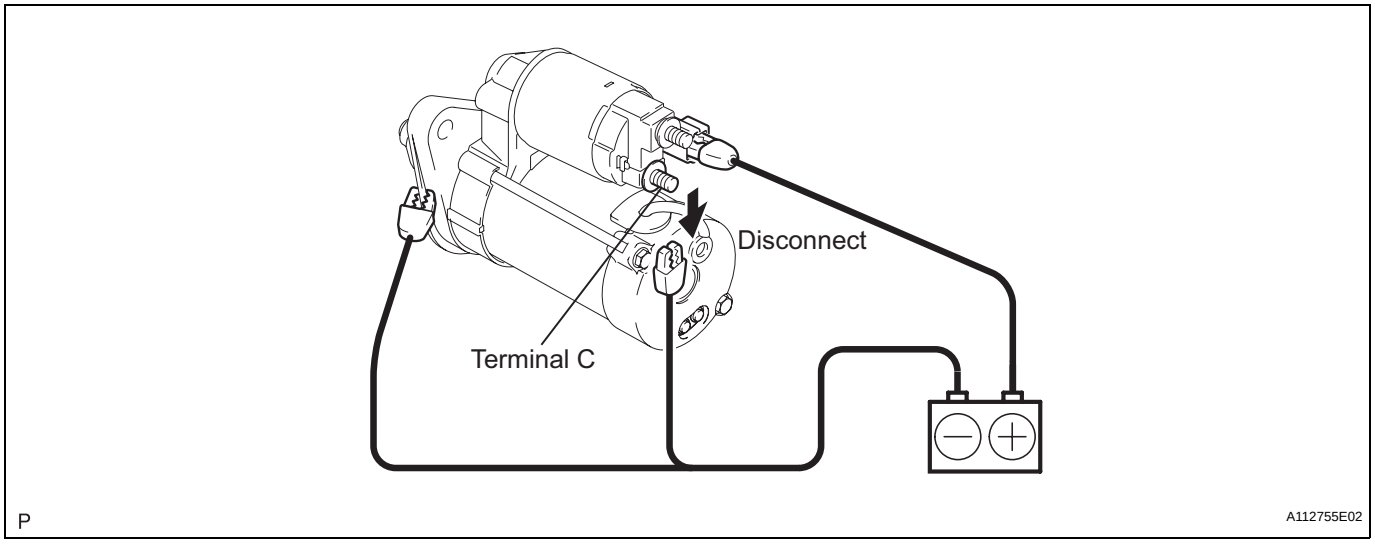

(4) Disconnect the negative (-) lead from the starter body. Check that the clutch pinion gear returns inward.
If the result is not as specified, replace the magnet switch body.

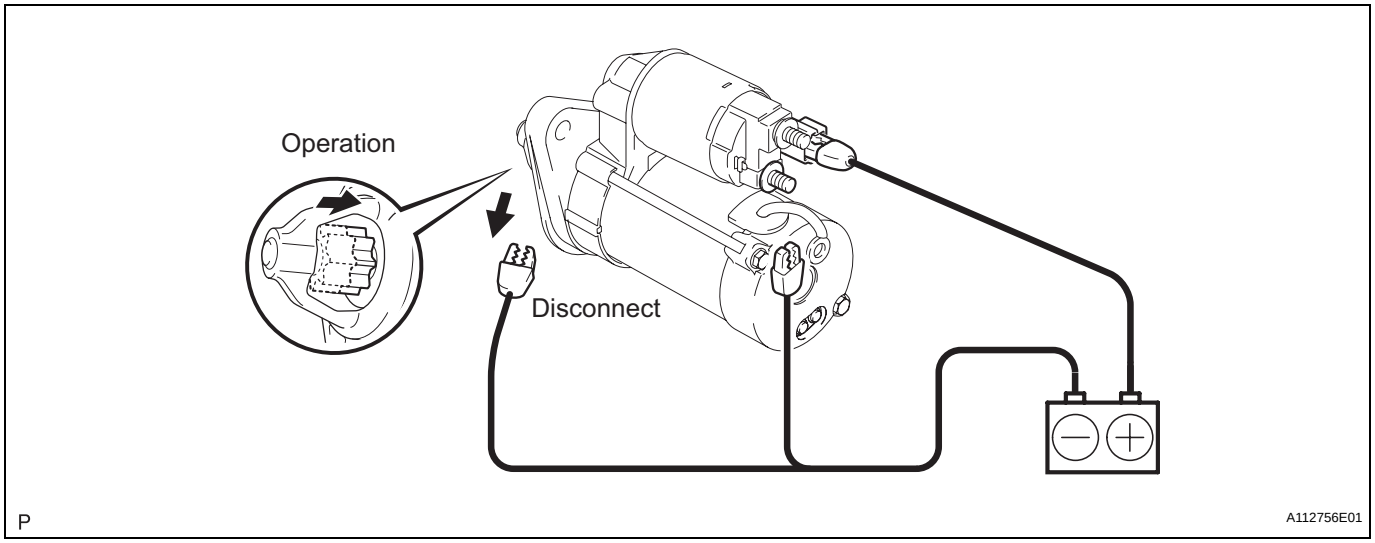

(b) Perform operation test without load.
(1) Connect the lead wire to terminal C.
Torque: 9.8 N*m (100 kgf*cm, 87 in.*lbf)
(2) Clamp the starter in a vise.
(3) Connect the battery and ammeter to the starter as shown in the illustration.
(4) Check that the starter rotates smoothly while the pinion gear is extended. Then measure the current.
Standard current:
90A or less at 11.5V
If the result is not as specified, replace the magnet switch body.

ST

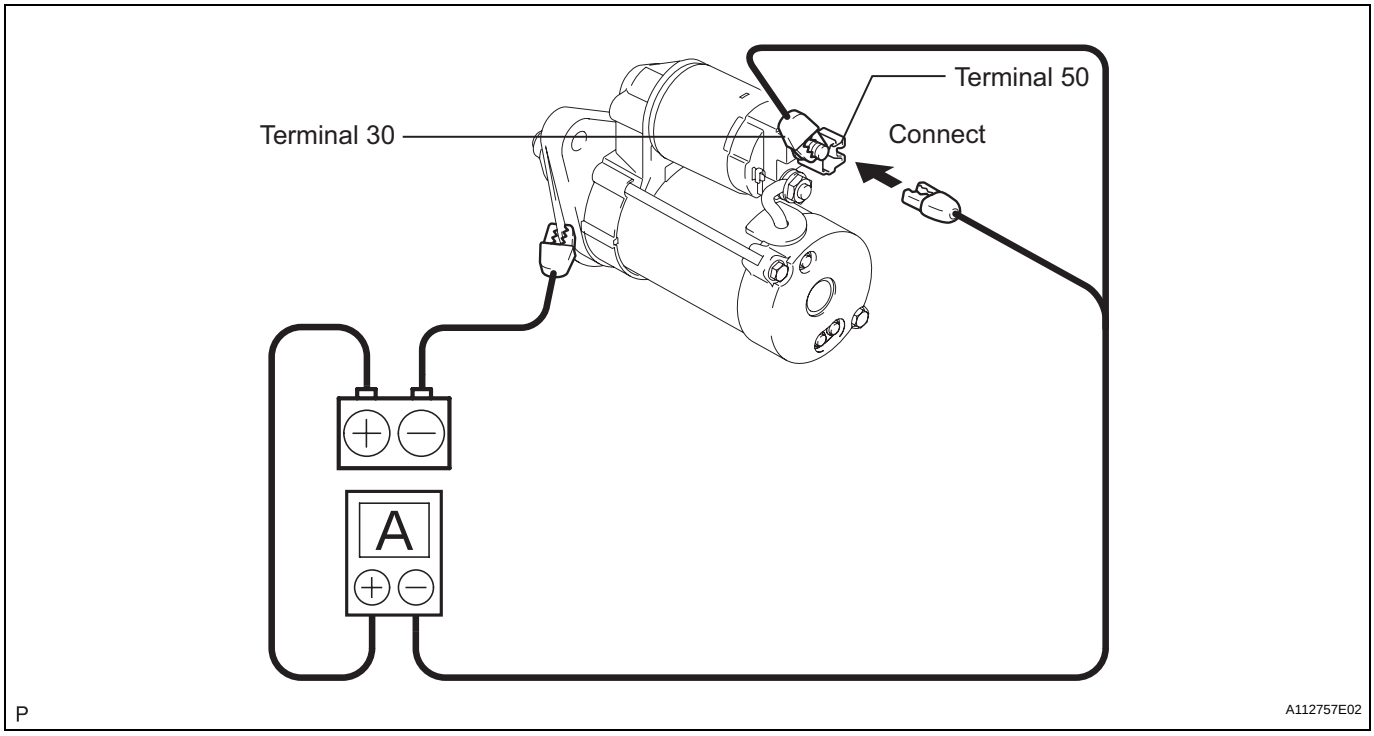

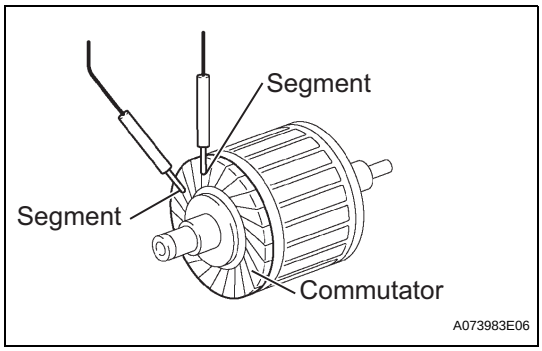

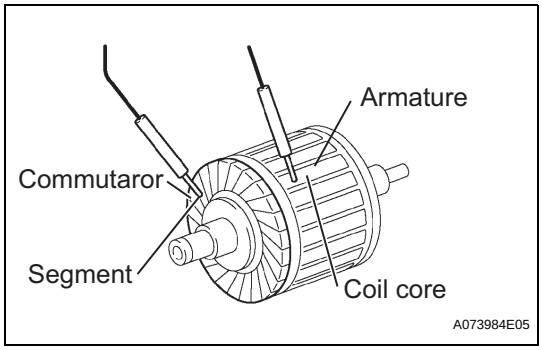

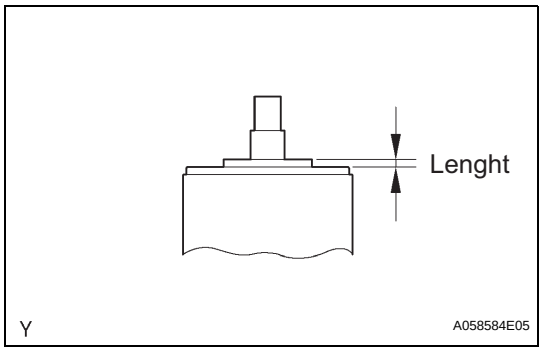

2. INSPECT STARTER ARMATURE ASSEMBLY

(a) Inspect the commutator for open circuits.

(1) Using an ohmmeter, check the resistance between the segments of the commutator.

Standard resistance:
1Ω or lower

If the result is not as specified, replace the starter armature assembly.

(b) Inspect the commutator for ground.

(1) Using an ohmmeter, check the resistance between the commutator and armature coil core.

Standard resistance:
10 kΩ or higher

If the result is not as specified, replace the starter armature assembly.

(c) Inspect the commutator surface for dirt and burns.
If the surface is dirty or burnt, restore it with 400-grit sandpaper.

(d) Using vernier calipers, measure the commutator length.

Standard length:
3.1 mm (0.122 in.)
Maximum length:
3.8 mm (0.150 in.)

If the length is greater than the maximum, replace the armature assembly.

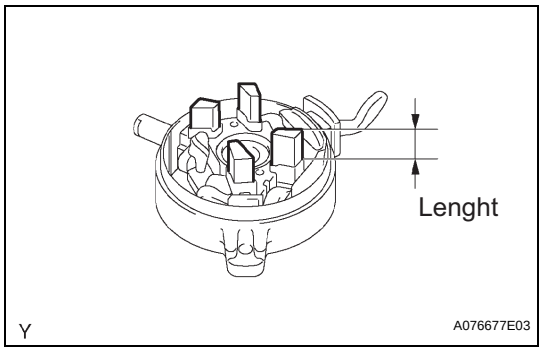

3. INSPECT STARTER COMMUTATOR END FRAME ASSEMBLY

(a) Using vernier calipers, measure the brush length.
Standard length:
9.0 mm (0.354 in.)
Minimum length:
4.0 mm (0.158 in.)
If the length is less than the minimum, replace the starter commutator end frame assembly.

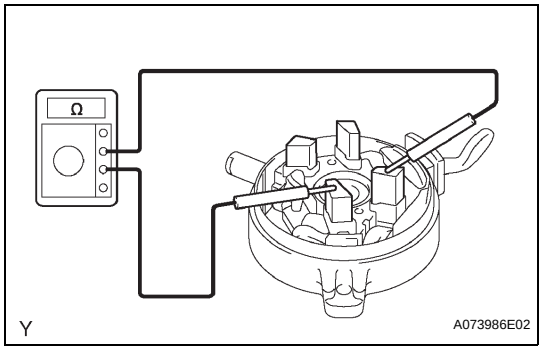

(b) Inspect the brush holder.
(1) Using an ohmmeter, check the resistance between the positive (+) and negative (-) brushes.
Standard resistance:
10 kΩ or higher
If the result is not as specified, replace the starter commutator end frame assembly.

4. INSPECT STARTER CENTER BEARING CLUTCH SUB-ASSEMBLY

(a) Inspect the gear teeth on the planetary gear, internal gear and starter clutch for wear and damage.
If damaged, replace the starter planetary gear or starter center bearing clutch sub-assembly. Also check the starter planetary gear for wear or damage.

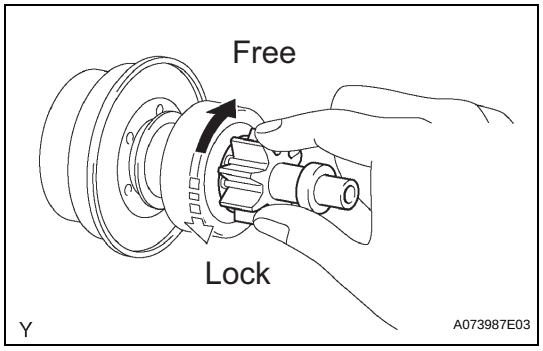

(b) Inspect the starter clutch.
(1) Rotate the clutch pinion gear clockwise and check that it turns freely. Try to rotate the clutch pinion gear counterclockwise and check that it locks.
If necessary, replace the starter center bearing clutch sub-assembly.

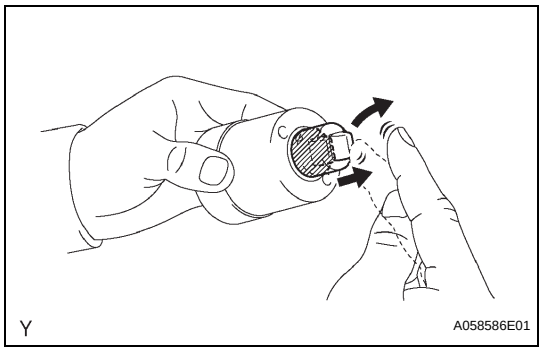

5. INSPECT MAGNET SWITCH BODY

(a) Inspect the plunger.
(1) Push in the plunger and check that it returns quickly to its original position.
If necessary, replace the magnet switch body.

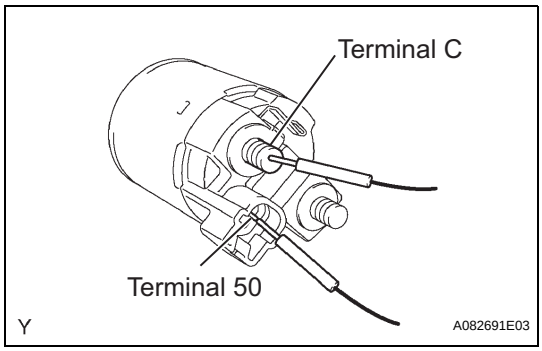

(b) Inspect the pull-in coil for open circuits.
  (1) Using an ohmmeter, check the resistance between terminals 50 and C.
  Standard resistance:
  1Ω or lower
  If the result is not as specified, replace the magnet switch body.

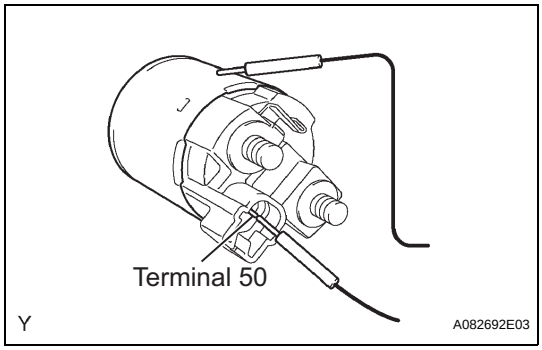

(c) Check whether the holding coil has an open circuit.
  (1) Using an ohmmeter, check the resistance between terminal 50 and the magnet switch body.
  Standard resistance:
  2Ω or lower
  If the result is not as specified, replace the magnet switch body.

REASSEMBLY

1. INSTALL STARTER CENTER BEARING CLUTCH SUB-ASSEMBLY

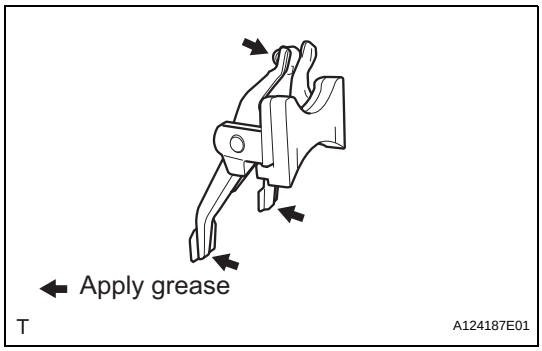

(a) Apply grease to the drive lever set pin which is in contact with the starter pivot part of the drive lever set pin.

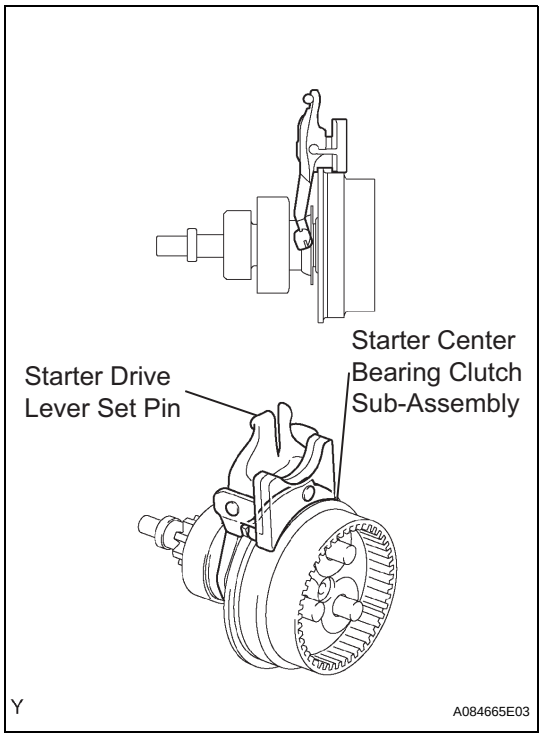

(b) Install the drive lever set pin into the starter center bearing clutch sub-assembly.

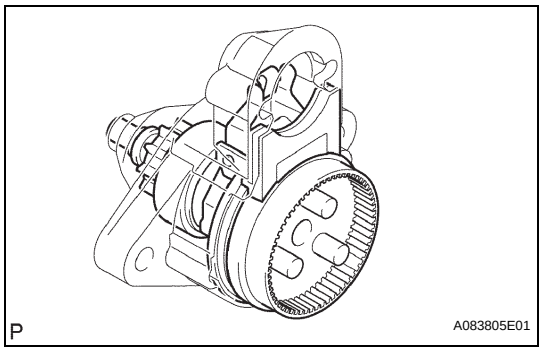

(c) Install the starter center bearing clutch sub-assembly together with the starter drive lever set pin into the starter drive housing assembly.

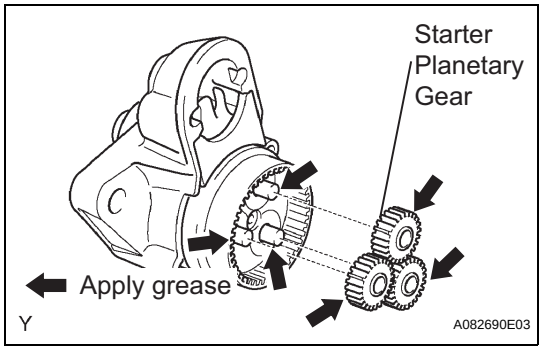

2. INSTALL STARTER PLANETARY GEAR

(a) Apply grease to the planetary gears and pin parts of the planetary shaft.

(b) Install the 3 planetary gears.

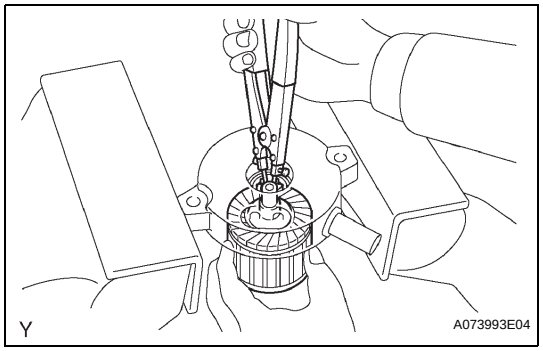

3. INSTALL STARTER ARMATURE ASSEMBLY

(a) Apply grease to the washer plate and the armature shaft.

(b) Install the armature shaft onto the starter commutator end frame assembly.

(c) Using snap ring pliers, install the plate washer and a new snap ring.

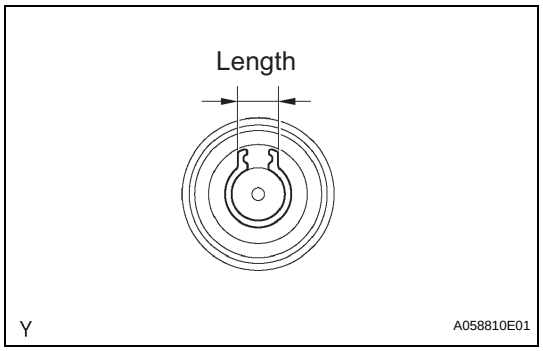

(d) Using vernier calipers, measure the snap ring.
Maximum length:
5.0 mm (0.197 in.)
If the length is greater than the maximum, replace the snap ring.

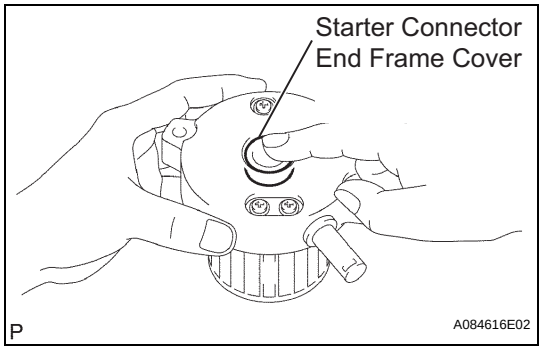

4. INSTALL STARTER COMMUTATOR END FRAME COVER

(a) Install the starter commutator end frame cover onto the starter commutator end frame assembly.

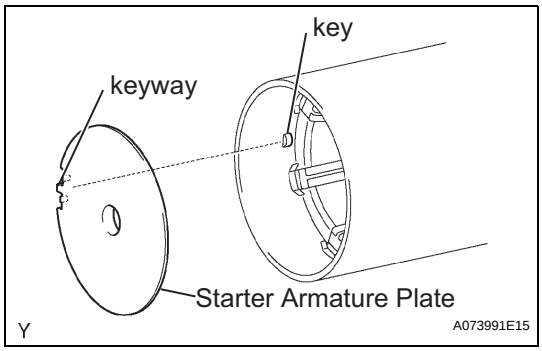

5. INSTALL STARTER ARMATURE PLATE

(a) Insert the starter armature plate into the starter yoke assembly.

(b) Align the cutout of the plate with the inside protrusion of the starter yoke assembly, and install the plate.

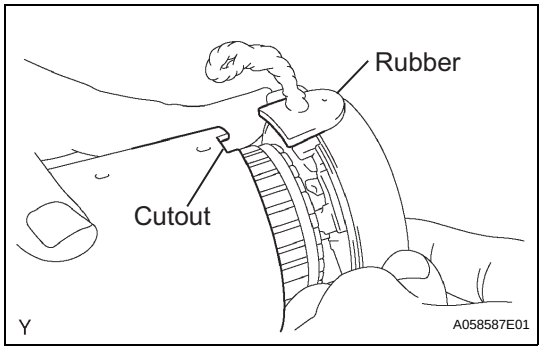

6. INSTALL STARTER COMMUTATOR END FRAME ASSEMBLY

(a) Align the starter commutator rubber end frame with the cutout of the starter yoke assembly.

(b) Install the starter yoke assembly onto the starter commutator end frame assembly.

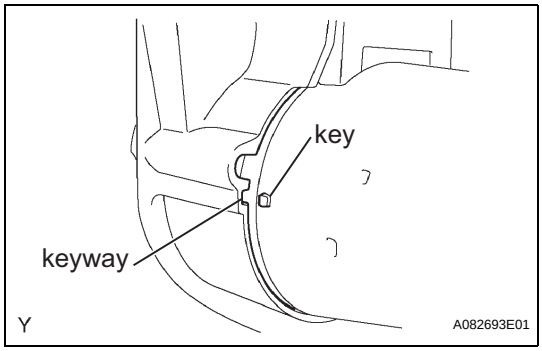

7. INSTALL STARTER YOKE ASSEMBLY

(a) Align the key located on the starter yoke assembly with the keyway of the starter drive housing assembly.

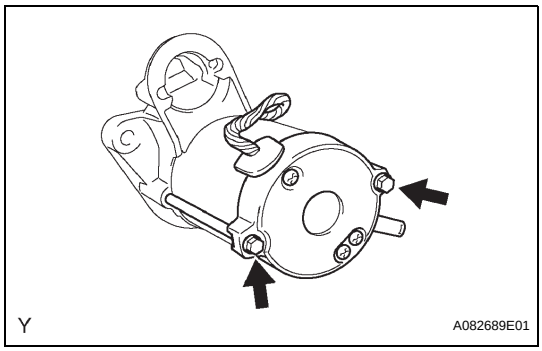

(b) Install the starter yoke assembly with the 2 through bolts.
Torque: 6.0 N*m (61 kgf*cm, 53 in.*lbf)

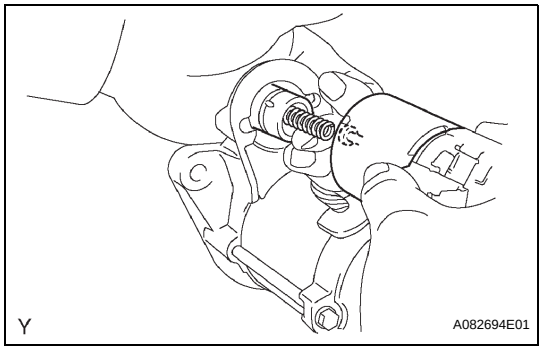

8. INSTALL MAGNET SWITCH BODY

(a) Apply grease to the plunger and the hook.

(b) Put the plunger hook of the magnet switch body on the starter drive lever set pin.

(c) Install the plunger and the return spring as shown in the illustration.

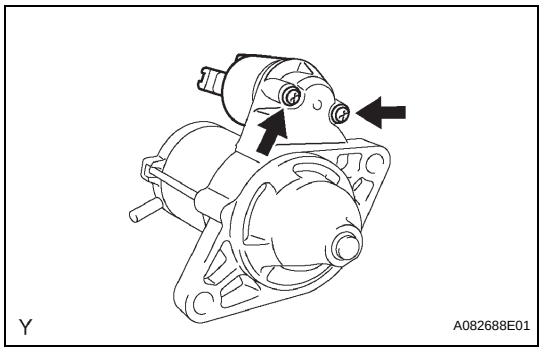

(d) Install the magnet switch body with the 2 screws.
Torque: 7.5 N*m (76 kgf*cm, 66 in.*lbf)

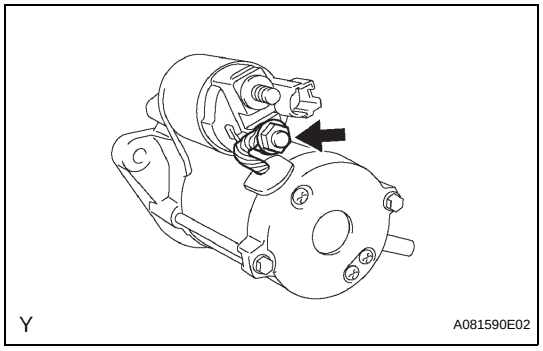

(e) Connect the lead wire to the terminal C with the nut.
Torque: 10 N*m (102 kgf*cm, 7.4 ft.*lbf)

INSTALLATION

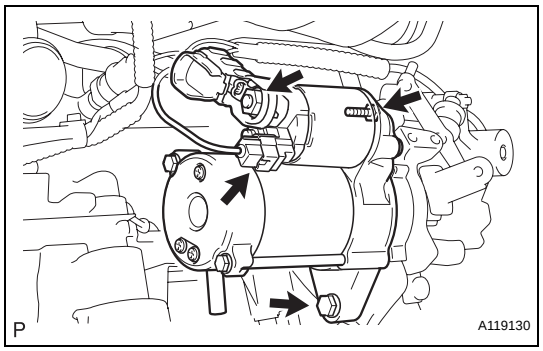

1. INSTALL STARTER ASSEMBLY

(a) Install the starter assembly with the 2 bolts.
Torque: 37 N*m (377 kgf*cm, 27 ft.*lbf)

(b) Connect the connector.

(c) Connect terminal 30 with the nut.
Torque: 9.8 N*m (100 kgf*cm, 87 in.*lbf)

(d) Close the terminal cap.

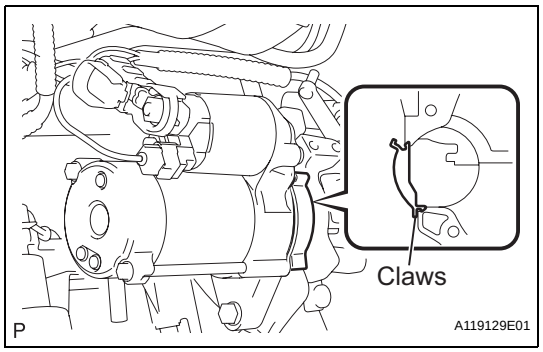

2. INSTALL FLYWHEEL HOUSING SIDE COVER

(a) Insert the protruding portion into the end of the cylinder block and while pushing it along the cylinder block, fit the 2 claws into the cylinder block.
NOTICE:
- **Make sure that the claw makes a click sound, indicating that it fits tightly.**
- **Replace the claw with a new one if it does not fit tightly or is deformed.**

3. CONNECT CABLE TO NEGATIVE BATTERY TERMINAL
Torque: 5.4 N*m (55 kgf*cm, 48 in.*lbf)

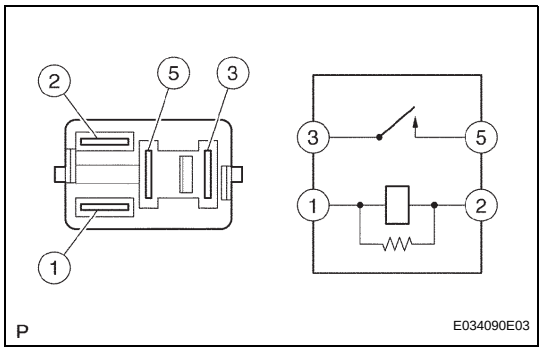

STARTER RELAY

ON-VEHICLE INSPECTION

1. INSPECT STARTER RELAY ASSEMBLY

(a) Check the resistance.

(1) Using an ohmmeter, measure the resistance between the terminals.

Standard resistance

Tester Connection	Specified Condition
3 - 5	Below 1 Ω (when battery voltage applied to terminals 1 and 2)
	10 kΩ or higher

If the result is not as specified, replace the relay.

ACC CUT RELAY

COMPONENTS

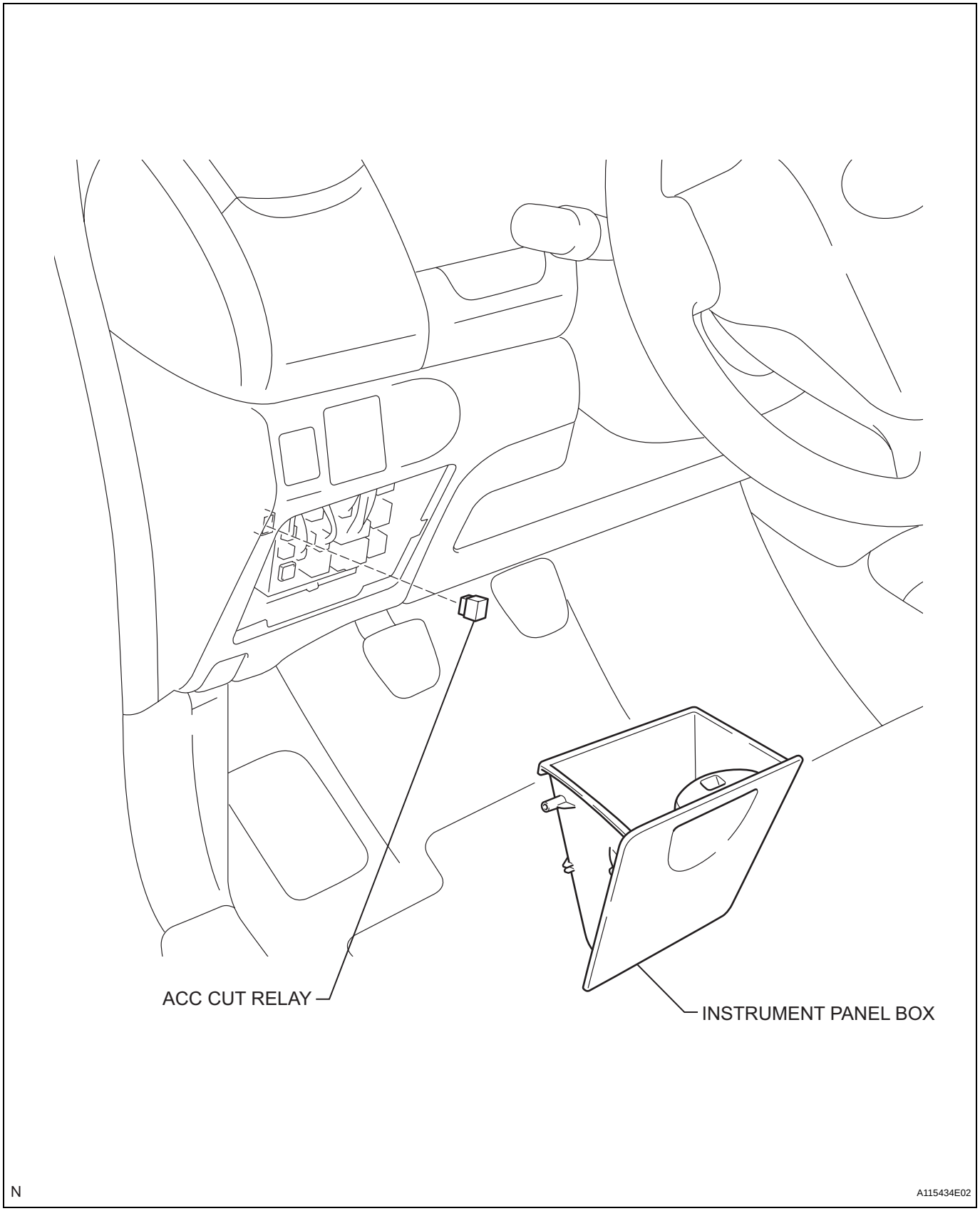

REMOVAL

1. **DISCONNECT CABLE FROM NEGATIVE BATTERY TERMINAL**
2. **REMOVE INSTRUMENT PANEL BOX (See page IP-70)**
3. **REMOVE ACC CUT RELAY**
   (a) Remove the ACC cut relay.

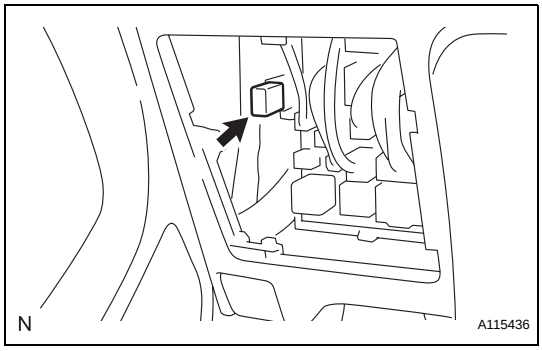

INSPECTION

1. **INSPECT ACC CUT RELAY**
   (a) Check the resistance.
      (1) Using an ohmmeter, measure the resistance between the terminals.
      Standard resistence

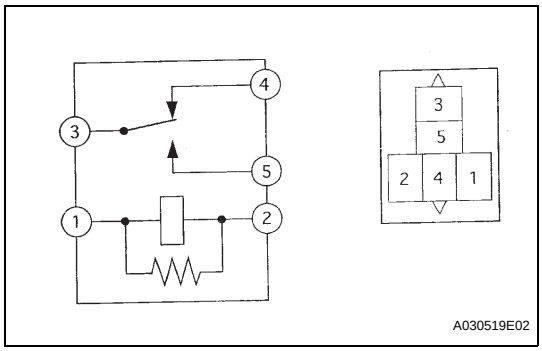

Tester Connection	Specified Condition
3 - 4	Below 1 Ω
	10 kΩ or higher (when battery voltage applied to terminals 1 and 2)
3 - 5	Below 1 Ω (when battery voltage applied to terminals 1 and 2)
	10 kΩ or higher

If the result is not as specified, replace the relay.

INSTALLATION

1. **INSTALL ACC CUT RELAY**
   (a) Install the ACC cut relay.
2. **INSTALL INSTRUMENT PANEL BOX (See page IP-78)**
3. **CONNECT CABLE TO NEGATIVE BATTERY TERMINAL**
   Torque: 5.4 N*m (55 kgf*cm, 48 in.*lbf)

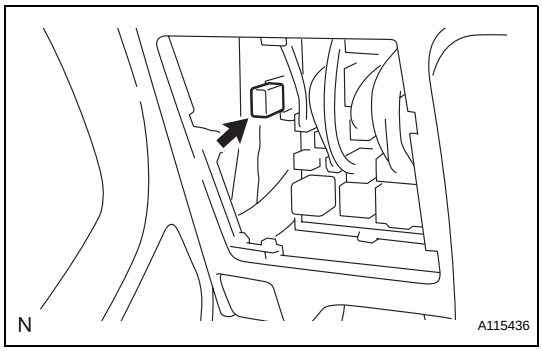

ST

INTEGRATION RELAY

COMPONENTS

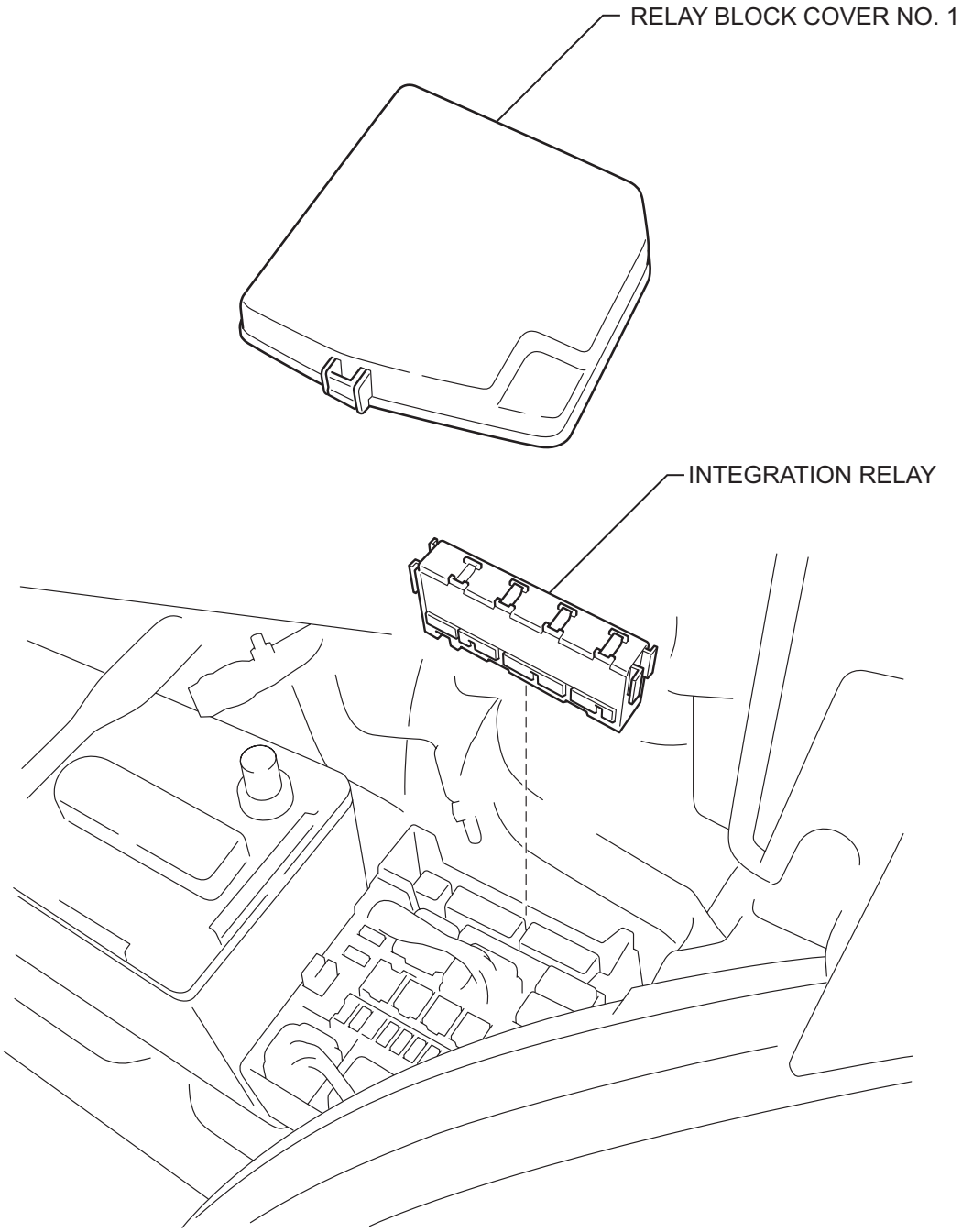

N

A115401E01

REMOVAL

1. **DISCONNECT CABLE FROM NEGATIVE BATTERY TERMINAL**
2. **REMOVE RELAY BLOCK COVER NO. 1**
3. **REMOVE INTEGRATION RELAY**
   (a) Using a screwdriver with its tip wrapped in protective tape, disengage the 2 claws and disconnect the integration relay.
   (b) Disconnect the 3 connectors.

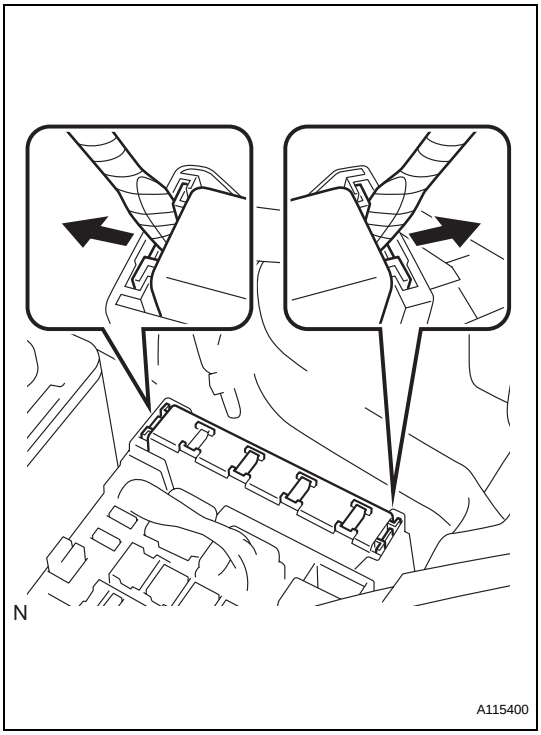

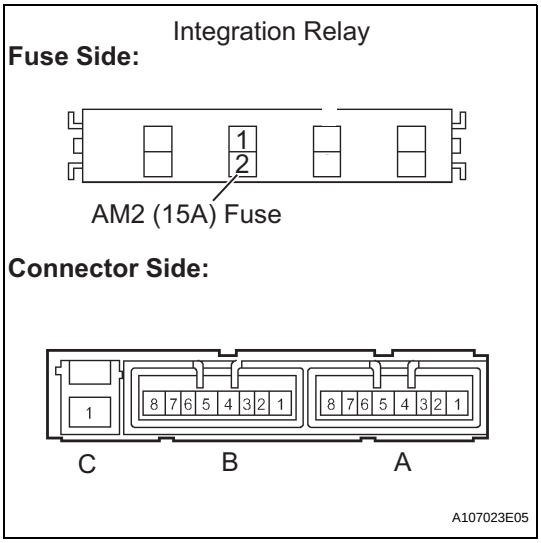

INSPECTION

1. **INSPECT INTEGRATION RELAY**
   (a) Inspect the AM2 (15A) fuse.
      (1) Disconnect the fuse. Using an ohmmeter, measure the resistance of the fuse.
      Standard resistance

Tester Connection	Specified condition
1 - 2	Below 1 Ω

   (b) Inspect the IG2 relay.
      (1) Using an ohmmeter, measure the resistance between the terminals.
      Standard resistance

Tester Connection	Specified condition
B1 - C1	Below 1 Ω
B4 - C1	Below 1 Ω (when battery voltage applied to terminals 1 and 2)
	10 kΩ or higher

NOTICE:
While using the battery for the inspection, do not bring the positive and negative tester probes too close to each other as a short circuit may occur.

INSTALLATION

1. INSTALL INTEGRATION RELAY

(a) Connect the 3 connectors.

(b) Attach the integration relay to the engine room relay block.

2. INSTALL RELAY BLOCK COVER NO. 1

3. CONNECT CABLE TO NEGATIVE BATTERY TERMINAL

Torque: 5.4 N*m (55 kgf*cm, 48 in.*lbf)

IGNITION RELAY

COMPONENTS

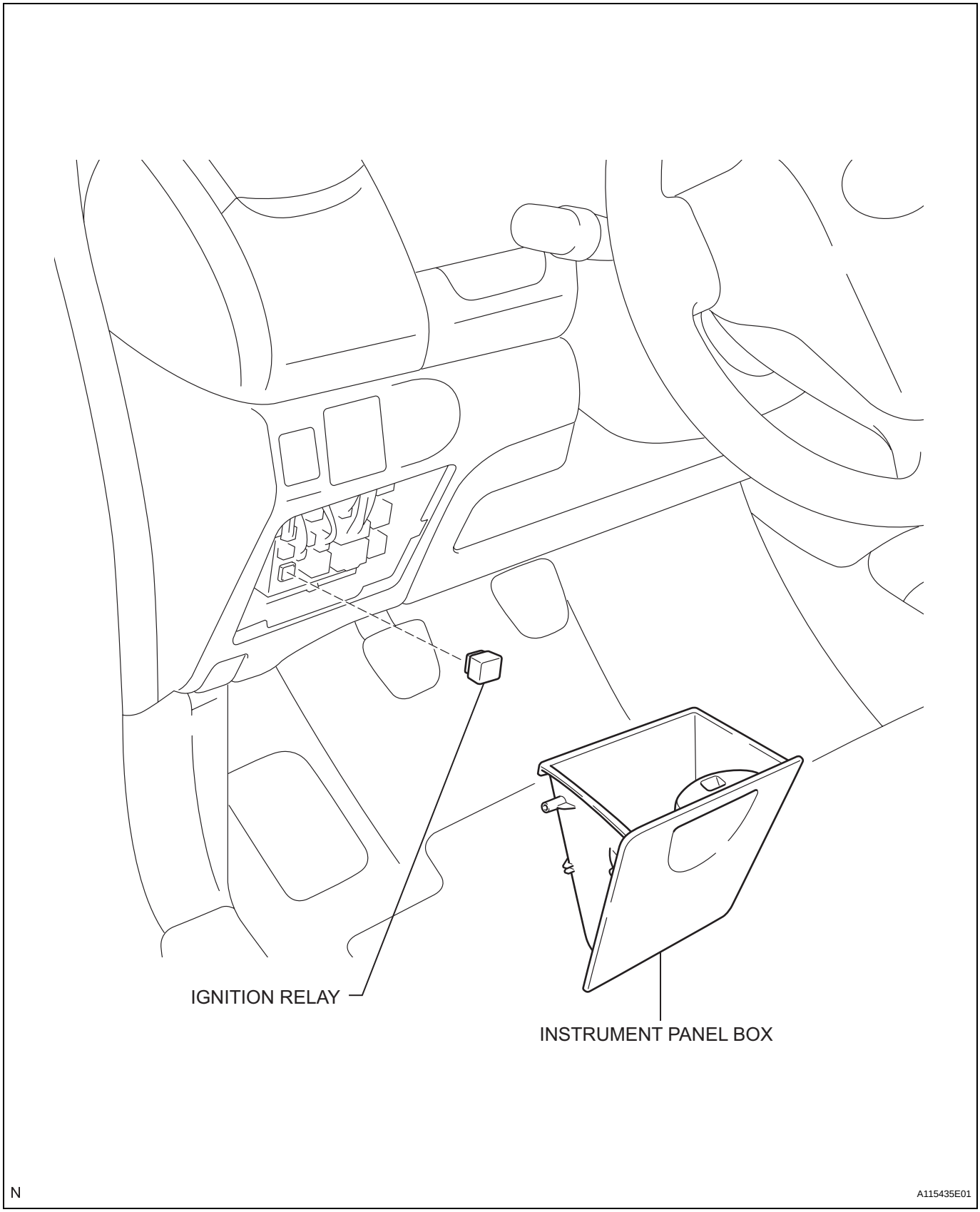

REMOVAL

1. **DISCONNECT CABLE FROM NEGATIVE BATTERY TERMINAL**
2. **REMOVE INSTRUMENT PANEL BOX (See page IP-70)**
3. **REMOVE IGNITION RELAY**
   (a) Remove the ignition relay.

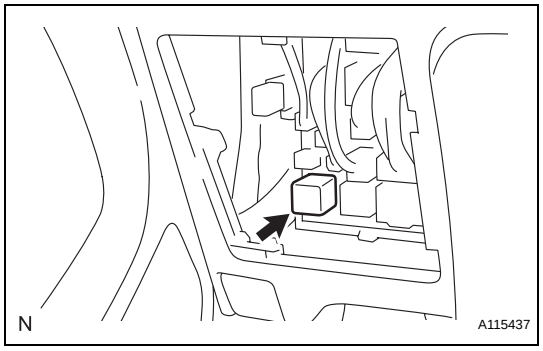

INSPECTION

1. **INSPECT IGNITION RELAY**
   (a) Check the resistance.
      (1) Using an ohmmeter, measure the resistance between the terminals.
      Standard resistance

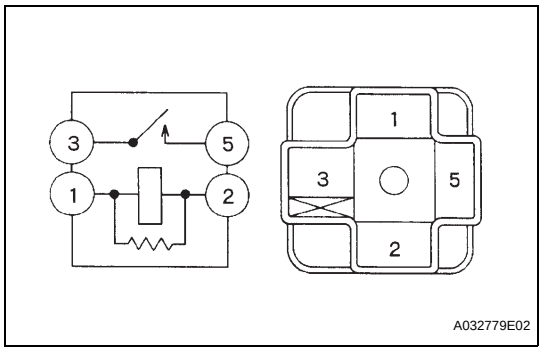

Tester Connection	Specified Condition
3 - 5	Below 1 Ω (when battery voltage applied to terminals 1 and 2)
	10 kΩ or higher

If the result is not as specified, replace the relay.

INSTALLATION

1. **INSTALL IGNITION RELAY**
   (a) Install the ignition relay.
2. **INSTALL INSTRUMENT PANEL BOX (See page IP-78)**
3. **CONNECT CABLE TO NEGATIVE BATTERY TERMINAL**
   Torque: 5.4 N*m (55 kgf*cm, 48 in.*lbf)

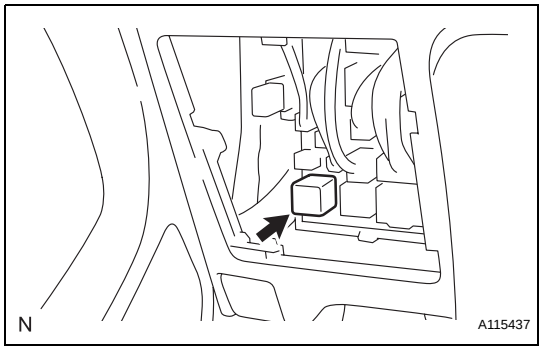

ST

IGNITION SWITCH

COMPONENTS

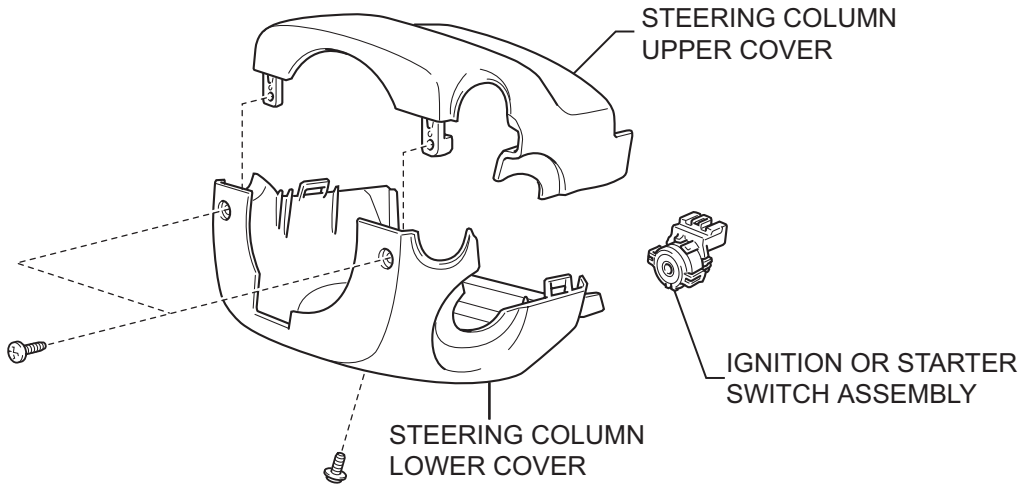

Y

E107141E01

REMOVAL

1. DISCONNECT CABLE FROM NEGATIVE BATTERY TERMINAL

2. REMOVE STEERING COLUMN COVER

(a) Turn the steering wheel to the right and remove the screw indicated in the illustration.

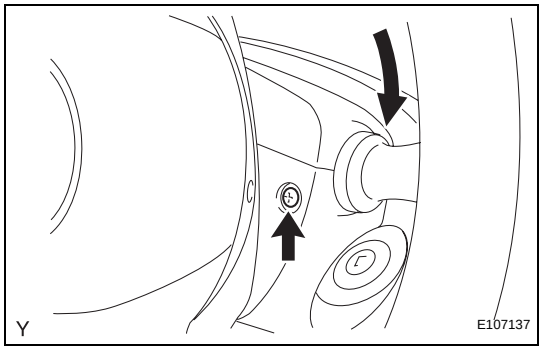

(b) Turn the steering wheel to the left and remove the screw indicated in the illustration.

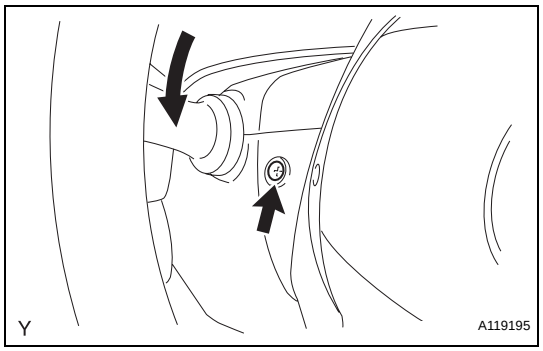

(c) Remove the screw indicated in the illustration and remove the steering column cover.

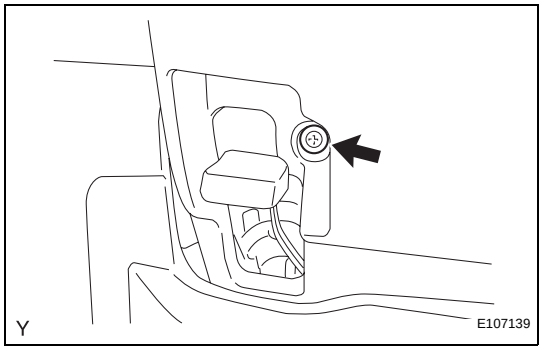

3. REMOVE IGNITION OR STARTER SWITCH ASSEMBLY

(a) Disconnect the connector.

(b) Disengage the 2 claws and remove the ignition or starter switch assembly.

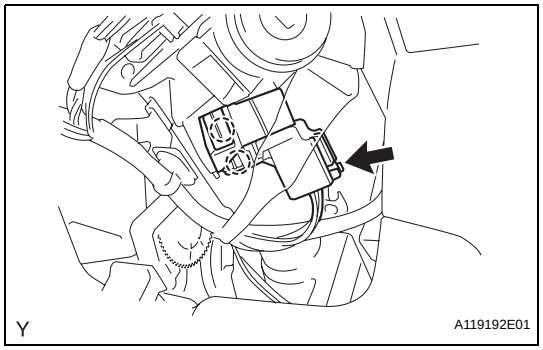

ST

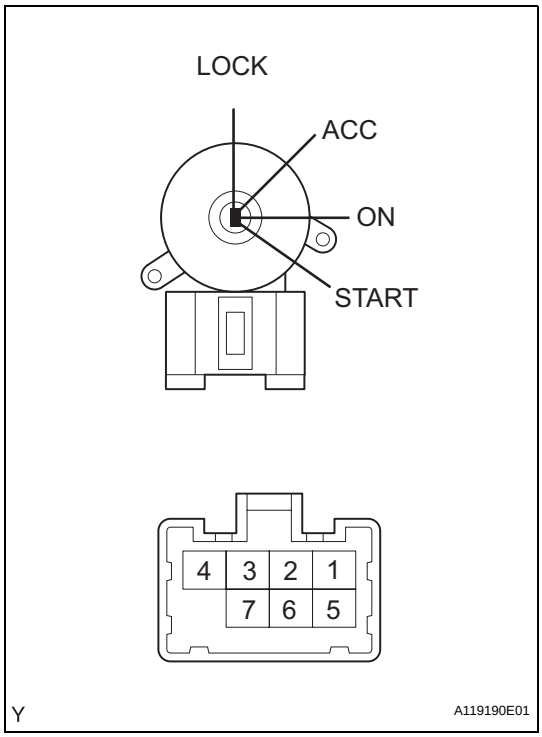

INSPECTION

1. INSPECT IGNITION OR STARTER SWITCH ASSEMBLY

(a) Check the resistance.

(1) Using an ohmmeter, measure the resistance between the terminals.

Standard resistance

Condition	Tester Connection	Standard
LOCK	Between all terminals	10 kΩ or higher
ACC	2-4	Below 1 Ω
ON	1-2-4	Below 1 Ω
	5-6	
START	1-3-4	Below 1 Ω
	5-6-7	

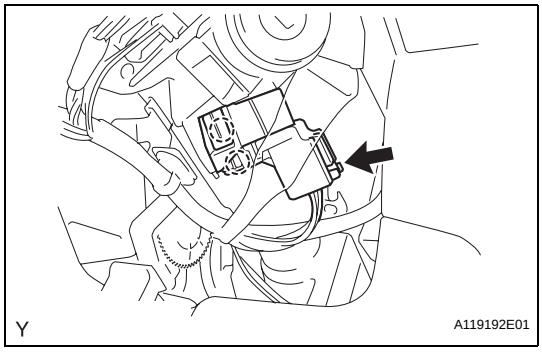

INSTALLATION

1. INSTALL IGNITION OR STARTER SWITCH ASSEMBLY

(a) Engage the 2 claws and install the ignition or starter switch assembly.

(b) Connect the connector.

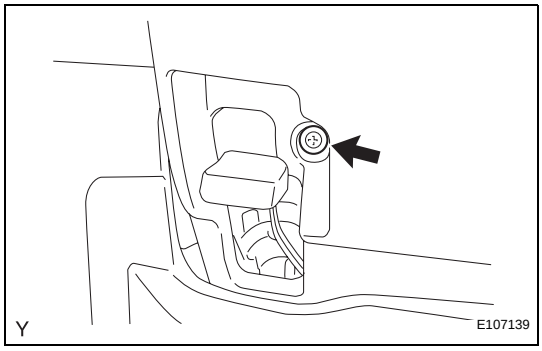

2. INSTALL STEERING COLUMN COVER

(a) Install the screw indicated in the illustration.

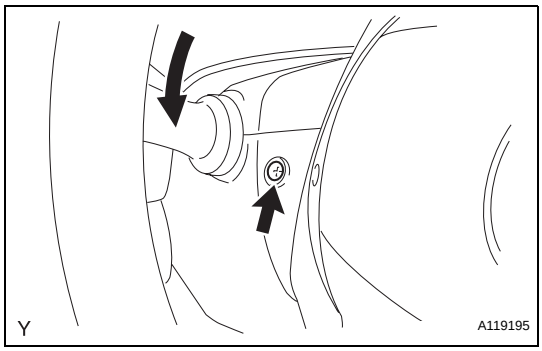

(b) Turn the steering wheel to the left and install the screw indicated in the illustration.

ST

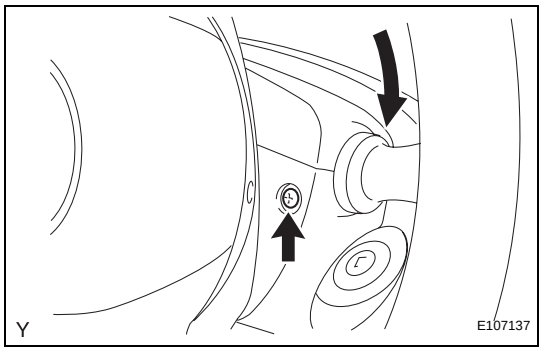

(c) Turn the steering wheel to the right, and install the screw indicated in the illustration.

3. CONNECT CABLE TO NEGATIVE BATTERY TERMINAL
Torque: 5.4 N*m (55 kgf*cm, 48 in.*lbf)