DRIVE SHAFT SYSTEM

PROBLEM SYMPTOMS TABLE

Use the table below to help find the cause of the problem. Check each part. If necessary, replace these parts.

For TMC made

Symptom	Suspected area	See page
Noise (Front drive shaft)	Inboard or outboard joint (Worn)	DS-13

For TMMK made

Symptom	Suspected area	See page
Noise (Front drive shaft)	Inboard or outboard joint (Worn)	DS-29

FRONT DRIVE SHAFT (for TMC Made)

COMPONENTS

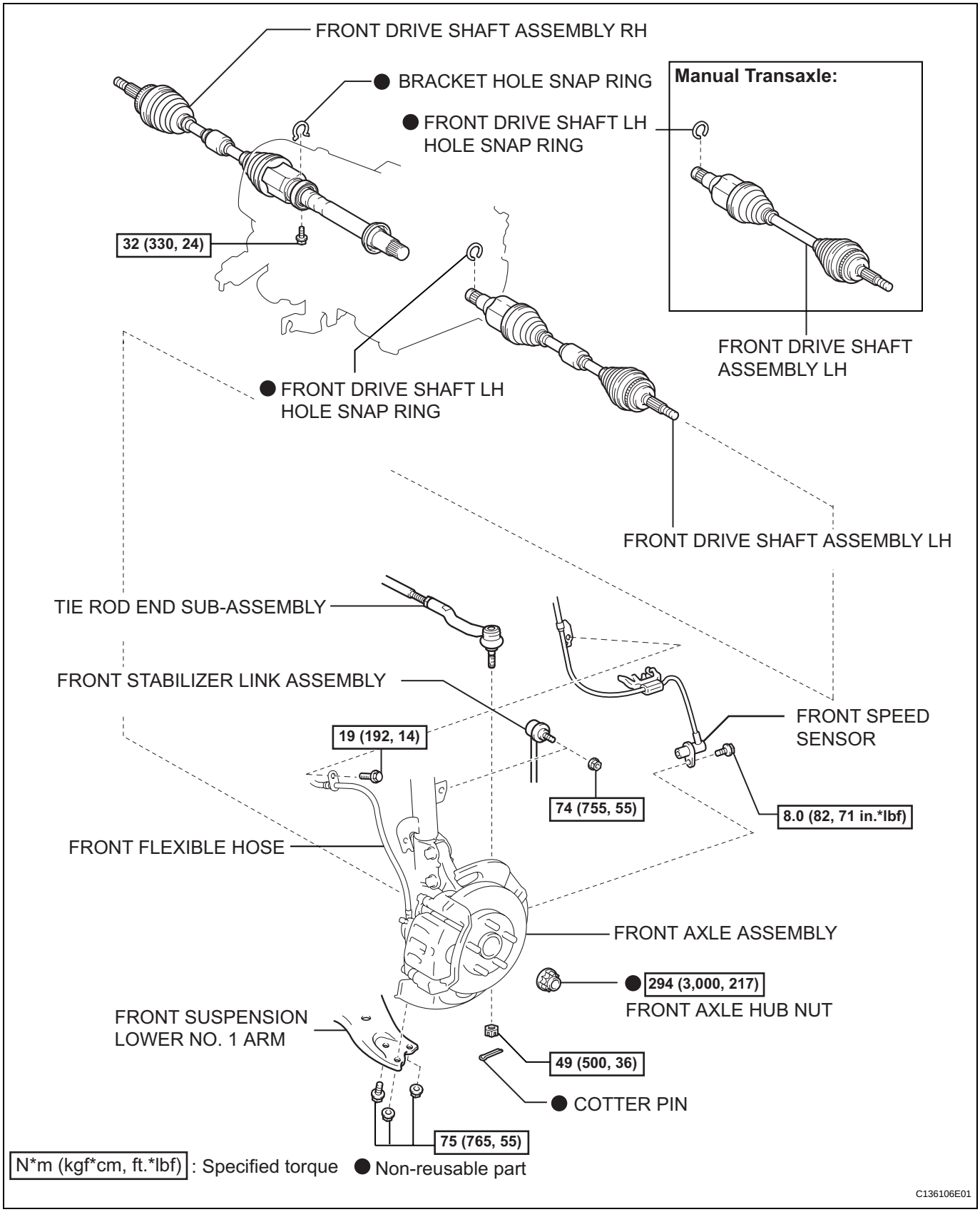

2GR-FE LH SIDE:

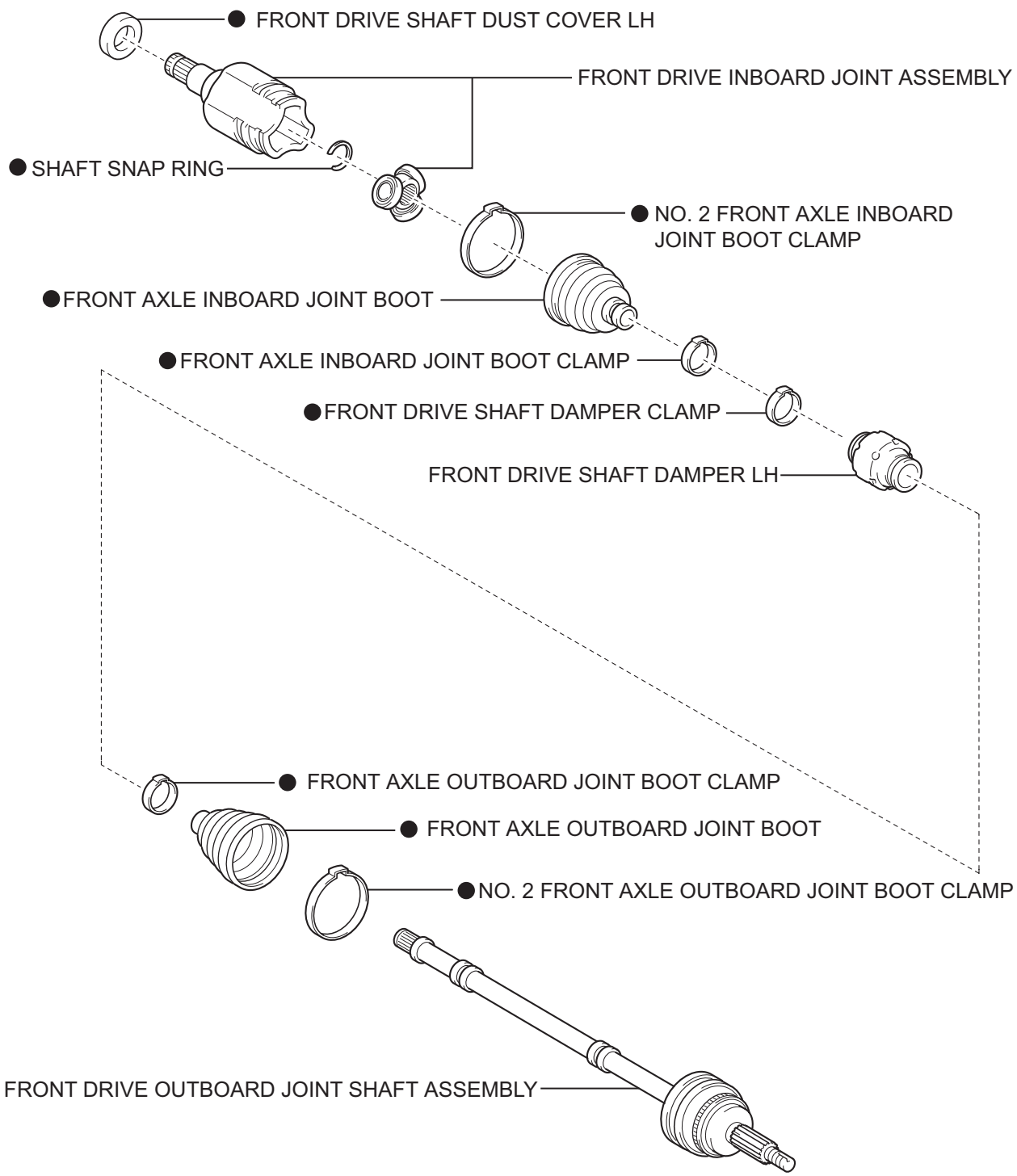

● Non-reusable part

C136538E01

DS

2AZ-FE LH SIDE:

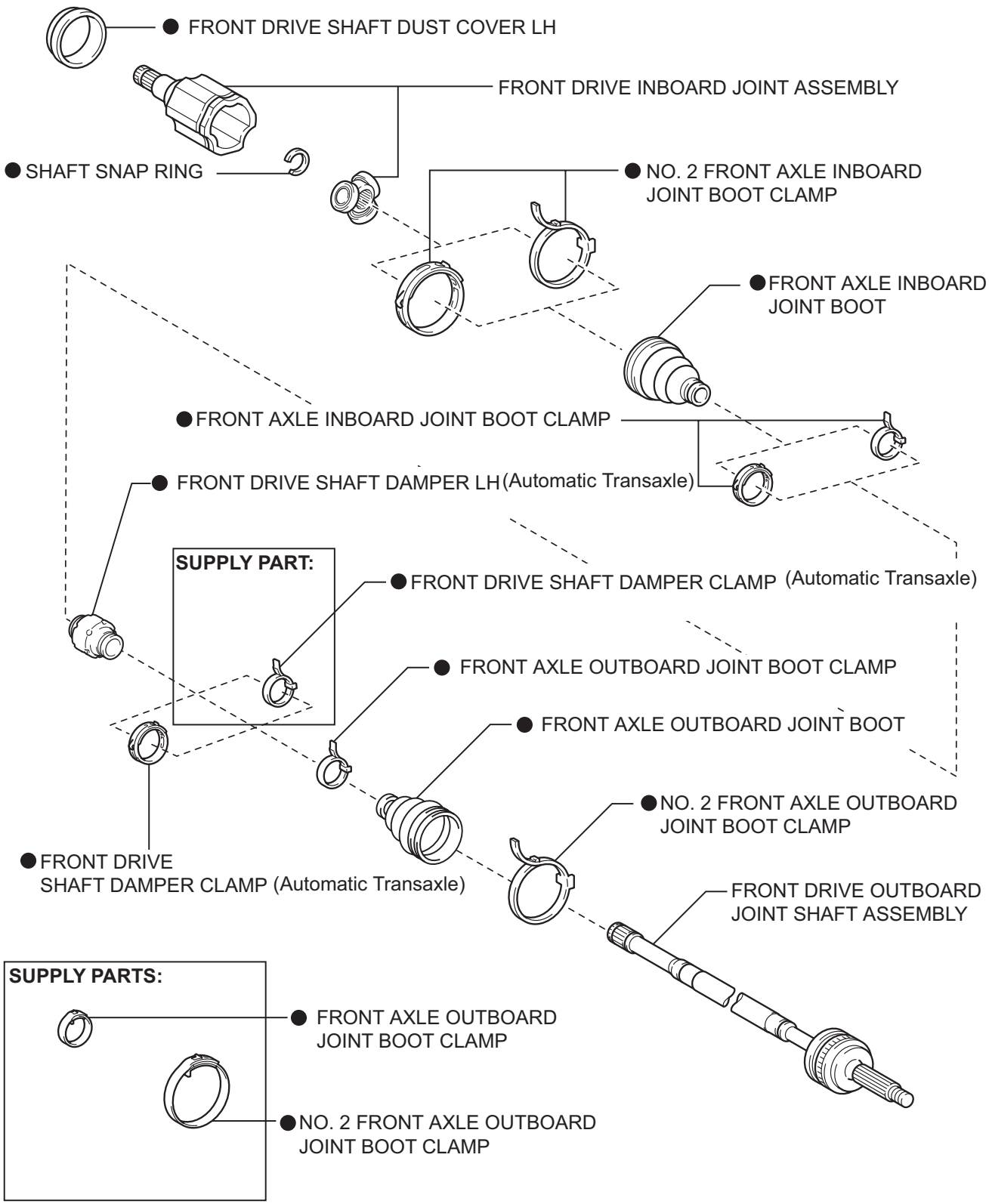

● Non-reusable part

C141176E01

2GR-FE RH SIDE:

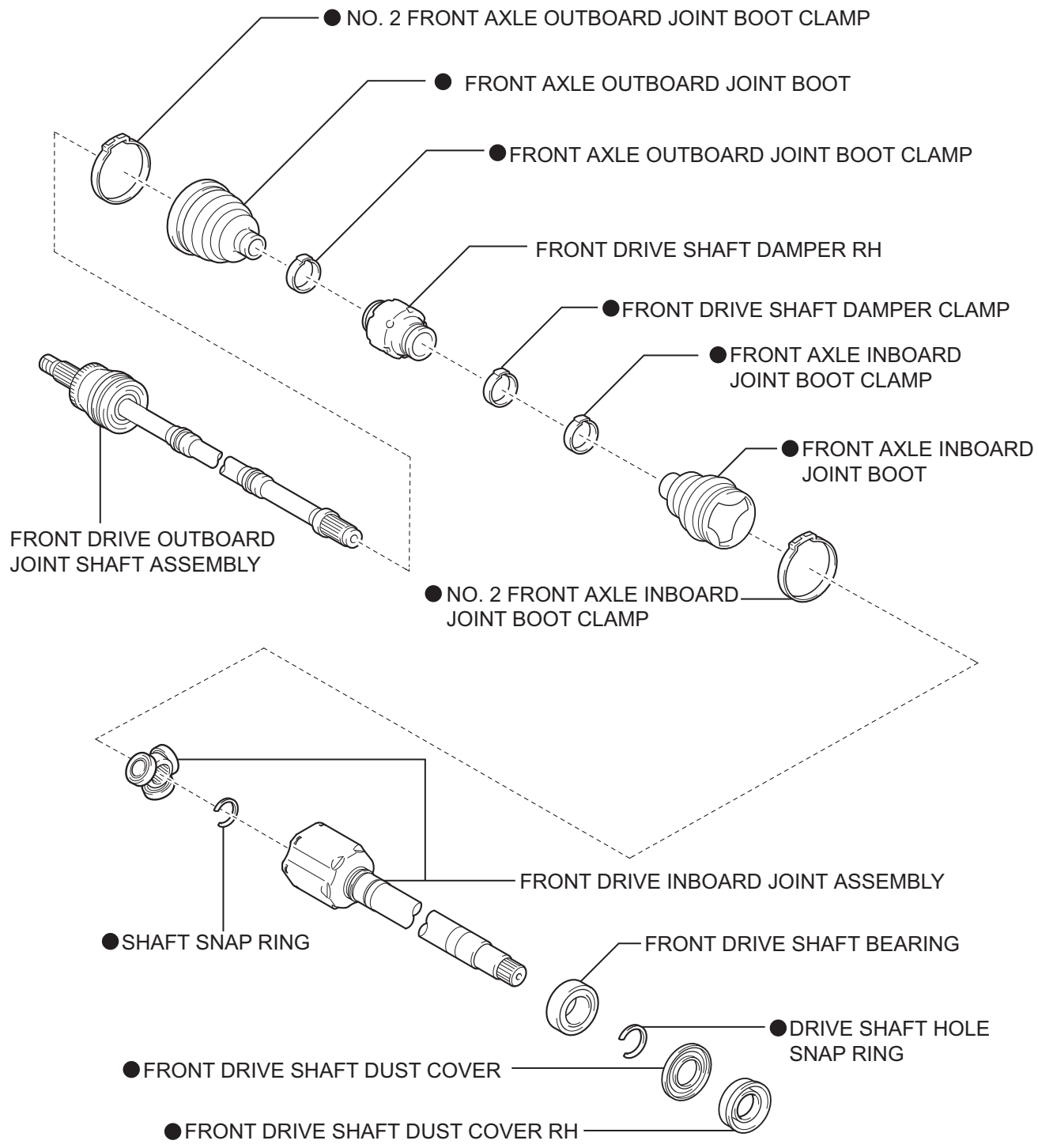

● Non-reusable part

C136540E01

DS

2AZ-FE RH SIDE:

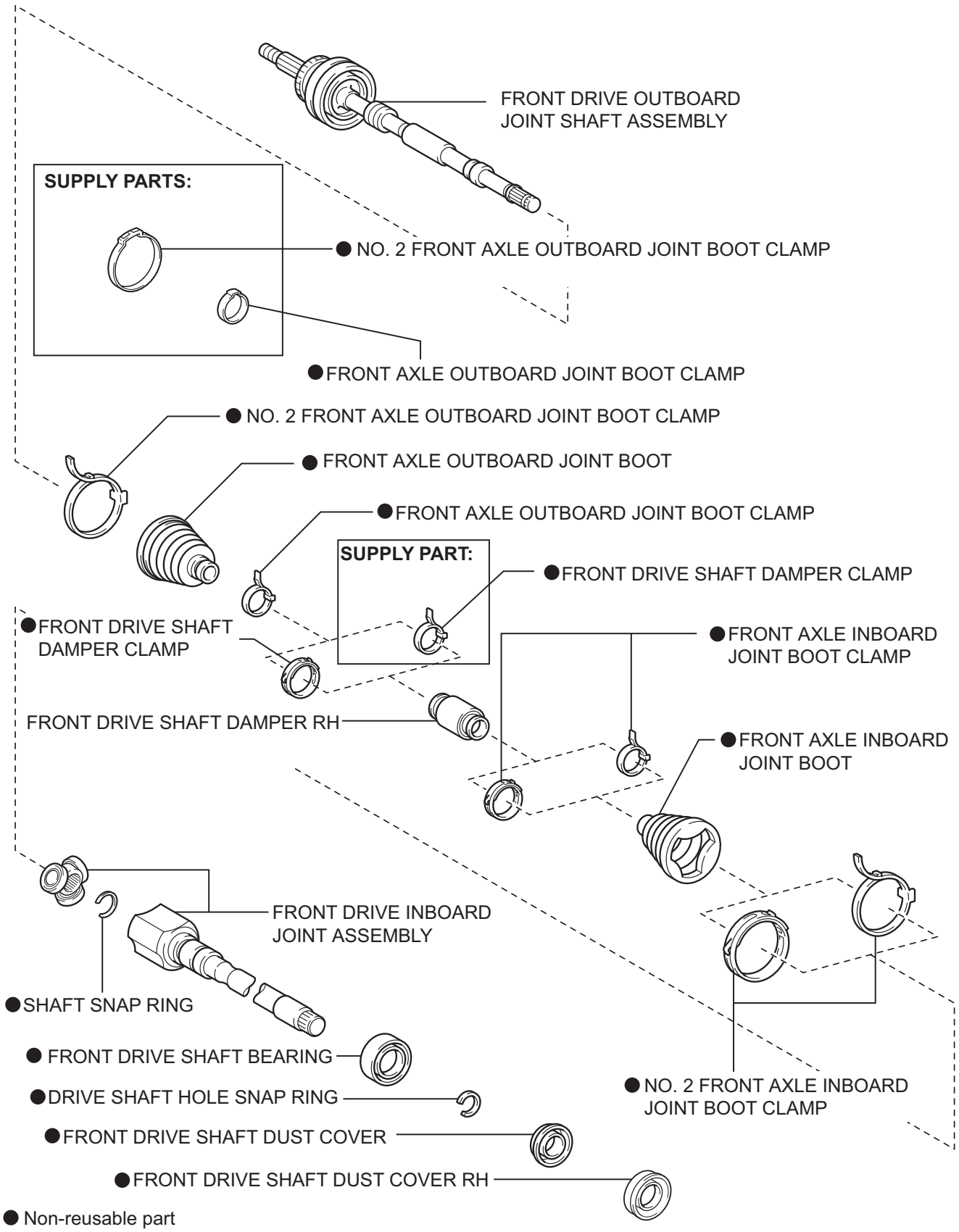

FRONT DRIVE SHAFT (for TMMK Made)

COMPONENTS

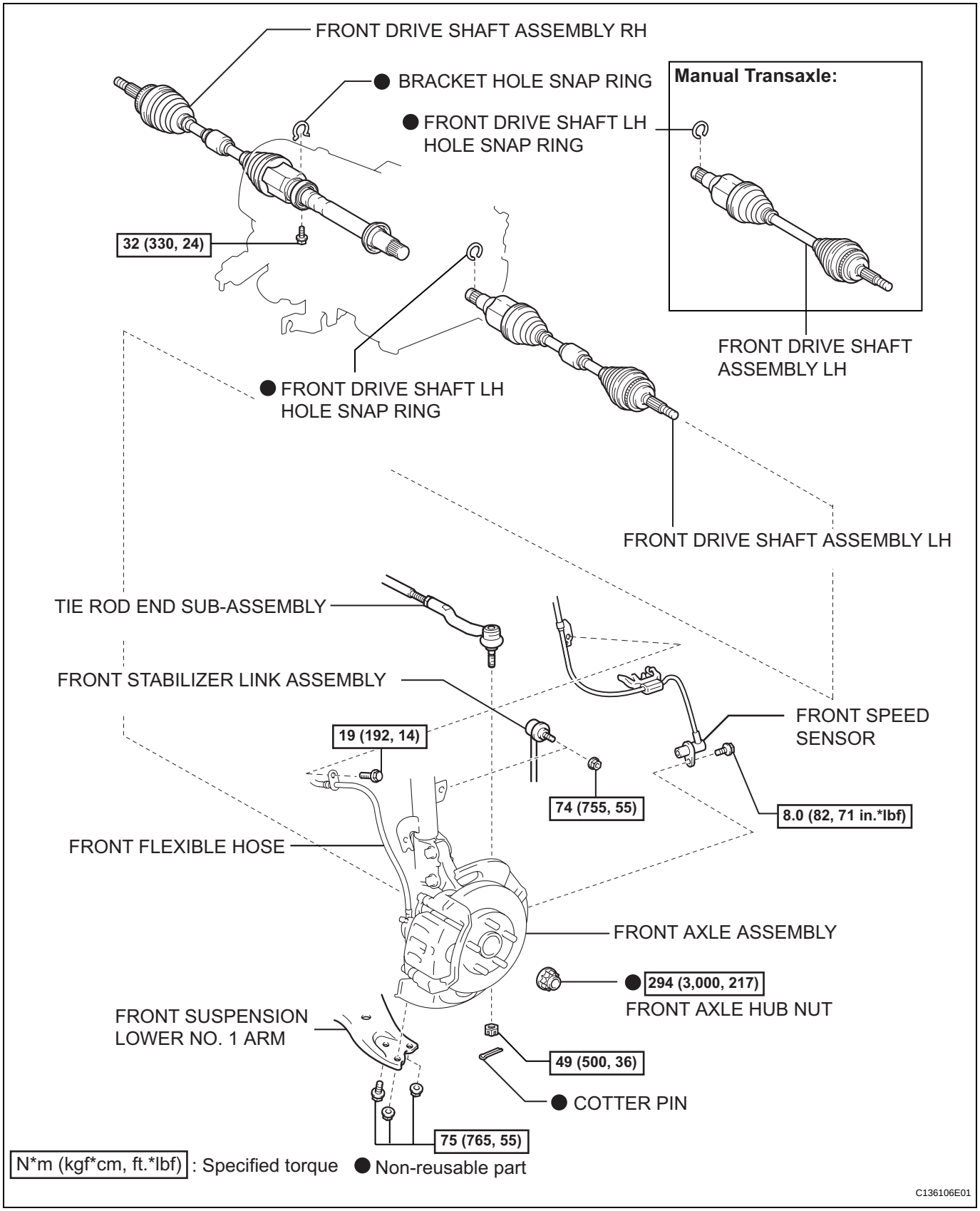

DS

DS

LH SIDE:

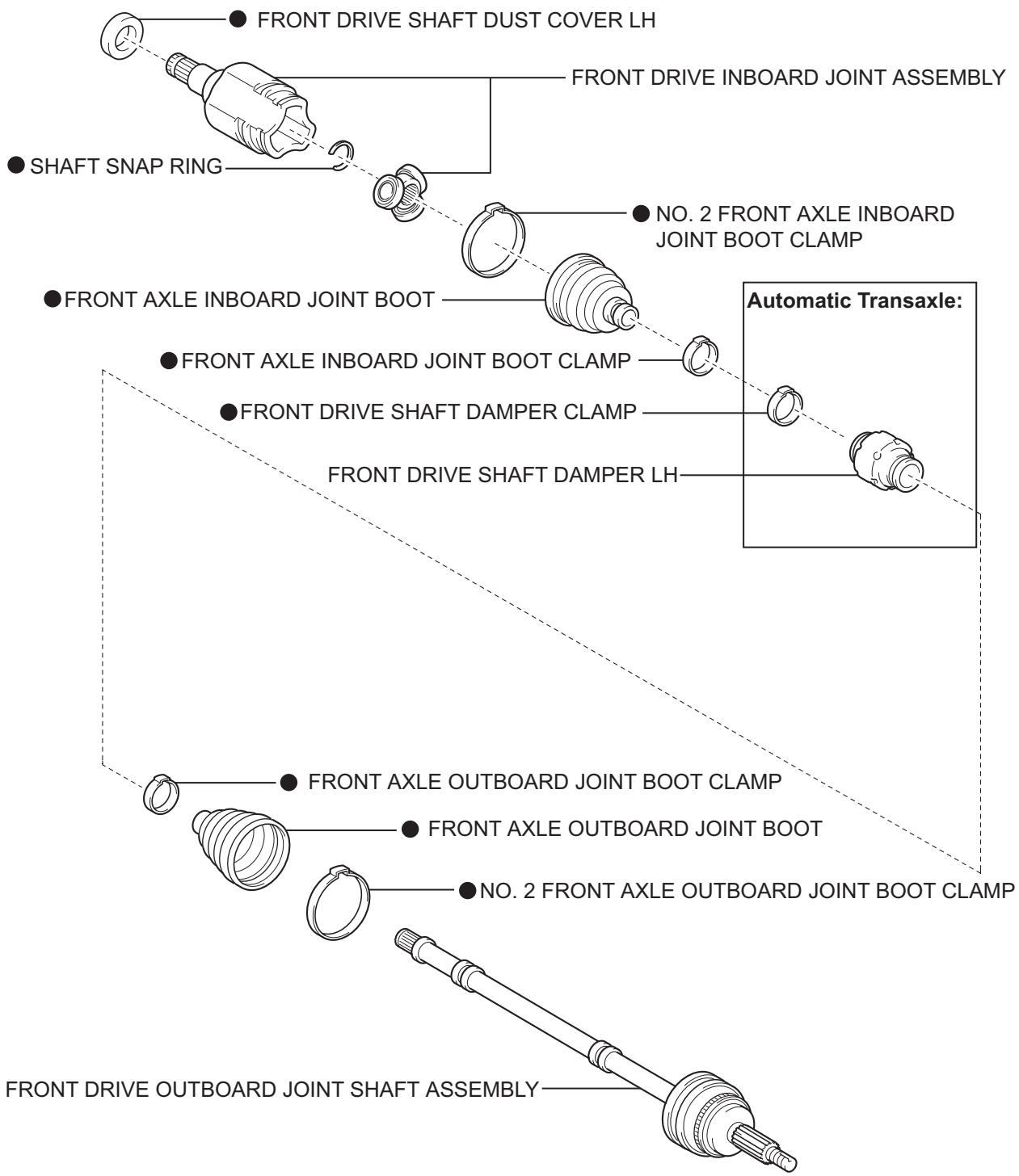

● Non-reusable part

C136538E02

RH SIDE:

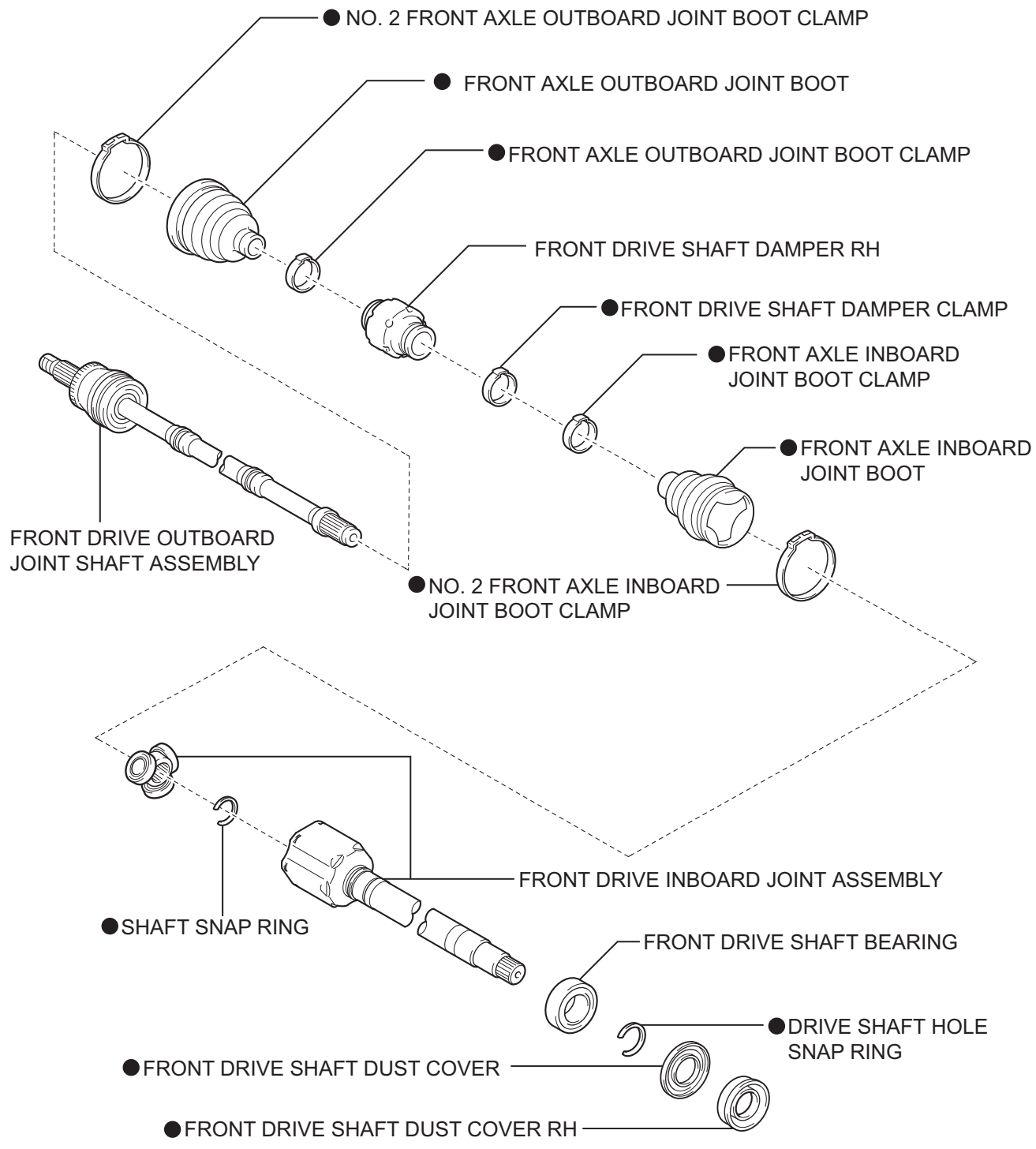

● Non-reusable part

C136540E02

REMOVAL

HINT:
- Use the same procedures for the RH side and LH side.
- The procedures listed below are for the LH side.

1. DRAIN AUTOMATIC TRANSAXLE FLUID (for Automatic Transaxle)
(a) for 2GR-FE: See page AX-207
(b) for 2AZ-FE: See page AX-162

2. DRAIN MANUAL TRANSAXLE OIL (for Manual Transaxle) (See page MX-5)

3. REMOVE FRONT WHEEL

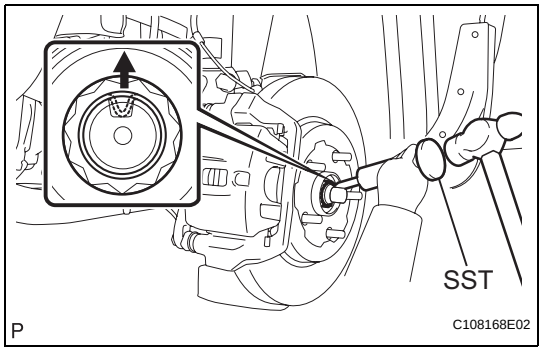

4. REMOVE FRONT AXLE HUB NUT
(a) Using SST and a hammer, release the staked part of the front axle hub nut.
SST 09930-00010
NOTICE:
Loosen the staked part of the nut completely, otherwise the thread of the drive shaft may be damaged.
(b) While applying the brakes, remove the front axle hub nut.

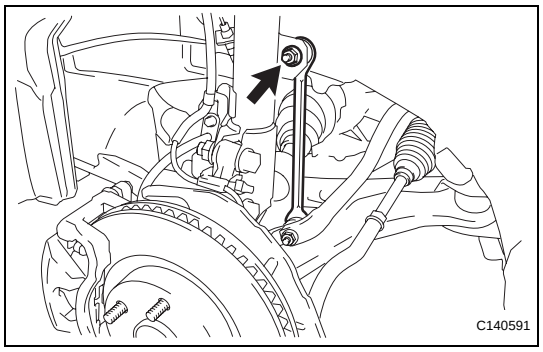

5. SEPARATE FRONT STABILIZER LINK ASSEMBLY
(a) Remove the nut and separate the front stabilizer link assembly.
HINT:
If the ball joint turns together with the nut, use a hexagon wrench (6 mm) to hold the stud.

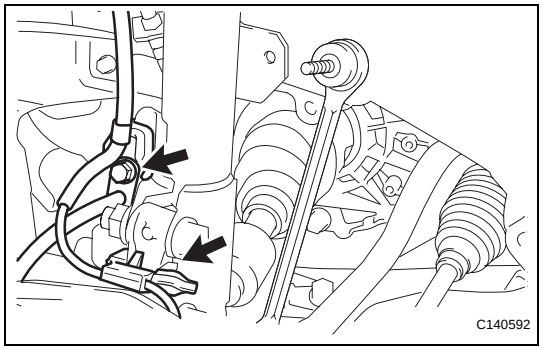

6. SEPARATE FRONT SPEED SENSOR
(a) Remove the bolt and clip, and separate the speed sensor wire and flexible hose from the shock absorber.

DS

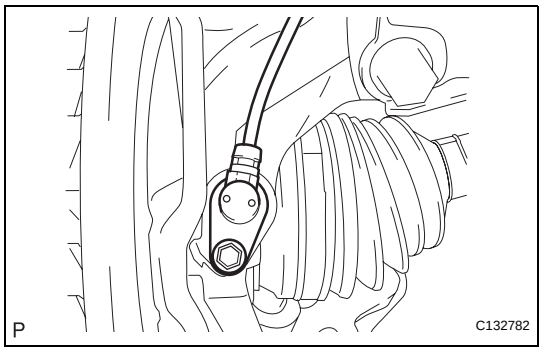

(b) Remove the bolt and separate the speed sensor from the steering knuckle.
NOTICE:
- **Prevent foreign matter from adhering to the speed sensor.**
- **Be careful not to damage the speed sensor.**

DS

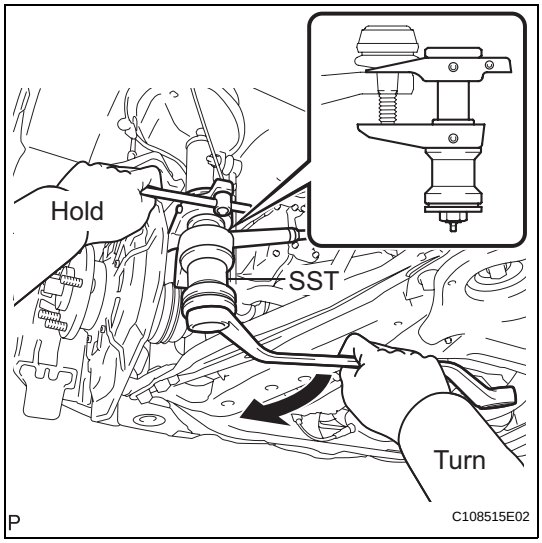

7. SEPARATE TIE ROD END SUB-ASSEMBLY
(a) Remove the cotter pin and nut.
(b) Using SST, separate the tie rod end sub-assembly from the steering knuckle.
SST 09628-00011
NOTICE:
- **Make sure that the string of the SST is securely tied to the vehicle.**
- **Be careful not to damage the ball joint dust cover.**
- **Be careful not to damage the steering knuckle.**
- **Be careful not to damage the front disc brake dust cover.**

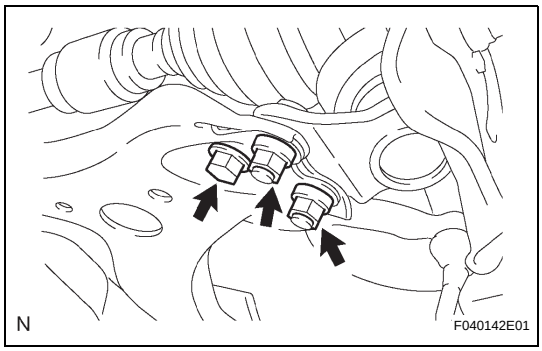

8. SEPARATE FRONT SUSPENSION LOWER NO. 1 ARM
(a) Remove the bolt and 2 nuts, and separate the front suspension lower No. 1 arm from the lower ball joint.

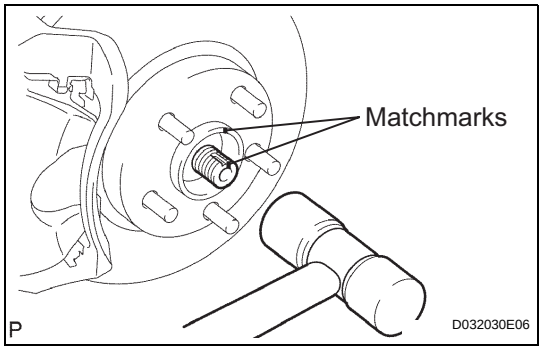

9. SEPARATE FRONT AXLE ASSEMBLY
(a) Put matchmarks on the front drive shaft assembly and the axle hub.
(b) Using a plastic hammer, separate the front drive shaft assembly from the front axle assembly.
NOTICE:
Be careful not to damage the drive shaft boot and speed sensor rotor.

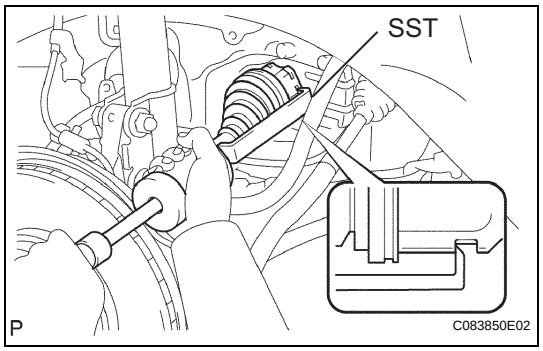

10. REMOVE FRONT DRIVE SHAFT ASSEMBLY LH

(a) Using SST, remove the front drive shaft assembly LH.

SST 09520-01010, 09520-24010 (09520-32040)

NOTICE:

- **Be careful not to damage the drive shaft dust cover, boot, and oil seal.**
- **Be careful not to drop the drive shaft assembly.**

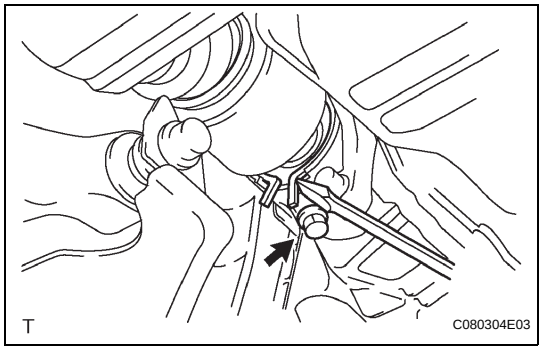

11. REMOVE FRONT DRIVE SHAFT ASSEMBLY RH

(a) Using a screwdriver, remove the bearing bracket hole snap ring.

(b) Remove the bolt and front drive shaft assembly RH from the drive shaft bearing bracket.

NOTICE:

Do not damage the boot and oil seal.

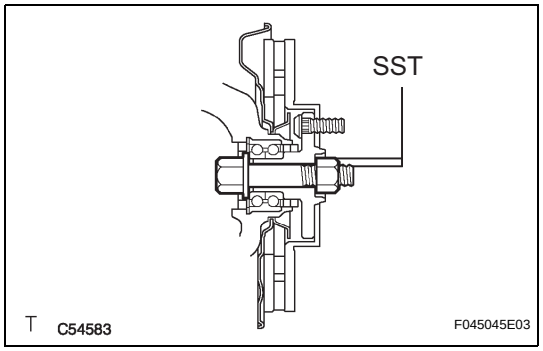

12. SECURE FRONT AXLE HUB SUB-ASSEMBLY

(a) Secure the front axle hub bearing.

SST 09608-16042 (09608-02021, 09608-02041)

NOTICE:

The hub bearing may be damaged if it is subjected to the vehicle's full weight, such as moving the vehicle with the drive shaft removed. If it is necessary to place the vehicle's weight on the hub bearing, first support it with SST.

13. INSPECT FRONT DRIVE SHAFT ASSEMBLY (See page DS-13)

DISASSEMBLY

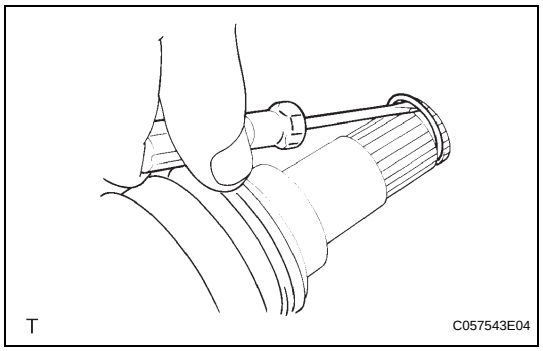

1. REMOVE FRONT DRIVE SHAFT LH HOLE SNAP RING

(a) Using a screwdriver, remove the front drive shaft LH hole snap ring.

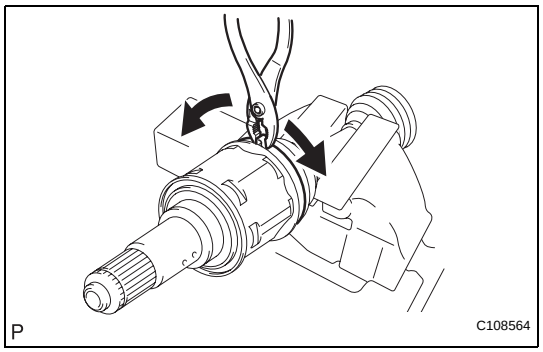

2. REMOVE NO. 2 FRONT AXLE INBOARD JOINT BOOT CLAMP (for 2GR-FE)

(a) Using pliers, remove the No. 2 front axle inboard joint boot clamp as shown in the illustration.

3. REMOVE FRONT AXLE INBOARD JOINT BOOT CLAMP (for 2GR-FE)

(a) Remove the front axle inboard joint boot clamp.

HINT:

Perform the same procedures as for the No. 2 front axle inboard joint boot clamp.

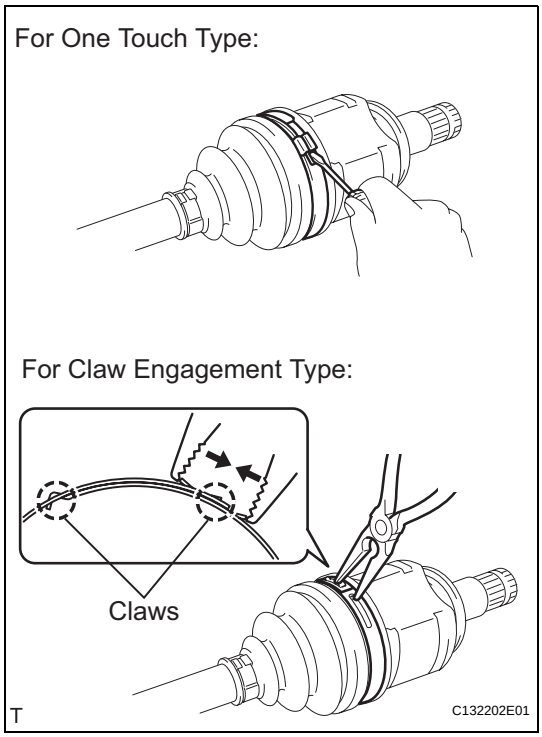

4. REMOVE NO. 2 FRONT AXLE INBOARD JOINT BOOT CLAMP (for 2AZ-FE)

(a) For one touch type:
  (1) Using a screwdriver, remove the No. 2 front axle inboard joint boot clamp as shown in the illustration.

(b) For claw engagement type:
  (1) Using needle-nose pliers, remove the No. 2 front axle inboard joint boot clamp as shown in the illustration.

5. REMOVE FRONT AXLE INBOARD JOINT BOOT CLAMP (for 2AZ-FE)

(a) Remove the front axle inboard joint boot clamp.
HINT:
Perform the same procedures as for the No. 2 front axle inboard joint boot clamp.

6. SEPARATE FRONT AXLE INBOARD JOINT BOOT

(a) Separate the front axle inboard joint boot from the inboard joint assembly.

7. REMOVE FRONT DRIVE INBOARD JOINT ASSEMBLY

(a) Remove the grease from the inboard joint assembly.

(b) Put matchmarks on the inboard joint assembly and outboard joint shaft.
NOTICE:
Do not use a punch for the marks.

(c) Remove the inboard joint assembly from the outboard joint shaft.

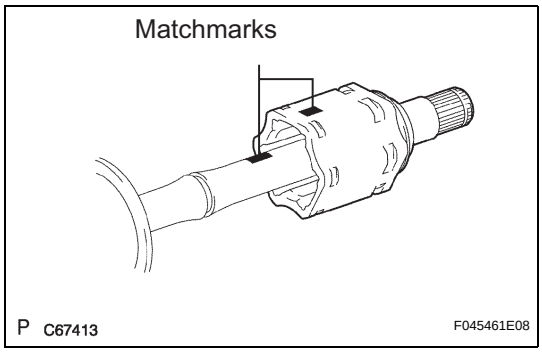

(d) Using a snap ring expander, remove the shaft snap ring.

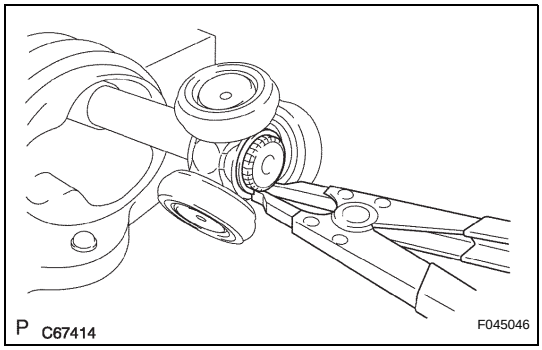

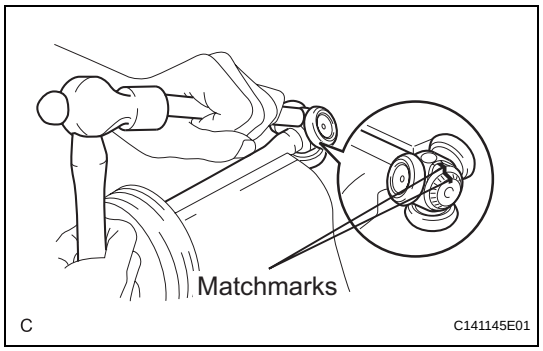

(e) Put matchmarks on the outboard joint shaft and tripod joint.
NOTICE:
Do not use a punch for the marks.

(f) Using a brass bar and a hammer, remove the tripod joint from the outboard joint shaft.
NOTICE:
Do not tap the roller.

8. REMOVE FRONT AXLE INBOARD JOINT BOOT

(a) Remove the inboard joint boot from the outboard joint shaft.

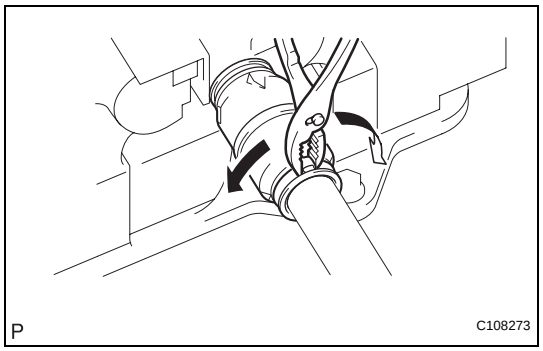

9. REMOVE FRONT DRIVE SHAFT DAMPER LH (for 2GR-FE)

(a) Using pliers, remove the drive shaft damper clamp as shown in the illustration.

(b) Remove the drive shaft damper.

10. REMOVE FRONT DRIVE SHAFT DAMPER RH (for 2GR-FE)

(a) Remove the front drive shaft damper RH.
HINT:
Perform the same procedures as for the front drive shaft damper LH.

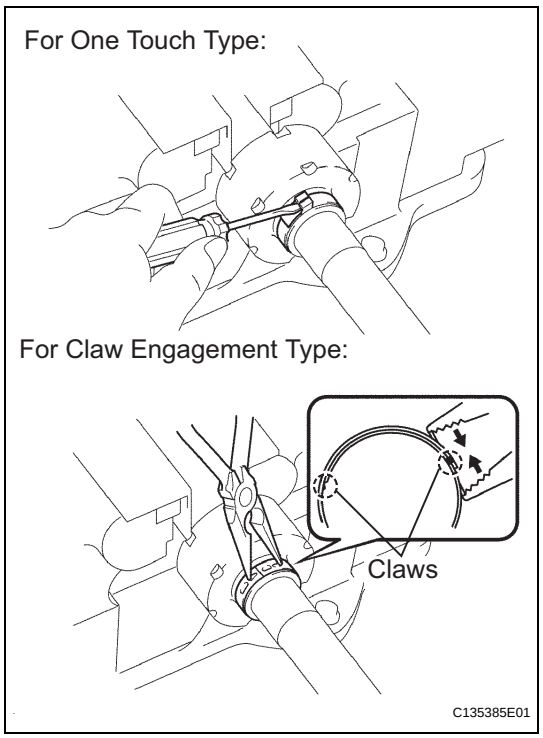

11. REMOVE FRONT DRIVE SHAFT DAMPER LH (for 2AZ-FE Automatic Transaxle)

(a) For one touch type:
(1) Using a screwdriver, remove the drive shaft damper clamp as shown in the illustration.

(b) For claw engagement type:
(1) Using needle-nose pliers, remove the drive shaft damper clamp as shown in the illustration.

(c) Remove the drive shaft damper.

12. REMOVE FRONT DRIVE SHAFT DAMPER RH (for 2AZ-FE)

(a) Remove the front drive shaft damper RH.
HINT:
Perform the same procedures as for the front drive shaft damper LH.

DS

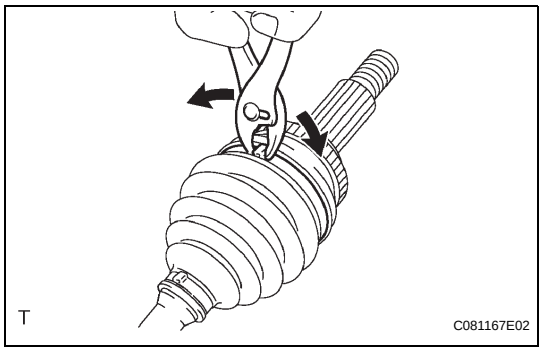

13. REMOVE NO. 2 FRONT AXLE OUTBOARD JOINT BOOT CLAMP (for 2GR-FE)

(a) Using pliers, remove the No. 2 front axle outboard joint boot clamp as shown in the illustration.

14. REMOVE FRONT AXLE OUTBOARD JOINT BOOT CLAMP (for 2GR-FE)

(a) Remove the front axle outboard joint boot clamp.
HINT:
Perform the same procedures as for the No. 2 front axle outboard joint boot clamp.

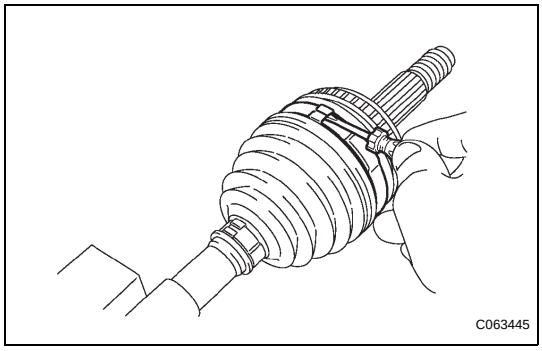

15. REMOVE NO. 2 FRONT AXLE OUTBOARD JOINT BOOT CLAMP (for 2AZ-FE)

(a) Using a screwdriver, remove the No. 2 front axle outboard joint boot clamp as shown in the illustration.

16. REMOVE FRONT AXLE OUTBOARD JOINT BOOT CLAMP (for 2AZ-FE)

(a) Remove the front axle outboard joint boot clamp.
HINT:
Perform the same procedures as for the No. 2 front axle outboard joint boot clamp.

17. REMOVE FRONT AXLE OUTBOARD JOINT BOOT

(a) Remove the outboard joint boot from the outboard joint shaft.

(b) Remove the grease from the outboard joint.

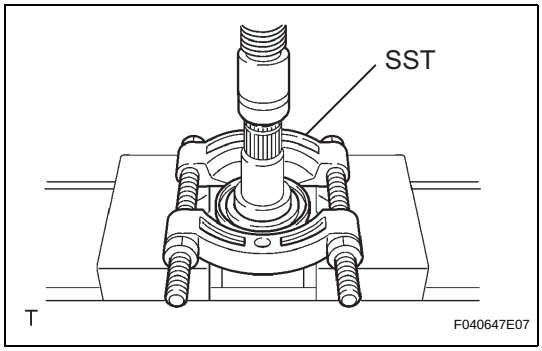

18. REMOVE FRONT DRIVE SHAFT DUST COVER LH

(a) Using SST and a press, remove the drive shaft dust cover LH.
SST 09950-00020
NOTICE:
Be careful not to drop the inboard joint assembly.

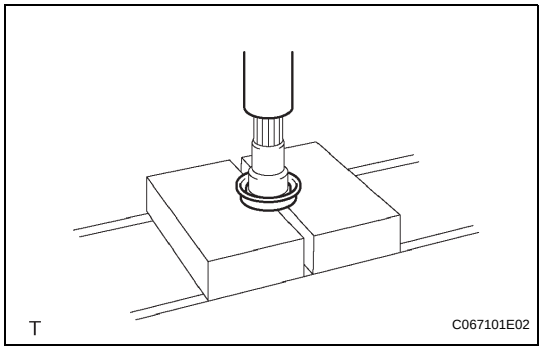

19. REMOVE FRONT DRIVE SHAFT DUST COVER RH

(a) Using a press, remove the drive shaft dust cover RH.

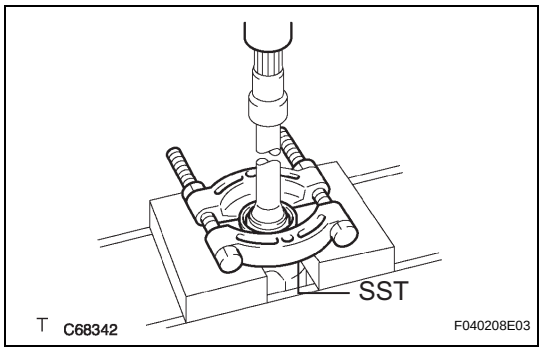

20. REMOVE FRONT DRIVE SHAFT DUST COVER

(a) Using SST and a press, remove the drive shaft dust cover.
SST 09950-00020

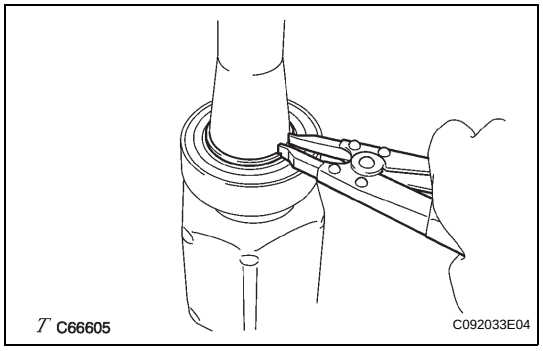

21. REMOVE FRONT DRIVE SHAFT BEARING

(a) Using a snap ring expander, remove the drive shaft hole snap ring.

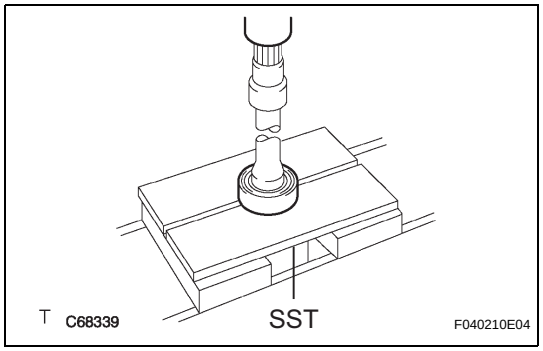

(b) Using SST and a press, remove the bearing.
SST 09527-10011

(c) Remove the bearing bracket hole snap ring.
NOTICE:
Be careful not to drop the inboard joint assembly.

INSPECTION

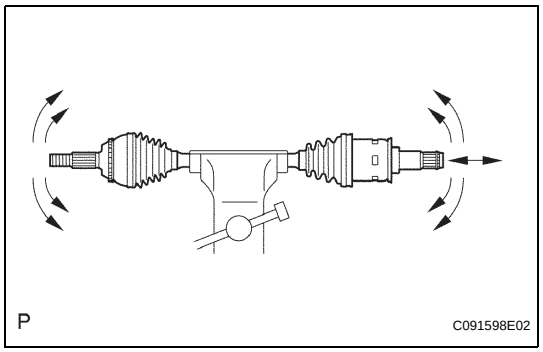

1. INSPECT FRONT DRIVE SHAFT ASSEMBLY

(a) Check that there is no excessive play in the outboard joint.
(b) Check that the inboard joint slides smoothly in the thrust direction.
(c) Check that there is no excessive play in the radial directions of the inboard joint.
(d) Check the boots for damage.

REASSEMBLY

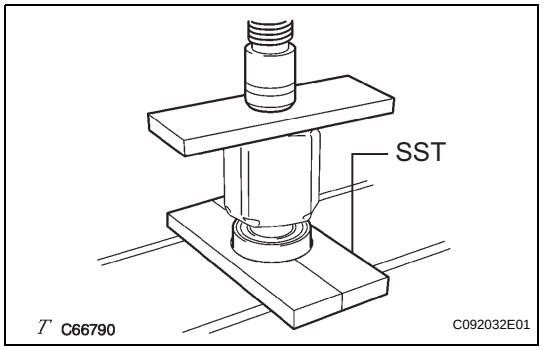

1. INSTALL FRONT DRIVE SHAFT BEARING

(a) Install a new bearing bracket hole snap ring to the front drive shaft assembly RH.
(b) Using SST and a steel plate, install a new front drive shaft bearing.
SST 09527-30010, 09527-10011
NOTICE:
Bearing should be completely installed.

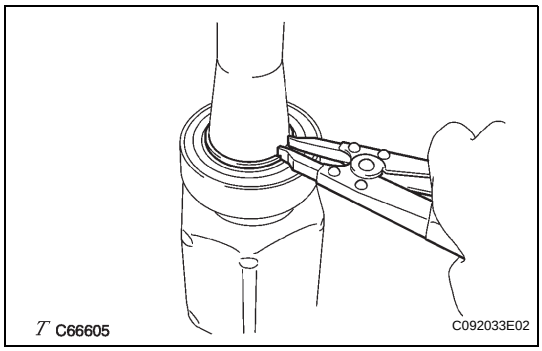

(c) Using a snap ring expander, install a new drive shaft hole snap ring.

DS

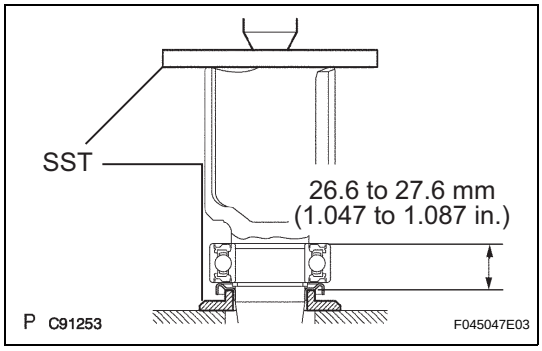

2. INSTALL FRONT DRIVE SHAFT DUST COVER

(a) Using SST and a press, install a new drive shaft dust cover.
SST 09726-40010, 09527-10011
NOTICE:
- **The dust cover should be completely installed.**
- **Be careful not to damage the dust deflector.**

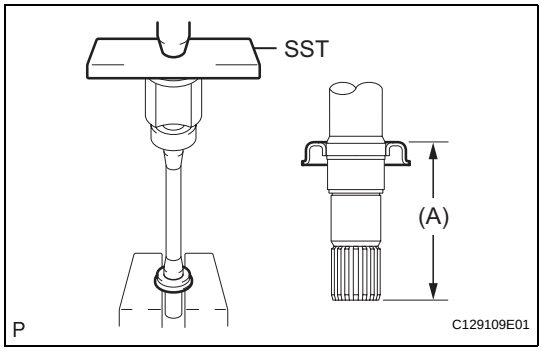

3. INSTALL FRONT DRIVE SHAFT DUST COVER RH

(a) Using SST and a press, install a new drive shaft dust cover RH until distance (A) from the tip of the center drive shaft to the drive shaft dust cover RH meets the specification.
SST 09527-10011

Engine type	Distance (A)
2GR-FE	110.0 to 111.0 mm (4.3307 to 4.3701 in.)
2AZ-FE	91.0 to 92.0 mm (3.5827 to 3.6220 in.)

NOTICE:
- **The dust cover should be completely installed.**
- **Be careful not to damage the dust deflector.**

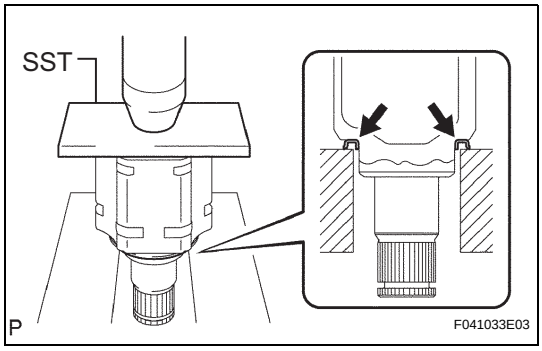

4. INSTALL FRONT DRIVE SHAFT DUST COVER LH

(a) Using SST and a press, install a new drive shaft dust cover LH.
SST 09527-10011
NOTICE:
- **The dust cover should be completely installed.**
- **Be careful not to damage the dust deflector.**

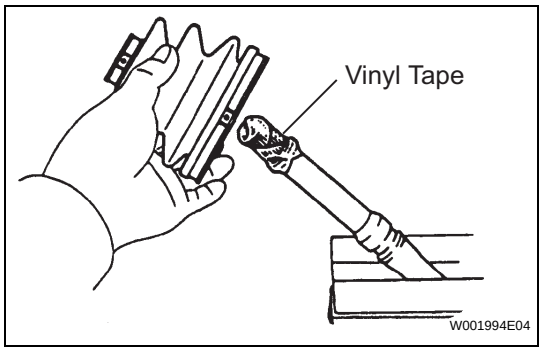

5. INSTALL FRONT AXLE OUTBOARD JOINT BOOT

(a) Hold the drive shaft lightly in a vise between aluminium plates.
HINT:
Before installing the boots, wrap the spline of the drive shaft with vinyl tape to prevent the boots from being damaged.

(b) Temporarily install a new outboard joint boot to the drive shaft with the 2 clamps.

(c) Pack the outboard joint shaft and boot with grease.

Engine type	Grease capacity
2GR-FE	164 to 184 g (5.8 to 6.5 oz.)
2AZ-FE	190 to 200 g (6.7 to 7.1 oz.)

DS

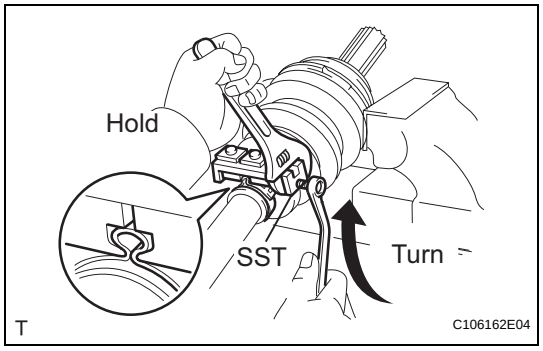

6. INSTALL FRONT AXLE OUTBOARD JOINT BOOT CLAMP

(a) Hold the drive shaft lightly in a vise between aluminum plates.
NOTICE:
Do not overtighten the vise.

(b) Install the 2 outboard joint boot clamps onto the boot.

(c) Place SST onto the outboard joint boot clamp.
SST 09521-24010

(d) Tighten the SST so that the outboard joint boot clamp is pinched.
NOTICE:
Do not overtighten the SST.

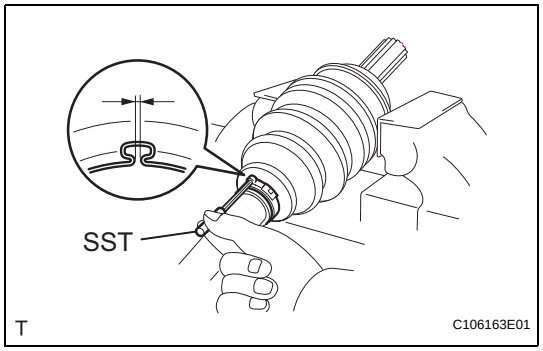

(e) Using SST, measure the clearance of the outboard joint boot clamp.
SST 09240-00020
Clearance:
0.5 to 1.5 mm (0.0197 to 0.0591 in.)
NOTICE:
If the measured value is greater than the specified value, retighten the clamp.

7. INSTALL NO. 2 FRONT AXLE OUTBOARD JOINT BOOT CLAMP

(a) Install the No. 2 outboard joint boot clamp onto the boot.

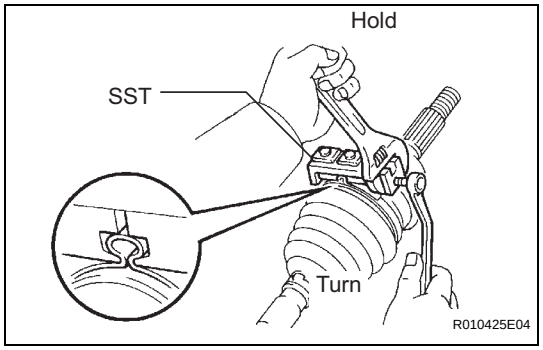

(b) Place SST onto the No. 2 outboard joint boot clamp.
SST 09521-24010

(c) Tighten the SST so that the No. 2 outboard joint boot clamp is pinched.
NOTICE:
Do not overtighten the SST.

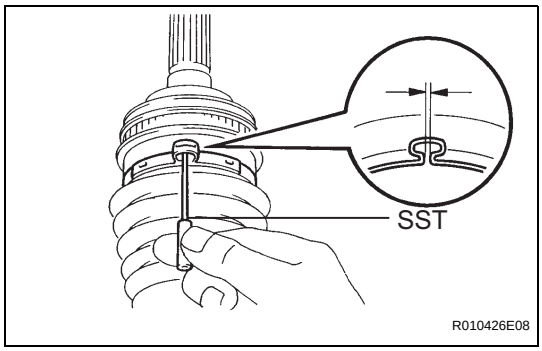

(d) Using SST, measure the clearance of the No. 2 outboard joint boot clamp.
SST 09240-00020
Clearance:
0.5 to 1.5 mm (0.0197 to 0.0591 in.)
NOTICE:
If the measured value is greater than the specified value, retighten the clamp.

DS

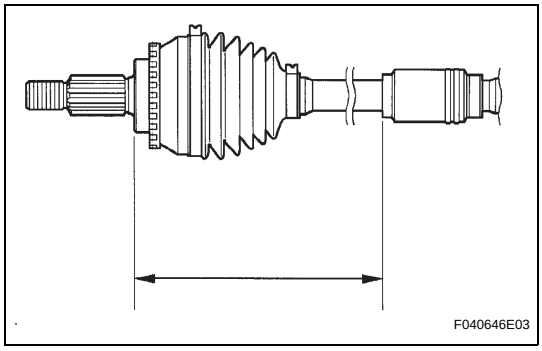

8. INSTALL FRONT DRIVE SHAFT DAMPER LH (for 2GR-FE)

(a) Install the drive shaft damper to the drive shaft.
(b) Make sure that the damper is on the shaft groove.
(c) Set the distance as specified below.
Distance:
228.0 to 232.0 mm (8.976 to 9.134 in.)
(d) Install the drive shaft damper clamp onto the drive shaft damper.
NOTICE:
Be sure to install the clamp in the correct position.

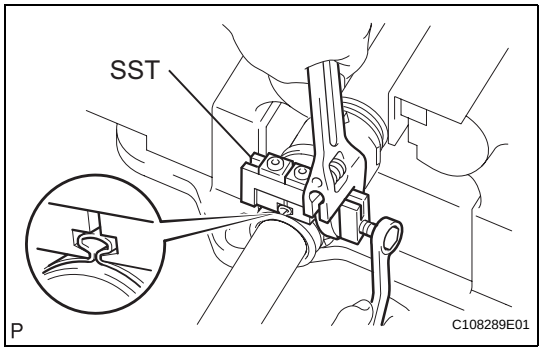

(e) Place SST onto the drive shaft damper clamp.
SST 09521-24010
(f) Tighten the SST so that the clamp is pinched.
NOTICE:
Do not overtighten the SST.

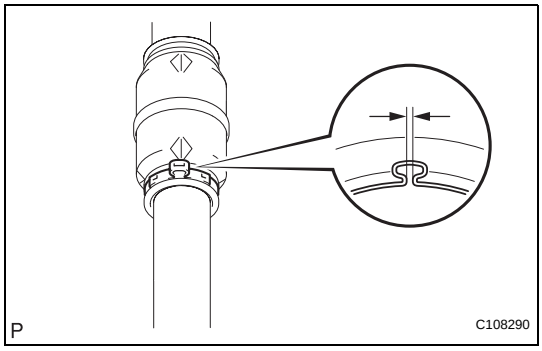

(g) Using SST, measure the clearance of the drive shaft damper clamp.
SST 09240-00020
Clearance:
0.5 to 1.5 mm (0.0197 to 0.0591 in.)
NOTICE:
If the measured value is greater than the specified value, retighten the clamp.

9. INSTALL FRONT DRIVE SHAFT DAMPER RH (for 2GR-FE)

(a) Install the front drive shaft damper RH.
HINT:
Perform the same procedures as for the front drive shaft damper LH.

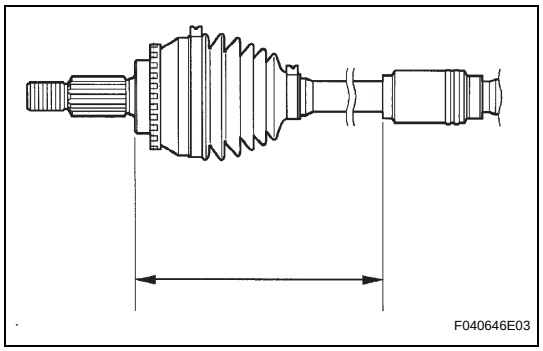

10. INSTALL FRONT DRIVE SHAFT DAMPER LH (for 2AZ-FE Automatic Transaxle)

(a) Install the drive shaft damper to the drive shaft.
(b) Make sure that the damper is on the shaft groove.
(c) Set the distance as specified below.
Distance:
222.0 to 226.0 mm (8.740 to 8.898 in.)

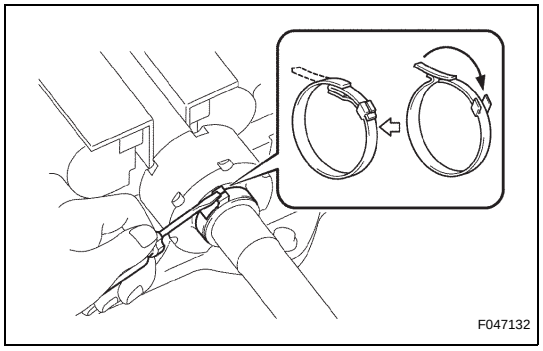

(d) Using a screwdriver, install a new drive shaft damper clamp as shown in the illustration.

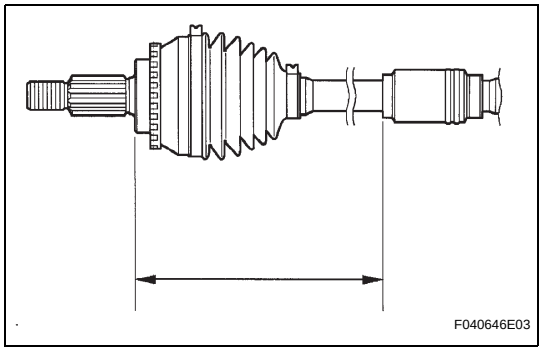

11. INSTALL FRONT DRIVE SHAFT DAMPER RH (for 2AZ-FE)

(a) Install the drive shaft damper to the drive shaft.
(b) Make sure that the damper is on the shaft groove.
(c) Set the distance as specified below.
Distance:
223.4 to 227.4 mm (8.795 to 8.953 in.)

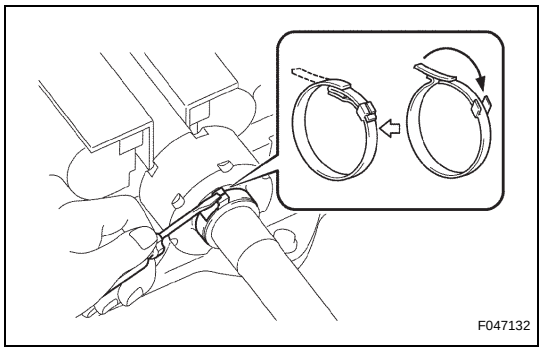

(d) Using a screwdriver, install a new drive shaft damper clamp as shown in the illustration.

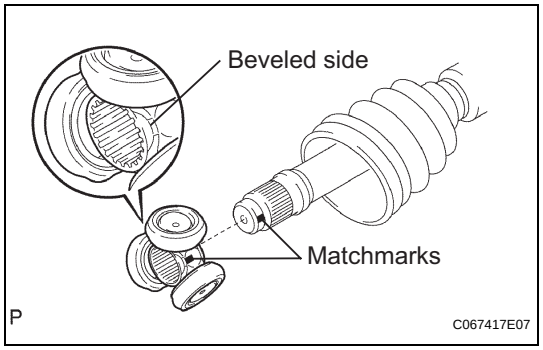

12. INSTALL FRONT DRIVE INBOARD JOINT ASSEMBLY

(a) Temporarily install a new inboard joint boot to the drive shaft with the 2 clamps.
(b) Place the beveled side of the tripod joint axial spline toward the outboard joint shaft.
(c) Align the matchmarks.
(d) Using a brass bar and hammer, tap in the tripod joint to the outboard joint shaft.
NOTICE:
- **Do not tap the roller.**

- **Be sure to install the tripod joint assembly in the correct direction.**

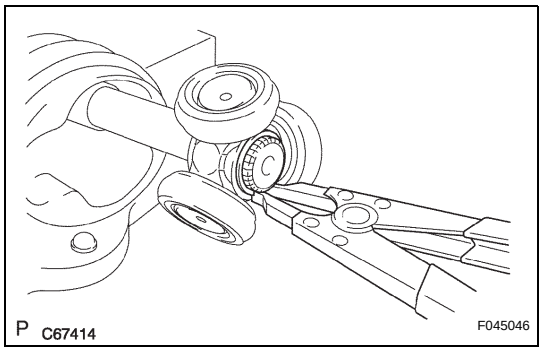

(e) Using a snap ring expander, install a new shaft snap ring.

(f) Coat the outboard joint shaft and boot with grease.

Engine type	Grease capacity
2GR-FE	155 to 175 g (5.5 to 6.2 oz.)
2AZ-FE	175 to 185 g (6.2 to 6.5 oz.)

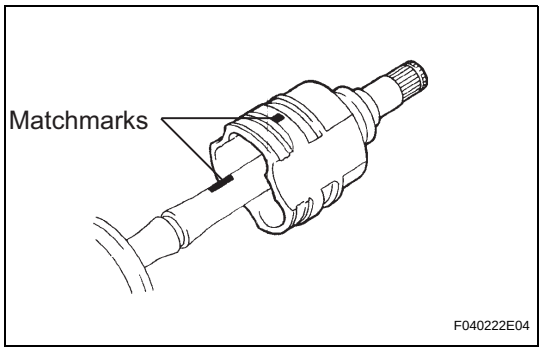

(g) Align the matchmarks and install the inboard joint assembly to the outboard joint shaft assembly.

13. INSTALL FRONT AXLE INBOARD JOINT BOOT

(a) Install the inboard joint boot to the inboard joint assembly.

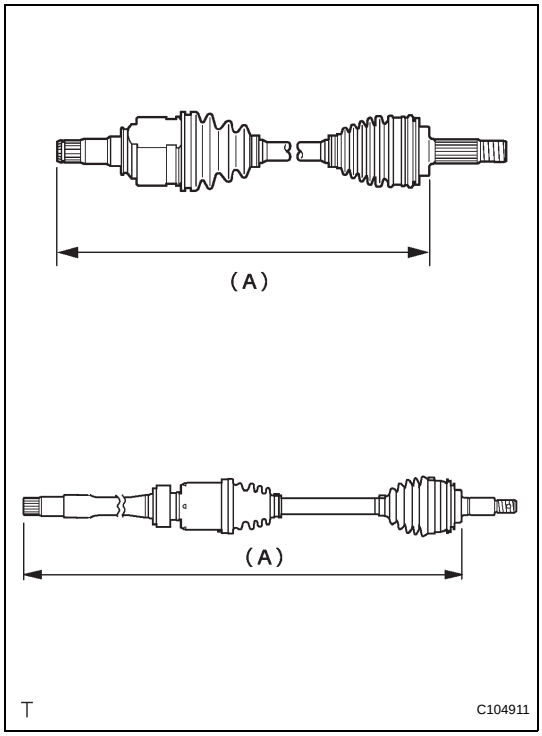

(b) Check whether the drive shaft dimensions are within the following specifications.
HINT:
The following table shows dimension (A) of the drive shaft.
Dimension (A)

Engine Type	LH	RH
2GR-FE	**585.5 to 589.5 mm (23.05 to 23.21 in.)**	**904.4 to 908.4 mm (35.61 to 35.76 in.)**
2AZ-FE	**592.2 to 602.2 mm (23.32 to 23.71 in.)**	**891.0 to 901.0 mm (35.08 to 35.47 in.)**

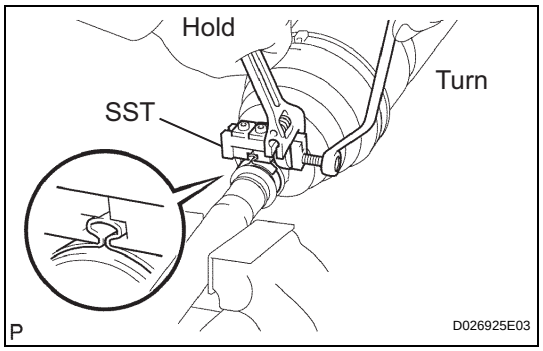

14. INSTALL FRONT AXLE INBOARD JOINT BOOT CLAMP (for 2GR-FE)

(a) Hold the drive shaft lightly in a vise between aluminum plates.
NOTICE:
Do not overtighten the vise.

(b) Install the 2 inboard joint boot clamps onto the boot.

(c) Place SST onto the inboard joint boot clamp.
SST 09521-24010

(d) Tighten the SST so that the inboard joint boot clamp is pinched.
NOTICE:
Do not overtighten the SST.

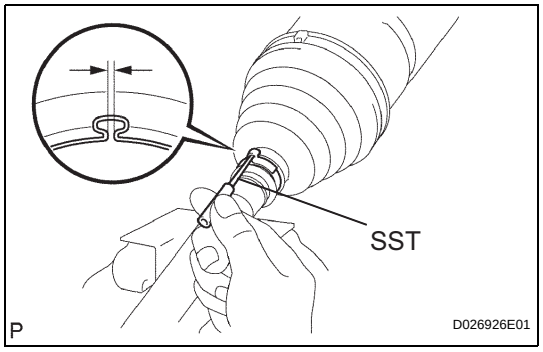

(e) Using SST, measure the clearance of the inboard joint boot clamp.
SST 09240-00020
Clearance:
0.5 to 1.5 mm (0.0197 to 0.0591 in.)
NOTICE:
If the measured value is greater than the specified value, retighten the clamp.

15. INSTALL NO. 2 FRONT AXLE INBOARD JOINT BOOT CLAMP (for 2GR-FE)

(a) Hold the inboard joint shaft assembly in a vise between aluminium plates.
NOTICE:
Do not overtighten the vise.

(b) Install the No. 2 front axle inboard joint boot clamp onto the boot.

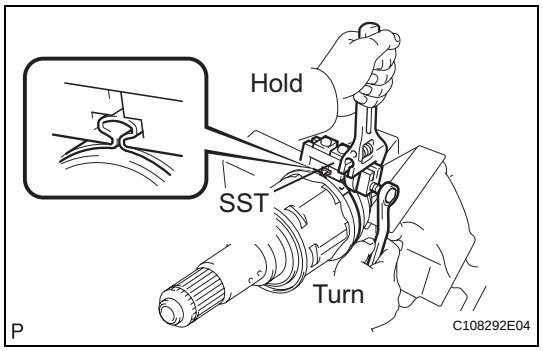

(c) Place SST onto the No. 2 front axle inboard joint boot clamp.
SST 09521-24010

(d) Tighten the SST so that the No. 2 front axle inboard joint boot clamp is pinched.
NOTICE:
Do not overtighten the SST.

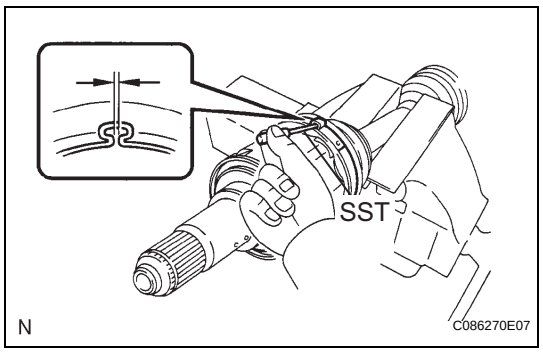

(e) Using SST, measure the clearance of the No. 2 front axle inboard joint boot clamp.
SST 09240-00020
Clearance:
0.5 to 1.5 mm (0.0197 to 0.0591 in.)
NOTICE:
If the measured value is greater than the specified value, retighten the clamp.

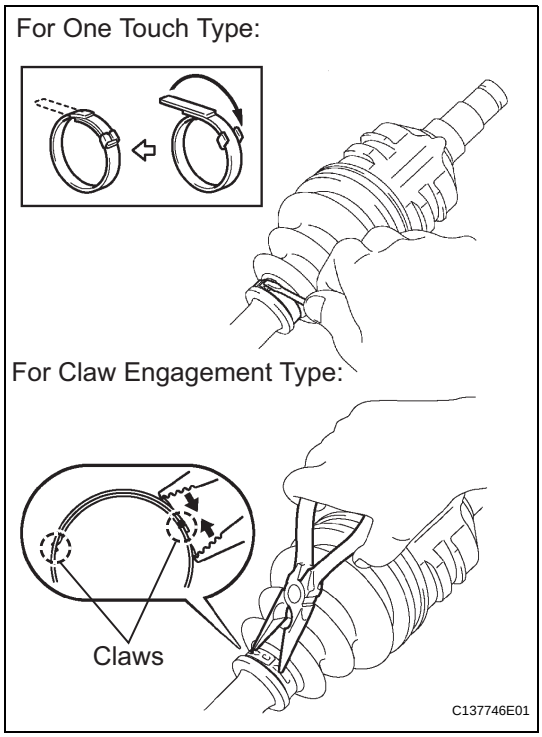

16. INSTALL FRONT AXLE INBOARD JOINT BOOT CLAMP (for 2AZ-FE)

(a) For one touch type:

(1) Using a screwdriver, install the inboard joint boot clamp as shown in the illustration.

(b) For claw engagement type:

(1) Using needle nose pliers, install the inboard joint boot clamp as shown in the illustration.

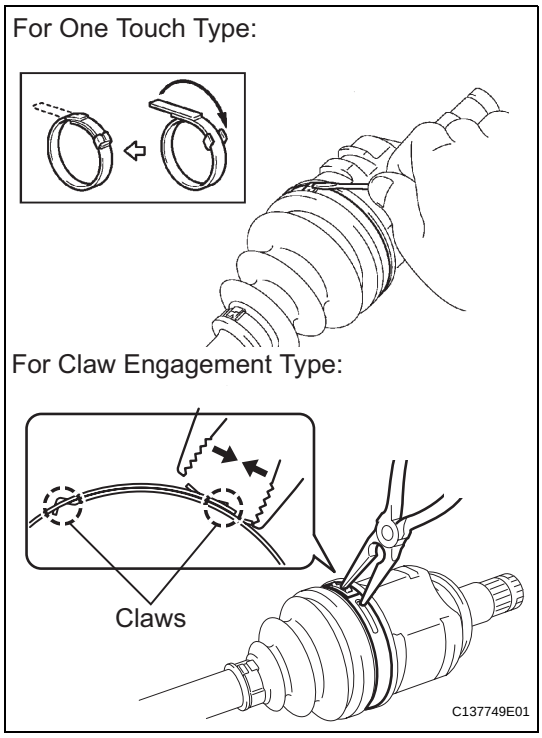

17. INSTALL NO. 2 FRONT AXLE INBOARD JOINT BOOT CLAMP (for 2AZ-FE)

(a) For one touch type:

(1) Using a screwdriver, install the No. 2 front axle inboard joint boot clamp as shown in the illustration.

(b) For claw engagement type:

(1) Using needle nose pliers, install the No. 2 front axle inboard joint boot clamp as shown in the illustration.

18. INSTALL FRONT DRIVE SHAFT LH HOLE SNAP RING

(a) Install a new hole snap ring.

19. INSPECT FRONT DRIVE SHAFT ASSEMBLY (See page DS-13)

INSTALLATION

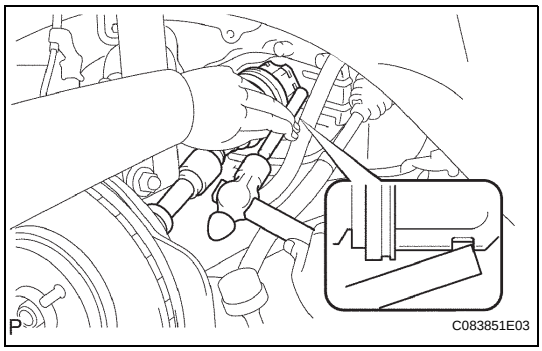

1. INSTALL FRONT DRIVE SHAFT ASSEMBLY LH

(a) Coat the spline of the inboard joint shaft assembly with ATF.

(b) Align the shaft splines and install the drive shaft assembly LH with a brass bar and hammer.

NOTICE:

- **Set the shaft snap ring with the opening side facing down.**

- **Be careful not to damage the drive shaft dust cover, boot, and oil seal.**
- **Move the drive shaft assembly while keeping it level.**

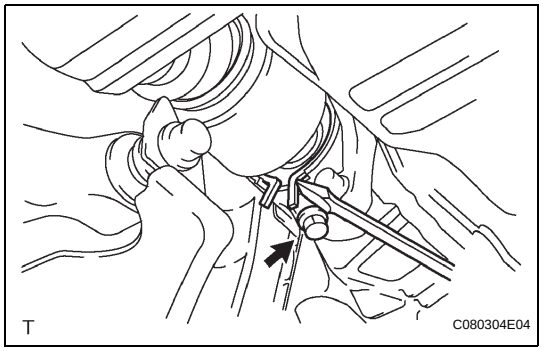

2. INSTALL FRONT DRIVE SHAFT ASSEMBLY RH

(a) Coat the spline of the inboard joint shaft assembly with ATF.

(b) Install the front drive shaft the assembly RH.

(c) Using a screwdriver, install a new bearing bracket hole snap ring.

NOTICE:

- **Do not damage the boot and oil seal.**
- **Move the drive shaft assembly while keeping it level.**

(d) Install a new bolt.

Torque: 32 N*m (330 kgf*cm, 24 ft.*lbf)

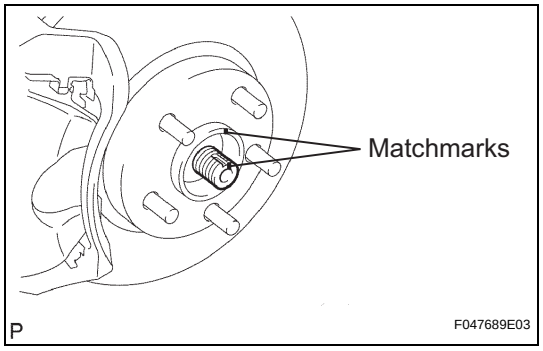

3. INSTALL FRONT AXLE ASSEMBLY

(a) Align the matchmarks and install the front drive shaft assembly to the front axle hub sub-assembly.

NOTICE:

Be careful not to damage the drive shaft boot and speed sensor rotor.

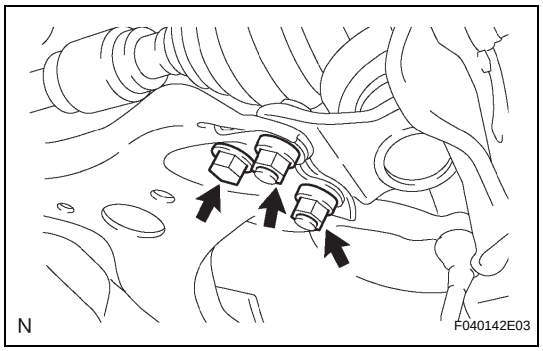

4. INSTALL FRONT SUSPENSION LOWER NO. 1 ARM

(a) Install the lower ball joint to the front suspension lower No. 1 arm with the bolt and 2 nuts.

Torque: 75 N*m (765 kgf*cm, 55 ft.*lbf)

5. INSTALL TIE ROD END SUB-ASSEMBLY

(a) Install the tie rod end sub-assembly to the steering knuckle with the nut.

Torque: 49 N*m (500 kgf*cm, 36 ft.*lbf)

(b) Install a new cotter pin.

NOTICE:

If the holes for the cotter pin are not aligned, tighten the nut up to 60° further.

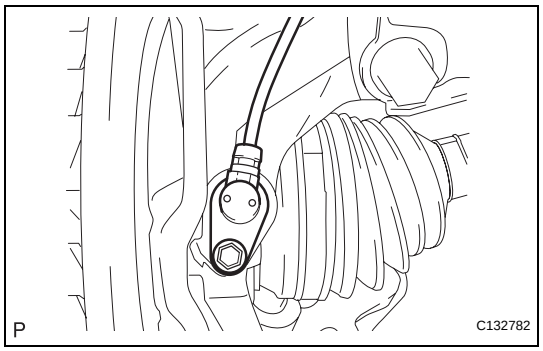

6. INSTALL FRONT SPEED SENSOR

(a) Install the front speed sensor to the steering knuckle with the bolt.

Torque: 8.0 N*m (82 kgf*cm, 71 in.*lbf)

NOTICE:

- **Prevent foreign matter from adhering to the speed sensor.**
- **Be careful not to damage the speed sensor.**

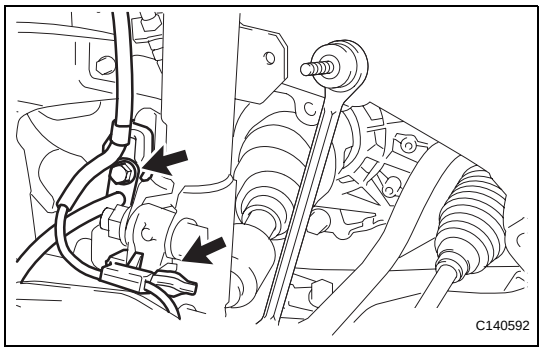

(b) Install the flexible hose and the speed sensor to the shock absorber with the bolt and set the sensor clip on the knuckle.
Torque: 19 N*m (192 kgf*cm, 14 ft.*lbf)
NOTICE:
- **Be careful not to damage the speed sensor.**
- **Prevent foreign matter from adhering to the speed sensor.**
- **Do not twist the sensor wire when installing the speed sensor.**

DS

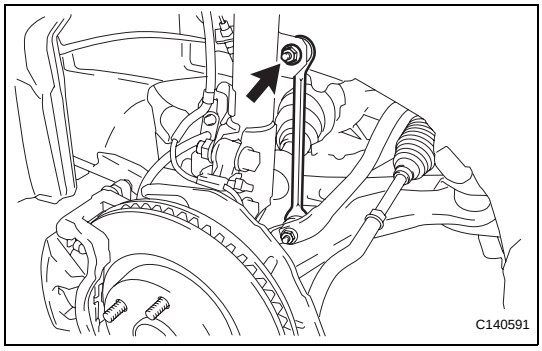

7. INSTALL FRONT STABILIZER LINK ASSEMBLY
(a) Install the stabilizer link assembly with the nut.
Torque: 74 N*m (755 kgf*cm, 55 ft.*lbf)
HINT:
If the ball joint turns together with the nut, use a hexagon wrench (6 mm) to hold the stud.

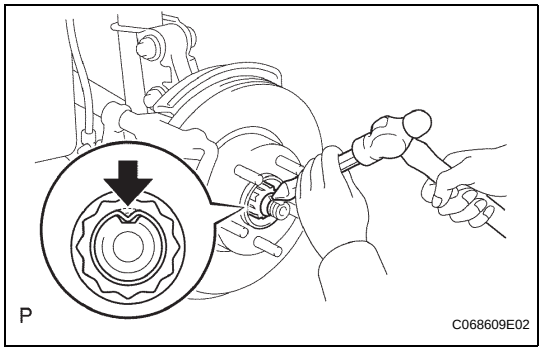

8. INSTALL FRONT AXLE HUB NUT
(a) Using a socket wrench (30 mm), install a new axle hub nut.
Torque: 294 N*m (3,000 kgf*cm, 217 ft.*lbf)
(b) Using a chisel and hammer, stake the front axle hub nut.

9. INSTALL FRONT WHEEL
Torque: 103 N*m (1,050 kgf*cm, 76 ft.*lbf)

10. ADD AUTOMATIC TRANSAXLE FLUID (for Automatic Transaxle)
(a) for 2GR-FE: See page AX-164
(b) for 2AZ-FE: See page AX-175

11. ADD MANUAL TRANSAXLE OIL (for Manual Transaxle) (See page MX-6)

12. INSPECT AUTOMATIC TRANSAXLE FLUID (for 2AZ-FE Automatic Transaxle) (See page AX-123)

13. INSPECT MANUAL TRANSAXLE OIL (for Manual Transaxle) (See page MX-2)

14. ADJUST FRONT WHEEL ALIGNMENT
HINT:
See page SP-4

15. CHECK ABS SPEED SENSOR SIGNAL
(a) ABS: See page BC-11
(b) VSC (for BOSCH): See page BC-123
(c) VSC (for ADVICS): See page BC-290

DS

REMOVAL

HINT:
- Use the same procedures for the RH side and LH side.
- The procedures listed below are for the LH side.

1. **DRAIN AUTOMATIC TRANSAXLE FLUID (for Automatic Transaxle)**
   (a) for 2GR-FE: See page AX-207
   (b) for 2AZ-FE: See page AX-162
2. **DRAIN MANUAL TRANSAXLE OIL (for Manual Transaxle) (See page MX-5)**
3. **REMOVE FRONT WHEEL**
4. **REMOVE FRONT AXLE HUB NUT (See page DS-7)**
5. **SEPARATE FRONT STABILIZER LINK ASSEMBLY (See page DS-7)**
6. **SEPARATE FRONT SPEED SENSOR (See page DS-7)**
7. **SEPARATE TIE ROD END SUB-ASSEMBLY (See page DS-8)**
8. **SEPARATE FRONT SUSPENSION LOWER NO. 1 ARM (See page DS-8)**
9. **SEPARATE FRONT AXLE ASSEMBLY (See page DS-8)**
10. **REMOVE FRONT DRIVE SHAFT ASSEMBLY LH (See page DS-9)**
11. **REMOVE FRONT DRIVE SHAFT ASSEMBLY RH (See page DS-9)**
12. **SECURE FRONT AXLE HUB SUB-ASSEMBLY (See page DS-9)**
13. **INSPECT FRONT DRIVE SHAFT ASSEMBLY (See page DS-29)**

DISASSEMBLY

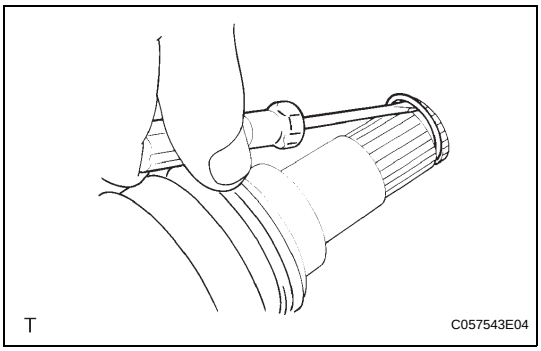

1. **REMOVE FRONT DRIVE SHAFT LH HOLE SNAP RING**
   (a) Using a screwdriver, remove the front drive shaft LH hole snap ring.

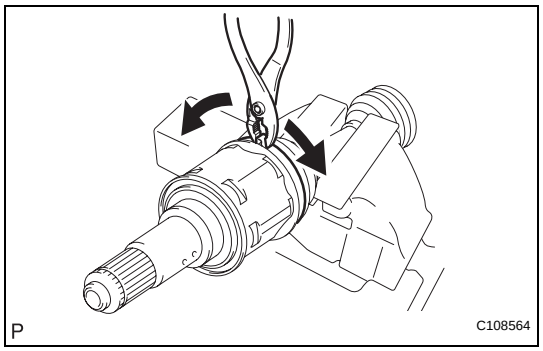

2. REMOVE NO. 2 FRONT AXLE INBOARD JOINT BOOT CLAMP

(a) Using pliers, remove the No. 2 front axle inboard joint boot clamp as shown in the illustration.

3. REMOVE FRONT AXLE INBOARD JOINT BOOT CLAMP

(a) Remove the front axle inboard joint boot clamp.
HINT:
Perform the same procedures as for the No. 2 front axle inboard joint boot clamp.

4. SEPARATE FRONT AXLE INBOARD JOINT BOOT

(a) Separate the front axle inboard joint boot from the inboard joint assembly.

5. REMOVE FRONT DRIVE INBOARD JOINT ASSEMBLY

(a) Remove the grease from the inboard joint assembly.

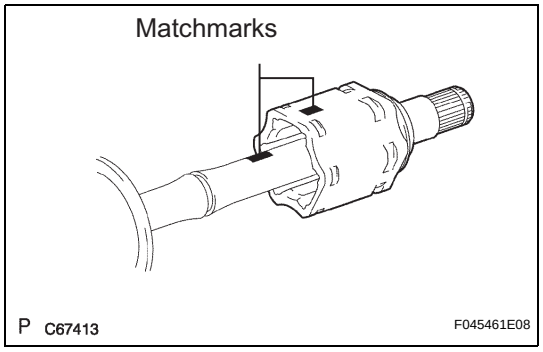

(b) Put matchmarks on the inboard joint assembly and outboard joint shaft.
NOTICE:
Do not use a punch for the marks.

(c) Remove the inboard joint assembly from the outboard joint shaft.

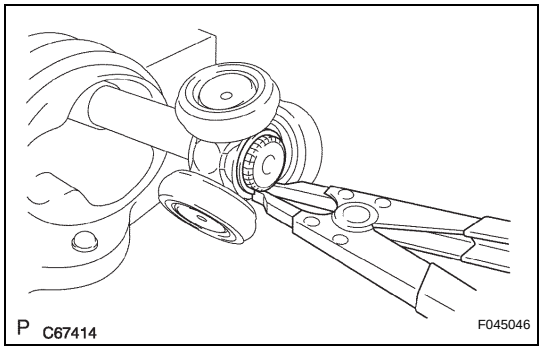

(d) Using a snap ring expander, remove the shaft snap ring.

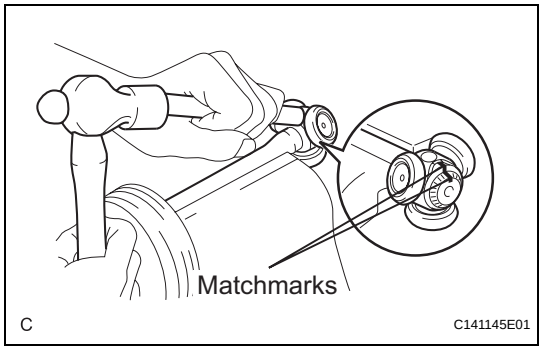

(e) Put matchmarks on the outboard joint shaft and tripod joint.
NOTICE:
Do not use a punch for the marks.

(f) Using a brass bar and a hammer, remove the tripod joint from the outboard joint shaft.
NOTICE:
Do not tap the roller.

6. REMOVE FRONT AXLE INBOARD JOINT BOOT

(a) Remove the inboard joint boot from the outboard joint shaft.

DS

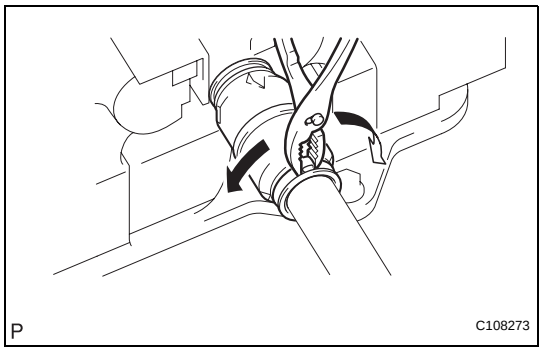

7. REMOVE FRONT DRIVE SHAFT DAMPER LH

(a) Using pliers, remove the drive shaft damper clamp as shown in the illustration.

(b) Remove the drive shaft damper.

8. REMOVE FRONT DRIVE SHAFT DAMPER RH

(a) Remove the front drive shaft damper RH.
HINT:
Perform the same procedures as for the front drive shaft damper LH.

DS

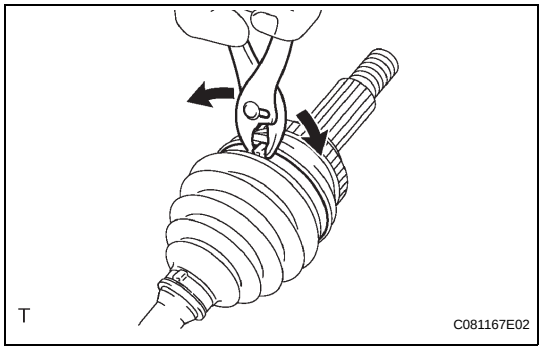

9. REMOVE NO. 2 FRONT AXLE OUTBOARD JOINT BOOT CLAMP

(a) Using pliers, remove the No. 2 front axle outboard joint boot clamp as shown in the illustration.

10. REMOVE FRONT AXLE OUTBOARD JOINT BOOT CLAMP

(a) Remove the front axle outboard joint boot clamp.
HINT:
Perform the same procedures as for the No. 2 front axle outboard joint boot clamp.

11. REMOVE FRONT AXLE OUTBOARD JOINT BOOT

(a) Remove the outboard joint boot from the outboard joint shaft.

(b) Remove the grease from the outboard joint.

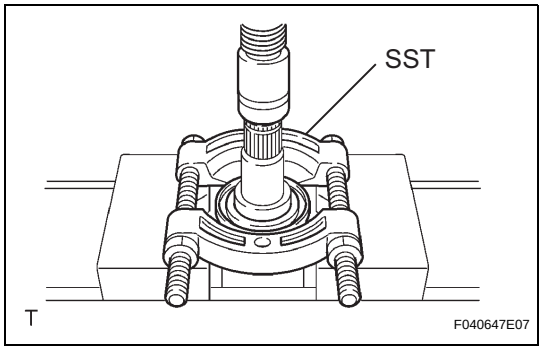

12. REMOVE FRONT DRIVE SHAFT DUST COVER LH

(a) Using SST and a press, remove the drive shaft dust cover LH.
SST 09950-00020
NOTICE:
Be careful not to drop the inboard joint assembly.

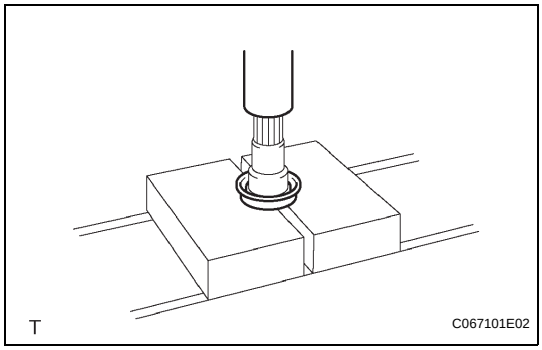

13. REMOVE FRONT DRIVE SHAFT DUST COVER RH

(a) Using a press, remove the drive shaft dust cover RH.

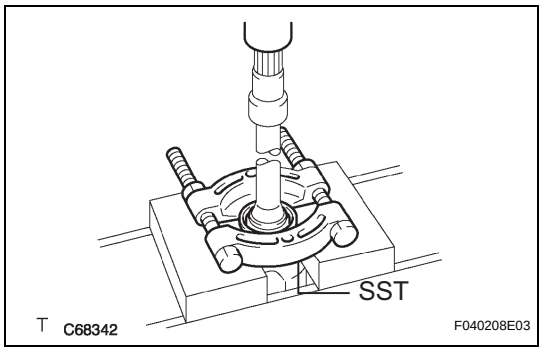

14. REMOVE FRONT DRIVE SHAFT DUST COVER

(a) Using SST and a press, remove the drive shaft dust cover.
SST 09950-00020

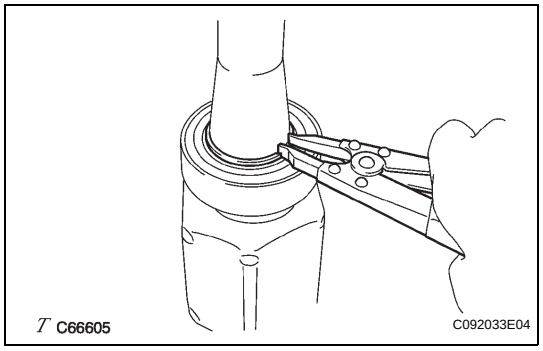

15. REMOVE FRONT DRIVE SHAFT BEARING

(a) Using a snap ring expander, remove the drive shaft hole snap ring.

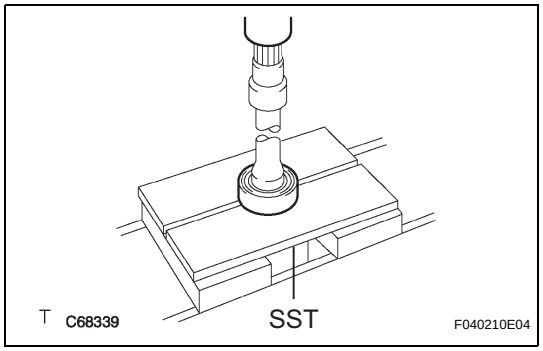

(b) Using SST and a press, remove the bearing.
SST 09527-10011

(c) Remove the bearing bracket hole snap ring.
NOTICE:
Be careful not to drop the inboard joint assembly.

INSPECTION

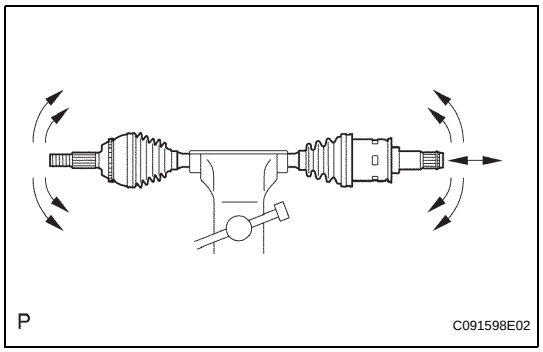

1. INSPECT FRONT DRIVE SHAFT ASSEMBLY

(a) Check that there is no excessive play in the outboard joint.
(b) Check that the inboard joint slides smoothly in the thrust direction.
(c) Check that there is no excessive play in the radial directions of the inboard joint.
(d) Check the boots for damage.

REASSEMBLY

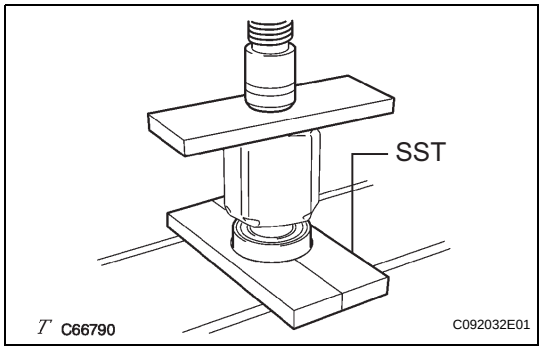

1. INSTALL FRONT DRIVE SHAFT BEARING

(a) Install a new bearing bracket hole snap ring to the front drive shaft assembly RH.
(b) Using SST and a steel plate, install a new front drive shaft bearing.
SST 09527-30010, 09527-10011
NOTICE:
Bearing should be completely installed.

DS

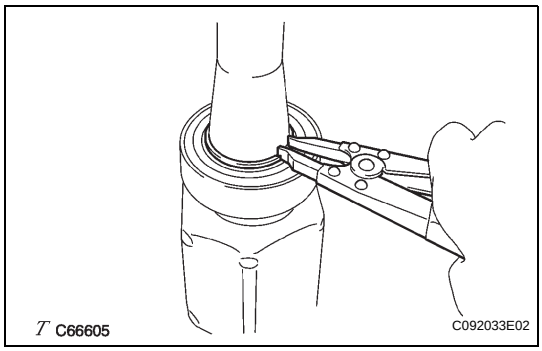

(c) Using a snap ring expander, install a new drive shaft hole snap ring.

DS

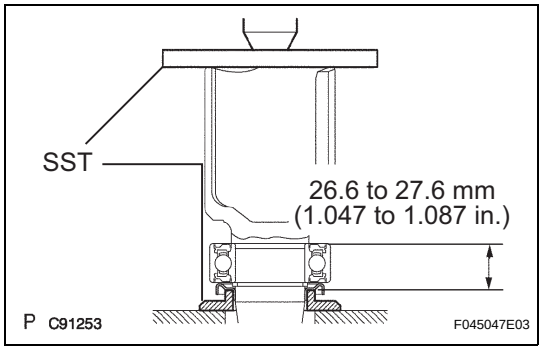

2. INSTALL FRONT DRIVE SHAFT DUST COVER

(a) Using SST and a press, install a new drive shaft dust cover.
SST 09726-40010, 09527-10011
NOTICE:
- **The dust cover should be completely installed.**
- **Be careful not to damage the dust cover.**

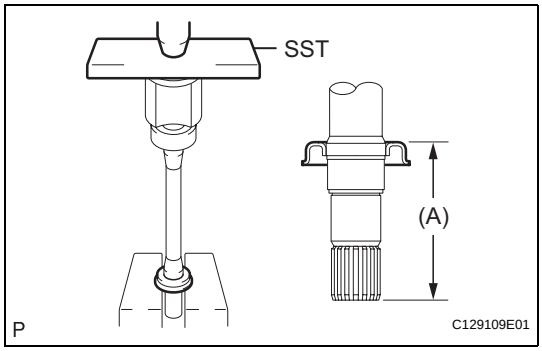

3. INSTALL FRONT DRIVE SHAFT DUST COVER RH

(a) Using SST and a press, install a new drive shaft dust cover RH until distance (A) from the tip of the center drive shaft to the drive shaft dust cover RH meets the specification.
SST 09527-10011

Engine type	Distance (A)
2GR-FE	110.0 to 111.0 mm (4.3307 to 4.3701 in.)
2AZ-FE	91.0 to 92.0 mm (3.5827 to 3.6220 in.)

NOTICE:
- **The dust cover should be completely installed.**
- **Be careful not to damage the dust cover.**

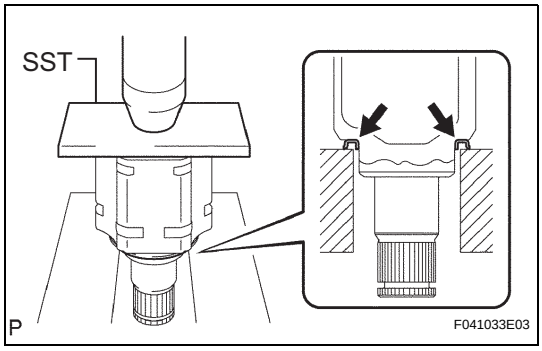

4. INSTALL FRONT DRIVE SHAFT DUST COVER LH

(a) Using SST and a press, install a new drive shaft dust cover LH.
SST 09527-10011
NOTICE:
- **The dust cover should be completely installed.**
- **Be careful not to damage the dust cover.**

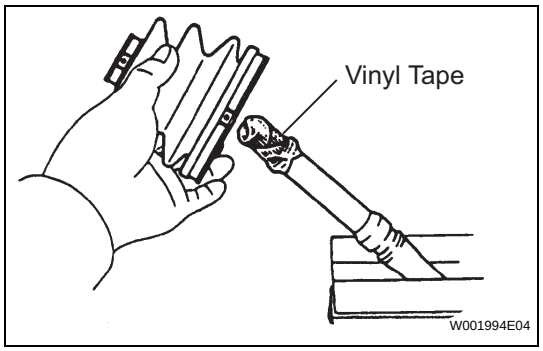

5. INSTALL FRONT AXLE OUTBOARD JOINT BOOT

(a) Hold the drive shaft lightly in a vise between aluminium plates.
HINT:
Before installing the boots, wrap the spline of the drive shaft with vinyl tape to prevent the boots from being damaged.

(b) Temporarily install a new outboard joint boot to the drive shaft with the 2 clamps.

(c) Coat the outboard joint shaft and boot with grease.

Engine type	Grease capacity
2GR-FE	164 to 184 g (5.8 to 6.5 oz.)
2AZ-FE	100 to 120 g (3.5 to 4.2 oz.)

DS

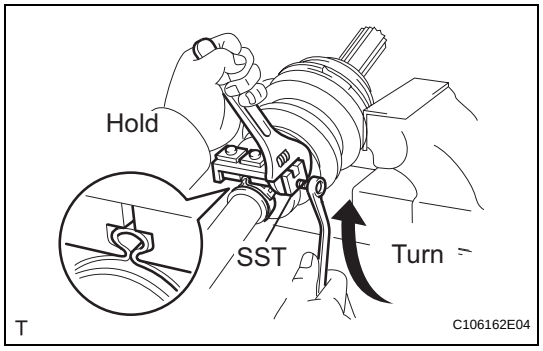

6. INSTALL FRONT AXLE OUTBOARD JOINT BOOT CLAMP

(a) Hold the drive shaft lightly in a vise between aluminum plates.
NOTICE:
Do not overtighten the vise.

(b) Install the 2 outboard joint boot clamps onto the boot.

(c) Place SST onto the outboard joint boot clamp.
SST 09521-24010

(d) Tighten the SST so that the outboard joint boot clamp is pinched.
NOTICE:
Do not overtighten the SST.

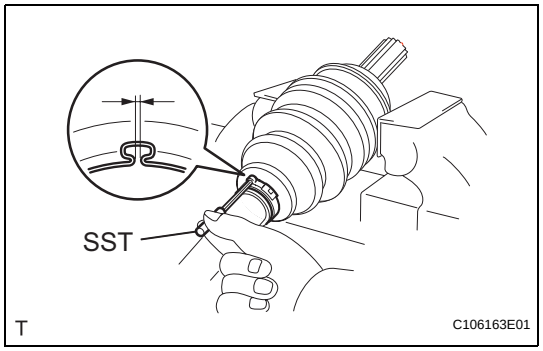

(e) Using SST, measure the clearance of the outboard joint boot clamp.
SST 09240-00020
Clearance:
0.5 to 1.5 mm (0.0197 to 0.0591 in.)
NOTICE:
If the measured value is greater than the specified value, retighten the clamp.

7. INSTALL NO. 2 FRONT AXLE OUTBOARD JOINT BOOT CLAMP

(a) Install the No. 2 outboard joint boot clamp onto the boot.

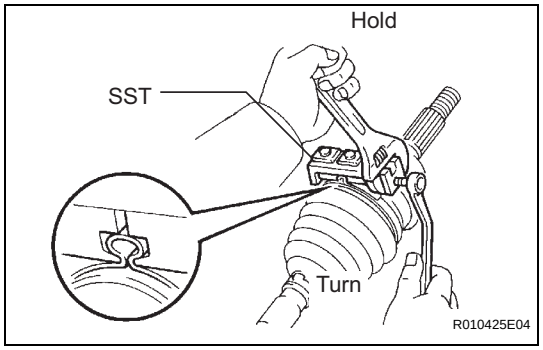

(b) Place SST onto the No. 2 outboard joint boot clamp.
SST 09521-24010

(c) Tighten the SST so that the No. 2 outboard joint boot clamp is pinched.
NOTICE:
Do not overtighten the SST.

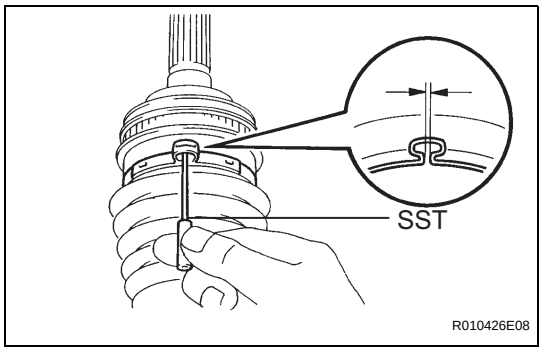

(d) Using SST, measure the clearance of the No. 2 outboard joint boot clamp.
SST 09240-00020
Clearance:
0.5 to 1.5 mm (0.0197 to 0.0591 in.)
NOTICE:
If the measured value is greater than the specified value, retighten the clamp.

DS

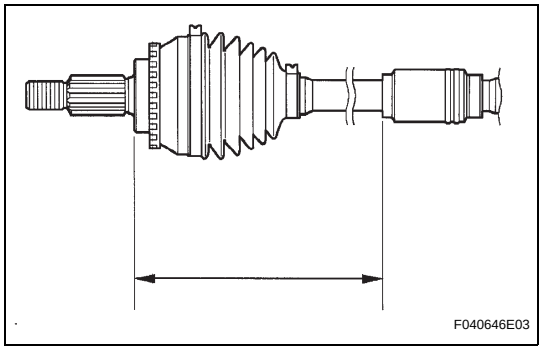

8. INSTALL FRONT DRIVE SHAFT DAMPER LH

(a) Install the drive shaft damper to the drive shaft.
(b) Make sure that the damper is on the shaft groove.
(c) Set the distance as specified below.
Distance:
228.0 to 232.0 mm (8.976 to 9.134 in.)
(d) Install the drive shaft damper clamp onto the drive shaft damper.
NOTICE:
Be sure to install the clamp in the correct position.

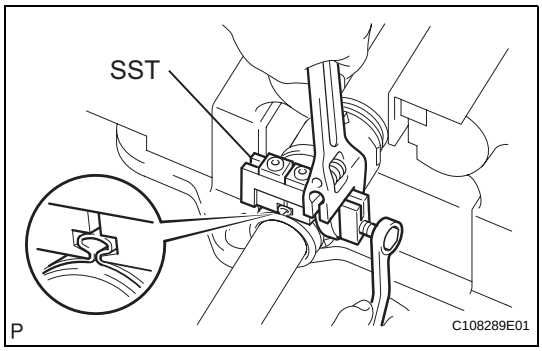

(e) Place SST onto the drive shaft damper clamp.
SST 09521-24010
(f) Tighten the SST so that the clamp is pinched.
NOTICE:
Do not overtighten the SST.

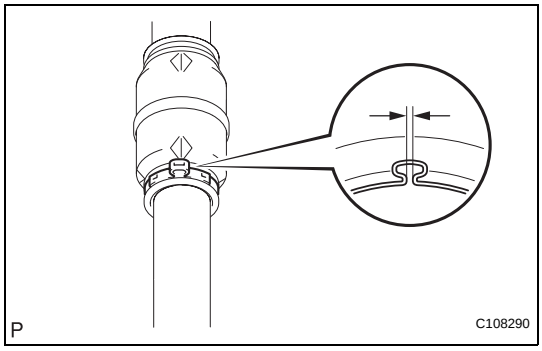

(g) Using SST, measure the clearance of the drive shaft damper clamp.
SST 09240-00020
Clearance:
0.5 to 1.5 mm (0.0197 to 0.0591 in.)
NOTICE:
If the measured value is greater than the specified value, retighten the clamp.

9. INSTALL FRONT DRIVE SHAFT DAMPER RH

(a) Install the front drive shaft damper RH.
HINT:
Perform the same procedures as for the front drive shaft damper LH.

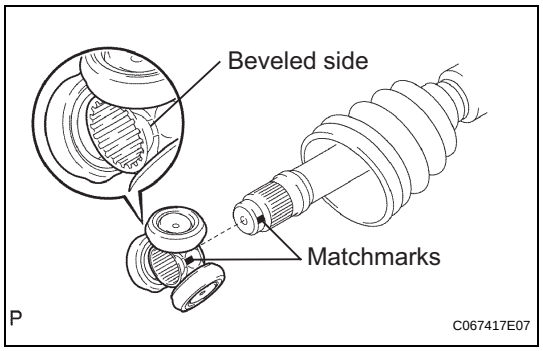

10. INSTALL FRONT DRIVE INBOARD JOINT ASSEMBLY

(a) Temporarily install a new inboard joint boot to the drive shaft with the 2 clamps.

(b) Place the beveled side of the tripod joint axial spline toward the outboard joint shaft.

(c) Align the matchmarks.

(d) Using a brass bar and hammer, tap in the tripod joint to the outboard joint shaft.

NOTICE:

- **Do not tap the roller.**
- **Be sure to install the tripod joint assembly in the correct direction.**

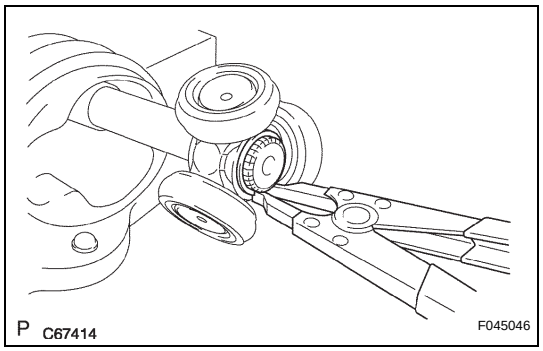

(e) Using a snap ring expander, install a new shaft snap ring.

(f) Coat the outboard joint shaft and boot with grease.

Engine type	Grease capacity
2GR-FE	155 to 175 g (5.5 to 6.2 oz.)
2AZ-FE	170 to 190 g (6.0 to 6.7 oz.)

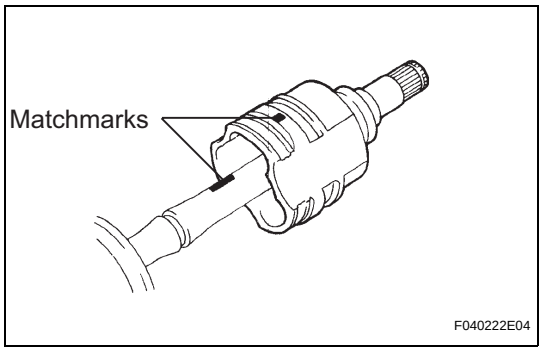

(g) Align the matchmarks and install the inboard joint assembly to the outboard joint shaft assembly.

11. INSTALL FRONT AXLE INBOARD JOINT BOOT

(a) Install the inboard joint boot to the inboard joint assembly.

DS

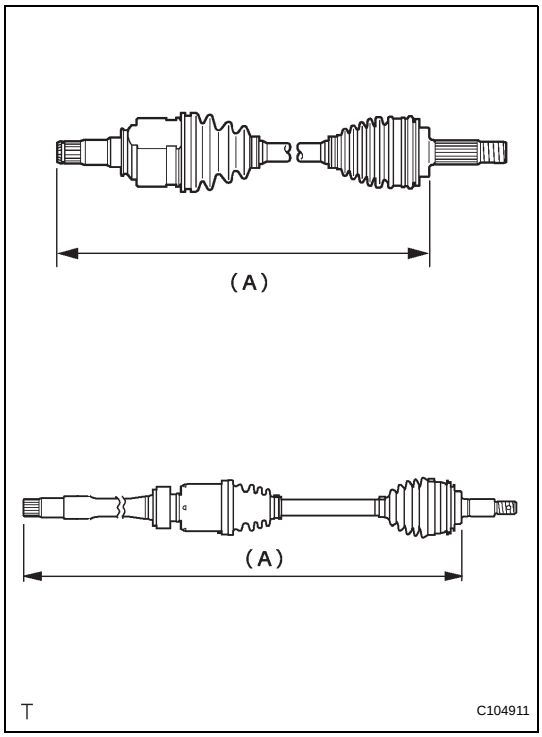

(b) Check whether the drive shaft dimensions are within the following specifications.
HINT:
The following table shows dimension (A) of the drive shaft.
Dimension (A)

Engine Type	LH	RH
2GR-FE	585.5 to 589.5 mm (23.05 to 23.21 in.)	904.4 to 908.4 mm (35.61 to 35.76 in.)
2AZ-FE	598.0 to 602.0 mm (23.54 to 23.70 in.)	897.0 to 901.0 mm (35.32 to 35.47 in.)

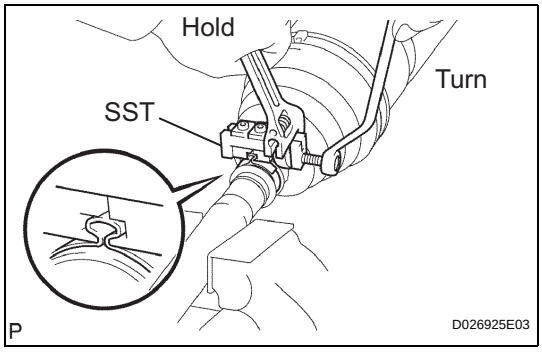

12. INSTALL FRONT AXLE INBOARD JOINT BOOT CLAMP

(a) Hold the drive shaft lightly in a vise between aluminum plates.
NOTICE:
Do not overtighten the vise.

(b) Install the 2 inboard joint boot clamps onto the boot.

(c) Place SST onto the inboard joint boot clamp.
SST 09521-24010

(d) Tighten the SST so that the inboard joint boot clamp is pinched.
NOTICE:
Do not overtighten the SST.

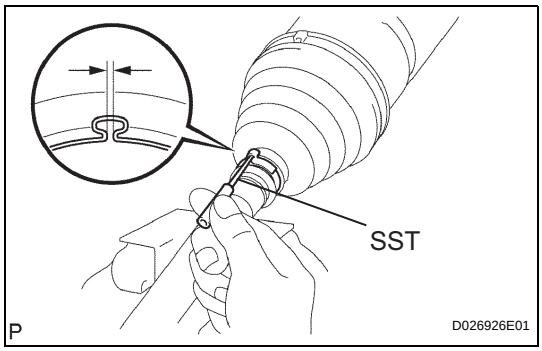

(e) Using SST, measure the clearance of the inboard joint boot clamp.
SST 09240-00020
Clearance:
0.5 to 1.5 mm (0.0197 to 0.0591 in.)
NOTICE:
If the measured value is greater than the specified value, retighten the clamp.

13. INSTALL NO. 2 FRONT AXLE INBOARD JOINT BOOT CLAMP

(a) Hold the inboard joint shaft assembly in a vise between aluminium plates.
NOTICE:
Do not overtighten the vise.

(b) Install the No. 2 front axle inboard joint boot clamp onto the boot.

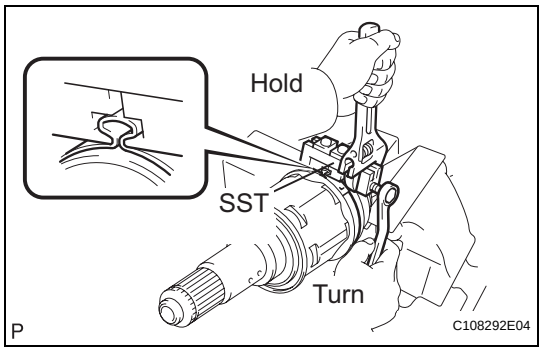

(c) Place SST onto the No. 2 front axle inboard joint boot clamp.
SST 09521-24010

(d) Tighten the SST so that the No. 2 front axle inboard joint boot clamp is pinched.
NOTICE:
Do not overtighten the SST.

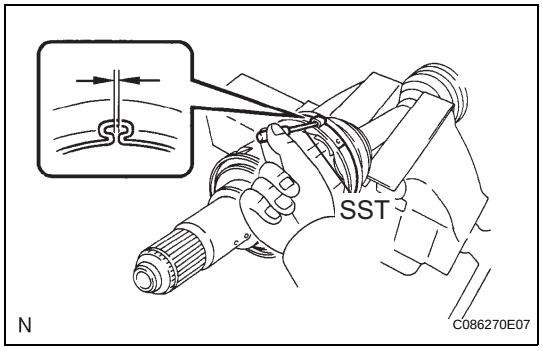

(e) Using SST, measure the clearance of the No. 2 front axle inboard joint boot clamp.
SST 09240-00020
Clearance:
0.5 to 1.5 mm (0.0197 to 0.0591 in.)
NOTICE:
If the measured value is greater than the specified value, retighten the clamp.

14. INSTALL FRONT DRIVE SHAFT LH HOLE SNAP RING

(a) Install a new hole snap ring.

15. INSPECT FRONT DRIVE SHAFT ASSEMBLY (See page DS-29)

DS

INSTALLATION

1. **INSTALL FRONT DRIVE SHAFT ASSEMBLY LH (See page DS-20)**
2. **INSTALL FRONT DRIVE SHAFT ASSEMBLY RH (See page DS-21)**
3. **INSTALL FRONT AXLE ASSEMBLY (See page DS-21)**
4. **INSTALL FRONT SUSPENSION LOWER NO. 1 ARM (See page DS-21)**
5. **INSTALL TIE ROD END SUB-ASSEMBLY (See page DS-21)**
6. **INSTALL FRONT SPEED SENSOR (See page DS-21)**
7. **INSTALL FRONT STABILIZER LINK ASSEMBLY (See page DS-22)**
8. **INSTALL FRONT AXLE HUB NUT (See page DS-22)**
9. **INSTALL FRONT WHEEL**
   Torque: 103 N*m (1,050 kgf*cm, 76 ft.*lbf)
10. **ADD AUTOMATIC TRANSAXLE FLUID (for Automatic Transaxle)**
    (a) for 2GR-FE: See page AX-164
    (b) for 2AZ-FE: See page AX-175
11. **ADD MANUAL TRANSAXLE OIL (for Manual Transaxle) (See page MX-6)**
12. **INSPECT AUTOMATIC TRANSAXLE FLUID (for 2AZ-FE Automatic Transaxle) (See page AX-123)**
13. **INSPECT MANUAL TRANSAXLE OIL (for Manual Transaxle) (See page MX-2)**
14. **ADJUST FRONT WHEEL ALIGNMENT**
    HINT:
    See page SP-4
15. **CHECK ABS SPEED SENSOR SIGNAL**
    (a) ABS: See page BC-11
    (b) VSC (for BOSCH): See page BC-290
    (c) VSC (for ADVICS): See page BC-123