SECTION BL

BODY, LOCK & SECURITY SYSTEM

CONTENTS

PRECAUTIONS 4
Precautions for Supplemental Restraint System (SRS) “AIR BAG” and “SEAT BELT PRE-TENSIONER” 4
Precautions for work 4
PREPARATION 5
Special Service Tool 5
Commercial Service Tool 5
SQUEAK AND RATTLE TROUBLE DIAGNOSES..... 6
Work Flow 6
CUSTOMER INTERVIEW 6
DUPLICATE THE NOISE AND TEST DRIVE 7
CHECK RELATED SERVICE BULLETINS 7
LOCATE THE NOISE AND IDENTIFY THE ROOT CAUSE 7
REPAIR THE CAUSE 7
CONFIRM THE REPAIR 8
Generic Squeak and Rattle Troubleshooting 8
INSTRUMENT PANEL 8
CENTER CONSOLE 8
DOORS 8
TRUNK 9
SUNROOF/HEADLINING 9
OVERHEAD CONSOLE (FRONT AND REAR)..... 9
SEATS 9
UNDERHOOD 9
Diagnostic Worksheet 10
HOOD 12
Fitting Adjustment 12
FRONT END HEIGHT ADJUSTMENT AND LATERAL/LONGITUDINAL CLEARANCE ADJUSTMENT 12
SURFACE HEIGHT ADJUSTMENT 12
Removal and Installation of Hood Assembly 14
Removal and Installation of Hood Lock Control 15
REMOVAL 15
INSTALLATION 15
Hood Lock Control Inspection 16
POWER DOOR LOCK SYSTEM 17
Component Parts and Harness Connector Location.. 17
System Description 18
WITH LEFT FRONT ONLY FRONT POWER WINDOW ANTI-PINCH SYSTEM 18
WITH LEFT AND RIGHT FRONT POWER WINDOW ANTI-PINCH SYSTEM 18
OUTLINE 18
KEY–TRAP PREVENTIVE FUNCTION 19
Schematic 20
Wiring Diagram — D/LOCK — 21
..... 21
..... 22
..... 23
..... 24
Terminals and Reference Value for BCM 25
Work Flow 25
CONSULT–II Function (BCM) 26
CONSULT–II BASIC OPERATION PROCEDURE 26
DATA MONITOR 28
ACTIVE TEST 28
Symptom Chart 29
BCM Power Supply and Ground Circuit Check 29
Door Switch Check 31
Key Switch (Insert) Check 33
Door Lock/Unlock Switch Check (With left front only power window anti–pinch system) 34
Door Lock/Unlock Switch Check (With left and right front power window anti–pinch system) 37
Front Door Lock Assembly LH (Actuator) Check ... 39
Door Lock Actuator Check (Front RH and Rear LH/RH) 40
Front Door Lock Assembly LH (Key Cylinder Switch) Check (With left front only power window anti-pinch system) 41
Door Lock/Unlock Switch Check (With left and right front power window anti–pinch system) 42
Power Window and Door Lock/Unlock Switch RH (With left and right front power window anti–pinch system) 44
Front Door Lock Assembly LH (Key Cylinder Switch)

Check (With left and right front power window anti–pinch system) 45
REMOTE KEYLESS ENTRY SYSTEM 47
Component Parts and Harness Connector Location.. 47
System Description 48
INPUTS 48
OPERATED PROCEDURE 48
CAN Communication System Description 49
Schematic 50
Wiring Diagram — KEYLES — 51
..... 51
..... 52
..... 53
..... 54
Terminals and Reference Value for BCM 55
CONSULT-II Function (BCM) 56
CONSULT-II Inspection Procedure 56
“MULTI REMOTE ENT” 56
CONSULT-II Application Items 57
“MULTI REMOTE ENT” 57
Trouble Diagnosis Procedure 59
BCM Power Supply and Ground Circuit Check 59
Trouble Diagnoses 60
SYMPTOM CHART 60
Keyfob Battery and Function Check 62
Door Switch Check 63
Key Switch (Insert) Check 65
Trunk Release Solenoid Check 66
Check Hazard Function 68
Check Horn Function 68
Check Headlamp Function 68
Check Room Lamp, Step Lamp and Ignition Key Illumination Function 68
ID Code Entry Procedure 69
KEYFOB ID SET UP WITH CONSULT-II 69
KEYFOB ID SET UP WITHOUT CONSULT-II 71
Keyfob Battery Replacement 72
DOOR 73
Fitting Adjustment 73
FRONT DOOR 73
REAR DOOR 73
STRIKER ADJUSTMENT 74
Removal and Installation 74
Door Weatherstrip 75
FRONT DOOR LOCK 76
Component Structure 76
Inspection and Adjustment 76
EXTERIOR HANDLE ROD ADJUSTMENT 76
Removal and Installation 76
REMOVAL 76
Disassembly and Assembly 77
DISASSEMBLY 77
ASSEMBLY 77
REAR DOOR LOCK 78
Components 78
Inspection and Adjustment 78
EXTERIOR HANDLE ROD ADJUSTMENT 78
Removal and Installation of Door Lock 78
REMOVAL 78
Disassembly and Assembly 79
DISASSEMBLY 79
ASSEMBLY 79
TRUNK LID 80
Fitting Adjustment 80
LONGITUDINAL AND LATERAL CLEARANCE ADJUSTMENT 81
SURFACE HEIGHT ADJUSTMENT 81
Removal and Installation of Trunk Lid Assembly 81
Removal and Installation of Trunk Lid Lock 81
LOCK REMOVAL 81
STRIKER REMOVAL 82
LOCK AND STRIKER INSTALLATION 82
Removal and Installation of Trunk Lid Weatherstrip.. 82
TRUNK LID OPENER 83
Wiring Diagram — TLID — 83
Terminals and Reference Value for BCM 84
VEHICLE SECURITY (THEFT WARNING) SYSTEM.. 85
Component Parts and Harness Connector Location.. 85
System Description 87
DESCRIPTION 87
POWER SUPPLY 87
INITIAL CONDITION TO ACTIVATE THE SYSTEM 87
VEHICLE SECURITY SYSTEM ALARM OPERATION 87
VEHICLE SECURITY SYSTEM DEACTIVATION.. 88
PANIC ALARM OPERATION 88
CAN Communication System Description 88
Schematic 89
Wiring Diagram — VEHSEC — 90
..... 90
..... 91
..... 92
..... 93
Terminals and Reference Value for BCM 94
Terminals and Reference Value for IPDM E/R 94
CONSULT-II Function (BCM) 95
CONSULT-II INSPECTION PROCEDURE 95
CONSULT-II APPLICATION ITEM 97
Trouble Diagnosis 98
WORK FLOW 98
Preliminary Check 99
Symptom Chart 100
BCM Power Supply and Ground Circuit Check 101
Door Switch Check 102
TRUNK LAMP SWITCH AND TRUNK RELEASE SOLENOID SWITCH CHECK 104
TRUNK KEY CYLINDER SWITCH (UNLOCK SWITCH) SIGNAL 105
SECURITY INDICATOR LAMP CHECK 106
FRONT DOOR LOCK ASSEMBLY LH (KEY CYLINDER SWITCH) CHECK 107
VEHICLE SECURITY HORN ALARM CHECK 107
VEHICLE SECURITY HEADLAMP ALARM CHECK 107
DOOR LOCK/UNLOCK SWITCH CHECK 107
NVIS(NISSAN VEHICLE IMMOBILIZER SYSTEM-

NATS) 108
Component Parts and Harness Connector Location 108
System Description 109
System Composition 109
ECM Re-communicating Function 110
Wiring Diagram — NATS — 111
Terminals and Reference Value for BCM 112
CONSULT-II 112
CONSULT-II INSPECTION PROCEDURE 112
CONSULT-II DIAGNOSTIC TEST MODE FUNCTION 113
HOW TO READ SELF-DIAGNOSTIC RESULTS 114
NVIS (NATS) SELF-DIAGNOSTIC RESULTS ITEM CHART 114
Work Flow 115
Trouble Diagnoses 116
SYMPTOM MATRIX CHART 1 116
SYMPTOM MATRIX CHART 2 117
DIAGNOSTIC SYSTEM DIAGRAM 117
Diagnostic Procedure 1 118
Diagnostic Procedure 2 119
Diagnostic Procedure 3 120
Diagnostic Procedure 4 121
Diagnostic Procedure 5 122
Diagnostic Procedure 6 125
How to Replace NVIS (NATS) IMMU 126
HOMELINK UNIVERSAL TRANSCEIVER 127
Wiring Diagram — TRNSCV — 127
Trouble Diagnoses 128
DIAGNOSTIC PROCEDURE 128
BODY REPAIR 129
Body Exterior Paint Color 129
Body Component Parts 130
UNDERBODY COMPONENT PARTS 130
BODY COMPONENT PARTS 132
Corrosion Protection 134
DESCRIPTION 134
ANTI-CORROSIVE WAX 135
UNDERCOATING 136
Body Sealing 137
DESCRIPTION 137
Body Construction 140
BODY CONSTRUCTION 140
Body Alignment 141
BODY CENTER MARKS 141
PANEL PARTS MATCHING MARKS 142
DESCRIPTION 143
ENGINE COMPARTMENT 144
UNDERBODY 146
PASSENGER COMPARTMENT 148
REAR BODY 150
Handling Precautions for Plastics 152
HANDLING PRECAUTIONS FOR PLASTICS 152
LOCATION OF PLASTIC PARTS 153
Precautions in Repairing High Strength Steel 155
HIGH STRENGTH STEEL (HSS) USED IN NISSAN VEHICLES 155
Foam Repair 157
URETHANE FOAM APPLICATIONS 157
FILL PROCEDURES 157
Replacement Operations 158
DESCRIPTION 158
HOODLEDGE 161
HOODLEDGE (PARTIAL REPLACEMENT) 162
FRONT SIDE MEMBER 163
FRONT SIDE MEMBER (PARTIAL REPLACEMENT) 165
FRONT PILLAR 166
CENTER PILLAR 169
OUTER SILL 170
REAR FENDER 171
REAR PANEL 172
REAR FLOOR REAR 173
REAR SIDE MEMBER EXTENSION 174

PRECAUTIONS

PFP:00001

Precautions for Supplemental Restraint System (SRS) “AIR BAG” and “SEAT BELT PRE-TENSIONER”

EIS003H8

The Supplemental Restraint System such as “AIR BAG” and “SEAT BELT PRE-TENSIONER”, used along with a front seat belt, helps to reduce the risk or severity of injury to the driver and front passenger for certain types of collision. This system includes seat belt switch inputs and dual stage front air bag modules. The SRS system uses the seat belt switches to determine the front air bag deployment, and may only deploy one front air bag, depending on the severity of a collision and whether the front occupants are belted or unbelted.
Information necessary to service the system safely is included in the SRS and SB section of this Service Manual.

WARNING:

- **To avoid rendering the SRS inoperative, which could increase the risk of personal injury or death in the event of a collision which would result in air bag inflation, all maintenance must be performed by an authorized NISSAN/INFINITI dealer.**
- **Improper maintenance, including incorrect removal and installation of the SRS, can lead to personal injury caused by unintentional activation of the system. For removal of Spiral Cable and Air Bag Module, see the SRS section.**
- **Do not use electrical test equipment on any circuit related to the SRS unless instructed to in this Service Manual. SRS wiring harnesses can be identified by yellow and/or orange harnesses or harness connectors.**

Precautions for work

EIS003H9

- After removing and installing the opening/closing parts, be sure to carry out fitting adjustments to check their operation.
- Check the lubrication level, damage, and wear of each part. If necessary, grease or replace it.

PREPARATION

PFP:00002

Special Service Tool

EIS003HB

The actual shapes of Kent-Moore tools may differ from those of special service tools illustrated here.

Tool number (Kent-Moore No.) Tool name		Description
— (J-39570) Chassis ear	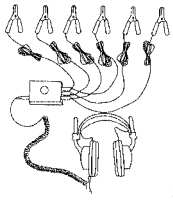 SIIA0993E	Locating the noise
— (J-43980) NISSAN Squeak and Rattle Kit	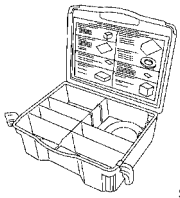 SIIA0994E	Repairing the cause of noise
— (J-43241) Remote Keyless Entry Tester	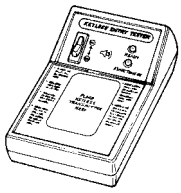 LEL946A	Used to test keyfobs

Commercial Service Tool

EIS003HC

(Kent-Moore No.) Tool name		Description
(J-39565) Engine ear	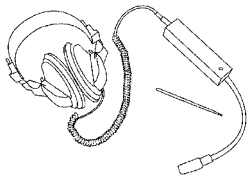 SIIA0995E	Locating the noise

SQUEAK AND RATTLE TROUBLE DIAGNOSES

PFP:00000

Work Flow

EIS00486

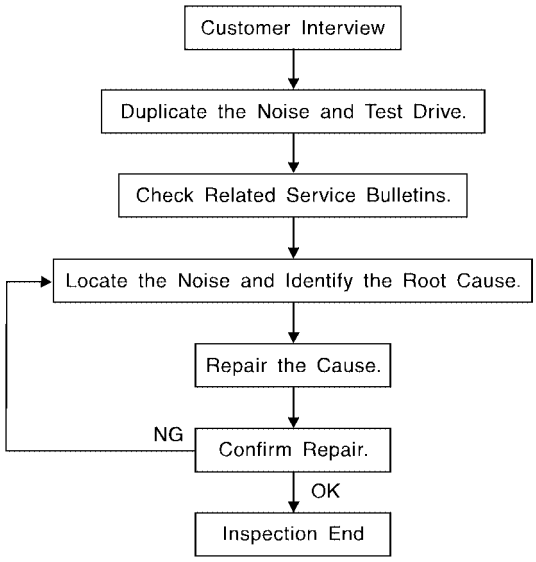

SBT842

CUSTOMER INTERVIEW

Interview the customer if possible, to determine the conditions that exist when the noise occurs. Use the Diagnostic Worksheet during the interview to document the facts and conditions when the noise occurs and any customer's comments; refer to BL-10, "Diagnostic Worksheet" . This information is necessary to duplicate the conditions that exist when the noise occurs.

- The customer may not be able to provide a detailed description or the location of the noise. Attempt to obtain all the facts and conditions that exist when the noise occurs (or does not occur).
- If there is more than one noise in the vehicle, be sure to diagnose and repair the noise that the customer is concerned about. This can be accomplished by test driving the vehicle with the customer.
- After identifying the type of noise, isolate the noise in terms of its characteristics. The noise characteristics are provided so the customer, service adviser and technician are all speaking the same language when defining the noise.
- Squeak —(Like tennis shoes on a clean floor)
  Squeak characteristics include the light contact/fast movement/brought on by road conditions/hard surfaces = higher pitch noise/softer surfaces = lower pitch noises/edge to surface = chirping.
- Creak—(Like walking on an old wooden floor)
  Creak characteristics include firm contact/slow movement/twisting with a rotational movement/pitch dependent on materials/often brought on by activity.
- Rattle—(Like shaking a baby rattle)
  Rattle characteristics include the fast repeated contact/vibration or similar movement/loose parts/missing clip or fastener/incorrect clearance.
- Knock —(Like a knock on a door)
  Knock characteristics include hollow sounding/sometimes repeating/often brought on by driver action.
- Tick—(Like a clock second hand)
  Tick characteristics include gentle contacting of light materials/loose components/can be caused by driver action or road conditions.
- Thump—(Heavy, muffled knock noise)
  Thump characteristics include softer knock/dead sound often brought on by activity.
- Buzz—(Like a bumble bee)
  Buzz characteristics include high frequency rattle/firm contact.
- Often the degree of acceptable noise level will vary depending upon the person. A noise that you may judge as acceptable may be very irritating to the customer.
- Weather conditions, especially humidity and temperature, may have a great effect on noise level.

DUPLICATE THE NOISE AND TEST DRIVE

If possible, drive the vehicle with the customer until the noise is duplicated. Note any additional information on the Diagnostic Worksheet regarding the conditions or location of the noise. This information can be used to duplicate the same conditions when you confirm the repair.

If the noise can be duplicated easily during the test drive, to help identify the source of the noise, try to duplicate the noise with the vehicle stopped by doing one or all of the following:

1) Close a door.
2) Tap or push/pull around the area where the noise appears to be coming from.
3) Rev the engine.
4) Use a floor jack to recreate vehicle “twist”.
5) At idle, apply engine load (electrical load, half-clutch on M/T model, drive position on A/T model).
6) Raise the vehicle on a hoist and hit a tire with a rubber hammer.

- Drive the vehicle and attempt to duplicate the conditions the customer states exist when the noise occurs.
- If it is difficult to duplicate the noise, drive the vehicle slowly on an undulating or rough road to stress the vehicle body.

CHECK RELATED SERVICE BULLETINS

After verifying the customer concern or symptom, check ASIST for Technical Service Bulletins (TSBs) related to that concern or symptom.

If a TSB relates to the symptom, follow the procedure to repair the noise.

LOCATE THE NOISE AND IDENTIFY THE ROOT CAUSE

1. Narrow down the noise to a general area.To help pinpoint the source of the noise, use a listening tool (Chassis Ear: J-39570, Engine Ear: J-39565 and mechanic's stethoscope).
2. Narrow down the noise to a more specific area and identify the cause of the noise by:

- removing the components in the area that you suspect the noise is coming from.
  Do not use too much force when removing clips and fasteners, otherwise clips and fasteners can be broken or lost during the repair, resulting in the creation of new noise.
- tapping or pushing/pulling the component that you suspect is causing the noise.
  Do not tap or push/pull the component with excessive force, otherwise the noise will be eliminated only temporarily.
- feeling for a vibration with your hand by touching the component(s) that you suspect is (are) causing the noise.
- placing a piece of paper between components that you suspect are causing the noise.
- looking for loose components and contact marks.
  Refer to BL-8, "Generic Squeak and Rattle Troubleshooting" .

REPAIR THE CAUSE

- If the cause is a loose component, tighten the component securely.
- If the cause is insufficient clearance between components:
  - separate components by repositioning or loosening and retightening the component, if possible.
  - insulate components with a suitable insulator such as urethane pads, foam blocks, felt cloth tape or urethane tape. A NISSAN Squeak and Rattle Kit (J-43980) is available through your authorized NISSAN Parts Department.

CAUTION:

Do not use excessive force as many components are constructed of plastic and may be damaged.
Always check with the Parts Department for the latest parts information.

The following materials are contained in the NISSAN Squeak and Rattle Kit (J-43980). Each item can be ordered separately as needed.

URETHANE PADS [1.5 mm (0.059 in) thick]
Insulates connectors, harness, etc.
76268-9E005: 100×135 mm (3.94×5.31 in)/76884-71L01: 60×85 mm (2.36×3.35 in)/76884-71L02: 15×25 mm (0.59×0.98 in)

INSULATOR (Foam blocks)
Insulates components from contact. Can be used to fill space behind a panel.
73982-9E000: 45 mm (1.77 in) thick, 50×50 mm (1.97×1.97 in)/73982-50Y00: 10 mm (0.39 in) thick, 50×50 mm (1.97×1.97 in)

INSULATOR (Light foam block)

80845-71L00: 30 mm (1.18 in) thick, 30×50 mm (1.18×1.97 in)
FELT CLOTH TAPE
Used to insulate where movement does not occur. Ideal for instrument panel applications.
68370-4B000: 15×25 mm (0.59×0.98 in) pad/68239-13E00: 5 mm (0.20 in) wide tape roll. The following materials not found in the kit can also be used to repair squeaks and rattles.
UHMW (TEFLON) TAPE
Insulates where slight movement is present. Ideal for instrument panel applications.
SILICONE GREASE
Used instead of UHMW tape that will be visible or not fit.
Note: Will only last a few months.
SILICONE SPRAY
Use when grease cannot be applied.
DUCT TAPE
Use to eliminate movement.

CONFIRM THE REPAIR

Confirm that the cause of a noise is repaired by test driving the vehicle. Operate the vehicle under the same conditions as when the noise originally occurred. Refer to the notes on the Diagnostic Worksheet.

Generic Squeak and Rattle Troubleshooting

EIS00487

Refer to Table of Contents for specific component removal and installation information.

INSTRUMENT PANEL

Most incidents are caused by contact and movement between:

1. The cluster lid A and instrument panel
2. Acrylic lens and combination meter housing
3. Instrument panel to front pillar garnish
4. Instrument panel to windshield
5. Instrument panel mounting pins
6. Wiring harnesses behind the combination meter
7. A/C defroster duct and duct joint

These incidents can usually be located by tapping or moving the components to duplicate the noise or by pressing on the components while driving to stop the noise. Most of these incidents can be repaired by applying felt cloth tape or silicone spray (in hard to reach areas). Urethane pads can be used to insulate wiring harness.

CAUTION:
Do not use silicone spray to isolate a squeak or rattle. If you saturate the area with silicone, you will not be able to recheck the repair.

CENTER CONSOLE

Components to pay attention to include:

1. Shifter assembly cover to finisher
2. A/C control unit and cluster lid C
3. Wiring harnesses behind audio and A/C control unit

The instrument panel repair and isolation procedures also apply to the center console.

DOORS

Pay attention to the:

1. Finisher and inner panel making a slapping noise
2. Inside handle escutcheon to door finisher
3. Wiring harnesses tapping
4. Door striker out of alignment causing a popping noise on starts and stops

Tapping or moving the components or pressing on them while driving to duplicate the conditions can isolate many of these incidents. You can usually insulate the areas with felt cloth tape or insulator foam blocks from the NISSAN Squeak and Rattle Kit (J-43980) to repair the noise.

TRUNK

Trunk noises are often caused by a loose jack or loose items put into the trunk by the owner.
In addition look for:

1. Trunk lid bumpers out of adjustment
2. Trunk lid striker out of adjustment
3. The trunk lid torsion bars knocking together
4. A loose license plate or bracket

Most of these incidents can be repaired by adjusting, securing or insulating the item(s) or component(s) causing the noise.

SUNROOF/HEADLINING

Noises in the sunroof/headlining area can often be traced to one of the following:

1. Sunroof lid, rail, linkage or seals making a rattle or light knocking noise
2. Sun visor shaft shaking in the holder
3. Front or rear windshield touching headliner and squeaking

Again, pressing on the components to stop the noise while duplicating the conditions can isolate most of these incidents. Repairs usually consist of insulating with felt cloth tape.

OVERHEAD CONSOLE (FRONT AND REAR)

Overhead console noises are often caused by the console panel clips not being engaged correctly. Most of these incidents are repaired by pushing up on the console at the clip locations until the clips engage.
In addition look for:

1. Loose harness or harness connectors.
2. Front console map/reading lamp lense loose.
3. Loose screws at console attachment points.

SEATS

When isolating seat noise it's important to note the position the seat is in and the load placed on the seat when the noise is present. These conditions should be duplicated when verifying and isolating the cause of the noise.
Cause of seat noise include:

1. Headrest rods and holder
2. A squeak between the seat pad cushion and frame
3. The rear seatback lock and bracket

These noises can be isolated by moving or pressing on the suspected components while duplicating the conditions under which the noise occurs. Most of these incidents can be repaired by repositioning the component or applying urethane tape to the contact area.

UNDERHOOD

Some interior noise may be caused by components under the hood or on the engine wall. The noise is then transmitted into the passenger compartment.
Causes of transmitted underhood noise include:

1. Any component mounted to the engine wall
2. Components that pass through the engine wall
3. Engine wall mounts and connectors
4. Loose radiator mounting pins
5. Hood bumpers out of adjustment
6. Hood striker out of adjustment

These noises can be difficult to isolate since they cannot be reached from the interior of the vehicle. The best method is to secure, move or insulate one component at a time and test drive the vehicle. Also, engine RPM or load can be changed to isolate the noise. Repairs can usually be made by moving, adjusting, securing, or insulating the component causing the noise.

Diagnostic Worksheet

EIS00488

SQUEAK & RATTLE DIAGNOSTIC WORKSHEET

Dear Nissan Customer:
We are concerned about your satisfaction with your Nissan vehicle. Repairing a squeak or rattle sometimes can be very difficult. To help us fix your Nissan right the first time, please take a moment to note the area of the vehicle where the squeak or rattle occurs and under what conditions. You may be asked to take a test drive with a service advisor or technician to ensure we confirm the noise you are hearing.

I. WHERE DOESTHE NOISE COME FROM? (circle the area of the vehicle)
The illustrations are for reference only, and may not reflect the actual configuration of your vehicle.

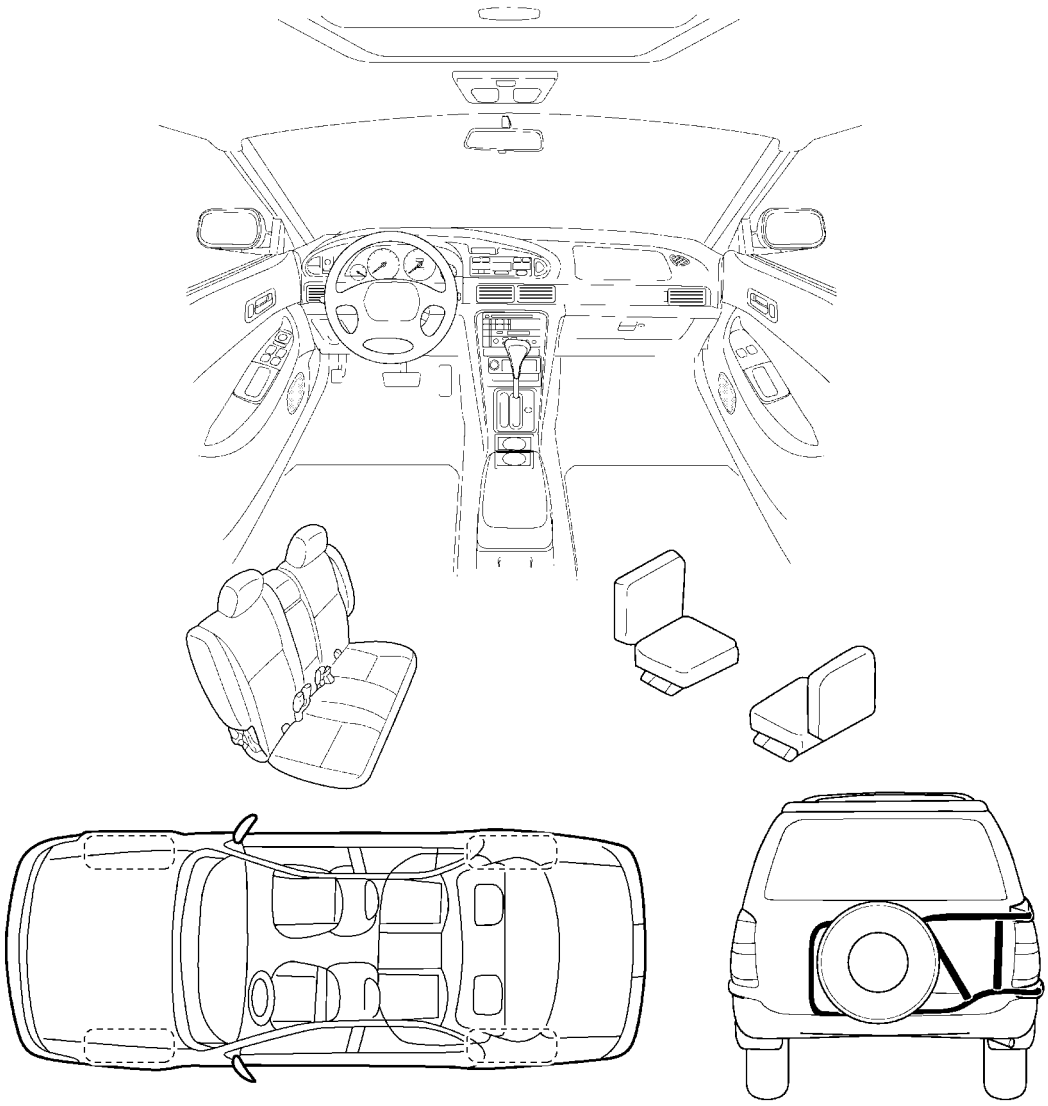

Continue to the back of the worksheet and briefly describe the location of the noise or rattle. In addition, please indicate the conditions which are present when the noise occurs.

LIWA0276E

SQUEAK & RATTLE DIAGNOSTIC WORKSHEET- page 2

Briefly describe the location where the noise occurs:

_____

_____

II. WHEN DOES IT OCCUR? (check the boxes that apply)

- ❑ anytime
- ❑ 1st time in the morning
- ❑ only when it is cold outside
- ❑ only when it is hot outside
- ❑ after sitting out in the sun
- ❑ when it is raining or wet
- ❑ dry or dusty conditions
- ❑ other: _____

III. WHEN DRIVING:

- ❑ through driveways
- ❑ over rough roads
- ❑ over speed bumps
- ❑ only at about ____ mph
- ❑ on acceleration
- ❑ coming to a stop
- ❑ on turns : left, right or either (circle)
- ❑ with passengers or cargo
- ❑ other: _____
- ❑ after driving ____ miles or ____ minutes

IV. WHAT TYPE OF NOISE?

- ❑ squeak (like tennis shoes on a clean floor)
- ❑ creak (like walking on an old wooden floor)
- ❑ rattle (like shaking a baby rattle)
- ❑ knock (like a knock on a door)
- ❑ tick (like a clock second hand)
- ❑ thump (heavy, muffled knock noise)
- ❑ buzz (like a bumble bee)

TO BE COMPLETED BY DEALERSHIP PERSONNEL
Test Drive Notes:

_____

_____

	YES	NO	Initials of person performing
Vehicle test driven with customer	❑	❑	_____
- Noise verified on test drive	❑	❑	
- Noise source located and repaired	❑	❑	_____
- Follow up test drive performed to confirm repair	❑	❑	_____

VIN: _____ Customer Name: _____

W.O. #: _____ Date: _____

SBT844

This form must be attached to Work Order

HOOD

PFP:F5100

Fitting Adjustment

EIS003HG

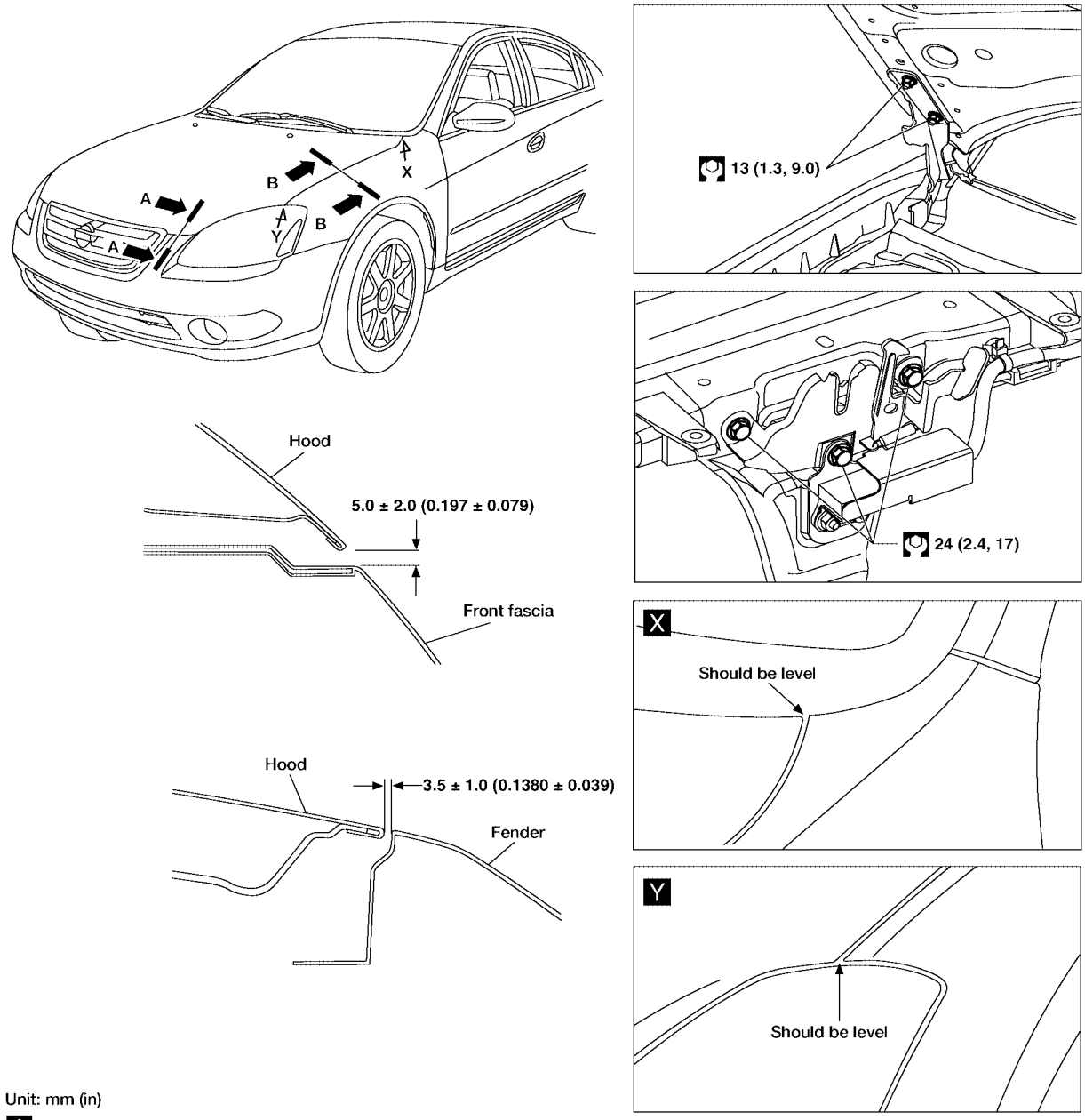

LIIA1526E

FRONT END HEIGHT ADJUSTMENT AND LATERAL/LONGITUDINAL CLEARANCE ADJUSTMENT

1. Remove the front upper grill. Refer to EI-17, "UPPER FRONT GRILLE" .
2. Loosen the hood lock and adjust the height by rotating the bumper rubber until the hood becomes 1 to 1.5 mm (0.04 to 0.059 in) higher than the fender.
3. Temporarily tighten the hood lock, and position it by engaging it with the hood striker. Check the lock and striker for looseness, and tighten the bolts to the specified torque.
4. Install the front upper grill. Refer to EI-17, "UPPER FRONT GRILLE" .

SURFACE HEIGHT ADJUSTMENT

1. Remove the front upper grill. Refer to EI-17, "UPPER FRONT GRILLE" .

2. Remove the hood lock, and adjust the surface height difference of the hood and fender according to the fitting standard dimension, by rotating RH and LH bumper rubbers.
3. Install the hood lock temporarily, and align the hood striker and lock so that the centers of striker and lock become vertical viewed from the front, by moving the hood lock laterally.
4. Check that the secondary latch is properly engaged with the secondary striker with hood's own weight by dropping it from approx. 200 mm (7.87 in) height or by pressing it lightly approx. 3 kg (29 N).

   CAUTION:
   Do not drop the hood from 300 mm (11.81 in) height or higher.
5. Move the hood lock up and down so that the striker and lock are engaged firmly with the hood closed.
6. Tighten the bolts to the specified torque.
7. Install the front upper grill. Refer to EI-17, "UPPER FRONT GRILLE" .

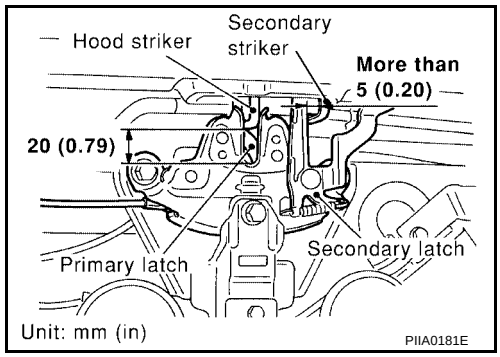

Removal and Installation of Hood Assembly

EIS003HH

SEC. 650

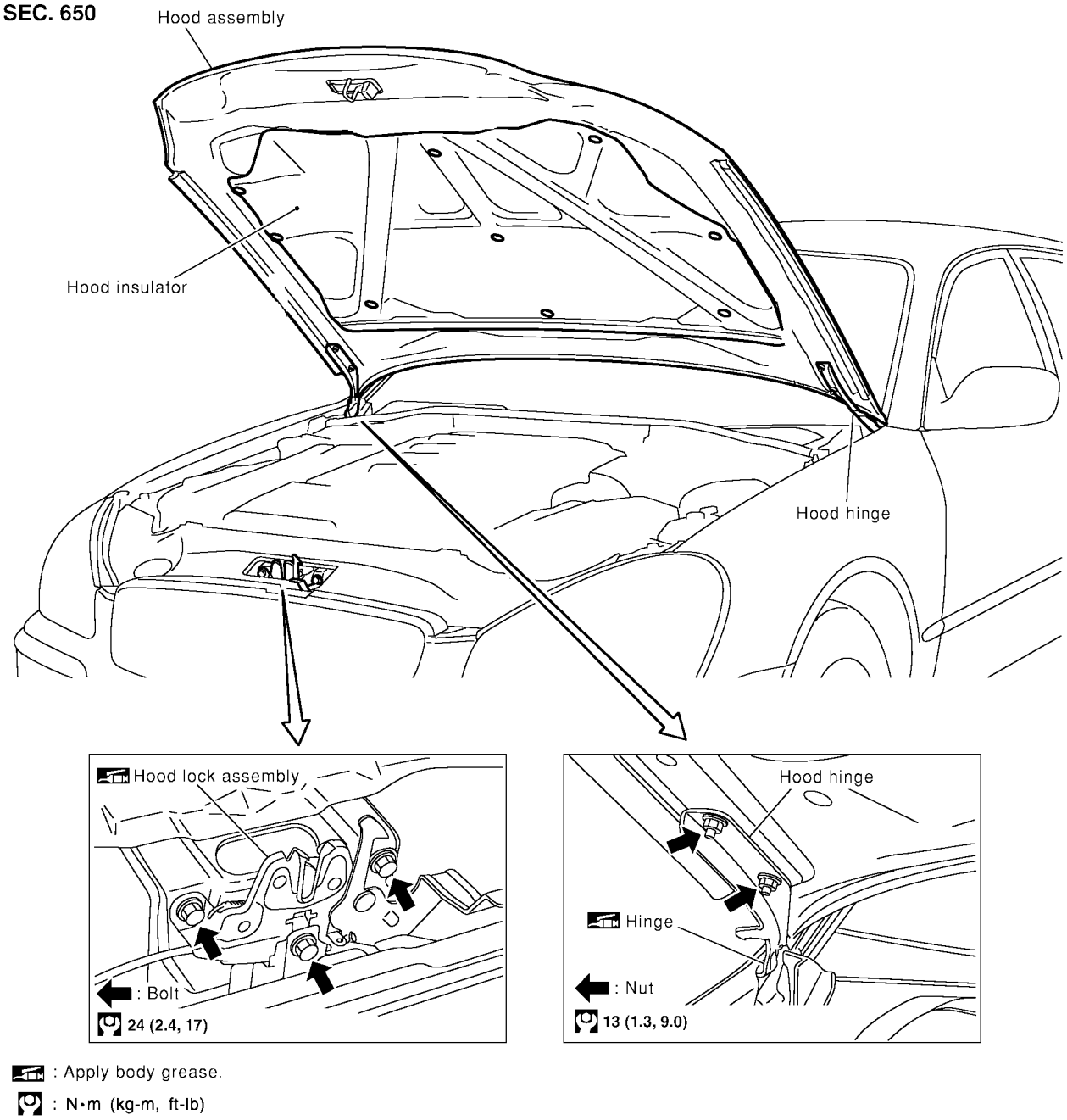

1. Remove the nuts on the hood to remove the hood assembly.

Installation is in the reverse order of removal.

Removal and Installation of Hood Lock Control

EIS003HI

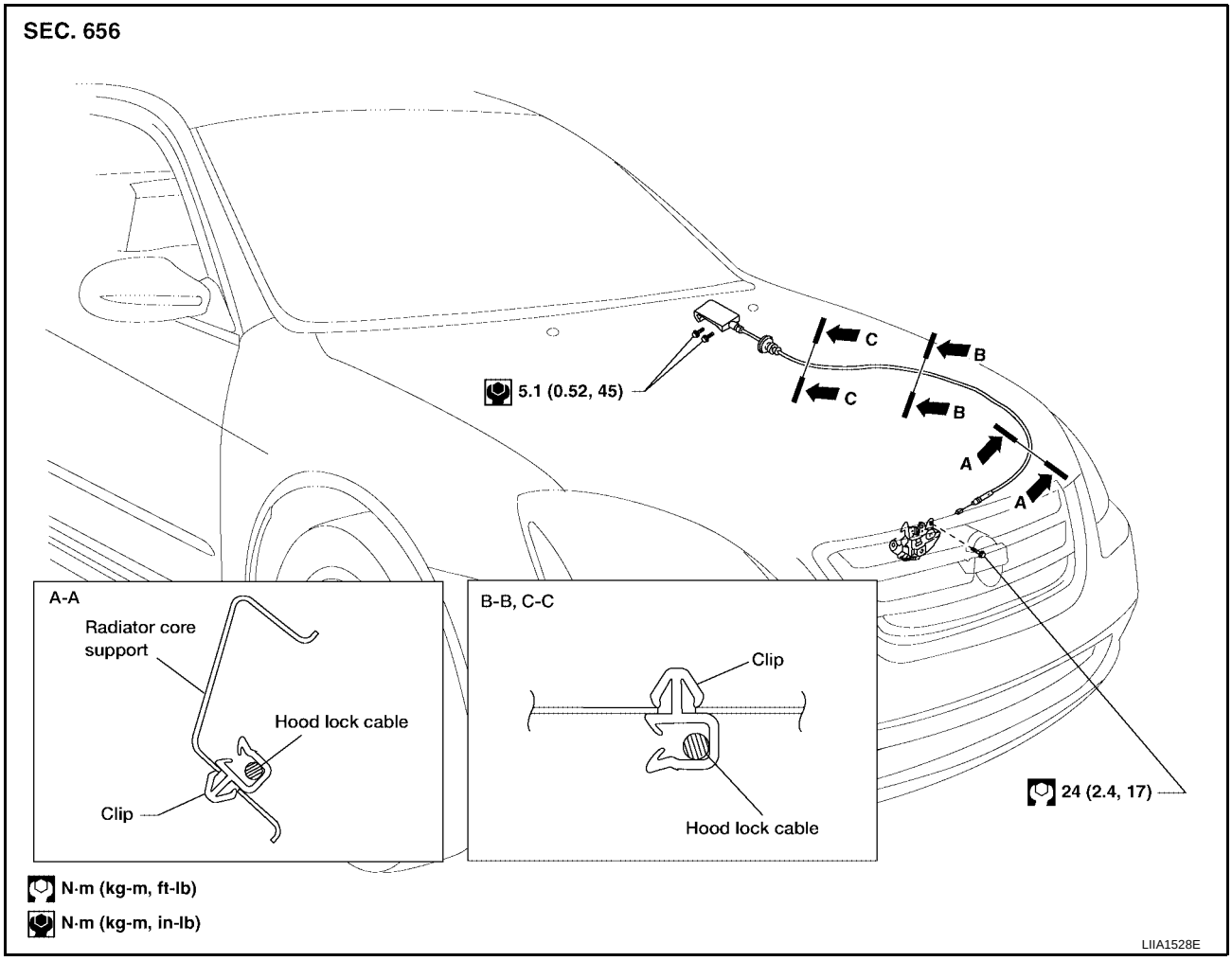

REMOVAL

1. Remove the front upper grill. Refer to EI-17, "UPPER FRONT GRILLE" .
2. Disconnect the hood lock cable from the hood lock, and unclip it from the radiator core upper support and hood ledge.
3. Remove the screws and the hood opener.
4. Remove the grommet from the dash lower, and pull the hood lock cable into the passenger compartment.

   CAUTION:
   While pulling, be careful not to damage (peeling) the outside of the hood lock cable.

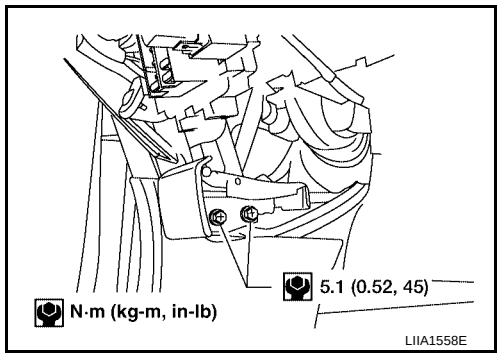

INSTALLATION

1. Pull the hood lock cable through the hole in the lower dash and into the engine compartment.

Be careful not to bend the cable too much, keeping the radius 100 mm (3.94 in) or more.

2. Check that the cable is not offset from the grommet, and push the grommet into the panel hole securely.
3. Apply the sealant to the grommet (at * mark) properly.

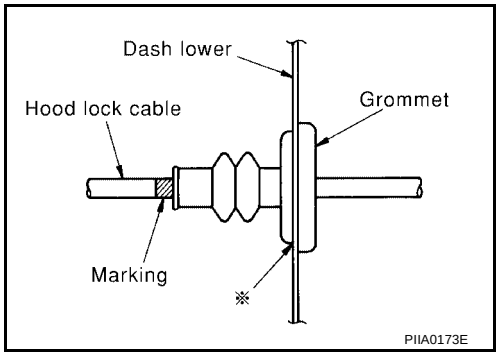

4. Install the cable securely to the lock.
5. After installing, check the hood lock adjustment and hood opener operation. Refer to BL-16, "Hood Lock Control Inspection" .

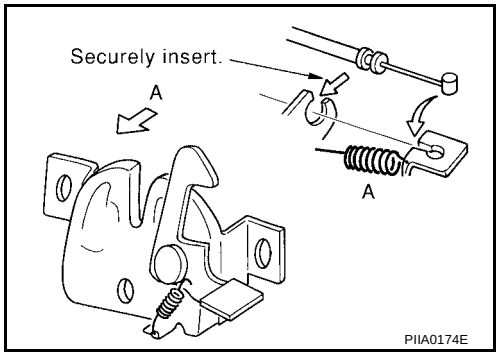

Hood Lock Control Inspection

EIS003HJ

CAUTION:

If the hood lock cable is bent or deformed, replace it.

1. Remove the front upper grill. Refer to EI-17, "UPPER FRONT GRILLE" .
2. Check that the secondary latch is properly engaged with the secondary striker with hood's own weight by dropping it from approx. 200 mm (7.87 in) height.
3. While operating the hood opener, carefully check that the front end of the hood is raised by approx. 20 mm (0.79 in). Also check that the hood opener returns to the original position.

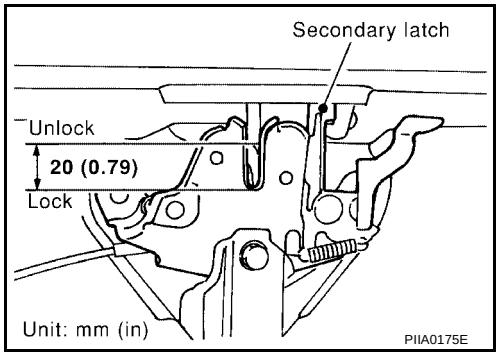

4. Check the hood lock lubrication condition. If necessary, apply "body grease" to the points shown in the figure.
5. Install the front upper grill. Refer to EI-17, "UPPER FRONT GRILLE" .

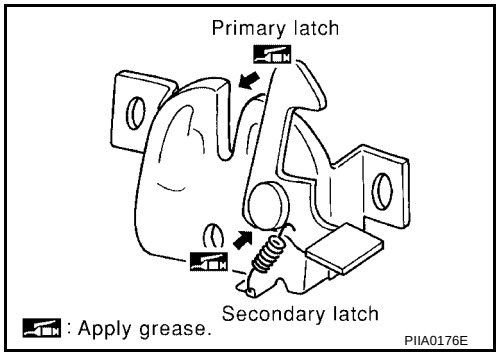

POWER DOOR LOCK SYSTEM

PFP:24814

Component Parts and Harness Connector Location

EIS003HK

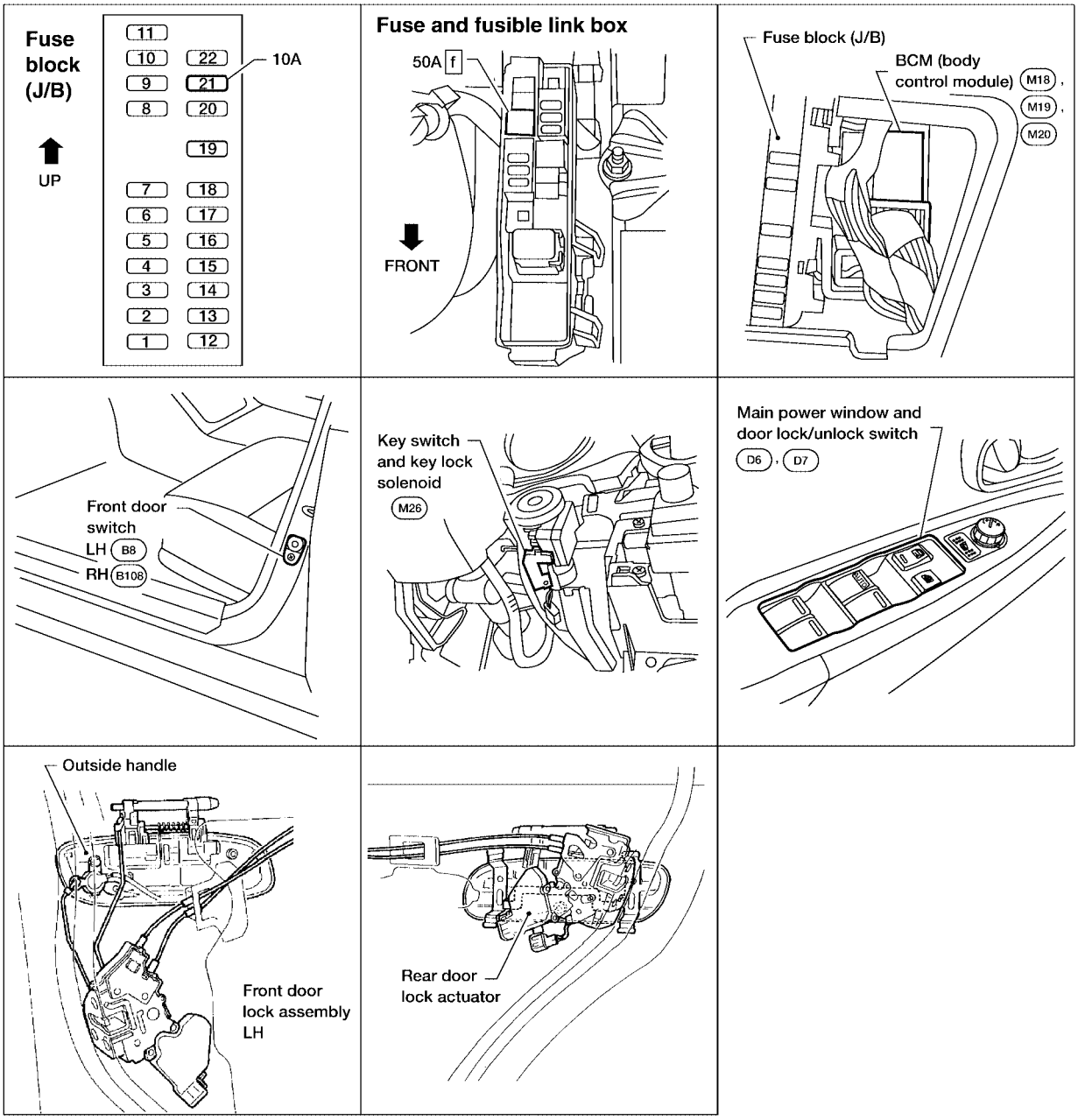

LIIA1870E

System Description

EIS003HL

Power is supplied at all time

- to BCM terminal 70
- through 50A fusible link (letter **f,** located in the fuse and fusible link box)
- through 10A fuse [No. 21, located in the fuse block (J/B)]
- to BCM terminal 57
- to key switch and key lock solenoid terminal 3.

With ignition key inserted, power is supplied

- through key switch and key lock solenoid terminal 4
- to BCM terminal 37.

WITH LEFT FRONT ONLY FRONT POWER WINDOW ANTI-PINCH SYSTEM

Ground is supplied to terminal 67 of the BCM through body grounds M57, M61 and F14.
When the door is unlocked with main power window and door lock/unlock switch, ground is supplied

- through terminal 19 of main power window and door lock/unlock switch through body grounds M57, M61 and F14
- to BCM terminal 46
- through main power window and door lock/unlock switch terminal 17.

When the door is locked with main power window and door lock/unlock switch, ground is supplied

- through terminal 19 of main power window and door lock/unlock switch through body grounds M57, M61 and F14
- to BCM terminal 45
- through main power window and door lock/unlock switch terminal 18.

When the door is unlocked with power window and door lock/unlock switch RH, ground is supplied

- through terminal 19 power window and door lock/unlock switch RH through body grounds M57, M61 and F14
- to BCM terminal 46
- through power window and door lock/unlock switch RH terminal 20.

When the door is locked with power window and door lock/unlock switch RH, ground is supplied

- through terminal 19 of power window and door lock/unlock switch RH through body grounds M57, M61 and F14
- to BCM terminal 45
- through power window and door lock/unlock switch RH terminal 18.

When the door is locked with front door lock assembly LH (key cylinder switch), ground is supplied

- to BCM terminal 8
- through body grounds M57, M61 and F14.

When the door is unlocked with front door lock assembly LH (key cylinder switch), ground is supplied

- to BCM terminal 7
- through body grounds M57, M61 and F14.

WITH LEFT AND RIGHT FRONT POWER WINDOW ANTI-PINCH SYSTEM

BCM is connected to main power window and door lock/unlock switch and power window and door lock/unlock switch RH as power window serial link.
Main power window and door lock/unlock switch and power window and door lock/unlock switch RH output to key cylinder lock/unlock switch, central lock/unlock switch and power window UP/DOWN control by key cylinder switch as DATALINE (power window serial link) to BCM.

OUTLINE

Functions available by operating the central switches on driver's door and passenger's door

- Interlocked with the locking operation of central switch, door lock actuators of all doors are locked.
- Interlocked with the unlocking operation of central switch, door lock actuators of all doors are unlocked.

Functions available by operating the key cylinder switch on driver's door

- Interlocked with the locking operation of door key cylinder, door lock actuators of all doors are locked.
- When door key cylinder is unlocked, front door lock assembly LH (actuator) is unlocked.
- When door key cylinder is unlocked for the second time within 5 seconds after the first operation, door lock actuators on all doors are unlocked.

Key–trap preventive function

When door lock switch LH or RH is operated to lock doors with ignition key put in key cylinder and any door open, all door lock actuators are locked and then unlocked.

KEY–TRAP PREVENTIVE FUNCTION

Time chart

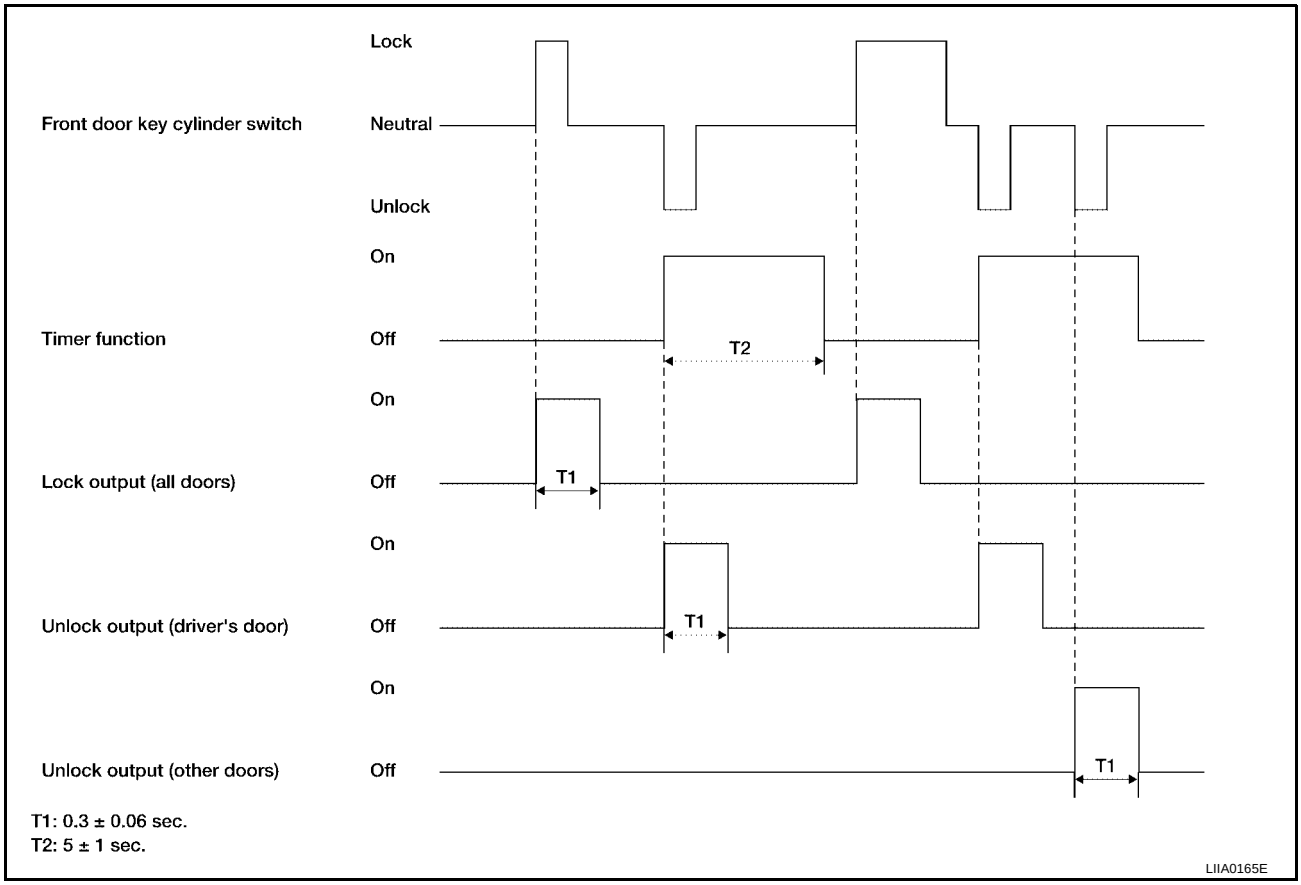

Schematic

EIS003HM

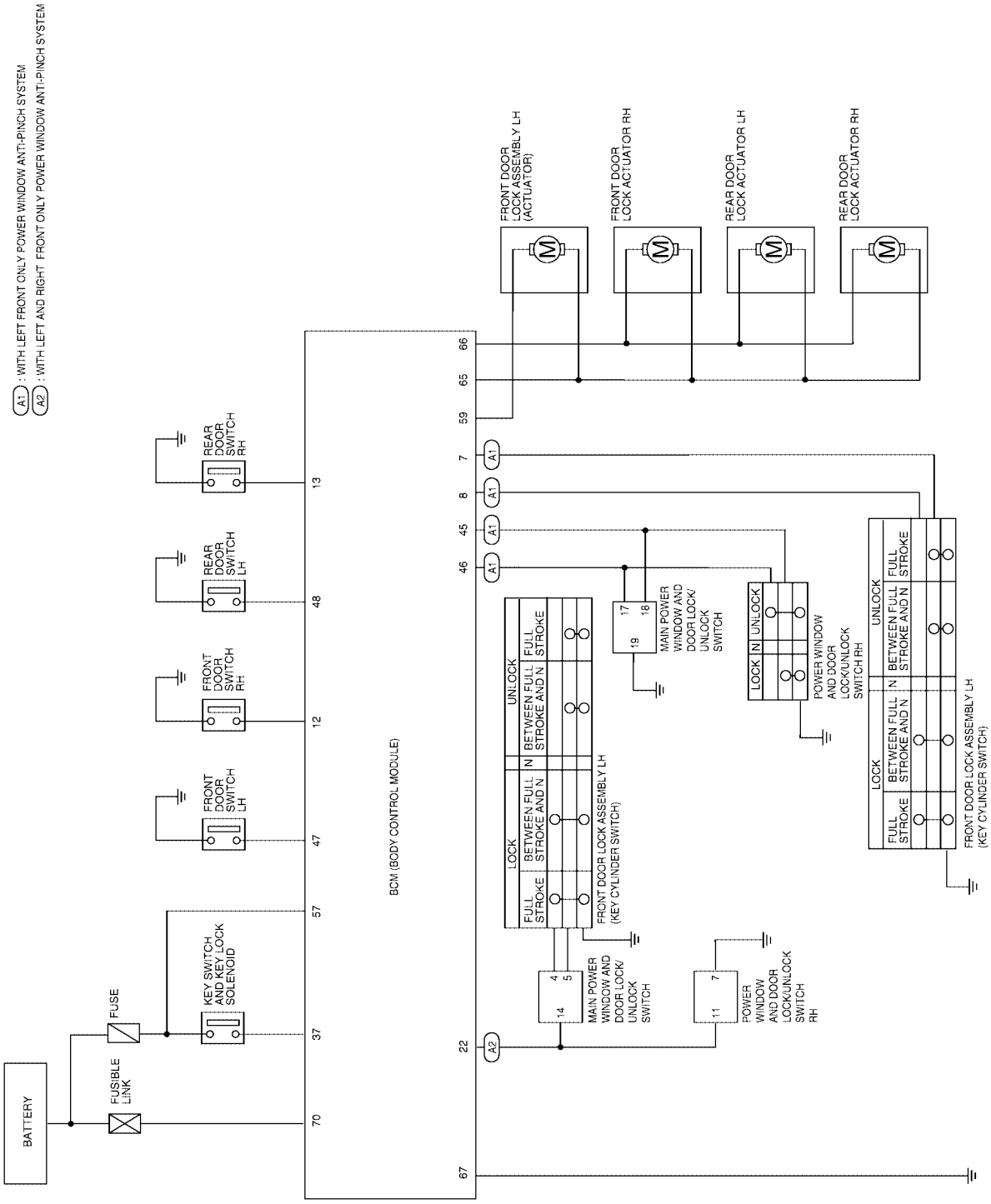

WIWA1027E

Wiring Diagram — D/LOCK —

EIS003HN

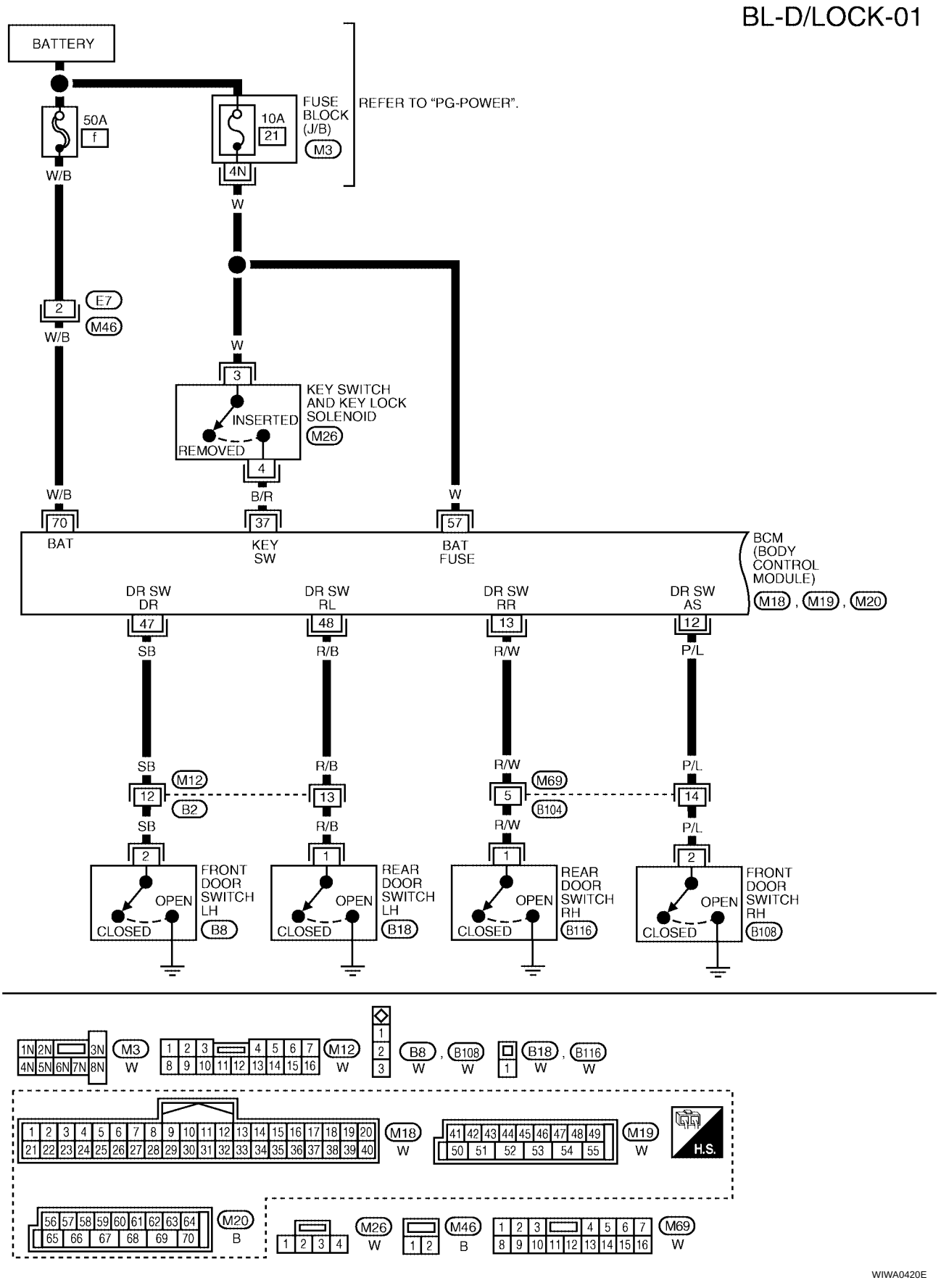

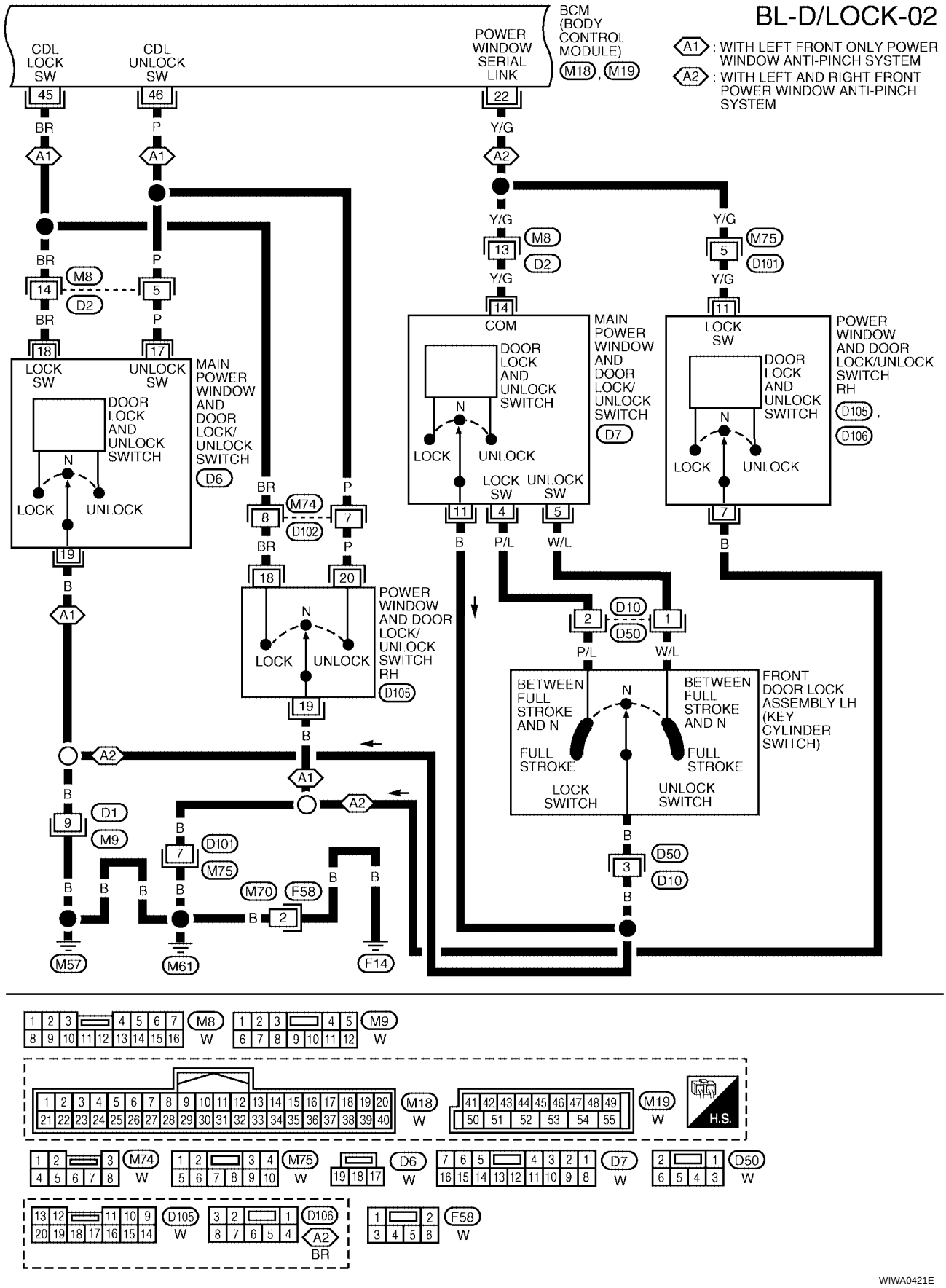
BL-D/LOCK-02
BCM (BODY CONTROL MODULE)
M18, M19
A1 : WITH LEFT FRONT ONLY POWER WINDOW ANTI-PINCH SYSTEM
A2 : WITH LEFT AND RIGHT FRONT POWER WINDOW ANTI-PINCH SYSTEM
CDL LOCK SW
CDL UNLOCK SW
POWER WINDOW SERIAL LINK
MAIN POWER WINDOW AND DOOR LOCK/ UNLOCK SWITCH
D6
DOOR LOCK AND UNLOCK SWITCH
LOCK
UNLOCK
COM
LOCK SW
UNLOCK SW
D7
POWER WINDOW AND DOOR LOCK/UNLOCK SWITCH RH
D105, D106
POWER WINDOW AND DOOR LOCK/ UNLOCK SWITCH RH
D105
FRONT DOOR LOCK ASSEMBLY LH (KEY CYLINDER SWITCH)
BETWEEN FULL STROKE AND N
FULL STROKE
LOCK SWITCH
UNLOCK SWITCH
M57
M61
F14
M8
M9
M18
M19
H.S.
M74
M75
D6
D7
D50
D105
D106
F58
WIWA0421E

BL-D/LOCK-03

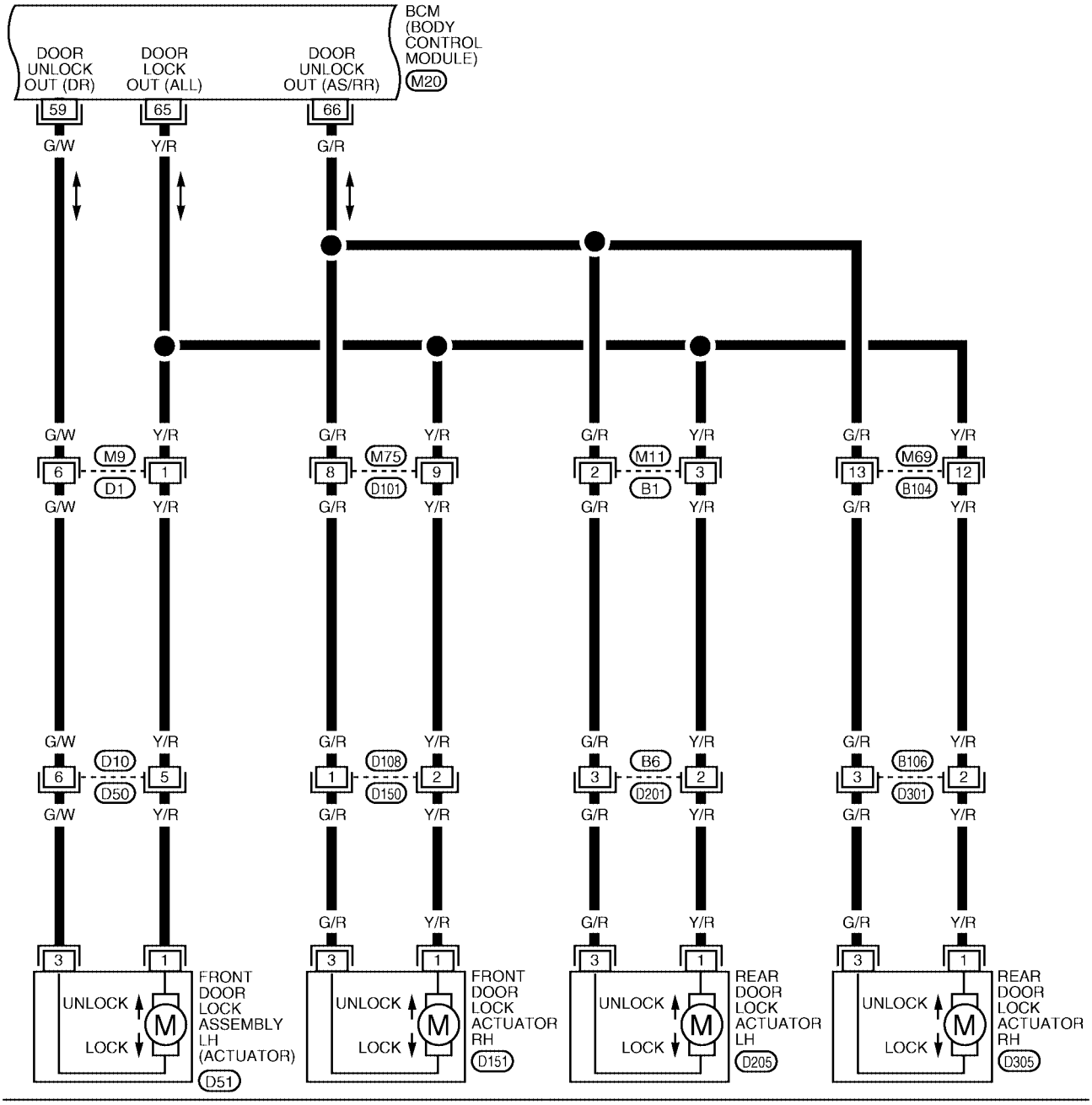

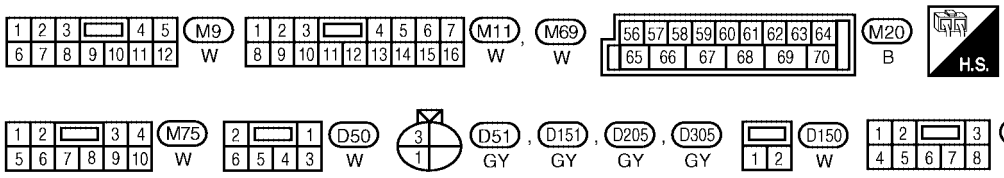

WIWA1017E

A1 :WITH LEFT FRONT ONLY POWER WINDOW ANTI-PINCH SYSTEM

BL-D/LOCK-04

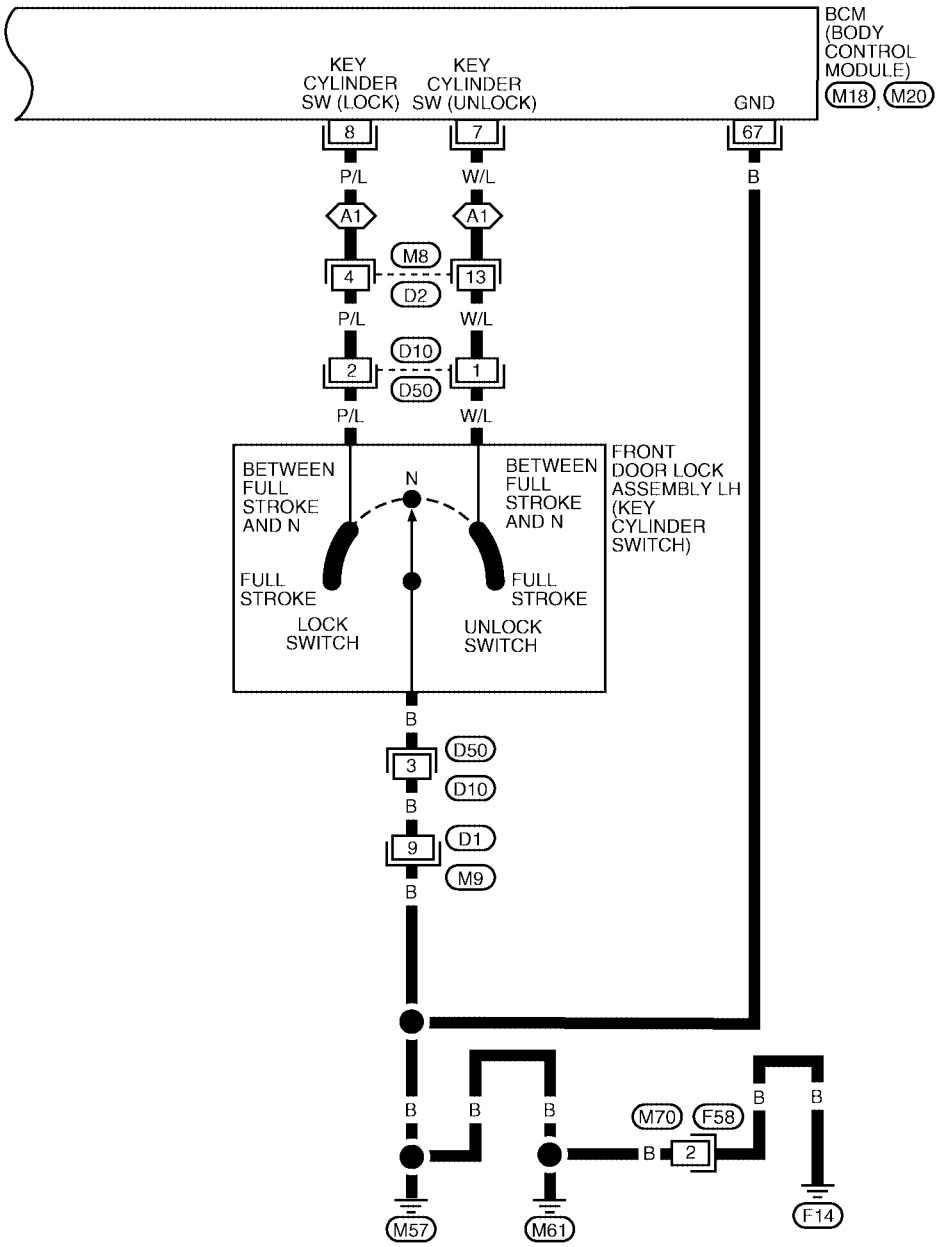

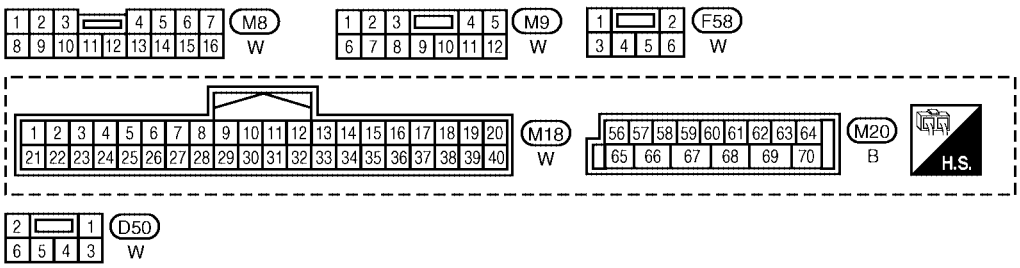

LIWA0386E

Terminals and Reference Value for BCM

EIS003HO

Terminal	Wire Color	Item	Condition	Voltage (V) (Approx.)
7	W/L	Front door lock assembly LH (key cylinder switch) (unlock)	OFF (neutral) → ON (unlocked)	5V → 0V
8	P/L	Front door lock assembly LH (key cylinder switch) (lock)	OFF (neutral) → ON (locked)	5V → 0V
12	P/L	Front door switch RH	Door open (ON) → Door close (OFF)	0V → Battery voltage
13	R/W	Rear door switch RH	Door open (ON) → Door close (OFF)	0V → Battery voltage
22	Y/G	Power window serial link	—	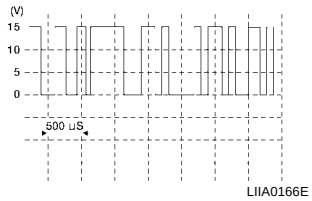
37	B/R	Key switch (insert)	Key inserted (ON) → Key removed from IGN key cylinder (OFF)	Battery voltage → 0V
45	BR	Lock switch signal	Door lock and unlock switch (unlocked → locked)	Battery voltage → 0V
46	P	Unlock switch signal	Door lock and unlock switch (locked → unlocked)	Battery voltage → 0V
47	SB	Front door switch LH	Door open (ON) → Door close (OFF)	0V → Battery voltage
48	R/B	Rear door switch LH	Door open (ON) → Door close (OFF)	0V → Battery voltage
57	W	Battery power supply	—	Battery voltage
59	G/W	Front door lock assembly LH (actuator) (unlock)	Driver door lock knob (locked → unlocked)	0V → Battery voltage
65	Y/R	All door lock actuator (lock)	Driver door lock knob (neutral → lock)	0V → Battery voltage
66	G/R	Front door lock actuator RH and Rear door lock actuators LH/RH (unlock)	Door lock and unlock switch (locked → unlocked)	0V → Battery voltage
67	B	Ground	—	—
70	W/B	Battery power supply	—	Battery voltage

Work Flow

EIS003HP

1. Check the symptom and customer's requests.
2. Understand the outline of system. Refer to BL-18, "System Description" .
3. Perform BCM Power Supply and Ground Circuit Check. Refer to BL-29, "BCM Power Supply and Ground Circuit Check" .
4. According to the trouble diagnosis chart, repair or replace the cause of the malfunction. Refer to BL-29, "Symptom Chart" .
5. Does power door lock system operate normally? OK: GO TO 6, NG: GO TO 4.
6. INSPECTION END.

CONSULT–II Function (BCM)

EIS003HQ

CONSULT-II can display each diagnostic item using the diagnostic test modes shown following.

BCM diagnostic test item	Diagnostic mode	Content
Inspection by part	WORK SUPPORT	Changes setting of each function.
	DATA MONITOR	Displays BCM input/output data in real time.
	ACTIVE TEST	Operation of electrical loads can be checked by sending drive signal to them.
	SELF-DIAG RESULTS	Displays BCM self-diagnosis results.
	CAN DIAG SUPPORT MNTR	The results of transmit/receive diagnosis of CAN communication can be read.
	ECU PART NUMBER	BCM part number can be read.
	CONFIGURATION	Performs BCM configuration read/write functions.

CONSULT–II BASIC OPERATION PROCEDURE

CAUTION:

If CONSULT-II is used with no connection of CONSULT-II CONVERTER, malfunctions might be detected in self-diagnosis depending on control unit which carries out CAN communications.

1. With ignition switch OFF, connect CONSULT–II and CONSULT-II CONVERTER to data link connector on vehicle, and turn ON ignition switch.

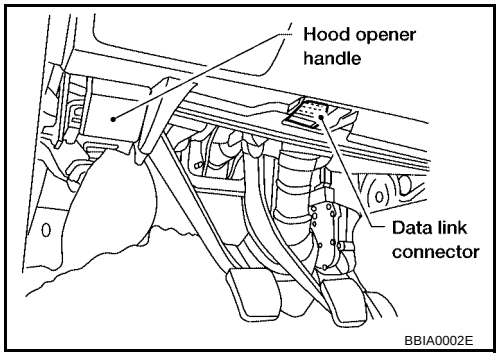

2. Touch “START (NISSAN BASED VHCL)”.

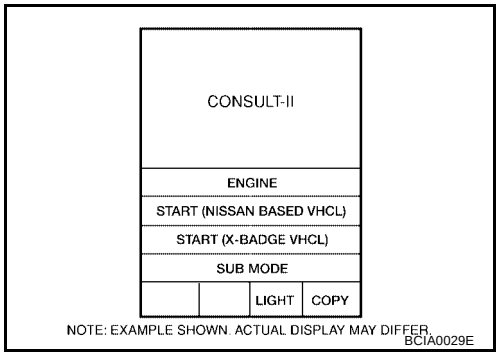

3. Touch “BCM” on “SELECT SYSTEM” screen.

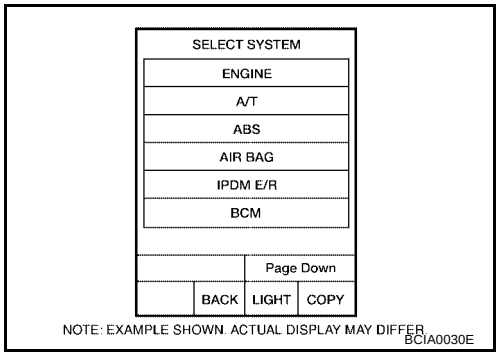

4. Select item to be diagnosed on “SELECT TEST ITEM” screen.

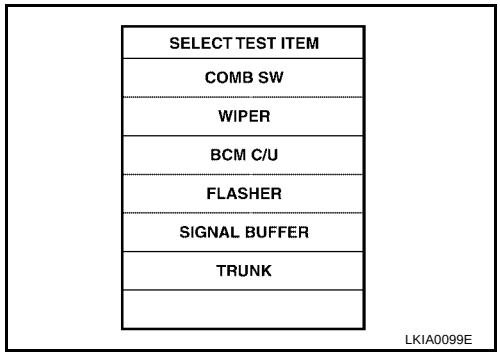

DATA MONITOR

Operation procedure

1. Touch "DOOR LOCK" on the "SELECT TEST ITEM" screen.
2. Touch "DATA MONITOR" on the "SELECT DIAG MODE" screen.
3. Touch either "ALL SIGNALS" or "SELECTION FROM MENU" on the "DATA MONITOR" screen.

ALL SIGNALS	Monitor all items.
SELECTION FROM MENU	Select and monitor the item.

4. Touch "START".
5. If "SELECTION FROM MENU" is selected, touch the desired monitor item. If "ALL SIGNALS" is selected, all the items are monitored.
6. During monitoring, touching "COPY" can start recording the monitor item status.

Display item list

Monitor item "OPERATION"		Content
IGN ON SW	"ON/OFF"	Indicates [ON/OFF] condition of ignition switch.
KEY ON SW	"ON/OFF"	Indicates [ON/OFF] condition of key switch.
CDL LOCK SW	"ON/OFF"	Indicates [ON/OFF] condition of lock signal from lock/unlock switch LH and RH.
CDL UNLOCK SW	"ON/OFF"	Indicates [ON/OFF] condition of unlock signal from lock/unlock switch LH and RH.
KEY CYL LK-SW	"ON/OFF"	Indicates [ON/OFF] condition of lock signal from key cylinder.
KEY CYL UN-SW	"ON/OFF"	Indicates [ON/OFF] condition of unlock signal from key cylinder.
DOOR SW–DR	"ON/OFF"	Indicates [ON/OFF] condition of front door switch LH.
DOOR SW–AS	"ON/OFF"	Indicates [ON/OFF] condition of front door switch RH.
DOOR SW–RR	"ON/OFF"	Indicates [ON/OFF] condition of rear door switch RH.
DOOR SW–RL	"ON/OFF"	Indicates [ON/OFF] condition of rear door switch LH.

ACTIVE TEST

Operation procedure

1. Touch "DOOR LOCK" on the "SELECT TEST ITEM" screen.
2. Touch "ACTIVE TEST" on the "SELECT DIAG MODE" screen.
3. Touch the item to be tested, and check the operation.
4. During the operation check, touching "OFF" deactivates the operation.

Display item list

Test item	Content
ALL D/LK MTR	This test is able to check all door lock actuators lock operation. These actuators lock when "ON" on CONSULT–II screen is touched.
DR D/UN MTR	This test is able to check front door lock assembly LH (actuator) unlock operation. These actuators lock when "ON" on CONSULT–II screen is touched.
NON DR D/UN	This test is able to check door lock actuators [except front door lock assembly LH (actuator)] unlock operation.These actuators unlock when "ON" on CONSULT–II screen is touched.

Symptom Chart

EIS003HR

Symptom	Malfunctioning system	Power window system
Key reminder door function does not operate properly.	Door switch check. Refer to BL-31, "Door Switch Check" .	—
	Key switch (Insert) check. Refer to BL-33, "Key Switch (Insert) Check" .	
	If above systems are "OK", replace BCM. Refer to BCS-20, "Removal and Installation of BCM" .	
Power door lock does not operate with door lock and unlock switch on main power window and door lock/unlock switch or power window and door lock/unlock switch RH	Door lock and unlock switch check. Refer to BL-34, "Door Lock/Unlock Switch Check (With left front only power window anti–pinch system)" .	With left front only anti–pinch system.
	Door lock and unlock switch check. Refer to BL-37, "Door Lock/Unlock Switch Check (With left and right front power window anti–pinch system)" .	With left and right front anti–pinch system.
Power door lock does not operate with driver door lock knob switch.	Door lock actuator check –Driver–. Refer to BL-39, "Front Door Lock Assembly LH (Actuator) Check" .	—
Specific door lock acutuator does not operate.	Door lock actuator check (passenger, Rear LH/RH).Refer to BL-40, "Door Lock Actuator Check (Front RH and Rear LH/RH)" .	—
Power door lock does not operate with front door lock assembly LH (key cylinder switch) operation.	Front door lock assembly LH (key cylinder switch) check. Refer to BL-41, "Front Door Lock Assembly LH (Key Cylinder Switch) Check (With left front only power window anti-pinch system)" .	With left front only anti–pinch system.
	Door lock and unlock switch check. Refer to BL-42, "Door Lock/Unlock Switch Check (With left and right front power window anti–pinch system)" .	With left and right front anti–pinch system.
	Front door lock assembly LH (key cylinder switch) check. Refer to BL-45, "Front Door Lock Assembly LH (Key Cylinder Switch) Check (With left and right front power window anti–pinch system)" .	
	If above systems are "OK", replace BCM. Refer to BCS-20, "Removal and Installation of BCM" .	—

BCM Power Supply and Ground Circuit Check

EIS003HS

1. CHECK FUSE

- Check the following BCM fuses and fusible link.

Component Parts	Terminal No. (SIGNAL)	Ampere	No.	Location
BCM	57 (BAT power supply)	10A	21	Fuse block (J/B)
	70 (BAT power supply)	50A	**f**	Fuse and fusible link box

NOTE:
Refer to BL-17, "Component Parts and Harness Connector Location" .

OK or NG

OK >> GO TO 2.
NG >> If fuse is blown, be sure to eliminate cause of problem before installing new fuse. Refer to PG-4, "POWER SUPPLY ROUTING CIRCUIT" .

2. CHECK POWER SUPPLY CIRCUIT

1. Turn ignition switch OFF.
2. Disconnect BCM.
3. Check voltage between BCM connector M20 terminals 57, 70 and ground.

Connector	Terminals		Signal name	Ignition switch	Voltage (V) (Approx.)
	(+)	(–)			
M20	57	Ground	Battery power supply	OFF	Battery voltage
	70		Battery power supply	OFF	Battery voltage

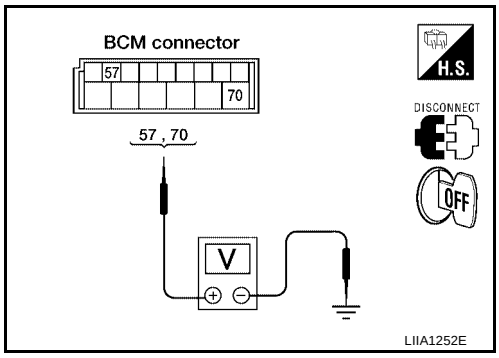

OK or NG

OK >> GO TO 3.
NG >> Repair or replace harness.

3. CHECK GROUND CIRCUIT

Check continuity between BCM connector M20 terminal 67 and ground.

Connector	Terminals		Continuity
	(+)	(-)	
M20	67	Ground	Yes

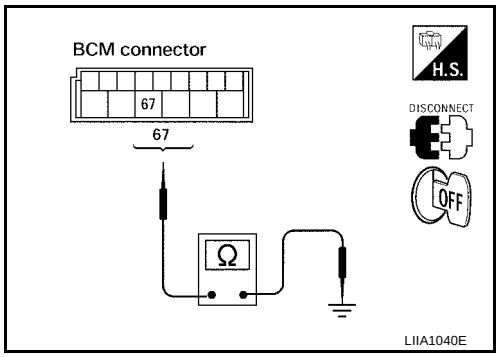

OK or NG

OK >> Power supply and ground circuit is OK.
NG >> Repair or replace harness.

Door Switch Check

EIS003HT

1. CHECK DOOR SWITCHES INPUT SIGNAL

With CONSULT-II

Check door switches ("DOOR SW-DR", "DOOR SW-AS", "DOOR SW-RL", "DOOR SW-RR") in DATA MONITOR mode with CONSULT–II. Refer to BL-28, "DATA MONITOR" .

- When doors are open:

DOOR SW-DR	**: ON**
DOOR SW-AS	**: ON**
DOOR SW-RL	**: ON**
DOOR SW-RR	**: ON**

- When doors are closed:

DOOR SW-DR	**: OFF**
DOOR SW-AS	**: OFF**
DOOR SW-RL	**: OFF**
DOOR SW-RR	**: OFF**

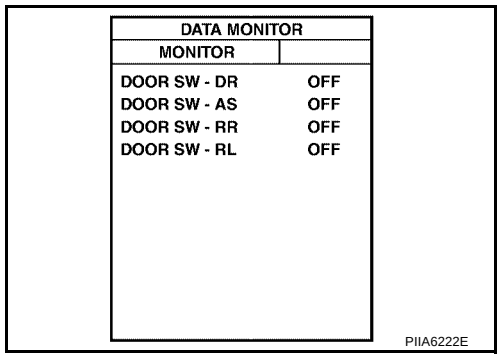

Without CONSULT-II

Check voltage between BCM connector M18 or M19 terminals 12, 13, 47, 48 and ground.

Connector	Item	Terminals (+)	Terminals (–)	Condition	Voltage (V) (Approx.)
M18	Front door switch RH	12	Ground	Open ↓ Closed	0 ↓ Battery voltage
	Rear door switch RH	13			
M19	Front door switch LH	47			
	Rear door switch LH	48			

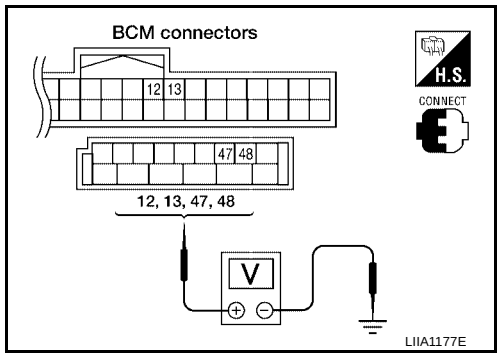

OK or NG

OK >> System is OK.
NG >> GO TO 2.

2. CHECK DOOR SWITCH CIRCUIT

1. Turn ignition switch OFF.
2. Disconnect door switch and BCM.
3. Check continuity between door switch connector B8 (Front LH) or B108 (Front RH) terminal 2, B18 (Rear LH) or B116 (Rear RH) terminal 1 and BCM connector M18, M19 terminals 12, 13, 47 and 48.

2 - 47	**: Continuity should exist**
2 - 12	**: Continuity should exist**
1 - 48	**: Continuity should exist**
1 - 13	**: Continuity should exist**

4. Check continuity between door switch connector B8 (Front LH) or B108 (Front RH) terminal 2, B18 (Rear LH) or B116 (Rear RH) terminal 1 and ground.

2 - Ground	**: Continuity should not exist**
1 - Ground	**: Continuity should not exist**

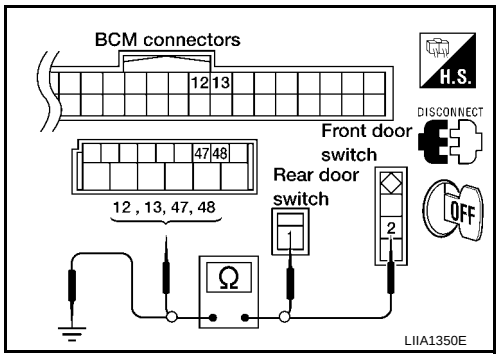

OK or NG

OK >> GO TO 3.
NG >> Repair or replace harness.

3. CHECK DOOR SWITCHES

1. Disconnect door switch harness.
2. Check continuity between door switch connector terminals.

	Terminals	Condition	Continuity
Front door switch LH/RH	2 – Ground	Open	Yes
		Closed	No
Rear door switch LH/RH	1 – Ground	Open	Yes
		Closed	No

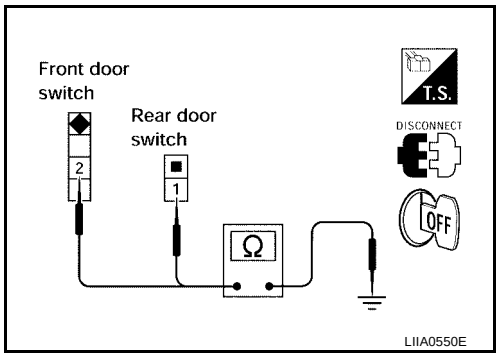

OK or NG

OK >> Check door switch case ground condition.
NG >> Replace door switch.

Key Switch (Insert) Check

EIS003HU

1. CHECK KEY SWITCH AND KEY LOCK SOLENOID INPUT SIGNAL

With CONSULT-II

Check key switch "KEY ON SW" in DATA MONITOR mode with CONSULT–II. Refer to BL-28, "DATA MONITOR" .

- When key is inserted to ignition key cylinder :

  KEY ON SW : ON

- When key is removed from ignition key cylinder :

  KEY ON SW : OFF

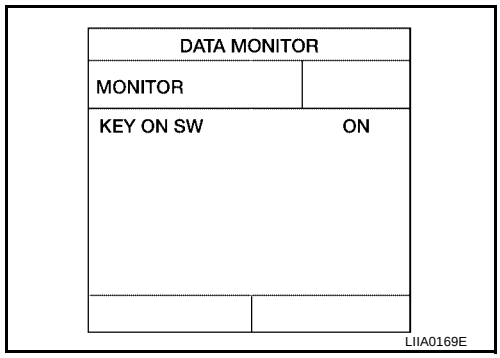

Without CONSULT-II

Check voltage between BCM connector M18 terminal 37 and ground.

Connector	Terminals		Condition	Voltage (V) (Approx.)
	(+)	(–)		
M18	37	Ground	Key is inserted.	Battery voltage
			Key is removed.	0

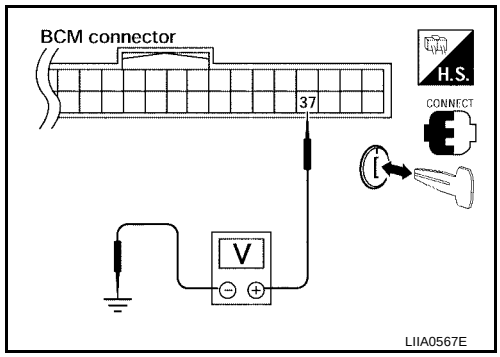

OK or NG

OK >> System is OK.

NG >> GO TO 2.

2. CHECK KEY SWITCH (INSERT)

1. Turn ignition switch OFF.
2. Disconnect key switch and key lock solenoid connector.
3. Check continuity between key switch and key lock solenoid connector terminals 3 and 4.

Terminals	Condition	Continuity
3 – 4	Key is inserted.	Yes
	Key is removed.	No

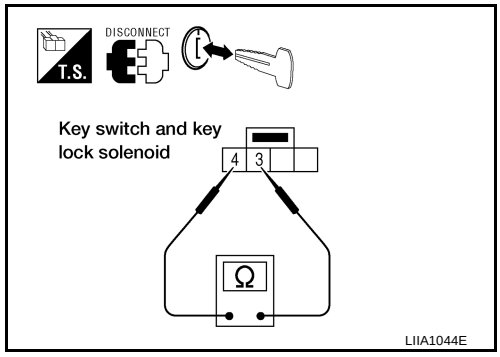

OK or NG

OK >> GO TO 3.

NG >> Replace key switch and key lock solenoid. Refer to PS-10, "STEERING COLUMN" .

3. CHECK KEY SWITCH AND KEY LOCK SOLENOID CIRCUIT

1. Disconnect BCM connector.
2. Check continuity between the BCM harness connector M18 terminal 37 and key switch and key lock solenoid harness connector M26 terminal 4.
3. Check continuity between BCM harness connector M18 terminal 37 and ground.

37 - 4 : Continuity should exist

37 - Ground : Continuity should not exist

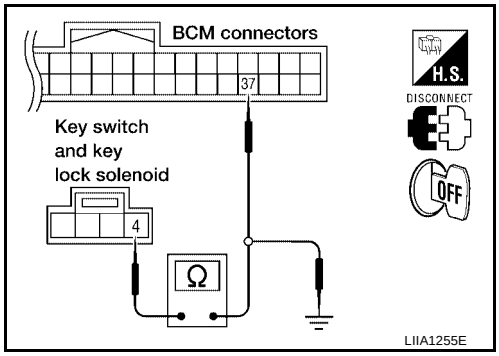

OK or NG

OK >> Check the following:
- 10A fuse [No. 21, located in fuse block (J/B)]
- Harness for open or short between key switch and key lock solenoid and fuse

NG >> Repair or replace harness.

Door Lock/Unlock Switch Check (With left front only power window anti–pinch system)

EIS003HV

1. CHECK DOOR LOCK/UNLOCK SWITCH INPUT SIGNAL

With CONSULT-II

Check door lock/unlock switch ("CDL LOCK SW", "CDL UNLOCK SW") in DATA MONITOR mode in CONSULT–II. Refer to BL-28, "DATA MONITOR" .

- When door lock/unlock switch is turned to LOCK :

CDL LOCK SW : ON

- When door lock/unlock switch is turned to UNLOCK :

CDL UNLOCK SW : ON

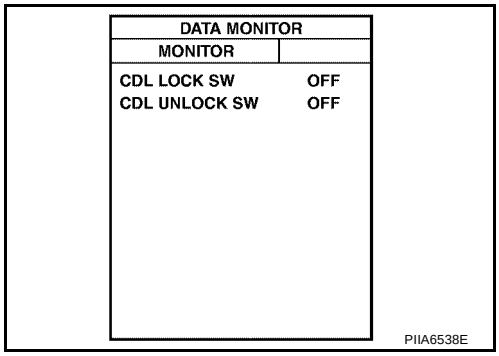

Without CONSULT-II

Check voltage between BCM connector M19 terminals 45, 46 and ground.

Connector	Terminals (+)	Terminals (–)	Condition	Voltage (V) (Approx.)
M19	46	Ground	Door lock/unlock switch is neutral.	Battery voltage
			Door lock/unlock switch is turned to UNLOCK.	0
	45	Ground	Door lock/unlock switch is neutral.	Battery voltage
			Door lock/unlock switch is turned to LOCK.	0

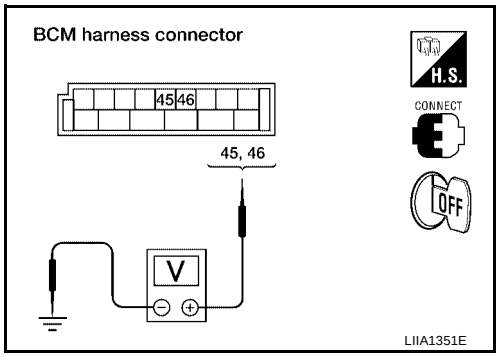

OK or NG

OK >> System is OK.

NG >> GO TO 2.

2. CHECK DOOR LOCK/UNLOCK SWITCH GROUND HARNESS

Check continuity between main power window and door lock/unlock switch connector D6 terminal 19 and power window and door lock/unlock switch RH connector D105 terminal 19 and body ground.

- Main power window and door lock/unlock switch

Connector	Terminals	Continuity
D6	19 – Ground	Yes

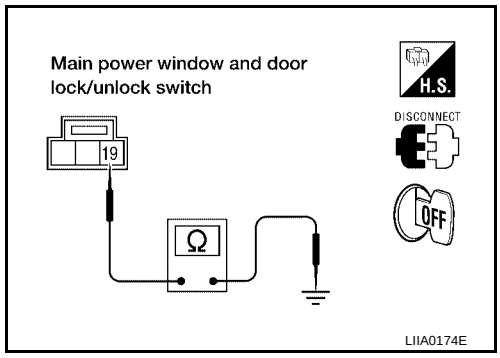

- Power window and door lock/unlock switch RH

Connector	Terminals	Continuity
D105	19 – Ground	Yes

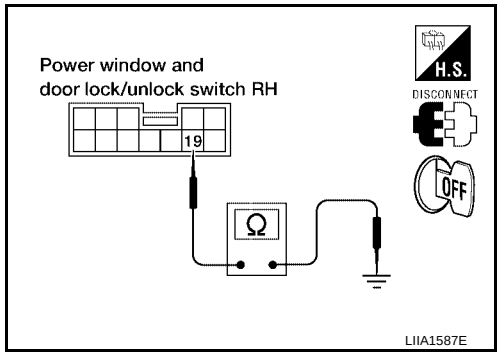

OK or NG

OK >> GO TO 3.
NG >> Repair or replace harness.

3. CHECK DOOR LOCK/UNLOCK SWITCH

1. Disconnect main power window and door lock/unlock switch or power window and door lock/unlock switch RH.
2. Check continuity between each door lock/unlock switch terminals.

- Main power window and door lock/unlock switch

Terminals	Condition	Continuity
17 – 19	Neutral	No
	Unlock	Yes
18 – 19	Neutral	No
	Lock	Yes

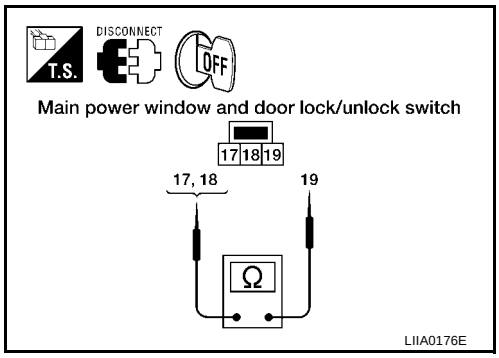

- Power window and door lock/unlock switch RH

Terminals	Condition	Continuity
18 – 19	Neutral	No
	Lock	Yes
19 – 20	Neutral	No
	Unlock	Yes

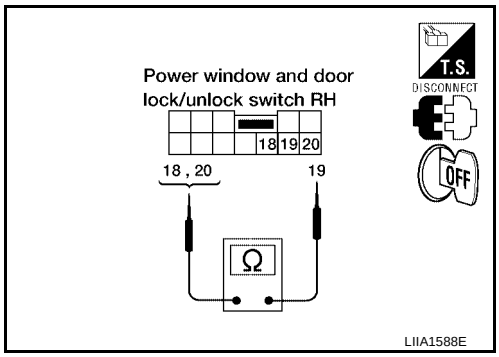

OK or NG

OK >> Repair or replace harness.
NG >> Replace main power window and door lock/unlock switch or power window and door lock/unlock switch RH.

Door Lock/Unlock Switch Check (With left and right front power window anti–pinch system)

EIS003HW

1. CHECK DOOR LOCK/UNLOCK SWITCH INPUT SIGNAL

With CONSULT-II

Check door lock/unlock switch ("CDL LOCK SW", "CDL UNLOCK SW") in DATA MONITOR mode in CONSULT–II. Refer to BL-28, "DATA MONITOR" .

- When door lock/unlock switch is turned to LOCK :

  CDL LOCK SW : ON

- When door lock/unlock switch is turned to UNLOCK :

  CDL UNLOCK SW : ON

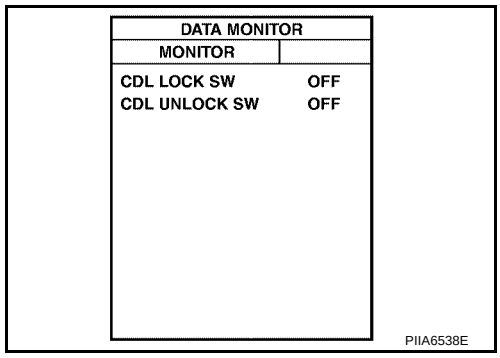

Without CONSULT-II

1. Remove key from ignition key cylinder.
2. Check the signal between BCM connector M18 terminal 22 and ground with oscilloscope when door lock/unlock switch is turned to LOCK or UNLOCK.
3. Make sure the signals which are shown in the figure below can be detected during 10 seconds just after the door lock/unlock switch is turned to LOCK or UNLOCK.

Connector	Terminals		Signal (Reference value)
	(+)	(–)	
M18	22	Ground	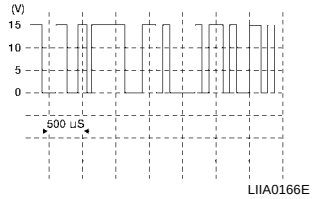

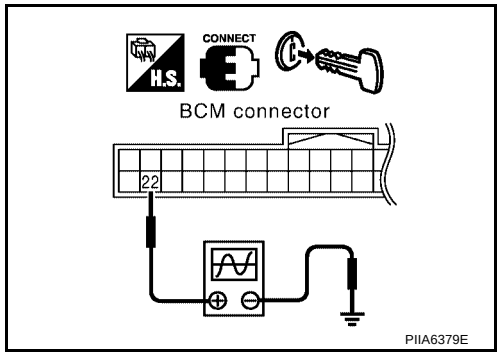

OK or NG

OK >> Door lock and unlock switch circuit is OK.
NG >> GO TO 2.

2. CHECK BCM OUTPUT SIGNAL

Check ("POWER WINDOW DOWN") in ACTIVE TEST mode for "MULTI REMOTE ENT" with CONSULT–II. Refer to BL-57, "Active Test" .

When "ACTIVE TEST" is performed, are the front windows lowered?

OK or NG

OK >> GO TO 3.
NG >> Replace BCM. Refer to BCS-20, "Removal and Installation of BCM" .

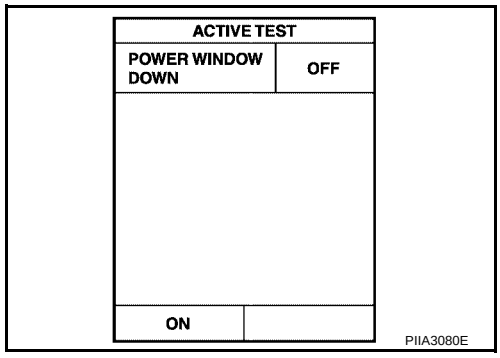

3. CHECK ANTI-PINCH SERIAL LINK CIRCUIT

Check continuity between BCM connector M18 terminal 22 and main power window and door lock/unlock switch connector D7 terminal 14.

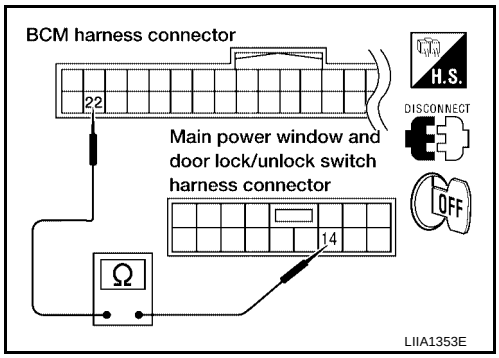

Connector	Terminal	Con-nector	Terminal	Continuity
M18	22	D7	14	Yes
		D105	11	Yes

Check continuity between BCM connector M18 terminal 22 and power window and door lock/unlock switch RH connector D105 terminal 11.

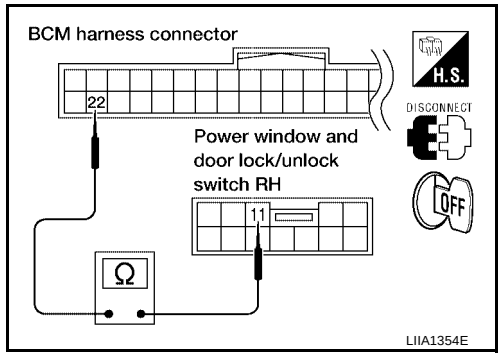

OK or NG

OK >> Replace main power window and door lock/unlock switch or power window and door lock/unlock switch RH.

NG >> Repair or replace harness.

Front Door Lock Assembly LH (Actuator) Check

EIS003HX

1. CHECK DOOR LOCK ACTUATOR SIGNAL

With CONSULT-II

Check front door lock assembly LH (actuator) "ALL D/LK MTR", "DR D/UN MTR" in ACTIVE TEST mode with CONSULT–II. Refer to BL-28, "ACTIVE TEST" .

ALL D/LK MTR : ON/OFF

DR D/UN MTR : ON/OFF

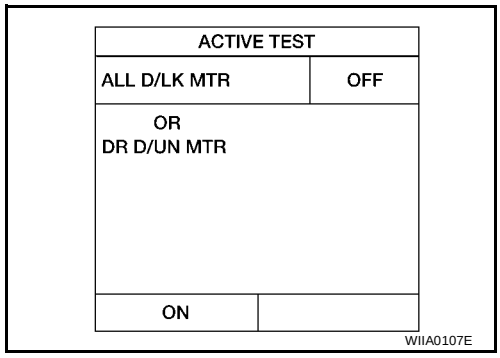

Without CONSULT-II

Check voltage between BCM connector M20 terminals 59, 65 and ground.

Connector	Terminals		Condition	Voltage (V) (Approx.)
	(+)	(–)		
M20	59	Ground	Driver door lock knob is turned to UNLOCK.	0 → Battery voltage
	65	Ground	Driver door lock knob is turned to LOCK.	0 → Battery voltage

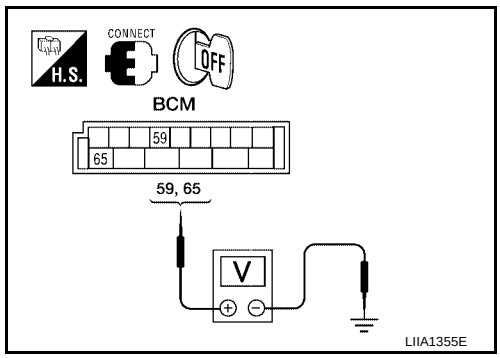

OK or NG

OK >> System is OK.

NG >> GO TO 2.

2. CHECK DOOR LOCK ACTUATOR HARNESS

Check continuity between BCM connector M20 terminals 59, 65 and front door lock assembly LH (actuator) connector D51 terminals 1, 3 and body ground.

Connector	Terminal	Connector	Terminal	Continuity
M20	59	D51	3	Yes
	65		1	Yes
	59, 65	Ground		No

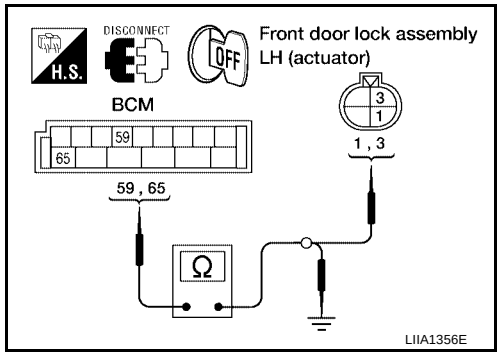

OK or NG

OK >> Replace front door lock assembly LH (actuator). Refer to BL-76, "Removal and Installation" .

NG >> Repair or replace harness.

Door Lock Actuator Check (Front RH and Rear LH/RH)

EIS003HY

1. CHECK DOOR LOCK ACTUATOR SIGNAL

With CONSULT-II

Check door lock actuators "ALL D/LK MTR", "NON DR D/UN" in ACTIVE TEST mode with CONSULT–II. Refer to BL-28, "ACTIVE TEST" .

ALL D/LK MTR : ON/OFF

DR D/UN MTR : ON/OFF

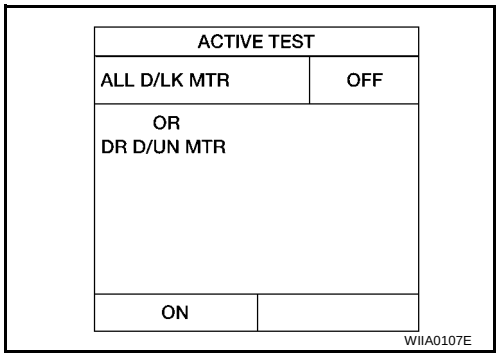

Without CONSULT-II

Check voltage between BCM connector M20 terminals 65, 66 and ground.

Connector	Terminals		Condition	Voltage (V) (Approx.)
	(+)	(–)		
M20	65	Ground	Driver door lock knob is turned to LOCK.	0 → Battery voltage
	66	Ground	Door lock/unlock switch is turned to UNLOCK.	0 → Battery voltage

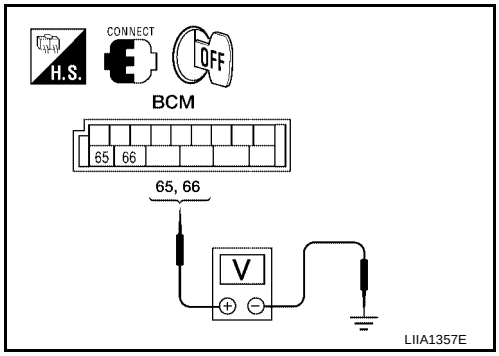

OK or NG

OK >> System is OK.

NG >> GO TO 2.

2. CHECK DOOR LOCK ACTUATOR HARNESS

Check continuity between BCM connector M20 terminals 65, 66 and front door lock actuator RH, rear door lock actuator LH/RH connector D151, D205 and D305 terminals 1, 3 and body ground.

Connector	Terminal	Connector	Terminal	Continuity
M20	65	D151, D205, D305	1	Yes
	66		3	Yes
	65, 66	Ground		No

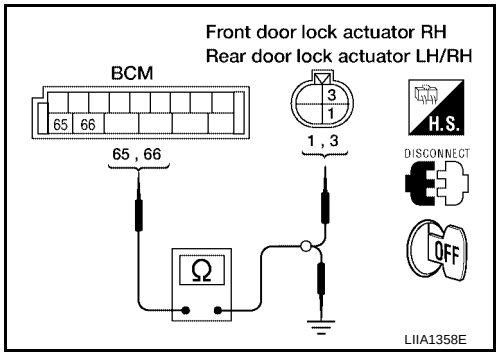

OK or NG

OK >> Replace front door lock actuator RH or rear door lock actuator LH/RH. Refer to BL-76, "Removal and Installation" (front) or BL-78, "Removal and Installation of Door Lock" (rear).

NG >> Repair or replace harness.

Front Door Lock Assembly LH (Key Cylinder Switch) Check (With left front only power window anti-pinch system)

EIS003HZ

1. CHECK DOOR KEY CYLINDER SWITCH LH SIGNAL

With CONSULT-II

Check front door lock assembly LH (key cylinder switch) ("KEY CYL LK-SW", "KEY CYL UN-SW") in DATA MONITOR mode in CONSULT–II. Refer to BL-28, "DATA MONITOR" .

- When key inserted in front key cylinder is turned to LOCK:

  KEY CYL LK-SW : ON

- When key inserted in front key cylinder is turned to UNLOCK:

  KEY CYL UN-SW : ON

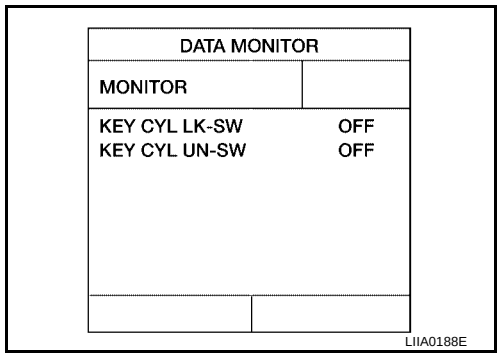

Without CONSULT-II

Check voltage between BCM connector M18 terminals 7, 8 and ground.

Connector	Terminals		Condition	Voltage (V) (Approx.)
	(+)	(–)		
M18	7	Ground	Front door lock assembly LH (key cylinder switch) is neutral.	5
			Front door lock assembly LH (key cylinder switch) is turned to UNLOCK.	0
	8	Ground	Front door lock assembly LH (key cylinder switch) is neutral.	5
			Front door lock assembly LH (key cylinder switch) is turned to LOCK.	0

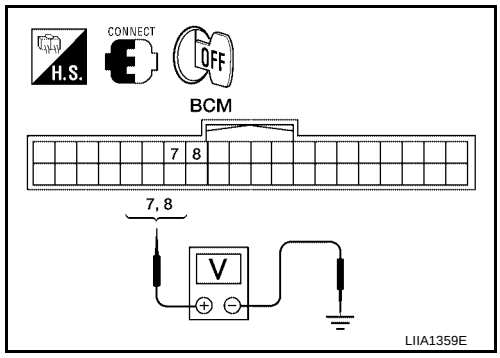

OK or NG

OK >> System is OK.
NG >> GO TO 2.

2. CHECK FRONT DOOR LOCK ASSEMBLY LH (KEY CYLINDER SWITCH) GROUND HARNESS

Check continuity between front door lock assembly LH (key cylinder switch) connector D50 terminal 3 and body ground.

Connector	Terminals	Continuity
D50	3 – Ground	Yes

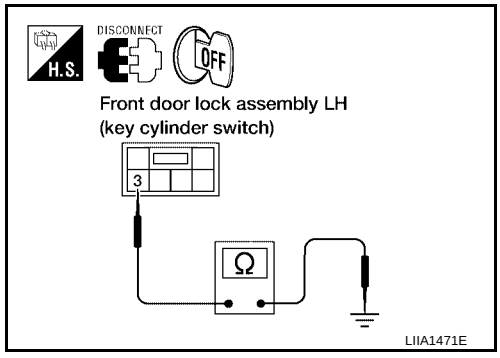

OK or NG

OK >> GO TO 3.
NG >> Repair or replace harness.

3. CHECK FRONT DOOR LOCK ASSEMBLY LH (KEY CYLINDER SWITCH)

Check continuity between front door lock assembly LH (key cylinder switch) connector terminals.

Terminals	Condition	Continuity
1 – 3	Key is turned to LOCK or neutral.	No
	Key is turned to UNLOCK	Yes
2 – 3	Key is turned to UNLOCK or neutral.	No
	Key is turned to LOCK.	Yes

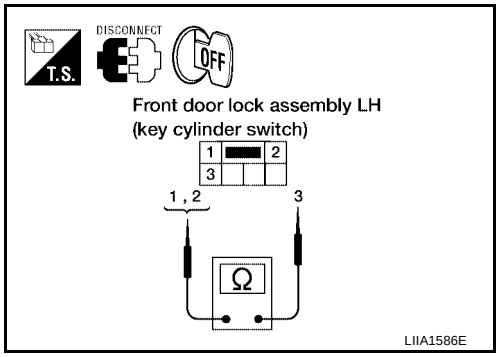

OK or NG

OK >> Repair or replace harness.
NG >> Replace front door lock assembly LH (key cylinder switch). Refer to BL-76, "Removal and Installation" .

Door Lock/Unlock Switch Check (With left and right front power window anti–pinch system)

EIS003I0

1. CHECK MAIN POWER WINDOW AND DOOR LOCK/UNLOCK SWITCH INPUT SIGNAL

With CONSULT-II

Check main power window and door lock/unlock switch ("LOCK SW DR/AS", "UNLK SW DR/AS") in DATA MONITOR mode in CONSULT–II. Refer to BL-28, "DATA MONITOR" .

- When main power window and door lock/unlock switch is turned to LOCK :

  LOCK SW DR/AS : ON

- When main power window and door lock/unlock switch is turned to UNLOCK :

  UNLK SW DR/AS : ON

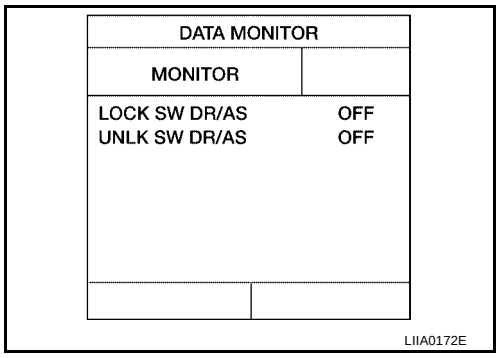

Without CONSULT-II

Check voltage between BCM connector M18 terminal 22 and ground.

Connec-tor	Terminals		Condition	Voltage (V)
	(+)	(–)		
M18	22	Ground	—	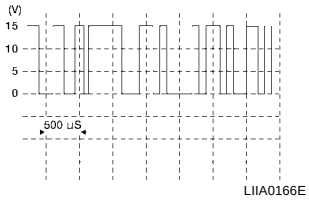

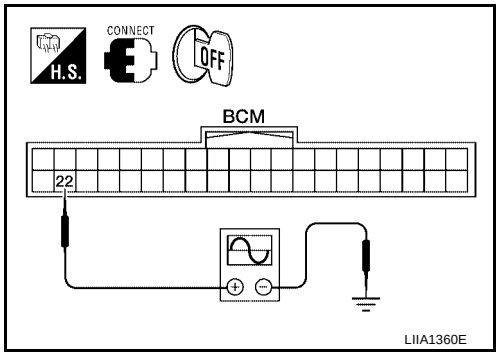

OK or NG

OK >> System is OK.
NG >> GO TO 2.

2. CHECK MAIN POWER WINDOW AND DOOR LOCK/UNLOCK SWITCH GROUND HARNESS

Check continuity between main power window and door lock/unlock switch connector D7 terminal 11 and body ground.

Connector	Terminals	Continuity
D7	11 – Ground	Yes

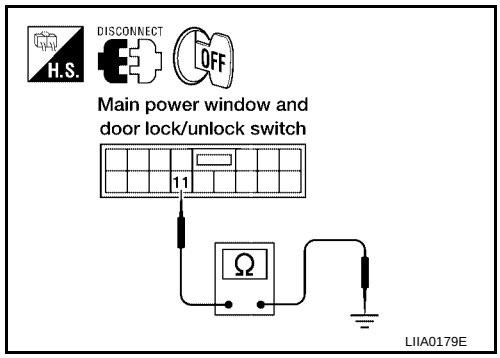

OK or NG

OK >> GO TO 3.
NG >> Repair or replace harness.

3. CHECK POWER WINDOW SERIAL LINK CIRCUIT

Check continuity between BCM connector M18 terminal 22 and main power window and door lock/unlock switch connector D7 terminal 14.

22 - 14 : Continuity should exist

OK or NG

OK >> GO TO 4.
NG >> Repair or replace harness.

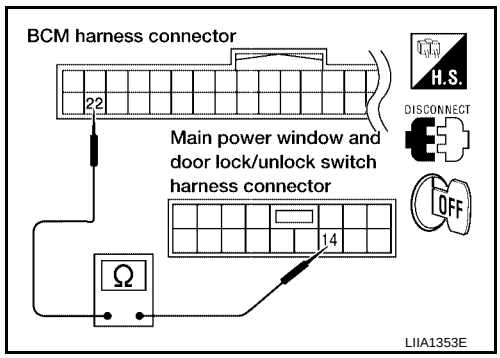

4. CHECK DOOR LOCK/UNLOCK SWITCH

Check continuity between main power window and door lock/unlock switch terminals.

Terminals	Condition	Continuity
5 – 11	Key is turned to LOCK or neutral.	No
	Key is turned to UNLOCK	Yes
4 – 11	Key is turned to UNLOCK or neutral.	No
	Key is turned to LOCK.	Yes

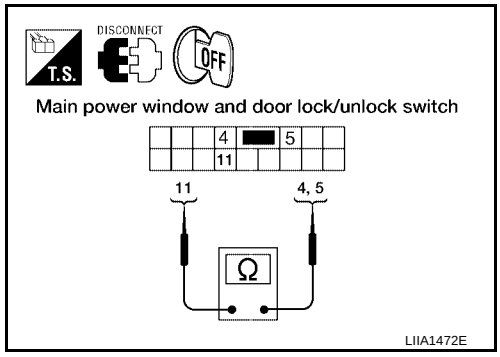

OK or NG

OK >> Repair or replace harness.
NG >> Replace main power window and door lock/unlock switch or power window and door lock/unlock switch RH.

Power Window and Door Lock/Unlock Switch RH (With left and right front power window anti–pinch system)

EIS003I1

1. CHECK MAIN POWER WINDOW AND DOOR LOCK/UNLOCK SWITCH INPUT SIGNAL

With CONSULT-II

Check main power window and door lock/unlock switch ("LOCK SW DR/AS", "UNLK SW DR/AS") in DATA MONITOR mode in CONSULT–II. Refer to BL-28, "DATA MONITOR" .

- When main power window and door lock/unlock switch is turned to LOCK :

  LOCK SW DR/AS : ON

- When main power window and door lock/unlock switch is turned to UNLOCK :

  UNLK SW DR/AS : ON

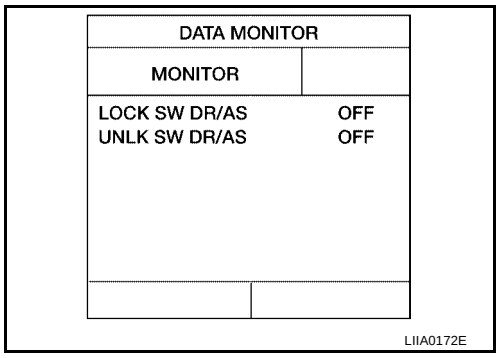

Without CONSULT-II

Check voltage between BCM connector M18 terminal 22 and ground.

Connec-tor	Terminals		Condition	Voltage (V) (Approx.)
	(+)	(–)		
M18	22	Ground	—	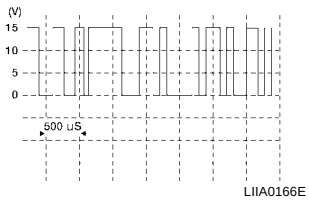

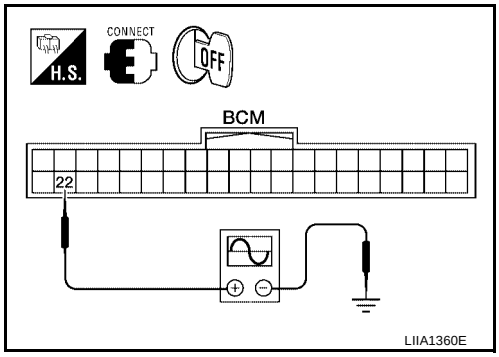

OK or NG

OK >> System is OK.
NG >> GO TO 2.

2. CHECK DOOR LOCK/UNLOCK SWITCH GROUND HARNESS

Check continuity between power window and door lock/unlock switch RH connector D106 terminal 7 and body ground.

- Power window and door lock/unlock switch RH

Connector	Terminals	Continuity
D106	7 – Ground	Yes

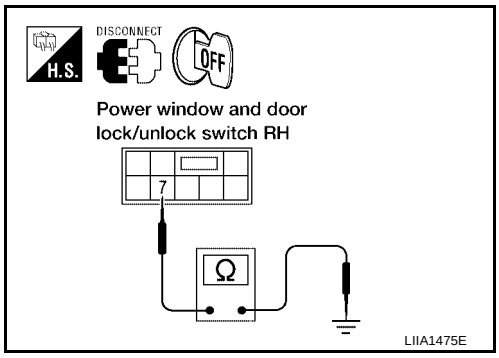

OK or NG

OK >> GO TO 3.
NG >> Repair or replace harness.

3. CHECK DOOR LOCK/UNLOCK SWITCH

1. Disconnect power window and door lock/unlock switch RH.
2. Check continuity between switch terminals 7 and 11.

- Power window and door lock/unlock switch RH

Terminals	Condition	Continuity
7 – 11	Neutral	No
	Lock	Yes
	Unlock	Yes

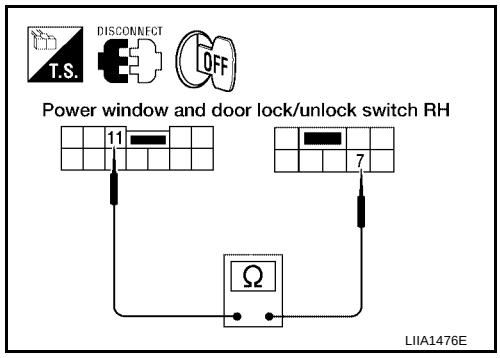

OK or NG

OK >> Repair or replace harness.
NG >> Replace power window and door lock/unlock switch RH.

Front Door Lock Assembly LH (Key Cylinder Switch) Check (With left and right front power window anti–pinch system)

EIS003I2

1. CHECK DOOR KEY CYLINDER SWITCH LH SIGNAL

With CONSULT-II

Check front door lock assembly LH (key cylinder switch) ("KEY CYL LK-SW", "KEY CYL UN-SW") in DATA MONITOR mode in CONSULT–II. Refer to BL-28, "DATA MONITOR" .

- When key inserted in front key cylinder is turned to LOCK :

  KEY CYL LK-SW : ON

- When key inserted in front key cylinder is turned to UNLOCK:

  KEY CYL UN-SW : ON

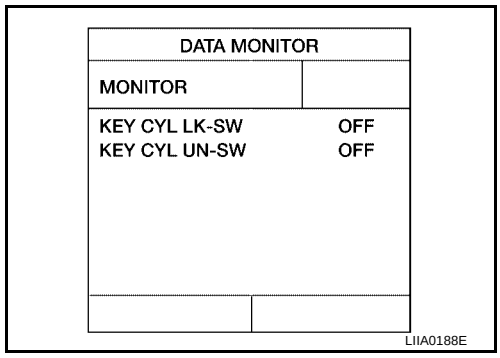

OK or NG

OK >> System is OK.
NG >> GO TO 2.

2. CHECK DOOR KEY CYLINDER SWITCH LH GROUND HARNESS

Check continuity between front door lock assembly LH (key cylinder switch) connector D50 terminal 3 and body ground.

Connector	Terminals	Continuity
D50	3 – Ground	Yes

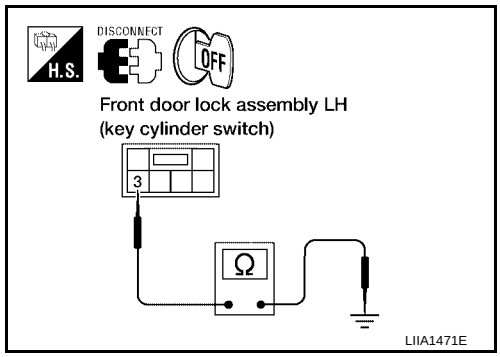

OK or NG

OK >> GO TO 3.
NG >> Repair or replace harness.

3. CHECK DOOR KEY CYLINDER SWITCH LH

Check continuity between front door lock assembly LH (key cylinder switch) connector terminals.

Terminals	Condition	Continuity
1 – 3	Key is turned to LOCK or neutral.	No
	Key is turned to UNLOCK.	Yes
2 – 3	Key is turned to UNLOCK or neutral.	No
	Key is turned to LOCK.	Yes

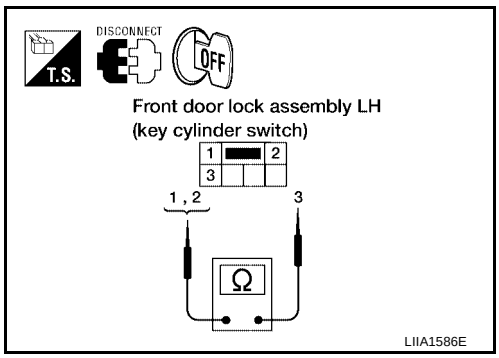

OK or NG

OK >> GO TO 4.
NG >> Replace front door lock assembly LH (key cylinder switch). Refer to BL-76, "Removal and Installation" .

4. CHECK DOOR KEY CYLINDER HARNESS

Check continuity between main power window and door lock/unlock switch connector D7 terminals 4, 5 and front door lock assembly LH (key cylinder switch) connector D50 terminals 1, 2 and body ground.

Connector	Terminal	Connector	Terminal	Continuity
D7	4	D50	2	Yes
	5		1	Yes
	4, 5	Ground		No

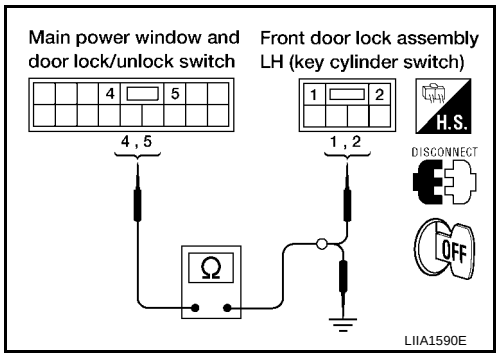

OK or NG

OK >> Replace main power window and door lock/unlock switch.
NG >> Repair or replace harness.

REMOTE KEYLESS ENTRY SYSTEM

PFP:28596

Component Parts and Harness Connector Location

EIS003I3

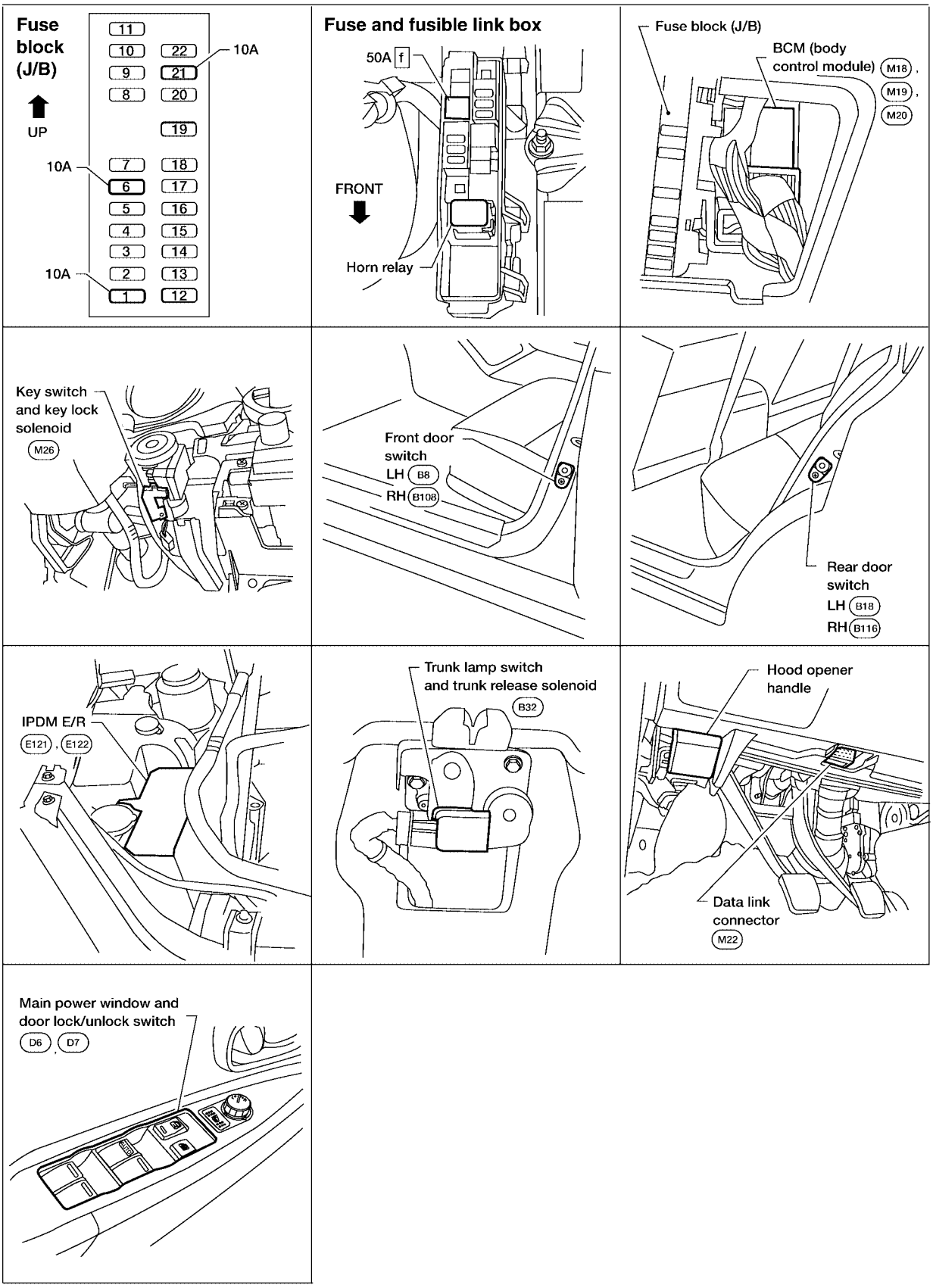

LIIA2219E

System Description

EIS003I4

INPUTS

Power is supplied at all times

- to BCM terminal 70
- through 50A fusible link (letter **f** , located in the fuse and fusible link box).

Power is supplied at all times

- to key switch terminal 3 and
- to BCM terminal 57
- through 10A fuse [No. 21, located in the fuse block (J/B)].

When the key switch is ON (ignition key is inserted in key cylinder), power is supplied

- through key switch terminal 4
- to BCM terminal 37.

When the front door switch LH is ON (door is OPEN), ground is supplied

- to BCM terminal 47.
- through front door switch LH terminal 2
- to front door switch LH case ground.

When the front door switch RH is ON (door is OPEN), ground is supplied

- to BCM terminal 12
- through front door switch RH terminal 2
- to front door switch RH case ground.

When the rear door switch RH is ON (door is OPEN), ground is supplied

- to BCM terminal 13
- through rear door switch RH terminal 1
- to rear door switch RH case ground.

When the rear door switch LH is ON (door is OPEN), ground is supplied

- to BCM terminal 48
- through rear door switch LH terminal 1
- to rear door switch LH case ground.

Keyfob signal is inputted to BCM.
The remote keyless entry system controls operation of the

- power door lock
- trunk lid opener
- interior lamp
- panic alarm
- hazard and horn reminder
- keyless power window down (open)

OPERATED PROCEDURE

Power Door Lock Operation

BCM receives a LOCK signal from keyfob. BCM locks all doors with input of LOCK signal from keyfob.
When an UNLOCK signal is sent from keyfob once, driver's door will be unlocked.
Then, if an UNLOCK signal is sent from keyfob again within 5 seconds, all other doors will be unlocked.

Hazard and Horn Reminder

BCM output to IPDM E/R for hazard and horn reminder signal as DATA LINE (CAN H line and CAN L line).
The hazard and horn reminder has C mode (horn chirp mode) and S mode (non-horn chirp mode).

Operating function of hazard and horn reminder

	C mode		S mode	
Remote controller operation	Lock	Unlock	Lock	Unlock
Hazard warning lamp flash	Twice	Once	Twice	—
Horn sound	Once	—	—	—

How to change hazard and horn reminder mode

With CONSULT-II

Hazard and horn reminder can be changed using “WORK SUPPORT” mode in “MULTI ANSWER BACK SET".

Without CONSULT-II

Refer to Owner's Manual for instructions.

Interior Lamp Operation

When the following input signals are both supplied:

- door switches OPEN (when all the doors are closed);
- driver's door LOCKED;

Remote keyless entry system turns on interior lamp and ignition illumination (for 30 seconds) with input of UNLOCK signal from keyfob.

For detailed description, refer to LT-116, "ROOM LAMP TIMER OPERATION" .

Panic Alarm Operation

When key switch is OFF (when ignition key is not inserted in key cylinder), remote keyless entry system turns on and off horn and headlamp intermittently with input of PANIC ALARM signal from keyfob.

The alarm automatically turns off after 25 seconds or when BCM receives any signal from keyfob.

For detailed description, refer to BL-85, "VEHICLE SECURITY (THEFT WARNING) SYSTEM" .

Trunk Lid Opener Operation

When a TRUNK OPEN signal is sent with key OFF (ignition key removed from key cylinder) from keyfob, power is supplied

- through BCM terminal 53
- to trunk lamp switch and trunk release solenoid terminal 3.

When power and ground are supplied, trunk lamp switch and trunk release solenoid opens trunk lid.

Keyless Power Window Down (open) Operation

When keyfob unlock switch is turned ON with ignition switch OFF, and the switch is detected to be on continuously for 3 seconds, the driver's door and passenger's door (with left and right front power window anti-pinch system) power windows are simultaneously opened.

Power window is operated to open and the operation continues as long as the keyfob unlock switch is pressed.

CAN Communication System Description

EIS003I5

Refer to LAN-20, "CAN COMMUNICATION" .

Schematic

EIS003I6

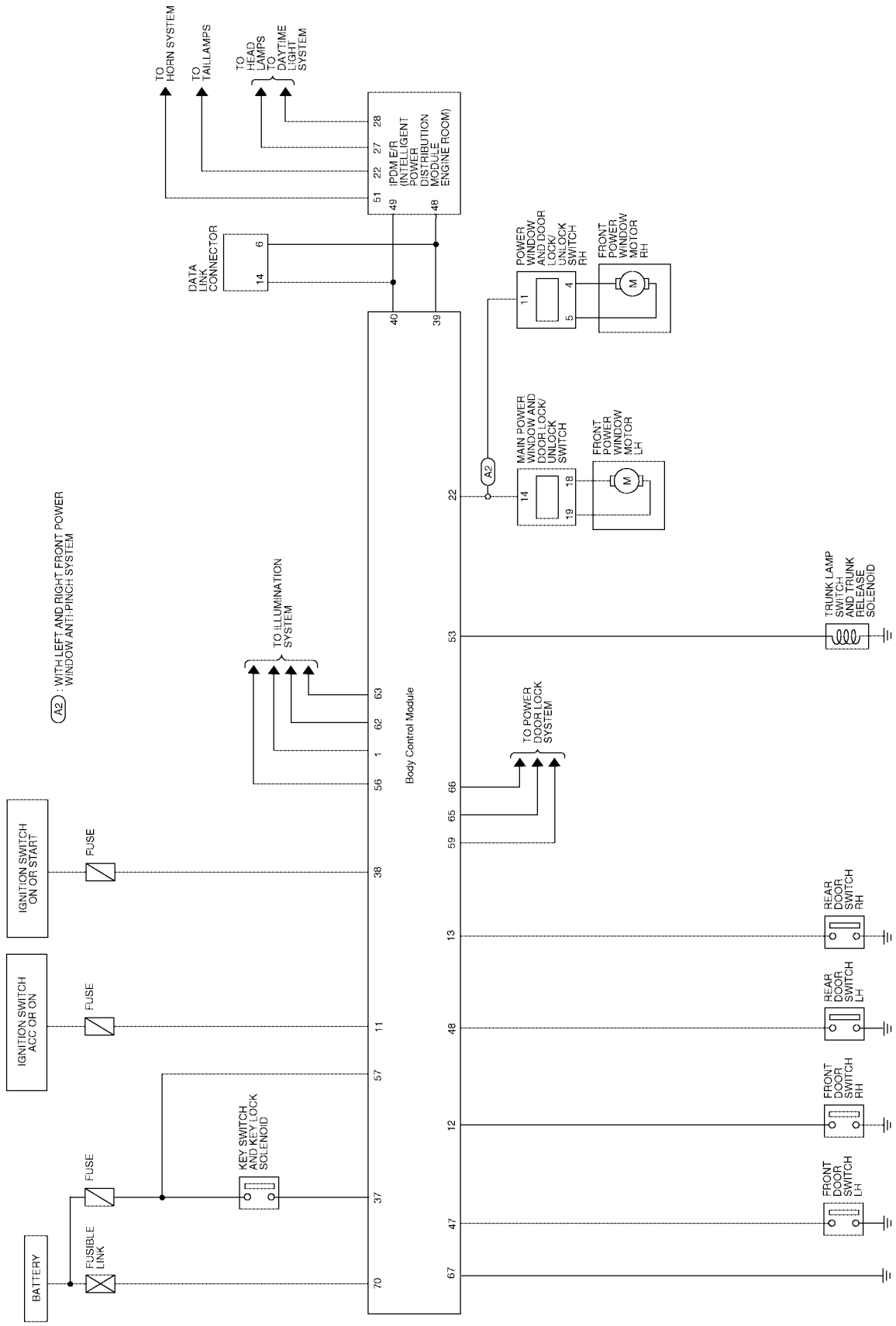

Wiring Diagram — KEYLES —

EIS003I7

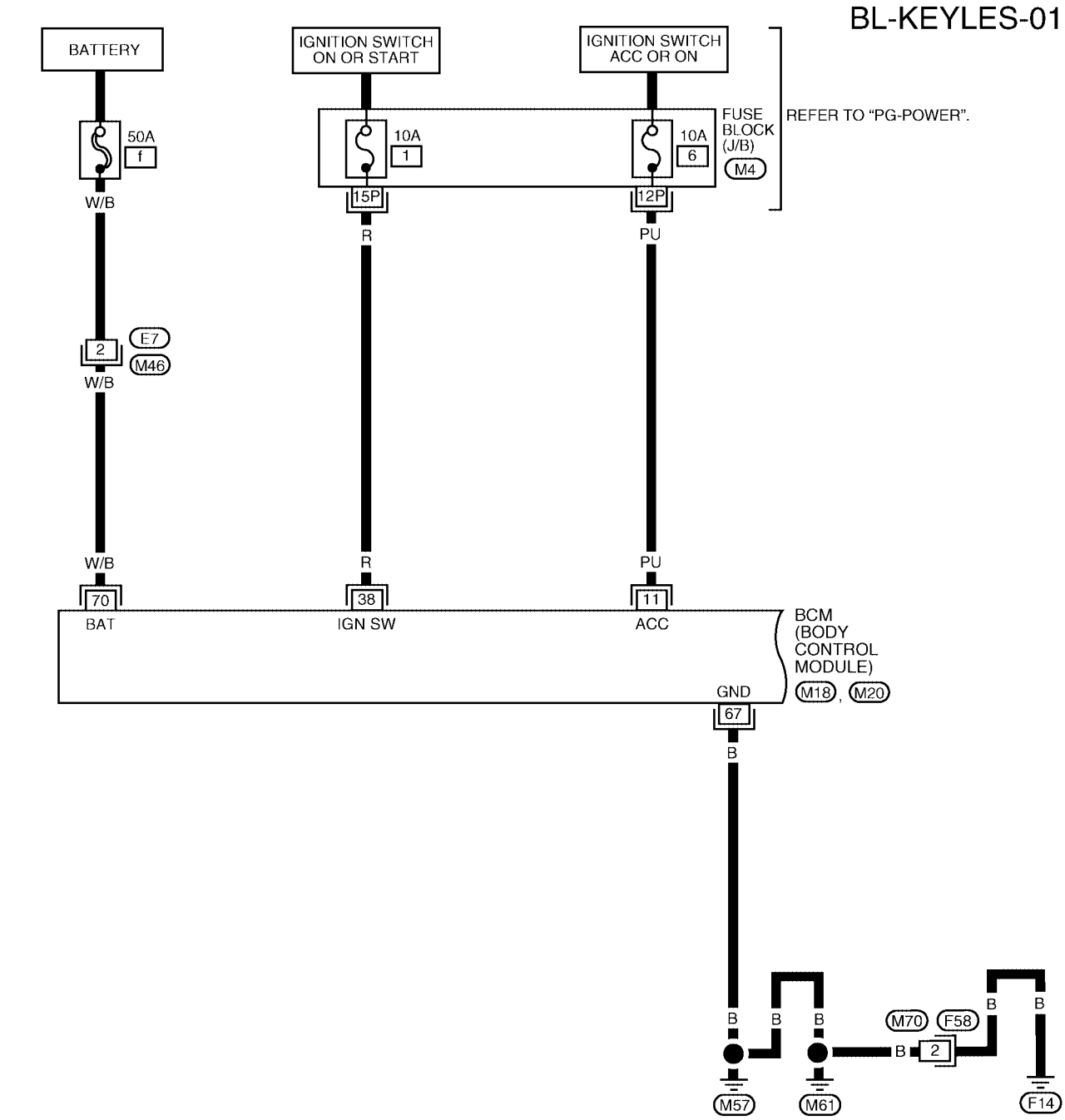

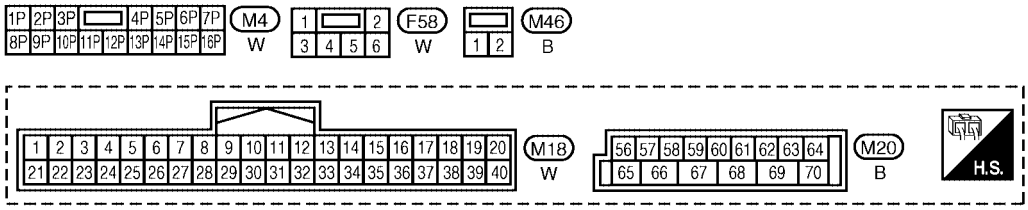

WIWA0422E

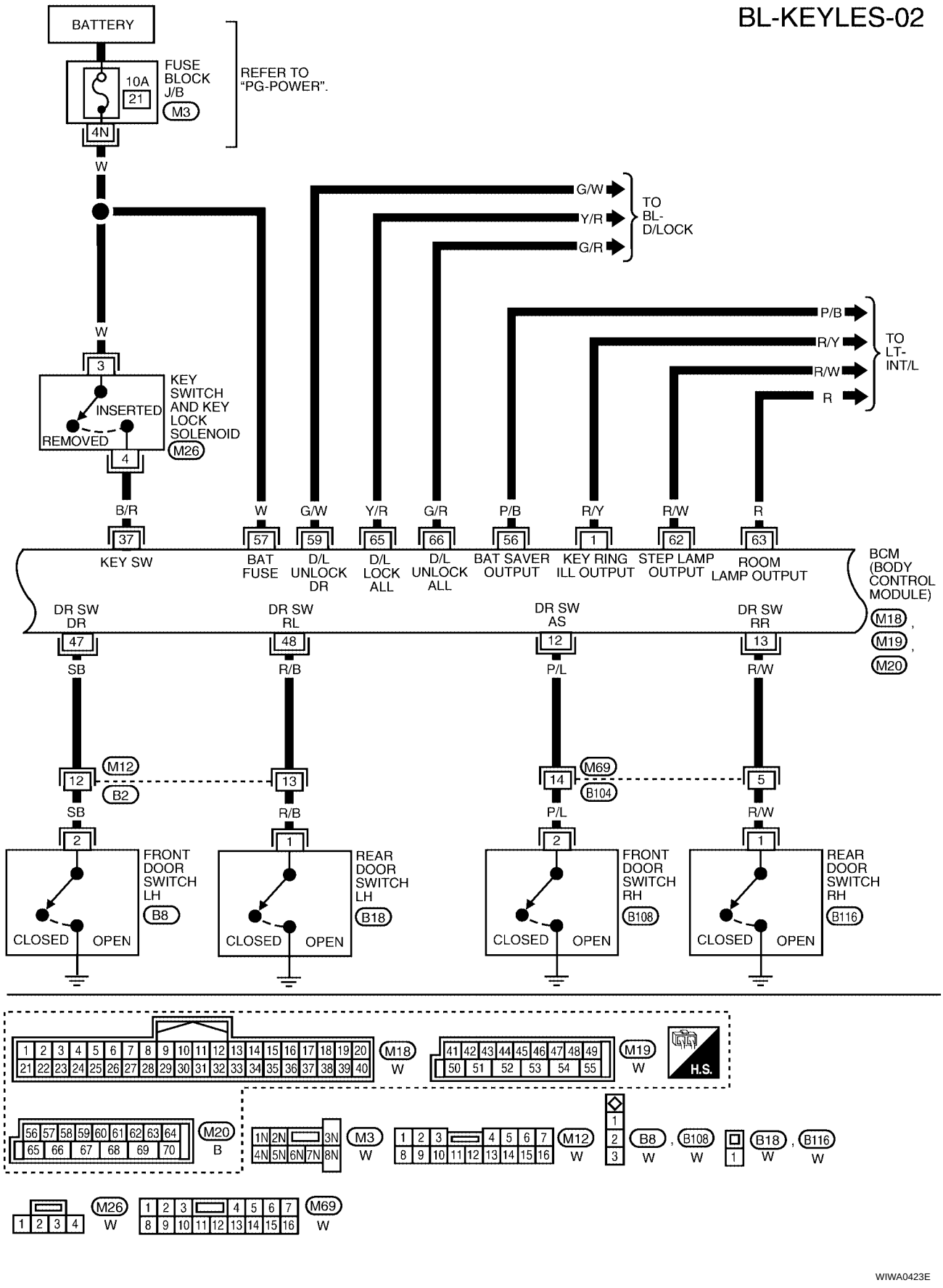
BL-KEYLES-02
BATTERY
FUSE BLOCK J/B
10A
21
M3
4N
REFER TO "PG-POWER".
W
G/W
Y/R
G/R
TO BL-D/LOCK
P/B
R/Y
R/W
R
TO LT-INT/L
3
KEY SWITCH AND KEY LOCK SOLENOID
INSERTED
REMOVED
M26
4
B/R
37
KEY SW
57
BAT FUSE
59
D/L UNLOCK DR
65
D/L LOCK ALL
66
D/L UNLOCK ALL
56
BAT SAVER OUTPUT
1
KEY RING ILL OUTPUT
62
STEP LAMP OUTPUT
63
ROOM LAMP OUTPUT
BCM (BODY CONTROL MODULE)
M18, M19, M20
DR SW DR
47
SB
DR SW RL
48
R/B
DR SW AS
12
P/L
DR SW RR
13
R/W
M12
B2
M69
B104
14
5
2
1
FRONT DOOR SWITCH LH
B8
REAR DOOR SWITCH LH
B18
FRONT DOOR SWITCH RH
B108
REAR DOOR SWITCH RH
B116
CLOSED
OPEN
M18
M19
H.S.
M20
B
M3
M12
B8
B108
B18
B116
M26
M69

WIWA0423E

BL-KEYLES-03

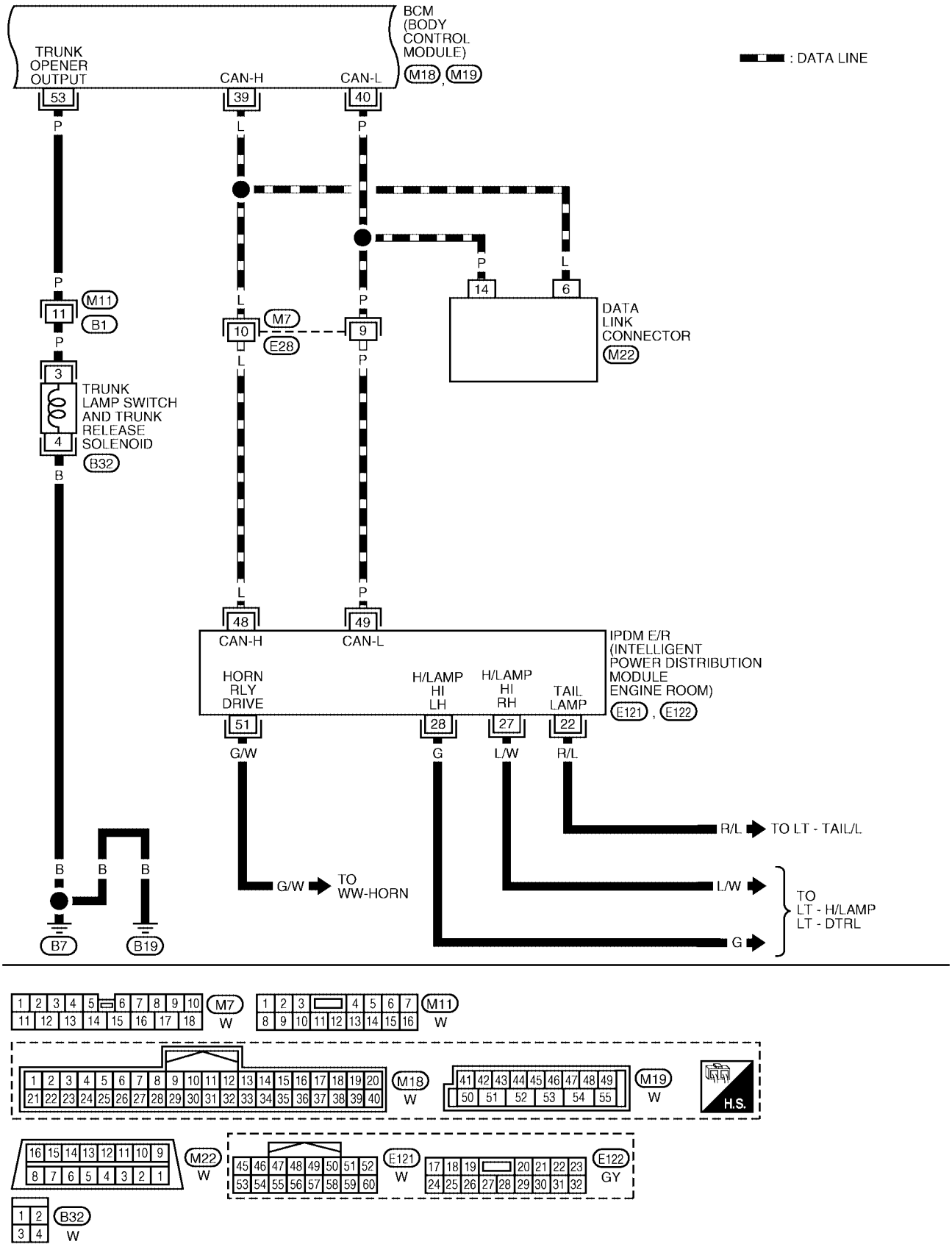
BCM (BODY CONTROL MODULE)
M18, M19
: DATA LINE
TRUNK OPENER OUTPUT
CAN-H
CAN-L
53
39
40
P
L
P
M11
11
B1
M7
10
E28
9
14
6
DATA LINK CONNECTOR
M22
3
TRUNK LAMP SWITCH AND TRUNK RELEASE SOLENOID
4
B32
B
48
49
CAN-H
CAN-L
IPDM E/R (INTELLIGENT POWER DISTRIBUTION MODULE ENGINE ROOM)
E121, E122
HORN RLY DRIVE
H/LAMP HI LH
H/LAMP HI RH
TAIL LAMP
51
28
27
22
G/W
G
L/W
R/L
R/L
TO LT - TAIL/L
G/W
TO WW-HORN
L/W
G
TO LT - H/LAMP LT - DTRL
B7
B19
M7
W
M11
W
M18
W
M19
W
H.S.
M22
W
E121
W
E122
GY
B32
W
WIWA0424E

BL-KEYLES-04

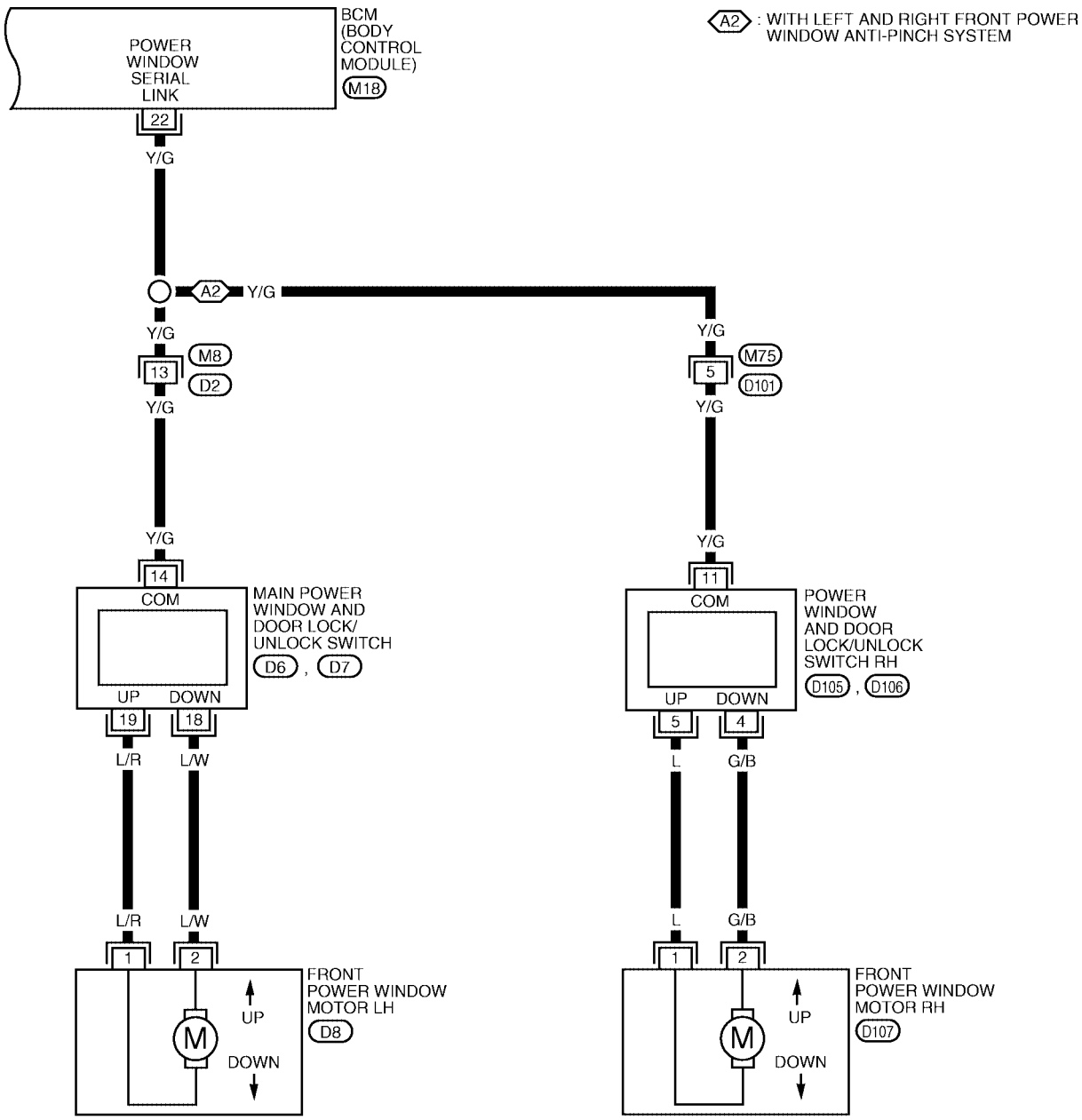

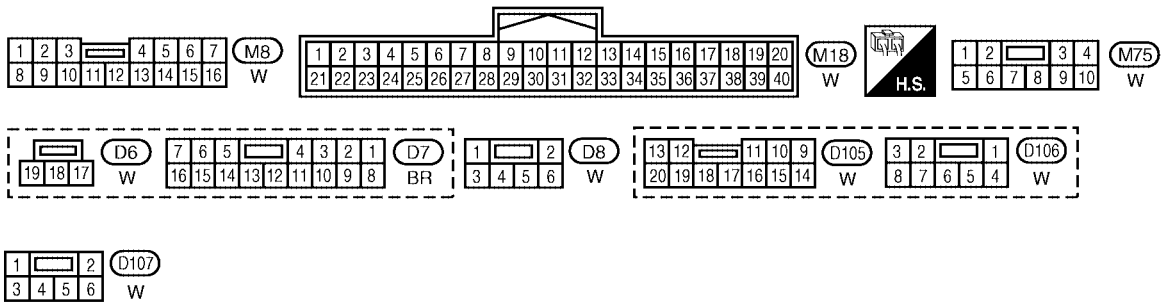

WIWA1018E

Terminals and Reference Value for BCM

EIS003I8

Terminal	Wire Color	Item	Condition	Voltage (V) (Approx.)
1	R/Y	Ignition key illumination	When doors are unlocked using keyfob (OFF → Unlock)	Battery voltage → 0V
11	PU	Ignition switch (ACC or ON)	Ignition switch (ACC or ON position)	Battery voltage
12	P/L	Front door switch RH	Door Closed (OFF) → Open (ON)	Battery voltage → 0V
13	R/W	Rear door switch RH	Door Closed (OFF) → Open (ON)	Battery voltage → 0V
22	Y/G	Power window serial link	—	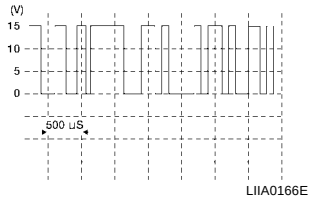
37	B/R	Ignition key switch (insert)	Key inserted → Key removed from key cylinder	Battery voltage → 0V
38	R	Ignition switch (ON or START)	Ignition switch (ON or START position)	Battery voltage
39	L	CAN-H	—	—
40	P	CAN-L	—	—
47	SB	Front door switch LH	Door Closed (OFF) → Open (ON)	Battery voltage → 0V
48	R/B	Rear door switch LH	Door Closed (OFF) → Open (ON)	Battery voltage → 0V
53	P	Trunk release solenoid	When trunk lid release solenoid is operated using keyfob (OFF → ON)	0V → Battery voltage
56	P/B	Battery saver (Interior lamp)	Battery saver operates → Does not operate (ON → OFF)	Battery voltage → 0V
57	W	Battery power supply	—	Battery voltage
59	G/W	Driver door lock actuator	Door lock & unlock switch (Neutral → Unlock)	0V → Battery voltage
62	R/W	Step lamp LH and RH	When doors are unlocked using keyfob (OFF → Unlock)	Battery voltage → 0V
63	R	Room lamp	When doors are locked using keyfob → Unlocked using keyfob (Lamp switch in "DOOR" position)	Battery voltage → 0V
65	Y/R	Door lock actuators	Door lock & unlock switch (Neutral → Lock)	0V → Battery voltage
66	G/R	Passenger and rear doors lock actuator	Door lock & unlock switch (Neutral → Unlock)	0V → Battery voltage
67	B	Ground	—	—
70	W/B	Battery power supply	—	Battery voltage

CONSULT-II Function (BCM)

EIS003I9

CONSULT-II can display each diagnostic item using the diagnostic test modes shown following.

BCM diagnostic test item	Diagnostic mode	Content
Inspection by part	WORK SUPPORT	Changes setting of each function.
	DATA MONITOR	Displays BCM input/output data in real time.
	ACTIVE TEST	Operation of electrical loads can be checked by sending drive signal to them.
	SELF-DIAG RESULTS	Displays BCM self-diagnosis results.
	CAN DIAG SUPPORT MNTR	The results of transmit/receive diagnosis of CAN communication can be read.
	ECU PART NUMBER	BCM part number can be read.
	CONFIGURATION	Performs BCM configuration read/write functions.

CONSULT-II Inspection Procedure

EIS003IA

“MULTI REMOTE ENT”

CAUTION:

If CONSULT-II is used with no connection of CONSULT-II CONVERTER, malfunctions might be detected in self-diagnosis depending on control unit which carries out CAN communications.

1. Turn ignition switch OFF.
2. Connect CONSULT-II and CONSULT-II CONVERTER to the data link connector.

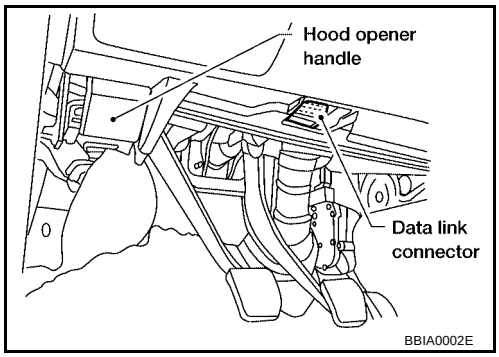

3. Turn ignition switch ON.
4. Touch “START (NISSAN BASED VHCL)”.

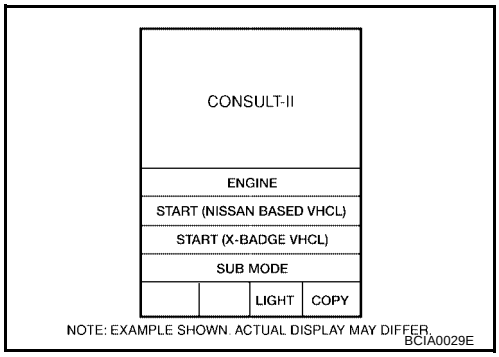

5. Touch “BCM”.

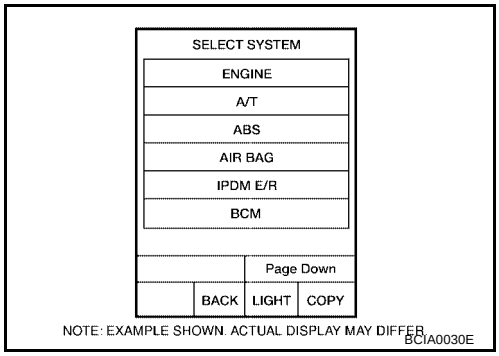

6. Touch “MULTI REMOTE ENT”.

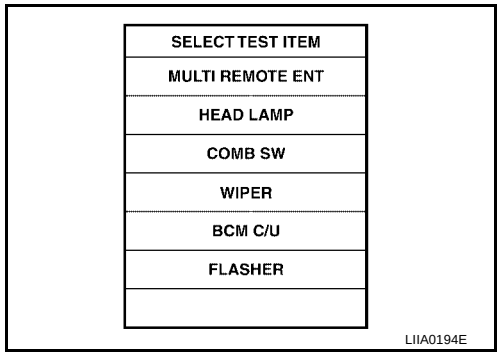

7. Select diagnosis mode.
“DATA MONITOR”, “ACTIVE TEST” and “WORK SUPPORT” are available.

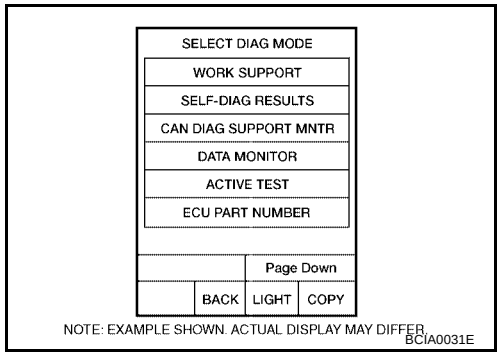

CONSULT-II Application Items

EIS003IB

“MULTI REMOTE ENT”

Data Monitor

Monitored Item	Description
DOOR SW-AS	Indicates [ON/OFF] condition of front door switch RH.
DOOR SW-DR	Indicates [ON/OFF] condition of front door switch LH.
KEY ON SW	Indicates [ON/OFF] condition of key switch.
ACC ON SW	Indicates [ON/OFF] condition of ignition switch in ACC position.
IGN ON SW	Indicates [ON/OFF] condition of ignition switch in ON position.
PANIC BTN	Indicates [ON/OFF] condition of panic signal from keyfob.
UN BUTTON/SIG	Indicates [ON/OFF] condition of unlock signal from keyfob.
LK BUTTON/SIG	Indicates [ON/OFF] condition of lock signal from keyfob.
KEY CYL LK-SW	Indicates [ON/OFF] condition of lock signal from door key cylinder switch.
KEY CYL UN-SW	Indicates [ON/OFF] condition of unlock signal from door key cylinder switch.
UNLK SW DR/AS	Indicates [ON/OFF] condition of unlock signal from lock/unlock switch.
LOCK SW DR/AS	Indicates [ON/OFF] condition of lock signal from lock/unlock switch.
DOOR SW-RR	Indicates [ON/OFF] condition of rear door switch RH.
DOOR SW-RL	Indicates [ON/OFF] condition of rear door switch LH.
LK/UN BTN ON	Indicates [ON/OFF] condition of lock/unlock signal at the same time from keyfob.
TRUNK BTN/SIG	Indicates [ON/OFF] condition of trunk open signal from keyfob.
UN BUTTON ON	Indicates [ON/OFF] condition of unlock signal from keyfob.

Active Test

Test Item	Description
INT LAMP	This test is able to check interior lamp illumination operation. The interior lamp illumination is turned on when “ON” on CONSULT-II screen is touched.
IGN ILLUM	This test is able to check ignition illumination operation. The ignition illumination is turned on when “ON” on CONSULT-II screen is touched.

Test Item	Description
FLASHER RIGHT(CAN)	This test is able to check right hazard reminder operation. The right hazard lamp turns on when “ON” on CONSULT-II screen is touched.
FLASHER LEFT(CAN)	This test is able to check left hazard reminder operation. The left hazard lamp turns on when “ON” on CONSULT-II screen is touched.
HORN	This test is able to check panic alarm and horn reminder operations. The alarm activate for 0.5 seconds after “ON” on CONSULT-II screen is touched.
HEAD LAMP(HI)	This test is able to check headlamps panic alarm operation. The headlamp illuminates for 0.5 seconds after “ON” on CONSULT-II screen is touched.
POWER WINDOW DOWN	This test is able to check power window down operation. The windows are lowered when "ON" on the CONSULT-II screen is touched.
TRUNK/BACK DOOR	This test is able to check trunk lid opener actuator operation. The trunk is unlocked when “ON” on CONSULT-II screen is touched.

Work Support

Test Item	Description
REMO CONT ID CONFIR	It can be checked whether keyfob ID code is registered or not in this mode.
REMO CONT ID REGIST	Keyfob ID code can be registered.
REMO CONT ID ERASUR	Keyfob ID code can be erased.
MULTI ANSWER BACK SET	Hazard and horn reminder mode can be changed in this mode. The reminder mode will be changed when “MODE SET” on CONSULT-II screen is touched.
AUTO LOCK SET	Auto locking function mode can be changed in this mode. The function mode will be changed when "MODE SET" on CONSULT-II screen is touched.
PANIC ALRM SET	Panic alarm operation mode can be changed in this mode. The operation mode will be changed when "MODE SET" on CONSULT-II screen is touched.
TRUNK OPEN SET	Trunk lid opener operation mode can be changed in this mode. The operation mode will be changed when "MODE SET" on CONSULT-II screen is touched.
PW DOWN SET	Keyless power window down (open) operation mode can be changed in this mode. The operation mode will be changed when "MODE SET" on CONSULT-II screen is touched.

Hazard and horn reminder mode

	MODE 1 (C mode)		MODE 2 (S mode)		MODE 3		MODE 4		MODE 5		MODE 6	
Keyfob operation	Lock	Unlock	Lock	Unlock	Lock	Unlock	Lock	Unlock	Lock	Unlock	Lock	Unlock
Hazard warning lamp flash	Twice	Once	Twice	—	—	—	Twice	Once	Twice	—	—	Once
Horn sound	Once	—	—	—	—	—	—	—	Once	—	Once	—

Auto locking function mode

	MODE 1	MODE 2	MODE 3
Auto locking function	5 minutes	Nothing	1 minutes

Panic alarm operation mode

	MODE 1	MODE 2	MODE 3
Keyfob operation	0.5 seconds	Nothing	1.5 seconds

Trunk open operation mode

	MODE 1	MODE 2	MODE 3
Keyfob operation	0.5 seconds	Nothing	1.5 seconds

Power window down operation mode

	MODE 1	MODE 2	MODE 3
Keyfob operation	3 seconds	Nothing	5 seconds

Trouble Diagnosis Procedure

EIS003IC

1. Check the symptom and customer's requests.
2. Understand outline of system. Refer to BL-48, "System Description" .
3. Confirm that power door lock system operates normally. Refer to BL-17, "POWER DOOR LOCK SYSTEM" .
4. Perform BCM power supply and ground circuit check. Refer to BL-59, "BCM Power Supply and Ground Circuit Check" .
5. Refer to trouble diagnosis chart by symptom, repair or replace any malfunctioning parts. Refer to BL-60, "Trouble Diagnoses" .
6. Inspection End.

BCM Power Supply and Ground Circuit Check

EIS003ID

1. CHECK FUSE

- Check the following BCM fuses and fusible link.

Component Parts	Terminal No. (SIGNAL)	Ampere	No.	Location
BCM	57 (BAT power supply)	10A	21	Fuse block (J/B)
	70 (BAT power supply)	50A	**f**	Fuse and fusible link box
	11 (ACC power supply)	10A	6	Fuse block (J/B)
	38 (IGN power supply)	10A	1	Fuse block (J/B)

NOTE:
Refer to BL-17, "Component Parts and Harness Connector Location" .

OK or NG

OK >> GO TO 2.
NG >> If fuse is blown, be sure to eliminate cause of problem before installing new fuse. Refer to PG-4, "POWER SUPPLY ROUTING CIRCUIT" .

2. CHECK POWER SUPPLY CIRCUIT

1. Turn ignition switch OFF.
2. Disconnect BCM.
3. Check voltage between BCM connectors M18, M20 terminals 11, 38, 57, 70 and ground.

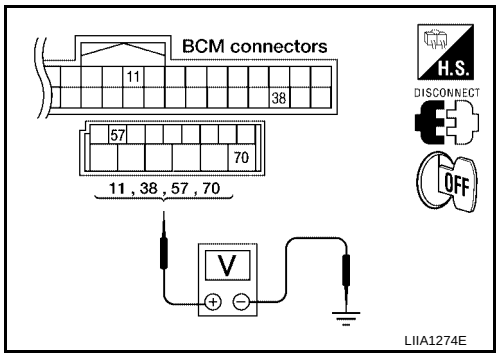

Connector	Terminals		Signal name	Ignition switch	Voltage (V) (Approx.)
	(+)	(–)			
M18	11	Ground	ACC power supply	ACC	Battery voltage
	38		IGN power supply	ON	Battery voltage
M20	57		Battery power supply	OFF	Battery voltage
	70		Battery power supply	OFF	Battery voltage

OK or NG

OK >> GO TO 3.
NG >> Repair or replace harness.

3. CHECK GROUND CIRCUIT

Check continuity between BCM connector M20 terminal 67 and ground.

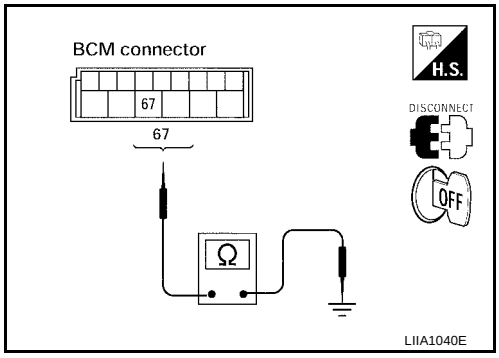

Connector	Terminals (Wire color)		Continuity
	(+)	(-)	
M20	67 (B)	Ground	Yes

OK or NG

OK >> Power supply and ground circuit is OK.
NG >> Repair or replace harness.

Trouble Diagnoses

EIS003IE

SYMPTOM CHART

NOTE:

- Always check the "Trouble Diagnosis Procedure" before troubleshooting. Refer to BL-59, "Trouble Diagnosis Procedure" .
- Always check keyfob battery before replacing keyfob. Refer to BL-62, "Keyfob Battery and Function Check" .
- The panic alarm operation and trunk lid opener operation of remote keyless entry system do not activate with the ignition key inserted in the ignition key cylinder.
- Use Remote Keyless Entry Tester J-43241 (follow instructions on tester) to check operation of keyfob before replacing keyfob.

Symptom	Diagnoses/service procedure	Reference page
All function of remote keyless entry system do not operate.	1. Keyfob battery and function check (use Remote Keyless Entry Tester J-43241) **NOTE:** If the result of keyfob function check is OK, keyfob is not malfunctioning.	BL-62
	2. Replace keyfob. Refer to ID Code Entry Procedure.	BL-69

Symptom	Diagnoses/service procedure	Reference page
The new ID of keyfob cannot be entered.	1. Keyfob battery and function check (use Remote Keyless Entry Tester J-43241) **NOTE:** If the result of keyfob function check is OK, keyfob is not malfunctioning.	BL-62
	2. Key switch (insert) check	BL-65
	3. Door switch check	BL-63
	4. Replace keyfob. Refer to ID Code Entry Procedure.	BL-69
Door lock or unlock does not function. (If the power door lock system does not operate manually, check power door lock system. Refer to BL-17, "POWER DOOR LOCK SYSTEM" .)	1. Keyfob battery and function check (use Remote Keyless Entry Tester J-43241) **NOTE:** If the result of keyfob function check is OK, keyfob is not malfunctioning.	BL-62
	2. Replace keyfob. Refer to ID Code Entry Procedure.	BL-69
Hazard and horn reminder does not activate properly when pressing lock or unlock button of keyfob.	1. Hazard reminder check	BL-68
	2. Horn reminder check	BL-68
	3. Door switch check	BL-63
	4. Replace BCM.	BCS-20
Room lamp, ignition illumination and step lamp operation do not activate properly.	1. Room lamp operation check	BL-68
	2. Ignition illumination operation check	BL-68
	3. Step lamp operation check	BL-68
	4. Door switch check	BL-63
Panic alarm (horn and headlamp) does not activate when panic alarm button is continuously pressed.	1. Keyfob battery and function check (use Remote Keyless Entry Tester J-43241) **NOTE:** If the result of keyfob function check is OK, keyfob is not malfunctioning.	BL-62
	2. Vehicle security operation check. Refer to Vehicle security system.	BL-85
	3. Key switch (insert) check	BL-65
	4. Replace keyfob. Refer to ID Code Entry Procedure.	BL-69
Trunk lid does not open when trunk opener button is continuously pressed.	1. Keyfob battery and function check (use Remote Keyless Entry Tester J-43241) **NOTE:** If the result of keyfob function check is OK, keyfob is not malfunctioning.	BL-62
	2. Trunk release solenoid check	BL-66
	3. Key switch (insert) check	BL-65
	4. Replace BCM.	BCS-20

Keyfob Battery and Function Check

EIS003IF

1. CHECK KEYFOB BATTERY

Remove battery and measure voltage across battery positive and negative terminals, (+) and (–).

Voltage : 2.5V - 3.0V

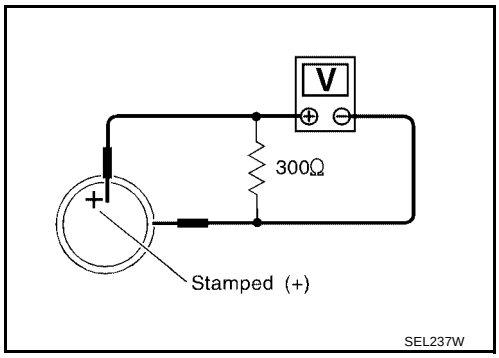

NOTE:
Keyfob does not function if battery is not set correctly.

OK or NG

OK >> GO TO 2.
NG >> Replace battery. Refer to BL-72, "Keyfob Battery Replacement" .

2. CHECK KEYFOB FUNCTION

With CONSULT-II

Check keyfob function in “DATA MONITOR” mode with CONSULT-II.

When pushing each button of keyfob, the corresponding monitor item should be turned as follows.

Condition	Monitor item	
Pushing LOCK	LK BUTTON/SIG	: ON
Pushing UNLOCK	UN BUTTON/SIG	: ON
Pushing TRUNK	TRUNK BTN/SIG	: ON
Pushing PANIC	PANIC BTN	: ON
Pushing LOCK and UNLOCK at the same time	LK/UN BTN ON	: ON

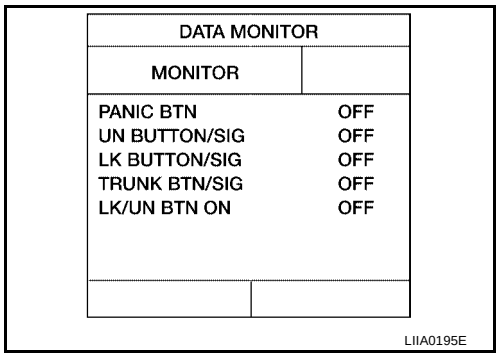

Without CONSULT-II

Check keyfob function using Remote Keyless Entry Tester J-43241.

OK or NG

OK >> WITH CONSULT-II: Replace BCM. Refer to BCS-20, "Removal and Installation of BCM" .
OK >> WITHOUT CONSULT-II: Keyfob is OK. Further inspection is necessary. Refer to BL-60, "SYMPTOM CHART" .
NG >> WITH CONSULT-II: Further inspection is necessary. Refer to BL-60, "SYMPTOM CHART" .
NG >> WITHOUT CONSULT-II: Replace keyfob. Refer to BL-71, "KEYFOB ID SET UP WITHOUT CONSULT-II" .

Door Switch Check

EIS003IG

1. CHECK DOOR SWITCHES INPUT SIGNAL

With CONSULT-II

Check door switches ("DOOR SW-DR", "DOOR SW-AS", "DOOR SW-RL", "DOOR SW-RR") in DATA MONITOR mode with CONSULT–II. Refer to BL-28, "DATA MONITOR" .

- When doors are open:

  DOOR SW-DR : ON
  DOOR SW-AS : ON
  DOOR SW-RL : ON
  DOOR SW-RR : ON

- When doors are closed:

  DOOR SW-DR : OFF
  DOOR SW-AS : OFF
  DOOR SW-RL : OFF
  DOOR SW-RR : OFF

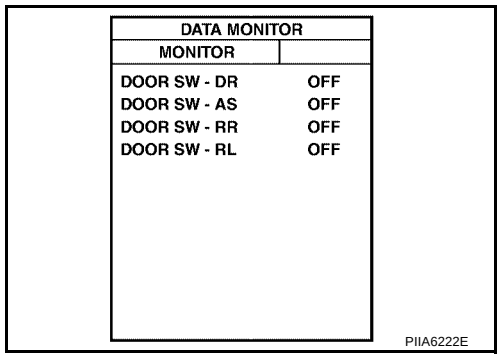

Without CONSULT-II

Check voltage between BCM connector M18 or M19 terminals 12, 13, 47, 48 and ground.

Connector	Item	Terminals (+)	Terminals (–)	Condition	Voltage (V) (Approx.)
M18	Front door switch RH	12	Ground	DOOR Open ↓ Closed	0 ↓ Battery voltage
	Rear door switch RH	13			
M19	Front door switch LH	47			
	Rear door switch LH	48			

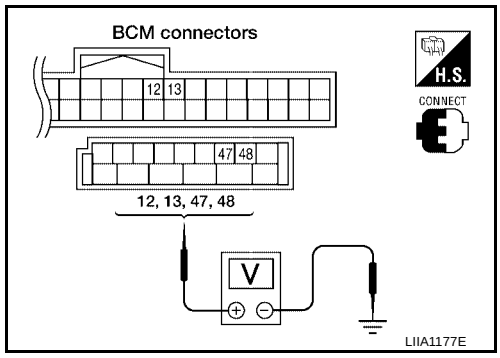

OK or NG

OK >> Door switch circuit is OK.
NG >> GO TO 2.

2. CHECK DOOR SWITCH CIRCUIT

1. Turn ignition switch OFF.
2. Disconnect door switch and BCM.
3. Check continuity between door switch connector B8 (front LH) or B108 (front RH) terminal 2, B18 (rear LH) or B116 (rear RH) terminal 1 and BCM connector M18, M19 terminals 12, 13, 47 and 48.

1 - 48	**: Continuity should exist**
1 - 13	**: Continuity should exist**
2 - 47	**: Continuity should exist**
2 - 12	**: Continuity should exist**

4. Check continuity between door switch connector B8 (front LH) or B108 (front RH) terminal 2, B18 (rear LH) or B116 (rear RH) terminal 1 and ground.

1 - Ground	**: Continuity should not exist**
2 - Ground	**: Continuity should not exist**

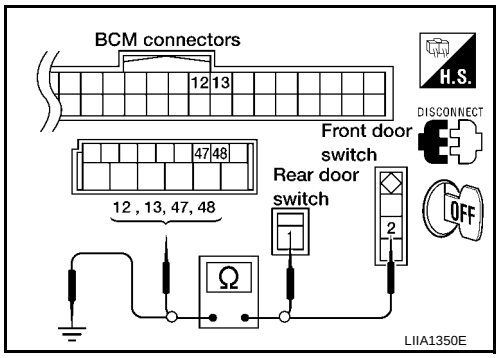

OK or NG

OK >> GO TO 3.
NG >> Repair or replace harness.

3. CHECK DOOR SWITCHES

1. Disconnect door switch harness.
2. Check continuity between door switch connector terminals.

	Terminals	Condition	Continuity
Front door switch LH/RH	2 – Ground	Door Open	Yes
		Door Closed	No
Rear door switch LH/RH	1 – Ground	Door Open	Yes
		Door Closed	No

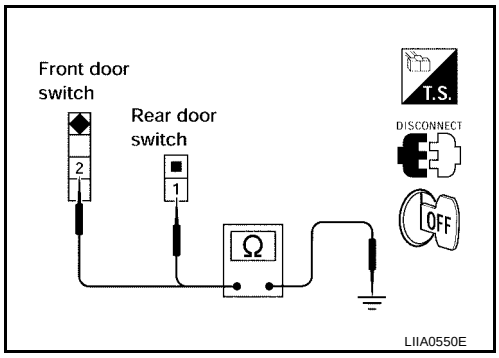

OK or NG

OK >> Check door switch case ground condition.
NG >> Replace door switch.

Key Switch (Insert) Check

EIS003IH

1. CHECK KEY SWITCH AND KEY LOCK SOLENOID INPUT SIGNAL

With CONSULT-II

Check key switch "KEY ON SW" in DATA MONITOR mode with CONSULT–II. Refer to BL-28, "DATA MONITOR" .

- When key is inserted to ignition key cylinder:

  KEY ON SW : ON

- When key is removed from ignition key cylinder:

  KEY ON SW : OFF

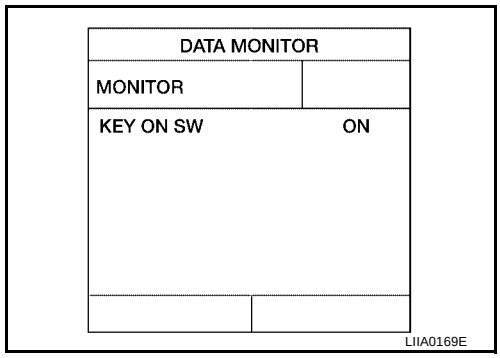

Without CONSULT-II

Check voltage between BCM connector M18 terminal 37 and ground.

Connector	Terminals		Condition	Voltage (V) (Approx.)
	(+)	(–)		
M18	37	Ground	Key is inserted.	Battery voltage
			Key is removed.	0

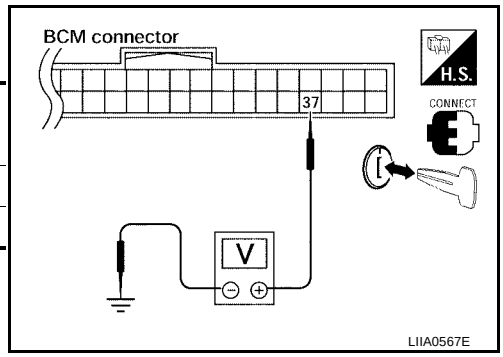

OK or NG

OK >> System is OK.
NG >> GO TO 2.

2. CHECK KEY SWITCH (INSERT)

1. Turn ignition switch OFF.
2. Disconnect key switch and key lock solenoid connector.
3. Check continuity between key switch and key lock solenoid connector terminals 3 and 4.

Terminals	Condition	Continuity
3 – 4	Key is inserted.	Yes
	Key is removed.	No

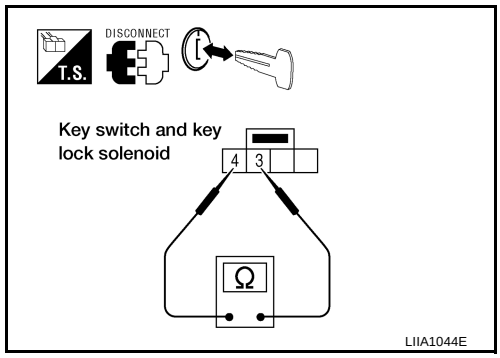

OK or NG

OK >> GO TO 3.
NG >> Replace key switch and key lock solenoid.

3. CHECK KEY SWITCH AND KEY LOCK SOLENOID CIRCUIT

1. Disconnect BCM connector.
2. Check continuity between the BCM harness connector M18 terminal 37 and key switch and key lock solenoid harness connector M26 terminal 4.
3. Check continuity between BCM harness connector M18 terminal 37 and ground.

37 - 4 : Continuity should exist

37 - Ground : Continuity should not exist

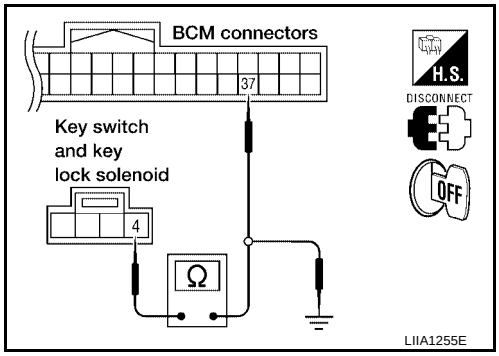

OK or NG

OK >> Check the following:
- 10A fuse [No. 21, located in fuse block (J/B)]
- Harness for open or short between key switch and key lock solenoid and fuse

NG >> Repair or replace harness.

Trunk Release Solenoid Check

EIS003II

1. CHECK TRUNK LID OPENER

Check trunk release operation with trunk lid opener switch.

NOTE:
First check trunk lid opener cancel switch position. Refer to BL-83, "TRUNK LID OPENER" .

Does trunk lid open?

Yes >> GO TO 2.
No >> Check trunk release solenoid and the circuit.

2. CHECK TRUNK LID OPENER ACTUATOR OPERATION

With CONSULT-II

1. Select “ACTIVE TEST” in “MULTI REMOTE ENT” with CONSULT-II.
2. Select “TRUNK/BACK DOOR” and touch “ON”.

Trunk release solenoid should operate.

NOTE:
If CONSULT-II is not available, skip this procedure and go to the next step.

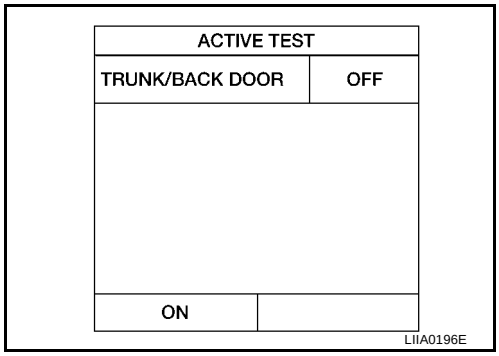

OK or NG

OK >> Trunk lid opener actuator circuit is OK.
NG >> Check harness for open or short between BCM and trunk lid opener actuator.

3. CHECK TRUNK LID OPENER ACTUATOR CIRCUIT

Without CONSULT-II

1. Disconnect trunk lamp switch and trunk release solenoid connector.
2. While pressing keyfob release button, check voltage between trunk lamp switch and trunk release solenoid harness connector B32 terminal 3 and ground.

   3 - Ground : Battery voltage should exist.

3. Check continuity between trunk lamp switch and trunk release solenoid harness connector B32 terminal 4 and ground.

   4 - Ground : Continuity should exist.

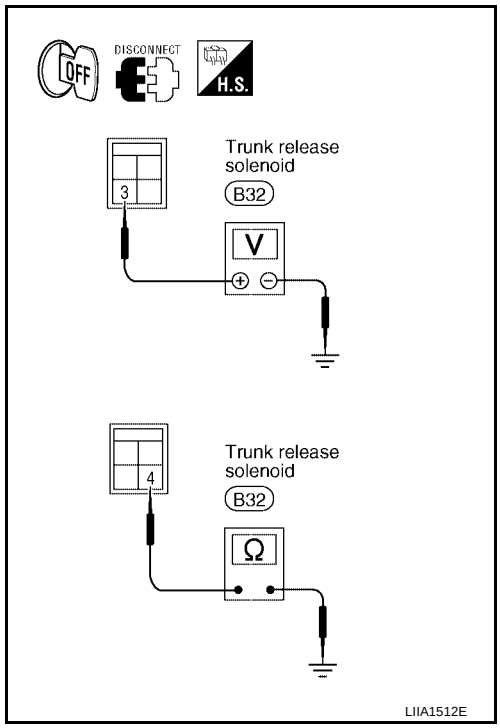

OK or NG

OK >> Replace trunk release solenoid.

NG >> Check the following:

1. Harness for open or short between BCM and trunk release solenoid
2. Harness for open or short between trunk lamp switch and trunk release solenoid and ground
3. Replace BCM

Check Hazard Function

EIS003IJ

1. CHECK HAZARD WARNING LAMP

Does hazard indicator flash with hazard switch?

Yes or No

Yes >> Hazard warning lamp circuit is OK.
No >> Check “hazard indicator.” Refer to LT-71, "TURN SIGNAL AND HAZARD WARNING LAMPS" .

Check Horn Function

EIS003IK

First, perform the "SELF-DIAG RESULTS" in "BCM" with CONSULT-II, then perform the trouble diagnosis of malfunction system indicated in "SELF-DIAG RESULTS" of "BCM".

1. CHECK HORN FUNCTION

Does horn sound with horn switch?

Yes or No

Yes >> Horn circuit is OK.
No >> Check horn circuit. Refer to WW-35, "HORN" .

Check Headlamp Function

EIS003IL

First, perform the "SELF-DIAG RESULTS" in "BCM" with CONSULT-II, then perform the trouble diagnosis of malfunction system indicated in "SELF-DIAG RESULTS" of "BCM".

1. CHECK HEADLAMP OPERATION

Does headlamp come on when turning lighting switch ON?

Yes or No

Yes >> Headlamp operation circuit is OK.
No >> Check headlamp circuit. Refer to LT-5, "HEADLAMP (FOR USA)" or LT-32, "HEADLAMP (FOR CANADA) - DAYTIME LIGHT SYSTEM -" .

Check Room Lamp, Step Lamp and Ignition Key Illumination Function

EIS003IM

1. CHECK ROOM LAMP, STEP LAMP AND IGNITION KEY ILLUMINATION FUNCTION

When room lamp switch is in DOOR position, open the front door LH or RH.

Room lamp, Step lamp and ignition key illumination should illuminate.

OK or NG

OK >> System is OK.
NG >> Check interior lamp circuits. Refer to LT-114, "INTERIOR ROOM LAMP" .

ID Code Entry Procedure

EIS003IN

KEYFOB ID SET UP WITH CONSULT-II

NOTE:

- **If a keyfob is lost, the ID code of the lost keyfob must be erased to prevent unauthorized use. A specific ID code can be erased with CONSULT-II. However, when the ID code of a lost keyfob is not known, all controller ID codes should be erased. After all ID codes are erased, the ID codes of all remaining and/or new keyfobs must be re-registered.**
- **When registering an additional keyfob, the existing ID codes in memory may or may not be erased. If five ID codes are stored in memory when an additional code is registered, only the oldest code is erased. If less than five codes are stored in memory when an additional code is registered, the new ID code is added and no ID codes are erased.**
- **Entry of a maximum of five ID codes is allowed. When more than five codes are entered, the oldest ID code will be erased.**
- **Even if the same ID code that is already in memory is input, the same ID code can be entered. The code is counted as an additional code.**

CAUTION:

If CONSULT-II is used with no connection of CONSULT-II CONVERTER, malfunctions might be detected in self-diagnosis depending on control unit which carries out CAN communications.

1. Turn ignition switch OFF.
2. Connect CONSULT-II and CONSULT-II CONVERTER to the data link connector.

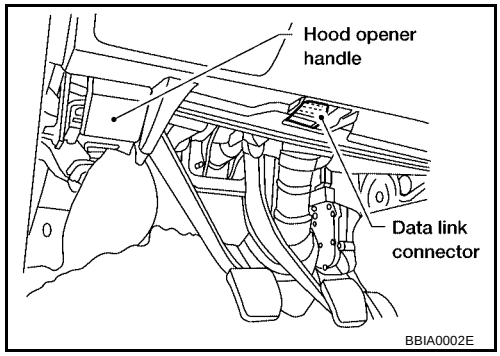

3. Turn ignition switch ON.
4. Touch “START (NISSAN BASED VHCL)”.

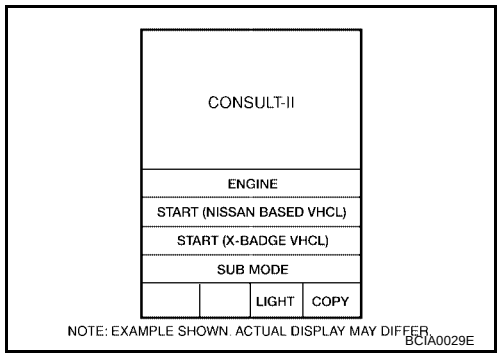

5. Touch “BCM”.

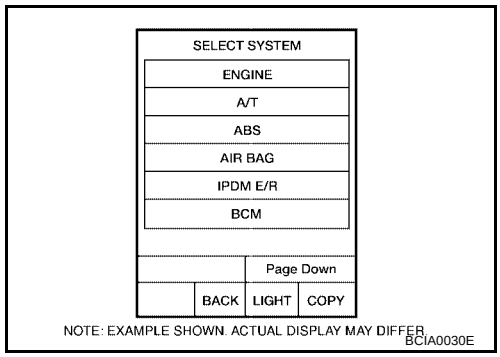

6. Touch “MULTI REMOTE ENT”.

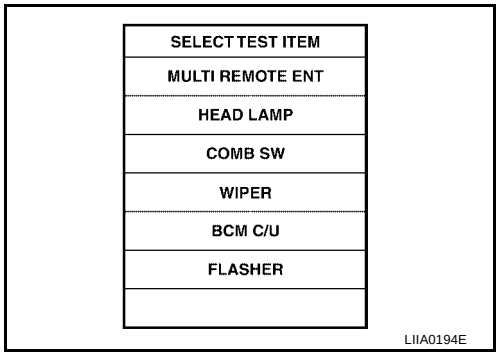

7. Touch “WORK SUPPORT”.

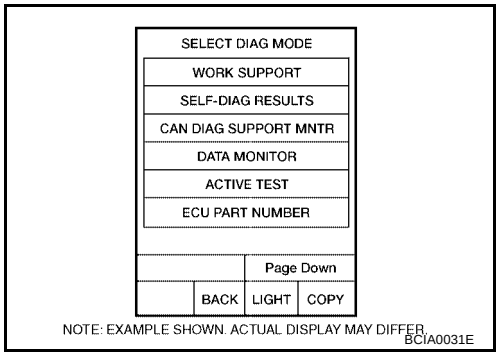

8. The items shown on the figure can be set up.
   - “REMO CONT ID CONFIR”
     Use this mode to confirm if a keyfob ID code is registered or not.
   - “REMO CONT ID REGIST”
     Use this mode to register a keyfob ID code.
     NOTE:
     Register the ID code when keyfob or BCM is replaced, or when additional keyfob is required.
   - “REMO CONT ID ERASUR”
     Use this mode to erase a keyfob ID code.

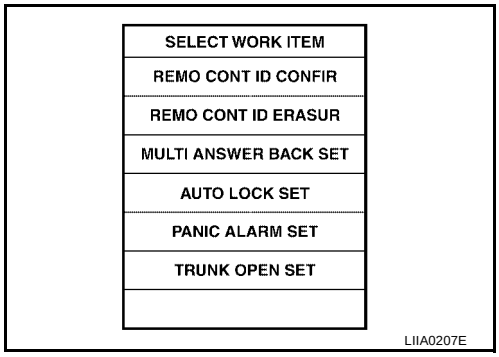

KEYFOB ID SET UP WITHOUT CONSULT-II

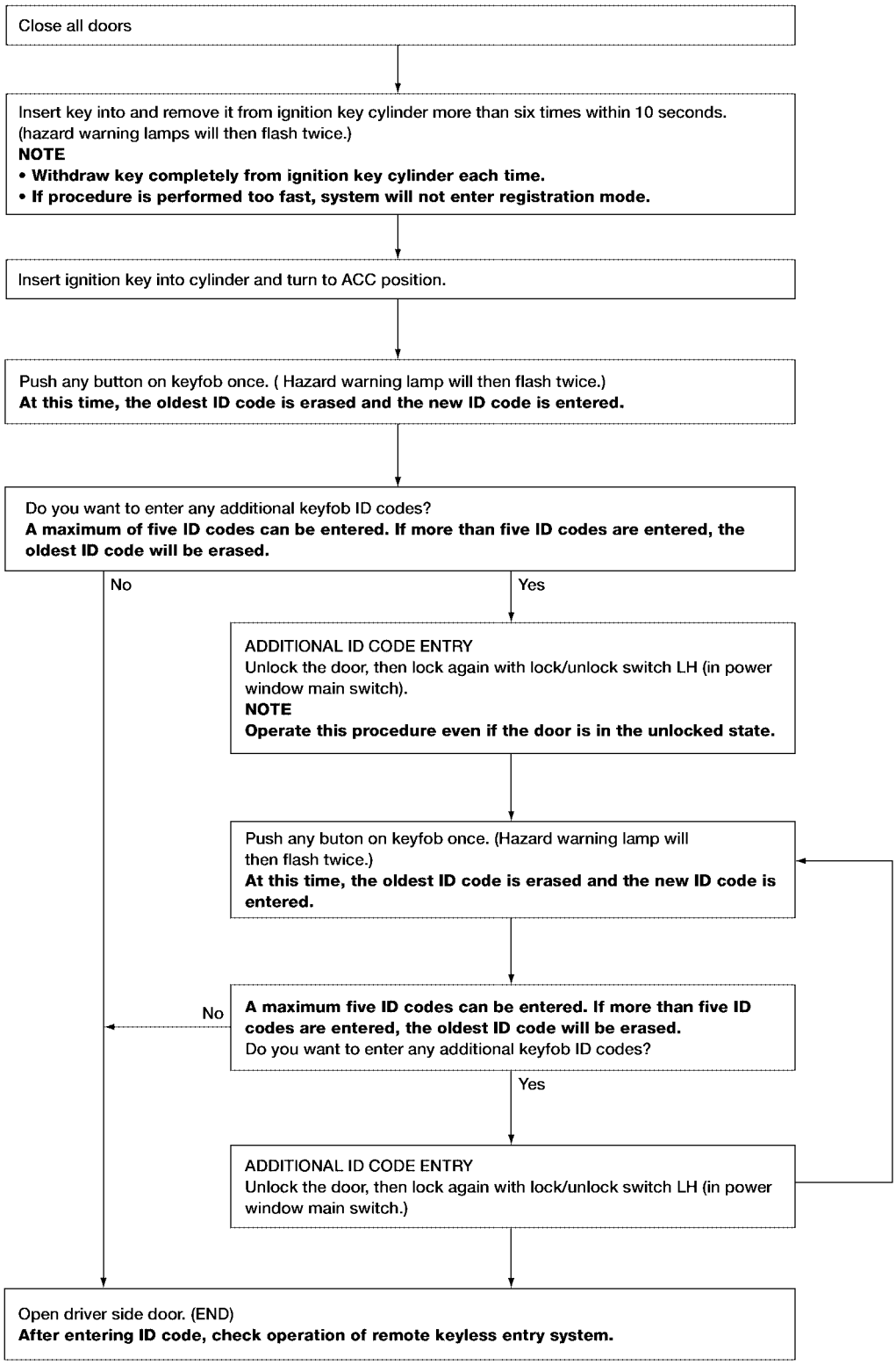

LIIA1513E

NOTE:

- If a keyfob is lost, the ID code of the lost keyfob must be erased to prevent unauthorized use. A specific ID code can be erased with CONSULT-II. However, when the ID code of a lost keyfob is not known, all controller ID codes should be erased. After all ID codes are erased, the ID codes of all remaining and/or new keyfobs must be re-registered.
  To erase all ID codes in memory, register one ID code (keyfob) five times. After all ID codes are erased, the ID codes of all remaining and/or new keyfobs must be re-registered.
- When registering an additional keyfob, the existing ID codes in memory may or may not be erased. If five ID codes are stored in memory, when an additional code is registered, only the oldest code is erased. If less than five ID codes are stored in memory, when an additional ID code is registered, the new ID code is added and no ID codes are erased.
- If you need to activate more than two additional new keyfobs, repeat the procedure “Additional ID code entry” for each new keyfob.
- Entry of maximum five ID codes is allowed. When more than five ID codes are entered, the oldest ID code will be erased.
- Even if same ID code that is already in the memory is input, the same ID code can be entered. The code is counted as an additional code.

Keyfob Battery Replacement

EIS003IO

NOTE:

- Be careful not to touch the circuit board or battery terminal.
- The keyfob is water-resistant. However, if it does get wet, immediately wipe it dry.

1. Open the lid using a coin.
2. Remove the battery.
3. Install the new battery, positive side down.
4. Close the lid securely. Push the keyfob buttons two or three times to check operation.

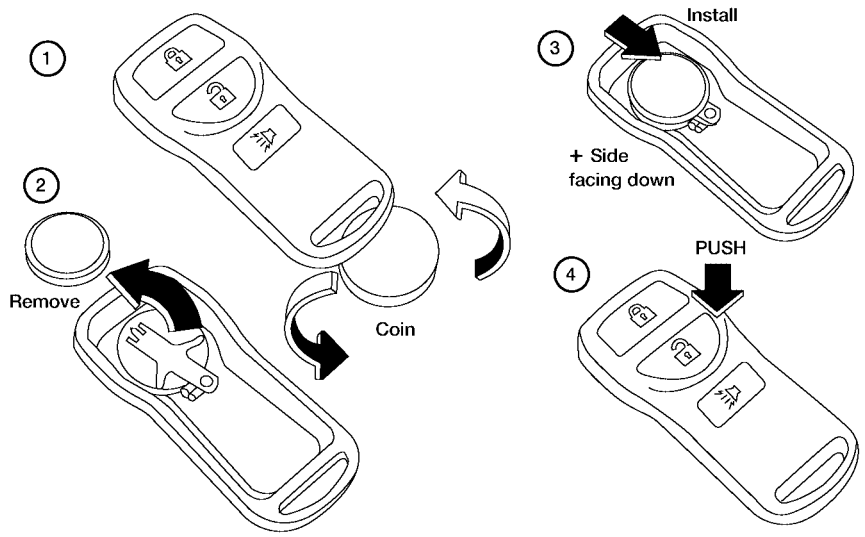

LIIA1514E

DOOR

PFP:80100

Fitting Adjustment

EIS003IP

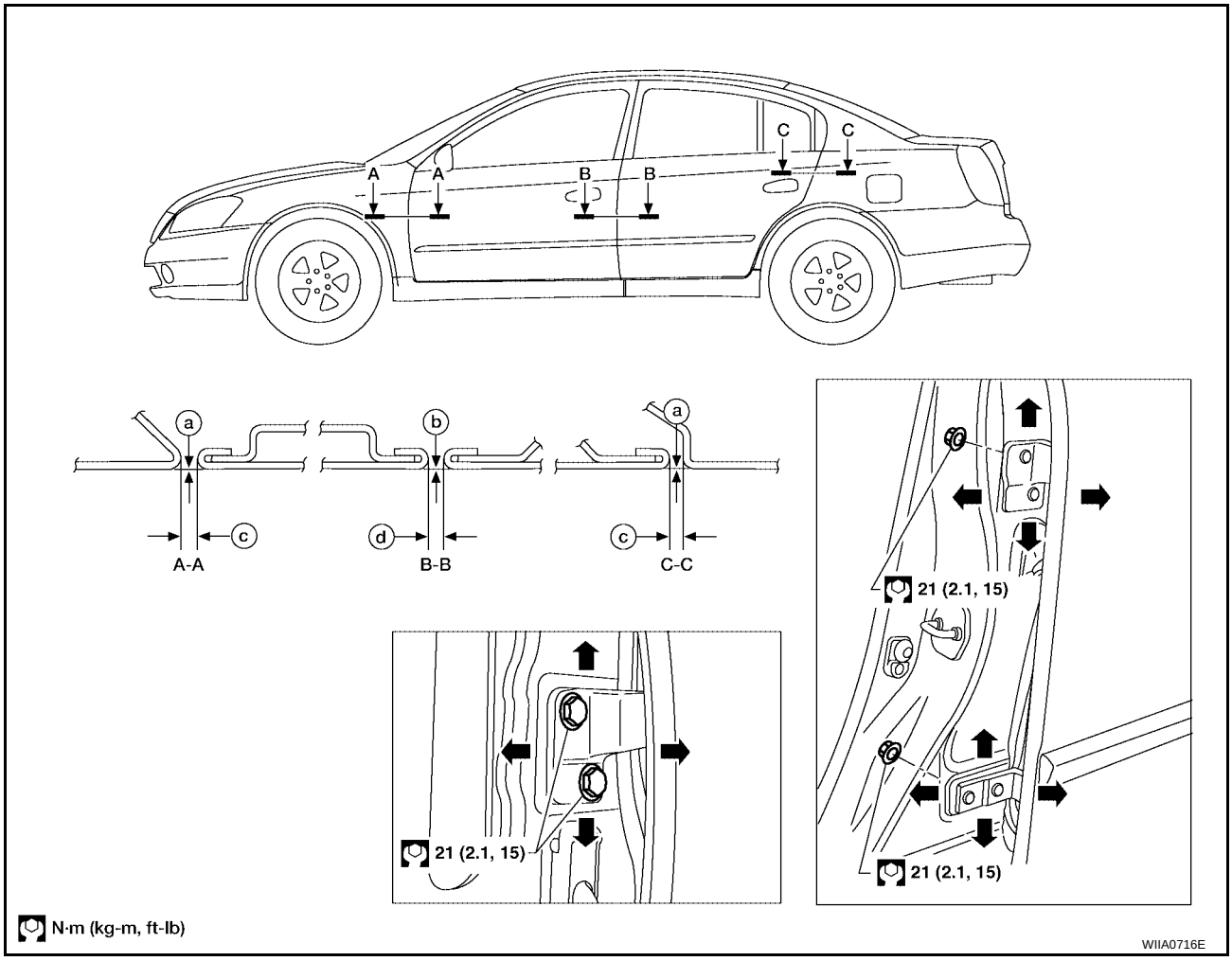

a. Flush + 0.5, -1.0 mm (+0.02, -0.04 in) b. Flush + 1.0, -0.5 mm (+0.04, -0.02 in) c. 4.5 ± 1.0 mm (0.18 ± 0.04 in)
d. 4.6 ± 1.0 mm (0.18 ± 0.04 in)

FRONT DOOR

Longitudinal clearance and surface height adjustment at front end

1. Remove the front fender. Refer to EI-19, "FRONT FENDER" .
2. Loosen the bolts. Raise the front door at rear end to adjust.
3. Install the front fender. Refer to EI-19, "FRONT FENDER" .

REAR DOOR

Longitudinal clearance and surface height adjustment at front end

1. Remove the center pillar upper and lower garnish. Refer to EI-31, "Removal and Installation" .
2. Accessing from inside the vehicle, loosen the nuts. Open the rear door, and raise the rear door at rear end to adjust.
3. Install the center pillar upper and lower garnish. Refer to EI-31, "Removal and Installation" .

STRIKER ADJUSTMENT

1. Adjust the striker so that it becomes parallel with the lock insertion direction.

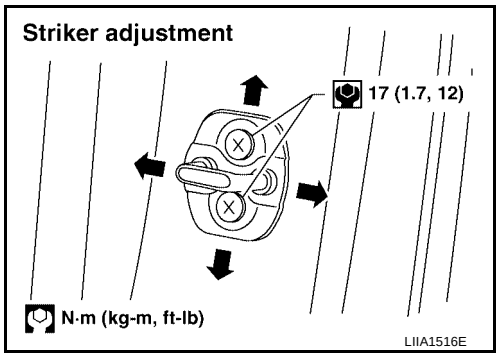

Removal and Installation

EIS003IQ

CAUTION:

- **When removing and installing the door assembly, support the door with a jack and shop cloth to protect the door and body.**
- **When removing and installing door assembly, be sure to carry out the fitting adjustment.**
- **Check the hinge rotating part for poor lubrication. If necessary, apply "body grease".**

1. Remove the door window and module assembly. Refer to GW-34, "Removal and Installation" .
2. Remove the door harness.
3. Remove the check link cover.
4. Remove the check link bolt from the hinge pillar.

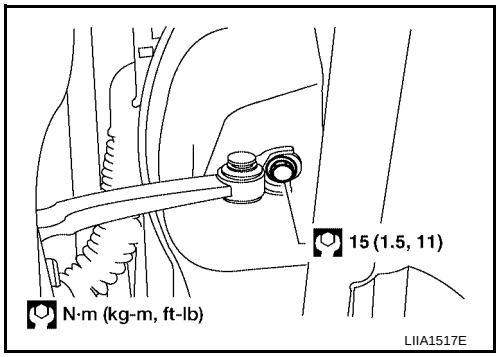

5. Remove the door-side nuts and bolts, and the door assembly.

Installation is in the reverse order of removal.

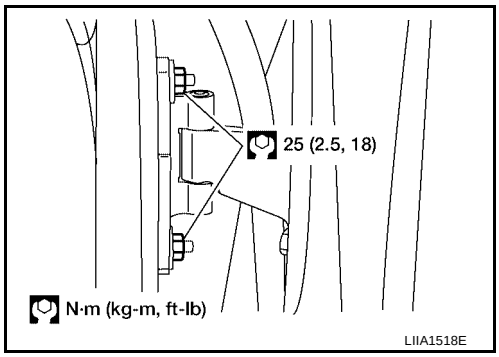

Door Weatherstrip

EIS003IR

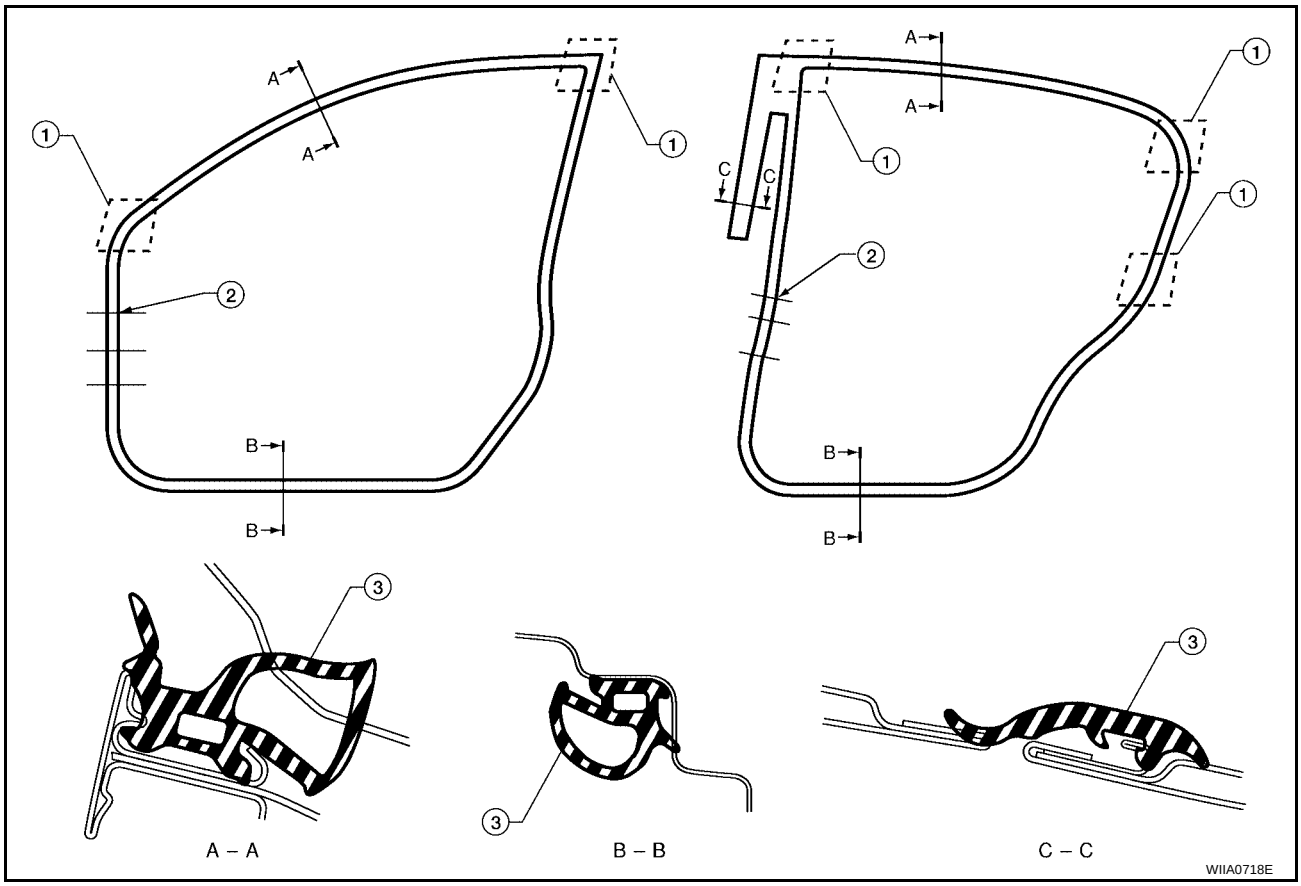

1. Glued area
2. Clip (Driver side: Yellow, Passenger side: Blue)
3. Weatherstrip

FRONT DOOR LOCK

PFP:80502

Component Structure

EIS003IS

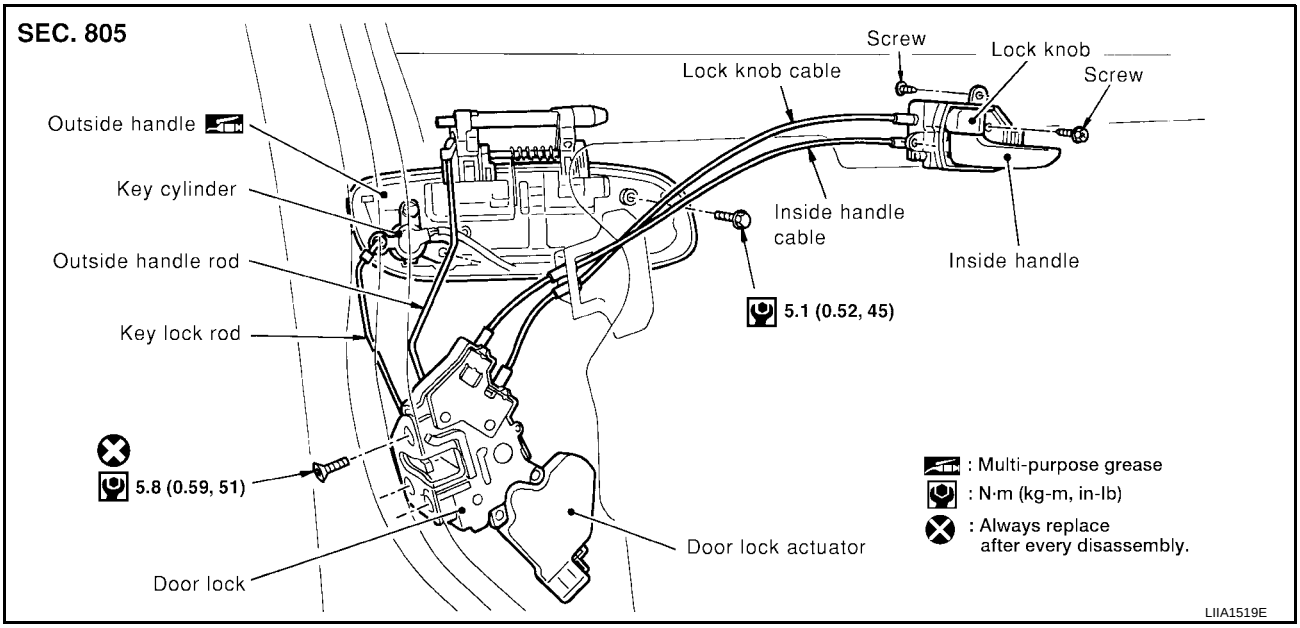

Inspection and Adjustment

EIS003IT

1. Remove the front door window and front door module assembly. Refer to GW-34, "FRONT DOOR GLASS AND REGULATOR" .

EXTERIOR HANDLE ROD ADJUSTMENT

- Rotate the bushing to adjust so that the clearance between the bushing and rod becomes as shown in the figure.

CAUTION:
Be careful not to make the clearance 0 mm (0 in) or the rod will be pressed continuously.

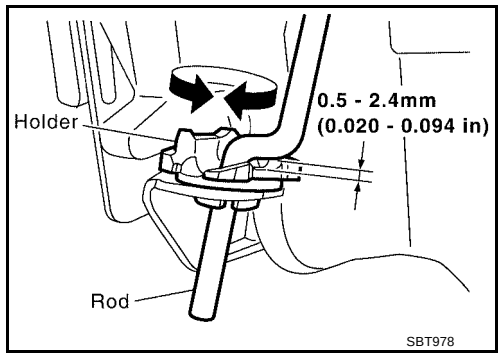

Removal and Installation

EIS003IU

REMOVAL

1. Remove the front door window and front door module assembly. Refer to GW-34, "FRONT DOOR GLASS AND REGULATOR" .
2. Separate the key cylinder rod and exterior handle rod connection (on the handle) if equipped.
3. Remove the screws (TORX T30) and the door lock assembly.
4. Disconnect the door lock actuator electrical connector.

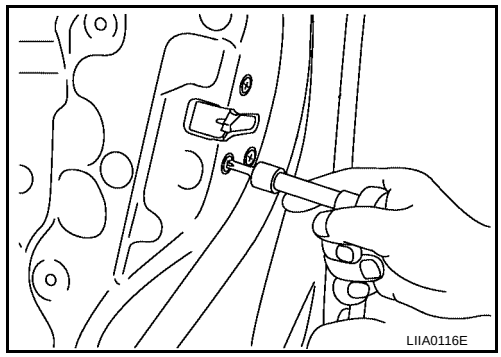

5. Remove the exterior handle bolts, move the exterior handle assembly backward, and then remove it from the panel in front of the exterior handle escutcheon.

Installation is in the reverse order of removal.

CAUTION:
To install each rod, be sure to rotate the rod holder until a click is felt.

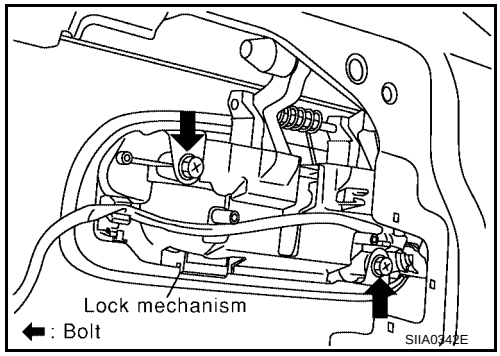

Disassembly and Assembly

EIS003IV

DISASSEMBLY

CAUTION:
Be sure to remove or install the actuator with the door lock assembly removed.

1. Remove the screws and actuator from the door lock assembly.
2. Pull the actuator straight downward to separate it from the door lock assembly.

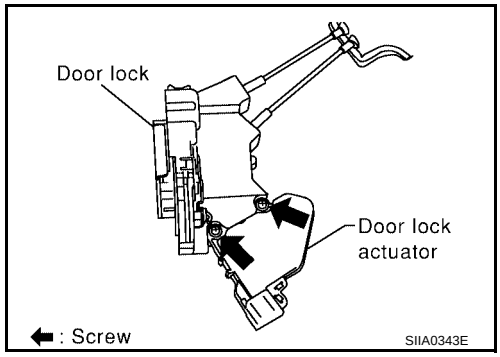

ASSEMBLY

1. Align the actuator pivot with the cutout on the knob lever of the door lock assembly, then assemble the actuator.
2. Move the knob lever and the actuator pivot toward the lock-on direction, and check that it engages securely.

REAR DOOR LOCK

PFP:82502

Components

EIS003IW

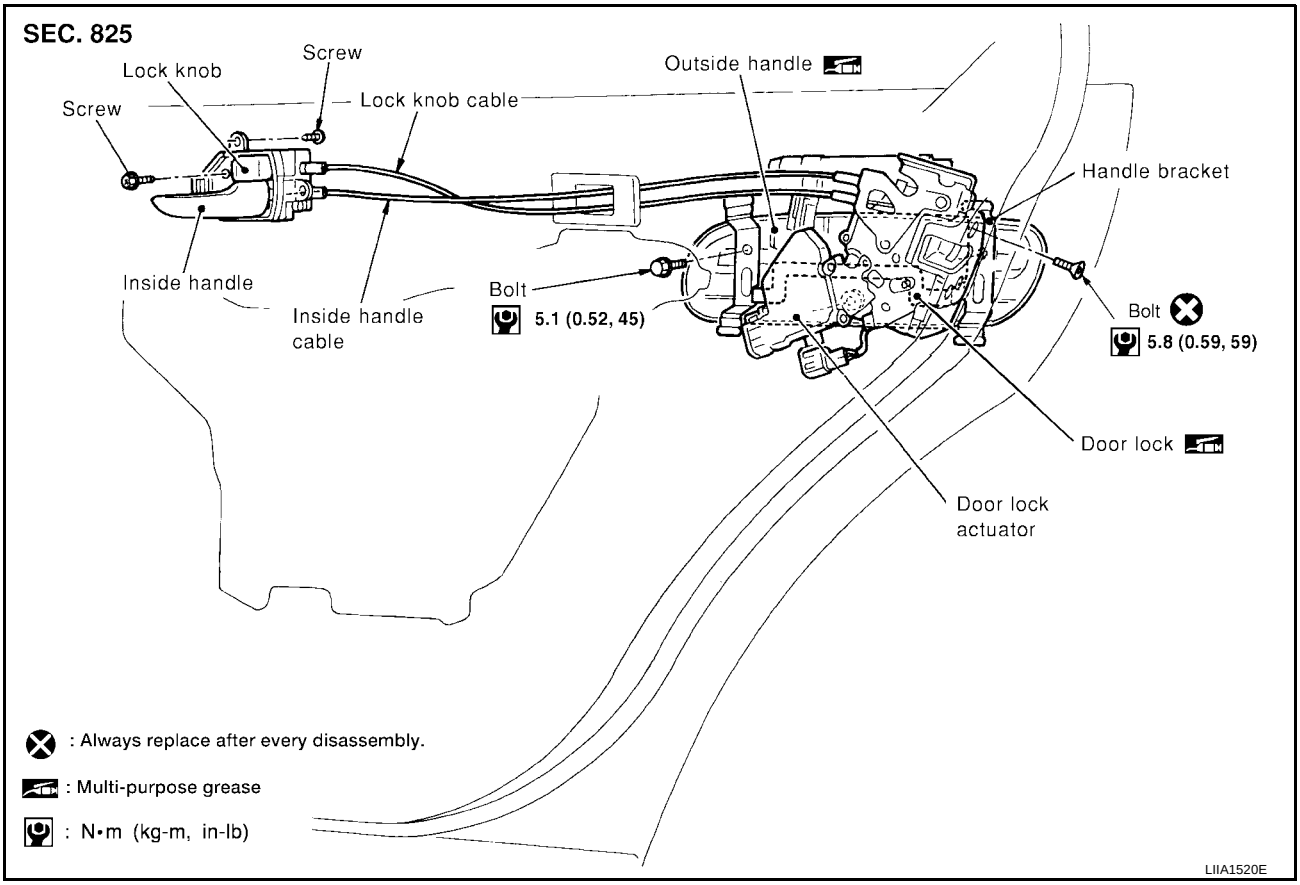

Inspection and Adjustment

EIS003IX

Remove the rear door finisher. Refer to EI-29, "DOOR FINISHER" .

EXTERIOR HANDLE ROD ADJUSTMENT

Rotate the bushing to adjust so that the clearance between the bushing and rod becomes as shown.

CAUTION:

Be careful not to make the clearance 0 mm (0 in) or the rod will be pressed continuously.

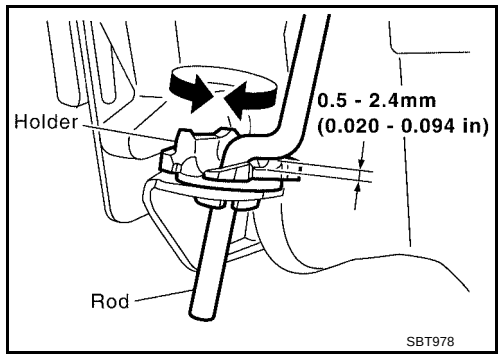

Removal and Installation of Door Lock

EIS003IY

REMOVAL

1. Remove the rear door finisher. Refer to EI-29, "DOOR FINISHER" .

2. Remove the screws (TORX T30) and the door lock assembly.
3. Disconnect the door lock actuator connector.

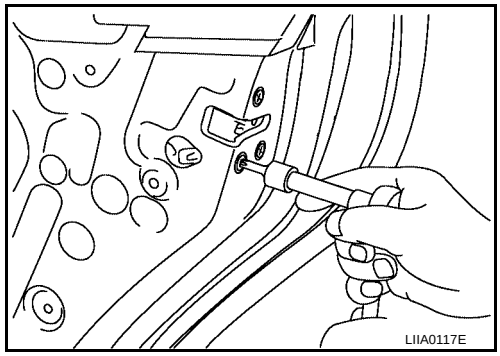

4. Remove the exterior handle bolts, and move the handle backward to disengage it from the panel in front of the exterior handle escutcheon, then remove the handle.

Installation is in the reverse order of removal.

CAUTION:
To install each rod, be sure to rotate the rod holder until a click is felt.

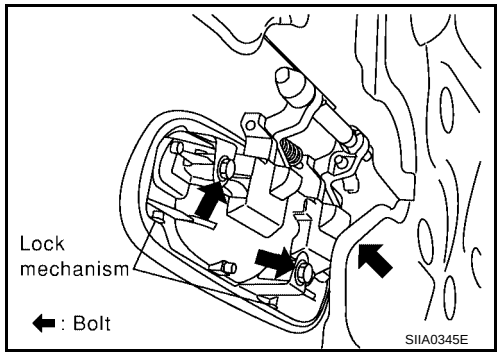

Disassembly and Assembly

EIS003IZ

DISASSEMBLY

CAUTION:
Be sure to remove or install the actuator with the door lock assembly removed.

1. Remove the screws and the actuator from the door lock assembly.
2. Pull the actuator straight downward to separate it from the door lock assembly.

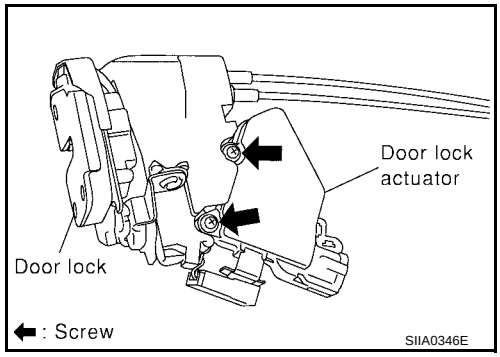

ASSEMBLY

1. Align the actuator pivot with the cutout on the knob lever of the door lock assembly, then assemble the actuator.
2. Move the knob lever and the actuator pivot toward the lock-on direction, and check that it engages securely.

TRUNK LID

PFP:H4300

Fitting Adjustment

EIS003J0

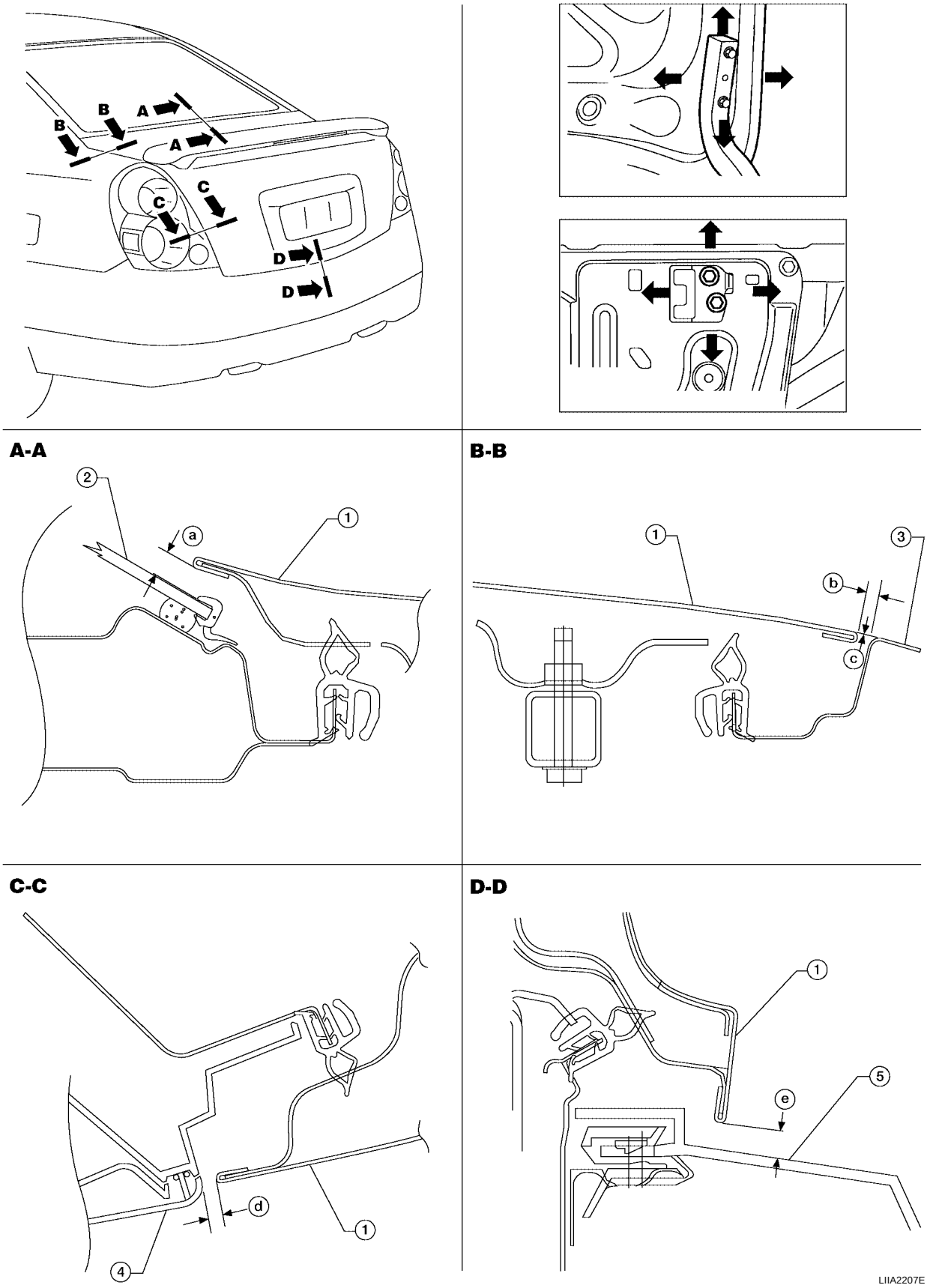

1.	Trunk lid assembly	2.	Rear window glass	3.	Body side outer
4.	Rear combination lamp	5.	Rear bumper fascia	a.	7.3 mm (0.29 in)
b.	3.5 ± 1.0 mm (0.14 ± 0.04 in)	c.	flush + 0.5/ -1.0 mm (+ 0.02/-0.04 in)	d.	5.4 mm (0.21 in)
e.	8.2 ± 1.5 mm (0.3 ± 0.06 in)				

LONGITUDINAL AND LATERAL CLEARANCE ADJUSTMENT

1. With the striker released, loosen the trunk lid hinge bolts and close the trunk lid.
2. Make the lateral clearance and the clearance to the rear window glass equal, and open the trunk lid to tighten the bolts to the specified torque.

SURFACE HEIGHT ADJUSTMENT

1. Loosen the striker bolts. Raise the striker to the top position, and temporarily tighten the upper bolt at the position.
2. Close the trunk lid lightly and adjust the surface height, then open the trunk lid to finally tighten the striker bolts.

Removal and Installation of Trunk Lid Assembly

EIS003J1

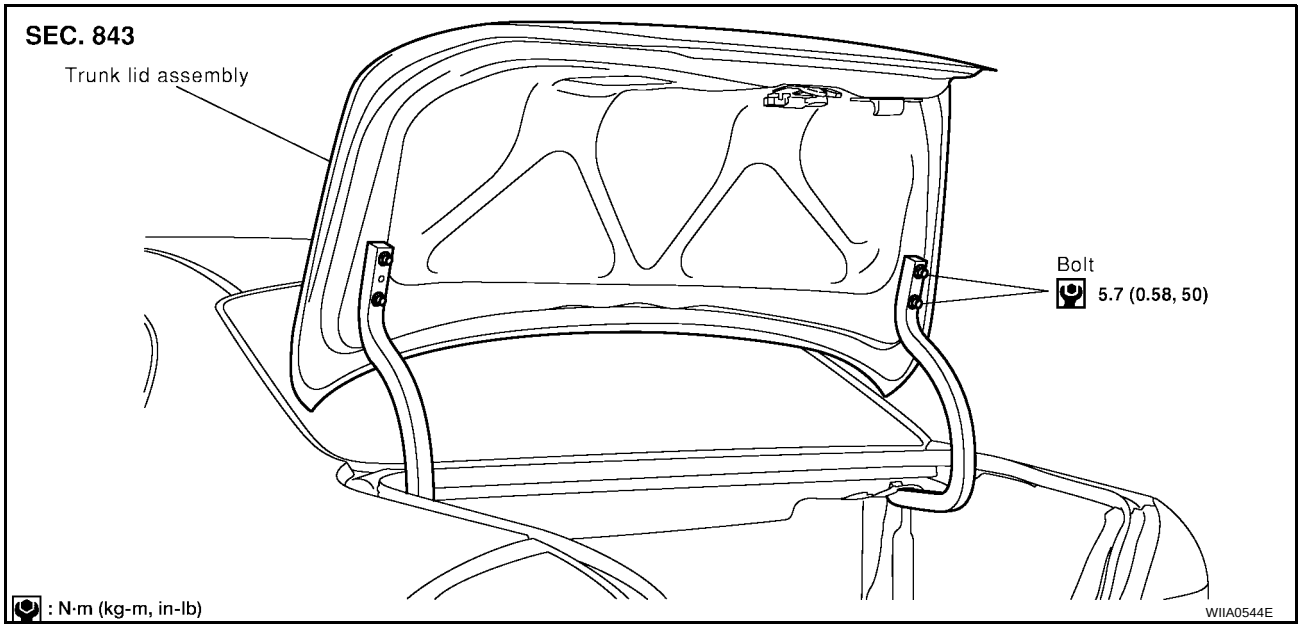

1. Remove the trunk lid finisher. Refer to EI-37, "TRUNK ROOM TRIM & TRUNK LID FINISHER" .
2. Disconnect the connectors in the trunk lid, and remove the harness clamps to pull the harness out of the trunk lid.
3. Remove the bolts and the trunk lid assembly.

Installation is in the reverse order of removal.

CAUTION:

After installing, apply touch-up paint (the body color) onto the head of the hinge mounting bolts.

Removal and Installation of Trunk Lid Lock

EIS003J2

LOCK REMOVAL

1. Remove the trunk lid finisher. Refer to EI-37, "TRUNK ROOM TRIM & TRUNK LID FINISHER" .
2. Separate the key cylinder rod.
3. After removing the harness connector, remove the bolts and the trunk lid lock.

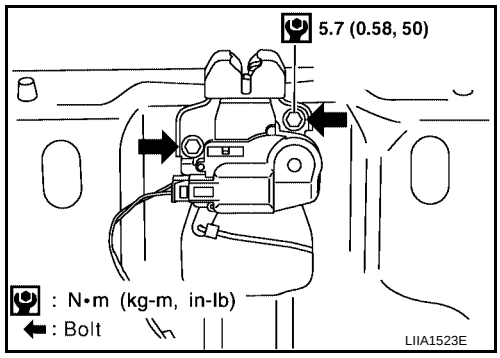

STRIKER REMOVAL

1. Remove the trunk rear plate and trunk rear finisher. Refer to EI-37, "TRUNK ROOM TRIM & TRUNK LID FINISHER" .
2. Remove the bolts and the trunk lock support from the vehicle.
3. After removing the harness connector, remove the bolts, and the striker from the trunk lock support.

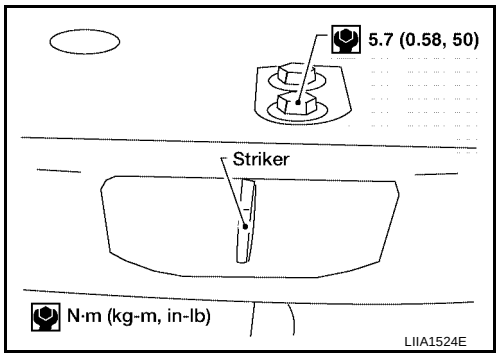

LOCK AND STRIKER INSTALLATION

1. Install the trunk lid lock and striker.
2. After installing, close the trunk lid lightly. Perform the lock and surface height adjustment. Refer to BL-80, "Fitting Adjustment" .
3. After installing, check the operation.

Removal and Installation of Trunk Lid Weatherstrip

EIS003J3

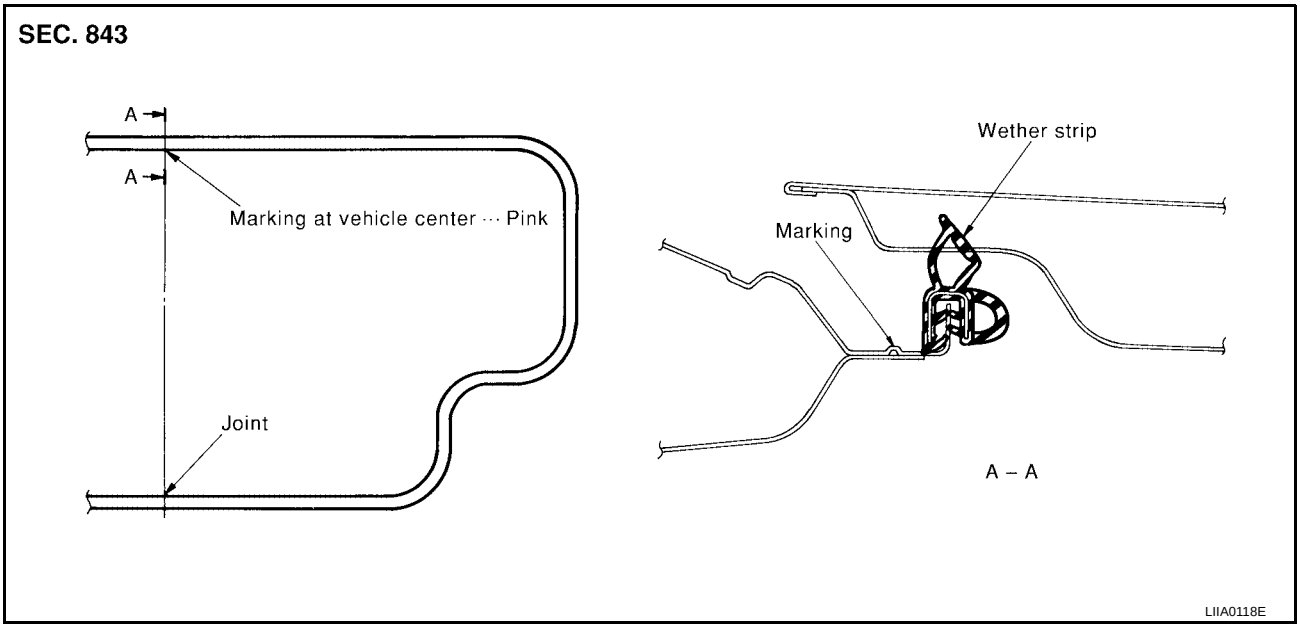

1. Install the weatherstrip from the front with the vehicle center mark aligned to the weatherstrip mark.
2. At rear side, align the weatherstrip seam to the center of the striker.
3. After installing, pull the weatherstrip lightly to check for looseness.

   CAUTION:
   The weatherstrip should fit tightly onto the corners and trunk lid rear plate.

TRUNK LID OPENER

PFP:84640

Wiring Diagram — TLID —

EIS003J4

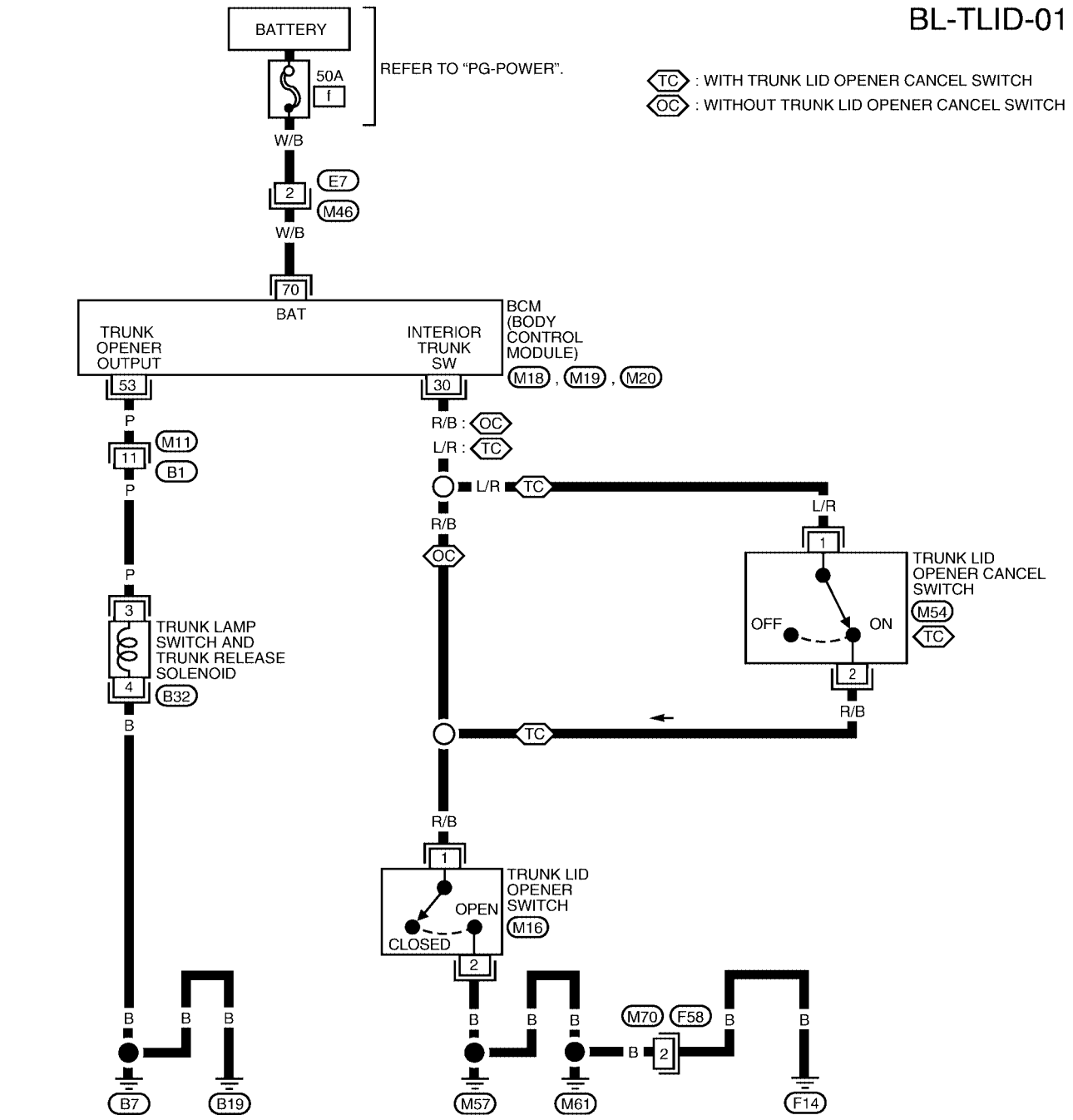

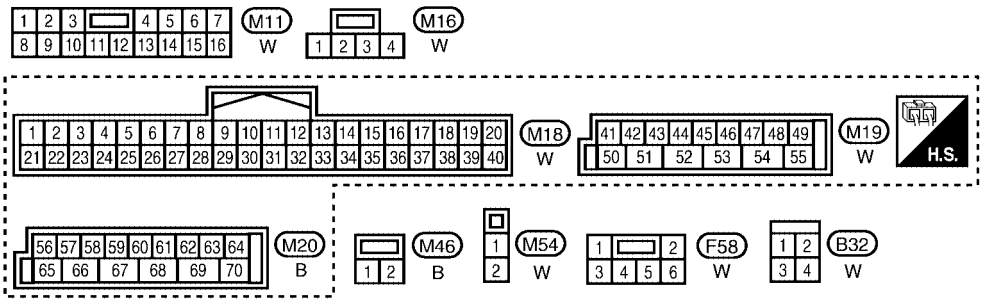

WIWA1019E

Terminals and Reference Value for BCM

EIS003J5

Terminal	Wire Color	Item	Condition	Voltage (V) (Approx.)
30	R/B*1, L/R*2	Trunk lid opener switch	OFF → ON	Battery voltage → 0V
53	P	Trunk opener output	When trunk lamp switch and trunk release solenoid is operated using keyfob trunk release button (OFF → ON)	0V → Battery voltage
70	W/B	Battery power supply	—	Battery voltage

NOTE:

*1: Without trunk lid opener cancel switch.

*2: With trunk lid opener cancel switch.

VEHICLE SECURITY (THEFT WARNING) SYSTEM

PFP:28491

Component Parts and Harness Connector Location

EIS003J6

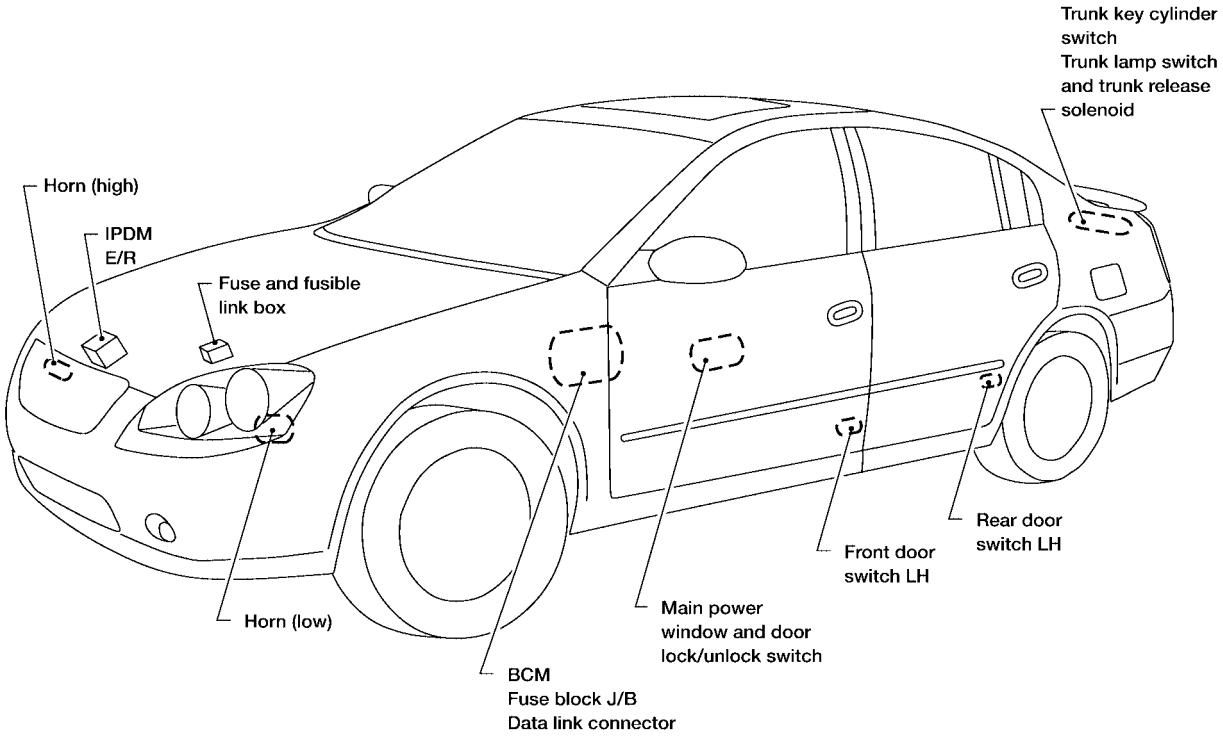

LIIA1397E

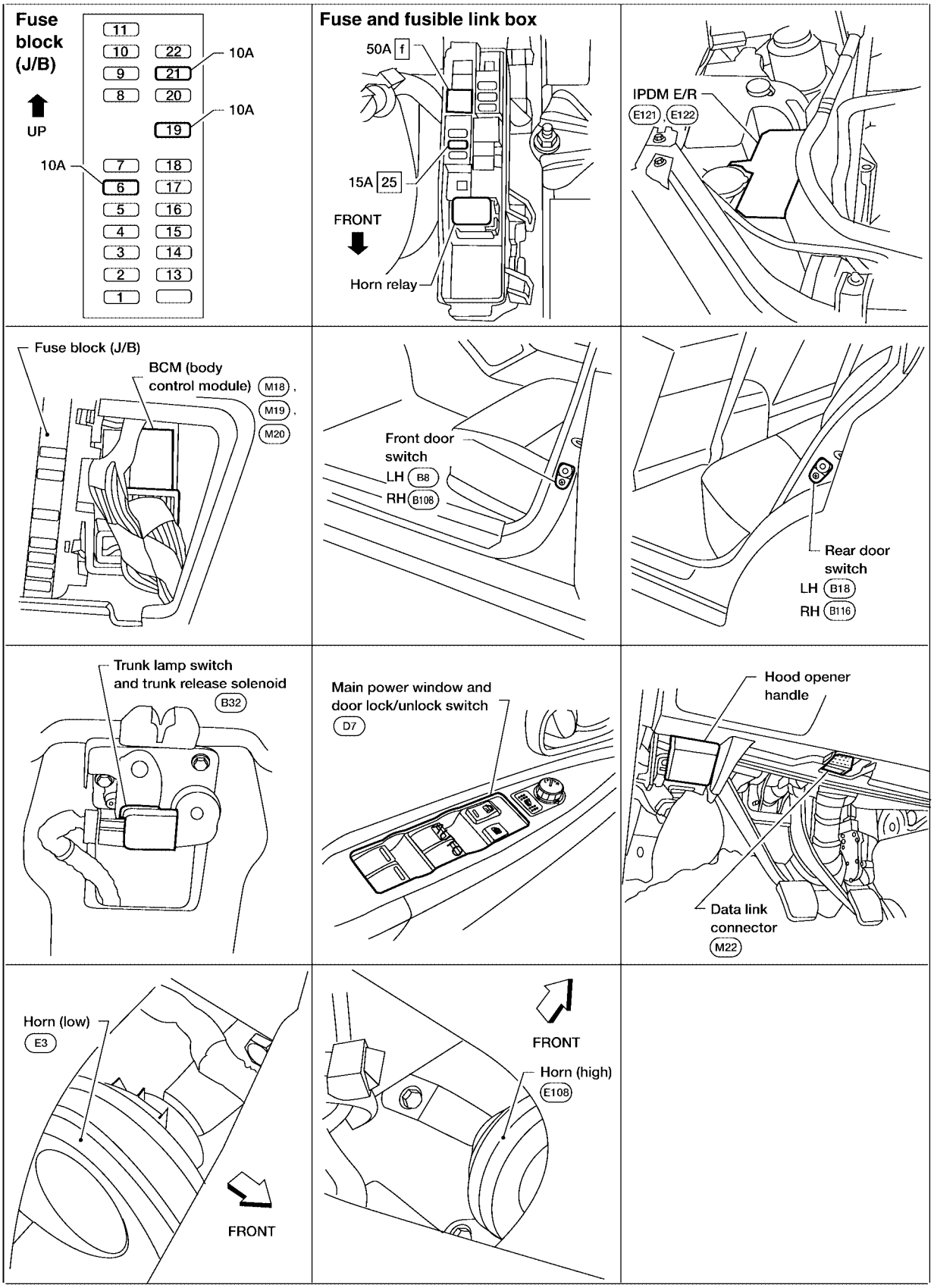
Fuse block (J/B)
11
10
22
9
21
8
20
19
7
18
6
17
5
16
4
15
3
14
2
13
1
10A
10A
10A
UP
Fuse and fusible link box
50A f
15A 25
FRONT
Horn relay
IPDM E/R
E121
E122
Fuse block (J/B)
BCM (body control module)
M18
M19
M20
Front door switch
LH B8
RH B108
Rear door switch
LH B18
RH B116
Trunk lamp switch and trunk release solenoid
B32
Main power window and door lock/unlock switch
D7
Hood opener handle
Data link connector
M22
Horn (low)
E3
FRONT
FRONT
Horn (high)
E108

LIIA1872E

System Description

EIS003J7

DESCRIPTION

Setting the vehicle security system

Disarmed phase

- When the vehicle is being driven or when doors or trunk lid is open, the vehicle security system is set in the disarmed phase on the assumption that the owner is inside or near the vehicle.

Pre-armed phase and armed phase

- The vehicle security system turns into the "pre-armed" phase when trunk lid and all doors are closed and locked by electronic key. The security indicator lamp illuminates for 30 seconds. Then, the system automatically shifts into the "armed" phase.

Canceling the set vehicle security system

When one of the following operations is performed, the armed phase is canceled.

1. Unlock the doors with the key or the keyfob.
2. Open the trunk lid with the key or the keyfob. When the trunk lid is closed after opening the trunk lid with the keyfob, the system returns to the armed phase.

Activating the alarm operation of the vehicle security system

Make sure the system is in the armed phase.
When one of the following operations is performed, the system sounds the horns and flashes the head-lamps for about 50 seconds.

1. Any door is opened before unlocking door with key or keyfob.
2. Door is unlocked without using key or keyfob.
3. Trunk lid is opened without using key or keyfob.

POWER SUPPLY

Power is supplied at all times

- through 10A fuse [No.19, located in the fuse block (J/B)]
- to security indicator lamp terminal 1
- through 10A fuse [No. 21, located in the fuse block (J/B)]
- to key switch and key lock solenoid terminal 3
- to BCM terminal 57
- through 50A fusible link (letter **f** , located in the fuse and fusible link box)
- to BCM terminal 70.

With the ignition switch in the ACC or ON position, power is supplied

- through 10A fuse [No. 6, located in the fuse block (J/B)]
- to BCM terminal 11.

INITIAL CONDITION TO ACTIVATE THE SYSTEM

The operation of the vehicle security system is controlled by the doors and trunk lid.
To activate the vehicle security system, BCM must receive signals indicating the doors and trunk lid are closed and the doors are locked.
When a door is open, BCM terminal 12, 13, 47 or 48 receives a ground signal from each door switch.
When front door LH is unlocked, BCM terminal 22 receives a signal from terminal 14 of main power window and door lock/unlock switch.
When front door RH is unlocked, BCM terminal 22 receives a signal from terminal 11 of power window and door lock/unlock switch RH.
The IPDM E/R then sends a signal to the BCM through the CAN SYSTEM.
When the trunk lid is open, BCM terminal 42 receives a ground signal

- from terminal 1 of the trunk lamp switch and trunk release solenoid
- through body grounds B7 and B19.

VEHICLE SECURITY SYSTEM ALARM OPERATION

The vehicle security system is triggered by

- opening a door
- opening the trunk lid

- unlocking door without using the key or keyfob.

The vehicle security system will be triggered once the system is in armed phase

- when BCM receives a ground signal at terminals 12, 13, 47, 48 (door switch), 42 (trunk lamp and trunk release solenoid switch).

Power is supplied at all times

- to horn relay terminal 1
- through 15A fuse (No. 25, located in fuse and fusible link box).

When the vehicle security system is triggered, ground is supplied intermittently

- to headlamp high relay
- from IPDM E/R terminal 51
- to horn relay terminal 2.

The headlamps flash and the horn sounds intermittently.
The alarm automatically turns off after 50 seconds, but will reactivate if the vehicle is tampered with again.

VEHICLE SECURITY SYSTEM DEACTIVATION

To deactivate the vehicle security system, a door or the trunk lid must be unlocked with the key or keyfob.
When the key is used to unlock the driver door, BCM terminal 22 receives signal

- from terminal 14 of the main power window and door lock/unlock switch.

When the key is used to unlock the trunk lid, BCM terminal 41 receives a ground signal from terminal 1 of the trunk key cylinder switch (unlock switch).
When the BCM receives either one of these signals or unlock signal from keyfob, the vehicle security system is deactivated. (Disarmed phase)

PANIC ALARM OPERATION

Remote keyless entry system may or may not operate vehicle security system (horn and headlamps) as required.
When the remote keyless entry system is triggered, ground is supplied intermittently

- to headlamp high relay
- from IPDM E/R terminal 51
- to horn relay terminal 2.

The headlamp flashes and the horn sounds intermittently.
The alarm automatically turns off after 25 seconds or when BCM receives any signal from keyfob.

CAN Communication System Description

EIS003J8

Refer to LAN-20, "CAN COMMUNICATION"

Schematic

EIS003J9

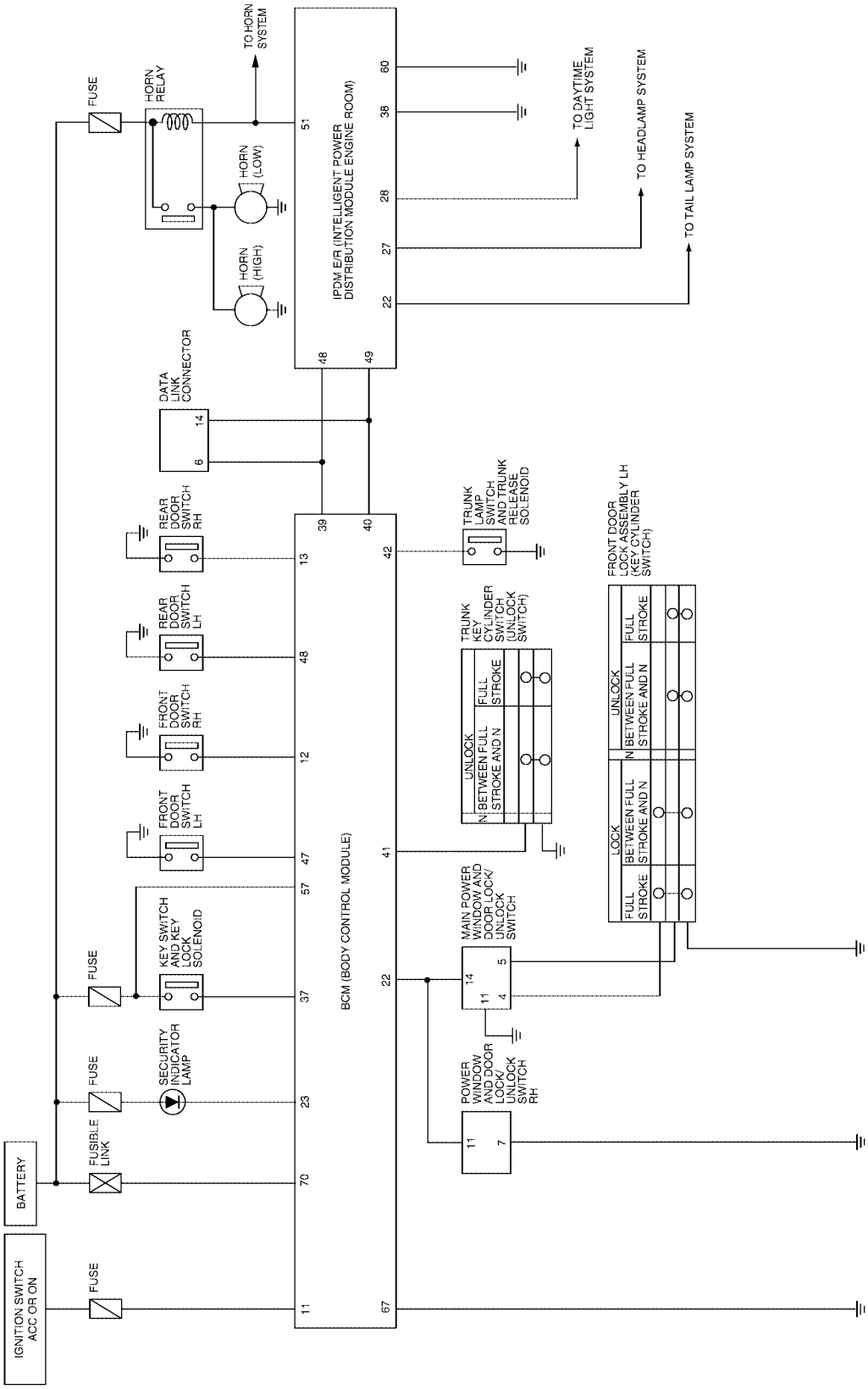

WIWA1020E

Wiring Diagram — VEHSEC —

EIS003JA

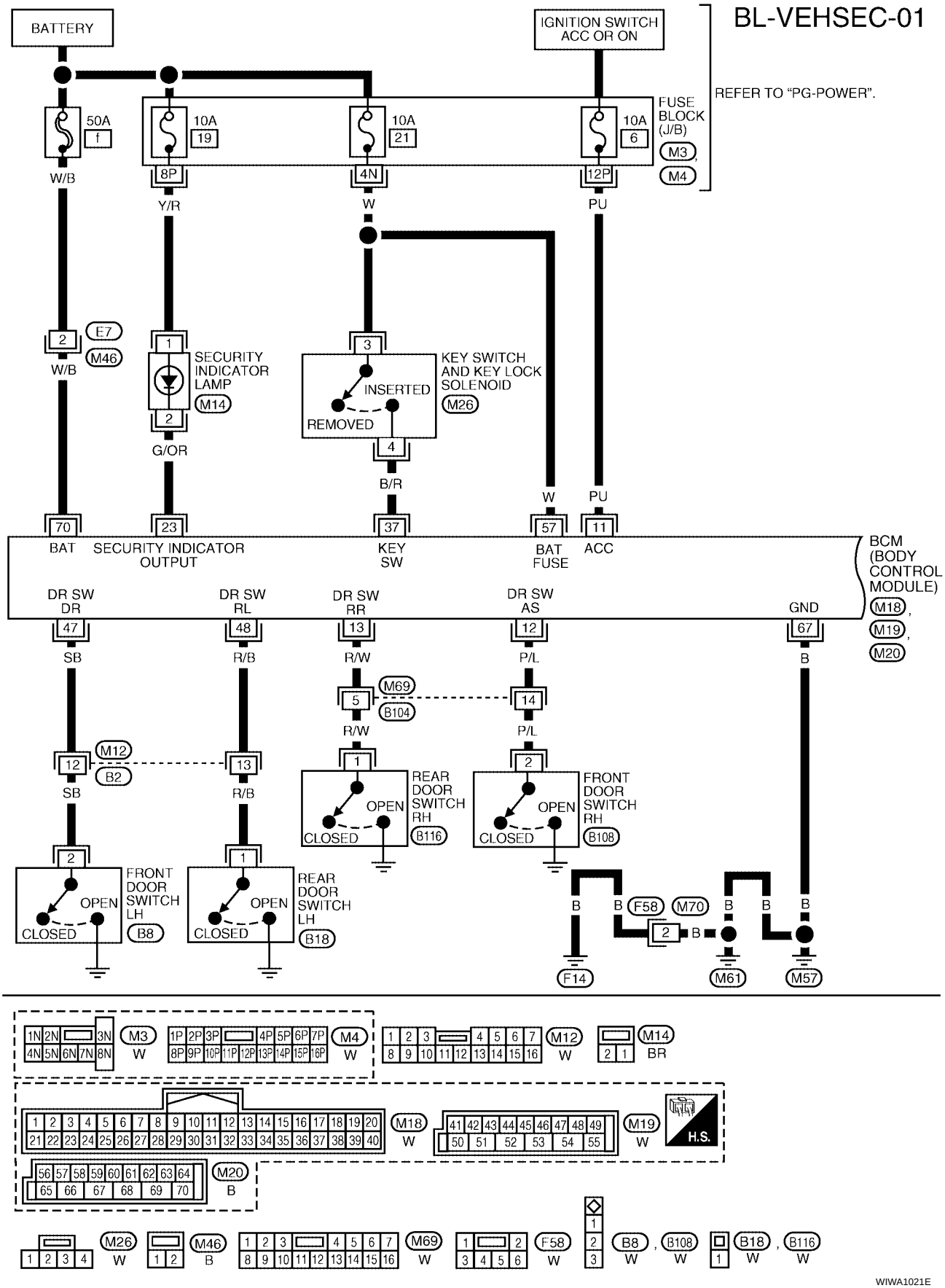

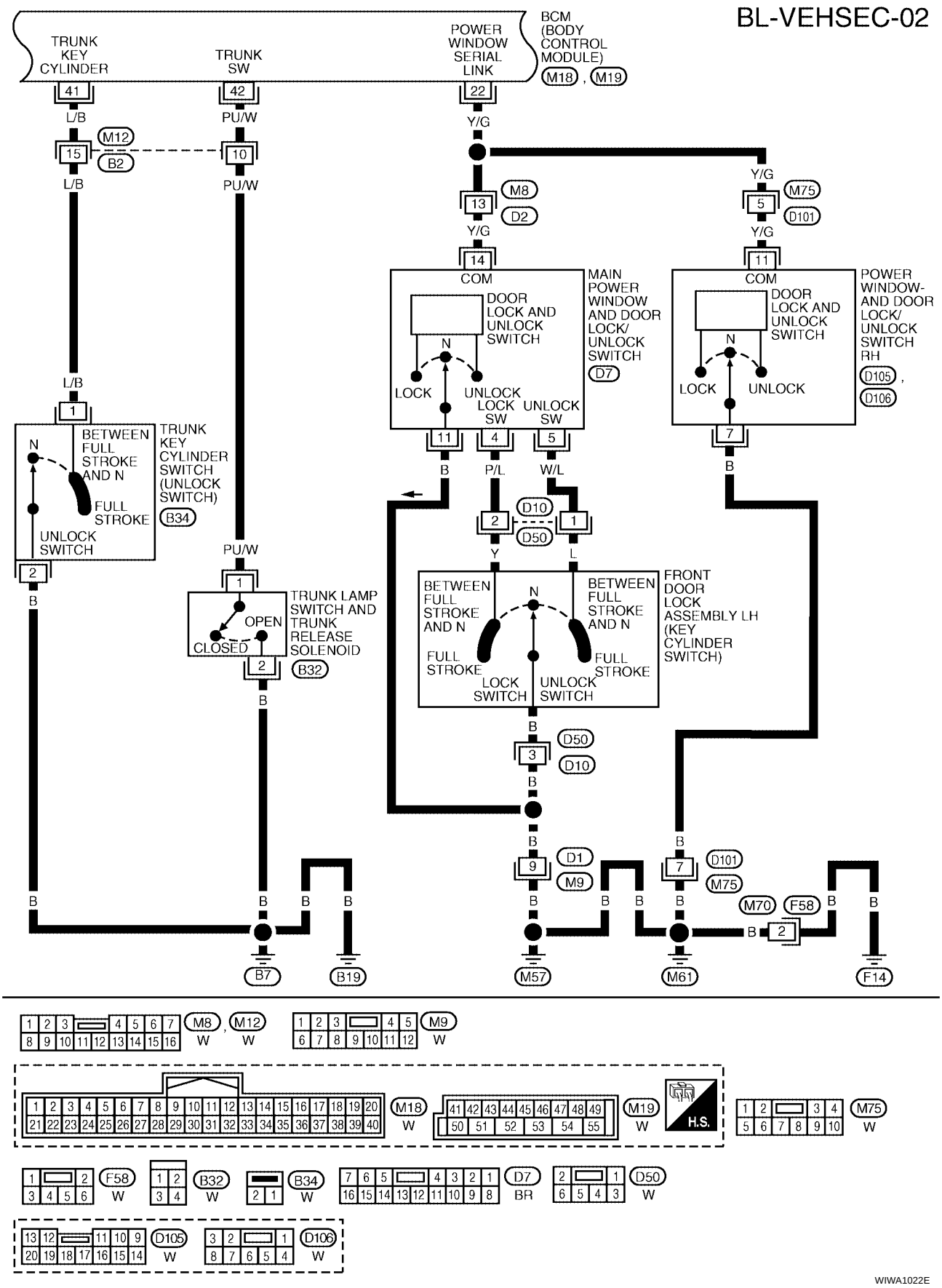
BL-VEHSEC-02
BCM (BODY CONTROL MODULE)
M18 , M19
TRUNK KEY CYLINDER
TRUNK SW
POWER WINDOW SERIAL LINK
41
42
22
L/B
PU/W
Y/G
M12
B2
15
10
13
M8
D2
M75
D101
5
14
11
COM
DOOR LOCK AND UNLOCK SWITCH
MAIN POWER WINDOW AND DOOR LOCK/ UNLOCK SWITCH
D7
POWER WINDOW- AND DOOR LOCK/ UNLOCK SWITCH RH
D105 , D106
N
LOCK
UNLOCK
LOCK SW
UNLOCK SW
1
BETWEEN FULL STROKE AND N
FULL STROKE
UNLOCK SWITCH
TRUNK KEY CYLINDER SWITCH (UNLOCK SWITCH)
B34
2
B
P/L
W/L
D10
D50
Y
L
BETWEEN FULL STROKE AND N
FULL STROKE
LOCK SWITCH
UNLOCK SWITCH
FRONT DOOR LOCK ASSEMBLY LH (KEY CYLINDER SWITCH)
TRUNK LAMP SWITCH AND TRUNK RELEASE SOLENOID
OPEN
CLOSED
B32
3
9
D1
M9
7
M70
F58
B7
B19
M57
M61
F14
M8 , M12
W
M9
M18
M19
H.S.
M75
F58
B32
B34
D7
BR
D50
D105
D106
WIWA1022E

BL-VEHSEC-03

: DATA LINE

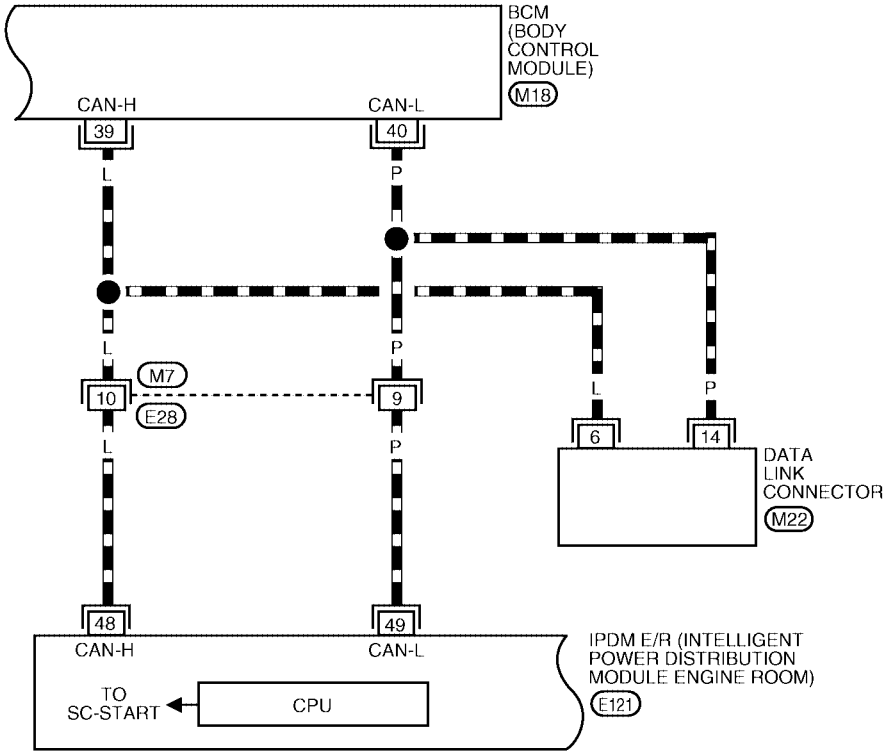

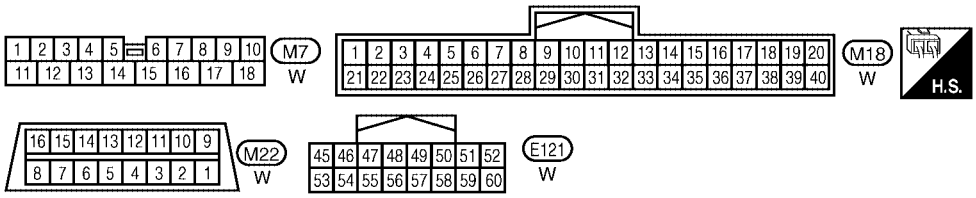

WIWA1023E

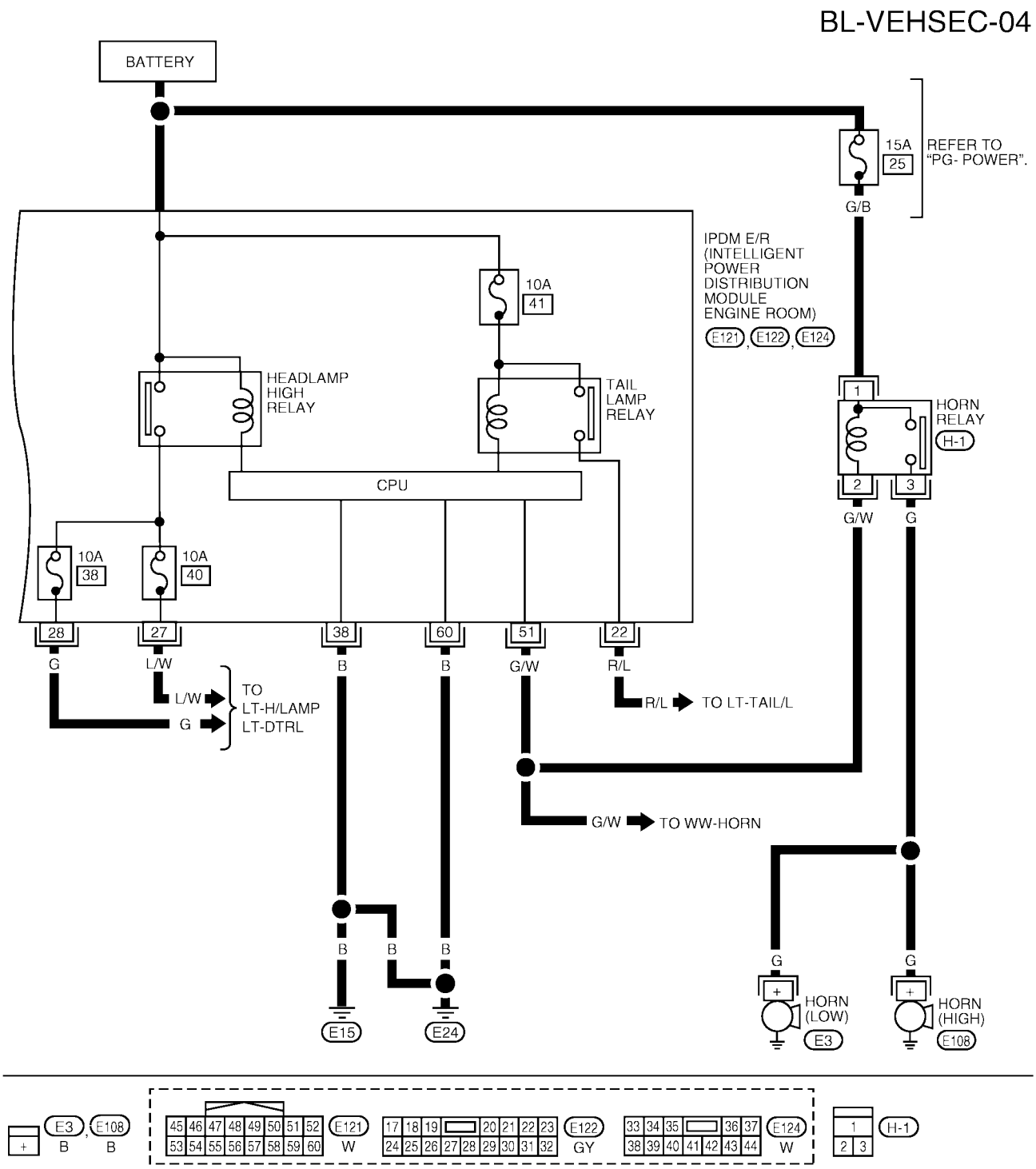
BL-VEHSEC-04
BATTERY
15A
25
REFER TO
"PG- POWER".
G/B
IPDM E/R
(INTELLIGENT
POWER
DISTRIBUTION
MODULE
ENGINE ROOM)
E121, E122, E124
10A
41
HEADLAMP
HIGH
RELAY
TAIL
LAMP
RELAY
CPU
HORN
RELAY
H-1
1
2
3
G/W
G
10A
38
10A
40
28
27
38
60
51
22
G
L/W
B
B
G/W
R/L
L/W
G
TO
LT-H/LAMP
LT-DTRL
R/L
TO LT-TAIL/L
G/W
TO WW-HORN
B
B
B
E15
E24
G
G
HORN
(LOW)
E3
HORN
(HIGH)
E108
E3, E108
B B
E121
W
E122
GY
E124
W
H-1
WIWA0427E

Terminals and Reference Value for BCM

EIS003JB

Terminal	Wire Color	Item	Condition	Voltage (V) (Approx.)
11	PU	Ignition switch (ACC or ON)	Ignition switch (ACC or ON position)	Battery voltage
12	P/L	Front door switch RH	Door Closed (OFF) → Open (ON)	Battery voltage → 0V
13	R/W	Rear door switch RH	Door Closed (OFF) → Open (ON)	Battery voltage → 0V
22	Y/G	Power window serial link	—	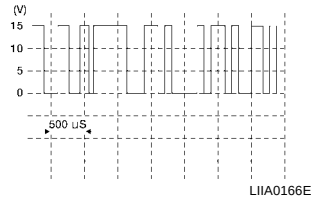
23	G/OR	Security indicator output	OFF → ON	Battery voltage → 0V
37	B/R	Ignition key switch (insert)	Key inserted → Key removed from key cylinder	Battery voltage → 0V
39	L	CAN-H	—	—
40	P	CAN-L	—	—
41	L/B	Trunk key cylinder	Unlocked → Neutral	0V → 5V
42	PU/W	Trunk switch	Trunk lid closed (OFF) → Trunk lid open (ON)	Battery voltage → 0V
47	SB	Front door switch LH	Door Closed (OFF) → Open (ON)	Battery voltage → 0V
48	R/B	Rear door switch LH	Door Closed (OFF) → Open (ON)	Battery voltage → 0V
57	W	Battery power supply	—	Battery voltage
67	B	Ground	—	0
70	W/B	Battery power supply	—	Battery voltage

Terminals and Reference Value for IPDM E/R

EIS003JC

Terminal	Wire Color	Item	Condition	Voltage (V) (Approx.)
22	R/L	Parking. license, and tail lamps	OFF → ON	0V → Battery voltage
27	L/W	Headlamp high (RH)	OFF → ON	0V → Battery voltage
28	G	Headlamp high (LH)	OFF → ON	0V → Battery voltage
38	B	Ground	—	0
48	L	CAN-H	—	—
49	P	CAN-L	—	—
51	G/W	Horn relay	ON → OFF	0V → Battery voltage
60	B	Ground	—	0

CONSULT-II Function (BCM)

EIS003JD

CONSULT-II can display each diagnostic item using the diagnostic test modes shown following.

BCM diagnostic test item	Diagnostic mode	Content
Inspection by part	WORK SUPPORT	Changes setting of each function.
	DATA MONITOR	Displays BCM input/output data in real time.
	ACTIVE TEST	Operation of electrical loads can be checked by sending drive signal to them.
	SELF-DIAG RESULTS	Displays BCM self-diagnosis results.
	CAN DIAG SUPPORT MNTR	The results of transmit/receive diagnosis of CAN communication can be read.
	ECU PART NUMBER	BCM part number can be read.
	CONFIGURATION	Performs BCM configuration read/write functions.

CONSULT-II INSPECTION PROCEDURE

CAUTION:

If CONSULT-II is used with no connection of CONSULT-II CONVERTER, malfunctions might be detected in self-diagnosis depending on control unit which carries out CAN communications.

1. With the ignition switch OFF, connect CONSULT-II and CONSULT-II CONVERTER to the data link connector, and turn the ignition switch ON.

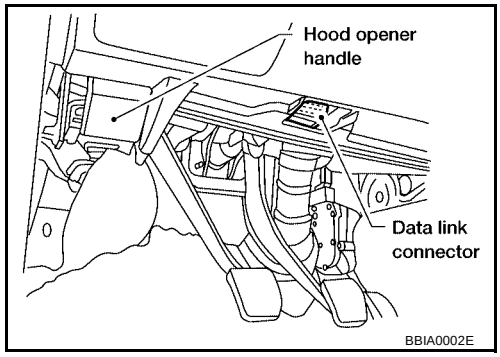

2. Touch "START (NISSAN BASED VHCL)".

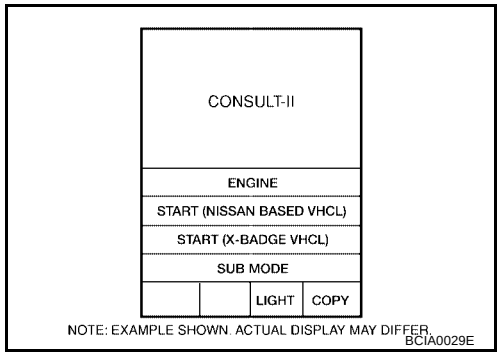

3. Touch "BCM" on the "SELECT SYSTEM" screen.

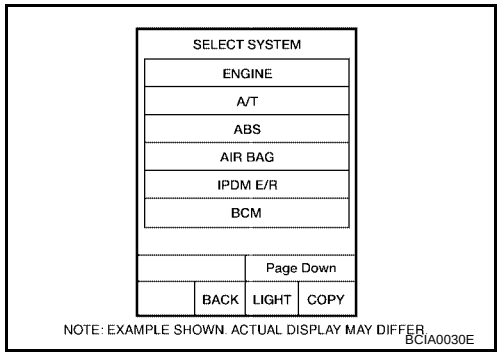

4. Touch "THEFT ALM" on the "SELECT TEST ITEM" screen.
   - WORK SUPPORT, DATA MONITOR and ACTIVE TEST are available for the vehicle security system.

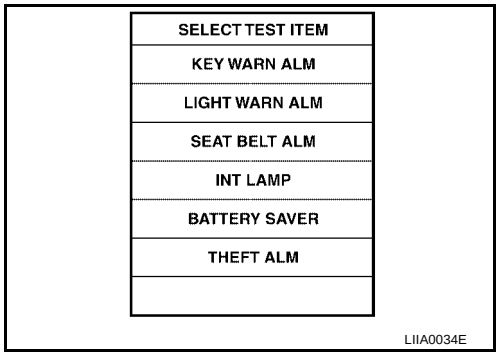

CONSULT-II APPLICATION ITEM

Data Monitor

Monitored Item	Description
IGN ON SW	Indicates [ON/OFF] condition of ignition switch.
ACC ON SW	Indicates [ON/OFF] condition of ignition switch in ACC position.
KEY CYL LK SW	Indicates [ON/OFF] condition of lock signal from key cylinder switch.
KEY CYL UN SW	Indicates [ON/OFF] condition of unlock signal from key cylinder switch.
DOOR SW-DR	Indicates [ON/OFF] condition of front door switch LH.
DOOR SW-AS	Indicates [ON/OFF] condition of front door switch RH.
DOOR SW-RR	Indicates [ON/OFF] condition of rear door switch RH.
DOOR SW-RL	Indicates [ON/OFF] condition of rear door switch LH.
TRNK OPN MTR	Indicates [ON/OFF] condition of trunk opener motor.
TRNK OPNR SW	Indicates [ON/OFF] condition of trunk opener switch.
TRUNK KEY SW	Indicates [ON/OFF] condition of trunk key cylinder switch.
LOCK SW DR/AS	Indicates [ON/OFF] condition of lock signal from door lock/unlock switch LH and RH.
UNLK SW DR/AS	Indicates [ON/OFF] condition of unlock signal from door lock/unlock switch LH and RH.
LK BUTTON/SIG	Indicates [ON/OFF] condition of lock signal from keyfob.
UN BUTTON/SIG	Indicates [ON/OFF] condition of unlock signal from keyfob.
TRUNK BTN/SIG	Indicates [ON/OFF] condition of trunk open signal from keyfob.

Active Test

Test Item	Description
THEFT IND	This test is able to check security indicator lamp operation. The lamp will be turned on when “ON” on CONSULT-II screen is touched.
HEADLAMP	This test is able to check vehicle security lamp operation. The headlamps will be activated for 0.5 seconds after “ON” on CONSULT-II screen is touched.
HORN	This test is able to check vehicle security horn operation. The horns will be activated for 0.5 seconds after “ON” on CONSULT-II screen is touched.

Work Support

Test Item	Description
SECURITY ALARM SET	This mode can confirm and change security alarm ON-OFF setting.
THEFT ALM TRG	The switch which triggered vehicle security alarm is recorded. This mode is able to confirm and erase the record of vehicle security alarm. The trigger data can be erased by touching “CLEAR” on CONSULT-II screen.

Trouble Diagnosis

EIS003JE

WORK FLOW

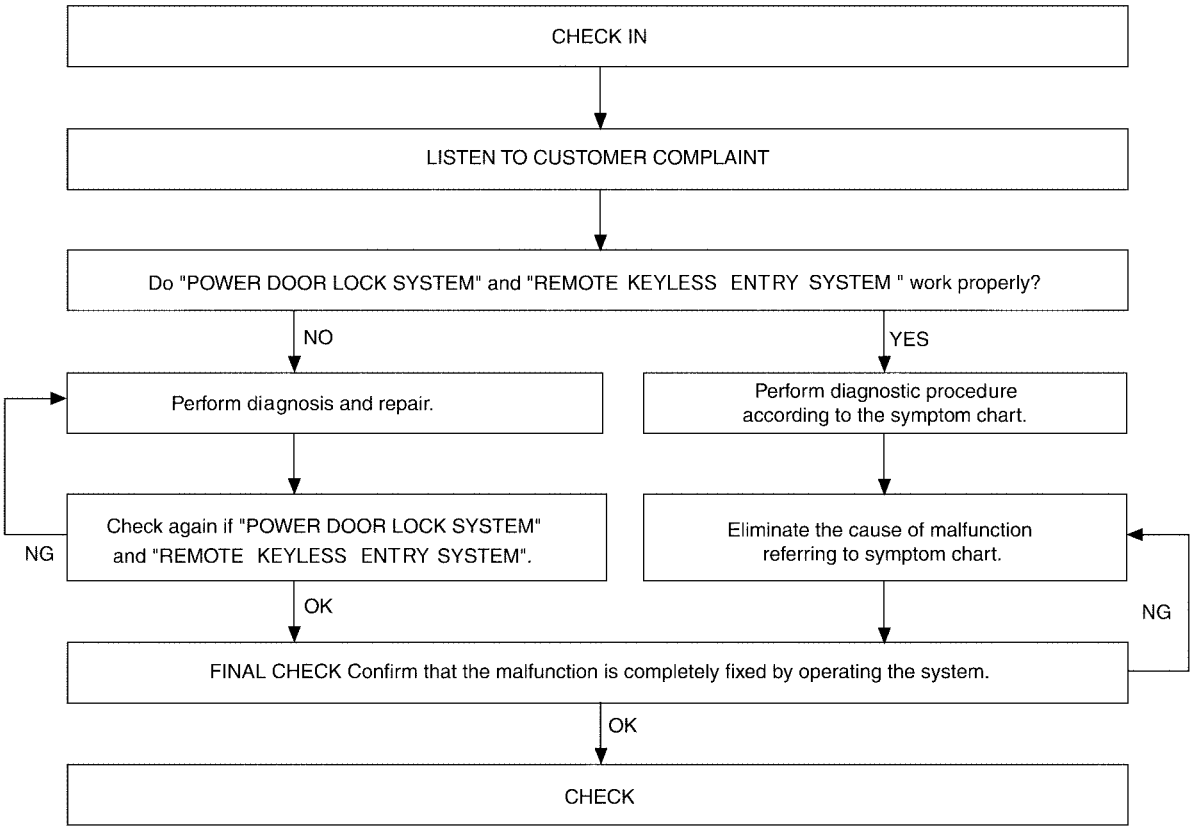

LIIA0123E

- “POWER DOOR LOCK SYSTEM” Diagnosis. Refer to BL-17, "POWER DOOR LOCK SYSTEM" .
- “REMOTE CONTROL SYSTEM” Diagnosis. Refer to BL-47, "REMOTE KEYLESS ENTRY SYSTEM" .

Preliminary Check

EIS003JF

The system operation is canceled by turning ignition switch to ACC at any step between START and ARMED in the following flow chart.

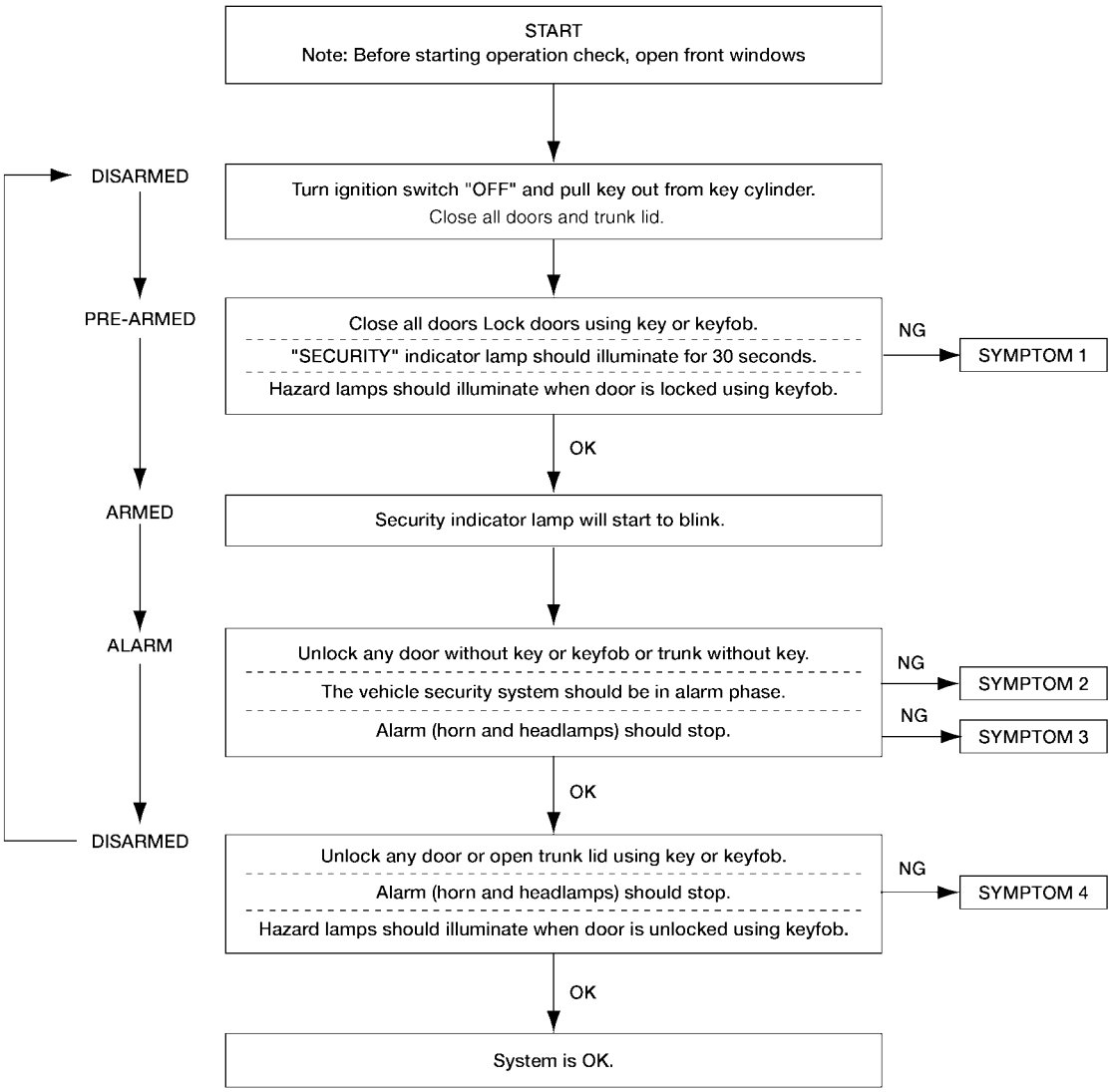

LIIA1525E

After performing preliminary check, go to symptom chart.

Symptom Chart

EIS003JG

PROCEDURE / SYMPTOM			Diagnostic procedure
1	Vehicle security system cannot be set by ····	All items	Diagnostic Procedure 1 (Door and trunk lamp and trunk release solenoid switch check) Refer to BL-102, "Door Switch Check" .
			If the above systems are “OK”, replace BCM.
		Lock/unlock switch	Diagnostic Procedure 7 (Door lock/unlock switch check) Refer to BL-107, "DOOR LOCK/UNLOCK SWITCH CHECK" .
			If the above systems are “OK”, check main power window and door lock/ unlock switch.
		Driver door outside key	Diagnostic Procedure 3 (Door key cylinder switch check) Refer to BL-107, "FRONT DOOR LOCK ASSEMBLY LH (KEY CYLINDER SWITCH) CHECK" .
			If the above systems are “OK”, check main power window and door lock/ unlock switch.
	Security indicator does not turn “ON”.		Diagnostic Procedure 2 (Security indicator lamp check) Refer to BL-104, "TRUNK LAMP SWITCH AND TRUNK RELEASE SOLENOID SWITCH CHECK" .
			If the above systems are “OK”, replace BCM.
2	*1 Vehicle security system does not alarm when ….	Any door is opened.	Diagnostic Procedure 1 (Door and trunk room lamp switch check) Refer to BL-102, "Door Switch Check" .
			If the above systems are “OK”, replace BCM.
3	Vehicle security alarm does not activate.	Horn alarm	Diagnostic Procedure 5 (Vehicle security horn alarm check) Refer to BL-107, "VEHICLE SECURITY HORN ALARM CHECK" .
			If the above systems are “OK”, check horn system. Refer to WW-35, "HORN" .
		Head lamp alarm	Diagnostic Procedure 6 (Head lamp alarm check) Refer to BL-107, "VEHICLE SECURITY HEADLAMP ALARM CHECK" .
			If the above systems are “OK”, replace BCM.
4	Vehicle security system cannot be canceled by ····	Driver door outside key	Diagnostic Procedure 3 (Door key cylinder switch check) Refer to BL-107, "FRONT DOOR LOCK ASSEMBLY LH (KEY CYLINDER SWITCH) CHECK" .
			If the above systems are “OK”, check main power window and door lock/ unlock switch.
		Trunk lid key	Diagnostic Procedure 4 (Trunk lid key cylinder switch check) Refer to BL-105, "TRUNK KEY CYLINDER SWITCH (UNLOCK SWITCH) SIGNAL" .
			If the above systems are “OK”, replace BCM.
		Keyfob	Check remote keyless entry function.
			If the above systems are “OK”, replace BCM.

*1: Make sure the system is in the armed phase.

BCM Power Supply and Ground Circuit Check

EIS003JH

1. CHECK FUSE

Check the following BCM fuses and fusible link.

Component Parts	Terminal No. (SIGNAL)	Ampere	No.	Location
BCM	11 (ACC power supply)	10A	6	Fuse block (J/B)
	57 (BAT power supply)	10A	21	Fuse block (J/B)
	70 (BAT power supply)	50A	**f**	Fuse and fusible link box

NOTE:
Refer to BL-17, "Component Parts and Harness Connector Location" .

OK or NG

OK >> GO TO 2.
NG >> If fuse is blown, be sure to eliminate cause of problem before installing new fuse. Refer to PG-4, "POWER SUPPLY ROUTING CIRCUIT" .

2. CHECK POWER SUPPLY CIRCUIT

1. Turn ignition switch OFF.
2. Disconnect BCM.
3. Check voltage between BCM connectors M20 terminals 57, 70 and M18 terminal 11 and ground.

Connector	Terminals		Signal name	Ignition switch	Voltage (V) (Approx.)
	(+)	(–)			
M18	11	Ground	ACC power supply	ACC	Battery voltage
M20	57		Battery power supply	OFF	Battery voltage
	70		Battery power supply	OFF	Battery voltage

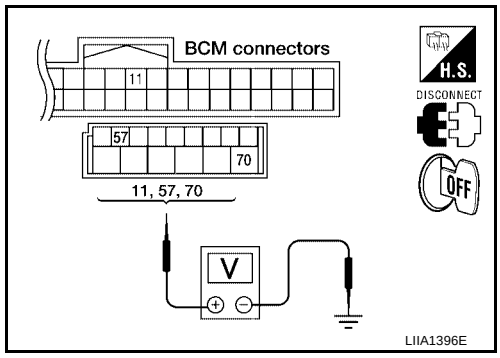

OK or NG

OK >> GO TO 3.
NG >> Repair or replace harness.

3. CHECK GROUND CIRCUIT

Check continuity between BCM connector M20 terminal 67 and ground.

Connector	Terminals		Continuity
	(+)	(-)	
M20	67	Ground	Yes

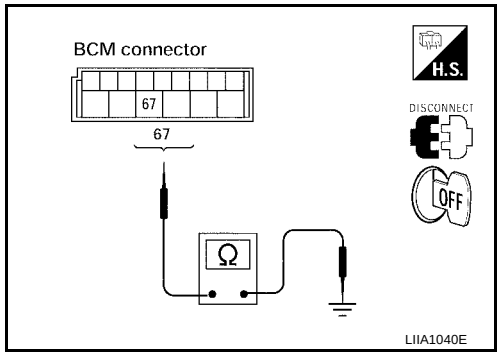

OK or NG

OK >> Power supply and ground circuit is OK.
NG >> Repair or replace harness.

Door Switch Check

EIS003JI

1. CHECK DOOR SWITCHES INPUT SIGNAL

With CONSULT-II

Check door switches ("DOOR SW-DR", "DOOR SW-AS", "DOOR SW-RL", "DOOR SW-RR") in DATA MONITOR mode with CONSULT–II. Refer to BL-28, "DATA MONITOR" .

- When doors are open:

DOOR SW-DR	**: ON**
DOOR SW-AS	**: ON**
DOOR SW-RL	**: ON**
DOOR SW-RR	**: ON**

- When doors are closed:

DOOR SW-DR	**: OFF**
DOOR SW-AS	**: OFF**
DOOR SW-RL	**: OFF**
DOOR SW-RR	**: OFF**

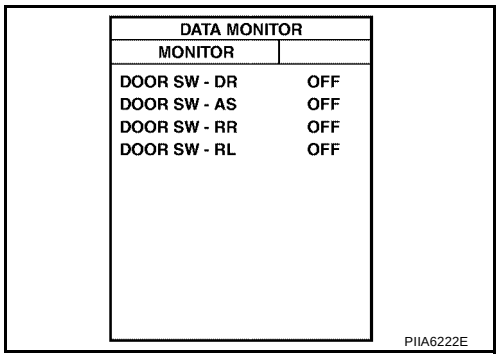

Without CONSULT-II

Check voltage between BCM connector M18 or M19 terminals 12, 13, 47, 48 and ground.

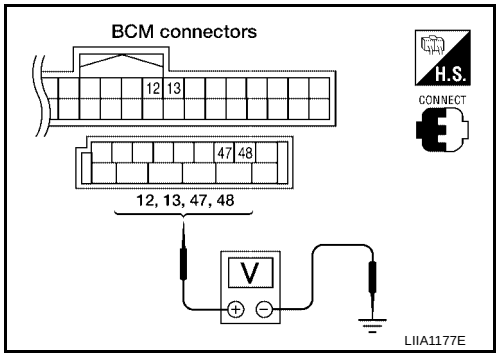

Connector	Item	Terminals (+)	Terminals (–)	Condition	Voltage (V) (Approx.)
M18	Front door switch RH	12	Ground	Door Open ↓ Closed	0 ↓ Battery voltage
	Rear door switch RH	13			
M19	Front door switch LH	47			
	Rear door switch LH	48			

OK or NG

OK >> System is OK.
NG >> GO TO 2.

2. CHECK DOOR SWITCH CIRCUIT

1. Turn ignition switch OFF.
2. Disconnect door switch and BCM.
3. Check continuity between door switch connector B8 (front LH) or B108 (front RH) terminal 2, B18 (rear LH) or B116 (rear RH) terminal 1 and BCM connector M18, M19 terminals 12, 13, 47 and 48.

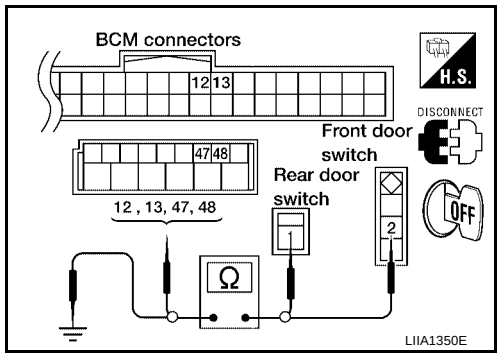

1 - 48 : Continuity should exist
1 - 13 : Continuity should exist
2 - 47 : Continuity should exist
2 - 12 : Continuity should exist

4. Check continuity between door switch connector B8 (front LH) or B108 (front RH) terminal 2, B18 (rear LH) or B116 (rear RH) terminal 1 and ground.

1 - Ground : Continuity should not exist
2 - Ground : Continuity should not exist

OK or NG

OK >> GO TO 3.
NG >> Repair or replace harness.

3. CHECK DOOR SWITCHES

1. Disconnect door switch harness.
2. Check continuity between door switch connector terminals.

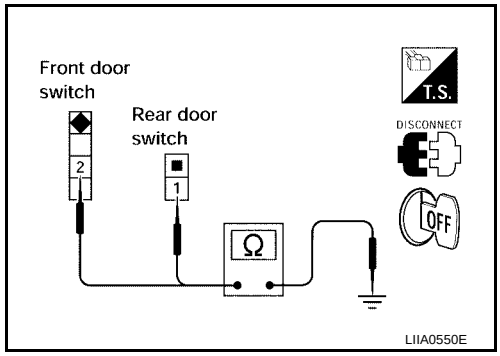

	Terminals	Condition	Continuity
Rear door switch LH/RH	1 – Ground	Door Open	Yes
		Door Closed	No
Front door switch LH/RH	2 – Ground	Door Open	Yes
		Door Closed	No

OK or NG

OK >> Check door switch case ground condition.
NG >> Replace door switch.

TRUNK LAMP SWITCH AND TRUNK RELEASE SOLENOID SWITCH CHECK

EIS003JJ

1. CHECK TRUNK LAMP SWITCH AND TRUNK RELEASE SOLENOID INPUT SIGNAL

With CONSULT-II

Check “TRNK OPN MNTR” in "DATA MONITOR" mode with CONSULT-II.

When trunk lid is open : TRNK OPN MNTR ON

When trunk lid is closed : TRNK OPN MNTR OFF

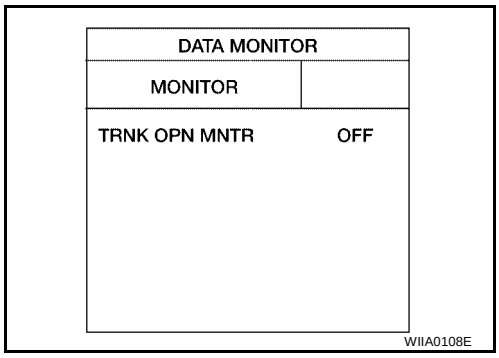

Without CONSULT-II

Check voltage between BCM harness connector M19 terminal 42 and ground.

Refer to BL-91, "" .

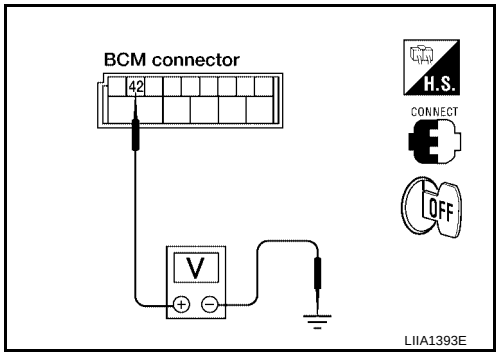

OK or NG

OK >> Trunk lamp switch and trunk release solenoid is OK.

NG >> GO TO 2.

2. CHECK TRUNK LAMP SWITCH AND TRUNK RELEASE SOLENOID

1. Turn ignition switch OFF.
2. Disconnect trunk lamp switch and trunk release solenoid.
3. Check continuity between trunk lamp switch and trunk release solenoid connector B32 terminals 1 and 2.

Connector	Terminals	Condition	Continuity
B32	1 – 2	Closed	No
		Open	Yes

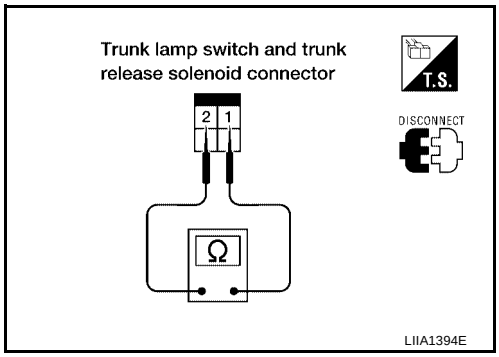

OK or NG

OK >> Check the following:

- Trunk lamp switch and trunk release solenoid ground circuit
- Harness for open or short between trunk lamp switch and trunk release solenoid and BCM

NG >> Replace trunk lamp switch and trunk release solenoid.

TRUNK KEY CYLINDER SWITCH (UNLOCK SWITCH) SIGNAL

EIS003JK

1. TRUNK KEY CYLINDER SWITCH (UNLOCK SWITCH) SIGNAL CHECK

With CONSULT-II

Check trunk key cylinder switch (“TRUNK KEY SW”) in "DATA MONITOR" mode with CONSULT-II.

- When key in key cylinder is at “NEUTRAL” position,

  TRUNK KEY SW: OFF

- When key is at “UNLOCK” position,

  TRUNK KEY SW: ON

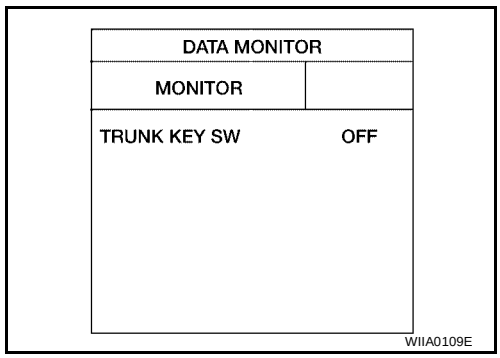

Without CONSULT-II

Check voltage between BCM harness connector M19 terminal 41 and ground.

Condition	Voltage (V) (Approx.)
Neutral	5
Unlocked	0

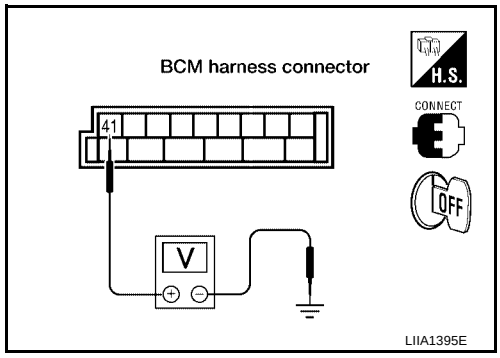

OK or NG

OK >> Trunk key cylinder switch is OK.

NG >> GO TO 2.

2. CHECK TRUNK KEY CYLINDER SWITCH (UNLOCK SWITCH)

1. Disconnect trunk key cylinder switch connector.
2. Check continuity between trunk key cylinder switch connector B34 terminals 1 and 2.

Condition	Continuity
Neutral	No
Unlocked	Yes

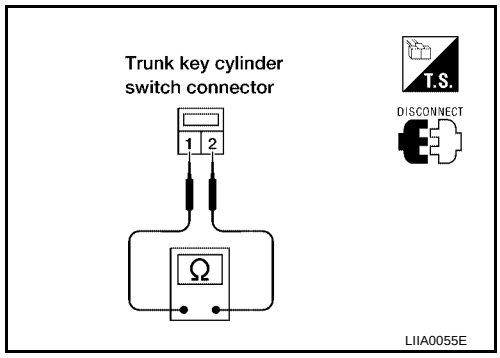

OK or NG

OK >> Check the following:

- Trunk key cylinder switch ground circuit
- Harness for open or short between trunk key cylinder switch and BCM

NG >> Replace trunk key cylinder switch.

SECURITY INDICATOR LAMP CHECK

EIS003JL

1. SECURITY INDICATOR LAMP ACTIVE TEST

With CONSULT-II

Check "THEFT IND" in "ACTIVE TEST" mode with CONSULT-II.

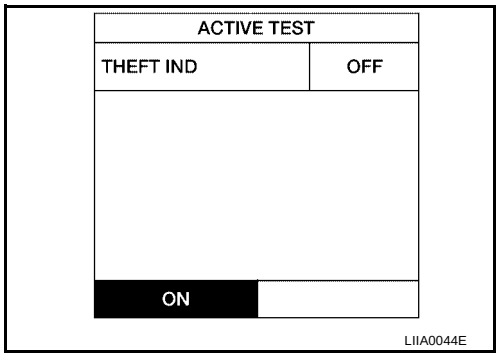

Without CONSULT-II

1. Disconnect BCM.
2. Check voltage between BCM harness connector M18 terminal 23 and ground.

Connector	Terminals		Voltage (V) (Approx.)
	(+)	(-)	
M18	23	Ground	Battery voltage

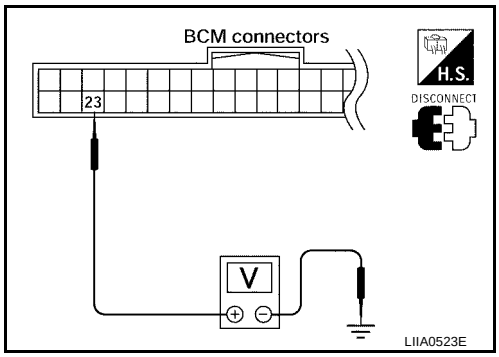

OK or NG

OK >> Security indicator lamp is OK.

NG >> GO TO 2.

2. SECURITY INDICATOR LAMP CHECK

Check indicator lamp condition.

OK or NG

OK >> GO TO 3.

NG >> Replace indicator lamp.

3. CHECK HARNESS CONTINUITY

1. Turn ignition switch OFF.
2. Disconnect BCM and security indicator lamp connector.
3. Check continuity between BCM connector (A) M18 terminal 23 and security indicator lamp harness connector (B) M14 terminal 2.

   23 - 2 : Continuity should exist.

4. Check continuity between BCM connector (A) M18 terminal 23 and ground.

   23 - Ground : Continuity should not exist.

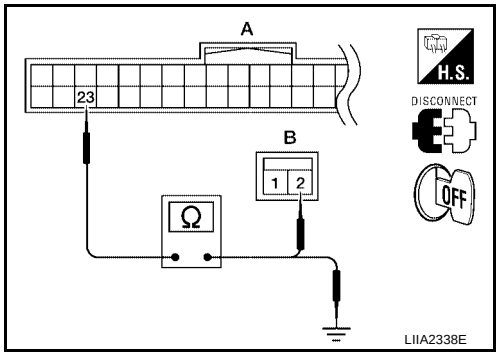

OK or NG

OK >> Check the following:

- 10A fuse [No. 19, located in fuse block (J/B)]
- Harness for open or short between security indicator lamp and fuse

NG >> Repair or replace harness.

FRONT DOOR LOCK ASSEMBLY LH (KEY CYLINDER SWITCH) CHECK

EIS003JM

1. FRONT DOOR LOCK ASSEMBLY LH (KEY CYLINDER SWITCH) OPERATION

Check door key cylinder switch with key.

Do doors lock/unlock when using the key?

YES >> Front door lock assembly LH (key cylinder switch) is OK.
NO >> Check front door lock assembly LH (key cylinder switch) circuit. Refer to BL-107, "FRONT DOOR LOCK ASSEMBLY LH (KEY CYLINDER SWITCH) CHECK" .

VEHICLE SECURITY HORN ALARM CHECK

EIS003JN

1. CHECK HORN OPERATION

Check if horn sounds with horn switch.

Does horn operate?

YES >> Check harness for open or short between IPDM E/R and horn relay.
NO >> Check horn circuit. Refer to WW-35, "HORN" .

VEHICLE SECURITY HEADLAMP ALARM CHECK

EIS003JO

1. CHECK VEHICLE SECURITY HEADLAMP ALARM OPERATION

Check if headlamps operate with lighting switch.

Do headlamps come on when turning switch ON?

YES >> Headlamp alarm is OK.
NO >> Check headlamp system. Refer to LT-5, "HEADLAMP (FOR USA)" or LT-32, "HEADLAMP (FOR CANADA) - DAYTIME LIGHT SYSTEM -" .

DOOR LOCK/UNLOCK SWITCH CHECK

EIS003JP

1. CHECK DOOR LOCK/UNLOCK SWITCH INPUT SIGNAL

Check if power door lock operates with door lock/unlock switch.

Do doors lock/unlock when using each door lock/unlock switch?

YES >> Door lock/unlock switch is OK.
NO >> Refer to BL-107, "DOOR LOCK/UNLOCK SWITCH CHECK" .

NVIS(NISSAN VEHICLE IMMOBILIZER SYSTEM-NATS)

PFP:28591

Component Parts and Harness Connector Location

EIS003JQ

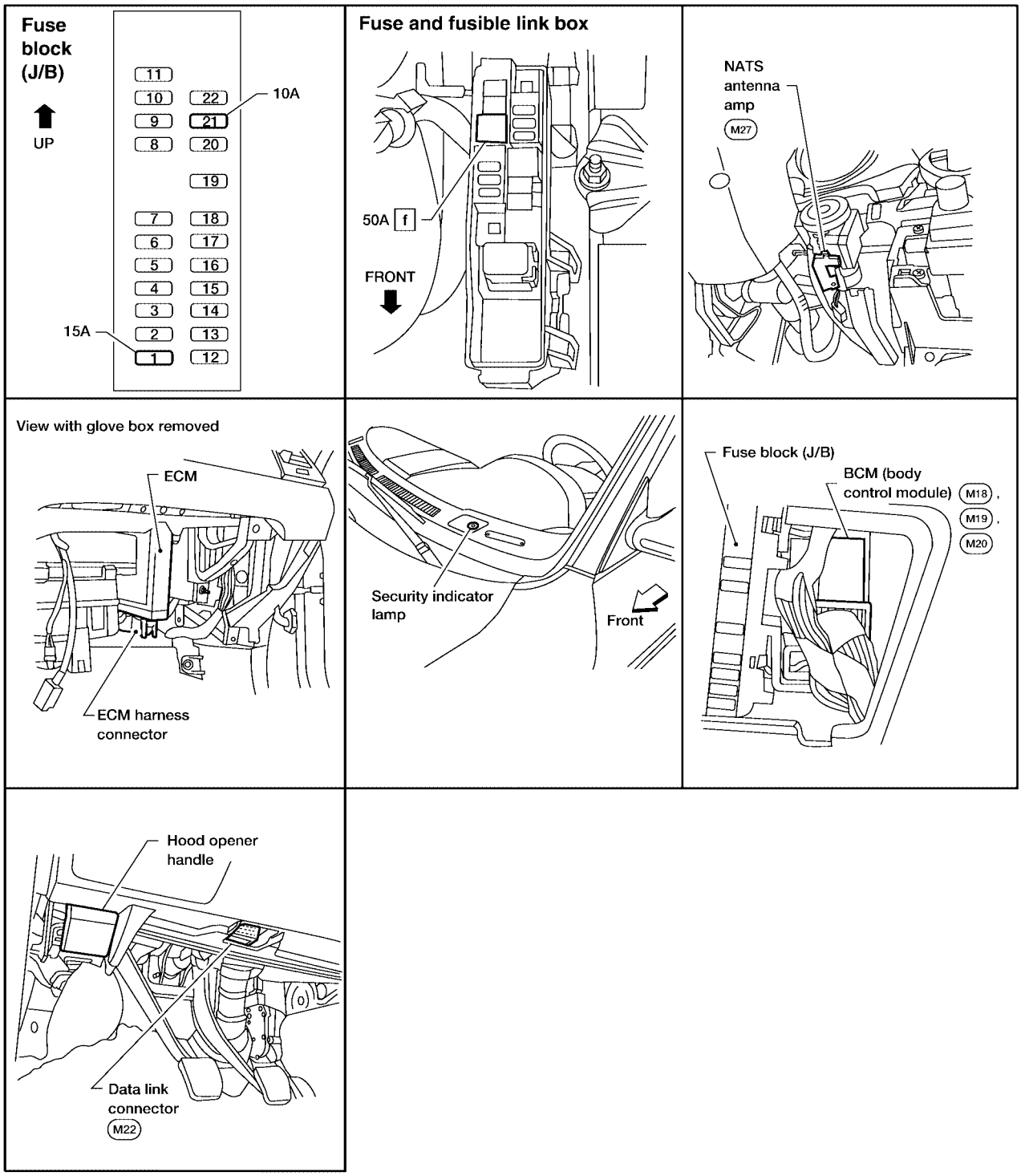

LIIA1874E

System Description

EIS003JR

NVIS (Nissan Vehicle Immobilizer System-NATS) has the following immobilizer functions:

- Since only NVIS (NATS) ignition keys, whose IDs have been registered into the ECM and BCM, allow the engine to run, operation of a stolen vehicle without a NVIS (NATS) registered key is prevented by NVIS (NATS).
  NVIS (NATS) will immobilize the engine if someone tries to start it without the registered key of NVIS (NATS).
- All of the originally supplied ignition key IDs have been NVIS (NATS) registered.
  If requested by the vehicle owner, a maximum of five key IDs can be registered into the NVIS (NATS) components.
- The security indicator blinks when the ignition switch is in OFF or ACC position. NVIS (NATS) warns outsiders that the vehicle is equipped with the anti-theft system.
- When NVIS (NATS) detects trouble, the security indicator lamp lights up while ignition key is in the ON position.
- NVIS (NATS) trouble diagnoses, system initialization and additional registration of other NVIS (NATS) ignition key IDs must be carried out using CONSULT-II hardware and CONSULT-II NVIS (NATS) software.
  When NVIS (NATS) initialization has been completed, the ID of the inserted ignition key is automatically NVIS (NATS) registered. Then, if necessary, additional registration of other NVIS (NATS) ignition key IDs can be carried out.
  Regarding the procedures of NVIS (NATS) initialization and NVIS (NATS) ignition key ID registration, refer to CONSULT-II Operation Manual NATS-IVIS/NVIS.
- **When servicing a malfunction of the NVIS (NATS) (indicated by lighting up of Security Indicator Lamp) or registering another NVIS (NATS) ignition key ID, it may be necessary to re-register original key identification. Therefore, be sure to receive ALL KEYS from vehicle owner.**

System Composition

EIS003JS

The immobilizer function of the NVIS (NATS) consists of the following:

- NATS ignition key
- NATS antenna amp. located in the ignition key cylinder
- Body control module (BCM)
- Engine control module (ECM)
- Security indicator lamp

NOTE:
The communication between ECM and BCM uses the CAN communication system.

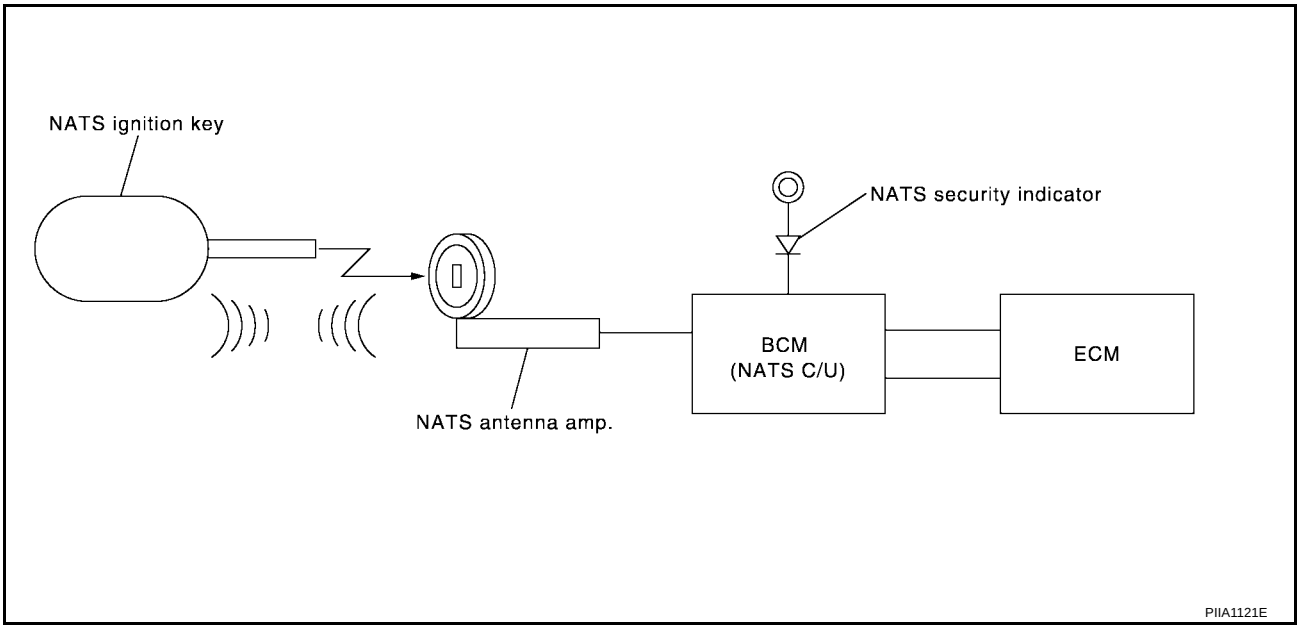

ECM Re-communicating Function

EIS003JT

The following procedure can automatically perform re-communication of ECM and BCM, but only when the ECM has been replaced with a new one which has never been energized on-board.
(In this step, initialization procedure by CONSULT-II is not necessary.)

NOTE:

- **When registering new Key IDs or replacing the ECM other than brand new, refer to CONSULT-II Operation Manual NATS-IVIS/NVIS.**
- **If multiple keys are attached to the key holder, separate them before work.**
- **Distinguish keys with unregistered key ID from those with registered ID.**

1. Install ECM.
2. Using a registered key (*1), turn ignition switch to ON.
   *1: To perform this step, use the key that has been used before performing ECM replacement.
3. Maintain ignition switch in ON position for at least 5 seconds.
4. Turn ignition switch to OFF.
5. Start engine.
   If engine can be started, procedure is completed.
   If engine cannot be started, refer to CONSULT-II Operation Manual NATS-IVIS/NVIS and initialize control unit.

Wiring Diagram — NATS —

EIS003JU

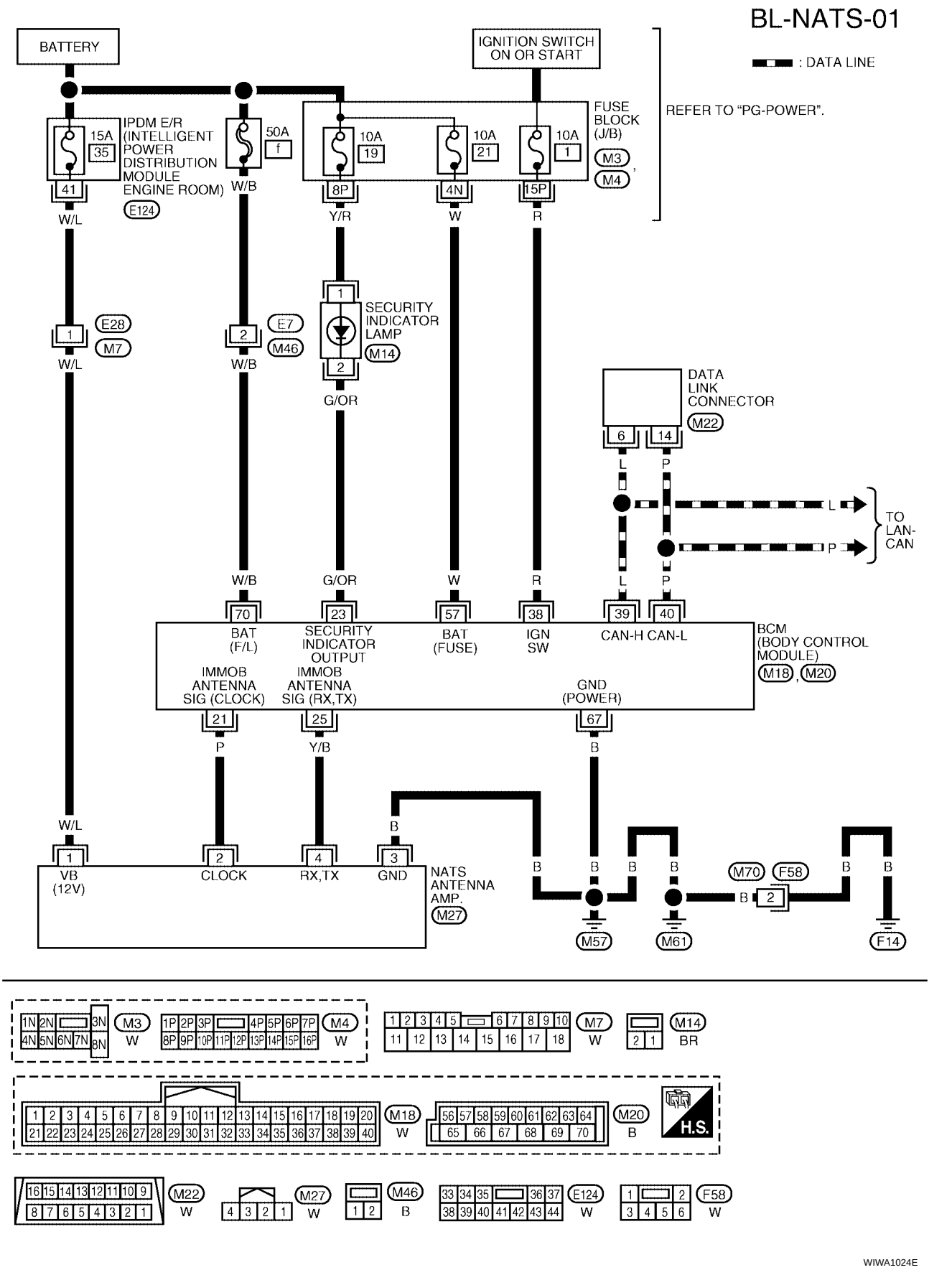

WIWA1024E

Terminals and Reference Value for BCM

EIS003JV

Terminal	Wire Color	Item	Condition	Voltage (V) (Approx.)
21	P	NATS antenna amp.	Ignition switch (OFF → ON)	Just after turning ignition switch ON: Pointer of tester should move.
23	G/OR	Security indicator lamp	Goes OFF → illuminates (Every 2.4 seconds)	Battery voltage → 0
25	Y/B	NATS antenna amp.	Ignition switch (OFF → ON)	Just after turning ignition switch ON: Pointer of tester should move.
38	R	Ignition switch (ON or START)	Ignition switch (ON or START position)	Battery voltage
39	L	CAN-H	—	—
40	P	CAN-L	—	—
57	W	Battery power supply	—	Battery voltage
67	B	Ground	—	0
70	W/B	Battery power supply	—	Battery voltage

CONSULT-II

EIS003JW

CONSULT-II INSPECTION PROCEDURE

CAUTION:

If CONSULT-II is used with no connection of CONSULT-II CONVERTER, malfunctions might be detected in self-diagnosis depending on control unit which carries out CAN communications

1. Turn ignition switch OFF.
2. Connect CONSULT-II and CONSULT-II CONVERTER to data link connector.

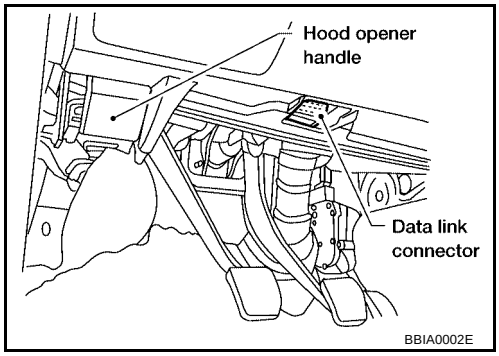

3. Insert NVIS (NATS) program card into CONSULT-II.

   Program card : NATS (AEN04A-1) or later

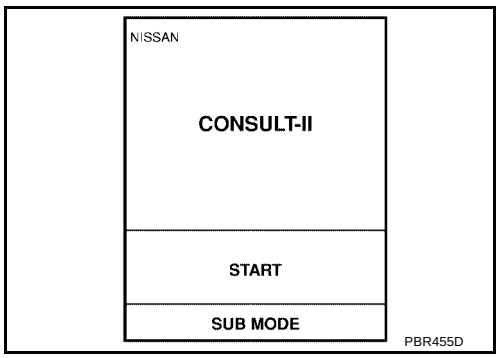

4. Turn ignition switch ON.
5. Touch “START”.

6. Select “NATS V.5.0”.

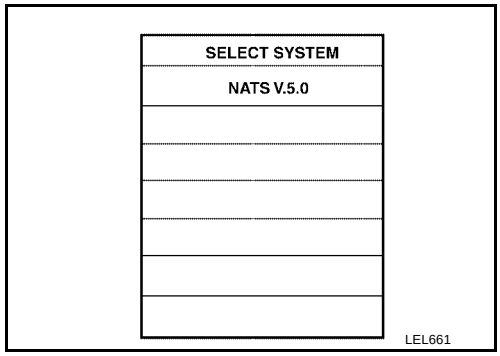

7. Perform each diagnostic test mode according to each service procedure.

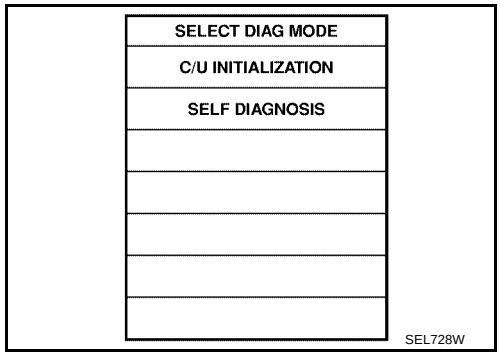

For further information, see the “CONSULT-II OPERATION MANUAL IVIS/NVIS”.

CONSULT-II DIAGNOSTIC TEST MODE FUNCTION

CONSULT-II DIAGNOSTIC TEST MODE	Description
C/U INITIALIZATION	When replacing any of the following components, C/U initialization and re-registration of all NATS ignition keys are necessary. [(NATS ignition key/ BCM/ ECM]
SELF-DIAG RESULTS	Detected items (screen terms) are as shown in the chart. Refer to BL-114, "NVIS (NATS) SELF-DIAGNOSTIC RESULTS ITEM CHART" .

NOTE:

- When any initialization is performed, all IDs previously registered will be erased and all NATS ignition keys must be registered again.
- The engine cannot be started with an unregistered key. In this case, the system will show “DIFFERENCE OF KEY” or “LOCK MODE” as a self-diagnostic result on the CONSULT-II screen.
- In rare case, “CHAIN OF ECM-IMMU” might be stored as a self-diagnostic result during key registration procedure, even if the system is not malfunctioning.

HOW TO READ SELF-DIAGNOSTIC RESULTS

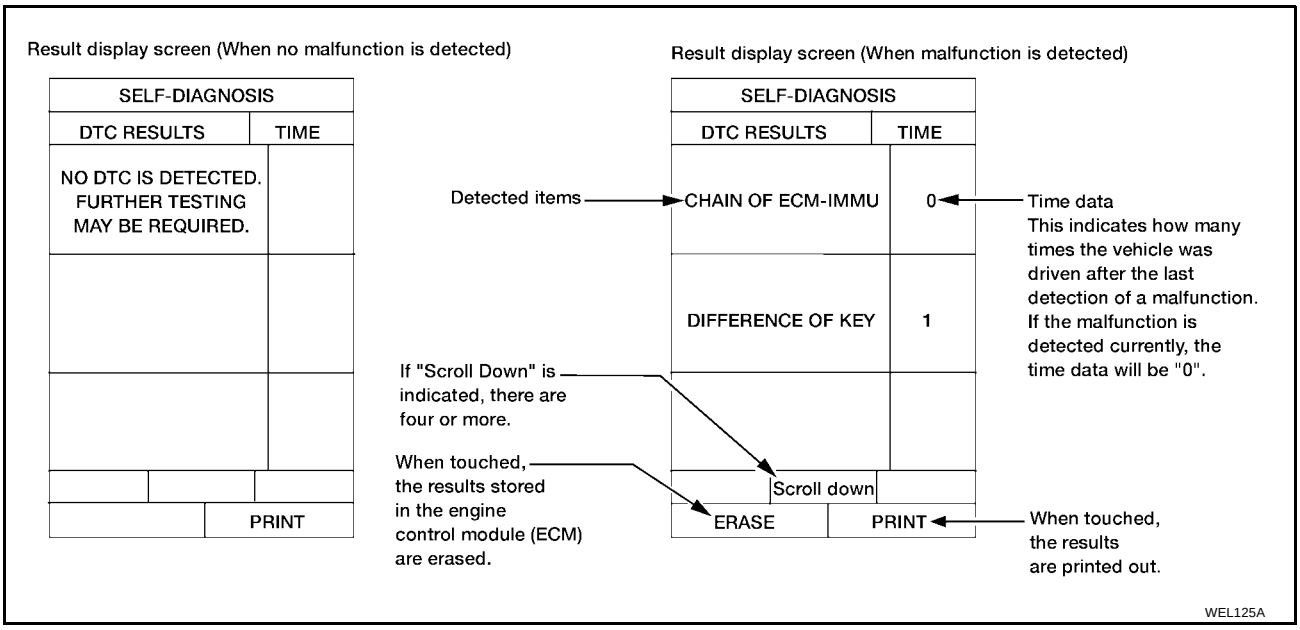

NVIS (NATS) SELF-DIAGNOSTIC RESULTS ITEM CHART

Detected items (NATS program card screen terms)	P No. Code (Self-diagnostic result of "ENGINE"	Malfunction is detected when.....	Reference page
ECM INT CIRC-IMMU	P1613	The malfunction of ECM internal circuit of IMMU communication line is detected.	BL-117
CHAIN OF ECM-IMMU	P1612	Communication impossible between ECM and IMMU (In rare cases, "CHAIN OF ECM-IMMU" might be stored during key registration procedure, even if the system is not malfunctioning.)	BL-118
DIFFERENCE OF KEY	P1615	IMMU can receive the key ID signal but the result of ID verification between key ID and IMMU is NG.	BL-119
CHAIN OF IMMU-KEY	P1614	IMMU cannot receive the key ID signal.	BL-122
ID DISCORD, IMM-ECM	P1611	The result of ID verification between IMMU and ECM is NG. System initialization is required.	BL-120
LOCK MODE	P1610	When the starting operation is carried out five or more times consecutively under the following conditions, NVIS (NATS) will shift the mode to one which prevents the engine from being started. ● Unregistered ignition key is used. ● IMMU or ECM is malfunctioning.	BL-121
DON'T ERASE BEFORE CHECKING ENG DIAG	—	Any engine trouble codes except NVIS (NATS) trouble codes have been detected in ECM.	BL-115

Work Flow

EIS003JX

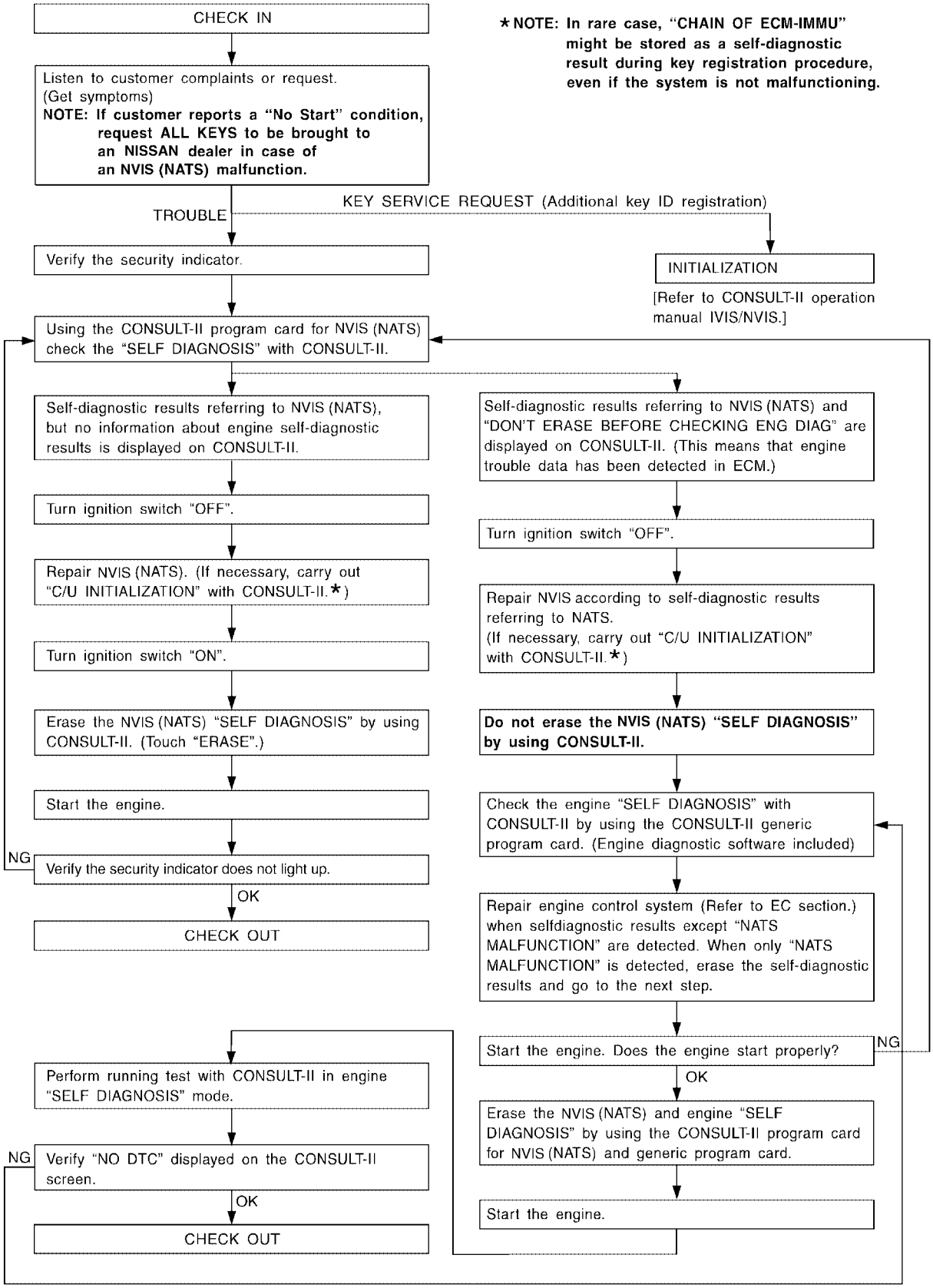

LIIA1152E

Trouble Diagnoses

EIS003JY

SYMPTOM MATRIX CHART 1

Self-diagnosis related item

Symptom	Displayed "SELF-DIAG RESULTS" on CONSULT-II screen.	Diagnostic Procedure (Reference page)	System (Malfunctioning part or mode)	Reference Part No. Of Illustration On System Diagram
● Security indicator lighting up* ● Engine cannot be started	CHAIN OF ECM-IMMU [P1612]	PROCEDURE 1 (BL-118)	In rare case, "CHAIN OF ECM-IMMU" might be stored during key registration procedure, even if the system is not malfunctioning.	—
			Open circuit in battery voltage line of BCM circuit	C1
			Open circuit in ignition line of BCM circuit	C2
			Open circuit in ground line of BCM circuit	C3
			Open or short circuit between BCM and ECM communication line	C4
			ECM	B
			BCM	A
	DIFFERENCE OF KEY [P1615]	PROCEDURE 2 (BL-119)	Unregistered key	D
			BCM	A
	CHAIN OF IMMU-KEY [P1614]	PROCEDURE 5 (BL-122)	Malfunction of key ID chip	E5
			Communication line between ANT/ AMP and BCM: Open circuit or short circuit of battery voltage line or ground line	E1
				E2
			Open circuit in power source line of ANT/ AMP circuit	E3
			Open circuit in ground line of ANT/ AMP circuit	E4
			NATS antenna amp.	E6
			BCM	A
	ID DISCORD, IMM-ECM [P1611]	PROCEDURE 3 (BL-120)	System initialization has not yet been completed.	F
			ECM	B
	LOCK MODE [P1610]	PROCEDURE 4 (BL-121)	LOCK MODE	D
Security indicator lighting up*	DON'T ERASE BEFORE CHECKING ENG DIAG	WORK FLOW (BL-115)	Engine trouble data and NVIS (NATS) trouble data have been detected in ECM	—

*: When NVIS (NATS) detects trouble, the security indicator lights up while ignition key is in the "ON" position.

SYMPTOM MATRIX CHART 2

Non self-diagnosis related item

Symptom	Diagnostic Procedure (Reference page)	System (Malfunctioning part or mode)	Reference Part No. Of Illustration On System Diagram
Security indicator does not light up*.	PROCEDURE 6 (BL-125)	Security indictor lamp	—
		Open circuit between Fuse and BCM	—
		BCM	A

*: CONSULT-II self-diagnostic results display screen “no malfunction is detected”.

DIAGNOSTIC SYSTEM DIAGRAM

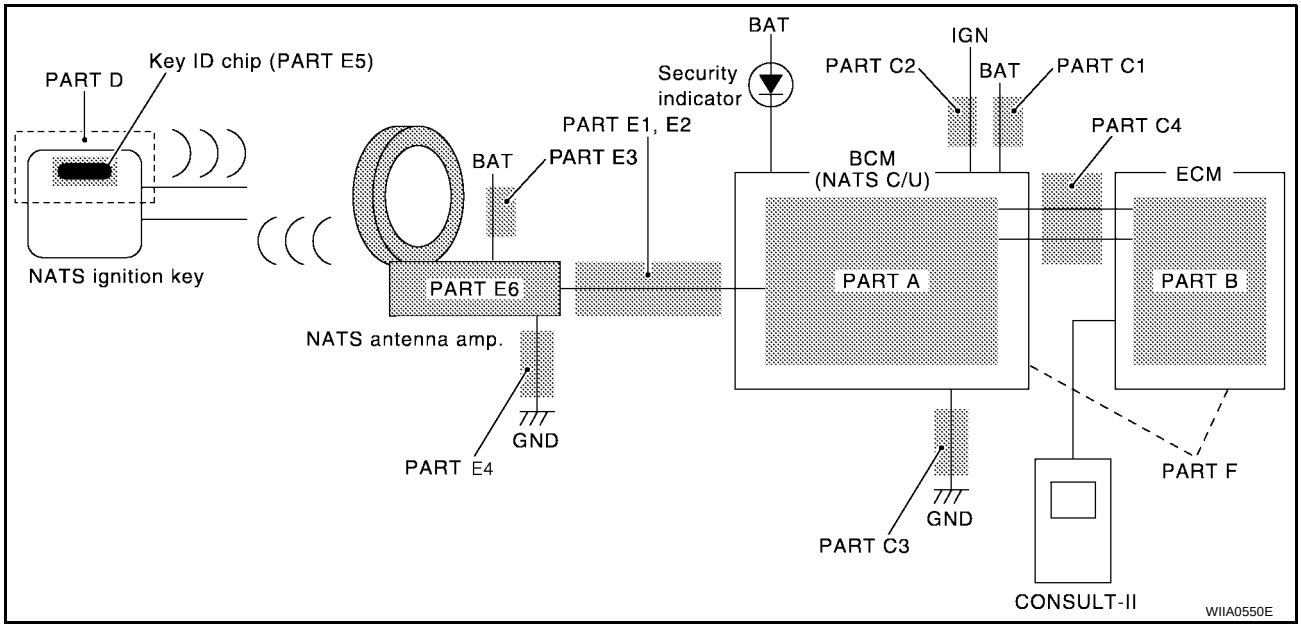

Diagnostic Procedure 1

EIS003JZ

Self-diagnostic results:
“CHAIN OF ECM-IMMU” displayed on CONSULT-II screen
First perform the “SELF-DIAG RESULTS” in “BCM” with CONSULT-II, then perform the trouble diagnosis of malfunction system indicated “SELF-DIAG RESULTS” of “BCM”. Refer to **BL-112, "CONSULT-II"**
.

1. CONFIRM SELF-DIAGNOSTIC RESULTS

Confirm SELF-DIAGNOSTIC RESULTS “CHAIN OF ECM-IMMU” displayed on CONSULT-II screen.

NOTE:
In rare case, “CHAIN OF ECM-IMMU” might be stored during key registration procedure, even if the system is not malfunctioning.

Is CONSULT-II screen displayed as shown?

Yes >> GO TO 2.
No >> GO TO BL-116, "SYMPTOM MATRIX CHART 1" .

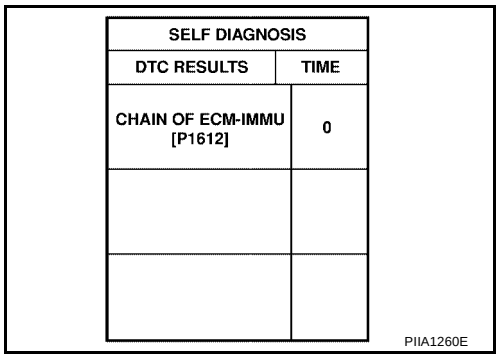

SELF DIAGNOSIS	
DTC RESULTS	TIME
CHAIN OF ECM-IMMU [P1612]	0

PIIA1260E

2. CHECK POWER SUPPLY CIRCUIT FOR BCM

1. Turn ignition switch OFF.
2. Check voltage between BCM connector M20 terminal 70 and ground.

70 – Ground : Battery voltage

OK or NG

OK >> GO TO 3.
NG >> Check the following:
- 50A fusible link (letter **f** , located in fuse and fusible link box)
- Harness for open or short between fuse and BCM connector
  Ref. Part No. C1

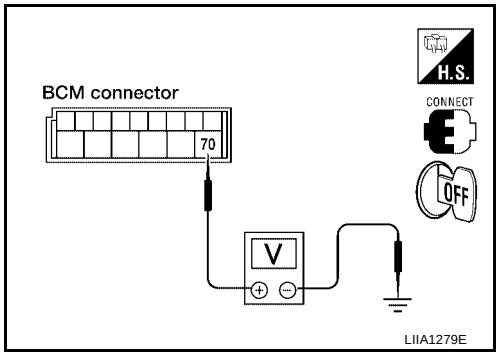

LIIA1279E

3. CHECK IGNITION SWITCH ON SIGNAL

1. Turn ignition switch ON.
2. Check voltage between BCM connector M18 terminal 38 and ground.

38 – Ground : Battery voltage

OK or NG

OK >> GO TO 4.
NG >> Check the following:
- 10A fuse [No. 1, located in the fuse block (J/B)]
- Harness for open or short between fuse and BCM connector
  Ref. part No. C2

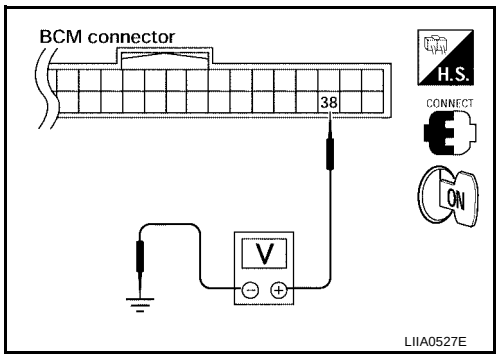

LIIA0527E

4. CHECK GROUND CIRCUIT FOR BCM

1. Turn ignition switch OFF.
2. Check continuity between BCM connector M18 terminal 67 and ground.

67 – Ground : Continuity should exist

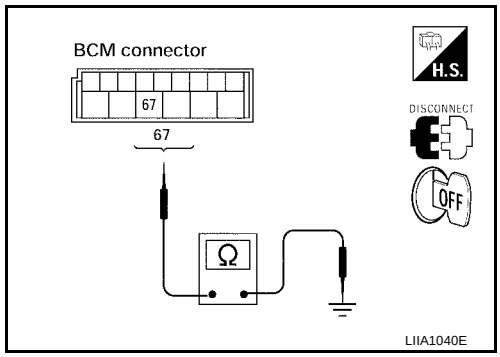

OK or NG

OK >> GO TO 5.
NG >> Repair or replace harness. **Ref. part No. C3**

5. REPLACE BCM

1. Replace BCM. **Ref. part No. A**
2. Perform initialization with CONSULT-II.
   For initialization, refer to “CONSULT-II Operation Manual NATS-IVIS/NVIS”.

Does the engine start?

Yes >> BCM is malfunctioning.
No >>
- ECM is malfunctioning.
- Replace ECM. **Ref. part No. B**
- Perform initialization or re-communicating function.
- For initialization, refer to “CONSULT-II Operation Manual NATS-IVIS/NVIS”.
- For re-communicating function, refer to BL-110, "ECM Re-communicating Function" .

Diagnostic Procedure 2

EIS003K0

Self-diagnostic results:
“DIFFERENCE OF KEY” displayed on CONSULT-II screen

1. CONFIRM SELF-DIAGNOSTIC RESULTS

Confirm SELF-DIAGNOSTIC RESULTS “DIFFERENCE OF KEY” displayed on CONSULT-II screen.

Is CONSULT-II screen displayed as shown?

Yes >> GO TO 2.
No >> GO TO BL-116, "SYMPTOM MATRIX CHART 1" .

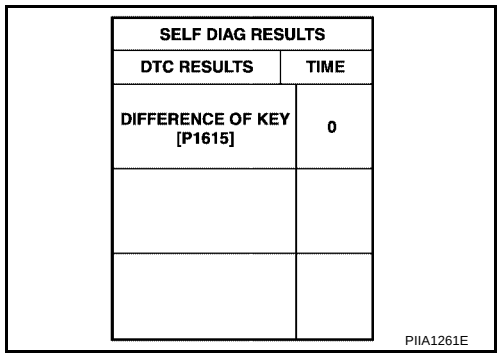

SELF DIAG RESULTS	
DTC RESULTS	TIME
DIFFERENCE OF KEY [P1615]	0

PIIA1261E

2. PERFORM INITIALIZATION WITH CONSULT-II

Perform initialization with CONSULT-II. Re-register all NATS ignition key IDs.
For initialization and registration of NATS ignition key IDs, refer to “CONSULT-II Operation Manual NATS-IVIS/NVIS”.

NOTE:
If the initialization is not completed or malfunctions, CONSULT-II shows message on the screen.

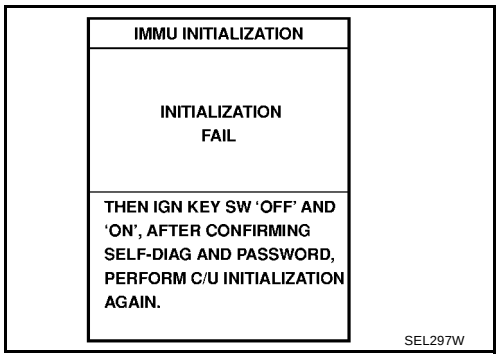

Can the system be initialized and can the engine be started with re-registered NATS ignition key?

Yes >> ● Ignition key ID was unregistered. **Ref. part No. D**

No >> ● BCM is malfunctioning.
- Replace BCM. **Ref. part No. A**
- Perform initialization with CONSULT-II.
- For initialization, refer to “CONSULT-II Operation Manual NATS-IVIS/NVIS”.

Diagnostic Procedure 3

EIS003K1

Self-diagnostic results:
“ID DISCORD, IMM-ECM” displayed on CONSULT-II screen

1. CONFIRM SELF-DIAGNOSTIC RESULTS

Confirm SELF-DIAGNOSTIC RESULTS “ID DISCORD, IMM-ECM” displayed on CONSULT-II screen.

NOTE:
“ID DISCORD IMM-ECM”:
Registered ID of BCM is in discord with that of ECM.

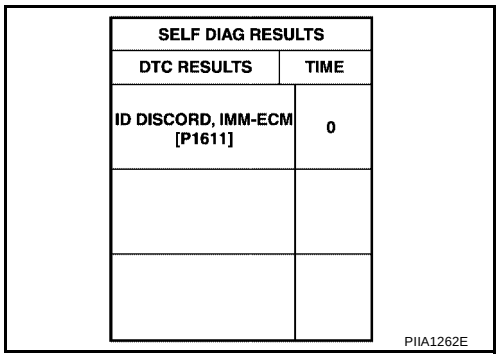

SELF DIAG RESULTS	
DTC RESULTS	TIME
ID DISCORD, IMM-ECM [P1611]	0

PIIA1262E

Is CONSULT-II screen displayed as shown?

Yes >> GO TO 2.

No >> GO TO BL-116, "SYMPTOM MATRIX CHART 1" .

2. PERFORM INITIALIZATION WITH CONSULT-II

Perform initialization with CONSULT-II. Re-register all NATS ignition key IDs.
For initialization, refer to “CONSULT-II Operation Manual NATS-IVIS/NVIS”.

NOTE:
If the initialization is not completed or malfunctions, CONSULT-II shows message on the screen.

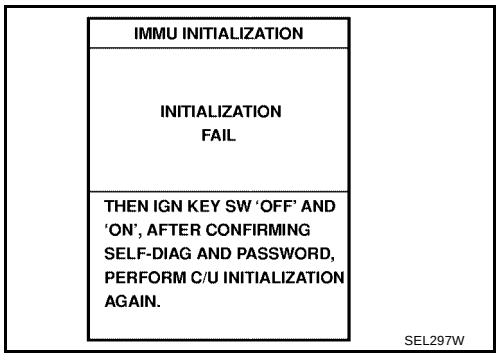

Can the system be initialized?

Yes >> ● Start engine. (END)
- System initialization had not been completed. **Ref. part No. F**

No >> ● ECM is malfunctioning.
- Replace ECM. **Ref. part No. B**
- Perform initialization with CONSULT-II.
  For initialization, refer to “CONSULT-II Operation Manual NATS-IVIS/NVIS”.

Diagnostic Procedure 4

EIS003K2

Self-diagnostic results:
“LOCK MODE” displayed on CONSULT-II screen

1. CONFIRM SELF-DIAGNOSTIC RESULTS

Confirm SELF-DIAGNOSTIC RESULTS “LOCK MODE” is displayed on CONSULT-II screen.

Is CONSULT-II screen displayed as shown?

Yes >> GO TO 2.
No >> GO TO BL-116, "SYMPTOM MATRIX CHART 1" .

SELF DIAG RESULTS	
DTC RESULTS	TIME
LOCK MODE [P1610]	0

PIIA1264E

2. ESCAPE FROM LOCK MODE

1. Turn ignition switch OFF.
2. Turn ignition switch ON with registered key. (Do not start engine.) Wait 5 seconds.
3. Return the key to OFF position. Wait 5 seconds.
4. Repeat steps 2 and 3 twice (total of three cycles).
5. Start the engine.

Does engine start?

Yes >> System is OK (Now system is escaped from “LOCK MODE”).
No >> GO TO 3.

3. PERFORM INITIALIZATION WITH CONSULT-II

Perform initialization with CONSULT-II.
For initialization, refer to “CONSULT-II Operation Manual NATS-IVIS/NVIS”.

NOTE:
If the initialization is not completed or malfunctions, CONSULT-II shows the message on the screen.

Can the system be initialized?

Yes >> System is OK.
No >> GO TO 4.

IMMU INITIALIZATION
INITIALIZATION FAIL
THEN IGN KEY SW ‘OFF’ AND ‘ON’, AFTER CONFIRMING SELF-DIAG AND PASSWORD, PERFORM C/U INITIALIZATION AGAIN.

SEL297W

4. PERFORM INITIALIZATION WITH CONSULT-II AGAIN

1. Replace BCM.
2. Perform initialization with CONSULT-II.
   For initialization, refer to “CONSULT-II Operation Manual NATS-IVIS/NVIS”.

NOTE:
If the initialization is not completed or malfunctions, CONSULT-II shows the message on the screen.

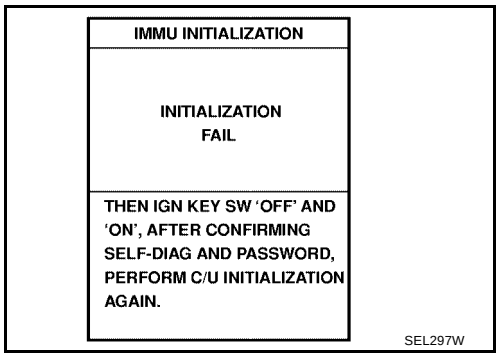

Can the system be initialized?

Yes >> System is OK. BCM is malfunctioning. **Ref. part No. A**

No >>
- ECM is malfunctioning.
- Replace ECM. **Ref. part No. B**
- Perform initialization with CONSULT-II.
  For initialization, refer to “CONSULT-II Operation Manual NATS-IVIS/NVIS”.

Diagnostic Procedure 5

EIS003K3

Self-diagnostic results:
“CHAIN OF IMMU-KEY” displayed on CONSULT-II screen

1. CONFIRM SELF-DIAGNOSTIC RESULTS

Confirm SELF-DIAGNOSTIC RESULTS “CHAIN OF IMMU-KEY” displayed on CONSULT-II screen.

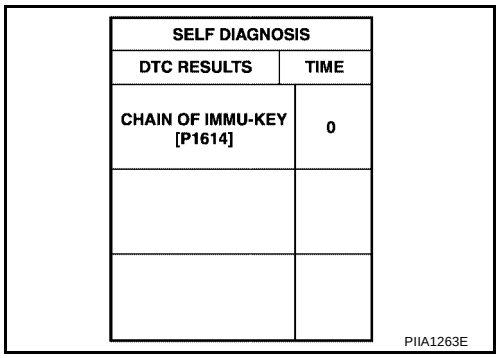

SELF DIAGNOSIS	
DTC RESULTS	TIME
CHAIN OF IMMU-KEY [P1614]	0

PIIA1263E

Is CONSULT-II screen displayed as shown?

Yes >> GO TO 2.

No >> GO TO BL-116, "SYMPTOM MATRIX CHART 1" .

2. CHECK NATS ANTENNA AMP. INSTALLATION

Check NATS antenna amp. installation. Refer to BL-126, "How to Replace NVIS (NATS) IMMU" .

OK or NG

OK >> GO TO 3.

NG >> Reinstall NATS antenna amp. correctly.

3. CHECK NVIS (NATS) IGNITION KEY ID CHIP

Start engine with another registered NATS ignition key.

Does the engine start?

Yes >>
- Ignition key ID chip is malfunctioning.
- Replace the ignition key.
  Ref. part No. E5
- Perform initialization with CONSULT-II.
  For initialization, refer to “CONSULT-II Operation Manual NATS-IVIS/NVIS”.

No >> GO TO 4.

4. CHECK POWER SUPPLY FOR NATS ANTENNA AMP.

Check voltage between NATS antenna amp. connector M27 terminal 1 and ground.

1 – Ground : Battery voltage

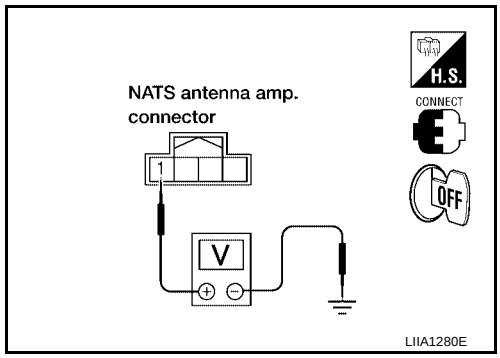

OK or NG

OK >> GO TO 5.
NG >> Repair or replace fuse or harness. **Ref. part No. E3**

5. CHECK NATS ANTENNA AMP. SIGNAL LINE- 1

Check voltage between NATS antenna amp. connector M27 terminal 2 and ground with analog tester.

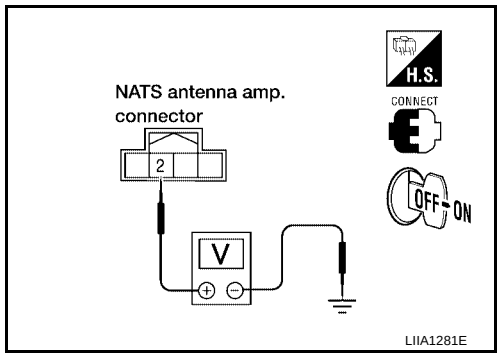

Connector terminals (wire colors)		Position of ignition key cylinder	Voltage (V) (Approx.)
(+)	(-)		
2	Ground	Before inserting ignition key	Battery voltage
		After inserting ignition key	Pointer of tester should move for approx. 30 seconds, then return to battery voltage
		Just after turning ignition switch ON	Pointer of tester should move for approx. 1 second, then return to battery voltage

OK or NG

OK >> GO TO 6.
NG >> ● Repair or replace harness.

NOTE:
If harness is OK, replace BCM, perform initialization with CONSULT-II. For initialization, refer to “CONSULT-II Operation Manual NATS-IVIS/NVIS”.

6. CHECK NATS ANTENNA AMP. SIGNAL LINE- 2

Check voltage between NATS antenna amp. connector M27 terminal 4 and ground with analog tester.

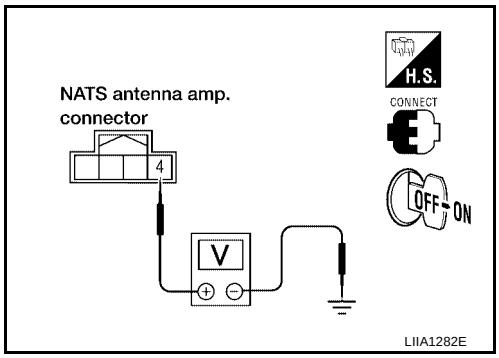

Connector terminals (wire colors)		Position of ignition key cylinder	Voltage (V) (Approx.)
(+)	(-)		
4	Ground	Before inserting ignition key	Battery voltage
		After inserting ignition key	Pointer of tester should move for approx. 30 seconds, then return to battery voltage
		Just after turning ignition switch ON	Pointer of tester should move for approx. 1 second, then return to battery voltage

OK or NG

OK >> GO TO 7.

NG >> ● Repair or replace harness.

NOTE:
If harness is OK, replace BCM, perform initialization with CONSULT-II. For initialization, refer to “CONSULT-II Operation Manual NATS-IVIS/NVIS”.

7. CHECK NATS ANTENNA AMP. GROUND LINE CIRCUIT

1. Turn ignition switch OFF.
2. Disconnect NATS antenna amp. connector.
3. Check continuity between NATS antenna amp. connector M27 terminal 3 and ground.

3 – Ground : Continuity should exist.

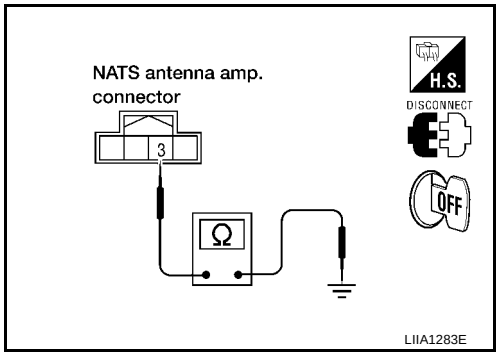

OK or NG

OK >> ● NATS antenna amp. is malfunctioning.
Ref. part No. E6

NG >> ● Repair or replace harness.

NOTE:
If harness is OK, replace BCM, perform initialization with CONSULT-II. For initialization, refer to “CONSULT-II Operation Manual NATS-IVIS/NVIS”.

Diagnostic Procedure 6

EIS003K4

“SECURITY INDICATOR LAMP DOES NOT LIGHT UP”

1. CHECK FUSE

Check 10A fuse [No.19, located in the fuse block (J/B)]

NOTE:
Refer to BL-108, "Component Parts and Harness Connector Location" .

OK or NG

OK >> GO TO 2.
NG >> If fuse is blown, be sure to eliminate cause of malfunction before installing new fuse.

2. CHECK SECURITY INDICATOR LAMP

1. Start engine and turn ignition switch OFF.
2. Check the security indicator lamp.

Security indicator lamp should light up.

OK or NG

OK >> Inspection End.
NG >> GO TO 3.

3. CHECK SECURITY INDICATOR LAMP POWER SUPPLY CIRCUIT

1. Disconnect security indicator lamp connector.
2. Check voltage between security indicator lamp connector M14 terminal 1 and ground.

1 – Ground : Battery voltage

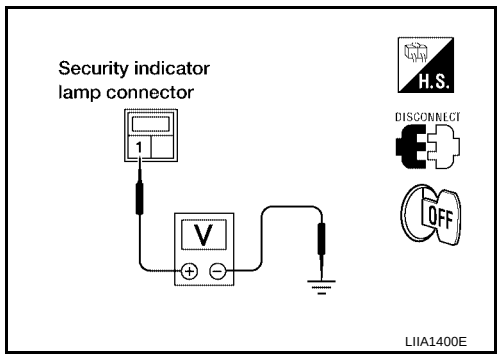

OK or NG

OK >> GO TO 4.
NG >> Repair or replace harness.

4. CHECK BCM (NATS CONTROL UNIT) FUNCTION

1. Connect security indicator lamp connector.
2. Disconnect BCM.
3. Check voltage between BCM connector M18 terminal 23 and ground.

23 – Ground : Battery voltage

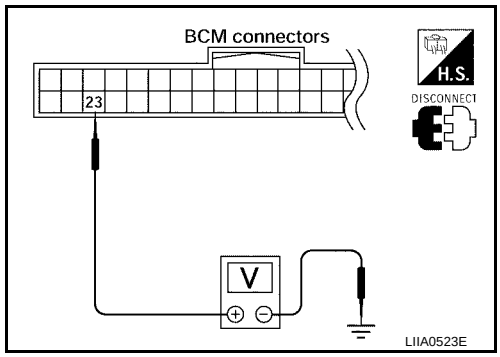

OK or NG

OK >> BCM is malfunctioning.
- Replace BCM.
  Ref. part No. A
- Perform initialization with CONSULT-II.
- For initialization, refer to “CONSULT-II Operation Manual NATS-IVIS/NVIS”.

NG >> Check the following.
- Harness for open or short between security indicator lamp and BCM (NATS control unit).
- Indicator lamp condition

How to Replace NVIS (NATS) IMMU

EIS003K5

NOTE:

- **If NVIS (NATS) IMMU is not installed correctly, NVIS (NATS) system will not operate properly and SELF-DIAG RESULTS on CONSULT-II screen will show “LOCK MODE” or “CHAIN OF IMMU-KEY”.**
- **Initialization is not necessary when only NATS antenna is replaced with a new one.**

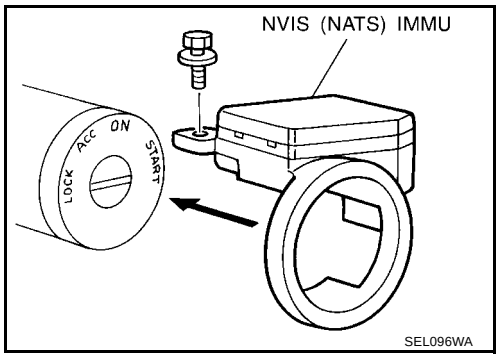

HOMELINK UNIVERSAL TRANSCEIVER

PFP:96401

Wiring Diagram — TRNSCV —

EIS003K6

BL-TRNSCV-01

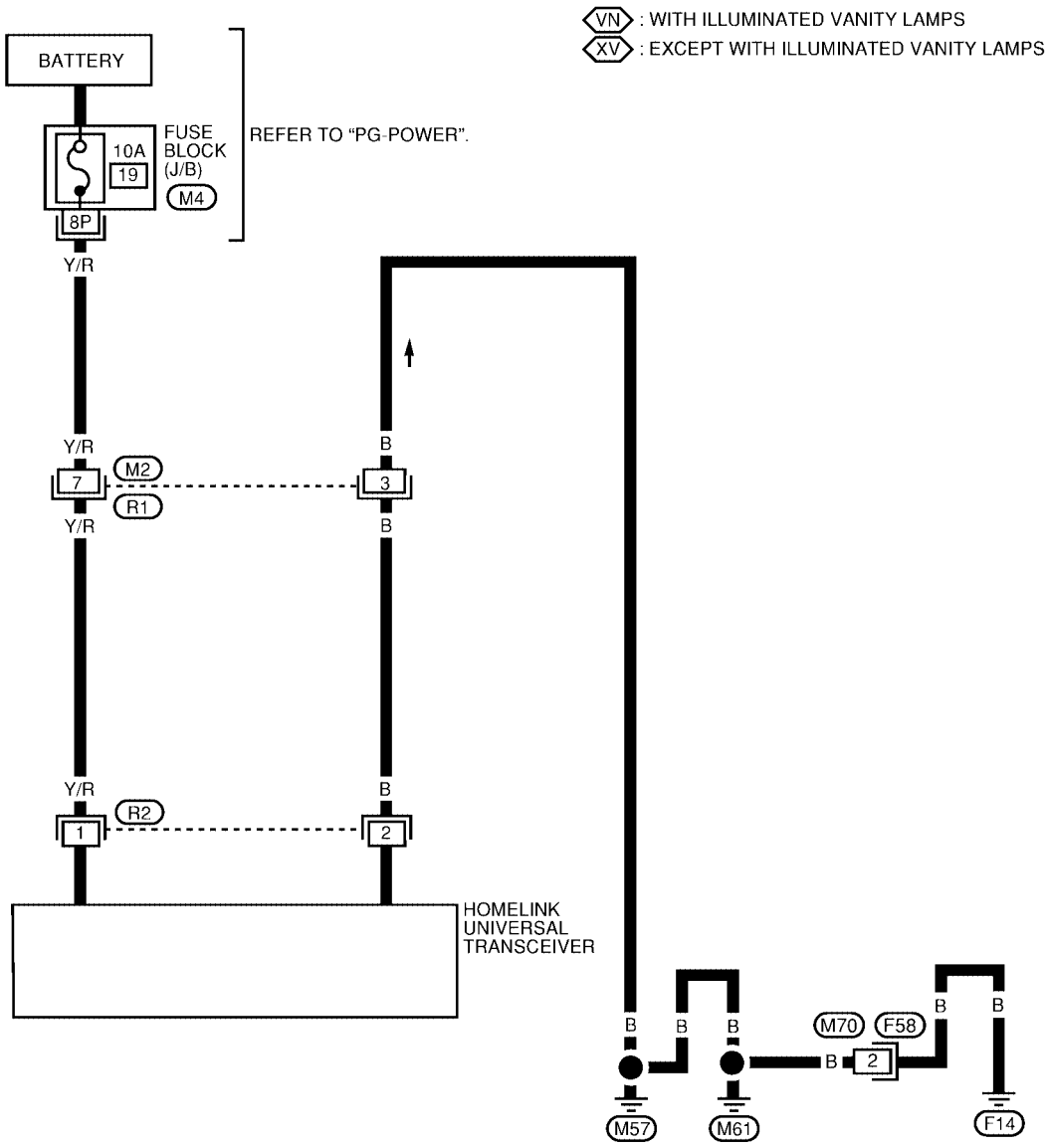

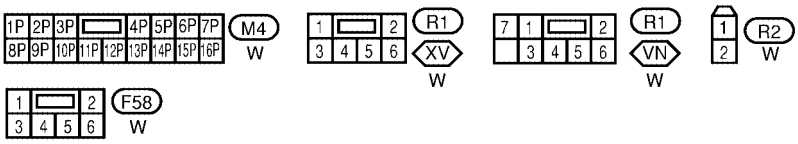

LIWA0399E

Trouble Diagnoses

EIS003K7

DIAGNOSTIC PROCEDURE

SYMPTOM: Transmitter does not activate receiver.

Before conducting the procedure given below, make sure that system receiver (garage door opener, etc.) operates with original, hand-held transmitter. If NG, receiver or hand-held transmitter is at fault, not vehicle related.

1. ILLUMINATION CHECK

- Turn ignition switch OFF.
- Does red light (LED) of transmitter illuminate when any button is pressed?

YES or NO

YES >> GO TO 2.
NO >> GO TO 3.

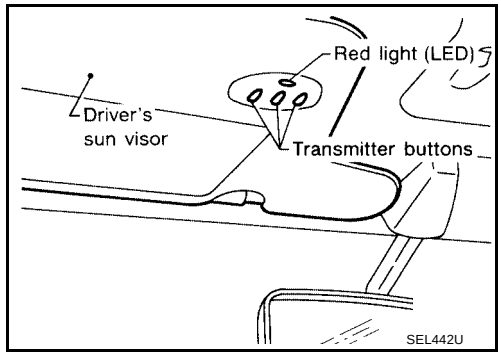

2. TRANSMITTER CHECK

Check transmitter with Tool*.
*:For details, refer to Technical Service Bulletin.

OK or NG

OK >> Receiver or hand-held transmitter malfunction, not vehicle related.
NG >> Replace transmitter with sun visor assembly.

3. POWER SUPPLY CHECK

1. Disconnect transmitter connector.
2. Turn ignition switch OFF.
3. Check voltage between transmitter harness connector R2 terminal 1 and body ground.

Battery voltage should exist.

OK or NG

OK >> GO TO 4.
NG >>
- Check 10A fuse [No. 19 located in the fuse block (J/B)]
- Harness for open or short between fuse and transmitter

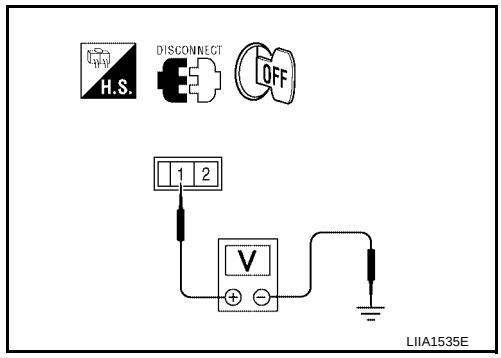

4. GROUND CIRCUIT CHECK

Check continuity between transmitter harness connector R2 terminal 2 and body ground.

Continuity should exist.

OK or NG

OK >> Replace transmitter with sun visor assembly.
NG >> Repair harness.

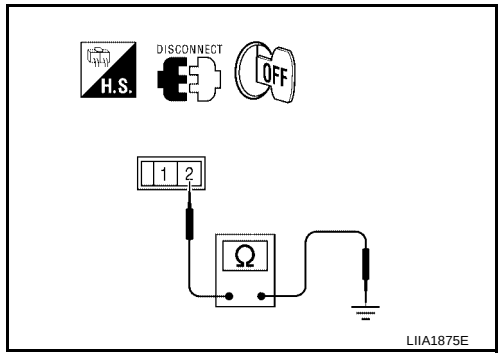

BODY REPAIR

PFP:60100

Body Exterior Paint Color

EIS003K8

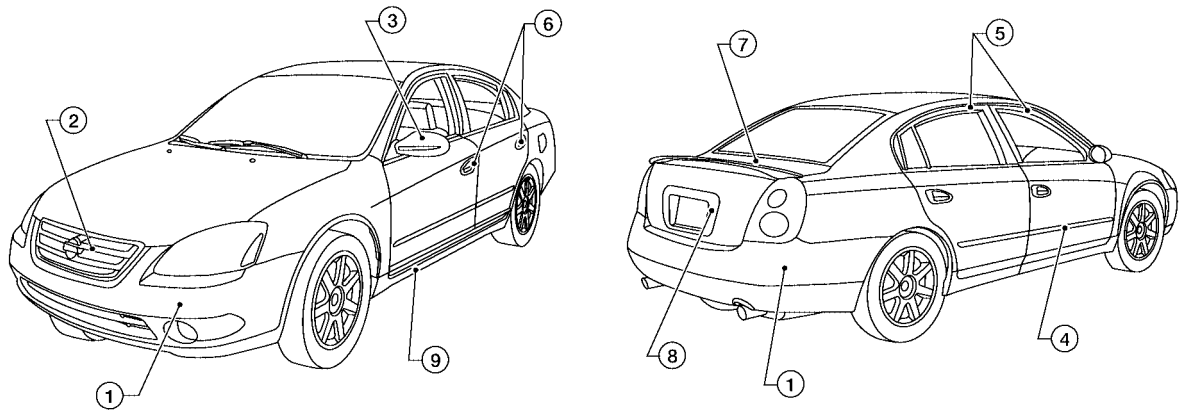

LIIA0126E

Component			Color code	A15	A20	BW9	C12	DY2	K11	KH3	KY1	KY2	QX3
			Description	Sonoma Sunset	Code Red	Majestic Blue	Coral Sand	Mystic Emerald	Smoke	Super Black	Sheer Silver	Polished Pewter	Satin White
			Paint type	2M	2M	2M	2M	2M	2M	2S	2M	2M	3P
			Hard clear coat	X	X	X	X	X	X	X	X	X	X
1	Bumper fascia	Body	Body color	A15	A20	BW9	C12	DY2	K11	KH3	KY1	KY2	BQX3
2	Radiator grille	Center	Black	AG01	AG01	AG01	AG01	AG01	AG01	AG01	AG01	AG01	AG01
		Outer	Chrome	Cr	Cr	Cr	Cr	Cr	Cr	Cr	Cr	Cr	Cr
3	Outside mirror	Body	Body color	A15	A20	BW9	C12	DY2	K11	KH3	KY1	KY2	QX3
		Base	Black	AG01	AG01	AG01	AG01	AG01	AG01	AG01	AG01	AG01	AG01
4	Side guard molding	Body	Body color	A15	A20	BW9	C12	DY2	K11	KH3	KY1	KY2	QX3
		Base	Black	AG01	AG01	AG01	AG01	AG01	AG01	AG01	AG01	AG01	AG01
5	Door sash		Black tape	X	X	X	X	X	X	X	X	X	X
6	Outside handle		Body color	A15	A20	BW9	C12	DY2	K11	KH3	KY1	KY2	QX3
7	Rear Spoiler		Body color	A15	A20	BW9	C12	DY2	K11	KH3	KY1	KY2	QX3
8	Trunk lid finisher		Body color	A15	A20	BW9	C12	DY2	K11	KH3	KY1	KY2	QX3
9	Center mudguard		Body color	A15	A20	BW9	C12	DY2	K11	KH3	KY1	KY2	QX3

2S: Solid Color with Clear, 2M: Metallic with Clear, 3P:3-Coat Pearl

Body Component Parts

EIS003K9

UNDERBODY COMPONENT PARTS

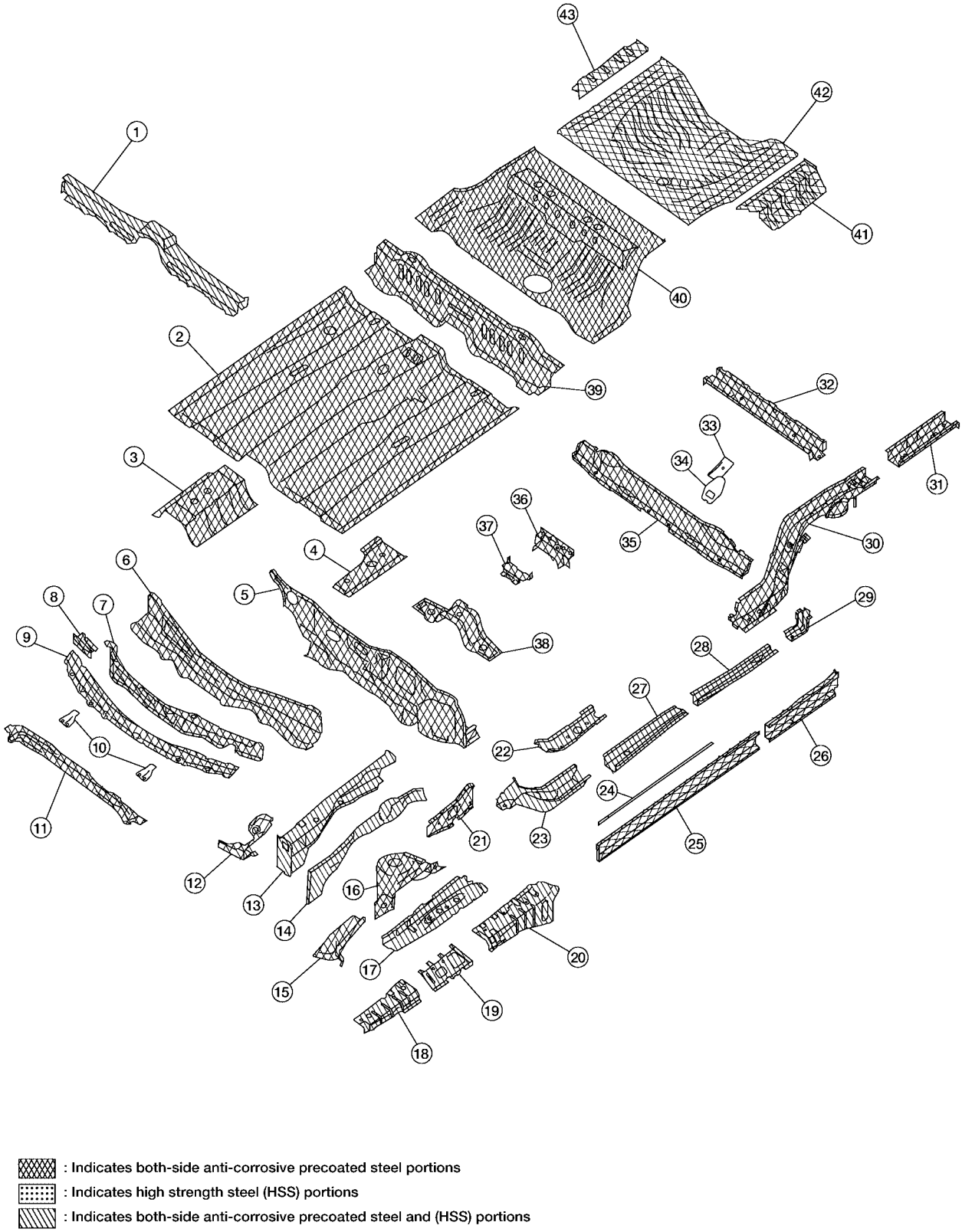

: Indicates both-side anti-corrosive precoated steel portions

: Indicates high strength steel (HSS) portions

: Indicates both-side anti-corrosive precoated steel and (HSS) portions

LIIA1668E

1. 2nd crossmember assembly
2. Front floor)
3. Transmission control reinforcement
4. Front floor reinforcement RH/LH
5. Lower dash assembly
6. Upper dash
7. Front cowl top
8. Cowl top extension bracket RH/LH
9. Center cowl top
10. Cowl top reinforcement RH/LH
11. Cowl top extension
12. Cowl top side brace RH/LH
13. Front side member assembly RH/LH
14. Side member closing plate assembly RH/LH
15. Lower front hoodledge assembly RH/LH
16. Lower rear hoodledge RH/LH
17. Upper hoodledge RH/LH
18. Front hoodledge reinforcement RH/LH
19. Hoodledge reinforcement gusset RH/LH
20. Rear hoodledge reinforcement RH/LH
21. Side cowl top RH/LH
22. Front side member extension reinforcement RH/LH
23. Front side member front extension RH/LH
24. Front inner sill reinforcement RH/LH
25. Inner sill RH/LH
26. Inner sill extension RH/LH
27. Front side member center extension RH/LH
28. Front side member rear extension RH/LH
29. Fuel tank protector RH/LH
30. Rear side member assembly RH/LH
31. Rear side member extension assembly RH/ LH
32. Rear center crossmember
33. Rear seat bracket
34. Inner rear seatbelt anchor reinforcement
35. Rear seat crossmember assembly
36. Rear seat crossmember reinforcement
37. Rear parking brake bracket
38. Front floor reinforcement assembly
39. Rear floor front extension
40. Rear floor front
41. Rear floor side LH
42. Rear floor rear
43. Rear floor side RH

BODY COMPONENT PARTS

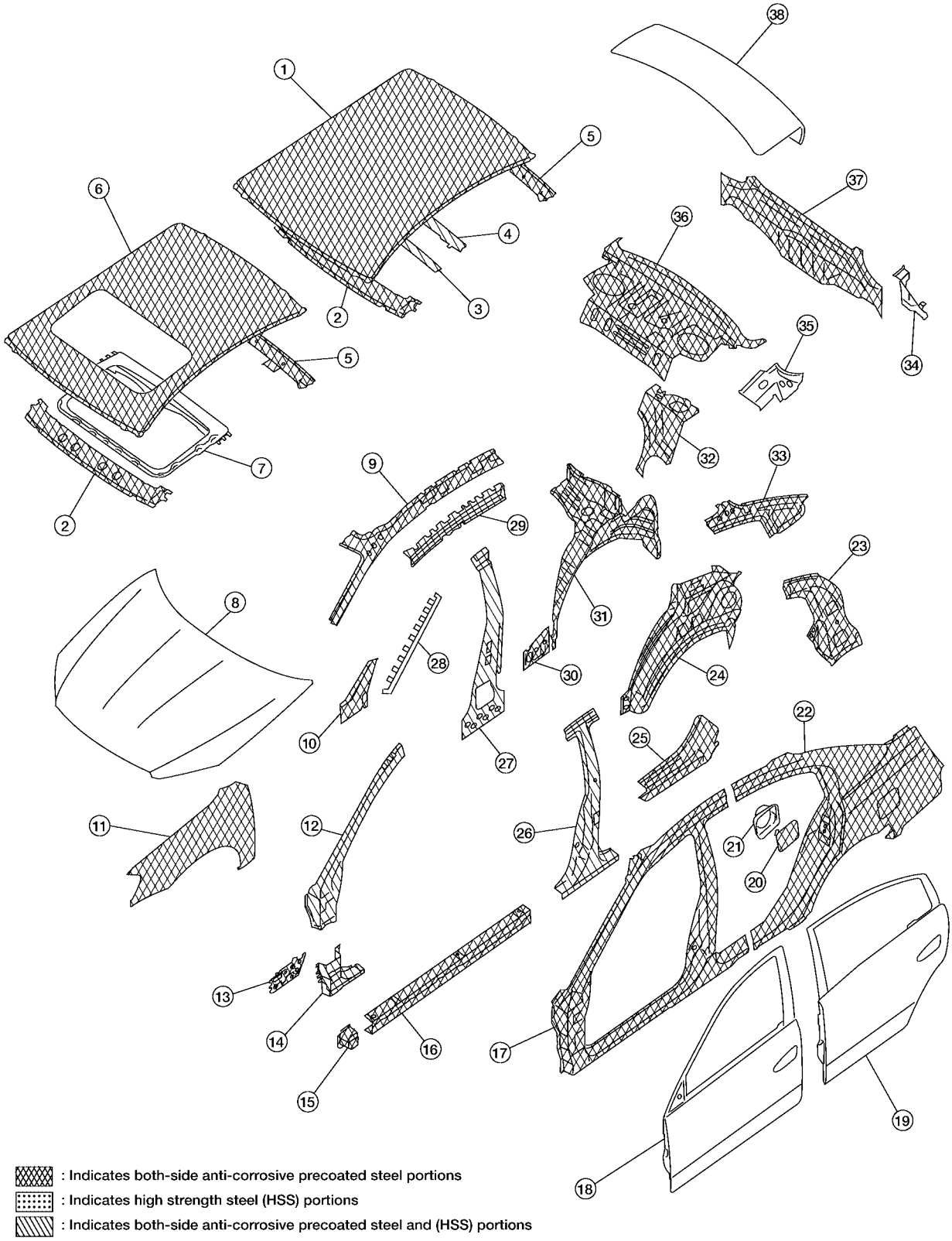

1. Standard roof
2. Front roof rail assembly
3. Front roof bow
4. Center roof bow assembly
5. Rear roof rail assembly
6. Roof (if equipped with sunroof)
7. Roof reinforcement assembly (if equipped with sunroof)
8. Hood assembly
9. Upper inner front pillar RH/LH
10. Lower inner front pillar RH/LH
11. Front fender RH/LH
12. Front pillar upper hinge brace assembly RH/LH
13. Front pillar lower reinforcement RH/LH
14. Front pillar lower hinge brace assembly RH/LH
15. Front outer sill reinforcement RH/LH
16. Sill outer reinforcement assembly RH/LH
17. Front body side outer assembly RH/LH
18. Front door assembly RH/LH
19. Rear door assembly RH/LH
20. Fuel door assembly
21. Fuel filler base assembly
22. Rear body side outer assembly RH/LH
23. Rear pillar inner reinforcement RH/LH
24. Outer rear wheel house RH/LH
25. Rear outer sill reinforcement RH/LH
26. Center pillar reinforcement RH/LH
27. Inner center pillar RH/LH
28. Front pillar outer reinforcement RH/LH
29. Roof side outer reinforcement assembly RH/LH
30. Rear wheelhouse outer extension assembly RH/LH
31. Rear wheelhouse inner assembly RH/LH
32. Rear seatback side support assembly RH/LH
33. Rear pillar inner RH/LH
34. Rear fender corner assembly RH/LH
35. Parcel shelf side RH/LH
36. Parcel shelf assembly RH/LH
37. Rear panel assembly
38. Trunk lid assembly

Corrosion Protection

EIS003KA

DESCRIPTION

To provide improved corrosion prevention, the following anti-corrosive measures have been implemented in NISSAN production plants. When repairing or replacing body panels, it is necessary to use the same anti-corrosive measures.

ANTI-CORROSIVE PRECOATED STEEL (GALVANNEALED STEEL)

To improve repairability and corrosion resistance, a new type of anti-corrosive precoated steel sheet has been adopted replacing conventional zinc-coated steel sheet.
Galvannealed steel is electroplated and heated to form Zinc-iron alloy, which provides excellent and long term corrosion resistance with cationic electrodeposition primer.

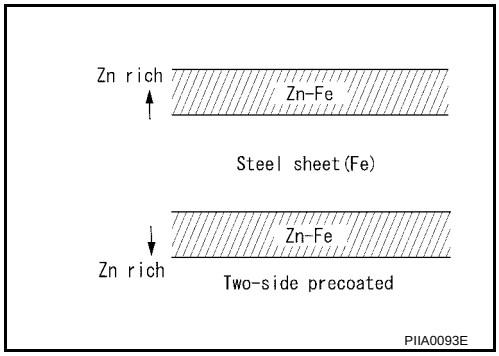

Nissan Genuine Service Parts are fabricated from galvannealed steel. Therefore, it is recommended that GENUINE NISSAN PARTS or equivalent be used for panel replacement to maintain the anti-corrosive performance built into the vehicle at the factory.

PHOSPHATE COATING TREATMENT AND CATIONIC ELECTRODEPOSITION PRIMER

A phosphate coating treatment and a cationic electrodeposition primer, which provide excellent corrosion protection, are employed on all body components.

CAUTION:

Confine paint removal during welding operations to an absolute minimum.

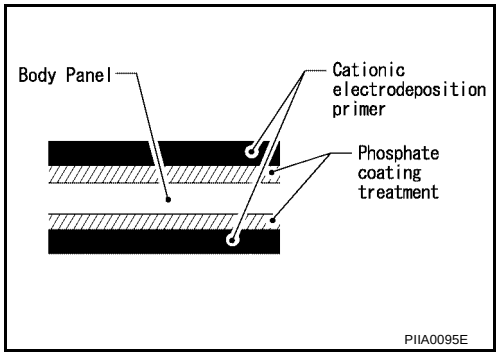

Nissan Genuine Service Parts are also treated in the same manner. Therefore, it is recommended that GENUINE NISSAN PARTS or equivalent be used for panel replacement to maintain anti-corrosive performance built into the vehicle at the factory.

ANTI-CORROSIVE WAX

To improve corrosion resistance, anti-corrosive wax is applied inside the body sill and inside other closed sections. Accordingly, when replacing these parts, be sure to apply anti-corrosive wax to the appropriate areas of the new parts. Select an excellent anti-corrosive wax which will penetrate after application and has a long shelf life.

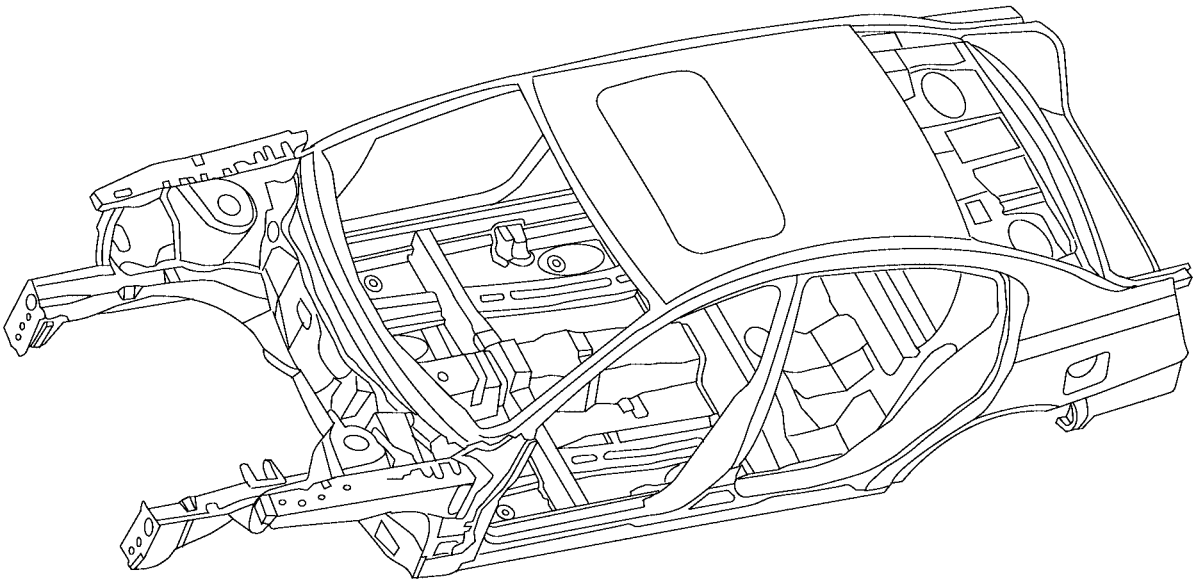

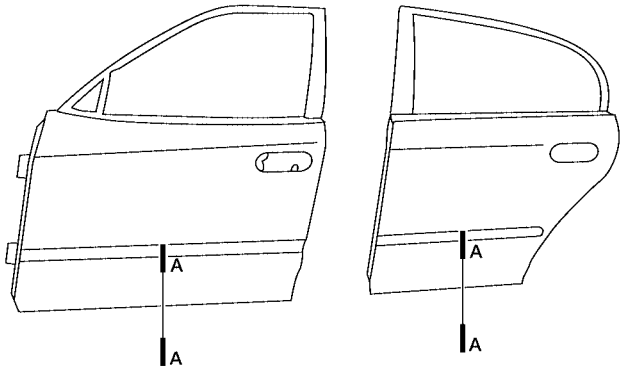

: Indicates anti-corrosive wax coated portions inside doors.

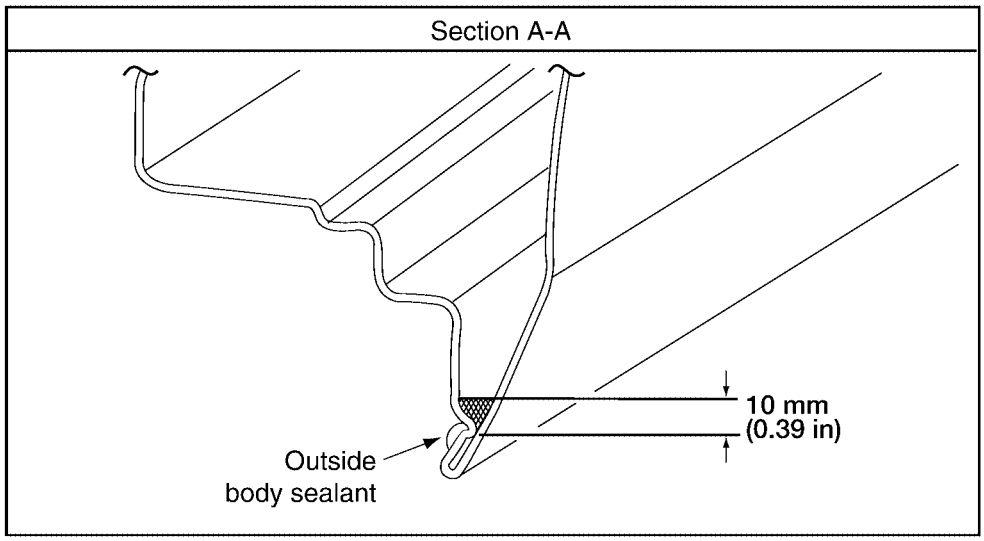

LIIA0005E

UNDERCOATING

The underside of the floor and wheelhouse are undercoated to prevent rust, vibration, noise and stone chipping. Therefore, when such a panel is replaced or repaired, apply undercoating to that part. Use an undercoating which is rust preventive, soundproof, vibration-proof, shock-resistant, adhesive, and durable.

Precautions in undercoating

1. Do not apply undercoating to any place unless specified (such as the areas above the muffler and three way catalyst which are subjected to heat).
2. Do not undercoat the exhaust pipe or other parts which become hot.
3. Do not undercoat rotating parts.
4. Apply bitumen wax after applying undercoating.

: Indicates undercoated portions.

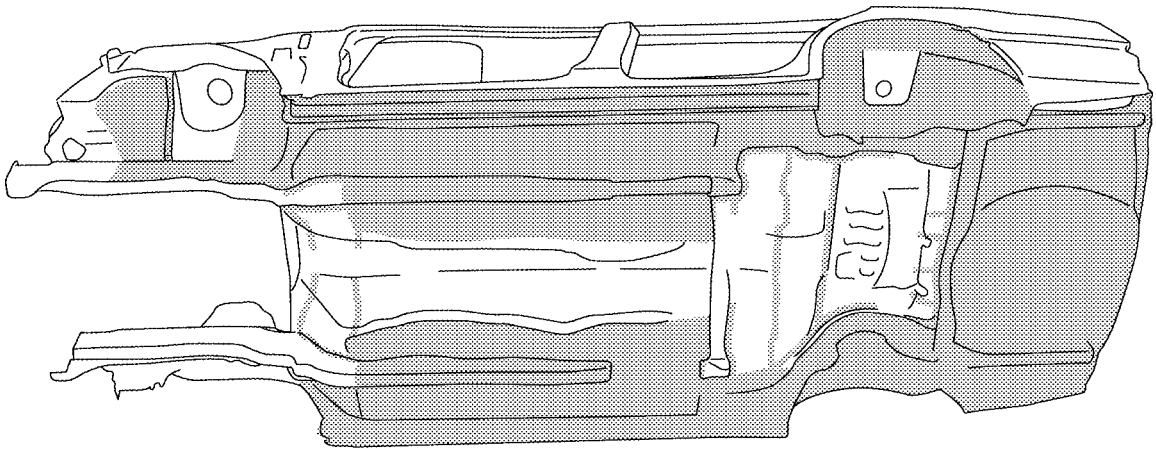

LIIA0129E

Body Sealing

EIS003KB

DESCRIPTION

The following figure shows the areas which are sealed at the factory. Sealant which has been applied to these areas should be smooth and free from cuts or gaps. Care should be taken not to apply an excess amount of sealant and not to allow other unaffected parts to come into contact with the sealant.

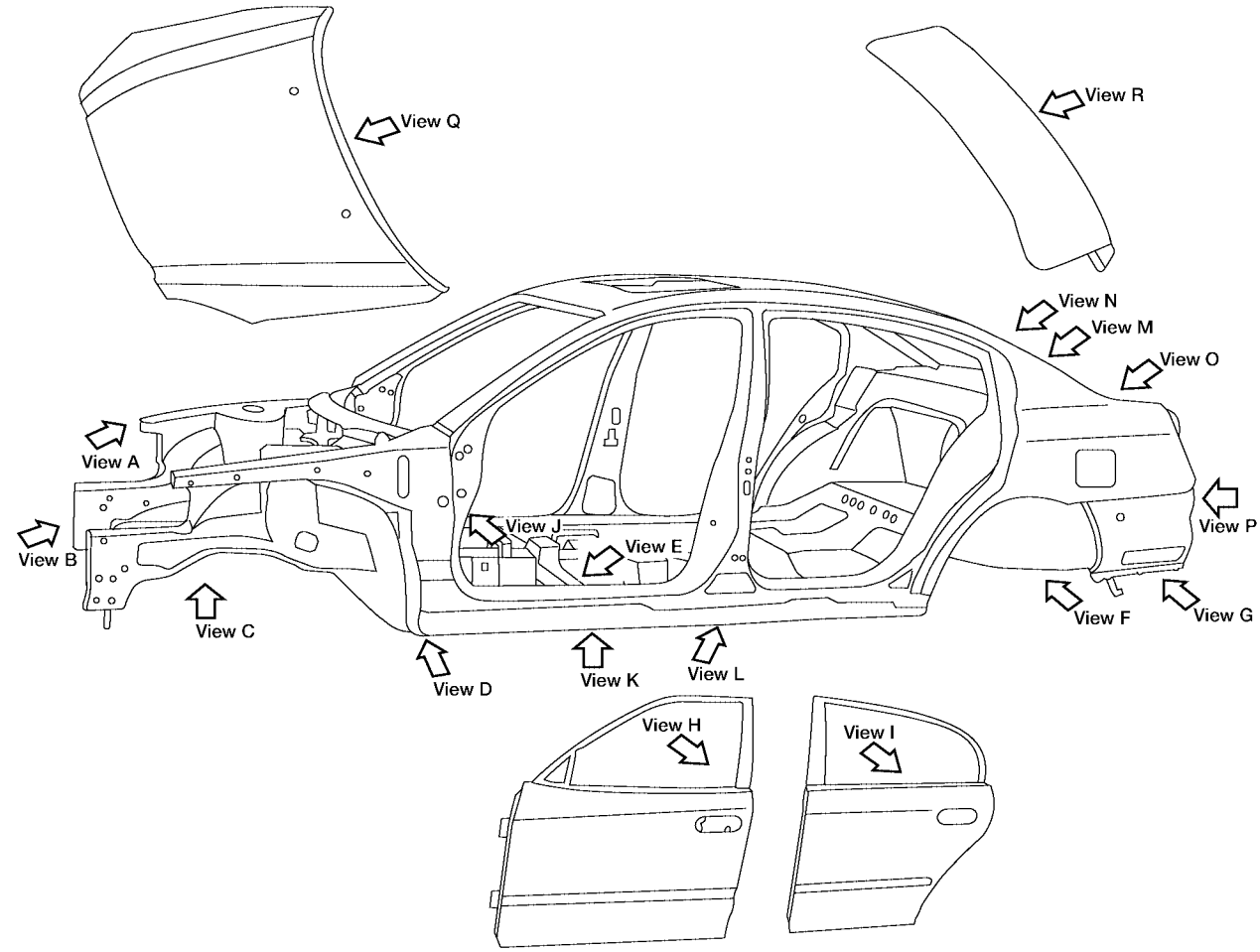

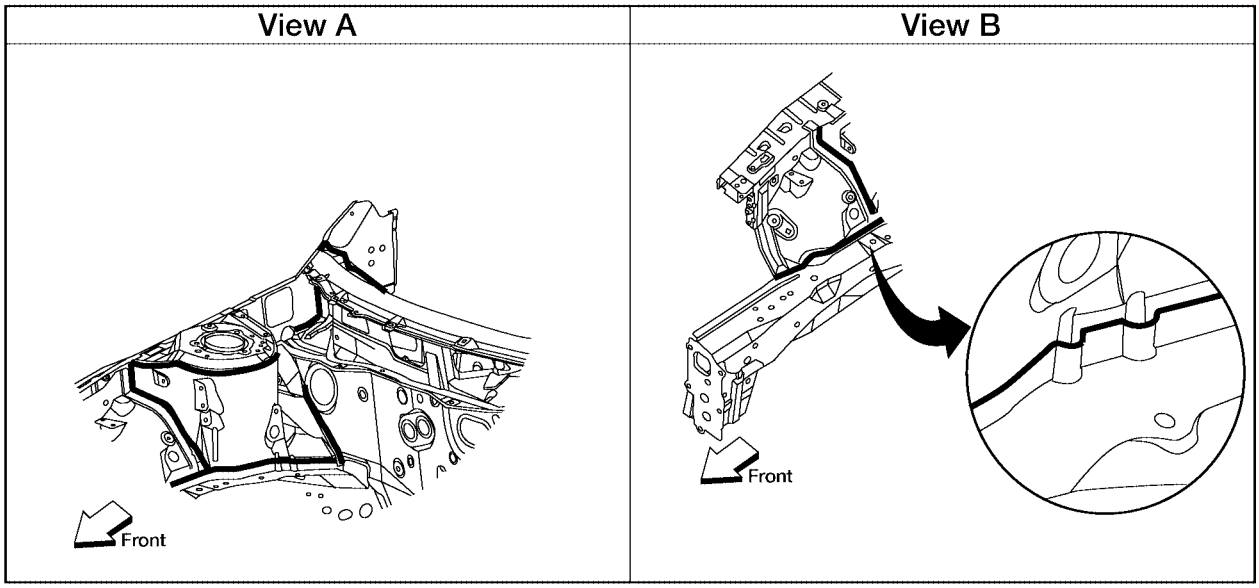

WIIA0402E

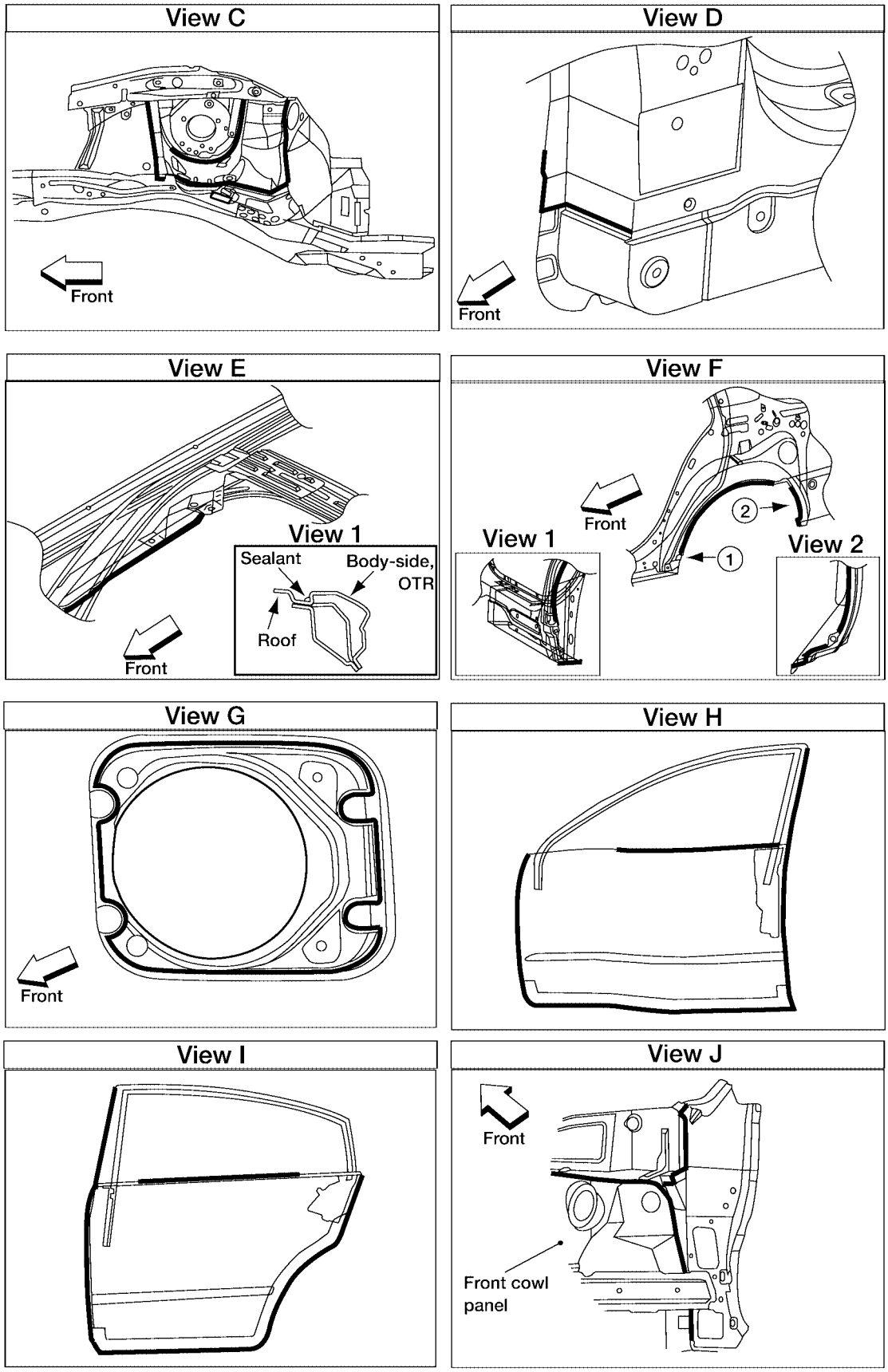
View C
Front
View D
Front
View E
View 1
Sealant
Body-side, OTR
Roof
Front
View F
Front
View 1
View 2
1
2
View G
Front
View H
View I
View J
Front
Front cowl panel

WIIA0406E

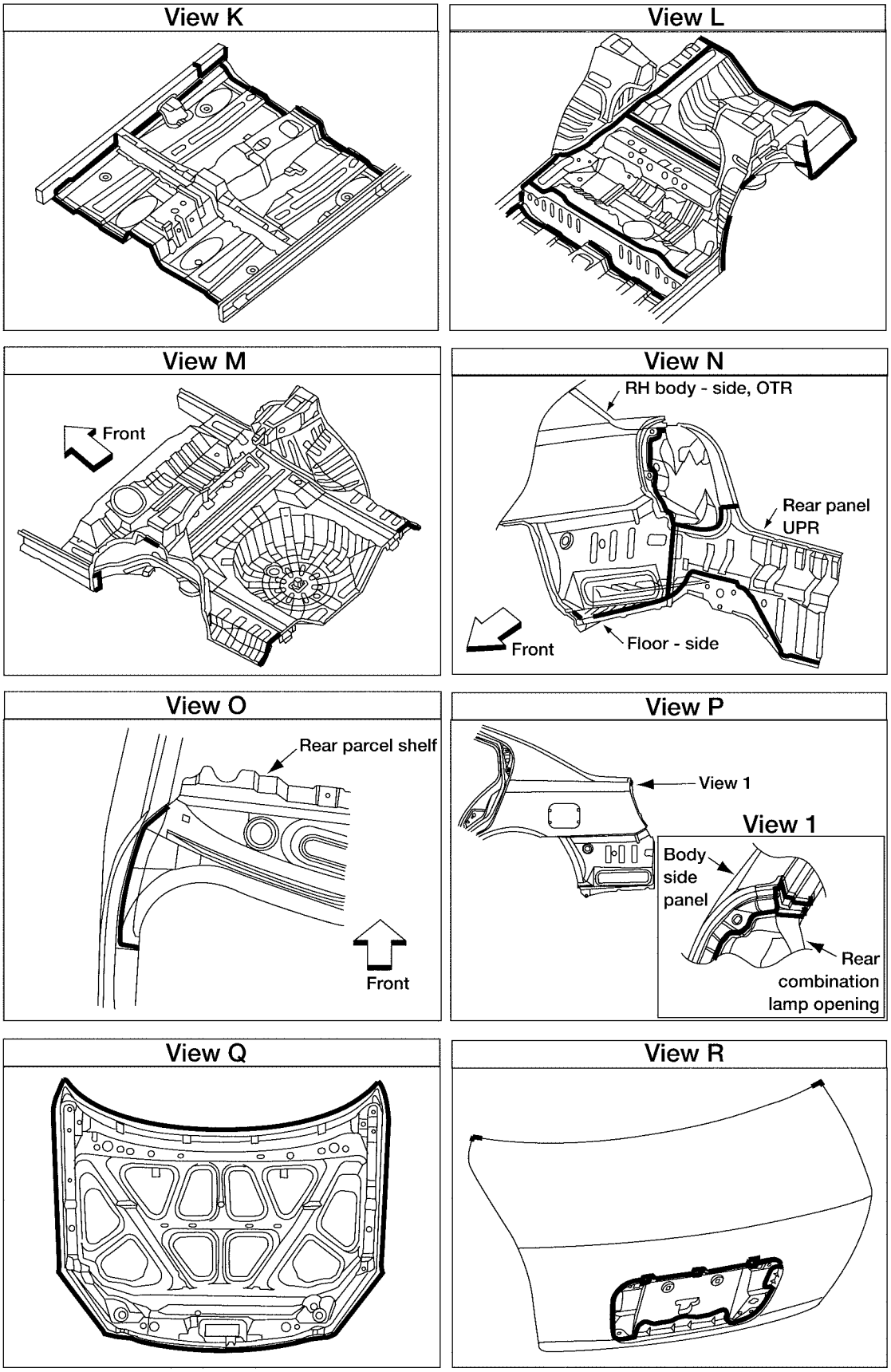
View K
View L
View M
Front
View N
RH body - side, OTR
Rear panel
UPR
Front
Floor - side
View O
Rear parcel shelf
Front
View P
View 1
View 1
Body
side
panel
Rear
combination
lamp opening
View Q
View R

WIIA0130E

Body Construction
BODY CONSTRUCTION

EIS003KC

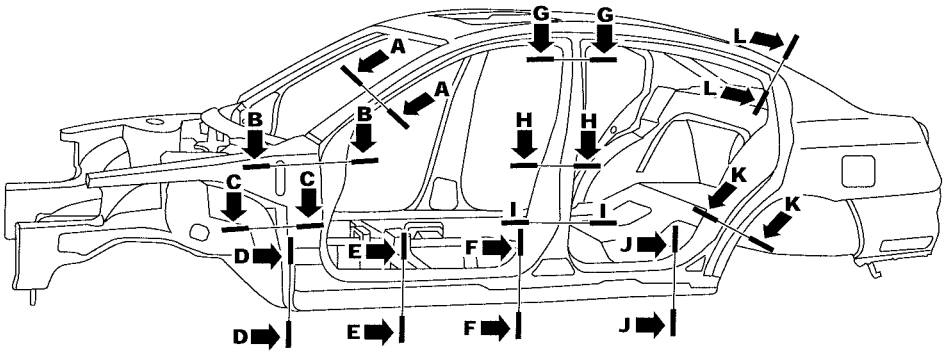

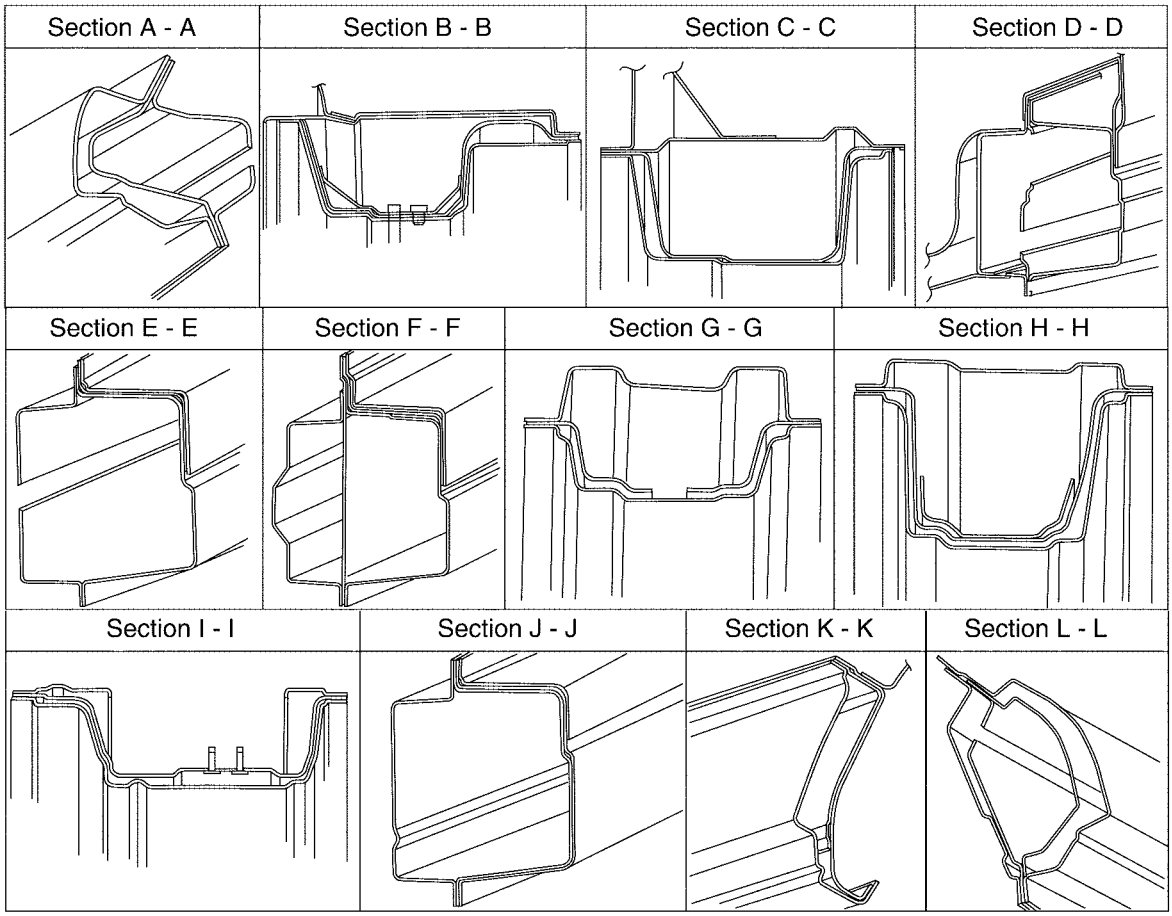

WIIA0131E

Body Alignment

EIS003KD

BODY CENTER MARKS

A mark has been placed on each part of the body to indicate the vehicle center. When repairing parts damaged by an accident which might affect the vehicle frame (members, pillars, etc.), more accurate and effective repair will be possible by using these marks together with body alignment specifications.

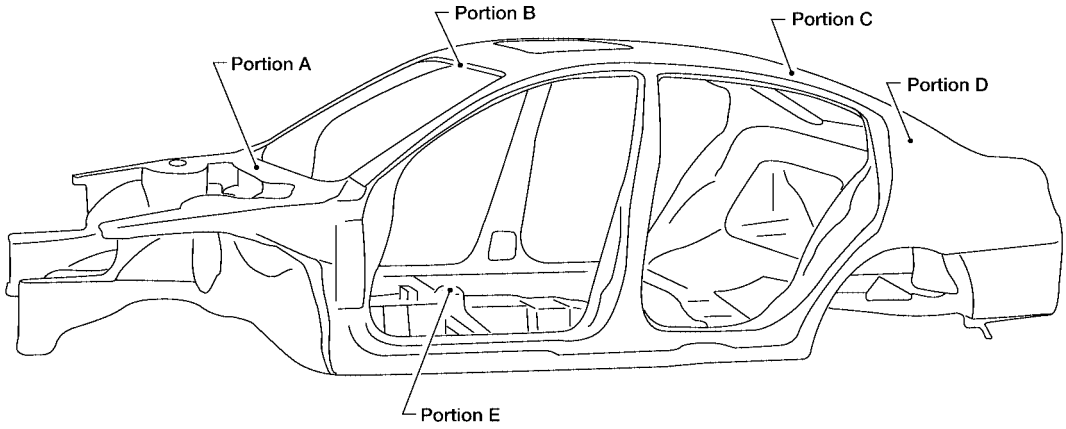

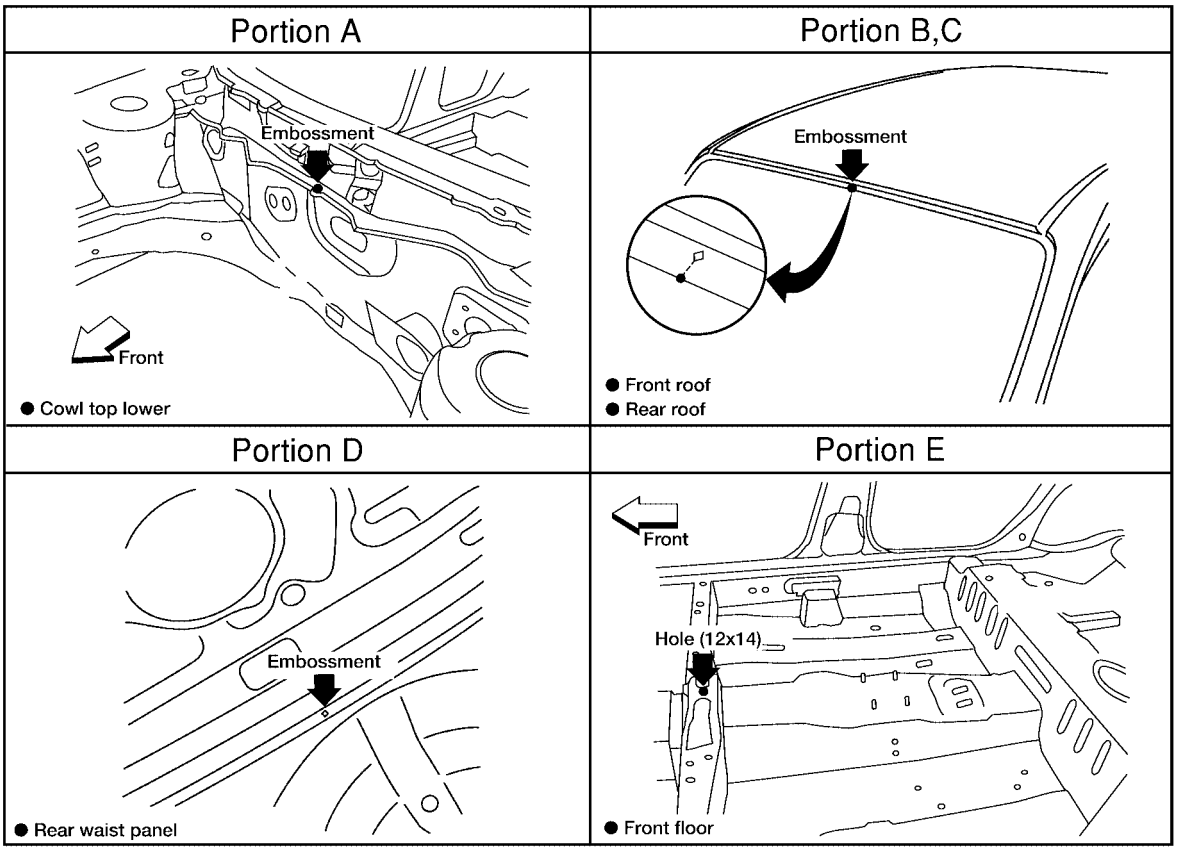

LIIA1365E

PANEL PARTS MATCHING MARKS

A mark has been placed on each body panel to indicate the parts matching positions. When repairing parts damaged by an accident which might affect the vehicle structure (members, pillars, etc.), more accurate and effective repair will be possible by using these marks together with body alignment specifications.

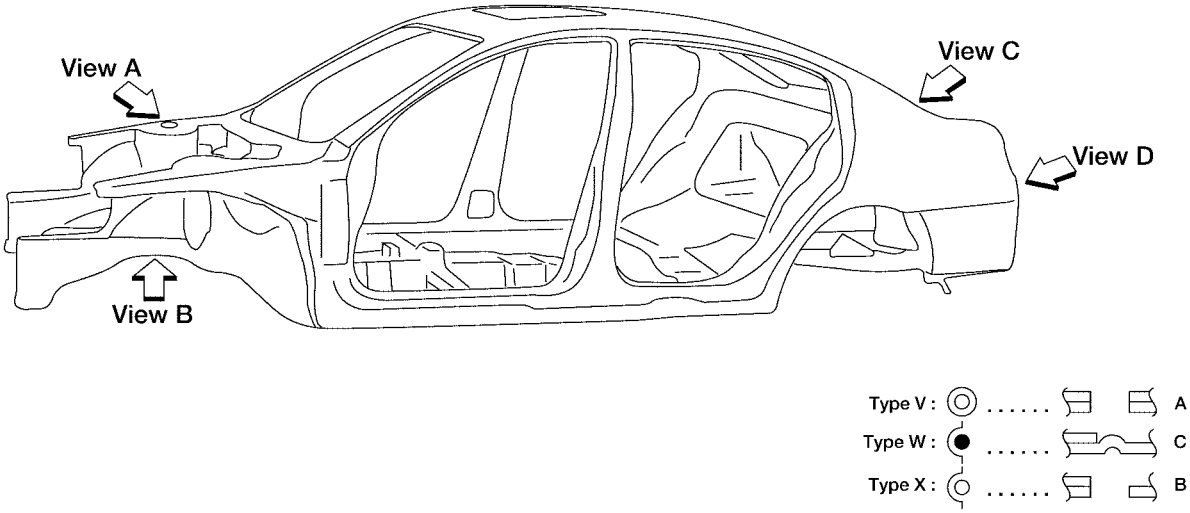

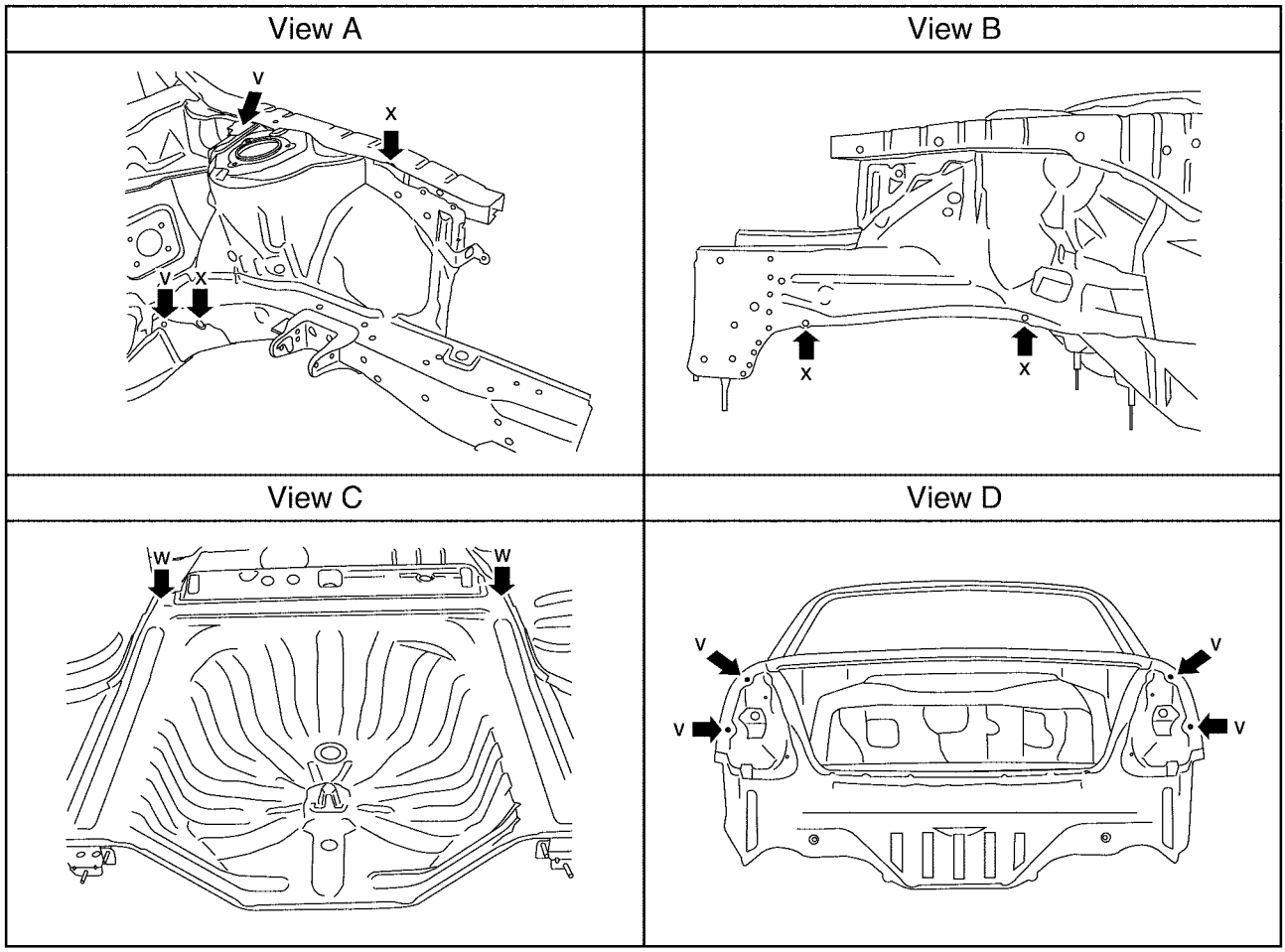

WIIA0132E

DESCRIPTION

- All dimensions indicated in the figures are actual.
- When using a tracking gauge, adjust both pointers to equal length. Then check the pointers and gauge itself to make sure there is no free play.
- When a measuring tape is used, check to be sure there is no elongation, twisting or bending.
- Measurements should be taken at the center of the mounting holes.
- An asterisk (*) following the value at the measuring point indicates that the measuring point on the other side is symmetrically the same value.
- The coordinates of the measurement points are the distances measured from the standard line of "X", "Y" and "Z".

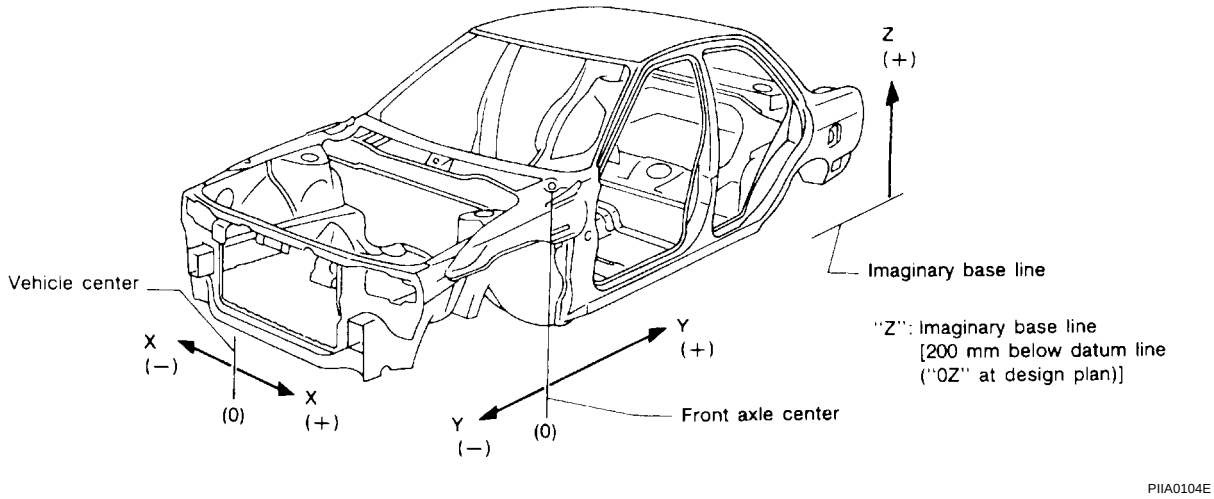

ENGINE COMPARTMENT MEASUREMENT

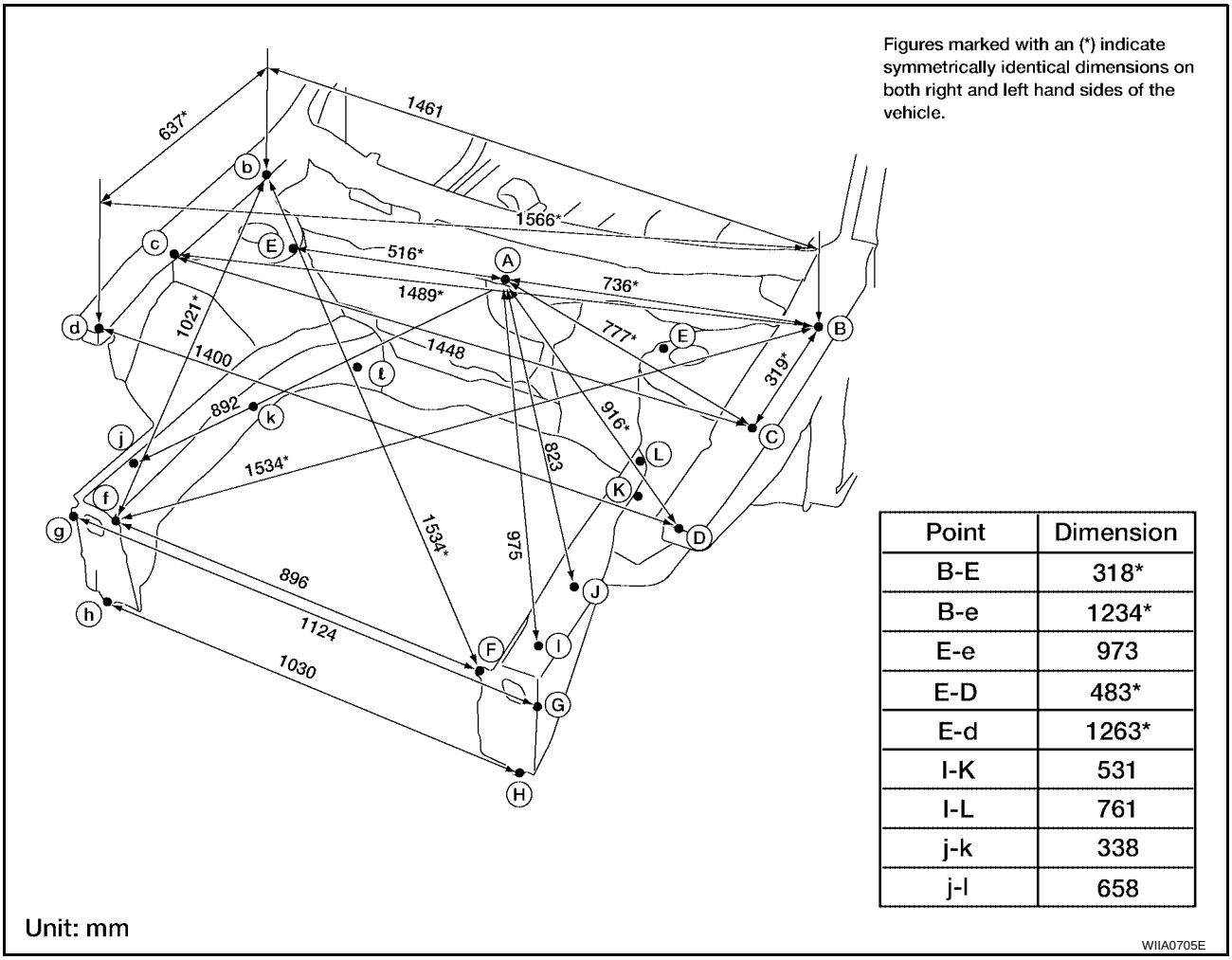

Point	Dimension
B-E	318*
B-e	1234*
E-e	973
E-D	483*
E-d	1263*
I-K	531
I-L	761
j-k	338
j-l	658

MEASUREMENT POINTS

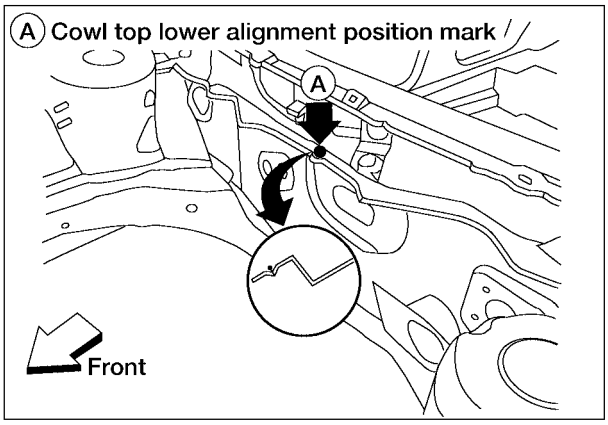

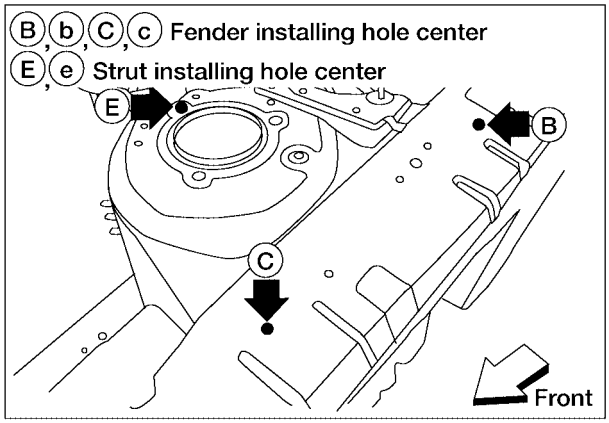

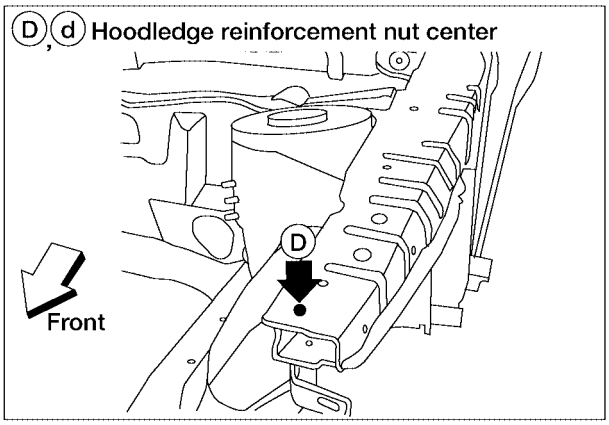

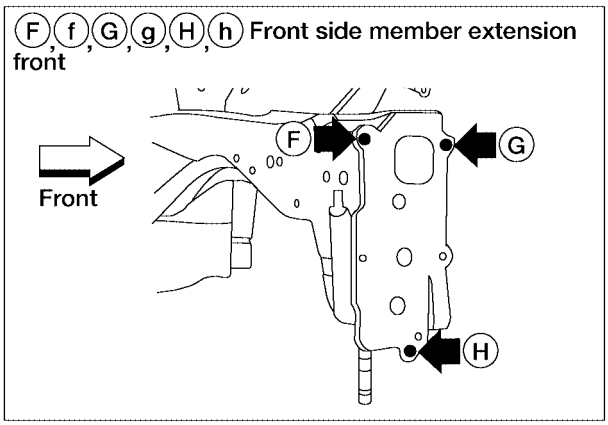

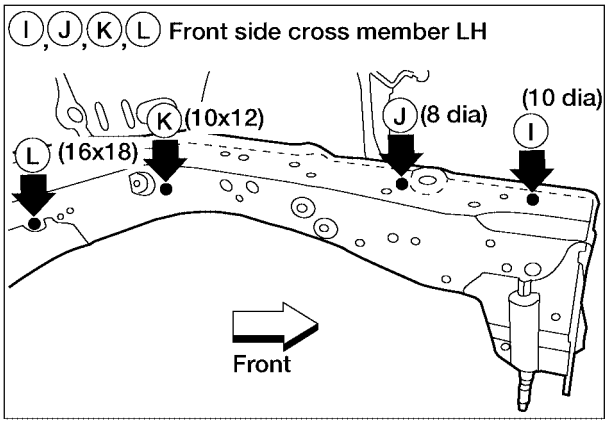

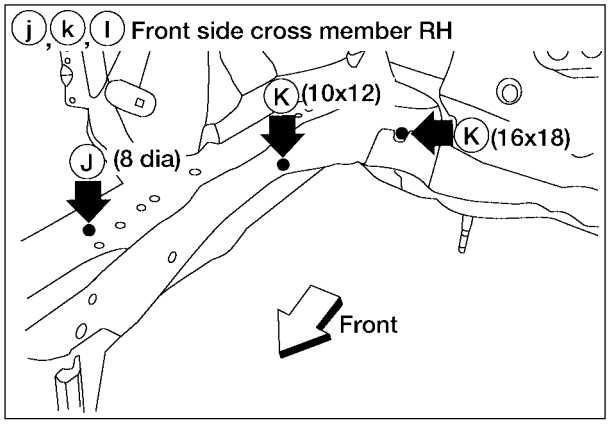

Unit: mm

WIIA0403E

UNDERBODY MEASUREMENT

Unit : mm

Figures marked with a (*) indicate symmetrically identical dimensions on both right and left hand sides of the vehicle.

★ : Bolt head

As viewed from underside.

All dimensions indicated in this figure are actual.

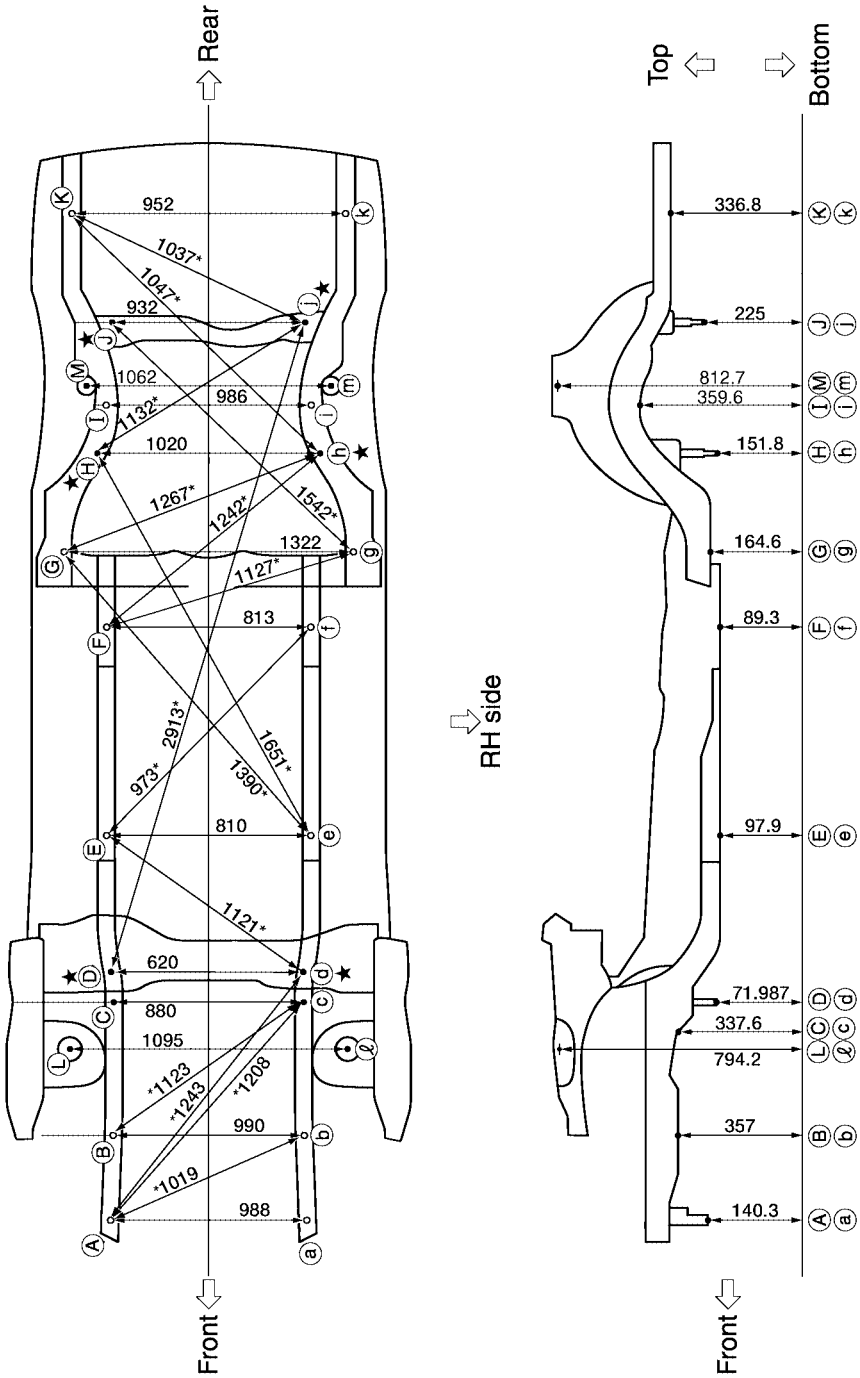

LIIA0087E

MEASUREMENT POINTS

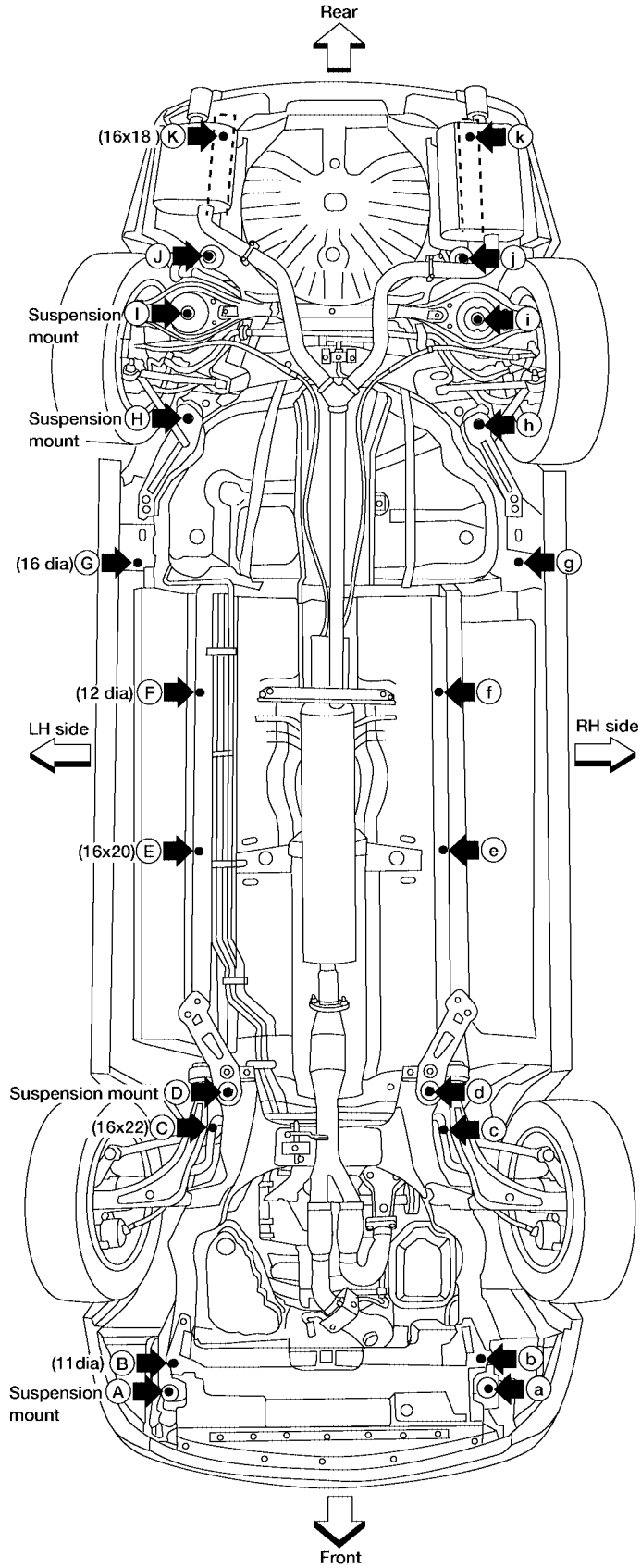

Coordinates:

Ⓐ,ⓐ
X : ±494
Y : -617.5
Z : 140.3

Ⓑ,ⓑ
X : ±495
Y : -500
Z : 357

Ⓒ,ⓒ
X : ±440
Y : 122.2
Z : 337.6

Ⓓ,ⓓ
X : ±310
Y : 327.5
Z : 71.987

Ⓔ,ⓔ
X : ±405
Y : 1190
Z : 97.9

Ⓕ,ⓕ
X : ±406.5
Y : 1727
Z : 89.3

Ⓖ,ⓖ
X : ±661
Y : 2080
Z : 164.6

Ⓗ,ⓗ
X : ±510
Y : 2563
Z : 151.8

Ⓘ,ⓘ
X : ±496.0
Y : 2936.7
Z : 359.6

Ⓙ,ⓙ
X : ±466
Y : 3132
Z : 225

Ⓚ,ⓚ
X : ±476
Y : 3550
Z : 336.8

Strut tower centers

Coordinates:

Ⓛ,ⓛ Front
X : ±547.6
Y : 28.9
Z : 794.2

Ⓜ,ⓜ Rear
X : ±531.1
Y : 2833.1
Z : 812.7

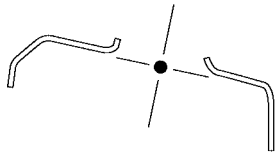

Unit: mm

WIIA0404E

PASSENGER COMPARTMENT MEASUREMENT

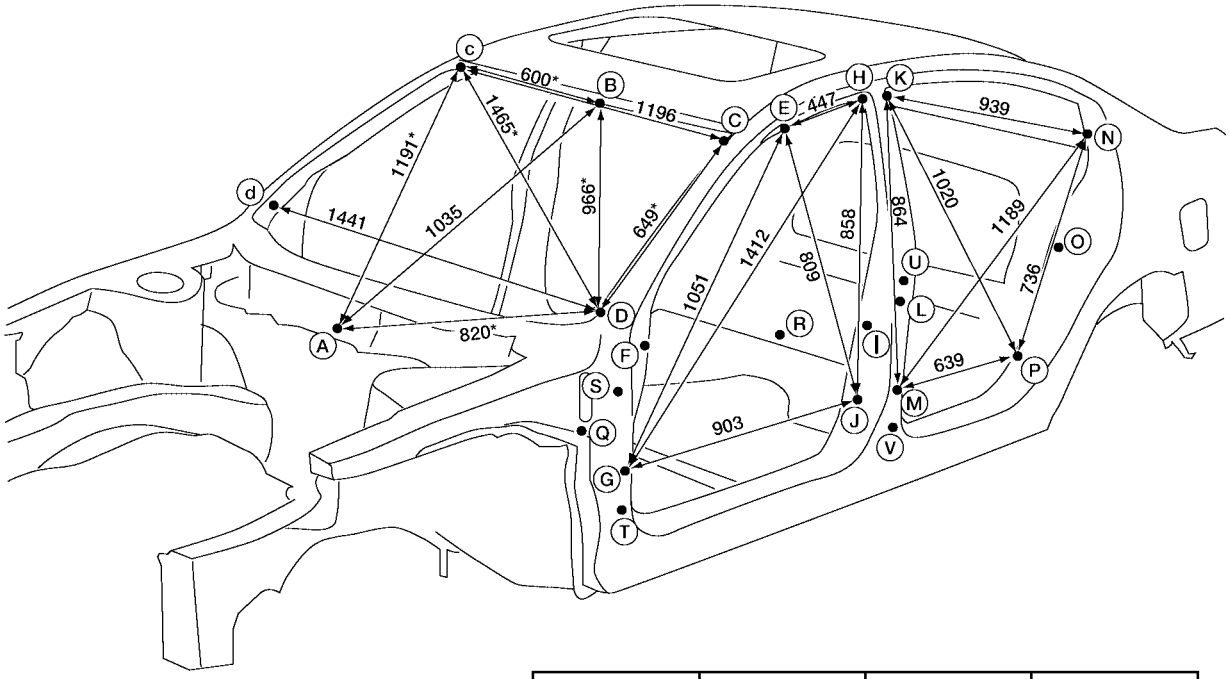

Point	Dimension	Point	Dimension
E-e	1192	Q-I*	939
F-f	1450	R-K	1075
G-g	1468	R-k	1167
I-i	1451	R-L	814
I-F	885	R-l	963
J-j	1467	R-M	751
L-l	1448	R-m	912
M-m	1469	R-N	1106
N-n	1332	R-n	1211
O-L*	840	R-P	697
P-p	1468	R-p	868
Q-G*	919	S-U*	1152
Q-H*	1255	T-V*	1132

*= Figures marked with a (*) indicate symmetrically identical dimensions on both right and left hand sides of the vehicle.

Unit: mm

LIIA1369E

MEASUREMENT POINTS

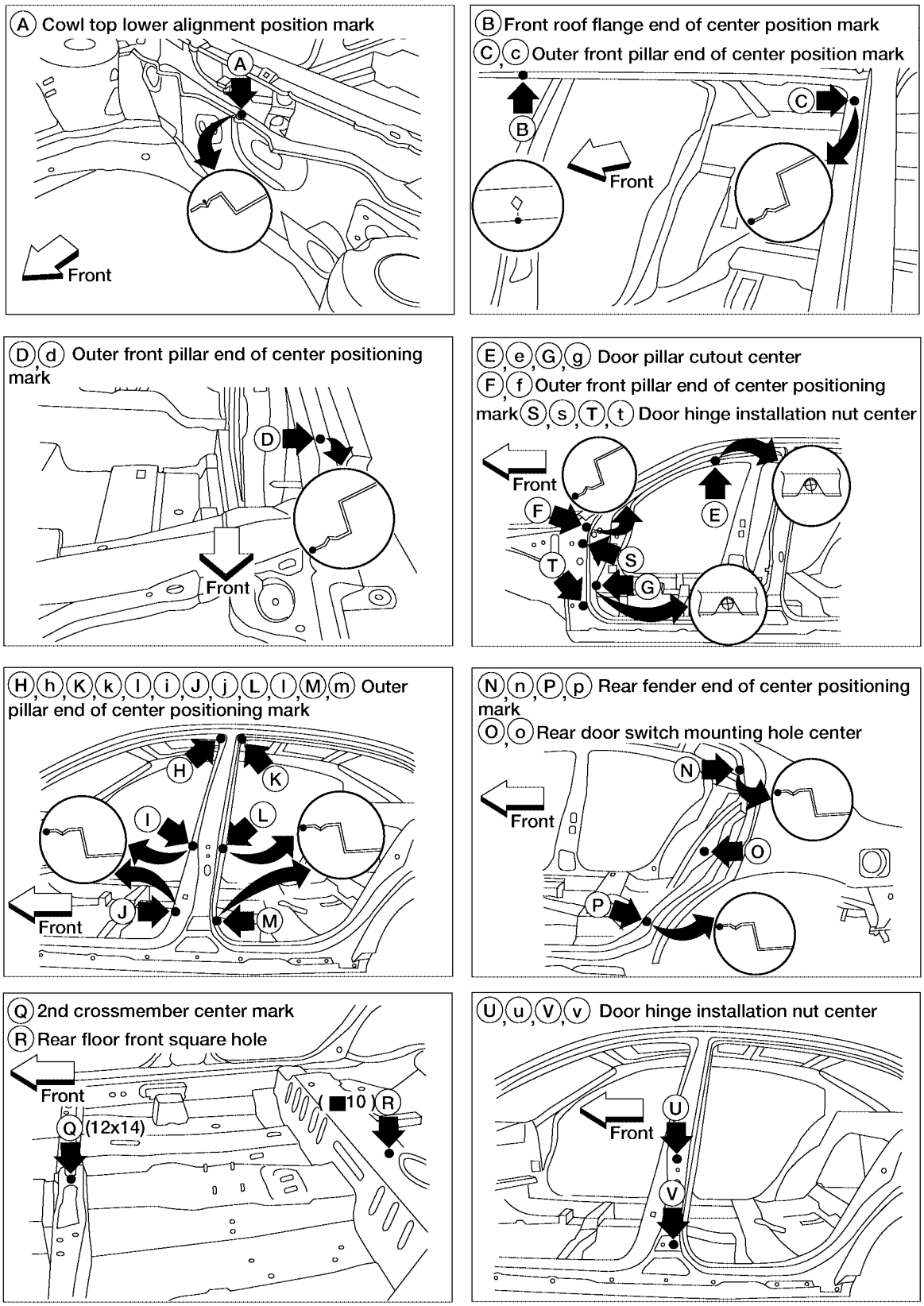

Unit: mm

WIIA0405E

REAR BODY MEASUREMENT

*= Figures marked with a (*) indicate symmetrically identical dimensions on both right and left hand sides of the vehicle.

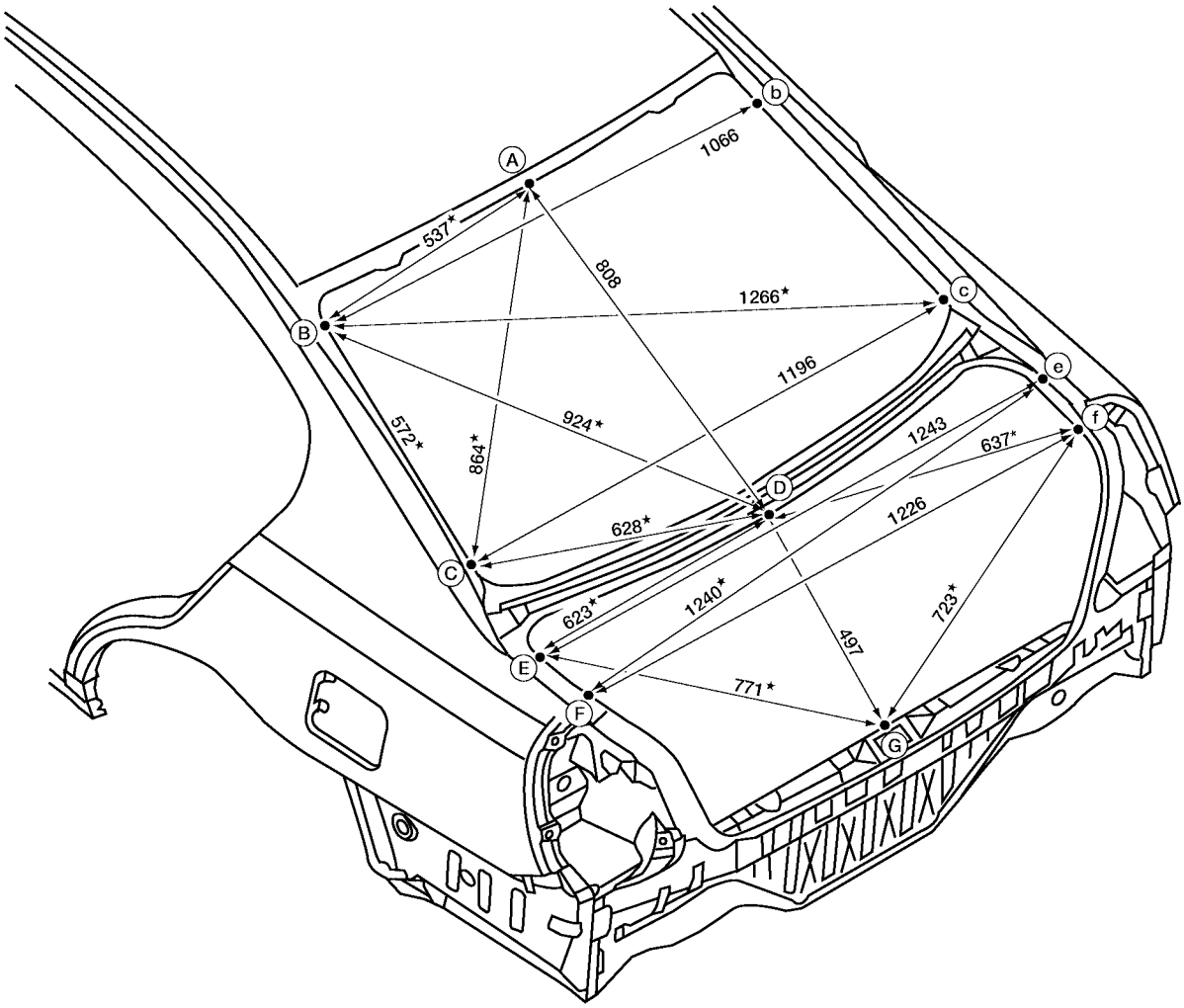

Unit: mm

LIIA1371E

MEASUREMENT POINTS

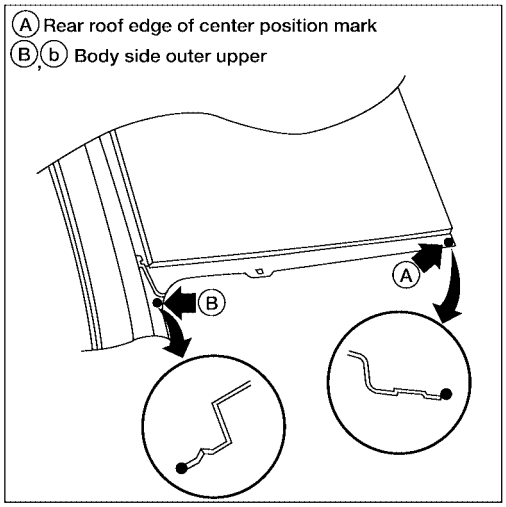

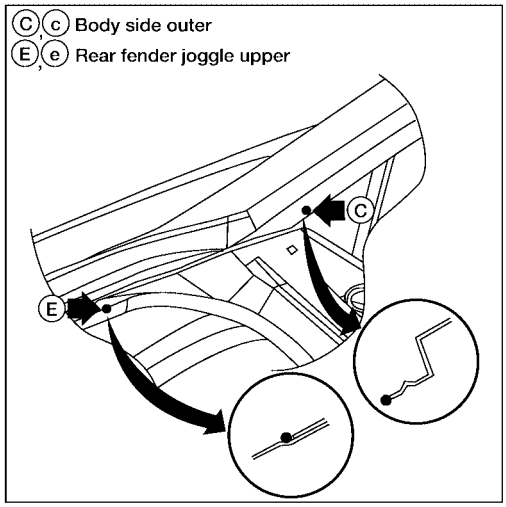

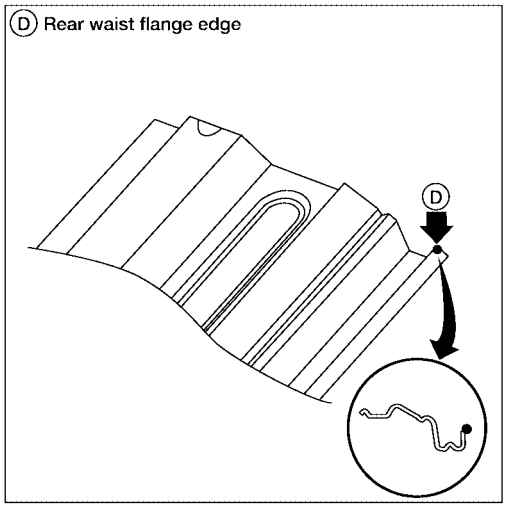

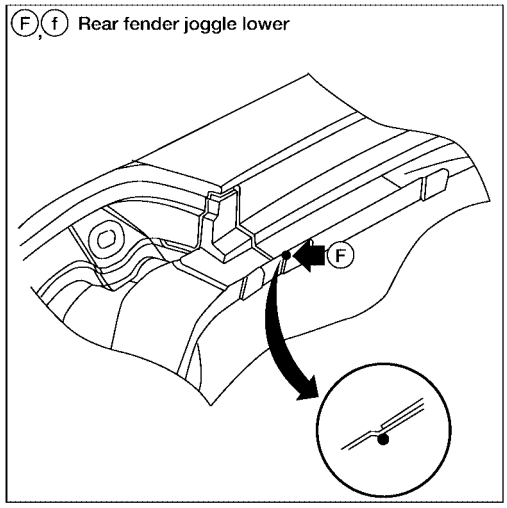

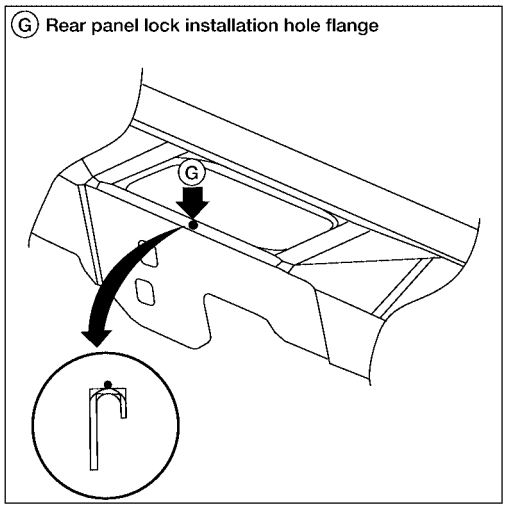

LIIA0066E

Handling Precautions for Plastics

EIS003KE

HANDLING PRECAUTIONS FOR PLASTICS

Abbre-viation	Material name	Heat resisting temperature °C (°F)	Resistance to gasoline and solvents	Other cautions
PE	Polyethylene	60 (140)	Gasoline and most solvents are harmless if applied for a very short time (wipe up quickly).	Flammable
PVC	Polyvinyl Chloride	80 (176)	Same as above.	Poison gas is emitted when burned.
EPM/ EPDM	Ethylene Propylene (Diene) rub-ber	80 (176)	Same as above.	Flammable
TPO/ TPR	Thermoplastic Olefine/ Thermoplastic Rubber	80 (176)	Same as above.	Flammable
PP	Polypropylene	90 (194)	Same as above.	Flammable, avoid bat-tery acid.
UP	Polyester thermoset	90 (194)	Same as above.	Flammable
PS	Polystyrene	80 (176)	Avoid solvents.	Flammable
ABS	Acrylonitrile Butadiene Styrene resin	80 (176)	Avoid gasoline and solvents.	
AES	Acrylonitrile Ethylene Styrene	80 (176)	Same as above.	
PMMA	Polymethyl Methacrylate	85 (185)	Same as above.	
AAS	Acrylonitrile Acrylic Styrene	85 (185)	Same as above.	
AS	Acrylonitrile Styrene	85 (185)	Same as above.	
EVA	Polyvinyl Ethyl Acetate	90 (194)	Same as above.	
ASA	Acrylonitrile Styrene Acrylate	100 (222)	Same as above.	Flammable
PPO/ PPE	Polyphenylene Oxide/ Polyphenylene Ether	110 (230)	Same as above.	
PC	Polycarbonate	120 (248)	Same as above.	
PAR	Polyacrylate	180 (356)	Same as above.	
L-LDPE	Lenear Low Density PE	45 (100)	Gasoline and most solvents are harmless.	Flammable
PUR	Polyurethane	90 (194)	Same as above.	
TPU	Thermoplastic Urethane	110 (230)	Same as above.	
PPC	Polypropylene Composite	115 (239)	Same as above.	Flammable
POM	Polyacetal	120 (248)	Same as above.	Avoid battery acid.
PBT+PC	Polybutylene Terephtha-late+Polycarbonate	120 (248)	Same as above.	Flammable
PA	Polyamide (Nylon)	140 (284)	Same as above.	Avoid immersing in wa-ter.
PBT	Polybutylene Terephthalate	140 (284)	Same as above.	
FRP	Fiber Reinforced Plastics	170 (338)	Same as above.	Avoid battery acid.
PET	Polyethylene Terephthalate	180 (356)	Same as above.	
PEI	Polyetherimide	200 (392)	Same as above.	

1. When repairing and painting a portion of the body adjacent to plastic parts, consider their characteristics (influence of heat and solvent) and remove them if necessary or take suitable measures to protect them.
2. Plastic parts should be repaired and painted using methods suiting the materials' characteristics.

LOCATION OF PLASTIC PARTS

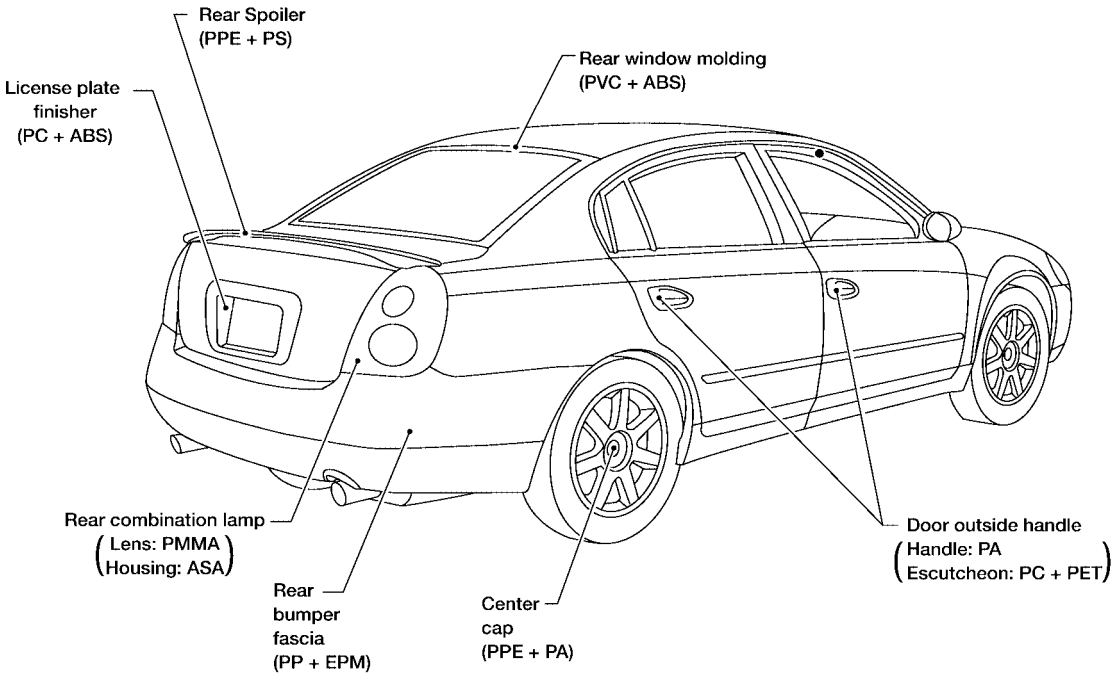

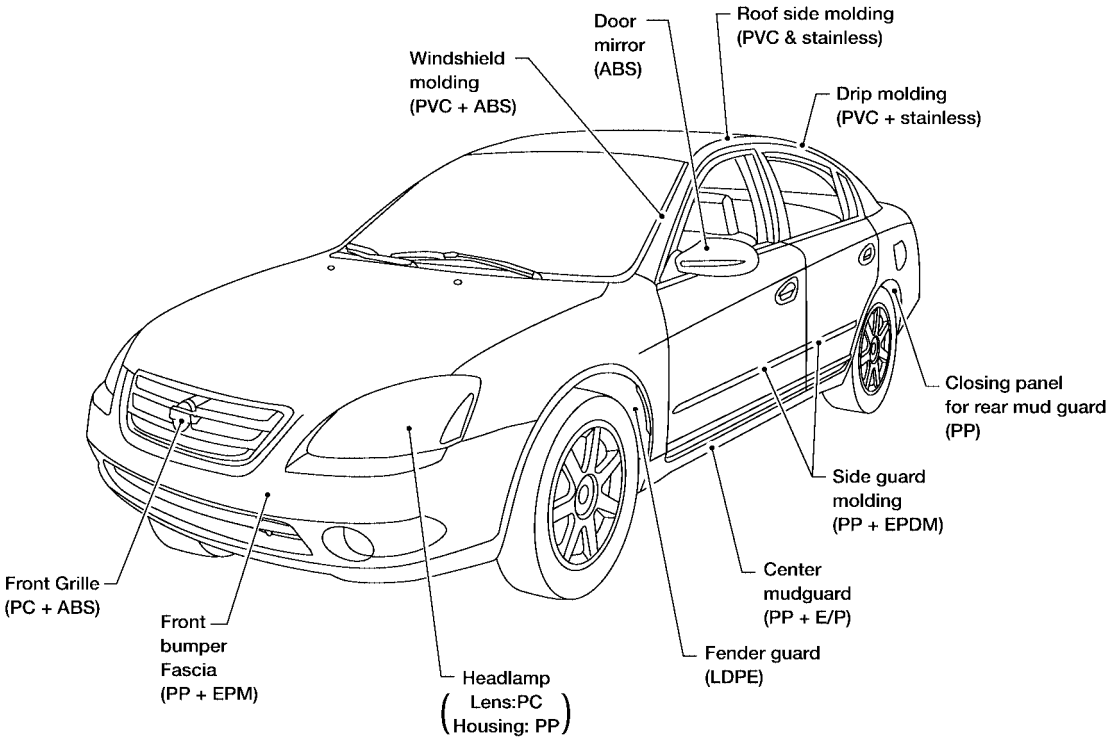

LIIA0088E

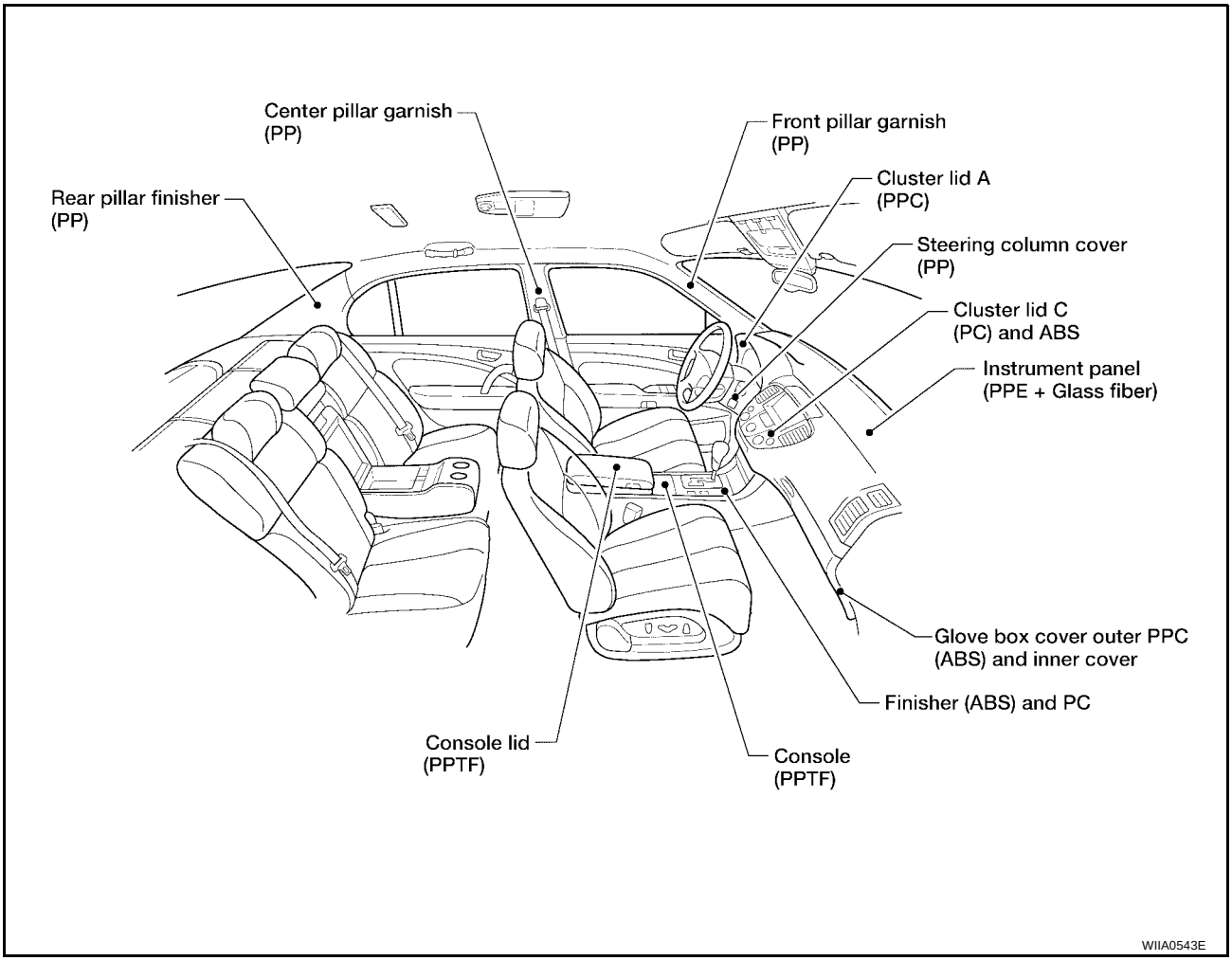
Center pillar garnish
(PP)
Front pillar garnish
(PP)
Cluster lid A
(PPC)
Rear pillar finisher
(PP)
Steering column cover
(PP)
Cluster lid C
(PC) and ABS
Instrument panel
(PPE + Glass fiber)
Glove box cover outer PPC
(ABS) and inner cover
Finisher (ABS) and PC
Console lid
(PPTF)
Console
(PPTF)
WIIA0543E

Precautions in Repairing High Strength Steel

EIS003KF

High strength steel is used for body panels in order to reduce vehicle weight.
Accordingly, precautions in repairing automotive bodies made of high strength steel are described below:

HIGH STRENGTH STEEL (HSS) USED IN NISSAN VEHICLES

Tensile strength	Nissan/Infiniti designation	Major applicable parts
373 N/mm^2 (38kg/mm^2 ,54klb/sq in)	SP130	● Front side member assembly ● Upper hoodledge ● Upper pillar hinge brace assembly ● Rear side member extension ● Other reinforcements
785-981 N/mm^2 (80-100kg/mm^2 114-142klb/sq in)	SP150	● Front bumper reinforcement ● Rear bumper reinforcement

SP130 is the most commonly used HSS.
SP150 HSS is used only on parts that require much more strength.

Read the following precautions when repairing HSS:

1. Additional points to consider
   - The repair of reinforcements (such as side members) by heating is not recommended since it may weaken the component. When heating is unavoidable, do not heat HSS parts above 550°C (1,022°F).
     Verify heating temperature with a thermometer.
     (Crayon-type and other similar type thermometer are appropriate.)

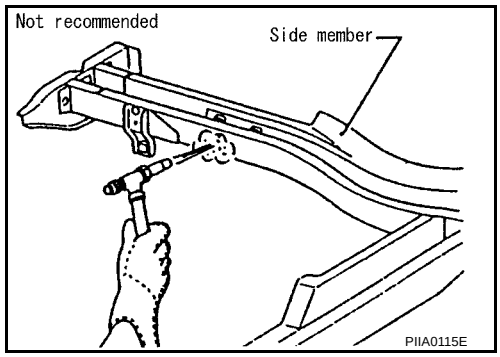

   - When straightening body panels, use caution in pulling any HSS panel. Because HSS is very strong, pulling may cause deformation in adjacent portions of the body. In this case, increase the number of measuring points, and carefully pull the HSS panel.

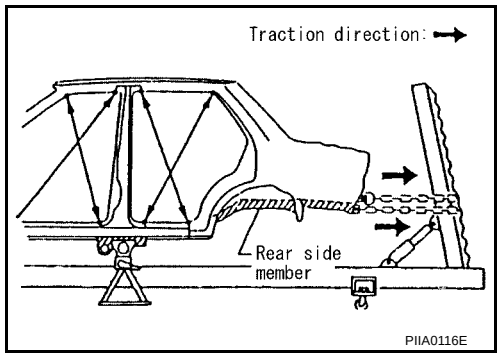

   - When cutting HSS panels, avoid gas (torch) cutting if possible. Instead, use a saw to avoid weakening surrounding areas due to heat. If gas (torch) cutting is unavoidable, allow a minimum margin of 50 mm (1.97in).

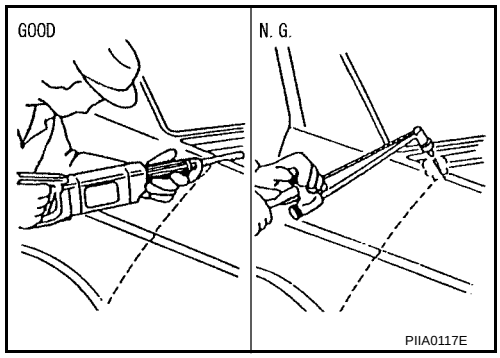

- When welding HSS panels, use spot welding whenever possible in order to minimize weakening surrounding areas due to heat.
  If spot welding is impossible, use M.I.G. welding. Do not use gas (torch) welding because it is inferior in welding strength.

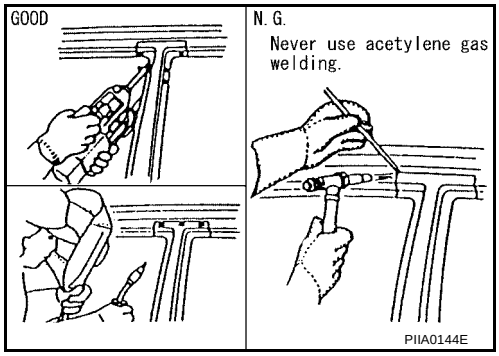

- The spot weld on HSS panels is harder than that of an ordinary steel panel.
  Therefore, when cutting spot welds on a HSS panel, use a low speed high torque drill (1,000 to 1,200 rpm) to increase drill bit durability and facilitate the operation.
- SP150 HSS panels with a tensile strength of 785 to 981 N/mm^2 (80 to 100 kg/mm^2 , 114 to 142 klb/sq in), used as reinforcement in the door guard beams, is too strong to repair. When these HSS parts are damaged, the outer panels also sustain substantial damage; therefore, the assembly parts must be replaced.

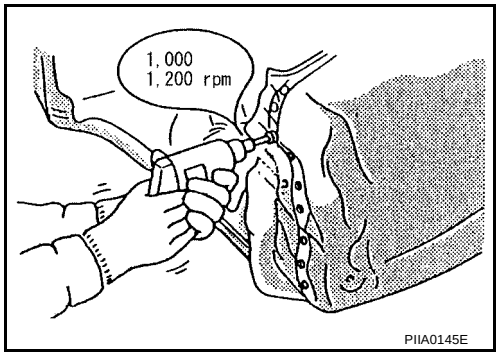

2. Precautions in spot welding HSS
   This work should be performed under standard working conditions. Always note the following when spot welding HSS:
   - The electrode tip diameter must be sized properly according to the metal thickness.

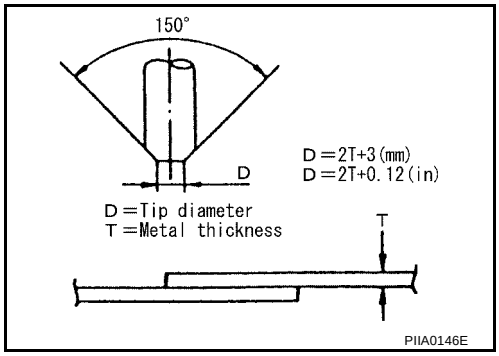

- The panel surfaces must fit flush to each other, leaving no gaps.

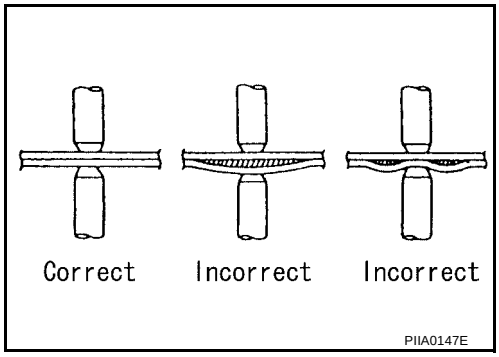

- Follow the specifications for the proper welding pitch.

Unit:mm

Thickness (t)	Minimum pitch (l)
0.6 (0.024)	10 (0.39) or over
0.8 (0.031)	12 (0.47) or over
1.0 (0.039)	18 (0.71) or over
1.2 (0.047)	20 (0.79) or over
1.6 (0.063)	27 (1.06) or over
1.8 (0.071)	31 (1.22) or over

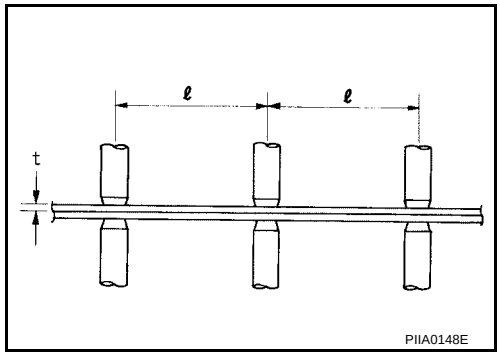

Foam Repair

EIS00489

During factory body assembly, foam insulators are installed in certain body panels and locations around the vehicle. Use the following procedure(s) to replace any factory-installed foam insulators.

URETHANE FOAM APPLICATIONS

Use commercially available spray foam for sealant (foam material) repair of material used on vehicle. Read instructions on product for fill procedures.

FILL PROCEDURES

1. Fill procedures after installation of service part.
- Remove foam material remaining on vehicle side.
- Clean area in which foam was removed.
- Install service part.
- Insert nozzle into hole near fill area and fill foam material or fill in enough to close gap with the service part.

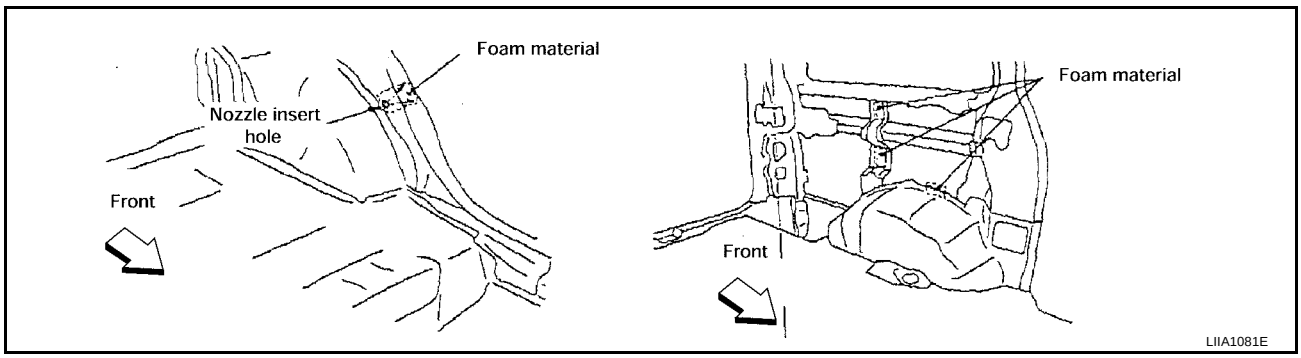

2. Fill procedures before installation of service part.
- Remove foam material remaining on vehicle side.
- Clean area in which foam was removed.
- Fill foam material on wheelhouse outer side.

  NOTE:
  Fill in enough to close gap with service part while avoiding flange area.
- Install service part.

  NOTE:
  Refer to label for information on working times.

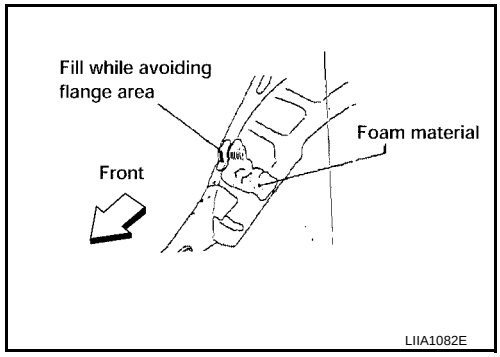

Replacement Operations

EIS003KG

DESCRIPTION

This section is prepared for technicians who have attained a high level of skill and experience in repairing collision-damaged vehicles and also use modern service tools and equipment. Persons unfamiliar with body repair techniques should not attempt to repair collision-damaged vehicles by using this section.

Technicians are also encouraged to read Body Repair Manual (Fundamentals) in order to ensure that the original functions and quality of the vehicle can be maintained. The Body Repair Manual (Fundamentals) contains additional information, including cautions and warnings, that are not including in this manual. Technicians should refer to both manuals to ensure proper repairs.

Please note that this information is prepared for worldwide usage, and as such, certain procedures may not apply in some regions or countries.

The symbols used in this section for cutting and welding / brazing operations are shown below.

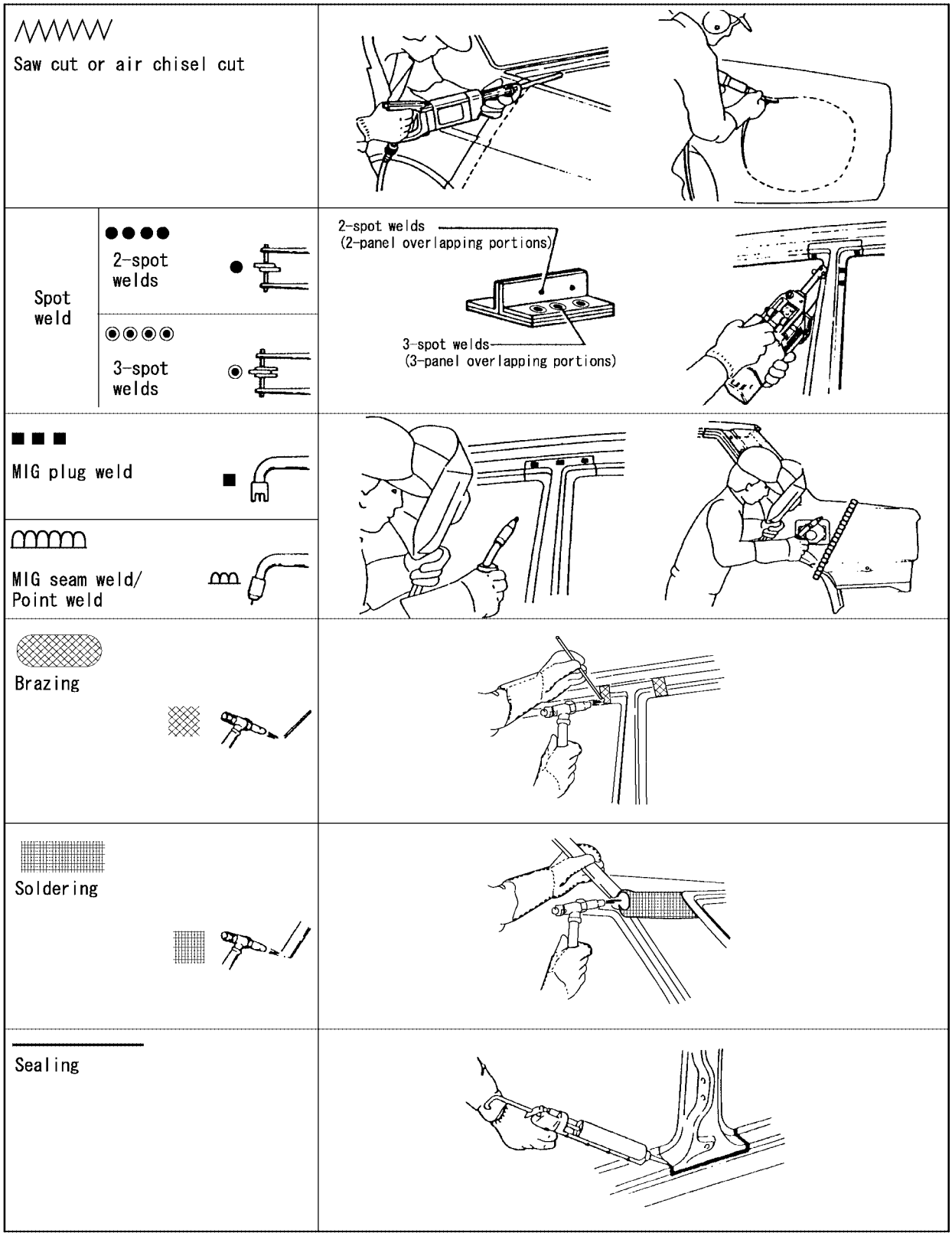

PIIA0149E

- Front pillar butt joint can be determined anywhere within shaded area as shown in the figure. The best location for the butt joint is at position A due to the construction of the vehicle. Refer to BL-166, "FRONT PILLAR" .

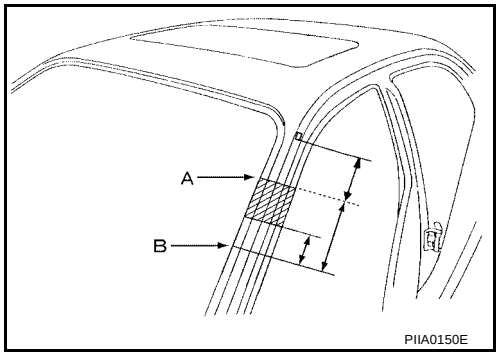

- Determine cutting position and record distance from the locating indent. Use this distance when cutting the service part. Cut outer front pillar over 60 mm above inner front pillar cut position.

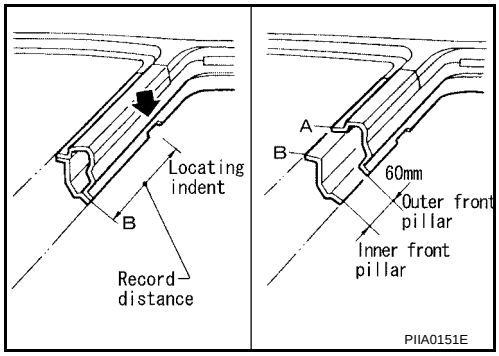

- Prepare a cutting jig to make outer pillar easier to cut. Also, this will permit service part to be accurately cut at joint position.

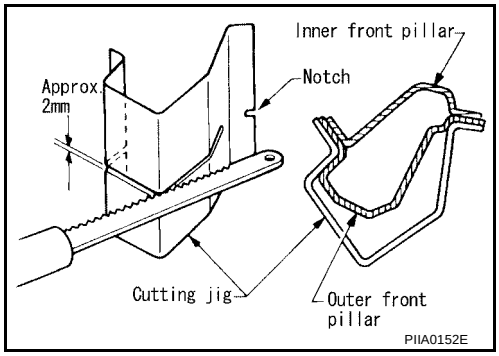

- An example of cutting operation using a cutting jig is as follows.

1. Mark cutting lines.
   A: Cut position of outer pillar
   B: Cut position of inner pillar
2. Align cutting line with notch on jig. Clamp jig to pillar.
3. Cut outer pillar along groove of jig. (At position A)
4. Remove jig and cut remaining portions.
5. Cut inner pillar at position B in same manner.

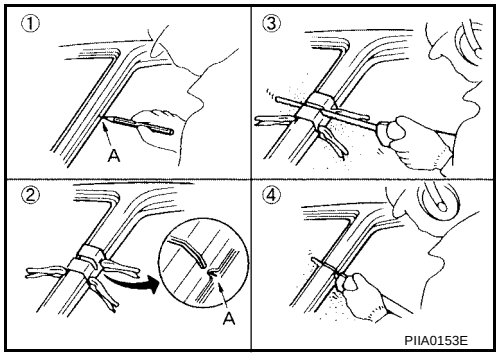

HOODLEDGE

- Work after radiator core support has been removed.

Service Joint

Perform with closed plate panel removed

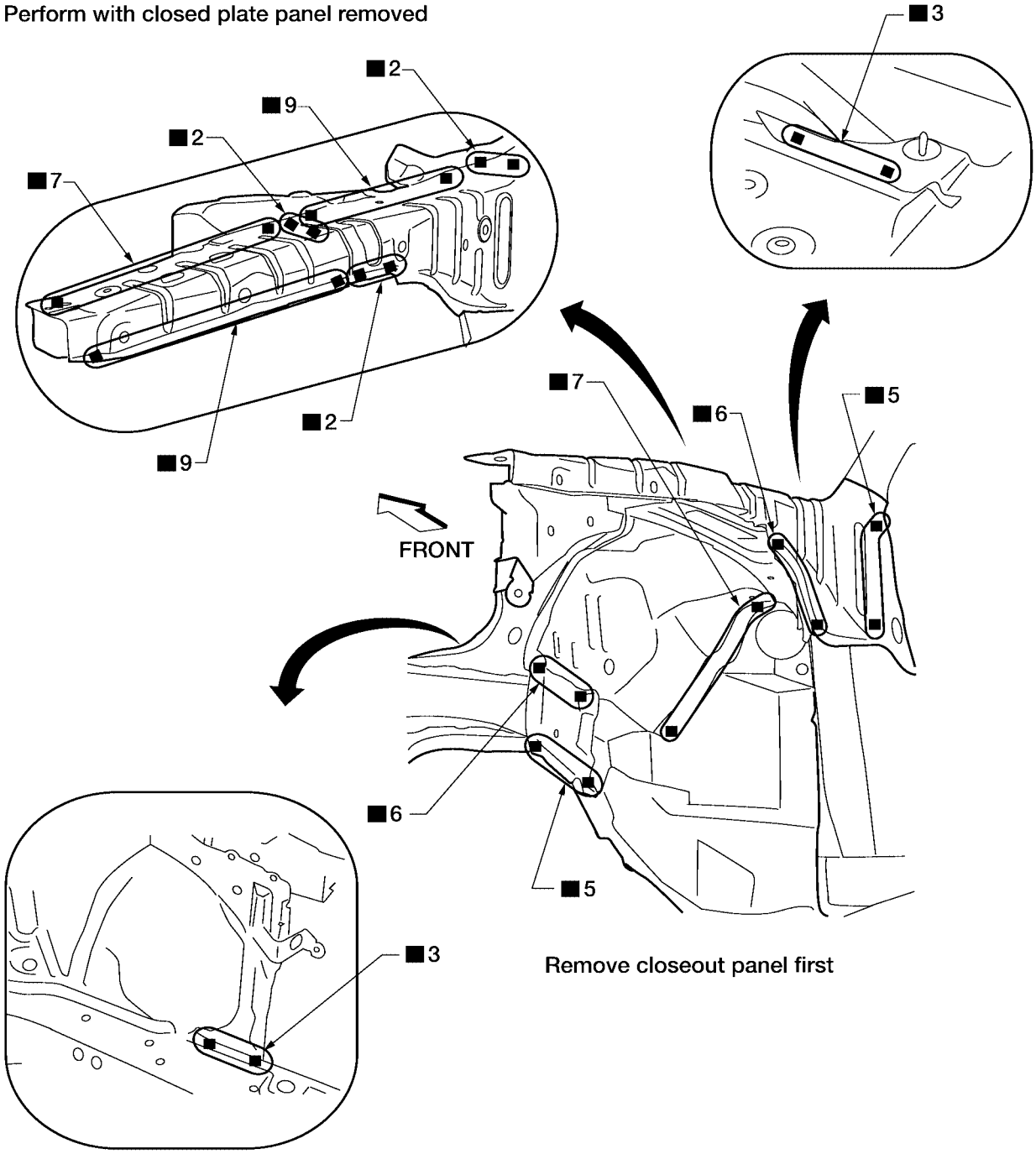

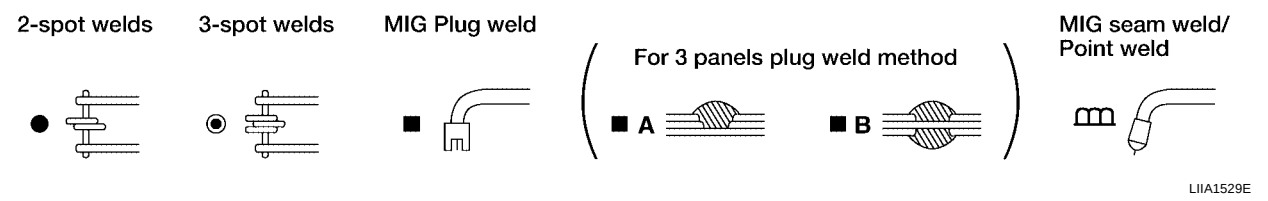

HOODLEDGE (PARTIAL REPLACEMENT)

- Work after radiator core support has been removed.

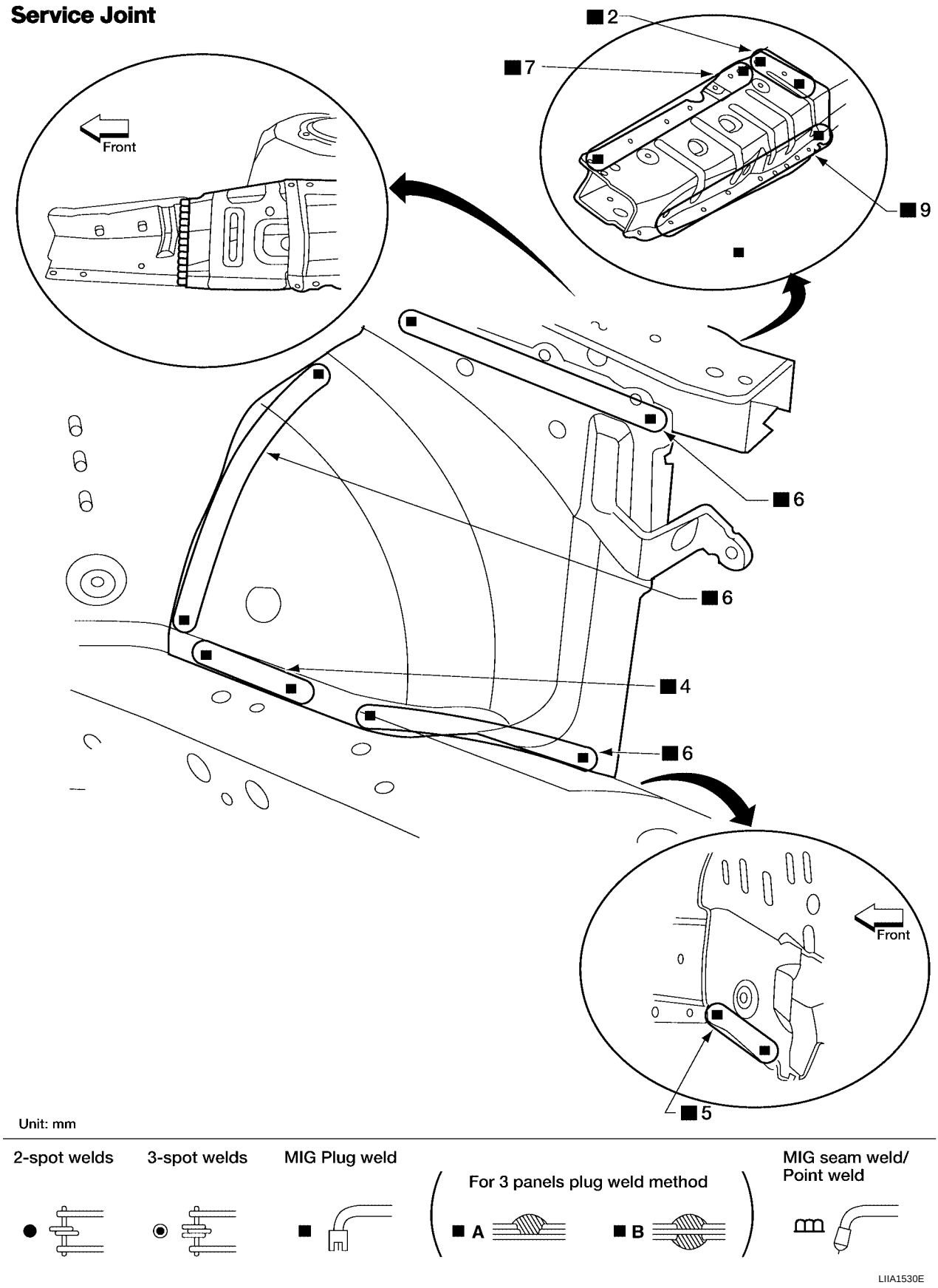

FRONT SIDE MEMBER

- Work after hoodledge and radiator core support have been removed.

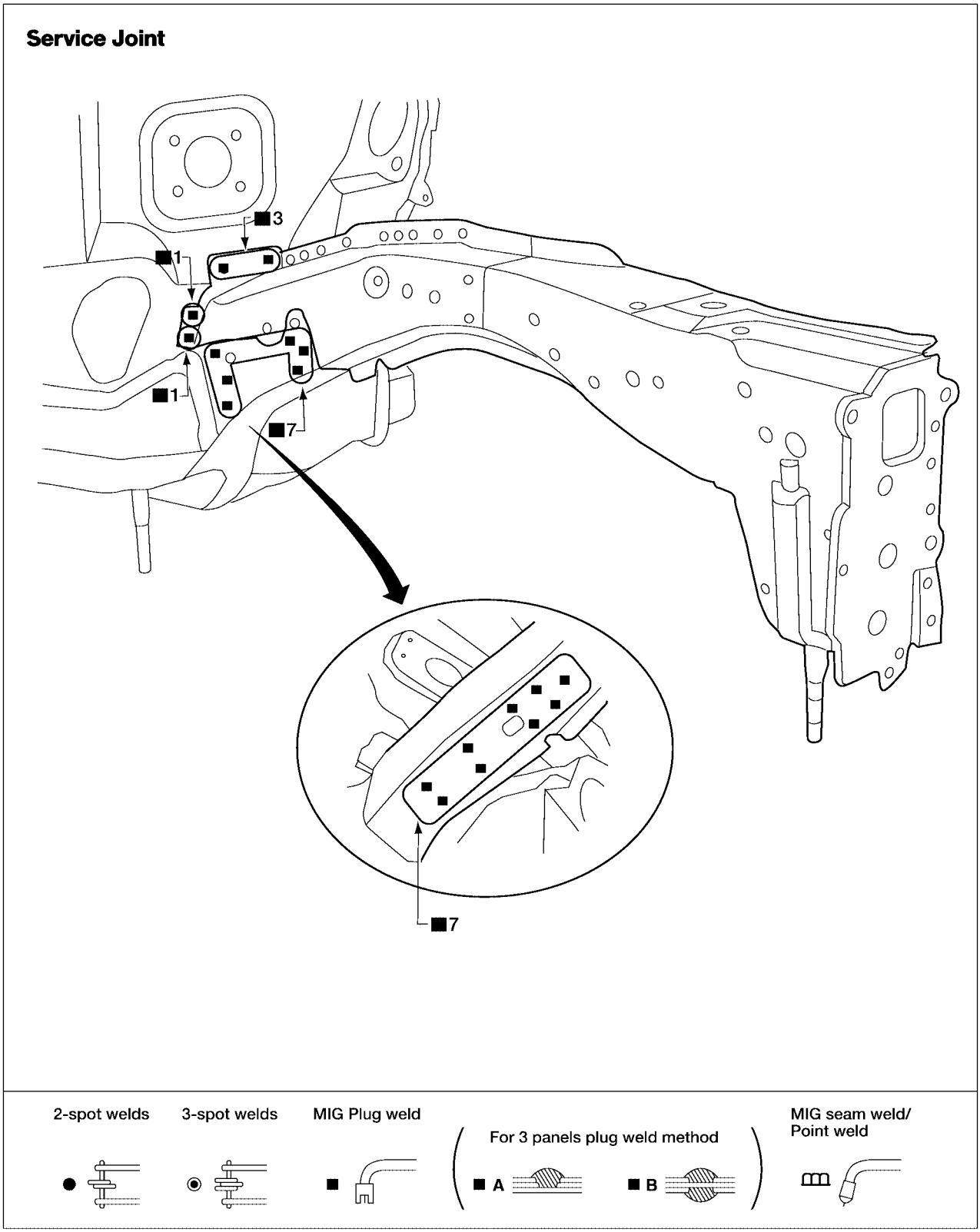

LIIA0136E

Service Joint

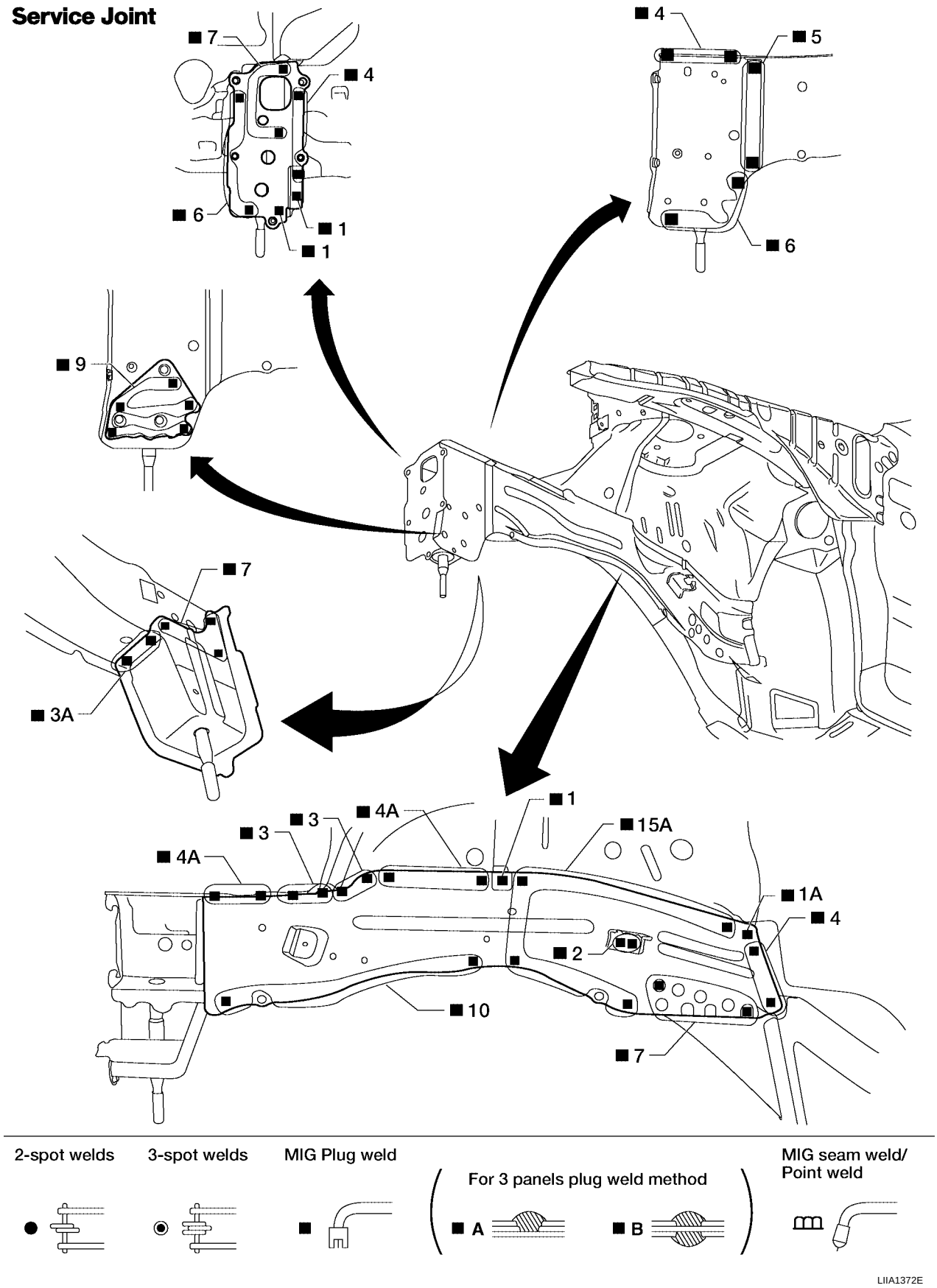

FRONT SIDE MEMBER (PARTIAL REPLACEMENT)

- Work after radiator core support has been removed.

Service Joint

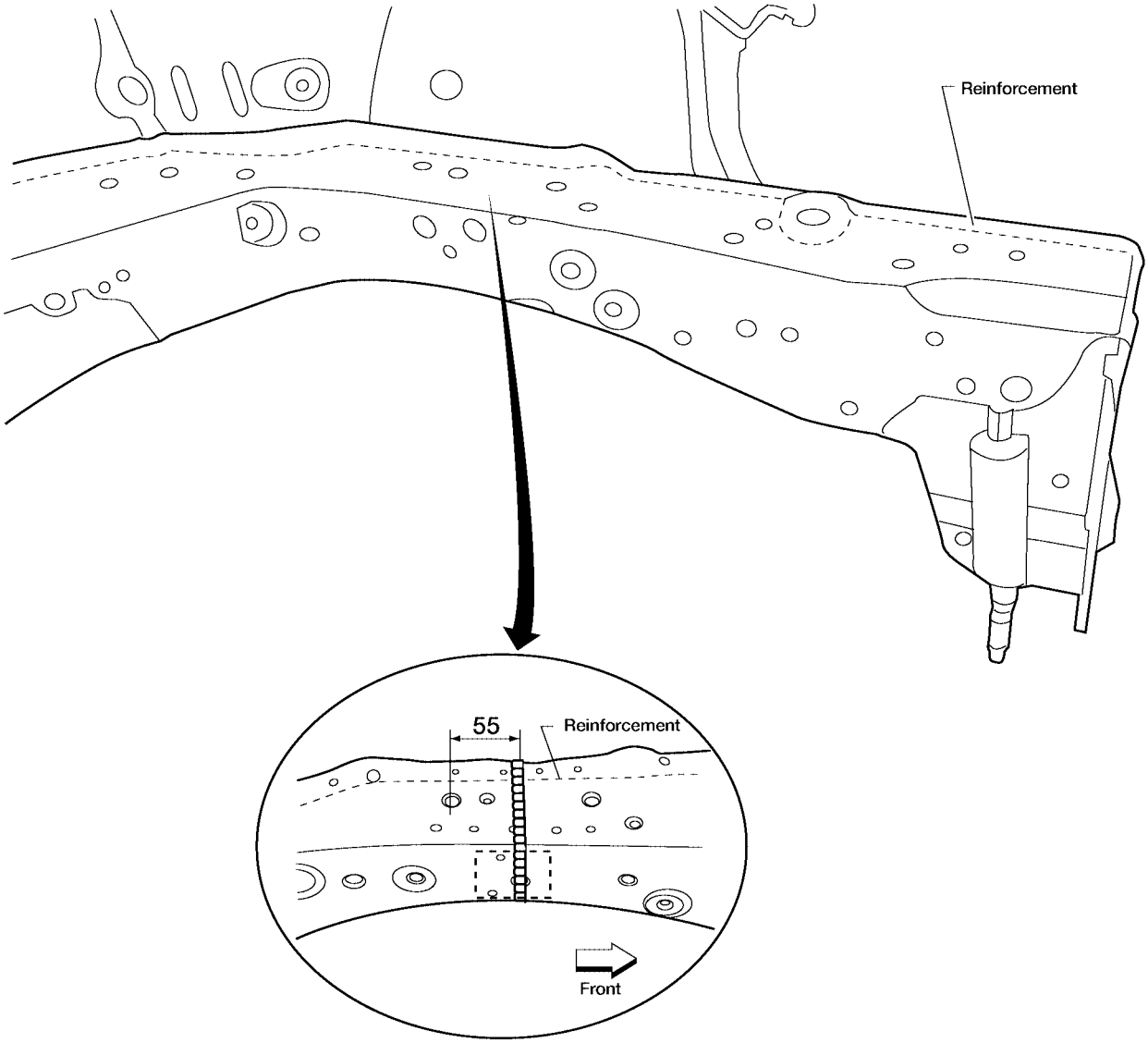

Unit: mm

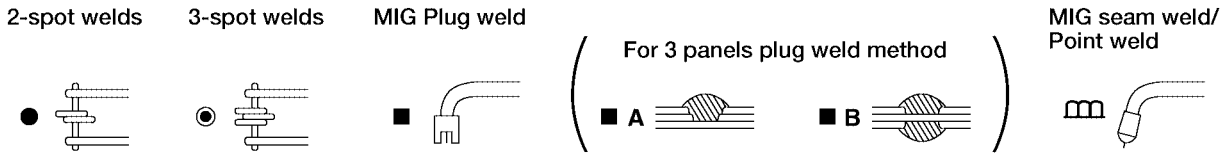

LIIA1373E

FRONT PILLAR

- Work after rear hoodledge reinforcement has been removed.

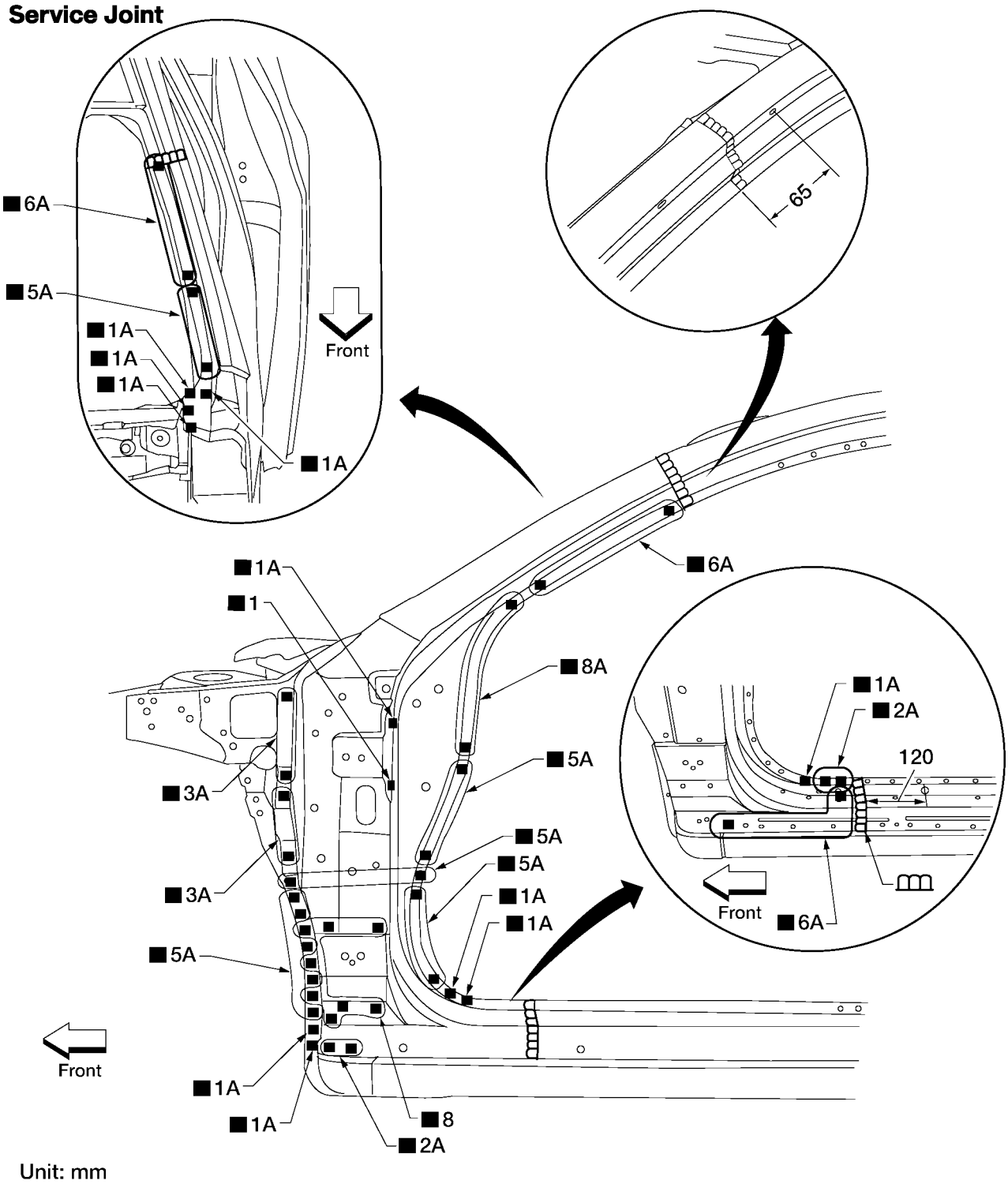

LIIA1374E

Service Joint

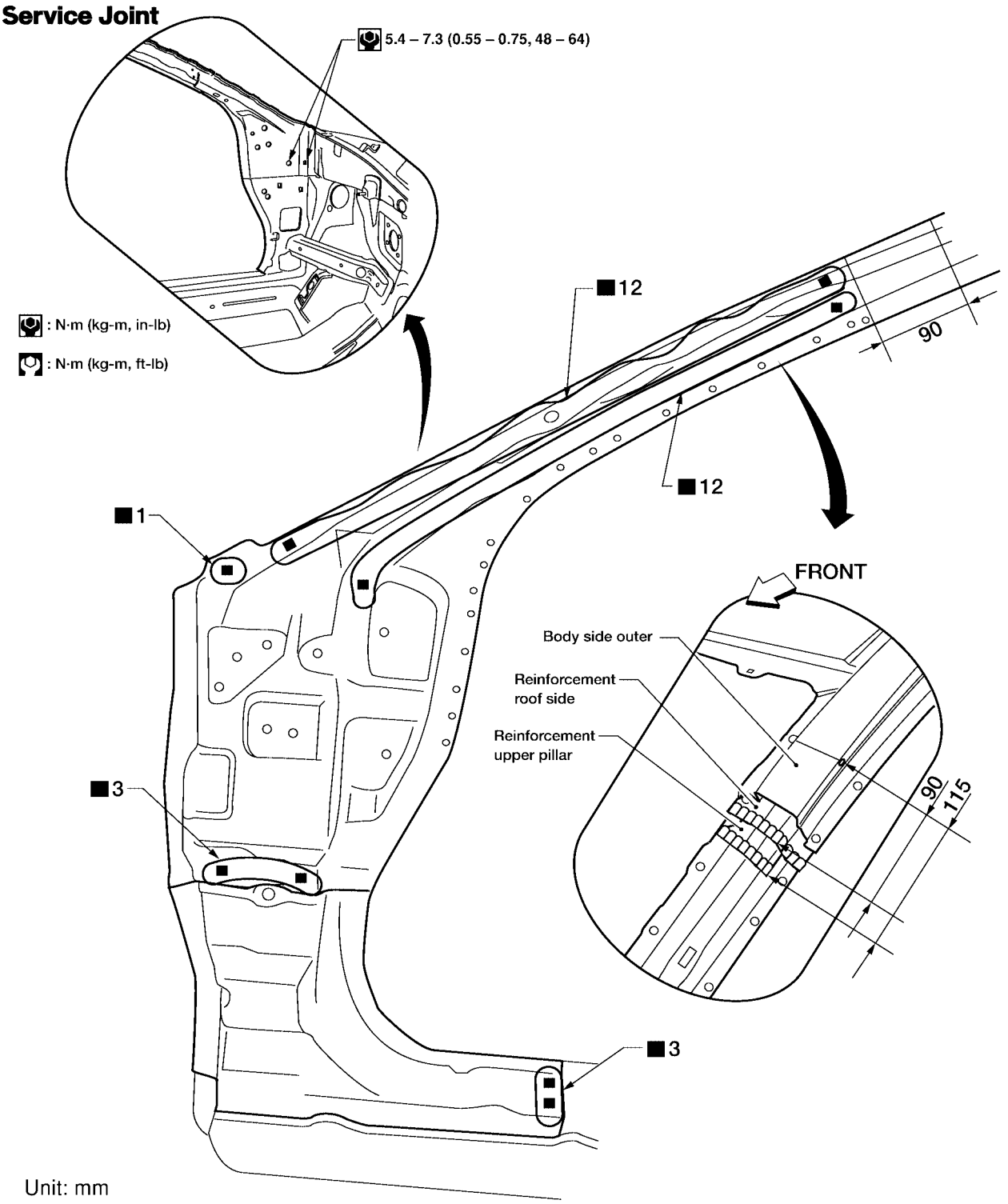

LIIA1375E

Service Joint

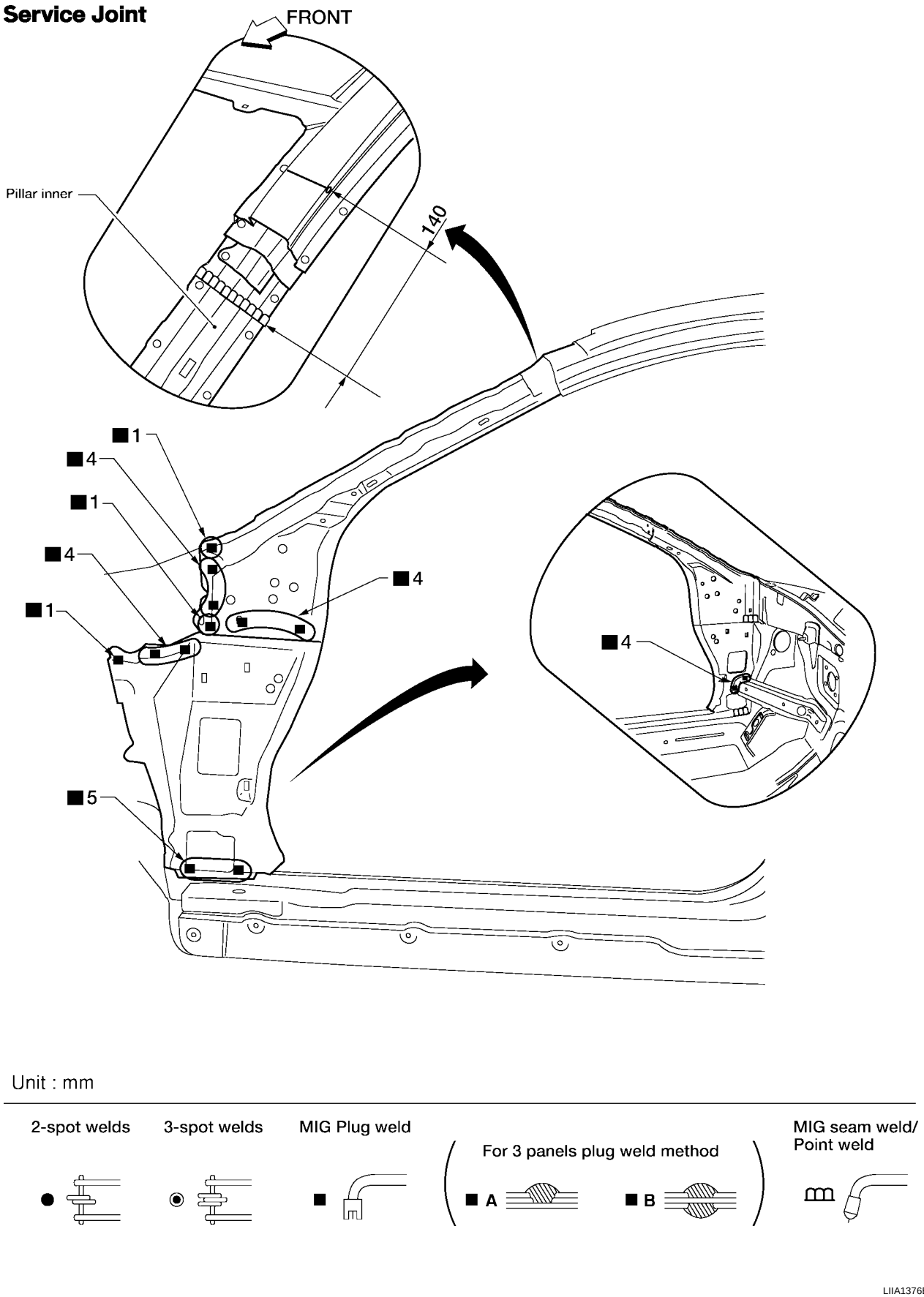

CENTER PILLAR

Service Joint

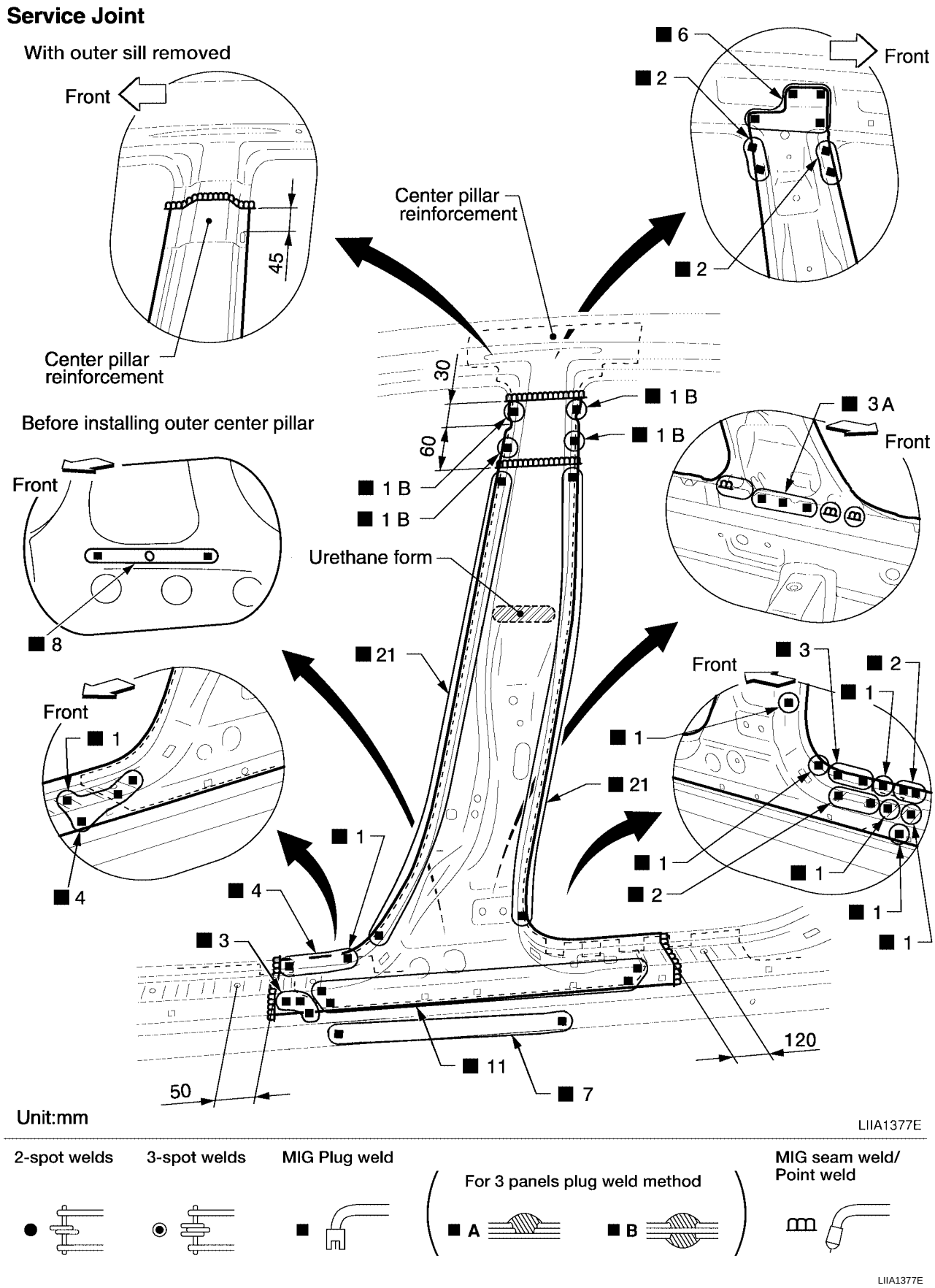

OUTER SILL

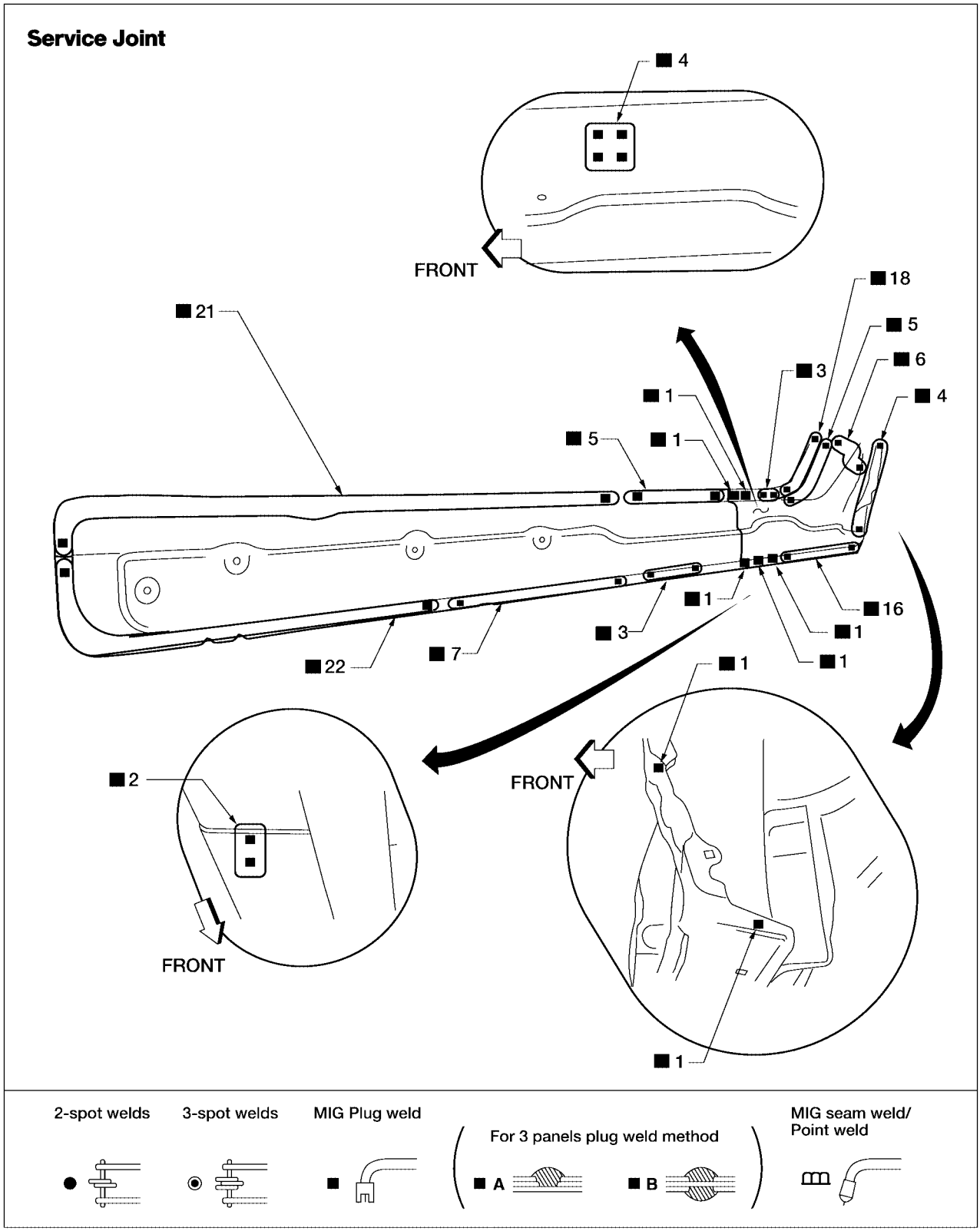

LIIA0142E

REAR FENDER

Service Joint

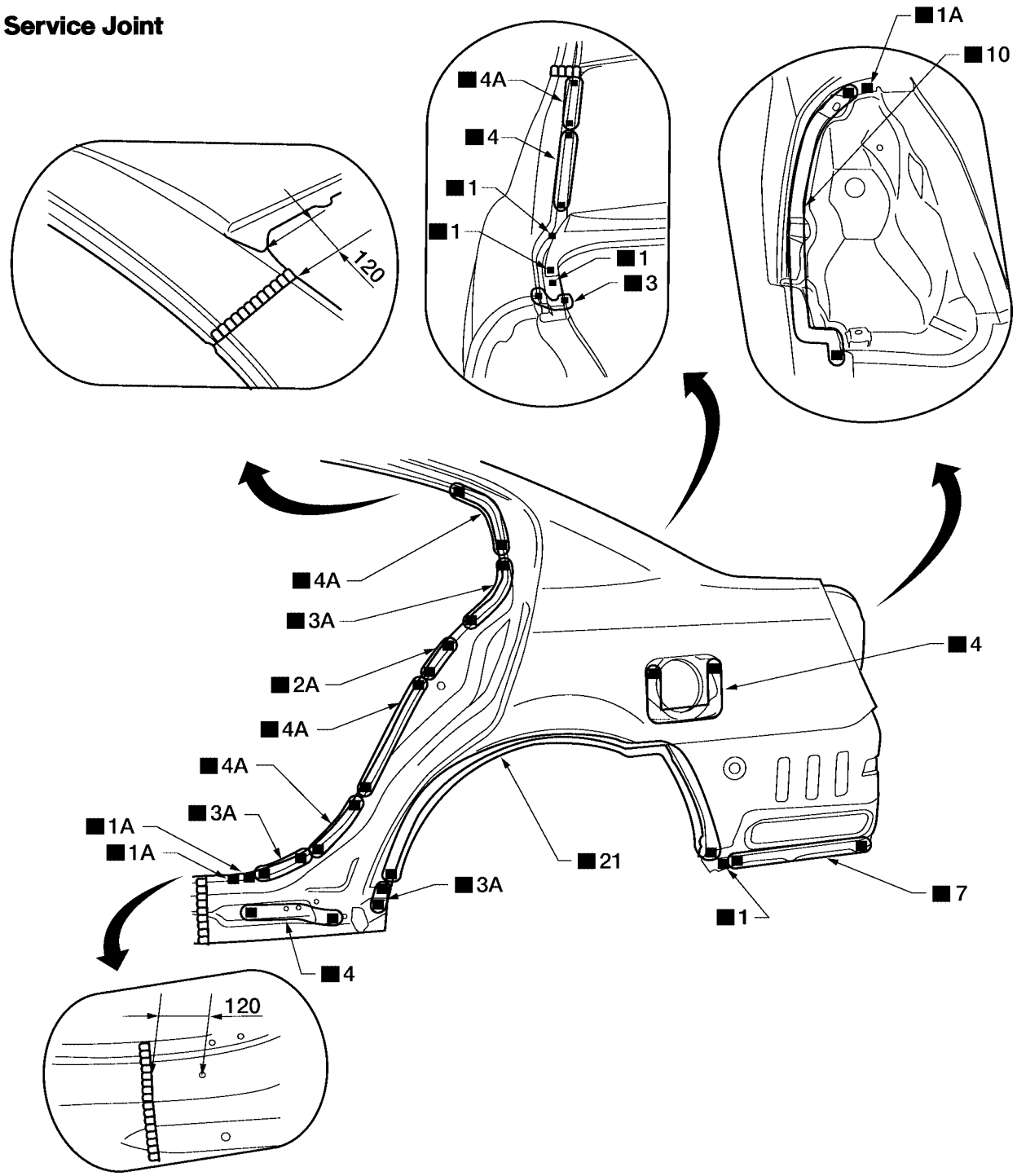

Unit: mm

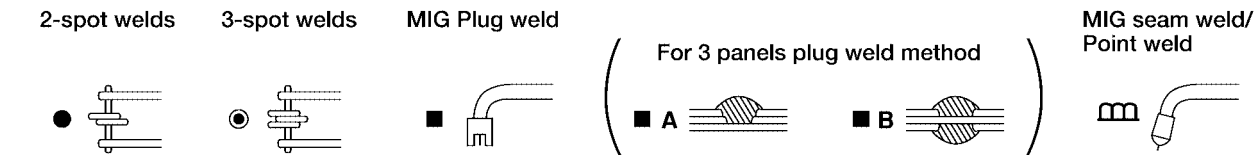

LIIA1378E

REAR PANEL

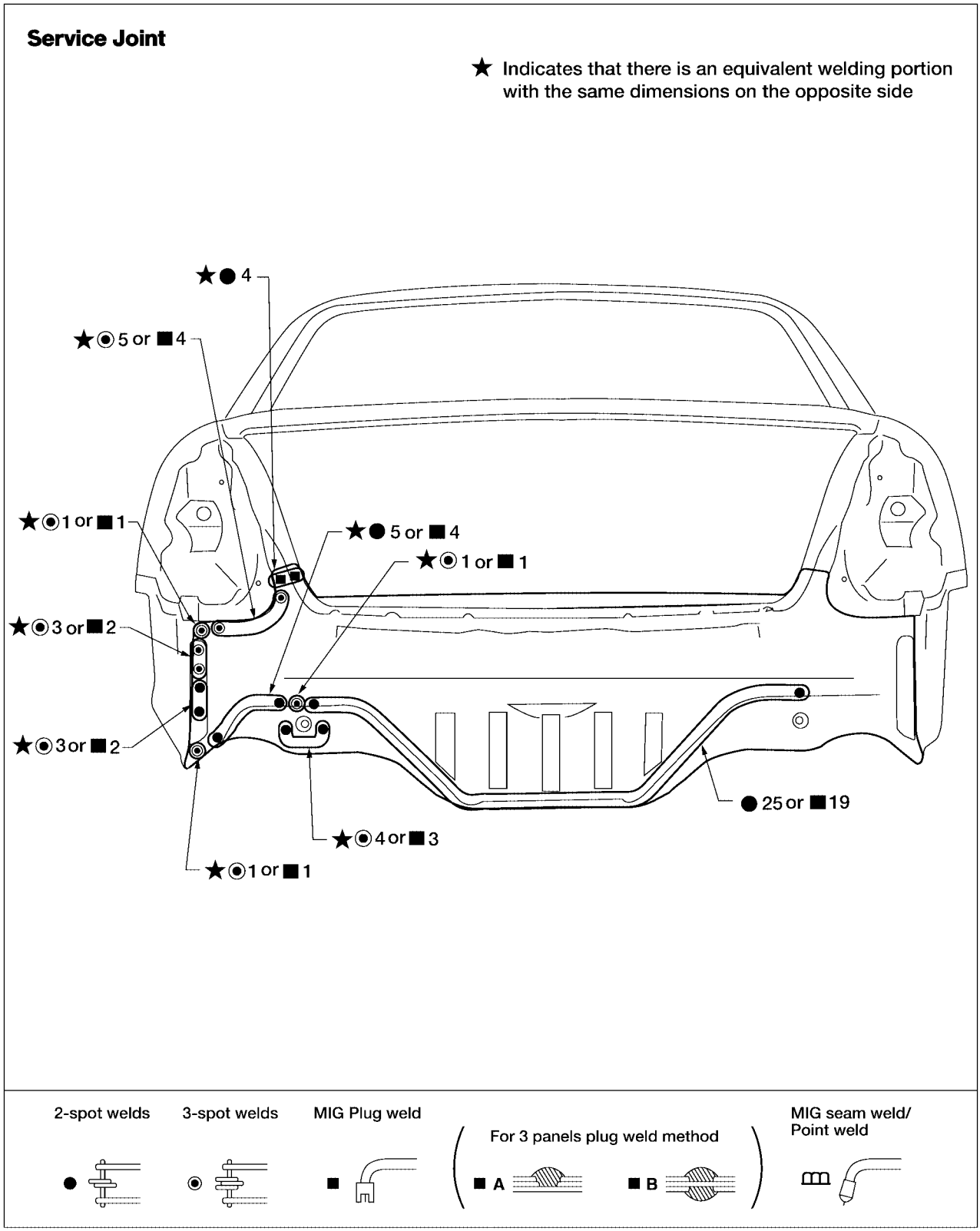

LIIA0144E

REAR FLOOR REAR

- Work after rear panel has been removed.

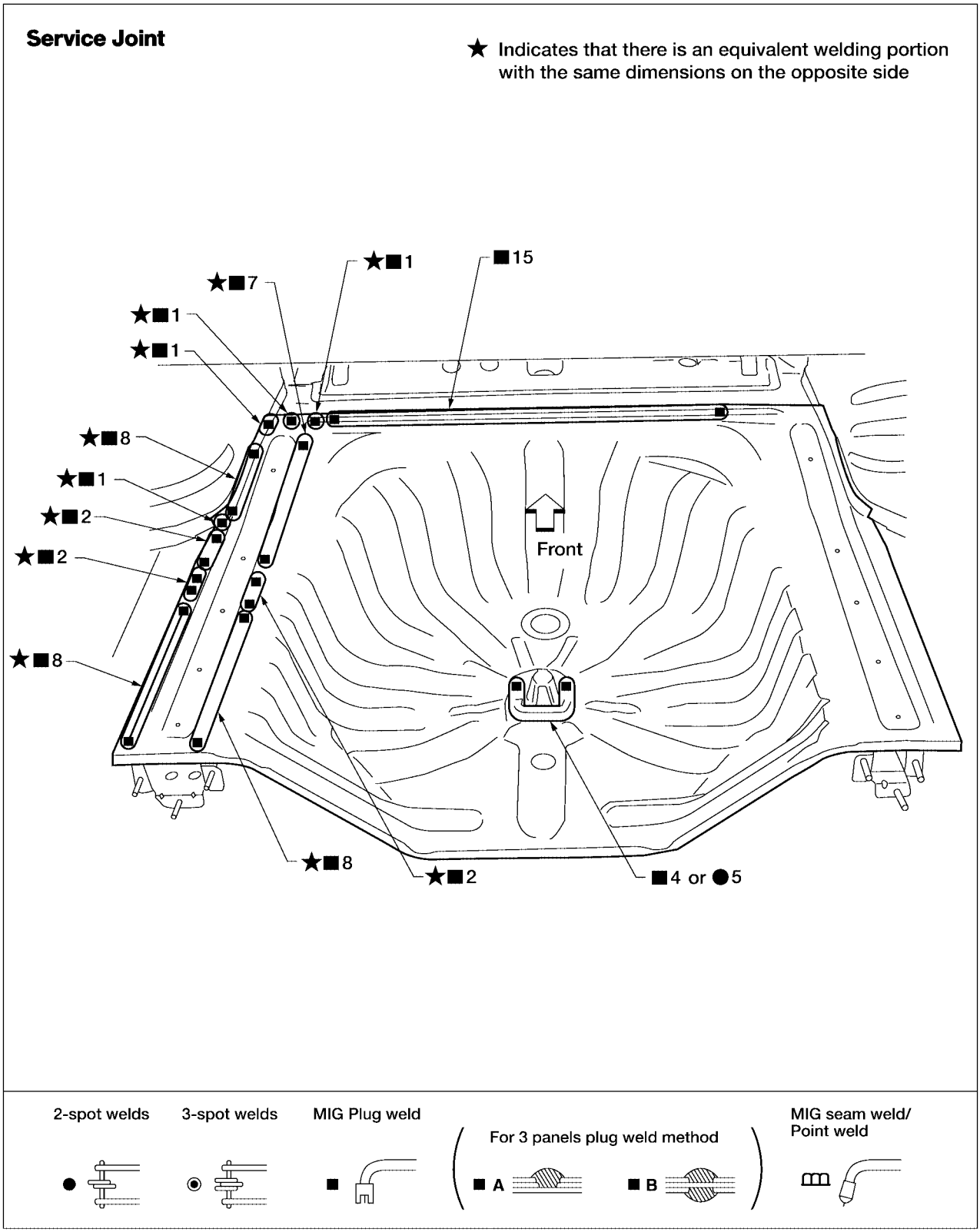

LIIA0145E

REAR SIDE MEMBER EXTENSION

- Work after rear panel and rear end crossmember have been removed.

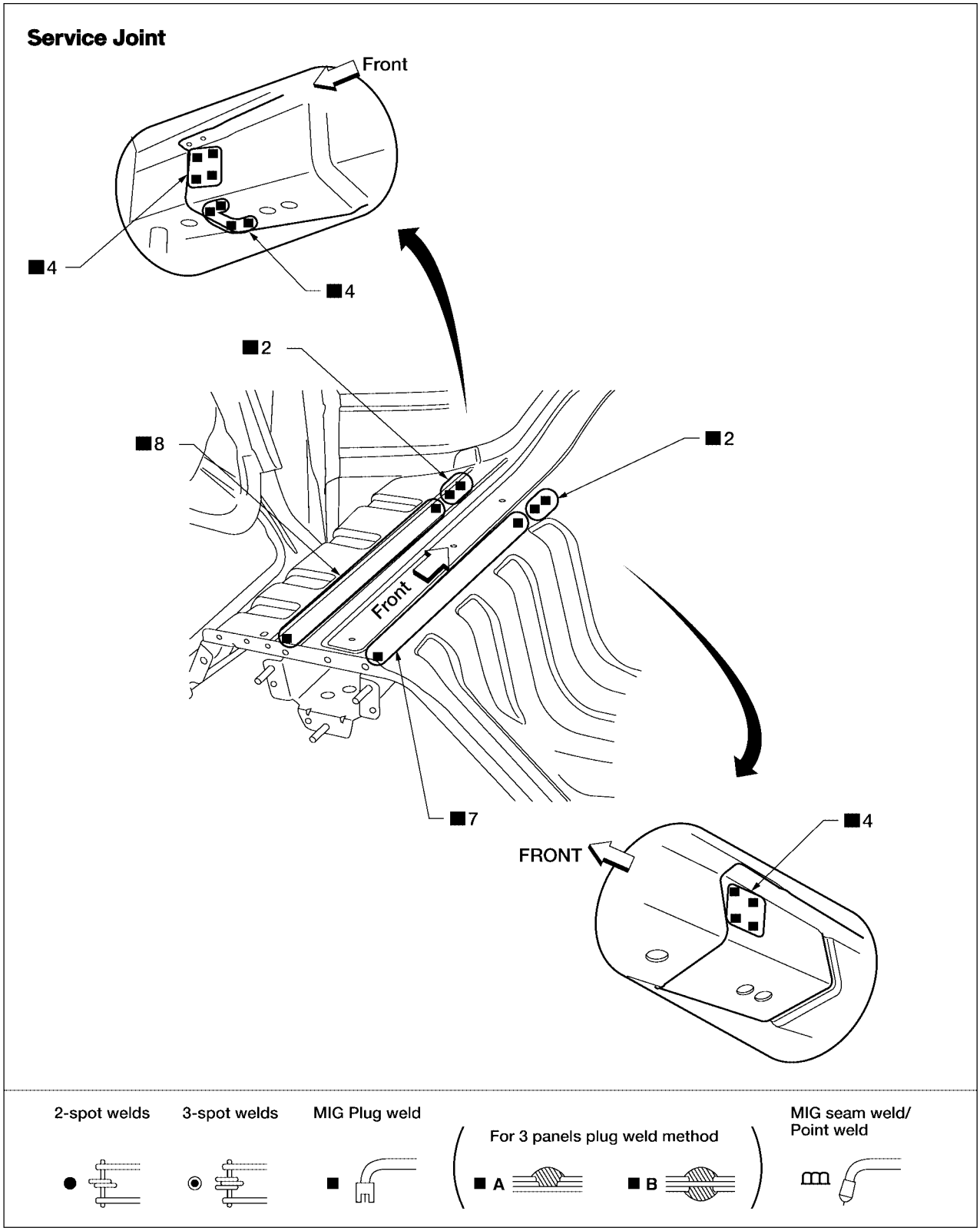

LIIA0146E