2019

Silverado LD 1500 and Silverado 2500/3500 Owner's Manual

chevrolet.com (U.S.)
chevrolet.ca (Canada)

Contents

Introduction 2
In Brief 5
Keys, Doors, and Windows 33
Seats and Restraints 55
Storage 122
Instruments and Controls 126
Lighting 171
Infotainment System 181
Climate Controls 216
Driving and Operating 225
Vehicle Care 324
Service and Maintenance 429
Technical Data 446
Customer Information 450
Reporting Safety Defects 460
OnStar 464
Connected Services 472
Index 476

Introduction

The names, logos, emblems, slogans, vehicle model names, and vehicle body designs appearing in this manual including, but not limited to, GM, the GM logo, CHEVROLET, the CHEVROLET Emblem, SILVERADO, and Z71 are trademarks and/or service marks of General Motors LLC, its subsidiaries, affiliates, or licensors.

For vehicles first sold in Canada, substitute the name “General Motors of Canada Company” for Chevrolet Motor Division wherever it appears in this manual.

This manual describes features that may or may not be on the vehicle because of optional equipment that was not purchased on the vehicle, model variants, country specifications, features/applications that may not be available in your region, or changes subsequent to the printing of this owner’s manual.

If the vehicle has the Duramax diesel engine, see the Duramax diesel supplement for additional and specific information on this engine.

Refer to the purchase documentation relating to your specific vehicle to confirm the features.

Keep this manual in the vehicle for quick reference.

Canadian Vehicle Owners

A French language manual can be obtained from your dealer, at www.helminc.com, or from:

Propriétaires Canadiens

On peut obtenir un exemplaire de ce guide en français auprès du concessionnaire ou à l'adresse suivante:

Helm, Incorporated
Attention: Customer Service
47911 Halyard Drive
Plymouth, MI 48170
USA

Using this Manual

To quickly locate information about the vehicle, use the Index in the back of the manual. It is an alphabetical list of what is in the manual and the page number where it can be found.

Litho in U.S.A.
Part No. 84161700 B Second Printing

©2018 General Motors LLC. All Rights Reserved.

Danger, Warning, and Caution

Warning messages found on vehicle labels and in this manual describe hazards and what to do to avoid or reduce them.

⚠ Danger
Danger indicates a hazard with a high level of risk which will result in serious injury or death.

⚠ Warning
Warning indicates a hazard that could result in injury or death.

Caution
Caution indicates a hazard that could result in property or vehicle damage.

A circle with a slash through it is a safety symbol which means “Do Not,” “Do not do this,” or “Do not let this happen.”

Symbols

The vehicle has components and labels that use symbols instead of text. Symbols are shown along with the text describing the operation or information relating to a specific component, control, message, gauge, or indicator.

: Shown when the owner’s manual has additional instructions or information.

: Shown when the service manual has additional instructions or information.

: Shown when there is more information on another page — “see page.”

Vehicle Symbol Chart

Here are some additional symbols that may be found on the vehicle and what they mean. See the features in this manual for information.

: Air Conditioning System

: Air Conditioning Refrigerant Oil

: Airbag Readiness Light

: Antilock Brake System (ABS)

: Brake System Warning Light

: Dispose of Used Components Properly

: Do Not Apply High Pressure Water

: Engine Coolant Temperature

: Flame/Fire Prohibited

: Flammable

: Forward Collision Alert

: Fuse Block Cover Lock Location

: Fuses

: ISOFIX/LATCH System Child Restraints

: Keep Fuse Block Covers Properly Installed

: Lane Change Alert

: Lane Departure Warning

: Lane Keep Assist

: Malfunction Indicator Lamp

: Oil Pressure

: Park Assist

: Pedestrian Ahead Indicator

: Power

: Rear Cross Traffic Alert

: Registered Technician

: Remote Vehicle Start

: Seat Belt Reminders

: Side Blind Zone Alert

: Stop/Start

: Tire Pressure Monitor

: Traction Control/StabiliTrak/ Electronic Stability Control (ESC)

: Under Pressure

: Vehicle Ahead Indicator

In Brief

Instrument Panel

Instrument Panel 6

Initial Drive Information

Initial Drive Information 8
Remote Keyless Entry (RKE) System 8
Remote Vehicle Start 9
Door Locks 9
Windows 10
Seat Adjustment 11
Memory Features 13
Heated and Ventilated Seats . . . 14
Head Restraint Adjustment 14
Seat Belts 14
Passenger Sensing System . . . 15
Mirror Adjustment 15
Steering Wheel Adjustment 17
Throttle and Brake Pedal Adjustment 17
Interior Lighting 18
Exterior Lighting 18
Windshield Wiper/Washer 19
Climate Controls 19
Transmission 22
Four-Wheel Drive 23

Vehicle Features

Infotainment System 24
Radio(s) 24
Satellite Radio 25
Portable Audio Devices 25
Bluetooth 25
Steering Wheel Controls 25
Cruise Control 26
Driver Information Center (DIC) 26
Forward Collision Alert (FCA) System 27
Forward Automatic Braking (FAB) (1500 Series) 27
Lane Departure Warning (LDW) 27
Lane Keep Assist (LKA) 28
Rear Vision Camera (RVC) 28
Park Assist 28
Power Outlets 28
Universal Remote System 29
Sunroof 29

Performance and Maintenance

Traction Control/Electronic Stability Control 30
Tire Pressure Monitor 30
Fuel (Diesel) 31
Fuel (Gasoline) 31
E85 or FlexFuel 31
Engine Oil Life System 31
Driving for Better Fuel Economy 32
Roadside Assistance Program 32

Instrument Panel

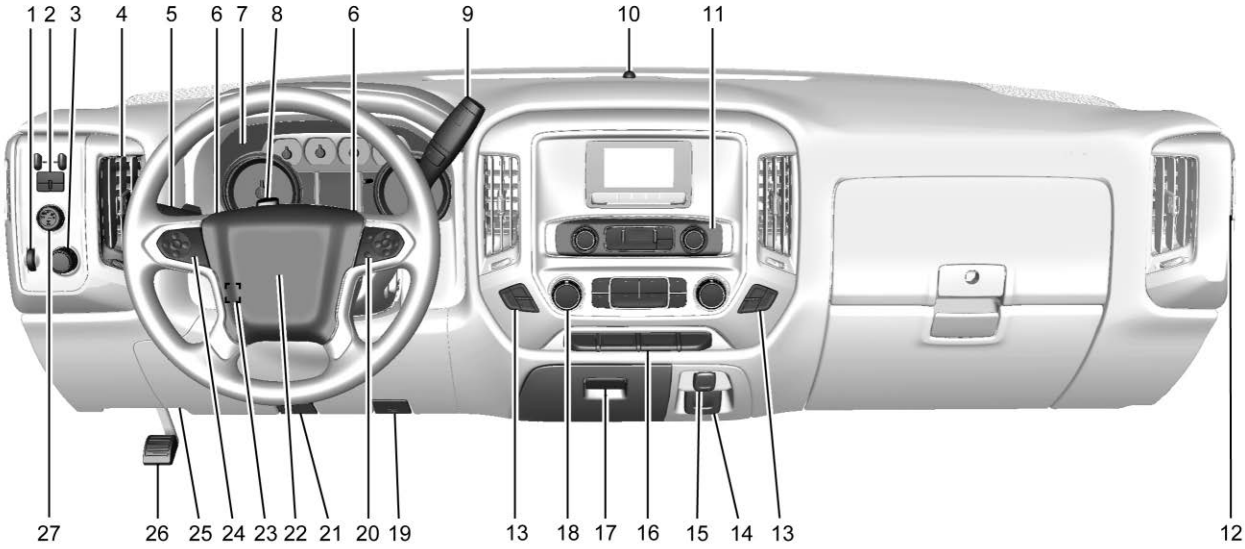

Base Shown, Uplevel Similar

1. *Instrument Panel Illumination Control* ⇨ *178*.
2. Integrated Trailer Brake Control (ITBC) System (If Equipped). See *Towing Equipment* ⇨ *306*.
3. *Exterior Lamp Controls* ⇨ *171*.

   Fog Lamps ⇨ *176* (If Equipped).
4. *Air Vents* ⇨ *223*.
5. Turn Signal Lever. See *Turn and Lane-Change Signals* ⇨ *175*.

   Windshield Wiper/Washer ⇨ *128*.
6. Favorite Switches (Out of View). See *Steering Wheel Controls* ⇨ *127*.

   Volume Switches (Out of View). See *Steering Wheel Controls* ⇨ *127*.
7. *Instrument Cluster* ⇨ *136*.
8. *Hazard Warning Flashers* ⇨ *175*.
9. Shift Lever. See *Automatic Transmission* ⇨ *256*.

   Tow/Haul Selector Button (If Equipped). See *Tow/Haul Mode* ⇨ *261*.

   Range Selection Mode (If Equipped). See *Manual Mode* ⇨ *259*.
10. Light Sensor. See *Automatic Headlamp System* ⇨ *174*.
11. *Infotainment* ⇨ *181*.
12. Passenger Airbag On-Off Switch (If Equipped) (Out of View). See *Airbag On-Off Switch* ⇨ *82*.
13. *Heated and Ventilated Front Seats* ⇨ *63* (If Equipped).
14. Power Outlet 110/120 Volt Alternating Current (If Equipped). See *Power Outlets* ⇨ *130*.
15. *Power Outlets* ⇨ *130* (If Equipped).
16. *Traction Control/Electronic Stability Control* ⇨ *273*.

    Pedal Adjust Switch (If Equipped). See *Adjustable Throttle and Brake Pedal* ⇨ *246*.

    Exterior Cargo Lamps ⇨ *177*.

    Park Assist Button (If Equipped). See *Assistance Systems for Parking or Backing* ⇨ *280*.

    Lane Keep Assist (LKA) (1500 Series) ⇨ *287* (If Equipped).

    Lane Departure Warning (LDW) (2500/3500 Series) ⇨ *286* (If Equipped).

    Hill Descent Control Switch (If Equipped). See *Hill Descent Control (HDC)* ⇨ *275*.

    Exhaust Brake Switch (If Equipped). See “Exhaust Brake” in the Duramax diesel supplement.

Power Take Off (PTO) Switch (If Equipped). See the Duramax diesel supplement.

Auxiliary Button (If Equipped). See *Add-On Electrical Equipment* ⇨ *318*.

Power Assist Steps ⇨ *42* (If Equipped).

17. *Instrument Panel Storage* ⇨ *122* (If Equipped).
18. *Climate Control Systems (with Heater Only)* ⇨ *216* or *Climate Control Systems (with Air Conditioning)* ⇨ *218* (If Equipped).

    Dual Automatic Climate Control System ⇨ *219* (If Equipped).
19. Parking Brake Release Handle (If Equipped). See *Parking Brake* ⇨ *271*.
20. *Steering Wheel Controls* ⇨ *127* (If Equipped).

    Driver Information Center (DIC) Controls (If Equipped). See *Driver Information Center (DIC) (Base Level)* ⇨ *156* or *Driver Information Center (DIC) (Uplevel)* ⇨ *156*.
21. Hood Release. See *Hood* ⇨ *327*.
22. *Horn* ⇨ *128*.
23. *Steering Wheel Adjustment* ⇨ *127* (Out of View).
24. *Cruise Control* ⇨ *276*.

    Heated Steering Wheel ⇨ *128* (If Equipped).

    Forward Collision Alert (FCA) System ⇨ *282* (If Equipped).
25. Data Link Connector (DLC) (Out of View). See *Malfunction Indicator Lamp* ⇨ *146*.
26. *Parking Brake* ⇨ *271*.
27. Electronic Transfer Case Knob (If Equipped). See *Four-Wheel Drive* ⇨ *262*.

    Card Holder (If Equipped). See *Instrument Panel Storage* ⇨ *122*.

Initial Drive Information

This section provides a brief overview about some of the important features that may or may not be on your specific vehicle.

For more detailed information, refer to each of the features which can be found later in this owner's manual.

Remote Keyless Entry (RKE) System

The Remote Keyless Entry (RKE) transmitter functions may work from up to 60 m (197 ft) away from the vehicle.

: Press to unlock the driver door. Press again within three seconds to unlock all remaining doors and the tailgate, if equipped.

: Press to lock all doors and the tailgate. Lock and unlock feedback can be personalized. See *Vehicle Personalization* ⇨ *160*.

: Press and release one time to initiate vehicle locator. Press and hold for at least three seconds to sound the panic alarm. Press again to cancel the panic alarm.

See *Keys* ⇨ *33* and *Remote Keyless Entry (RKE) System Operation* ⇨ *36*.

Remote Vehicle Start

If equipped, the engine can be started from outside of the vehicle.

Starting the Vehicle

1. Press and release on the RKE transmitter.
2. Immediately press and hold for at least four seconds or until the turn signal lamps flash.

Start the vehicle normally after entering.

When the vehicle starts, the parking lamps will turn on.

Remote start can be extended.

Canceling a Remote Start

To cancel a remote start, do one of the following:

- Press and hold until the parking lamps turn off.
- Turn on the hazard warning flashers.
- Turn the vehicle on and then off.

See *Remote Vehicle Start* ⇨ *38*.

Door Locks

There are several ways to lock and unlock the vehicle.

From outside, use the Remote Keyless Entry (RKE) transmitter or the key in the driver door.

From inside, use the power door locks or push down or pull up on the manual door locks.

From inside, pull the door handle once to unlock the door. Pull again to open the door.

Power Door Locks

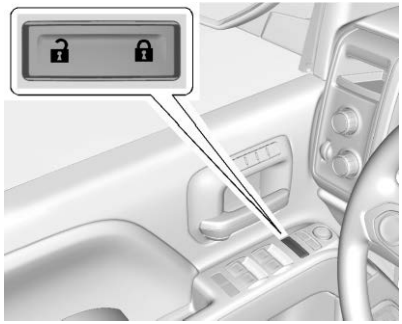

Crew/Double Cab Premium Trim Shown, Other Models Similar

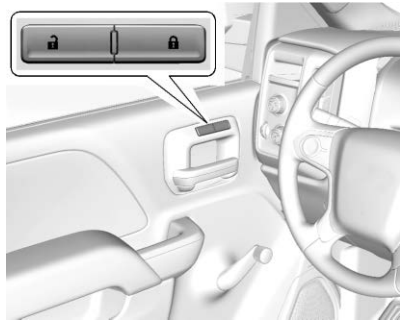

Base Trim

If equipped with power door locks:

🔒 **:** Press to lock the doors.

🔓 **:** Press to unlock the doors.

See *Door Locks* ⇨ *39* and *Power Door Locks* ⇨ *40*.

Windows

Power Windows

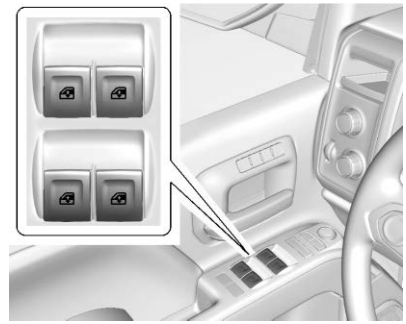

Crew/Double Cab Premium Trim Shown, Other Models Similar

Power windows work when the ignition is on, in ACC/ACCESSORY, or when Retained Accessory Power (RAP) is active. See *Retained Accessory Power (RAP)* ⇨ *251*.

Using the window switch, press to open or pull to close the window.

The windows may be temporarily disabled if they are used repeatedly within a short time.

Power Sliding Rear Window

If equipped, the power sliding rear window works when the ignition has been turned on or to ACC/ACCESSORY, or when Retained Accessory Power (RAP) is active. See *Retained Accessory Power (RAP)* ⇨ *251*.

Using the window switch, press to open or pull to close the window.

The power sliding rear window cannot be operated manually. See “Power Sliding Rear Window” in *Rear Windows* ⇨ *52*.

Seat Adjustment

Manual Seats

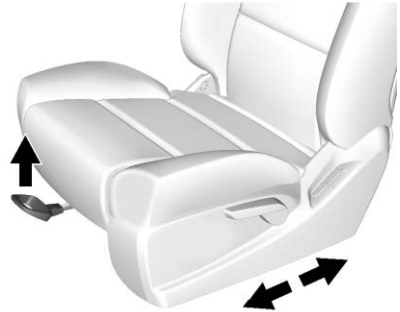

To adjust a manual seat:

1. Pull the handle at the front of the seat.
2. Slide the seat to the desired position and release the handle.
3. Try to move the seat back and forth to be sure it is locked in place.

See *Seat Adjustment* ⇨ *57*.

Power Seats

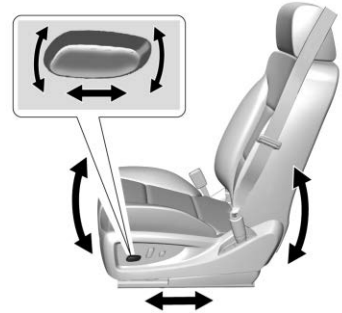

To adjust a power seat, if equipped:

- Move the seat forward or rearward by sliding the control forward or rearward.
- If equipped, raise or lower the front part of the seat cushion by moving the front of the control up or down.
- If equipped, raise or lower the seat by moving the rear of the control up or down.

See *Power Seat Adjustment* ⇨ *58*.

Lumbar Adjustment

Manual Lumbar

If equipped, move the lever up or down repeatedly to increase or decrease lumbar support.

See *Lumbar Adjustment* ⇨ *58*.

Power Lumbar

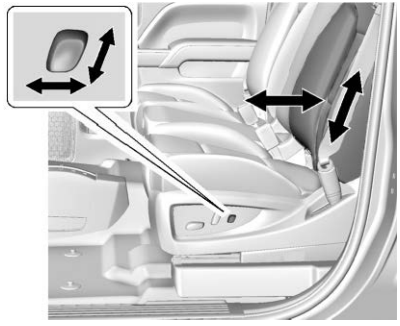

To adjust the power lumbar support, if equipped:

- Press and hold the control forward to increase or rearward to decrease upper and lower lumbar support at the same time.
- If equipped, press and hold the control up to increase upper lumbar support and decrease lower lumbar support.

  Press and hold the control down to increase lower lumbar support and decrease upper lumbar support.

See *Lumbar Adjustment* ⇨ *58*.

Reclining Seatbacks

Manual Reclining Seatbacks

To adjust a manual seatback:

1. Lift the lever.

   The seatback will automatically fold forward.
2. To recline, move the seatback rearward to the desired position, then release the lever to lock the seatback in place.
3. Push and pull on the seatback to make sure it is locked.

To return the seatback to the upright position:

1. Lift the lever fully without applying pressure to the seatback, and the seatback will return to the upright position.
2. Push and pull on the seatback to make sure it is locked.

See *Reclining Seatbacks* ⇨ *59*.

Power Reclining Seatbacks

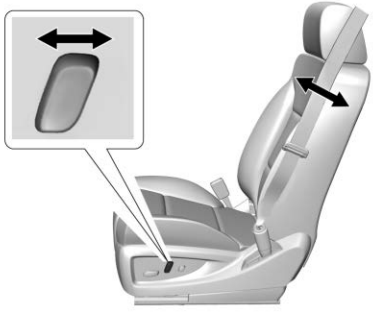

To recline a power seatback, if equipped:

- Tilt the top of the control rearward to recline.
- Tilt the top of the control forward to raise.

See *Reclining Seatbacks* ⇨ *59*.

Memory Features

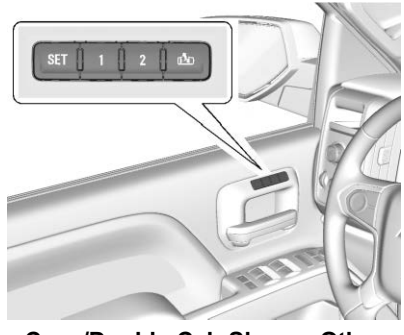

Crew/Double Cab Shown, Other Models Similar

If equipped, memory seats allow two drivers to save and recall their unique seat positions for driving the vehicle, and a shared exit position for getting out of the vehicle. Other feature positions may also be saved, such as power mirrors and power steering wheel, if equipped.

Memory positions are linked to RKE transmitter 1 or 2 for automatic memory recalls.

Before saving, adjust all available memory feature positions. Turn the ignition on and then press and release SET; a beep will sound. Then immediately press and hold 1, 2, or (Exit) until two beeps sound. To manually recall these positions, press and hold 1, 2, or until the saved position is reached.

When Auto Memory Recall is enabled in vehicle personalization, positions previously saved to memory buttons 1 and 2 are recalled when the ignition is changed from off to on or ACC/ACCESSORY.

When Easy Exit Options is enabled in vehicle personalization, the feature automatically recalls the previously saved exit position when exiting the vehicle.

Memory adjustments may not be available upon delivery or after service until steps in “Saving Memory Positions” section are performed. See *Memory Seats* ⇨ *60*.

Heated and Ventilated Seats

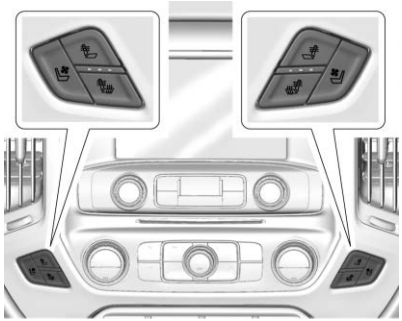

Heated and Ventilated Seat Buttons Shown, Heated Seat Buttons Similar

If equipped, the buttons are on the center stack. To operate, the engine must be running.

Press to heat the driver or passenger seatback only.

Press to heat the driver or passenger seat cushion and seatback.

Press to ventilate the driver or passenger seat.

See *Heated and Ventilated Front Seats* ⇨ *63*.

Head Restraint Adjustment

Do not drive until the head restraints for all occupants are installed and adjusted properly.

To achieve a comfortable seating position, change the seatback recline angle as little as necessary while keeping the seat and the head restraint height in the proper position.

See *Head Restraints* ⇨ *56* and *Seat Adjustment* ⇨ *57*.

Seat Belts

Refer to the following sections for important information on how to use seat belts properly:

- *Seat Belts* ⇨ *67*
- *How to Wear Seat Belts Properly* ⇨ *68*
- *Lap-Shoulder Belt* ⇨ *70*
- *Lower Anchors and Tethers for Children (LATCH System)* ⇨ *98*

Passenger Sensing System

The passenger sensing system, if equipped, turns off the front outboard passenger frontal airbag under certain conditions. No other airbag is affected by the passenger sensing system.

If the vehicle has one of the indicators pictured in the following illustrations, then the vehicle has a passenger sensing system for the front outboard passenger position unless there is an airbag off switch on the instrument panel endcap.

If there is an airbag off switch, the vehicle does not have a passenger sensing system. See *Airbag On-Off Switch* ⇨ *82* for more information.

The passenger airbag status indicator will be visible on the overhead console when the vehicle is started.

United States

Canada

See *Passenger Sensing System* ⇨ *84* for important information.

Mirror Adjustment

Using hood-mounted air deflectors and add-on convex mirror attachments could decrease mirror performance.

Exterior Mirrors

Manual Mirrors

If equipped, adjust manual mirrors by moving them up and down or left to right to see a little of the side of the vehicle and to have a clear view behind the vehicle.

See *Manual Mirrors* ⇨ *45*.

Power Mirrors

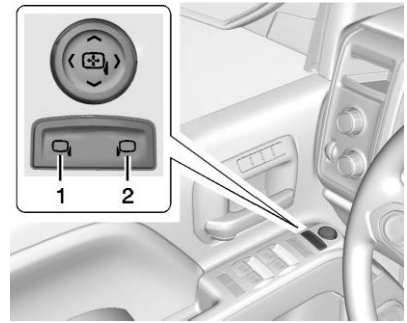

If equipped with power mirrors:

1. Press (1) or (2) to select the driver or passenger side mirror.

2. Press the arrows on the control pad to move the mirror up, down, right, or left.
3. Adjust each outside mirror so that a little of the vehicle and the area behind it can be seen.
4. Keep the selector switch in the center position when not adjusting either outside mirror.

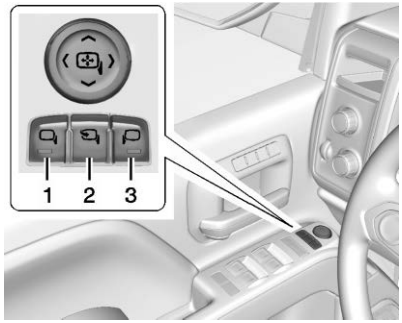

1. Press (1) or (3) to select the driver or passenger side mirror.
2. Press the arrows on the control pad while the indicator light on the (1) or (3) button is illuminated, to move the mirror up, down, right, or left.
3. Adjust each outside mirror so that a little of the vehicle and the area behind it can be seen.
4. Press either (1) or (3) again to deselect the mirror.

See *Power Mirrors* ⇨ *46*.

If equipped with power folding mirrors:

1. Press (2) to fold the mirrors out to the driving position.
2. Press (2) again to fold the mirrors in to the folded position.

For manual, power, and auto folding mirrors, see *Folding Mirrors* ⇨ *47*.

The mirrors may also include a memory function that works with the memory seats. See *Memory Seats* ⇨ *60*.

Interior Mirror

Adjustment

Adjust the mirror for a clear view of the area behind the vehicle.

Manual Dimming Rearview Mirror

If equipped, push the tab forward for daytime use and pull it for nighttime use to avoid glare from the headlamps from behind. See *Manual Rearview Mirror* ⇨ *49*.

Automatic Dimming Rearview Mirror

If equipped, the mirror will automatically reduce the glare of the headlamps from behind. The dimming feature comes on when the vehicle is started.

See *Automatic Dimming Rearview Mirror* ⇨ *50*.

Steering Wheel Adjustment

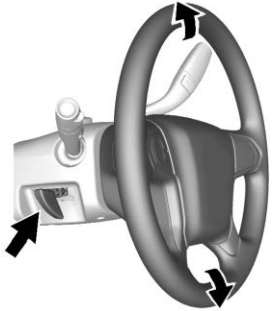

To adjust the steering wheel:

1. Hold the steering wheel and pull the lever.
2. Move the steering wheel up or down.
3. Release the lever to lock the wheel in place.

Tilt and Telescoping Steering Wheel

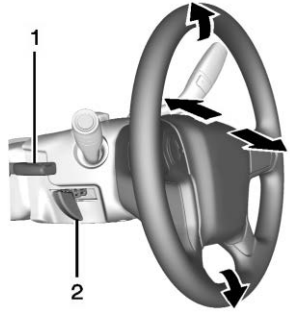

To adjust the tilt and telescoping steering wheel, if equipped:

1. Push the lever (1) down to move the steering wheel forward or rearward. Lift the lever up to lock the wheel in place.
2. Pull the lever (2) toward you to move the steering wheel up or down, then release the lever to lock the wheel in place.

Do not adjust the steering wheel while driving.

Throttle and Brake Pedal Adjustment

If equipped, the position of the throttle and brake pedals can be changed.

The switch used to adjust the pedals is on the center stack, below the climate controls.

Lift the switch up to move the pedals closer to your body. Press the switch down to move the pedals away.

See *Adjustable Throttle and Brake Pedal* ⇨ *246*.

Interior Lighting

Dome Lamps

There are dome lamps in the overhead console and the headliner, if equipped.

To change the dome lamp settings, press the following:

OFF : Turns the lamps off, even when a door is open.

DOOR : The lamps come on automatically when a door is opened.

ON : Turns all dome lamps on.

Reading Lamps

There are reading lamps in the overhead console and the headliner, if equipped. To operate, the ignition must be on or in ACC/ACCESSORY or using Retained Accessory Power (RAP).

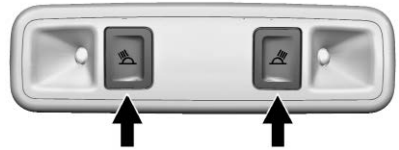

Press or next to each reading lamp to turn it on or off.

For more information about interior lighting, see *Instrument Panel Illumination Control* ⇨ *178*.

Exterior Lighting

The exterior lamp control is on the instrument panel to the left of the steering wheel.

⏻ **:** Turns off the automatic headlamps and Daytime Running Lamps (DRL). Turn the headlamp control to ⏻ again to turn the automatic headlamps or DRL back on.

For vehicles first sold in Canada, off will only work when the vehicle is in P (Park).

AUTO : Automatically turns on the headlamps, parking lamps, taillamps, instrument panel lights, roof marker lamps (if equipped), front/rear sidemarker lamps, and license plate lamps.

: Turns on the parking lamps including all lamps, except the headlamps.

: Turns on the headlamps together with the parking lamps and instrument panel lights.

See:

- *Exterior Lamp Controls* ⇨ *171*.
- *Daytime Running Lamps (DRL)* ⇨ *174*.
- *Fog Lamps* ⇨ *176*.

Windshield Wiper/Washer

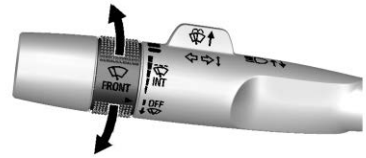

The windshield wiper control is on the turn signal lever.

The windshield wipers are controlled by turning the band with on it.

: Fast wipes.

: Slow wipes.

INT : Turn the band up for more frequent wipes or down for less frequent wipes.

OFF : Turns the windshield wipers off.

: For a single wipe, turn to , then release. For several wipes, hold the band on longer.

: Push the paddle at the top of the lever to spray washer fluid on the windshield.

See *Windshield Wiper/Washer* ⇨ *128*.

Climate Controls

These systems control the heating, cooling, and ventilation.

Climate Control System (with Heater Only)

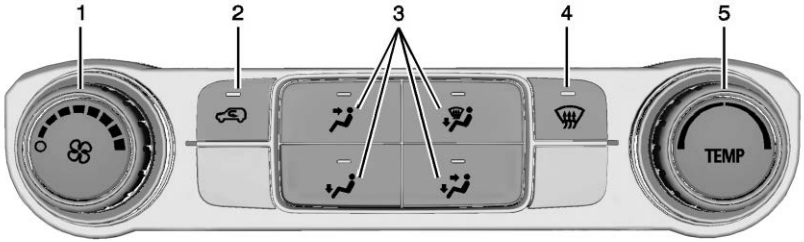

1. Fan Control
2. Air Recirculation
3. Air Delivery Mode Control
4. Defrost
5. TEMP (Temperature Control)

Climate Control System (with Air Conditioning)

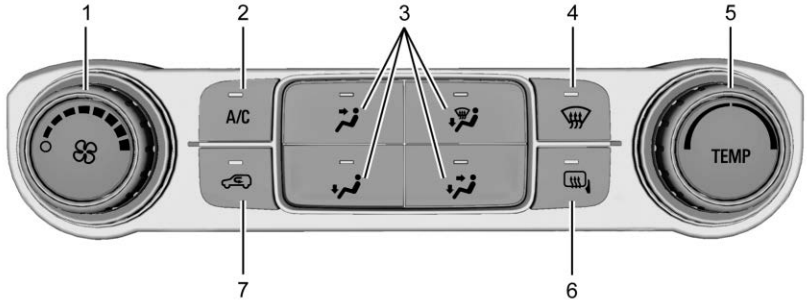

1. Fan Control
2. A/C (Air Conditioning)
3. Air Delivery Mode Control
4. Defrost
5. TEMP (Temperature Control)
6. REAR (Rear Window Defogger, If Equipped)

   (Outside Heated Mirror, If Equipped)

   (Outside Air, If Equipped)
7. Air Recirculation

Dual Automatic Climate Control System

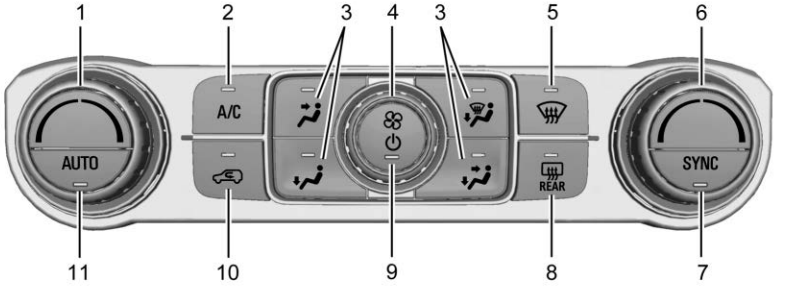

1. Driver Temperature Control
2. A/C (Air Conditioning)
3. Air Delivery Mode Controls
4. Fan Control
5. Defrost
6. Passenger Temperature Control
7. SYNC (Synchronized Temperature)
8. Rear Window Defogger
9. Power Button
10. Air Recirculation
11. AUTO (Automatic Operation)

See *Climate Control Systems (with Heater Only)* ⇨ *216* or *Climate Control Systems (with Air Conditioning)* ⇨ *218* or *Dual Automatic Climate Control System* ⇨ *219* (If Equipped).

Transmission

Range Selection Mode

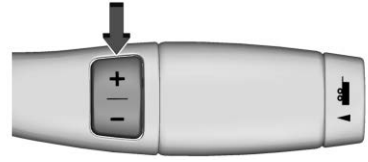

The Range Selection Mode switch, if equipped, is on the shift lever.

1. To enable the Range Selection feature, move the shift lever to the L (Manual Mode) position. The current range will appear next to the L. This is the highest attainable range with all lower gears accessible. As an example, when 5 (Fifth) gear is selected, 1 (First) through 5 (Fifth) gears are available.
2. Press the plus/minus buttons on the shift lever to select the desired range of gears for current driving conditions. See *Manual Mode* ⇨ *259*.

While using Range Selection Mode, cruise control and the Tow/Haul Mode can be used.

Grade Braking is not available when Range Selection Mode is active. See *Tow/Haul Mode* ⇨ *261*.

Four-Wheel Drive

If equipped with four-wheel drive, the engine's driving power can be sent to all four wheels for extra traction.

Transfer Case Controls

The vehicle will have one of the following three styles of transfer case controls. Use these controls to shift into and out of the different four-wheel drive modes.

Manual Transfer Case

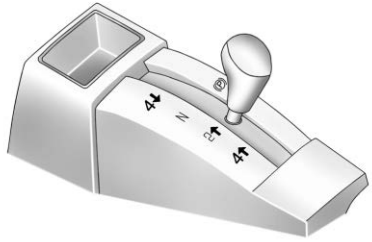

This transfer case shift lever is on the floor to the right of the driver.

Electronic Transfer Case

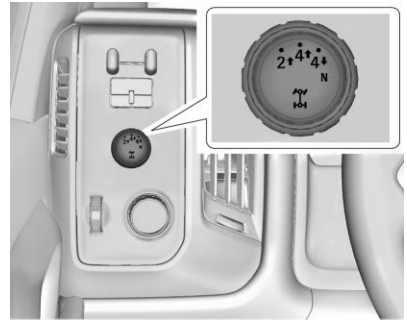

This transfer case knob is to the left of the steering column.

Automatic Transfer Case

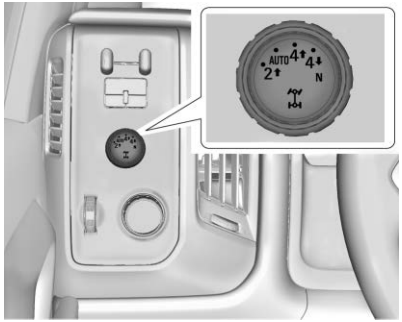

This transfer case knob is to the left of the steering column.

The different drive options that may be available are described following.

2 ↑ (Two-Wheel Drive High) : This setting is used for driving in most street and highway situations.

AUTO (Automatic Four-Wheel Drive) : This setting is ideal for use when road surface traction conditions are variable.

Do not use AUTO mode to park on a steep grade with poor traction such as ice, snow, mud or gravel. In AUTO mode only the rear wheels will hold the vehicle from sliding when parked. If parking on a steep grade, use 4 ↑ to keep all four wheels engaged.

4 ↑ (Four-Wheel Drive High) : Use this setting when extra traction is needed, such as on snowy or icy roads or in most off-road situations.

N (Neutral) : Shift to this setting only when towing the vehicle. See *Recreational Vehicle Towing* ⇨ *413* or *Towing the Vehicle* ⇨ *413*.

4 ↓ (Four-Wheel Drive Low) : This setting sends maximum power to all four wheels. Choose 4↓ when driving in deep sand, mud, or snow, and while climbing or descending steep hills.

See *Four-Wheel Drive* ⇨ *262*.

Vehicle Features

Infotainment System

The base radio information is included in this manual. See the infotainment manual for information on the uplevel radios, audio players, phone, navigation system, Rear Seat Entertainment (RSE), and voice or speech recognition, if equipped.

Radio(s)

Base Radio

⏻ **:** Press to turn the system on. Press and hold to turn it off. When on, press to mute; press again to unmute. Turn to increase or decrease the volume.

⌂ **:** Press to go to the Home Page.

⏮ **:** Press to seek the previous station or track.

⏭ **:** Press to seek the next station or track.

See *Overview* ⇨ *183*.

Setting the Clock

See *Clock* ⇨ *129*.

Satellite Radio

Vehicles with a SiriusXM satellite radio tuner and a valid SiriusXM satellite radio subscription can receive SiriusXM programming.

SiriusXM Satellite Radio Service

SiriusXM is a satellite radio service based in the 48 contiguous United States and 10 Canadian provinces. SiriusXM satellite radio has a wide variety of programming and commercial-free music, coast to coast, and in digital-quality sound. A fee is required to receive the SiriusXM service.

For more information refer to:

- www.siriusxm.com or call 1-888-601-6296 (U.S.).
- www.siriusxm.ca or call 1-877-438-9677 (Canada).

See *Satellite Radio* ⇨ *187*.

Portable Audio Devices

This vehicle may have a 3.5 mm (1/8 in) auxiliary input jack and USB ports in the center console or armrest. There may be USB ports in the center stack below the climate controls. External devices such as iPods, laptop computers, MP3 players, and USB storage devices may be connected, depending on the audio system.

See *USB Port* ⇨ *190* and *Auxiliary Jack* ⇨ *195*.

Bluetooth

The Bluetooth system allows users with a Bluetooth-enabled cell phone to make and receive hands-free calls using the vehicle audio system and controls.

The Bluetooth-enabled cell phone must be paired with the in-vehicle Bluetooth system before it can be used in the vehicle. Not all phones will support all functions.

See *Bluetooth (Overview)* ⇨ *203* or *Bluetooth (Infotainment Controls)* ⇨ *205*.

Steering Wheel Controls

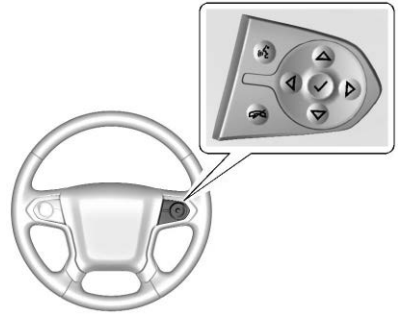

If equipped, some audio controls can be adjusted at the steering wheel.

: If equipped with OnStar® or a Bluetooth® system, press to interact with those systems. See *OnStar Overview* ⇨ *464*, *Bluetooth (Overview)* ⇨ *203* or *Bluetooth (Infotainment Controls)* ⇨ *205*, or “Bluetooth (Overview)” in the infotainment manual.

: Press to reject an incoming call or end a current call. Press to mute or unmute the infotainment system when not on a call.

◁ **or** ▷ **:** Press to go to the previous or next menu option.

△ **or** ▽ **:** Press to go to the next or previous selection.

✓ **:** Press to select a highlighted menu option.

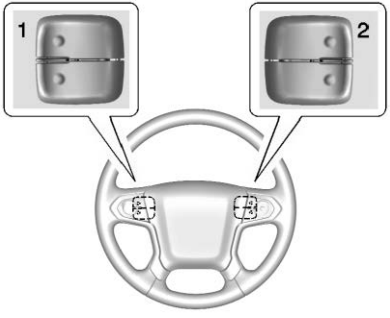

The favorite and volume switches are on the back of the steering wheel.

1. Favorite: When on a radio source, press to select the next or previous favorite. When on a media source, press to select the next or previous track.
2. Volume: Press to increase or decrease the volume.

See *Steering Wheel Controls* ⇨ *127*.

Cruise Control

: Press to turn the system on or off. The indicator light is white when cruise control is on and turns off when cruise control is off.

+RES : If there is a set speed in memory, press briefly to resume to that speed or press and hold to accelerate. If cruise control is already active, use to increase vehicle speed.

SET− : Press briefly to set the speed and activate cruise control. If cruise control is already active, use to decrease vehicle speed.

: Press to disengage cruise control without erasing the set speed from memory.

See *Cruise Control* ⇨ *276*.

Driver Information Center (DIC)

The DIC display is in the instrument cluster. It shows the status of many vehicle systems.

If the vehicle has the base level instrument cluster, the trip odometer reset stem is used to operate the DIC.

If the vehicle has the uplevel instrument cluster, the right steering wheel controls are used to operate the DIC.

△ **or** ▽ **:** Press to move up or down in a list.

◁ **or** ▷ **:** Press to move between the interactive display zones in the cluster.

✓ **:** Press to open a menu or select a menu item. Press and hold to reset values on certain screens.

See *Driver Information Center (DIC) (Base Level)* ⇨ *154* or *Driver Information Center (DIC) (Uplevel)* ⇨ *156*.

Forward Collision Alert (FCA) System

If equipped, FCA may help avoid or reduce the harm caused by front-end crashes. FCA provides a green indicator, , when a vehicle is detected ahead. This indicator displays amber when following a vehicle much too closely. When approaching a vehicle ahead too quickly, FCA provides a flashing red alert on the windshield and rapidly beeps or pulses the driver seat.

See *Forward Collision Alert (FCA) System* ⇨ *282*.

Forward Automatic Braking (FAB) (1500 Series)

If the vehicle has Forward Collision Alert (FCA), it also has FAB, which includes Intelligent Brake Assist (IBA). When the system detects a vehicle ahead in your path that is traveling in the same direction that you may be about to crash into, it can provide a boost to braking or automatically brake the vehicle. This can help avoid or lessen the severity of crashes when driving in a forward gear.

See *Forward Automatic Braking (FAB) (1500 Series)* ⇨ *285*.

Lane Departure Warning (LDW)

If equipped, LDW may help avoid unintentional lane departures at speeds of 56 km/h (35 mph) or greater. LDW uses a camera sensor to detect the lane markings. The LDW light, , is green if a lane marking is detected. If the vehicle departs the lane, the light will change to amber and flash. In addition, beeps will sound or the driver seat will pulse.

See *Lane Departure Warning (LDW) (2500/3500 Series)* ⇨ *286*.

Lane Keep Assist (LKA)

If equipped, LKA may help avoid crashes due to unintentional lane departures. It may assist by gently turning the steering wheel if the vehicle approaches a detected lane marking without using a turn signal in that direction. It may also provide a Lane Departure Warning (LDW) alert as the lane marking is crossed. The system will not assist or alert if it detects that you are actively steering. Override LKA by turning the steering wheel. LKA uses a camera to detect lane markings between 60 km/h (37 mph) and 180 km/h (112 mph).

See *Lane Departure Warning (LDW) (2500/3500 Series)* ⇨ *286* and *Lane Keep Assist (LKA) (1500 Series)* ⇨ *287*.

Rear Vision Camera (RVC)

If equipped, RVC shows a view of the area behind the vehicle on the infotainment display when the vehicle is shifted into R (Reverse) to aid with parking and low-speed backing maneuvers.

See *Assistance Systems for Parking or Backing* ⇨ *280*.

Park Assist

If equipped, Rear Park Assist (RPA) uses sensors on the rear bumper to assist with parking and avoiding objects while in R (Reverse). It operates at speeds less than 8 km/h (5 mph). RPA may show a warning triangle on the infotainment display and a graphic on the instrument cluster to provide the object distance. In addition, multiple beeps or seat pulses may occur if very close to an object.

The vehicle may also have the Front Park Assist system.

See *Assistance Systems for Parking or Backing* ⇨ *280*.

Power Outlets

Accessory power outlets can be used to plug in electrical equipment, such as a cell phone, MP3 player, etc.

The vehicle may have up to four accessory power outlets.

Vehicles with a Center Console

- One or two in front of the cupholders on the center console
- One inside the center console
- One on the rear of the center console

Vehicles with Bench Seats

- One on the center stack below the climate control system
- One or two in the storage area on the bench seat

Lift the cover to access and replace when not in use.

See *Power Outlets* ⇨ *130*.

Universal Remote System

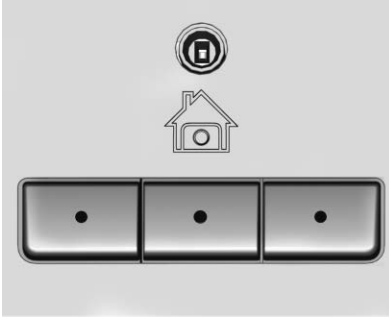

If equipped with the Universal Remote system, these buttons will be in the front overhead console.

This system provides a way to replace up to three remote control transmitters used to activate devices such as garage door openers, security systems, and home automation devices.

See *Universal Remote System* ⇨ *167*.

Sunroof

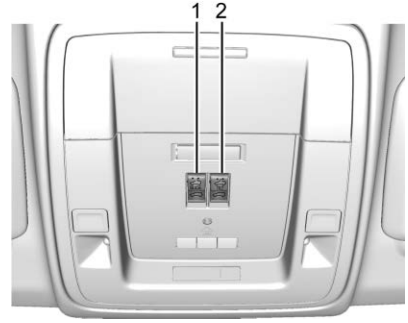

1. SLIDE Switch
2. TILT Switch

If equipped, the sunroof operates when the ignition is on or in ACC/ACCESSORY, or when Retained Accessory Power (RAP) is active. See *Retained Accessory Power (RAP)* ⇨ *251*.

Slide Switch

Express-Open/Express-Close : To express-open the sunroof, fully press and release (1). Press and release (1) again to stop the movement. To express-close the sunroof, fully press and release (1). Press and release (1) again to stop the movement.

Open/Close (Manual Mode) : To open the sunroof, press and hold (1). Release (1) to stop the movement. Press and hold (1) to close the sunroof. Release (1) to stop the movement.

Tilt Switch

Vent : From the closed position, press (2) to vent the sunroof. Press (2) to close the vent.

When the sunroof is opened, an air deflector will automatically raise. The air deflector will retract when the sunroof is closed.

The sunroof also has a sunshade, which can be pulled forward to block sun rays. The sunshade must be opened and closed manually.

The sunroof is equipped with an automatic reversal system. See *Sunroof* ⇨ *53*.

Performance and Maintenance

Traction Control/ Electronic Stability Control

The vehicle has a Traction Control System (TCS) that limits wheel spin and the StabiliTrak/Electronic Stability Control (ESC) system that assists with directional control of the vehicle in difficult driving conditions. Both systems come on automatically when the vehicle is started and begins to move.

- To turn off TCS, press and release on the center stack. The traction off light displays in the instrument cluster. The appropriate Driver Information Center (DIC) message displays.
- To turn off both TCS and StabiliTrak/ESC, press and hold until and illuminate in the instrument cluster and the appropriate DIC message displays.
- Press and release again to turn on both systems.

StabiliTrak/ESC will automatically turn on if the vehicle exceeds 56 km/h (35 mph). Traction control will remain off.

See *Traction Control/Electronic Stability Control* ⇨ *273*.

Tire Pressure Monitor

This vehicle may have a Tire Pressure Monitor System (TPMS).

The low tire pressure warning light alerts to a significant loss in pressure of one of the vehicle's tires. If the warning light comes on, stop as soon as possible and inflate the tires to the recommended pressure shown on the Tire and Loading Information label. See *Vehicle Load Limits* ⇨ *238*. The warning light will remain on until the tire pressure is corrected.

The low tire pressure warning light may come on in cool weather when the vehicle is first started, and then turn off as the vehicle is driven. This may be an early indicator that the tire pressures are getting low and the tires need to be inflated to the proper pressure.

The TPMS does not replace normal monthly tire maintenance. Maintain the correct tire pressures.

See *Tire Pressure Monitor System* ⇨ *381*.

Tire Fill Alert (If Equipped)

This feature provides visual and audible alerts outside the vehicle to help when inflating an underinflated tire to the recommended cold tire pressure. See “Tire Fill Alert (If Equipped)” under *Tire Pressure Monitor Operation* ⇨ *382*.

Fuel (Diesel)

For diesel vehicles, do not use gasoline. See “Fuel for Diesel Engines” in the Duramax diesel supplement.

Fuel (Gasoline)

Regular Unleaded Fuel

Use only Regular 87 octane — (R+M)/2 — or higher unleaded gasoline in your vehicle. TOP TIER Detergent Gasoline is recommended. Do not use gasoline with an octane rating lower as it will result in reduced performance and lower fuel economy. See *Recommended Fuel* ⇨ *290*.

E85 or FlexFuel

FlexFuel Possible

Certain models are compatible with E85 fuel. See *E85 or FlexFuel* ⇨ *291*.

Engine Oil Life System

The engine oil life system calculates engine oil life based on vehicle use and, on most vehicles, displays a DIC message when it is necessary to change the engine oil and filter. The oil life system should be reset to 100% only following an oil change.

Resetting the Oil Life System

To reset the engine oil life system:

1. Display OIL LIFE REMAINING on the DIC. See *Driver Information Center (DIC) (Base Level)* ⇨ *154* or *Driver Information Center (DIC) (Uplevel)* ⇨ *156*. If the vehicle does not have DIC buttons, the vehicle must be in P (Park) to access this display.
2. Press and hold ✓ on the DIC, or the trip odometer reset stem if the vehicle does not have DIC buttons, for several seconds. The oil life will change to 100%.

The oil life system can also be reset as follows:

1. Display OIL LIFE REMAINING on the DIC.
   See *Driver Information Center (DIC) (Base Level)* ⇨ *154* or *Driver Information Center (DIC) (Uplevel)* ⇨ *156*.

2. Fully press the accelerator pedal slowly three times within five seconds.
3. If the display changes to 100%, the system is reset.

See *Engine Oil Life System* ⇨ *334*.

Driving for Better Fuel Economy

Driving habits can affect fuel mileage. Here are some driving tips to get the best fuel economy possible:

- Set the climate controls to the desired temperature after the engine is started, or turn them off when not required.
- Avoid fast starts and accelerate smoothly.
- Brake gradually and avoid abrupt stops.
- Avoid idling the engine for long periods of time.
- When road and weather conditions are appropriate, use cruise control.
- Always follow posted speed limits or drive more slowly when conditions require.
- Keep vehicle tires properly inflated.
- Combine several trips into a single trip.
- Replace the vehicle's tires with the same TPC Spec number molded into the tire's sidewall near the size.
- Follow recommended scheduled maintenance.

Roadside Assistance Program

U.S.: 1-800-243-8872

TTY Users (U.S. Only): 1-888-889-2438

Canada: 1-800-268-6800

New Chevrolet owners are automatically enrolled in the Roadside Assistance Program.

See *Roadside Assistance Program* ⇨ *454*.

Keys, Doors, and Windows

Keys and Locks
Keys 33
Remote Keyless Entry (RKE) System 36
Remote Keyless Entry (RKE) System Operation 36
Remote Vehicle Start 38
Door Locks 39
Power Door Locks 40
Automatic Door Locks 40
Lockout Protection 41
Safety Locks 41

Doors
Tailgate 42
Power Assist Steps 42

Vehicle Security
Vehicle Security 43
Vehicle Alarm System 43
Immobilizer 44
Immobilizer Operation 45

Exterior Mirrors
Convex Mirrors 45
Manual Mirrors 45
Trailer-Tow Mirrors 46
Power Mirrors 46
Folding Mirrors 47
Heated Mirrors 48
Automatic Dimming Mirror 48
Blind Spot Mirrors 48
Reverse Tilt Mirrors 49

Interior Mirrors
Interior Rearview Mirrors 49
Manual Rearview Mirror 49
Automatic Dimming Rearview Mirror 50

Windows
Windows 50
Manual Windows 50
Power Windows 50
Rear Windows 52
Sun Visors 53

Roof
Sunroof 53

Keys and Locks

Keys

⚠ Warning

Leaving children in a vehicle with the ignition key is dangerous and children or others could be seriously injured or killed. They could operate the power windows or other controls or make the vehicle move. The windows will function with the keys in the ignition, and children or others could be caught in the path of a closing window. Do not leave children in a vehicle with the ignition key.

⚠ Warning

If the key is unintentionally rotated while the vehicle is running, the ignition could be moved out of the RUN position. This could be caused by heavy items hanging from the key ring, or by large or long items attached to the key ring that could be contacted by the driver or steering wheel. If the ignition moves out of the RUN position, the engine will shut off, braking and steering power assist may be

(Continued)

Warning (Continued)

impacted, and airbags may not deploy. To reduce the risk of unintentional rotation of the ignition key, do not change the way the ignition key and Remote Keyless Entry (RKE) transmitter, if equipped, are connected to the provided key rings.

The ignition key and key rings, and RKE transmitter, if equipped, are designed to work together as a system to reduce the risk of unintentionally moving the key out of the RUN position. The ignition key has a small hole to allow attachment of the provided key ring. It is important that any replacement ignition keys have a small hole. See your dealer if a replacement key is required.

The combination and size of the rings that came with your keys were specifically selected for your vehicle. The rings are connected to the key like two links of a chain to reduce the risk of unintentionally moving the key out of the RUN position. Do not add any additional items to the ring attached to the ignition key. Attach additional items only to the second ring, and limit added items to a few essential keys or small, light items no larger than an RKE transmitter.

Interference from radio-frequency identification (RFID) tags may prevent the key from starting the vehicle. Keep RFID tags away from the key when starting the vehicle.

The key is used for the ignition, all door locks, and the glove box.

If equipped with memory seats, keys 1 and 2 are linked to seating positions of memory 1 or 2. See *Memory Seats* ⇨ *60*.

Programming Keys

Follow these procedures to program up to eight keys to the vehicle.

Programming with Two Recognized Keys

To program a new key:

1. Insert the original, already programmed key in the ignition and turn the ignition on.
2. Turn the ignition off, and remove the key.
3. Quickly, within five seconds, insert the second original already programmed key in the ignition and turn the ignition on.
4. Turn the ignition off, and remove the key.
5. Insert the key to be programmed and turn the ignition on within five seconds.
6. After a few seconds, the security light will turn off once the key has been programmed.
7. Repeat Steps 1–5 if additional keys are to be programmed.

If a key is lost or damaged, see your dealer to have a new key made.

Programming without Recognized Keys

Program a new key to the vehicle when a recognized key is not available. Canadian regulations require that owners see their dealer.

If two currently recognized keys are not available, follow this procedure to program the first key.

This procedure will take approximately 30 minutes to complete for the first key. The vehicle must be off and all of the keys you wish to program must be with you.

1. Insert the new vehicle key into the ignition.
2. Turn the ignition on. The security light will come on.
3. Wait 10 minutes until the security light turns off.
4. Turn the ignition off.
5. Repeat Steps 2–4 two more times. After the third time, turn the ignition on; the key is

learned and all previously known keys will no longer work with the vehicle.

6. To learn a second key, turn the ignition off, insert the second key to be learned, and turn the ignition on.

After two keys are learned, the remaining keys can be learned by following the procedure in "Programming with Two Recognized Keys."

The key has a bar-coded key tag that the dealer or qualified locksmith can use to make new keys. Store this information in a safe place, not in the vehicle.

See your dealer if a replacement key or additional key is needed.

If it becomes difficult to turn a key, inspect the key blade for debris. Periodically clean with a brush or pick.

If locked out of the vehicle, see *Roadside Assistance Program* ⇨ *454*.

With an active OnStar or connected service plan, an OnStar Advisor may remotely unlock the vehicle. See *OnStar Overview* ⇨ *464*.

Remote Keyless Entry (RKE) System

See *Radio Frequency Statement* ⇨ *460*.

If there is a decrease in the Remote Keyless Entry (RKE) operating range:

- Check the distance. The transmitter may be too far from the vehicle.
- Check the location. Other vehicles or objects may be blocking the signal.
- Check the transmitter's battery. See "Battery Replacement" later in this section.
- If the transmitter is still not working correctly, see your dealer or a qualified technician for service.

Remote Keyless Entry (RKE) System Operation

The RKE transmitter functions may work up to 60 m (197 ft) away from the vehicle.

Other conditions can affect the performance of the transmitter. See *Remote Keyless Entry (RKE) System* ⇨ *36*.

With Remote Start (without Remote Start Similar)

: If equipped, is used to start the engine from outside the vehicle using the RKE transmitter. See *Remote Vehicle Start* ⇨ *38*.

: Press to lock all doors and the tailgate.

If enabled, the turn signal lamps flash once to indicate locking has occurred. If enabled, the horn chirps when is pressed again within three seconds. See *Vehicle Personalization* ⇨ *160*.

Pressing arms the alarm system. See *Vehicle Alarm System* ⇨ *43*.

If equipped with auto mirror folding, pressing and holding for one second will fold the mirrors, if enabled.
See *Folding Mirrors* ⇨ *47* and *Vehicle Personalization* ⇨ *160*.

: Press once to unlock only the driver door. If is pressed again within three seconds, all remaining doors and the tailgate unlock. The interior lamps may come on and stay on for 20 seconds or until the ignition is turned on.

If enabled, the turn signal lamps flash twice to indicate unlocking has occurred. If enabled, the exterior lamps may turn on. See *Vehicle Personalization* ⇨ *160*.

Pressing on the RKE transmitter disarms the alarm system. See *Vehicle Alarm System* ⇨ *43*.

If equipped with auto mirror folding, pressing and holding for one second will unfold the mirrors, if enabled.
See *Folding Mirrors* ⇨ *47* and *Vehicle Personalization* ⇨ *160*.

If equipped, press, release, and then press and hold to open all of the windows. Pressing the button again will stop the windows. See *Vehicle Personalization* ⇨ *160*.

: Press and release one time to initiate vehicle locator. The turn signal lamps flash and the horn sounds three times.

Press and hold for at least three seconds to sound the panic alarm. The turn signal lamps flash and the horn sounds repeatedly for 30 seconds. The alarm turns off when the ignition is turned on or is pressed again. The ignition must be off for the panic alarm to work.

Programming Transmitters to the Vehicle

Only RKE transmitters programmed to this vehicle will work. If a transmitter is lost or stolen, a replacement can be purchased and programmed through your dealer. Each vehicle can have up to eight transmitters programmed to it. See your dealer for transmitter programming.

Battery Replacement

Replace the battery in the transmitter soon if the REPLACE BATTERY IN REMOTE KEY message displays in the Driver Information Center (DIC).

Caution

When replacing the battery, do not touch any of the circuitry on the transmitter. Static from your body could damage the transmitter.

To replace the battery:

1. Separate and remove the back cover of the transmitter with a flat, thin object, such as a coin.

2. Press and slide the battery down toward the pocket of the transmitter in the direction of the key ring. Do not use a metal object.
3. Remove the battery.
4. Insert the new battery, positive side facing up. Replace with a CR2032 or equivalent battery.
5. Push together the transmitter back cover top side first, and then the bottom toward the key ring.

Remote Vehicle Start

If equipped with the remote start feature, the climate control system will come on when the vehicle is started remotely, depending on the outside temperature.

The rear defog and heated and ventilated seats, if equipped, may also come on.
See *Heated and Ventilated Front Seats* ⇨ *63* and *Vehicle Personalization* ⇨ *160*.

Laws in some communities may restrict the use of remote starters. Check local regulations for any requirements on remote starting of vehicles.

Do not use remote start if the vehicle is low on fuel. The vehicle may run out of fuel.

The vehicle cannot be remote started if:

- The key is in the ignition.
- The hood is not closed.

- There is an emission control system malfunction and the lamp is on.
- The hazard flashers are on.
- Two starts or a start with an extension have been done.
- The vehicle is not in P (Park).

The engine will turn off during a remote vehicle start if:

- The coolant temperature gets too high.
- The oil pressure gets low.

The RKE transmitter range may be reduced while the vehicle is running.

Other conditions can affect the performance of the transmitter. See *Remote Keyless Entry (RKE) System* ⇨ *36* or *Vehicle Personalization* ⇨ *160*.

Starting the Engine Using Remote Start

1. Press and release 🔒.
2. Immediately press and hold ⟲ until the turn signal lamps flash or for at least four seconds.

   When the vehicle starts, the parking lamps will turn on. The doors will be locked and the climate control system may come on.

   The engine will continue to run for 15 minutes. After 30 seconds, repeat Steps 1 and 2 for a 15-minute time extension.

Turn the ignition on to operate the vehicle.

Extending Engine Run Time

The engine run time can be extended by 15 minutes, for a total of 30 minutes, if during the first 15 minutes Steps 1 and 2 are repeated while the engine is still running. An extension can be requested 30 seconds after starting.

A maximum of two remote starts, or a single start with an extension, is allowed between ignition cycles.

The vehicle's ignition must be turned on and then back off to use remote start again.

Canceling a Remote Start

To cancel a remote start, do one of the following:

- Press and hold ⟲ until the parking lamps turn off.
- Turn on the hazard warning flashers.
- Turn the ignition on and then off.

Door Locks

⚠ Warning

Unlocked doors can be dangerous.

- Passengers, especially children, can easily open the doors and fall out of a moving vehicle. The doors can be unlocked and opened while the vehicle is moving. The chance of being thrown out of the vehicle in a crash is increased if the doors are not locked. So, all

(Continued)

Warning (Continued)

passengers should wear seat belts properly and the doors should be locked whenever the vehicle is driven.

- Young children who get into unlocked vehicles may be unable to get out. A child can be overcome by extreme heat and can suffer permanent injuries or even death from heat stroke. Always lock the vehicle whenever leaving it.
- Outsiders can easily enter through an unlocked door when you slow down or stop the vehicle. Locking the doors can help prevent this from happening.

There are several ways to lock and unlock the vehicle.

From outside, use the Remote Keyless Entry (RKE) transmitter or the key in the driver door.

From inside, use the power door locks or manual door locks. To lock or unlock the door with the manual locks, push down or pull up on the manual lock knob.

From inside, pull the door handle once to unlock the door. Pull the handle again to open the door.

See *Vehicle Alarm System* ⇨ *43*.

Power Door Locks

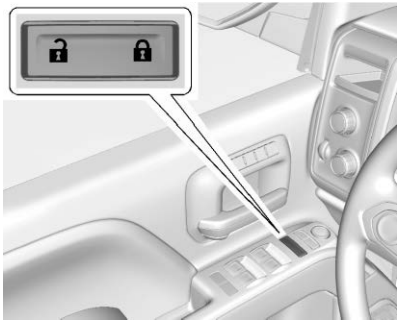

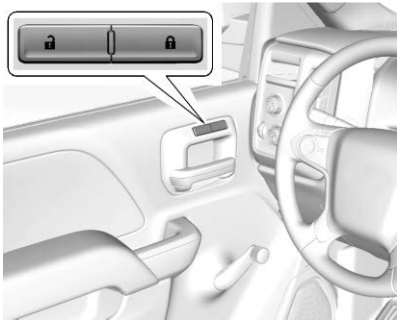

Base Trim

If equipped with power door locks:

🔒 **:** Press to lock the doors.

🔓 **:** Press to unlock the doors.

Automatic Door Locks

If equipped, the doors will lock automatically when all doors are closed, the ignition is on, and the shift lever is moved out of P

If a vehicle door is unlocked, and then opened and closed, the doors will lock either when your foot is

removed from the brake or the vehicle speed becomes faster than 13 km/h (8 mph).

To unlock the doors:

- Press on a power door lock switch.
- Shift the transmission into P (Park)

Automatic door locking cannot be disabled. Automatic door unlocking can be programmed. See *Vehicle Personalization* ⇨ *160*.

Lockout Protection

If the ignition is on or in ACC/ACCESSORY and the power door lock switch is pressed with the driver door open, all the doors will lock and only the driver door will unlock.

If the vehicle is off and locking is selected while a door is open, when all doors are closed the vehicle will check for RKE transmitters inside. If an RKE transmitter is detected, and the number of RKE transmitters has not reduced, the driver door will unlock and the horn will chirp three times.

This can be manually overridden by pressing and holding on the power door lock switch.

Unlocked Door Anti-Lockout

If Unlocked Door Anti-Lockout is turned on and the vehicle is off, the driver door is open, and locking is requested, all the doors will lock and the driver door will remain open. Press the button again to lock the driver door. The Unlocked Door Anti-Lockout feature can be turned on or off. See *Vehicle Personalization* ⇨ *160*.

Safety Locks

The rear door safety locks prevent passengers from opening the rear doors from inside the vehicle.

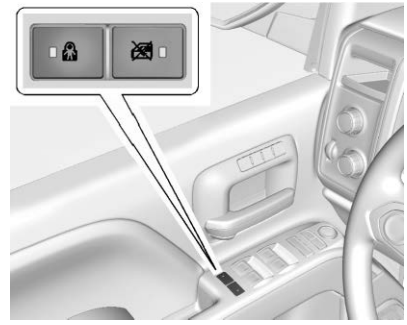

Press to activate the safety locks on the rear doors. The indicator light comes on when activated. Press again to deactivate. The vehicle must be on, in ACC/ACCESSORY, or in Retained Accessory Power (RAP). See *Retained Accessory Power (RAP)* ⇨ *251*.

If the indicator light flashes, the feature may not be working properly.

Doors

Tailgate

⚠ Warning

It is extremely dangerous to ride on the tailgate, even when the vehicle is operated at low speeds. People riding on the tailgate can easily lose their balance and fall in response to vehicle maneuvers. Falling from a moving vehicle may result in serious injuries or death. Do not allow people to ride on the tailgate. Be sure everyone in your vehicle is in a seat and using a seat belt properly.

If equipped, to lock or unlock the tailgate, use the RKE transmitter or the key. See *Remote Keyless Entry (RKE) System Operation* ⇨ *36*.

Open the tailgate by lifting up on its handle while pulling the tailgate down.

To shut the tailgate, firmly push it upward until it latches.

After closing the tailgate, pull it back to be sure it latches securely.

Power Assist Steps

If equipped, the power assist steps, when enabled, will extend when the door is opened. They will retract three seconds after the door is closed or immediately if the vehicle starts moving.

Keep hands, children, pets, objects, and clothing clear of the power assist steps when in motion.

The steps will reverse direction if there is an obstruction. Remove the obstruction, then open and close the door on the same side to complete the motion. If the obstruction is not cleared, the assist steps remain extended.

Slight movement of the steps while extended is normal.

Kick Switch

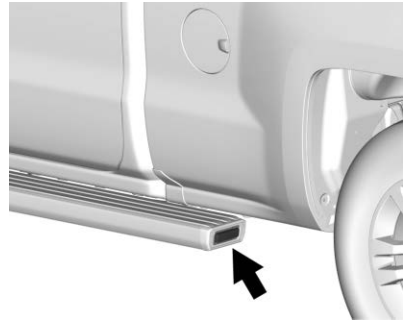

1. Place the vehicle in P (Park) and unlock the doors.
2. Kick the switch to extend the power assist step to the tire. A DIC message displays.
3. Kick the switch again to return to normal operation.

Center Stack Switch

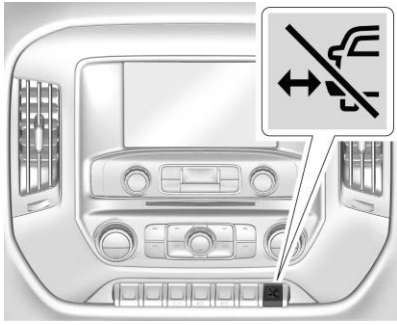

The power assist steps can be extended and extended to the tire by pressing . When extending the steps with , the kick switch is disabled.

The vehicle must be in P (Park) or N (Neutral). To extend the steps:

- Press to extend both steps. A DIC message displays.
- Press again to extend to the tire. A DIC message displays.
- Press again to return to normal operation.

Enable/Disable

To enable or disable the power assist steps, press and hold for four seconds. A DIC message displays.

Cleaning

Clean the power assist steps regularly. For an automatic car wash, extend the steps while in N (Neutral) using the center stack switch. The steps will stow when shifting into D (Drive).

Vehicle Security

This vehicle has theft-deterrent features; however, they do not make the vehicle impossible to steal.

Vehicle Alarm System

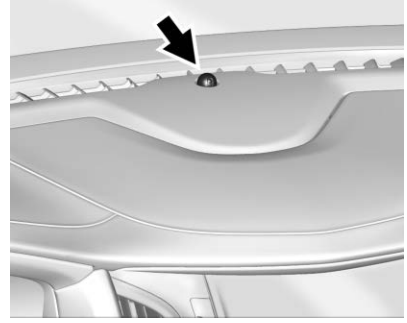

The indicator light, on the instrument panel near the windshield, indicates the status of the system.

Off : Alarm system is disarmed.

On Solid : Vehicle is secured during the delay to arm the system.

Fast Flash : Vehicle is unsecured. A door, the tailgate, or the hood is open.

Slow Flash : Alarm system is armed.

Arming the Alarm System

1. Turn off the vehicle.
2. Lock the vehicle in one of two ways:
   - Use the RKE transmitter.
   - With a door open, press 🔒 on the interior of the door.
3. After 30 seconds, the alarm system will arm and the indicator light will begin to slowly flash. Pressing 🔒 on the RKE transmitter a second time will bypass the 30-second delay and immediately arm the alarm system.

The vehicle alarm system will not arm if the doors are locked with the key.

If the driver door is opened without first unlocking with the RKE transmitter, the horn will chirp and the lights will flash to indicate pre-alarm. If the vehicle is not started, or the door is not unlocked by pressing 🔓 on the RKE transmitter during the 10-second pre-alarm, the alarm will be activated.

The alarm will also be activated if a passenger door, the tailgate, or the hood is opened without first disarming the system. When the alarm is activated, the turn signals flash and the horn sounds for about 30 seconds. The alarm system will then re-arm to monitor for the next unauthorized event.

Disarming the Alarm System

To disarm the alarm system or turn off the alarm if it has been activated:

- Press 🔓 on the RKE transmitter.
- Start the vehicle.

To avoid setting off the alarm by accident:

- Lock the vehicle after all occupants have exited.
- Always unlock a door with the RKE transmitter.

  Unlocking the driver door with the key will not disarm the system or turn off the alarm.

How to Detect a Tamper Condition

If 🔓 is pressed on the RKE transmitter and the horn chirps three times, an alarm occurred previously while the alarm system was armed.

If the alarm has been activated, a message will appear on the DIC.

Immobilizer

See *Radio Frequency Statement* ⇨ *460*.

Immobilizer Operation

This vehicle has a passive theft-deterrent system.

The system does not have to be manually armed or disarmed.

The vehicle is automatically immobilized when the vehicle is turned off.

The system is automatically disarmed when the ignition is turned from off to on.

The security light, in the instrument cluster, comes on if there is a problem with arming or disarming the theft-deterrent system.

When trying to start the vehicle, the security light comes on briefly when the ignition is turned on.

If the engine does not start and the security light stays on, there is a problem with the system. Turn the ignition off and try again.

If the engine still does not start, and the key appears to be undamaged, try another ignition key. It may be necessary to check the fuse. See *Fuses and Circuit Breakers* ⇨ *363*. If the engine still does not start with the other key, the vehicle needs service. If the vehicle does start, the first key may be faulty. See your dealer.

It is possible for the immobilizer system to learn new or replacement keys. Up to eight keys can be programmed for the vehicle. To program additional keys, see *Keys* ⇨ *33*. To program additional transmitters, see your dealer.

Do not leave the key or device that disarms or deactivates the vehicle theft system in the vehicle.

See your dealer to get a new key blank cut exactly as the ignition key that operates the system.

Exterior Mirrors

Convex Mirrors

⚠ Warning

A convex mirror can make things, like other vehicles, look farther away than they really are. If you cut too sharply into the right lane, you could hit a vehicle on the right. Check the inside mirror or glance over your shoulder before changing lanes.

The passenger side mirror is convex shaped. A convex mirror's surface is curved so more can be seen from the driver seat.

Manual Mirrors

If equipped, adjust manual mirrors by moving the mirror up and down or left to right to see a little of the side of the vehicle and to have a clear view behind the vehicle.

Using hood-mounted air deflectors and add-on convex mirror attachments could decrease mirror performance.

Trailer-Tow Mirrors

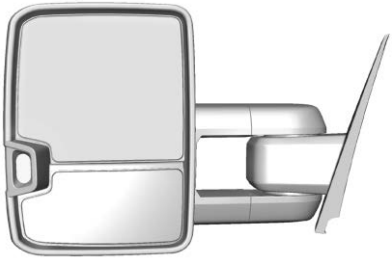

If equipped, adjust trailer-tow mirrors for a clear view of the area behind you. Manually pull out the mirror head to extend it for better visibility when towing a trailer.

The lower portion of the mirror is convex. A convex mirror's surface is curved to see more from the driver seat. The convex mirror can be adjusted manually to the driver preferred position for better vision.

The mirror may have a turn signal arrow that flashes in the direction of the turn or lane change.

Power Mirrors

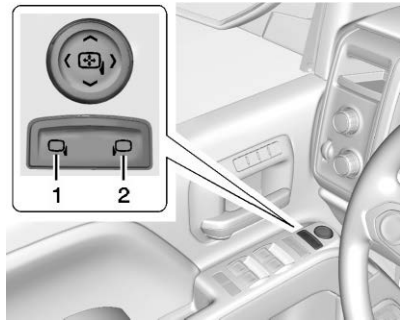

If equipped with power mirrors:

1. Press (1) or (2) to select the driver or passenger side mirror.
2. Press the arrows on the control pad to move the mirror in the desired direction.
3. Adjust each outside mirror so that a little of the vehicle and the area behind it can be seen.
4. Keep the selector switch in the center position when not adjusting mirrors.

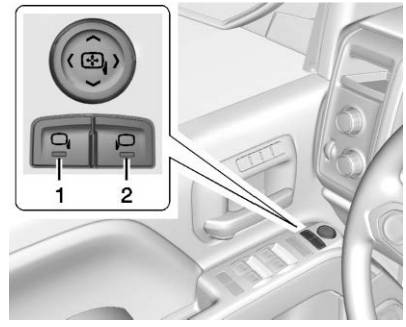

1. Press (1) or (2) to select the driver or passenger side mirror.
2. Press the arrows on the control pad while the indicator light on button (1) or (2) is illuminated, to move the mirror in the desired direction.

3. Adjust each outside mirror so that a little of the vehicle and the area behind it can be seen.
4. Press either (1) or (2) again to deselect the mirror.

If you do not deselect the mirror, the feature will turn off after about one minute.

If equipped, the mirrors may include a memory function that works with the memory seats. See *Memory Seats* ⇨ *60*.

Folding Mirrors

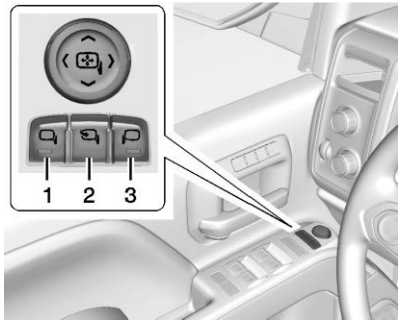

Power Folding

If equipped with power folding mirrors:

1. Press (2) to fold the mirrors out to the driving position.
2. Press (2) again to fold the mirrors in to the folded position.

The mirrors may also include a memory function that works with the memory seats. See *Memory Seats* ⇨ *60*.

Resetting the Power Folding Mirrors

Reset the power folding mirrors if:

- The mirrors are accidentally obstructed while folding.
- They are accidentally manually folded/unfolded.
- The mirrors will not stay in the unfolded position.
- The mirrors vibrate at normal driving speeds.

Manually fold both mirrors if they are out of sync. Fold and unfold the mirrors three times using the mirror controls to reset them to their normal position. A popping noise may be heard. This sound is normal after a manual folding operation.

Manual Folding

If equipped, push the mirror toward the vehicle to fold. Push the mirror outward to return to its original position.

Manually fold the mirrors inward to prevent damage when going through an automatic car wash.

Auto Mirror Folding

If equipped, press and hold 🔒 on the RKE transmitter for approximately one second to automatically fold the exterior mirrors. Press and hold 🔓 on the RKE transmitter for approximately one second to unfold. See *Remote Keyless Entry (RKE) System Operation* ⇨ *36*.

This feature is turned on or off through vehicle personalization. See *Vehicle Personalization* ⇨ *160*.

Turn Signal Indicator

If equipped, indicator lights on the mirror flash in the direction of the turn or lane change.

Heated Mirrors

REAR **:** If equipped, the rear window defogger also heats the outside mirrors.

: If equipped, press to turn the heated outside mirrors on or off.

If the vehicle has trailer-tow mirrors, only the upper glass of the mirror is heated. The lower convex part of the towing mirrors is not heated.

See “Rear Window Defogger” under *Climate Control Systems (with Heater Only)* ⇨ *216* or *Climate Control Systems (with Air Conditioning)* ⇨ *218* or *Dual Automatic Climate Control System* ⇨ *219*.

Automatic Dimming Mirror

If equipped, the driver outside mirror automatically adjusts for the glare of the headlamps from behind. This feature comes on when the vehicle is started.

Blind Spot Mirrors

If equipped, there is a small convex mirror built into the upper and outer corner of the driver outside mirror. It can show objects that may be in the vehicle's blind zone.

Driving with the Blind Spot Mirror

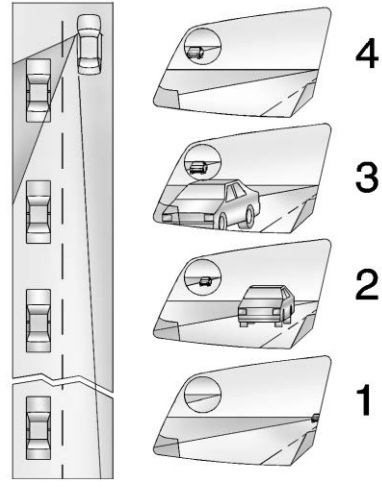

Actual Mirror View

1. When the approaching vehicle is a long distance away, the image in the main mirror is small and near the inboard edge of the mirror.
2. As the vehicle gets closer, the image in the main mirror gets larger and moves outboard.
3. As the vehicle enters the blind zone, the image transitions from the main mirror to the blind spot mirror.
4. When the vehicle is in the blind zone, the image only appears in the blind spot mirror.

Using the Outside Mirror with the Blind Spot Mirror

1. Set the main mirror so that the side of the vehicle can just be seen and the blind spot mirror has an unobstructed view.
2. When checking for traffic or before changing a lane, look at the main driver/passenger side mirror to observe traffic in the adjacent lane, behind your vehicle. Check the blind spot mirror for a vehicle in the blind zone. Then, glance over your shoulder to double check before moving slowly into the adjacent lane.

Reverse Tilt Mirrors

If equipped with memory seats, the passenger and/or driver mirror tilts to a preselected position when the vehicle is in R (Reverse). This allows the curb to be seen when parallel parking.

The mirror(s) return to the original position when:

- The vehicle is shifted out of R (Reverse), or remains in R (Reverse) for about 30 seconds.
- The ignition is turned off.
- The vehicle is driven in R (Reverse) above a set speed.

To turn this feature on or off, see *Vehicle Personalization* ⇨ *160*.

Interior Mirrors

Interior Rearview Mirrors

Adjust the rearview mirror for a clear view of the area behind your vehicle.

If equipped with OnStar, the vehicle may have three control buttons at the bottom of the mirror. See *OnStar Overview* ⇨ *464*.

To avoid accidental OnStar calls, clean the mirror with the ignition off. Do not spray glass cleaner directly on the mirror. Use a soft towel dampened with water.

Manual Rearview Mirror

If equipped, push the tab forward for daytime use and pull it rearward for nighttime use to avoid glare from the headlamps from behind.

Automatic Dimming Rearview Mirror

If equipped, the mirror will automatically reduce the glare of the headlamps from behind. The dimming feature comes on each time the vehicle is started.

Windows

⚠ Warning

Never leave a child, a helpless adult, or a pet alone in a vehicle, especially with the windows closed in warm or hot weather. They can be overcome by the extreme heat and suffer permanent injuries or even death from heat stroke.

The vehicle aerodynamics are designed to improve fuel economy performance. This may result in a pulsing sound when either rear window is down and the front windows are up. To reduce the sound, open either a front window or the sunroof, if equipped.

Manual Windows

If equipped, turn the hand crank on each door to manually raise or lower the manual windows.

Power Windows

⚠ Warning

Children could be seriously injured or killed if caught in the path of a closing window. Never leave keys in a vehicle with children. When there are children in the rear seat, use the window lockout button to prevent operation of the windows. See *Keys* ⇨ *33*.

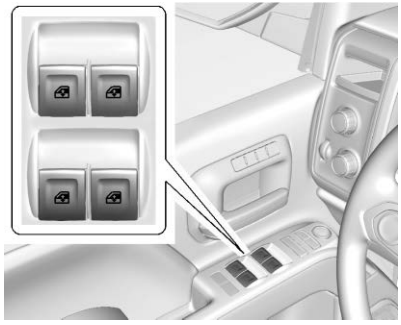

Crew/Double Cab Premium Trim Shown, Other Models Similar

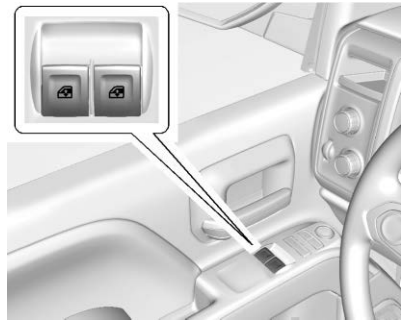

Regular Cab Uplevel Trim Shown, Other Models Similar

The power windows work when the ignition is on, in ACC/ACCESSORY, or when Retained Accessory Power (RAP) is active. See *Retained Accessory Power (RAP)* ⇨ *251*.

Using the window switch, press to open or pull to close the window.

The windows may be temporarily disabled if they are used repeatedly within a short time.

Window Lockout

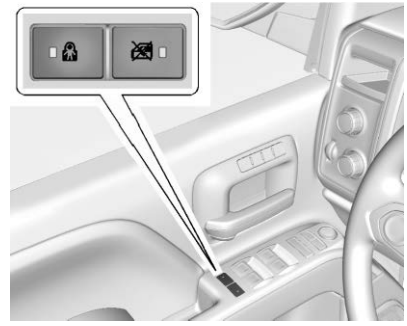

Crew/Double Cab Premium Trim Shown, Other Models Similar

This feature stops the rear passenger window switches from working.

Press to engage the rear window lockout feature. The indicator light is on when engaged.

Press again to disengage.

Window Express Movement

All windows can be opened without holding the window switch. Press the switch down fully and quickly release to express open the window.

If equipped, pull the window switch up fully and quickly release to express close the window.

Briefly press or pull the window switch in the same direction to stop that window's express movement.

Window Automatic Reversal System

The express-close feature will reverse window movement if it comes in contact with an object. Extreme cold or ice could cause the window to auto-reverse. The window will operate normally after the object or condition is removed.

Automatic Reversal System Override

⚠ Warning

If automatic reversal system override is active, the window will not reverse automatically. You or others could be injured and the window could be damaged. Before using automatic reversal system override, make sure that all people and obstructions are clear of the window path.

When the engine is on, override the automatic reversal system by pulling and holding the window switch if conditions prevent it from closing.

Programming the Power Windows

Programming may be necessary if the vehicle battery has been disconnected or discharged. If the window is unable to express-up, program each express-close window:

1. Close all doors.
2. Turn the ignition on or to ACC/ ACCESSORY.
3. Partially open the window to be programmed. Then close it and continue to pull the switch briefly after the window has fully closed.
4. Open the window and continue to press the switch briefly after the window has fully opened.

Rear Windows

Power Sliding Rear Window

If equipped, the power sliding rear window works when the ignition has been turned on or to ACC/ ACCESSORY, or Retained Accessory Power (RAP) must be active. See *Retained Accessory Power (RAP)* ⇨ *251*.

- Press the switch to open the window.
- Pull the switch to close the window.

The power sliding rear window cannot be operated manually.

Sun Visors

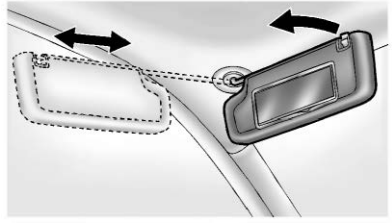

Pull the sun visor down to block glare. Detach the sun visor from the center mount to pivot to the side window and, if equipped, extend along the rod.

Roof

Sunroof

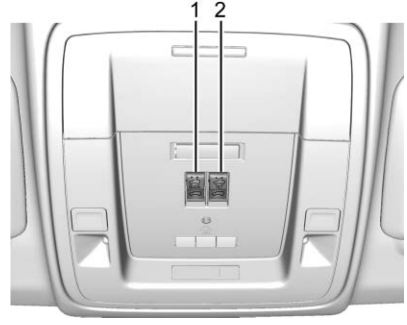

1. SLIDE Switch
2. TILT Switch

If equipped, the sunroof operates when the ignition is on or in ACC/ ACCESSORY, or when Retained Accessory Power (RAP) is active. See *Retained Accessory Power (RAP)* ⇨ *251*.

Slide Switch

Express-Open/Express-Close : To express-open the sunroof, fully press and release SLIDE (1). Press and release SLIDE (1) again to stop the movement. To express-close the sunroof, fully press and release (1). Press and release (1) again to stop the movement.

Open/Close (Manual Mode) : To open the sunroof, press and hold SLIDE (1). Release SLIDE (1) to stop the movement. Press and hold (1) to close the sunroof. Release (1) to stop the movement.

Tilt Switch

Vent : From the closed position, press TILT (2) to vent the sunroof. Press (2) to close the vent.

When the sunroof is opened, an air deflector will automatically raise. The air deflector will retract when the sunroof is closed.

The sunroof also has a sunshade, which can be pulled forward to block sun rays. The sunshade must be opened and closed manually.

Automatic Reversal System

The sunroof has an automatic reversal system that is only active when the sunroof is operated in express-close mode.

If an object is in the path while express-closing, the reversal system will detect an object, stop, and open the sunroof again.

If frost or other conditions prevent closing, override the feature by closing the sunroof in manual mode. To stop movement, release (1).

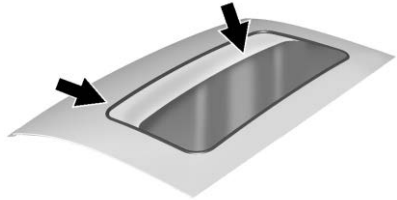

Dirt and debris may collect on the sunroof seal or in the track. This could cause an issue with sunroof operation or noise. It could also plug the water drainage system. Periodically open the sunroof and remove any obstacles or loose debris. Wipe the sunroof seal and roof sealing area using a clean cloth, mild soap, and water. Do not remove grease from the sunroof tracks.

If water is seen dripping into the water drainage system, this is normal.

Seats and Restraints

Head Restraints
Head Restraints 56

Front Seats
Seat Adjustment 57
Center Seat 57
Power Seat Adjustment 58
Lumbar Adjustment 58
Reclining Seatbacks 59
Memory Seats 60
Heated and Ventilated Front Seats 63

Rear Seats
Rear Seats (Double Cab Full Bench) 65
Rear Seats (Split Bench) 66

Seat Belts
Seat Belts 67
How to Wear Seat Belts Properly 68
Lap-Shoulder Belt 70
Seat Belt Use During Pregnancy 73
Lap Belt 73
Seat Belt Extender 74
Safety System Check 74
Seat Belt Care 75
Replacing Seat Belt System Parts after a Crash 75

Airbag System
Airbag System 76
Where Are the Airbags? 77
When Should an Airbag Inflate? 79
What Makes an Airbag Inflate? 80
How Does an Airbag Restrain? 80
What Will You See after an Airbag Inflates? 81
Airbag On-Off Switch 82
Passenger Sensing System . . . 84
Servicing the Airbag-Equipped Vehicle 88
Adding Equipment to the Airbag-Equipped Vehicle 89
Airbag System Check 90
Replacing Airbag System Parts after a Crash 90

Child Restraints
Older Children 91
Infants and Young Children 92
Child Restraint Systems 95
Where to Put the Restraint 96
Lower Anchors and Tethers for Children (LATCH System) 98
Replacing LATCH System Parts After a Crash 109
Securing Child Restraints (With the Seat Belt in the Rear Seat) 110
Securing Child Restraints (With the Seat Belt in the Center Front Seat) 113
Securing Child Restraints (With the Seat Belt in the Front Seat) 113

Head Restraints

Front Seats

The vehicle's front seats have adjustable head restraints in the outboard seating positions.

⚠ Warning

With head restraints that are not installed and adjusted properly, there is a greater chance that occupants will suffer a neck/spinal injury in a crash. Do not drive until the head restraints for all occupants are installed and adjusted properly.

Adjust the head restraint so that the top of the restraint is at the same height as the top of the occupant's head. This position reduces the chance of a neck injury in a crash.

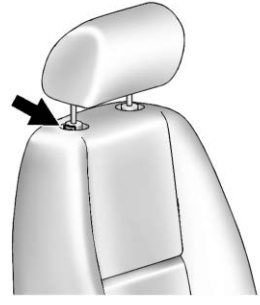

The height of the head restraint can be adjusted. Pull the head restraint up to raise it. Try to move the head restraint to make sure that it is locked in place.

To lower the head restraint, press the button, located on the top of the seatback, and push the restraint down. Try to move the head restraint after the button is released to make sure that it is locked in place.

The front seat outboard head restraints are not removable.

Rear Seats

The rear seat has adjustable headrests in the outboard seating positions.

The height of the headrest can be adjusted. Pull the headrest up to raise it. To lower the headrest, push the headrest down.

If you are installing a child restraint in the rear seat, see “Securing a Child Restraint Designed for the LATCH System” under *Lower Anchors and Tethers for Children (LATCH System)* ⇨ *98*.

Front Seats

Seat Adjustment

⚠ Warning

You can lose control of the vehicle if you try to adjust a driver seat while the vehicle is moving. Adjust the driver seat only when the vehicle is not moving.

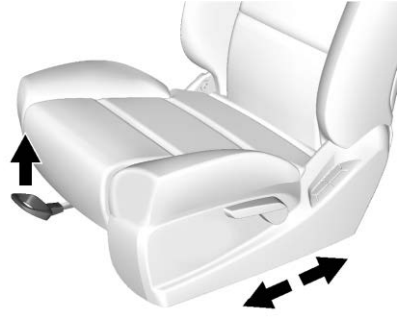

To adjust a manual seat:

1. Pull the handle at the front of the seat.
2. Slide the seat to the desired position and release the handle.
3. Try to move the seat back and forth to be sure it is locked in place.

To adjust the seatback, see *Reclining Seatbacks* ⇨ *59*.

To adjust the lumbar support, if equipped, see *Lumbar Adjustment* ⇨ *58*.

Center Seat

If equipped, the center front seatback doubles as an armrest and cupholder/storage area for the driver and passenger when the center front seat is not used. Do not use it as a seating position when the seatback is folded down.

Power Seat Adjustment

⚠ Warning

The power seats will work with the ignition off. Children could operate the power seats and be injured. Never leave children alone in the vehicle.

To adjust a power seat, if equipped:

- Move the seat forward or rearward by sliding the control forward or rearward.
- If equipped, raise or lower the front part of the seat cushion by moving the front of the control up or down.
- If equipped, raise or lower the seat by moving the rear of the control up or down.

To adjust the seatback, see *Reclining Seatbacks* ⇨ *59*.

To adjust the lumbar support, see *Lumbar Adjustment* ⇨ *58*.

Some vehicles are equipped with a feature that activates a vibrating pulse alert in the driver seat to help the driver avoid crashes. See *Driver Assistance Systems* ⇨ *279*.

Lumbar Adjustment

Manual Lumbar

If equipped, move the lever up or down repeatedly to increase or decrease lumbar support.

Power Lumbar

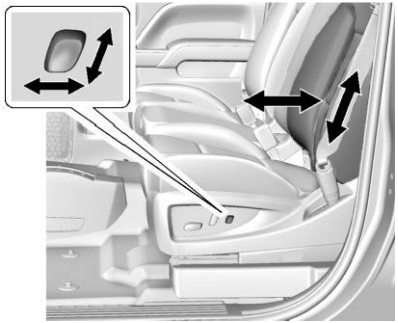

To adjust the power lumbar support, if equipped:

- Press and hold the control forward to increase or rearward to decrease upper and lower lumbar support at the same time.
- If equipped, press and hold the control up to increase upper lumbar support and decrease lower lumbar support.

  Press and hold the control down to increase lower lumbar support and decrease upper lumbar support.

Reclining Seatbacks

⚠ Warning

Sitting in a reclined position when the vehicle is in motion can be dangerous. Even when buckled up, the seat belts cannot do their job.

The shoulder belt will not be against your body. Instead, it will be in front of you. In a crash, you could go into it, receiving neck or other injuries.

The lap belt could go up over your abdomen. The belt forces would be there, not at your pelvic bones. This could cause serious internal injuries.

For proper protection when the vehicle is in motion, have the seatback upright. Then sit well back in the seat and wear the seat belt properly.

Do not have a seatback reclined if the vehicle is moving.

Manual Reclining Seatbacks

⚠ Warning

If either seatback is not locked, it could move forward in a sudden stop or crash. That could cause injury to the person sitting there. Always push and pull on the seatbacks to be sure they are locked.

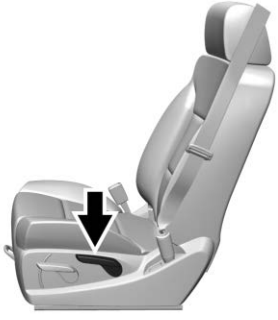

To adjust a manual seatback:

1. Lift the lever.

   The seatback will automatically fold forward.

2. To recline, move the seatback rearward to the desired position, then release the lever to lock the seatback in place.

3. Push and pull on the seatback to make sure it is locked.

To return the seatback to the upright position:

1. Lift the lever fully without applying pressure to the seatback, and the seatback will return to the upright position.

2. Push and pull on the seatback to make sure it is locked.

Power Reclining Seatbacks

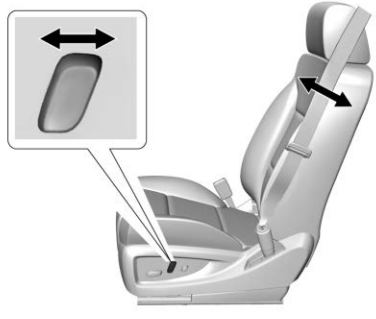

To recline a power seatback, if equipped:

- Tilt the top of the control rearward to recline.
- Tilt the top of the control forward to raise.

Memory Seats

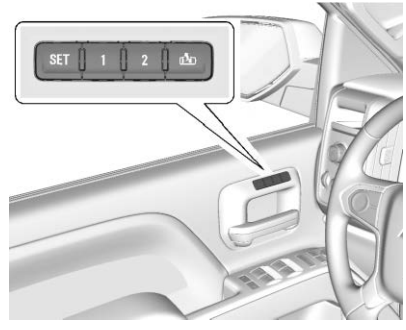

Crew/Double Cab Shown, Other Models Similar

If equipped, memory seats allow two drivers to save and recall their unique seat positions for driving the vehicle, and a shared exit position for getting out of the vehicle. Other feature positions may also be saved, such as power mirrors and power steering wheel, if equipped. Memory positions are linked to RKE transmitter 1 or 2 for automatic memory recalls.

Before saving, adjust all available memory feature positions. Turn the ignition on and then press and release SET; a beep will sound. Then immediately press and hold 1, 2, or (Exit) until two beeps sound. To manually recall these positions, press and hold 1, 2, or until the saved position is reached. Follow the instructions under "Saving Memory Positions."

The vehicle identifies the current driver's RKE transmitter number (1–8). See *Remote Keyless Entry (RKE) System Operation* ⇨ *36*. Only RKE transmitters 1 and 2 can be used for automatic memory recalls. A Driver Information Center (DIC) welcome message indicating the transmitter number may display for the first few ignition cycles following a transmitter change. For Auto Memory Recall to work properly, save the positions to the memory button (1 or 2) matching the RKE transmitter number displayed in the DIC welcome message. Carry the linked RKE transmitter when entering the vehicle.

Memory adjustments may not be available upon delivery or after service until steps in "Saving Memory Positions" section are performed.

Vehicle Personalization Settings

- To have the Auto Memory Recall movement begin when the vehicle is started, select the Settings menu, then Vehicle, then Comfort and Convenience, and then Auto Memory Recall. Select On or Off. See "Auto Memory Recall" later in this section.
- To begin Easy Exit Recall movement when the ignition is turned off and the driver door is opened, or when the ignition is turned off with the driver door already opened, select the Settings menu, then Vehicle, then Comfort and Convenience, and then Easy Exit Options. Select On or Off. See "Easy Exit Recall" later in this section.
- See *Vehicle Personalization* ⇨ *160* for additional setting information.

Identifying Driver Number

To identify the driver number:

1. Start the vehicle with a different key or RKE transmitter. The DIC should display the driver number; 1 or 2. Turn the ignition off and remove the key or RKE transmitter from the vehicle.
2. Start the vehicle with the initial key or RKE transmitter. The DIC should display the other driver number not shown in Step 1.

Saving Memory Positions

Read these instructions completely before saving memory positions.

To save preferred driving positions 1 and 2:

1. Turn the ignition on or to ACC/ACCESSORY.

   A DIC welcome message may indicate driver number 1 or 2.

2. Adjust all available memory features to the desired driving position.
3. Press and release SET; a beep will sound.
4. Immediately press and hold the 1 or 2 memory button matching the above DIC welcome message until two beeps sound.

   If too much time passes between releasing SET and pressing 1, the memory position will not be saved and two beeps will not sound. Repeat Steps 3 and 4.

   1 or 2 corresponds to the driver number. See “Identifying Driver Number” previously in this section.
5. Repeat Steps 1–4 for a second driver using 1 or 2.

To save the position for and easy exit features, repeat Steps 1–4 using . This saves the position for getting out of the vehicle.

Save preferred memory feature positions to both 1 and 2 if you are the only driver.

Manually Recalling Memory Positions

Press and hold 1, 2, or to recall the previously saved memory positions.

To stop Manual Memory Recall movement, release 1, 2, or or press any of the following controls:

- Power seat
- Memory SET
- Power mirror, with the driver or passenger side mirror selected
- Power steering wheel, if equipped

Auto Memory Recall

The vehicle identifies the number of the current driver’s RKE transmitter (1–8). See *Remote Keyless Entry (RKE) System Operation* ⇨ *36*. If the RKE transmitter is 1 or 2, and Auto Memory Recall is programmed on in vehicle personalization, the positions saved to the same memory button number 1 or 2 are automatically recalled when the ignition is turned on, or turned from off to ACC/ACCESSORY. RKE transmitters 3–8 will not provide automatic memory recalls.

To turn Auto Memory Recall on or off, see "Vehicle Personalization Settings" previously in this section and *Vehicle Personalization* ⇨ *160*.

The shift lever must be in P (Park) to start Auto Memory Recall. Auto Memory Recall will complete if the vehicle is shifted out of P (Park) prior to reaching the saved memory position.

To stop Auto Memory Recall movement, turn the ignition off or press any of the following controls:

- Power seat
- Memory SET, 1, 2, or
- Power mirror, with the driver or passenger side mirror selected
- Power steering wheel, if equipped

If the saved memory seat position does not automatically recall or recalls to the wrong positions, the driver's RKE transmitter number (1 or 2) may not match the memory button number that positions were saved to. Try saving the position to the other memory button or try the other RKE transmitter.

Easy Exit Recall

Easy Exit Recall is not linked to an RKE transmitter. The position saved to is used for all drivers. To turn Easy Exit Recall on or off, see "Vehicle Personalization Settings" previously in this section and *Vehicle Personalization* ⇨ *160*.

If turned on, the position saved to is automatically recalled when one of the following occurs:

- The vehicle is turned off and the driver door is opened within a short time.
- The vehicle is turned off with the driver door open.

To stop Easy Exit Recall movement, press any of the following memory controls:

- Power seat
- Memory SET, 1, 2, or
- Power mirror, with the driver or passenger side mirror selected
- Power steering wheel, if equipped

Obstructions

If something has blocked the driver seat and/or power steering wheel while recalling a memory position, the recall may stop. Remove the obstruction and try the recall again. If the memory position still does not recall, see your dealer for service.

Heated and Ventilated Front Seats

⚠ Warning

If temperature change or pain to the skin cannot be felt, the seat heater may cause burns. To reduce the risk of burns, use care when using the seat heater, especially for long periods of time. Do not place anything on the seat that insulates against heat, such as a blanket, cushion, cover, or similar item. This may cause the seat heater to overheat. An overheated seat heater may cause a burn or may damage the seat.

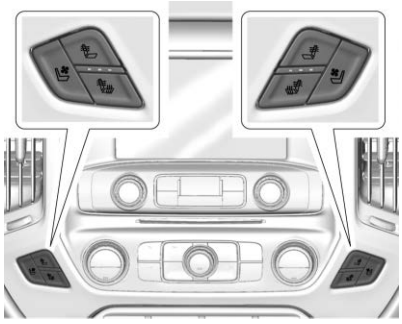

Heated and Ventilated Seat Buttons Shown, Heated Seat Buttons Similar

If equipped, the buttons are on the center stack. To operate, the engine must be running.

Press to heat the driver or passenger seatback only.

Press to heat the driver or passenger seat cushion and seatback.

Press to ventilate the driver or passenger seat.

The indicator light on the button comes on when this feature is on.

Press the button once for the highest setting. With each press of the button, the seat will change to the next lower setting, and then to the off setting. The indicator lights next to the buttons indicate three for the highest setting and one for the lowest. If the heated seats are on high for an extended time, their level may automatically be lowered.

Remote Start Auto Heated and Ventilated Seats

During a remote start, the heated or ventilated seats can be turned on automatically. When it is cold outside, the heated seats turn on, and when it is hot outside the ventilated seats turn on. The heated or ventilated seats are canceled when the ignition is turned on. Press the heated or ventilated seat button to use the heated or ventilated seats after the vehicle is started.

The heated or ventilated seat indicator lights do not turn on during a remote start.

The temperature performance of an unoccupied seat may be reduced. This is normal.

The heated or ventilated seats will not turn on during a remote start unless they are enabled in the vehicle personalization menu. See *Remote Vehicle Start* ⇨ *38* and *Vehicle Personalization* ⇨ *160*.

Rear Seats

Rear Seats (Double Cab Full Bench)

Rear Seat Reminder

If equipped, the message REAR SEAT REMINDER LOOK IN REAR SEAT displays under certain conditions indicating there may be an item or passenger in the rear seat. Check before exiting the vehicle.

This feature will activate when a second row door is opened while the vehicle is on or up to 10 minutes before the vehicle is turned on. There will be an alert when the vehicle is turned off. The alert does not directly detect objects in the rear seat; instead, under certain conditions, it detects when a rear door is opened and closed, indicating that there may be something in the rear seat.

The feature is active only once each time the vehicle is turned on and off, and will require reactivation by opening and closing the second row doors. There may be an alert even when there is nothing in the rear seat; for example, if a child entered the vehicle through the rear door and left the vehicle without the vehicle being shut off.

The feature can be turned on or off. See *Vehicle Personalization* ⇨ *160*.

Folding the Rear Seat

Caution
Folding a rear seat with the seat belts still fastened may cause damage to the seat or the seat belts. Always unbuckle the seat belts and return them to their normal stowed position before folding a rear seat.

To fold the seat:

1. Pull up on the front of the seat cushion while pulling down on the release strap loop under the seat cushion.
2. Pull the seat cushion up until it latches with the seatback.
3. Pull forward on the seat cushion to make sure it is locked in place.

To unfold the seat:

1. Push the seat cushion rearward while pulling the release strap loop under the seat cushion. Pull the seat cushion down until it latches.
2. Pull up on the seat cushion to make sure it is locked in place.

   Make sure the seat belts are not twisted or caught in the seat cushion.

⚠ Warning

A seat belt that is improperly routed, not properly attached, or twisted will not provide the protection needed in a crash. The person wearing the belt could be seriously injured. After raising the rear seatback, always check to be sure that the seat belts are properly routed and attached, and are not twisted.

Rear Seats (Split Bench)

Folding the Rear Seat

Either side of the rear seat can be folded for added cargo space.

Caution

Folding a rear seat with the seat belts still fastened may cause damage to the seat or the seat belts. Always unbuckle the seat belts and return them to their normal stowed position before folding a rear seat.

Make sure that nothing is on the seat cushion.

To fold the seat, slowly pull the seat cushion up.

To return the seat to the normal seating position, slowly pull the seat cushion down.

Make sure the seat belts are not twisted or caught in the seat cushion.

⚠ Warning

A seat belt that is improperly routed, not properly attached, or twisted will not provide the protection needed in a crash. The person wearing the belt could be seriously injured. After raising the rear seatback, always check to be sure that the seat belts are properly routed and attached, and are not twisted.

Seat Belts

This section describes how to use seat belts properly, and some things not to do.

⚠ Warning

Do not let anyone ride where a seat belt cannot be worn properly. In a crash, if you or your passenger(s) are not wearing seat belts, injuries can be much worse than if you are wearing seat belts. You can be seriously injured or killed by hitting things inside the vehicle harder or by being ejected from the vehicle. In addition, anyone who is not buckled up can strike other passengers in the vehicle.

It is extremely dangerous to ride in a cargo area, inside or outside of a vehicle. In a collision, passengers riding in these areas are more likely to be seriously injured or killed. Do not allow

(Continued)

Warning (Continued)

passengers to ride in any area of the vehicle that is not equipped with seats and seat belts.

Always wear a seat belt, and check that all passenger(s) are restrained properly too.

This vehicle has indicators as a reminder to buckle the seat belts. See *Seat Belt Reminders* ⇨ *143*.

Why Seat Belts Work

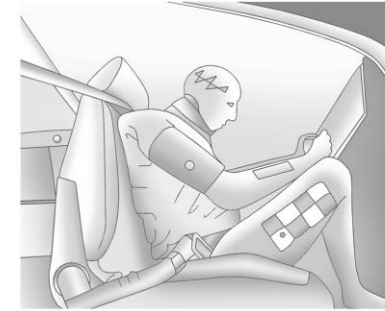

When riding in a vehicle, you travel as fast as the vehicle does. If the vehicle stops suddenly, you keep going until something stops you. It could be the windshield, the instrument panel, or the seat belts!

When you wear a seat belt, you and the vehicle slow down together. There is more time to stop because you stop over a longer distance and, when worn properly, your strongest bones take the forces from the seat belts. That is why wearing seat belts makes such good sense.

Questions and Answers About Seat Belts

Q: Will I be trapped in the vehicle after a crash if I am wearing a seat belt?

A: You *could* be — whether you are wearing a seat belt or not. Your chance of being conscious during and after a crash, so you *can* unbuckle and get out, is *much* greater if you are belted.

Q: If my vehicle has airbags, why should I have to wear seat belts?

A: Airbags are supplemental systems only. They work *with* seat belts — not instead of them. Whether or not an airbag is provided, all occupants still have to buckle up to get the most protection.

Also, in nearly all states and in all Canadian provinces, the law requires wearing seat belts.

How to Wear Seat Belts Properly

Follow these rules for everyone's protection.

There are additional things to know about seat belts and children, including smaller children and infants. If a child will be riding in the vehicle, see *Older Children* ⇨ *91* or *Infants and Young Children* ⇨ *92*. Review and follow the rules for children in addition to the following rules.

It is very important for all occupants to buckle up. Statistics show that unbelted people are hurt more often in crashes than those who are wearing seat belts.

There are important things to know about wearing a seat belt properly.

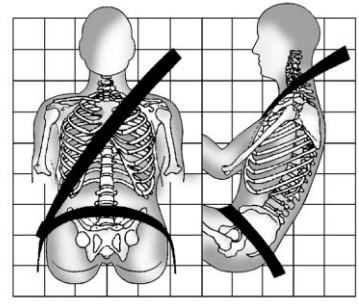

- Sit up straight and always keep your feet on the floor in front of you (if possible).
- Always use the correct buckle for your seating position.

- Wear the lap part of the belt low and snug on the hips, just touching the thighs. In a crash, this applies force to the strong pelvic bones and you would be less likely to slide under the lap belt. If you slid under it, the belt would apply force on your abdomen. This could cause serious or even fatal injuries.
- Wear the shoulder belt over the shoulder and across the chest. These parts of the body are best able to take belt restraining forces. The shoulder belt locks if there is a sudden stop or crash.

⚠ Warning

You can be seriously injured, or even killed, by not wearing your seat belt properly.

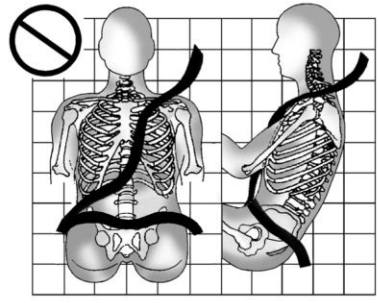

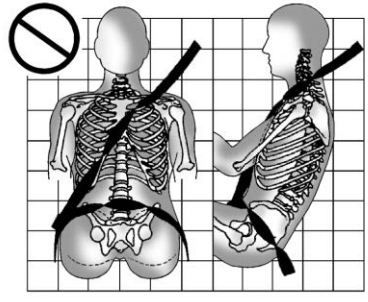

Never allow the lap or shoulder belt to become loose or twisted.

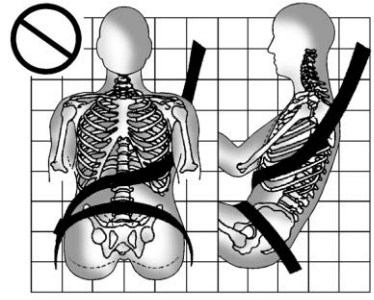

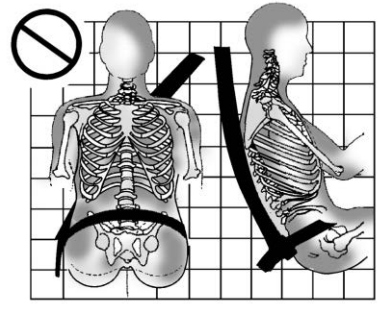

Never wear the shoulder belt under both arms or behind your back.

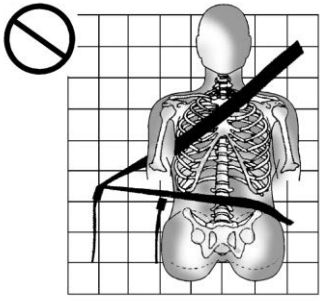

Always use the correct buckle for your seating position.

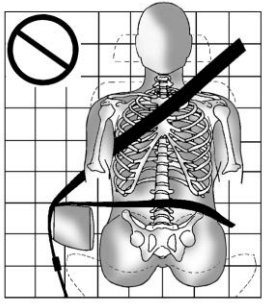

Never route the lap or shoulder belt over an armrest.

Lap-Shoulder Belt

If the vehicle is a regular cab, then all seating positions in the vehicle have a lap-shoulder belt. If the vehicle is a double or crew cab, then all seating positions in the vehicle have a lap-shoulder belt except for the center front passenger position (if equipped), which has a lap belt. See *Lap Belt* ⇨ *73*.

The following instructions explain how to wear a lap-shoulder belt properly.

1. Adjust the seat, if the seat is adjustable, so you can sit up straight. To see how, see “Seats” in the Index.

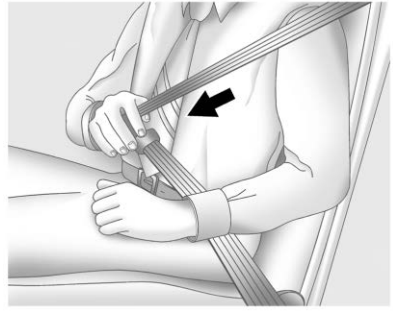

2. Pick up the latch plate and pull the belt across you. Do not let it get twisted.

   The lap-shoulder belt may lock if you pull the belt across you very quickly. If this happens, let the belt go back slightly to unlock it. Then pull the belt across you more slowly.

   If the shoulder portion of a passenger belt is pulled out all the way, the child restraint locking feature may be engaged. If this happens, let the belt go back all the way and start again.

Engaging the child restraint locking feature in the front outboard seating position may affect the passenger sensing system, if equipped. See *Passenger Sensing System* ⇨ *84*.

If the webbing locks in the latch plate before it reaches the buckle, tilt the latch plate flat to unlock.

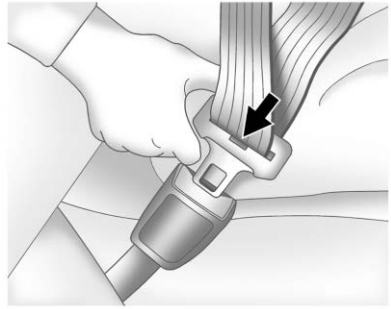

3. Push the latch plate into the buckle until it clicks.

   Pull up on the latch plate to make sure it is secure. If the belt is not long enough, see *Seat Belt Extender* ⇨ *74*.

   Position the release button on the buckle so that the seat belt could be quickly unbuckled if necessary.

4. If equipped with a shoulder belt height adjuster, move it to the height that is right for you. See “Shoulder Belt Height Adjuster” later in this section for instructions on use and important safety information.

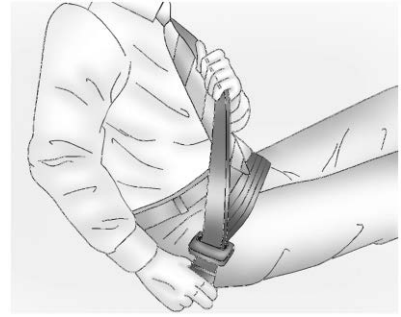

5. To make the lap part tight, pull up on the shoulder belt.

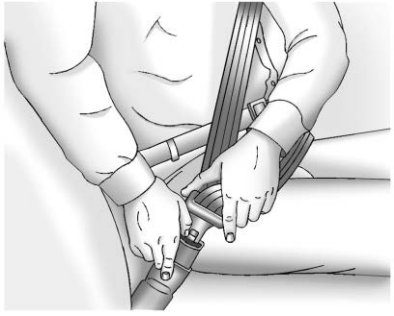

To unlatch the belt, push the button on the buckle. The belt should return to its stowed position.

Always stow the seat belt slowly. If the seat belt webbing returns quickly to the stowed position, the retractor may lock and cannot be pulled out. If this happens, pull the seat belt straight out firmly to unlock the webbing, and then release it. If the webbing is still locked in the retractor, see your dealer.

Before a door is closed, be sure the seat belt is out of the way. If a door is slammed against a seat belt, damage can occur to both the seat belt and the vehicle.

Shoulder Belt Height Adjuster

The vehicle has a shoulder belt height adjuster for the driver and front outboard passenger seating positions.

Adjust the height so the shoulder portion of the belt is on the shoulder and not falling off of it. The belt should be close to, but not contacting, the neck. Improper shoulder belt height adjustment could reduce the effectiveness of the seat belt in a crash. See *How to Wear Seat Belts Properly* ⇨ *68*.

Push down on the release button to move the height adjuster to the desired position.

Move the adjuster up by pushing up on the shoulder belt guide.

After the adjuster is set to the desired position, try to move it down without pushing the release button to make sure it has locked into position.

Seat Belt Pretensioners

This vehicle has seat belt pretensioners for front outboard occupants. Although the seat belt pretensioners cannot be seen, they are part of the seat belt assembly. They can help tighten the seat belts during the early stages of a moderate to severe frontal, near frontal, or rear crash if the threshold conditions for pretensioner activation are met. And, if your vehicle has side impact airbags, seat belt pretensioners can help tighten the seat belts in a side crash. If the vehicle has rollover

roof-rail airbags, seat belt pretensioners can help tighten the seat belts in a rollover event.

Pretensioners work only once. If the pretensioners activate in a crash, the pretensioners and probably other parts of the vehicle's seat belt system will need to be replaced. See *Replacing Seat Belt System Parts after a Crash* ⇨ *75*.

Do not sit on the outboard seat belt while entering or exiting the vehicle or at any time while sitting in the seat. Sitting on the seat belt can damage the webbing and hardware.

Rear Seat Belt Comfort Guides

Rear seat belt comfort guides may provide added seat belt comfort for older children who have outgrown booster seats and for some adults. When installed on a shoulder belt, the comfort guide positions the shoulder belt away from the neck and head.

Comfort guides are available through your dealer for the rear outboard seating positions. Instructions are included with the guide.

Seat Belt Use During Pregnancy

Seat belts work for everyone, including pregnant women. Like all occupants, they are more likely to be seriously injured if they do not wear seat belts.

A pregnant woman should wear a lap-shoulder belt, and the lap portion should be worn as low as possible, below the rounding, throughout the pregnancy.

The best way to protect the fetus is to protect the mother. When a seat belt is worn properly, it is more likely that the fetus will not be hurt in a crash. For pregnant women, as for anyone, the key to making seat belts effective is wearing them properly.

Lap Belt

This section is only for the lap belt. To learn how to wear a lap-shoulder belt, see *Lap-Shoulder Belt* ⇨ *70*.

The vehicle may have a center seating position with a lap seat belt. The lap seat belt does not have a retractor.

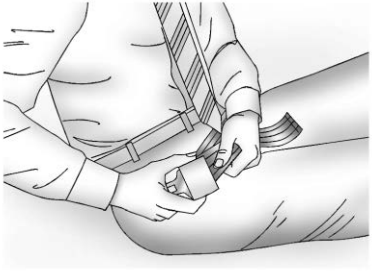

To make the belt longer, tilt the latch plate and pull it along the belt.

Buckle, position, and release it the same way as the lap part of a lap-shoulder belt.

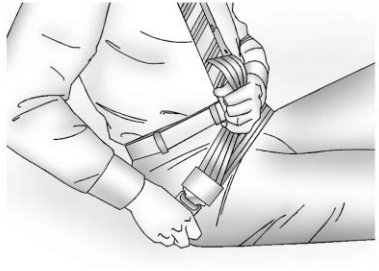

To make the belt shorter, pull its free end as shown until the belt is snug.

If the belt is not long enough, see *Seat Belt Extender* ⇨ *74*.

Make sure the release button on the buckle is positioned so you would be able to unbuckle the seat belt quickly if necessary.

Seat Belt Extender

If the vehicle's seat belt will fasten around you, you should use it.

But if a seat belt is not long enough, your dealer will order you an extender. When you go in to order it, take the heaviest coat you will wear, so the extender will be long enough for you. To help avoid personal injury, do not let someone else use it, and use it only for the seat it is made to fit. The extender has been designed for adults. Never use it for securing child restraints. For more information on the proper use and fit of seat belt extenders see the instruction sheet that comes with the extender.

Safety System Check

Periodically check the seat belt reminder, seat belts, buckles, latch plates, retractors, shoulder belt height adjusters (if equipped), and seat belt anchorages to make sure they are all in working order. Look for any other loose or damaged seat belt system parts that might keep a seat belt system from performing properly. See your dealer to have it repaired. Torn, frayed, or twisted seat belts may not protect you in a crash. Torn or frayed seat belts can rip apart under impact forces. If a belt is torn or frayed, have it

replaced immediately. If a belt is twisted, it may be possible to untwist by reversing the latch plate on the webbing. If the twist cannot be corrected, ask your dealer to fix it.

Make sure the seat belt reminder light is working. See *Seat Belt Reminders* ⇨ *143*.

Keep seat belts clean and dry. See *Seat Belt Care* ⇨ *75*.

Seat Belt Care

Keep belts clean and dry.

Seat belts should be properly cared for and maintained.

Seat belt hardware should be kept dry and free of dust or debris. As necessary, exterior hard surfaces and seat belt webbing may be lightly cleaned with mild soap and water. Ensure there is not excessive dust or debris in the mechanism. If dust or debris exists in the system please see the dealer. Parts may need to be replaced to ensure proper functionality of the system.

⚠ Warning

Do not bleach or dye seat belt webbing. It may severely weaken the webbing. In a crash, they might not be able to provide adequate protection. Clean and rinse seat belt webbing only with mild soap and lukewarm water. Allow the webbing to dry.

Replacing Seat Belt System Parts after a Crash

⚠ Warning

A crash can damage the seat belt system in the vehicle. A damaged seat belt system may not properly protect the person using it, resulting in serious injury or even death in a crash. To help make sure the seat belt systems are working properly after a crash,

(Continued)

Warning (Continued)

have them inspected and any necessary replacements made as soon as possible.

After a minor crash, replacement of seat belts may not be necessary. But the seat belt assemblies that were used during any crash may have been stressed or damaged. See your dealer to have the seat belt assemblies inspected or replaced.

New parts and repairs may be necessary even if the seat belt system was not being used at the time of the crash.

Have the seat belt pretensioners checked if the vehicle has been in a crash, or if the airbag readiness light stays on after you start the vehicle or while you are driving. See *Airbag Readiness Light* ⇨ *143*.

Airbag System

The vehicle has the following airbags:

- A frontal airbag for the driver
- A frontal airbag for the front outboard passenger

The vehicle may have the following airbags:

- A seat-mounted side impact airbag for the driver
- A seat-mounted side impact airbag for the front outboard passenger
- A roof-rail airbag for the driver and the passenger seated directly behind the driver
- A roof-rail airbag for the front outboard passenger and the person seated directly behind the front outboard passenger

All of the airbags in the vehicle will have the word AIRBAG on the trim or on a label near the deployment opening.

For frontal airbags, the word AIRBAG is on the center of the steering wheel for the driver and on the instrument panel for the front outboard passenger.

For seat-mounted side impact airbags, the word AIRBAG is on the seatback closest to the door.

For roof-rail airbags, the word AIRBAG is on the ceiling or trim.

Airbags are designed to supplement the protection provided by seat belts. Even though today's airbags are also designed to help reduce the risk of injury from the force of an inflating bag, all airbags must inflate very quickly to do their job.

Here are the most important things to know about the airbag system:

⚠ Warning

You can be severely injured or killed in a crash if you are not wearing your seat belt, even with airbags. Airbags are designed to

(Continued)

Warning (Continued)

work with seat belts, not replace them. Also, airbags are not designed to inflate in every crash. In some crashes seat belts are the only restraint. See *When Should an Airbag Inflate?* ⇨ *79*.

Wearing your seat belt during a crash helps reduce your chance of hitting things inside the vehicle or being ejected from it. Airbags are “supplemental restraints” to the seat belts. Everyone in the vehicle should wear a seat belt properly, whether or not there is an airbag for that person.

⚠ Warning

Because airbags inflate with great force and faster than the blink of an eye, anyone who is up against, or very close to, any airbag when it inflates can be

(Continued)

Warning (Continued)

seriously injured or killed. Do not sit unnecessarily close to any airbag, as you would be if sitting on the edge of the seat or leaning forward. Seat belts help keep you in position before and during a crash. Always wear a seat belt, even with airbags. The driver should sit as far back as possible while still maintaining control of the vehicle. The seat belts and the front outboard passenger airbags are most effective when you are sitting well back and upright in the seat with both feet on the floor.

Occupants should not lean on or sleep against the door or side windows in seating positions with seat-mounted side impact airbags and/or roof-rail airbags.

⚠ Warning

Children who are up against, or very close to, any airbag when it inflates can be seriously injured or killed. Always secure children properly in the vehicle. To read how, see *Older Children* ⇨ *91* or *Infants and Young Children* ⇨ *92*.

There is an airbag readiness light on the instrument cluster, which shows the airbag symbol.

The system checks the airbag electrical system for malfunctions. The light tells you if there is an electrical problem. See *Airbag Readiness Light* ⇨ *143* for more information.

Where Are the Airbags?

The driver frontal airbag is in the center of the steering wheel.

The front outboard passenger frontal airbag is in the passenger side instrument panel.

Driver Side Shown, Passenger Side Similar

If the vehicle has seat-mounted side impact airbags for the driver and front outboard passenger, they are in the side of the seatbacks closest to the door.

Driver Side Crew Cab Shown, Passenger Side Double and Regular Cabs Similar

If the vehicle has roof-rail airbags for the driver, front outboard passenger, and second row outboard passengers, they are in the ceiling above the side windows.

⚠ Warning

If something is between an occupant and an airbag, the airbag might not inflate properly or it might force the object into that person causing severe injury or even death. The path of an inflating airbag must be kept clear. Do not put anything between an occupant and an airbag, and do not attach or put anything on the steering wheel hub or on or near any other airbag covering.

Do not use seat accessories that block the inflation path of a seat-mounted side impact airbag.

Never secure anything to the roof of a vehicle with roof-rail airbags by routing a rope or tie-down through any door or window opening. If you do, the path of an inflating roof-rail airbag will be blocked.

When Should an Airbag Inflate?

This vehicle is equipped with airbags. See *Airbag System* ⇨ *76*. Airbags are designed to inflate if the impact exceeds the specific airbag system's deployment threshold. Deployment thresholds are used to predict how severe a crash is likely to be in time for the airbags to inflate and help restrain the occupants. The vehicle has electronic sensors which help the airbag system determine the severity of the impact. Deployment thresholds can vary with specific vehicle design.

Frontal airbags are designed to inflate in moderate to severe frontal or near frontal crashes to help reduce the potential for severe injuries, mainly to the driver's or front outboard passenger's head and chest.

Whether the frontal airbags will or should inflate is not based primarily on how fast the vehicle is traveling. It depends on what is hit, the direction of the impact, and how quickly the vehicle slows down.

Frontal airbags may inflate at different crash speeds depending on whether the vehicle hits an object straight on or at an angle, and whether the object is fixed or moving, rigid or deformable, narrow or wide.

Frontal airbags are not intended to inflate during vehicle rollovers, in rear impacts, or in many side impacts.

In addition, if the GVWR (Gross Vehicle Weight Rating) is at or below 3 855 kg (8,500 lb), the vehicle has advanced technology frontal airbags. You can find the GVWR on the Certification/Tire label on the center pillar of the vehicle. See *Vehicle Load Limits* ⇨ *238* for more information.

Advanced technology frontal airbags adjust the restraint according to crash severity. Vehicles with advanced technology frontal airbags have a seat position sensor that

enables the sensing system to monitor the position of the driver seat. The seat position sensor provides information that is used to adjust the deployment of the driver frontal airbag.

If the GVWR is at or below 4 536 kg (10,000 lb), the vehicle has seat-mounted side impact airbags. Vehicles with a GVWR above 4 536 kg (10,000 lb) may or may not have seat-mounted side impact airbags. Seat-mounted side impact airbags, if equipped, are designed to inflate in moderate to severe side crashes depending on the location of the impact. Seat-mounted side impact airbags are not designed to inflate in frontal impacts, near frontal impacts, rollovers, or rear impacts. A seat-mounted side impact airbag is designed to inflate on the side of the vehicle that is struck.

If the GVWR is at or below 4 536 kg (10,000 lb), the vehicle has roof-rail airbags. Vehicles with a GVWR above 4 536 kg (10,000 lb) may or may not have roof-rail airbags. These roof-rail airbags, if equipped, are designed to inflate in moderate to severe side crashes depending on the location of the impact. Both roof-rail airbags will inflate when either side of the vehicle is struck. In addition, these roof-rail airbags are designed to inflate in a severe frontal impact. If available, both roof-rail airbags will also inflate if the sensing system predicts that the vehicle is about to roll over on its side. The roof-rail airbags are not designed to inflate in rear impacts.

In any particular crash, no one can say whether an airbag should have inflated simply because of the vehicle damage or repair costs.

What Makes an Airbag Inflate?

In a deployment event, the sensing system sends an electrical signal triggering a release of gas from the inflator. Gas from the inflator fills the airbag causing the bag to break out of the cover. The inflator, the airbag, and related hardware are all part of the airbag module.

For airbag locations, see *Where Are the Airbags?* ⇨ 77.

How Does an Airbag Restrain?

In moderate to severe frontal or near frontal collisions, even belted occupants can contact the steering wheel or the instrument panel. In moderate to severe side collisions, even belted occupants can contact the inside of the vehicle.

Airbags supplement the protection provided by seat belts by distributing the force of the impact more evenly over the occupant's body.

Rollover capable roof-rail airbags are designed to help contain the head and chest of occupants in the outboard seating positions in the first and second rows. The rollover capable roof-rail airbags are designed to help reduce the risk of full or partial ejection in rollover events, although no system can prevent all such ejections.

But airbags would not help in many types of collisions, primarily because the occupant's motion is not toward those airbags. See *When Should an Airbag Inflate?* ⇨ *79*.

Airbags should never be regarded as anything more than a supplement to seat belts.

What Will You See after an Airbag Inflates?

After frontal and seat-mounted side impact airbags inflate, they quickly deflate, so quickly that some people may not even realize the airbags inflated. Roof-rail airbags may still be at least partially inflated for some time after they inflate. Some components of the airbag module may be hot for several minutes. For location of the airbags, see *Where Are the Airbags?* ⇨ *77*.

The parts of the airbag that come into contact with you may be warm, but not too hot to touch. There may be some smoke and dust coming from the vents in the deflated airbags. Airbag inflation does not prevent the driver from seeing out of the windshield or being able to steer the vehicle, nor does it prevent people from leaving the vehicle.

⚠ Warning

When an airbag inflates, there may be dust in the air. This dust could cause breathing problems for people with a history of asthma or other breathing trouble. To avoid this, everyone in the vehicle should get out as soon as it is safe to do so. If you have breathing problems but cannot get out of the vehicle after an airbag inflates, then get fresh air by opening a window or a door. If you experience breathing problems following an airbag deployment, you should seek medical attention.

The vehicle has a feature that may automatically unlock the doors, turn on the interior lamps and hazard warning flashers, and shut off the fuel system after the airbags inflate. The feature may also activate, without airbag inflation, after an event that exceeds a predetermined threshold. After turning the ignition off and then on again, the fuel system will return to normal operation; the doors can be locked, the interior lamps can be turned off, and the hazard warning flashers can be turned off using the controls for those features. If any of these systems are damaged in the crash they may not operate as normal.

⚠ Warning

A crash severe enough to inflate the airbags may have also damaged important functions in the vehicle, such as the fuel system, brake and steering systems, etc. Even if the vehicle appears to be drivable after a moderate crash, there may be concealed damage that could make it difficult to safely operate the vehicle.

(Continued)

Warning (Continued)

Use caution if you should attempt to restart the engine after a crash has occurred.

In many crashes severe enough to inflate the airbag, windshields are broken by vehicle deformation. Additional windshield breakage may also occur from the front outboard passenger airbag.

- Airbags are designed to inflate only once. After an airbag inflates, you will need some new parts for the airbag system. If you do not get them, the airbag system will not be there to help protect you in another crash. A new system will include airbag modules and possibly other parts. The service manual for the vehicle covers the need to replace other parts.
- The vehicle has a crash sensing and diagnostic module which records information after a crash. See *Vehicle Data Recording and Privacy* ⇨ *462* and *Event Data Recorders* ⇨ *462*.
- Let only qualified technicians work on the airbag systems. Improper service can mean that an airbag system will not work properly. See your dealer for service.

Airbag On-Off Switch

If the passenger side instrument panel endcap has the switch pictured in the following illustration, the vehicle has an airbag on-off switch that you can use to manually turn on or off the front outboard passenger frontal airbag. See *Instrument Panel* ⇨ *6*.

If the vehicle does not have an airbag on-off switch, it may have a passenger sensing system. See *Passenger Sensing System* ⇨ *84*.

This switch should only be turned to the OFF position if the person in the front outboard passenger position is a member of a passenger risk group identified by the national government as follows:

Infant. An infant (less than 1 year old) must ride in the front seat because:

- *My vehicle has no rear seat;*
- *My vehicle has a rear seat too small to accommodate a rear-facing infant seat; or*
- *The infant has a medical condition which, according to the infant's physician, makes it necessary for the infant to ride in the front seat so that the driver can constantly monitor the child's condition.*

Child age 1 to 12. A child age 1 to 12 must ride in the front seat because:

- *My vehicle has no rear seat;*
- *Although children ages 1 to 12 ride in the rear seat(s) whenever possible, children ages 1 to 12 sometimes must ride in the front because no space is available in the rear seat(s) of my vehicle; or*
- *The child has a medical condition which, according to the child's physician, makes it necessary for the child to ride in the front seat so that the driver can constantly monitor the child's condition.*

Medical Condition. A passenger has a medical condition which, according to his or her physician:

- *Causes the passenger airbag to pose a special risk for the passenger; and*
- *Makes the potential harm from the passenger airbag in a crash greater than the potential harm from turning off the airbag and allowing the passenger, even if belted, to hit the instrument panel or windshield in a crash.*

⚠ Warning

If the front outboard passenger frontal airbag is turned off for a person who is not in a risk group identified by the national government, that person will not have the extra protection of an airbag. In a crash, the airbag will not be able to inflate and help protect the person sitting there. Do not turn off the front outboard passenger frontal airbag unless the person sitting there is in a risk group.

To turn off the front outboard passenger frontal airbag, insert the ignition key into the airbag on-off switch, push in, and move the switch to the OFF position.

The word OFF or the off symbol will come on in the passenger airbag status indicator located in the overhead console to let you know that the front outboard passenger frontal airbag is off, after the system check is completed. The airbag OFF light will come on and stay on to let you know that the front outboard passenger frontal airbag is off. See *Airbag On-Off Light* ⇨ *144*. The airbag OFF light will stay on to remind you that the airbag is off.

The front outboard passenger airbag will remain off until you turn it back on again.

⚠ Warning

If the airbag readiness light ever comes on and stays on, it means that something may be wrong with the airbag system. For example, the front outboard passenger frontal airbag could inflate even though the airbag on-off switch is turned off.

To help avoid injury to yourself or others, have the vehicle serviced right away. See *Airbag Readiness Light* ⇨ *143* for more information, including important safety information.

To turn the front outboard passenger frontal airbag on again, insert the ignition key into the airbag on-off switch, push in, and move the switch to the ON position.

The front outboard passenger frontal airbag is now enabled (may inflate). See *Airbag On-Off Light* ⇨ *144*.

Passenger Sensing System

If the vehicle has one of the following indicators, then the vehicle has a passenger sensing system for the front outboard passenger position, unless there is an airbag on-off switch on the instrument panel endcap. If there is an airbag on-off switch, the vehicle does not have a passenger sensing system. See *Airbag On-Off Switch* ⇨ *82* for more information.

The passenger airbag status indicator will light on the overhead console when the vehicle is started.

United States

Canada

The words ON and OFF, or the symbols for on and off, will be visible during the system check. When the system check is complete, either the word ON or

OFF, or the symbol for on or off, will be visible. See *Passenger Airbag Status Indicator* ⇨ *145*.

The passenger sensing system turns off the front outboard passenger frontal airbag under certain conditions. No other airbag is affected by the passenger sensing system.

The passenger sensing system works with sensors that are part of the front outboard passenger seat and seat belt. The sensors are designed to detect the presence of a properly seated occupant and determine if the front outboard passenger frontal airbag should be allowed to inflate or not.

According to accident statistics, children are safer when properly secured in a rear seat in the correct child restraint for their weight and size.

Whenever possible, children aged 12 and under should be secured in a rear seating position.

Never put a rear-facing child seat in the front. This is because the risk to the rear-facing child is so great, if the airbag inflates.

⚠ Warning

A child in a rear-facing child restraint can be seriously injured or killed if the passenger frontal airbag inflates. This is because the back of the rear-facing child restraint would be very close to the inflating airbag. A child in a forward-facing child restraint can be seriously injured or killed if the passenger frontal airbag inflates and the passenger seat is in a forward position.

Even if the passenger sensing system has turned off the passenger frontal airbag, no system is fail-safe. No one can guarantee that an airbag will not deploy under some unusual circumstance, even though the airbag is turned off.

(Continued)

Warning (Continued)

Never put a rear-facing child restraint in the front seat, even if the airbag is off. If securing a forward-facing child restraint in the front outboard passenger seat, always move the seat as far back as it will go. It is better to secure child restraints in the rear seat. Consider using another vehicle to transport the child when a rear seat is not available.

If the vehicle does not have a rear seat that will accommodate a rear-facing child restraint, a rear-facing child restraint should not be installed in the vehicle, even if the airbag is off.

The passenger sensing system is designed to turn off the front outboard passenger frontal airbag if:

- The front outboard passenger seat is unoccupied.
- The system determines an infant is present in a child restraint.

- A front outboard passenger takes his/her weight off of the seat for a period of time.
- There is a critical problem with the airbag system or the passenger sensing system.

When the passenger sensing system has turned off the front outboard passenger frontal airbag, the OFF indicator will light and stay lit as a reminder that the airbag is off. See *Passenger Airbag Status Indicator* ⇨ *145*.

The passenger sensing system is designed to turn on the front outboard passenger frontal airbag anytime the system senses that a person of adult size is sitting properly in the front outboard passenger seat.

When the passenger sensing system has allowed the airbag to be enabled, the ON indicator will light and stay lit as a reminder that the airbag is active.

For some children, including children in child restraints, and for very small adults, the passenger sensing system may or may not turn off the front outboard passenger frontal airbag, depending upon the person's seating posture and body build. Everyone in the vehicle who has outgrown child restraints should wear a seat belt properly — whether or not there is an airbag for that person.

⚠ Warning

If the airbag readiness light ever comes on and stays on, it means that something may be wrong with the airbag system. To help avoid injury to yourself or others, have the vehicle serviced right away. See *Airbag Readiness Light* ⇨ *143* for more information, including important safety information.

If the On Indicator Is Lit for a Child Restraint

The passenger sensing system is designed to turn off the front outboard passenger frontal airbag if the system determines that an infant is present in a child restraint. If a child restraint has been installed and the ON indicator is lit:

1. Turn the vehicle off.
2. Remove the child restraint from the vehicle.
3. Remove any additional items from the seat such as blankets, cushions, seat covers, seat heaters, or seat massagers.
4. Reinstall the child restraint following the directions provided by the child restraint manufacturer and refer to *Securing Child Restraints (With the Seat Belt in the Center Front Seat)* ⇨ *113* or *Securing Child Restraints (With the Seat Belt in the Rear Seat)* ⇨ *110* or *Securing Child Restraints (With the Seat Belt in the Front Seat)* ⇨ *113*.

   Make sure the seat belt retractor is locked by pulling the shoulder belt all the way out of the retractor when installing the child restraint,

even if the child restraint is equipped with a seat belt lock off. When the retractor lock is set, the belt can be tightened but not pulled out of the retractor.

5. If, after reinstalling the child restraint and restarting the vehicle, the ON indicator is still lit, turn the vehicle off. Then slightly recline the vehicle seatback and adjust the seat cushion, if adjustable, to make sure that the vehicle seatback is not pushing the child restraint into the seat cushion.

   Also make sure the child restraint is not trapped under the vehicle head restraint. If this happens, adjust the head restraint. See *Head Restraints* ⇨ *56*.

6. Restart the vehicle.

The passenger sensing system may or may not turn off the airbag for a child in a child restraint depending upon the child's size. It is better to secure child restraints in the rear seat. Consider using another vehicle to transport the child when a rear seat is not available. Never put a rear-facing child restraint in the front seat, even if the ON indicator is not lit.

If the Off Indicator Is Lit for an Adult-Sized Occupant

If a person of adult size is sitting in the front outboard passenger seat, but the OFF indicator is lit, it could be because that person is not sitting properly in the seat or that the child restraint locking feature is engaged. Use the following steps to allow the system to detect that person and enable the front outboard passenger frontal airbag:

1. Turn the vehicle off.
2. Remove any additional material from the seat, such as blankets, cushions, seat covers, seat heaters, or seat massagers.
3. Place the seatback in the fully upright position.
4. Have the person sit upright in the seat, centered on the seat cushion, with legs comfortably extended.
5. If the shoulder portion of the belt is pulled out all the way, the child restraint locking feature will be engaged. This may unintentionally cause the passenger sensing system to turn the airbag off for some adult-sized occupants. If this happens, unbuckle the belt, let the belt go back all the way, and then buckle the belt again without pulling the belt out all the way.

6. Restart the vehicle and have the person remain in this position for two to three minutes after the ON indicator is lit.

⚠ Warning

If the front outboard passenger airbag is turned off for an adult-sized occupant, the airbag will not be able to inflate and help protect that person in a crash, resulting in an increased risk of serious injury or even death. An adult-sized occupant should not ride in the front outboard passenger seat, if the passenger airbag OFF indicator is lit.

Additional Factors Affecting System Operation

Seat belts help keep the passenger in position on the seat during vehicle maneuvers and braking, which helps the passenger sensing system maintain the passenger airbag status. See “Seat Belts” and “Child Restraints” in the Index for additional information about the importance of proper restraint use.

A thick layer of additional material, such as a blanket or cushion, or aftermarket equipment such as seat covers, seat heaters, and seat massagers can affect how well the passenger sensing system operates. We recommend that you not use seat covers or other aftermarket equipment except when approved by GM for your specific vehicle. See *Adding Equipment to the Airbag-Equipped Vehicle* ⇨ *89* for more information about modifications that can affect how the system operates.

The ON indicator may be lit if an object, such as a briefcase, handbag, grocery bag, laptop, or other electronic device, is put on an unoccupied seat. If this is not desired, remove the object from the seat.

⚠ Warning

Stowing articles under the passenger seat or between the passenger seat cushion and seatback may interfere with the proper operation of the passenger sensing system.

Servicing the Airbag-Equipped Vehicle

Airbags affect how the vehicle should be serviced. There are parts of the airbag system in several places around the vehicle. Your dealer and the service manual have information about servicing the vehicle and the airbag system. To purchase a service manual, see *Publication Ordering Information* ⇨ *459*.

⚠ Warning

For up to 10 seconds after the vehicle is turned off and the battery is disconnected, an airbag can still inflate during improper service. You can be injured if you are close to an airbag when it inflates. Avoid yellow connectors. They are probably part of the airbag system. Be sure to follow proper service procedures, and make sure the person performing work for you is qualified to do so.

Adding Equipment to the Airbag-Equipped Vehicle

Adding accessories that change the vehicle's frame, bumper system, height, front end, or side sheet metal, may keep the airbag system from working properly.

The operation of the airbag system can also be affected by changing, including improperly repairing or replacing, any parts of the following:

- Airbag system, including airbag modules, front or side impact sensors, sensing and diagnostic module, or airbag wiring
- Front seats, including stitching, seams or zippers
- Seat belts
- Steering wheel, instrument panel, overhead console, ceiling trim, or pillar garnish trim
- Inner door seals, including speakers

Your dealer and the service manual have information about the location of the airbag modules and sensors, sensing and diagnostic module, and airbag wiring along with the proper replacement procedures.

In addition, the vehicle may have a passenger sensing system for the front outboard passenger position, which includes sensors that are part of the passenger's seat. The passenger sensing system may not operate properly if the original seat trim is replaced with non-GM covers, upholstery, or trim; or with GM covers, upholstery, or trim designed for a different vehicle. Any object, such as an aftermarket seat heater or a comfort-enhancing pad or device, installed under or on top of the seat fabric, could also interfere with the operation of the passenger sensing system. This could either prevent proper deployment of the passenger airbag(s) or prevent the passenger sensing system from properly turning off the passenger airbag(s). See *Passenger Sensing System* ⇨ *84*.

If the vehicle has rollover roof-rail airbags, see *Different Size Tires and Wheels* ⇨ *391* for additional important information.

If a snow plow is added to the vehicle, the airbags should still work properly. The airbag systems were designed to work properly under a wide range of conditions, including snow plowing with vehicles that have the optional snow plow prep package (RPO VYU). Do not change or defeat the snow plow's "tripping mechanism." If you do, it

can damage the snow plow and the vehicle, and may cause an airbag deployment.

If the vehicle must be modified because you have a disability and you have questions about whether the modifications will affect the vehicle's airbag system, or if you have questions about whether the airbag system will be affected if the vehicle is modified for any other reason, call Customer Assistance. See *Customer Assistance Offices* ⇨ *452*.

Airbag System Check

The airbag system does not need regularly scheduled maintenance or replacement. Make sure the airbag readiness light is working. See *Airbag Readiness Light* ⇨ *143*.

Caution

If an airbag covering is damaged, opened, or broken, the airbag may not work properly. Do not open or break the airbag coverings. If there are any opened or broken airbag coverings, have the airbag covering and/or airbag module replaced. For the location of the airbags, see *Where Are the Airbags?* ⇨ *77*. See your dealer for service.

Replacing Airbag System Parts after a Crash

⚠ Warning

A crash can damage the airbag systems in the vehicle.
A damaged airbag system may not properly protect you and your passenger(s) in a crash, resulting in serious injury or even death. To

(Continued)

Warning (Continued)

help make sure the airbag systems are working properly after a crash, have them inspected and any necessary replacements made as soon as possible.

If an airbag inflates, you will need to replace airbag system parts. See your dealer for service.

If the airbag readiness light stays on after the vehicle is started or comes on when you are driving, the airbag system may not work properly. Have the vehicle serviced right away. See *Airbag Readiness Light* ⇨ *143*.

Child Restraints

Older Children

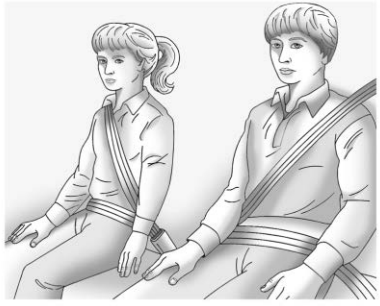

Older children who have outgrown booster seats should wear the vehicle's seat belts.

The manufacturer instructions that come with the booster seat state the weight and height limitations for that booster. Use a booster seat with a lap-shoulder belt until the child passes the fit test below:

- Sit all the way back on the seat. Do the knees bend at the seat edge? If yes, continue. If no, return to the booster seat.
- Buckle the lap-shoulder belt. Does the shoulder belt rest on the shoulder? If yes, continue. If no, try using the rear seat belt comfort guide, if available. See "Rear Seat Belt Comfort Guides" under *Lap-Shoulder Belt* ⇨ *70*. If a comfort guide is not available, or if the shoulder belt still does not rest on the shoulder, then return to the booster seat.
- Does the lap belt fit low and snug on the hips, touching the thighs? If yes, continue. If no, return to the booster seat.
- Can proper seat belt fit be maintained for the length of the trip? If yes, continue. If no, return to the booster seat.

If you have the choice, a child should sit in a position with a lap-shoulder belt and get the additional restraint a shoulder belt can provide.

Q: What is the proper way to wear seat belts?

A: An older child should wear a lap-shoulder belt and get the additional restraint a shoulder belt can provide. The shoulder belt should not cross the face or neck. The lap belt should fit snugly below the hips, just touching the top of the thighs. This applies belt force to the child's pelvic bones in a crash. It should never be worn over the abdomen, which could cause severe or even fatal internal injuries in a crash.

Also see "Rear Seat Belt Comfort Guides" under *Lap-Shoulder Belt* ⇨ *70*.

According to accident statistics, children are safer when properly restrained in a rear seating position.

In a crash, children who are not buckled up can strike other people who are buckled up, or can be thrown out of the vehicle. Older children need to use seat belts properly.

⚠ Warning

Never allow more than one child to wear the same seat belt. The seat belt cannot properly spread the impact forces. In a crash, they can be crushed together and seriously injured. A seat belt must be used by only one person at a time.

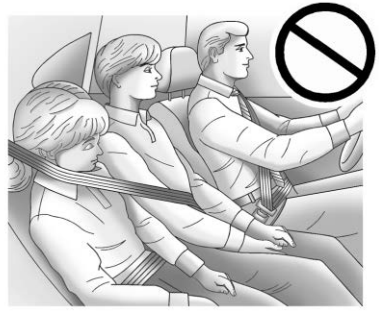

⚠ Warning

Never allow a child to wear the seat belt with the shoulder belt behind their back. A child can be seriously injured by not wearing the lap-shoulder belt properly. In a crash, the child would not be restrained by the shoulder belt. The child could move too far forward increasing the chance of head and neck injury. The child might also slide under the lap belt. The belt force would then be applied right on the abdomen.

(Continued)

Warning (Continued)

That could cause serious or fatal injuries. The shoulder belt should go over the shoulder and across the chest.

Infants and Young Children

Everyone in a vehicle needs protection! This includes infants and all other children. Neither the distance traveled nor the age and size of the traveler changes the

need, for everyone, to use safety restraints. In fact, the law in every state in the United States and in every Canadian province says children up to some age must be restrained while in a vehicle.

⚠ Warning

Children can be seriously injured or strangled if a shoulder belt is wrapped around their neck. The shoulder belt can tighten but cannot be loosened if it is locked. The shoulder belt locks when it is pulled all the way out of the retractor. It unlocks when the shoulder belt is allowed to go all the way back into the retractor, but it cannot do this if it is wrapped around a child's neck. If the shoulder belt is locked and tightened around a child's neck, the only way to loosen the belt is to cut it.

(Continued)

Warning (Continued)

Never leave children unattended in a vehicle and never allow children to play with the seat belts.

Every time infants and young children ride in vehicles, they should have the protection provided by appropriate child restraints. Neither the vehicle's seat belt system nor its airbag system is designed for them.

Children who are not restrained properly can strike other people, or can be thrown out of the vehicle.

⚠ Warning

Never hold an infant or a child while riding in a vehicle. Due to crash forces, an infant or a child will become so heavy it is not possible to hold it during a crash. For example, in a crash at only 40 km/h (25 mph), a 5.5 kg (12 lb)

(Continued)

Warning (Continued)

infant will suddenly become a 110 kg (240 lb) force on a person's arms. An infant or child should be secured in an appropriate restraint.

⚠ Warning

Children who are up against, or very close to, any airbag when it inflates can be seriously injured

(Continued)

Warning (Continued)

or killed. Never put a rear-facing child restraint in the front outboard seat. Secure a rear-facing child restraint in a rear seat. It is also better to secure a forward-facing child restraint in a rear seat. If you must secure a forward-facing child restraint in the front outboard seat, always move the front passenger seat as far back as it will go.

Child restraints are devices used to restrain, seat, or position children in the vehicle and are sometimes called child seats or car seats.

There are three basic types of child restraints:

- Forward-facing child restraints
- Rear-facing child restraints
- Belt-positioning booster seats

The proper child restraint for your child depends on their size, weight, and age, and also on whether the child restraint is compatible with the vehicle in which it will be used.

For each type of child restraint, there are many different models available. When purchasing a child restraint, be sure it is designed to be used in a motor vehicle. If it is, the restraint will have a label saying that it meets federal motor vehicle safety standards. The restraint manufacturer's instructions that come with the restraint state the weight and height limitations for a particular child restraint. In addition, there are many kinds of restraints available for children with special needs.

⚠ Warning

To reduce the risk of neck and head injury in a crash, infants and toddlers should be secured in a rear-facing child restraint until age two, or until they reach the maximum height and weight limits of their child restraint.

⚠ Warning

A young child's hip bones are still so small that the vehicle's regular seat belt may not remain low on the hip bones, as it should. Instead, it may settle up around the child's abdomen. In a crash, the belt would apply force on a body area that is unprotected by any bony structure. This alone could cause serious or fatal

(Continued)

Warning (Continued)

injuries. To reduce the risk of serious or fatal injuries during a crash, young children should always be secured in appropriate child restraints.

Child Restraint Systems

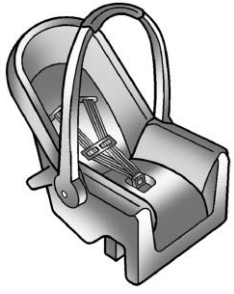

Rear-Facing Infant Restraint

A rear-facing child restraint provides restraint with the seating surface against the back of the infant.

The harness system holds the infant in place and, in a crash, acts to keep the infant positioned in the restraint.

Forward-Facing Child Restraint

A forward-facing child restraint provides restraint for the child's body with the harness.

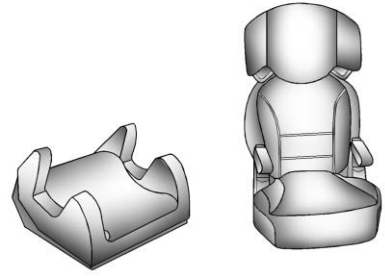

Booster Seats

A belt-positioning booster seat is used for children who have outgrown their forward-facing child restraint. Boosters are designed to improve the fit of the vehicle's seat belt system until the child is large enough for the vehicle seat belts to fit properly without a booster seat. See the seat belt fit test in *Older Children* ⇨ *91*.

Securing an Add-On Child Restraint in the Vehicle

⚠ Warning

A child can be seriously injured or killed in a crash if the child restraint is not properly secured in the vehicle. Secure the child restraint properly in the vehicle using the vehicle's seat belt or LATCH system, following the instructions that came with that child restraint and the instructions in this manual.

To help reduce the chance of injury, the child restraint must be secured in the vehicle. Child restraints must be secured in vehicle seats by lap belts or the lap belt portion of a lap-shoulder belt, or by the LATCH system. See *Lower Anchors and Tethers for Children (LATCH System)* ⇨ *98* for more information. Children can be endangered in a crash if the child restraint is not properly secured in the vehicle.

When securing an add-on child restraint, refer to the instructions that come with the restraint which may be on the restraint itself or in a booklet, or both, and to this manual. The child restraint instructions are important, so if they are not available, obtain a replacement copy from the manufacturer.

Keep in mind that an unsecured child restraint can move around in a collision or sudden stop and injure people in the vehicle. Be sure to properly secure any child restraint in the vehicle — even when no child is in it.

In some areas of the United States and Canada, Certified Child Passenger Safety Technicians (CPSTs) are available to inspect and demonstrate how to correctly use and install child restraints. In the U.S., refer to the National Highway Traffic Safety Administration (NHTSA) website to locate the nearest child safety seat inspection station. For CPST availability in Canada, check with Transport Canada or the Provincial Ministry of Transportation office.

Securing the Child Within the Child Restraint

⚠ Warning

A child can be seriously injured or killed in a crash if the child is not properly secured in the child restraint. Secure the child properly following the instructions that came with that child restraint.

Where to Put the Restraint

According to accident statistics, children and infants are safer when properly restrained in an appropriate child restraint secured in a rear seating position.

Whenever possible, children aged 12 and under should be secured in a rear seating position.

If a child restraint is secured in the front outboard passenger seat, and the vehicle has a switch on the passenger side instrument panel endcap to manually turn off the front outboard passenger airbag, see *Airbag On-Off Switch* ⇨ *82* and *Securing Child Restraints (With the Seat Belt in the Center Front Seat)* ⇨ *113* or *Securing Child Restraints (With the Seat Belt in the Rear Seat)* ⇨ *110* or *Securing Child Restraints (With the Seat Belt in the Front Seat)* ⇨ *113* for more information, including important safety information.

Never put a rear-facing child restraint in the front. This is because the risk to the rear-facing child is so great if the airbag deploys.

⚠ Warning

A child in a rear-facing child restraint can be seriously injured or killed if the front outboard passenger frontal airbag inflates. This is because the back of the

(Continued)

Warning (Continued)

rear-facing child restraint would be very close to the inflating airbag. A child in a forward-facing child restraint can be seriously injured or killed if the front outboard passenger frontal airbag inflates and the passenger seat is in a forward position.

Even if the passenger sensing system or airbag switch has turned off the front outboard passenger frontal airbag, no system is fail-safe. No one can guarantee that an airbag will not deploy under some unusual circumstance, even though it is turned off.

Secure rear-facing child restraints in a rear seat, even if the airbag is off. If you secure a forward-facing child restraint in the front outboard passenger seat, always move the seat as far

(Continued)

Warning (Continued)

back as it will go. It is better to secure the child restraint in a rear seat.

⚠ Warning

A child in a child restraint in the center front seat can be badly injured or killed by the frontal airbags if they inflate. Never secure a child restraint in the center front seat. It is always better to secure a child restraint in a rear seat.

Do not use child restraints in the center front seat position.

If the vehicle does not have a rear seat that will accommodate a rear-facing child restraint, a rear-facing child restraint should not be installed in the vehicle, even if the airbag is off.

When securing a child restraint with the seat belts in a rear seat position, study the instructions that came with the child restraint to make sure it is compatible with this vehicle.

Child restraints and booster seats vary considerably in size, and some may fit in certain seating positions better than others.

Depending on where you place the child restraint and the size of the child restraint, you may not be able to access adjacent seat belts or LATCH anchors for additional passengers or child restraints. Adjacent seating positions should not be used if the child restraint prevents access to or interferes with the routing of the seat belt.

Wherever a child restraint is installed, be sure to follow the instructions that came with the child restraint and secure the child restraint properly.

Keep in mind that an unsecured child restraint can move around in a collision or sudden stop and injure people in the vehicle. Be sure to properly secure any child restraint in the vehicle — even when no child is in it.

Lower Anchors and Tethers for Children (LATCH System)

The LATCH system secures a child restraint during driving or in a crash. LATCH attachments on the child restraint are used to attach the child restraint to the anchors in the vehicle. This system is designed to make installation of a child restraint easier.

In order to use the LATCH system in your vehicle, you need a child restraint that has LATCH attachments. LATCH-compatible rear-facing and forward-facing child seats can be properly installed using either the LATCH anchors or the vehicle's seat belts. Do not use both the seat belts and the LATCH anchorage system to secure a rear-facing or forward-facing child seat.

Booster seats use the vehicle's seat belts to secure the child in the booster seat. If the manufacturer recommends that the booster seat be secured with the LATCH system, this can be done as long as the booster seat can be positioned properly and there is no interference with the proper positioning of the lap-shoulder belt on the child.

Make sure to follow the instructions that came with the child restraint, and also the instructions in this manual.

When installing a child restraint with a top tether, you must also use either the lower anchors or the seat belts to properly secure the child restraint. A child restraint must never be attached using only the top tether.

The LATCH anchorage system can be used until the combined weight of the child plus the child restraint is 29.5 kg (65 lbs). Use the seat belt alone instead of the LATCH anchorage system once the combined weight is more than 29.5 kg (65 lbs).

See *Securing Child Restraints (With the Seat Belt in the Center Front Seat)* ⇨ *113* or *Securing Child Restraints (With the Seat Belt in the Rear Seat)* ⇨ *110* or *Securing Child Restraints (With the Seat Belt in the Front Seat)* ⇨ *113*.

Child restraints built after March 2014 will be labeled with the specific child weight up to which the LATCH system can be used to install the restraint.

The following explains how to attach a child restraint with these attachments in the vehicle.

Not all vehicle seating positions or child restraints have lower anchors and attachments or top tether anchors and attachments. In this case, the seat belt must be used (with top tether where available) to secure the child restraint.
See *Securing Child Restraints (With the Seat Belt in the Center Front Seat)* ⇨ *113* or *Securing Child Restraints (With the Seat Belt in the Rear Seat)* ⇨ *110* or *Securing Child Restraints (With the Seat Belt in the Front Seat)* ⇨ *113*.

Lower Anchors

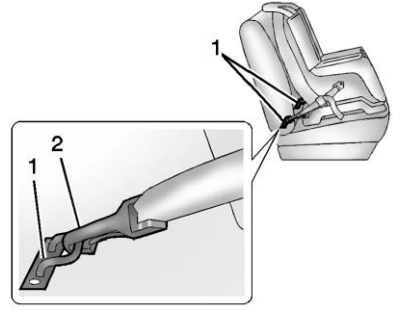

Lower anchors (1) are metal bars built into the vehicle. There are two lower anchors for each LATCH seating position that will accommodate a child restraint with lower attachments (2).

Top Tether Anchor

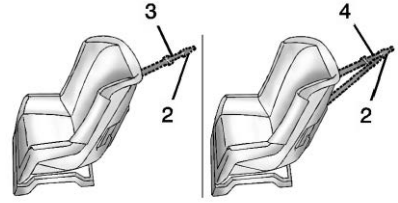

A top tether (3, 4) is used to secure the top of the child restraint to the vehicle. A top tether anchor is built into the vehicle. The top tether attachment hook (2) on the child restraint connects to the top tether anchor in the vehicle in order to reduce the forward movement and rotation of the child restraint during driving or in a crash.

The child restraint may have a single tether (3) or a dual tether (4). Either will have a single attachment hook (2) to secure the top tether to the anchor.

Some child restraints that have a top tether are designed for use with or without the top tether being attached. Others require the top tether always to be attached. In Canada, the law requires that forward-facing child restraints have a top tether, and that the tether be attached. Be sure to read and follow the instructions for your child restraint.

Lower Anchor and Top Tether Anchor Locations

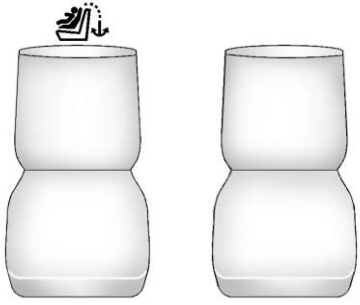

Regular Cab — Two-Passenger Front Seat

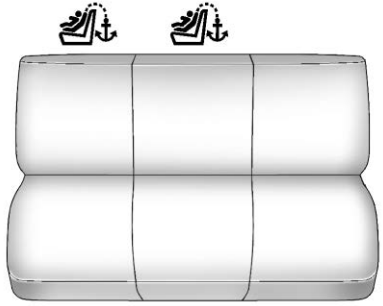

Regular Cab — Three-Passenger Front Seat

: Seating positions with top tether anchors.

Do not install a child restraint in the center front seating position. See *Securing Child Restraints (With the Seat Belt in the Center Front Seat)* ⇨ *113* or *Securing Child Restraints (With the Seat Belt in the Rear Seat)* ⇨ *110* or *Securing Child Restraints (With the Seat Belt in the Front Seat)* ⇨ *113* for more information.

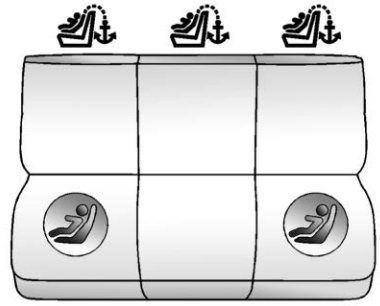

Crew and Double Cab Rear Seat

: Seating positions with top tether anchors.

: Seating positions with two lower anchors.

To assist in locating the lower anchors on crew cab models, each seating position with lower anchors

has two labels near the crease between the seatback and the seat cushion.

For double cab models, the rear outboard seating positions have exposed metal lower anchors in the crease between the seatback and the seat cushion.

For regular cab models, there is an anchor symbol on the cover to assist you in locating the top tether anchors.

Do not install a child restraint in the center seating position.
See *Securing Child Restraints (With the Seat Belt in the Center Front Seat)* ⇨ *113* or *Securing Child Restraints (With the Seat Belt in the Rear Seat)* ⇨ *110* or *Securing Child Restraints (With the Seat Belt in the Front Seat)* ⇨ *113* for more information.

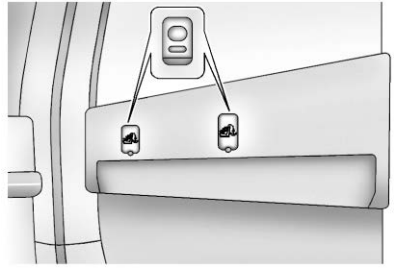

Regular Cab

For regular cab models, the top tether anchors are under covers on the back panel behind the passenger seat. Remove the trim plug to access the anchor. Be sure to use an anchor on the same side of the vehicle as the seating position where the child restraint will be placed.

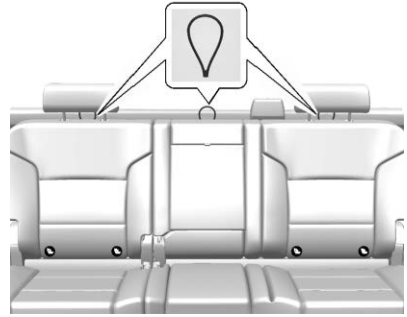

Crew Cab Shown, Double Cab Similar

For crew and double cab models, the top tether anchors are the loops near the top of the seatback for each rear seating position. These loops will be used to route the top tether through, as well as to secure the top tether to the vehicle. Be sure to use the anchor (loop) on the same side of the vehicle as the seating position where the child restraint will be placed.

Be sure to read the following instructions to properly install a child restraint using these loops.

Do not secure a child restraint in a position without a top tether anchor if a national or local law requires that the top tether be attached, or if the instructions that come with the child restraint say that the top tether must be attached.

According to accident statistics, children and infants are safer when properly restrained in a child restraint system or infant restraint system secured in a rear seating position. See *Where to Put the Restraint* ⇨ *96* for additional information.

Securing a Child Restraint Designed for the LATCH System

⚠ Warning

A child could be seriously injured or killed in a crash if the child restraint is not properly attached to the vehicle using either the LATCH anchors or the vehicle seat belt. Follow the instructions

(Continued)

Warning (Continued)

that came with the child restraint and the instructions in this manual.

⚠ Warning

Do not attach more than one child restraint to a single anchor, except for the center top tether anchors in the crew and double cabs. Attaching more than one child restraint to a single anchor could cause the anchor or attachment to come loose or even break during a crash. A child or others could be injured. To reduce the risk of serious or fatal injuries during a crash, attach only one child restraint per anchor.

⚠ Warning

Children can be seriously injured or strangled if a shoulder belt is wrapped around their neck. The shoulder belt can tighten but cannot be loosened if it is locked. The shoulder belt locks when it is pulled all the way out of the retractor. It unlocks when the shoulder belt is allowed to go all the way back into the retractor, but it cannot do this if it is wrapped around a child's neck. If the shoulder belt is locked and tightened around a child's neck, the only way to loosen the belt is to cut it.

Buckle any unused seat belts behind the child restraint so children cannot reach them. Pull the shoulder belt all the way out of the retractor to set the lock, and tighten the belt behind the child restraint after the child restraint has been installed.

Caution

Do not let the LATCH attachments rub against the vehicle's seat belts. This may damage these parts. If necessary, move buckled seat belts to avoid rubbing the LATCH attachments.

Do not fold the rear seatback when the seat is occupied. Do not fold the empty rear seat with a seat belt buckled. This could damage the seat belt or the seat. Unbuckle and return the seat belt to its stowed position, before folding the seat.

If you need to secure more than one child restraint in the rear seat, see *Where to Put the Restraint* ⇨ *96*.

Regular Cab Models

1. For models without a rear seat, forward-facing child restraints should only be installed in the right front seating position with belts and a top tether. See *Securing Child Restraints (With the Seat Belt in the Center Front Seat)* ⇨ *113* or *Securing Child Restraints (With the Seat Belt in the Rear Seat)* ⇨ *110* or *Securing Child Restraints (With the Seat Belt in the Front Seat)* ⇨ *113*.

   If the child restraint manufacturer recommends that the top tether be attached, attach and tighten the top tether to the top tether anchor, if your vehicle has one. Refer to the child restraint instructions and the following steps:

   1.1. Fold the passenger seatback forward to access the top tether anchor. See *Reclining Seatbacks* ⇨ *59*.

   1.2. Find the top tether anchor.

   1.3. Remove the cover to expose the anchor.

   1.4. Route, attach, and tighten the top tether according to your child restraint instructions and the following instructions:

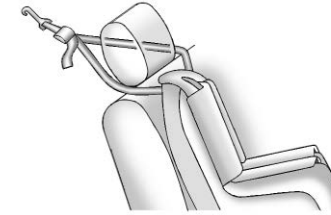

   If the position you are using has an adjustable head restraint and you are using a dual tether, route the tether around the head restraint.

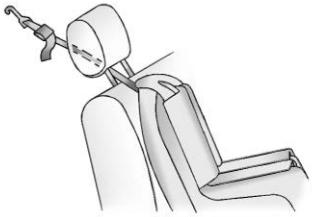

If the position you are using has an adjustable head restraint and you are using a single tether, raise the head restraint and route the tether under the head restraint and in between the head restraint posts.

2. Secure the child restraint in the right front seating position with the vehicle belts.
See *Securing Child Restraints (With the Seat Belt in the Center Front Seat)* ⇨ *113* or *Securing Child Restraints (With the Seat Belt in the Rear Seat)* ⇨ *110* or *Securing Child Restraints (With the Seat Belt in the Front Seat)* ⇨ *113*.

3. Before placing a child in the child restraint, make sure it is securely held in place. To check, grasp the child restraint at the belt path and attempt to move it side to side and back and forth. There should be no more than 2.5 cm (1 in) of movement for proper installation.

Crew Cab Models

1. Attach and tighten the lower attachments to the lower anchors. If the child restraint does not have lower attachments or the desired seating position does not have lower anchors, secure the child restraint with the top tether and the belts. Refer to your child restraint manufacturer's instructions and the instructions in this manual.
   1.1. Find the lower anchors for the desired seating position.
   1.2. Put the child restraint on the seat.
   1.3. Attach and tighten the lower attachments on the child restraint to the lower anchors.
2. For forward-facing child restraints, attach and tighten the top tether to the top tether anchor (loop), if your vehicle has one. Follow the child restraint instructions the vehicle LATCH anchor weight limits described at the beginning of this section, and the following steps:

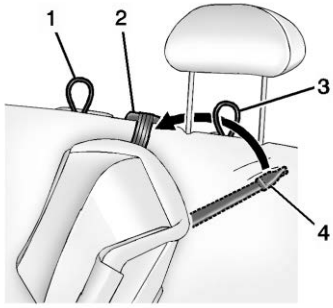

Example — Rear Driver Side Position

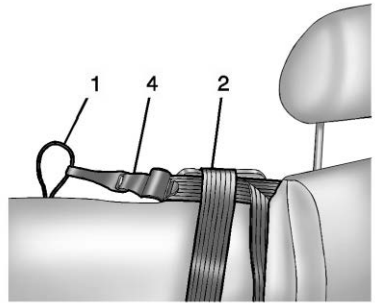

Example — Rear Driver Side Position

2.1. For a top tether in the rear driver side position:

2.1.1. Raise the headrest.

2.1.2. Route the top tether (4) between the headrest posts, through the loop (3), behind the inboard headrest post, and under the center shoulder belt (2).

2.1.3. Then attach the top tether (4) to the top tether anchor (loop) (1) at the center rear seating position.

2.2. For a top tether in the rear center position:

2.2.1. Route the top tether (4) through the center loop (1), and behind the passenger side headrest post.

2.2.2. Then attach the top tether (4) to the top tether anchor (loop) at the rear passenger side seating position.

2.3. For a top tether in the rear passenger position:

2.3.1. Raise the headrest.

2.3.2. Route the top tether (4) between the headrest posts, through the loop on the passenger side and behind the inboard headrest post.

2.3.3. Then attach the top tether (4) to the top tether anchor (loop) (1) at the center rear seating position.

3. Tighten the top tether per the child restraint manufacturer's instructions.

   When the top tether is properly tightened, the anchor (loop) may bend. This is normal and will not damage the vehicle.

   If child restraints are installed in both outboard positions, both top tethers can be attached to the center loop. Top tethers can be attached for child restraints in all three rear seating positions at the same time, following the routing instructions above.

4. Before placing a child in the child restraint, make sure it is securely held in place. To check, grasp the child restraint at the LATCH path and attempt to move it side to side and back and forth. There should be no more than 2.5 cm (1 in) of movement for proper installation.

Double Cab Models

1. Remove the headrest prior to installing a forward-facing child restraint in an outboard rear seating position. See “Headrest Removal and Reinstallation” at the end of this section.

2. Attach and tighten the lower attachments to the lower anchors. If the child restraint does not have lower attachments or the desired seating position does not have lower anchors, secure the child restraint with the top tether and the belts. Refer to your child restraint manufacturer’s instructions and the instructions in this manual.

   2.1. Find the lower anchors for the desired seating position.

   2.2. Put the child restraint on the seat.

   2.3. Attach and tighten the lower attachments on the child restraint to the lower anchors.

3. For forward-facing child restraints, attach and tighten the top tether to the top tether anchor (loop). Follow the child restraint instructions, the vehicle LATCH anchor weight limits described at the beginning of this section, and the following steps:

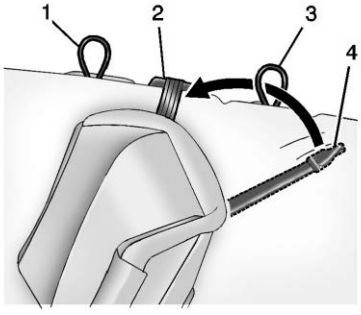

Example — Rear Driver Side Position

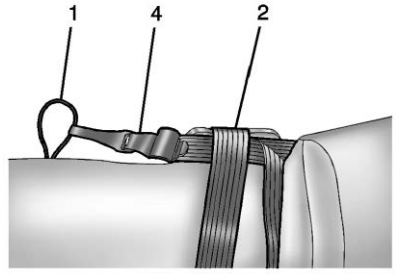

Example — Rear Driver Side Position

3.1. For a top tether in the rear driver side position:

3.1.1. Remove the headrest.

3.1.2. Route the top tether (4) through the loop (3) on the driver side under the center shoulder belt (2).

3.1.3. Then attach the top tether (4) to the top tether anchor (loop) (1) at the center rear seating position.

3.2. For a top tether in the rear center position:

3.2.1. Route the top tether (4) through the center loop (1), and behind the passenger side headrest post.

3.2.2. Then attach the top tether (4) to the top tether anchor (loop) at the rear passenger side seating position.

3.3. For a top tether in the rear passenger position:

3.3.1. Remove the headrest.

3.3.2. Route the top tether (4) through the loop on the passenger side.

3.3.3. Then attach the top tether (4) to the top tether anchor (loop) (1) at the center rear seating position.

4. Tighten the top tether per the child restraint manufacturer's instructions.

   When the top tether is properly tightened, the anchor (loop) may bend. This is normal and will not damage the vehicle.

   If child restraints are installed in both outboard positions, both top tethers can be attached to the center loop. Top tethers can be attached for child restraints in all three rear seating positions at the same time, following the routing instructions above.

5. Before placing a child in the child restraint, make sure it is securely held in place. To check, grasp the child restraint at the LATCH path and attempt to move it side to side and back and forth. There should be no more than 2.5 cm (1 in) of movement for proper installation.

Headrest Removal and Reinstallation

Crew Cab Models

For outboard rear seating positions, if the child restraint cannot be installed properly with the headrest in place, the headrest may be removed. See your dealer for assistance with removal.

Store the removed headrests in a secure place. Reinstall the headrest before the seating position is moved.

To reinstall the headrest:

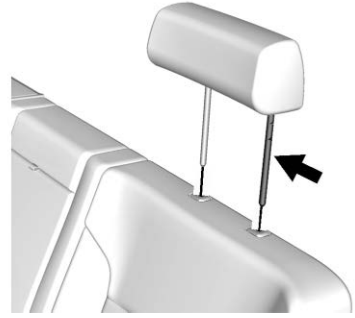

1. Insert the headrest posts into the holes in the top of the seatback with the longer chrome plated post toward the driver side of the vehicle.
2. Push the headrest all the way down until it contacts the top of the seatback.

Double Cab Models

The rear outboard headrests should be removed when installing forward-facing child restraints.

To remove the headrest:

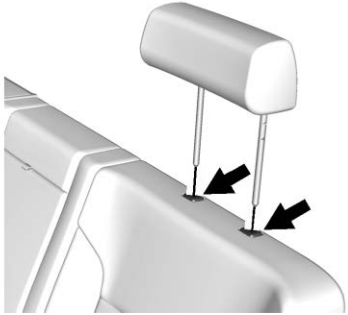

1. Press both buttons on the headrest posts and pull up on the headrest.
2. Store the headrest in a secure place.
3. When the child restraint is removed, reinstall the headrest before the seating position is used.

To reinstall the headrest:

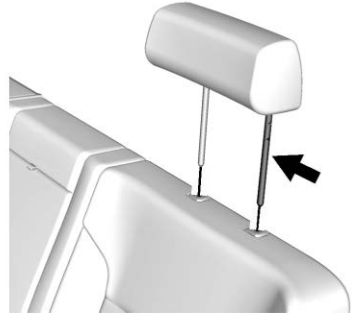

1. Insert the headrest posts into the holes in the top of the seatback with the longer chrome plated post toward the driver side of the vehicle.
2. Push the headrest all the way down until it contacts the top of the seatback.

Replacing LATCH System Parts After a Crash

⚠ Warning

A crash can damage the LATCH system in the vehicle. A damaged LATCH system may not properly secure the child restraint, resulting in serious injury or even death in a crash. To help make sure the LATCH system is working properly after a crash, see your dealer to have the system inspected and any necessary replacements made as soon as possible.

If the vehicle has the LATCH system and it was being used during a crash, new LATCH system parts may be needed.

New parts and repairs may be necessary even if the LATCH system was not being used at the time of the crash.

Securing Child Restraints (With the Seat Belt in the Rear Seat)

When securing a child restraint with the seat belts in a rear seat position, study the instructions that came with the child restraint to make sure it is compatible with this vehicle.

If the child restraint has the LATCH system, see *Lower Anchors and Tethers for Children (LATCH System)* ⇨ *98* for how and where to install the child restraint using LATCH. If a child restraint is secured in the vehicle using a seat belt and it uses a top tether, see *Lower Anchors and Tethers for Children (LATCH System)* ⇨ *98* for top tether anchor locations.

Do not secure a child seat in a position without a top tether anchor if a national or local law requires that the top tether be anchored, or if the instructions that come with the child restraint say that the top tether must be anchored.

In Canada, the law requires that forward-facing child restraints have a top tether, and that the tether be attached.

If the child restraint or vehicle seat position does not have the LATCH system, you will be using the seat belt to secure the child restraint. Be sure to follow the instructions that came with the child restraint.

If more than one child restraint needs to be installed in the rear seat, be sure to read *Where to Put the Restraint* ⇨ *96*.

Double Cab

1. Remove the head restraint or headrest prior to installing a forward-facing child restraint in an outboard rear seating position. See “Head Restraint or Headrest Removal and Reinstallation” under *Lower Anchors and Tethers for Children (LATCH System)* ⇨ *98*.
2. Put the child restraint on the seat.
3. Pick up the latch plate, and run the lap and shoulder portions of the vehicle's seat belt through or around the child restraint. The child restraint instructions will show you how.

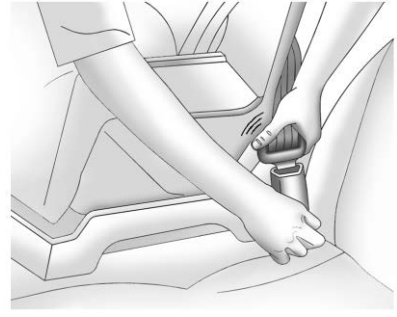

4. Push the latch plate into the buckle until it clicks.

   Position the release button on the buckle, away from the child restraint, so that the seat belt could be quickly unbuckled if necessary.

5. Pull the shoulder belt all the way out of the retractor to set the lock. When the retractor lock is set, the belt can be tightened but not pulled out of the retractor.

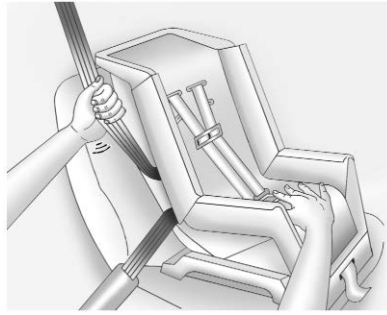

6. To tighten the belt, push down on the child restraint, pull the shoulder portion of the belt to tighten the lap portion of the belt, and feed the shoulder belt back into the retractor. When installing a forward-facing child restraint, it may be helpful to use your knee to push down on the child restraint as you tighten the belt.

   Try to pull the belt out of the retractor to make sure the retractor is locked. If the retractor is not locked, repeat Steps 5 and 6.

7. For forward-facing child restraints, attach and tighten the top tether to the top tether anchor (loop). Refer to the child restraint instructions, the vehicle LATCH anchor weight limits, and instructions listed in *Lower Anchors and Tethers for Children (LATCH System)* ⇨ *98*.

8. Before placing a child in the child restraint, make sure it is securely held in place. To check, grasp the child restraint at the seat belt path and attempt to move it side to side and back and forth. When the child restraint is properly installed, there should be no more than 2.5 cm (1 in) of movement.

To remove the child restraint, unbuckle the vehicle seat belt and let it return to the stowed position. If the top tether is attached to a top tether anchor, disconnect it. Reinstall the head restraint or headrest before the seating position is used. See “Head Restraint or Headrest Removal and

Reinstallation" under *Lower Anchors and Tethers for Children (LATCH System)* ⇨ *98* for additional information on installing the headrest properly.

Crew Cab

1. Put the child restraint on the seat.
2. Pick up the latch plate, and run the lap and shoulder portions of the vehicle's seat belt through or around the child restraint. The child restraint instructions will show you how.

3. Push the latch plate into the buckle until it clicks.

   Position the release button on the buckle, away from the child restraint, so that the seat belt could be quickly unbuckled if necessary.

4. Pull the shoulder belt all the way out of the retractor to set the lock. When the retractor lock is set, the belt can be tightened but not pulled out of the retractor.

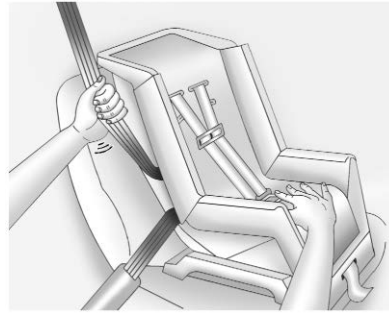

5. To tighten the belt, push down on the child restraint, pull the shoulder portion of the belt to tighten the lap portion of the belt, and feed the shoulder belt back into the retractor. When installing a forward-facing child restraint, it may be helpful to use your knee to push down on the child restraint as you tighten the belt.

   Try to pull the belt out of the retractor to make sure the retractor is locked. If the retractor is not locked, repeat Steps 4 and 5.

6. If the child restraint has a top tether, follow the child restraint manufacturer's instructions regarding the use of the top tether. See *Lower Anchors and Tethers for Children (LATCH System)* ⇨ *98* for more information on using the top tether anchors.
7. Before placing a child in the child restraint, make sure it is securely held in place. To check, grasp the child restraint at the seat belt path and attempt to move it side to side and back and forth. When the child restraint is properly installed, there should be no more than 2.5 cm (1 in) of movement.

To remove the child restraint, unbuckle the vehicle seat belt and let it return to the stowed position. If the top tether is attached to a top tether anchor, disconnect it.

For outboard rear seating positions, if the child restraint cannot be installed properly with the head restraint in place, the head restraint may be removed. See your dealer for assistance with removal, and store the removed head restraint in a secure place. When the child restraint is removed, reinstall the head restraint before the seating position is used. For reinstallation instructions, see “Head Restraint or Headrest Removal and Reinstallation” under *Lower Anchors and Tethers for Children (LATCH System)* ⇨ *98*.

Securing Child Restraints (With the Seat Belt in the Center Front Seat)

⚠ Warning

A child in a child restraint in the center front seat can be badly injured or killed by the frontal airbags if they inflate. Never secure a child restraint in the center front seat. It is always better to secure a child restraint in a rear seat.

Do not use child restraints in the center front seat position.

Securing Child Restraints (With the Seat Belt in the Front Seat)

With Passenger Sensing System

This vehicle has airbags. A rear seat is a safer place to secure a forward-facing child restraint. See *Where to Put the Restraint* ⇨ *96*.

In addition, the vehicle may have a passenger sensing system which is designed to turn off the front outboard passenger frontal airbag under certain conditions. See *Passenger Sensing System* ⇨ *84* and *Passenger Airbag Status Indicator* ⇨ *145* for more information, including important safety information.

Never put a rear-facing child restraint in the front. This is because the risk to the rear-facing child is so great, if the airbag deploys.

⚠ Warning

A child in a rear-facing child restraint can be seriously injured or killed if the front outboard passenger airbag inflates. This is because the back of the rear-facing child restraint would be very close to the inflating airbag. A child in a forward-facing child restraint can be seriously injured or killed if the front outboard passenger airbag inflates and the passenger seat is in a forward position.

The vehicle may have a passenger sensing system which is designed to turn off the front outboard passenger frontal airbag under certain conditions.

Even if the passenger sensing system, if equipped, has turned off the front outboard passenger frontal airbag, no system is fail-safe. No one can guarantee that an airbag will not deploy

(Continued)

Warning (Continued)

under some unusual circumstance, even though it is turned off.

Secure rear-facing child restraints in a rear seat, even if the airbag is off. If you secure a forward-facing child restraint in the front outboard passenger seat, always move the seat as far back as it will go. It is better to secure the child restraint in a rear seat.

See *Passenger Sensing System* ⇨ *84* for additional information.

If the vehicle does not have a rear seat that will accommodate a rear-facing child restraint, a rear-facing child restraint should not be installed in the vehicle, even if the airbag is off.

If a child restraint uses a top tether, see *Lower Anchors and Tethers for Children (LATCH System)* ⇨ *98* for top tether anchor locations.

Do not secure a child restraint in a position without a top tether anchor if a national or local law requires that the top tether be anchored, or if the instructions that come with the child restraint say that the top tether must be anchored.

In Canada, the law requires that forward-facing child restraints have a top tether, and that the tether be attached.

When using the lap-shoulder belt to secure the child restraint in this position, follow the instructions that came with the child restraint and the following instructions:

1. Move the seat as far back as it will go before securing the forward-facing child restraint. Move the seat upward or the seatback to an upright position, if needed, to get a tight installation of the child restraint.

   When the passenger sensing system, if equipped, has turned off the front outboard passenger frontal airbag, the

OFF indicator in the passenger airbag status indicator should light and stay lit when you start the vehicle. See *Passenger Airbag Status Indicator* ⇨ *145*.

2. Put the child restraint on the seat.
3. Pick up the latch plate, and run the lap and shoulder portions of the vehicle's seat belt through or around the child restraint. The child restraint instructions will show you how.

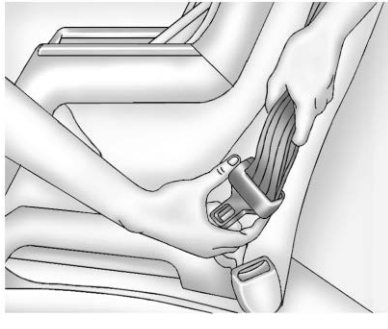

Tilt the latch plate to adjust the belt, if needed.

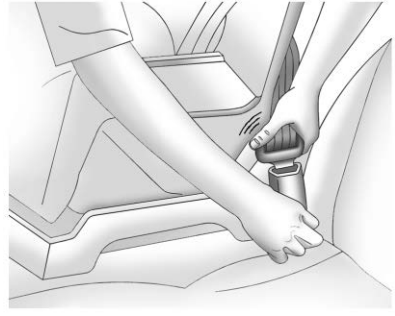

4. Push the latch plate into the buckle until it clicks.

   Position the release button on the buckle, away from the child restraint, so that the seat belt could be quickly unbuckled if necessary.

5. Pull the shoulder belt all the way out of the retractor to set the lock. When the retractor lock is set, the belt can be tightened but not pulled out of the retractor.

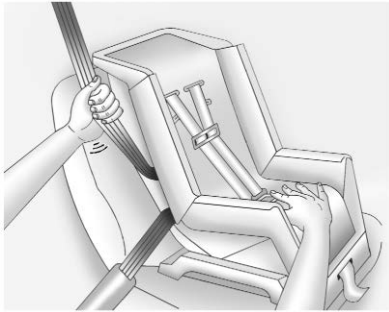

6. To tighten the belt, push down on the child restraint, pull the shoulder portion of the belt to tighten the lap portion of the belt, and feed the shoulder belt back into the retractor. When installing a forward-facing child restraint, it may be helpful to use your knee to push down on the child restraint as you tighten the belt.

   Try to pull the belt out of the retractor to make sure the retractor is locked. If the retractor is not locked, repeat Steps 5 and 6.

7. If the vehicle does not have a rear seat and the child restraint manufacturer recommends using a top tether anchor, attach the top tether to the top tether anchor. Refer to the instructions that came with the child restraint and to *Lower Anchors and Tethers for Children (LATCH System)* ⇨ *98*.

8. Before placing a child in the child restraint, make sure it is securely held in place. To check, grasp the child restraint at the seat belt path and attempt to move it side to side and back and forth. When the child restraint is properly installed, there should be no more than 2.5 cm (1 in) of movement.

If the vehicle is equipped with a passenger sensing system, and when the passenger sensing system has turned off the front outboard passenger frontal airbag, the OFF indicator in the passenger airbag status indicator will come on and stay on when the vehicle is started.

If a child restraint has been installed and the ON indicator is lit, see “If the On Indicator Is Lit for a Child Restraint” under *Passenger Sensing System* ⇨ *84*.

To remove the child restraint, unbuckle the vehicle seat belt and let it return to the stowed position. If the top tether is attached to a top tether anchor, disconnect it.

With Airbag On-Off Switch

This vehicle has airbags. A rear seat is a safer place to secure a forward-facing child restraint. See *Where to Put the Restraint* ⇨ *96*.

There may be a switch on the instrument panel endcap that you can use to turn off the front outboard passenger frontal airbag. See *Airbag On-Off Switch* ⇨ *82* for more information, including important safety information.

Never put a rear-facing child restraint in the front. This is because the risk to the rear-facing child is so great if the airbag deploys.

⚠ Warning

A child in a rear-facing child restraint can be seriously injured or killed if the front outboard passenger airbag inflates. This is because the back of the rear-facing child restraint would be very close to the inflating airbag. A child in a forward-facing child restraint can be seriously injured or killed if the front outboard passenger airbag inflates and the passenger seat is in a forward position.

Even if the airbag switch has turned off the front outboard passenger frontal airbag, no system is fail-safe. No one can guarantee that an airbag will not deploy under some unusual circumstance, even though it is turned off.

Secure rear-facing child restraints in a rear seat, even if the airbag is off. If you secure a

(Continued)

Warning (Continued)

forward-facing child restraint in the front outboard passenger seat, always move the seat as far back as it will go. It is better to secure the child restraint in a rear seat.

⚠ Warning

If the airbag readiness light ever comes on and stays on, it means that something may be wrong with the airbag system. For example, the front outboard passenger frontal airbag could inflate even though the airbag on-off switch is turned off.

To help avoid injury to yourself or others, have the vehicle serviced right away. See *Airbag Readiness Light* ⇨ *143* for more information, including important safety information.

If the vehicle does not have a rear seat that will accommodate a rear-facing child restraint, a rear-facing child restraint should not be installed in the vehicle, even if the airbag is off.

If a child restraint uses a top tether, see *Lower Anchors and Tethers for Children (LATCH System)* ⇨ *98* for top tether anchor locations.

Do not secure a child restraint in a position without a top tether anchor if a national or local law requires that the top tether be anchored, or if the instructions that come with the child restraint say that the top tether must be anchored.

In Canada, the law requires that forward-facing child restraints have a top tether, and that the tether be attached.

When using the lap-shoulder belt to secure the child restraint in this position, follow the instructions that came with the child restraint and the following instructions:

1. Move the seat as far back as it will go before securing the forward-facing child restraint. Move the seat upward or the seatback to an upright position, if needed, to get a tight installation of the child restraint.

   When the airbag off switch (if equipped) has turned off the front outboard passenger frontal airbag, the OFF indicator in the airbag off light should light and stay lit when you start the vehicle. See *Airbag On-Off Light* ⇨ *144*.

2. Put the child restraint on the seat.

3. Pick up the latch plate, and run the lap and shoulder portions of the vehicle's seat belt through or around the child restraint. The child restraint instructions will show you how.

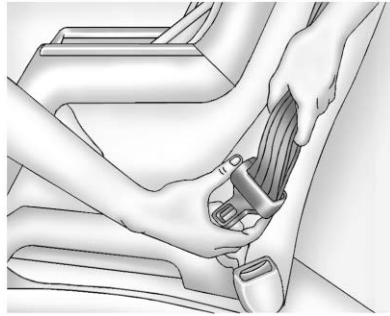

Tilt the latch plate to adjust the belt, if needed.

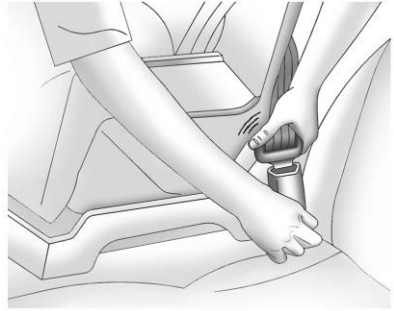

4. Push the latch plate into the buckle until it clicks.

   Position the release button on the buckle, away from the child restraint, so that the seat belt could be quickly unbuckled if necessary.

5. Pull the shoulder belt all the way out of the retractor to set the lock. When the retractor lock is set, the belt can be tightened but not pulled out of the retractor.

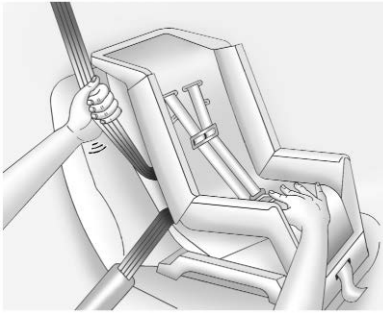

6. To tighten the belt, push down on the child restraint, pull the shoulder portion of the belt to tighten the lap portion of the belt, and feed the shoulder belt back into the retractor. When installing a forward-facing child restraint, it may be helpful to use your knee to push down on the child restraint as you tighten the belt.

   Try to pull the belt out of the retractor to make sure the retractor is locked. If the retractor is not locked, repeat Steps 5 and 6.

7. If the vehicle does not have a rear seat and the child restraint manufacturer recommends using a top tether anchor, attach the top tether to the top tether anchor. Refer to the instructions that came with the child restraint and to *Lower Anchors and Tethers for Children (LATCH System)* ⇨ *98*.

8. Before placing a child in the child restraint, make sure it is securely held in place. To check, grasp the child restraint at the seat belt path and attempt to move it side to side and back and forth. When the child restraint is properly installed, there should be no more than 2.5 cm (1 in) of movement.

To remove the child restraint, unbuckle the vehicle seat belt and let it return to the stowed position. If the top tether is attached to a top tether anchor, disconnect it.

If you turned the airbag off with the switch (if equipped), turn on the front outboard passenger airbag when you remove the child restraint from the vehicle unless the person who will be sitting there is a member of a passenger airbag risk group. See *Airbag On-Off Switch* ⇨ *82* for more information, including important safety information.

Heavy-Duty Crew Cab Only

This vehicle has airbags. A rear seat is a safer place to secure a forward-facing child restraint. See *Where to Put the Restraint* ⇨ *96*.

Never put a rear-facing child restraint in the front. This is because the risk to the rear-facing child is so great if the airbag deploys.

⚠ Warning

A child in a rear-facing child restraint can be seriously injured or killed if the passenger airbag inflates. This is because the back of the rear-facing child restraint would be very close to the

(Continued)

Warning (Continued)

inflating airbag. Secure rear-facing child restraints in a rear seat.

A child in a forward-facing child restraint can be seriously injured or killed if the front outboard passenger airbag inflates and the passenger seat is in a forward position. If you secure a forward-facing child restraint in the front outboard passenger seat, always move the seat as far back as it will go. It is better to secure the child restraint in a rear seat.

If a child restraint uses a top tether, see *Lower Anchors and Tethers for Children (LATCH System)* ⇨ *98* for top tether anchor locations.

Do not secure a child restraint in a position without a top tether anchor if a national or local law requires that the top tether be anchored, or if the instructions that come with the child restraint say that the top tether must be anchored.

In Canada, the law requires that forward-facing child restraints have a top tether, and that the tether be attached.

When using the lap-shoulder belt to secure the child restraint in this position, follow the instructions that came with the child restraint and the following instructions:

1. Move the seat as far back as it will go before securing the forward-facing child restraint. Move the seat upward or the seatback to an upright position, if needed, to get a tight installation of the child restraint.
2. Put the child restraint on the seat.
3. Pick up the latch plate, and run the lap and shoulder portions of the vehicle's seat belt through or around the child restraint. The child restraint instructions will show you how.

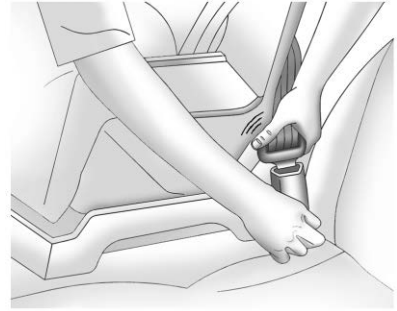

4. Push the latch plate into the buckle until it clicks.

   Position the release button on the buckle, away from the child restraint, so that the seat belt could be quickly unbuckled if necessary.

5. Pull the shoulder belt all the way out of the retractor to set the lock. When the retractor lock is set, the belt can be tightened but not pulled out of the retractor.

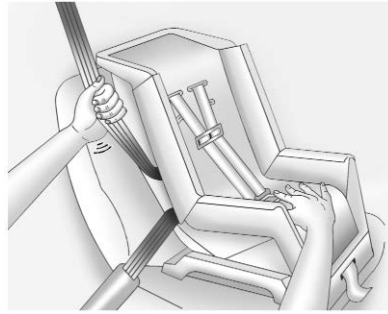

6. To tighten the belt, push down on the child restraint, pull the shoulder portion of the belt to tighten the lap portion of the belt, and feed the shoulder belt back into the retractor. When installing a forward-facing child restraint, it may be helpful to use your knee to push down on the child restraint as you tighten the belt.

   Try to pull the belt out of the retractor to make sure the retractor is locked. If the retractor is not locked, repeat Steps 5 and 6.

7. If your child restraint has a top tether, follow the child restraint manufacturer's instructions regarding the use of the top tether. See *Lower Anchors and Tethers for Children (LATCH System)* ⇨ *98* for more information on using the top tether anchors.

8. Before placing a child in the child restraint, make sure it is securely held in place. To check, grasp the child restraint at the seat belt path and attempt to move it side to side and back and forth. When the child restraint is properly installed, there should be no more than 2.5 cm (1 in) of movement.

To remove the child restraint, unbuckle the vehicle seat belt and let it return to the stowed position. If the top tether is attached to a top tether anchor, disconnect it.

Storage

Storage Compartments
Storage Compartments 122
Instrument Panel Storage 122
Glove Box 122
Cupholders 123
Sunglasses Storage 123
Center Console Storage 123
Floor Console Storage 124

Additional Storage Features
Cargo Tie-Downs 124

Storage Compartments

⚠ Warning

Do not store heavy or sharp objects in storage compartments. In a crash, these objects may cause the cover to open and could result in injury.

Instrument Panel Storage

If equipped, there is storage under the climate control system.

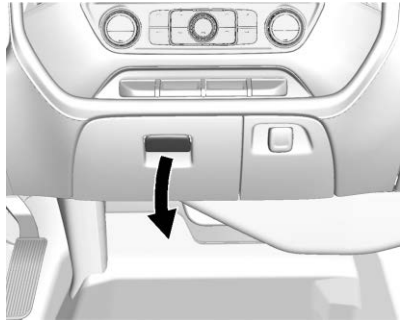

To access, pull down on the handle.

Card Holder

If equipped, there is a card holder on the front instrument panel to the left of the steering wheel.

Glove Box

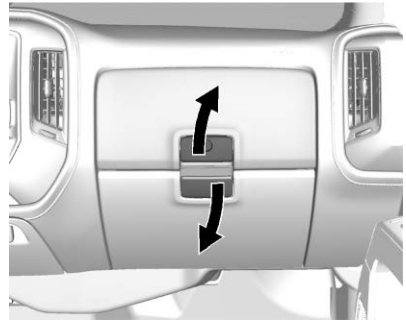

To access the upper glove box, unlock with the key and pull up on the handle.

To access the lower glove box, pull down on the handle.

Cupholders

Front

There may be cupholders on the center front seat console armrest.

Rear

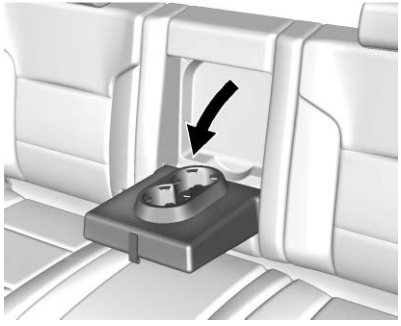

If equipped, pull the rear seat armrest down to access the cupholders.

Sunglasses Storage

If equipped, sunglasses storage is on the overhead console. Press the fixed button on the cover and release to access.

Center Console Storage

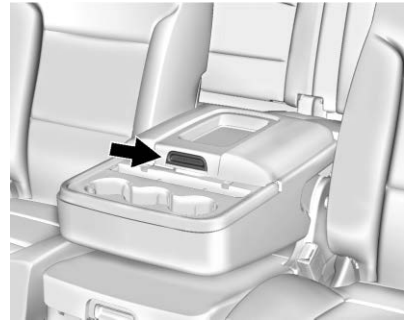

Bench Seat

If equipped, pull the front center seat armrest down to access the storage area with cupholders.

Press the button and lift to open. There is a removable divider.

If equipped, there is an accessory power outlet inside.

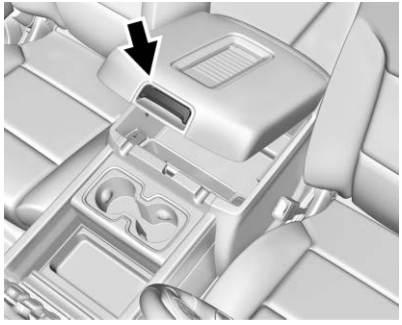

Bucket Seat

If equipped, press the latch and lift to open. Depending on the options there may be a tote compartment, accessory power outlet, auxiliary jack, and USB port(s) inside. There are openings for power cords on the edge of the storage area.

See *Power Outlets* ⇨ *130*, *USB Port* ⇨ *190*, and *Auxiliary Jack* ⇨ *195*.
If equipped with the uplevel radio, see the infotainment manual.

Floor Console Storage

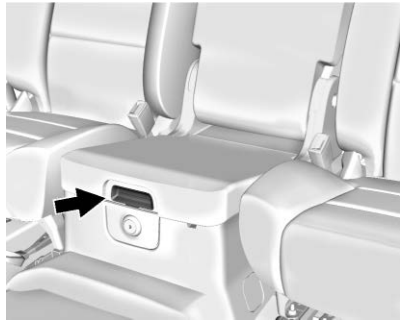

If equipped with front seat floor console storage, unlock with the ignition key, press the button, and lift to open.

Additional Storage Features

Cargo Tie-Downs

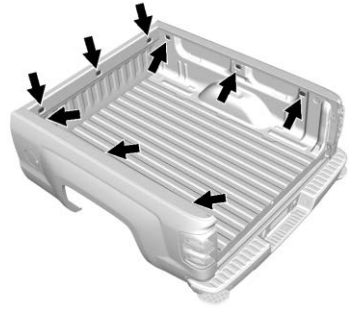

The vehicle may be equipped with cargo tie-downs.

Any of the nine holes inside the truck bed can be used for tie-downs.

The maximum load is 113 kg (250 lb) per tie-down.

Caution
The truck bed walls will collapse if the tie-downs are overloaded.

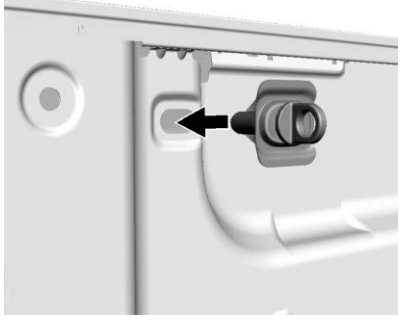

To install:

1. Insert a tie-down loop assembly until it is flush with the truck bed wall.
2. Turn the tie-down loop clockwise to tighten. The tie-down will be hard to turn until the toggle moves past the installation point on the toggle guide.
3. Fasten the tie-down firmly by hand only. Do not use tools.

To remove:

1. Remove the tie-down loop completely by turning counterclockwise while holding the backing plate against the truck bed wall.
2. Pull the backing plate away from the truck bed wall until a click is heard. This locks the toggle into position on the toggle guide.
3. Push the backing plate against the truck bed wall. This allows the toggle nut to spin.
4. Remove the backing plate, toggle guide, and toggle nut from the truck bed wall completely.
5. Reinstall the tie-down loop through the backing plate into the toggle nut for reuse.

Instruments and Controls

Controls

Steering Wheel Adjustment . . . 127
Steering Wheel Controls 127
Heated Steering Wheel 128
Horn 128
Windshield Wiper/Washer 128
Compass 129
Clock 129
Power Outlets 130
Wireless Charging 132

Warning Lights, Gauges, and Indicators

Warning Lights, Gauges, and Indicators 135
Instrument Cluster 136
Speedometer 139
Odometer 139
Trip Odometer 139
Tachometer 139
Fuel Gauge 139
Engine Oil Pressure Gauge 140
Engine Coolant Temperature Gauge 141
Voltmeter Gauge 142
Seat Belt Reminders 143
Airbag Readiness Light 143
Airbag On-Off Light 144
Passenger Airbag Status Indicator 145
Charging System Light 146
Malfunction Indicator Lamp . . . 146
Brake System Warning Light 148
Antilock Brake System (ABS) Warning Light 149
Four-Wheel-Drive Light 150
Tow/Haul Mode Light 150
Hill Descent Control Light 150
Lane Departure Warning (LDW) Light (2500/3500 Series) 150
Lane Keep Assist (LKA) Light (1500 Series) 151
Vehicle Ahead Indicator 151
Traction Off Light 151
StabiliTrak OFF Light 151
Traction Control System (TCS)/ StabiliTrak Light 152
Tire Pressure Light 152
Low Fuel Warning Light 153
Security Light 153
High-Beam On Light 153
Front Fog Lamp Light 153
Lamps On Reminder 154
Cruise Control Light 154

Information Displays

Driver Information Center (DIC) (Base Level) 154
Driver Information Center (DIC) (Uplevel) 156

Vehicle Messages

Vehicle Messages 159
Engine Power Messages 159
Vehicle Speed Messages 159

Vehicle Personalization

Vehicle Personalization 160

Universal Remote System

Universal Remote System 167
Universal Remote System Programming 167
Universal Remote System Operation 170

Controls

Steering Wheel Adjustment

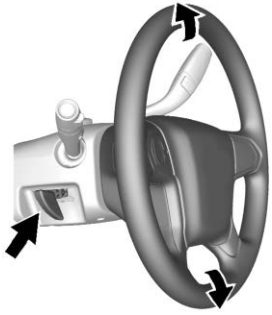

To adjust the steering wheel:

1. Hold the steering wheel and pull the lever.
2. Move the steering wheel up or down.
3. Release the lever to lock the wheel in place.

Tilt and Telescoping Steering Wheel

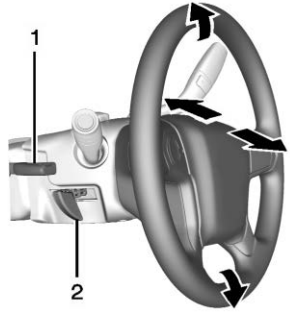

To adjust the tilt and telescoping steering wheel, if equipped:

1. Push the lever (1) down to move the steering wheel forward or rearward. Lift the lever up to lock the wheel in place.
2. Pull the lever (2) toward you to move the steering wheel up or down, then release the lever to lock the wheel in place.

Do not adjust the steering wheel while driving.

Steering Wheel Controls

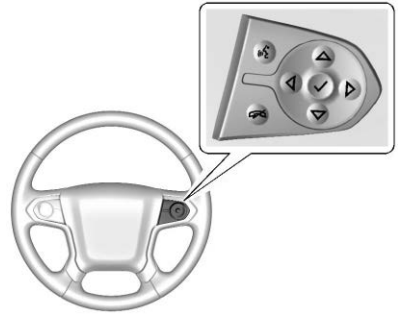

If equipped, some audio controls can be adjusted at the steering wheel.

: For vehicles with OnStar or a Bluetooth system, press to interact with those systems. See *OnStar Overview* ⇨ *464*, *Bluetooth (Overview)* ⇨ *203* or *Bluetooth (Infotainment Controls)* ⇨ *205*, or “Bluetooth (Overview)” in the infotainment manual.

: Press to reject an incoming call or end a current call. Press to mute or unmute the infotainment system when not on a call.

◁ **or** ▷ **:** Press to go to the previous or next menu option.

△ **or** ▽ **:** Press to go to the next or previous selection.

✓ **:** Press to select a highlighted menu option.

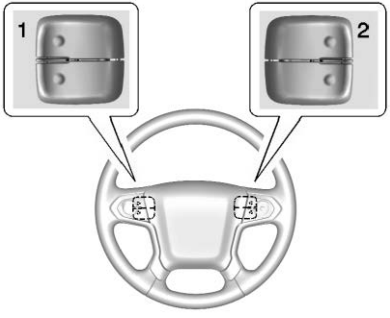

The favorite and volume switches are on the back of the steering wheel.

1. Favorite: When on a radio source, press to select the next or previous favorite. When on a media source, press to select the next or previous track.
2. Volume: Press to increase or decrease the volume.

Heated Steering Wheel

: If equipped, press to turn it on or off. A light next to the button displays when the feature is turned on.

The steering wheel takes about three minutes to start heating.

Horn

To sound the horn, press on the steering wheel.

Windshield Wiper/Washer

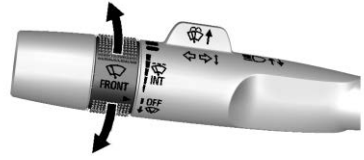

The windshield wiper control is on the turn signal lever.

The windshield wipers are controlled by turning the band with on it.

: Fast wipes.

: Slow wipes.

INT : Turn the band up for more frequent wipes or down for less frequent wipes.

OFF : Turns the windshield wipers off.

: For a single wipe, turn to , then release. For several wipes, hold the band on longer.

Clear ice and snow from the wiper blades before using them. If frozen to the windshield, carefully loosen or thaw them. Damaged wiper blades should be replaced. See *Wiper Blade Replacement* ⇨ *356*.

Heavy snow or ice can overload the wiper motor. An internal circuit breaker to the motor will stop the motor until it cools down.

Wiper Parking

If the ignition is turned off while the wipers are on , , or INT, they will immediately stop.

If the windshield wiper lever is then moved to OFF before the driver door is opened or within 10 minutes, the wipers will restart and move to the base of the windshield.

If the ignition is turned off while the wipers are performing wipes due to windshield washing, the wipers continue to run until they reach the base of the windshield.

Windshield Washer

⚠ Warning

In freezing weather, do not use the washer until the windshield is warmed. Otherwise the washer fluid can form ice on the windshield, blocking your vision.

↑ : Push the paddle marked with the windshield washer symbol at the top of the turn signal lever, to spray washer fluid and activate the wipers. The wipers will continue until the paddle is released or the maximum wash time is reached. When the paddle is released, additional wipes may occur depending on how long the windshield washer had been activated. See *Washer Fluid* ⇨ *347* for information on filling the windshield washer fluid reservoir.

Compass

The vehicle may have a compass display on the Driver Information Center (DIC). The compass receives its heading and other information from the Global Positioning System (GPS) antenna, StabiliTrak/ Electronic Stability Control (ESC), and vehicle speed information.

The compass system is designed to operate for a certain number of miles or degrees of turn before needing a signal from the GPS satellites. When the compass display shows CAL, drive the vehicle for a short distance in an open area where it can receive a GPS signal. The compass system will automatically determine when a GPS signal is restored and provide a heading again.

Clock

Setting the Time and Date

To set the time:

1. Touch SETTINGS from the Home Page, then touch Time and Date.
2. Touch Set Time and touch ∧ or ∨ to increase or decrease hours, minutes, and AM or PM. Touch 12–24 Hr for 12 or 24 hour clock.
3. Touch the ⬅ or ↩ screen button to go back to the previous menu.

Auto Set requires an active OnStar or connected service plan.

If auto timing is set, the time displayed on the clock may not update immediately when driving into a new time zone.

To set the date:

1. Touch SETTINGS from the Home Page, then touch Time and Date.
2. Touch Set Date and touch ∧ or ∨ to increase or decrease month, day, or year.
3. Touch the ⬅ or ↩ screen button to go back to the previous menu.

To set the clock display:

1. Touch SETTINGS and touch Time and Date.
2. Touch Clock Display and touch OFF or ON to turn the clock display off or on.
3. Touch the ⬅ or ↩ screen button to go back to the previous menu.

Power Outlets

Power Outlets 12-Volt Direct Current

Accessory power outlets can be used to plug in electrical equipment, such as a cell phone or MP3 player.

The vehicle may have up to four accessory power outlets.

Vehicles with a Center Console

- One or two in front of the cupholders on the center console
- One inside the center console
- One on the rear of the center console

Vehicles with Bench Seats

- One on the center stack below the climate control system
- One or two in the storage area on the bench seat

Lift the cover to access and replace when not in use.

The power outlets on the center stack and in front of the cupholders are powered at all times. The power outlets inside the storage area and on the rear of the console are powered when the ignition is on or in ACC/ACCESSORY, or when Retained Accessory Power (RAP) is active.

⚠ Warning

Power is always supplied to the outlets. Do not leave electrical equipment plugged in when the vehicle is not in use because the vehicle could catch fire and cause injury or death.

Caution

Leaving electrical equipment plugged in for an extended period of time while the vehicle is off will drain the battery. Always unplug electrical equipment when not in use and do not plug in equipment that exceeds the maximum 15 amp rating.

Certain power accessory plugs may not be compatible with the accessory power outlet and could overload vehicle or adapter fuses. If a problem is experienced, see your dealer.

When adding electrical equipment, be sure to follow the proper installation instructions included with the equipment. See *Add-On Electrical Equipment* ⇨ *318*.

Caution

Hanging heavy equipment from the power outlet can cause damage not covered by the vehicle warranty. The power outlets are designed for accessory power plugs only, such as cell phone charge cords.

Power Outlet 110/120-Volt Alternating Current

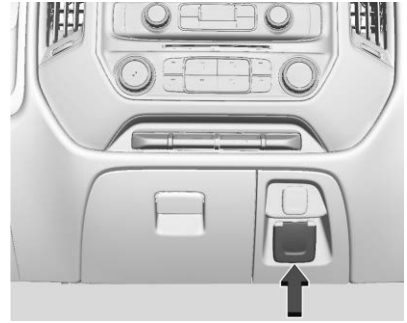

Base Shown, Uplevel Similar

If equipped with this power outlet, it can be used to plug in electrical equipment that uses a maximum limit of 150 watts.

If equipped with a center console, the 110/120-volt power outlet is in front of the cupholders in the center console.

If equipped with bench seats, the 110/120-volt power outlet is on the center stack.

An indicator light on the outlet turns on to show it is in use. The light comes on when the ignition is on, equipment requiring less than 150 watts is plugged into the outlet, and no system fault is detected.

The indicator light does not come on when the ignition is off or if the equipment is not fully seated into the outlet.

If equipment is connected using more than 150 watts or a system fault is detected, a protection circuit shuts off the power supply and the indicator light turns off. To reset the circuit, unplug the item and plug it back in or turn the RAP off and then back on. See *Retained Accessory Power (RAP)* ⇨ *251*.

The power outlet is not designed for the following, and may not work properly if they are plugged in:

- Equipment with high initial peak wattage, such as compressor-driven refrigerators and electric power tools
- Other equipment requiring an extremely stable power supply, such as microcomputer-controlled electric blankets and touch sensor lamps
- Medical equipment

Wireless Charging

The vehicle may have wireless charging on top of the center console. See *Center Console Storage* ⇨ *123*. The system operates at 145 kHz and wirelessly charges one Qi compatible smartphone. The power output of the system is capable of charging at a rate up to 1 amp (5W), as requested by the compatible smartphone. See *Radio Frequency Statement* ⇨ *460*.

⚠ Warning

Wireless charging can affect the operation of an implanted pacemaker or other medical

(Continued)

Warning (Continued)

devices. If you have one, it is recommended to consult with your doctor before using the wireless charging system.

The vehicle must be on, in ACC/ACCESSORY, or Retained Accessory Power (RAP) must be active. The wireless charging feature may not correctly indicate charging when the vehicle is in RAP. See *Retained Accessory Power (RAP)* ⇨ *251*.

The operating temperature is −20 °C (−4 °F) to 60 °C (140 °F) for the charging system and 0 °C (32 °F) to 35 °C (95 °F) for the smartphone.

⚠ Warning

Remove all objects from the charging pad before charging your compatible smartphone. Objects, such as coins, keys,

(Continued)

Warning (Continued)

rings, paper clips, or cards, between the smartphone and charging pad will become very hot. On the rare occasion that the charging system does not detect an object, and the object gets wedged between the smartphone and charger, remove the smartphone and allow the object to cool before removing it from the charging pad, to prevent burns.

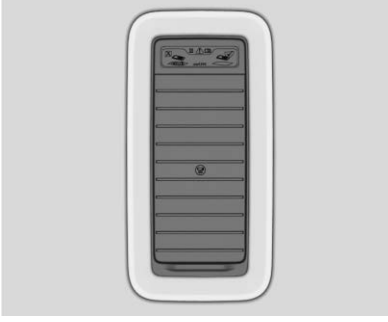

To charge a compatible smartphone:

1. Remove all objects from the charging pad. The system may not charge if there are any objects between the smartphone and charging pad.
2. Place the smartphone face up against the alignment rib on the charge pad.

   To maximize the charge rate, ensure the smartphone is fully seated and centered in the holder with nothing under it. A thick smartphone case may prevent the wireless charger from working, or may reduce the charging performance. See your dealer for additional information.
3. The ⚡ will appear on the ☎ on the infotainment display. This indicates that the smartphone is properly positioned and charging. If a smartphone is placed on the charging pad and ⚡ does not display, remove the smartphone from the pad, turn it 180 degrees, and wait three seconds before placing/aligning the smartphone on the pad again.

Software Acknowledgements

Certain Wireless Charging Module product from LG Electronics, Inc. ("LGE") contains the open source software detailed below. Refer to the indicated open source licenses (as are included following this notice) for the terms and conditions of their use.

OSS Notice Information

To obtain the source code that is contained in this product, please visit http://opensource.lge.com. In addition to the source code, all referred license terms, warranty disclaimers and copyright notices are available for download. LG Electronics will also provide open source code to you on CD-ROM for a charge covering the cost of performing such distribution (such as the cost of media, shipping, and handling) upon email request to opensource@lge.com. This offer is

valid for three (3) years from the date on which you purchased the product.

Freescale-WCT library

Copyright (c) 2012-2014 Freescale Semiconductor, Inc.. All rights reserved.

1. Redistributions of source code must retain the above copyright notice, this list of conditions and the following disclaimer.
2. Redistributions in binary form must reproduce the above copyright notice, this list of conditions and the following disclaimer in the documentation and/or other materials provided with the distribution.
3. Neither the name of the copyright holder nor the names of its contributors may be used to endorse or promote products derived from this software without specific prior written permission.

THIS SOFTWARE IS PROVIDED BY THE COPYRIGHT HOLDERS AND CONTRIBUTORS "AS IS" AND ANY EXPRESS OR IMPLIED WARRANTIES, INCLUDING, BUT NOT LIMITED TO, THE IMPLIED WARRANTIES OF MERCHANTABILITY AND FITNESS FOR A PARTICULAR PURPOSE ARE DISCLAIMED. IN NO EVENT SHALL THE COPYRIGHT HOLDER OR CONTRIBUTORS BE LIABLE FOR ANY DIRECT, INDIRECT, INCIDENTAL, SPECIAL, EXEMPLARY, OR CONSEQUENTIAL DAMAGES (INCLUDING, BUT NOT LIMITED TO, PROCUREMENT OF SUBSTITUTE GOODS OR SERVICES; LOSS OF USE, DATA, OR PROFITS; OR BUSINESS INTERRUPTION) HOWEVER CAUSED AND ON ANY THEORY OF LIABILITY, WHETHER IN CONTRACT, STRICT LIABILITY, OR TORT (INCLUDING NEGLIGENCE OR OTHERWISE) ARISING IN ANY WAY OUT OF THE USE OF THIS SOFTWARE, EVEN IF ADVISED OF THE POSSIBILITY OF SUCH DAMAGE.

Warning Lights, Gauges, and Indicators

Warning lights and gauges can signal that something is wrong before it becomes serious enough to cause an expensive repair or replacement. Paying attention to the warning lights and gauges could prevent injury.

Some warning lights come on briefly when the engine is started to indicate they are working. When one of the warning lights comes on and stays on while driving, or when one of the gauges shows there may be a problem, check the section that explains what to do. Waiting to do repairs can be costly and even dangerous.

Instrument Cluster

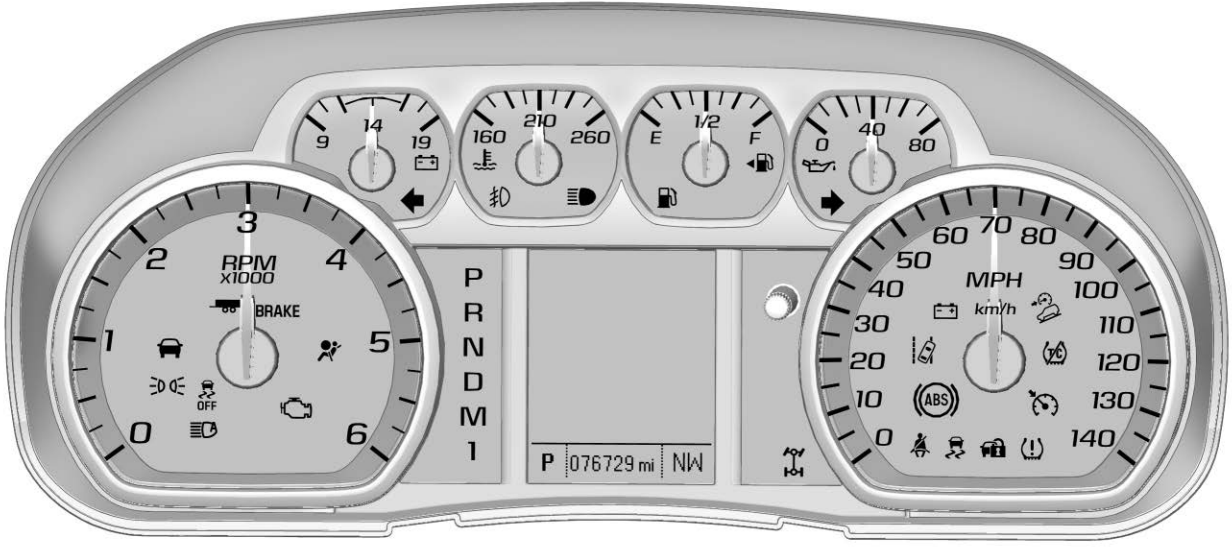

Base Cluster (English Shown, Metric Similar)

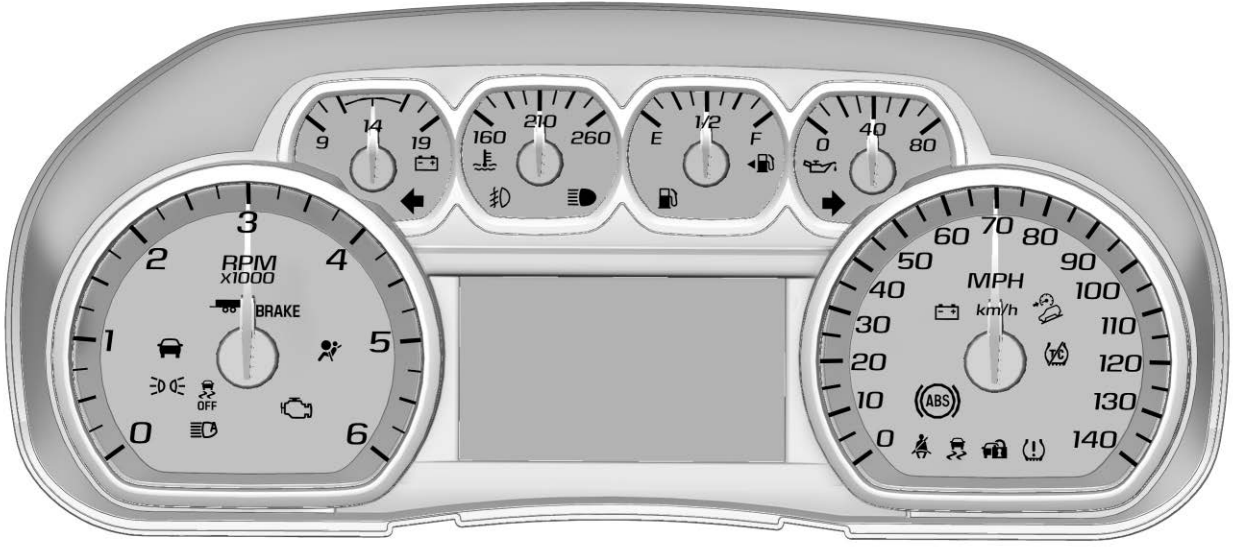

Uplevel Cluster (English Shown, Metric Similar)

Cluster Menu (Uplevel Cluster)

There is an interactive display area in the center of the instrument cluster.

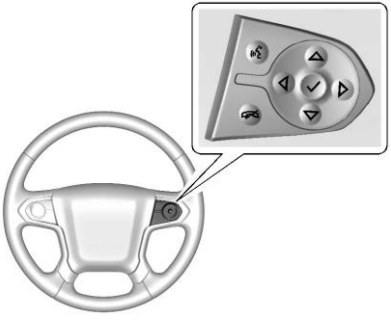

Use the right steering wheel control to open and scroll through the different items and displays.

Press ◁ to access the cluster applications. Use △ or ▽ to scroll through the list of available applications. Not all applications will be available on all vehicles.

- Info App. This is where the selected Driver Information Center (DIC) displays can be viewed. See “Driver Information Center (DIC) (Uplevel)” in the Index.
- Audio
- Phone
- Navigation
- Settings

Audio

Press ✓ to select the Audio app, then press ▷ to enter the Audio menu. In the Audio menu browse for music, select from the favorites, or change the audio source. In the main view, use △ or ▽ to change the station or go to the next or previous track.

Phone

Press ✓ to select the Phone app, then press ▷ to enter the Phone menu. In the Phone menu, if there is no active phone call, view recent calls, scroll through contacts, select from the favorites, or change the phone source. If there is an active call, mute the phone or switch to handset operation.

Navigation

Press ✓ to select the Navigation app, then press ▷ to enter the Navigation menu. If there is no active route, you can resume the last route and turn the voice prompts on/off. If there is an active route, you can cancel the route.

Settings

Press ✓ to select the Settings app. Use △ or ▽ to scroll through items in the Settings menu.

Units : Press ▷ while Units is displayed to enter the Units menu. Choose English or metric units by pressing ✓ while the desired item is highlighted. A checkmark will be displayed next to the selected item.

Info Pages : Press ▷ while Info Pages is displayed to enter the Info Pages menu and select the items to

be displayed in the Info app. See “Driver Information Center (DIC) (Uplevel)” in the Index.

Speed Warning : The Speed Warning display allows the driver to set a speed that they do not want to exceed. To set the Speed Warning, press ▷ when Speed Warning is displayed, or press ✓ on the main view to set the speed value. Press △ or ▽ to adjust the value. Press ✓ to set the speed. Once the speed is set, this feature can be turned off by pressing ✓ while viewing this page. If the selected speed limit is exceeded, a pop-up warning is displayed with a chime.

Software Information : Press ▷ while Software Information is highlighted to display open source software information.

Speedometer

The speedometer shows the vehicle's speed in either kilometers per hour (km/h) or miles per hour (mph).

Odometer

The odometer shows how far the vehicle has been driven, in either kilometers or miles.

Trip Odometer

The trip odometer shows how far the vehicle has been driven since the trip odometer was last reset.

The trip odometer is accessed and reset through the Driver Information Center (DIC).
See *Driver Information Center (DIC) (Base Level)* ⇨ *154* or *Driver Information Center (DIC) (Uplevel)* ⇨ *156*.

Tachometer

The tachometer displays the engine speed in revolutions per minute (rpm).

Fuel Gauge

Metric

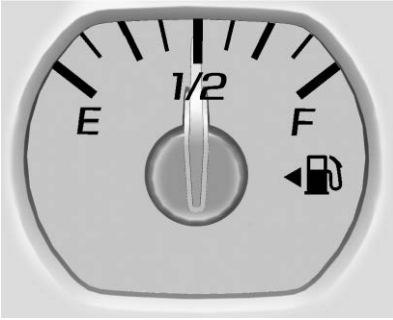

English

When the ignition is on, the fuel gauge indicates about how much fuel is left in the tank.

There is an arrow near the fuel gauge pointing to the side of the vehicle the fuel door is on.

When the indicator nears empty, the low fuel light comes on. There still is a little fuel left, but the vehicle should be refueled soon.

Here are four things that some owners ask about. None of these show a problem with the fuel gauge:

- At the service station, the fuel pump shuts off before the gauge reads full.
- It takes a little more or less fuel to fill up than the gauge indicated. For example, the gauge may have indicated the tank was half full, but it actually took a little more or less than half the tank's capacity to fill the tank.
- The gauge moves a little while turning a corner or speeding up.
- The gauge takes a few seconds to stabilize after the ignition is turned on, and goes back to empty when the ignition is turned off.

Engine Oil Pressure Gauge

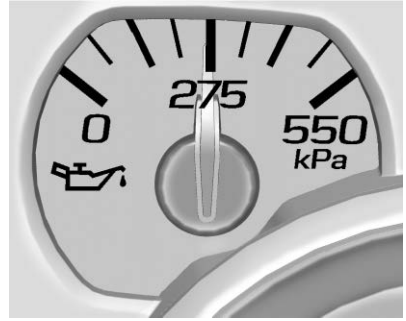

Metric

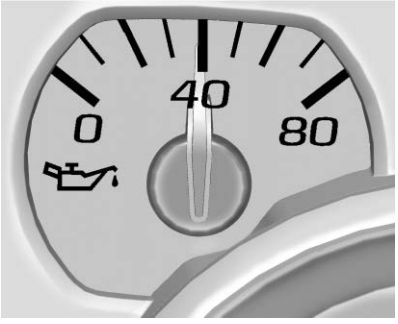

English

The engine oil pressure gauge shows the engine oil pressure in kPa (kilopascals) or psi (pounds per square inch) when the engine is running.

Oil pressure can vary with engine speed, outside temperature, coolant temperature, and oil viscosity.

On some models, the oil pump will vary engine oil pressure according to engine needs. Oil pressure may change quickly as the engine speed or load varies. This is normal. If the oil pressure warning light or Driver Information Center (DIC) message indicates oil pressure outside the normal operating range, check the vehicle's oil as soon as possible.

See *Engine Oil* ⇨ *332*.

Caution
Lack of proper engine oil maintenance can damage the engine. Driving with the engine oil low can also damage the engine. The repairs would not be covered by the vehicle warranty. Check the oil level as soon as possible. Add oil if required, but if the oil level is within the operating range and the oil pressure is still low, have the vehicle serviced. Always follow the maintenance schedule for changing engine oil.

If the vehicle has a diesel engine, see the Duramax diesel supplement.

Engine Coolant Temperature Gauge

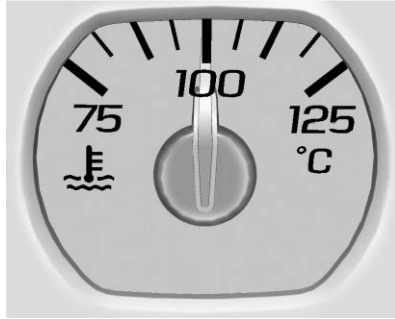

Metric

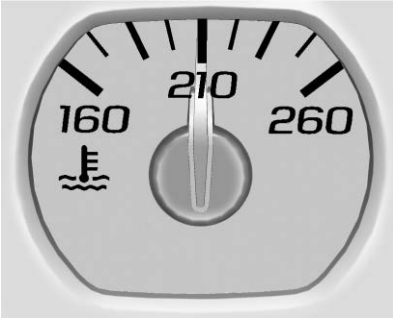

English

This gauge measures the temperature of the vehicle's engine coolant.

While driving under normal operating conditions, if the needle moves into the red warning area, the engine is too hot. Pull off the road, stop the vehicle, and turn off the engine as soon as possible.

Voltmeter Gauge

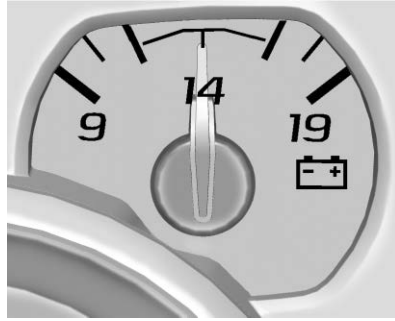

When the ignition is on, this gauge indicates the battery voltage.

When the engine is running, this gauge shows the condition of the charging system. The gauge can transition from a higher to lower or a lower to higher reading. This is normal. If the vehicle is operating outside the normal operating range, the charging system light comes on. See *Charging System Light* ⇨ *146* for more information. The voltmeter gauge may also read lower when in fuel economy mode. This is normal.

Readings outside the normal operating range can also occur when a large number of electrical accessories are operating in the vehicle and the engine is left idling for an extended period. This condition is normal since the charging system is not able to provide full power at engine idle. As engine speeds are increased, this condition should correct itself as higher engine speeds allow the charging system to create maximum power.

The vehicle can only be driven for a short time with the readings outside the normal operating range. If the vehicle must be driven, turn off all accessories, such as the radio and air conditioner.

Readings outside the normal operating range indicate a possible problem in the electrical system. Have the vehicle serviced as soon as possible.

Seat Belt Reminders

Driver Seat Belt Reminder Light

There is a driver seat belt reminder light on the instrument cluster.

When the vehicle is started, this light flashes and a chime may come on to remind the driver to fasten their seat belt. Then the light stays on solid until the belt is buckled. This cycle may continue several times if the driver remains or becomes unbuckled while the vehicle is moving.

If the driver seat belt is buckled, neither the light nor the chime comes on.

Passenger Seat Belt Reminder Light

There may be a passenger seat belt reminder light near the passenger airbag status indicator. See *Passenger Sensing System* ⇨ *84*.

For vehicles equipped with the passenger seat belt reminder light, when the vehicle is started this light flashes and a chime may come on to remind passengers to fasten their seat belt. Then the light stays on solid until the belt is buckled. This cycle continues several times if the passenger remains or becomes unbuckled while the vehicle is moving.

If the passenger seat belt is buckled, neither the chime nor the light comes on.

The front passenger seat belt reminder light and chime may turn on if an object is put on the seat such as a briefcase, handbag, grocery bag, laptop, or other electronic device. To turn off the reminder light and/or chime, remove the object from the seat or buckle the seat belt.

Airbag Readiness Light

This light shows if there is an electrical problem with the airbag system. The system check includes the airbag sensor(s), passenger sensing system (if equipped), the pretensioners, the airbag modules, the wiring, and the crash sensing and diagnostic module. For more information on the airbag system, see *Airbag System* ⇨ *76*.

The airbag readiness light comes on for several seconds when the vehicle is started. If the light does not come on then, have it fixed immediately.

⚠ Warning

If the airbag readiness light stays on after the vehicle is started or comes on while driving, it means the airbag system might not be working properly. The airbags in the vehicle might not inflate in a crash, or they could even inflate without a crash. To help avoid injury, have the vehicle serviced right away.

If there is a problem with the airbag system, a Driver Information Center (DIC) message may also come on.

Airbag On-Off Light

If the vehicle has an airbag on-off switch, it also has a passenger airbag status indicator located in the overhead console.

United States

Canada

When the vehicle is started, the passenger airbag status indicator ON and OFF, or the symbols for on and off, will light for several seconds as a system check. Then, after several more seconds, the status indicator ON or OFF, or either the on or off symbol, will light to let you know the status of the front outboard passenger frontal airbag.

When the front outboard passenger frontal airbag is manually turned off using the airbag on-off switch on the instrument panel endcap, the OFF indicator light or the off symbol will come on and stay on as a reminder that the airbag has been turned off. This light will go off when the airbag has been turned on. See *Airbag On-Off Switch* ⇨ *82* for more information, including important safety information.

⚠ Warning

If the front outboard passenger frontal airbag is turned off for a person who is not in a risk group identified by the national government, that person will not have the extra protection of an airbag. In a crash, the airbag will

(Continued)

Warning (Continued)

not be able to inflate and help protect the person sitting there. Do not turn off the front outboard passenger frontal airbag unless the person sitting there is in a risk group identified by the national government. See *Airbag On-Off Switch* ⇨ *82* for more information, including important safety information.

⚠ Warning

If the airbag readiness light ever comes on and stays on, it means that something may be wrong with the airbag system. For example, the front outboard passenger frontal airbag could inflate even though the airbag on-off switch is turned off.

(Continued)

Warning (Continued)

To help avoid injury to yourself or others, have the vehicle serviced right away. See *Airbag Readiness Light* ⇨ *143* for more information, including important safety information.

If the word ON or the on symbol is lit, it means that the front outboard passenger frontal airbag is enabled (may inflate). See *Airbag On-Off Switch* ⇨ *82* for more information, including important safety information.

If, after several seconds, both status indicator lights remain on, or if there are no lights at all, there may be a problem with the lights or the airbag on-off switch. See your dealer for service.

Passenger Airbag Status Indicator

If the vehicle has the passenger sensing system, the overhead console will have a passenger airbag status indicator. See *Passenger Sensing System* ⇨ *84* for important safety information.

United States

Canada

When the vehicle is started, the passenger airbag status indicator will light ON and OFF, or the symbols for on and off, for several seconds as a system check. Then,

after several more seconds, the status indicator will light either ON or OFF, or either the on or off symbol, to let you know the status of the front outboard passenger frontal airbag.

If the word ON or the on symbol is lit on the passenger airbag status indicator, it means that the front outboard passenger frontal airbag is allowed to inflate.

If the word OFF or the off symbol is lit on the airbag status indicator, it means that the passenger sensing system has turned off the front outboard passenger frontal airbag.

If, after several seconds, both status indicator lights remain on, or if there are no lights at all, there may be a problem with the lights or the passenger sensing system. See your dealer for service.

⚠ Warning

If the airbag readiness light ever comes on and stays on, it means that something may be wrong with the airbag system. To help avoid injury to yourself or others, have the vehicle serviced right away. See *Airbag Readiness Light* ⇨ *143* for more information, including important safety information.

Charging System Light

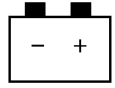

The charging system light comes on briefly when the ignition is turned on, but the engine is not running, as a check to show the light is working. It should go out when the engine is started.

If the light stays on, or comes on while driving, there may be a problem with the electrical charging system. Have it checked by your dealer. Driving while this light is on could drain the battery.

When this light comes on, or is flashing, the Driver Information Center (DIC) also displays a message.

If a short distance must be driven with the light on, be sure to turn off all accessories, such as the radio and air conditioner.

Malfunction Indicator Lamp

This light is part of the vehicle's emission control on-board diagnostic system. If this light is on while the engine is running, a malfunction has been detected and the vehicle may require service. The light should come on to show that it is working when the ignition is on and the engine is not running. See *Ignition Positions* ⇨ *247*.

Malfunctions are often indicated by the system before any problem is noticeable. Being aware of the light and seeking service promptly when it comes on may prevent damage.

Caution

If the vehicle is driven continually with this light on, the emission control system may not work as well, the fuel economy may be lower, and the vehicle may not run smoothly. This could lead to costly repairs that might not be covered by the vehicle warranty.

Caution

Modifications to the engine, transmission, exhaust, intake, or fuel system, or the use of replacement tires that do not meet the original tire specifications, can cause this light to come on. This could lead to costly repairs not covered by the vehicle warranty. This could also affect the vehicle's ability to pass an Emissions Inspection/ Maintenance test. See *Accessories and Modifications* ⇨ *326*.

If the light is flashing : A malfunction has been detected that could damage the emission control system and increase vehicle emissions. Diagnosis and service may be required.

To help prevent damage, reduce vehicle speed and avoid hard accelerations and uphill grades.

If towing a trailer, reduce the amount of cargo being hauled as soon as possible.

If the light continues to flash, find a safe place to park. Turn the vehicle off and wait at least 10 seconds before restarting the engine. If the light is still flashing, follow the previous guidelines and see your dealer for service as soon as possible.

If the light is on steady : A malfunction has been detected. Diagnosis and service may be required.

Check the following:

- If fuel has been added to the vehicle using the capless funnel adapter, make sure that it has been removed. See "Filling the Tank with a Portable Gas Can" under *Filling the Tank* ⇨ *291*.

The diagnostic system can detect if the adapter has been left installed in the vehicle, allowing fuel to evaporate into the atmosphere. A few driving trips with the adapter removed may turn off the light.

- Poor fuel quality can cause inefficient engine operation and poor driveability, which may go away once the engine is warmed up. If this occurs, change the fuel brand. It may require at least one full tank of the proper fuel to turn the light off. See *Recommended Fuel* ⇨ *290*.

If the light remains on, see your dealer.

Emissions Inspection and Maintenance Programs

If the vehicle requires an Emissions Inspection/Maintenance test, the test equipment will likely connect to the vehicle's Data Link Connector (DLC).

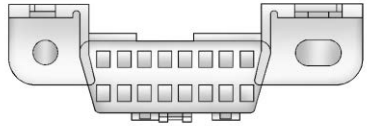

The DLC is under the instrument panel to the left of the steering wheel. Connecting devices that are not used to perform an Emissions Inspection/Maintenance test or to service the vehicle may affect vehicle operation. See *Add-On Electrical Equipment* ⇨ *318*. See your dealer if assistance is needed.

The vehicle may not pass inspection if:

- The light is on when the engine is running.
- The light does not come on when the ignition is on while the engine is off.
- Critical emission control systems have not been completely diagnosed. If this happens, the vehicle would not be ready for inspection and might require several days of routine driving before the system is ready for inspection. This can happen if the 12-volt battery has recently been replaced or run down, or if the vehicle has been recently serviced.

See your dealer if the vehicle will not pass or cannot be made ready for the test.

Brake System Warning Light

The vehicle brake system consists of two hydraulic circuits. If one circuit is not working, the remaining circuit can still work to stop the vehicle. For normal braking performance, both circuits need to be working.

If the warning light comes on, there is a brake problem. Have the brake system inspected right away.

BRAKE

Metric **English**

This light should come on briefly when the engine is started. If it does not come on then, have it fixed so it will be ready to warn you if there is a problem.

When the ignition is on, the brake system warning light also comes on when the parking brake is set. The light stays on if the parking brake does not fully release. If it stays on after the parking brake is fully released, it means the vehicle has a brake problem.

If the light comes on while driving, pull off the road and stop carefully. The pedal might be harder to push, or the pedal can go closer to the floor. It may take longer to stop. If the light is still on, have the vehicle towed for service. See *Towing the Vehicle* ⇨ *413*.

⚠ Warning

The brake system might not be working properly if the brake system warning light is on. Driving with the brake system warning light on can lead to a crash. If the light is still on after the vehicle has been pulled off the road and carefully stopped, have the vehicle towed for service.

Antilock Brake System (ABS) Warning Light

This light comes on briefly when the engine is started.

If the light does not come on, have it fixed so it will be ready to warn if there is a problem.

If the light comes on while driving, stop as soon as it is safely possible and turn off the vehicle. Then start the engine again to reset the system. If the ABS light stays on, or comes on again while driving, the vehicle needs service. A chime may also sound when the light comes on steady.

If the ABS light is the only light on, the vehicle has regular brakes, but the antilock brakes are not functioning.

If both the ABS and the brake system warning light are on, the vehicle's antilock brakes are not functioning and there is a problem with the regular brakes. See your dealer for service.

See *Brake System Warning Light* ⇨ *148*.

Four-Wheel-Drive Light

The four-wheel-drive light comes on when a vehicle with a manual transfer case is shifted into four-wheel drive and the front axle engages.

Some delay between the shifting and the light coming on is normal.

See *Four-Wheel Drive* ⇨ *262* for more information.

Tow/Haul Mode Light

For vehicles with the Tow/Haul Mode feature, this light comes on when the Tow/Haul Mode has been activated.

See *Tow/Haul Mode* ⇨ *261*.

Hill Descent Control Light

If equipped, the Hill Descent Control light comes on when the system is ready for use. When the light flashes, the system is active.

See *Hill Descent Control (HDC)* ⇨ *275*.

Lane Departure Warning (LDW) Light (2500/3500 Series)

If equipped, this light comes on briefly while starting the vehicle. If it does not come on, have the vehicle serviced.

This light is green if LDW is on and ready to operate.

This light changes to amber and flashes to indicate that the lane marking has been crossed without using a turn signal in that direction.

See *Lane Departure Warning (LDW) (2500/3500 Series)* ⇨ *286*.

Lane Keep Assist (LKA) Light (1500 Series)

If available, this light comes on briefly while starting the vehicle.

If it does not come on, have the vehicle serviced.

This light is green if LKA is available to assist.

LKA may assist by gently turning the steering wheel if the vehicle approaches a detected lane marking without using the turn signal in that direction. The LKA light will turn amber.

This light is amber and flashes as a Lane Departure Warning (LDW) alert, to indicate that the lane marking has been crossed.

See *Lane Keep Assist (LKA) (1500 Series)* ⇨ *287*.

Vehicle Ahead Indicator

If equipped, this indicator will display green when a vehicle is detected ahead and amber when you are following a vehicle ahead much too closely.

See *Forward Collision Alert (FCA) System* ⇨ *282*.

Traction Off Light

This light comes on briefly while starting the engine. If it does not, have the vehicle serviced by your dealer. If the system is working normally, the indicator light then turns off.

The traction off light comes on when the Traction Control System (TCS) has been turned off by pressing and releasing the TCS/StabiliTrak button.

This light and the StabiliTrak OFF light come on when StabiliTrak is turned off.

If the TCS is off, wheel spin is not limited. Adjust driving accordingly.

See *Traction Control/Electronic Stability Control* ⇨ *273*.

StabiliTrak OFF Light

This light comes on briefly while starting the engine. If it does not, have the vehicle serviced by your dealer.

This light comes on when the StabiliTrak system is turned off. If StabiliTrak is off, the Traction Control System (TCS) is also off.

If StabiliTrak and TCS are off, the system does not assist in controlling the vehicle. Turn on the TCS and the StabiliTrak systems, and the warning light turns off.

See *Traction Control/Electronic Stability Control* ⇨ *273*.

Traction Control System (TCS)/StabiliTrak Light

This light comes on briefly when the engine is started.

If the light does not come on, have the vehicle serviced by your dealer. If the system is working normally, the indicator light turns off.

If the light is on and not flashing, the TCS and potentially the StabiliTrak/ESC system have been disabled. A Driver Information Center (DIC) message may display. Check the DIC messages to determine which feature(s) is no longer functioning and whether the vehicle requires service.

If the light is on and flashing, the TCS and/or the StabiliTrak/ESC system is actively working.

See *Traction Control/Electronic Stability Control* ⇨ *273*.

Tire Pressure Light

For vehicles with the Tire Pressure Monitor System (TPMS), this light comes on briefly when the engine is started. It provides information about tire pressures and the TPMS.

When the Light Is On Steady

This indicates that one or more of the tires are significantly underinflated.

A Driver Information Center (DIC) tire pressure message may also display. Stop as soon as possible, and inflate the tires to the pressure value shown on the Tire and Loading Information label. See *Tire Pressure* ⇨ *379*.

When the Light Flashes First and Then Is On Steady

If the light flashes for about a minute and then stays on, there may be a problem with the TPMS. If the problem is not corrected, the light will come on at every ignition cycle. See *Tire Pressure Monitor Operation* ⇨ *382*.

Low Fuel Warning Light

This light is near the fuel gauge and comes on briefly when the ignition is turned on as a check to show it is working.

It also comes on when the fuel tank is low on fuel. The light turns off when fuel is added. If it does not, have the vehicle serviced.

Security Light

The security light should come on briefly as the engine is started. If it does not come on, have the vehicle serviced by your dealer. If the system is working normally, the indicator light turns off.

If the light stays on and the engine does not start, there could be a problem with the theft-deterrent system. See *Immobilizer Operation* ⇨ *45*.

High-Beam On Light

This light comes on when the high-beam headlamps are in use.

See *Headlamp High/Low-Beam Changer* ⇨ *173*.

IntelliBeam Light

This light comes on when the IntelliBeam system, if equipped, is enabled.

See *Exterior Lamp Controls* ⇨ *171*.

Front Fog Lamp Light

For vehicles with fog lamps, this light comes on when the fog lamps are on.

The light goes out when the fog lamps are turned off. See *Fog Lamps* ⇨ *176*.

Lamps On Reminder

This light comes on when the exterior lamps are in use. See *Exterior Lamp Controls* ⇨ *171*.

Cruise Control Light

For vehicles with cruise control, the cruise control light is white when the cruise control is on and ready, and turns green when the cruise control is set and active.

The light turns off when the cruise control is turned off. See *Cruise Control* ⇨ *276*.

Information Displays

Driver Information Center (DIC) (Base Level)

The DIC displays are shown in the center of the instrument cluster. The displays show the status of many vehicle systems. The trip odometer reset stem in the instrument cluster is used to access the DIC menu items.

DIC Menu Items

Turn the trip odometer reset stem to scroll through the following menu items:

- Digital Speedometer
- Trip
- Fuel Range
- Average Fuel Economy
- Tire Pressure
- Remaining Oil Life
- Transmission Fluid Temperature
- Trailer Brake
- Hourmeter
- Unit

Digital Speedometer

The speedometer shows how fast the vehicle is moving in either kilometers per hour (km/h) or miles per hour (mph). The speedometer cannot be reset.

Trip

Turn the trip odometer reset stem until TRIP displays. The current distance traveled, in either kilometers (km) or miles (mi), since the last reset for the trip odometer is shown. The trip odometer can be reset to zero by pressing and holding the trip odometer reset stem while the trip odometer is displayed.

Fuel Range

This display shows the approximate distance the vehicle can be driven without refueling. The fuel range estimate is based on an average of the vehicle's fuel economy over recent driving history and the amount of fuel remaining in the fuel tank. Fuel range cannot be reset.

Average Fuel Economy

The Average Fuel Economy display shows the approximate average liters per 100 kilometers (L/100 km) or miles per gallon (mpg). This number reflects only the approximate average fuel economy that the vehicle has right now, and will change as driving conditions change. This number is based on the number of L/100 km (mpg) recorded since the last time this menu item was reset. Reset this display by pressing the trip odometer reset stem.

Tire Pressure

Turn the trip odometer reset stem until a vehicle with the approximate pressures of all four tires displays. Tire pressure is displayed in either kilopascal (kPa) or in pounds per square inch (psi).

See *Tire Pressure Monitor System* ⇨ *381* and *Tire Pressure Monitor Operation* ⇨ *382*.

Remaining Oil Life

Turn the trip odometer reset stem until REMAINING OIL LIFE displays. An estimate of the oil's remaining useful life is shown. REMAINING OIL LIFE 99% means 99% of the current oil life remains.

When the remaining oil life is low, the CHANGE ENGINE OIL SOON message will appear on the display. The oil should be changed as soon as possible. See *Engine Oil* ⇨ *332*. In addition to the engine oil life system monitoring the oil life, additional maintenance is recommended in the Maintenance Schedule. See *Maintenance Schedule* ⇨ *431*.

The Oil Life display must be reset after each oil change. It will not reset itself. Do not reset the Oil Life display at any time other than when the oil has just been changed. It cannot be reset accurately until the next oil change. To reset the engine oil life system, see *Engine Oil Life System* ⇨ *334*.

Transmission Fluid Temperature

The temperature of the automatic transmission fluid displays in either degrees Celsius (°C) or degrees Fahrenheit (°F).

Trailer Brake

On vehicles with the Integrated Trailer Brake Control (ITBC) system, turn the trip odometer reset stem until TRAILER GAIN and TRAILER OUTPUT displays.

TRAILER GAIN shows the Trailer Gain setting. This setting can be adjusted from 0.0 to 10.0 with either a trailer connected or disconnected.

TRAILER OUTPUT shows the power output to the trailer anytime a trailer with electric brakes is connected. Output is displayed as a bar graph. Dashes may appear in the TRAILER OUTPUT display if a trailer is not connected.

Hourmeter

This display shows the total number of hours the engine has run.

Unit

This will change the displays on the instrument cluster and DIC to either metric or English (US) measurements. To change the units, press the trip odometer reset stem when UNITS is displayed to enter the Unit menu. Turn the trip odometer reset stem to switch between English and metric. Press the trip odometer reset stem when the desired setting is displayed.

Compass

The vehicle may have a compass in the Driver Information Center (DIC). See *Compass* ⇨ *129*.

Driver Information Center (DIC) (Uplevel)

The DIC displays are shown in the center of the instrument cluster in the Info app. See *Instrument Cluster* ⇨ *136*. The displays show the status of many vehicle systems. The controls for the DIC are on the right steering wheel control.

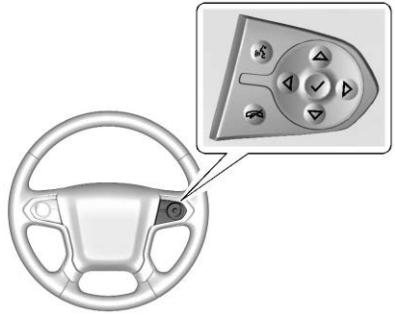

△ **or** ▽ **:** Press to move up or down in a list. In the main view, press up and down to move between different info app pages.

◁ **or** ▷ **:** Press to move between the interactive display zones in the cluster.

✓ **:** Press to open a menu or select a menu item. Press and hold to reset values on certain screens.

DIC Info Page Options

The info pages on the DIC can be turned on or off through the Options menu.

1. Press ◁ to access the cluster applications.
2. Press △ or ▽ to scroll to the Options application.
3. Press ✓ to enter the Options menu.
4. Scroll to Info Pages and press ▷.
5. Press △ or ▽ to move through the list of possible information displays.
6. Press ✓ while an item is highlighted to select or deselect that item. When an item is selected, a checkmark will appear next to it.

DIC Info Pages

The following is the list of all possible DIC info page displays. Some may not be available for your particular vehicle. Some items may not be turned on by default but can be turned on through the Options app. See “DIC Info Page Options” earlier in this section.

Speed : Shows the vehicle speed in either kilometers per hour (km/h) or miles per hour (mph). If equipped, press ▷ to open the menu and select to display speed limit signs.

Trip A or Trip B : Shows the current distance traveled, in either kilometers (km) or miles (mi), since the trip odometer was last reset.

This also shows the approximate average liters per 100 kilometers (L/100 km) or miles per gallon (mpg). This number is calculated based on the number of L/100 km (mpg) recorded since the last time this menu item was reset. This number reflects only the approximate average fuel economy that the vehicle has right now, and will change as driving conditions change.

Press and hold ✓ while this display is active to reset the trip odometer and the average fuel economy. Trip A and Trip B can also be reset by pressing ▷ and choosing reset.

Fuel Range : Shows the approximate distance the vehicle can be driven without refueling. LOW will be displayed when the vehicle is low on fuel. The fuel range estimate is based on an average of the vehicle's fuel economy over recent driving history and the amount of fuel remaining in the fuel tank.

Oil Life : Shows an estimate of the oil's remaining useful life. If REMAINING OIL LIFE 99% is displayed, that means 99% of the current oil life remains.

When the remaining oil life is low, the CHANGE ENGINE OIL SOON message will appear on the display. The oil should be changed as soon as possible. See *Engine Oil* ⇨ *332*. In addition to the engine oil life system monitoring the oil life, additional maintenance is recommended in the Maintenance Schedule. See *Maintenance Schedule* ⇨ *431*.

The Oil Life display must be reset after each oil change. It will not reset itself. Do not reset the Oil Life display at any time other than when the oil has just been changed. It cannot be reset accurately until the next oil change. To reset the engine oil life system, press and hold ✓ for several seconds while the Oil Life display is active. See *Engine Oil Life System* ⇨ *334*.

Tire Pressure : Shows the approximate pressures of all four tires. Tire pressure is displayed in either kilopascal (kPa) or in pounds per square inch (psi). If the pressure is low, the value for that tire is shown in amber. See *Tire Pressure Monitor System* ⇨ *381* and *Tire Pressure Monitor Operation* ⇨ *382*.

Fuel Economy : The center displays the approximate instantaneous fuel economy as a number and bar graph. Displayed above the bar graph is a running average of fuel economy for the most recently traveled selected distance. Displayed below the bar graph is the best average fuel economy that has been achieved for the selected distance. The selected

distance is displayed at the top of the page as “last xxx mi/km.” Next to the odometer, the Active Fuel Management displays the number of cylinders the vehicle is running on. See *Active Fuel Management* ⇨ *255*.

Press ▷ to select the distance or reset best value. Use △ and ▽ to choose the distance and press ✓. Press △ and ▽ to select “Reset Best Score.” Press ✓ to reset the best average fuel economy. After reset, the momentary average fuel economy will display.

The display provides information on how current driving behavior affects the running average and how well recent driving compares to the best that has been achieved for the selected distance.

Timer : This display can be used as a timer. To start the timer, press ✓ while this display is active. The display will show the amount of time that has passed since the timer was last reset. To stop the timer, press ✓ briefly while this display is active and the timer is running. To reset the timer to zero, press and hold ✓ while this display is active, or press ▷ and select reset.

Speed Limit (If Equipped) : Shows sign information, which comes from a roadway database in the onboard navigation.

Engine Hours : Shows the total number of hours the engine has run.

Transmission Fluid Temperature : Shows the temperature of the automatic transmission fluid in either degrees Celsius (°C) or degrees Fahrenheit (°F).

Trailer Brake (If Equipped) : On vehicles with the Integrated Trailer Brake Control (ITBC) system, the trailer brake display appears in the DIC.

TRAILER GAIN shows the trailer gain setting. This setting can be adjusted from 0.0 to 10.0 with either a trailer connected or disconnected.

TRAILER OUTPUT shows the power output to the trailer anytime a trailer with electric brakes is connected. Output is displayed as a bar graph. Dashes may appear in the OUTPUT display if a trailer is not connected.

Off Road : Displays vehicle pitch and roll information, road wheel angle, and four-wheel drive (4WD) status.

Blank Page : Shows no information.

Vehicle Messages

Messages displayed on the DIC indicate the status of the vehicle or some action that may be needed to correct a condition. Multiple messages may appear one after another.

The messages that do not require immediate action can be acknowledged and cleared by pressing ✓. The messages that require immediate action cannot be cleared until that action is performed.

All messages should be taken seriously; clearing the message does not correct the problem.

If a SERVICE message appears, see your dealer.

Follow the instructions given in the messages. The system displays messages regarding the following topics:

- Service Messages
- Fluid Levels
- Vehicle Security
- Brakes
- Steering
- Ride Control Systems
- Driver Assistance Systems
- Cruise Control
- Lighting and Bulb Replacement
- Wiper/Washer Systems
- Doors and Windows
- Seat Belts
- Airbag Systems
- Engine and Transmission
- Tire Pressure
- Battery

Engine Power Messages

ENGINE POWER IS REDUCED

This message displays when the vehicle's propulsion power is reduced. A reduction in propulsion power can affect the vehicle's ability to accelerate. If this message is on, but there is no observed reduction in performance, proceed to your destination. The performance may be reduced the next time the vehicle is driven. The vehicle may be driven while this message is on, but maximum acceleration and speed may be reduced. Anytime this message stays on, or displays repeatedly, the vehicle should be taken to your dealer for service as soon as possible.

Vehicle Speed Messages

SPEED LIMITED TO XXX KM/H (MPH)

This message shows that the vehicle speed has been limited to the speed displayed. The limited speed is a protection for various propulsion and vehicle systems, such as lubrication, thermal, suspension, Teen Driver if equipped, or tires.

Vehicle Personalization

Use the audio system controls to access the personalization menus for customizing vehicle features.

The following are all possible personalization features. Depending on the vehicle, some may not be available.

Base Radio Audio System Controls

: Press to access the Home Page Menu.

▲ or ▼ : Touch to scroll through the menus or setup items.

: Touch to exit or return to the previous screen or menu.

Uplevel Radio Audio System Controls

1. Touch the desired feature to display a list of available options.
2. Select the desired feature setting.
3. Press ◁ BACK on the center stack or touch ⬅ to return to the previous menu or exit.

Turn the ignition on to access the Settings menu, then select SETTINGS from the Home Page on the infotainment display.

Personalization Menus

The following list of menu items may be available:

- Time and Date
- Rear Seat Reminder
- Language
- Video Voice-Over
- Valet Mode
- Teen Driver
- Radio
- Vehicle
- Bluetooth
- Apple CarPlay
- Android Auto
- USB Auto Launch
- Voice
- Display
- Rear Camera
- Return to Factory Settings
- Software Information
- Wi-Fi

Detailed information for each menu follows.

Time and Date

Manually set the time and date. See *Clock* ⇨ *129*.

Rear Seat Reminder

This allows for a chime and a message when the rear door has been opened before or during operation of the vehicle.

Select Off or On.

Language

Select Language, then select from the available language(s).

The selected language will display on the system, and voice recognition will reflect the selected language.

Video Voice-Over

Select Off or On.

Valet Mode

This will lock the infotainment system and steering wheel controls. It may also limit access to vehicle storage locations, if equipped.

To enable valet mode:

1. Enter a four-digit code on the keypad.
2. Select Enter to go to the confirmation screen.
3. Re-enter the four-digit code.

Touch Lock or Unlock to lock or unlock the system. Touch Back to go back to the previous menu.

Teen Driver

See “Teen Driver” under “Settings” in the infotainment manual.

Radio

Select and the following may display:

- Manage Favorites
- Number of Favorites Shown
- Audible Touch Feedback
- Text Scroll
- Tone Settings
- Auto Volume
- Maximum Startup Volume
- Audio Cue Volume

Manage Favorites

This allows favorites to be edited. See “Manage Favorites” in “Settings” under “Radio” in the infotainment manual.

Number of Favorites Shown

Select to set the number of favorites to display.

Select the desired number or select Auto and the infotainment system will automatically adjust the number of favorites shown.

Audible Touch Feedback

This allows Audible Touch Feedback to be turned on or off.

Select Off or On.

Text Scroll

Select to see text scroll on the screen.

Select Off or On.

Tone Settings

Select to adjust the radio tone. See “Tone Settings” in *AM-FM Radio* ⇨ *185*.

Auto Volume

This feature adjusts the volume based on vehicle speed and ambient noise.

Select Off, Low, Medium-Low, Medium, Medium-High, or High.

Maximum Startup Volume

This feature sets the maximum startup volume. If the vehicle is started and the volume is greater than this level, the volume is

adjusted to this level. To set the maximum startup volume, touch + or − to increase or decrease.

Audio Cue Volume

This feature sets the volume of audio files played at system startup and shutdown.

Select On, then touch + or − to increase or decrease the volume.

Vehicle

Select and the following may display:

- Climate and Air Quality
- Collision/Detection Systems
- Comfort and Convenience
- Lighting
- Power Door Locks
- Remote Lock, Unlock, Start

Climate and Air Quality

Select and the following may display:

- Auto Fan Speed
- Auto Rear Defog

Auto Fan Speed

This feature will set the auto fan speed.

Select Low, Medium, or High.

Auto Rear Defog

This feature will automatically turn on the rear defogger when it is cold outside.

Select Off or On.

Collision/Detection Systems

Select and the following may display:

- Alert Type
- Forward Collision System
- Park Assist

Alert Type

This feature will set crash alerts to beeps or seat vibrations. This setting affects all crash alerts including Forward Collision, Lane Departure Warning, and Park Assist alerts.

Select Beeps or Safety Alert Seat.

Forward Collision System

This feature will turn on or off Forward Collision Alert (FCA) and Forward Automatic Braking (FAB). The Off setting disables all FCA and FAB functions. With the Alert and Brake setting, both FCA and FAB are available. The Alert setting disables FAB. See *Forward Automatic Braking (FAB) (1500 Series)* ⇨ *285*.

Select Off, Alert and Brake, or Alert.

Park Assist

If equipped, this feature can assist in backing up and parking the vehicle. See *Assistance Systems for Parking or Backing* ⇨ *280*.

Select Off, On, or On with Towbar.

Comfort and Convenience

Select and the following may display:

- Auto Memory Recall
- Easy Exit Options
- Chime Volume
- Reverse Tilt Mirror

- Auto Mirror Folding

Auto Memory Recall

This feature automatically recalls the previously stored 1 or 2 button positions when the ignition is changed from off to on or ACC/ACCESSORY. See *Memory Seats* ⇨ *60*.

Select Off or On.

Easy Exit Options

This feature automatically recalls the previously stored Exit button position when exiting the vehicle. See *Memory Seats* ⇨ *60*.

Select Off or On.

Chime Volume

This allows the selection of the chime volume level.

Touch + or − to adjust the volume.

Reverse Tilt Mirror

When on, both the driver and passenger, driver, or passenger outside mirrors will tilt downward when the vehicle is shifted to R (Reverse) to improve visibility of the ground near the rear wheels. They will return to their previous driving position when the vehicle is shifted out of R (Reverse) or the engine is turned off. See *Reverse Tilt Mirrors* ⇨ *49*.

Select Off, On - Driver and Passenger, On - Driver, or On - Passenger.

Auto Mirror Folding

When on, the outside mirrors will automatically fold or unfold when the Remote Keyless Entry (RKE) transmitter lock or unlock button is pressed and held. See *Folding Mirrors* ⇨ *47*.

Select Off or On.

Lighting

Select and the following may display:

- Vehicle Locator Lights
- Exit Lighting

Vehicle Locator Lights

This feature will flash the exterior lamps and allows some of the exterior lamps and most of the interior lamps to turn on briefly when 🔓 on the Remote Keyless Entry (RKE) transmitter is pressed to locate the vehicle.

Select Off or On.

Exit Lighting

This allows the selection of how long the exterior lamps stay on when leaving the vehicle when it is dark outside.

Select Off, 30 Seconds, 60 Seconds, or 120 Seconds.

Power Door Locks

Select and the following may display:

- Auto Door Unlock
- Delayed Door Lock

Auto Door Unlock

This allows selection of which of the doors will automatically unlock when the vehicle is shifted into P (Park).

Select Off, All Doors, or Driver Door.

Delayed Door Lock

When on, this feature will delay the locking of the doors. To override the delay, press the power door lock switch on the door.

Select Off or On.

Remote Lock, Unlock, Start

Select and the following may display:

- Remote Unlock Light Feedback
- Remote Lock Feedback
- Remote Door Unlock
- Remote Start Auto Cool Seats
- Remote Start Auto Heat Seats

Remote Unlock Light Feedback

When on, the exterior lamps will flash when unlocking the vehicle with the RKE transmitter.

Select Off or Flash Lights.

Remote Lock Feedback

This allows selection of what type of feedback is given when locking the vehicle with the RKE transmitter.

Select Off, Lights and Horn, Lights Only, or Horn Only.

Remote Door Unlock

This allows selection of which doors will unlock when pressing 🔓 on the RKE transmitter.

Select All Doors or Driver Door.

Remote Start Auto Cool Seats

If equipped and turned on, this feature will turn the ventilated seats on when using remote start on warm days.

Select Off or On.

Remote Start Auto Heat Seats

If equipped and turned on, this feature will turn the heated seats on when using remote start on cold days.

Select Off or On.

Bluetooth

Select and the following may display:

- Pair New Device
- Discoverable
- Device Management
- Ringtones
- Voice Mail Numbers
- Text Message Alerts

Pair New Device

Select to pair a new device. See “Pairing” under *Bluetooth (Overview)* ⇨ *203* or *Bluetooth (Infotainment Controls)* ⇨ *205* or “Pairing” in “Infotainment Controls” under “Bluetooth” in the infotainment manual.

Discoverable

This allows the system to find a device.

Select Off or On.

Device Management

Select to connect to a different phone source, disconnect a phone, or delete a phone.

Ringtones

Select to change the ring tone for the specific phone. The phone does not need to be connected to change the ring tones.

Voice Mail Numbers

This feature displays the voice mail number for all connected phones. To change the voice mail number, select EDIT. Type a new number, then select Save.

Text Message Alerts

This allows the feature to be turned on or off.

Select Off or On.

Apple CarPlay

Select and the following may display:

- Apple CarPlay
- Manage Apple CarPlay Devices

Apple CarPlay

This feature allows Apple devices to be connected to the infotainment system through a USB port.

Select Off or On.

Manage Apple CarPlay Devices

Select to manage Apple devices. Apple CarPlay must be on for this feature to be accessed.

Android Auto

Select and the following may display:

- Android Auto
- Manage Android Auto Devices

Android Auto

This feature allows Android devices to be connected to the infotainment system through a USB port.

Select Off or On.

Manage Android Auto Devices

Select to manage Android devices. Android Auto must be on for this feature to be accessed.

USB Auto Launch

This allows Android and Apple CarPlay devices to automatically connect when plugged into the USB port.

Select Off or On.

Voice

Select and the following may display:

- Confidence Threshold
- Prompt Length
- Audio Feedback Speed
- Display “What Can I Say?” Tips

Confidence Threshold

This feature allows the adjustment of the sensitivity of the speech recognition system.

Select Confirm More or Confirm Less.

Prompt Length

This feature adjusts the voice prompt length.

Select Short or Long.

Audio Feedback Speed

This feature adjusts the audio feedback speed.

Select Slow, Medium, or Fast.

Display "What Can I Say?" Tips

This feature gives voice command tips.

Select Off or On.

Display

Select and the following may display:

- Calibrate Touchscreen
- Turn Display Off

Calibrate Touchscreen

Select to calibrate the touchscreen, then follow the prompts.

Turn Display Off

Select to turn the display off. Touch anywhere on the infotainment display or press any infotainment controls on the center stack to turn the display on.

Rear Camera

Select and the following may display:

- Guidance Lines
- Rear Park Assist Symbols

Guidance Lines

Select to turn Off or On. See *Assistance Systems for Parking or Backing* ⇨ *280*.

Rear Park Assist Symbols

Select to turn Off or On. See *Assistance Systems for Parking or Backing* ⇨ *280*.

Return to Factory Settings

Select and the following may display:

- Restore Vehicle Settings
- Clear All Private Data
- Restore Radio Settings

Restore Vehicle Settings

This allows selection of restoring vehicle settings.

Select Restore or Cancel.

Clear All Private Data

This allows selection to clear all private information from the vehicle.

Select Delete or Cancel.

Restore Radio Settings

This allows selection to restore radio settings.

Select Restore or Cancel.

Software Information

Select to view or update the infotainment system current software information.

Wi-Fi

Select and the following may display:

- Wi-Fi
- Manage Wi-Fi Networks

Wi-Fi

This feature allows Wi-Fi networks to be turned off or on.

Select Off or On.

Manage Wi-Fi Networks

Select to manage Wi-Fi networks. Wi-Fi must be on for this feature to be accessed.

Universal Remote System

See *Radio Frequency Statement* ⇨ *460*.

Universal Remote System Programming

If equipped, these buttons are in the overhead console.

This system can replace up to three remote control transmitters used to activate devices such as garage door openers, security systems, and home automation devices. These instructions refer to a garage door opener, but can be used for other devices.

Do not use the Universal Remote system with any garage door opener that does not have the stop and reverse feature. This includes any garage door opener model manufactured before April 1, 1982.

Read these instructions completely before programming the Universal Remote system. It may help to have another person assist with the programming process.

Keep the original hand-held transmitter for use in other vehicles as well as for future programming. Erase the programming when vehicle ownership is terminated. See “Erasing Universal Remote System Buttons” later in this section.

To program a garage door opener, park outside directly in line with and facing the garage door opener receiver. Clear all people and objects near the garage door.

Make sure the hand-held transmitter has a new battery for quicker and more accurate transmission of the radio-frequency signal.

Programming the Universal Remote System

For questions or programming help, see www.homelink.com/gm or call 1-800-355-3515. For calls placed outside the U.S.A, Canada, or Puerto Rico, international rates will apply and may differ based on landline or mobile phone.

Programming involves time-sensitive actions, and may time out causing the procedure to be repeated.

To program up to three devices:

1. Hold the end of the hand-held transmitter about 3 to 8 cm (1 to 3 in) away from the Universal Remote system buttons with the indicator light in view. The hand-held transmitter was supplied by the manufacturer of the garage door opener receiver.
2. At the same time, press and hold both the hand-held transmitter button and one of the three Universal Remote system buttons to be used to operate the garage door. Do not release either button until the indicator light changes from a slow to a rapid flash. Then release both buttons.

   Some garage door openers may require substitution of Step 2 with the procedure under “Radio Signals for Some Gate Operators” later in this section.
3. Press and hold the newly programmed Universal Remote system button for five seconds while watching the indicator light and garage door activation.
   - If the indicator light stays on continuously or the garage door moves when the button is pressed, then programming is complete. There is no need to complete Steps 4–6.
   - If the indicator light does not come on or the garage door does not move, a second button press may be required. For a second time, press and hold the newly programmed button for five seconds. If the light stays on or the garage door moves, programming is complete.
   - If the indicator light blinks rapidly for two seconds, then changes to a solid light and the garage door does not move, continue with programming Steps 4–6.

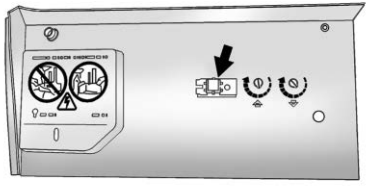

Learn or Smart Button

4. After completing Steps 1–3, locate the Learn or Smart button inside the garage on the garage door opener receiver. The name and color of the button may vary by manufacturer.
5. Press and release the Learn or Smart button. Step 6 must be completed within 30 seconds of pressing this button.
6. Inside the vehicle, press and hold the newly programmed Universal Remote system button for two seconds, then release it. If the garage door does not move or the lamp on the garage door opener receiver does not flash, press and hold the same button a second time for two seconds, then release it. Again, if the door does not move or the garage door lamp does not flash, press and hold the same button a third time for two seconds, then release it.

The Universal Remote system should now activate the garage door.

Repeat the process for programming the two remaining buttons.

Radio Signals for Some Gate Operators

For questions or programming help, see www.homelink.com/gm or call 1-800-355-3515. For calls placed outside the U.S.A, Canada, or Puerto Rico, international rates will apply and may differ based on landline or mobile phone.

Some radio-frequency laws and gate operators require transmitter signals to time out or quit after several seconds of transmission. This may not be long enough for the Universal Remote system to pick up the signal during programming.

If the programming did not work, replace Step 2 under “Programming the Universal Remote System” with the following:

Press and hold the Universal Remote system button while pressing and releasing the hand-held transmitter button every two seconds until the signal has been successfully accepted by the Universal Remote system. The Universal Remote system indicator light will flash slowly at first and then rapidly. Proceed with Step 3 under “Programming the Universal Remote System” to complete.

Universal Remote System Operation

Using the Universal Remote System

Press and hold the appropriate Universal Remote system button for at least one-half second. The indicator light will come on while the signal is being transmitted.

Erasing Universal Remote System Buttons

Erase all programmed buttons when vehicle ownership is terminated.

To erase:

1. Press and hold the two outside buttons until the indicator light begins to flash. This should take about 10 seconds.
2. Release both buttons.

Reprogramming a Single Universal Remote System Button

To reprogram any of the system buttons:

1. Press and hold any one of the buttons. Do not release the button.
2. The indicator light will begin to flash after 20 seconds. Without releasing the button, proceed with Step 1 under “Programming the Universal Remote System.”

Lighting

Exterior Lighting
Exterior Lamp Controls 171
Exterior Lamps Off Reminder 173
Headlamp High/Low-Beam Changer 173
Flash-to-Pass 174
Daytime Running Lamps (DRL) 174
Automatic Headlamp System 174
Hazard Warning Flashers 175
Turn and Lane-Change Signals 175
Fog Lamps 176
Auxiliary Roof-Mounted Lamp 176
Exterior Cargo Lamps 177

Interior Lighting
Instrument Panel Illumination Control 178
Dome Lamps 178
Reading Lamps 178

Lighting Features
Entry Lighting 179
Exit Lighting 179
Battery Load Management . . . 179
Battery Power Protection 180
Exterior Lighting Battery Saver 180

Exterior Lighting

Exterior Lamp Controls

The exterior lamp control is on the instrument panel to the left of the steering wheel.

⏻ **:** Turns off the automatic headlamps and Daytime Running Lamps (DRL). Turn the headlamp control to ⏻ again to turn the automatic headlamps or DRL back on.

For vehicles first sold in Canada, off will only work when the vehicle is in P (Park).

AUTO : Automatically turns on the headlamps, parking lamps, taillamps, instrument panel lights, roof marker lamps (if equipped), front/rear sidemarker lamps, and license plate lamps.

When the vehicle is turned off and the headlamps are in AUTO, the headlamps turn off. When the key is removed, they automatically turn on for a set time. The time of the delay can be changed using the DIC. See *Driver Information Center (DIC) (Base Level)* ⇨ *154* or *Driver Information Center (DIC) (Uplevel)* ⇨ *156*.

: Turns on the parking lamps including all lamps, except the headlamps.

: Turns on the headlamps together with the parking lamps and instrument panel lights.

When the headlamps are turned on while the vehicle is on, the headlamps turn off automatically 10 minutes after the ignition is turned off. When the headlamps are turned on while the vehicle is off, the headlamps will stay on for 10 minutes before turning off to prevent the battery from being drained. Turn the headlamp control off and then back to the headlamp on position to make the headlamps stay on for an additional 10 minutes. To keep the lamps on for more than 10 minutes, the ignition must be on or in ACC/ACCESSORY.

: If equipped, turns on the fog lamps. See *Fog Lamps* ⇨ *176*.

IntelliBeam System

If equipped, this system turns the vehicle's high-beam headlamps on and off according to surrounding traffic conditions.

The system turns the high-beam headlamps on when it is dark enough and there is no other traffic present.

This light comes on in the instrument cluster when the IntelliBeam system is enabled.

Turning On and Enabling IntelliBeam

To enable the IntelliBeam system, activate the high/low-beam changer on then off within two seconds while the exterior lamp control is in AUTO or .

Driving with IntelliBeam

The system only activates the high beams when driving over 40 km/h (25 mph).

The blue high-beam on light appears on the instrument cluster when the high beams are on.

There is a sensor near the top center of the windshield that automatically controls the system. Keep this area of the windshield clear of debris to allow for best system performance.

The high-beam headlamps remain on, under the automatic control, until one of the following situations occurs:

- The system detects an approaching vehicle's headlamps.
- The system detects a preceding vehicle's taillamps.
- The outside light is bright enough that high-beam headlamps are not required.
- The vehicle's speed drops below 20 km/h (12 mph).
- The IntelliBeam system can be disabled by the high/low-beam changer or the flash-to-pass feature. If this happens, the high/low-beam changer must be activated on then off within two seconds to reactivate the IntelliBeam system. The instrument cluster light will come on to indicate the IntelliBeam is reactivated.
  See *Headlamp High/Low-Beam Changer* ⇨ *173* and *Flash-to-Pass* ⇨ *174*.

The high beams may not turn off automatically if the system cannot detect another vehicle's lamps because of any of the following:

- The other vehicle's lamps are missing, damaged, obstructed from view, or otherwise undetected.
- The other vehicle's lamps are covered with dirt, snow, and/or road spray.
- The other vehicle's lamps cannot be detected due to dense exhaust, smoke, fog, snow, road spray, mist, or other airborne obstructions.
- The vehicle's windshield is dirty, cracked, or obstructed by something that blocks the view of the light sensor.
- The vehicle is loaded such that the front end points upward, causing the light sensor to aim high and not detect headlamps and taillamps.
- Driving on winding or hilly roads.

The automatic high-beam headlamps may need to be disabled if any of the above conditions exist.

Exterior Lamps Off Reminder

A reminder chime sounds when the headlamps or parking lamps are manually turned on, the ignition is off, and a door is open. To disable the chime, turn the lamps off.

Headlamp High/ Low-Beam Changer

Push the turn signal lever toward the instrument panel to change the headlamps from low to high beam.

Pull the turn signal lever toward you and release it to return to low-beam headlamps.

When the high-beam headlamps are on, this indicator light on the instrument cluster will also be on.

Flash-to-Pass

This feature lets you use the high-beam headlamps to signal a driver in front of you that you want to pass. It works even if the headlamps are in the automatic position.

To use it, pull the turn signal lever toward you, then release it.

If the headlamps are in the automatic position or on low beam, the high-beam headlamps will turn on. Depending on the type of headlamp, they will either turn off after a short duration or stay on as long as you hold the lever toward you. The high-beam indicator on the instrument cluster will come on. Release the lever to return to normal operation.

Daytime Running Lamps (DRL)

DRL can make it easier for others to see the front of the vehicle during the day. Fully functional DRL are required on all vehicles first sold in Canada.

The DRL system comes on when the following conditions are met:

- The ignition is on.
- The exterior lamp control is in AUTO.
- The transmission is not in P (Park).
- The light sensor determines it is daytime.

When the DRL system is on, only the DRL are on. The taillamps, sidemarker lamps, instrument panel lights, and other lamps will not be on.

When it begins to get dark, the automatic headlamp system switches from DRL to the headlamps.

To turn off the DRL, turn the exterior lamp control to ⏻ and then release. For vehicles first sold in Canada, off will only work when the vehicle is parked.

Automatic Headlamp System

When the exterior lamp control is set to AUTO and it is dark enough outside, the headlamps come on automatically.

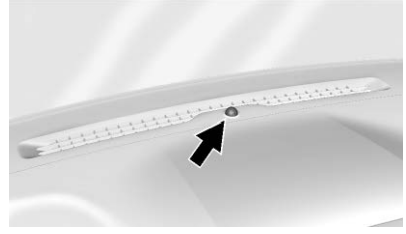

There is a light sensor on top of the instrument panel. Do not cover the sensor, otherwise the headlamps will come on when they are not needed.

The system may also turn on the headlamps when driving through a parking garage or tunnel.

If the vehicle is started in a dark garage, the automatic headlamp system comes on immediately. If it is light outside when the vehicle leaves the garage, there is a slight delay before the automatic headlamp system changes to the DRL. During that delay, the instrument cluster may not be as bright as usual. Make sure the instrument panel brightness control is in the full bright position. See *Instrument Panel Illumination Control* ⇨ *178*.

When it is bright enough outside, the headlamps will turn off or may change to Daytime Running Lamps (DRL).

The automatic headlamp system turns off when the exterior lamp control is turned to ⏻ or the ignition is off.

Lights On with Wipers

If the windshield wipers are activated in daylight with the engine on, and the exterior lamp control is in AUTO, the headlamps, parking lamps, and other exterior lamps come on. The transition time for the lamps coming on varies based on wiper speed. When the wipers are not operating, these lamps turn off.

Move the exterior lamp control to ⏻ or ≋ to disable this feature.

Hazard Warning Flashers

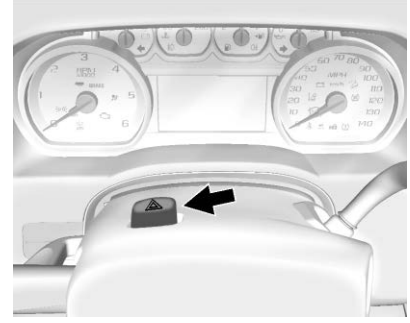

⚠ **:** Press this button to make the front and rear turn signal lamps flash on and off. Press again to turn the flashers off.

When the hazard warning flashers are on, the vehicle's turn signals will not work.

Turn and Lane-Change Signals

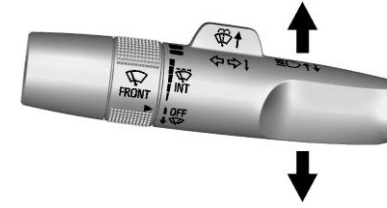

An arrow on the instrument cluster flashes in the direction of the turn or lane change.

Move the turn signal lever all the way up or down to signal a turn.

Raise or lower the lever for less than one second until the arrow starts to flash to signal a lane

change. This causes the turn signals to automatically flash three times. It will flash six times if Tow/Haul Mode is active. Holding the turn signal lever for more than one second will cause the turn signals to flash until the lever is released.

The lever returns to its starting position whenever it is released.

If after signaling a turn or a lane change the arrows flash rapidly or do not come on, a signal bulb could be burned out. If equipped with LED turn signals, see your dealer.

Replace any burned out bulbs. If a bulb is not burned out, check the fuse. See *Fuses and Circuit Breakers* ⇨ *363*.

Turn Signal On Chime

If the turn signal is left on for more than 1.2 km (0.75 mi), a chime sounds at each flash of the turn signal. The message TURN SIGNAL ON will also appear in the Driver Information Center (DIC). To turn the chime and message off, move the turn signal lever to the off position.

Fog Lamps

If equipped, the control is on the center of the exterior lamp control, to the left of the steering column.

The ignition must be on for the fog lamps to come on.

: Press to turn the fog lamps on or off. A light will come on in the instrument cluster.

When the fog lamps are turned on, the parking lamps automatically turn on.

When the headlamps are changed to high beam, the fog lamps go off. When the high-beam headlamps are turned off, the fog lamps will come on again.

Some localities have laws that require the headlamps to be on with the fog lamps.

Auxiliary Roof-Mounted Lamp

If equipped, this button includes wiring provisions for a dealer or a qualified service center to install an auxiliary roof lamp.

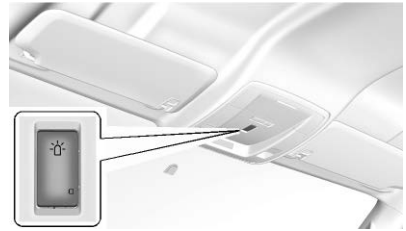

This button is on the overhead console.

When the wiring is connected to an auxiliary roof-mounted lamp, pressing the bottom of the button will activate the lamp and illuminate an indicator light at the bottom of this button. Pressing the top of the button will turn off the roof-mounted lamp and indicator.

The emergency roof lamp circuit is fused at 30 amps, so the total current draw of the attached lamps should be less than this value. The attachment points for the roof lamp circuits are two blunt cut wires above the overhead console: a dark green with blue stripe switched power wire and a black ground wire.

For information on roof-mounted emergency lamp installation, see www.gmupfitter.com or contact your dealer.

If the vehicle has this button, the vehicle may have the snow plow prep package. See *Add-On Electrical Equipment* ⇨ *318*.

Exterior Cargo Lamps

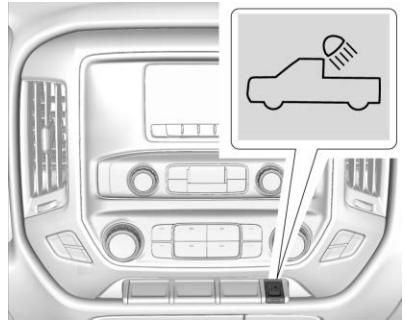

The cargo lamp provides more light in the cargo area or on the sides of the vehicle, if needed. The lamps inside the pickup box and/or on the outside mirrors also turn on, if equipped.

Press the switch to turn the cargo lamp on or off. An indicator light will turn on when the lamp is turned on, if equipped. The shift lever must be in P (Park), R (Reverse), or N (Neutral) to operate the cargo lamp. The lights on the outside mirrors turn on if the shift lever is in P (Park), R (Reverse), or N (Neutral).

Become familiar with and follow all state and local laws that apply to cargo lamp operation.

Interior Lighting

Instrument Panel Illumination Control

This feature controls the brightness of the steering wheel and instrument panel lights. The instrument panel illumination control is next to the exterior lamp control.

: Move the thumbwheel up or down to brighten or dim the lights.

Dome Lamps

There are dome lamps in the overhead console and the headliner, if equipped.

To change the dome lamp settings, press the following:

OFF : Turns the lamps off, even when a door is open.

DOOR : The lamps come on automatically when a door is opened.

ON : Turns all dome lamps on.

Reading Lamps

There are reading lamps in the overhead console and the headliner, if equipped. To operate, the ignition must be on or in ACC/ ACCESSORY, or using Retained Accessory Power (RAP).

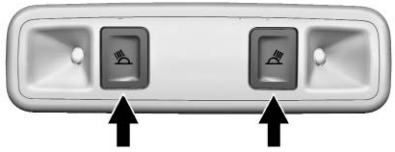

Press or next to each reading lamp to turn it on or off.

Lighting Features

Entry Lighting

Some exterior lamps and the interior lamps turn on briefly at night, or in areas with limited lighting, when is pressed on the Remote Keyless Entry (RKE) transmitter. When a door is opened, the interior lamps come on if the dome lamp control is in the DOOR position. After about 30 seconds the exterior lamps turn off. Entry lighting can be disabled manually by changing the ignition out of the OFF position, or by pressing the RKE transmitter button.

This feature can be changed. See “Vehicle Locator Lights” under *Vehicle Personalization* ⇨ *160*.

Exit Lighting

Some exterior lamps and the interior lamps come on at night, or in areas with limited lighting when the key is removed from the ignition. The exterior and interior lamps remain on for a set amount of time and then automatically turn off. The interior lamps do not come on if the dome lamp control is in the Off position.

The exterior lamps turn off immediately by turning the exterior lamps control off.

This feature can be changed. See *Vehicle Personalization* ⇨ *160*.

Battery Load Management

The vehicle has Electric Power Management (EPM), which estimates the battery's temperature and state of charge. It then adjusts the voltage for best performance and extended life of the battery.

When the battery's state of charge is low, the voltage is raised slightly to quickly bring the charge back up. When the state of charge is high, the voltage is lowered slightly to prevent overcharging. The voltmeter gauge or the voltage display on the Driver Information Center (DIC), if equipped, may show the voltage

moving up or down. This is normal. If there is a problem, an alert will be displayed.

The battery can be discharged at idle if the electrical loads are very high. This is true for all vehicles. This is because the generator (alternator) may not be spinning fast enough at idle to produce all the power that is needed for very high electrical loads.

A high electrical load occurs when several of the following are on, such as: headlamps, high beams, fog lamps, rear window defogger, climate control fan at high speed, heated seats, engine cooling fans, trailer loads, and loads plugged into accessory power outlets.

EPM works to prevent excessive discharge of the battery. It does this by balancing the generator's output and the vehicle's electrical needs. It can increase engine idle speed to generate more power, whenever needed. It can temporarily reduce the power demands of some accessories.

Normally, these actions occur in steps or levels, without being noticeable. In rare cases at the highest levels of corrective action, this action may be noticeable to the driver. If so, a DIC message might be displayed and it is recommended that the driver reduce the electrical loads as much as possible.

Battery Power Protection

This feature shuts off the dome and reading lamps, if they are left on for more than 10 minutes after the ignition is turned off. The cargo lamp shuts off after 20 minutes. This prevents the battery from running down.

Exterior Lighting Battery Saver

The exterior lamps turn off about 10 minutes after the ignition is turned off, if the parking lamps or headlamps have been manually left on. This protects against draining the battery. To restart the 10-minute timer, turn the exterior lamp control to the ⏻ position and then back to the 🚗 or 🚙 position.

To keep the lamps on for more than 10 minutes, the ignition must be on or in ACC/ACCESSORY.

Infotainment System

Introduction
Infotainment 181
Theft-Deterrent Feature 182
Overview 183
Home Page 184
Software Updates 184

Radio
AM-FM Radio 185
Satellite Radio 187
Radio Reception 188
Fixed Mast Antenna 189
Multi-Band Antenna 189

Audio Players
Avoiding Untrusted Media Devices 190
USB Port 190
Auxiliary Jack 195
Bluetooth Audio 196

Voice Recognition
Voice Recognition 197

Phone
Bluetooth (Overview) 203
Bluetooth (Infotainment Controls) 205
Apple CarPlay and Android Auto 209

Trademarks and License Agreements
Trademarks and License Agreements 210

Introduction

Infotainment

Base radio information is included in this manual. See the infotainment manual for information on other available infotainment systems.

Read the following pages to become familiar with the features.

⚠ Warning

Taking your eyes off the road for too long or too often while using any infotainment feature can cause a crash. You or others could be injured or killed. Do not give extended attention to infotainment tasks while driving. Limit your glances at the vehicle displays and focus your attention on driving. Use voice commands whenever possible.

The infotainment system has built-in features intended to help avoid distraction by disabling some functions when driving. These functions may gray out when they are unavailable. Many infotainment features are also available through the instrument cluster and steering wheel controls.

Before driving:

- Become familiar with the operation, center stack controls, and infotainment display controls.
- Set up the audio by presetting favorite stations, setting the tone, and adjusting the speakers.
- Set up phone numbers in advance so they can be called easily by pressing a single control or by using a single voice command if equipped with Bluetooth phone capability.

See *Defensive Driving* ⇨ *227*.

To play the infotainment system with the ignition off, see *Retained Accessory Power (RAP)* ⇨ *251*.

Active Noise Cancellation (ANC)

If equipped, ANC reduces engine noise in the vehicle’s interior. ANC requires the factory-installed audio system, radio, speakers, amplifier (if equipped), induction system, and exhaust system to work properly. Deactivation is required by your dealer if related aftermarket equipment is installed.

Theft-Deterrent Feature

TheftLock is designed to discourage theft of the vehicle's radio by learning a portion of the Vehicle Identification Number (VIN). The radio does not operate if it is stolen or moved to a different vehicle.

Overview

1. ⌂
   - Press to go to the Home Page. See *Home Page* ⇨ *184*.
2. ⏮
   - Radio: Press and release to go to the previous station or channel. Press and hold to fast seek the next strongest previous station or channel.
   - USB/Bluetooth Music/ Pictures: Press and hold to go to the previous content. Press and hold to fast rewind.
3. ⏻
   - Press to turn the power on.
   - Press and hold to turn the power off.
   - Press to mute the system when on.
   - Turn to decrease or increase the volume.

4. ⏭
   - Radio: Press and release to go to the next station or channel. Press and hold to fast seek the next strongest station or channel.
   - USB/Bluetooth Music/ Pictures: Press and hold to go to the next content. Press and hold to fast forward.
5. 📞
   - Press and release to access the phone screen, answer an incoming call, or access the device home screen. Press and hold to access Press to Talk.

Home Page

Touchscreen Buttons

Touchscreen buttons show on the screen when available. When a function is unavailable, the button may gray out. When a function is selected, the button may highlight.

Home Page Features

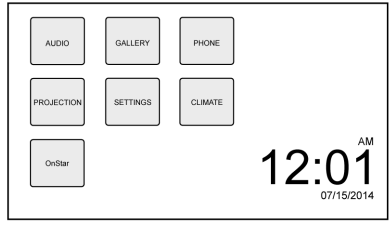

Press ⌂ to go to the Home Page.

Audio : Touch to select AM, FM, SiriusXM (if equipped), USB/iPod/ Bluetooth Audio, or AUX.

Gallery : Touch to view a picture or movie.

Phone : Touch to activate the phone features (if equipped). See *Bluetooth (Overview)* ⇨ *203* or *Bluetooth (Infotainment Controls)* ⇨ *205*.

Projection : Touch to access supported devices when connected. See *USB Port* ⇨ *190*.

Settings : Touch to access the Personalization menu. See *Vehicle Personalization* ⇨ *160*.

Climate : Touch to access the Climate menu. See *Dual Automatic Climate Control System* ⇨ *219*.

OnStar : If equipped, touch to access the OnStar menu. See *OnStar Overview* ⇨ *464*.

Software Updates

Over-the-Air Software Updates

If equipped, the infotainment system can download and install select software updates over a wireless connection. The system will prompt for certain updates to be downloaded and installed. There is also an option to check for updates manually.

To manually check for updates, touch SETTINGS on the Home Page, followed by Software Information, and then System Update. Follow the on-screen

prompts. Steps for downloading and installing updates may vary by vehicle.

Downloading Over-the-Air vehicle software updates requires Internet connectivity, which can be accessed through the vehicle's built-in OnStar 4G LTE connection, if equipped and active. If required, data plans are provided by a third party. Optionally, a secure Wi-Fi hotspot such as a compatible mobile device hotspot, home hotspot or public hotspot can be used. Applicable data rates may apply.

To connect the infotainment system to a secured mobile device hotspot, home hotspot, or a public hotspot, touch SETTINGS on the Home Page, followed by Wi-Fi, and then Manage Wi-Fi Networks. Select the appropriate Wi-Fi network, and follow the on-screen prompts. Download speeds may vary.

On most compatible mobile devices, activation of the Wi-Fi hotspot is in the Settings menu under Mobile Network Sharing, Personal Hotspot, Mobile Hotspot or similar.

Availability of Over-the-Air vehicle software updates varies by vehicle and country. For more information on this feature, see my.chevrolet.com/learn for US/Canada.

Radio

AM-FM Radio

Playing the Radio

Audio Source Menu

⌂ **:** Press to go to the Home Page.

⏻ **:** Press to turn on, mute, or unmute the system. Press and hold to turn off the system.

Selecting a Band

Press ⌂, then touch AUDIO, Source, then select AM, FM, or SXM, if equipped. The last station that was playing starts playing again.

System Settings

Auto Volume

This feature automatically adjusts the radio volume to compensate for road and wind noise.

The level of volume compensation can be selected, or the feature can be turned off.

1. Touch MENU from a source screen.
2. Select Auto Volume.
3. Select the desired setting.
4. Touch ⮌ to go back to the source screen.

Tone Settings

The tone settings can be set for each radio band and each audio player source.

Preset Tone Settings

- Touch MENU.
- Touch Tone Settings.
- Select a preset tone setting.
- Bass, Midrange, or Treble: Touch − or +.
- Fader or Balance: Adjust the front/rear or left/right speakers by dragging the dot in the vehicle image on the screen.

Custom Tone Settings

- Touch MENU.
- Touch Tone Settings.
- Touch Custom.
- Bass, Midrange, or Treble: Touch − or +.
- Fader or Balance: Adjust the front/rear or left/right speakers by dragging the dot in the vehicle image on the screen.

Touch ⮌ to go back to the source screen.

Selecting an Auxiliary Device

Connect the auxiliary device to the AUX input terminal. Play will begin when the system has finished reading the information on the device.

If the AUX device is already connected, press ⌂, AUDIO, Source, then select the device.

Selecting a Station

Seek Tuning

If the radio station is not known:

Press ⏮ or ⏭ to automatically search for available radio stations.

Manual Tuning

Continue touching |◀ or ▶| to manually change the radio station.

Direct Tune

From the AM or FM menu:

- Touch Tune.
- Enter the station number.
- Touch Go or |◀ or ▶| to go to the previous or next station.

Favorite

- Touch < or > to scroll through the favorites.
- Touch on the station to select it.

Station List

- From the AM or FM menu, touch MENU.
- Select Station List.
- Touch ▲ or ▼ to scroll through the list. Touch the station to select it.

Update Station List

- From the AM or FM menu, touch MENU, then touch Update Station List. The broadcasting list updating will begin.
- During the AM or FM broadcasting list update, touch Cancel to stop the updates.

Storing a Station as a Favorite

Stations from all bands can be stored in any order in the favorite pages.

Up to 25 stations can be stored.

Storing Stations

To store the station to a position in the list, touch the corresponding button 1−5 until a beep is heard.

1. Select the desired station.
2. Touch < or > to select the desired page of saved favorites.
3. Touch and hold down any of the preset buttons to save the current radio station to that button of the selected favorites page.

To change a preset button, tune to the new desired radio station and touch and hold the preset button.

Satellite Radio

Vehicles with an SXM Satellite Radio tuner and a valid SiriusXM Satellite Radio subscription can receive SiriusXM programming.

SiriusXM Satellite Radio Service (If Equipped)

SiriusXM is a satellite radio service based in the 48 contiguous United States and 10 Canadian provinces. SiriusXM Satellite Radio has a wide variety of programming and commercial-free music, coast to coast, and in digital-quality sound. A service fee is required to receive the SiriusXM service. For more information, contact SiriusXM at www.siriusxm.com or 1-866-635-2349 (U.S.), and www.xmradio.ca or 1-877-209-0079 (Canada).

Listening to SiriusXM Radio (If Equipped)

1. Press ⌂.
2. Touch AUDIO.
3. Touch Source.
4. Touch SXM and the most recent listened to SiriusXM channel will display.

Touch ⮌ to return to the HOME menu.

Selecting a Category

From Menu, touch Categories, then touch the desired category or from Categories, touch ▲ or ▼ to find the desired channel. Touch the channel to select it.

Selecting a Channel

Touch ▶| or |◀ and the previous or next channel will be selected.

Touch and hold ▶| or |◀ to jump four channels backward or forward, then release the button at the desired channel.

Using the Preset Buttons

Up to seven favorites pages can be saved, and each page can store up to five channels.

To change a preset button, tune to the new desired channel and hold the button.

Listening to Preset Channels

1. Continue touching < or > to select the desired favorites page.
2. Touch the preset button to listen to the channel saved to that button.

Using the SiriusXM Menu

Operation

1. Touch MENU on the SXM radio screen.
2. Touch the menu to select the desired item or to display the detail menu item.
3. Touch ↩ to return to the previous menu.

Channel List

1. Touch Channel List from the SXM menu. The channel list is displayed.
2. Touch ▲ or ▼ to find the desired channel. Tune to the channel by selecting it.

Tone Settings

From the tone settings menu, the sound features can be set up for SiriusXM audio and each audio player's functions.

1. Touch Tone Settings. The tone settings screen is displayed. See "Tone Settings" in *AM-FM Radio* ⇨ *185*.
2. Touch OK.

Auto Volume

1. Touch Auto Volume. See "Auto Volume" in *AM-FM Radio* ⇨ *185*.
2. Touch OK.

Categories

1. Touch Categories.
2. Touch ▲ or ▼ to find the desired category. Touch the category to select it.

Explicit Content Filter

When on, only a filtered list of channels will be received. When off, all regular SXM programming subscribed to will be received.

1. Touch SXM Explicit Filter.
2. Select On or Off.

Radio Reception

Frequency interference and static can occur during normal radio reception if items such as phone chargers, vehicle convenience accessories, and external electronic devices are plugged into the

accessory power outlet. If there is interference or static, unplug the item from the accessory power outlet.

FM

FM signals only reach about 16 to 65 km (10 to 40 mi). Although the radio has a built-in electronic circuit that automatically works to reduce interference, some static can occur, especially around tall buildings or hills, causing the sound to fade in and out.

AM

The range for most AM stations is greater than for FM, especially at night. The longer range can cause station frequencies to interfere with each other. Static can also occur when things like storms and power lines interfere with radio reception. When this happens, try reducing the treble on the radio.

SiriusXM Satellite Radio Service

If equipped, SiriusXM Satellite Radio Service provides digital radio reception. Tall buildings or hills can interfere with satellite radio signals, causing the sound to fade in and out. In addition, traveling or standing under heavy foliage, bridges, garages, or tunnels may cause loss of the SiriusXM signal for a period of time.

Cell Phone Usage

Cell phone usage, such as making or receiving phone calls, charging, or just having the phone on may cause static interference in the radio. Unplug the phone or turn it off if this happens.

Fixed Mast Antenna

The fixed mast antenna will go through most car washes as long as it is securely attached. If the antenna becomes slightly bent, straighten it out by hand. If it is badly bent, replace it.

Occasionally check that the antenna is tight at the base. If tightening is required, protect the paint from damage.

Multi-Band Antenna

The multi-band antenna is on the roof of the vehicle. The antenna is used for OnStar, the SiriusXM Satellite Radio Service System, and GPS (Global Positioning System), if the vehicle has these features. Keep the antenna clear of obstructions for clear reception.

If the vehicle has a sunroof, and it is open, reception can also be affected.

Items on the roof of the vehicle can interfere with the performance of the radio system and OnStar (if equipped). Make sure the multi-band antenna is not obstructed.

Audio Players

Avoiding Untrusted Media Devices

When using media devices such as CDs, DVDs, Blu-ray Discs, SD cards, USB devices, and mobile devices, consider the source. Untrusted media devices could contain files that affect system operation or performance. Avoid use if the content or origin cannot be trusted.

USB Port

Using the USB Port

The infotainment system can play music by connecting an auxiliary device to the USB port.

USB Support

If equipped, there may be USB ports in the center stack below the climate controls, in the center console storage, and at the rear of the center console. All ports use the USB 2.0 standard.

USB Supported Devices

- USB flash drives
- Portable USB hard drives

Not all iPods and USB drives are compatible with the USB port.

Make sure the iPod has the latest firmware from Apple for proper operation. iPod firmware can be updated using the latest iTunes application. See www.apple.com/itunes.

For help with identifying your iPod, go to www.apple.com/support.

The USB port can play both lower and upper case .mp3, .wma, .ogg, and .wav files stored on a USB storage device.

Supported Apple Devices

To view supported devices in U.S., see my.chevrolet.com\learn.

To view supported devices in Canada, see www.chevroletowner.ca.

USB Supported File and Folder Structure

The infotainment system supports:

- FAT16.
- FAT32.
- exFAT.

Connecting a USB Storage Device or iPod/iPhone

To connect a USB storage device, connect the device to the USB port.

To connect an iPod/iPhone, connect one end of the device's cable to the iPod/iPhone and the other end to the USB port.

The iPod/iPhone charges while it is connected to the vehicle if the ignition is on or in ACC/ACCESSORY. See *Ignition Positions* ⇨ *247*. When the vehicle is turned off, the iPod/iPhone automatically powers off and will not charge or draw power from the vehicle's battery.

For more information on USB usage, see "Audio System Information" following.

Audio System Information

The infotainment system can play the music files contained in the USB storage device or iPod/iPhone products.

Using MP3/WMA/OGG/WAV Files

- Music files with .mp3, .wma, .ogg, and .wav file name extensions can be played.
- MP3 files that can be played: Bit rate: 8 kbps to 320 kbps. Sampling frequency: 48 kHz, 44.1 kHz, 32 kHz, 24 kHz, 22.05 kHz, and 16 kHz.
- Files with a bit rate above 128 kbps will result in higher quality sound.
- ID3 Tag information for MP3 files, such as the album name and the artist, can be played.
- To display album title, track title, and artist information, the file should be compatible with the ID3 Tag V1 and V2 formats.

Using USB Storage Devices and an iPod/iPhone

- Use a USB or flash memory type storage device. Do not connect using a USB adaptor.
- Do not connect and reconnect the USB device repeatedly in a short time, as this may cause static electricity and problems using the device.
- Use a USB device with a metal connecting terminal.
- Connection with i-Stick Type USB storage devices may be faulty due to vehicle vibration.
- Do not touch the USB connecting terminal.
- Only USB storage devices formatted in FAT16/32 or exFAT file systems are recognized. NTFS and other file systems are not recognized.
- The time it takes to process files will depend on the USB storage device type and capacity, and the type of files stored.
- Some USB storage device files may not be compatible.
- Up to two USB devices and one iPod can be played through a USB hub. All devices may not be supported, depending on the performance of the USB hub. If there is not enough power supply, it may not operate normally.
- Do not disconnect the USB storage device while it is playing. This may cause damage to the product or affect the performance of the USB device.
- Disconnect the USB storage device when the ignition is turned off. If the ignition is turned on while the USB device is connected, the USB device may be damaged or may not operate normally.
- USB storage devices can only be connected for playing music, viewing photo files, or upgrading.

- Do not use the USB terminal to charge USB accessory equipment. The heat generated may cause performance issues or damage.
- Music files to which Digital Right Management (DRM) is applied cannot be played.
- USB storage device that are in capacity with a limit of 5,000 files, such as music, photo, video, 15 stages of folder structure. Normal usage cannot be guaranteed for a storage device that exceeds this limit. The iPod/iPhone can play all music files that are supported. The music file lists will only display up to 5,000 files on the screen. These files are sorted in alphabetical order.
- Some iPod/iPhone product models may not support the connectivity or functionality of this product.
- Only connect the iPod/iPhone with connection cables supported by iPod/iPhone products. Other connection cables cannot be used.
- The iPod/iPhone may be damaged if it is connected to the vehicle with the ignition on. When not in use, disconnect the iPod/iPhone.
- When the iPod/iPhone is connected to the USB port by using the iPod/iPhone cable, the Bluetooth music is not supported.
- The iPod/iPhone playback functions and the information displayed may be different when played on the infotainment system.

	Step 1	Step 2
Playlists	Playlists	Songs
Artists	Albums/ All Songs	Songs
Albums	Albums	Songs
Songs	Songs	
Genres	Albums/ All Songs	Songs
Composer	Albums/ All Songs	Songs
Audiobooks	Songs	

- Refer to the table for the classification items related to the search function provided by the iPod/iPhone.

USB Player

Playing Music from a USB Device

- Connect the USB device to the USB port.
- Play will start automatically after the system has finished reading the USB device.
- If a non-readable USB device is connected, an error message displays and the system will switch to the previous audio function.

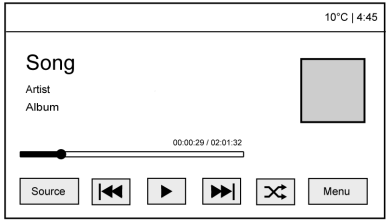

If the USB device is already connected:

1. Press ⌂.
2. Touch AUDIO.
3. Touch Source.
4. Touch USB.

To stop the USB device and select another media source, touch Source, then select the other source.

To remove the USB device, select another function, then remove the USB device.

Pause

- Touch ❚❚ to pause.
- Touch ▶ to resume.

Changing to Next/Previous Files

- Touch ⏭ to change to the next file.
- Touch ⏮ within five seconds of the playback time to play the previous file.

Returning to the Beginning of the Current File

Touch ⏮ after five seconds of the playback time.

Scanning Forward or Backward

Touch and hold ⏮ or ⏭ during playback to rewind or fast forward. Release the button to resume playback at normal speed.

Playing a File Randomly

Touch ⤮ during playback.

- ON: Plays all files randomly.
- OFF: Returns to normal playback.

Using the USB Music Menu

- Touch Menu during playback.

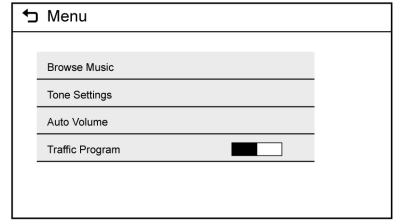

- Touch the desired menu.

Browse Music

1. Touch Browse Music.
2. Touch the desired music.

Tone Settings

- Touch Tone Settings. The Tone Settings menu is displayed. See “Tone Settings” in *AM-FM Radio* ⇨ *185*.

Auto Volume

- Touch Auto Volume. The Auto Volume menu is displayed. See “Auto Volume” in *AM-FM Radio* ⇨ *185*.

Traffic Program (If Equipped)

- Touch On or Off.

MTP (Media Transfer Protocol)

- Connect an MTP supported device.
- Play will start automatically after the system has finished reading the MTP device.
- If a non-readable MTP device is connected, an error message displays and the system will switch to the previous audio function.

iPod/iPhone Player

This feature is limited to models supporting the iPod/iPhone connection.

Playing Music Files

- Connect the iPod/iPhone to the USB port.
- Play will start from the previously played point after the system has finished reading the USB device.
- If a non-readable USB device is connected, an error message displays and the system will switch to the previous audio function.

If the iPod/iPhone is already connected:

1. Press ⌂.
2. Touch AUDIO.
3. Touch Source.
4. Touch iPod.

To stop the device and select another media source, touch Source, then select the other source.

To remove the device, select another function, then remove the device.

Pause

- Touch ❚❚ to pause.
- Touch ▶ to resume.

Changing to Next/Previous Song

- Touch ⏭ to change to the next song.
- Touch ⏮ within two seconds of the playback time to play the previous file.

Returning to the Beginning of the Current File

Touch ⏮ after two seconds of the playback time.

Scanning Forward or Backward

Touch and hold ⏮ or ⏭ during playback to rewind or fast forward. Release the button to resume playback at normal speed.

Playing a File Randomly

Touch ⤮ during playback.

- ON: Plays all files randomly.
- OFF: Returns to normal playback.

Using the iPod Menu

- Touch Menu during playback.
- Touch the appropriate play mode.

Browse Music

1. Touch Browse Music.

2. Touch the desired music.

Tone Settings

- Touch Tone Settings. The Tone Settings menu is displayed. See “Tone Settings” in *AM-FM Radio* ⇨ *185*.

Auto Volume

- Touch Auto Volume. The Auto Volume menu is displayed. See “Auto Volume” in *AM-FM Radio* ⇨ *185*.

Picture System Information

The infotainment system can view picture files stored on a USB storage device and devices that support Media Transfer Protocol (MTP).

- Supported file extensions: .jpg, .bmp, .png, .gif.
- Animated GIF files are not supported.
- Some files may not operate due to a different recording format or the condition of the file.

Viewing Pictures

1. Connect the USB device to the USB port.
2. Touch the screen to open to full screen. Touch the screen again to return to the previous screen.

If the USB device is already connected:

1. Press ⌂.
2. Touch GALLERY.

Some features are disabled while the vehicle is in motion.

Viewing a Slide Show

1. Touch ▶ from the picture screen.
2. Touch the screen to cancel the slide show during the slide show playback.

Viewing a Previous or Next Picture

Touch < or > from the picture screen.

Rotating a Picture

Touch ↺ from the picture screen.

Enlarging a Picture

Touch Q¹ from the picture screen.

Using the USB Picture Menu

1. Touch MENU from the picture screen.
2. Touch the appropriate menu:
   - Slide Show Time: Allows selection of the slide show interval.
   - Clock, Temp. Display: Allows selection of On or Off to show the clock and temperature on the full screen.
   - Display Settings: Adjusts for Brightness and Contrast.
3. Touch ↩ to exit.

Auxiliary Jack

This vehicle may have an AUX jack in the center console storage. See *Center Console Storage* ⇨ *123*.

Possible auxiliary audio sources include:

- Laptop computer
- Audio music player

This jack is not an audio output. Do not plug headphones into the auxiliary input jack. Auxiliary devices should be set up while the vehicle is in P (Park).

Connect a 3.5 mm (1/8 in) cable from the auxiliary device to the auxiliary input jack.

If an auxiliary device has already been connected, but a different source is currently active, touch Source repeatedly to scroll through all of the available audio source screens, until the AUX source screen is shown.

Playing from the AUX Jack

An auxiliary device is played through the audio system and controlled through the device itself. Play will begin when the system has finished reading the information on the device.

Playing Music

To play the music from the device, if the device is already connected:

1. Press ⌂.
2. Touch AUDIO.
3. Touch Source.
4. Touch AUX.

To adjust the tone settings. See “Audio Settings” in “System Settings” under *AM-FM Radio* ⇨ *185*.

Bluetooth Audio

If equipped, music may be played from a paired Bluetooth device. See “Pairing” under *Bluetooth (Overview)* ⇨ *203* or *Bluetooth (Infotainment Controls)* ⇨ *205* for help pairing a device.

Volume and song selection may be controlled by using the infotainment controls or the phone/device.
If Bluetooth Audio is selected and nothing is heard, check the volume setting on both the phone/device and the infotainment system.

Launch music by touching MEDIA on the Home Page.

To play music via Bluetooth:

1. Power on the device, and pair to connect the device.
2. Once paired, go into the audio application from the Home Page or via the application tray. Select MEDIA until Bluetooth displays.

Bluetooth Audio Menu

Touch MENU to display the Bluetooth Audio menu. The following may be available:

Tone: Use the infotainment controls to adjust the tone settings.

Press ◁ BACK to go back to the previous menu.

Manage Bluetooth Devices: Select to go to the Bluetooth page to add or delete devices.

When selecting Bluetooth Audio, the radio may not be able to launch the audio player on the connected

device to start playing. When the vehicle is not moving, use the phone to begin playback.

All devices launch audio differently. When selecting Bluetooth Audio as a source, the radio may show as paused on the screen. Press play on the device or press ▶ to begin playback.

Some phones support sending Bluetooth music information to display on the radio. When the radio receives this information, it will check to see if any is available and display it. For more information about supported Bluetooth features, see www.gm.com/bluetooth for U.S. and Canada only.

Voice Recognition

If equipped, voice recognition allows for hands-free operation within the audio and phone applications. This feature can be started by pressing either the button on the steering wheel or by selecting the on the screen display.

However, not all features within these areas are supported by voice commands. Generally, only complex tasks that require multiple manual interactions to complete are supported by voice commands.

For example, tasks that take more than one or two button presses such as selecting a song or artist to play from a media device would be supported by voice commands. Other tasks, like adjusting the volume or seeking up or down are audio features that are easily performed by pressing one or two buttons, and are not supported by voice commands.

In general there are flexible ways to speak commands for completing the tasks. Most of them, except destination entry and voice keypad, can be completed in a single command. If the task takes more than one command to complete, the first command would be to indicate the kind of task that is to be performed. The system replies with prompts that lead through a dialog to enter the necessary information.

Voice recognition can be used when the ignition is on or when Retained Accessory Power (RAP) is active. See *Retained Accessory Power (RAP)* ⇨ *251*.

Using Voice Recognition

Voice recognition becomes available once the system has been initialized. This begins when the ignition is turned on. Initialization may take a few moments.

1. Press on the steering wheel control to activate voice recognition, or select on the infotainment display.
   - If voice recognition is started from the steering wheel control, the instrument cluster displays the selections and visual dialog content.
   - If voice recognition is started from the infotainment display, the selections and visual dialog content are displayed on both the infotaonment display and the instrument cluster display.
2. The audio system mutes and the system plays a prompt followed by a beep.
3. Wait until after the beep completes, then clearly speak one of the commands described in this section.

   Press to interrupt any voice recognition system prompt. For example, if the prompt seems to be taking too long to finish, press again and the beep should happen right away.

There are two voice prompt modes supported:

- Long verbal prompts: The longer prompts provide more information regarding the supported actions.
- Short prompts: The short prompts provide simple instructions about what can be stated.

If a command is not spoken, the voice recognition system says a help prompt.

Prompts and Screen Displays

While a voice recognition session is active, there will be corresponding buttons on screens displayed. Manual interaction in the voice recognition session is permitted. Interaction during a voice session may be completed entirely using voice commands, or some selections may expedite a session. If a selection is made using a manual control, the dialog will progress in the same way as if the selection was made through a voice command. Once the system is able to complete the task, or the session is terminated, the voice recognition dialog stops.

An example of this type of manual intervention is pressing on an entry of a displayed number list instead of speaking the number associated with the entry desired.

Canceling Voice Recognition

- Press the Home screen button to terminate the voice recognition session which was initiated by pressing on the infotainment display.
- Press or say “Cancel” or “Exit” to terminate the voice recognition session and display the screen from which voice recognition was initiated.

- Press ⌔ on the steering wheel controls to terminate the voice session and display the screen from which voice recognition was initiated.

Helpful Hints for Speaking Commands

Voice recognition can understand commands that are either naturally stated in sentence form (English only), or direct commands that state the application and the task.

For languages that do not support natural language commands in sentence form, use the direct commands shown as examples on the display screen.

For best results:

- Listen for the prompt and wait for the beep before saying a command or reply.
- Say “Help” or look at the screen display for commands.
- Voice recognition system prompt can be interrupted during a prompt by pressing ⌇ again.

  For example, if the prompt seems to be taking too long to finish, or if what is being prompted causes a need for an immediate reply, press ⌇ again and wait for the beep.
- Speak the command naturally, not too fast, not too slow. Use direct commands without a lot of extra words.
- Usually Phone and Audio commands can be spoken in a single command.

  For example, “Call Dave Smith at work,” “Play” followed by the artist or song name, or “Tune” followed by the radio station number.

There is no need to memorize specific command words. Direct commands might be more clearly understood by the system. An example of a direct command would be “Call 555-1212.” Examples of these direct commands are displayed on most of the screens while a voice session is active.
If “Phone” or “Phone Commands,” is stated, the system understands that a phone call is requested and will respond with questions until enough details are gathered.

If the phone number has been saved with a name and a place, the direct command should include both, for example “Call Dave Smith at work.”

Using Voice Recognition for List Options

When a list is displayed, a voice prompt will ask to confirm or select an option from that list. A selection can be made by manually selecting the item, or by speaking the line number for the item to select.

When a screen contains a list, options may be available but not displayed. The list on a voice recognition screen functions the same as a list on other screens. Scrolling can be used to help display other entries from the list.

Manually scrolling or paging the list on a screen during a voice recognition session suspends the current voice recognition event and

plays the prompt “Make your selection from the list using the manual controls or press the Back button to try again.”

If manual selection takes more than 15 seconds, the session terminates and prompts that it has timed out. The screen returns back to the screen where voice recognition was initiated.

The Back Command

Say “Back” or press the Back button to go to the previous screen.

If in voice recognition, and “Back” is stated all the way through to the initial screen, then “Back” is stated one more time, the voice recognition session will cancel.

Help

Say “Help” on any voice recognition screen and the help prompt for the screen is played. Additionally, a pop-up displays a text version of the help prompt. Depending on how voice recognition was initiated, the Help pop-up will either display on the instrument cluster or the infotainment display. Press the Dismiss button to make the pop-up go away.

Pressing while the help prompt is playing will terminate the prompt and a beep will be heard. Doing this will stop the help prompt so that a voice command can be used.

Voice Recognition for the Radio

Select the screen button to launch audio voice recognition. If the voice button is pressed in a radio screen, the voice commands for radio and media features are available.

“Switch to AM” : Switch bands to AM and tune to the last AM radio station.

“Switch to FM” : Switch bands to FM and tune to the last FM radio station.

“Switch to SXM” : Switch bands to SiriusXM (if equipped) and tune to the last SiriusXM channel.

“Tune to <AM frequency> AM” : Tune to the radio station whose frequency is identified in the command (like “nine fifty”).

“Tune to <FM frequency> FM” : Tune to the radio station whose frequency is identified in the command (like “one o one point one”).

“Tune to SXM <SXM channel number>” : Tune to the SiriusXM (if equipped) radio station whose channel number is identified in the command.

“Tune to SXM <SXM channel name>” : Tune to the SiriusXM (if equipped) radio station whose channel name is identified in the command.

Voice Recognition for Audio My Media

If browsing My Media when the voice button is selected, the voice recognition commands for My Media features are available.

“Play Artist” : Begin a dialog to enter a specific Artist name.

“Play Artist <artist name>” : Begin playback of the media selection identified in the command.

“Play Album” : Begin a dialog to enter a specific album name.

“Play Album <album name>” : Begin playback of the identified album name in the command.

“Play Song” : Begin a dialog to enter a specific song name.

“Play Song <song name>” : Begin playback of the identified song name in the command.

“Play Genre” : Begin a dialog to enter a specific genre.

“Play Genre <genre name>” : Begin playback of the media selection identified in the command.

“Play Playlist” : Begin a dialog to enter a specific playlist name.

“Play Playlist <playlist name>” : Begin playback of the identified playlist in the command.

“Play <device name>” : Play music from a specific device identified by name. The device name is the name displayed on the screen when the device is first selected as an audio source.

“Play Chapter” : Begin a dialog to enter a specific name.

“Play Chapter <chapter name>” : Begin playback of the media selection identified in the command.

“Play Audiobook” : Begin a dialog to enter a specific name.

“Play Audiobook <audiobook name>” : Begin playback of the media selection identified in the command.

“Play Episode” : Begin a dialog to enter a specific name.

“Play Episode <episode name>” : Begin playback of the media selection identified in the command.

“Play Podcast” : Begin a dialog to enter a specific name.

“Play Podcast <podcast name>” : Begin playback of the media selection identified in the command.

“Play Video” : Begin a dialog to enter a specific name.

“Play Video <video name>” : Begin playback of the media selection identified in the command.

“My Media” : Begin a dialog to enter the desired media content.

Handling Large Amounts of Media Content

It is expected that large amounts of media content will be brought into the vehicle. It may be necessary to handle large amounts of media content in a different way than smaller amounts of media. The system may limit the options of voice recognition by not allowing selection of song titles by voice at the highest level if the number of songs exceeds the maximum limit.

Voice command option changes through media content limits are:

- Song files including other individual files of all media types such as audiobook chapters, podcast episodes, and videos.

- Album type folders including types such as albums and audiobooks.

There are no restrictions if the number of song files and albums is less than 4,000. When the number of song files connected to the system is between 4,000 and 8,000, the content cannot be accessed directly with one command like “Play <song name>.”

The restriction is that the command “Play Song” must be spoken first; the system will then ask for the song name. The reply command would be to say the name of the song to play.

Similar limits exist for album content. If there are more than 4,000 albums, but less than 8,000, the content cannot be accessed directly with one command like, “Play <album name>.” The command “Play Album” must first be spoken; the system will then ask for the album name. The reply would be to say the name of the album to play.

Once the number of songs has exceeded approximately 8,000, there is no support for accessing the songs directly through voice commands. There will still be access to the media content by using commands for playlists, artists, and genres.

The access commands for playlists, artists, and genres are prohibited after the number of this type of media exceeds 4,000.

The system will provide feedback the first time voice recognition is initiated if it has become apparent that any of these limits are reached during a device initializing process.

Voice Recognition for the Phone

“Call <contact name>” : Initiate a call to an entered contact. The command may include location if the contact has location numbers stored.

“Call <contact name> At Home,” “At Work,” “On Mobile,” or “On Other” : Initiate a call to an entered contact and location at home, at work, on mobile device, or on another phone.

“Call <phone number>” : Initiate a call to a standard phone number seven or 10 digits in length, and also 911, 411, or 611.

“Pair Phone” : Begins the Bluetooth pairing process. Follow instructions on the radio display.

“Switch Phone” : Select a different phone for outgoing calls.

“Voice Keypad” : Begins a dialog to enter special numbers like international numbers. The numbers can be entered in groups of digits with each group of digits being repeated back by the system. If the group of digits is not correct, the command “Delete” will remove the last group of digits and allow them to be re-entered. Once the entire number has been entered, the command “Call” will start dialing the number.

“Voice Mail” : Initiate a call to voice mail numbers.

Voice Recognition for OnStar (If Equipped)

"OnStar" : Begin OnStar Voice Recognition.

Bluetooth Speech Recognition (If Equipped)

Voice Pass-Thru allows access to the speech recognition commands on the cell phone. See your cell phone manufacturer's user guide to see if the cell phone supports this feature.

Activating this function will start the Bluetooth Speech Recognition on a connected phone.

The steering wheel controls are used to operate this function.

Press and hold to activate.
A voice session begins so that voice commands can be given to Siri or many other controls provided by the cell phone.

Press ✓ to exit or press to close and return to the previous application prior to the start of Voice Pass-Thru.

Phone

Bluetooth (Overview)

Instructions for using the cell phone may differ between infotainment systems. The base radio instructions are included in this manual. See the infotainment manual for instructions on the uplevel radios.

Bluetooth-capable systems can interact with many cell phones, allowing:

- Placement and receipt of calls in a hands-free mode.
- Sharing of the cell phone's address book or contact list with the vehicle.

To minimize driver distraction, before driving, and with the vehicle parked:

- Become familiar with the features of the cell phone. Organize the phone book and contact lists clearly and delete duplicate or rarely used entries. If possible, program speed dial or other shortcuts.
- Review the controls and operation of the infotainment system.
- Pair cell phone(s) to the vehicle. The system may not work with all cell phones. See "Pairing" in this section.
- If the cell phone has voice dialing capability, learn to use that feature to access the address book or contact list.
- See "Deleting a Bluetooth Device" in this section.

⚠ Warning

When using a cell phone, it can be distracting to look too long or too often at the screen of the phone or the infotainment system. Taking your eyes off the road too long or too often could cause a crash resulting in injury or death. Focus your attention on driving.

Vehicles with a Bluetooth system can use a Bluetooth-capable cell phone with a Hands-Free Profile to make and receive phone calls. The infotainment system and voice recognition are used to control the system. The system can be used when the ignition is on or in ACC/ACCESSORY. The range of the Bluetooth system can be up to 9.1 m (30 ft). Not all phones support all functions and not all phones work with the Bluetooth system. For U.S. and Canada only, see www.gm.com/bluetooth for more information about compatible phones.

Bluetooth Controls

Use the buttons on the instrument panel, center stack, and steering wheel to operate the Bluetooth system.

Steering Wheel Controls

: Press to answer incoming calls, confirm system information, and start voice recognition.

: Press to end a call, reject a call, or cancel an operation. Press to mute or unmute the infotainment system.

Infotainment System Controls

For information about how to navigate the menu system using the infotainment controls, see *Overview* ⇨ *183*.

: Press to go to the Home Page. See *Home Page* ⇨ *184*.

: Select to enter the phone main menu.
See *Bluetooth (Overview)* ⇨ *203* or *Bluetooth (Infotainment Controls)* ⇨ *205*.

Voice Recognition

If equipped, the voice recognition system uses commands to control the system and dial phone numbers.

Noise : The system may not recognize voice commands if there is too much background noise, such as noise from open windows or loud talking inside the vehicle.

When to Speak : A tone sounds to indicate that the system is ready for a voice command. Wait for the tone and then speak.

How to Speak : Speak clearly in a calm and natural voice.

Audio System

When using the Bluetooth system, sound comes through the vehicle's front audio system speakers and overrides the audio system. Use the ⏻ knob during a call to change the volume level. The system maintains a minimum volume level.

Bluetooth Audio Quality

Turn off the Echo and Noise cancellation feature on your phone, if supported, for the best hands-free performance.

See www.gm.com/bluetooth for U.S. and Canada only.

Bluetooth (Infotainment Controls)

To use infotainment controls to access the menu system, see *Overview* ⇨ *183*.

Pairing

A Bluetooth-enabled cell phone must be paired to the Bluetooth system and then connected to the vehicle before it can be used. See your cell phone manufacturer's user guide for Bluetooth functions before pairing the cell phone. If a Bluetooth phone is not connected, calls will be made using OnStar Hands-Free Calling, if available. See *OnStar Overview* ⇨ *464*.

Pairing Information

- A Bluetooth phone with MP3 capability cannot be paired to the vehicle as a phone and an MP3 player at the same time.
- Up to 10 cell phones can be paired to the Bluetooth system.
- The pairing process is disabled when the vehicle is moving.
- Pairing only needs to be completed once, unless the pairing information on the cell phone changes or the cell phone is deleted from the system.
- Only one paired cell phone can be connected to the Bluetooth system at a time.
- If multiple paired cell phones are within range of the system, the system connects to the first available paired cell phone in the order that they were first paired to the system.

When the Bluetooth device and infotainment system are successfully paired, the phone book is downloaded automatically. This is dependent on the type of the phone paired. If the automatic download does not occur, proceed with the phone book download on the phone.

Pairing a Phone - SSP and No Paired Device

When there is no paired device on the infotainment system and Simple Secure Pairing (SSP) is supported:

1. Press ⌂.
2. Touch PHONE, press on the center stack, or press on the steering wheel without OnStar.
3. Touch Search Device.
4. Touch the desired device to pair on the searched list screen.
5. Touch Yes on the pop-up screen of the Bluetooth device and infotainment system.
6. When the Bluetooth device and infotainment system are successfully paired, the phone screen is displayed on the infotainment system.

Pairing a Phone - SSP and Paired Device

When a paired device is on the infotainment system and SSP is supported:

1. Press ⌂.
2. Touch Settings.

3. Touch Bluetooth, then Device Management.
4. Touch the desired device to pair. When the Bluetooth device and infotainment system are successfully paired, / is displayed on the pair device screen. If no desired device is available go to Step 5.
5. Touch Search Device to search for the desired device.
6. Touch the desired device to pair on the searched list screen.
7. Touch Yes on the pop-up screen of the Bluetooth device and infotainment system.

- The connected phone is highlighted by .
- / indicates the hands-free and phone music functions are enabled.
- indicates only the hands-free function is enabled.
- indicates only Bluetooth music is enabled.

Pairing a Phone - No SSP and No Paired Device

When there is no paired device on the infotainment system and SSP is not supported:

1. Press .
2. Touch PHONE, press on the center stack, or press on the steering wheel without OnStar.
3. Touch Search Device.
4. Touch the desired device to pair on the searched list screen.
5. Input the Personal Identification Number (PIN) code (default: 1234) to the Bluetooth device. When the Bluetooth device and infotainment system are successfully paired, the PHONE screen is displayed on the infotainment system.

When the connection fails, a failure message is displayed on the infotainment system.

If a Bluetooth device was previously connected, the infotainment system executes the auto connection. However, if the Bluetooth setting on the Bluetooth device is turned off, a failure message is displayed on the infotainment system.

Pairing a Phone - No SSP and Paired Device

When a paired device is on the infotainment system and SSP is not supported:

1. Press .
2. Touch Settings.
3. Touch Bluetooth, then Device Management.
4. Touch the desired device to pair. When the Bluetooth device and infotainment system are successfully paired, / is displayed on the pair device screen. If no desired device is available go to Step 5.

5. Touch Search Device to search for the desired device.
6. Touch the desired device to pair on the searched list screen.
7. Input the Personal Identification Number (PIN) code (default: 1234) to the Bluetooth device. When the Bluetooth device and infotainment system are successfully paired, / is displayed on the pair device screen.

- The connected phone is highlighted by .
- / indicates the hands-free and phone music functions are enabled.
- indicates only the hands-free function is enabled.
- indicates only Bluetooth music is enabled.

Connecting a Paired Bluetooth Device

1. Press .
2. Touch Settings.
3. Touch Bluetooth, then Device Management.
4. Touch the device to be connected.

Checking the Bluetooth Connection

1. Press .
2. Touch Settings.
3. Touch Bluetooth, then Device Management.
4. The paired device will show.

Disconnecting a Bluetooth Device

1. Press .
2. Touch Settings.
3. Touch Bluetooth, then Device Management.
4. Touch the name of the device to be disconnected.
5. Touch Disconnect.

Deleting a Bluetooth Device

1. Press .
2. Touch Settings.
3. Touch Bluetooth, then Device Management.
4. Touch the device to delete.
5. Touch
6. Touch Delete.

Bluetooth Music

Before playing Bluetooth music, read the following information.

- A cell phone or Bluetooth device that supports Advanced Audio Distribution Profile (A2DP) versions over 1.2 must be registered and connected to the product.
- From the cell phone or Bluetooth device, find the Bluetooth device type to set/connect the item as a stereo headset.

- ♪ will appear on the screen if the stereo headset is successfully connected.
- The sound played by the Bluetooth device is delivered through the infotainment system.
- Bluetooth music can be played only when a Bluetooth device has been connected. To play Bluetooth music, connect the Bluetooth phone to the infotainment system.
- If the Bluetooth device is disconnected while playing phone music, the music is discontinued. The audio streaming function may not be supported in some Bluetooth phones. Only one function can be used at a time between the Bluetooth hands-free or Phone music function. For example, if you convert to Bluetooth hands-free while playing Phone music, the music is discontinued. Playing music from the car is not possible when there are no music files stored in the cell phone.

Playing Bluetooth Music

1. Press ⌂.
2. Touch AUDIO.
3. Touch Source.
4. Touch Bluetooth.

Pause

Touch ❚❚ to pause.

Touch ▶ to resume.

Playing the Next Song

Touch ▶▶|.

Playing the Previous Song

Touch |◀◀ within two seconds of playback time to play the previous song.

Returning to the Beginning of the Current Song

Touch |◀◀ after two seconds of playback time.

Search

Touch and hold |◀◀ or ▶▶| to rewind or fast forward.

Playing Music Randomly

Touch ⤮ during playback. Touch again to return to normal play.

This function may not be supported depending on the bluetooth device.

Do not change the track too quickly when playing Bluetooth music.

Conditions that may occur when playing Bluetooth music:

- It takes time to transmit data from the bluetooth device to the infotainment system.
- If the cell phone or Bluetooth device is not in the waiting screen mode, it may not automatically play.
- The infotainment system transmits the order to play from the bluetooth device in the Bluetooth music play mode. If this is done in a different mode, then the device transmits

the order to stop. Depending on the bluetooth device options, this order to play/stop may take time to activate.

- If the Bluetooth music playback is not functioning, then check to see if the bluetooth device is in the waiting screen mode.
- Sounds may be cut off during the Bluetooth music playback.
- The infotainment system outputs the audio from the cell phone or Bluetooth device as it is transmitted.

Apple CarPlay and Android Auto

If equipped, Android Auto and/or Apple CarPlay capability may be available through a compatible smartphone. If available, PROJECTION will appear on the Home Page of the infotainment display.

To use Android Auto or Apple CarPlay:

1. Download the Android Auto app to your phone from the Google Play store. No app is required for Apple CarPlay.
2. Connect an Android phone or iPhone by using the compatible phone USB cable and plugging into a USB data port. For best performance, use the device's factory-provided USB cable. Aftermarket or third-party cables may not work.
3. When the phone is first connected to activate Apple CarPlay or Android Auto, the message "Device Projection Privacy Consent" will appear.
   - Select Continue to launch Apple CarPlay or Android Auto.
   - Select Disable to remove Apple CarPlay and Android Auto capability from the vehicle Settings menu. Other functions may still work.

PROJECTION on the Home Page will change to Android Auto or Apple CarPlay depending on the phone. Android Auto and/or Apple CarPlay may automatically launch upon USB connection. If not, touch the ANDROID AUTO and/or APPLE CARPLAY icon on the Home Page to launch.

Press ⌂ on the center stack to return to the Home Page.

For further information on how to set up Android Auto and Apple CarPlay in the vehicle, see my.chevrolet.com or see *Customer Assistance Offices* ⇨ *452*.

Android Auto is provided by Google and is subject to Google's terms and privacy policy. Apple CarPlay is provided by Apple and is subject to Apple's terms and privacy policy. Data plan rates apply. For Android Auto support see https://support.google.com/androidauto.

For Apple CarPlay support see www.apple.com/ios/carplay/. Apple or Google may change or suspend availability at any time. Android Auto, Android, Google, Google Play, and other marks are trademarks of Google Inc.; Apple CarPlay is a trademark of Apple Inc.

Trademarks and License Agreements

FCC Information

See *Radio Frequency Statement* ⇨ *460*.

Made for iPod iPhone

"Made for iPod" and "Made for iPhone" mean that an electronic accessory has been designed to connect specifically to iPod or iPhone and has been certified by the developer to meet Apple performance standards. Apple is not responsible for the operation of this device or its compliance with safety and regulatory standards. Please note that the use of this accessory with iPod or iPhone may affect wireless performance. iPhone, iPod, iPod classic, iPod nano, iPod shuffle, and iPod touch are trademarks of Apple Inc., registered in the U.S. and other countries.

SiriusXM SATELLITE RADIO

Fees and Taxes: Subscription fee, taxes, one time activation fee, and other fees may apply. Subscription fee is consumer only. All fees and programming subject to change. Subscriptions subject to Customer Agreement available at www.siriusxm.com. SiriusXM service only available in the 48 contiguous United States and Canada.

In Canada: Some deterioration of service may occur in extreme northern latitudes. This is beyond the control of SiriusXM Satellite Radio.

Explicit Language Notice: Channels with frequent explicit language are indicated with an “XL” preceding the channel name. Channel blocking is available for SiriusXM Satellite Radio receivers by notifying SiriusXM:

- USA Customers — See www.siriusxm.com or call 1-866-635–2349.
- Canadian Customers — See www.xmradio.ca or call 1-877-209-0079.

It is prohibited to copy, decompile, disassemble, reverse engineer, hack, manipulate, or otherwise make available any technology or software incorporated in receivers compatible with the SiriusXM Satellite Radio System or that support the SiriusXM website, the Online Service or any of its content. Furthermore, the AMBER voice compression software included in this product is protected by intellectual property rights including patent rights, copyrights, and trade secrets of Digital Voice Systems, Inc.

General Requirements:

1. A License Agreement from SiriusXM is required for any product that incorporates SiriusXM Technology and/or for use of any of the SiriusXM marks to be manufactured, distributed, or marketed in the SiriusXM Service Area.
2. For products to be distributed, marketed, and/or sold in Canada, a separate agreement is required with Canadian Satellite Radio Inc. (operating as SiriusXM Canada).

Other Information

The Bluetooth word mark and logos are owned by the Bluetooth SIG, Inc. and any use of such marks by General Motors is under license. Other trademarks and trade names are those of their respective owners.

Schedule I: Gracenote EULA

Music recognition technology and related data are provided by Gracenote. Gracenote is the industry standard in music recognition technology and related content delivery. For more information visit www.gracenote.com.

Music-related data from Gracenote, Inc., copyright 2000 to present Gracenote. Gracenote Software, copyright 2000 to present Gracenote. One or more patents owned by Gracenote may apply to this product and service. See the Gracenote website for a non-exhaustive list of applicable Gracenote patents. Gracenote, CDDB, MusicID, MediaVOCS, the Gracenote logo and logotype, and the "Powered by Gracenote" logo

are either registered trademarks or trademarks of Gracenote in the United States and/or other countries.

Gracenote Terms of Use

This application or device contains software from Gracenote, Inc. of Emeryville, California ("Gracenote"). The software from Gracenote (the "Gracenote Software") enables this application to do disc or file identification and obtain music-related information, including name, artist, track, and title information ("Gracenote Data") from online servers or embedded databases (collectively, "Gracenote Servers") and to perform other functions. You may use Gracenote Data only by means of the intended End-User functions of this application or device.

This application or device may contain content belonging to Gracenote's providers. If so, all of the restrictions set forth herein with respect to Gracenote Data shall also apply to such content and such content providers shall be entitled to all of the benefits and protections set forth herein that are available to Gracenote.

You agree that you will use Gracenote Data, the Gracenote Software, and Gracenote Servers for your own personal non-commercial use only. You agree not to assign, copy, transfer or transmit the Gracenote Software or any Gracenote Data to any third party. YOU AGREE NOT TO USE OR EXPLOIT GRACENOTE DATA, THE GRACENOTE SOFTWARE, OR GRACENOTE SERVERS, EXCEPT AS EXPRESSLY PERMITTED HEREIN.

You agree that your non-exclusive license to use the Gracenote Data, the Gracenote Software, and Gracenote Servers will terminate if you violate these restrictions. If your license terminates, you agree to cease any and all use of the Gracenote Data, the Gracenote Software, and Gracenote Servers. Gracenote reserves all rights in Gracenote Data, the Gracenote Software, and the Gracenote Servers, including all ownership rights. Under no circumstances will Gracenote become liable for any payment to you for any information that you provide. You agree that Gracenote may enforce its rights under this Agreement against you directly in its own name.

The Gracenote service uses a unique identifier to track queries for statistical purposes. The purpose of a randomly assigned numeric identifier is to allow the Gracenote service to count queries without knowing anything about who you are. For more information, see the web page for the Gracenote Privacy Policy for the Gracenote service.

The Gracenote Software and each item of Gracenote Data are licensed to you "AS IS." Gracenote makes no representations or warranties, express or implied, regarding the accuracy of any Gracenote Data. Gracenote reserves the right to delete data from the Gracenote Servers or to change data categories for any cause that Gracenote deems sufficient. No

warranty is made that the Gracenote Software or Gracenote Servers are error-free or that functioning of Gracenote Software or Gracenote Servers will be uninterrupted. Gracenote is not obligated to provide you with new enhanced or additional data types or categories that Gracenote may provide in the future and is free to discontinue its services at any time.

GRACENOTE DISCLAIMS ALL WARRANTIES EXPRESS OR IMPLIED, INCLUDING, BUT NOT LIMITED TO, IMPLIED WARRANTIES OF MERCHANTABILITY, FITNESS FOR A PARTICULAR PURPOSE, TITLE, AND NON-INFRINGEMENT. GRACENOTE DOES NOT WARRANT THE RESULTS THAT WILL BE OBTAINED BY YOUR USE OF THE GRACENOTE SOFTWARE OR ANY GRACENOTE SERVER. IN NO CASE WILL GRACENOTE BE LIABLE FOR ANY CONSEQUENTIAL OR INCIDENTAL DAMAGES OR FOR ANY LOST PROFITS OR LOST REVENUES.

Copyright 2013. Gracenote, Inc. All Rights Reserved.

Unicode

Copyright 1991-2013 Unicode, Inc. All rights reserved. Distributed under the Terms of Use in http://www.unicode.org/copyright.html.

Free Type Project

Portions of this software are copyright 2013 The FreeType Project (http://www.freetype.org). All rights reserved.

iType

iType is a trademark of Monotype Imaging Inc. registered in the U.S. Patent & Trademark Office and may be registered in certain other jurisdictions.

Open Source SW

The open source code used in this device can be downloaded at the webpage shown in the information at the center stack display. Further information concerning the OSS licenses is shown in the center stack display.

QNX

Portions of this software are copyright 2008-2013, QNX Software Systems. All rights reserved.

Part C – EULA

Copyright 2013, Software Systems GmbH & Co. KG. All Rights Reserved.

The product you have purchased ("Product") contains Software (Runtime Configuration No. 505962; "Software") which is distributed by or on behalf of the Product manufacturer "Manufacturer") under license from Software Systems Co. ("QSSC"). You may only use the Software in the Product and in compliance with the license terms below.

Subject to the terms and conditions of this License, QSSC hereby grants you a limited, non-exclusive, non-transferable license to use the Software in the Product for the

purpose intended by the Manufacturer. If permitted by the Manufacturer, or by applicable law, you may make one backup copy of the Software as part of the Product software. QSSC and its licensors reserve all license+C31 rights not expressly granted herein, and retain all right, title and interest in and to all copies of the Software, including all intellectual property rights therein. Unless required by applicable law you may not reproduce, distribute or transfer, or de-compile, disassemble or otherwise attempt to unbundle, reverse engineer, modify or create derivative works of, the Software. You agree: (1) not to remove, cover or alter any proprietary notices, labels or marks in or on the Software, and to ensure that all copies bear any notice contained on the original; and (2) not to export the Product or the Software in contravention of applicable export control laws.

EXCEPT TO THE EXTENT OTHERWISE REQUIRED BY APPLICABLE LAW, QSSC AND ITS LICENSORS PROVIDE THE SOFTWARE ON AN "AS IS" BASIS, WITHOUT WARRANTIES OR CONDITIONS OF ANY KIND, EITHER EXPRESS OR IMPLIED INCLUDING, WITHOUT LIMITATION, ANY WARRANTIES OR CONDITIONS OF TITLE, NON-INFRINGEMENT, MERCHANTABILITY OR FITNESS FOR A PARTICULAR PURPOSE. ANY WARRANTIES OR OTHER PROVISIONS OFFERED BY THE MANUFACTURER OR ITS DISTRIBUTOR(S) THAT DIFFER FROM THIS LICENSE ARE OFFERED BY THE MANUFACTURER OR ITS DISTRIBUTOR(S) ALONE AND NOT BY QSSC, ITS AFFILIATES OR THEIR LICENSORS. YOU ASSUME ANY RISKS ASSOCIATED WITH YOUR USE OF THE SOFTWARE UNDER THIS LICENSE.

EXCEPT TO THE EXTENT OTHERWISE REQUIRED BY APPLICABLE LAW (SUCH AS IN THE CASE OF DELIBERATE OR GROSSLY NEGLIGENT ACTS), IN NO EVENT SHALL QSSC, ITS AFFILIATES OR THEIR LICENSORS BE LIABLE TO YOU UNDER ANY LEGAL THEORY, WHETHER IN TORT (INCLUDING NEGLIGENCE), CONTRACT OR OTHERWISE, FOR DAMAGES, INCLUDING ANY DIRECT, INDIRECT, SPECIAL, INCIDENTAL, OR CONSEQUENTIAL DAMAGES OF ANY CHARACTER ARISING AS A RESULT OF THIS LICENSE OR OUT OF THE USE OR INABILITY TO USE THE PRODUCT (INCLUDING BUT NOT LIMITED TO DAMAGES FOR LOSS OF GOODWILL, WORK STOPPAGE, PRODUCT FAILURE OR MALFUNCTION, OR ANY AND ALL OTHER COMMERCIAL DAMAGES OR LOSSES), EVEN IF QSSC, ITS AFFILIATES OR THEIR LICENSORS HAVE BEEN ADVISED OF THE POSSIBILITY OF SUCH DAMAGES.

WMA

This product is protected by certain intellectual property rights of Microsoft. Use or distribution of such technology outside of this product is prohibited without a license from Microsoft.

For more information on the Software, including any open source software license terms (and available source code) as well as copyright attributions applicable to the Runtime Configuration indicated above, please contact the Manufacturer or contact QSSC at 175 Terence Matthews Crescent, Kanata, Ontario, Canada K2M 1W8 (licensing@qnx.com).

END USER NOTICE

The marks of companies displayed by this product to indicate business locations are the marks of their respective owners. The use of such marks in this product does not imply any sponsorship, approval, or endorsement by such companies of this product.

Climate Controls

Climate Control Systems
Climate Control Systems (with Heater Only) 216
Climate Control Systems (with Air Conditioning) 218
Dual Automatic Climate Control System 219

Air Vents
Air Vents 223

Maintenance
Passenger Compartment Air Filter 223
Service 224

Climate Control Systems

Climate Control Systems (with Heater Only)

With this system, the heating and ventilation can be controlled.

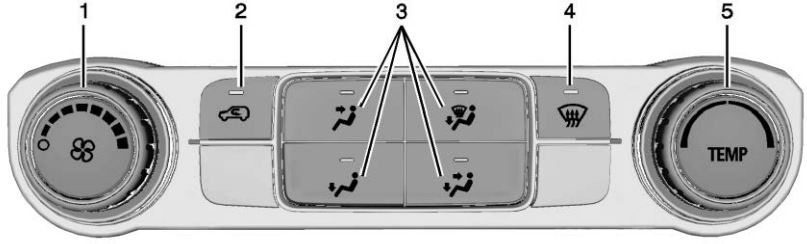

1. Fan Control
2. Air Recirculation
3. Air Delivery Mode Controls
4. Defrost
5. TEMP (Temperature Control)

TEMP : Turn clockwise or counterclockwise to increase or decrease the temperature inside the vehicle.

: Turn clockwise or counterclockwise to increase or decrease the fan speed. Turn the knob all the way counterclockwise to turn the fan off.

Air Delivery Mode Controls :

Press , , , or to change the direction of the airflow. An indicator light comes on in the selected mode button.

: Air is directed to the instrument panel outlets.

: Air is divided between the instrument panel and floor outlets.

: Air is directed to the floor outlets, with some air directed to the windshield, side window, and second row floor outlets.

: This mode clears the windows of fog or moisture. Air is directed to the windshield, floor outlets, and side window vents.

: Press to clear the windshield of fog or frost more quickly. Air is directed to the windshield and the side window vents. The system automatically forces outside air into the vehicle.

Do not drive the vehicle until all the windows are clear.

See *Air Vents* ⇨ *223*.

: Press to turn on recirculation. An indicator light comes on. Air is recirculated to quickly cool the inside of the vehicle. It can also be used to help reduce outside air and odors that enter the vehicle.

Climate Control Systems (with Air Conditioning)

With this system the heating, cooling, and ventilation can be controlled.

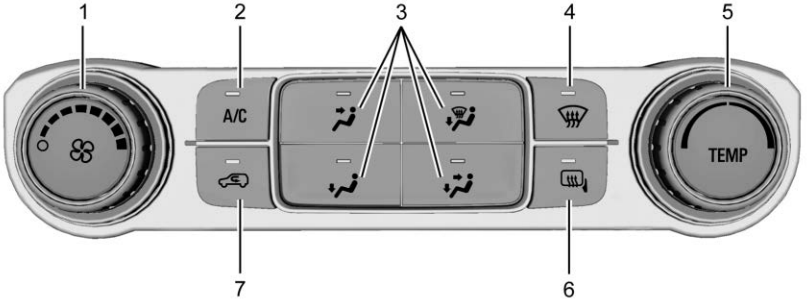

1. Fan Control
2. A/C (Air Conditioning)
3. Air Delivery Mode Controls
4. Defrost
5. TEMP (Temperature Control)
6. REAR (Rear Window Defogger, If Equipped)

   (Heated Outside Mirror, If Equipped)

   (Outside Air, If Equipped)
7. Air Recirculation

TEMP : Turn clockwise or counterclockwise to increase or decrease the temperature inside the vehicle.

: Turn clockwise or counterclockwise to increase or decrease the fan speed. Turn the knob all the way counterclockwise to turn the fan off.

Air Delivery Mode Controls : Press , , , or to change the direction of the airflow. An indicator light comes on in the selected mode button.

: Air is directed to the instrument panel outlets.

: Air is divided between the instrument panel and floor outlets.

: Air is directed to the floor outlets, with some air directed to the windshield and side window outlets.

: This mode clears the windows of fog or moisture. Air is directed to the windshield, floor outlets, and side window vents.

: Press to clear the windshield of fog or frost more quickly. Air is directed to the windshield and the side window vents. The system automatically forces outside air into the vehicle and the air conditioning compressor will run, unless the outside temperature is close to freezing.

Do not drive the vehicle until all the windows are clear.

See *Air Vents* ⇨ *223*.

: Press to turn on recirculation. An indicator light comes on. Air is recirculated to quickly cool the inside of the vehicle. It can also be used to help reduce outside air and odors that enter the vehicle.

: If equipped, press to turn the outside air mode on. An indicator light on the button comes on to show that outside air is on. When selected, air from outside the vehicle circulates throughout the vehicle. The recirculation mode cannot be used with the outside air mode.

A/C : Press to turn the air conditioning system on or off. An indicator light comes on to show that the air conditioning is enabled. If the fan is turned off, the air conditioner will not run. The A/C light will stay on even if the outside temperatures are below freezing.

Rear Window Defogger

REAR **:** If equipped, press to turn the rear window defogger on or off. An indicator light on the button comes on to show that the rear window defogger is on.

The rear window defogger only works when the ignition is on. The defogger turns off if the ignition is turned to ACC/ACCESSORY or off.

If equipped with heated outside mirrors, they turn on when the rear window defogger button is on. They help to clear fog or frost from the surface of the mirrors.

Caution
Using a razor blade or sharp object to clear the inside rear window can damage the rear window defogger. Repairs would not be covered by the vehicle warranty. Do not clear the inside rear window with sharp objects.

Dual Automatic Climate Control System

With this system the heating, cooling, and ventilation in the vehicle can be controlled.

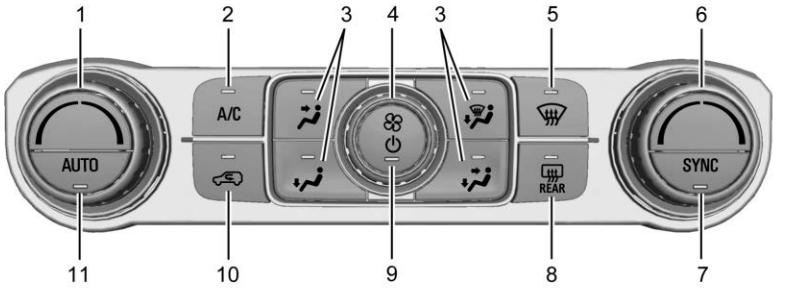

1. Driver Temperature Control
2. A/C (Air Conditioning)
3. Air Delivery Mode Controls
4. Fan Control
5. Defrost
6. Passenger Temperature Control
7. SYNC (Synchronized Temperature)
8. Rear Window Defogger
9. Power Button
10. Air Recirculation
11. AUTO (Automatic Operation)

Automatic Operation

The system automatically controls the fan speed, air delivery, air conditioning, and recirculation in order to heat or cool the vehicle to the desired temperature.

When the indicator light is on, the system is in full automatic operation. If the air delivery mode or fan setting is manually adjusted, the auto indicator turns off and displays will show the selected settings.

To place the system in automatic mode:

1. Press AUTO.
2. Set the driver and passenger temperature.

   To find your comfort setting, start with 22 °C (72 °F) and allow the system time to stabilize. Then adjust the temperature as needed for best comfort.

To improve fuel efficiency and to cool the vehicle faster, recirculation may be automatically selected in warm weather.

The recirculation light will not come on when automatically controlled.

Press to manually select recirculation; press it again to select outside air.

Do not cover the solar sensor on the top of the instrument panel near the windshield. This sensor regulates air temperature based on sun load. See “Sensors” later in this section.

Manual Operation

⏻ **:** Press to turn the climate control system on or off. When off is selected, air will not flow into the cabin. If on is selected, a climate control button is pressed, or a climate control knob is turned, the climate control system will turn on and operate at the current setting.

: Turn clockwise or counterclockwise to increase or decrease the fan speed. Press the knob to turn the fan off.

Press AUTO to return to automatic operation.

Driver and Passenger Temperature Control : The temperature can be adjusted separately for the driver and passenger.

Turn the knob clockwise or counterclockwise to increase or decrease the driver or passenger temperature setting.

SYNC : Press to link the passenger temperature setting to the driver setting. The SYNC indicator light will turn on. When the passenger setting is adjusted, the SYNC indicator light is off.

The driver side or passenger side temperature display shows the temperature setting increasing or decreasing.

Air Delivery Mode Control : Press , , , or to change the direction of the airflow. An indicator light comes on in the selected mode button.

Changing the mode cancels the automatic operation and the system goes into manual mode. Press AUTO to return to automatic operation.

: Air is directed to the instrument panel outlets.

: Air is divided between the instrument panel and floor outlets. Some air is directed toward the windshield and side window outlets.

: Air is directed to the floor outlets, with some to the windshield, side window outlets, and second row floor outlets.

: This mode clears the windows of fog or moisture. Air is directed to the windshield, floor outlets, and side window vents. The system automatically forces outside air into the vehicle and the air conditioning compressor will run, unless the outside temperature is close to freezing.

: Press to clear the windshield of fog or frost more quickly. Air is directed to the windshield and the side window vents. The air conditioning compressor also comes on, unless the outside temperature is below freezing.

Do not drive the vehicle until all windows are clear.

See *Air Vents* ⇨ *223*.

A/C : Press to turn the air conditioning system on or off. An indicator light comes on to show that the air conditioning is enabled. If the fan is turned off, the air conditioner will not run. The A/C light will stay on even if the outside temperatures are below freezing.

: Press to turn on recirculation. An indicator light comes on. Air is recirculated to quickly cool the inside of the vehicle. It can also be used to help reduce outside air and odors that enter the vehicle. The air conditioning compressor also comes on when this mode is activated.

Rear Window Defogger

The rear window defogger uses a warming grid to remove fog from the rear window.

REAR : Press to turn the rear window defogger on or off. An indicator light on the button comes on to show that the rear window defogger is on.

The rear window defogger only works when the ignition is on. The defogger turns off if the ignition is turned to ACC/ACCESSORY or off.

Caution

Using a razor blade or sharp object to clear the inside rear window can damage the rear

(Continued)

Caution (Continued)

window defogger. Repairs would not be covered by the vehicle warranty. Do not clear the inside rear window with sharp objects.

Heated Mirrors : If equipped with heated outside mirrors, press REAR to heat the mirrors. See *Heated Mirrors* ⇨ *48*.

Sensors

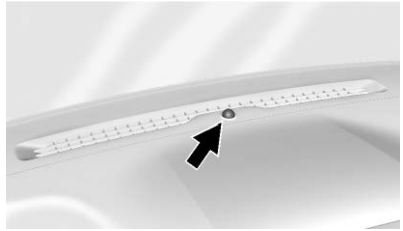

The solar sensor, located in the defrost grille in the middle of the instrument panel, monitors the solar heat. Do not cover the solar sensor or the system will not work properly.

There is also an exterior temperature sensor behind the front grille. This sensor reads the outside air temperature and helps maintain the temperature inside the vehicle. Any cover on the front of the vehicle including a snow plow, could cause a false reading in the displayed temperature.

Some vehicles may have the exterior temperature sensor in the passenger side mirror instead of the front grille area.

The climate control system uses the information from these sensors to maintain comfort settings by adjusting the outlet temperature, fan speed, and the air delivery mode. The system may also supply cooler air to the side of the vehicle facing the sun. The recirculation mode will also be used as needed to maintain cool outlet temperatures.

Air Vents

Use the sliding knobs on the center and side air vents to direct the airflow. Use the thumbwheels near the air vents to open or close off the airflow.

Air vents blow warm air on the side windows in cold weather. If Floor, Defog, or Defrost modes are selected, a small amount of air will come from the vents close to the window. If the airflow is shut off using the thumbwheels, warm air will be directed to the other instrument panel vents. This is normal operation.

Use the thumbwheels to turn vent airflow on or off based on the mode selected.

Operation Tips

- Clear away any ice, snow, or leaves from air inlets at the base of the windshield that could block the flow of air into the vehicle.
- Clear snow off the hood to improve visibility and help decrease moisture drawn into the vehicle.
- Keep the path under the front seats clear of objects to help circulate the air inside of the vehicle more effectively.
- Use of non-GM approved hood deflectors can adversely affect the performance of the system. Check with your dealer before adding equipment to the outside of the vehicle.

Maintenance

Passenger Compartment Air Filter

The filter reduces the dust, pollen, and other airborne irritants from outside air that is pulled into the vehicle.

The filter should be replaced as part of routine scheduled maintenance. See *Maintenance Schedule* ⇨ *431*. To find out what type of filter to use, see *Maintenance Replacement Parts* ⇨ *443*.

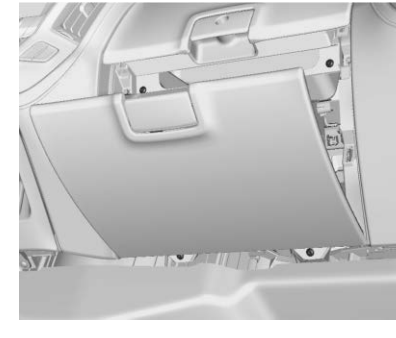

1. Open the lower glove box door completely.
2. Remove the four screws from around the lower glove box. The door does not need to be removed to access the screws.

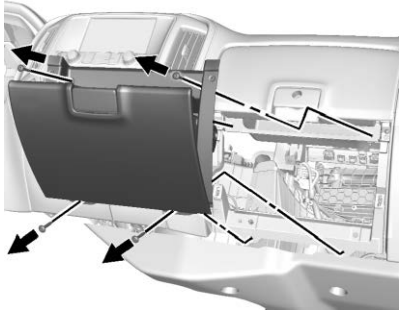

3. Close the lower glove box door and pull it from its frame to remove the entire unit.

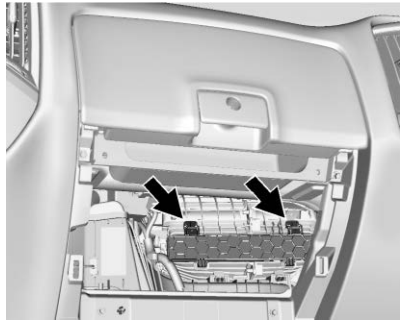

4. Release the two tabs holding the service door. Open the service door and remove the old filter.
5. Install the new air filter.
6. Close the service door and secure the tabs.
7. Reverse the steps to reinstall the glove box.

See your dealer if additional assistance is needed.

Service

All vehicles have a label underhood that identifies the refrigerant used in the vehicle. The refrigerant system should only be serviced by trained and certified technicians. The air conditioning evaporator should never be repaired or replaced by one from a salvage vehicle.
It should only be replaced by a new evaporator to ensure proper and safe operation.

During service, all refrigerants should be reclaimed with proper equipment. Venting refrigerants directly to the atmosphere is harmful to the environment and may also create unsafe conditions based on inhalation, combustion, frostbite, or other health-based concerns.

The air conditioning system requires periodic maintenance. See *Maintenance Schedule* ⇨ *431*.

Driving and Operating

Driving Information
Distracted Driving 226
Defensive Driving 227
Drunk Driving 227
Control of a Vehicle 227
Braking 227
Steering 228
Off-Road Recovery 229
Loss of Control 229
Off-Road Driving 230
Driving on Wet Roads 234
Hill and Mountain Roads 235
Winter Driving 236
If the Vehicle Is Stuck 237
Vehicle Load Limits 238
Truck-Camper Loading Information 244

Starting and Operating
New Vehicle Break-In 246
Adjustable Throttle and Brake Pedal 246
Ignition Positions 247
Starting the Engine 249
Fast Idle System 250
Retained Accessory Power (RAP) 251
Engine Coolant Heater 251
Shifting Into Park 253
Shifting out of Park 254
Parking over Things That Burn 254
Active Fuel Management 255

Engine Exhaust
Engine Exhaust 255
Running the Vehicle While Parked 256

Automatic Transmission
Automatic Transmission 256
Manual Mode 259
Tow/Haul Mode 261

Drive Systems
Four-Wheel Drive 262

Brakes
Antilock Brake System (ABS) 270
Parking Brake 271
Brake Assist 272
Hill Start Assist (HSA) 272

Ride Control Systems
Traction Control/Electronic Stability Control 273
Hill Descent Control (HDC) . . . 275
Locking Rear Axle 276

Cruise Control
Cruise Control 276

Driver Assistance Systems
Driver Assistance Systems . . . 279
Assistance Systems for Parking or Backing 280
Assistance Systems for Driving 282
Forward Collision Alert (FCA) System 282
Forward Automatic Braking (FAB) (1500 Series) 285
Lane Departure Warning (LDW) (2500/3500 Series) 286
Lane Keep Assist (LKA) (1500 Series) 287

Fuel
Top Tier Fuel 289
Recommended Fuel 290
Prohibited Fuels 290
Fuels in Foreign Countries . . . 290
Fuel Additives 290
E85 or FlexFuel 291
Filling the Tank 291

Filling a Portable Fuel Container 293

Trailer Towing

General Towing Information 294
Driving Characteristics and Towing Tips 294
Trailer Towing 298
Towing Equipment 306
Trailer Sway Control (TSC) . . . 316

Conversions and Add-Ons

Add-On Electrical Equipment 318
Adding a Snow Plow or Similar Equipment 319
Pickup Conversion to Chassis Cab 323

Driving Information

Distracted Driving

Distraction comes in many forms and can take your focus from the task of driving. Exercise good judgment and do not let other activities divert your attention away from the road. Many local governments have enacted laws regarding driver distraction. Become familiar with the local laws in your area.

To avoid distracted driving, keep your eyes on the road, keep your hands on the steering wheel, and focus your attention on driving.

- Do not use a phone in demanding driving situations. Use a hands-free method to place or receive necessary phone calls.
- Watch the road. Do not read, take notes, or look up information on phones or other electronic devices.
- Designate a front seat passenger to handle potential distractions.
- Become familiar with vehicle features before driving, such as programming favorite radio stations and adjusting climate control and seat settings. Program all trip information into any navigation device prior to driving.
- Wait until the vehicle is parked to retrieve items that have fallen to the floor.
- Stop or park the vehicle to tend to children.
- Keep pets in an appropriate carrier or restraint.
- Avoid stressful conversations while driving, whether with a passenger or on a cell phone.

⚠ Warning

Taking your eyes off the road too long or too often could cause a crash resulting in injury or death. Focus your attention on driving.

Refer to the infotainment section and/or infotainment manual on using that system and the navigation system, if equipped, including pairing and using a cell phone.

Defensive Driving

Defensive driving means “always expect the unexpected.” The first step in driving defensively is to wear the seat belt. See *Seat Belts* ⇨ *67*.

- Assume that other road users (pedestrians, bicyclists, and other drivers) are going to be careless and make mistakes. Anticipate what they might do and be ready.
- Allow enough following distance between you and the driver in front of you.
- Focus on the task of driving.

Drunk Driving

Death and injury associated with drinking and driving is a global tragedy.

⚠ Warning

Drinking and then driving is very dangerous. Your reflexes, perceptions, attentiveness, and judgment can be affected by even a small amount of alcohol. You can have a serious — or even fatal — collision if you drive after drinking.

Do not drink and drive or ride with a driver who has been drinking. Ride home in a cab; or if you are with a group, designate a driver who will not drink.

Control of a Vehicle

Braking, steering, and accelerating are important factors in helping to control a vehicle while driving.

Braking

Braking action involves perception time and reaction time. Deciding to push the brake pedal is perception time. Actually doing it is reaction time.

Average driver reaction time is about three-quarters of a second. In that time, a vehicle moving at 100 km/h (60 mph) travels 20 m (66 ft), which could be a lot of distance in an emergency.

Helpful braking tips to keep in mind include:

- Keep enough distance between you and the vehicle in front of you.
- Avoid needless heavy braking.
- Keep pace with traffic.

If the engine ever stops while the vehicle is being driven, brake normally but do not pump the brakes. Doing so could make the pedal harder to push down. If the engine stops, there will be some power brake assist but it will be used when the brake is applied.

Once the power assist is used up, it can take longer to stop and the brake pedal will be harder to push.

Steering

Electric Power Steering (1500 Series)

If the vehicle has electric power steering, it does not have power steering fluid. Regular maintenance is not required.

If power steering assist is lost due to a system malfunction, the vehicle can be steered, but may require increased effort. See your dealer if there is a problem.

If the steering wheel is turned until it reaches the end of its travel, and is held in that position for an extended period of time, power steering assist may be reduced.

If the steering assist is used for an extended period of time while the vehicle is not moving, power assist may be reduced.

Normal use of the power steering assist should return when the system cools down.

See your dealer if there is a problem.

Hydraulic Power Steering (2500/3500 Series)

(2500/3500 Series – All Regular Cab, Double Cab/Crew Cab without Digital Steer Assist)

The power steering system may require maintenance.
See *Power Steering Fluid (1500 Series)* ⇨ *346* or *Power Steering Fluid (2500/3500 Series)* ⇨ *346*.

If power steering assist is lost because the engine stops or the system malfunctions, the vehicle can be steered but may require increased effort. See your dealer.

(2500/3500 Series – Double Cab/ Crew Cab with Digital Steer Assist)

The vehicle has a Digital Steer Assist power steering system that varies the amount of effort required to steer the vehicle. Less steering effort is required at slower speeds. At faster speeds, the steering effort increases. The system helps the steering wheel return to center at low speeds. Pressing the Tow/Haul button adjusts steering effort for driving conditions described in *Tow/ Haul Mode* ⇨ *261*.

The power steering system may require maintenance.
See *Power Steering Fluid (1500 Series)* ⇨ *346* or *Power Steering Fluid (2500/3500 Series)* ⇨ *346*.

If power steering assist is lost because the engine stops or the system malfunctions, the vehicle can be steered but may require increased effort. See your dealer.

Caution

If the steering wheel is turned until it reaches the end of its travel, and is held in that position for more than 15 seconds,

(Continued)

Caution (Continued)

damage may occur to the power steering system and there may be loss of power steering assist.

Curve Tips

- Take curves at a reasonable speed.
- Reduce speed before entering a curve.
- Maintain a reasonable steady speed through the curve.
- Wait until the vehicle is out of the curve before accelerating gently into the straightaway.

Steering in Emergencies

- There are some situations when steering around a problem may be more effective than braking.
- Holding both sides of the steering wheel allows you to turn 180 degrees without removing a hand.
- Antilock Brake System (ABS) allows steering while braking.

Off-Road Recovery

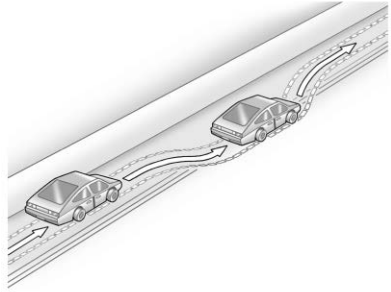

The vehicle's right wheels can drop off the edge of a road onto the shoulder while driving. Follow these tips:

1. Ease off the accelerator and then, if there is nothing in the way, steer the vehicle so that it straddles the edge of the pavement.
2. Turn the steering wheel about one-eighth of a turn, until the right front tire contacts the pavement edge.
3. Turn the steering wheel to go straight down the roadway.

Loss of Control

Skidding

There are three types of skids that correspond to the vehicle's three control systems:

- Braking Skid — wheels are not rolling.
- Steering or Cornering Skid — too much speed or steering in a curve causes tires to slip and lose cornering force.
- Acceleration Skid — too much throttle causes the driving wheels to spin.

Defensive drivers avoid most skids by taking reasonable care suited to existing conditions, and by not overdriving those conditions. But skids are always possible.

If the vehicle starts to slide, follow these suggestions:

- Ease your foot off the accelerator pedal and steer the way you want the vehicle to go. The vehicle may straighten out. Be ready for a second skid if it occurs.
- Slow down and adjust your driving according to weather conditions. Stopping distance can be longer and vehicle control can be affected when traction is reduced by water, snow, ice, gravel, or other material on the road. Learn to recognize warning clues — such as enough water, ice, or packed snow on the road to make a mirrored surface — and slow down when you have any doubt.
- Try to avoid sudden steering, acceleration, or braking, including reducing vehicle speed by shifting to a lower gear. Any sudden changes could cause the tires to slide.

Remember: Antilock brakes help avoid only the braking skid.

Off-Road Driving

Four-wheel-drive vehicles can be used for off-road driving. Vehicles without four-wheel drive and vehicles not equipped with All Terrain (AT) or On-Off Road (OOR) tires must not be driven off-road except on a level, solid surface. For contact information about the original equipment tires, see the warranty manual.

One of the best ways for successful off-road driving is to control the speed.

⚠ Warning

When driving off-road, bouncing and quick changes in direction can easily throw you out of position. This could cause you to lose control and crash. You and your passengers should always wear seat belts.

Before Driving Off-Road

- Have all necessary maintenance and service work completed.
- Fuel the vehicle, fill fluid levels, and check inflation pressure in all tires, including the spare, if equipped.
- Read all the information about four-wheel-drive vehicles in this manual.
- Remove any underbody air deflector, if equipped. Re-attach the air deflector after off-road driving.
- Know the local laws that apply to off-road driving.

To gain more ground clearance if needed, it may be necessary to remove the front fascia lower air dam, if equipped. However, driving without the air dam reduces fuel economy.

Caution

Operating the vehicle for extended periods without the front fascia lower air dam installed can cause improper airflow to the engine. Reattach the front fascia air dam after off-road driving.

Loading the Vehicle for Off-Road Driving

⚠ Warning

- Unsecured cargo on the load floor can be tossed about when driving over rough terrain. You or your passengers can be struck by flying objects. Secure the cargo properly.
- Keep cargo in the cargo area as far forward and as low as possible. The

(Continued)

Warning (Continued)

heaviest things should be on the floor, forward of the rear axle.

- Heavy loads on the roof raise the vehicle's center of gravity, making it more likely to roll over. You can be seriously or fatally injured if the vehicle rolls over. Put heavy loads inside the cargo area, not on the roof.

For more information about loading the vehicle, see *Vehicle Load Limits* ⇨ *238* and *Tires* ⇨ *371*.

Environmental Concerns

- Always use established trails, roads, and areas that have been set aside for public off-road recreational driving and obey all posted regulations.
- Do not damage shrubs, flowers, trees, or grasses or disturb wildlife.
- Do not park over things that burn. See *Parking over Things That Burn* ⇨ *254*.

Driving on Hills

Driving safely on hills requires good judgment and an understanding of what the vehicle can and cannot do.

⚠ Warning

Many hills are simply too steep for any vehicle. Driving up hills can cause the vehicle to stall. Driving down hills can cause loss of control. Driving across hills can cause a rollover. You could be injured or killed. Do not drive on steep hills.

Before driving on a hill, assess the steepness, traction, and obstructions. If the terrain ahead cannot be seen, get out of the vehicle and walk the hill before driving further.

When driving on hills:

- Use a low gear and keep a firm grip on the steering wheel.
- Maintain a slow speed.
- When possible, drive straight up or down the hill.
- Slow down when approaching the top of the hill.
- Use headlamps even during the day to make the vehicle more visible.

⚠ Warning

Driving to the top of a hill at high speed can cause a crash. There could be a drop-off, embankment, cliff, or even another vehicle. You could be seriously injured or killed. As you near the top of a hill, slow down and stay alert.

- Never go downhill forward or backward with either the transmission or transfer case in N (Neutral). The brakes could overheat and you could lose control.

⚠ Warning

If the vehicle has the two-speed automatic or electronic transfer case, shifting the transfer case to N (Neutral) can cause your vehicle to roll even if the transmission is in P (Park). This is because the N (Neutral) position on the transfer case overrides the transmission. You or someone else could be injured. If leaving the vehicle, set the parking brake and shift the transmission to P (Park). Shift the transfer case to any position but N (Neutral).

- When driving down a hill, keep the vehicle headed straight down. Use a low gear because the engine will work with the brakes to slow the vehicle and help keep the vehicle under control.

⚠ Warning

Heavy braking when going down a hill can cause your brakes to overheat and fade. This could cause loss of control and you or others could be injured or killed. Apply the brakes lightly when descending a hill and use a low gear to keep vehicle speed under control.

If the vehicle stalls on a hill:

1. Apply the brakes to stop the vehicle, and then apply the parking brake.
2. Shift into P (Park) and then restart the engine.
   - If driving uphill when the vehicle stalls, shift to R (Reverse), release the parking brake, and back straight down.

- Never try to turn the vehicle around. If the hill is steep enough to stall the vehicle, it is steep enough to cause it to roll over.
- If you cannot make it up the hill, back straight down the hill.
- Never back down a hill in N (Neutral) using only the brake. The vehicle can roll backward quickly and you could lose control.
- If driving downhill when the vehicle stalls, shift to a lower gear, release the parking brake, and drive straight down the hill.

3. If the vehicle cannot be restarted after stalling, set the parking brake, shift into P (Park), and turn the vehicle off.

   3.1. Leave the vehicle and seek help.

   3.2. Stay clear of the path the vehicle would take if it rolled downhill.

- Avoid turns that take the vehicle across the incline of the hill. A hill that can be driven straight up or down might be too steep to drive across. Driving across an incline puts more weight on the downhill wheels, which could cause a downhill slide or a rollover.
- Surface conditions can be a problem. Loose gravel, muddy spots, or even wet grass can cause the tires to slip sideways, downhill. If the vehicle slips sideways, it can hit something that will trip it — a rock, a rut, etc. — and roll over.
- Hidden obstacles can make the steepness of the incline more severe. If a rock is driven across with the uphill wheels, or if the downhill wheels drop into a rut or depression, the vehicle can tilt even more.
- If an incline must be driven across, and the vehicle starts to slide, turn downhill. This should help straighten out the vehicle and prevent the side slipping.

⚠ Warning

Getting out of the vehicle on the downhill side when stopped across an incline is dangerous. If the vehicle rolls over, you could be crushed or killed. Always get out on the uphill side of the vehicle and stay well clear of the rollover path.

Driving in Mud, Sand, Snow, or Ice

Use a low gear when driving in mud — the deeper the mud, the lower the gear. Keep the vehicle moving to avoid getting stuck.

Traction changes when driving on sand. On loose sand, such as on beaches or sand dunes, the tires tend to sink into the sand. This affects steering, accelerating, and

braking. Drive at a reduced speed and avoid sharp turns or abrupt maneuvers.

Traction is reduced on hard packed snow and ice and it is easy to lose control. Reduce vehicle speed when driving on hard packed snow and ice.

⚠ Warning

Driving on frozen lakes, ponds, or rivers can be dangerous. Ice conditions vary greatly and the vehicle could fall through the ice; you and your passengers could drown. Drive your vehicle on safe surfaces only.

Driving in Water

⚠ Warning

Driving through rushing water can be dangerous. Deep water can sweep your vehicle downstream and you and your passengers

(Continued)

Warning (Continued)

could drown. If it is only shallow water, it can still wash away the ground from under your tires. Traction could be lost, and the vehicle could roll over. Do not drive through rushing water.

Caution

Do not drive through standing water if it is deep enough to cover the wheel hubs, axles, or exhaust pipe. Deep water can damage the axle and other vehicle parts.

If the standing water is not too deep, drive through it slowly. At faster speeds, water can get into the engine and cause it to stall. Stalling can occur if the exhaust pipe is under water. Do not turn off the ignition when driving through water. If the exhaust pipe is under water, the engine will not start. When going through water, the brakes get wet and it may take longer to stop. See “Driving on Wet Roads” later in this section.

After Off-Road Driving

Remove any brush or debris that has collected on the underbody or chassis, or under the hood. These accumulations can be a fire hazard.

After operation in mud or sand, have the brake linings cleaned and checked. These substances can cause glazing and uneven braking. Check the body structure, driveline, steering, suspension, wheels, tires, and exhaust system for damage and check the fuel lines and cooling system for any leakage.

More frequent maintenance service is required. See the *Maintenance Schedule* ⇨ *431*.

Driving on Wet Roads

Rain and wet roads can reduce vehicle traction and affect your ability to stop and accelerate. Always drive slower in these types

of driving conditions and avoid driving through large puddles and deep-standing or flowing water.

⚠ Warning

Wet brakes can cause crashes. They might not work as well in a quick stop and could cause pulling to one side. You could lose control of the vehicle.

After driving through a large puddle of water or a car/vehicle wash, lightly apply the brake pedal until the brakes work normally.

Flowing or rushing water creates strong forces. Driving through flowing water could cause the vehicle to be carried away. If this happens, you and other vehicle occupants could drown. Do not ignore police warnings and be very cautious about trying to drive through flowing water.

Hydroplaning

Hydroplaning is dangerous. Water can build up under the vehicle's tires so they actually ride on the water. This can happen if the road is wet enough and you are going fast enough. When the vehicle is hydroplaning, it has little or no contact with the road.

There is no hard and fast rule about hydroplaning. The best advice is to slow down when the road is wet.

Other Rainy Weather Tips

Besides slowing down, other wet weather driving tips include:

- Allow extra following distance.
- Pass with caution.
- Keep windshield wiping equipment in good shape.
- Keep the windshield washer fluid reservoir filled.
- Have good tires with proper tread depth. See *Tires* ⇨ *371*.
- Turn off cruise control.

Hill and Mountain Roads

Driving on steep hills or through mountains is different than driving on flat or rolling terrain. Tips include:

- Keep the vehicle serviced and in good shape.
- Check all fluid levels and brakes, tires, cooling system, and transmission.
- Shift to a lower gear when going down steep or long hills.

⚠ Warning

Using the brakes to slow the vehicle on a long downhill slope can cause brake overheating, can reduce brake performance, and could result in a loss of braking. Shift the transmission to a lower gear to let the engine assist the brakes on a steep downhill slope.

⚠ Warning

Coasting downhill in N (Neutral) or with the ignition off is dangerous. This can cause overheating of the brakes and loss of steering assist. Always have the engine running and the vehicle in gear.

- Drive at speeds that keep the vehicle in its own lane. Do not swing wide or cross the center line.
- Be alert on top of hills; something could be in your lane (e.g., stalled car, crash).
- Pay attention to special road signs (e.g., falling rocks area, winding roads, long grades, passing or no-passing zones) and take appropriate action.

Winter Driving

Driving on Snow or Ice

Snow or ice between the tires and the road creates less traction or grip, so drive carefully. Wet ice can occur at about 0 °C (32 °F) when freezing rain begins to fall. Avoid driving on wet ice or in freezing rain until roads can be treated.

For Slippery Road Driving:

- Accelerate gently. Accelerating too quickly causes the wheels to spin and makes the surface under the tires slick.
- Turn on Traction Control. See *Traction Control/Electronic Stability Control* ⇨ *273*.
- The Antilock Brake System (ABS) improves vehicle stability during hard stops, but the brakes should be applied sooner than when on dry pavement. See *Antilock Brake System (ABS)* ⇨ *270*.
- Allow greater following distance and watch for slippery spots. Icy patches can occur on otherwise clear roads in shaded areas. The surface of a curve or an overpass can remain icy when the surrounding roads are clear. Avoid sudden steering maneuvers and braking while on ice.
- Turn off cruise control.

Blizzard Conditions

Stop the vehicle in a safe place and signal for help. Stay with the vehicle unless there is help nearby.
If possible, use Roadside Assistance. See *Roadside Assistance Program* ⇨ *454*. To get help and keep everyone in the vehicle safe:

- Turn on the hazard warning flashers.
- Tie a red cloth to an outside mirror.

⚠ Warning

Snow can trap engine exhaust under the vehicle. This may cause exhaust gases to get inside. Engine exhaust contains carbon monoxide (CO), which cannot be seen or smelled. It can cause unconsciousness and even death.

If the vehicle is stuck in snow:

- Clear snow from the base of the vehicle, especially any blocking the exhaust pipe.
- Open a window about 5 cm (2 in) on the vehicle side that is away from the wind, to bring in fresh air.
- Fully open the air outlets on or under the instrument panel.
- Adjust the climate control system to circulate the air inside the vehicle and set

(Continued)

Warning (Continued)

the fan speed to the highest setting. See "Climate Control Systems."

For more information about CO, see *Engine Exhaust* ⇨ *255*.

To save fuel, run the engine for short periods to warm the vehicle and then shut the engine off and partially close the window. Moving about to keep warm also helps.

If it takes time for help to arrive, when running the engine, push the accelerator pedal slightly so the engine runs faster than the idle speed. This keeps the battery charged to restart the vehicle and to signal for help with the headlamps. Do this as little as possible, to save fuel.

If the Vehicle Is Stuck

Slowly and cautiously spin the wheels to free the vehicle when stuck in sand, mud, ice, or snow. See "Rocking the Vehicle to Get It Out" later in this section.

The Traction Control/Electronic Stability Control can often help to free a stuck vehicle. See *Traction Control/Electronic Stability Control* ⇨ *273*. If TC/ESC cannot free the vehicle, see "Rocking the Vehicle to Get it Out" following.

⚠ Warning

If the vehicle's tires spin at high speed, they can explode, and you or others could be injured. The vehicle can overheat, causing an engine compartment fire or other damage. Spin the wheels as little as possible and avoid going above 56 km/h (35 mph).

For information about using tire chains on the vehicle, see *Tire Chains* ⇨ *395*.

Rocking the Vehicle to Get It Out

Turn the steering wheel left and right to clear the area around the front wheels. For four-wheel-drive vehicles, shift into Four-Wheel Drive High. Turn the TCS off. Shift back and forth between R (Reverse) and a forward gear, spinning the wheels as little as possible. To prevent transmission wear, wait until the wheels stop spinning before shifting gears. Slowly spinning the wheels in the forward and reverse directions causes a rocking motion that could free the vehicle. If that does not get the vehicle out after a few tries, it might need to be towed out. See *Towing the Vehicle* ⇨ *413*. Recovery hooks can be used, if the vehicle has them.

Recovery Hooks

⚠ Warning

Never pull on recovery hooks from the side. The hooks could break and you and others could be injured. When using recovery hooks, always pull the vehicle from the front.

Caution

Never use recovery hooks to tow the vehicle. The vehicle could be damaged, and the repairs would not be covered by the vehicle warranty.

There are recovery hooks at the front of the vehicle. Use them if the vehicle is stuck off-road and needs to be pulled some place to continue driving.

Vehicle Load Limits

It is very important to know how much weight the vehicle can carry. This weight is called the vehicle capacity weight and includes the weight of all occupants, cargo, and all nonfactory-installed options. Two labels on the vehicle may show how much weight it was designed to carry: the Tire and Loading Information label and the Certification/Tire label.

⚠ Warning

Do not load the vehicle any heavier than the Gross Vehicle Weight Rating (GVWR), or either the maximum front or rear Gross Axle Weight Rating (GAWR). This can cause systems to break and change the way the vehicle handles. This could cause loss of control and a crash. Overloading can also reduce stopping distance, damage the tires, and shorten the life of the vehicle.

Tire and Loading Information Label

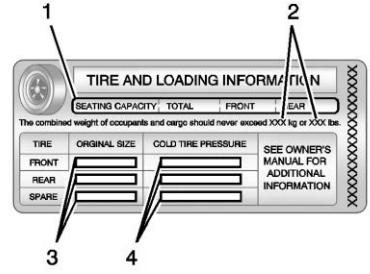

Label Example

A vehicle-specific Tire and Loading Information label is attached to the center pillar (B-pillar). The Tire and Loading Information label shows the number of occupant seating positions (1), and the maximum vehicle capacity weight (2) in kilograms and pounds.

The Tire and Loading Information label also shows the size of the original equipment tires (3) and the recommended cold tire inflation pressures (4). For more information on tires and inflation see *Tires* ⇨ *371* and *Tire Pressure* ⇨ *379*.

There is also important loading information on the vehicle Certification/Tire label. It may show the Gross Vehicle Weight Rating (GVWR) and the Gross Axle Weight Rating (GAWR) for the front and rear axles. See “Certification/Tire Label” later in this section.

“Steps for Determining Correct Load Limit–

1. Locate the statement "The combined weight of occupants and cargo should never exceed XXX kg or XXX lbs." on your vehicle’s placard.
2. Determine the combined weight of the driver and passengers that will be riding in your vehicle.

3. Subtract the combined weight of the driver and passengers from XXX kg or XXX lbs.
4. The resulting figure equals the available amount of cargo and luggage load capacity. For example, if the "XXX" amount equals 1400 lbs. and there will be five 150 lb passengers in your vehicle, the amount of available cargo and luggage load capacity is 650 lbs. (1400-750 (5 x 150) = 650 lbs.)
5. Determine the combined weight of luggage and cargo being loaded on the vehicle. That weight may not safely exceed the available cargo and luggage load capacity calculated in Step 4.
6. If your vehicle will be towing a trailer, load from your trailer will be transferred to your vehicle. Consult this manual to determine how this reduces the available cargo and luggage load capacity of your vehicle."

See *Trailer Towing* ⇨ *298* for important information on towing a trailer, towing safety rules, and trailering tips.

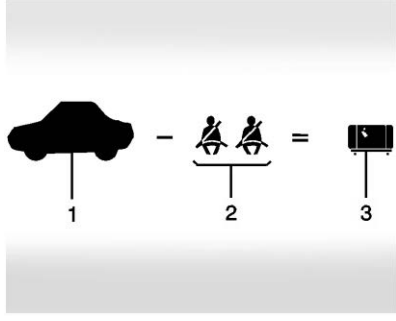

Example 1

1. Vehicle Capacity Weight for Example 1 = (453 kg) (1,000 lb)
2. Subtract Occupant Weight @ 68 kg (150 lb) × 2 = 136 kg (300 lb)
3. Available Occupant and Cargo Weight = 317 kg (700 lb)

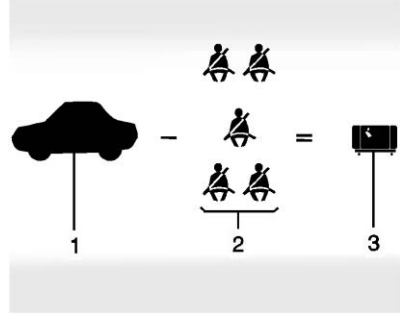

Example 2

1. Vehicle Capacity Weight for Example 2 = 453 kg (1,000 lb)
2. Subtract Occupant Weight @ 68 kg (150 lb) × 5 = 340 kg (750 lb)
3. Available Cargo Weight = 113 kg (250 lb)

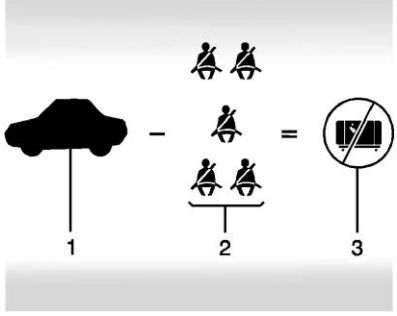

Example 3

1. Vehicle Capacity Weight for Example 3 = 453 kg (1,000 lb)
2. Subtract Occupant Weight @ 91 kg (200 lb) × 5 = 453 kg (1,000 lb)
3. Available Cargo Weight = 0 kg (0 lb)

Refer to the Tire and Loading Information label for specific information about the vehicle's capacity weight and seating positions. The combined weight of the driver, passengers, and cargo should never exceed the vehicle's capacity weight.

Certification/Tire Label

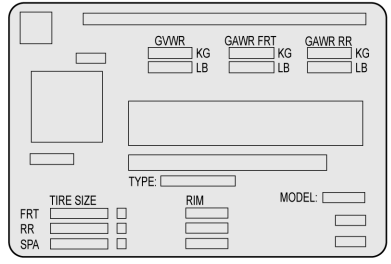

A vehicle-specific Certification/Tire label is label is attached to the center pillar (B-pillar). The label may show the size of the vehicle's original tires and the inflation pressures needed to obtain the gross weight capacity of the vehicle. This is called Gross Vehicle Weight Rating (GVWR). The GVWR includes the weight of the vehicle, all occupants, fuel, and cargo.

The Certification/Tire label also may show the maximum weights for the front and rear axles, called Gross Axle Weight Rating (GAWR). To determine the actual loads on the front and rear axles, weigh the vehicle at a weigh station. Your dealer can help with this. Be sure to spread the load equally on both sides of the centerline.

The Certification/Tire label also contains important information about the Front Axle Reserve Capacity. See *Adding a Snow Plow or Similar Equipment* ⇨ *319*.

⚠ Warning

In the case of a sudden stop or collision, things carried in the bed of your truck could shift forward and come into the passenger area, injuring you and others. If you put things in the bed of your truck, you should make sure they are properly secured.

Caution

Overloading the vehicle may cause damage. Repairs would not be covered by the vehicle warranty. Do not overload the vehicle.

Using heavier suspension components to get added durability might not change the weight ratings. Ask your dealer to help load the vehicle the right way.

⚠ Warning

Things you put inside the vehicle can strike and injure people in a sudden stop or turn, or in a crash.

- Put things in the cargo area of the vehicle. Try to spread the weight evenly.
- Never stack heavier things, like suitcases, inside the vehicle so that some of them are above the tops of the seats.
- Do not leave an unsecured child restraint in the vehicle.
- When you carry something inside the vehicle, secure it whenever you can.
- Do not leave a seat folded down unless you need to.

There is also important loading information for off-road driving in this manual. See “Loading the Vehicle for Off-Road Driving“ under *Off-Road Driving* ⇨ *230*.

Two-Tiered Loading

Depending on the model of the pickup, an upper load platform can be created by positioning three or four 5 cm (2 in) by 15 cm (6 in) wooden planks across the width of the pickup box. The planks must be inserted in the pickup box depressions.

When using this upper load platform, be sure the load is securely tied down to prevent it from shifting. The load's center of gravity should be positioned in a zone over the rear axle. The zone is located in the area between the front of each wheel well and the rear of each wheel

well. The center of gravity height must not extend above the top of the pickup box flareboard.

Any load that extends beyond the vehicle's taillamp area must be properly marked according to local laws and regulations.

Remember not to exceed the Gross Axle Weight Rating (GAWR) of the front or rear axle.

Add-On Equipment

When carrying removable items, a limit on how many people carried inside the vehicle may be necessary. Be sure to weigh the vehicle before buying and installing the new equipment.

Caution
Overloading the vehicle may cause damage. Repairs would not be covered by the vehicle warranty. Do not overload the vehicle.

Remember not to exceed the Gross Axle Weight Rating (GAWR) of the front or rear axle.

* Equipment	Maximum Weight
Ladder Rack and Cargo	340 kg (750 lb)
Cross Toolbox and Cargo	181 kg (400 lb)
Side Boxes and Cargo	113 kg per side (250 lb per side)
* The combined weight for all rail-mounted equipment should not exceed 454 kg (1,000 lb).	

Loading Points

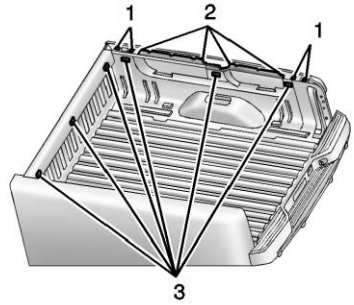

1. Primary Load Points
2. Secondary Load Areas
3. GM Approved Accessory Mounting Points

Structural members (1) and (2) are included in the pickup box design. Additional accessories should use these load points. Depending on the accessory design, use a spacer under the accessory at the load points to remove gap. The holes for GM approved accessories (3) are not intended for aftermarket

equipment. See www.gmupfitter.com for additional pickup box load bearing structural information.

Truck-Camper Loading Information

A vehicle-specific Truck-Camper Loading Information label is attached to the inside of the vehicle's glove box. This label indicates if a slide-in camper can be carried, how much of a load the vehicle can carry, and how to correctly spread out the load. It will help to match the right slide-in camper to the vehicle.

Your dealer can help make a good vehicle-camper match and help determine the Cargo Weight Rating (CWR).

When installing and loading a slide-in camper, check the manufacturer's instructions.

When carrying a slide-in camper, the total cargo load of the vehicle is the weight of the camper plus:

- Everything added to the camper after it left the factory.
- Everything in the camper.
- All the people inside.

The CWR is the maximum weight of the load the vehicle can carry. It does not include the weight of the people inside. But, use about 68 kg (150 lb) for each seat.

The total cargo load must not be more than the vehicle's CWR.

Refer to the Truck-Camper Loading Information label in the glove box for dimensions A and B as shown in the following illustration.

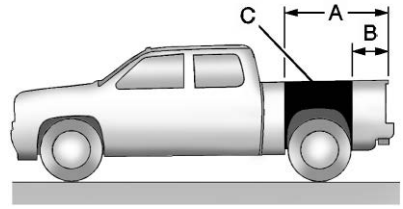

Use the rear edge of the load floor for measurement purposes. The recommended location for the cargo center of gravity is at point C for the CWR. It is the point where the mass of a body is concentrated and, if suspended at that point, would balance the front and rear.

Here is an example of proper truck and camper match:

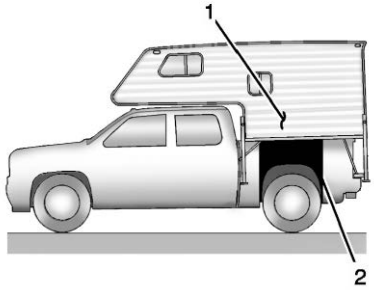

1. Camper Center of Gravity
2. Recommended Center of Gravity Location Zone

When the truck is used to carry a slide-in camper, the total cargo load of the truck consists of the manufacturer's camper weight figure, the weight of installed additional camper equipment not included in the manufacturer's camper weight figure, the weight of camper cargo, and the weight of passengers in the camper. The total cargo load should not exceed the truck's cargo weight rating, and the camper's center of gravity (1) should fall within the truck's recommended center of gravity zone (2) when installed.

Any accessories or other equipment that are added to the vehicle must be weighed. Then, subtract this extra weight from the CWR. This extra weight may shorten the center of gravity zone of the vehicle.

If the slide-in camper and its load weighs less than the CWR, the center of gravity zone for the vehicle may be larger.

Secure loose items to prevent weight shifts that could affect the balance of the vehicle. When the truck-camper is loaded, drive to a scale and weigh on the front and on the rear wheels separately to determine axle loads. Individual axle loads should not exceed either of the gross axle weight ratings (GAWR). The total axle loads should not exceed the vehicle's gross vehicle weight rating (GVWR). These ratings are given on the Certification/Tire label attached to the B-pillar. See “Certification/Tire Label” under *Vehicle Load Limits* ⇨ *238*. If weight ratings are exceeded, move or remove items to bring all weights below the ratings.

See your dealer for more information on curb weights, cargo weights, Cargo Weight Rating, and the correct center of gravity zone.

Starting and Operating

New Vehicle Break-In

Caution

The vehicle does not need an elaborate break-in. But it will perform better in the long run if you follow these guidelines:

- Keep the vehicle speed at 88 km/h (55 mph) or less for the first 805 km (500 mi).
- Do not drive at any one constant speed, fast or slow, for the first 805 km (500 mi). Do not make full-throttle starts. Avoid downshifting to brake or slow the vehicle.
- Avoid making hard stops for the first 322 km (200 mi) or so. During this time the new brake linings are not yet broken in. Hard stops with new linings can mean

(Continued)

Caution (Continued)

premature wear and earlier replacement. Follow this breaking-in guideline every time you get new brake linings.

- Do not tow a trailer during break-in. See *Trailer Towing* ⇨ *298* for the trailer towing capabilities of the vehicle and more information.

Following break-in, engine speed and load can be gradually increased.

Adjustable Throttle and Brake Pedal

If equipped, the position of the throttle and brake pedals can be changed.

The pedals can only be adjusted when the vehicle is in P (Park).

The switch used to adjust the pedals is on the center stack, below the climate controls.

Lift the switch up to move the pedals closer to your body. Press the switch down to move the pedals away.

Before you start driving, fully press the brake pedal to confirm the adjustment is right for you.

The vehicle may have a memory function, which lets pedal settings be saved and recalled. See *Memory Seats* ⇨ *60*.

Ignition Positions

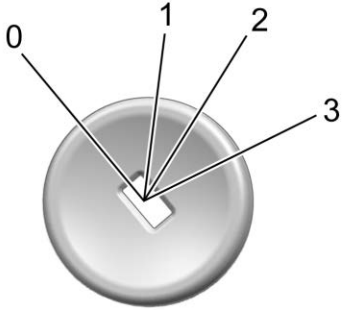

0. Stopping the Engine/LOCK/OFF
1. ACC/ACCESSORY
2. ON/RUN
3. START

The ignition switch has four positions.

To shift out of P (Park), the ignition must be in ON/RUN and the brake pedal must be applied.

0 (Stopping the Engine/LOCK/OFF) : This position turns off the vehicle. It also locks the ignition, the transmission, and the steering column, if equipped with a locking steering column.

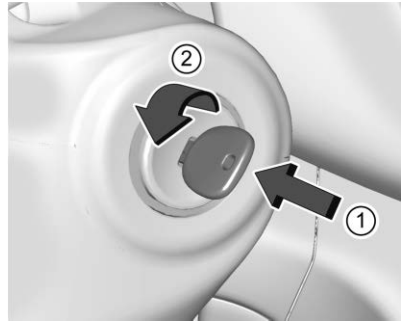

To turn off the vehicle:

1. Make sure that the vehicle is stopped.
2. Shift to P (Park).
3. Continue to hold the brake pedal, then set the parking brake. See *Parking Brake* ⇨ *271*.
4. Push the key all the way in the steering column (1), then turn the key to LOCK/OFF (2).
5. Remove the key.
6. Release the brake pedal.

See your dealer if the key can be removed in any other position.

Retained Accessory Power (RAP) will remain active. See *Retained Accessory Power (RAP)* ⇨ *251*.

A warning chime will sound when the driver door is opened and the key is in the ignition.

If equipped with a locking steering column, the steering can bind with the front wheels turned off center, which may prevent key rotation out of LOCK/OFF. If this happens, move the steering wheel from right to left while turning the key to ACC/ACCESSORY. If this does not work, then the vehicle needs service.

⚠ Warning

Turning off the vehicle while moving may cause loss of power assist in the brake and steering systems and disable the airbags. While driving, turn off the vehicle only in an emergency.

In an emergency, if the vehicle cannot be pulled over and must be turned off while driving:

1. Push the key all the way in toward the steering column, then turn the key to ACC/ACCESSORY.
2. Brake using firm and steady pressure. Do not pump the brakes repeatedly. This may deplete power assist, requiring increased brake pedal force.
3. Shift the vehicle to N (Neutral). This can be done while the vehicle is moving. Continue braking and steer the vehicle to a safe location.
4. Come to a complete stop.
5. Shift to P (Park) with an automatic transmission, or Neutral with a manual transmission.
6. Continue to hold the brake pedal, then set the parking brake. See *Parking Brake* ⇨ *271*.
7. Push the key all the way in toward the steering column, then turn the ignition to LOCK/OFF.
8. Remove the key.
9. Release the brake pedal.

Caution

Use the correct key, make sure it is all the way in — or pushed all the way in toward the steering column when turning off the vehicle — and turn it only with your hand.

1 (ACC/ACCESSORY) : This position allows features such as the infotainment system to operate while the vehicle is off. It also unlocks the steering column, if equipped with a locking steering column. Use this position if the vehicle must be pushed or towed. See *Retained Accessory Power (RAP)* ⇨ *251*.

From ON/RUN, push the key all the way in toward the steering column, then turn the key to ACC/ACCESSORY.

If the key is left in ACC/ACCESSORY with the engine off, the battery could drain and the vehicle may not start.

A warning chime will sound when the driver door is opened and the key is in the ignition.

2 (ON/RUN) : This position can be used to operate the electrical accessories and to display some instrument cluster warning and indicator lights. This position can also be used for service and diagnostics, and to verify the proper operation of the malfunction indicator lamp as may be required for emission inspection purposes.

The switch stays in this position when the engine is running. The transmission is also unlocked in this position.

If the key is left in ON/RUN with the engine off, the battery could drain and the vehicle may not start.

3 (START) : This is the position that starts the engine. When the engine starts, release the key. The ignition returns to ON/RUN for driving.

Starting the Engine

If the vehicle has a diesel engine, see the Duramax diesel supplement.

Caution

If you add electrical parts or accessories, you could change the way the engine operates. Any resulting damage would not be covered by the vehicle warranty. See *Add-On Electrical Equipment* ⇨ *318*.

Caution

If the steering wheel is turned until it reaches the end of its travel, and is held in that position while starting the vehicle, damage may occur to the power steering system and there may be loss of power steering assist.

Place the transmission in the proper gear.

Automatic Transmission

Move the shift lever to P (Park) or N (Neutral). To restart the engine when the vehicle is already moving, use N (Neutral) only.

Caution

Do not try to shift to P (Park) if the vehicle is moving. If you do, you could damage the transmission. Shift to P (Park) only when the vehicle is stopped.

Starting Procedure

1. With your foot off the accelerator pedal, turn the ignition key to START. When the engine starts, let go of the key. The idle speed will go down as the engine gets warm. Do not race the engine immediately after starting it. Operate the engine and transmission gently to allow the oil to warm up and lubricate all moving parts.

   When the low fuel warning light is on and the FUEL LEVEL LOW message is displayed in the Driver Information Center (DIC), hold the ignition switch in the START position to continue engine cranking.

Caution

Cranking the engine for long periods of time, by returning the ignition to the START position immediately after cranking has

(Continued)

Caution (Continued)

ended, can overheat and damage the cranking motor, and drain the battery. Wait at least 15 seconds between each try, to let the cranking motor cool down.

2. If the engine does not start after five to 10 seconds, especially in very cold weather (below −18 °C or 0 °F), it could be flooded with too much gasoline. Try pushing the accelerator pedal all the way to the floor and holding it there while holding the key in START for up to 15 seconds. Wait at least 15 seconds between each try, to allow the cranking motor to cool down. When the engine starts, let go of the key and accelerator. If the vehicle starts briefly but then stops again, do the same thing. This clears the extra gasoline from the engine. Do not race the engine immediately after starting it. Operate the engine and transmission gently until the oil warms up and lubricates all moving parts.

Fast Idle System

If equipped, this feature is available only with cruise control. The manual fast idle switch is operated using the cruise control buttons on the left side of the steering wheel.

This system can be used to increase engine idle speed whenever the following conditions are met:

- The parking brake is set.
- The brake pedal is not pressed.
- The vehicle must not be moving and the accelerator must not be pressed.

To control the fast idle:

- To enable the Fast Idle System, press and release the cruise control on/off button and ensure that the switch indicator light is lit.
- Press and release the cruise control SET- button. Engine speed will be held at approximately 1200 rpm.

One of the following actions will turn off the fast idle:

- Pressing the brake.
- Selecting the cruise control cancel button.
- Releasing the parking brake.
- Moving the transmission shift lever out of P (Park) or N (Neutral).
- Selecting the cruise control on/off button when it was previously on.
- Pressing the cruise control SET- button a second time.
- Pressing the accelerator more than one-quarter of the way down.
- Turning the ignition off.

Retained Accessory Power (RAP)

The following vehicle accessories can be used for up to 10 minutes after the ignition is turned off:

- Audio System
- Power Windows
- OnStar System (if equipped)
- Sunroof (if equipped)

These features work when the ignition is on or in ACC/ACCESSORY. Once the ignition is turned from on to off, the windows and sunroof continue to work up to 10 minutes or until any door is opened. The radio continues to work for up to 10 minutes or until the driver door is opened.

Accessory Power Outlets (APOs)

The vehicle may have Accessory Power Outlets (APOs) in several locations. See *Power Outlets* ⇨ *130*.

The APOs in the console or center seat position are powered by Retained Accessory Power (RAP). They will continue to work for up to 10 minutes after the ignition is turned from on to off, or until the driver door is opened.

The APOs on the center stack come from the factory powered directly from the vehicle battery, and supply accessory power at all times, regardless of ignition key position.

If electronic items are left plugged into these APOs for long periods of time with the vehicle off, the vehicle battery could be drained. The vehicle may not start if the battery is allowed to drain for an extended period of time.

Engine Coolant Heater

The engine heater can provide easier starting and better fuel economy during engine warm-up in cold weather conditions at or below −18 °C (0 °F). Vehicles with an engine heater should be plugged in at least four hours before starting. An internal thermostat in the plug-end of the cord may exist, which will prevent engine coolant heater operation at temperatures above −18 °C (0 °F).

If the vehicle has a diesel engine, see the Duramax diesel supplement.

⚠ Warning

Do not plug in the engine block heater while the vehicle is parked in a garage or under a carport. Property damage or personal injury may result. Always park the vehicle in a clear open area away from buildings or structures.

To Use the Engine Coolant Heater

1. Turn off the engine.
2. Open the hood and unwrap the electrical cord. The cord is secured to the driver side fender with a clip, next to the engine compartment fuse block. Carefully remove the

wire tie that bundles the electrical plug. Do not cut the electrical cord.

Check the heater cord for damage. If it is damaged, do not use it. See your dealer for a replacement. Inspect the cord for damage yearly.

3. Plug the cord into a normal, grounded 110-volt AC outlet.

⚠ Warning

Improper use of the heater cord or an extension cord can damage the cord and may result in overheating and fire.

- Plug the cord into a three-prong electrical utility receptacle that is protected by a ground fault detection

(Continued)

Warning (Continued)

function. An ungrounded outlet could cause an electric shock.

- Use a weatherproof, heavy-duty, 15 amp-rated extension cord if needed. Failure to use the recommended extension cord in good operating condition, or using a damaged heater or extension cord, could make it overheat and cause a fire, property damage, electric shock, and injury.
- Do not operate the vehicle with the heater cord permanently attached to the

(Continued)

Warning (Continued)

vehicle. Possible heater cord and thermostat damage could occur.

- While in use, do not let the heater cord touch vehicle parts or sharp edges. Never close the hood on the heater cord.
- Before starting the vehicle, unplug the cord, reattach the cover to the plug, and securely fasten the cord. Keep the cord away from any moving parts.

4. Before starting the engine, be sure to unplug and store the cord as it was before to keep it away from moving engine parts. If you do not, it could be damaged.

The length of time the heater should remain plugged in depends on several factors. Ask a dealer in the area where you will be parking the vehicle for the best advice on this.

Shifting Into Park

⚠ Warning

It can be dangerous to get out of the vehicle if the shift lever is not fully in P (Park) with the parking brake firmly set. The vehicle can roll. If you have left the engine running, the vehicle can move suddenly. You or others could be injured. To be sure the vehicle will not move, even when you are on fairly level ground, use the steps that follow. With four-wheel drive, if the transfer case is in N (Neutral), the vehicle will be free to roll, even if the shift lever is in P (Park). Be sure the transfer case is in a drive gear. If towing a trailer, see *Driving Characteristics and Towing Tips* ⇨ *294*.

1. Hold the brake pedal down, then set the parking brake. See *Parking Brake* ⇨ *271*.
2. Move the shift lever into the P (Park) position by pulling the shift lever toward you and moving it up as far as it will go.
3. Be sure the transfer case (if equipped) is in a drive gear– not in N (Neutral).
4. Push the ignition key in, towards the steering column and then turn the ignition off.
5. Remove the key and take it with you. If you can leave the vehicle with the ignition key in your hand, the vehicle is in P (Park).

Leaving the Vehicle with the Engine Running

⚠ Warning

It can be dangerous to leave the vehicle with the engine running. The vehicle could move suddenly if the shift lever is not fully in P (Park) with the parking brake firmly set.

(Continued)

Warning (Continued)

If you have four-wheel drive and the transfer case is in N (Neutral), the vehicle will be free to roll, even if the shift lever is in P (Park). So be sure the transfer case is in a drive gear – not in N (Neutral).

And, if you leave the vehicle with the engine running, it could overheat and even catch fire. You or others could be injured. Do not leave the vehicle with the engine running unless you have to.

If you have to leave the vehicle with the engine running, be sure the vehicle is in P (Park) and the parking brake is firmly set before you leave it. After you move the shift lever into P (Park), hold the regular brake pedal down. Then, see if you can move the shift lever away from P (Park) without first pulling it toward you. If you can, it means that the shift lever was not fully locked into P (Park).

Torque Lock

If you are parking on a hill and you do not shift the transmission into P (Park) properly, the weight of the vehicle may put too much force on the parking pawl in the transmission. You may find it difficult to pull the shift lever out of P (Park). This is called torque lock. To prevent torque lock, set the parking brake and then shift into P (Park) properly before you leave the driver seat.

When you are ready to drive, move the shift lever out of P (Park) before you release the parking brake.

If torque lock does occur, you may need to have another vehicle push yours a little uphill to take some of the pressure from the parking pawl in the transmission. You will then be able to pull the shift lever out of P (Park).

Shifting out of Park

This vehicle is equipped with an electronic shift lock release system. The shift lock release system is designed to prevent movement of the shift lever out of P (Park), unless the ignition is on and the brake pedal is applied.

The shift lock release is always functional except in the case of an uncharged or low voltage (less than 9 volt) battery.

If the vehicle has an uncharged battery or a battery with low voltage, try charging or jump starting the battery. See *Jump Starting - North America* ⇨ *409*.

To shift out of P (Park):

1. Apply the brake pedal.
2. Move the shift lever to the desired position.

If you still are unable to shift out of P (Park):

1. Ease the pressure on the shift lever.
2. While holding down the brake pedal, push the shift lever all the way into P (Park).
3. Move the shift lever to the desired position.

If you are still having a problem shifting, then have the vehicle serviced soon.

Parking over Things That Burn

⚠ Warning

Things that can burn could touch hot exhaust parts under the vehicle and ignite. Do not park over papers, leaves, dry grass, or other things that can burn.

Active Fuel Management

Vehicles with a gasoline engine may have Active Fuel Management. This system allows the engine to operate on either all of its cylinders, or in reduced cylinder operation, depending on the driving conditions.

When less power is required, such as cruising at a constant vehicle speed, the system will operate in reduced cylinder operation, allowing the vehicle to achieve better fuel economy. When greater power demands are required, such as accelerating from a stop, passing, or merging onto a freeway, the system will maintain full-cylinder operation.

Engine Exhaust

⚠ Warning

Engine exhaust contains carbon monoxide (CO), which cannot be seen or smelled. Exposure to CO can cause unconsciousness and even death.

Exhaust may enter the vehicle if:

- The vehicle idles in areas with poor ventilation (parking garages, tunnels, deep snow that may block underbody airflow or tail pipes).
- The exhaust smells or sounds strange or different.
- The exhaust system leaks due to corrosion or damage.
- The vehicle exhaust system has been modified, damaged, or improperly repaired.

(Continued)

Warning (Continued)

- There are holes or openings in the vehicle body from damage or aftermarket modifications that are not completely sealed.

If unusual fumes are detected or if it is suspected that exhaust is coming into the vehicle:

- Drive it only with the windows completely down.
- Have the vehicle repaired immediately.

Never park the vehicle with the engine running in an enclosed area such as a garage or a building that has no fresh air ventilation.

Running the Vehicle While Parked

It is better not to park with the engine running.

If the vehicle is left with the engine running, follow the proper steps to be sure the vehicle will not move. See *Shifting Into Park* ⇨ *253* and *Engine Exhaust* ⇨ *255*.

If parking on a hill and pulling a trailer, see *Driving Characteristics and Towing Tips* ⇨ *294*.

Automatic Transmission

If equipped, there is an electronic shift lever position indicator within the instrument cluster. This display comes on when the ignition key is turned on.

There are several different positions for the shift lever.

Heavy-Duty 6-Speed Automatic Transmission Shown, Others Similar

See “Range Selection Mode” under *Manual Mode* ⇨ *259*.

P : This position locks the rear wheels. Use P (Park) when starting the engine because the vehicle cannot move easily.

When parked on a hill, especially when the vehicle has a heavy load, you might notice an increase in the effort to shift out of P (Park). See “Torque Lock” under *Shifting Into Park* ⇨ *253*

⚠ Warning

It is dangerous to get out of the vehicle if the shift lever is not fully in P (Park) with the parking brake firmly set. The vehicle can roll.

Do not leave the vehicle when the engine is running. If you have left the engine running, the vehicle can move suddenly. You or others could be injured. To be sure the vehicle will not move, even when you are on fairly level ground, always set the parking brake and move the shift lever to P (Park). See *Shifting Into Park* ⇨ *253* and *Driving Characteristics and Towing Tips* ⇨ *294*.

⚠ Warning

If equipped with four-wheel drive, the vehicle will be free to roll if the transfer case is in N (Neutral), even when the shift lever is in P (Park). You or someone else could be seriously injured. Be sure the transfer case is in a drive gear — 2↑, 4↑, or 4↓ — or set the parking brake before placing the transfer case in N (Neutral). See *Four-Wheel Drive* ⇨ *262*.

R : Use this gear to back up.

Caution

Shifting to R (Reverse) while the vehicle is moving forward could damage the transmission. The repairs would not be covered by the vehicle warranty. Shift to R (Reverse) only after the vehicle is stopped.

To rock the vehicle back and forth to get out of snow, ice, or sand without damaging the transmission, see *If the Vehicle Is Stuck* ⇨ *237*.

N : In this position, the engine does not connect with the wheels. To restart the engine when the vehicle is already moving, use N (Neutral) only.

Also, use N (Neutral) when the vehicle is being towed.

⚠ Warning

Shifting into a drive gear while the engine is running at high speed is dangerous. Unless your foot is firmly on the brake pedal, the vehicle could move very rapidly. You could lose control and hit people or objects. Do not shift into a drive gear while the engine is running at high speed.

Caution

Shifting out of P (Park) or N (Neutral) with the engine running at high speed may damage the transmission. The repairs would not be covered by the vehicle warranty. Be sure the engine is not running at high speed when shifting the vehicle.

Caution

A transmission hot message may display if the automatic transmission fluid is too hot. Driving under this condition can damage the vehicle. Stop and idle the engine to cool the automatic transmission fluid. This message clears when the transmission fluid has cooled sufficiently.

D : This position is for normal driving. It provides the best fuel economy. If more power is needed for passing, press the accelerator pedal down.

- Going less than about 55 km/h (35 mph), push the accelerator pedal about halfway down.
- Going about 55 km/h (35 mph) or more, push the accelerator all the way down.

  By doing this, the vehicle shifts down to the next gear and has more power.

Use D (Drive) and Tow/Haul Mode when towing a trailer, carrying a heavy load, driving on steep hills, or driving off-road. Shift the transmission to a lower gear selection if the transmission shifts too often.

Downshifting the transmission in slippery road conditions could result in skidding. See “Skidding” under *Loss of Control* ⇨ *229*.

The vehicle has a shift stabilization feature that adjusts the transmission shifting to the current driving conditions in order to reduce rapid upshifts and downshifts. This shift stabilization feature is designed to determine, before making an upshift, if the engine is able to maintain vehicle speed by analyzing things such as vehicle speed, throttle position, and vehicle load. If the shift stabilization feature determines that a current vehicle speed cannot be maintained, the transmission does not upshift and instead holds the current gear. In some cases, this could appear to be a delayed shift, however the transmission is operating normally.

The transmission uses adaptive shift controls. The adaptive shift control process continually compares key shift parameters to pre-programmed ideal shifts stored in the transmission’s computer. The transmission constantly makes adjustments to improve vehicle performance according to how the vehicle is being used, such as with a heavy load or when the temperature changes. During this adaptive shift control process, shifting might feel different as the transmission determines the best settings.

When temperatures are very cold, the transmission's gear shifting could be delayed providing more stable shifts until the engine warms up. Shifts could be more noticeable with a cold transmission. This difference in shifting is normal.

L : This position allows selection of a range of gears appropriate for current driving conditions.
If equipped, see “Range Selection Mode” under *Manual Mode* ⇨ *259*.

Caution

Spinning the tires or holding the vehicle in one place on a hill using only the accelerator pedal may damage the transmission. The repair will not be covered by the vehicle warranty. If the vehicle is stuck, do not spin the tires.

(Continued)

Caution (Continued)

When stopping on a hill, use the brakes to hold the vehicle in place.

Normal Mode Grade Braking

If equipped with a gasoline engine and an automatic transmission, Normal Mode Grade Braking is enabled when the vehicle is started, but is not enabled in Range Selection Mode. It assists in maintaining desired vehicle speeds when driving on downhill grades by using the engine and transmission to slow the vehicle. The first time the system engages for each ignition key cycle, a DIC message will be displayed.

To disable or enable Normal Mode Grade Braking within the current ignition key cycle, press and hold the Tow/Haul button for five seconds. When the button is released, the requested mode change is made. A DIC message displays.

For other forms of grade braking, see *Tow/Haul Mode* ⇨ *261* and *Cruise Control* ⇨ *276*.

Kickdown Mode

If equipped, the accelerator pedal provides an additional downshift after pressing through the kickdown feature.

It requires extra pedal pressure near the end of its travel to engage.

Manual Mode

Range Selection Mode

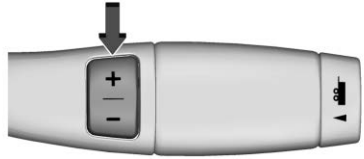

If equipped, Range Selection Mode helps control the vehicle's transmission and vehicle speed while driving downhill or towing a trailer by letting you select a desired range of gears.

To use this feature:

1. Move the shift lever to L (Manual Mode).
2. Press the plus/minus buttons on the shift lever to select the desired range of gears for current driving conditions.

With an 8-speed automatic transmission, hold the plus/minus buttons on the shift lever to select the highest or lowest range available for the current vehicle speed.

When the shift lever is moved from D (Drive) to L (Manual Mode), a number displays next to the L, indicating the current transmission range.

This number is the highest gear that the transmission will command while operating in L (Manual Mode). All gears below that number are available. As driving conditions change, the transmission can automatically shift to lower gears.

For example, when L5 is selected, 1 (First) through 5 (Fifth) gears are automatically shifted by the transmission, but 6 (Sixth) cannot be used until the plus/minus button on the shift lever is used to change to the range.

In vehicles with gasoline engines, when the shift lever is moved from D (Drive) to L (Manual Mode), a downshift may occur. The gear that the transmission is operating in when the shift lever is moved from D (Drive) to L (Manual Mode) determines if a downshift occurs. See the following chart.

6-Speed Automatic Transmission

Gear before shifting from D (Drive) to L (Manual Mode)	6th	5th	4th	3rd	2nd	1st
Range after shifting from D (Drive) to L (Manual Mode)	L4	L4	L3	L2	L2	L1

8-Speed Automatic Transmission

Gear before shifting from D (Drive) to L (Manual Mode)	8th	7th	6th	5th	4th	3rd	2nd	1st
Range after shifting from D (Drive) to L (Manual Mode) – Tow/Haul not engaged	L6	L6	L5	L4	L3	L3	L2	L1
Range after shifting from D (Drive) to L (Manual Mode) – Tow/Haul engaged	L6	L5	L4	L3	L3	L3	L2	L1

Grade Braking is not available when Range Selection Mode is active. See *Tow/Haul Mode* ⇨ *261*.

While using Range Selection Mode, cruise control and the Tow/Haul Mode can be used.

If the vehicle has an exhaust brake, it can also be used, but will not automatically downshift the transmission. See “Exhaust Brake” in the Duramax diesel supplement.

Caution

Spinning the tires or holding the vehicle in one place on a hill using only the accelerator pedal may damage the transmission. The repair will not be covered by the vehicle warranty. If the vehicle is stuck, do not spin the tires. When stopping on a hill, use the brakes to hold the vehicle in place.

Low Traction Mode

If equipped, Low Traction Mode assists in vehicle acceleration when road conditions are slippery, such as with ice or snow. While the vehicle is at a stop, select L2 using Range Selection Mode. This will limit torque to the wheels and help to prevent the tires from spinning.

Tow/Haul Mode

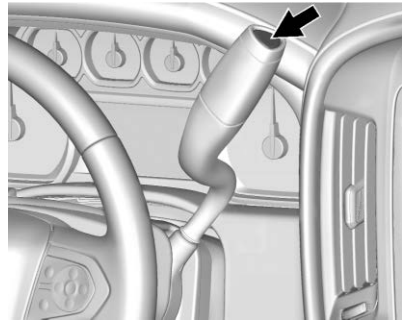

The Tow/Haul Mode adjusts the transmission shift pattern to reduce shift cycling. This provides increased performance, vehicle control, and enhanced transmission and engine cooling when driving down steep hills or mountain grades, when towing, or when hauling heavy loads.

The selector button is on the end of the shift lever. Turn the Tow/Haul Mode on and off by pressing the button. When the Tow/Haul Mode is enabled, a light on the instrument cluster will come on.

See *Tow/Haul Mode Light* ⇨ *150* and *Hill and Mountain Roads* ⇨ *235*. Also see “Tow/Haul Mode” under *Towing Equipment* ⇨ *306*.

Tow/Haul Mode Grade Braking

Tow/Haul Mode Grade Braking is only enabled while the Tow/Haul Mode is selected and the vehicle is not in the Range Selection Mode. See “Tow/Haul Mode” listed previously and *Manual Mode* ⇨ *259*. Tow/Haul Mode Grade Braking assists in maintaining desired vehicle speeds when driving on downhill grades by using the engine and transmission to slow the vehicle.

If equipped, on vehicles with a gasoline engine, to disable or enable Tow/Haul Grade Braking within the current ignition key cycle, press and hold the Tow/Haul button for five seconds. When the button is released, the requested mode change is made. A DIC message is displayed.

On vehicles with a diesel engine, Tow/Haul Mode Grade Braking can be enabled or disabled by pressing the Tow/Haul Mode button. Use the exhaust brake and Tow/Haul Mode for maximum grade braking.

See *Towing Equipment* ⇨ *306*.

For other forms of grade braking, see *Automatic Transmission* ⇨ *256* and *Cruise Control* ⇨ *276*.

Drive Systems

Four-Wheel Drive

If equipped, four-wheel drive engages the front axle for extra traction.

Read the appropriate section for transfer case operation before using.

Caution

Do not drive on clean, dry pavement in 4 ↑ and 4 ↓ (if equipped) for an extended period of time. These conditions may cause premature wear on the vehicle's powertrain.

Driving on clean, dry pavement in 4 ↑ or 4 ↓ may:

- Cause a vibration to be felt in the steering system.
- Cause tires to wear faster.
- Make the transfer case harder to shift, and cause it to run noisier.

⚠ Warning

If equipped with four-wheel drive, the vehicle will be free to roll if the transfer case is in N (Neutral), even when the shift lever is in P (Park). You or someone else could be seriously injured. Be sure the transfer case is in a drive gear — 2 ↑, 4 ↑, or 4 ↓ — or set the parking brake before placing the transfer case in N (Neutral). See *Shifting Into Park* ⇨ *253*.

Caution

Extended high-speed operation in 4 ↓ may damage or shorten the life of the drivetrain.

Engagement noise and bump when shifting between 4 ↓ and 4 ↑ or from N (Neutral), with the engine running, is normal.

Shifting into 4 ↓ will turn Traction Control and StabiliTrak/Electronic Stability Control (ESC) off. See *Traction Control/Electronic Stability Control* ⇨ *273*.

Manual Transfer Case

Move the lever to shift into and out of four-wheel drive.

An indicator light comes on when four-wheel drive is engaged. See *Four-Wheel-Drive Light* ⇨ *150*.

N (Neutral) : Use only when the vehicle needs to be towed. See *Recreational Vehicle Towing* ⇨ *413* or *Towing the Vehicle* ⇨ *413*.

2 ↑ (Two-Wheel Drive High) : Use this setting for driving on most streets and highways. The front axle is not engaged. This setting provides the best fuel economy.

4 ↓ (Four-Wheel Drive Low) : This setting also engages the front axle and delivers extra torque. Choose 4 ↓ if driving off-road in deep sand, deep mud, or deep snow, and while climbing or descending steep hills. When engaged, keep vehicle speed below 72 km/h (45 mph).

4 ↑ (Four-Wheel Drive High) : Use this setting when extra traction is needed. The front axle engages and helps when driving on snowy or icy roads, when off-roading, or when plowing snow.

The vehicle can be shifted between 2 ↑ and 4 ↑ while the vehicle is moving. In extremely cold weather, it may be necessary to stop or slow the vehicle to shift into 4 ↑.

Using the Manual Transfer Case

- Use quick motions to shift into or out of 4 ↓ or N (Neutral).
- Shifting may be harder when the vehicle is cold, but will return to normal once warmed up.
- Four-wheel drive reduces fuel economy.
- Delayed shifts from 4 ↑ to 2 ↑ may be experienced due to uneven tire wear, low tire pressure, high vehicle loading, or cold temperatures.

Shifting from 2 ↑ to 4 ↑

- Shifts can be made at any vehicle speed.
- Shift in one continuous motion.

- Shifting while the vehicle is in motion may require that moderate force be applied to the shift lever before 4 ↑ can be engaged, especially in cold weather.
- In extremely cold weather, it may be necessary to slow or stop the vehicle to shift.
- While in 4 ↑, the vehicle can be driven at any posted legal speed limit.

Shifting In or Out of 4 ↓

Caution
Shifting the transfer case into 4 ↓ while moving at speeds faster than 5 km/h (3 mph) may cause premature wear to the transfer case, and may cause the gears to grind.

1. If possible, shift with the vehicle moving 5 km/h (3 mph) or less.
2. Shift the transmission into N (Neutral).
3. Shift the transfer case shift lever in one continuous motion.
4. Shifting with the vehicle at a stop may be more difficult. It is possible that the shift will not complete and the transfer case will remain in N (Neutral). This is normal. To complete the shift, with the engine running, shift the transmission to D (Drive) and back to N (Neutral), and reattempt the transfer case shift.

Shifting In or Out of N (Neutral)

1. Have the engine running.
2. Set the parking brake. Press and hold the brake pedal. See *Parking Brake* ⇨ *271*.
3. Place the transmission into N (Neutral).
4. Shift the transfer case lever in one continuous motion into or out of N (Neutral).

Electronic Transfer Case

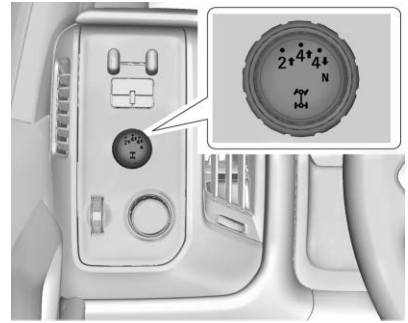

Use the transfer case knob, next to the steering wheel, to shift into and out of four-wheel drive for extra traction.

All of the lights will flash on then off momentarily when the ignition is turned on. The light that remains on will indicate the state of the transfer case.

If the indicator mark on the knob does not match up with the light then that likely means the knob was moved when the ignition was off.

The indicator mark on the knob must line up with the indicator light before a shift can be commanded. To command a shift rotate the transfer case knob to the new desired position. The light will flash meaning that the shift is in progress. When the shift is completed the new position will be illuminated. If the transfer case cannot complete a shift command, it will go back to its last chosen setting.

In extreme cold weather it may be necessary to slow or stop the vehicle to shift from 2↑ to 4↑.

Delayed shifts from 4↑ to 2↑ may be experienced due to uneven tire wear, low tire pressure, high vehicle loading, or cold temperatures.

Caution

Shifting the transmission into gear before the requested mode indicator light has stopped flashing could damage the transfer case.

The settings are:

N (Neutral) : Use only when the vehicle needs to be towed. See *Recreational Vehicle Towing* ⇨ *413* or *Towing the Vehicle* ⇨ *413*.

2↑ (Two-Wheel Drive High) : Use for driving on most streets and highways. The front axle is not engaged. This setting provides the best fuel economy.

4↓ (Four-Wheel Drive Low) : This setting engages the front axle and delivers extra torque. Choose 4↓ if driving off-road in deep sand, deep mud, or deep snow, and while climbing or descending steep hills. When engaged, keep vehicle speed below 72 km/h (45 mph).

Shifting into 4↓ will turn Traction Control and StabiliTrak/ESC off. See *Traction Control/Electronic Stability Control* ⇨ *273*.

4↑ (Four-Wheel Drive High) : Use when extra traction is needed. The front axle engages and helps when driving on snowy or icy roads, when off-roading, or when plowing snow. The vehicle can be shifted from 2↑ to 4↑ while the vehicle is moving.

Shifting Into 4↑

Turn the knob to 4↑ at any speed up to 121 km/h (75 mph), except from 4↓. The indicator light will flash while shifting and will remain on the selected setting.

Shifting Into 2↑

Turn the knob to 2↑ at any speed, except when shifting from 4↓.

Shifting Into 4↓

When 4↓ is engaged, vehicle speed should be kept below 72 km/h (45 mph).

1. The ignition must be on and the vehicle must be stopped or moving less than 5 km/h (3 mph) with the transmission in N (Neutral). It is best for the vehicle to be moving 1.6 to 3.2 km/h (1 to 2 mph).

2. Turn the knob to 4 ↓. Wait for the 4 ↓ indicator light to stop flashing before shifting the transmission into gear.

If the transmission is in gear and/or moving more than 5 km/h (3 mph), the 4 ↓ indicator light will flash for 30 seconds and not complete the shift. After 30 seconds the transfer case will shift to 4 ↑. Turn the knob to 4 ↑ to see the indicator. With the vehicle moving less than 5 km/h (3 mph), and the transmission in N (Neutral), attempt the shift again.

Shifting Out of 4 ↓

1. To shift out of 4 ↓ the vehicle must be stopped or moving less than 5 km/h (3 mph) with the transmission in N (Neutral) and the ignition in on. It is best for the vehicle to be moving 1.6 to 3.2 km/h (1 to 2 mph).
2. Turn the knob to 4 ↑ or 2 ↑. Wait for the 4 ↑ or 2 ↑ indicator light to stop flashing before shifting the transmission into gear.

If the transmission is in gear and/or moving more than 5 km/h (3 mph), the 4 ↑ or 2 ↑ indicator light will flash for 30 seconds, but will not complete the shift. With the vehicle moving less than 5 km/h (3 mph), and the transmission in N (Neutral), attempt the shift again.

Shifting Into N (Neutral)

To shift:

1. Park the vehicle on a level surface.
2. Set the parking brake and press and hold the brake pedal. See *Parking Brake* ⇨ *271*.
3. Start the vehicle or turn the ignition on.
4. Shift the transmission to N (Neutral).
5. Shift the transfer case to 2 ↑.
6. Turn the transfer case knob clockwise to N (Neutral) until it stops and hold it there until the N (Neutral) light starts flashing. This will take at least 10 seconds. Then slowly release the knob to the 4 ↓ position. The N (Neutral) light will come on when the transfer case shift to N (Neutral) is complete.
7. With the engine running, verify that the transfer case is in N (Neutral) by shifting the transmission to R (Reverse), then to D (Drive). There should be no movement of the vehicle while shifting the transmission.
8. Turn the engine off, and the ignition to ACC/ACCESSORY.
9. Place the transmission shift lever in P (Park). See *Recreational Vehicle Towing* ⇨ *413*.
10. Turn the ignition off.

Shifting Out of N (Neutral)

To shift:

1. Set the parking brake and apply the brake pedal.
2. Turn the ignition on with the engine off.
3. Shift the transmission to N (Neutral).
4. Turn the transfer case knob to 2 ↑.

   After the transfer case has shifted out of N (Neutral), the N (Neutral) light will go out.
5. Release the parking brake.

Caution
Shifting the transmission into gear before the requested mode indicator light has stopped flashing could damage the transfer case.

6. Start the engine and shift the transmission to the desired gear.

Automatic Transfer Case

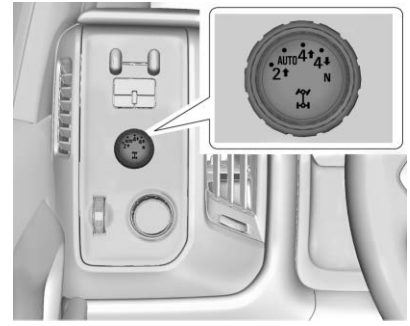

If equipped, use the transfer case knob next to the steering wheel to shift into and out of four-wheel drive.

All of the lights will flash on then off momentarily when the ignition is turned on. The light that remains on will indicate the state of the transfer case.

If the indicator mark on the knob does not match up with the light then that likely means the knob was moved when the ignition was off.

The indicator mark on the knob must line up with the indicator light before a shift can be commanded. To command a shift rotate the transfer case knob to the new desired position. The light will flash meaning that the shift is in progress. When the shift is completed the new position will be illuminated. If the transfer case cannot complete a shift command, it will go back to its last chosen setting.

The settings are:

N (Neutral) : Use only when the vehicle needs to be towed. See *Recreational Vehicle Towing* ⇨ *413* or *Towing the Vehicle* ⇨ *413*.

2 ↑ (Two-Wheel Drive High) : Use for driving on most streets and highways. The front axle is not engaged. This setting provides the best fuel economy.

AUTO (Automatic Four-Wheel Drive) : Use when road surface traction conditions are variable. When driving in AUTO, the front axle is engaged, and the vehicle's power is sent to the front and rear

wheels automatically based on driving conditions. This setting provides slightly lower fuel economy than 2 ↑.

Do not use AUTO mode, if equipped, to park on a steep grade with poor traction such as ice, snow, mud, or gravel. In AUTO mode only the rear wheels will hold the vehicle from sliding when parked. If parking on a steep grade, use 4 ↑ to keep all four wheels engaged.

4 ↑ (Four-Wheel Drive High) : Use this position when extra traction is needed, such as when driving on snowy or icy roads, when off-roading, or when plowing snow.

4 ↓ (Four-Wheel Drive Low) : This setting engages the front axle and delivers extra torque. Choose 4 ↓ when driving off-road in deep sand, deep mud, or deep snow, and while climbing or descending steep hills.

Shifting into 4 ↓ will turn Traction Control and StabiliTrak off. See *Traction Control/Electronic Stability Control* ⇨ *273*.

Shifting Into 4 ↑ or AUTO

Turn the knob to the 4 ↑ or AUTO position at any speed, except from 4 ↓. The indicator light will flash while shifting and will remain on when the shift is completed.

Shifting Into 2 ↑

Turn the knob to 2 ↑ at any speed, except when shifting from 4 ↓. The indicator light will flash while shifting and will remain on when the shift is completed.

Shifting Into 4 ↓

When 4 ↓ is engaged, keep vehicle speed below 72 km/h (45 mph).

To shift:

1. The ignition must be on and the vehicle must be stopped or moving less than 5 km/h (3 mph) with the transmission in N (Neutral). It is best for the vehicle to be moving 1.6 to 3.2 km/h (1 to 2 mph).
2. Turn the knob to 4 ↓. Wait for the 4 ↓ indicator light to stop flashing before shifting the transmission into gear.

Caution

Shifting the transmission into gear before the requested mode indicator light has stopped flashing could damage the transfer case.

If the transmission is in gear and/or moving more than 5 km/h (3 mph), the 4 ↓ indicator light will flash for 30 seconds and not complete the shift. After 30 seconds the transfer case will shift to 4 ↑. Turn the knob to 4 ↑ to display the indicator. With the vehicle moving less than 5 km/h (3 mph), and the transmission in N (Neutral), attempt the shift again.

Shifting Out of 4 ↓

To shift:

1. The vehicle must be stopped or moving less than 5 km/h (3 mph) with the transmission in N (Neutral) and the ignition on. It is best for the vehicle to be moving 1.6 to 3.2 km/h (1 to 2 mph).
2. Turn the knob to 4 ↑, AUTO, or 2 ↑. Wait for the 4 ↑, AUTO, or 2 ↑ indicator light to stop flashing before shifting the transmission into gear.

Caution
Shifting the transmission into gear before the requested mode indicator light has stopped flashing could damage the transfer case.

If the transmission is in gear and/or moving more than 5 km/h (3 mph), the 4 ↑, AUTO, or 2 ↑ indicator light will flash for 30 seconds but will not complete the shift. With the vehicle moving less than 5 km/h (3 mph), and the transmission in N (Neutral), attempt the shift again.

Shifting Into N (Neutral)

To shift into N (Neutral):

1. Park the vehicle on a level surface.
2. Set the parking brake and press and hold the brake pedal. See *Parking Brake* ⇨ *271*.
3. Start the vehicle or turn the ignition on.
4. Shift the transmission to N (Neutral).
5. Shift the transfer case to 2 ↑.
6. Turn the transfer case knob clockwise to N (Neutral) until it stops and hold it there until the N (Neutral) light starts flashing. This will take at least 10 seconds. Then slowly release the knob to the 4 ↓ position. The N (Neutral) light will come on when the transfer case shift to N (Neutral) is complete.
7. With the engine running, verify that the transfer case is in N (Neutral) by shifting the transmission to R (Reverse), then shift the transmission to D (Drive). There should be no movement of the vehicle while shifting the transmission.
8. Turn the engine off, and the ignition to ACC/ACCESSORY.
9. Place the transmission shift lever in P (Park).
10. Turn the ignition to off.

Shifting Out of N (Neutral)

To shift out of N (Neutral):

1. Set the parking brake and apply the brake pedal.
2. Turn the ignition on with the engine off.
3. Shift the transmission to N (Neutral).
4. Turn the transfer case knob to the desired setting.

   After the transfer case has shifted out of N (Neutral), the N (Neutral) light will go out.
5. Release the parking brake.
6. Start the engine and shift the transmission to the desired gear.

Brakes

Antilock Brake System (ABS)

This vehicle has an Antilock Brake System (ABS), an advanced electronic braking system that helps prevent a braking skid.

When the vehicle begins to drive away, ABS checks itself.
A momentary motor or clicking noise may be heard while this test is going on, and it may even be noticed that the brake pedal moves a little. This is normal.

If there is a problem with ABS, this warning light stays on. See *Antilock Brake System (ABS) Warning Light* ⇨ *149*.

If driving safely on a wet road and it becomes necessary to slam on the brakes and continue braking to avoid a sudden obstacle, a computer senses the wheels are slowing down. If one of the wheels is about to stop rolling, the computer will separately work the brakes at each wheel.

ABS can change the brake pressure to each wheel, as required, faster than any driver could. This can help you steer around the obstacle while braking hard.

As the brakes are applied, the computer keeps receiving updates on wheel speed and controls braking pressure accordingly.

Remember: ABS does not change the time needed to get a foot up to the brake pedal or always decrease stopping distance. If you get too close to the vehicle in front of you, there will not be enough time to apply the brakes if that vehicle suddenly slows or stops. Always leave enough room up ahead to stop, even with ABS.

Using ABS

Do not pump the brakes. Just hold the brake pedal down firmly and let ABS work. You may hear the ABS pump or motor operating and feel the brake pedal pulsate. This is normal.

Braking in Emergencies

ABS allows you to steer and brake at the same time. In many emergencies, steering can help more than even the very best braking.

Parking Brake

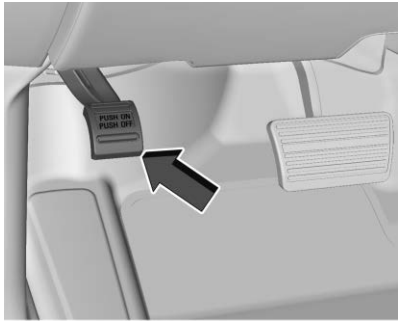

Set the parking brake by holding the regular brake pedal down, then pushing down the parking brake pedal.

If the ignition is on, the brake system warning light will come on. See *Brake System Warning Light* ⇨ *148*.

Caution
Driving with the parking brake on can overheat the brake system and cause premature wear or damage to brake system parts. Make sure that the parking brake is fully released and the brake warning light is off before driving.

To release the parking brake, hold the regular brake pedal down, then push down momentarily on the parking brake pedal until you feel the pedal release. Slowly pull your foot up off the parking brake pedal. If the parking brake is not released when you begin to drive, a DIC message will appear and a chime will sound warning you that the parking brake is still on.

If you are towing a trailer and are parking on any hill see *Driving Characteristics and Towing Tips* ⇨ *294*.

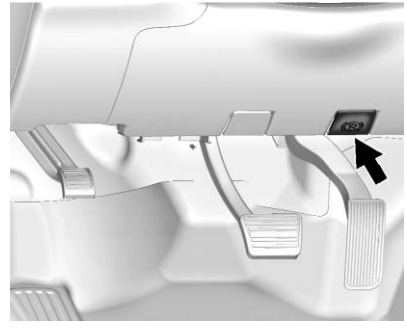

For vehicles with a release handle, set the parking brake by holding the regular brake pedal down, then pushing down the parking brake pedal.

If the ignition is on, the brake system warning light will come on. See *Brake System Warning Light* ⇨ *148*.

A chime sounds and the warning light flashes when the parking brake is applied and the vehicle is moving at least 8 km/h (5 mph).

To release the parking brake, hold the regular brake pedal down. Then pull the bottom edge of the lever with the parking brake symbol, located to the right of the steering column.

If the ignition is on when the parking brake is released, the brake system warning light goes off.

Caution
Driving with the parking brake on can overheat the brake system and cause premature wear or damage to brake system parts. Make sure that the parking brake is fully released and the brake warning light is off before driving.

If you are towing a trailer and are parking on any hill see *Driving Characteristics and Towing Tips* ⇨ *294*.

Brake Assist

The Brake Assist feature is designed to assist the driver in stopping or decreasing vehicle speed in emergency driving conditions. This feature uses the stability system hydraulic brake control module to supplement the power brake system under conditions where the driver has quickly and forcefully applied the brake pedal in an attempt to quickly stop or slow down the vehicle. The stability system hydraulic brake control module increases brake pressure at each corner of the vehicle until the ABS activates. Minor brake pedal pulsation or pedal movement during this time is normal and the driver should continue to apply the brake pedal as the driving situation dictates The Brake Assist feature will automatically disengage when the brake pedal is released or brake pedal pressure is quickly decreased.

Hill Start Assist (HSA)

This vehicle has a Hill Start Assist (HSA) feature, which may be useful when the vehicle is stopped on a grade. This feature is designed to prevent the vehicle from rolling, either forward or rearward, during vehicle drive off. After you completely stop and hold the vehicle in a complete standstill on a grade, HSA will automatically activate. During the transition period between when you release the brake pedal and start to accelerate to drive off on a grade, HSA holds the braking pressure for a maximum of two seconds to ensure that there is no rolling. The brakes will automatically release when the accelerator pedal is applied within the two-second window. If the vehicle is equipped with the Integrated Trailer Brake Control (ITBC) system, HSA may also apply the trailer brakes. It will not activate if the vehicle is in a drive gear and facing downhill or if the vehicle is facing uphill and in R (Reverse).

There may be situations on minor hills (less than 5% grade) with a loaded vehicle or while pulling a trailer where HSA may activate.

If you release the brake pedal and then reapply the brake pedal while HSA is activated, the brake pedal typically feels firmer with less pedal travel.

Ride Control Systems

Traction Control/ Electronic Stability Control

System Operation

The vehicle has a Traction Control System (TCS) and StabiliTrak/ Electronic Stability Control (ESC), an electronic stability control system. These systems help limit wheel spin and assist the driver in maintaining control, especially on slippery road conditions.

TCS activates if it senses any of the drive wheels are spinning or beginning to lose traction. When this happens, TCS applies the brakes to the spinning wheels and reduces engine power to limit wheel spin.

StabiliTrak/ESC activates when the vehicle senses a difference between the intended path and the direction the vehicle is actually traveling. StabiliTrak/ESC selectively applies braking pressure to any one of the vehicle wheel brakes to assist the driver in keeping the vehicle on the intended path. Trailer Sway Control (TSC) is also on automatically when the vehicle is started. See *Trailer Sway Control (TSC)* ⇨ *316*.

If cruise control is being used and traction control or StabiliTrak/ESC begins to limit wheel spin, cruise control will disengage. Cruise control may be turned back on when road conditions allow.

Both systems come on automatically when the vehicle is started and begins to move. The systems may be heard or felt while they are operating or while performing diagnostic checks. This is normal and does not mean there is a problem with the vehicle.

It is recommended to leave both systems on for normal driving conditions, but it may be necessary to turn TCS off if the vehicle gets stuck in sand, mud, ice, or snow. See *If the Vehicle Is Stuck* ⇨ *237* and “Turning the Systems Off and On” later in this section.

When the transfer case (if equipped) is in Four-Wheel Drive Low, the stability system is automatically disabled, OFF comes on, and the appropriate message will appear on the DIC. Both traction control and StabiliTrak/ESC are automatically disabled in this condition.

The indicator light for both systems is in the instrument cluster. This light will:

- Flash when TCS is limiting wheel spin
- Flash when StabiliTrak/ESC is activated
- Turn on and stay on when either system is not working

If either system fails to turn on or to activate, a message displays in the Driver Information Center (DIC), and comes on and stays on to indicate that the system is inactive and is not assisting the driver in maintaining control. The vehicle is safe to drive, but driving should be adjusted accordingly.

If comes on and stays on:

1. Stop the vehicle.
2. Turn the engine off and wait 15 seconds.
3. Start the engine.

Drive the vehicle. If comes on and stays on, the vehicle may need more time to diagnose the problem. If the condition persists, see your dealer.

Turning the Systems Off and On

The button for TCS and StabiliTrak/ESC is on the center stack.

Caution

Do not repeatedly brake or accelerate heavily when TCS is off. The vehicle driveline could be damaged.

To turn off only TCS, press and release OFF. The traction off light displays in the instrument cluster. The appropriate message will display in the DIC. To turn TCS on again, press and release OFF. The traction off light displayed in the instrument cluster will turn off.

If TCS is limiting wheel spin when OFF is pressed, the system will not turn off until the wheels stop spinning.

To turn off both TCS and StabiliTrak/ESC, press and hold OFF until the traction off light and the StabiliTrak/ESC OFF light OFF come on and stay on in the instrument cluster, then release. The appropriate message will display in the DIC.

To turn TCS and StabiliTrak/ESC on again, press and release OFF. The traction off light TC and the StabiliTrak/ESC OFF light OFF in the instrument cluster turn off.

StabiliTrak/ESC will automatically turn on if the vehicle exceeds 56 km/h (35 mph). Traction control will remain off.

The vehicle has a Trailer Sway Control (TSC) feature and a Hill Start Assist (HSA) feature. See *Trailer Sway Control (TSC)* ⇨ *316* or *Hill Start Assist (HSA)* ⇨ *272*.

Adding accessories can affect the vehicle performance. See *Accessories and Modifications* ⇨ *326*.

Hill Descent Control (HDC)

If equipped, Hill Descent Control (HDC) sets and maintains vehicle speed while driving down steep grades in a forward or reverse gear. The HDC switch is on the center stack, below the climate controls.

Press to enable or disable HDC. Vehicle speed must be below 50 km/h (31 mph).

When enabled, the HDC light displays on the instrument cluster.

A blinking HDC light indicates the system is actively applying the brakes to maintain vehicle speed. HDC can maintain vehicle speeds between 1 and 30 km/h (1 and 19 mph) on grades greater than or equal to 10%.

If HDC is to be used for more than three minutes or on grades steeper than 25%, the transfer case should be put into Four-Wheel Drive Low (4 ↓) to reduce the possibility of brake overheating.

Noise from the hydraulic brake control module is normal when HDC is active.

When HDC is activated, the initial HDC speed is set to the current driving speed. It can be increased or decreased by pressing +RES or SET- on the steering wheel, or by applying the accelerator or brake pedal. This adjusted speed becomes the new set speed.

HDC will remain enabled between 30 and 60 km/h (19 and 37 mph); however, vehicle speed cannot be set or maintained in this range. HDC will automatically disable if the vehicle speed is above 80 km/h (50 mph) or above 60 km/h (37 mph) for at least 30 seconds.

must be pressed again to re-enable HDC. HDC may disable after an extended period of use. If this happens, HDC will require time to cool down. The length of time HDC remains active depends on road conditions, grade, set speed, vehicle loading, and outside temperature.

When enabled, if the vehicle speed is above 30 km/h (19 mph) and below 60 km/h (37 mph), a DIC message will display.

Locking Rear Axle

Vehicles with a locking rear axle can give more traction on snow, mud, ice, sand, or gravel. It works like a standard axle most of the time, but when traction is low, this feature will allow the rear wheel with the most traction to move the vehicle.

Cruise Control

⚠ Warning

Cruise control can be dangerous where you cannot drive safely at a steady speed. Do not use cruise control on winding roads or in heavy traffic.

Cruise control can be dangerous on slippery roads. On such roads, fast changes in tire traction can cause excessive wheel slip, and you could lose control. Do not use cruise control on slippery roads.

With cruise control a speed of about 40 km/h (25 mph) or more can be maintained without keeping your foot on the accelerator. Cruise control does not work at speeds below about 40 km/h (25 mph).

If equipped with an Allison or Hydra-Matic 6-speed automatic transmission, see “Tow/Haul Mode Grade Braking” under *Tow/Haul Mode* ⇨ *261* for an explanation of how cruise control interacts with the Range Selection Mode, Tow/Haul Mode, and Grade Braking systems.

If the cruise control is being used and the Traction Control System (TCS) or StabiliTrak/Electronic Stability Control (ESC) begins to limit wheel spin, the cruise control will automatically disengage. See *Traction Control/Electronic Stability Control* ⇨ *273*. When road conditions allow you to safely use it again, cruise control can be turned back on.

If the brakes are applied, cruise control disengages.

: Press to turn the system on or off. The indicator light is white when cruise control is on and turns off when cruise control is off.

+RES : If there is a set speed in memory, press briefly to resume to that speed or press and hold to accelerate. If cruise control is already active, use to increase vehicle speed.

SET− : Press briefly to set the speed and activate cruise control. If cruise control is already active, use to decrease vehicle speed.

: Press to disengage cruise control without erasing the set speed from memory.

Setting Cruise Control

If is on when not in use, SET− or +RES could get pressed and go into cruise when not desired. Keep off when cruise is not being used.

1. Press to turn the cruise system on.
2. Get up to the desired speed.
3. Press and release SET−.
4. Remove your foot from the accelerator.

The cruise control indicator on the instrument cluster turns green after cruise control has been set to the desired speed. See *Instrument Cluster* ⇨ *136*.

Resuming a Set Speed

If the cruise control is set at a desired speed and then the brakes are applied or is pressed, the cruise control is disengaged without erasing the set speed from memory.

Once the vehicle speed reaches about 40 km/h (25 mph) or more, briefly press +RES. The vehicle returns to the previous set speed.

Increasing Speed While Using Cruise Control

If the cruise control system is already activated:

- Press and hold +RES until the desired speed is reached, then release it.
- To increase vehicle speed in small increments, briefly press +RES. For each press, the vehicle goes about 1 km/h (1 mph) faster.

The speedometer reading can be displayed in either English or metric units. See *Instrument Cluster* ⇨ *136*. The increment value used depends on the units displayed.

Reducing Speed While Using Cruise Control

If the cruise control system is already activated:

- Press and hold SET– until the desired lower speed is reached, then release it.
- To slow down in small increments, briefly press SET–. For each press, the vehicle goes about 1 km/h (1 mph) slower.

The speedometer reading can be displayed in either English or metric units. See *Instrument Cluster* ⇨ *136*. The increment value used depends on the units displayed.

Passing Another Vehicle While Using Cruise Control

Use the accelerator pedal to increase the vehicle speed. When you take your foot off the pedal, the vehicle will slow down to the previous set cruise speed. While pressing the accelerator pedal or shortly following the release to override cruise control, briefly pressing SET– will result in cruise control set to the current vehicle speed.

Using Cruise Control on Hills

How well the cruise control works on hills depends on the vehicle speed, the load, and the steepness of the hills. When going up steep hills, pressing the accelerator pedal may be necessary to maintain vehicle speed.

While going downhill:

- Vehicles with a 6-speed automatic transmission and a gasoline engine have Cruise Grade Braking to help maintain driver selected speed.

  Cruise Grade Braking is enabled when the vehicle is started and cruise control is active. It is not enabled in Range Selection Mode. It assists in maintaining driver selected speed when driving on downhill grades by using the engine and transmission to slow the vehicle.

  To disable and enable Cruise Grade Braking for the current ignition key cycle, press and hold the Tow/Haul button for five seconds. A DIC message displays. See *Vehicle Messages* ⇨ *159*.

- Vehicles with a diesel engine have Cruise Grade Braking enabled when Tow/Haul Mode is on, the exhaust brake is on, or both are on.

For other forms of descent control, see *Hill Descent Control (HDC)* ⇨ *275*, *Automatic Transmission* ⇨ *256*, and *Tow/Haul Mode* ⇨ *261*.

Ending Cruise Control

There are four ways to end cruise control:

- Step lightly on the brake pedal.
- Press .
- Shift the transmission to N (Neutral).
- To turn off cruise control, press .

Erasing Speed Memory

The cruise control set speed is erased from memory if is pressed or the ignition is turned off.

Driver Assistance Systems

This vehicle may have features that work together to help avoid crashes or reduce crash damage while driving, backing, and parking. Read this entire section before using these systems.

⚠ Warning

Do not rely on the Driver Assistance Systems. These systems do not replace the need for paying attention and driving safely. You may not hear or feel alerts or warnings provided by these systems. Failure to use proper care when driving may result in injury, death, or vehicle damage. See *Defensive Driving* ⇨ *227*.

Under many conditions, these systems will not:

(Continued)

Warning (Continued)

- Detect children, pedestrians, bicyclists, or animals.
- Detect vehicles or objects outside the area monitored by the system.
- Work at all driving speeds.
- Warn you or provide you with enough time to avoid a crash.
- Work under poor visibility or bad weather conditions.
- Work if the detection sensor is not cleaned or is covered by ice, snow, mud, or dirt.
- Work if the detection sensor is covered up, such as with a sticker, magnet, or metal plate.
- Work if the area surrounding the detection sensor is damaged or not properly repaired.

(Continued)

Warning (Continued)

Complete attention is always required while driving, and you should be ready to take action and apply the brakes and/or steer the vehicle to avoid crashes.

Audible or Safety Alert Seat

Some driver assistance features alert the driver of obstacles by beeping. To change the volume of the warning chime, see “Comfort and Convenience” under *Vehicle Personalization* ⇨ *160*.

If equipped with the Safety Alert Seat, the driver seat cushion may provide a vibrating pulse alert instead of beeping. To change this, see “Collision/Detection Systems” under *Vehicle Personalization* ⇨ *160*.

Cleaning

Depending on vehicle options, keep these areas of the vehicle clean to ensure the best driver assistance feature performance. Driver

Information Center (DIC) messages may display when the systems are unavailable or blocked.

- Front and rear bumpers and the area below the bumpers
- Front grille and headlamps
- Front camera lens in the front grille or near the front emblem
- Front side and rear side panels
- Outside of the windshield in front of the rearview mirror
- Side camera lens on the bottom of the outside mirrors
- Rear side corner bumpers
- Rear Vision Camera in the tailgate handle

Assistance Systems for Parking or Backing

If equipped, the Rear Vision Camera (RVC), Rear Park Assist (RPA), and Front Park Assist (FPA) may help the driver park or avoid objects. Always check around the vehicle when parking or backing.

The RVC and RPA will not work properly if the tailgate is down. If the tailgate is down, do not use these systems.

Rear Vision Camera (RVC)

When the vehicle is shifted into R (Reverse), the RVC displays an image of the area behind the vehicle in the infotainment display. The previous screen displays when the vehicle is shifted out of R (Reverse) after a short delay. To return to the previous screen sooner, press any button on the infotainment system, shift into P (Park), or reach a vehicle speed of approximately 12 km/h (8 mph).

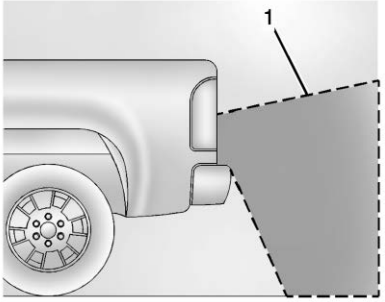

1. View Displayed by the Camera

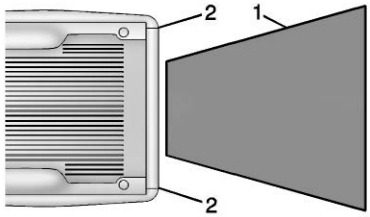

1. View Displayed by the Camera
2. Corners of the Rear Bumper

Displayed images may be farther or closer than they appear. The area displayed is limited and objects that are close to either corner of the bumper or under the bumper do not display.

A warning triangle may display on the infotainment display to show that RPA has detected an object. This triangle changes from amber to red and increases in size the closer the object.

⚠ Warning

The camera(s) do not display children, pedestrians, bicyclists, crossing traffic, animals, or any other object outside of the cameras' field of view, below the bumper, or under the vehicle. Shown distances may be different from actual distances. Do not drive or park the vehicle using only these camera(s). Always check behind and around the vehicle before driving. Failure to use proper care may result in injury, death, or vehicle damage.

Park Assist

With RPA, and if equipped with FPA, as the vehicle moves at speeds of less than 8 km/h (5 mph) the sensors on the bumpers may detect objects up to 2.5 m (8 ft) behind and 1.2 m (4 ft) in front of the vehicle within a zone 25 cm (10 in) high off the ground and below bumper level. These detection distances may be shorter during warmer or humid weather. Blocked sensors will not detect objects and can also cause false detections. Keep the sensors clean of mud, dirt, snow, ice, and slush; and clean sensors after a car wash in freezing temperatures.

⚠ Warning

The Park Assist system does not detect children, pedestrians, bicyclists, animals, or objects located below the bumper or that are too close or too far from the vehicle. It is not available at speeds greater than 8 km/h (5 mph). To prevent injury, death, or vehicle damage, even with Park Assist, always check the area around the vehicle and check all mirrors before moving forward or backing.

The instrument cluster may have a Park Assist display with bars that show “distance to object” and object location information for the Park Assist system. As the object gets closer, more bars light up and the bars change color from yellow to amber to red.

When an object is first detected in the rear, one beep will be heard from the rear, or both sides of the Safety Alert Seat will pulse two times. When an object is very close (<0.6 m (2 ft) in the vehicle rear, or <0.3 m (1 ft) in the vehicle front), a continuous beep will sound from the front or rear, or both sides of the Safety Alert Seat will pulse five times. Beeps for FPA are higher pitched than for RPA.

Turning the Features On or Off

Press P on the center stack to turn the Front and Rear Park Assist on or off. The indicator light in the button comes on when the features are on and turns off when the features have been disabled.

Front and Rear Park Assist can be turned off, on, or on with towbar through vehicle personalization. See “Park Assist” under *Vehicle Personalization* ⇨ *160*. If the Park Assist is turned off through vehicle personalization, the Park Assist button on the center stack will be disabled. To turn the Park Assist on again, select On in vehicle personalization. The On with Towbar setting allows for the Park Assist to work properly with an attached trailer hitch. Turn off Park Assist when towing a trailer.

To turn the rear Park Assist symbols or guidance lines on or off, see “Rear Camera” under *Vehicle Personalization* ⇨ *160*.

Assistance Systems for Driving

If equipped, when driving the vehicle in a forward gear, Forward Collision Alert (FCA), Lane Departure Warning (LDW), and/or Lane Keep Assist (LKA) can help to avoid a crash or reduce crash damage.

Forward Collision Alert (FCA) System

If equipped, the FCA system may help to avoid or reduce the harm caused by front-end crashes. When approaching a vehicle ahead too quickly, FCA provides a red flashing alert on the windshield and rapidly beeps or pulses the driver seat. FCA also lights an amber visual alert if following another vehicle much too closely.

FCA detects vehicles within a distance of approximately 60 m (197 ft) and operates at speeds above 8 km/h (5 mph) for the 1500 Series and at speeds above 40 km/h (25 mph) for the 2500/3500 Series.

⚠ Warning

FCA is a warning system and does not apply the brakes. When approaching a slower-moving or stopped vehicle ahead too rapidly, or when following a vehicle too closely, FCA may not provide a warning with enough time to help avoid a crash. It also may not provide any warning at all. FCA does not warn of pedestrians, animals, signs, guardrails, bridges, construction barrels, or other objects. Be ready to take action and apply the brakes. See *Defensive Driving* ⇨ *227*.

FCA can be disabled with either the FCA steering wheel control or, if equipped, through vehicle personalization. See “Collision/ Detection Systems” under *Vehicle Personalization* ⇨ *160*.

Detecting the Vehicle Ahead

FCA warnings will not occur unless the FCA system detects a vehicle ahead. When a vehicle is detected, the vehicle ahead indicator will display green. Vehicles may not be detected on curves, highway exit ramps, or hills, due to poor visibility; or if a vehicle ahead is partially blocked by pedestrians or other objects. FCA will not detect another vehicle ahead until it is completely in the driving lane.

⚠ Warning

FCA does not provide a warning to help avoid a crash, unless it detects a vehicle. FCA may not detect a vehicle ahead if the FCA sensor is blocked by dirt, snow, or ice, or if the windshield is damaged. It may also not detect a vehicle on winding or hilly roads, or in conditions that can limit visibility such as fog, rain, or snow, or if the headlamps or windshield are not cleaned or in proper condition. Keep the windshield, headlamps, and FCA sensors clean and in good repair.

Collision Alert

When your vehicle approaches another detected vehicle too rapidly, the red FCA display will flash on the windshield. Also, eight rapid high-pitched beeps will sound from the front, or both sides of the Safety Alert Seat will pulse five times. When this Collision Alert occurs, the brake system may prepare for driver braking to occur more rapidly which can cause a brief, mild deceleration. Continue to apply the brake pedal as needed. Cruise control may be disengaged when the Collision Alert occurs.

Tailgating Alert

The vehicle ahead indicator will display amber when you are following a detected vehicle ahead much too closely.

Selecting the Alert Timing

The Collision Alert control is on the steering wheel. Press to set the FCA timing to Far, Medium, Near, or Off. The first button press shows the current setting on the DIC. Additional button presses will change this setting. The chosen setting will remain until it is changed and will affect the timing of both the Collision Alert and the Tailgating Alert features. The timing of both alerts will vary based on vehicle speed. The faster the vehicle speed, the farther away the alert will occur. Consider traffic and weather conditions when selecting the alert timing. The range of selectable alert timing may not be appropriate for all drivers and driving conditions.

Unnecessary Alerts

FCA may provide unnecessary alerts for turning vehicles, vehicles in other lanes, objects that are not vehicles, or shadows. These alerts are normal operation and the vehicle does not need service.

Cleaning the System

If the FCA system does not seem to operate properly, this may correct the issue:

- Clean the outside of the windshield in front of the rearview mirror.
- Clean the entire front of the vehicle.
- Clean the headlamps.

Forward Automatic Braking (FAB) (1500 Series)

If the vehicle has Forward Collision Alert (FCA), it also has FAB, which includes Intelligent Brake Assist (IBA). When the system detects a vehicle ahead in your path that is traveling in the same direction that you may be about to crash into, it can provide a boost to braking or automatically brake the vehicle. This can help avoid or lessen the severity of crashes when driving in a forward gear. Depending on the situation, the vehicle may automatically brake moderately or hard. This forward automatic braking can only occur if a vehicle is detected. This is shown by the FCA vehicle ahead indicator being lit. See *Forward Collision Alert (FCA) System* ⇨ *282*.

The system works when driving in a forward gear between 8 km/h (5 mph) and 80 km/h (50 mph). It can detect vehicles up to approximately 60 m (197 ft).

⚠ Warning

FAB is an emergency crash preparation feature and is not designed to avoid crashes. Do not rely on FAB to brake the vehicle. FAB will not brake outside of its operating speed range and only responds to detected vehicles.

FAB may not:

- Detect a vehicle ahead on winding or hilly roads.

(Continued)

Warning (Continued)

- Detect all vehicles, especially vehicles with a trailer, tractors, muddy vehicles, etc.
- Detect a vehicle when weather limits visibility, such as in fog, rain, or snow.
- Detect a vehicle ahead if it is partially blocked by pedestrians or other objects.

Complete attention is always required while driving, and you should be ready to take action and apply the brakes and/or steer the vehicle to avoid crashes.

FAB may slow the vehicle to a complete stop to try to avoid a potential crash. The vehicle will only hold at a stop briefly. A firm press of the accelerator pedal will release FAB.

⚠ Warning

FAB may automatically brake the vehicle suddenly in situations where it is unexpected and undesired. It could respond to a turning vehicle ahead, guardrails, signs, and other non-moving objects. To override FAB, firmly press the accelerator pedal, if it is safe to do so.

Intelligent Brake Assist (IBA)

IBA may activate when the brake pedal is applied quickly by providing a boost to braking based on the speed of approach and distance to a vehicle ahead.

Minor brake pedal pulsations or pedal movement during this time is normal and the brake pedal should continue to be applied as needed. IBA will automatically disengage only when the brake pedal is released.

⚠ Warning

IBA may increase vehicle braking in situations when it may not be necessary. You could block the flow of traffic. If this occurs, take your foot off the brake pedal and then apply the brakes as needed.

FAB and IBA can be disabled through vehicle personalization. See “Collision/Detection Systems” under *Vehicle Personalization* ⇨ *160*.

⚠ Warning

Using FAB or IBA while towing a trailer could cause you to lose control of the vehicle and crash. Turn the system to Alert or Off when towing a trailer.

Lane Departure Warning (LDW) (2500/3500 Series)

If equipped, LDW may help avoid crashes due to unintentional lane departures. It may provide an alert if the vehicle is crossing a lane marking without using a turn signal in that direction. LDW uses a camera sensor to detect the lane markings at speeds of 56 km/h (35 mph) or greater.

⚠ Warning

The LDW system does not steer the vehicle. The LDW system may not:

- Provide enough time to avoid a crash.
- Detect lane markings under poor weather or visibility conditions. This can occur if the windshield or headlamps are blocked by dirt, snow, or ice; if they are not in proper condition; or if the sun shines directly into the camera.
- Detect road edges.
- Detect lanes on winding or hilly roads.

(Continued)

Warning (Continued)

If LDW only detects lane markings on one side of the road, it will only warn you when departing the lane on the side where it has detected a lane marking. Always keep your attention on the road and maintain proper vehicle position within the lane, or vehicle damage, injury, or death could occur. Always keep the windshield, headlamps, and camera sensors clean and in good repair. Do not use LDW in bad weather conditions.

How the System Works

The LDW camera sensor is on the windshield ahead of the rearview mirror.

To turn LDW on and off, press on the center stack. The control indicator will light when LDW is on.

When LDW is on, is green if LDW is available to warn of a lane departure. If the vehicle crosses a detected lane marking without using the turn signal in that direction, changes to amber and flashes. Additionally, there may be three beeps, or the driver seat may pulse three times on the right or left, depending on the lane departure direction.

When the System Does Not Seem to Work Properly

The system may not detect lanes as well when there are:

- Close vehicles ahead.
- Sudden lighting changes, such as when driving through tunnels.
- Banked roads.

If the LDW system is not functioning properly when lane markings are clearly visible, cleaning the windshield may help.

LDW alerts may occur due to tar marks, shadows, cracks in the road, temporary or construction lane markings, or other road imperfections. This is normal system operation; the vehicle does not need service. Turn LDW off if these conditions continue.

Lane Keep Assist (LKA) (1500 Series)

If equipped, LKA may help avoid crashes due to unintentional lane departures. It may assist by gently turning the steering wheel if the vehicle approaches a detected lane marking without using a turn signal in that direction. It may also provide a Lane Departure Warning (LDW) system alert as the lane marking is crossed. The LKA system will not assist or provide an LDW alert if it detects that you are actively steering. Override LKA by turning the steering wheel. LKA uses a

camera to detect lane markings between 60 km/h (37 mph) and 180 km/h (112 mph).

⚠ Warning

The LKA system does not continuously steer the vehicle. It may not keep the vehicle in the lane or give a Lane Departure Warning (LDW) alert, even if a lane marking is detected.

The LKA and LDW systems may not:

- Provide an alert or enough steering assist to avoid a lane departure or crash.
- Detect lane markings under poor weather or visibility conditions. This can occur if the windshield or headlamps are blocked by dirt, snow, or ice, if they are not in proper condition, or if the sun shines directly into the camera.

(Continued)

Warning (Continued)

- Detect road edges.
- Detect lanes on winding or hilly roads.

If LKA only detects lane markings on one side of the road, it will only assist or provide an LDW alert when approaching the lane on the side where it has detected a lane marking. Even with LKA and LDW, you must steer the vehicle. Always keep your attention on the road and maintain proper vehicle position within the lane, or vehicle damage, injury, or death could occur. Always keep the windshield, headlamps, and camera sensors clean and in good repair. Do not use LKA in bad weather conditions.

⚠ Warning

Using LKA while towing a trailer or on slippery roads could cause loss of control of the vehicle and a crash. Turn the system off.

How the System Works

The LKA camera sensor is on the windshield ahead of the rearview mirror.

To turn LKA on and off, press on the center stack.

When on, is green if LKA is available to assist and provide LDW alerts. It may assist by gently turning the steering wheel and display as amber if the vehicle approaches a detected lane marking without using a turn signal in that direction. It may also provide an LDW alert by flashing amber as the lane marking is crossed. Additionally, there may be three beeps, or the driver seat may pulse

three times, on the right or left, depending on the lane departure direction.

Take Steering

The LKA system does not continuously steer the vehicle. If LKA does not detect active driver steering, an alert, chime, or DIC message may be provided. Move the steering wheel to dismiss.

When the System Does Not Seem to Work Properly

The system performance may be affected by:

- Close vehicles ahead.
- Sudden lighting changes, such as when driving through tunnels.
- Banked roads.
- Roads with poor lane markings, such as two-lane roads.

If the LKA system is not functioning properly when lane markings are clearly visible, cleaning the windshield may help.

A camera blocked message may display if the camera is blocked. Cleaning the outside of the windshield behind the rearview mirror may correct the issue. Some driver assistance systems may have reduced performance or not work at all. An LKA or LDW unavailable message may display if the systems are temporarily unavailable. This message could be due to a blocked camera. The LKA system does not need service. Clean the outside of the windshield behind the rearview mirror.

LKA assistance and/or LDW alerts may occur due to tar marks, shadows, cracks in the road, temporary or construction lane markings, or other road imperfections. This is normal system operation; the vehicle does not need service. Turn LKA off if these conditions continue.

Fuel

Top Tier Fuel

GM recommends the use of TOP TIER Detergent Gasoline to keep the engine clean, reduce engine deposits, and maintain optimal vehicle performance. Look for the TOP TIER Logo or see www.toptiergas.com for a list of TOP TIER Detergent Gasoline marketers and applicable countries.

TOP TIER
Detergent Gasoline

CATEGORIE SUPERIÉURE
Essences Détergentes

Recommended Fuel

For diesel engine vehicles, see "Fuel for Diesel Engines" in the Duramax diesel supplement.

If the vehicle has a yellow sticker on the fuel door, E85 or FlexFuel can be used. If the vehicle does not have a yellow sticker, do not use gasoline with ethanol levels greater than 15% by volume. See *E85 or FlexFuel* ⇨ *291*.

Use regular unleaded gasoline meeting ASTM specification D4814 with a posted octane rating of 87 or higher. Do not use gasoline with a posted octane rating of less than 87, as this may cause engine knock and will lower fuel economy.

Prohibited Fuels

Caution

Do not use fuels with any of the following conditions; doing so may damage the vehicle and void its warranty:

- For vehicles that are not FlexFuel, fuel labeled greater than 15% ethanol by volume, such as mid-level ethanol blends (16–50% ethanol), E85, or FlexFuel.
- Fuel with any amount of methanol, methylal, ferrocene, and aniline. These fuels can corrode metal fuel system parts or damage plastic and rubber parts.
- Fuel containing metals such as methylcyclopentadienyl manganese tricarbonyl

(Continued)

Caution (Continued)

(MMT), which can damage the emissions control system and spark plugs.

- Fuel with a posted octane rating of less than the recommended fuel. Using this fuel will lower fuel economy and performance, and may decrease the life of the emissions catalyst.

Fuels in Foreign Countries

The U.S., Canada, and Mexico post fuel octane ratings in anti-knock index (AKI). For fuel not to use in a foreign country, see *Prohibited Fuels* ⇨ *290*.

Fuel Additives

TOP TIER Detergent Gasoline is highly recommended for use with your vehicle. If your country does not have TOP TIER Detergent Gasoline, add ACDelco Fuel

System Treatment Plus−Gasoline to the vehicle's gasoline fuel tank at every oil change or 15,000 km (9,000 mi), whichever occurs first. TOP TIER Detergent Gasoline and ACDelco Fuel System Treatment Plus−Gasoline will help keep your vehicle's engine fuel deposit free and performing optimally.

E85 or FlexFuel

Vehicles with a yellow fuel cap can use either unleaded gasoline or fuel containing up to 85% ethanol (E85). All other vehicles should use only the unleaded gasoline as described in *Recommended Fuel* ⇨ *290*.

The use of E85 or FlexFuel is encouraged when the vehicle is designed to use it. E85 or FlexFuel is made from renewable sources.

To help locate fuel stations that carry E85 or FlexFuel, the U.S. Department of Energy has an alternative fuel website. See www.afdc.energy.gov/afdc/locator/stations.

E85 or FlexFuel should meet ASTM Specification D 5798 or CAN/CGSB–3.512 in Canada. Do not use the fuel if the ethanol content is greater than 85%. Fuel mixtures that do not meet ASTM or CGSB specifications can affect driveability and could cause the malfunction indicator lamp to come on.

The starting characteristics of E85 or FlexFuel make it unsuitable for use when temperatures fall below −18 °C (0 °F). Use gasoline or add gasoline to the E85 or FlexFuel.

Because E85 or FlexFuel has less energy per liter (gallon) than gasoline, the vehicle will need to be refilled more often. See *Filling the Tank* ⇨ *291*.

The only GM approved aftermarket additive is ACDelco Fuel System Treatment Plus-FlexFuel. Follow the instructions on the bottle for proper use. This product is available at your GM dealer.

Caution

Some additives are not compatible with E85 or FlexFuel and can harm the vehicle's fuel system. Use only additives approved by GM for E85 or FlexFuel vehicles. Damage caused by unapproved additives would not be covered by the vehicle warranty.

Caution

Do not use fuel containing methanol. It can corrode metal parts in the fuel system and also damage plastic and rubber parts. That damage would not be covered under the vehicle warranty.

Filling the Tank

If the vehicle has a diesel engine, see the Duramax diesel supplement for more information.

⚠ Warning

Fuel vapors and fuel fires burn violently and can cause injury or death.

Follow these guidelines:

- To help avoid injuries to you and others, read and follow all the instructions on the fuel pump island.
- Turn off the engine when refueling.
- Keep sparks, flames, and smoking materials away from fuel.
- Do not leave the fuel pump unattended.
- Avoid using electronic devices while refueling.
- Do not reenter the vehicle while pumping fuel.
- Keep children away from the fuel pump and never let children pump fuel.

(Continued)

Warning (Continued)

- Fuel can spray out if the refueling nozzle is inserted too quickly. This spray can happen if the tank is nearly full, and is more likely in hot weather. Insert the refueling nozzle slowly and wait for any hiss noise to stop prior to beginning to flow fuel.

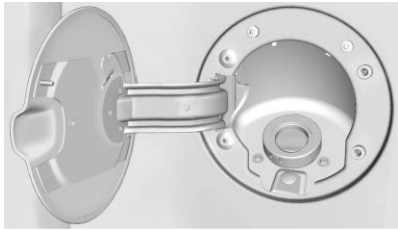

The vehicle has a capless refueling system and does not have a fuel cap. The filling nozzle must be fully inserted and latched prior to starting fuel flow.

⚠ Warning

Overfilling the fuel tank by more than three clicks of a standard fill nozzle may cause:

- Vehicle performance issues, including engine stalling and damage to the fuel system.
- Fuel spills.
- Potential fuel fires.

Be careful not to spill fuel. Wait a few seconds after you have finished pumping before removing the nozzle. Clean fuel from painted surfaces as soon as possible. See *Exterior Care* ⇨ *419*.

⚠ Warning

If a fire starts while you are refueling, do not remove the nozzle. Shut off the flow of fuel by shutting off the pump or by notifying the station attendant. Leave the area immediately.

For models with dual fuel tanks, the fuel gauge shows an average of both tanks. The rear tank is emptied first. When refueling, refuel the front tank first, then add fuel to the rear tank.

Filling the Tank With a Portable Gas Can

If the vehicle runs out of fuel and must be filled from a portable gas can:

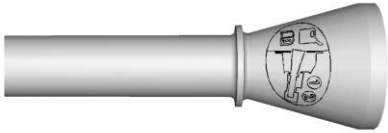

1. Locate the capless funnel adapter from inside the vehicle.
2. Insert and latch the funnel into the capless fuel system.

⚠ Warning

Attempting to refuel without using the funnel adapter may cause fuel spillage and damage the capless fuel system. This could cause a fire and you or others could be badly burned and the vehicle could be damaged.

3. Remove and clean the funnel adapter and return to the storage location.

Filling a Portable Fuel Container

⚠ Warning

Never fill a portable fuel container while it is in the vehicle. Static electricity discharge from the container can ignite the fuel vapor. You can be badly burned

(Continued)

Warning (Continued)

and the vehicle damaged if this occurs. To help avoid injury to you and others:

- Dispense fuel only into approved containers.
- Do not fill a container while it is inside a vehicle, in a vehicle's trunk, pickup bed, or on any surface other than the ground.
- Bring the fill nozzle in contact with the inside of the fill opening before operating the nozzle. Contact should be maintained until the filling is complete.
- Do not smoke while pumping fuel.
- Avoid using electronic devices.

Trailer Towing

General Towing Information

Only use towing equipment that has been designed for the vehicle. Contact your dealer or trailering dealer for assistance with preparing the vehicle to tow a trailer. Read the entire section before towing a trailer.

To tow a disabled vehicle, see *Towing the Vehicle* ⇨ *413*. To tow the vehicle behind another vehicle such as a motor home, see *Recreational Vehicle Towing* ⇨ *413*.

Driving Characteristics and Towing Tips

⚠ Warning

You can lose control when towing a trailer if the correct equipment is not used or the vehicle is not driven properly. For example, if the trailer is too heavy or the

(Continued)

Warning (Continued)

trailer brakes are inadequate for the load, the vehicle may not stop as expected. You and others could be seriously injured. The vehicle may also be damaged, and the repairs would not be covered by the vehicle warranty. Pull a trailer only if all the steps in this section have been followed. Ask your dealer for advice and information about towing a trailer with the vehicle.

Driving with a Trailer

Trailering is different than just driving the vehicle by itself. Trailering means changes in handling, acceleration, braking, durability, and fuel economy. Successful, safe trailering takes correct equipment, and it has to be used properly.

The following information has many time-tested, important trailering tips and safety rules. Many of these are important for your safety and that of your passengers. Read this section carefully before pulling a trailer.

When towing a trailer:

- Become familiar with and follow all state and local laws that apply to trailer towing. These requirements vary from state to state.
- State laws may require the use of extended side view mirrors. Even if not required, you should install extended side view mirrors if your visibility is limited or restricted while towing.
- Do not tow a trailer during the first 800 km (500 mi) of vehicle use to prevent damage to the engine, axle, or other parts.
- It is recommended to perform the first oil change before heavy towing.
- During the first 800 km (500 mi) of trailer towing, do not drive over 80 km/h (50 mph) and do not make starts at full throttle.

- Vehicles can tow in D (Drive). Tow/Haul Mode is recommended for heavier trailers. See *Tow/Haul Mode* ⇨ *261*. If the transmission downshifts too often, a lower gear may be selected using Manual Mode. See *Manual Mode* ⇨ *259*.

If equipped, the following driver assistance features should be turned off when towing a trailer:

- Adaptive Cruise Control (ACC)
- Super Cruise Control
- Lane Keep Assist (LKA)
- Parking Assist
- Automatic Parking Assist (APA)
- Reverse Automatic Braking (RAB)

If equipped, the following driver assistance features should be turned to alert or off when towing a trailer:

- Forward Automatic Braking System (FAB)
- Intelligent Brake Assist (IBA)
- Front Pedestrian Braking (FPB)

If equipped with Lane Change Alert (LCA), the LCA detection zones that extend back from the side of the vehicle do not move further back when a trailer is towed. Use caution while changing lanes when towing a trailer.

If equipped with Rear Cross Traffic Alert (RCTA), use caution while backing up when towing a trailer, as the RCTA detection zones that extend out from the back of the vehicle do not move further back when a trailer is towed.

⚠ Warning

To prevent serious injury or death from carbon monoxide (CO), when towing a trailer:

- Do not drive with the liftgate, trunk/hatch, or rear-most window open.

(Continued)

Warning (Continued)

- Fully open the air outlets on or under the instrument panel.
- Adjust the climate control system to a setting that brings in only outside air. See “Climate Control Systems” in the Index.

For more information about carbon monoxide, see *Engine Exhaust* ⇨ *255*.

Towing a trailer requires experience. The combination of the vehicle and trailer is longer and not as responsive as the vehicle itself. Get used to the handling and braking of the combination by driving on a level road surface before driving on public roads.

The trailer structure, the tires, and the brakes must be all be rated to carry the intended cargo. Inadequate trailer equipment can cause the combination to operate in

an unexpected or unsafe manner. Before driving, inspect all trailer hitch parts and attachments, safety chains, electrical connectors, lamps, tires, and mirrors. See *Towing Equipment* ⇨ *306*. If the trailer has electric brakes, start the combination moving and then manually apply the trailer brake controller to check the trailer brakes work. During the trip, occasionally check that the cargo and trailer are secure and that the lamps and any trailer brakes are working.

Towing with a Stability Control System

When towing, the stability control system might be heard. The system reacts to vehicle movement caused by the trailer, which mainly occurs during cornering. This is normal when towing heavier trailers.

Following Distance

Stay at least twice as far behind the vehicle ahead as you would when driving without a trailer. This can help to avoid heavy braking and sudden turns.

Passing

More passing distance is needed when towing a trailer. The combination of the vehicle and trailer will not accelerate as quickly and is much longer than the vehicle alone. It is necessary to go much farther beyond the passed vehicle before returning to the lane. Pass on level roadways. Avoid passing on hills if possible.

Backing Up

Hold the bottom of the steering wheel with one hand. To move the trailer to the left, move that hand to the left. To move the trailer to the right, move that hand to the right. Always back up slowly and, if possible, have someone guide you.

Making Turns

Caution

Turn more slowly and make wider arcs when towing a trailer to prevent damage to your vehicle. Making very sharp turns could cause the trailer to contact the vehicle.

Make wider turns than normal when towing, so trailer will not go over soft shoulders, over curbs, or strike road signs, trees, or other objects. Always signal turns well in advance. Do not steer or brake suddenly.

Driving on Grades

Reduce speed and shift to a lower gear before starting down a long or steep downhill grade. If the transmission is not shifted down, the brakes may overheat and result in reduced braking efficiency.

The vehicle can tow in D (Drive). Shift the transmission to a lower gear if the transmission shifts too often under heavy loads and/or hilly conditions.

When towing at higher altitudes, engine coolant will boil at a lower temperature than at lower altitudes. If the engine is turned off immediately after towing at high altitude on steep uphill grades, the vehicle could show signs similar to engine overheating. To avoid this, let the engine run, preferably on level ground, with the transmission in P (Park) for a few minutes before turning the engine off. If the overheat warning comes on, see *Engine Overheating* ⇨ *344*.

Parking on Hills

⚠ Warning

To prevent serious injury or death, always park your vehicle and trailer on a level surface when possible.

When parking your vehicle and your trailer on a hill:

1. Press the brake pedal, but do not shift into P (Park) yet. Turn the wheels into the curb if facing downhill or into traffic if facing uphill.
2. Have someone place chocks under the trailer wheels.
3. When the wheel chocks are in place, gradually release the brake pedal to allow the chocks to absorb the load of the trailer.
4. Reapply the brake pedal. Then apply the parking brake and shift into P (Park).
5. Release the brake pedal.

Leaving After Parking on a Hill

1. Apply and hold the brake pedal.
   - Start the engine.
   - Shift into a gear.
   - Release the parking brake.
2. Let up on the brake pedal.
3. Drive slowly until the trailer is clear of the chocks.
4. Stop and have someone pick up and store the chocks.

Maintenance when Trailer Towing

The vehicle needs service more often when used to tow trailers. See *Maintenance Schedule* ⇨ *431*. It is especially important to check the automatic transmission fluid, engine oil, axle lubricant, belts, cooling system, and brake system before and during each trip.

Check periodically that all nuts and bolts on the trailer hitch are tight.

Engine Cooling When Trailer Towing

The cooling system may temporarily overheat during severe operating conditions. See *Engine Overheating* ⇨ *344*.

Trailer Towing

If equipped with a diesel engine, see the Duramax diesel supplement.

Caution

Towing a trailer improperly can damage the vehicle and result in costly repairs not covered by the vehicle warranty. To tow a trailer correctly, follow the directions in this section and see your dealer for important information about towing a trailer with the vehicle.

Trailering is different than just driving the vehicle by itself. Trailering means changes in handling, acceleration, braking, durability, and fuel economy. Successful, safe trailering takes correct equipment, and it has to be used properly.

The following information has many time-tested, important trailering tips and safety rules. Many of these are important for your safety and that of your passengers. Read this section carefully before pulling a trailer.

Trailer Weight

⚠ Warning

Never exceed the towing capacity for your vehicle.

Safe trailering requires monitoring the weight, speed, altitude, road grades, outside temperature, dimensions of the front of the trailer, and how frequently the vehicle is used to tow a trailer.

Trailering Weight Ratings

When towing a trailer, the weight of the loaded vehicle and trailer must be within the weight ratings for the vehicle.

- GCWR: Gross Combined Weight Rating
- GVWR: Gross Vehicle Weight Rating
- Maximum Trailer Weight Rating
- GAWR-RR: Gross Axle Weight Rating-Rear
- Maximum Trailer Tongue Weight Rating

The only way to be sure the weight is not exceeding any of these ratings is to weigh the tow vehicle and trailer combination, fully loaded for the trip, getting individual weights for each of these items.

⚠ Warning

You and others could be seriously injured or killed if the trailer is too heavy or the trailer brakes are inadequate for the load. The vehicle may be damaged, and the repairs would not be covered by the vehicle warranty.

Only tow a trailer if all the steps in this section have been followed. Ask your dealer for advice and information about towing a trailer.

Gross Combined Weight Rating (GCWR)

GCWR is the total allowable weight of the completely loaded vehicle and trailer including any fuel, passengers, cargo, equipment, and accessories. Do not exceed the GCWR for your vehicle. The GCWR for the vehicle is on the Tow Rating Chart following.

Gross Vehicle Weight Rating (GVWR)

For information about the vehicle's maximum load capacity, see *Vehicle Load Limits* ⇨ *238*. When calculating the GVWR with a trailer attached, the trailer tongue weight must be included as part of the weight the vehicle is carrying.

Maximum Trailer Weight

The maximum trailer weight rating is calculated assuming the tow vehicle has a driver, a front seat passenger, and all required trailering equipment. Weight of additional optional equipment, passengers, and cargo in the tow vehicle must be subtracted from the trailer weight rating.

Use the tow rating chart to determine how much the trailer can weigh, based on the vehicle model and options.

Weights listed apply for conventional trailers and gooseneck/fifth-wheel trailers unless otherwise noted.

1500/2500/3500 Series Pickups – SAE J2807 Compliant			
Vehicle	**Axle Ratio**	**Maximum Trailer Weight (b)**	**GCWR (a)**
1500 Series 2WD Double Cab Standard Box			
5.3L V8, 6-speed automatic transmission	3.42	4 264 kg (9,400 lb)	6 804 kg (15,000 lb)
1500 Series 4WD Double Cab Standard Box			
5.3L V8 - Conventional Trailer	3.42	4 173 kg (9,200 lb)	6 804 kg (15,000 lb)
5.3L V8 - Gooseneck/Fifth Wheel	3.42	4 082 kg (9,000 lb)	6 804 kg (15,000 lb)
2500 Series 2WD Crew Cab Standard Box			
6.0L V8 – Conventional Trailer	3.73	4 491 kg (9,900 lb)	7 530 kg (16,600 lb)
6.0L V8 – Fifth-Wheel Trailer	3.73	4 445 kg (9,800 lb)	7 530 kg (16,600 lb)
6.0L V8 – Conventional Trailer	4.10	5 897 kg (13,000 lb)	9 571 kg (21,100 lb)
6.0L V8 – Fifth-Wheel Trailer	4.10	6 486 kg (14,300 lb)	9 571 kg (21,100 lb)
2500 Series 2WD Double Cab Long Box			
6.0L V8	3.73	4 491 kg (9,900 lb)	7 530 kg (16,600 lb)
6.0L V8 – Conventional Trailer	4.10	6 532 kg (14,400 lb)	9 571 kg (21,100 lb)
6.0L V8 – Fifth-Wheel Trailer	4.10	6 532 kg (14,400 lb)	9 571 kg (21,100 lb)

1500/2500/3500 Series Pickups – SAE J2807 Compliant			
Vehicle	**Axle Ratio**	**Maximum Trailer Weight (b)**	**GCWR (a)**
2500 Series 2WD Crew Cab Long Box			
6.0L V8 – Conventional Trailer	3.73	4 445 kg (9,800 lb)	7 530 kg (16,600 lb)
6.0L V8 – Fifth-Wheel Trailer	3.73	4 400 kg (9,700 lb)	7 530 kg (16,600 lb)
6.0L V8 – Conventional Trailer	4.10	6 486 kg (14,300 lb)	9 571 kg (21,100 lb)
6.0L V8 – Fifth-Wheel Trailer	4.10	6 441 kg (14,200 lb)	9 571 kg (21,100 lb)
2500 Series 4WD Double Cab Standard Box			
6.0L V8	3.73	4 400 kg (9,700 lb)	7 530 kg (16,600 lb)
6.0L V8 – Conventional Trailer	4.10	5 897 kg (13,000 lb)	9 571 kg (21,100 lb)
6.0L V8 – Fifth-Wheel Trailer	4.10	6 441 kg (14,200 lb)	9 571 kg (21,100 lb)
2500 Series 4WD Crew Cab Standard Box			
6.0L V8 – Conventional Trailer	3.73	4 354 kg (9,600 lb)	7 530 kg (16,600 lb)
6.0L V8 – Fifth-Wheel Trailer	3.73	4 309 kg (9,500 lb)	7 530 kg (16,600 lb)
6.0L V8 – Conventional Trailer	4.10	5 897 kg (13,000 lb)	9 571 kg (21,100 lb)
6.0L V8 – Fifth-Wheel Trailer	4.10	6 350 kg (14,000 lb)	9 571 kg (21,100 lb)

1500/2500/3500 Series Pickups – SAE J2807 Compliant			
Vehicle	**Axle Ratio**	**Maximum Trailer Weight (b)**	**GCWR (a)**
2500 Series 4WD Double Cab Long Box			
6.0L V8	3.73	4 354 kg (9,600 lb)	7 530 kg (16,600 lb)
6.0L V8 – Conventional Trailer	4.10	6 396 kg (14,100 lb)	9 571 kg (21,100 lb)
6.0L V8 – Fifth-Wheel Trailer	4.10	6 396 kg (14,100 lb)	9 571 kg (21,100 lb)
2500 Series 4WD Crew Cab Long Box			
6.0L V8	3.73	4 264 kg (9,400 lb)	7 530 kg (16,600 lb)
6.0L V8 – Conventional Trailer	4.10	6 305 kg (13,900 lb)	9 571 kg (21,100 lb)
6.0L V8 – Fifth-Wheel Trailer	4.10	6 305 kg (13,900 lb)	9 571 kg (21,100 lb)
3500 Series 2WD Crew Cab Standard Box			
6.0L V8	3.73	4 400 kg (9,700 lb)	7 530 kg (16,600 lb)
6.0L V8 – Conventional Trailer	4.10	5 897 kg (13,000 lb)	9 571 kg (21,100 lb)
6.0L V8 Fifth-Wheel Trailer	4.10	6 441 kg (14,200 lb)	9 571 kg (21,100 lb)
3500 Series 2WD Crew Cab Long Box			
6.0L V8 (Single Rear Wheels) Conventional Trailer	3.73	4 354 kg (9,600 lb)	7 530 kg (16,600 lb)
6.0L V8 (Single Rear Wheels) Fifth-Wheel Trailer	3.73	4 309 kg (9,500 lb)	7 530 kg (16,600 lb)

1500/2500/3500 Series Pickups – SAE J2807 Compliant			
Vehicle	**Axle Ratio**	**Maximum Trailer Weight (b)**	**GCWR (a)**
6.0L V8 (Single Rear Wheels) Conventional Trailer	4.10	6 396 kg (14,100 lb)	9 571 kg (21,100 lb)
6.0L V8 (Single Rear Wheels) Fifth-wheel Trailer	4.10	6 350 kg (14,000 lb)	9 571 kg (21,100 lb)
6.0L V8 (Dual Rear Wheels)	3.73	4 173 kg (9,200 lb)	7 530 kg (16,600 lb)
6.0L V8 (Dual Rear Wheels)	4.10	6 214 kg (13,700 lb)	9 571 kg (21,100 lb)
3500 Series 4WD Crew Cab Standard Box			
6.0L V8	3.73	4 264 kg (9,400 lb)	7 530 kg (16,600 lb)
6.0L V8 – Conventional Trailer	4.10	5 897 kg (13,000 lb)	9 571 kg (21,100 lb)
6.0L V8 – Fifth-Wheel Trailer	4.10	6 305 kg (13,900 lb)	9 571 kg (21,100 lb)
3500 Series 4WD Crew Cab Long Box			
6.0L V8 (Single Rear Wheels)	3.73	4 173 kg (9,200 lb)	7 530 kg (16,600 lb)
6.0L V8 (Single Rear Wheels)	4.10	6 214 kg (13,700 lb)	9 571 kg (21,100 lb)
6.0L V8 (Dual Rear Wheels)	3.73	3 992 kg (8,800 lb)	7 530 kg (16,600 lb)
6.0L V8 (Dual Rear Wheels)	4.10	6 033 kg (13,300 lb)	9 571 kg (21,100 lb)
3600 Series Chassis Cab 2WD/4WD			
6.0L V8	3.73	(c)	7 530 kg (16,600 lb)

1500/2500/3500 Series Pickups – SAE J2807 Compliant			
Vehicle	Axle Ratio	Maximum Trailer Weight (b)	GCWR (a)
6.0L V8	4.10	(c)	9 571 kg (21,100 lb)
(a) The Gross Combination Weight Rating (GCWR) is the total allowable weight of the completely loaded vehicle and trailer including any passengers, cargo, equipment, and conversions. The GCWR for the vehicle should not be exceeded. (b) For pickup box delete vehicles, choose an appropriate hitch and load the truck and trailer within the limits of GCWR, GVWR, and RGAWR. (c) Maximum Trailer Weight cannot be provided because total vehicle weight is unknown.			

A step bumper trailer hitch can only support a total trailer weight up to 2,271 kg (5,000 lb). If a trailer hitch ball is added to the step bumper, check the hitch ball rating to be sure it is higher than the total trailer weight.

Maximum Trailer Tongue Weight Rating

The Maximum Trailer Tongue Weight Rating is the allowable trailer tongue weight that the vehicle can support.

Vehicle Series	Hitch Type	Maximum Tongue Weight
1500	Weight-Carrying or Weight-Distributing	567 kg (1,250 lb)
2500/3500 Standard Box	Weight-Carrying or Weight-Distributing	680 kg (1,500 lb)
2500/ 3500 Long Box	Weight-Carrying or Weight-Distributing	907 kg (2,000 lb)
2500	Fifth-Wheel Gooseneck	1 361 kg (3,000 lb)
3500 Single Rear Wheels	Fifth-Wheel Gooseneck	1 814 kg (4,000 lb)
3500 Dual Rear Wheels	Fifth-Wheel Gooseneck	2 495 kg (5,500 lb)

The trailer tongue weight contributes to the Gross Vehicle Weight (GVW). GVW includes the CURB WEIGHT of your vehicle, any passengers, cargo, equipment and the trailer tongue weight. Vehicle options, passengers, cargo, and equipment reduce the maximum allowable tongue weight the vehicle can carry, which also reduces the maximum allowable trailer weight.

Trailer Load Balance

The correct trailer load balance must be maintained to ensure trailer stability. Incorrect load balance is a leading cause of trailer sway.

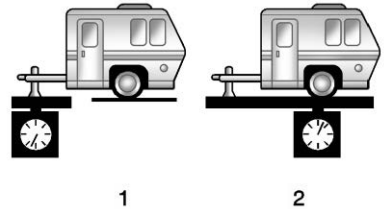

The trailer tongue weight (1) should be 10–15% and fifth-wheel or gooseneck kingpin weight should be 15–25% of the loaded trailer weight (2). Some specific trailer types, such as boat trailers, fall outside of this range. Always refer to the trailer owner's manual for the recommended trailer tongue weight

for each trailer. Never exceed the maximum loads for your vehicle, hitch and trailer.

After loading the trailer, separately weigh the trailer and then the trailer tongue to see if the weights are appropriate for your vehicle. If the trailer weight is too high, it may be possible to trasfer some of the cargo into your vehicle. If the trailer tongue weight is too high or too low, it may be possible to rearrange some of the cargo inside of the trailer.

Do not exceed the maximum allowable tongue weight for your vehicle. Use the shortest hitch extension available to position the hitch ball closer to your vehicle. This will help reduce the effect of the trailer tongue weight on the trailer hitch and the rear axle.

If a cargo carrier is used in the trailer hitch receiver, choose a carrier that positions the load as close to the vehicle as possible. Make sure the total weight, including the carrier, is no more than half of the maximum allowable tongue weight for the vehicle or 227 kg (500 lb), whichever is less.

Rear Gross Axle Weight Rating (GAWR-RR)

The GAWR-RR is the total weight that can be supported by the rear axle of the vehicle. Do not exceed the GAWR-RR for the vehicle, with the tow vehicle and trailer fully loaded for the trip including the weight of the trailer tongue. If using a weight-distributing hitch, do not exceed the GAWR-RR before applying the weight distribution spring bars.

Ask your dealer for trailering information or assistance.

Towing Equipment

Hitches

Always use the correct hitch equipment for your vehicle. Crosswinds, large trucks going by, and rough roads can affect the trailer and the hitch.

Proper hitch equipment for your vehicle helps maintain control of the vehicle-trailer combination. Many trailers can be towed using a weight-carrying hitch which has a coupler latched to the hitch ball, or a tow eye latched to a pintle hook. Other trailers may require a weight-distributing hitch that uses spring bars to distribute the trailer tongue weight between your vehicle and trailer axles. Fifth-wheel and gooseneck hitches may also be used. See “Trailer Tongue Weight” under *Trailer Towing* ⇨ *298* for weight limits with various hitch types.

Avoid sharp turns when using a step-bumper hitch to prevent damage. Make wider turns to prevent contact between your trailer and your bumper.

Consider using mechanical sway controls with any trailer. Ask a trailering professional about sway controls or refer to the trailer manufacturer's recommendations and instructions.

Weight-Distributing Hitch Adjustment

A weight-distributing hitch may be useful with some trailers. Use the following guidelines to determine if a weight-distributing hitch should be used.

Vehicle Series	Trailer Weight	Weight-Distributing Hitch Usage	Hitch Distribution
1500	Up to 3 175 kg (7,000 lb)	Optional	Refer to trailer manufacturer's recommendation
1500	Over 3 175 kg (7,000 lb)	Required	50%
2500/3500	Up to 9 080 kg (20,000 lb)	Optional	50%

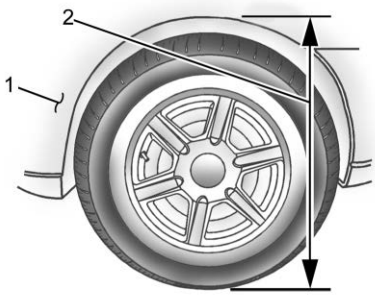

1. Front of Vehicle
2. Body to Ground Distance

When using a weight-distributing hitch, measure the front fender height above the front axle distance (2) before and after connecting trailer. Adjust the spring bars until the front fender height distance (2) is approximately half way between the first and second measurements.

Vehicle Tires

- Do not tow a trailer while using a compact spare tire on the vehicle.
- Tires must be properly inflated to support loads while towing a trailer. See *Tires* ⇨ *371* for instructions on proper tire inflation.

Fifth-Wheel and Gooseneck Trailering

Fifth-wheel and gooseneck trailers can be used with many pickup models. These trailers place a larger percentage of the weight (kingpin weight) on the tow vehicle than conventional trailers. Make sure this weight does not cause the vehicle to exceed GAWR or GVWR. Fifth-wheel or gooseneck kingpin weight should be 15 - 25% of the trailer weight up to the maximum amount specified in the trailering chart for the vehicle. See “Weight of the Trailer” under *Trailer Towing* ⇨ *298*.

The hitch should be in the pickup bed so that its centerline is over or slightly in front of the rear axle. Take care that it is not so far forward that it will contact the back of the cab in sharp turns. This is especially important for short box pickups. Trailer pin box extensions and sliding fifth-wheel hitch assemblies may be used. There should be at least 15 cm (6 in) of clearance between the top of the pickup box and the bottom of the trailer shelf that extends over the box.

Make sure the hitch is attached to the tow vehicle frame rails. Do not use the pickup box for support.

Safety Chains

Always attach safety chains between the vehicle and the trailer. Instructions about safety chains may be provided by the hitch manufacturer or by the trailer manufacturer.

If the trailer being towed weighs up to 2 271 kg (5,000 lb) with a factory-installed step bumper, safety chains may be attached to the attaching points on the bumper; otherwise, safety chains should be attached to holes on the trailer hitch.

Cross the safety chains under the tongue of the trailer to help prevent the tongue from contacting the road

if it becomes separated from the hitch. Always leave enough slack in the safety chains to allow the combination to turn. Never allow safety chains to drag on the ground.

Trailer Brakes

Loaded trailers over 900 kg (2,000 lb) must be equipped with brake systems and with brakes for each axle. Trailer braking equipment conforming to Canadian Standards Association (CSA) requirement CAN3-D313, or its equivalent, is recommended.

State or local regulations may require trailers to have their own braking system if the loaded weight of the trailer exceeds certain minimums that can vary from state to state. Read and follow the instructions for the trailer brakes so they are installed, adjusted, and maintained properly. Never attempt to tap into your vehicle's hydraulic brake system. If you do, both the vehicle anti-lock brakes and the trailer brakes may not function, which could result in a crash.

Auxiliary Battery

If equipped, the vehicle's auxiliary battery can be used to supply electrical power to additional equipment that may be added, such as a slide-in camper.

Locate the auxiliary battery connector under the hood on the driver's side of the vehicle, next to the underhood electrical center. Follow the proper installation instructions included with any electrical equipment that is installed.

Caution
To prevent draining the auxiliary battery, always turn off electrical equipment when not in use and do not use any equipment that may exceed the maximum amperage rating of 30 amps.

Trailer Wiring Harness

Basic Trailer Wiring

If the vehicle is not equipped with a trailer connector on the rear bumper, a 7-wire trailering harness is tied to the vehicles frame. The harness requires the installation of a trailer connector, which is available through your dealer.

Use only a round, seven-wire connector with flat blade terminals meeting SAE J2863 specifications for proper electrical connectivity.

The seven-wire harness contains the following trailer circuits:

Stop/Turn Signal Left	Yellow/Blue
Stop/Turn Signal Right	Green/Brown
Tail/Parking Lamps	Gray/Brown
Reverse Lamps	White/Green

Battery Feed	Red/Violet
Ground	Black
Electric Trailer Brake	Blue

Heavy-Duty Trailer Wiring Harness Package

If equipped, the trailer wiring harness, with a 7-pin connector and a 4-pin connector, is mounted on the vehicle's rear bumper.

The trailer connectors contain the following circuits.

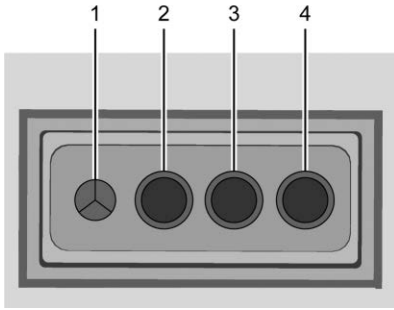

1. Ground
2. Tail Lamps
3. Left Turn/Brake
4. Right Turn/Brake

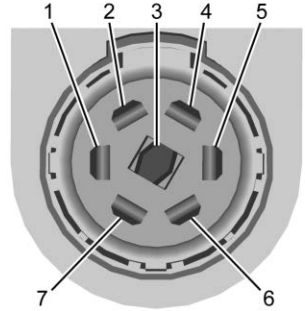

1. Left Turn/Brake
2. Tail Lamps
3. Reverse Lamps
4. Battery Feed
5. Right Turn/Brake
6. Electric Brakes
7. Ground

If equipped with the fifth wheel/ gooseneck trailer package, the harness connector is mounted on the inside of the pickup bed behind the rear wheel.

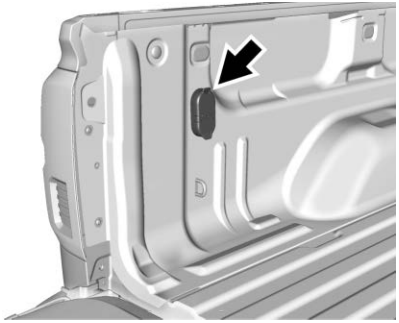

Camper/Fifth-Wheel Trailer Wiring Package

For vehicles without the fifth wheel/ gooseneck trailer package, the seven-wire camper harness is under the rear bumper, attached to the frame near the rear crossmember. A connector must be added to the wiring harness that connects to the camper.

The harness contains the following camper/trailer circuits:

Stop/Turn Signal Left	Yellow/Blue
Stop/Turn Signal Right	Green/Brown
Tail/Parking Lamps	Gray/Brown
Reverse Lamps	White/Green
Battery Feed	Red/Violet
Ground	Black
Electric Trailer Brake	Blue

If equipped with the heavy-duty trailering option, see “Heavy-Duty Trailer Wiring Harness Package” earlier in this section. When the camper-wiring harness is ordered without the heavy-duty trailering package, a seven-wire harness with a seven-pin connector is at the rear of the vehicle and is tied to the vehicle's frame.

Electric Brake Control Wiring Provisions

If the vehicle is not equipped with an integrated trailer brake controller, a trailer brake controller needs to be installed on the vehicle if the trailer has electric brakes. The brake controller should be installed by your dealer or a qualified service center. If equipped, wiring provisions for an aftermarket electric trailer brake controller are included with the vehicle as part of the trailer wiring package. The harness contains the following circuits:

Electric Trailer Brakes	Blue
Battery Feed	Red/Black or Red/Blue
Brake Apply Signal	White/Blue
Ground	Black

Refer to the aftermarket electric trailer brake controller owner's manual to determine wire color coding of the electric trailer brake controller. The wire colors on the brake controller may be different from the vehicle. The fuse for the electric trailer brake circuit is in the engine compartment fuse block, but the wires may not be connected. They should be connected by your dealer or a qualified service center.

Trailer Lamps

Always check all trailer lamps are working at the beginning of each trip, and periodically on longer trips.

Turn Signals When Towing a Trailer

When properly connected, the trailer turn signals should will illuminate to indicate the vehicle is turning, changing lanes, or stopping. When towing a trailer, the arrows on the instrument cluster will illuminate even if the trailer is not properly connected or the bulbs are burned out.

Tow/Haul Mode

For instructions on how to enter Tow/Haul mode, see *Tow/Haul Mode* ⇨ *261*.

Tow/Haul assists when pulling a heavy trailer or a large or heavy load.

Tow/Haul Mode is designed to be most effective when the vehicle and trailer combined weight is at least 75% of the vehicle's Gross Combined Weight Rating (GCWR). See “Weight of the Trailer” under *Trailer Towing* ⇨ *298*.

Tow/Haul Mode is most useful when towing a heavy trailer or carrying a large or heavy load:

- through rolling terrain.
- in stop-and-go traffic.
- in busy parking lots.

Operating the vehicle in Tow/Haul Mode when lightly loaded or not towing will not cause damage; however, it is not recommended and may result in unpleasant engine and transmission driving characteristics and reduced fuel economy.

Integrated Trailer Brake Control System

TThe vehicle may have an Integrated Trailer Brake Control (ITBC) system for use with electric trailer brakes or most electric over hydraulic trailer brake system

This symbol is on the Trailer Brake Control Panel on vehicles with an ITBC system. The power output to the trailer brakes is proportional to the amount of vehicle braking. This available power output to the trailer brakes can be adjusted to a wide range of trailering situations.

The ITBC system is integrated with the vehicle’s brake, anti-lock brake, and StabiliTrak systems. In trailering conditions that cause the vehicle’s anti-lock brake or StabiliTrak systems to activate, power sent to the trailer's brakes will be automatically adjusted to minimize trailer wheel lock-up. This does not imply that the trailer has StabiliTrak.

If the vehicle’s brake, anti-lock brake, or StabiliTrak systems are not functioning properly, the ITBC system may not function fully or at

all. Make sure all of these systems are fully operational to allow the ITBC system to function properly.

The ITBC system is powered through the vehicle's electrical system. Turning the ignition off will also turn off the ITBC system. The ITBC system is fully functional only when the ignition is in ON/RUN.

⚠ Warning

Connecting a trailer that has an air brake system may result in reduced or complete loss of trailer braking, including increased stopping distance or trailer instability which could result in serious injury, death, or property damage. Only use the ITBC system with electric or electric over hydraulic trailer brake systems.

Trailer Brake Control Panel

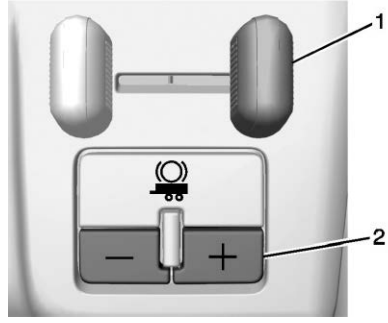

1. Manual Trailer Brake Apply Lever
2. Trailer Gain Adjustment Buttons

The ITBC control panel is on the instrument panel to the left of the steering column. See *Instrument Panel* ⇨ *6*. The control panel allows adjustment to the amount of output, referred to as Trailer Gain, available to the trailer brakes and allows manual application of the trailer brakes. Use the ITBC control panel and the DIC trailer brake display page to adjust and display power output to the trailer brakes.

Trailer Brake DIC Display Page

The ITBC display page indicates

- Trailer Gain setting
- Output to the trailer brakes
- Trailer connection
- System operational status.

To display

- Scroll through the DIC menu pages
- Press a Trailer Gain (+) or (−) button
- Activate the Manual Trailer Brake Apply Lever

Press a Trailer Gain button to recall the current Trailer Gain setting. Each press and release of the gain buttons will then change the Trailer Gain setting.

TRAILER GAIN:

Press the Trailer Gain (+) or (−) to adjust. Press and hold to continuously adjust the Trailer Gain. To turn the output to the trailer off, adjust the Trailer Gain setting to 0.0. This setting can be adjusted from 0.0 to 10.0 with a trailer connected or disconnected.

TRAILER OUTPUT: This displays anytime a trailer with electric brakes is connected. Output to the trailer brakes is based on the amount of vehicle braking present and relative to the Trailer Gain setting. Output is displayed from 0 to 100% for each gain setting.

The Trailer Output will indicate “- - - - - -” on the Trailer Brake Display Page whenever the following occur:

- No trailer is connected.
- A trailer without electric brakes is connected, no DIC message will display
- A trailer with electric brakes has become disconnected, a CHECK TRAILER WIRING message displays on the DIC
- There is a fault present in the wiring to the trailer brakes, a CHECK TRAILER WIRING message displays on the DIC
- The ITBC system is not working due to a fault, a SERVICE TRAILER BRAKE SYSTEM message displays in the DIC

Manual Trailer Brake Apply Lever

Slide this lever left to apply the trailer’s electric brakes independent of the vehicle’s brakes. Use this lever to adjust Trailer Gain to achieve the proper power output to the trailer brakes. The trailer's and the vehicle's brake lamps will come on when either vehicle brakes or manual trailer brakes are applied and properly connected.

Trailer Gain Adjustment Procedure

Trailer Gain should be set for a specific trailering condition and it must be readjusted anytime vehicle loading, trailer loading, or road surface conditions change.

⚠ Warning

Trailer brakes that are over-gained or under-gained may not stop the vehicle and the trailer as intended and can result in a crash. Always follow the instructions to set the Trailer Gain for the proper trailer stopping performance.

To adjust Trailer Gain for each towing condition:

1. Drive the vehicle with the trailer attached on a level road surface representative of the towing condition and free of traffic at about 32 - 40 km/h (20 - 25 mph) and fully apply the Manual Trailer Brake Apply Lever.

Note

Adjusting Trailer Gain at speeds lower than 32 to 40 km/h (20 to 25 mph) may result in an incorrect gain setting.

2. Adjust the Trailer Gain, using the Trailer Gain (+) or (−) adjustment Buttons, to just below the point of trailer wheel lock-up, indicated by trailer wheel squeal or tire smoke when a trailer wheel locks.

Note

Trailer wheel lock-up may not occur if towing a heavily loaded trailer. Adjust the Trailer Gain to the highest allowable setting for the towing condition.

3. Readjust Trailer Gain anytime vehicle loading, trailer loading, or road surface conditions change or if trailer wheel lock-up is noticed at any time while towing.

Other ITBC-Related DIC Messages

TRAILER CONNECTED: This message will briefly display when a trailer with electric brakes is first connected to the vehicle. This message will automatically turn off in about 10 seconds. This message can be acknowledged before it automatically turns off.

CHECK TRAILER WIRING: This message will display if:

- The ITBC system first determines connection to a trailer with electric brakes and then the trailer harness becomes disconnected the vehicle.

  If the disconnect occurs while the vehicle is stationary, this message will automatically turn off in about 30 seconds. This message will also turn off if it is acknowledged or if the trailer harness is reconnected.

  If the disconnect occurs while the vehicle is moving, this message will continue until the ignition is turned off. This message will also turn off if it is acknowledged or if the trailer harness is reconnected.

- There is an electrical fault in the wiring to the trailer brakes. This message will continue as long as there is an electrical fault in the trailer wiring. This message will also turn off if it is acknowledged.

To determine whether the electrical fault is on the vehicle side or trailer side of the trailer wiring harness connection:

1. Disconnect the trailer wiring harness from the vehicle.
2. Turn the ignition off.
3. Wait 10 seconds, then turn the ignition back to RUN.
4. If the CHECK TRAILER WIRING message reappears, the electrical fault is on the vehicle side.

If the CHECK TRAILER WIRING message only reappears when connecting the trailer wiring harness to the vehicle, the electrical fault is on the trailer side.

SERVICE TRAILER BRAKE SYSTEM: This message will display when there is a problem with the ITBC system. If this message continues over multiple ignition cycles, have the vehicle serviced.

If either the CHECK TRAILER WIRING or SERVICE TRAILER BRAKE SYSTEM message displays while driving, the ITBC system may not be fully functional or may not function at all. When traffic conditions allow, carefully pull the vehicle over to the side of the road and turn the ignition off. Check the wiring connection to the trailer and turn the ignition back on. If either of these messages continues, either the vehicle or trailer needs service.

A GM dealer may be able to diagnose and repair problems with the trailer. However, any diagnosis and repair of the trailer is not covered under the vehicle warranty. Contact your trailer dealer for assistance with trailer repairs and trailer warranty information.

Trailer Sway Control (TSC)

Vehicles with StabiliTrak have a Trailer Sway Control (TSC) feature. Trailer sway is unintended side-to-side motion of a trailer while towing. If the vehicle is towing a trailer and the TSC detects that sway is increasing, the vehicle brakes are selectively applied at each wheel, to help reduce excessive trailer sway. If equipped with the Integrated Trailer Brake Control (ITBC) system, and the trailer has an electric brake system, StabiliTrak may also apply the trailer brakes.

If TSC is enabled, the Traction Control System (TCS)/StabiliTrak warning light will flash on the instrument cluster. Reduce vehicle speed by gradually removing your foot from the accelerator. If trailer sway continues, StabiliTrak can reduce engine torque to help slow the vehicle. TSC will not function if StabiliTrak is turned off. See Traction Control/Electronic Stability Control.

⚠ Warning

Trailer sway can result in a crash and in serious injury or death, even if the vehicle is equipped with TSC.

(Continued)

Warning (Continued)

If the trailer begins to sway, reduce vehicle speed by gradually removing your foot from the accelerator. Then pull over to check the trailer and vehicle to help correct possible causes, including an improperly or overloaded trailer, unrestrained cargo, improper trailer hitch configuration, or improperly inflated or incorrect vehicle or trailer tires. See *Towing Equipment* ⇨ *306* for trailer ratings and hitch setup recommendations.

Aftermarket Electronic Trailer Sway Control Devices

Some trailers may come equipped with an electronic device designed to reduce or control trailer sway. Aftermarket equipment manufacturers also offer similar devices that connect to the wiring between the trailer and the vehicle. These devices may interfere with the vehicle's trailer brake systems or other systems, including integrated anti-sway systems, if equipped. Messages related to trailer connections or trailer brakes could appear on the DIC. The effects of these aftermarket devices on vehicle handling or trailer brake performance is not known.

⚠ Warning

Use of aftermarket electronic trailer sway control devices could result in reduced trailer brake performance, loss of trailer brakes, or other malfunctions, and result in a crash. You or others could be seriously injured or killed. Before using one of these devices:

- Ask the device or trailer manufacturer if the device has been thoroughly tested for compatibility with the make, model, and year of

(Continued)

Warning (Continued)

your vehicle and any optional equipment installed on your vehicle.

- Before driving, check the trailer brakes are working properly, if equipped. Drive the vehicle with the trailer attached on a level road surface that is free of traffic at about 32-40 km/h (20-25 mph) and fully apply the manual trailer brake apply lever. Also, check the trailer brake lamps and other lamps are functioning correctly.
- If the trailer brakes are not operating properly at any time, or if a DIC message indicates problems with the trailer connections or trailer brakes, carefully pull the vehicle over to the side of the road when traffic conditions allow.

Trailer Tires

Special Trailer (ST) tires differ from vehicle tires. Trailer tires are designed with stiff sidewalls to help prevent sway and to support heavy loads. These features can make it difficult to determine if the trailer tire pressures are low only based on a visual inspection.

Always check all trailer tire pressures before each trip when the tires are cool. Low trailer tire pressure is a leading cause of trailer tire blow-outs.

Trailer tires deteriorate over time. The trailer tire sidewall will show the week and year the tire was manufactured. Many trailer tire manufacturers recommend replacing tires more than six years old.

Overloading is another leading cause of trailer tire blow-outs. Never load your trailer with more weight than the tires are designed to support. The load rating is located on the trailer tire sidewall.

Always know the maximum speed rating for the trailer tires before driving. This may be significantly lower than the vehicle tire speed rating. The speed rating may be on the trailer tire sidewall. If the speed rating is not shown, the default trailer tire speed rating is 105 km/h (65 mph).

Conversions and Add-Ons

Add-On Electrical Equipment

⚠ Warning

The Data Link Connector (DLC) is used for vehicle service and Emission Inspection/Maintenance testing. See *Malfunction Indicator Lamp* ⇨ *146*. A device connected to the DLC — such as an aftermarket fleet or driver-behavior tracking device — may interfere with vehicle systems. This could affect vehicle operation and cause a crash. Such devices may also access information stored in the vehicle's systems.

Caution

Some electrical equipment can damage the vehicle or cause components to not work and would not be covered by the vehicle warranty. Always check with your dealer before adding electrical equipment.

Add-on equipment can drain the vehicle's 12-volt battery, even if the vehicle is not operating.

The vehicle has an airbag system. Before attempting to add anything electrical to the vehicle, see *Servicing the Airbag-Equipped Vehicle* ⇨ *88* and *Adding Equipment to the Airbag-Equipped Vehicle* ⇨ *89*.

For information on wiring auxiliary switches, see www.gmupfitter.com or contact your dealer.

Snow Plow Prep Wiring Package

These wiring provisions are included with RPO VYU (Snow Plow Prep Package) only. These provisions are for use with a snow plow installed. The harness should be installed by your dealer or qualified service center.

Adding a Snow Plow or Similar Equipment

Caution

Do not exceed 72 km/h (45 mph) with a snow plow mounted to the vehicle. The vehicle could overheat and be damaged.

Before installing a snow plow on the vehicle, follow these guidelines:

Caution

If the vehicle does not have the snow plow prep package, RPO VYU, adding a plow can damage the vehicle, and the repairs would not be covered by the vehicle warranty. Unless the vehicle was built to carry a snow plow, do not add one to the vehicle. If the vehicle has RPO VYU, then the payload the vehicle can carry will be reduced when a snow plow is installed. The vehicle can be damaged if either the front or rear axle ratings or the Gross Vehicle Weight Rating (GVWR) are exceeded.

The plow the vehicle can carry depends on many things, such as:

- The options the vehicle came with, and the weight of those options.
- The weight and number of passengers to be carried.
- The weight of items added to the vehicle, like a tool box or truck cap.
- The total weight of any additional cargo to be carried.

For example, if the snow plow weighs 318 kg (700 lb), the total weight of all occupants and cargo inside the cab should not exceed 135 kg (300 lb). This means that you may only be able to carry one passenger. Even this may be too much if there is other equipment already adding to the weight of the vehicle.

To safely carry a snow plow on the vehicle:

- Follow all aftermarket snow plow manufacturer's instructions for the operation and transportation of the snow plow.
- With a snow plow attached, the engine coolant temperature gauge may show a higher temperature than while driving without one. The snow plow could block the airflow to the radiator. This could be more noticeable as vehicle speed increases. At speeds above 72 km (45 mph), this may cause the engine coolant to overheat.
- To increase the airflow, move the snow plow blade postion.
- If driving more than 24 km (15 mi), angle the plow blade position.
- Make sure the weight on the front and rear axles does not exceed the axle rating for each.
- For the front axle, if more cargo or passengers must be carried, appropriate counter ballast must be installed rear of the rear axle. Counter ballast must be properly secured so it will not move during driving.
- Rear ballast may be required to ensure a proper front and rear weight distribution ratio, even though the actual weight at the front axle may be less than the front axle rating.
- The snow plow manufacturer or installer can assist in determining the amount of rear ballast required, to help make sure the snow plow/vehicle combination does not exceed the GVW rating, the front and rear axle ratings, and the front and rear weight distribution ratio.
- The total vehicle must not exceed the GVW rating.

Front axle reserve capacity is the difference between the Gross Axle Weight Rating (GAWR) and the front axle weight of the vehicle with full fuel and passengers. This is the amount of weight that can be added to the front axle before reaching the front GAWR.

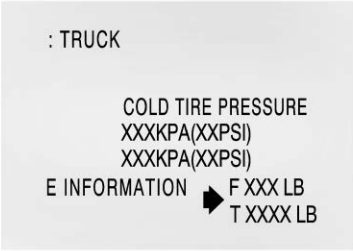

United States

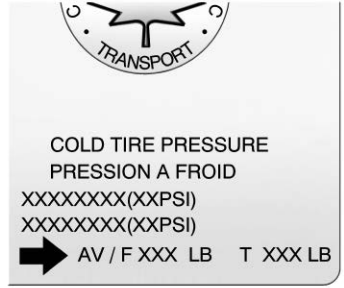

Canada

The front axle reserve capacity for the vehicle is in the lower right corner of the Certification/Tire label.

To calculate the amount of weight any front accessory, such as a snow plow, is adding to the front axle, use this formula:

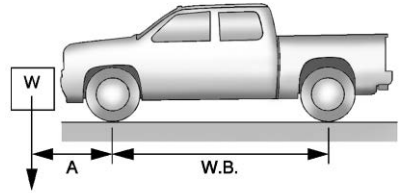

(W x (A + W.B.)) /W.B.= Weight the accessory is adding to the front axle.

Where:

W = Weight of added accessory
A = Distance that the accessory is in front of the front axle
W.B. = Vehicle Wheelbase

For example, adding a 318 kg (700 lb) snow plow actually adds more than 318 kg (700 lb) to the front axle. Using the formula, if the

snow plow is 122 cm (4 ft) in front of the front axle and the wheelbase is 305 cm (10 ft), then:

W = 318 kg (700 lb)
A = 122 cm (4 ft)
W.B. = 305 cm (10 ft)

(W x (A + W.B.)/W.B. =
(318 x (122 + 305))/305 = 445 kg (980 lb)

This means if the front axle reserve capacity is more than 445 kg (980 lb), the snow plow could be added without exceeding the front GAWR.

Heavier equipment can be added on the front of the vehicle if less cargo or fewer passengers are carried, or by positioning cargo toward the rear. This reduces the load on the front. However, the front GAWR, rear GAWR, and Gross Vehicle Weight Rating (GVWR) must never be exceeded.

⚠ Warning

On some vehicles that have certain front mounted equipment, such as a snow plow, it may be possible to load the front axle to the front Gross Axle Weight Rating (GAWR) but not have enough weight on the rear axle to have proper braking performance. If the brakes cannot work properly, the vehice could crash. Always follow the snow plow manufacturer or installer's recommendation for rear ballast to ensure a proper front and rear weight distribution ratio. Maintaining a proper front and rear weight distribution ratio is necessary to provide proper braking performance.

Total vehicle reserve capacity is the difference between the GVWR and the weight of the truck with full fuel and passengers. It is the amount of weight that can be added to the vehicle before reaching the GVWR.

Reserve capacity numbers are intended as a guide when selecting the amount of equipment or cargo the truck can carry. If unsure of the vehicle's front, rear, or total weight, go to a weigh station and weigh the vehicle. Your dealer can also help with this.

The total vehicle reserve capacity for the vehicle is in the lower right corner of the Certification/Tire label as shown previously.

See your dealer for additional advice and information about using a snow plow on the vehicle. Also, see *Vehicle Load Limits* ⇨ *238*.

Emergency Roof Lamp Provisions

Vehicles with the RPO VYU snow plow prep package also have an emergency roof lamp provision package, RPO TRW. Wiring for the emergency roof lamp is provided above the overhead console. See *Auxiliary Roof-Mounted Lamp* ⇨ *176* for switch location.

Pickup Conversion to Chassis Cab

We are aware that some vehicle owners might consider having the pickup box removed and a commercial or recreational body installed. Owners should be aware that, as manufactured, there are differences between a chassis cab and a pickup with the box removed which could affect vehicle safety. The components necessary to adapt a pickup to permit its safe use with a specialized body should be installed by the body builder.

Vehicle Care

General Information

General Information 325
California Proposition 65 Warning 326
California Perchlorate Materials Requirements 326
Accessories and Modifications 326

Vehicle Checks

Doing Your Own Service Work 327
Hood 327
Engine Compartment Overview 329
Engine Oil 332
Engine Oil Life System 334
Automatic Transmission Fluid (6-Speed Transmission) 336
Automatic Transmission Fluid (8-Speed Transmission) 338
Engine Air Cleaner/Filter 339
Cooling System 340
Engine Overheating 344
Overheated Engine Protection Operating Mode 345
Engine Fan 346
Power Steering Fluid (1500 Series) 346
Power Steering Fluid (2500/3500 Series) 346
Washer Fluid 347
Brakes 348
Brake Fluid 349
Battery - North America 350
Four-Wheel Drive 351
Front Axle 351
Rear Axle 352
Noise Control System 353
Starter Switch Check 355
Automatic Transmission Shift Lock Control Function Check 355
Ignition Transmission Lock Check 355
Park Brake and P (Park) Mechanism Check 355
Wiper Blade Replacement 356
Windshield Replacement 357
Gas Strut(s) 357

Headlamp Aiming

Headlamp Aiming 358

Bulb Replacement

Bulb Replacement 358
Halogen Bulbs 358
High Intensity Discharge (HID) Lighting 359
LED Lighting 359
Headlamps, Front Turn Signal, Sidemarker, and Parking Lamps 359
Fog Lamps 360
Taillamps (Chassis Cab Models) 360
Taillamps, Turn Signal, Stoplamps, and Back-Up Lamps 360
Center High-Mounted Stoplamp (CHMSL) and Cargo Lamp 362

Electrical System

Electrical System Overload . . . 362
Fuses and Circuit Breakers . . . 363
Engine Compartment Fuse Block 363
Instrument Panel Fuse Block (Right) 367
Instrument Panel Fuse Block (Left) 368

Wheels and Tires

Tires 371
All-Season Tires 371
Winter Tires 372
Low-Profile Tires 372

All-Terrain Tires 373
Tire Sidewall Labeling 373
Tire Designations 375
Tire Terminology and Definitions 377
Tire Pressure 379
Tire Pressure for High-Speed Operation 381
Tire Pressure Monitor System 381
Tire Pressure Monitor Operation 382
Tire Inspection 386
Tire Rotation 387
When It Is Time for New Tires 389
Buying New Tires 390
Different Size Tires and Wheels 391
Uniform Tire Quality Grading 392
Wheel Alignment and Tire Balance 393
Wheel Replacement 394
Tire Chains 395
If a Tire Goes Flat 395
Tire Changing 397
Full-Size Spare Tire 408

Jump Starting
Jump Starting - North America 409

Towing the Vehicle
Towing the Vehicle 413
Recreational Vehicle Towing 413

Appearance Care
Exterior Care 419
Interior Care 424
Floor Mats 427

General Information

For service and parts needs, visit your dealer. You will receive genuine GM parts and GM-trained and supported service people.

Genuine GM parts have one of these marks:

ACDelco

GM GENUINE PARTS

GMC

ACCESSORIES

California Proposition 65 Warning

⚠ Warning

Most motor vehicles, including this one, as well as many of its service parts and fluids, contain and/or emit chemicals known to the State of California to cause cancer and birth defects or other reproductive harm. Engine exhaust, many parts and systems, many fluids, and some component wear by-products contain and/or emit these chemicals. For more information go to www.P65Warnings.ca.gov/passenger-vehicle.

See *Battery - North America* ⇨ *350* and *Jump Starting - North America* ⇨ *409* and the back cover.

California Perchlorate Materials Requirements

Certain types of automotive applications, such as airbag initiators, seat belt pretensioners, and lithium batteries contained in Remote Keyless Entry transmitters, may contain perchlorate materials. Special handling may be necessary. For additional information, see www.dtsc.ca.gov/hazardouswaste/perchlorate.

Accessories and Modifications

Adding non-dealer accessories or making modifications to the vehicle can affect vehicle performance and safety, including such things as airbags, braking, stability, ride and handling, emissions systems, aerodynamics, durability, and electronic systems like antilock brakes, traction control, and stability control. These accessories or modifications could even cause malfunction or damage not covered by the vehicle warranty.

Damage to suspension components caused by modifying vehicle height outside of factory settings will not be covered by the vehicle warranty.

Damage to vehicle components resulting from modifications or the installation or use of non-GM certified parts, including control module or software modifications, is not covered under the terms of the vehicle warranty and may affect remaining warranty coverage for affected parts.

GM Accessories are designed to complement and function with other systems on the vehicle. See your dealer to accessorize the vehicle using genuine GM Accessories installed by a dealer technician.

Also, see *Adding Equipment to the Airbag-Equipped Vehicle* ⇨ *89*.

Vehicle Checks

Doing Your Own Service Work

⚠ Warning

It can be dangerous to work on your vehicle if you do not have the proper knowledge, service manual, tools, or parts. Always follow owner's manual procedures and consult the service manual for your vehicle before doing any service work.

If doing some of your own service work, use the proper service manual. It tells you much more about how to service the vehicle than this manual can. To order the proper service manual, see *Publication Ordering Information* ⇨ *459*.

This vehicle has an airbag system. Before attempting to do your own service work, see *Servicing the Airbag-Equipped Vehicle* ⇨ *88*.

If equipped with remote vehicle start, open the hood before performing any service work to prevent remote starting the vehicle accidentally. See *Remote Vehicle Start* ⇨ *38*.

Keep a record with all parts receipts and list the mileage and the date of any service work performed. See *Maintenance Records* ⇨ *445*.

Caution

Even small amounts of contamination can cause damage to vehicle systems. Do not allow contaminants to contact the fluids, reservoir caps, or dipsticks.

Hood

To open the hood:

1. Pull the handle with this symbol on it. It is inside the vehicle under the steering wheel.

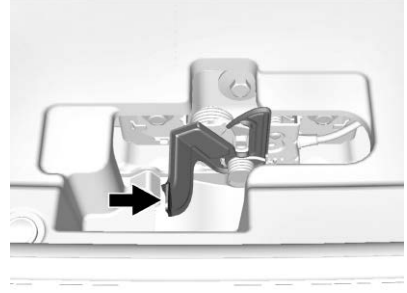

2. Go to the front of the vehicle to find the secondary hood release. The handle is under the front edge of the hood near the center. Push the handle to the right and at the same time raise the hood.

Before closing the hood, be sure all the filler caps are on properly. Then bring the hood from full open to within 15 cm (6 in) from the closed position, pause, and push the front center of the hood with a swift, firm motion to fully close the hood.

Engine Compartment Overview

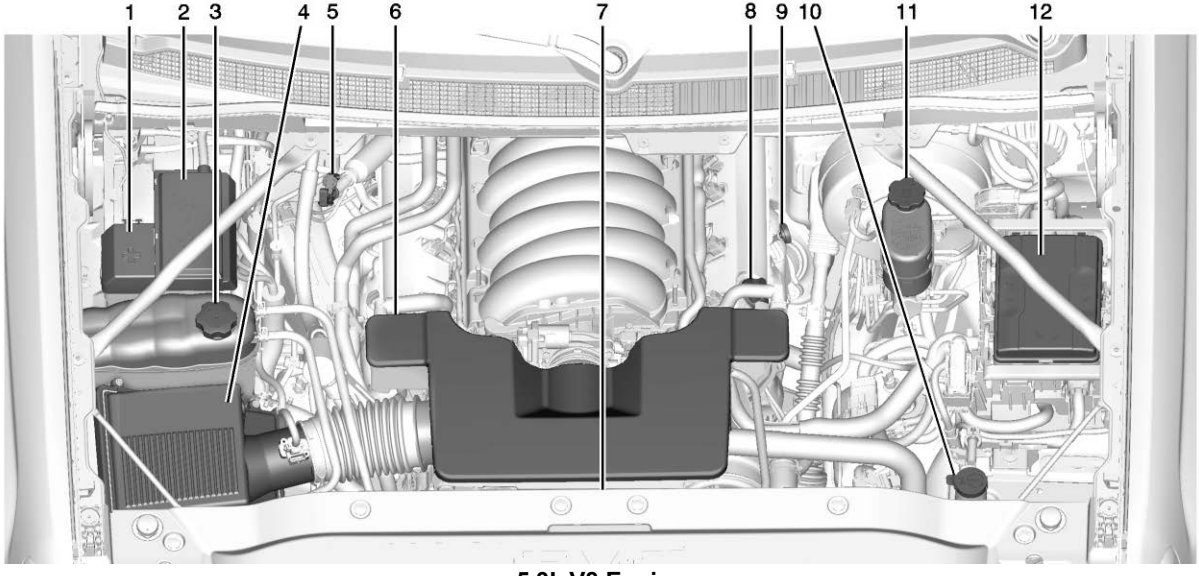

5.3L V8 Engine

1. Positive (+) Terminal. See *Jump Starting - North America* ⇨ *409*.
2. *Battery - North America* ⇨ *350*.
3. Coolant Surge Tank and Pressure Cap. See *Cooling System* ⇨ *340*.
4. *Engine Air Cleaner/Filter* ⇨ *339*.
5. Automatic Transmission Dipstick (If Equipped). See "How to Check Automatic Transmission Fluid" under *Automatic Transmission Fluid (6-Speed Transmission)* ⇨ *336* or *Automatic Transmission Fluid (8-Speed Transmission)* ⇨ *338*.
6. Remote Negative (–) Location (Out of View). See *Jump Starting - North America* ⇨ *409*.
7. Engine Cooling Fans (Out of View). See *Cooling System* ⇨ *340*.
8. Engine Oil Fill Cap. See "When to Add Engine Oil" under *Engine Oil* ⇨ *332*.
9. Engine Oil Dipstick. See "Checking Engine Oil" under *Engine Oil* ⇨ *332*.
10. Windshield Washer Fluid Reservoir. See "Adding Washer Fluid" under *Washer Fluid* ⇨ *347*.
11. Brake Fluid Reservoir. See *Brake Fluid* ⇨ *349*.
12. *Engine Compartment Fuse Block* ⇨ *363*.

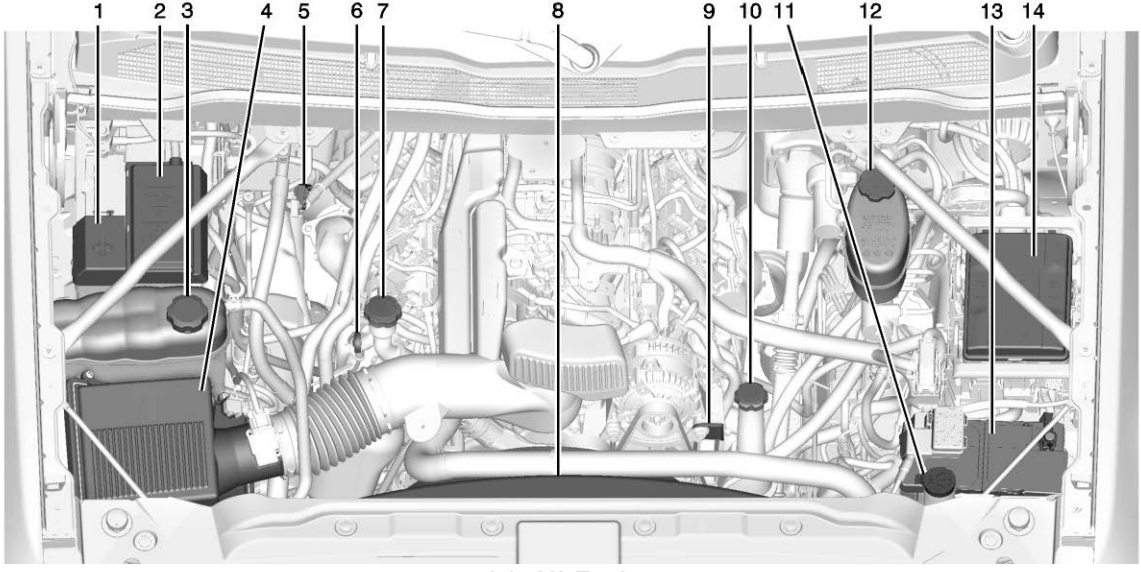

6.0L V8 Engine

1. Positive (+) Terminal. See *Jump Starting - North America* ⇨ *409*.
2. *Battery - North America* ⇨ *350*.
3. Coolant Surge Tank and Pressure Cap. See *Cooling System* ⇨ *340*.
4. *Engine Air Cleaner/Filter* ⇨ *339*.
5. Automatic Transmission Dipstick (If Equipped). See "How to Check Automatic Transmission Fluid" under *Automatic Transmission Fluid (6-Speed Transmission)* ⇨ *336* or *Automatic Transmission Fluid (8-Speed Transmission)* ⇨ *338*.
6. Engine Oil Dipstick. See "Checking Engine Oil" under *Engine Oil* ⇨ *332*.
7. Engine Oil Fill Cap. See "When to Add Engine Oil" under *Engine Oil* ⇨ *332*.
8. Engine Cooling Fan (Out of View). See *Cooling System* ⇨ *340*.
9. Remote Negative (–) Location. See *Jump Starting - North America* ⇨ *409*.
10. Power Steering Fluid Reservoir. See *Power Steering Fluid (1500 Series)* ⇨ *346* or *Power Steering Fluid (2500/3500 Series)* ⇨ *346*.
11. Windshield Washer Fluid Reservoir. See "Adding Washer Fluid" under *Washer Fluid* ⇨ *347*.
12. Brake Fluid Reservoir. See *Brake Fluid* ⇨ *349*.
13. Auxiliary Battery (If Equipped). See *Battery - North America* ⇨ *350*.
14. *Engine Compartment Fuse Block* ⇨ *363*.

If the vehicle has a diesel engine and/or an Allison Transmission, see the Duramax diesel supplement.

Engine Oil

For diesel engine vehicles, see "Engine Oil" in the Duramax diesel supplement.

To ensure proper engine performance and long life, careful attention must be paid to engine oil. Following these simple, but important steps will help protect your investment:

- Use engine oil approved to the proper specification and of the proper viscosity grade. See "Selecting the Right Engine Oil" in this section.
- Check the engine oil level regularly and maintain the proper oil level. See "Checking Engine Oil" and "When to Add Engine Oil" in this section.
- Change the engine oil at the appropriate time. See *Engine Oil Life System* ⇨ *334*.
- Always dispose of engine oil properly. See "What to Do with Used Oil" in this section.

Checking Engine Oil

Check the engine oil level regularly, every 650 km (400 mi), especially prior to a long trip. The engine oil dipstick handle is a loop. See *Engine Compartment Overview* ⇨ *329* for the location.

⚠ Warning

The engine oil dipstick handle may be hot; it could burn you. Use a towel or glove to touch the dipstick handle.

If a low oil Driver Information Center (DIC) message displays, check the oil level.

Follow these guidelines:

- To get an accurate reading, park the vehicle on level ground. Check the engine oil level after the engine has been off for at least two hours. Checking the engine oil level on steep grades or too soon after engine shutoff can result in incorrect readings. Accuracy improves when checking a cold engine prior to starting. Remove the dipstick and check the level.
- If unable to wait two hours, the engine must be off for at least 15 minutes if the engine is warm, or at least 30 minutes if the engine is not warm. Pull out the dipstick, wipe it with a clean paper towel or cloth, then push it back in all the way. Remove it again, keeping the tip down, and check the level.

When to Add Engine Oil

If the oil is below the cross-hatched area at the tip of the dipstick and the engine has been off for at least 15 minutes, add 1 L (1 qt) of the recommended oil and then recheck the level. See “Selecting the Right Engine Oil” later in this section for an explanation of what kind of oil to use. For engine oil crankcase capacity, see *Capacities and Specifications* ⇨ *447*.

Caution

Do not add too much oil. Oil levels above or below the acceptable operating range shown on the dipstick are harmful to the engine. If the oil level is above the operating range (i.e., the engine has so much oil that the oil level gets above the cross-hatched area that shows the proper operating range), the engine could be damaged. Drain the excess oil or limit driving of the vehicle, and seek a service professional to remove the excess oil.

See *Engine Compartment Overview* ⇨ *329* for the location of the engine oil fill cap.

Add enough oil to put the level somewhere in the proper operating range. Push the dipstick all the way back in when through.

Selecting the Right Engine Oil

Selecting the right engine oil depends on both the proper oil specification and viscosity grade. See *Recommended Fluids and Lubricants* ⇨ *441*.

Specification

Use full synthetic engine oils that meet the dexos1 specification. Engine oils that have been approved by GM as meeting the dexos1 specification are marked with the dexos1 approved logo.

Caution

Failure to use the recommended engine oil or equivalent can result in engine damage not covered by the vehicle warranty.

Viscosity Grade

Use SAE 0W-20 viscosity grade engine oil

When selecting an oil of the appropriate viscosity grade, it is recommended to select an oil of the correct specification. See “Specification” earlier in this section.

Engine Oil Additives/Engine Oil Flushes

Do not add anything to the oil. The recommended oils meeting the dexos1 specification are all that is needed for good performance and engine protection.

Engine oil system flushes are not recommended and could cause engine damage not covered by the vehicle warranty.

What to Do with Used Oil

Used engine oil contains certain elements that can be unhealthy for your skin and could even cause cancer. Do not let used oil stay on your skin for very long. Clean your skin and nails with soap and water, or a good hand cleaner. Wash or properly dispose of clothing or rags containing used engine oil. See the manufacturer's warnings about the use and disposal of oil products.

Used oil can be a threat to the environment. If you change your own oil, be sure to drain all the oil from the filter before disposal. Never dispose of oil by putting it in the trash or pouring it on the ground, into sewers, or into streams or bodies of water. Recycle it by taking it to a place that collects used oil.

Engine Oil Life System

When to Change Engine Oil

This vehicle has a computer system that indicates when to change the engine oil and filter. This is based on a combination of factors which

include engine revolutions, engine temperature, and miles driven. Based on driving conditions, the mileage at which an oil change is indicated can vary considerably. For the oil life system to work properly, the system must be reset every time the oil is changed.

On some vehicles, when the system has calculated that oil life has been diminished, a CHANGE ENGINE OIL SOON message comes on to indicate that an oil change is necessary. Change the oil as soon as possible within the next 1 000 km (600 mi). It is possible that, if driving under the best conditions, the oil life system might indicate that an oil change is not necessary for up to a year. The engine oil and filter must be changed at least once a year and, at this time, the system must be reset. For vehicles without the CHANGE ENGINE OIL SOON message, an oil change is needed when the OIL LIFE REMAINING percentage is near 0%. Your dealer has trained service people who will perform this work and reset the system. It is also important to check the oil regularly over the course of an oil drain interval and keep it at the proper level.

If the system is ever reset accidentally, the oil must be changed at 5 000 km (3,000 mi) since the last oil change. Remember to reset the oil life system whenever the oil is changed.

How to Reset the Engine Oil Life System

Reset the system whenever the engine oil is changed so that the system can calculate the next engine oil change. Always reset the engine oil life to 100% after every oil change. It will not reset itself. To reset the engine oil life system:

1. Display the OIL LIFE REMAINING on the DIC. If the vehicle does not have DIC buttons, the vehicle must be in P (Park) to access this display. See *Driver Information Center (DIC) (Base Level)* ⇨ *154* or *Driver Information Center (DIC) (Uplevel)* ⇨ *156*.
2. Press and hold ✓, or the trip odometer reset stem if the vehicle does not have DIC buttons, for several seconds. The oil life will change to 100%.

The oil life system can also be reset as follows:

1. Display the OIL LIFE REMAINING on the DIC. See *Driver Information Center (DIC) (Base Level)* ⇨ *154* or *Driver Information Center (DIC) (Uplevel)* ⇨ *156*.
2. Fully press the accelerator pedal slowly three times within five seconds.
3. Display the OIL LIFE REMAINING on the DIC. If the display shows 100%, the system is reset.

If the vehicle has a CHANGE ENGINE OIL SOON message and it comes back on when the vehicle is started and/or the OIL LIFE REMAINING is near 0%, the engine oil life system has not been reset. Repeat the procedure.

Automatic Transmission Fluid (6-Speed Transmission)

When to Check and Change Automatic Transmission Fluid

It is usually not necessary to check the transmission fluid level. The only reason for fluid loss is a transmission leak or overheated transmission. If a small leak is suspected, then use the following checking procedures to check the fluid level. However, if there is a large leak, then it may be necessary to have the vehicle towed to a dealer service department and have it repaired before driving the vehicle further.

Caution

Use of the incorrect automatic transmission fluid may damage the vehicle, and the damage may not be covered by the vehicle warranty. Always use the

(Continued)

Caution (Continued)

automatic transmission fluid listed in *Recommended Fluids and Lubricants* ⇨ *441*.

Change the fluid and filter at the scheduled maintenance intervals listed in *Maintenance Schedule* ⇨ *431*. Be sure to use the transmission fluid listed in *Recommended Fluids and Lubricants* ⇨ *441*.

How to Check Automatic Transmission Fluid

Caution

Too much or too little fluid can damage the transmission. Too much can mean that some of the fluid could come out and fall on hot engine parts or exhaust system parts, starting a fire. Too little fluid could cause the

(Continued)

Caution (Continued)

transmission to overheat. Be sure to get an accurate reading if checking the transmission fluid.

Before checking the fluid level, prepare the vehicle:

1. Start the engine and park the vehicle on a level surface. Keep the engine running.
2. Apply the parking brake and place the shift lever in P (Park).
3. With your foot on the brake pedal, move the shift lever through each gear range, pausing for about three seconds in each range. Then, move the shift lever back to P (Park).
4. Allow the engine to idle (500–800 rpm) for at least one minute. Slowly release the brake pedal.
5. Keep the engine running and check the transmission fluid temperature on the Driver

Information Center (DIC). See *Driver Information Center (DIC) (Base Level)* ⇨ *154* or *Driver Information Center (DIC) (Uplevel)* ⇨ *156*.

6. Using the transmission fluid temperature reading, determine and perform the appropriate check procedure. If the transmission fluid temperature reading is not within the required temperature ranges, allow the vehicle to cool, or operate the vehicle until the appropriate transmission fluid temperature is reached.

Cold Check Procedure

Use this procedure only as a reference to determine if the transmission has enough fluid to be operated safely until a hot check procedure can be made. The hot check procedure is the most accurate method to check the fluid level. Perform the hot check procedure at the first opportunity. Use this cold check procedure to check fluid level when the transmission temperature is between 27 °C and 32 °C (80 °F and 90 °F).

1. Locate the transmission dipstick at the rear of the engine compartment, on the passenger side of the vehicle.

   See *Engine Compartment Overview* ⇨ *329*.

2. Flip the handle up, then pull out the dipstick and wipe it with a clean rag or paper towel.
3. Install the dipstick by pushing it back in all the way; wait three seconds, and then pull it back out again.
4. Check both sides of the dipstick and read the lower level. Repeat the check procedure to verify the reading.

5. If the fluid level is below the COLD check band, add only enough fluid as necessary to bring the level into the COLD band. It does not take much fluid, generally less than 0.5 L (1 pt). Do not overfill.
6. Perform a hot check at the first opportunity after the transmission reaches a normal operating temperature between 71 °C to 93 °C (160 °F to 200 °F).
7. If the fluid level is in the acceptable range, push the dipstick back in all the way, then flip the handle down to lock the dipstick in place.

Hot Check Procedure

Use this procedure to check the transmission fluid level when the transmission fluid temperature is between 71 °C and 93 °C (160 °F and 200 °F).

The hot check is the most accurate method to check the fluid level. The hot check should be performed at the first opportunity in order to verify the cold check. The fluid level rises as fluid temperature increases, so it is important to ensure the transmission temperature is within range.

1. Locate the transmission dipstick at the rear of the engine compartment, on the passenger side of the vehicle.

   See *Engine Compartment Overview* ⇨ *329*.

2. Flip the handle up, then pull out the dipstick and wipe it with a clean rag or paper towel.
3. Install the dipstick by pushing it back in all the way; wait three seconds, and then pull it back out again.
4. Check both sides of the dipstick and read the lower level. Repeat the check procedure to verify the reading.

5. Safe operating level is within the HOT cross hatch band on the dipstick. If the fluid level is not within the HOT band, and the transmission temperature is between 71 °C and 93 °C (160 °F and 200 °F), add or drain fluid as necessary to bring the level into the HOT band. If the fluid level is low, add only enough fluid to bring the level into the HOT band. It does not take much fluid, generally less than 0.5 L (1 pt). Do not overfill.
6. If the fluid level is in the acceptable range, push the dipstick back in all the way, then flip the handle down to lock the dipstick in place.

Consistency of Readings

Always check the fluid level at least twice using the procedure described previously. Consistency (repeatable readings) is important to maintaining proper fluid level. If readings are still inconsistent, contact the dealer.

Automatic Transmission Fluid (8-Speed Transmission)

When to Check and Change Automatic Transmission Fluid

It is usually not necessary to check the transmission fluid level. The only reason for fluid loss is a

transmission leak or overheated transmission. This vehicle is not equipped with a transmission fluid level dipstick. There is a special procedure for checking and changing the transmission fluid in these vehicles. Because this procedure is difficult, this should be done at the dealer. Contact the dealer for additional information or the procedure can be found in the service manual. See *Publication Ordering Information* ⇨ *459*.

Caution
Use of the incorrect automatic transmission fluid may damage the vehicle, and the damage may not be covered by the vehicle warranty. Always use the correct automatic transmission fluid. See *Recommended Fluids and Lubricants* ⇨ *441*.

Change the fluid and filter at the scheduled maintenance intervals listed in *Maintenance Schedule* ⇨ *431*. Be sure to use the transmission fluid listed in *Recommended Fluids and Lubricants* ⇨ *441*.

Engine Air Cleaner/Filter

If the vehicle has a diesel engine, see “8-Cylinder Pickup Models” under “Engine Air Cleaner/Filter” in the Duramax diesel supplement for the correct inspection and replacement procedures.

The engine air cleaner/filter is on the passenger side of the engine compartment. See *Engine Compartment Overview* ⇨ *329*.

When to Inspect the Engine Air Cleaner/Filter

For intervals on changing and inspecting the engine air filter, see *Maintenance Schedule* ⇨ *431*.

How to Inspect the Engine Air Cleaner/Filter

Do not start the engine or have the engine running with the engine air cleaner/filter housing open. Before removing the engine air cleaner/filter, make sure that the engine air cleaner/filter housing and nearby components are free of dirt and debris. Remove the engine air cleaner/filter. Lightly tap and shake the engine air cleaner/filter (away from the vehicle), to release loose dust and dirt. Inspect the engine air cleaner/filter for damage, and replace if damaged. Do not clean the engine air cleaner/filter or components with water or compressed air.

To inspect or replace the engine air cleaner/filter:

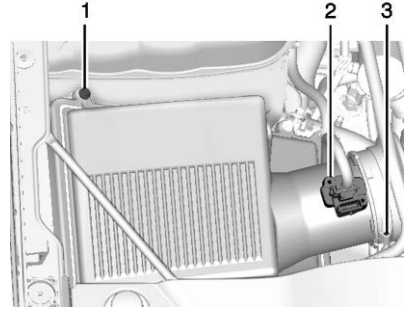

1. Screws
2. Electrical Connectors

3. Air Duct Clamp

1. Locate the air cleaner/filter assembly. See *Engine Compartment Overview* ⇨ *329*.
2. Disconnect the outlet duct by loosening the air duct clamp (3).
3. Disconnect the electrical connectors (2) and the connector harness from the cover.
4. Remove the four screws (1) on top of the cover of the housing and lift up the cover.
5. Remove the engine air cleaner/filter from the housing. Take care to dislodge as little dirt as possible.
6. Clean the engine air cleaner/filter sealing surfaces and the housing.
7. Inspect or replace the engine air cleaner/filter.
8. Reverse Steps 2–4 to reinstall the filter cover housing.

⚠ Warning

Operating the engine with the air cleaner/filter off can cause you or others to be burned. Use caution when working on the engine. Do not start the engine or drive the vehicle with the air cleaner/filter off, as flames may be present if the engine backfires.

Caution

If the air cleaner/filter is off, dirt can easily get into the engine, which could damage it. Always have the air cleaner/filter in place when driving.

Cooling System

If the vehicle has the Duramax diesel engine, see the Duramax diesel supplement.

The cooling system allows the engine to maintain the correct working temperature.

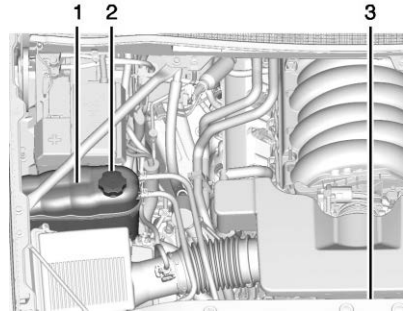

5.3L V8 Engine

1. Coolant Surge Tank
2. Coolant Surge Tank Pressure Cap
3. Engine Electric Cooling Fans (Out of View)

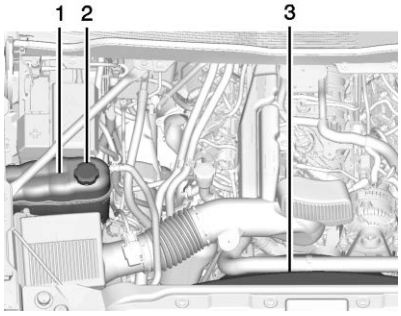

6.0L V8 Engine

1. Coolant Surge Tank
2. Coolant Surge Tank Pressure Cap
3. Engine Belt-Driven Cooling Fan (Out of View)

⚠ Warning

An underhood electric fan can start up even when the engine is not running and can cause injury. Keep hands, clothing, and tools away from any underhood electric fan.

⚠ Warning

Do not touch heater or radiator hoses, or other engine parts. They can be very hot and can burn you. Do not run the engine if there is a leak; all coolant could leak out. That could cause an engine fire and can burn you. Fix any leak before driving the vehicle.

Engine Coolant

The cooling system in the vehicle is filled with DEX-COOL engine coolant. This coolant is designed to remain in the vehicle for 5 years or 240 000 km (150,000 mi), whichever occurs first.

The following explains the cooling system and how to check and add coolant when it is low. If there is a problem with engine overheating, see *Engine Overheating* ⇨ *344*.

What to Use

⚠ Warning

Plain water, or other liquids such as alcohol, can boil before the proper coolant mixture will. With plain water or the wrong mixture, the engine could get too hot but there would not be an overheat warning. The engine could catch fire and you or others could be burned.

Use a 50/50 mixture of clean, drinkable water and DEX-COOL coolant. This mixture:

- Gives freezing protection down to −37 °C (−34 °F), outside temperature.
- Gives boiling protection up to 129 °C (265 °F), engine temperature.
- Protects against rust and corrosion.
- Will not damage aluminum parts.

- Helps keep the proper engine temperature.

Caution

Do not use anything other than a mix of DEX-COOL coolant that meets GM Standard GMW3420 and clean, drinkable water. Anything else can cause damage to the engine cooling system and the vehicle, which would not be covered by the vehicle warranty.

Never dispose of engine coolant by putting it in the trash, or by pouring it on the ground, or into sewers, streams, or bodies of water. Have the coolant changed by an authorized service center, familiar with legal requirements regarding used coolant disposal. This will help protect the environment and your health.

Checking Coolant

The coolant surge tank is located in the engine compartment on the passenger side of the vehicle. See *Engine Compartment Overview* ⇨ *329*.

The vehicle must be on a level surface when checking the coolant level.

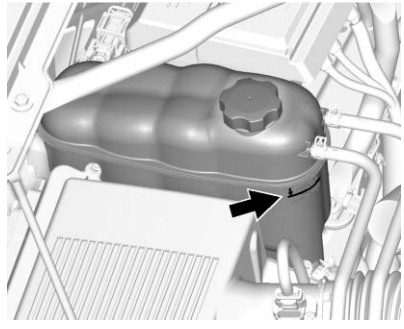

5.3L V8 Shown, 6.0L V8 Similar

Check to see if coolant is visible in the coolant surge tank. If the coolant inside the coolant surge tank is boiling, wait until it cools down. The coolant level should be at or above the full cold mark. If it is not, there may be a leak in the cooling system.

If coolant is visible but the coolant level is not at or above the full cold mark, see “How to Add Coolant to the Coolant Surge Tank for Gasoline Engines,” following.

How to Add Coolant to the Coolant Surge Tank for Gasoline Engines

If the vehicle has a diesel engine, see “Cooling System” in the Duramax diesel supplement for the proper coolant fill procedure.

⚠ Warning

Spilling coolant on hot engine parts can burn you. Coolant contains ethylene glycol and it will burn if the engine parts are hot enough.

⚠ Warning

Plain water, or other liquids such as alcohol, can boil before the proper coolant mixture will. With plain water or the wrong mixture, the engine could get too hot but there would not be an overheat warning. The engine could catch fire and you or others could be burned.

⚠ Warning

Steam and scalding liquids from a hot cooling system are under pressure. Turning the pressure cap, even a little, can cause them to come out at high speed and you could be burned. Never turn the cap when the cooling system, including the pressure cap, is hot. Wait for the cooling system and pressure cap to cool.

Caution

Failure to follow the specific coolant fill procedure could cause the engine to overheat and could cause system damage. If coolant is not visible in the surge tank, contact your dealer.

If no coolant is visible in the surge tank, add coolant.

Light-Duty Coolant Surge Tank Pressure Cap

Heavy-Duty Coolant Surge Tank Pressure Cap

1. Remove the coolant surge tank pressure cap when the cooling system, including the coolant surge tank pressure cap and upper radiator hose, is no longer hot.

   Turn the pressure cap slowly counterclockwise about one full turn. If a hiss is heard, wait for that to stop. A hiss means there is still some pressure left.
2. Keep turning the pressure cap slowly, and remove it.
3. Fill the coolant surge tank with the proper mixture to the full cold mark.
4. With the coolant surge tank pressure cap off, start the engine and let it run until the engine coolant temperature gauge indicates approximately 90 °C (195 °F).

   By this time, the coolant level inside the coolant surge tank may be lower. If the level is lower, add more of the proper mixture to the coolant surge tank until the level reaches the full cold mark.
5. Replace the pressure cap tightly.

6. Verify coolant level after the engine is shut off and the coolant is cold. If necessary, repeat coolant fill procedure Steps 1–6.

Caution

If the pressure cap is not tightly installed, coolant loss and engine damage may occur. Be sure the cap is properly and tightly secured.

Engine Overheating

If the vehicle has the Duramax diesel engine, see the Duramax diesel supplement.

Caution

Do not run the engine if there is a leak in the engine cooling system. This can cause a loss of all coolant and can damage the system and vehicle. Have any leaks fixed right away.

The vehicle has several indicators to warn of engine overheating.

There is a coolant temperature gauge in the vehicle's instrument cluster. See *Engine Coolant Temperature Gauge* ⇨ *141*.

In addition, there are ENGINE OVERHEATED STOP ENGINE, ENGINE OVERHEATED IDLE ENGINE, and ENGINE POWER IS REDUCED messages in the Driver Information Center (DIC).

If the decision is made not to lift the hood when this warning appears, get service help right away. See *Roadside Assistance Program* ⇨ *454*.

If the decision is made to lift the hood, make sure the vehicle is parked on a level surface.

5.3L V8 Engine

Check to see if the engine cooling fans are running. If the engine is overheating, the fans should be running. If they are not, do not continue to run the engine. Have the vehicle serviced.

If Steam is Coming from the Engine Compartment

⚠ Warning

Steam and scalding liquids from a hot cooling system are under pressure. Turning the pressure cap, even a little, can cause them to come out at high speed and you could be burned. Never turn the cap when the cooling system, including the pressure cap, is hot. Wait for the cooling system and pressure cap to cool.

If No Steam is Coming from the Engine Compartment

The ENGINE OVERHEATED STOP ENGINE or the ENGINE OVERHEATED IDLE ENGINE message, along with a low coolant condition, can indicate a serious problem.

If there is an engine overheat warning, but no steam is seen or heard, the problem may not be too serious. Sometimes the engine can get a little too hot when the vehicle:

- Climbs a long hill on a hot day.
- Stops after high-speed driving.
- Idles for long periods in traffic.
- Tows a trailer; see *Trailer Towing* ⇨ *298*.

If the ENGINE OVERHEATED STOP ENGINE or the ENGINE OVERHEATED IDLE ENGINE message appears with no sign of steam, try this for a minute or so:

1. Turn the air conditioning off.
2. Turn the heater on to the highest temperature and to the highest fan speed. Open the windows as necessary.
3. When it is safe to do so, pull off the road, shift to P (Park) or N (Neutral) and let the engine idle.

If the temperature overheat gauge is no longer in the overheat zone or an overheat warning no longer displays, the vehicle can be driven. Continue to drive the vehicle slowly for about 10 minutes. Keep a safe vehicle distance from the vehicle in front. If the warning does not come back on, continue to drive normally and have the cooling system checked for proper fill and function.

If the warning continues, pull over, stop, and park the vehicle right away.

If there is still no sign of steam and the vehicle is equipped with an engine driven cooling fan, push down the accelerator until the engine speed is about twice as fast as normal idle speed for at least five minutes while the vehicle is parked. If the warning is still there, turn off the engine and get everyone out of the vehicle until it cools down.

If there is no sign of steam, idle the engine for five minutes while parked. If the warning is still displayed, turn off the engine until it cools down.

Overheated Engine Protection Operating Mode

If an overheated engine condition exists and the ENGINE POWER IS REDUCED message displays, an overheat protection mode which alternates firing groups of cylinders helps to prevent engine damage. In this mode, a loss in power and engine performance will be noticed. This operating mode allows the vehicle to be driven to a safe place in an emergency. Driving extended distances and/or towing a trailer in the overheat protection mode should be avoided.

Caution

After driving in the overheated engine protection operating mode, the engine oil will be severely degraded. Any repairs performed before the engine is cool may cause engine damage. Allow the engine to cool before

(Continued)

Caution (Continued)

attempting any repair. Repair the cause of coolant loss, change the oil, and reset the oil life system. See *Engine Oil* ⇨ *332*.

Engine Fan

If the vehicle has a clutched engine cooling fan, when the clutch is engaged, the fan spins faster to provide more air to cool the engine. In most everyday driving conditions, the fan is spinning slower and the clutch is not fully engaged. This improves fuel economy and reduces fan noise. Under heavy vehicle loading, trailer towing, and/or high outside temperatures, the fan speed increases as the clutch more fully engages, so an increase in fan noise may be heard. This is normal and should not be mistaken as the transmission slipping or making extra shifts. It is merely the cooling system functioning properly. The fan will slow down when additional cooling is not required and the clutch disengages.

This fan noise may also be heard when starting the engine. It will go away as the fan clutch partially disengages.

If the vehicle has electric cooling fan(s), the fans may be heard spinning at low speed during most everyday driving. The fans may turn off if no cooling is required. Under heavy vehicle loading, trailer towing, high outside temperatures, or operation of the air conditioning system, the fans may change to high speed and an increase in fan noise may be heard. This is normal and indicates that the cooling system is functioning properly. The fans will change to low speed when additional cooling is no longer required.

The electric engine cooling fans may run after the engine has been turned. off. This is normal and no service is required.

Power Steering Fluid (1500 Series)

The vehicle has electric power steering and does not use power steering fluid.

Power Steering Fluid (2500/3500 Series)

See *Engine Compartment Overview* ⇨ *329* for reservoir location.

When to Check Power Steering Fluid

It is not necessary to regularly check power steering fluid unless there is a leak suspected in the system or an unusual noise is heard. A fluid loss in this system could indicate a problem. Have the system inspected and repaired.

Wait for the power steering system to cool, with the engine off, before checking the fluid.

How to Check Power Steering Fluid

To check the power steering fluid:

1. Turn the ignition off and let the engine compartment cool down.
2. Wipe the cap and the top of the reservoir clean.
3. Unscrew the cap and wipe the dipstick with a clean rag.
4. Replace the cap and completely tighten it.
5. Remove the cap again and look at the fluid level on the dipstick.

The level should be between the ADD and FULL marks. If necessary, add only enough fluid to bring the level up to the hashed area between the ADD and FULL marks.

What to Use

To determine what kind of fluid to use, see *Recommended Fluids and Lubricants* ⇨ *441*. Always use the proper fluid.

Caution

Use of the incorrect fluid may damage the vehicle and the damages may not be covered by the vehicle warranty. Always use the correct fluid listed in *Recommended Fluids and Lubricants* ⇨ *441*.

Washer Fluid

What to Use

When windshield washer fluid needs to be added, be sure to read the manufacturer's instructions before use. Use a fluid that has sufficient protection against freezing in an area where the temperature may fall below freezing.

Adding Washer Fluid

The vehicle has a low washer fluid message on the DIC that comes on when the washer fluid is low. The message is displayed for 15 seconds at the start of each ignition cycle. When the WASHER FLUID LOW ADD FLUID message displays, washer fluid will need to be added to the windshield washer fluid reservoir.

Open the cap with the washer symbol on it. Add washer fluid until the tank is full. See *Engine Compartment Overview* ⇨ *329* for reservoir location.

Caution

- Do not use washer fluid that contains any type of water repellent coating. This can cause the wiper blades to chatter or skip.
- Do not use engine coolant (antifreeze) in the windshield washer. It can damage the windshield washer system and paint.
- Do not mix water with ready-to-use washer fluid. Water can cause the solution to freeze and damage the washer fluid tank and other parts of the washer system.
- When using concentrated washer fluid, follow the manufacturer instructions for adding water.
- Fill the washer fluid tank only three-quarters full when it is very cold. This allows

(Continued)

Caution (Continued)

for fluid expansion if freezing occurs, which could damage the tank if it is completely full.

Brakes

Disc brake pads have built-in wear indicators that make a high-pitched warning sound when the brake pads are worn and new pads are needed. The sound can come and go or be heard all the time the vehicle is moving, except when applying the brake pedal firmly.

⚠ Warning

The brake wear warning sound means that soon the brakes will not work well. That could lead to a crash. When the brake wear warning sound is heard, have the vehicle serviced.

Caution

Continuing to drive with worn-out brake pads could result in costly brake repair.

Some driving conditions or climates can cause a brake squeal when the brakes are first applied or lightly applied. This does not mean something is wrong with the brakes.

Properly torqued wheel nuts are necessary to help prevent brake pulsation. When tires are rotated, inspect brake pads for wear and evenly tighten wheel nuts in the proper sequence to torque specifications in *Capacities and Specifications* ⇨ *447*.

Brake linings should always be replaced as complete axle sets.

Brake Pedal Travel

See your dealer if the brake pedal does not return to normal height, or if there is a rapid increase in pedal travel. This could be a sign that brake service may be required.

Replacing Brake System Parts

Always replace brake system parts with new, approved replacement parts. If this is not done, the brakes may not work properly. The braking performance expected can change in many other ways if the wrong replacement brake parts are installed or parts are improperly installed.

Brake Fluid

The brake master cylinder reservoir is filled with DOT 3 brake fluid. See *Engine Compartment Overview* ⇨ *329* for the location of the reservoir.

There are only two reasons why the brake fluid level in the reservoir may go down:

- Normal brake lining wear. When new linings are installed, the fluid level goes back up.
- A fluid leak in the brake hydraulic system. Have the brake hydraulic system fixed. With a leak, the brakes will not work well.

Always clean the brake fluid reservoir cap and the area around the cap before removing it.

Do not top off the brake fluid. Adding fluid does not correct a leak. If fluid is added when the linings are worn, there will be too much fluid when new brake linings are installed. Add or remove fluid, as necessary, only when work is done on the brake hydraulic system.

⚠ Warning

If too much brake fluid is added, it can spill on the engine and burn, if the engine is hot enough. You or others could be burned, and the vehicle could be damaged.

(Continued)

Warning (Continued)

Add brake fluid only when work is done on the brake hydraulic system.

When the brake fluid falls to a low level, the brake warning light comes on. See *Brake System Warning Light* ⇨ *148*.

Brake fluid absorbs water over time. Replace brake fluid at the specified intervals to prevent increased stopping distance. See *Maintenance Schedule* ⇨ *431*.

Checking Brake Fluid

Check brake fluid by looking at the brake fluid reservoir. See *Engine Compartment Overview* ⇨ *329*.

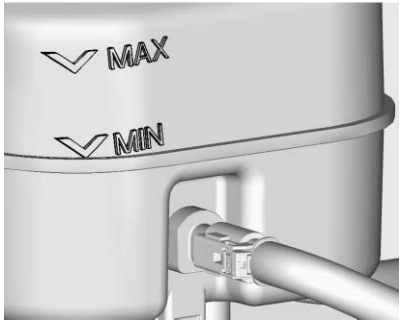

The fluid level should be above MIN. If it is not, have the brake hydraulic system checked to see if there is a leak.

After work is done on the brake hydraulic system, make sure the level is above MIN but not over the MAX mark.

What to Add

Use only GM approved DOT 3 brake fluid from a clean, sealed container. See *Recommended Fluids and Lubricants* ⇨ *441*.

⚠ Warning

The wrong or contaminated brake fluid could result in damage to the brake system. This could result in the loss of braking leading to a possible injury. Always use the proper GM approved brake fluid.

Caution

If brake fluid is spilled on the vehicle's painted surfaces, the paint finish can be damaged. Immediately wash off any painted surface.

Battery - North America

The original equipment battery is maintenance free. Do not remove the cap and do not add fluid.

Refer to the replacement number shown on the original battery label when a new battery is needed. See *Engine Compartment Overview* ⇨ *329* for battery location.

⚠ Warning

WARNING: Battery posts, terminals, and related accessories contain lead and lead compounds, chemicals known to the State of California to cause cancer and birth defects or other reproductive harm. Batteries also contain other chemicals known to the State of California to cause cancer. **WASH HANDS AFTER HANDLING.** For more information go to www.P65Warnings.ca.gov/passenger-vehicle.

See *California Proposition 65 Warning* ⇨ *326* and the back cover.

Vehicle Storage

⚠ Warning

Batteries have acid that can burn you and gas that can explode. You can be badly hurt if you are

(Continued)

Warning (Continued)

not careful. See *Jump Starting - North America* ⇨ *409* for tips on working around a battery without getting hurt.

Infrequent Usage: Remove the black, negative (−) cable from the battery to keep the battery from running down.

Extended Storage: Remove the black, negative (−) cable from the battery or use a battery trickle charger.

Four-Wheel Drive

Transfer Case

When to Check Lubricant

Refer to *Maintenance Schedule* ⇨ *431* to determine when to check the lubricant.

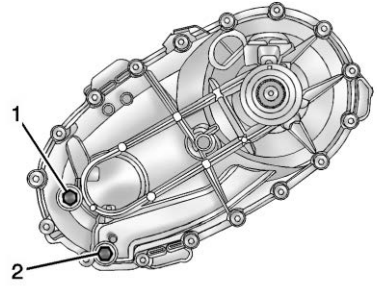

1. Fill Plug
2. Drain Plug

To get an accurate reading, the vehicle should be on a level surface.

If the level is below the bottom of the fill plug (1) hole, located on the transfer case, some lubricant will need to be added. Add enough lubricant to raise the level to the bottom of the fill plug (1) hole. Use care not to overtighten the plug.

When to Change Lubricant

Refer to *Maintenance Schedule* ⇨ *431* to determine how often to change the lubricant.

What to Use

Refer to *Recommended Fluids and Lubricants* ⇨ *441* to determine what kind of lubricant to use.

Front Axle

When to Check and Change Lubricant

It is not necessary to regularly check front axle fluid unless a leak is suspected, or an unusual noise is heard. A fluid loss could indicate a problem. Have it inspected and repaired.

How to Check Lubricant

To get an accurate reading, the vehicle should be on a level surface.

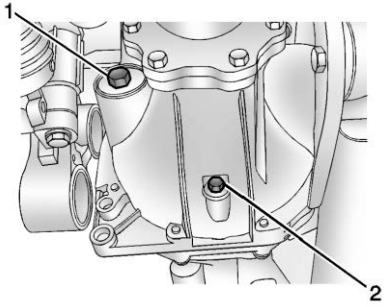

1500 Series

1. Fill Plug
2. Drain Plug

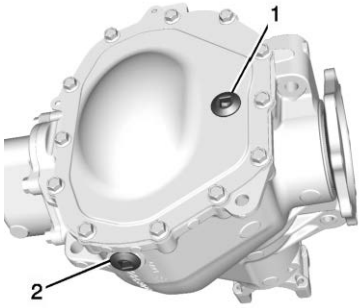

All Except 1500 Series

1. Fill Plug
2. Drain Plug

- When the differential is cold, add enough lubricant to raise the level from 0 mm (0 in) to 3.2 mm (1/8 in) below the fill plug (1) hole.
- When the differential is at operating temperature (warm), add enough lubricant to raise the level to the bottom of the fill plug (1) hole.

What to Use

Refer to *Recommended Fluids and Lubricants* ⇨ *441* to determine what kind of lubricant to use.

Rear Axle

When to Check Lubricant

It is not necessary to regularly check rear axle fluid unless a leak is suspected or an unusual noise is heard. A fluid loss could indicate a problem. Have it inspected and repaired.

All axle assemblies are filled by volume of fluid during production. They are not filled to reach a certain level. When checking the fluid level on any axle, variations in the readings can be caused by factory fill differences between the minimum and the maximum fluid volume. Also, if a vehicle has just been driven before checking the fluid level, it may appear lower than normal because fluid has traveled out along the axle tubes and has not drained back to the sump area. Therefore, a reading taken

five minutes after the vehicle has been driven will appear to have a lower fluid level than a vehicle that has been stationary for an hour or two. The rear axle assembly must be supported on a flat, level surface to get a true reading.

How to Check Lubricant

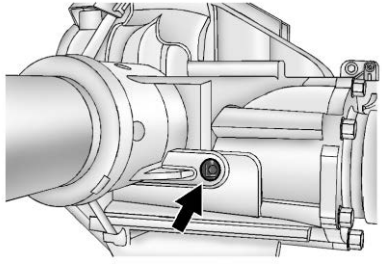

2500HD with 6.0L

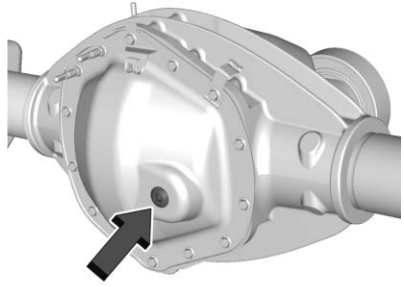

All Other Series and Engines

To get an accurate reading, the vehicle should be on a level surface.

- For 5.3L 1500 Series applications, the proper level is 1.0 mm to 19.0 mm (0.04 in to 0.7 in) below the bottom of the fill hole, located on the rear axle. Add only enough fluid to reach the proper level.
- For all 6.0L 2500HD Series applications, the proper level is from 0 mm to 13 mm (0 to 0.5 in) below the bottom of the fill plug hole, located on the rear axle. Add only enough fluid to reach the proper level.
- For all 6.6L Duramax Diesel 2500HD Series applications and all 3500 Series applications, the proper level is from 17 mm to 21 mm (0.6 in to 0.8 in) below the bottom of the fill plug hole, located on the rear axle. Add only enough fluid to reach the proper level.

What to Use

Refer to *Recommended Fluids and Lubricants* ⇨ *441* to determine what kind of lubricant to use.

Noise Control System

Noise Emissions Warranty

General Motors warrants to the first person who purchases this vehicle for purposes other than resale and to each subsequent purchaser that this vehicle as manufactured by General Motors, was designed, built and equipped to conform at the time it left General Motors's control with

all applicable U.S. EPA Noise Control Regulations. This warranty covers this vehicle as designed, built and equipped by General Motors, and is not limited to any particular part, component or system of the vehicle manufactured by General Motors. Defects in design, assembly or in any part, component or system of the vehicle as manufactured by General Motors, which, at the time it left General Motors's control, caused noise emissions to exceed Federal standards, are covered by this warranty for the life of the vehicle.

The following information relates to compliance with federal noise emission standards for vehicles with a Gross Vehicle Weight Rating (GVWR) of more than 4 536 kg (10,000 lb). The Maintenance Schedule provides information on maintaining the noise control system to minimize degradation of the noise emission control system during the life of the vehicle. The noise control system warranty is given in the warranty manual.

These standards apply only to vehicles sold in the United States.

TAMPERING WITH NOISE CONTROL SYSTEM PROHIBITED

Federal law prohibits the following acts or the causing thereof:

1. The removal or rendering inoperative by any person, other than for purposes of maintenance, repair, or replacement, of any device or element of design incorporated into any new vehicle for the purpose of noise control prior to its sale or delivery to the ultimate purchaser or while it is in use; or
2. The use of the vehicle after such device or element of design has been removed or rendered inoperative by any person.

Among those acts presumed to constitute tampering are the acts listed below.

Insulation:

Removal of the noise shields or any underhood insulation.

Engine:

Removal or rendering the engine speed governor, if equipped, inoperative so as to allow engine speed to exceed manufacturer specifications.

Fan and Drive:

- Removal of the fan clutch, if equipped, or rendering the clutch inoperative.
- Removal of the fan shroud, if equipped.

Air Intake:

- Removal of the air cleaner silencer.
- Modification of the air cleaner.

Exhaust:

- Removal of the muffler and/or resonator.
- Removal of the exhaust pipes and exhaust pipe clamps.

Starter Switch Check

⚠ Warning

When you are doing this inspection, the vehicle could move suddenly. If the vehicle moves, you or others could be injured.

1. Before starting this check, be sure there is enough room around the vehicle.
2. Apply both the parking brake and the regular brake.

   Do not use the accelerator pedal, and be ready to turn off the engine immediately if it starts.
3. Try to start the engine in each gear. The vehicle should start only in P (Park) or N (Neutral). If the vehicle starts in any other position, contact your dealer for service.

Automatic Transmission Shift Lock Control Function Check

⚠ Warning

When you are doing this inspection, the vehicle could move suddenly. If the vehicle moves, you or others could be injured.

1. Before starting this check, be sure there is enough room around the vehicle. It should be parked on a level surface.
2. Apply the parking brake. Be ready to apply the regular brake immediately if the vehicle begins to move.
3. With the engine off, turn the ignition on, but do not start the engine. Without applying the regular brake, try to move the shift lever out of P (Park) with normal effort. If the shift lever moves out of P (Park), contact your dealer for service.

Ignition Transmission Lock Check

While parked and with the parking brake set, try to turn the ignition off in each shift lever position.

- The ignition should turn off only when the shift lever is in P (Park).
- The ignition key should come out only when the ignition is off.

Contact your dealer if service is required.

Park Brake and P (Park) Mechanism Check

⚠ Warning

When you are doing this check, the vehicle could begin to move. You or others could be injured

(Continued)

Warning (Continued)

and property could be damaged. Make sure there is room in front of the vehicle in case it begins to roll. Be ready to apply the regular brake at once should the vehicle begin to move.

Park on a fairly steep hill, with the vehicle facing downhill. Keeping your foot on the regular brake, set the parking brake.

- To check the parking brake's holding ability: With the engine running and the transmission in N (Neutral), slowly remove foot pressure from the regular brake pedal. Do this until the vehicle is held by the parking brake only.
- To check the P (Park) mechanism's holding ability: With the engine running, shift to P (Park). Then release the parking brake followed by the regular brake.

Contact your dealer if service is required.

Wiper Blade Replacement

Windshield wiper blades should be replaced periodically. See *Maintenance Schedule* ⇨ *431*.

Replacement blades come in different types and are removed in different ways. For proper type and length, see *Maintenance Replacement Parts* ⇨ *443*.

Caution

Allowing the wiper arm to touch the windshield when no wiper blade is installed could damage the windshield. Any damage that occurs would not be covered by the vehicle warranty. Do not allow the wiper arm to touch the windshield.

Front Wiper Blade Replacement

To replace the wiper blade:

1. Pull the wiper assembly away from the windshield.

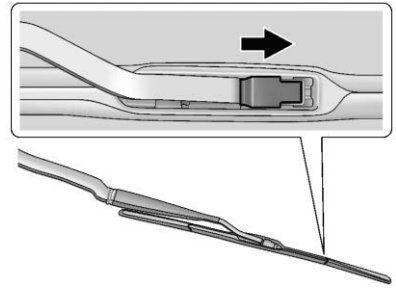

2. Lift up on the latch in the middle of the wiper blade where the wiper arm attaches.
3. With the latch open, pull the wiper blade down toward the windshield far enough to release it from the J-hooked end of the wiper arm.
4. Remove the wiper blade.
5. Reverse Steps 1–3 for wiper blade replacement.

Windshield Replacement

Driver Assistance Systems

If the windshield needs to be replaced and the vehicle is equipped with a front camera sensor for the Driver Assistance Systems, a GM replacement windshield is recommended. The replacement windshield must be installed according to GM specifications for proper alignment. If it is not, these systems may not work properly, they may display messages, or they may not work at all. See your dealer for proper windshield replacement.

Gas Strut(s)

This vehicle is equipped with gas strut(s) to provide assistance in lifting and holding open the hood/trunk/liftgate system in full open position.

⚠ Warning

If the gas struts that hold open the hood, trunk, and/or liftgate fail, you or others could be seriously injured. Take the vehicle to your dealer for service immediately. Visually inspect the gas struts for signs of wear, cracks, or other damage periodically. Check to make sure the hood/trunk/liftgate is held open with enough force. If struts are failing to hold the hood/trunk/liftgate, do not operate. Have the vehicle serviced.

Caution

Do not apply tape or hang any objects from gas struts. Also do not push down or pull on gas struts. This may cause damage to the vehicle.

See *Maintenance Schedule* ⇨ *431*.

Hood

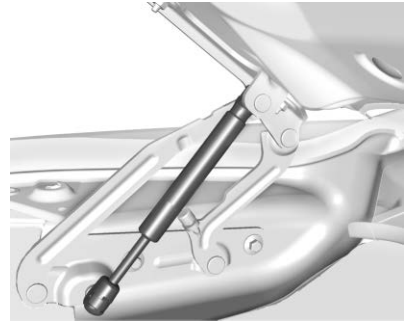

Trunk

Liftgate

Headlamp Aiming

Headlamp aim has been preset and should need no further adjustment.

If the vehicle is damaged in a crash, the headlamp aim may be affected. If adjustment to the headlamps is necessary, see your dealer.

Bulb Replacement

For the proper type of replacement bulbs, or any bulb changing procedure not listed in this section, contact your dealer.

Caution

Do not replace incandescent bulbs with aftermarket LED replacement bulbs. This can cause damage to the vehicle electrical system.

Halogen Bulbs

⚠ Warning

Halogen bulbs have pressurized gas inside and can burst if you drop or scratch the bulb. You or others could be injured. Be sure to read and follow the instructions on the bulb package.

High Intensity Discharge (HID) Lighting

⚠ Warning

The High Intensity Discharge (HID) lighting system operates at a very high voltage. If you try to service any of the system components, you could be seriously injured. Have your dealer or a qualified technician service them.

After an HID headlamp bulb has been replaced, the beam might be a slightly different shade than it was originally. This is normal.

LED Lighting

This vehicle has several LED lamps. For replacement of any LED lighting assembly, contact your dealer.

Headlamps, Front Turn Signal, Sidemarker, and Parking Lamps

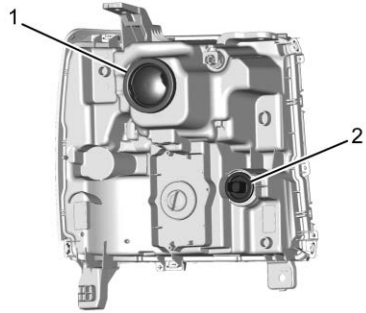

Driver Side Shown, Passenger Side Similar

1. Low/High-Beam Headlamp
2. Turn Signal

Headlamp

See your dealer for headlamp replacement.

Turn Signal

1. Open the hood.
2. If replacing a bulb on the passenger side, remove the engine air cleaner.

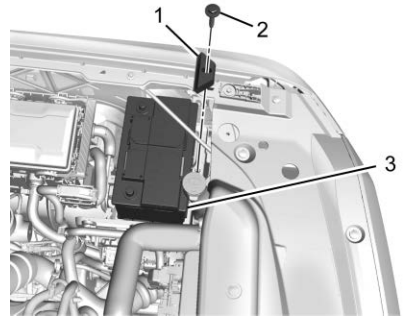

3. 2500/3500 Series vehicles only, driver side:
   3.1. Remove the auxiliary battery retainer bolt (2) and battery retainer (1).
   3.2. Reposition the auxiliary battery (3) so that the front turn signal access port is visible.

4. Turn the bulb socket counterclockwise to remove it from the headlamp assembly and pull it straight out.
5. Remove the bulb by pulling it straight out of the bulb socket.
6. Install the new bulb into the bulb socket.
7. Turn the bulb socket clockwise to install it in the headlamp assembly.
8. 2500/3500 Series vehicles only, driver side:
   8.1. Reposition the auxiliary battery (3).
   8.2. Install the auxiliary battery retainer (1) and battery retainer bolt (2).
9. If replacing a bulb on the passenger side, reinstall the engine air cleaner.
10. Close the hood.

Fog Lamps

To replace the front fog lamp bulb:

1. Locate the fog lamp in the front bumper.
2. Disconnect the electrical connector from the fog lamp bulb assembly by pressing the connector release.
3. Remove the bulb from the housing by squeezing the two release tabs and pulling it straight out of the assembly.

Taillamps (Chassis Cab Models)

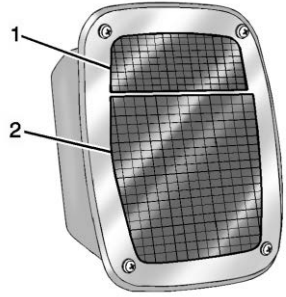

1. Back-Up Lamp
2. Stoplamp/Taillamp/Turn Signal Lamp

To replace one of these bulbs:

1. Remove the four screws.
2. Lift the lens off the lamp assembly.
3. Turn the old bulb counterclockwise and pull it straight out from the socket.

Taillamps, Turn Signal, Stoplamps, and Back-Up Lamps

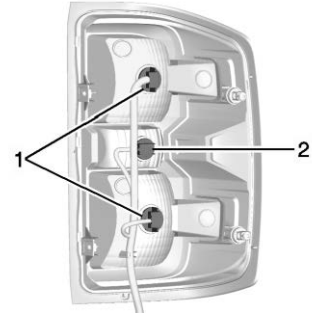

1. Stoplamp/Taillamp/Turn Signal Lamp
2. Back-Up Lamp

To replace one of these bulbs:

1. Open the tailgate.

2. Remove the two rear lamp assembly screws.
3. Pull the rear lamp assembly outboard away from the box side until the retainers release. There will be a noise when the retainers release.

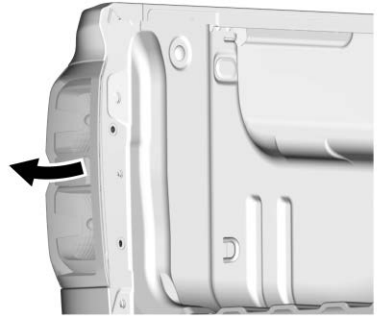

4. Pull the rear lamp assembly straight back to remove it from the vehicle.
5. Turn the bulb socket counterclockwise.
6. Pull the bulb straight out from the socket.
7. Replace the bulb, then insert the bulb socket into the rear lamp assembly and turn clockwise.

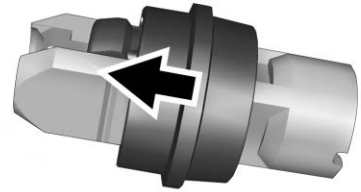

8. Verify the retainer ring is in the proper position. If the retainer ring is out of position, it will not engage. Reset the retainer by pulling it forward with a tool.
9. Push the rear lamp assembly straight in until it is seated against the vehicle.
10. Make sure the rear lamp assembly is flush with the box side.
11. Reinstall the two rear lamp assembly screws.

Center High-Mounted Stoplamp (CHMSL) and Cargo Lamp

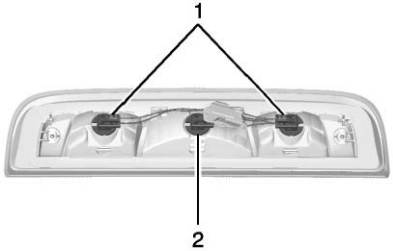

1. Cargo Lamp Bulbs
2. Center High-Mounted Stoplamp (CHMSL) Bulb

To replace one of these bulbs:

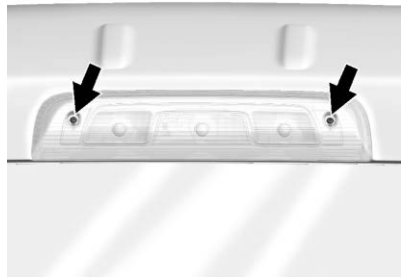

1. Remove the two screws and lift off the lamp assembly.
2. Turn the bulb socket counterclockwise and pull it straight out.
3. Pull the bulb straight out from the socket.

Electrical System

Electrical System Overload

The vehicle has fuses to protect against an electrical system overload. Fuses also protect power devices in the vehicle.

Replace a bad fuse with a new one of the identical size and rating.

If there is a problem on the road and a fuse needs to be replaced, there are some spare fuses and a fuse puller in the left instrument panel fuse block. The same amperage fuse can also be borrowed. Choose some feature of the vehicle that is not needed to use and replace it as soon as possible.

Headlamp Wiring

An electrical overload may cause the lamps to go on and off, or in some cases to remain off. Have the headlamp wiring checked right away if the lamps go on and off or remain off.

Windshield Wipers

If the wiper motor overheats due to heavy snow or ice, the windshield wipers will stop until the motor cools and will then restart.

Although the circuit is protected from electrical overload, overload due to heavy snow or ice may cause wiper linkage damage. Always clear ice and heavy snow from the windshield before using the windshield wipers.

If the overload is caused by an electrical problem and not snow or ice, be sure to get it fixed.

Fuses and Circuit Breakers

The wiring circuits in the vehicle are protected from short circuits by a combination of fuses and circuit breakers. This greatly reduces the chance of damage caused by electrical problems.

⚠ Danger

Fuses and circuit breakers are marked with their ampere rating. Do not exceed the specified amperage rating when replacing fuses and circuit breakers. Use of an oversized fuse or circuit breaker can result in a vehicle fire. You and others could be seriously injured or killed.

To check a fuse, look at the silver-colored band inside the fuse. If the band is broken or melted, replace the fuse. Be sure to replace a bad fuse with a new one of the identical size and rating.

Fuses of the same amperage can be temporarily borrowed from another fuse location, if a fuse goes out. Replace the fuse as soon as possible.

Engine Compartment Fuse Block

If the vehicle has a diesel engine, see the Duramax diesel supplement.

The engine compartment fuse block is in the engine compartment, on the driver side of the vehicle.

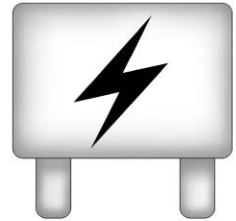

Lift the cover to access the fuse block.

Caution
Spilling liquid on any electrical component on the vehicle may damage it. Always keep the covers on any electrical component.

A fuse puller is available in the left instrument panel fuse block.

The vehicle may not be equipped with all of the fuses, relays, and features shown.

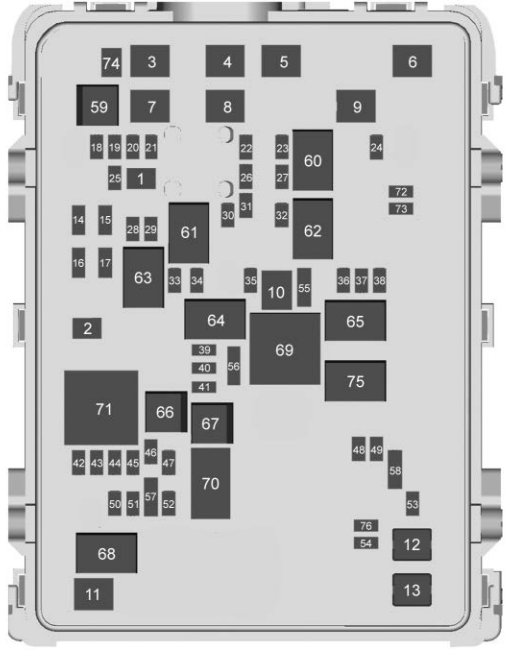

Fuses	Usage
1	Trailer brake
2	Trailer battery

Fuses	Usage
3	Antilock brake system pump
4	Instrument panel BEC 1
5	Passenger motorized seat belt
6	4WD transfer case electronic control
7	Electric parking brake
8	Instrument panel BEC 2
9	Driver motorized seat belt
10	Rear window defogger
11	Starter
12	Cooling fan 1
13	Cooling fan 2
14	Left trailer stop/ Turn signal lamps
15	Trailer parking lamps
16	Trailer reverse lamps
17	Right trailer stop/ Turn signal lamps
18	Fuel pump
19	Integrated chassis control module
20	Electronic suspension control module
21	Fuel pump power module
22	Upfitter 1
23	Upfitter 2
24	Front wiper
25	Antilock brake system valve
26	Upfitter 2
27	Upfitter 3
28	Right parking lamps
29	Left parking lamps
30	Upfitter 3
31	Upfitter 4
32	Upfitter 4
33	Reverse lamps
34	Engine control module/Ignition
35	Air conditioning clutch
36	Heated mirrors
37	Upfitter 1
38	Center high-mounted stoplamp
39	Miscellaneous/ Ignition
40	Transmission/ Ignition
41	Fuel pump 2
42	Cooling fan clutch
43	Engine
44	Fuel injectors A – odd

Fuses	Usage
45	Fuel injectors B – even
46	O2 Sensor B
47	Throttle control
48	Horn
49	Fog lamps
50	O2 Sensor A
51	Engine control module
52	Interior heater
53	Accessory power module/TPM pump
54	Front washer
55	Air conditioning/ Battery regulated voltage control
56	Air conditioning module/ Battery pack
57	Transmission control module/ Engine control module

Fuses	Usage
58	Headlamps
74	Electric running boards
76	Fuel pump prime / MGU motor
77	Cabin pump motor
79	Vacuum pump

Relays	Usage
59	Fuel pump
60	Upfitter 2
61	Upfitter 3
62	Upfitter 4
63	Trailer parking lamps
64	Run/Crank
65	Upfitter 1
66	Fuel pump 2
67	Air conditioning control
68	Starter

Relays	Usage
69	Rear window defogger
70	Engine control module
71	Vacuum pump/ Cooling fan clutch
72	CKT 95
73	CKT 92
75	Fuel pump prime/ MGU motor
78	Vacuum pump switch

Instrument Panel Fuse Block (Right)

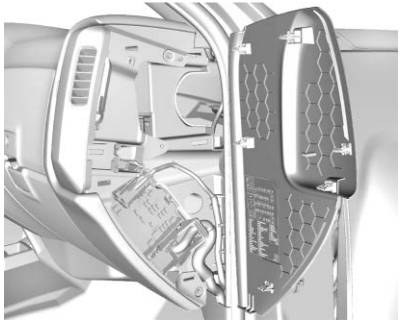

The right instrument panel fuse block access door is on the passenger side edge of the instrument panel.

Pull off the cover to access the fuse block.

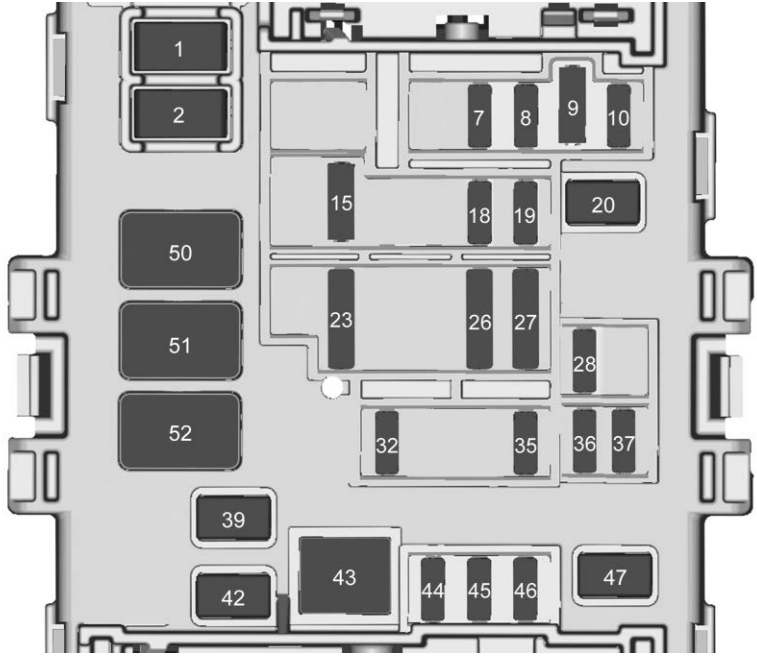

The vehicle may not be equipped with all of the fuses, relays, and features shown.

Fuses	Usage
1	Accessory power outlet 3

Fuses	Usage
2	Accessory power outlet 4
7	Body control module 4
8	Body control module 8
9	Rear seat entertainment
10	Cargo lamp
15	Steering wheel controls
18	Radio
19	–
20	Sunroof
23	Airbag/Info
26	Export/Power take off/ Special equipment option/Battery 1
27	Obstacle detection/ USB ports
28	Body control module 2
32	Special equipment option/Battery 2

Fuses	Usage
35	Air conditioning inverter
36	Amplifier
37	Battery system
39	Rear sliding window
42	Right door window motor
43	Front blower
44	Special equipment option
45	Body control module 6
46	Body control module 7
47	Passenger seat

Relays	Usage
50	Retained accessory power
51	Rear sliding window open
52	Rear sliding window close

Instrument Panel Fuse Block (Left)

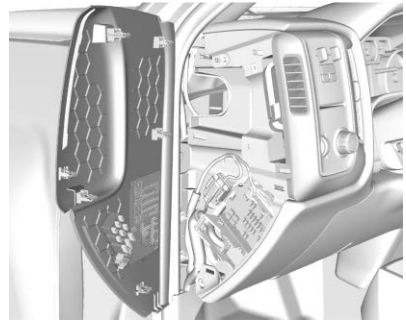

The left instrument panel fuse block access door is on the driver side edge of the instrument panel.

Pull off the cover to access the fuse block.

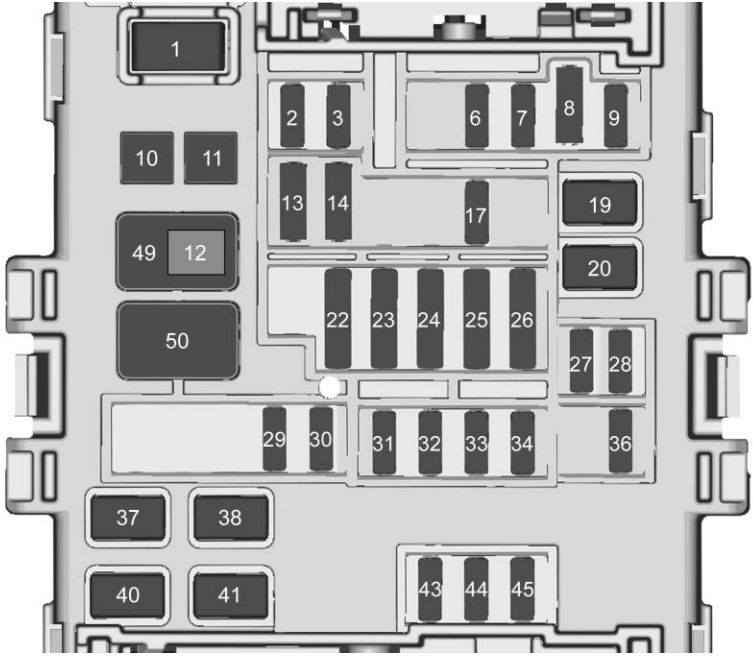

The vehicle may not be equipped with all of the fuses, relays, and features shown.

Fuses	Usage
1	Accessory power outlet 2
2	Special equipment option/Retained accessory power
3	Universal remote system/Interior rearview mirror
6	Body control module 3
7	Body control module 5
8	Driver window switch/ Mirror switch
9	–
10	Accessory power outlet/Retained accessory power
11	Accessory power outlet battery
12	Accessory power outlet 1/Cigarette lighter
13	Discrete logic ignition switch
14	Switch backlighting
17	Body control module 1

Fuses	Usage
19	–
20	–
22	Heating, ventilation, and air conditioning/ Auxiliary heating, ventilation, and air conditioning/Ignition
23	Instrument cluster/ Ignition sensing diagnostic module/ Ignition
24	–
25	Data link connector/ Driver seat module
26	Passive entry/Passive start/Heating, ventilation, and air conditioning
27	–
28	–
29	Park enable/ Electrically adjustable pedals

Fuses	Usage
30	Special equipment option
31	Accessory/Run/Crank
32	Heated steering wheel
33	–
34	Instrument cluster
36	–
37	–
38	4WD transfer case electronic control
40	Left doors
41	Driver power seat
43	Left heated, cooled or ventilated seats (if equipped)
44	Right heated, cooled or ventilated seats (if equipped)
45	–

Relays	Usage
49	Retained accessory power
50	Run/Crank

Wheels and Tires

Tires

Every new GM vehicle has high-quality tires made by a leading tire manufacturer. See the warranty manual for information regarding the tire warranty and where to get service. For additional information refer to the tire manufacturer.

⚠ Warning

- Poorly maintained and improperly used tires are dangerous.
- Overloading the tires can cause overheating as a result of too much flexing. There could be a blowout and a serious crash. See *Vehicle Load Limits* ⇨ *238*.

(Continued)

Warning (Continued)

- Underinflated tires pose the same danger as overloaded tires. The resulting crash could cause serious injury. Check all tires frequently to maintain the recommended pressure. Tire pressure should be checked when the tires are cold.
- Overinflated tires are more likely to be cut, punctured, or broken by a sudden impact — such as when hitting a pothole. Keep tires at the recommended pressure.
- Worn or old tires can cause a crash. If the tread is badly worn, replace them.

(Continued)

Warning (Continued)

- Replace any tires that have been damaged by impacts with potholes, curbs, etc.
- Improperly repaired tires can cause a crash. Only the dealer or an authorized tire service center should repair, replace, dismount, and mount the tires.
- Do not spin the tires in excess of 56 km/h (35 mph) on slippery surfaces such as snow, mud, ice, etc. Excessive spinning may cause the tires to explode.

All-Season Tires

This vehicle may come with all-season tires. These tires are designed to provide good overall

performance on most road surfaces and weather conditions. Original equipment tires designed to GM's specific tire performance criteria have a TPC specification code molded onto the sidewall. Original equipment all-season tires can be identified by the last two characters of this TPC code, which will be “MS.”

Consider installing winter tires on the vehicle if frequent driving on snow or ice-covered roads is expected. All-season tires provide adequate performance for most winter driving conditions, but they may not offer the same level of traction or performance as winter tires on snow or ice-covered roads. See *Winter Tires* ⇨ *372*.

Winter Tires

This vehicle was not originally equipped with winter tires. Winter tires are designed for increased traction on snow and ice-covered roads. Consider installing winter tires on the vehicle if frequent driving on ice or snow covered roads is expected. See your dealer for details regarding winter tire availability and proper tire selection. Also, see *Buying New Tires* ⇨ *390*.

With winter tires, there may be decreased dry road traction, increased road noise, and shorter tread life. After changing to winter tires, be alert for changes in vehicle handling and braking.

If using winter tires:

- Use tires of the same brand and tread type on all four wheel positions.
- Use only radial ply tires of the same size, load range, and speed rating as the original equipment tires.

Winter tires with the same speed rating as the original equipment tires may not be available for H, V, W, Y, and ZR speed rated tires. If winter tires with a lower speed rating are chosen, never exceed the tire's maximum speed capability.

Low-Profile Tires

If the vehicle has P275/55R20, P285/50R20, or P285/45R22 size tires, they are classified as low-profile tires.

Caution

Low-profile tires are more susceptible to damage from road hazards or curb impact than standard profile tires. Tire and/or wheel assembly damage can occur when coming into contact with road hazards like potholes, or sharp edged objects, or when sliding into a curb. The warranty does not cover this type of damage. Keep tires set to the correct inflation pressure and when possible, avoid contact with curbs, potholes, and other road hazards.

All-Terrain Tires

This vehicle may have all-terrain tires. These tires provide good performance on most road surfaces, weather conditions, and for off-road driving. See *Off-Road Driving* ⇨ *230*.

The tread pattern on these tires may wear more quickly than other tires. Consider rotating the tires more frequently than at 12 000 km (7,500 mi) intervals if irregular wear is noted when the tires are inspected. See *Tire Inspection* ⇨ *386*.

Tire Sidewall Labeling

Useful information about a tire is molded into the sidewall. The examples show a typical passenger and light truck tire sidewall.

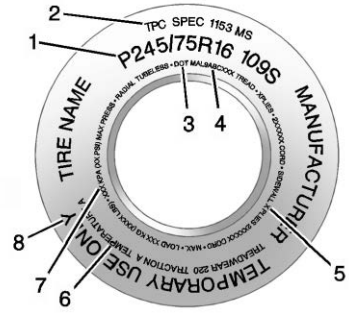

Passenger (P-Metric)/Spare Tire

(1) Tire Size : The tire size code is a combination of letters and numbers used to define a particular tire's width, height, aspect ratio, construction type, and service description. See the “Tire Size” illustration later in this section for more detail.

(2) TPC Spec (Tire Performance Criteria Specification) : Original equipment tires designed to GM's specific tire performance criteria have a TPC specification code molded onto the sidewall. GM's TPC specifications meet or exceed all federal safety guidelines.

(3) DOT (Department of Transportation) : The Department of Transportation (DOT) code indicates that the tire is in compliance with the U.S. Department of Transportation Motor Vehicle Safety Standards.

DOT Tire Date of Manufacture : The last four digits of the TIN indicate the tire manufactured date. The first two digits represent the week (01-52) and the last two digits, the year. For example, the third week of the year 2010 would have a four-digit DOT date of 0310.

(4) Tire Identification Number (TIN) : The letters and numbers following the DOT code are the Tire Identification Number (TIN).

The TIN shows the manufacturer and plant code, tire size, and date the tire was manufactured. The TIN is molded onto both sides of the tire, although only one side may have the date of manufacture.

(5) Tire Ply Material : The type of cord and number of plies in the sidewall and under the tread.

(6) Uniform Tire Quality Grading (UTQG) : Tire manufacturers are required to grade tires based on three performance factors: treadwear, traction, and temperature resistance. For more information, see *Uniform Tire Quality Grading* ⇨ *392*.

(7) Maximum Cold Inflation Load Limit : Maximum load that can be carried and the maximum pressure needed to support that load. For information on recommended tire pressure see *Tire Pressure* ⇨ *379* and *Vehicle Load Limits* ⇨ *238*.

(8) Temporary Use Only : Only use a temporary spare tire until the road tire is repaired and replaced. This spare tire should not be driven on over 112 km/h (70 mph), or 88 km/h (55 mph) when pulling a trailer, with the proper inflation pressure. See *Full-Size Spare Tire* ⇨ *408*.

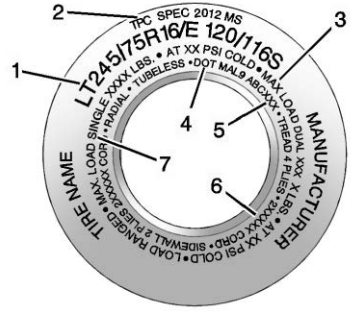

Light Truck (LT-Metric) Tire

(1) Tire Size : The tire size code is a combination of letters and numbers used to define a particular tire's width, height, aspect ratio, construction type, and service description. See the “Tire Size” illustration later in this section for more detail.

(2) TPC Spec (Tire Performance Criteria Specification) : Original equipment tires designed to GM's specific tire performance criteria have a TPC specification

code molded onto the sidewall. GM's TPC specifications meet or exceed all federal safety guidelines.

(3) Dual Tire Maximum Load : Maximum load that can be carried and the maximum pressure needed to support that load when used in a dual configuration. For information on recommended tire pressure see *Tire Pressure* ⇨ *379* and *Vehicle Load Limits* ⇨ *238*.

(4) DOT (Department of Transportation) : The Department of Transportation (DOT) code indicates that the tire is in compliance with the U.S. Department of Transportation Motor Vehicle Safety Standards.

DOT Tire Date of Manufacture : The last four digits of the TIN indicate the tire manufactured date. The first two digits represent the week (01-52) and the last two digits, the year. For example, the third week of the year 2010 would have a four-digit DOT date of 0310.

(5) Tire Identification Number (TIN) : The letters and numbers following the DOT code are the Tire Identification Number (TIN). The TIN shows the manufacturer and plant code, tire size, and date the tire was manufactured. The TIN is molded onto both sides of the tire, although only one side may have the date of manufacture.

(6) Tire Ply Material : The type of cord and number of plies in the sidewall and under the tread.

(7) Single Tire Maximum Load : Maximum load that can be carried and the maximum pressure needed to support that load when used as a single. For information on recommended tire pressure see *Tire Pressure* ⇨ *379* and *Vehicle Load Limits* ⇨ *238*.

Tire Designations

Tire Size

The examples show a typical passenger vehicle and light truck tire size.

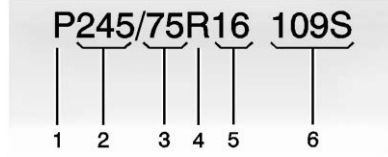

Passenger (P-Metric) Tire

(1) Passenger (P-Metric) Tire : The United States version of a metric tire sizing system. The letter P as the first character in the tire size means a passenger vehicle tire engineered to standards set by the U.S. Tire and Rim Association.

(2) Tire Width : The three-digit number indicates the tire section width in millimeters from sidewall to sidewall.

(3) Aspect Ratio : A two-digit number that indicates the tire height-to-width measurements. For example, if the tire size aspect ratio is 75, as shown in item C of the tire illustration, it would mean that the tire's sidewall is 75 percent as high as it is wide.

(4) Construction Code : A letter code is used to indicate the type of ply construction in the tire. The letter R means radial ply construction; the letter D means diagonal or bias ply construction; and the letter B means belted-bias ply construction.

(5) Rim Diameter : Diameter of the wheel in inches.

(6) Service Description : These characters represent the load index and speed rating of the tire. The load index represents the load carrying capacity a tire is certified to carry. The speed rating is the maximum speed a tire is certified to carry a load.

Light Truck (LT-Metric) Tire

(1) Light Truck (LT-Metric) Tire : The United States version of a metric tire sizing system. The letters LT as the first two characters in the tire size mean a light truck tire engineered to standards set by the U.S. Tire and Rim Association.

(2) Tire Width : The three-digit number indicates the tire section width in millimeters from sidewall to sidewall.

(3) Aspect Ratio : A two-digit number that indicates the tire height-to-width measurements. For example, if the tire size aspect ratio is 75, as shown in item 3 of the light truck (LT-Metric) tire illustration, it would mean that the tire's sidewall is 75 percent as high as it is wide.

(4) Construction Code : A letter code is used to indicate the type of ply construction in the tire. The letter R means radial ply construction; the letter D means diagonal or bias ply construction; and the letter B means belted-bias ply construction.

(5) Rim Diameter : Diameter of the wheel in inches.

(6) Load Range : Load Range.

(7) Service Description : The service description indicates the load index and speed rating of a tire. If two numbers are given as in the example, 120/116, then this represents the load index for single versus dual wheel usage (single/dual). The speed rating is the maximum speed a tire is certified to carry a load.

Tire Terminology and Definitions

Air Pressure : The amount of air inside the tire pressing outward on each square inch of the tire. Air pressure is expressed in kPa (kilopascal) or psi (pounds per square inch).

Accessory Weight : The combined weight of optional accessories. Some examples of optional accessories are automatic transmission, power windows, power seats, and air conditioning.

Aspect Ratio : The relationship of a tire's height to its width.

Belt : A rubber coated layer of cords between the plies and the tread. Cords may be made from steel or other reinforcing materials.

Bead : The tire bead contains steel wires wrapped by steel cords that hold the tire onto the rim.

Bias Ply Tire : A pneumatic tire in which the plies are laid at alternate angles less than 90 degrees to the centerline of the tread.

Cold Tire Pressure : The amount of air pressure in a tire, measured in kPa (kilopascal) or psi (pounds per square inch) before a tire has built up heat from driving. See *Tire Pressure* ⇨ *379*.

Curb Weight : The weight of a motor vehicle with standard and optional equipment including the maximum capacity of fuel, oil, and coolant, but without passengers and cargo.

DOT Markings : A code molded into the sidewall of a tire signifying that the tire is in compliance with the U.S. Department of Transportation (DOT) Motor Vehicle Safety Standards. The DOT code includes the Tire Identification Number (TIN), an alphanumeric designator which can also identify the tire manufacturer, production plant, brand, and date of production.

GVWR : Gross Vehicle Weight Rating. See *Vehicle Load Limits* ⇨ *238*.

GAWR FRT : Gross Axle Weight Rating for the front axle. See *Vehicle Load Limits* ⇨ *238*.

GAWR RR : Gross Axle Weight Rating for the rear axle. See *Vehicle Load Limits* ⇨ *238*.

Intended Outboard Sidewall : The side of an asymmetrical tire that must always face outward when mounted on a vehicle.

Kilopascal (kPa) : The metric unit for air pressure.

Light Truck (LT-Metric) Tire : A tire used on light duty trucks and some multipurpose passenger vehicles.

Load Index : An assigned number ranging from 1 to 279 that corresponds to the load carrying capacity of a tire.

Maximum Inflation Pressure : The maximum air pressure to which a cold tire can be inflated. The maximum air pressure is molded onto the sidewall.

Maximum Load Rating : The load rating for a tire at the maximum permissible inflation pressure for that tire.

Maximum Loaded Vehicle Weight : The sum of curb weight, accessory weight, vehicle capacity weight, and production options weight.

Normal Occupant Weight : The number of occupants a vehicle is designed to seat multiplied by 68 kg (150 lb). See *Vehicle Load Limits* ⇨ *238*.

Occupant Distribution : Designated seating positions.

Outward Facing Sidewall : The side of an asymmetrical tire that has a particular side that faces outward when mounted on a vehicle. The side of the tire that contains a whitewall, bears white lettering, or bears manufacturer, brand, and/or model name molding that is higher or deeper than the same moldings on the other sidewall of the tire.

Passenger (P-Metric) Tire : A tire used on passenger cars and some light duty trucks and multipurpose vehicles.

Recommended Inflation Pressure : Vehicle manufacturer's recommended tire inflation pressure as shown on the tire placard.
See *Tire Pressure* ⇨ *379* and *Vehicle Load Limits* ⇨ *238*.

Radial Ply Tire : A pneumatic tire in which the ply cords that extend to the beads are laid at 90 degrees to the centerline of the tread.

Rim : A metal support for a tire and upon which the tire beads are seated.

Sidewall : The portion of a tire between the tread and the bead.

Speed Rating : An alphanumeric code assigned to a tire indicating the maximum speed at which a tire can operate.

Traction : The friction between the tire and the road surface. The amount of grip provided.

Tread : The portion of a tire that comes into contact with the road.

Treadwear Indicators : Narrow bands, sometimes called wear bars, that show across the tread of a tire when only 1.6 mm (1/16 in) of tread remains. See *When It Is Time for New Tires* ⇨ *389*.

UTQGS (Uniform Tire Quality Grading Standards) : A tire information system that provides consumers with ratings for a tire's traction, temperature, and treadwear. Ratings are determined by tire manufacturers using government testing procedures. The ratings are molded into the sidewall of the tire. See *Uniform Tire Quality Grading* ⇨ *392*.

Vehicle Capacity Weight : The number of designated seating positions multiplied by 68 kg (150 lb) plus the rated cargo load. See *Vehicle Load Limits* ⇨ *238*.

Vehicle Maximum Load on the Tire : Load on an individual tire due to curb weight, accessory weight, occupant weight, and cargo weight.

Vehicle Placard : A label permanently attached to a vehicle showing the vehicle capacity weight and the original equipment tire size and recommended inflation pressure. See “Tire and Loading Information Label” under *Vehicle Load Limits* ⇨ *238*.

Tire Pressure

Tires need the correct amount of air pressure to operate effectively.

⚠ Warning

Neither tire underinflation nor overinflation is good. Underinflated tires, or tires that do not have enough air, can result in:

- Tire overloading and overheating which could lead to a blowout.
- Premature or irregular wear.
- Poor handling.
- Reduced fuel economy.

Overinflated tires, or tires that have too much air, can result in:

- Unusual wear.

(Continued)

Warning (Continued)

- Poor handling.
- Rough ride.
- Needless damage from road hazards.

The Tire and Loading Information label on the vehicle indicates the original equipment tires and the correct cold tire inflation pressures. The recommended pressure is the minimum air pressure needed to support the vehicle's maximum load carrying capacity.

For additional information regarding how much weight the vehicle can carry, and an example of the Tire and Loading Information label, see *Vehicle Load Limits* ⇨ *238*. How the vehicle is loaded affects vehicle handling and ride comfort. Never load the vehicle with more weight than it was designed to carry.

When to Check

Check the pressure of the tires once a month or more.

Do not forget the spare tire, if the vehicle has one. See *Full-Size Spare Tire* ⇨ *408* for additional information.

How to Check

Use a good quality pocket-type gauge to check tire pressure. Proper tire inflation cannot be determined by looking at the tire. Check the tire inflation pressure when the tires are cold, meaning the vehicle has not been driven for at least three hours or no more than 1.6 km (1 mi).

Remove the valve cap from the tire valve stem. Press the tire gauge firmly onto the valve to get a pressure measurement. If the cold tire inflation pressure matches the recommended pressure on the Tire and Loading Information label, no further adjustment is necessary. If the inflation pressure is low, add air until the recommended pressure is reached. If the inflation pressure is high, press on the metal stem in the center of the tire valve to release air.

Re-check the tire pressure with the tire gauge.

Put the valve caps back on the valve stems to keep out dirt and moisture and prevent leaks. Use only valve caps designed for the vehicle by GM. TPMS sensors could be damaged and would not be covered by the vehicle warranty.

Tire Pressure for High-Speed Operation

⚠ Warning

Driving at high speeds, 160 km/h (100 mph) or higher, puts additional strain on tires. Sustained high-speed driving causes excessive heat buildup and can cause sudden tire failure. This could cause a crash, and you or others could be killed. Some high-speed rated tires require inflation pressure adjustment for high-speed operation. When speed limits and road conditions allow the vehicle to be driven at high speeds, make sure the tires are rated for high-speed operation, are in excellent condition, and are set to the correct cold tire inflation pressure for the vehicle load.

Vehicles with P275/55R20 or P285/50R20 size tires require inflation pressure adjustment when driving the vehicle at speeds of 160 km/h (100 mph) or higher. Set the cold tire inflation pressure to 20 kPa (3 psi) above the recommended cold tire pressure shown on the Tire and Loading Information label.

Return the tires to the recommended cold tire inflation pressure when high-speed driving has ended.
See *Vehicle Load Limits* ⇨ *238* and *Tire Pressure* ⇨ *379*.

Tire Pressure Monitor System

The Tire Pressure Monitor System (TPMS) uses radio and sensor technology to check tire pressure levels. The TPMS sensors monitor the air pressure in your tires and transmit tire pressure readings to a receiver located in the vehicle.

Each tire, including the spare (if provided), should be checked monthly when cold and inflated to the inflation pressure recommended by the vehicle manufacturer on the vehicle placard or tire inflation pressure label. (If your vehicle has tires of a different size than the size indicated on the vehicle placard or tire inflation pressure label, you should determine the proper tire inflation pressure for those tires.)

As an added safety feature, your vehicle has been equipped with a tire pressure monitoring system (TPMS) that illuminates a low tire pressure telltale when one or more of your tires is significantly under-inflated.

Accordingly, when the low tire pressure telltale illuminates, you should stop and check your tires as soon as possible, and inflate them to the proper pressure. Driving on a significantly under-inflated tire causes the tire to overheat and can lead to tire failure. Under-inflation also reduces fuel efficiency and tire tread life, and may affect the vehicle's handling and stopping ability.

Please note that the TPMS is not a substitute for proper tire maintenance, and it is the driver's responsibility to maintain correct tire

pressure, even if under-inflation has not reached the level to trigger illumination of the TPMS low tire pressure telltale.

Your vehicle has also been equipped with a TPMS malfunction indicator to indicate when the system is not operating properly. The TPMS malfunction indicator is combined with the low tire pressure telltale. When the system detects a malfunction, the telltale will flash for approximately one minute and then remain continuously illuminated. This sequence will continue upon subsequent vehicle start-ups as long as the malfunction exists.

When the malfunction indicator is illuminated, the system may not be able to detect or signal low tire pressure as intended. TPMS malfunctions may occur for a variety of reasons, including the installation of replacement or alternate tires or wheels on the vehicle that prevent the TPMS from functioning properly. Always check the TPMS malfunction telltale after replacing one or more tires or wheels on your vehicle to ensure that the replacement or alternate tires and wheels allow the TPMS to continue to function properly.

See *Tire Pressure Monitor Operation* ⇨ *382*.

See *Radio Frequency Statement* ⇨ *460*.

Tire Pressure Monitor Operation

This vehicle may have a Tire Pressure Monitor System (TPMS). The TPMS is designed to warn the driver when a low tire pressure condition exists. TPMS sensors are mounted onto each tire and wheel assembly, excluding the spare tire and wheel assembly. The TPMS sensors monitor the air pressure in the tires and transmit the tire pressure readings to a receiver located in the vehicle.

When a low tire pressure condition is detected, the TPMS illuminates the low tire pressure warning light located on the instrument cluster. If the warning light comes on, stop as soon as possible and inflate the tires to the recommended pressure shown on the Tire and Loading Information label. See *Vehicle Load Limits* ⇨ *238*.

A message to check the pressure in a specific tire displays in the Driver Information Center (DIC). The low tire pressure warning light and the DIC warning message come on at each ignition cycle until the tires are inflated to the correct inflation pressure. If the vehicle has DIC buttons, tire pressure levels can be viewed. For additional information

and details about the DIC operation and displays, see *Driver Information Center (DIC) (Base Level)* ⇨ *154* or *Driver Information Center (DIC) (Uplevel)* ⇨ *156*.

The low tire pressure warning light may come on in cool weather when the vehicle is first started, and then turn off as the vehicle is driven. This could be an early indicator that the air pressure is getting low and needs to be inflated to the proper pressure.

A Tire and Loading Information label shows the size of the original equipment tires and the correct inflation pressure for the tires when they are cold. See *Vehicle Load Limits* ⇨ *238*, for an example of the Tire and Loading Information label and its location. Also see *Tire Pressure* ⇨ *379*.

The TPMS can warn about a low tire pressure condition but it does not replace normal tire maintenance. See *Tire Inspection* ⇨ *386*, *Tire Rotation* ⇨ *387* and *Tires* ⇨ *371*.

Caution

Tire sealant materials are not all the same. A non-approved tire sealant could damage the TPMS sensors. TPMS sensor damage caused by using an incorrect tire sealant is not covered by the vehicle warranty. Always use only the GM approved tire sealant available through your dealer or included in the vehicle.

TPMS Malfunction Light and Message

The TPMS will not function properly if one or more of the TPMS sensors are missing or inoperable. When the system detects a malfunction, the low tire pressure warning light flashes for about one minute and then stays on for the remainder of the ignition cycle. A DIC warning message also displays. The malfunction light and DIC warning message come on at each ignition cycle until the problem is corrected. Some of the conditions that can cause these to come on are:

- One of the road tires has been replaced with the spare tire. The spare tire does not have a TPMS sensor. The malfunction light and the DIC message should go off after the road tire is replaced and the sensor matching process is performed successfully. See "TPMS Sensor Matching Process" later in this section.
- The TPMS sensor matching process was not done or not completed successfully after rotating the tires. The malfunction light and the DIC message should go off after successfully completing the sensor matching process. See "TPMS Sensor Matching Process" later in this section.
- One or more TPMS sensors are missing or damaged. The malfunction light and the DIC message should go off when the TPMS sensors are installed and

the sensor matching process is performed successfully. See your dealer for service.

- Replacement tires or wheels do not match the original equipment tires or wheels. Tires and wheels other than those recommended could prevent the TPMS from functioning properly. See *Buying New Tires* ⇨ *390*.
- Operating electronic devices or being near facilities using radio wave frequencies similar to the TPMS could cause the TPMS sensors to malfunction.

If the TPMS is not functioning properly, it cannot detect or signal a low tire pressure condition. See your dealer for service if the TPMS malfunction light and DIC message come on and stay on.

Tire Fill Alert (If Equipped)

This feature provides visual and audible alerts outside the vehicle to help when inflating an underinflated tire to the recommended cold tire pressure.

When the low tire pressure warning light comes on:

1. Park the vehicle in a safe, level place.
2. Set the parking brake firmly.
3. Place the vehicle in P (Park).
4. Add air to the tire that is underinflated. The turn signal lamp will flash.

   When the recommended pressure is reached, the horn sounds once and the turn signal lamp will stop flashing and briefly turn solid.

Repeat these steps for all underinflated tires that have illuminated the low tire pressure warning light.

⚠ Warning

Overinflating a tire could cause the tire to rupture and you or others could be injured. Do not exceed the maximum pressure

(Continued)

Warning (Continued)

listed on the tire sidewall. See *Tire Sidewall Labeling* ⇨ *373* and *Vehicle Load Limits* ⇨ *238*.

If the tire is overinflated by more than 35 kPa (5 psi), the horn will sound multiple times and the turn signal lamp will continue to flash for several seconds after filling stops. To release and correct the pressure, while the turn signal lamp is still flashing, briefly press the center of the valve stem. When the recommended pressure is reached, the horn sounds once.

If the turn signal lamp does not flash within 15 seconds after starting to inflate the tire, the tire fill alert has not been activated or is not working.

If the hazard warning flashers are on, the tire fill alert visual feedback will not work properly.

The TPMS will not activate the tire fill alert properly under the following conditions:

- There is interference from an external device or transmitter.
- The air pressure from the inflation device is not sufficient to inflate the tire.
- There is a malfunction in the TPMS.
- There is a malfunction in the horn or turn signal lamps.
- The identification code of the TPMS sensor is not registered to the system.
- The battery of the TPMS sensor is low.

If the tire fill alert does not operate due to TPMS interference, move the vehicle about 1 m (3 ft) back or forward and try again. If the tire fill alert feature is not working, use a tire pressure gauge.

TPMS Sensor Matching Process

Each TPMS sensor has a unique identification code. The identification code needs to be matched to a new tire/wheel position after rotating the vehicle's tires or replacing one or more of the TPMS sensors. Also, the TPMS sensor matching process should be performed after replacing a spare tire with a road tire containing the TPMS sensor. The malfunction light and the DIC message should go off at the next ignition cycle. The sensors are matched to the tire/wheel positions, using a TPMS relearn tool, in the following order: driver side front tire, passenger side front tire, passenger side rear tire, and driver side rear. See your dealer for service or to purchase a relearn tool. A TPMS relearn tool can also be purchased. See Tire Pressure Monitor Sensor Activation Tool at www.gmtoolsandequipment.com or call 1-800-GM TOOLS (1-800-468-6657).

There are two minutes to match the first tire/wheel position, and five minutes overall to match all four tire/wheel positions. If it takes longer, the matching process stops and must be restarted.

The TPMS sensor matching process is:

1. Set the parking brake.
2. Turn the ignition on without starting the vehicle.
3. Uplevel DIC Only: Make sure the Tire Pressure info page option is turned on. The info pages on the DIC can be turned on and off through the Settings menu.
   See *Driver Information Center (DIC) (Base Level)* ⇨ *154* or *Driver Information Center (DIC) (Uplevel)* ⇨ *156*.
4. If the vehicle has an uplevel DIC, use the DIC controls on the right side of the steering wheel to scroll to the Tire Pressure screen under the DIC info page.

   If the vehicle has a base level DIC, use the trip odometer reset stem to scroll to the Tire Pressure screen.

5. If the vehicle has an uplevel DIC, press and hold the ✓ (Set/Reset) button located in the center of the DIC controls.

   If the vehicle has a base level DIC, press and hold the trip odometer reset stem for about five seconds. A message asking if the process should begin should appear. Select yes and press the trip odometer reset stem to confirm the selection.

   The horn sounds twice to signal the receiver is in relearn mode and the TIRE LEARNING ACTIVE message displays on the DIC screen.
6. Start with the driver side front tire.
7. Place the relearn tool against the tire sidewall, near the valve stem. Then press the button to activate the TPMS sensor. A horn chirp confirms that the sensor identification code has been matched to this tire and wheel position.
8. Proceed to the passenger side front tire, and repeat the procedure in Step 7.
9. Proceed to the passenger side rear tire, and repeat the procedure in Step 7.
10. Proceed to the driver side rear tire, and repeat the procedure in Step 7. The horn sounds two times to indicate the sensor identification code has been matched to the driver side rear tire, and the TPMS sensor matching process is no longer active. The TIRE LEARNING ACTIVE message on the DIC display screen goes off.
11. Turn the vehicle off.
12. Set all four tires to the recommended air pressure level as indicated on the Tire and Loading Information label.

Tire Inspection

We recommend that the tires, including the spare tire, if the vehicle has one, be inspected for signs of wear or damage at least once a month.

Replace the tire if:

- The indicators at three or more places around the tire can be seen.
- There is cord or fabric showing through the tire's rubber.
- The tread or sidewall is cracked, cut, or snagged deep enough to show cord or fabric.
- The tire has a bump, bulge, or split.
- The tire has a puncture, cut, or other damage that cannot be repaired well because of the size or location of the damage.

Tire Rotation

Tires should be rotated every 12 000 km (7,500 mi). See *Maintenance Schedule* ⇨ *431*.

Tires are rotated to achieve a uniform wear for all tires. The first rotation is the most important.

Anytime unusual wear is noticed, rotate the tires as soon as possible, check for proper tire inflation pressure, and check for damaged tires or wheels. If the unusual wear continues after the rotation, check the wheel alignment.
See *When It Is Time for New Tires* ⇨ *389* and *Wheel Replacement* ⇨ *394*.

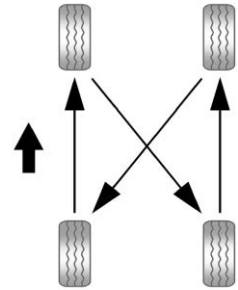

Use this rotation pattern when rotating the tires if the vehicle has single rear wheels.

Dual Tire Rotation

When the vehicle is new, or whenever a wheel, wheel bolt, or wheel nut is replaced or serviced, check the wheel nut torque after 160, 1 600, and 10 000 km (100, 1,000, and 6,000 mi) of driving. For proper torque and wheel nut tightening information, see “Removing the Flat Tire and Installing the Spare Tire” under *Tire Changing* ⇨ *397* and “Wheel Nut Torque” under *Capacities and Specifications* ⇨ *447*.

The outer tire on a dual wheel setup generally wears faster than the inner tire. Tires last longer and wear more evenly if they are rotated.
See *Tire Inspection* ⇨ *386* and *Tire Rotation* ⇨ *387*. Also see *Maintenance Schedule* ⇨ *431*.

⚠ Warning

If the vehicle is operated with a tire that is underinflated, the tire can overheat. An overheated tire can lose air suddenly or catch fire. You or others could be injured. Properly inflate all tires, including the spare.

See *Tire Pressure* ⇨ *379*, for information on proper tire inflation.

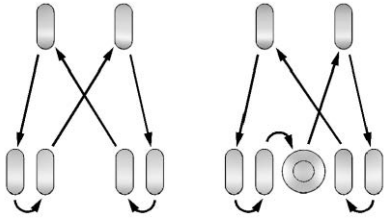

Use this rotation pattern when rotating the tires if the vehicle has dual rear wheels (except polished forged aluminum wheels).

Vehicles with polished forged aluminum dual wheels have three unique wheels; a front, a rear outer and a rear inner. These wheels cannot be rotated to another position, however, they can be rotated from left to right to the same position.

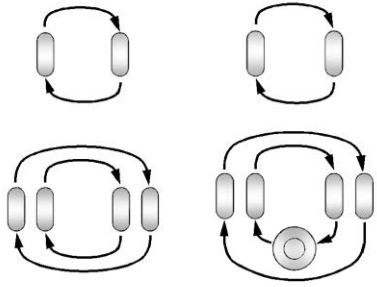

Use this rotation pattern when rotating the tires if the vehicle has polished forged aluminum dual rear wheels. The spare wheel can be used in any position in the event of a flat tire, and can be rotated with the rear inner wheels. After the flat tire is repaired, if the spare is not on one of the inner rear positions, it must be replaced by the correct wheel in the front or rear outer positions.

When installing dual wheels, check that the vent holes in the inner and outer wheels on each side are lined up.

Adjust the front and rear tires to the recommended inflation pressure on the Tire and Loading Information label after the tires have been rotated. See *Tire Pressure* ⇨ *379* and *Vehicle Load Limits* ⇨ *238*.

Check that all wheel nuts are properly tightened. See “Wheel Nut Torque” under *Capacities and Specifications* ⇨ *447*.

⚠ Warning

Rust or dirt on a wheel, or on the parts to which it is fastened, can make wheel nuts become loose after time. The wheel could come off and cause a crash. When changing a wheel, remove any rust or dirt from places where the

(Continued)

Warning (Continued)

wheel attaches to the vehicle. In an emergency, a cloth or a paper towel can be used; however, use a scraper or wire brush later to remove all rust or dirt.

Lightly coat the inner diameter of the wheel hub opening with wheel bearing grease after a wheel change or tire rotation to prevent corrosion or rust build-up. Do not get grease on the flat wheel mounting surface or on the wheel nuts or bolts.

Reset the Tire Pressure Monitor System (TPMS), if the vehicle has one. See *Tire Pressure Monitor Operation* ⇨ *382*.

Check that the spare tire, if the vehicle has one, is stored properly. Push, pull, and then try to rotate or turn the tire. If it moves, tighten the cable. See "Storing a Flat or Spare Tire and Tools" under *Tire Changing* ⇨ *397*.

When It Is Time for New Tires

Factors, such as maintenance, temperatures, driving speeds, vehicle loading, and road conditions affect the wear rate of the tires.

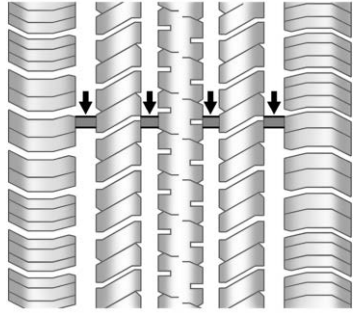

Treadwear indicators are one way to tell when it is time for new tires. Treadwear indicators appear when the tires have only 1.6 mm (1/16 in) or less of tread remaining. Some commercial truck tires may not have treadwear indicators.
See *Tire Inspection* ⇨ *386* and *Tire Rotation* ⇨ *387* for additional information.

The rubber in tires ages over time. This also applies to the spare tire, if the vehicle has one, even if it is never used. Multiple factors including temperatures, loading conditions, and inflation pressure maintenance affect how fast aging takes place. GM recommends that tires, including the spare if equipped, be replaced after six years, regardless of tread wear. To identify the age of a tire, use the tire manufacture date which is the last four digits of the DOT Tire Identification Number (TIN) which is molded into one side of the tire sidewall. The first two digits represent the week (01-52) and the last two digits, the year. For example, the third week of the year 2010 would have a four-digit DOT date of 0310.

Vehicle Storage

Tires age when stored normally mounted on a parked vehicle. Park a vehicle that will be stored for at least a month in a cool, dry, clean area away from direct sunlight to slow aging. This area should be free of grease, gasoline, or other substances that can deteriorate rubber.

Parking for an extended period can cause flat spots on the tires that may result in vibrations while driving. When storing a vehicle for at least a month, remove the tires or raise the vehicle to reduce the weight from the tires.

Buying New Tires

GM has developed and matched specific tires for the vehicle. The original equipment tires installed were designed to meet General Motors Tire Performance Criteria Specification (TPC Spec) system rating. When replacement tires are needed, GM strongly recommends buying tires with the same TPC Spec rating.

GM's exclusive TPC Spec system considers over a dozen critical specifications that impact the overall performance of the vehicle, including brake system performance, ride and handling, traction control, and tire pressure monitoring performance. GM's TPC Spec number is molded onto the tire's sidewall near the tire size. If the tires have an all-season tread design, the TPC Spec number will be followed by MS for mud and snow. See *Tire Sidewall Labeling* ⇨ *373* for additional information.

GM recommends replacing worn tires in complete sets of four (six for dual rear wheels). Uniform tread depth on all tires will help to maintain the performance of the vehicle. Braking and handling performance may be adversely affected if all the tires are not replaced at the same time. If proper rotation and maintenance have been done, all four tires (six for dual rear wheels) should wear out at about the same time. See *Tire Rotation* ⇨ *387* for information on proper tire rotation. However, if it is necessary to replace only one axle set of worn tires, place the new tires on the rear axle (two for single rear wheels, four for dual rear wheels).

⚠ Warning

Tires could explode during improper service. Attempting to mount or dismount a tire could cause injury or death. Only your dealer or authorized tire service center should mount or dismount the tires.

⚠ Warning

Mixing tires of different sizes, brands, or types may cause loss of control of the vehicle, resulting in a crash or other vehicle damage. Use the correct size, brand, and type of tires on all wheels.

This vehicle may have a different size spare than the road tires originally installed on the vehicle. When new, the vehicle included a spare tire and wheel assembly with a similar overall diameter as the road tires and wheels, so it is all right to drive on it. The spare tire was developed for use on this vehicle and will not affect vehicle handling.

⚠ Warning

Using bias-ply tires on the vehicle may cause the wheel rim flanges to develop cracks after many miles of driving. A tire and/or wheel could fail suddenly and cause a crash. Use only radial-ply tires with the wheels on the vehicle.

Winter tires with the same speed rating as the original equipment tires may not be available for H, V, W, Y and ZR speed rated tires. Never exceed the winter tires' maximum speed capability when using winter tires with a lower speed rating.

If the vehicle tires must be replaced with a tire that does not have a TPC Spec number, make sure they are the same size, load range, speed rating, and construction (radial) as the original tires.

Vehicles that have a tire pressure monitoring system could give an inaccurate low-pressure warning if non-TPC Spec rated tires are installed. See *Tire Pressure Monitor System* ⇨ *381*.

The Tire and Loading Information label indicates the original equipment tires on the vehicle. See *Vehicle Load Limits* ⇨ *238* for the label location and more information about the Tire and Loading Information label.

Different Size Tires and Wheels

If wheels or tires are installed that are a different size than the original equipment wheels and tires, vehicle performance, including its braking, ride and handling characteristics, stability, and resistance to rollover may be affected. If the vehicle has electronic systems such as antilock brakes, rollover airbags, traction control, electronic stability control,

or All-Wheel Drive, the performance of these systems can also be affected.

⚠ Warning

If different sized wheels are used, there may not be an acceptable level of performance and safety if tires not recommended for those wheels are selected. This increases the chance of a crash and serious injury. Only use GM specific wheel and tire systems developed for the vehicle, and have them properly installed by a GM certified technician.

See *Buying New Tires* ⇨ *390* and *Accessories and Modifications* ⇨ *326*.

Uniform Tire Quality Grading

The following information relates to the system developed by the United States National Highway Traffic Safety Administration (NHTSA), which grades tires by treadwear, traction, and temperature performance. This applies only to vehicles sold in the United States. The grades are molded on the sidewalls of most passenger car tires. The Uniform Tire Quality Grading (UTQG) system does not apply to deep tread, winter tires, compact spare tires, tires with nominal rim diameters of 10 to 12 inches (25 to 30 cm), or to some limited-production tires.

While the tires available on General Motors passenger cars and light trucks may vary with respect to these grades, they must also conform to federal safety requirements and additional General Motors Tire Performance Criteria (TPC) standards.

Quality grades can be found where applicable on the tire sidewall between tread shoulder and maximum section width. For example:

Treadwear 200 Traction AA Temperature A

All Passenger Car Tires Must Conform to Federal Safety Requirements In Addition To These Grades.

Treadwear

The treadwear grade is a comparative rating based on the wear rate of the tire when tested under controlled conditions on a specified government test course. For example, a tire graded 150 would wear one and one-half (1½) times as well on the government course as a tire graded 100. The relative performance of tires depends upon the actual conditions of their use, however, and may depart significantly from the

norm due to variations in driving habits, service practices and differences in road characteristics and climate.

Traction

The traction grades, from highest to lowest, are AA, A, B, and C. Those grades represent the tire's ability to stop on wet pavement as measured under controlled conditions on specified government test surfaces of asphalt and concrete. A tire marked C may have poor traction performance. Warning: The traction grade assigned to this tire is based on straight-ahead braking traction tests, and does not include acceleration, cornering, hydroplaning, or peak traction characteristics.

Temperature

The temperature grades are A (the highest), B, and C, representing the tire's resistance to the generation of heat and its ability to dissipate heat when tested under controlled conditions on a specified indoor laboratory test wheel. Sustained high temperature can cause the material of the tire to degenerate and reduce tire life, and excessive temperature can lead to sudden tire failure. The grade C corresponds to a level of performance which all passenger car tires must meet under the Federal Motor Safety Standard No. 109. Grades B and A represent higher levels of performance on the laboratory test wheel than the minimum required by law. Warning: The temperature grade for this tire is established for a tire that is properly inflated and not overloaded. Excessive speed, underinflation, or excessive loading, either separately or in combination, can cause heat buildup and possible tire failure.

Wheel Alignment and Tire Balance

The tires and wheels were aligned and balanced at the factory to provide the longest tire life and best overall performance. Adjustments to wheel alignment and tire balancing are not necessary on a regular basis. Consider an alignment check if there is unusual tire wear or the vehicle is significantly pulling to one side or the other. Some slight pull to the left or right, depending on the crown of the road and/or other road surface variations such as troughs or ruts, is normal. If the vehicle is vibrating when driving on a smooth road, the tires and wheels may need to be rebalanced. See your dealer for proper diagnosis.

Wheel Replacement

Replace any wheel that is bent, cracked, or badly rusted or corroded. If wheel nuts keep coming loose, the wheel, wheel bolts and wheel nuts should be replaced. If the wheel leaks air, replace it. Some aluminum wheels can be repaired. See your dealer if any of these conditions exist.

Your dealer will know the kind of wheel that is needed.

Each new wheel should have the same load-carrying capacity, diameter, width, offset and be mounted the same way as the one it replaces.

Replace wheels, wheel bolts, wheel nuts, or Tire Pressure Monitor System (TPMS) sensors with new GM original equipment parts.

⚠ Warning

Using the wrong replacement wheels, wheel bolts, or wheel nuts can be dangerous. It could affect the braking and handling of the vehicle. Tires can lose air, and cause loss of control, causing a crash. Always use the correct wheel, wheel bolts, and wheel nuts for replacement.

Caution

The wrong wheel can also cause problems with bearing life, brake cooling, speedometer or odometer calibration, headlamp aim, bumper height, vehicle ground clearance, and tire or tire chain clearance to the body and chassis.

Whenever a wheel, wheel bolt, or wheel nut is replaced on a dual wheel setup, check the wheel nut torque after 160,1 600, and 10 000 km (100,1,000, and 6,000 mi) of driving. For proper torque, see “Wheel Nut Torque” under *Capacities and Specifications* ⇨ *447*.

See *If a Tire Goes Flat* ⇨ *395* for more information.

Used Replacement Wheels

⚠ Warning

Replacing a wheel with a used one is dangerous. How it has been used or how far it has been driven may be unknown. It could fail suddenly and cause a crash. When replacing wheels, use a new GM original equipment wheel.

Tire Chains

⚠ Warning

If the vehicle has dual wheels or 265/65R18, P265/65R18, P275/55R20, LT265/70R17, LT265/70R18, LT265/60R20, LT275/65R18, P285/50R20, 285/45R22, or P285/45R22 size tires, do not use tire chains. They can damage the vehicle because there is not enough clearance. Tire chains used on a vehicle without the proper amount of clearance can cause damage to the brakes, suspension, or other vehicle parts. The area damaged by the tire chains could cause you to lose control of the vehicle and you or others may be injured in a crash.

Use another type of traction device only if its manufacturer recommends it for use on the vehicle and tire size combination

(Continued)

Warning (Continued)

and road conditions. Follow that manufacturer's instructions. To help avoid damage to the vehicle, drive slowly, readjust, or remove the device if it is contacting the vehicle, and do not spin the vehicle's wheels.

If you do find traction devices that will fit, install them on the rear tires.

Caution

If the vehicle does not have dual wheels and has a tire size other than 265/65R18, P265/65R18, P275/55R20, LT265/70R17, LT265/70R18, LT265/60R20, LT275/65R18, P285/50R20, 285/45R22, or P285/45R22, use tire chains only where legal and only when you must. Use chains that are the proper size for the tires.

(Continued)

Caution (Continued)

Install them on the tires of the rear axle. Do not use chains on the tires of the front axle. Tighten them as tightly as possible with the ends securely fastened. Drive slowly and follow the chain manufacturer's instructions. If you can hear the chains contacting the vehicle, stop and retighten them. If the contact continues, slow down until it stops. Driving too fast or spinning the wheels with chains on will damage the vehicle.

If a Tire Goes Flat

It is unusual for a tire to blowout while driving, especially if the tires are maintained properly. If air goes out of a tire, it is much more likely to leak out slowly. But if there ever is a blowout, here are a few tips about what to expect and what to do:

If a front tire fails, the flat tire creates a drag that pulls the vehicle toward that side. Take your foot off the accelerator pedal and grip the steering wheel firmly. Steer to maintain lane position, and then gently brake to a stop, well off the road, if possible.

A rear blowout, particularly on a curve, acts much like a skid and may require the same correction as used in a skid. Stop pressing the accelerator pedal and steer to straighten the vehicle. It may be very bumpy and noisy. Gently brake to a stop, well off the road, if possible.

⚠ Warning

Driving on a flat tire will cause permanent damage to the tire. Re-inflating a tire after it has been driven on while severely underinflated or flat may cause a blowout and a serious crash. Never attempt to re-inflate a tire

(Continued)

Warning (Continued)

that has been driven on while severely underinflated or flat. Have your dealer or an authorized tire service center repair or replace the flat tire as soon as possible.

⚠ Warning

Lifting a vehicle and getting under it to do maintenance or repairs is dangerous without the appropriate safety equipment and training. If a jack is provided with the vehicle, it is designed only for changing a flat tire. If it is used for anything else, you or others could be badly injured or killed if the vehicle slips off the jack. If a jack is provided with the vehicle, only use it for changing a flat tire.

If a tire goes flat, avoid further tire and wheel damage by driving slowly to a level place, well off the road, if possible. Turn on the hazard warning flashers. See *Hazard Warning Flashers* ⇨ *175*.

⚠ Warning

Changing a tire can be dangerous. The vehicle can slip off the jack and roll over or fall causing injury or death. Find a level place to change the tire. To help prevent the vehicle from moving:

1. Set the parking brake firmly.
2. Put an automatic transmission in P (Park) or a manual transmission in 1 (First) or R (Reverse).
3. For four-wheel-drive vehicles, be sure the transfer case is in a drive gear– not in N (Neutral).

(Continued)

Warning (Continued)

4. Turn off the engine and do not restart while the vehicle is raised.
5. Do not allow passengers to remain in the vehicle.
6. Place wheel blocks, if equipped, on both sides of the tire at the opposite corner of the tire being changed.

When the vehicle has a flat tire (2), use the following example as a guide to assist in the placement of the wheel blocks (1), if equipped.

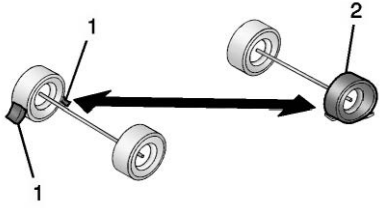

1. Wheel Block (If Equipped)
2. Flat Tire

The following information explains how to use the jack and change a tire.

Tire Changing

Removing the Spare Tire and Tools

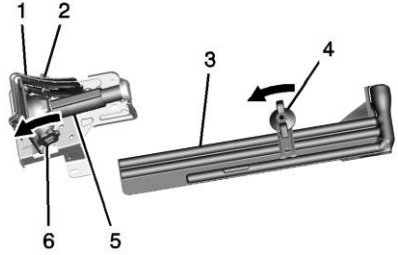

Crew Cab

1. Wheel Blocks
2. Wing Nut Retaining Wheel Blocks
3. Tool Kit
4. Wing Nut Retaining Tool Kit
5. Jack
6. Jack Knob

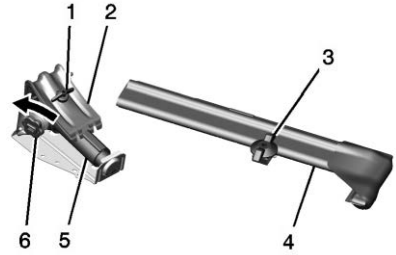

Regular Cab

1. Wing Nut Retaining Wheel Blocks
2. Wheel Blocks
3. Wing Nut Retaining Tool Kit
4. Tool Kit
5. Jack
6. Jack Knob

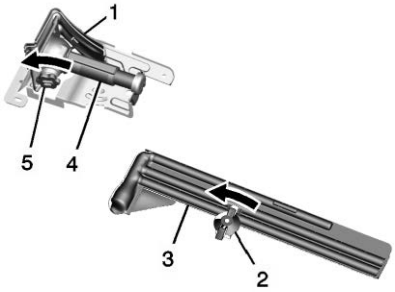

Double Cab

1. Wheel Blocks
2. Wing Nut Retaining Tool Kit
3. Tool Kit
4. Jack
5. Jack Knob

For regular cab models, the equipment you will need is behind the passenger seat. For double and crew cab models, the equipment is on the shelf behind the passenger side second row seat.

1. Turn the knob on the jack counterclockwise to lower the jack head to release the jack from its holder.
2. Turn the wing nut counterclockwise to remove the wheel blocks and the wheel block retainer.
3. Turn the wing nut used to retain the storage bag and tools counterclockwise to remove it.

Use the jack handle extensions and the wheel wrench to remove the underbody-mounted spare tire.

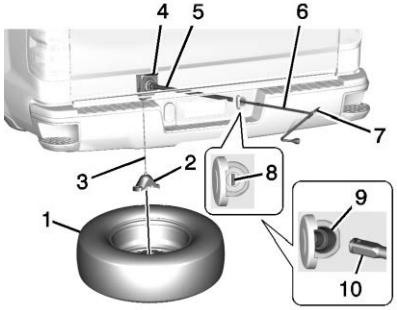

1. Spare Tire (Valve Stem Pointed Down)
2. Tire/Wheel Retainer
3. Hoist Cable
4. Hoist Assembly
5. Hoist Shaft
6. Jack Handle Extensions
7. Wheel Wrench
8. Spare Tire Lock (If Equipped)
9. Hoist Shaft Access Hole
10. Hoist End of Extension Tool

1. Open the spare tire lock cover on the bumper and use the ignition key to remove the spare tire lock (8). To remove the spare tire lock, insert the ignition key, turn, and pull straight out.

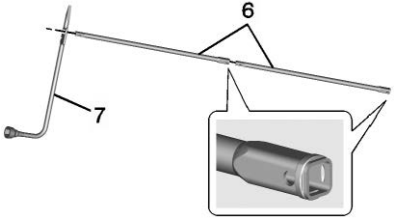

2. Assemble the wheel wrench (7) and the two jack handle extensions (6), as shown.

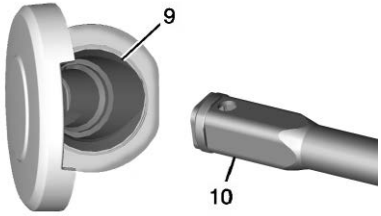

3. Insert the hoist end (open end) (10) of the extension through the hole (9) in the rear bumper.

   Do not use the chiseled end of the wheel wrench.

   Be sure the hoist end of the extension (10) connects to the hoist shaft. The ribbed square end of the extension is used to lower the spare tire.

4. Turn the wheel wrench counterclockwise to lower the spare tire to the ground. Continue to turn the wheel wrench until the spare tire can be pulled out from under the vehicle.

5. Pull the spare tire out from under the vehicle.

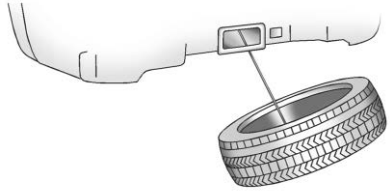

6. Tilt the tire toward the vehicle with some slack in the cable to access the tire/wheel retainer.

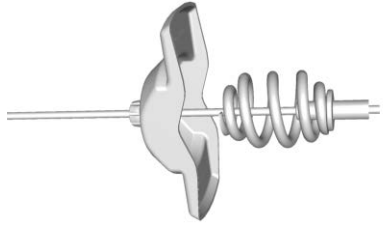

   Tilt the retainer and pull it through the center of the wheel along with the cable and spring.

7. Put the spare tire near the flat tire.

Removing the Flat Tire and Installing the Spare Tire

Use the following pictures and instructions to remove the flat tire and raise the vehicle.

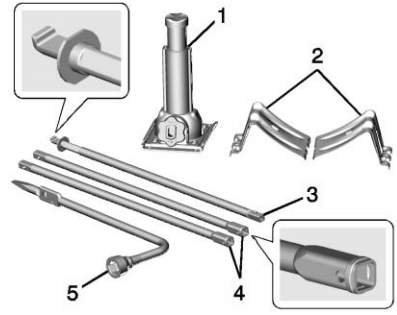

1. Jack
2. Wheel Blocks
3. Jack Handle
4. Jack Handle Extensions
5. Wheel Wrench

The tools you will be using include the jack (1), the wheel blocks (2), the jack handle (3), the jack handle extensions (4), and the wheel wrench (5).

1. Do a safety check before proceeding. See *If a Tire Goes Flat* ⇨ *395*.

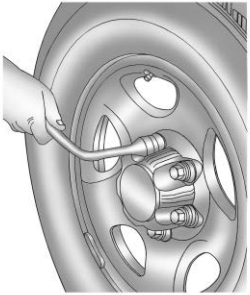

2. If the vehicle has wheel nut caps, loosen them by turning the wheel wrench counterclockwise.

   If the vehicle has a center cap with wheel nut caps, the wheel nut caps are designed to stay with the center cap after they are loosened. Remove the entire center cap.

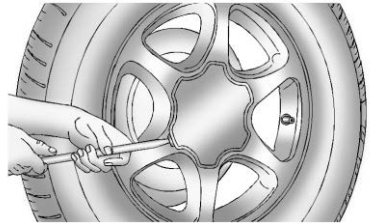

   If the wheel has a smooth center cap, place the chisel end of the wheel wrench in the slot on the wheel, and gently pry it out.

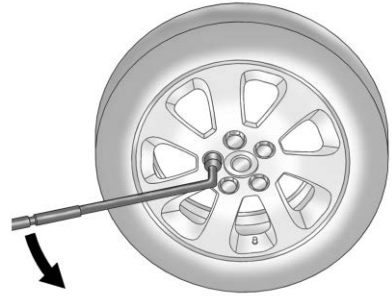

3. Use the wheel wrench and turn it counterclockwise to loosen the wheel nuts. Do not remove the wheel nuts yet.

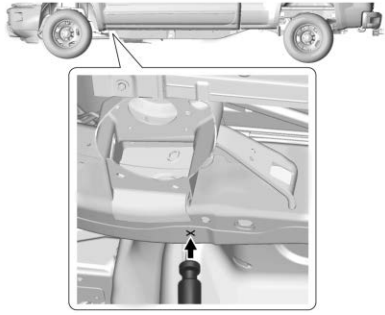

Front Position – 1500 Models

4. If the flat tire is on the front of the vehicle (1500 models), position the jack under the bracket attached to the vehicle's frame, behind the flat tire, as shown.

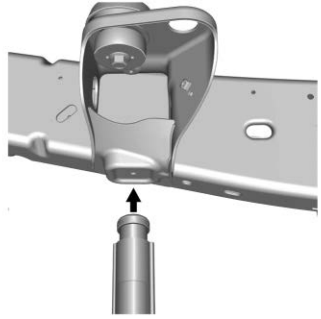

Front Position – All Other Models

If the flat tire is on the front of the vehicle (all other models), position the jack under the vehicle, as shown.

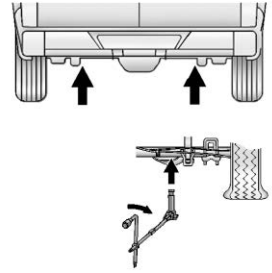

Rear Position – 1500 Models

5. If the flat tire is on the rear, for 1500 models position the jack under the rear axle about 5 cm (2 in) inboard of the shock absorber bracket.

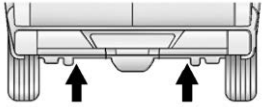

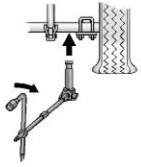

Rear Position – All Other Models

For all other models, position the jack under the rear axle between the spring anchor and the shock absorber bracket.

If a snow plow has been added to the front of the vehicle, lower the snow plow fully before raising the vehicle.

Make sure that the jack head is positioned so that the rear axle is resting securely between the grooves that are on the jack head.

⚠ Warning

Getting under a vehicle when it is lifted on a jack is dangerous. If the vehicle slips off the jack, you could be badly injured or killed. Never get under a vehicle when it is supported only by a jack.

⚠ Warning

Raising the vehicle with the jack improperly positioned can damage the vehicle and even make the vehicle fall. To help avoid personal injury and vehicle damage, be sure to fit the jack lift head into the proper location before raising the vehicle.

6. Turn the wheel wrench clockwise to raise the vehicle. Raise the vehicle far enough off the ground so there is enough room for the spare tire to fit under the wheel well.

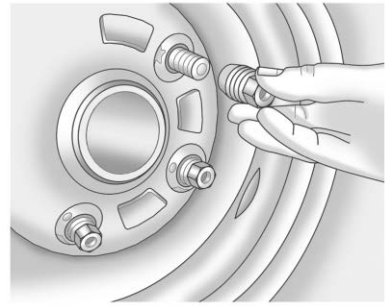

7. Remove all the wheel nuts and take off the flat tire.

⚠ Warning

Rust or dirt on a wheel, or on the parts to which it is fastened, can make wheel nuts become loose after time. The wheel could come off and cause a crash. When changing a wheel, remove any rust or dirt from places where the wheel attaches to the vehicle. In an emergency, a cloth or a paper

(Continued)

Warning (Continued)

towel can be used; however, use a scraper or wire brush later to remove all rust or dirt.

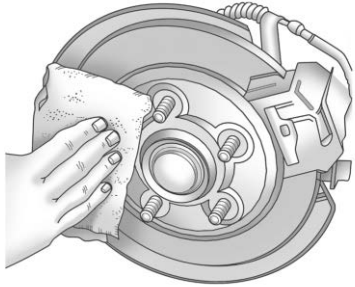

8. Remove any rust or dirt from the wheel bolts, mounting surfaces, and spare wheel.
9. Install the spare tire.

⚠ Warning

Never use oil or grease on bolts or nuts because the nuts might come loose. The vehicle's wheel could fall off, causing a crash.

10. Put the wheel nuts back on with the rounded end of the nuts toward the wheel.
11. Tighten each wheel nut by hand. Then use the wheel wrench to tighten the nuts until the wheel is held against the hub.
12. Turn the wheel wrench counterclockwise to lower the vehicle. Lower the jack completely.

⚠ Warning

If wheel studs are damaged, they can break. If all the studs on a wheel broke, the wheel could come off and cause a crash.
If any stud is damaged because of a loose-running wheel, it could be that all of the studs are damaged. To be sure, replace all studs on the wheel. If the stud holes in a wheel have become larger, the wheel could collapse in operation. Replace any wheel if its stud holes have become larger or distorted in any way. Inspect hubs and hub-piloted wheels for damage. Because of loose running wheels, piloting pad damage may occur and require replacement of the entire hub, for proper centering of the wheels. When replacing studs, hubs, wheel nuts or wheels, be sure to use GM original equipment parts.

⚠ Warning

Wheel nuts that are improperly or incorrectly tightened can cause the wheels to become loose or come off. The wheel nuts should be tightened with a torque wrench to the proper torque specification after replacing. Follow the torque specification supplied by the aftermarket manufacturer when using accessory locking wheel nuts. See *Capacities and Specifications* ⇨ *447* for original equipment wheel nut torque specifications.

Caution

Improperly tightened wheel nuts can lead to brake pulsation and rotor damage. To avoid expensive brake repairs, evenly tighten the wheel nuts in the proper sequence and to the proper

(Continued)

Caution (Continued)

torque specification. See *Capacities and Specifications* ⇨ *447* for the wheel nut torque specification.

13. Tighten the nuts firmly in a crisscross sequence, as shown, by turning the wheel wrench clockwise.

For vehicles with dual wheels, have a technician check the wheel nut tightness of all wheels with a torque wrench after the first 160, 1 600 and 10 000 km (100, 1,000 and 6,000 mi). Repeat this service whenever you have a tire removed or serviced. See *Capacities and Specifications* ⇨ *447*.

When reinstalling the regular wheel and tire, also reinstall either the center cap, or bolt-on hub cap, depending on what the vehicle is equipped with. For center caps, place the cap on the wheel and tap it into place until it seats flush with the wheel. The cap only goes on one way. Be sure to line up the tab on the center cap with the indentation on the wheel. For bolt-on hub caps, align the plastic nut caps with the wheel nuts and then tighten by hand. Then use the wheel wrench to tighten.

Storing a Flat or Spare Tire and Tools

⚠ Warning

Storing a jack, a tire, or other equipment in the passenger compartment of the vehicle could cause injury. In a sudden stop or

(Continued)

Warning (Continued)

collision, loose equipment could strike someone. Store all these in the proper place.

⚠ Warning

Failure to follow these tire storage instructions carefully could result in personal injury or property damage if the hoist cable fails or if the tire comes loose. Make sure the tire is stored securely before driving.

Caution

Storing an aluminum wheel with a flat tire under your vehicle for an extended period of time or with the valve stem pointing up can damage the wheel. Always stow the wheel with the valve stem

(Continued)

Caution (Continued)

pointing down and have the wheel/tire repaired as soon as possible.

Caution

The tire hoist can be damaged if there is no tension on the cable when using it. To have the necessary tension, the spare or road tire and wheel assembly must be installed on the tire hoist to use it.

⚠ Warning

An improperly stored spare tire could come loose and cause a crash. To avoid personal injury or property damage, always store the spare tire when the vehicle is parked on a level surface.

Store the tire under the rear of the vehicle in the spare tire carrier.

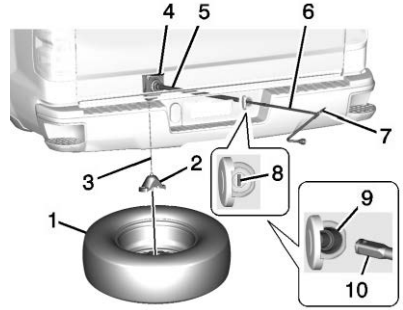

1. Spare Tire (Valve Stem Pointed Down)
2. Tire/Wheel Retainer
3. Hoist Cable
4. Hoist Assembly
5. Hoist Shaft
6. Jack Handle Extensions
7. Wheel Wrench
8. Spare Tire Lock (If Equipped)
9. Hoist Shaft Access Hole
10. Hoist End of Extension Tool

1. Put the tire on the ground at the rear of the vehicle with the valve stem pointed down, and to the rear.
2. Pull the cable and spring through the center of the wheel. Tilt the wheel retainer plate down and through the center wheel.

   Make sure the retainer is fully seated across the underside of the wheel.

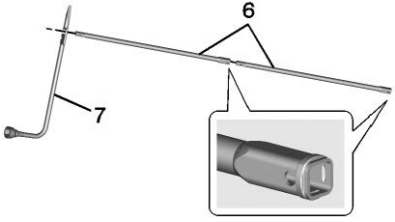

3. Attach the wheel wrench (7) and extensions (6) together, as shown.

Caution

Use of an air wrench or other power tools with the hoist mechanism is not recommended and could damage the system. Use only the tools supplied with the hoist mechanism.

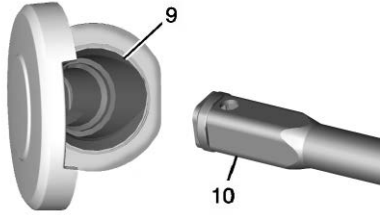

4. Insert the hoist end (10) through the hole (9) in the rear bumper and onto the hoist shaft.

   Do not use the chiseled end of the wheel wrench.
5. Raise the tire part way upward. Make sure the retainer is seated in the wheel opening.
6. Raise the tire fully against the underside of the vehicle by turning the wheel wrench clockwise until you hear two clicks or feel it skip twice. You cannot overtighten the cable.

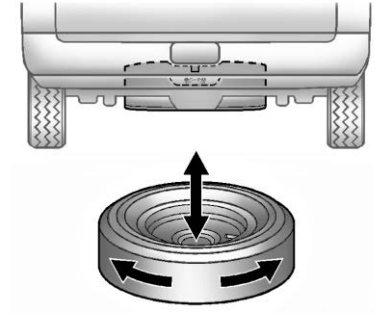

7. Make sure the tire is stored securely. Push, pull, and then try to turn the tire. If the tire moves, use the wheel wrench to tighten the cable.

Repeat this tightness check procedure when checking the spare tire pressure according to the scheduled maintenance information or any time the spare tire is handled due to service of other components.

Correctly Stored

Incorrectly Stored

8. Reinstall the spare tire lock, if the vehicle has one.

To store the jack and jack tools:

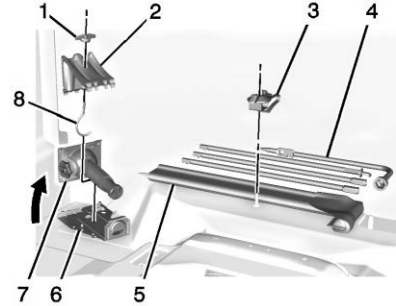

1. Wing Nut Retaining Wheel Blocks
2. Wheel Blocks
3. Wing Nut Retaining Tool Kit
4. Wheel Wrench and Extensions
5. Tool Bag
6. Jack Mounting Bracket
7. Jack
8. Bolt Retaining Wheel Blocks

1. Put the tools (4) in the tool bag (5) and place them in the retaining bracket (3).
2. Tighten down the wing nut (3).

3. Assemble the wheel blocks (2) and jack (7) together with the wing nut (1) and retaining bolt (8).
4. Position the jack (7) in the mounting bracket (6). Position the holes in the base of the jack (7) onto the pin in the mounting bracket (6).
5. Return them to their original location in the vehicle. See "Removing the Spare Tire and Tools."

Full-Size Spare Tire

If this vehicle came with a full-size spare tire, it was fully inflated when new, however, it can lose air over time. Check the inflation pressure regularly.
See *Tire Pressure* ⇨ *379* and *Vehicle Load Limits* ⇨ *238*. For instructions on how to remove, install, or store a spare tire, see *Tire Changing* ⇨ *397*.

If equipped with a temporary use full-size spare tire, it is indicated on the tire sidewall. See *Tire Sidewall Labeling* ⇨ *373*. This spare tire should not be driven on over 112 km/h (70 mph), or 88 km/h (55 mph) when pulling a trailer, at the proper inflation pressure. Repair and replace the road tire as soon as it is convenient, and stow the spare tire for future use.

Caution

If the vehicle has four-wheel drive and a different size spare tire is installed, do not drive in four-wheel drive until the flat tire is repaired and/or replaced. The vehicle could be damaged and the repairs would not be covered by the warranty. Never use four-wheel drive when a different size spare tire is installed on the vehicle.

The vehicle may have a different size spare tire than the road tires originally installed on the vehicle. This spare tire was developed for use on this vehicle, so it is all right to drive on it. If the vehicle has four-wheel drive and a different size spare tire is installed, drive only in two-wheel drive.

After installing the spare tire on the vehicle, stop as soon as possible and check that the spare tire is correctly inflated.

Have the damaged or flat road tire repaired or replaced and installed back onto the vehicle as soon as possible so the spare tire will be available in case it is needed again.

Do not mix tires and wheels of different sizes, because they will not fit. Keep your spare tire and its wheel together. If the vehicle has a spare tire that does not match the original road tires and wheels in size and type, do not include the spare in the tire rotation.

Jump Starting

Jump Starting - North America

For more information about the vehicle battery, see *Battery - North America* ⇨ *350*.

If the vehicle's battery (or batteries) has run down, you may want to use another vehicle and some jumper cables to start your vehicle. Be sure to use the following steps to do it safely.

⚠ Warning

WARNING: Battery posts, terminals, and related accessories contain lead and lead compounds, chemicals known to the State of California to cause cancer and birth defects or other reproductive harm. Batteries also contain other chemicals known to the State of California to cause cancer. **WASH HANDS AFTER**

(Continued)

Warning (Continued)

HANDLING. For more information go to www.P65Warnings.ca.gov/passenger-vehicle.

See *California Proposition 65 Warning* ⇨ *326* and the back cover.

⚠ Warning

Batteries can hurt you. They can be dangerous because:

- They contain acid that can burn you.
- They contain gas that can explode or ignite.
- They contain enough electricity to burn you.

If you do not follow these steps exactly, some or all of these things can hurt you.

Caution

Ignoring these steps could result in costly damage to the vehicle that would not be covered by the vehicle warranty. Trying to start the vehicle by pushing or pulling it will not work, and it could damage the vehicle.

1. Check the other vehicle. It must have a 12-volt battery with a negative ground system.

Caution

If the other vehicle does not have a 12-volt system with a negative ground, both vehicles can be damaged. Only use a vehicle that has a 12-volt system with a negative ground for jump starting.

2. If you have a vehicle with a diesel engine with two batteries, you should know before you begin that, especially in cold weather, you

may not be able to get enough power from a single battery in another vehicle to start your diesel engine. If your vehicle has more than one battery, using the battery that is closer to the starter will reduce electrical resistance. This is located on the passenger side, in the rear of the engine compartment.

3. Get the vehicles close enough so the jumper cables can reach, but be sure the vehicles are not touching each other. If they are, it could cause an unwanted ground connection. You would not be able to start your vehicle, and the bad grounding could damage the electrical systems.

   To avoid the possibility of the vehicles rolling, set the parking brake firmly on both vehicles involved in the jump start procedure. Put the automatic transmission in P (Park) or a manual transmission in Neutral before setting the parking brake. If you have a four-wheel-drive vehicle, be sure the transfer case is in a drive gear, not in N (Neutral).

Caution

If any accessories are left on or plugged in during the jump starting procedure, they could be damaged. The repairs would not be covered by the vehicle warranty. Whenever possible, turn off or unplug all accessories on either vehicle when jump starting.

4. Turn the ignition off on both vehicles. Unplug unnecessary accessories plugged into the accessory power outlets. Turn off the radio and all the lamps that are not needed. This will avoid sparks and help save both batteries. And it could save the radio!

5. Open the hood on the other vehicle and locate the positive (+) and negative (−) terminal locations on that vehicle.

   The positive (+) terminal is under a red plastic cover at the positive battery post. To uncover the positive (+) terminal, open the red plastic cover.

   For more information on the location of the remote positive (+) and remote negative (−) terminals, see *Engine Compartment Overview* ⇨ *329*.

⚠ Warning

An electric fan can start up even when the engine is not running and can injure you. Keep hands, clothing, and tools away from any underhood electric fan.

⚠ Warning

Using a match near a battery can cause battery gas to explode. People have been hurt doing this, and some have been blinded. Use a flashlight if you need more light.

Battery fluid contains acid that can burn you. Do not get it on you. If you accidentally get it in your eyes or on your skin, flush the place with water and get medical help immediately.

⚠ Warning

Fans or other moving engine parts can injure you badly. Keep your hands away from moving parts once the engine is running.

6. Check that the jumper cables do not have loose or missing insulation. If they do, you could get a shock. The vehicles could be damaged too.

   Before you connect the cables, here are some basic things you should know. Positive (+) will go to positive (+) or to a remote positive (+) terminal if the vehicle has one. Negative (−) will go to a heavy, unpainted metal engine part or to a remote negative (−) terminal if the vehicle has one.

   Do not connect positive (+) to negative (−) or you will get a short that would damage the battery and maybe other parts too. And do not connect the negative (−) cable to the negative (−) terminal on the dead battery because this can cause sparks.

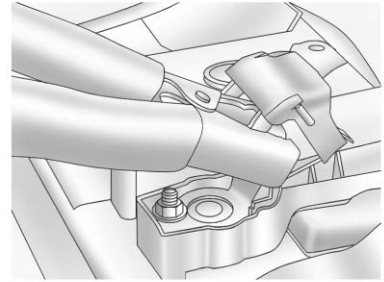

5.3L Shown, 6.0L and 6.6L Similar

7. Connect the red positive (+) cable to the positive (+) terminal of the vehicle with the dead battery.
8. Do not let the other end touch metal. Connect it to the positive (+) terminal of the good battery. Use a remote positive (+) terminal if the vehicle has one.
9. Connect the black negative (−) cable to the negative (−) terminal of the good battery. Use a remote negative (−) terminal if the vehicle has one.

Do not let the other end touch anything until the next step.

10. Connect the other end of the negative (−) cable.

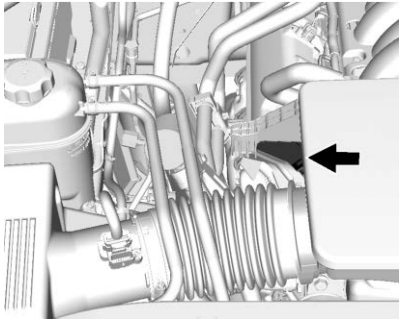

5.3L

- To the metal bracket that is bolted to the engine and supports the resonator, on the vehicle with the dead battery.

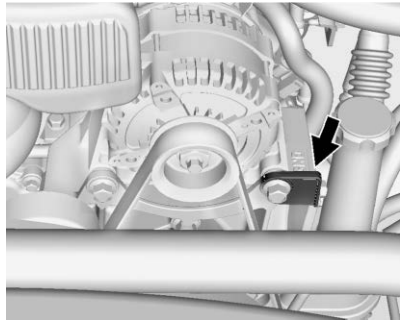

6.0L

- To the generator bracket, on the vehicle with the dead battery.

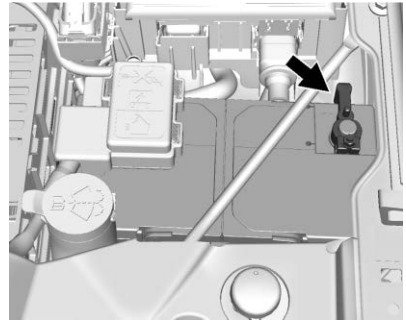

6.6L

- To the negative (−) post on the auxiliary battery, on the vehicle with the dead battery.

11. Start the vehicle with the good battery and run the engine for a while.
12. Try to start the vehicle that had the dead battery. If it will not start after a few tries, it probably needs service.

Caution

If the jumper cables are connected or removed in the wrong order, electrical shorting may occur and damage the vehicle. The repairs would not be covered by the vehicle warranty. Always connect and remove the jumper cables in the correct order, making sure that the cables do not touch each other or other metal.

Jumper Cable Removal

Reverse the sequence exactly when removing the jumper cables.

After starting the disabled vehicle and removing the jumper cables, allow it to idle for several minutes.

Towing the Vehicle

Caution

Incorrectly towing a disabled vehicle may cause damage. The damage would not be covered by the vehicle warranty. Do not lash or hook to suspension components. Use the proper straps around the tires to secure the vehicle. Do not drag a locked wheel/tire while loading the vehicle. Do not use a sling type lift to tow the vehicle. This could damage the vehicle.

GM recommends a flatbed tow truck to transport a disabled vehicle. Use ramps to help reduce approach angles, if necessary. A towed vehicle should have its drive wheels off the ground. Contact Roadside Assistance or a professional towing service if the disabled vehicle must be towed.

Front Attachment Points

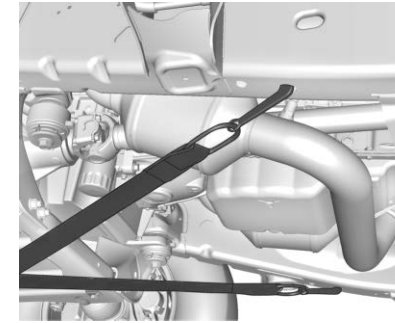

The vehicle is equipped with specific attachment points to be used to pull the vehicle onto a flatbed car carrier from a flat road surface. Do not use these attachment points to pull the vehicle from snow, mud or sand.

Recreational Vehicle Towing

Recreational vehicle towing means towing the vehicle behind another vehicle, such as a motor home. The two most common types of

recreational vehicle towing are dinghy and dolly towing. Dinghy towing is towing the vehicle with all four wheels on the ground. Dolly towing is towing the vehicle with two wheels on the ground and two wheels on a dolly.

- Before towing the vehicle, become familiar with the local laws that apply to recreational vehicle towing. These laws may vary by region.
- What is the towing capacity of the towing vehicle? Be sure to read the tow vehicle manufacturer's recommendations.
- What is the distance that will be traveled? Some vehicles have restrictions on how far and how long they can tow.
- Is the proper towing equipment going to be used? See your dealer or trailering professional for additional advice and equipment recommendations.
- Is the vehicle ready to be towed? Just as preparing the vehicle for a long trip, make sure the vehicle is prepared to be towed.

Follow the tow vehicle manufacturer’s instructions.

Caution

Use of a shield mounted in front of the vehicle grille could restrict airflow and cause damage to the transmission. The repairs would not be covered by the vehicle warranty. If using a shield, only use one that attaches to the towing vehicle.

Dinghy Towing

Two-Wheel-Drive Vehicles

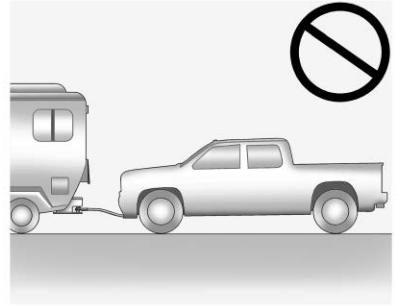

Caution

If the two-wheel-drive vehicle is towed with all four wheels on the ground, the drivetrain components could be damaged. The repairs would not be covered by the vehicle warranty.

Two-wheel-drive vehicles should not be towed with all four wheels on the ground.

Four-Wheel-Drive Vehicles

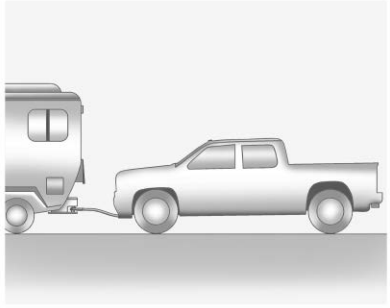

Only dinghy tow four-wheel-drive vehicles with a two-speed transfer case that have an N (Neutral) and a Four-Wheel Drive Low (4 (↓) setting.

⚠ Warning

Shifting a four-wheel-drive vehicle's transfer case into N (Neutral) can cause the vehicle to roll even if the transmission is in P (Park). You or others could

(Continued)

Warning (Continued)

be injured. Set the parking brake before shifting the transfer case to N (Neutral).

To dinghy tow:

1. Position the vehicle being towed behind the tow vehicle, facing forward and on a level surface.
2. Securely attach the vehicle being towed to the tow vehicle.
3. Apply the parking brake and start the engine.
4. Shift the transfer case to N (Neutral). See “Shifting into N (Neutral)” under *Four-Wheel Drive* ⇨ *262*. Check that the vehicle is in N (Neutral) by shifting the transmission to R (Reverse) and then to D (Drive). There should be no movement of the vehicle while shifting.
5. Turn the engine off.

Caution

Failure to disconnect the negative battery cable or to have it contact the terminals can cause damage to the vehicle.

6. Disconnect the negative battery cable at the battery and secure the nut and bolt. Cover the negative battery post with a non-conductive material to prevent any contact with the negative battery terminal.
7. Shift the transmission to P (Park).

Caution

If the steering column is locked, vehicle damage may occur.

8. Move the steering wheel to make sure the steering column is unlocked.

9. With a foot on the brake pedal, release the parking brake. Keep the ignition key in the towed vehicle in ACC/ ACCESSORY to prevent the steering column from locking.

Disconnecting the Towed Vehicle

Before disconnecting the towed vehicle:

1. Park on a level surface.
2. Set the parking brake, then shift the transmission to P (Park), and move the ignition key to OFF.
3. Connect the battery.
4. Apply the brake pedal.
5. Turn the ignition on with the engine off. Shift the transfer case out of N (Neutral) to Two-Wheel Drive High. See “Shifting out of N (Neutral)” under *Four-Wheel Drive* ⇨ *262*. See your dealer if the transfer case cannot be shifted out of N (Neutral).
6. Check that the vehicle is in Two-Wheel Drive High by shifting the transmission to R (Reverse) and then to D (Drive). There should be movement of the vehicle while shifting.
7. Shift the transmission to P (Park) and turn off the ignition.
8. Disconnect the vehicle from the tow vehicle.
9. Release the parking brake.
10. Reset any lost presets.

    The outside temperature display will default to 0 °C (32 °F) but will reset with normal usage.

Dolly Towing

Front Towing (Front Wheels Off the Ground) – Two-Wheel-Drive Vehicles

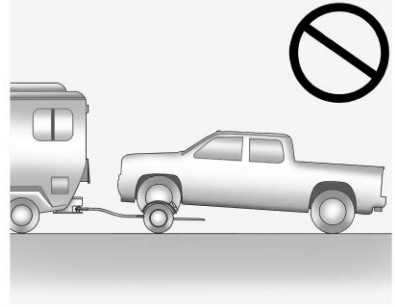

Caution

If a two-wheel-drive vehicle is towed with the rear wheels on the ground, the transmission could be damaged. The repairs would not be covered by the vehicle warranty. Never tow the vehicle with the rear wheels on the ground.

Two-wheel-drive vehicles should not be towed with the rear wheels on the ground. Two-wheel-drive transmissions have no provisions for internal lubrication while being towed.

To dolly tow a two-wheel-drive vehicle, the vehicle must be towed with the rear wheels on the dolly. See “Rear Towing (Rear Wheels Off the Ground)” later in this section.

Front Towing (Front Wheels Off the Ground) – Four-Wheel-Drive Vehicles

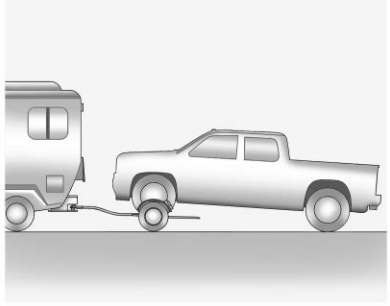

To dolly tow a four-wheel-drive vehicle from the front:

1. Attach the dolly to the tow vehicle following the dolly manufacturer's instructions.
2. Drive the front wheels onto the dolly.
3. Shift the transmission to P (Park).
4. Set the parking brake.

⚠ Warning

Shifting a four-wheel-drive vehicle's transfer case into N (Neutral) can cause the vehicle to roll even if the transmission is in P (Park). You or others could be injured. Set the parking brake before shifting the transfer case to N (Neutral).

5. Use a clamping device designed for towing to ensure that the front wheels are locked into the straight position.
6. Secure the vehicle to the dolly following the manufacturer's instructions.
7. Shift the transfer case to N (Neutral). See “Shifting into N (Neutral)” under *Four-Wheel Drive* ⇨ *262* for the proper procedure.
8. Release the parking brake only after the vehicle being towed is firmly attached to the tow vehicle.
9. Turn the ignition to LOCK/OFF.

Rear Towing (Rear Wheels Off the Ground)

Two-Wheel-Drive Vehicles

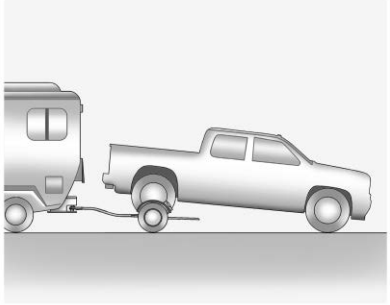

To dolly tow a two-wheel-drive vehicle from the rear:

1. Drive the rear wheels onto the dolly.
2. Set the parking brake. See *Parking Brake* ⇨ *271*.
3. Put the transmission in P (Park).
4. Secure the vehicle to the dolly following the manufacturer's instructions.
5. Use a clamping device designed for towing to ensure that the front wheels are locked into the straight position.
6. Turn the ignition to LOCK/OFF.

Four-Wheel-Drive Vehicles

⚠ Warning

Shifting a four-wheel-drive vehicle's transfer case into N (Neutral) can cause the vehicle to roll even if the transmission is in P (Park). You or others could be injured. Set the parking brake before shifting the transfer case to N (Neutral).

To dolly tow a four-wheel-drive vehicle from the rear:

1. Drive the rear wheels onto the dolly.
2. Set the parking brake. See *Parking Brake* ⇨ *271*.
3. Put the transmission in P (Park).
4. Secure the vehicle to the dolly following the manufacturer's instructions.
5. Use a clamping device designed for towing to ensure that the front wheels are locked into the straight position.
6. Shift the transfer case to N (Neutral). See “Shifting into N (Neutral)” under *Four-Wheel Drive* ⇨ *262* for the proper procedure.
7. Turn the ignition to LOCK/OFF.

Appearance Care

Exterior Care

Locks

Locks are lubricated at the factory. Use a de-icing agent only when absolutely necessary, and have the locks greased after using. See *Recommended Fluids and Lubricants* ⇨ *441*.

Washing the Vehicle

To preserve the vehicle's finish, wash it often and out of direct sunlight.

⚠ Warning

Do not power wash any part of the vehicle’s interior, including the vinyl floor covering. This could damage safety and other systems in the vehicle, which would not be covered by the vehicle warranty.

Caution

Do not use petroleum-based, acidic, or abrasive cleaning agents as they can damage the vehicle's paint, metal, or plastic parts. If damage occurs, it would not be covered by the vehicle warranty. Approved cleaning products can be obtained from your dealer. Follow all manufacturer directions regarding correct product usage, necessary safety precautions, and appropriate disposal of any vehicle care product.

Caution

Avoid using high-pressure washes closer than 30 cm (12 in) to the surface of the vehicle. Use of power washers exceeding 8,274 kPa (1,200 psi) can result in damage or removal of paint and decals.

Caution

Do not power wash any component under the hood that has this symbol.

This could cause damage that would not be covered by the vehicle warranty.

If using an automatic car wash, follow with the car wash instructions. The windshield wiper and rear window wiper, if equipped, must be turned off. Remove any accessories that may be damaged or interfere with the car wash equipment.

See *Power Assist Steps* ⇨ *42* for cleaning information.

Rinse the vehicle well, before washing and after, to remove all cleaning agents completely. If they are allowed to dry on the surface, they could stain.

Dry the finish with a soft, clean chamois or an all-cotton towel to avoid surface scratches and water spotting.

Finish Care

Application of aftermarket clearcoat sealant/wax materials is not recommended. If painted surfaces are damaged, see your dealer to have the damage assessed and repaired. Foreign materials such as calcium chloride and other salts, ice melting agents, road oil and tar, tree sap, bird droppings, chemicals from industrial chimneys, etc., can damage the vehicle's finish if they remain on painted surfaces. Wash the vehicle as soon as possible. If necessary, use non-abrasive cleaners that are marked safe for painted surfaces to remove foreign matter.

Occasional hand waxing or mild polishing should be done to remove residue from the paint finish. See your dealer for approved cleaning products.

Do not apply waxes or polishes to uncoated plastic, vinyl, rubber, decals, simulated wood, or flat paint as damage can occur.

Caution

Machine compounding or aggressive polishing on a basecoat/clearcoat paint finish may damage it. Use only non-abrasive waxes and polishes that are made for a basecoat/clearcoat paint finish on the vehicle.

To keep the paint finish looking new, keep the vehicle garaged or covered whenever possible.

Protecting Exterior Bright Metal Moldings

Caution

Failure to clean and protect the bright metal moldings can result in a hazy white finish or pitting. This damage would not be covered by the vehicle warranty.

The bright metal moldings on the vehicle are aluminum, chrome or stainless steel. To prevent damage always follow these cleaning instructions:

- Be sure the molding is cool to the touch before applying any cleaning solution.
- Use only approved cleaning solutions for aluminum, chrome or stainless steel. Some cleaners are highly acidic or contain alkaline substances and can damage the moldings.
- Always dilute a concentrated cleaner according to the manufacturer’s instructions.

- Do not use cleaners that are not intended for automotive use.
- Use a nonabrasive wax on the vehicle after washing to protect and extend the molding finish.

Spray-In Bedliner Care

A spray-in bedliner is a permanent coating that bonds to the truck bed and cannot be removed. Promptly rinse the bedliner surface following a chemical spill to avoid permanent damage.

Spray-in bedliners can fade from oxidation, road dirt, heavy-duty hauling, and hard water stains. Clean it periodically by washing off the loose dirt and using a mild detergent. To restore the original appearance, apply the bedliner conditioner available through your dealer.

Caution

Using silicone-based products may damage the bedliner, reduce the slip-resistant texture, and attract dirt.

Cleaning Exterior Lamps/ Lenses, Emblems, Decals and Stripes

Use only lukewarm or cold water, a soft cloth, and a car washing soap to clean exterior lamps, lenses, emblems, decals and stripes. Follow instructions under "Washing the Vehicle" previously in this section.

Lamp covers are made of plastic, and some have a UV protective coating. Do not clean or wipe them while they are dry.

Do not use any of the following on lamp covers:

- Abrasive or caustic agents.
- Washer fluids and other cleaning agents in higher concentrations than suggested by the manufacturer.
- Solvents, alcohols, fuels, or other harsh cleaners.
- Ice scrapers or other hard items.
- Aftermarket appearance caps or covers while the lamps are illuminated, due to excessive heat generated.

Caution

Failure to clean lamps properly can cause damage to the lamp cover that would not be covered by the vehicle warranty.

Caution

Using wax on low gloss black finish stripes can increase the gloss level and create a

(Continued)

Caution (Continued)

non-uniform finish. Clean low gloss stripes with soap and water only.

Air Intakes

Clear debris from the air intakes, between the hood and windshield, when washing the vehicle.

Windshield and Wiper Blades

Clean the outside of the windshield with glass cleaner.

Clean rubber blades using a lint-free cloth or paper towel soaked with windshield washer fluid or a mild detergent. Wash the windshield thoroughly when cleaning the blades. Bugs, road grime, sap, and a buildup of vehicle wash/wax treatments may cause wiper streaking.

Replace the wiper blades if they are worn or damaged. Damage can be caused by extreme dusty conditions, sand, salt, heat, sun, snow, and ice.

Weatherstrips

Apply weatherstrip lubricant on weatherstrips to make them last longer, seal better, and not stick or squeak. Lubricate weatherstrips once a year. Hot, dry climates may require more frequent application. Black marks from rubber material on painted surfaces can be removed by rubbing with a clean cloth. See *Recommended Fluids and Lubricants* ⇨ *441*.

Tires

Use a stiff brush with tire cleaner to clean the tires.

Caution

Using petroleum-based tire dressing products on the vehicle may damage the paint finish and/

(Continued)

Caution (Continued)

or tires. When applying a tire dressing, always wipe off any overspray from all painted surfaces on the vehicle.

Wheels and Wheel Trim

Use a soft, clean cloth with mild soap and water to clean the wheels. After rinsing thoroughly with clean water, dry with a soft, clean towel. A wax may then be applied.

Caution

Chrome wheels and chrome wheel trim may be damaged if the vehicle is not washed after driving on roads that have been sprayed with magnesium chloride or calcium chloride. These are used on roads for conditions such as dust and ice. Always wash the chrome with soap and water after exposure.

Caution

To avoid surface damage on wheels and wheel trim, do not use strong soaps, chemicals, abrasive polishes, cleaners, or brushes. Use only GM approved cleaners. Do not drive the vehicle through an automatic car wash that uses silicone carbide tire/wheel cleaning brushes. Damage could occur and the repairs would not be covered by the vehicle warranty.

Brake System

Visually inspect brake lines and hoses for proper hook-up, binding, leaks, cracks, chafing, etc. Inspect disc brake pads for wear and rotors for surface condition. Inspect drum brake linings/shoes for wear or cracks. Inspect all other brake parts.

Steering, Suspension, and Chassis Components

Visually inspect steering, suspension, and chassis components for damaged, loose, or missing parts or signs of wear at least once a year.

Inspect power steering for proper attachment, connections, binding, leaks, cracks, chafing, etc.

Visually check constant velocity joint boots and axle seals for leaks.

1500 Series vehicles, at least every other oil change lubricate the outer tie rod ends.

2500/3500 Series vehicles, at least every other engine oil change lubricate the upper and lower control arm ball joints. Control arm ball joints on 1500 series vehicles are maintenance-free.

2500/3500 Series vehicles equipped with steering linkage, at least every other engine oil change lubricate the tie rod ball joints, idler arm pivot shaft bearings, idler arm socket, and pitman arm socket.

Caution

Lubrication of applicable steering/suspension points should not be done unless the temperature is −12 °C (10 °F) or higher, or damage could result.

Body Component Lubrication

Lubricate all key lock cylinders, hood hinges, liftgate hinges, and the steel fuel door hinge unless the components are plastic. Applying silicone grease on weatherstrips with a clean cloth will make them last longer, seal better, and not stick or squeak.

Underbody Maintenance

At least twice a year, spring and fall, use plain water to flush any corrosive materials from the underbody. Take care to thoroughly clean any areas where mud and other debris can collect. If equipped with power assist steps, extend them and then use a high pressure wash to clean all joints and gaps.

Do not directly power wash the transfer case and/or front/rear axle output seals. High pressure water can overcome the seals and contaminate the fluid. Contaminated fluid will decrease the life of the transfer case and/or axles and should be replaced.

Sheet Metal Damage

If the vehicle is damaged and requires sheet metal repair or replacement, make sure the body repair shop applies anti-corrosion material to parts repaired or replaced to restore corrosion protection.

Original manufacturer replacement parts will provide the corrosion protection while maintaining the vehicle warranty.

Finish Damage

Quickly repair minor chips and scratches with touch-up materials available from your dealer to avoid corrosion. Larger areas of finish damage can be corrected in your dealer's body and paint shop.

Chemical Paint Spotting

Airborne pollutants can fall upon and attack painted vehicle surfaces causing blotchy, ring-shaped discolorations, and small, irregular dark spots etched into the paint surface. Refer to “Finish Care” previously in this section.

Interior Care

To prevent dirt particle abrasions, regularly clean the vehicle's interior. Immediately remove any soils. Newspapers or dark garments can transfer color to the vehicle’s interior.

Use a soft bristle brush to remove dust from knobs and crevices on the instrument cluster. Using a mild soap solution, immediately remove hand lotions, sunscreen, and insect repellent from all interior surfaces or permanent damage may result.

Use cleaners specifically designed for the surfaces being cleaned to prevent permanent damage. Apply cleaners directly to the cleaning cloth. Do not spray cleaners on any switches or controls. Remove cleaners quickly.

Before using cleaners, read and follow all safety instructions on the label. While cleaning the interior, open the doors and windows to get proper ventilation.

To prevent damage, do not clean the interior using the following cleaners or techniques:

- Never use a razor or any other sharp object to remove soil from any interior surface.
- Never use a brush with stiff bristles.
- Never rub any surface aggressively or with too much pressure.
- Do not use laundry detergents or dishwashing soaps with degreasers. For liquid cleaners, use approximately 20 drops per 3.8 L (1 gal) of water.
  A concentrated soap solution will

create streaks and attract dirt. Do not use solutions that contain strong or caustic soap.

- Do not heavily saturate the upholstery when cleaning.
- Do not use solvents or cleaners containing solvents.

Interior Glass

To clean, use a terry cloth fabric dampened with water. Wipe droplets left behind with a clean dry cloth. If necessary, use a commercial glass cleaner after cleaning with plain water.

Caution
To prevent scratching, never use abrasive cleaners on automotive glass. Abrasive cleaners or aggressive cleaning may damage the rear window defogger.

Cleaning the windshield with water during the first three to six months of ownership will reduce tendency to fog.

Speaker Covers

Vacuum around a speaker cover gently, so that the speaker will not be damaged. Clean spots with water and mild soap.

Coated Moldings

Coated moldings should be cleaned.

- When lightly soiled, wipe with a sponge or soft, lint-free cloth dampened with water.
- When heavily soiled, use warm soapy water.

Fabric/Carpet/Suede

Start by vacuuming the surface using a soft brush attachment. If a rotating vacuum brush attachment is being used, only use it on the floor carpet. Before cleaning, gently remove as much of the soil as possible:

- Gently blot liquids with a paper towel. Continue blotting until no more soil can be removed.
- For solid soils, remove as much as possible prior to vacuuming.

To clean:

1. Saturate a clean, lint-free colorfast cloth with water. Microfiber cloth is recommended to prevent lint transfer to the fabric or carpet.
2. Remove excess moisture by gently wringing until water does not drip from the cleaning cloth.
3. Start on the outside edge of the soil and gently rub toward the center. Fold the cleaning cloth to a clean area frequently to prevent forcing the soil in to the fabric.
4. Continue gently rubbing the soiled area until there is no longer any color transfer from the soil to the cleaning cloth.
5. If the soil is not completely removed, use a mild soap solution followed only by plain water.

If the soil is not completely removed, it may be necessary to use a commercial upholstery cleaner or spot lifter. Test a small

hidden area for colorfastness before using a commercial upholstery cleaner or spot lifter. If ring formation occurs, clean the entire fabric or carpet.

After cleaning use a paper towel to blot excess moisture.

Cleaning High Gloss Surfaces and Vehicle Information and Radio Displays

Use a microfiber cloth on high gloss surfaces or vehicle displays. First, use a soft bristle brush to remove dirt that can scratch the surface. Then gently clean by rubbing with a microfiber cloth. Never use window cleaners or solvents. Periodically hand wash the microfiber cloth separately, using mild soap. Do not use bleach or fabric softener. Rinse thoroughly and air dry before next use.

Caution

Do not attach a device with a suction cup to the display. This may cause damage and would not be covered by the vehicle warranty.

Instrument Panel, Leather, Vinyl, Other Plastic Surfaces, Low Gloss Paint Surfaces and Natural Open Pore Wood Surfaces

Use a soft microfiber cloth dampened with water to remove dust and loose dirt. For a more thorough cleaning, use a soft microfiber cloth dampened with a mild soap solution.

Caution

Soaking or saturating leather, especially perforated leather, as well as other interior surfaces, may cause permanent damage.

(Continued)

Caution (Continued)

Wipe excess moisture from these surfaces after cleaning and allow them to dry naturally. Never use heat, steam, or spot removers. Do not use cleaners that contain silicone or wax-based products. Cleaners containing these solvents can permanently change the appearance and feel of leather or soft trim, and are not recommended.

Do not use cleaners that increase gloss, especially on the instrument panel. Reflected glare can decrease visibility through the windshield under certain conditions.

Caution

Use of air fresheners may cause permanent damage to plastics and painted surfaces. If an air freshener comes in contact with

(Continued)

Caution (Continued)

any plastic or painted surface in the vehicle, blot immediately and clean with a soft cloth dampened with a mild soap solution. Damage caused by air fresheners would not be covered by the vehicle warranty.

Care of Seat Belts

Keep belts clean and dry.

⚠ Warning

Do not bleach or dye seat belt webbing. It may severely weaken the webbing. In a crash, they might not be able to provide adequate protection. Clean and rinse seat belt webbing only with mild soap and lukewarm water. Allow the webbing to dry.

Floor Mats

⚠ Warning

If a floor mat is the wrong size or is not properly installed, it can interfere with the pedals. Interference with the pedals can cause unintended acceleration and/or increased stopping distance which can cause a crash and injury. Make sure the floor mat does not interfere with the pedals.

Use the following guidelines for proper floor mat usage:

- The original equipment floor mats were designed for your vehicle. If the floor mats need replacing, it is recommended that GM certified floor mats be purchased. Non-GM floor mats may not fit properly and may interfere with the pedals. Always check that the floor mats do not interfere with the pedals.
- Do not use a floor mat if the vehicle is not equipped with a floor mat retainer on the driver side floor.
- Use the floor mat with the correct side up. Do not turn it over.
- Do not place anything on top of the driver side floor mat.
- Use only a single floor mat on the driver side.
- Do not place one floor mat on top of another.

Removing and Replacing the Floor Mats

Pull up on the rear of the driver side floor mat to unlock each retainer and remove.

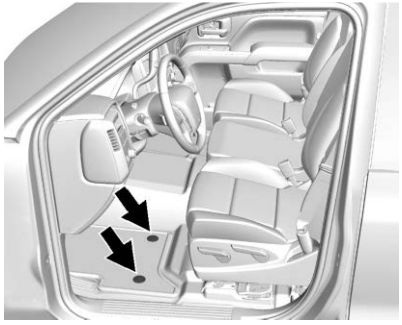

Reinstall by lining up the floor mat retainer openings over the carpet retainers and snapping into position.

Make sure the floor mat is properly secured in place.

Verify the floor mat does not interfere with the pedals.

Service and Maintenance

General Information
General Information 429

Maintenance Schedule
Maintenance Schedule 431

Special Application Services
Special Application Services 437

Additional Maintenance and Care
Additional Maintenance and Care 438

Recommended Fluids, Lubricants, and Parts
Recommended Fluids and Lubricants 441
Maintenance Replacement Parts 443

Maintenance Records
Maintenance Records 445

General Information

This maintenance section applies to vehicles with a gasoline engine. For diesel engine vehicles, see "Maintenance Schedule" in the Duramax diesel supplement.

Your vehicle is an important investment. This section describes the required maintenance for the vehicle. Follow this schedule to help protect against major repair expenses resulting from neglect or inadequate maintenance. It may also help to maintain the value of the vehicle if it is sold. It is the responsibility of the owner to have all required maintenance performed.

Your dealer has trained technicians who can perform required maintenance using genuine replacement parts. They have up-to-date tools and equipment for fast and accurate diagnostics. Many dealers have extended evening and Saturday hours, courtesy transportation, and online scheduling to assist with service needs.

Your dealer recognizes the importance of providing competitively priced maintenance and repair services. With trained technicians, the dealer is the place for routine maintenance such as oil changes and tire rotations and additional maintenance items like tires, brakes, batteries, and wiper blades.

Caution

Damage caused by improper maintenance can lead to costly repairs and may not be covered by the vehicle warranty. Maintenance intervals, checks, inspections, recommended fluids, and lubricants are important to keep the vehicle in good working condition.

Do not have chemical flushes that are not approved by GM performed on the vehicle. The use of flushes, solvents, cleaners, or lubricants that are not

(Continued)

Caution (Continued)

approved by GM could damage the vehicle, requiring expensive repairs that are not covered by the vehicle warranty.

The Tire Rotation and Required Services are the responsibility of the vehicle owner. It is recommended to have your dealer perform these services every 12 000 km/7,500 mi. Proper vehicle maintenance helps to keep the vehicle in good working condition, improves fuel economy, and reduces vehicle emissions.

Because of the way people use vehicles, maintenance needs vary. There may need to be more frequent checks and services. The Additional Required Services - Normal are for vehicles that:

- Carry passengers and cargo within recommended limits on the Tire and Loading Information label. See *Vehicle Load Limits* ⇨ *238*.
- Are driven on reasonable road surfaces within legal driving limits.
- Use the recommended fuel. See *Recommended Fuel* ⇨ *290*.

Refer to the information in the Maintenance Schedule Additional Required Services - Normal chart.

The Additional Required Services - Severe are for vehicles that are:

- Mainly driven in heavy city traffic in hot weather
- Mainly driven in hilly or mountainous terrain
- Frequently towing a trailer
- Used for high speed or competitive driving
- Used for taxi, police, or delivery service

Refer to the information in the Maintenance Schedule Additional Required Services - Severe chart.

⚠ Warning

Performing maintenance work can be dangerous and can cause serious injury. Perform maintenance work only if the required information, proper tools, and equipment are available.
If they are not, see your dealer to have a trained technician do the work. See *Doing Your Own Service Work* ⇨ *327*.

Maintenance Schedule

Owner Checks and Services

At Each Fuel Stop

- Check the engine oil level. See *Engine Oil* ⇨ *332*.

Once a Month

- Check the tire inflation pressures, including the spare. See *Tire Pressure* ⇨ *379*.
- Inspect the tires for wear. See *Tire Inspection* ⇨ *386*.
- Check the windshield washer fluid level. See *Washer Fluid* ⇨ *347*.

Engine Oil Change

When the CHANGE ENGINE OIL SOON message displays, have the engine oil and filter changed within the next 1 000 km/600 mi. If driven under the best conditions, the engine oil life system may not indicate the need for vehicle service for up to a year. The engine oil and filter must be changed at least once a year and the oil life system must be reset. Your trained dealer technician can perform this work. If the engine oil life system is reset accidentally, service the vehicle within 5 000 km/3,000 mi since the last service. Reset the oil life system when the oil is changed. See *Engine Oil Life System* ⇨ *334*.

Passenger Compartment Air Filter

The passenger compartment air filter removes dust, pollen, and other airborne irritants from outside air that is pulled into the vehicle. The filter should be replaced as part of routine scheduled maintenance. Inspect the passenger compartment air filter every 36 000 km/ 22,500 miles or two years, whichever comes first. Replace if necessary. More frequent replacement may be needed if the vehicle is driven in areas with heavy traffic, areas with poor air quality, or areas with high dust levels. Replacement may also be needed if there is a reduction in air flow, excessive window fogging, or odors.

Power Take Off (PTO) and Extended Idle Use

When the vehicle is used with the PTO equipment or used in a way that requires extended idle time, one hour of use shall be deemed the same as 33 miles.
See *Driver Information Center (DIC) (Base Level)* ⇨ *154* or *Driver Information Center (DIC) (Uplevel)* ⇨ *156* for hourmeter.

Air Conditioning Desiccant (Replace Every Seven Years)

The air conditioning system requires maintenance every seven years. This service requires replacement of the desiccant to help the longevity and efficient operation of the air conditioning system. This service can be complex. See your dealer.

Tire Rotation and Required Services Every 12 000 km/ 7,500 mi

Rotate the tires, if recommended for the vehicle, and perform the following services. See *Tire Rotation* ⇨ *387*.

- Check engine oil level and oil life percentage. If needed, change engine oil and filter, and reset oil life system. See *Engine Oil* ⇨ *332* and *Engine Oil Life System* ⇨ *334*.
- Check engine coolant level. See *Cooling System* ⇨ *340*.
- Check windshield washer fluid level. See *Washer Fluid* ⇨ *347*.
- Check tire inflation pressures, including the spare. See *Tire Pressure* ⇨ *379*.
- Inspect tire wear. See *Tire Inspection* ⇨ *386*.
- Visually check for fluid leaks.
- Inspect engine air cleaner filter. See *Engine Air Cleaner/Filter* ⇨ *339*.
- Inspect brake system. See *Exterior Care* ⇨ *419*.
- Visually inspect steering, suspension, and chassis components for damage, including cracks or tears in the rubber boots, loose or missing parts, or signs of wear at least once a year. See *Exterior Care* ⇨ *419*. Lubricate the suspension and steering components at least every other oil change. (If equipped with grease fittings)
- Inspect power steering for proper attachment, connections, binding, leaks, cracks, chafing, etc.
- Visually inspect halfshafts and drive shafts for excessive wear, lubricant leaks, and/or damage including: tube dents or cracks, constant velocity joint or universal joint looseness, cracked or missing boots, loose or missing boot clamps, center bearing excessive looseness, loose or missing fasteners, and axle seal leaks.
- Check restraint system components. See *Safety System Check* ⇨ *74*.
- Visually inspect fuel system for damage or leaks.
- Visually inspect exhaust system and nearby heat shields for loose or damaged parts.
- Lubricate body components. See *Exterior Care* ⇨ *419*.
- Check starter switch. See *Starter Switch Check* ⇨ *355*.
- Check automatic transmission shift lock control function. See *Automatic Transmission Shift Lock Control Function Check* ⇨ *355*.
- Check ignition transmission lock. See *Ignition Transmission Lock Check* ⇨ *355*.
- Check parking brake and automatic transmission park mechanism. See *Park Brake and P (Park) Mechanism Check* ⇨ *355*.

- Check accelerator pedal for damage, high effort, or binding. Replace if needed.
- Visually inspect gas strut for signs of wear, cracks, or other damage. Check the hold open ability of the strut. If the hold open is low, service the gas strut. See *Gas Strut(s)* ⇨ *357*.
- Inspect sunroof track and seal, if equipped. See *Sunroof* ⇨ *53*.
- Verify spare tire key lock operation and lubricate as needed. See *Tire Changing* ⇨ *397*.
- Visually inspect the spare tire to ensure that it is tightly stowed under the vehicle. Push, pull, and try to turn the tire. If the spare tire moves, tighten as necessary. Verify that the wheel retainer plate compression spring is fully compressed. See *Tire Changing* ⇨ *397*.

Additional Required Services

Maintenance Schedule Additional Required Services - Normal	12 000 km/7,500 mi	24 000 km/15,000 mi	36 000 km/22,500 mi	48 000 km/30,000 mi	60 000 km/37,500 mi	72 000 km/45,000 mi	84 000 km/52,500 mi	96 000 km/60,000 mi	108 000 km/67,500 mi	120 000 km/75,000 mi	132 000 km/82,500 mi	144 000 km/90,000 mi	156 000 km/97,500 mi	168 000 km/105,000 mi	180 000 km/112,500 mi	192 000 km/120,000 mi	204 000 km/127,500 mi	216 000 km/135,000 mi	228 000 km/142,500 mi	240 000 km/150,000 mi
Rotate tires and perform Required Services. Check engine oil level and oil life percentage. Change engine oil and filter, if needed.	✓	✓	✓	✓	✓	✓	✓	✓	✓	✓	✓	✓	✓	✓	✓	✓	✓	✓	✓	✓
Replace passenger compartment air filter. (1)			✓			✓			✓			✓			✓			✓		
Replace engine air cleaner filter. (2)						✓						✓						✓		
Inspect evaporative control system. (3)						✓						✓						✓		
Replace spark plugs. Inspect spark plug wires.													✓							
For GVW under 3 900 kg (8,600 lb), change transfer case fluid, if equipped with 4WD. (4)													✓							
For GVW over 3 900 kg (8,600 lb), change transfer case fluid, if equipped with 4WD. (4)						✓						✓						✓		
Drain and fill engine cooling system. (5)																				✓
Visually inspect accessory drive belts. (6)																				✓
Replace brake fluid. (7)																				
Replace windshield wiper blades (8)		✓		✓		✓		✓		✓		✓		✓		✓		✓		✓
Replace hood and/or body lift support gas struts.										✓										✓

Footnotes — Maintenance Schedule Additional Required Services - Normal

(1) Or every two years, whichever comes first. More frequent replacement may be needed if the vehicle is driven in areas with heavy traffic, poor air quality, areas with high dust levels or are sensitive to environmental allergens. Filter replacement may also be needed if you notice reduced airflow, windows fogging up, or odors. Your local GM Service location can help you determine when it is the right time to replace your filter.

(2) Or every four years, whichever comes first. If driving in dusty conditions, inspect the filter at each oil change or more often as needed.

(3) Visually check all fuel and vapor lines and hoses for proper attachment, connection, routing, and condition.

(4) Do not directly power wash the transfer case and/or front/rear axle output seals. High pressure water can overcome the seals and contaminate the fluid. Contaminated fluid will decrease the life of the transfer case and/or drive axles and should be replaced.

(5) Or every five years, whichever comes first. See *Cooling System* ⇨ *340*.

(6) Or every 10 years, whichever comes first. Inspect for fraying, excessive cracking, or damage; replace, if needed.

(7) Replace brake fluid every five years. See *Brake Fluid* ⇨ *349*.

(8) Or every 12 months, whichever comes first. See *Wiper Blade Replacement* ⇨ *356*.

Maintenance Schedule Additional Required Services - Severe	12 000 km/7,500 mi	24 000 km/15,000 mi	36 000 km/22,500 mi	48 000 km/30,000 mi	60 000 km/37,500 mi	72 000 km/45,000 mi	84 000 km/52,500 mi	96 000 km/60,000 mi	108 000 km/67,500 mi	120 000 km/75,000 mi	132 000 km/82,500 mi	144 000 km/90,000 mi	156 000 km/97,500 mi	168 000 km/105,000 mi	180 000 km/112,500 mi	192 000 km/120,000 mi	204 000 km/127,500 mi	216 000 km/135,000 mi	228 000 km/142,500 mi	240 000 km/150,000 mi
Rotate tires and perform Required Services. Check engine oil level and oil life percentage. Change engine oil and filter, if needed.	✓	✓	✓	✓	✓	✓	✓	✓	✓	✓	✓	✓	✓	✓	✓	✓	✓	✓	✓	✓
Replace passenger compartment air filter. (1)			✓			✓			✓			✓			✓			✓		
Replace engine air cleaner filter. (2)						✓						✓						✓		
Inspect evaporative control system. (3)						✓						✓						✓		
Replace spark plugs. Inspect spark plug wires.													✓							
Change automatic transmission fluid and filter.						✓						✓						✓		
For GVW under 3 900 kg (8,600 lb), change transfer case fluid, if equipped with 4WD. (4)						✓						✓						✓		
For GVW over 3 900 kg (8,600 lb), change transfer case fluid, if equipped with 4WD. (4)			✓			✓			✓			✓			✓			✓		
Drain and fill engine cooling system. (5)																				✓
Visually inspect accessory drive belts. (6)																				✓
Replace brake fluid. (7)																				
Replace windshield wiper blades (8)		✓		✓		✓		✓		✓		✓		✓		✓		✓		✓
Replace hood and/or body lift support gas struts.										✓										✓

Footnotes — Maintenance Schedule Additional Required Services - Severe

(1) Or every two years, whichever comes first. More frequent replacement may be needed if the vehicle is driven in areas with heavy traffic, poor air quality, areas with high dust levels or are sensitive to environmental allergens. Filter replacement may also be needed if you notice reduced airflow, windows fogging up, or odors. Your local GM Service location can help you determine when it is the right time to replace your filter.

(2) Or every four years, whichever comes first. If driving in dusty conditions, inspect the filter at each oil change or more often as needed.

(3) Visually check all fuel and vapor lines and hoses for proper attachment, connection, routing, and condition.

(4) Do not directly power wash the transfer case and/or front/rear axle output seals. High pressure water can overcome the seals and contaminate the fluid. Contaminated fluid will decrease the life of the transfer case and/or drive axles and should be replaced.

(5) Or every five years, whichever comes first. See *Cooling System* ⇨ *340*.

(6) Or every 10 years, whichever comes first. Inspect for fraying, excessive cracking, or damage; replace, if needed.

(7) Replace brake fluid every five years. See *Brake Fluid* ⇨ *349*.

(8) Or every 12 months, whichever comes first. See *Wiper Blade Replacement* ⇨ *356*.

Special Application Services

- Vehicles with Dual Wheels: Check dual wheel nut torque at 160, 1 600, and 10 000 km (100, 1,000, and 6,000 mi) of driving. Repeat this service whenever a tire/wheel is serviced or removed.
- Severe Commercial Use Vehicles Only: Lubricate chassis components every oil change.
- Have underbody flushing service performed. See “Underbody Maintenance” in *Exterior Care* ⇨ *419*.

Additional Maintenance and Care

Your vehicle is an important investment and caring for it properly may help to avoid future costly repairs. To maintain vehicle performance, additional maintenance services may be required.

It is recommended that your dealer perform these services — their trained dealer technicians know your vehicle best. Your dealer can also perform a thorough assessment with a multi-point inspection to recommend when your vehicle may need attention.

The following list is intended to explain the services and conditions to look for that may indicate services are required.

Battery

The 12-volt battery supplies power to start the engine and operate any additional electrical accessories.

- To avoid break-down or failure to start the vehicle, maintain a battery with full cranking power.
- Trained dealer technicians have the diagnostic equipment to test the battery and ensure that the connections and cables are corrosion-free.

Belts

- Belts may need replacing if they squeak or show signs of cracking or splitting.
- Trained dealer technicians have access to tools and equipment to inspect the belts and recommend adjustment or replacement when necessary.

Brakes

Brakes stop the vehicle and are crucial to safe driving.

- Signs of brake wear may include chirping, grinding, or squealing noises, or difficulty stopping.
- Trained dealer technicians have access to tools and equipment to inspect the brakes and recommend quality parts engineered for the vehicle.

Fluids

Proper fluid levels and approved fluids protect the vehicle's systems and components. See *Recommended Fluids and Lubricants* ⇨ *441* for GM approved fluids.

- Engine oil and windshield washer fluid levels should be checked at every fuel fill.
- Instrument cluster lights may come on to indicate that fluids may be low and need to be filled.

Hoses

Hoses transport fluids and should be regularly inspected to ensure that there are no cracks or leaks. With a multi-point inspection, your dealer can inspect the hoses and advise if replacement is needed.

Lamps

Properly working headlamps, taillamps, and brake lamps are important to see and be seen on the road.

- Signs that the headlamps need attention include dimming, failure to light, cracking, or damage. The brake lamps need to be checked periodically to ensure that they light when braking.
- With a multi-point inspection, your dealer can check the lamps and note any concerns.

Shocks and Struts

Shocks and struts help aid in control for a smoother ride.

- Signs of wear may include steering wheel vibration, bounce/sway while braking, longer stopping distance, or uneven tire wear.
- As part of the multi-point inspection, trained dealer technicians can visually inspect the shocks and struts for signs of leaking, blown seals, or damage, and can advise when service is needed.

Tires

Tires need to be properly inflated, rotated, and balanced. Maintaining the tires can save money and fuel, and can reduce the risk of tire failure.

- Signs that the tires need to be replaced include three or more visible treadwear indicators; cord or fabric showing through the rubber; cracks or cuts in the tread or sidewall; or a bulge or split in the tire.
- Trained dealer technicians can inspect and recommend the right tires. Your dealer can also provide tire/wheel balancing services to ensure smooth vehicle operation at all speeds. Your dealer sells and services name brand tires.

Vehicle Care

To help keep the vehicle looking like new, vehicle care products are available from your dealer. For information on how to clean and protect the vehicle's interior and exterior, see *Interior Care* ⇨ *424* and *Exterior Care* ⇨ *419*.

Wheel Alignment

Wheel alignment is critical for ensuring that the tires deliver optimal wear and performance.

- Signs that the alignment may need to be adjusted include pulling, improper vehicle handling, or unusual tire wear.
- Your dealer has the required equipment to ensure proper wheel alignment.

Windshield

For safety, appearance, and the best viewing, keep the windshield clean and clear.

- Signs of damage include scratches, cracks, and chips.

- Trained dealer technicians can inspect the windshield and recommend proper replacement if needed.

Wiper Blades

Wiper blades need to be cleaned and kept in good condition to provide a clear view.

- Signs of wear include streaking, skipping across the windshield, and worn or split rubber.
- Trained dealer technicians can check the wiper blades and replace them when needed.

Recommended Fluids, Lubricants, and Parts

Recommended Fluids and Lubricants

This maintenance section applies to vehicles with a gasoline engine. If the vehicle has a diesel engine and/or an Allison Transmission, see “Recommended Fluids and Lubricants” in the Duramax diesel supplement.

Fluids and lubricants identified below by name, part number, or specification can be obtained from your dealer.

Usage	Fluid/Lubricant
Automatic Transmission (6-Speed Transmission)	DEXRON-VI Automatic Transmission Fluid.
Automatic Transmission (8-Speed Transmission)	DEXRON-HP Automatic Transmission Fluid.
Chassis Lubrication	Chassis Lubricant (GM Part No. 12377985, in Canada 88901242) or lubricant meeting requirements of NLGI #2, Category LB or GC-LB.
Engine Coolant	50/50 mixture of clean, drinkable water and use only DEX-COOL coolant. See *Cooling System* ⇨ *340*.
Engine Oil	Engine oil meeting the dexos1 specification of the proper SAE viscosity grade. ACDelco dexos1 full synthetic is recommended. See *Engine Oil* ⇨ *332*.
Floor Shift Linkage	Lubriplate Lubricant Aerosol (GM Part No. 89021668, in Canada 89021674) or lubricant meeting requirements of NLGI #2 Category LB or GC-LB.

Usage	Fluid/Lubricant
Front Axle Driveshaft Splines (All 4WD 1500/2500/3500 Series) and Rear Axle Driveshaft Splines (All 2WD 1500 Series)	Spline Lubricant, Special Lubricant (GM Part No. 19257121, in Canada 19257122).
Front Axle (Four-Wheel Drive)	SAE 75W-90 Synthetic Axle Lubricant (GM Part No. 88900401, in Canada 89021678).
Hydraulic Brake System	DOT 3 Hydraulic Brake Fluid (GM Part No. 19353126, in Canada 19353127).
Hydraulic Power Steering System (2500/3500 Series Only)	GM Power Steering Fluid (GM Part No. 19329450, in Canada 19329451).
Key Lock Cylinders, Hood Hinges, Body Door Hinge Pins, Tailgate Hinge and Linkage, Fuel Door Hinge, Tailgate Handle Pivot Points, Hinges, Latch Bolt, and Linkage	Multi-Purpose Lubricant, Superlube (GM Part No. 12346241, in Canada 10953474).
Rear Axle (1500 Series)	SAE 75W-85 Synthetic Axle Lubricant (GM Part No. 19300457, in Canada 19300458).
Rear Axle (2500/3500 Series)	SAE 75W-90 Synthetic Axle Lubricant (GM Part No. 88900401, in Canada 89021678).
Rear Driveline Center Spline (Two-Piece Driveshaft)	Chassis Lubricant (GM Part No. 12377985, in Canada 88901242) or lubricant meeting requirements of NLGI #2, Category LB or GC-LB.
Transfer Case (Four-Wheel Drive)	DEXRON-VI Automatic Transmission Fluid.

Usage	Fluid/Lubricant
Weatherstrip Conditioning	Weatherstrip lubricant (GM Part No. 3634770, in Canada 10953518) or equivalent.
Weatherstrip Squeaks	Synthetic Grease with Teflon, Superlube (GM Part No. 12371287, in Canada 10953437).
Windshield Washer	Automotive windshield washer fluid that meets regional freeze protection requirements.

Maintenance Replacement Parts

Replacement parts identified below by name, part number, or specification can be obtained from your dealer.

If the vehicle has a diesel engine, see the Duramax diesel supplement.

Part	GM Part Number	ACDelco Part Number
Engine Air Cleaner/Filter	22845992	A3181C
Oil Filter		
5.3L V8	19330000	PF63E
6.0L V8 (L96 and LC8)	19303975	PF48E
Passenger Compartment Air Filter	23281440	CF188
Spark Plugs		
5.3L V8	12622441	41–114

Part	GM Part Number	ACDelco Part Number
6.0L V8 (L96 and LC8)	12680072	41–110
Wiper Blades		
Driver Side – 55 cm (21.7 in)	23417074	—
Passenger Side – 55 cm (21.7 in)	23417074	—

Maintenance Records

After the scheduled services are performed, record the date, odometer reading, who performed the service, and the type of services performed in the boxes provided. Retain all maintenance receipts.

Date	Odometer Reading	Serviced By	Services Performed

Technical Data

Vehicle Identification
Vehicle Identification Number (VIN) 446
Service Parts Identification Label 446

Vehicle Data
Capacities and Specifications 447
Engine Drive Belt Routing 449

Vehicle Identification

Vehicle Identification Number (VIN)

This legal identifier is in the front corner of the instrument panel, on the driver side of the vehicle. It can be seen through the windshield from outside. The Vehicle Identification Number (VIN) also appears on the Vehicle Certification and Service Parts labels and certificates of title and registration.

Engine Identification

The eighth character in the VIN is the engine code. This code identifies the vehicle's engine, specifications, and replacement parts. See “Engine Specifications” under *Capacities and Specifications* ⇨ *447* for the vehicle's engine code.

Service Parts Identification Label

There may be a label on the inside of the glove box that contains the following information:

- Vehicle Identification Number (VIN)
- Model designation
- Paint information
- Production options and special equipment

If there is no label, there is a barcode on the certification label on the center (B) pillar to scan for this same information.

Vehicle Data

Capacities and Specifications

The following approximate capacities are given in metric and English conversions. See *Recommended Fluids and Lubricants* ⇨ *441*.

If the vehicle has a diesel engine, see the Duramax diesel supplement.

Application	Capacities	
	Metric	English
Air Conditioning Refrigerant	For the air conditioning system refrigerant type and charge amount, see the refrigerant label under the hood. See your dealer for more information.	
Cooling System		
5.3L V8 1500 Series	15.7 L	16.6 qt
6.0L V8 2500 Series and 3500 Series	16.1 L	17.0 qt
Engine Oil with Filter		
5.3L V8 Engine	7.6 L	8.0 qt
6.0L V8 Engines	5.7 L	6.0 qt
Fuel Tank		
1500 Series Standard and Short Box	98.4 L	26.0 gal
1500 Series Long Box	128.7 L	34.0 gal

Application	Capacities	
	Metric	English
2500 Series and 3500 Series Standard Box	136.3 L	36.0 gal
2500 Series and 3500 Series Long Box	136.3 L	36.0 gal
3500 Series Chassis Cab	240.4 L	63.5 gal
3500 Chassis Cab – Front Tank	89.0 L	23.5 gal
3500 Chassis Cab – Rear Tank (if equipped)	151.4 L	40.0 gal
Transfer Case Fluid	1.5 L	1.6 qt
Wheel Nut Torque	190 N•m	140 lb ft
All capacities are approximate. When adding, be sure to fill to the approximate level, as recommended in this manual. Recheck fluid level after filling.		

Engine Specifications

Engine	VIN Code	Spark Plug Gap
5.3L V8 (L83)	C	0.95–1.10 mm (0.037–0.043 in)
6.0L V8 (L96)	G	0.95–1.10 mm (0.037–0.043 in)
6.0L V8 (LC8)	B	0.95–1.10 mm (0.037–0.043 in)

Engine Drive Belt Routing

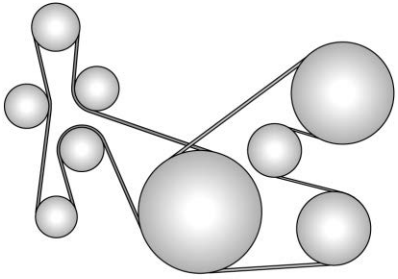

5.3L V8 Engine

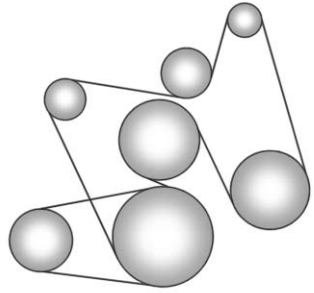

6.0L V8 Engines

If the vehicle has a diesel engine, see the Duramax diesel supplement.

Customer Information

Customer Information
Customer Satisfaction Procedure 450
Customer Assistance Offices 452
Customer Assistance for Text Telephone (TTY) Users 453
Online Owner Center 453
GM Mobility Reimbursement Program 454
Roadside Assistance Program 454
Scheduling Service Appointments 456
Courtesy Transportation Program 456
Collision Damage Repair 457
Publication Ordering Information 459
Radio Frequency Statement 460

Reporting Safety Defects
Reporting Safety Defects to the United States Government 460
Reporting Safety Defects to the Canadian Government 461
Reporting Safety Defects to General Motors 461

Vehicle Data Recording and Privacy
Vehicle Data Recording and Privacy 462
Event Data Recorders 462
OnStar 463
Infotainment System 463

Customer Information

Customer Satisfaction Procedure

Your satisfaction and goodwill are important to your dealer and to Chevrolet. Normally, any concerns with the sales transaction or the operation of the vehicle will be resolved by your dealer's sales or service departments. Sometimes, however, despite the best intentions of all concerned, misunderstandings can occur. If your concern has not been resolved to your satisfaction, the following steps should be taken:

STEP ONE : Discuss your concern with a member of dealership management. Normally, concerns can be quickly resolved at that level. If the matter has already been reviewed with the sales, service, or parts manager, contact the owner of your dealership or the general manager.

STEP TWO : If after contacting a member of dealership management, it appears your concern cannot be

resolved by your dealership without further help, in the U.S., call the Chevrolet Customer Assistance Center at 1-800-222-1020. In Canada, call General Motors of Canada Customer Care Centre at 1-800-263-3777 (English), or 1-800-263-7854 (French).

We encourage you to call the toll-free number in order to give your inquiry prompt attention. Have the following information available to give the Customer Assistance representative:

- Vehicle Identification Number (VIN). This is available from the vehicle registration or title, or the plate at the top left of the instrument panel and visible through the windshield.
- Dealership name and location.
- Vehicle delivery date and present mileage.

When contacting Chevrolet, remember that your concern will likely be resolved at a dealer's facility. That is why we suggest following Step One first.

STEP THREE — U.S. Owners : Both General Motors and your dealer are committed to making sure you are completely satisfied with your new vehicle. However, if you continue to remain unsatisfied after following the procedure outlined in Steps One and Two, you can file with the Better Business Bureau (BBB) Auto Line Program to enforce your rights.

The BBB Auto Line Program is an out-of-court program administered by the Council of Better Business Bureaus to settle automotive disputes regarding vehicle repairs or the interpretation of the New Vehicle Limited Warranty. Although you may be required to resort to this informal dispute resolution program prior to filing a court action, use of the program is free of charge and your case will generally be heard within 40 days. If you do not agree with the decision given in your case, you may reject it and proceed with any other venue for relief available to you.

You may contact the BBB Auto Line Program using the toll-free telephone number or write them at the following address:

BBB Auto Line Program
Council of Better Business Bureaus, Inc.
3033 Wilson Boulevard
Suite 600
Arlington, VA 22201

Telephone: 1-800-955-5100
http://www.bbb.org/council/programs-services/dispute-handling-and-resolution/bbb-auto-line

This program is available in all 50 states and the District of Columbia. Eligibility is limited by vehicle age, mileage, and other factors. General Motors reserves the right to change eligibility limitations and/or discontinue its participation in this program.

STEP THREE — Canadian Owners : In the event that you do not feel your concerns have been addressed after following the procedure outlined in Steps One

and Two, General Motors of Canada Company wants you to be aware of its participation in a no-charge Mediation/Arbitration Program. General Motors of Canada Company has committed to binding arbitration of owner disputes involving factory-related vehicle service claims. The program provides for the review of the facts involved by an impartial third party arbiter, and may include an informal hearing before the arbiter. The program is designed so that the entire dispute settlement process, from the time you file your complaint to the final decision, should be completed in about 70 days. We believe our impartial program offers advantages over courts in most jurisdictions because it is informal, quick, and free of charge.

For further information concerning eligibility in the Canadian Motor Vehicle Arbitration Plan (CAMVAP), call toll-free 1-800-207-0685, or call the General Motors Customer Care Centre, 1-800-263-3777 (English), 1-800-263-7854 (French), or write to:

The Mediation/Arbitration Program
c/o Customer Care Centre
General Motors of Canada Company
Mail Code: CA1-163-005
1908 Colonel Sam Drive
Oshawa, Ontario L1H 8P7

Your inquiry should be accompanied by the Vehicle Identification Number (VIN).

Customer Assistance Offices

Chevrolet encourages customers to call the toll-free number for assistance. However, if a customer wishes to write or e-mail Chevrolet, the letter should be addressed to:

United States and Puerto Rico

Chevrolet Motor Division
Chevrolet Customer Assistance Center
P.O. Box 33170
Detroit, MI 48232-5170
www.Chevrolet.com

1-800-222-1020
1-800-833-2438 (For Text Telephone Devices (TTYs))
Roadside Assistance:
1-800-243-8872

From U.S. Virgin Islands:

1-800-496-9994

Canada

General Motors of Canada Company
Customer Care Centre, Mail Code: CA1-163-005
1908 Colonel Sam Drive
Oshawa, Ontario L1H 8P7
www.gm.ca

1-800-263-3777 (English)
1-800-263-7854 (French)
1-800-263-3830 (For Text

Telephone devices (TTYs))
Roadside Assistance:
1-800-268-6800

Overseas

Please contact the local General Motors Business Unit.

Customer Assistance for Text Telephone (TTY) Users

To assist customers who are deaf, hard of hearing, or speech-impaired and who use Text Telephones (TTYs), Chevrolet has TTY equipment available at its Customer Assistance Center. Any TTY user in the U.S. can communicate with Chevrolet by dialing:
1-800-833-2438. TTY users in Canada can dial 1-800-263-3830.

Online Owner Center

Online Owner Experience (U.S.) my.chevrolet.com

The Chevrolet online owner experience allows interaction with Chevrolet and keeps important vehicle-specific information in one place.

Membership Benefits

: Download owner's manuals and view vehicle-specific how-to videos.

: View maintenance schedules, alerts, and Vehicle Diagnostic Information. Schedule service appointments.

: View and print dealer-recorded service records and self-recorded service records.

: Select a preferred dealer and view locations, maps, phone numbers, and hours.

: Track your vehicle's warranty information.

: View active recalls by Vehicle Identification Number (VIN). See *Vehicle Identification Number (VIN)* ⇨ *446*.

: View GM Card, SiriusXM Satellite radio (if equipped), and OnStar account information (if equipped).

: Chat with online help representatives.

See my.chevrolet.com to register your vehicle.

Chevrolet Owner Centre (Canada) www.chevroletowner.ca

Visit the Chevrolet Owner Centre:

- Chat live with online help representatives.
- Locate owner resources such as lease-end, financing, and warranty information.
- Retrieve your favorite articles, quizzes, tips, and multimedia galleries organized into the Featured Articles and Auto Care Sections.

- Download owner's manuals.
- Find the Chevrolet-recommended maintenance services.

GM Mobility Reimbursement Program

GENERAL MOTORS MOBILITY

This program is available to qualified applicants for cost reimbursement, up to certain limits, of eligible aftermarket adaptive equipment required for the vehicle, such as hand controls or a wheelchair/scooter lift for the vehicle.

To learn about the GM Mobility program, see www.gmmobility.com or call the GM Mobility Assistance Center at 1-800-323-9935. Text Telephone (TTY) users, call 1-800-833-9935.

General Motors of Canada also has a Mobility program. See www.gm.ca or call 1-800-GM-DRIVE (800-463-7483) for details. TTY users call 1-800-263-3830.

Roadside Assistance Program

For U.S.-purchased vehicles, call 1-800-243-8872. (Text Telephone (TTY): 1-888-889-2438.)

For Canadian-purchased vehicles, call 1-800-268-6800.

Service is available 24 hours a day, 365 days a year.

Calling for Assistance

When calling Roadside Assistance, have the following information ready:

- Your name, home address, and home telephone number
- Telephone number of your location
- Location of the vehicle
- Model, year, color, and license plate number of the vehicle
- Odometer reading, Vehicle Identification Number (VIN), and delivery date of the vehicle
- Description of the problem

Coverage

Services are provided for the duration of the vehicle's powertrain warranty.

In the U.S., anyone driving the vehicle is covered. In Canada, a person driving the vehicle without permission from the owner is not covered.

Roadside Assistance is not a part of the New Vehicle Limited Warranty. General Motors North America and Chevrolet reserve the right to make any changes or discontinue the Roadside Assistance program at any time without notification.

General Motors North America and Chevrolet reserve the right to limit services or payment to an owner or

driver if they decide the claims are made too often, or the same type of claim is made many times.

Services Provided

- **Emergency Fuel Delivery:** Delivery of enough fuel for the vehicle to get to the nearest service station.
- **Lock-Out Service:** Service to unlock the vehicle if you are locked out. A remote unlock may be available if you have OnStar. For security reasons, the driver must present identification before this service is given.
- **Emergency Tow from a Public Road or Highway:** Tow to the nearest Chevrolet dealer for warranty service, or if the vehicle was in a crash and cannot be driven. Assistance is not given when the vehicle is stuck in the sand, mud, or snow.
- **Flat Tire Change:** Service to change a flat tire with the spare tire. The spare tire, if equipped, must be in good condition and properly inflated. It is the owner's responsibility for the repair or replacement of the tire if it is not covered by the warranty.
- **Battery Jump Start:** Service to jump start a dead battery.
- **Trip Interruption Benefits and Assistance:** If your trip is interrupted due to a warranty event, incidental expenses may be reimbursed within the Powertrain warranty period. Items considered are reasonable and customary hotel, meals, rental car, or a vehicle being delivered back to the customer, up to 500 miles.

Services Not Included in Roadside Assistance

- Impound towing caused by violation of any laws
- Legal fines
- Mounting, dismounting, or changing of snow tires, chains, or other traction devices

Service is not provided if a vehicle is in an area that is not accessible to the service vehicle or is not a regularly traveled or maintained public road, which includes ice and winter roads. Off-road use is not covered.

Services Specific to Canadian-Purchased Vehicles

- **Fuel Delivery:** Reimbursement is up to 7 liters. If available, diesel fuel delivery may be restricted. Propane and other fuels are not provided through this service.
- **Lock-Out Service:** Vehicle registration is required.
- **Trip Interruption Benefits and Assistance:** Must be over 150 km from where your trip was started to qualify. Pre-authorization, original detailed receipts, and a copy of the repair orders are required. Once authorization has been received, the Roadside Assistance advisor will help to make arrangements and explain how to receive payment.

- **Alternative Service:** If assistance cannot be provided right away, the Roadside Assistance advisor may give permission to get local emergency road service. You will receive payment, up to $100, after sending the original receipt to Roadside Assistance. Mechanical failures may be covered, however any cost for parts and labor for repairs not covered by the warranty are the owner responsibility.

Scheduling Service Appointments

When the vehicle requires warranty service, contact your dealer and request an appointment. By scheduling a service appointment and advising the service consultant of your transportation needs, your dealer can help minimize your inconvenience.

If the vehicle cannot be scheduled into the service department immediately, keep driving it until it can be scheduled for service, unless, of course, the problem is safety related. If it is, please call your dealership, let them know this, and ask for instructions.

If your dealer requests you to bring the vehicle for service, you are urged to do so as early in the work day as possible to allow for same-day repair.

Courtesy Transportation Program

To enhance your ownership experience, we and our participating dealers are proud to offer Courtesy Transportation, a customer support program for vehicles with the Bumper-to-Bumper (Base Warranty Coverage period in Canada), extended powertrain, and/or hybrid-specific warranties in both the U.S. and Canada.

Several Courtesy Transportation options are available to assist in reducing inconvenience when warranty repairs are required.

Courtesy Transportation is not a part of the New Vehicle Limited Warranty. A separate booklet entitled “Limited Warranty and Owner Assistance Information” furnished with each new vehicle provides detailed warranty coverage information.

Transportation Options

Warranty service can generally be completed while you wait. However, if you are unable to do so, your dealer may offer the following transportation options:

Shuttle Service

This includes one-way or round-trip shuttle service within reasonable time and distance parameters of your dealer's area.

Public Transportation or Fuel Reimbursement

If overnight warranty repairs are needed, and public transportation is used, the expense must be supported by original receipts and within the maximum amount allowed by GM for shuttle service. If U.S.

customers arrange their own transportation, limited reimbursement for reasonable fuel expenses may be available. Claim amounts should reflect actual costs and be supported by original receipts. See your dealer for information.

Courtesy Rental Vehicle

For an overnight warranty repair, the dealer may provide an available courtesy rental vehicle or provide for reimbursement of a rental vehicle. Reimbursement is limited and must be supported by original receipts as well as a signed and completed rental agreement and meet state/provincial, local, and rental vehicle provider requirements. Requirements vary and may include minimum age requirements, insurance coverage, credit card, etc. Additional fees such as fuel usage charges, taxes, levies, usage fees, excessive mileage, or rental usage beyond the completion of the repair are also your responsibility.

It may not be possible to provide a like vehicle as a courtesy rental.

Additional Program Information

All program options, such as shuttle service, may not be available at every dealer. Contact your dealer for specific availability.

General Motors reserves the right to unilaterally modify, change, or discontinue Courtesy Transportation at any time and to resolve all questions of claim eligibility pursuant to the terms and conditions described herein at its sole discretion.

Collision Damage Repair

If the vehicle is involved in a collision and it is damaged, have the damage repaired by a qualified technician using the proper equipment and quality replacement parts. Poorly performed collision repairs diminish the vehicle resale value, and safety performance can be compromised in subsequent collisions.

Collision Parts

Genuine GM Collision parts are new parts made with the same materials and construction methods as the parts with which the vehicle was originally built. Genuine GM Collision parts are the best choice to ensure that the vehicle's designed appearance, durability, and safety are preserved. The use of Genuine GM parts can help maintain the GM New Vehicle Limited Warranty.

Recycled original equipment parts may also be used for repair. These parts are typically removed from vehicles that were total losses in prior crashes. In most cases, the parts being recycled are from undamaged sections of the vehicle. A recycled original equipment GM part may be an acceptable choice to maintain the vehicle's originally designed appearance and safety performance; however, the history of these parts is not known. Such parts are not covered by the GM New Vehicle Limited Warranty, and any related failures are not covered by that warranty.

Aftermarket collision parts are also available. These are made by companies other than GM and may not have been tested for the vehicle. As a result, these parts may fit poorly, exhibit premature durability/corrosion problems, and may not perform properly in subsequent collisions. Aftermarket parts are not covered by the GM New Vehicle Limited Warranty, and any vehicle failure related to such parts is not covered by that warranty.

Repair Facility

GM also recommends that you choose a collision repair facility that meets your needs before you ever need collision repairs. Your dealer may have a collision repair center with GM-trained technicians and state-of-the-art equipment, or be able to recommend a collision repair center that has GM-trained technicians and comparable equipment.

Insuring the Vehicle

Protect your investment in the GM vehicle with comprehensive and collision insurance coverage. There are significant differences in the quality of coverage afforded by various insurance policy terms. Many insurance policies provide reduced protection to the GM vehicle by limiting compensation for damage repairs through the use of aftermarket collision parts. Some insurance companies will not specify aftermarket collision parts. When purchasing insurance, we recommend that you ensure that the vehicle will be repaired with GM original equipment collision parts. If such insurance coverage is not available from your current insurance carrier, consider switching to another insurance carrier.

If the vehicle is leased, the leasing company may require you to have insurance that ensures repairs with Genuine GM Original Equipment Manufacturer (OEM) parts or Genuine Manufacturer replacement parts. Read the lease carefully, as you may be charged at the end of the lease for poor quality repairs.

If a Crash Occurs

If there has been an injury, call emergency services for help. Do not leave the scene of a crash until all matters have been taken care of. Move the vehicle only if its position puts you in danger, or you are instructed to move it by a police officer.

Give only the necessary information to police and other parties involved in the crash.

For emergency towing see *Roadside Assistance Program* ⇨ *454*.

Gather the following information:

- Driver name, address, and telephone number
- Driver license number
- Owner name, address, and telephone number
- Vehicle license plate number

- Vehicle make, model, and model year
- Vehicle Identification Number (VIN)
- Insurance company and policy number
- General description of the damage to the other vehicle

Choose a reputable repair facility that uses quality replacement parts. See “Collision Parts” earlier in this section.

If the airbag has inflated, see *What Will You See after an Airbag Inflates?* ⇨ *81*.

Managing the Vehicle Damage Repair Process

In the event that the vehicle requires damage repairs, GM recommends that you take an active role in its repair. If you have a pre-determined repair facility of choice, take the vehicle there, or have it towed there. Specify to the facility that any required replacement collision parts be original equipment parts, either new Genuine GM parts or recycled original GM parts. Remember, recycled parts will not be covered by the GM vehicle warranty.

Insurance pays the bill for the repair, but you must live with the repair. Depending on your policy limits, your insurance company may initially value the repair using aftermarket parts. Discuss this with the repair professional, and insist on Genuine GM parts. Remember, if the vehicle is leased, you may be obligated to have the vehicle repaired with Genuine GM parts, even if your insurance coverage does not pay the full cost.

If another party's insurance company is paying for the repairs, you are not obligated to accept a repair valuation based on that insurance company's collision policy repair limits, as you have no contractual limits with that company. In such cases, you can have control of the repair and parts choices as long as the cost stays within reasonable limits.

Publication Ordering Information

Service Manuals

Service manuals have the diagnosis and repair information on the engine, transmission, axle, suspension, brakes, electrical system, steering system, body, etc.

Customer Literature

Owner’s manuals are written specifically for owners and are intended to provide basic operational information about the vehicle. The owner’s manual includes the Maintenance Schedule for all models.

Customer literature publications available for purchase include owner’s manuals, warranty manuals, infotainment manuals, and portfolios. Portfolios include an owner’s manual, warranty manual, infotainment manual, if applicable, and zip lock bag or pouch.

Current and Past Models

Service manuals and customer literature are available for many current and past model year GM vehicles.

To order, call 1-800-551-4123 Monday–Friday, 8:00 a.m.–6:00 p.m. eastern time

For credit card orders only (VISA, MasterCard, or Discover), see Helm, Inc. at: www.helminc.com.

To order by mail, write to:

Helm, Incorporated
Attention: Customer Service
47911 Halyard Drive
Plymouth, MI 48170

Make checks payable in U.S. funds.

Radio Frequency Statement

This vehicle has systems that operate on a radio frequency that complies with Part 15/Part 18 of the Federal Communications Commission (FCC) rules and with Innovation, Science and Economic Development (ISED) Canada's RSP-100 / license-exempt RSS's / ICES-001.

Operation is subject to the following two conditions:

1. The device may not cause harmful interference.
2. The device must accept any interference received, including interference that may cause undesired operation of the device.

Changes or modifications to any of these systems by other than an authorized service facility could void authorization to use this equipment.

Reporting Safety Defects

Reporting Safety Defects to the United States Government

If you believe that your vehicle has a defect which could cause a crash or could cause injury or death, you should immediately inform the National Highway Traffic Safety Administration (NHTSA) in addition to notifying General Motors.

If NHTSA receives similar complaints, it may open an investigation, and if it finds that a safety defect exists in a group of vehicles, it may order a recall and remedy campaign. However, NHTSA cannot become involved in individual problems between you, your dealer, or General Motors.

To contact NHTSA, you may call the Vehicle Safety Hotline toll-free at 1-888-327-4236 (TTY: 1-800-424-9153); go to *http://www.safercar.gov;* or write to:

Administrator, NHTSA
1200 New Jersey Avenue, S.E.
Washington, D.C. 20590

You can also obtain other information about motor vehicle safety from *http://www.safercar.gov*.

Reporting Safety Defects to the Canadian Government

If you live in Canada, and you believe that the vehicle has a safety defect, notify Transport Canada immediately, and notify General Motors of Canada Company. Call Transport Canada at 1-800-333-0510; go to:

www.tc.gc.ca/recalls (English)

www.tc.gc.ca/rappels (French)

or write to:

Transport Canada
Motor Vehicle Safety Directorate
Defect Investigations and Recalls Division
80 Noel Street
Gatineau, QC J8Z 0A1

Reporting Safety Defects to General Motors

In addition to notifying NHTSA (or Transport Canada) in a situation like this, notify General Motors.

In the U.S., call 1-800-222-1020, or write:

Chevrolet Motor Division
Chevrolet Customer Assistance Center
P.O. Box 33170
Detroit, MI 48232-5170

In Canada, call 1-800-263-3777 (English) or 1-800-263-7854 (French), or write:

General Motors of Canada Company
Customer Care Centre, Mail Code: CA1-163-005
1908 Colonel Sam Drive
Oshawa, Ontario L1H 8P7

In Mexico, call 01-800-466-0811.

In other Central America and Caribbean Countries, call 52-722-236-0680.

Vehicle Data Recording and Privacy

The vehicle has a number of computers that record information about the vehicle's performance and how it is driven. For example, the vehicle uses computer modules to monitor and control engine and transmission performance, to monitor the conditions for airbag deployment and deploy them in a crash, and, if equipped, to provide antilock braking to help the driver control the vehicle. These modules may store data to help the dealer technician service the vehicle. Some modules may also store data about how the vehicle is operated, such as rate of fuel consumption or average speed. These modules may retain personal preferences, such as radio presets, seat positions, and temperature settings.

Event Data Recorders

This vehicle is equipped with an event data recorder (EDR). The main purpose of an EDR is to record, in certain crash or near crash-like situations, such as an air bag deployment or hitting a road obstacle, data that will assist in understanding how a vehicle's systems performed. The EDR is designed to record data related to vehicle dynamics and safety systems for a short period of time, typically 30 seconds or less. The EDR in this vehicle is designed to record such data as:

- How various systems in your vehicle were operating;
- Whether or not the driver and passenger safety belts were buckled/fastened;
- How far (if at all) the driver was depressing the accelerator and/or brake pedal; and,
- How fast the vehicle was traveling.

These data can help provide a better understanding of the circumstances in which crashes and injuries occur.

Note

EDR data are recorded by your vehicle only if a non-trivial crash situation occurs; no data are recorded by the EDR under normal driving conditions and no personal data (e.g., name, gender, age, and crash location) are recorded. However, other parties, such as law enforcement, could combine the EDR data with the type of personally identifying data routinely acquired during a crash investigation.

To read data recorded by an EDR, special equipment is required, and access to the vehicle or the EDR is needed. In addition to the vehicle manufacturer, other parties, such as law enforcement, that have the special equipment, can read the information if they have access to the vehicle or the EDR.

GM will not access these data or share it with others except: with the consent of the vehicle owner or, if the vehicle is leased, with the consent of the lessee; in response to an official request by police or similar government office; as part of GM's defense of litigation through the discovery process; or, as required by law. Data that GM collects or receives may also be used for GM research needs or may be made available to others for research purposes, where a need is shown and the data is not tied to a specific vehicle or vehicle owner.

OnStar

If the vehicle is equipped with OnStar and has an active service plan, additional data may be collected through the OnStar system. This includes information about the vehicle's operation; collisions involving the vehicle; the use of the vehicle and its features; and, in certain situations, the location and approximate GPS speed of the vehicle. Refer to the OnStar Terms and Conditions and Privacy Statement on the OnStar website.

See *OnStar Additional Information* ⇨ *466*.

Infotainment System

If the vehicle is equipped with a navigation system as part of the infotainment system, use of the system may result in the storage of destinations, addresses, telephone numbers, and other trip information. See the infotainment manual for information on stored data and for deletion instructions.

OnStar

OnStar Overview
OnStar Overview 464

OnStar Services
Emergency 465
Security 466

OnStar Additional Information
OnStar Additional Information 466

OnStar Overview

Voice Command Button

Blue OnStar Button

Red Emergency Button

This vehicle may be equipped with a comprehensive, in-vehicle system that can connect to an OnStar Advisor for Emergency, Security, Navigation, Connections, and Diagnostics Services. OnStar services may require a paid service plan and data plan. OnStar requires the vehicle battery and electrical system, cellular service, and GPS satellite signals to be available and operating. OnStar acts as a link to existing emergency service providers. OnStar may collect information about you and your vehicle, including location information. See OnStar User Terms, Privacy Statement, and Software Terms for more details including system limitations at www.onstar.com (U.S.) or www.onstar.ca (Canada).

The OnStar system status light is next to the OnStar buttons. If the status light is:

- Solid Green: System is ready.
- Flashing Green: On a call.
- Red: Indicates a problem.
- Off: System is off. Press twice to speak with an OnStar Advisor.

Press or call 1-888-4ONSTAR (1-888-466-7827) to speak to an Advisor.

Functionality of the Voice Command button may vary by vehicle and region.

Press to:

- Open the OnStar app on the infotainment display. See the infotainment manual for information on how to use the OnStar app.

Or

- Make a call, end a call, or answer an incoming call.
- Give OnStar Hands-Free Calling voice commands.
- Give OnStar Turn-by-Turn Navigation voice commands.
- Obtain and customize the Wi-Fi hotspot name or SSID and password, if equipped.

Press to connect to an Advisor to:

- Verify account information or update contact information.
- Get driving directions.
- Receive a Diagnostic check of the vehicle's key operating systems.
- Receive Roadside Assistance.
- Manage Wi-Fi Settings, if equipped.

Press to get a priority connection to an OnStar Advisor available 24/7 to:

- Get help for an emergency.
- Be a Good Samaritan or respond to an AMBER Alert.
- Get assistance in severe weather or other crisis situations and find evacuation routes.

OnStar Services

Emergency

Emergency Services require an active safety and security plan. With Automatic Crash Response, built-in sensors can automatically alert a specially trained OnStar Advisor who is immediately connected in to the vehicle to help.

Press for a priority connection to an OnStar Advisor who can contact emergency service providers, direct them to your exact location, and relay important information.

With OnStar Crisis Assist, specially trained Advisors are available 24 hours a day, 7 days a week, to provide a central point of contact, assistance, and information during a crisis.

With Roadside Assistance, Advisors can locate a nearby service provider to help with a flat tire, a battery jump, or an empty gas tank.

Security

If equipped, OnStar provides these services:

- With Stolen Vehicle Assistance, OnStar Advisors can use GPS to pinpoint the vehicle and help authorities quickly recover it.
- With Remote Ignition Block, if equipped, OnStar can block the engine from being restarted.
- With Stolen Vehicle Slowdown, if equipped, OnStar can work with law enforcement to gradually slow the vehicle down.

Theft Alarm Notification

If equipped, if the doors are locked and the vehicle alarm sounds, a notification by text, e-mail, or phone call will be sent. If the vehicle is stolen, an OnStar Advisor can work with authorities to recover the vehicle.

OnStar Additional Information

In-Vehicle Audio Messages

Audio messages may play important information at the following times:

- Prior to vehicle purchase. Press On to set up an account.
- After change in ownership and at 90 days.

Transferring Service

Press On to request account transfer eligibility information. The Advisor can cancel or change account information.

Selling/Transferring the Vehicle

Call 1-888-4ONSTAR (1-888-466-7827) immediately to terminate your OnStar or connected services if the vehicle is disposed of, sold, transferred, or if the lease ends.

Reactivation for Subsequent Owners

Press On and follow the prompts to speak to an Advisor as soon as possible. The Advisor will update vehicle records and explain OnStar or connected service options.

How OnStar Service Works

Automatic Crash Response, Emergency Services, Crisis Assist, Stolen Vehicle Assistance, Remote Services, Roadside Assistance, and Hands-Free Calling are available on most vehicles. Not all OnStar services are available everywhere or on all vehicles. For more information, a full description of OnStar services, system limitations, and OnStar User Terms, Privacy Statement, and Software Terms:

- Call 1-888-4ONSTAR (1-888-466-7827).
- See www.onstar.com (U.S.).
- See www.onstar.ca (Canada).
- Call TTY 1-877-248-2080.

- Press ⓞⓝ to speak with an Advisor.

OnStar or connected services cannot work unless the vehicle is in a place where OnStar has an agreement with a wireless service provider for service in that area. The wireless service provider must also have coverage, network capacity, reception, and technology compatible with OnStar or connected services. Service involving location information about the vehicle cannot work unless GPS signals are available, unobstructed, and compatible with the OnStar hardware. OnStar or connected services may not work if the OnStar equipment is not properly installed or it has not been properly maintained. If equipment or software is added, connected, or modified, OnStar or connected services may not work. Other problems beyond the control of OnStar — such as hills, tall buildings, tunnels, weather, electrical system design and architecture of the vehicle, damage to the vehicle in a crash, or wireless phone network congestion or jamming — may prevent service.

See *Radio Frequency Statement* ⇨ *460*.

Services for People with Disabilities

Advisors provide services to help with physical disabilities and medical conditions.

Press ⓞⓝ to help:

- Locate a gas station with an attendant to pump gas.
- Find a hotel, restaurant, etc., that meets accessibility needs.
- Provide directions to the closest hospital or pharmacy in urgent situations.

TTY Users

OnStar has the ability to communicate to deaf, hard-of-hearing, or speech-impaired customers while in the vehicle. The available dealer-installed TTY system can provide in-vehicle access to all OnStar services, except Virtual Advisor and OnStar Turn-by-Turn Navigation.

If equipped, TTY mode can be turned on or off by touching Settings, then Apps, and then Phone. When TTY mode is on, phone calls can be made or received with OnStar using the infotainment display.

OnStar Personal Identification Number (PIN)

A PIN is needed to access some OnStar services. The PIN will need to be changed the first time when speaking with an Advisor. To change the OnStar PIN, contact an OnStar Advisor by pressing ⓞⓝ or calling 1-888-4ONSTAR.

Warranty

OnStar equipment may be warranted as part of the vehicle warranty.

Languages

The vehicle can be programmed to respond in multiple languages.

Press On and ask for an Advisor. Advisors are available in English, Spanish, and French. Available languages may vary by country.

Potential Issues

OnStar cannot perform Remote Door Unlock or Stolen Vehicle Assistance after the vehicle has been off continuously for 10 days without an ignition cycle. If the vehicle has not been started for 10 days, OnStar can contact Roadside Assistance or a locksmith to help gain access to the vehicle.

Global Positioning System (GPS)

- Obstruction of the GPS can occur in a large city with tall buildings; in parking garages; around airports; in tunnels and underpasses; or in an area with very dense trees. If GPS signals are not available, the OnStar system should still operate to call OnStar. However, OnStar could have difficulty identifying the exact location.
- In emergency situations, OnStar can use the last stored GPS location to send to emergency responders.

A temporary loss of GPS can cause loss of the ability to send a Turn-by-Turn Navigation route. The Advisor may give a verbal route or may ask for a call back after the vehicle is driven into an open area.

Cellular and GPS Antennas

Cellular reception is required for OnStar to send remote signals to the vehicle. Do not place items over or near the antenna to prevent blocking cellular and GPS signal reception.

Unable to Connect to OnStar Message

If there is limited cellular coverage or the cellular network has reached maximum capacity, this message may come on. Press On to try the call again or try again after driving a few miles into another cellular area.

Vehicle and Power Issues

OnStar services require a vehicle electrical system, wireless service, and GPS satellite technologies to be available and operating for features to function properly. These systems may not operate if the battery is discharged or disconnected.

Add-on Electrical Equipment

The OnStar system is integrated into the electrical architecture of the vehicle. Do not add any electrical equipment. See *Add-On Electrical Equipment* ⇨ *318*. Added electrical equipment may interfere with the operation of the OnStar system and cause it to not operate.

Vehicle Software Updates

OnStar or GM may remotely deliver software updates or changes to the vehicle without further notice or consent. These updates or changes may enhance or maintain safety,

security, or the operation of the vehicle or the vehicle systems. Software updates or changes may affect or erase data or settings that are stored in the vehicle, such as OnStar Hands-Free Calling name tags, saved navigation destinations, or pre-set radio stations. Neither OnStar nor GM is responsible for any affected or erased data or settings. These updates or changes may also collect personal information. Such collection is described in the OnStar privacy statement or separately disclosed at the time of installation. These updates or changes may also cause a system to automatically communicate with GM servers to collect information about vehicle system status, identify whether updates or changes are available, or deliver updates or changes. An active OnStar agreement constitutes consent to these software updates or changes and agreement that either OnStar or GM may remotely deliver them to the vehicle.

Privacy

The complete OnStar Privacy Statement may be found at www.onstar.com (U.S.), or www.onstar.ca (Canada). We recommend that you review it. If you have any questions, call 1-888-4ONSTAR (1-888-466-7827) or press to speak with an Advisor. Users of wireless communications are cautioned that the privacy of any information sent via wireless cellular communications cannot be assured. Third parties may unlawfully intercept or access transmissions and private communications without consent.

OnStar - Software Acknowledgements

Certain OnStar components include libcurl and unzip software and other third party software. Below are the notices and licenses associated with libcurl and unzip and for other third party software please see http://opensource.lge.com/index

www.onstar.com/us/en/

libcurl:

COPYRIGHT AND PERMISSION NOTICE

Copyright (c) 1996 - 2010, Daniel Stenberg, <daniel@haxx.se>.

All rights reserved.

Permission to use, copy, modify, and distribute this software for any purpose with or without fee is hereby granted, provided that the above copyright notice and this permission notice appear in all copies.

THE SOFTWARE IS PROVIDED “AS IS,” WITHOUT WARRANTY OF ANY KIND, EXPRESS OR IMPLIED, INCLUDING BUT NOT LIMITED TO THE WARRANTIES OF MERCHANTABILITY, FITNESS FOR A PARTICULAR PURPOSE AND NONINFRINGEMENT OF THIRD PARTY RIGHTS. IN NO EVENT SHALL THE AUTHORS OR COPYRIGHT HOLDERS BE LIABLE FOR ANY CLAIM, DAMAGES OR OTHER LIABILITY, WHETHER IN AN ACTION OF CONTRACT, TORT OR

OTHERWISE, ARISING FROM, OUT OF OR IN CONNECTION WITH THE SOFTWARE OR THE USE OR OTHER DEALINGS IN THE SOFTWARE.

Except as contained in this notice, the name of a copyright holder shall not be used in advertising or otherwise to promote the sale, use or other dealings in this Software without prior written authorization of the copyright holder.

unzip:

This is version 2005-Feb-10 of the Info-ZIP copyright and license. The definitive version of this document should be available at ftp://ftp.info-zip.org/pub/infozip/license.html indefinitely.

Copyright (c) 1990-2005 Info-ZIP. All rights reserved.

For the purposes of this copyright and license, “Info-ZIP” is defined as the following set of individuals:

Mark Adler, John Bush, Karl Davis, Harald Denker, Jean-Michel Dubois, Jean-loup Gailly, Hunter Goatley, Ed Gordon, Ian Gorman, Chris Herborth, Dirk Haase, Greg Hartwig, Robert Heath, Jonathan Hudson, Paul Kienitz, David Kirschbaum, Johnny Lee, Onno van der Linden, Igor Mandrichenko, Steve P. Miller, Sergio Monesi, Keith Owens, George Petrov, Greg Roelofs, Kai Uwe Rommel, Steve Salisbury, Dave Smith, Steven M. Schweda, Christian Spieler, Cosmin Truta, Antoine Verheijen, Paul von Behren, Rich Wales, Mike White.

This software is provided “as is,” without warranty of any kind, express or implied. In no event shall Info-ZIP or its contributors be held liable for any direct, indirect, incidental, special or consequential damages arising out of the use of or inability to use this software.

Permission is granted to anyone to use this software for any purpose, including commercial applications, and to alter it and redistribute it freely, subject to the following restrictions:

1. Redistributions of source code must retain the above copyright notice, definition, disclaimer, and this list of conditions.
2. Redistributions in binary form (compiled executables) must reproduce the above copyright notice, definition, disclaimer, and this list of conditions in documentation and/or other materials provided with the distribution. The sole exception to this condition is redistribution of a standard UnZipSFX binary (including SFXWiz) as part of a self-extracting archive; that is permitted without inclusion of this license, as long as the normal SFX banner has not been removed from the binary or disabled.
3. Altered versions–including, but not limited to, ports to new operating systems, existing ports with new graphical interfaces, and dynamic, shared, or static library versions–must be plainly marked as such and must not

be misrepresented as being the original source. Such altered versions also must not be misrepresented as being Info-ZIP releases–including, but not limited to, labeling of the altered versions with the names “Info-ZIP” (or any variation thereof, including, but not limited to, different capitalizations), “Pocket UnZip,” “WiZ” or “MacZip” without the explicit permission of Info-ZIP. Such altered versions are further prohibited from misrepresentative use of the Zip-Bugs or Info-ZIP e-mail addresses or of the Info-ZIP URL(s).

4. Info-ZIP retains the right to use the names “Info-ZIP,” “Zip,” “UnZip,” “UnZipSFX,” “WiZ,” “Pocket UnZip,” “Pocket Zip,” and “MacZip” for its own source and binary releases.

Connected Services

Connected Services

Navigation 472
Connections 473
Diagnostics 475

Connected Services

Navigation

Navigation requires a specific OnStar or connected service plan.

Press to receive Turn-by-Turn directions or have them sent to the vehicle's navigation screen, if equipped.

Turn-by-Turn Navigation

1. Press to connect to an Advisor.
2. Request directions to be downloaded to the vehicle.
3. Follow the voice-guided commands.

Using Voice Commands During a Planned Route

Functionality of the Voice Command button, if equipped, may vary by vehicle and region. For some vehicles, press to open the OnStar app on the infotainment display. For other vehicles press as follows.

Cancel Route

1. Press . System responds: "OnStar ready," then a tone.
2. Say "Cancel route." System responds: "Do you want to cancel directions?"
3. Say "Yes." System responds: "OK, request completed, thank you, goodbye."

Route Preview

1. Press . System responds: "OnStar ready," then a tone.
2. Say "Route preview." System responds with the next three maneuvers.

Repeat

1. Press . System responds: "OnStar ready," then a tone.

2. Say “Repeat.” System responds with the last direction given, then responds with “OnStar ready,” then a tone.

Get My Destination

1. Press . System responds: “OnStar ready,” then a tone.
2. Say “Get my destination.” System responds with the address and distance to the destination, then responds with “OnStar ready,” then a tone.

Send Destination to Vehicle

Directions can be sent to the vehicle’s navigation screen, if equipped.

Press , then ask the Advisor to download directions to the vehicle’s navigation system, if equipped. After the call ends, the navigation screen will provide prompts to begin driving directions. Routes that are sent to the navigation screen can only be canceled through the navigation system.

See www.onstar.com (U.S.) or www.onstar.ca (Canada).

Connections

The following services help with staying connected.

For coverage maps, see www.onstar.com (U.S.) or www.onstar.ca (Canada).

Ensuring Security

- Change the default passwords for the Wi-Fi hotspot and myChevrolet mobile application. Make these passwords different from each other and use a combination of letters, numbers, and symbols to increase the security.
- Change the default name of the SSID (Service Set Identifier). This is your network’s name that is visible to other wireless devices. Choose a unique name and avoid family names or vehicle descriptions.

Wi-Fi Hotspot (If Equipped)

The vehicle may have a built-in Wi-Fi hotspot that provides access to the Internet and web content at 4G LTE speed. Up to seven mobile devices can be connected. A data plan is required. Use the in-vehicle controls only when it is safe to do so.

1. To retrieve Wi-Fi hotspot information, press to open the OnStar app on the infotainment display, then select Wi-Fi Hotspot. On some vehicles, touch Wi-Fi or Wi-Fi Settings on the screen.
2. The Wi-Fi settings will display the Wi-Fi hotspot name (SSID), password, and on some vehicles, the connection type (no Internet connection, 3G, 4G, 4G LTE), and signal quality (poor, good, excellent).
3. To change the SSID or password, press or call 1-888-4ONSTAR to connect with an Advisor. On some

vehicles, the SSID and password can be changed in the Wi-Fi Hotspot menu.

After initial set-up, your vehicle's Wi-Fi hotspot will connect automatically to your mobile devices. Manage data usage by turning Wi-Fi on or off on your mobile device, using the myChevrolet mobile app, or by contacting an OnStar Advisor. On some vehicles, Wi-Fi can also be managed from the Wi-Fi Hotspot menu.

MyChevrolet Mobile App (If Available)

Download the myChevrolet mobile app to compatible Apple and Android smartphones. Chevrolet users can access the following services from a smartphone:

- Remotely start/stop the vehicle, if factory-equipped.
- Lock/unlock doors, if equipped with automatic locks.
- Activate the horn and lamps.
- Check the vehicle's fuel level, oil life, or tire pressure, if factory-equipped with the Tire Pressure Monitor System.
- Send destinations to the vehicle.
- Locate the vehicle on a map (U.S. market only).
- Turn the vehicle's Wi-Fi hotspot on/off, manage settings, and monitor data consumption, if equipped.
- Locate a dealer and schedule service.
- Request roadside assistance.
- Set a parking reminder with pin drop, take a photo, make a note, and set a timer.
- Connect with Chevrolet on social media.

Features are subject to change. For myChevrolet mobile app information and compatibility, see my.chevrolet.com.

An active OnStar or connected service plan may be required. A compatible device, factory-installed remote start, and power locks are required. Data rates apply. See www.onstar.com for details and system limitations.

Remote Services

Contact an OnStar Advisor to unlock the doors or sound the horn and flash the lamps.

Marketplace

OnStar Advisors can provide offers from restaurants and retailers on your route, help locate hotels, or book a room. These services vary by market.

OnStar Hands-Free Calling

Make and receive calls with the built-in wireless calling service, which requires available minutes. Functionality of the Voice Command button may vary by vehicle and region. For some vehicles, press to open the OnStar app on the infotainment display, then select Hands-Free calling. For other vehicles press as follows.

Make a Call

1. Press . System responds: “OnStar ready.”
2. Say “Call.” System responds: “Call. Please say the name or number to call.”
3. Say the entire number without pausing, including a “1” and the area code. System responds: “OK, calling.”

Calling 911 Emergency

1. Press . System responds: “OnStar ready.”
2. Say “Call.” System responds: “Call. Please say the name or number to call.”
3. Say “911” without pausing. System responds: “911.”
4. Say “Call.” System responds: “OK, dialing 911.”

Retrieve My Number

1. Press . System responds: “OnStar ready.”
2. Say “My number.” System responds: “Your OnStar Hands-Free Calling number is,” then says the number.

End a Call

Press . System responds: “Call ended.”

Verify Minutes and Expiration

Press and say “Minutes” then “Verify” to check how many minutes remain and their expiration date.

If equipped, press and touch Account Services to view the number of remaining minutes, available Wi-Fi data, and other account information.

Diagnostics

By monitoring and reporting on the vehicle's key systems, OnStar Advanced Diagnostics, if equipped, provides a way to keep up on maintenance. Capabilities vary by model. See www.onstar.com for details and system limitations. Features are subject to change. For updates on feature capabilities, see my.chevrolet.com. Message and data rates may apply.

Index

A

Accessories and Modifications 326
Accessory Power 251
Active Fuel Management 255
Add-On Electrical Equipment . . . 318
Adding a Snow Plow or Similar Equipment 319
Additional Information
  OnStar 466
Additional Maintenance and Care 438
Adjustable Throttle and Brake Pedal 246
Adjustments
  Lumbar, Front Seats 58
Agreements
  Trademarks and License 210
Air Cleaner/Filter, Engine 339
Air Conditioning 216, 218, 219
Air Filter, Passenger Compartment 223
Air Vents 223
Airbag System
  Check 90
  How Does an Airbag Restrain? 80
  Passenger Sensing System 84
Airbag System (cont'd)
  What Makes an Airbag Inflate? 80
  What Will You See after an Airbag Inflates? 81
  When Should an Airbag Inflate? 79
  Where Are the Airbags? 77
Airbags
  Adding Equipment to the Vehicle 89
  Light On-Off 144
  On-Off Light 144
  On-Off Switch 82
  Passenger Status Indicator . . . 145
  Readiness Light 143
  Servicing Airbag-Equipped Vehicles 88
  System Check 76
Alarm
  Vehicle Security 43
All-Season Tires 371
All-Terrain Tires 373
AM-FM Radio 185
Antenna
  Fixed Mast 189
  Multi-band 189
Antilock Brake System (ABS) . . . 270

Antilock Brake System (ABS) (cont'd)
Warning Light 149
Appearance Care
Exterior 419
Interior 424
Apple CarPlay and Android Auto 209
Assistance Program, Roadside 454
Assistance Systems for Driving 282
Assistance Systems for Parking and Backing 280
Audio
Bluetooth 196
Theft-Deterrent Feature 182
Automatic
Dimming Mirrors 48
Door Locks 40
Forward Braking 285
Headlamp System 174
Transmission 256
Transmission Fluid 336, 338
Automatic Transmission
Manual Mode 259
Shift Lock Control Function Check 355
Auxiliary
Roof Mounted Lamp 176
Auxiliary Jack 195
Avoiding Untrusted Media Devices 190
Axle, Front 351
Axle, Rear 352

B

Battery
Exterior Lighting Battery Saver 180
Load Management 179
Power Protection 180
Battery - North America 350, 409
Blade Replacement, Wiper 356
Blind Spot Mirrors 48
Bluetooth
Overview 203, 205
Bluetooth Audio 196
Brake
Pedal and Adjustable Throttle 246
System Warning Light 148
Brakes 348
Antilock 270
Assist 272
Fluid 349
Brakes (cont'd)
Parking 271
Braking 227
Automatic Forward 285
Break-In, New Vehicle 246
Bulb Replacement
Center High-Mounted Stoplamp (CHMSL) and Cargo Lamp 362
Fog Lamps 360
Halogen Bulbs 358
Headlamp Aiming 358
Headlamps 358
Headlamps, Front Turn Signal, Sidemarker, and Parking Lamps 359
High Intensity Discharge (HID) Lighting 359
Taillamps 360
Taillamps, Turn Signal, Stoplamps, and Back-up Lamps 360
Buying New Tires 390

C

Calibration 129

California
Perchlorate Materials
Requirements 326
California
Proposition
65 Warning .....326, 350, 409, Back Cover
Canadian Vehicle Owners 2
Capacities and
Specifications 447
Carbon Monoxide
Engine Exhaust 255
Tailgate 42
Winter Driving 236
Cargo
Tie-Downs 124
Caution, Danger, and Warning 3
Center Console Storage 123
Center High-Mounted
Stoplamp (CHMSL) and
Cargo Lamp 362
Center Seat 57
Chains, Tire 395
Charging
Wireless 132
Charging System Light 146
Check
Engine Light (Malfunction
Indicator) 146
Ignition Transmission Lock ... 355
Child Restraints
Infants and Young Children 92
Lower Anchors and Tethers
for Children 98
Older Children 91
Securing 110, 113
Systems 95
Circuit Breakers 363
Cleaning
Exterior Care 419
Interior Care 424
Climate Control
Systems 216, 218
Air Conditioning 216, 218
Dual Automatic 219
Heating 216, 218
Clock 129
Cluster, Instrument 136
Collision Damage Repair 457
Compartments
Storage 122
Compass 129
Connected Services
Connections 473
Connected Services (cont'd)
Diagnostics 475
Navigation 472
Connections
Connected Services 473
Control
Hill Descent 275
Traction and Electronic
Stability 273
Control Light
Hill Descent 150
Control of a Vehicle 227
Convex Mirrors 45
Coolant
Engine Temperature Gauge .. 141
Cooling 216, 218, 219
Cooling System 340
Courtesy Transportation
Program 456
Cruise Control 276
Light 154
Cupholders 123
Customer Assistance 453
Offices 452
Text Telephone (TTY)
Users 453

Customer Information
Publications Ordering Information 459
Customer Satisfaction Procedure 450

D

Damage Repair, Collision 457
Danger, Warning, and Caution 3
Data Collection
Infotainment System 463
OnStar 463
Data Recorders, Event 462
Daytime Running Lamps (DRL) 174
Defensive Driving 227
Diagnostics
Connected Services 475
Distracted Driving 226
Dome Lamps 178
Door
Locks 39
Power Locks 40
Drive Belt Routing, Engine 449
Driver Assistance Systems 279
Driver Information Center (DIC) 154, 156
Driving
Assistance Systems 282
Characteristics and Towing Tips 294
Defensive 227
Drunk 227
For Better Fuel Economy 32
Hill and Mountain Roads 235
If the Vehicle is Stuck 237
Loss of Control 229
Off-Road 230
Off-Road Recovery 229
Vehicle Load Limits 238
Wet Roads 234
Winter 236
Dual Automatic Climate Control System 219

E

E85 or FlexFuel 291
Electrical Equipment, Add-On 318
Electrical System
Engine Compartment Fuse Block 363
Fuses and Circuit Breakers . . . 363
Instrument Panel Fuse Block 367, 368
Electrical System (cont'd)
Overload 362
Emergency
OnStar 465
Engine
Air Cleaner/Filter 339
Check Light (Malfunction Indicator) 146
Compartment Overview 329
Coolant Heater 251
Coolant Temperature Gauge 141
Cooling System 340
Drive Belt Routing 449
Exhaust 255
Fan 346
Oil Life System 334
Oil Pressure Gauge 140
Overheated Protection Operating Mode 345
Overheating 344
Power Messages 159
Running While Parked 256
Starting 249
Entry Lighting 179
Equipment, Towing 306
Event Data Recorders 462
Exit Lighting 179

Extender, Seat Belt 74
Exterior Cargo Lamps 177
Exterior Lamp Controls 171
Exterior Lamps Off Reminder . . . 173
Exterior Lighting Battery
  Saver 180

F

Fan
  Engine 346
Fast Idle System 250
Features
  Memory 13
Filter,
  Engine Air Cleaner 339
Fixed Mast Antenna 189
Flash-to-Pass 174
Flashers, Hazard Warning 175
Flat Tire 395
  Changing 397
FlexFuel
  E85 291
Floor Console Storage 124
Floor Mats 427
Fluid
  Automatic
    Transmission 336, 338
  Brakes 349
Fluid (cont'd)
  Four-Wheel Drive
    Transfer Case 262
  Power Steering 346
  Washer 347
Fog Lamps 176
  Bulb Replacement 360
Folding Mirrors 47
Forward Automatic Braking 285
Forward Collision Alert
  (FCA) System 282
Four-Wheel Drive 262, 351
Four-Wheel-Drive Light 150
Frequency Statement
  Radio 460
Front Axle 351
Front Fog Lamp
  Light 153
Front Seats
  Adjustment 57
  Heated and Ventilated 63
Fuel
  Additives 290
  Economy Driving 32
  Filling a Portable Fuel
    Container 293
  Filling the Tank 291
  Foreign Countries 290
Fuel (cont'd)
  Gauge 139
  Low Fuel Warning Light 153
  Management, Active 255
  Prohibited Fuels 290
  Recommended 290
  Top Tier 289
Full-Size Spare Tire 408
Fuses
  Engine Compartment Fuse
    Block 363
  Fuses and Circuit Breakers . . . 363
  Instrument Panel Fuse
    Block 367, 368

G

Garage Door Opener 167
  Programming 167
Gas Strut(s) 357
Gauges
  Engine Coolant
    Temperature 141
  Engine Oil Pressure 140
  Fuel 139
  Odometer 139
  Speedometer 139
  Tachometer 139
  Trip Odometer 139

Gauges (cont'd)
Voltmeter 142
Warning Lights and Indicators 135
General Information
Service and Maintenance 429
Towing 294
Vehicle Care 325
Glove Box 122
GM Mobility Reimbursement Program 454

H

Halogen Bulbs 358
Hazard Warning Flashers 175
Head Restraints 56
Headlamps
Aiming 358
Automatic 174
Bulb Replacement 358
Daytime Running Lamps (DRL) 174
Flash-to-Pass 174
Headlamps, Front Turn Signal, Sidemarker, and Parking Lamps 359
High Intensity Discharge (HID) Lighting 359
Headlamps (cont'd)
High-Beam On Light 153
High/Low Beam Changer 173
Lamps On Reminder 154
Heated
Steering Wheel 128
Heated and Ventilated Front Seats 63
Heated Mirrors 48
Heater
Engine Coolant 251
Heating 216, 218, 219
High-Beam On Light 153
High-Speed Operation 381
Hill and Mountain Roads 235
Hill Descent Control (HDC) 275
Hill Descent Control Light 150
Hill Start Assist (HSA) 272
Home Page 184
Hood 327
Horn 128
How to Wear Seat Belts Properly 68
HVAC 216, 218, 219

I

Idle System
Fast 250
Ignition Positions 247
Ignition Transmission Lock Check 355
Immobilizer 44
Indicator
Vehicle Ahead 151
Infants and Young Children, Restraints 92
Information
Publication Ordering 459
Infotainment 181
Infotainment System 463
Instrument Cluster 136
Instrument Panel
Storage Area 122
Interior Rearview Mirrors 49
Introduction 2

J

Jack
Auxiliary 195
Jump Starting - North America 409

K

Keyless Entry
Remote (RKE) System 36
Keys 33

L

Labeling, Tire Sidewall 373
Lamps
Auxiliary Roof
Mounted Lamp 176
Daytime Running (DRL) 174
Dome 178
Exterior Cargo 177
Exterior Controls 171
Exterior Lamps Off
Reminder 173
Exterior Lighting Battery
Saver 180
Malfunction Indicator
(Check Engine) 146
On Reminder 154
Reading 178
Taillamps 360
Lane Departure
Warning (LDW) 286
Lane Departure Warning
Light 150
Lane Keep Assist (LKA) 287
Lane Keep Assist Light 151
Lap Belt 73
Lap-Shoulder Belt 70
LATCH System
Replacing Parts after a
Crash 109
LATCH, Lower Anchors and
Tethers for Children 98
LED Lighting 359
Lighting
Entry 179
Exit 179
Illumination Control 178
LED 359
Lights
Airbag On-Off 144
Airbag Readiness 143
Antilock Brake System
(ABS) Warning 149
Brake System Warning 148
Charging System 146
Check Engine (Malfunction
Indicator) 146
Cruise Control 154
Flash-to-Pass 174
Four-Wheel-Drive 150
Front Fog Lamp 153
High-Beam On 153
Lights (cont'd)
High/Low Beam Changer 173
Hill Descent Control 150
Lane Departure Warning 150
Lane Keep Assist 151
Low Fuel Warning 153
Seat Belt Reminders 143
Security 153
StabiliTrak OFF 151
Tire Pressure 152
Tow/Haul Mode 150
Traction Control System
(TCS)/StabiliTrak 152
Traction Off 151
Locking Rear Axle 276
Locks
Automatic Door 40
Door 39
Lockout Protection 41
Power Door 40
Safety 41
Loss of Control 229
Low Fuel Warning Light 153
Low-Profile Tires 372
Lower Anchors and Tethers
for Children (LATCH
System) 98
Lumbar Adjustment 58

Lumbar Adjustment (cont'd)
Front Seats 58

M

Maintenance
Records 445
Maintenance and Care
Additional 438
Maintenance Schedule 431
Recommended Fluids and
Lubricants 441
Transfer Case 262
Malfunction Indicator Lamp 146
Manual Mirrors 45
Manual Mode 259
Manual Windows 50
Media
Avoiding Untrusted Devices . . 190
Memory Features 13
Memory Seats 60
Messages
Engine Power 159
Vehicle 159
Vehicle Speed 159
Mirrors
Automatic Dimming 48
Automatic Dimming
Rearview 50
Mirrors (cont'd)
Blind Spot 48
Convex 45
Folding 47
Heated 48
Manual 45
Manual Rearview 49
Power 46
Tilt in Reverse 49
Trailer Tow 46
Mirrors, Interior Rearview 49
Monitor System, Tire
Pressure 381
Multi-band Antenna 189

N

Navigation
Connected Services 472
New Vehicle Break-In 246
Noise Control System 353

O

Odometer 139
Trip 139
Off-Road 230
Driving 230
Recovery 229
Oil
Engine 332
Oil (cont'd)
Engine Oil Life System 334
Engine Oil Pressure Gauge . . . 140
Older Children, Restraints 91
Online Owner Center 453
OnStar 463
OnStar Additional
Information 466
OnStar Emergency 465
OnStar Overview 464
OnStar Security 466
Operating Mode
Overheated Engine
Protection 345
Operation
Fog Lamps 176
Outlets
Power 130
Overheated Engine
Protection Operating Mode 345
Overheating, Engine 344
Overview 183

P

Park
Shifting Into 253
Shifting Out of 254
Park Assist 280

Parking
Brake 271
Brake and P (Park)
Mechanism Check 355
Over Things That Burn 254
Parking or Backing
Assistance Systems 280
Passenger Airbag Status
Indicator 145
Passenger Compartment Air
Filter 223
Passenger Sensing System 84
Perchlorate Materials
Requirements, California 326
Personalization
Vehicle 160
Phone
Apple CarPlay and
Android Auto 209
Bluetooth 203, 205
Pickup Conversion to
Chassis Cab 323
Port
USB 190
Power
Door Locks 40
Mirrors 46
Outlets 130
Power (cont'd)
Protection, Battery 180
Retained Accessory (RAP) . . . 251
Seat Adjustment 58
Steering Fluid 346
Windows 50
Power Assist Steps 42
Pregnancy, Using Seat Belts 73
Privacy
Vehicle Data Recording 462
Program
Courtesy Transportation 456
Prohibited Fuels 290
Proposition
65 Warning,
California 326, 350, 409,
Back Cover
Publication Ordering
Information 459

R

Radio Frequency Statement 460
Radio Reception 188
Radios
AM-FM Radio 185
Satellite 187
Reading Lamps 178
Rear Axle 352
Rear Axle (cont'd)
Locking 276
Rear Seats 65, 66
Rear Vision Camera (RVC) 280
Rear Windows 52
Rearview Mirrors 49
Automatic Dimming 50
Reclining Seatbacks 59
Recognition
Voice 197
Recommended
Fuel 290
Recommended Fluids and
Lubricants 441
Records
Maintenance 445
Recreational Vehicle Towing 413
Reimbursement Program,
GM Mobility 454
Remote Keyless Entry (RKE)
System 36
Remote Vehicle Start 38
Replacement Parts
Airbags 90
Maintenance 443
Replacing Airbag System 90
Replacing LATCH System
Parts after a Crash 109

Replacing Seat Belt System Parts after a Crash 75
Reporting Safety Defects
Canadian Government 461
General Motors 461
U.S. Government 460
Restraints
Where to Put 96
Retained Accessory Power (RAP) 251
Reverse Tilt Mirrors 49
Roads
Driving, Wet 234
Roadside Assistance Program 454
Roof
Sunroof 53
Rotation, Tires 387
Routing, Engine Drive Belt 449
Running the Vehicle While Parked 256

S

Safety Defects Reporting
Canadian Government 461
General Motors 461
Safety Defects Reporting (cont'd)
U.S. Government 460
Safety Locks 41
Safety System Check 74
Satellite Radio 187
Scheduling Appointments 456
Seat Belts 67
Care 75
Extender 74
How to Wear Seat Belts Properly 68
Lap Belt 73
Lap-Shoulder Belt 70
Reminders 143
Replacing after a Crash 75
Use During Pregnancy 73
Seats
Adjustment, Front 57
Center Seat 57
Head Restraints 56
Heated and Ventilated Front 63
Lumbar Adjustment, Front 58
Memory 60
Power Adjustment, Front 58
Rear 65, 66
Reclining Seatbacks 59
Securing Child Restraints 110, 113
Security
Light 153
OnStar 466
Vehicle 43
Vehicle Alarm 43
Service 224
Accessories and Modifications 326
Climate Control System 216, 218
Doing Your Own Work 327
Maintenance Records 445
Maintenance, General Information 429
Parts Identification Label 446
Scheduling Appointments 456
Services
Special Application 437
Servicing the Airbag 88
Shift Lock Control Function Check, Automatic Transmission 355
Shifting
Into Park 253
Out of Park 254
Signals, Turn and Lane-Change 175
Snow Plow 319

Software Updates 184
Special Application Services 437
Specifications and
Capacities 447
Speedometer 139
StabiliTrak
OFF Light 151
Start Assist, Hill 272
Start Vehicle, Remote 38
Starter Switch Check 355
Starting the Engine 249
Steering 228
Fluid, Power 346
Heated Wheel 128
Wheel Adjustment 127
Wheel Controls 127
Steps
Power Assist 42
Stoplamps and Back-up Lamps
Bulb Replacement 360
Storage Areas
Center Console 123
Floor Console 124
Glove Box 122
Instrument Panel 122
Sunglasses 123
Storage Compartments 122
Struts
Gas 357
Stuck Vehicle 237
Sun Visors 53
Sunglass Storage 123
Sunroof 53
Switches
Airbag On-Off 82
Symbols 3
System
Forward Collision
Alert (FCA) 282
Infotainment 181, 463
Noise Control 353
Systems
Driver Assistance 279

T

Tachometer 139
Tailgate 42
Taillamps 360
Bulb Replacement 360
Text Telephone (TTY) Users 453
Theft-Deterrent Systems 45
Immobilizer 44
Throttle, Adjustable 246
Time 129
Tires 371
Tires (cont'd)
All-Season 371
All-Terrain 373
Buying New Tires 390
Chains 395
Changing 397
Designations 375
Different Size 391
Full-Size Spare 408
If a Tire Goes Flat 395
Inspection 386
Low Profile 372
Pressure 379, 381
Pressure Light 152
Pressure Monitor Operation . . 382
Pressure Monitor System 381
Rotation 387
Sidewall Labeling 373
Terminology and Definitions . . 377
Uniform Tire Quality
Grading 392
Wheel Alignment and Tire
Balance 393
Wheel Replacement 394
When It Is Time for New
Tires 389
Winter 372
Top Tier Fuel 289

Tow/Haul Mode 261
Tow/Haul Mode Light 150
Towing
Driving Characteristics 294
Equipment 306
General Information 294
Recreational Vehicle 413
Trailer 298
Trailer Sway Control (TSC) . . . 316
Vehicle 413
Traction
Control System
(TCS)/StabiliTrak Light 152
Off Light 151
Traction Control/Electronic
Stability Control 273
Trademarks and License
Agreements 210
Trailer
Sway Control (TSC) 316
Tow Mirrors 46
Towing 298
Transfer Case 262
Transmission
Automatic 256
Fluid, Automatic 336, 338
Transportation Program,
Courtesy 456
Trip Odometer 139
Truck-Camper Loading
Information 244
Turn and Lane-Change
Signals 175
Turn Signal
Bulb Replacement 360

U

Uniform Tire Quality Grading . . . 392
Universal Remote System 167
Operation 170
Programming 167
Updates
Software 184
USB Port 190
Using This Manual 2

V

Vehicle
Alarm System 43
Canadian Owners 2
Control 227
Identification Number (VIN) . . . 446
Load Limits 238
Messages 159
Personalization 160
Remote Start 38
Security 43
Vehicle (cont'd)
Speed Messages 159
Towing 413
Vehicle Ahead Indicator 151
Vehicle Care
Tire Pressure 379
Vehicle Data Recording and
Privacy 462
Ventilation, Air 223
Visors 53
Voice Recognition 197
Voltmeter Gauge 142

W

Warning
Brake System Light 148
Caution and Danger 3
Lane Departure (LDW) 286
Warning Lights, Gauges, and
Indicators 135
Warnings
Hazard Flashers 175
Washer Fluid 347
Wheels
Alignment and Tire Balance . . 393
Different Size 391
Replacement 394

When It Is Time for New Tires 389
Where to Put the Restraint 96
Windows 50
Manual 50
Power 50
Rear 52
Windshield
Replacement 357
Wiper/Washer 128
Winter
Driving 236
Winter Tires 372
Wiper Blade Replacement 356
Wireless Charging 132

WARNING

Operating, servicing and maintaining a passenger vehicle or off-highway motor vehicle can expose you to chemicals including engine exhaust, carbon monoxide, phthalates, and lead, which are known to the State of California to cause cancer and birth defects or other reproductive harm. To minimize exposure, avoid breathing exhaust, do not idle engine except as necessary, service your vehicle in a well-ventilated area and wear gloves or wash your hands frequently when servicing your vehicle. For more information go to www.P65Warnings.ca.gov/passenger-vehicle.

U.S. Only

84161700 B