COOLING SYSTEM

ON-VEHICLE INSPECTION

CAUTION:
Be sure that the ignition is off if you work near the electric cooling fans or radiator grille. With the ignition on the electric cooling fans may automatically start to run if the engine coolant temperature is high and/or the air conditioning is on.

1. CHECK COOLING SYSTEM FOR LEAKAGE

CAUTION:
To avoid the danger of being burned, do not remove the radiator cap sub-assembly while the engine and radiator assembly are still hot. Thermal expansion will cause hot engine coolant and steam to blow out from the radiator assembly.

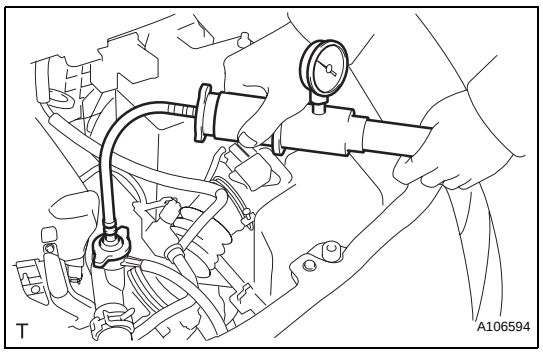

(a) Fill the radiator assembly with engine coolant, then attach a radiator cap tester.

(b) Pump the tester to 137 kPa (1.4 kgf/cm^2, 19.9 psi), then check that the pressure does not drop.
If the pressure drops, check the hoses, radiator assembly and water pump assembly for leakage. If there are no signs or traces of external engine coolant leakage, check the heater core, cylinder block and head.

2. INSPECT RESERVOIR TANK ENGINE COOLANT LEVEL

(a) The engine coolant should be between the LOW and FULL lines when the engine is cold.
HINT:
If it is below the LOW line, check for leakage and add Toyota Super Long Life Coolant or similar high quality ethylene glycol based non-silicate, non-amine, non-nitrite, and non-borate coolant with long-life hybrid organic acid technology up to the FULL line.

3. INSPECT ENGINE COOLANT QUALITY

(a) Remove the radiator cap sub-assembly.
CAUTION:
To avoid the danger of being burned, do not remove the radiator cap sub-assembly while the engine and radiator assembly are still hot. Thermal expansion will cause hot engine coolant and steam to blow out from the radiator assembly.

(b) Check for excessive deposits of rust or scale around the radiator cap sub-assembly and radiator filler hole. The engine coolant should be free of oil.
If excessively dirty, replace the engine coolant.

(c) Reinstall the radiator cap sub-assembly.

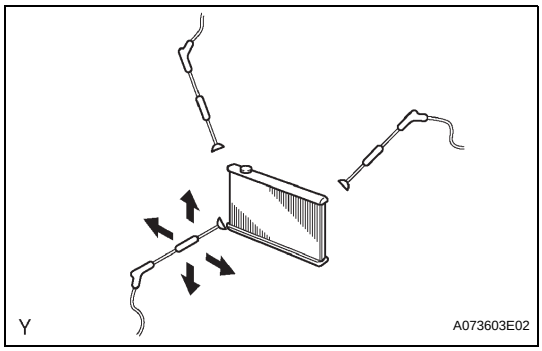

4. INSPECT FINS FOR BLOCKAGE

(a) If the fins are clogged, wash them with water or a steam cleaner and dry them with compressed air.

NOTICE:

- **To avoid damaging the fins, the injection direction should be at right angles to the core surface.**
- **If the steam cleaner is too close to the core, there is a possibility of damaging the fins, so keep to the following injection distances.**

Injection Pressure kPa (kgf*cm^2, psi)	Injection Distance mm (in.)
2.942 to 4.903 (30 to 50, 427 to 711)	300 (11.811)
4.903 to 7.845 (50 to 80, 711 to 1.138)	500 (19.685)

- **If the fins are bent, straighten them with a screwdriver or pliers.**
- **Do not expose electronic components to water.**

COOLING FAN SYSTEM

PARTS LOCATION

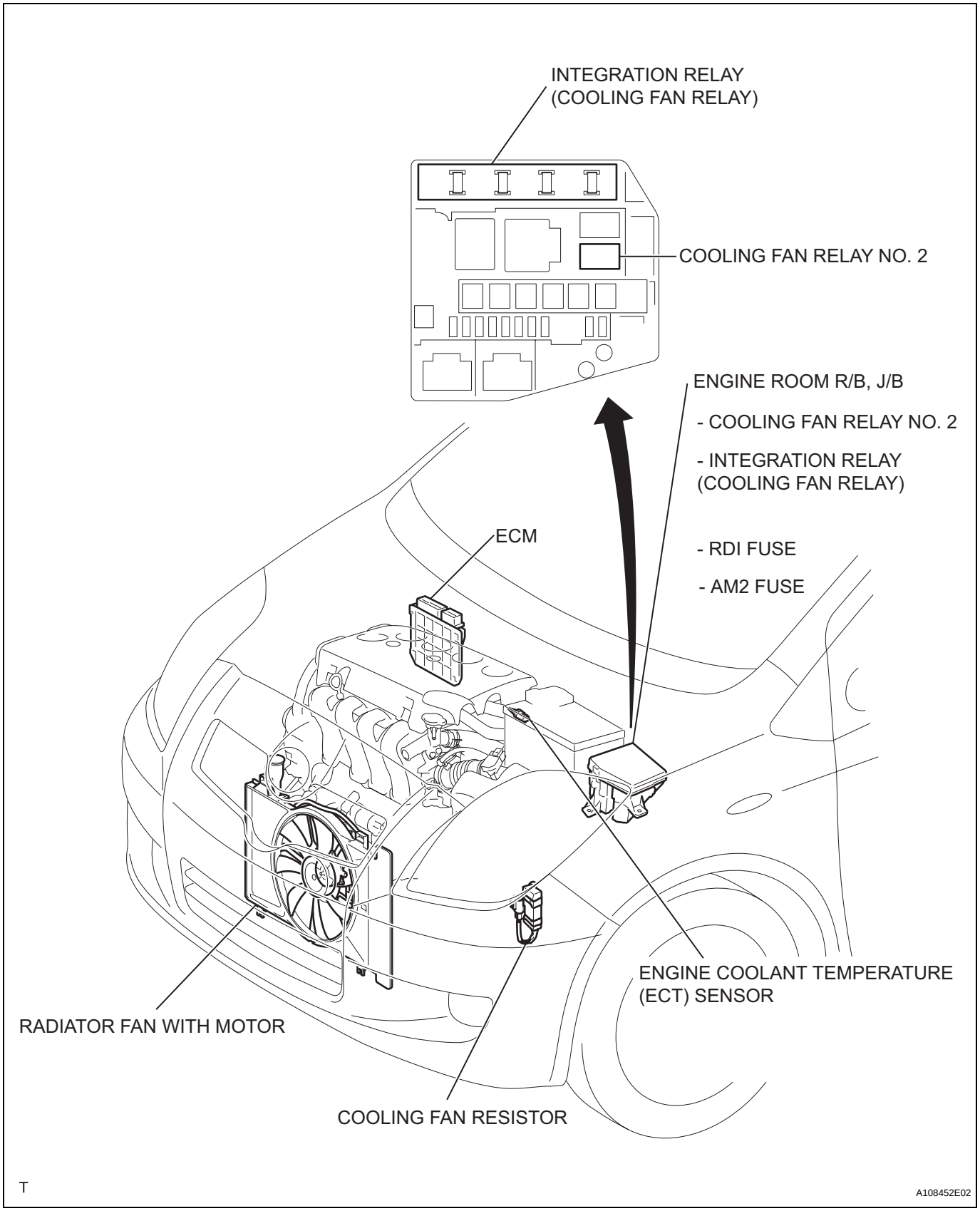

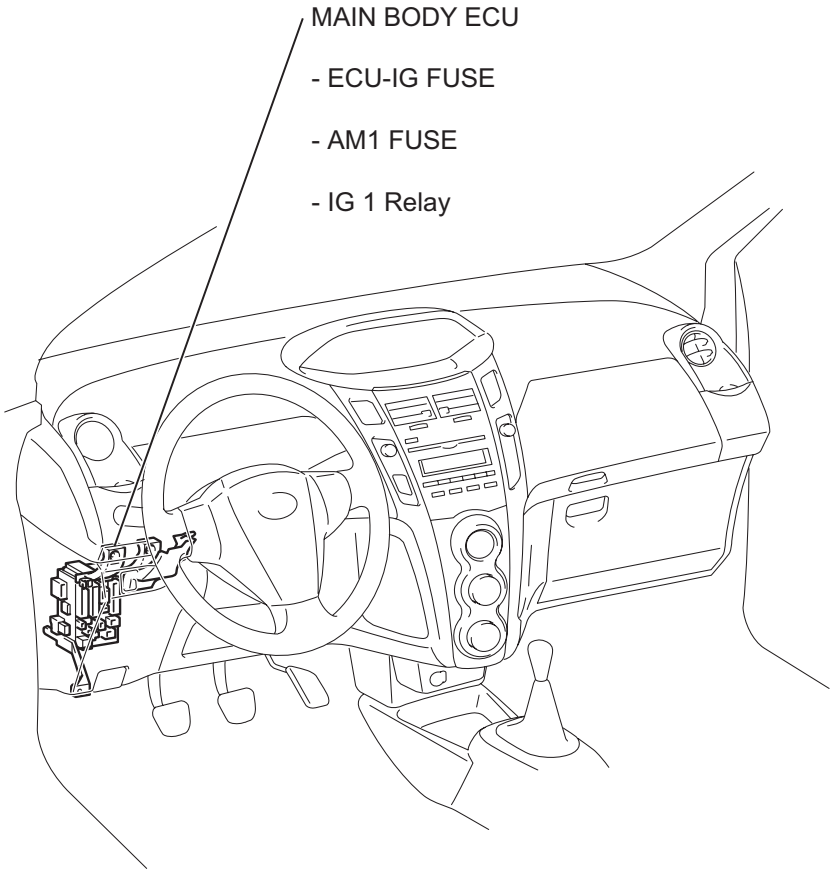

Y

A117368E03

SYSTEM DIAGRAM

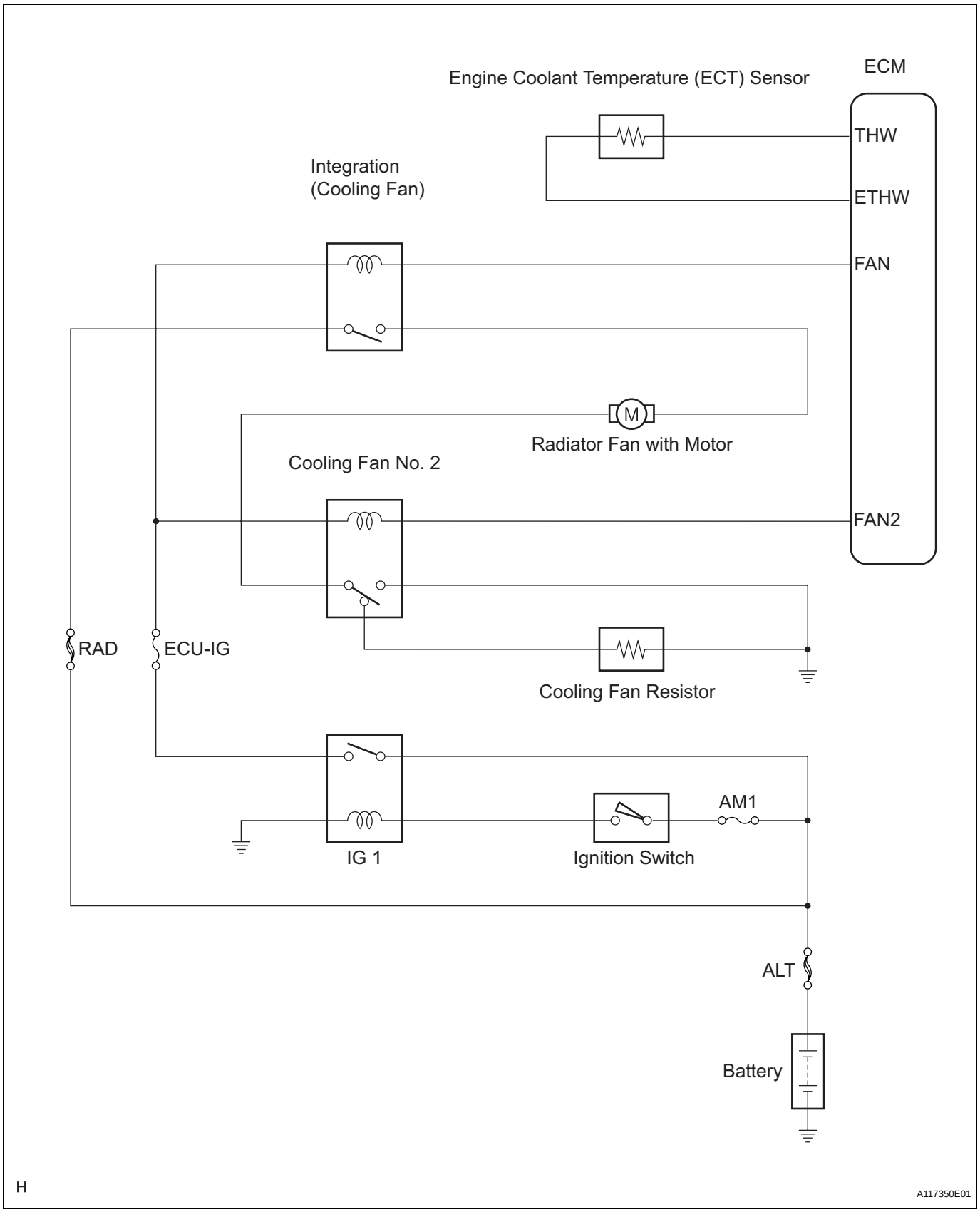

ON-VEHICLE INSPECTION

CAUTION:
Be sure that the ignition is off if you work near the electric cooling fans or radiator grille. With the ignition on the electric cooling fans may automatically start to run if the engine coolant temperature is high and/or the air conditioning is on.

1. INSPECT COOLING FAN OPERATION AT LOW TEMPERATURES (Below 83°C (181°F))

(a) Turn the ignition switch on (IG) and air conditioning switch off.

(b) Check that the cooling fan stops.
If not, check the cooling fan relay and engine coolant temperature sensor, and check whether there is disconnection or an open circuit between them.

(c) Disconnect the engine coolant temperature sensor connector.

(d) Check that the cooling fan rotates.
If not, check the fuses, cooling fan relay, ECM and cooling fan, and check for a short circuit between the cooing fan relay and the engine coolant temperature sensor.

(e) Reconnect the engine coolant temperature sensor connector.

2. INSPECT COOLING FAN OPERATION AT HIGH TEMPERATURES (Above 93°C (199°F))

(a) Start the engine and air conditioning switch off, and raise the engine coolant temperature to above 93°C (199°F).
HINT:
Engine coolant temperature is detected by the engine coolant temperature sensor on the water outlet.

(b) Check that the cooling fan rotates.
If not, replace the engine coolant temperature sensor.

3. INSPECT COOLING FAN MOTOR

(a) Disconnect the cooling fan motor connector.

(b) Connect the cooling fan connector to the battery and check that the fan motor moves smoothly.

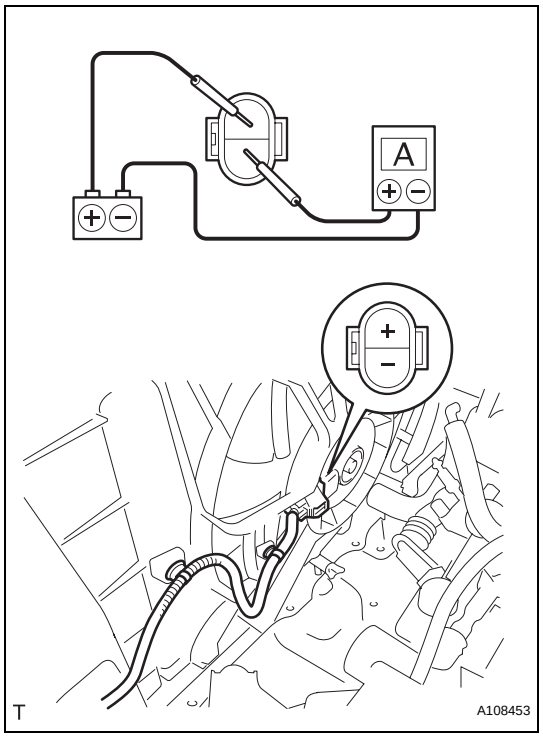

(c) Using an ammeter, measure the current between the terminals.
Standard Current:
w/ A/C 11.8 to 14.8 A (at 12 V)
w/o A/C 7.9 to 10.9 A (at 12 V)

(d) Connect the cooling fan motor connector.

COOLANT

REPLACEMENT

CAUTION:
Be sure that the ignition is off if you work near the electric cooling fans or radiator grille. With the ignition on the electric cooling fans may automatically start to run if the engine coolant temperature is high and/or the air conditioning is on.

1. DRAIN ENGINE COOLANT
NOTICE:
To avoid the danger of being burned, do not remove the radiator cap sub-assembly while the engine and radiator assembly are still hot. Thermal expansion will cause hot engine coolant and steam to blow out from the radiator assembly.
(a) Loosen the radiator drain cock plug.
(b) Remove the radiator cap sub-assembly.
(c) Loosen the cylinder block drain cock plug, then drain the coolant.

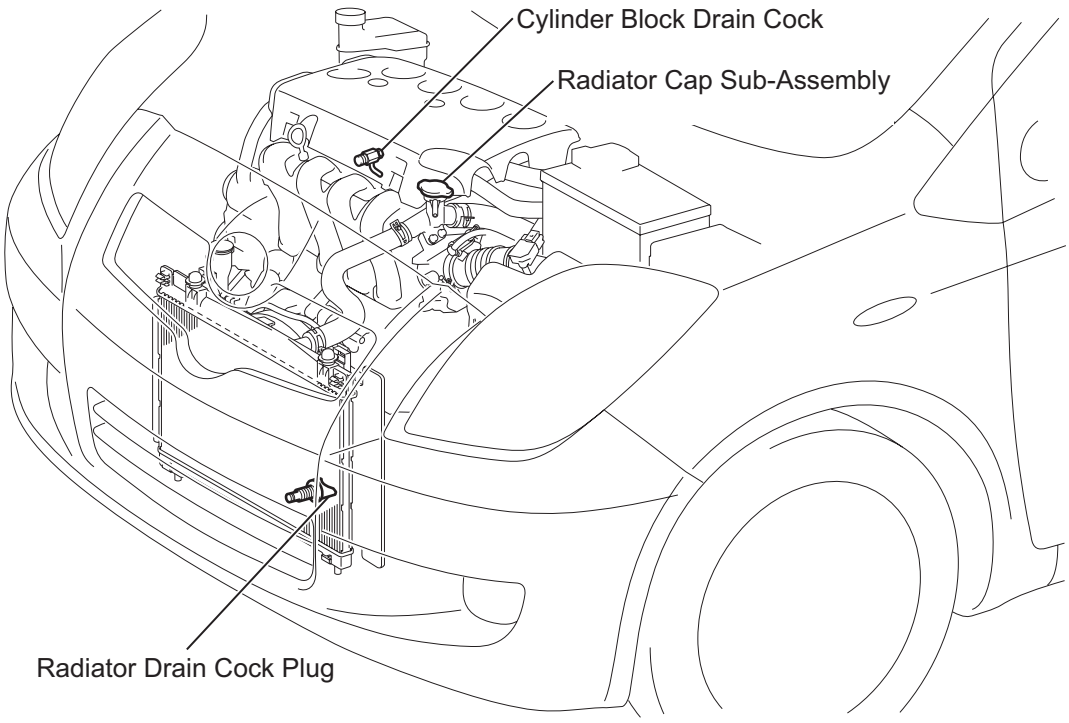

2. ADD ENGINE COOLANT
(a) Tighten all the plugs.

(b) Pour engine coolant into the radiator assembly until it overflows.
Capacity:
M/T 4.8 liters (5.1 USqts, 4.5 Imp. qts)
A/T 4.7 liters (5.0 USqts, 4.4 Imp. qts)
NOTICE:
Do not substitute water for engine coolant.
HINT:
- Use of improper engine coolant may damage the engine coolant system.
- Use only Toyota Super Long Life Coolant or similar high quality ethylene glycol based non-silicate, non-amine, non-nitrite, and non-borate engine coolant with long-life hybrid organic acid technology (coolant with long-life hybrid organic acid technology consists of a combination of low phosphates and organic acids).

(c) Check the engine coolant level inside the radiator assembly by squeezing the inlet and outlet radiator hoses several times by hand. If the engine coolant level goes down, add engine coolant.
(d) Install the radiator cap sub-assembly securely.
(e) Slowly pour engine coolant into the radiator reservoir until it reaches the FULL line.
(f) Warm up the engine until the cooling fan operates.
(1) Set the air conditioning as follows while warming up the engine.

Item	Manual air conditioning system	Automatic air conditioning system
Set control as follows	Fan speed - Any setting except "OFF" Temperature - Toward WARM Air conditioning switch "OFF"	Fan speed - Any setting except "OFF" Temperature - To the highest temperature Air conditioning switch "OFF" "AUTO" switch "OFF"

(2) Maintain the engine speed at 2,000 to 2,500 rpm and warm up the engine until the cooling fan operates.
(g) Stop the engine and wait until the coolant cools down.
(h) If the engine coolant level is below the full level, perform steps (b) through (g) again and repeat the operation until the engine coolant level stays at the full level.
(i) Recheck the engine coolant level inside the radiator reservoir tank assembly. If it is below the full level, add engine coolant.

3. CHECK FOR ENGINE COOLANT LEAKAGE (See page CO-1)

WATER PUMP

COMPONENTS

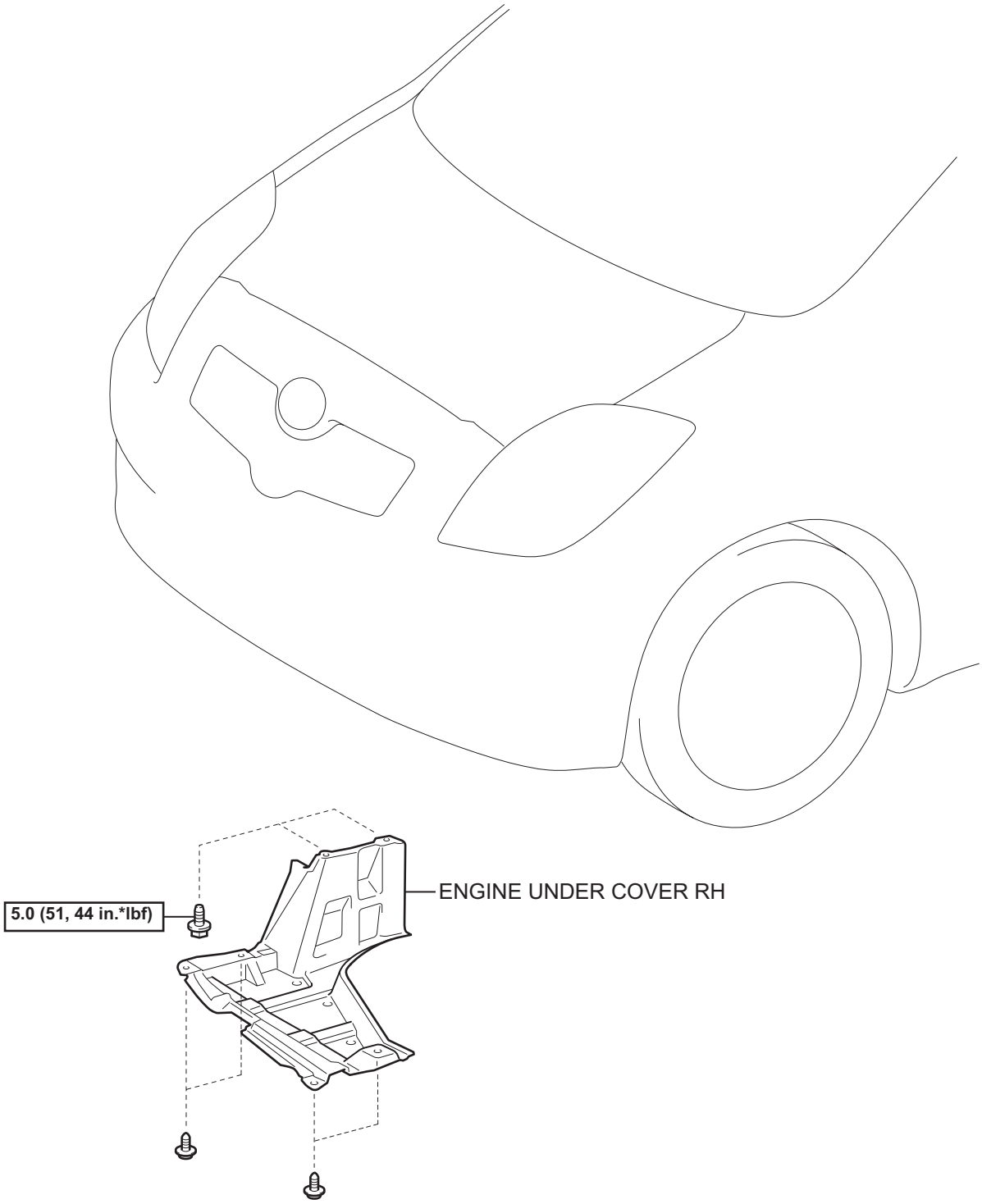

N*m (kgf*cm, ft.*lbf) : Specified torque

T

A115143E01

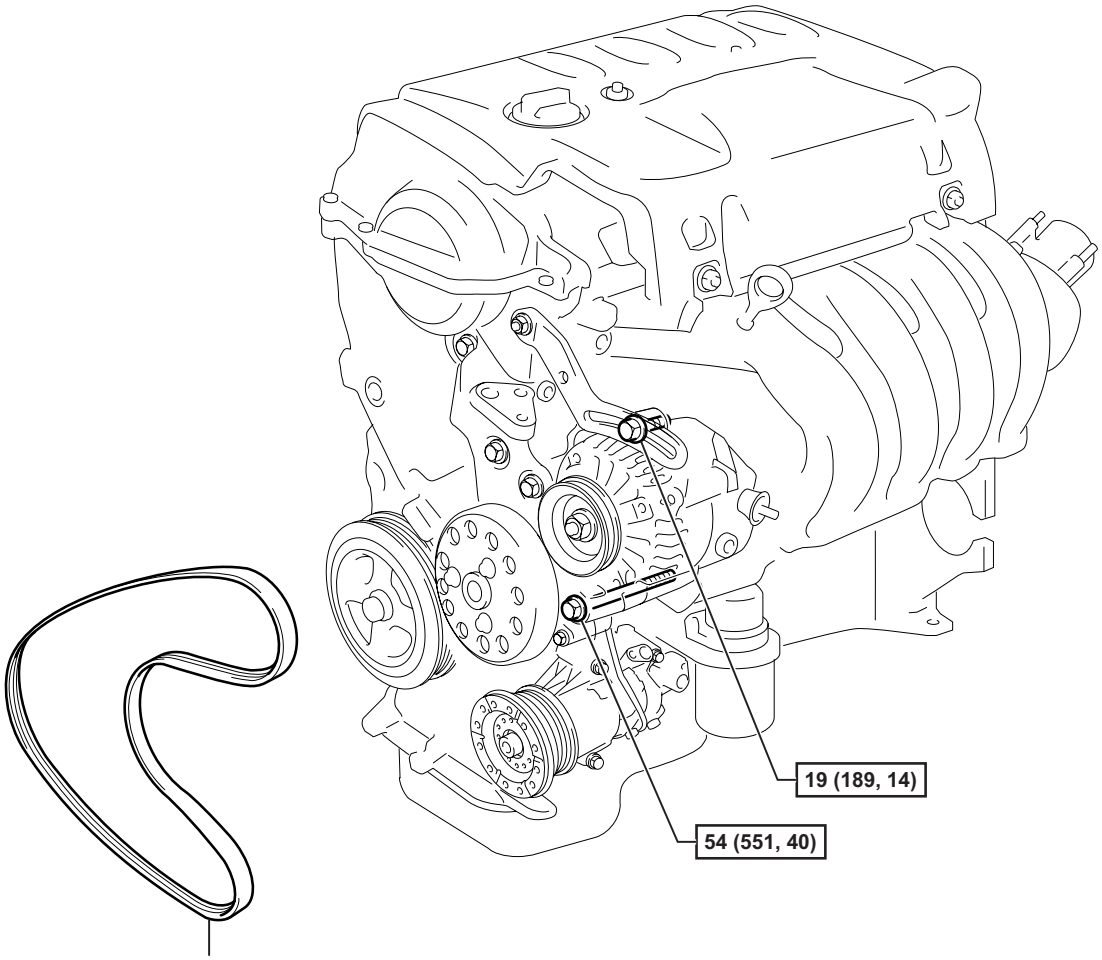

N*m (kgf*cm, ft.*lbf) : Specified torque

T

A116199E01

for Hatchback:

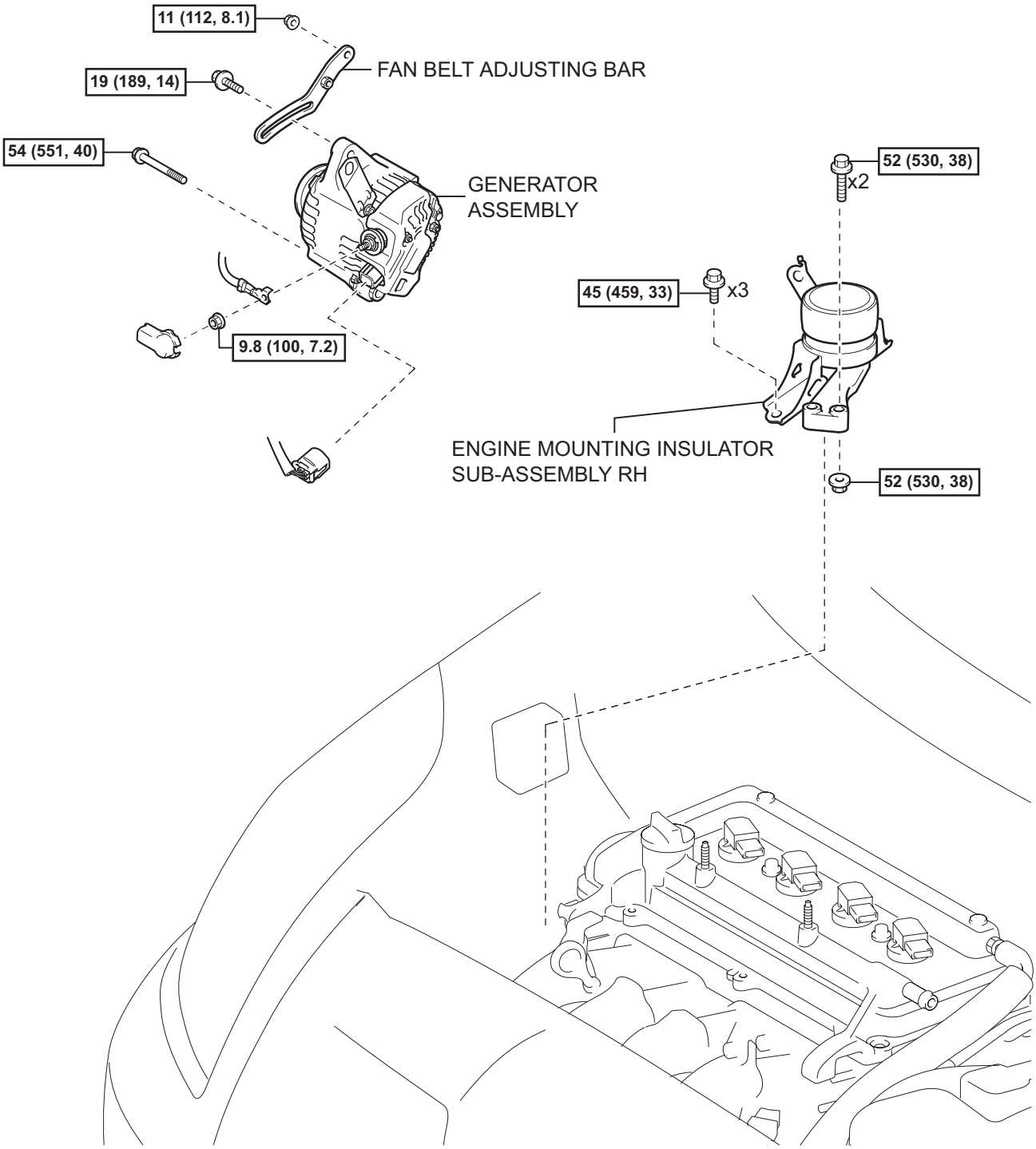

N*m (kgf*cm, ft.*lbf) : Specified torque

T

A116193E06

for Sedan:

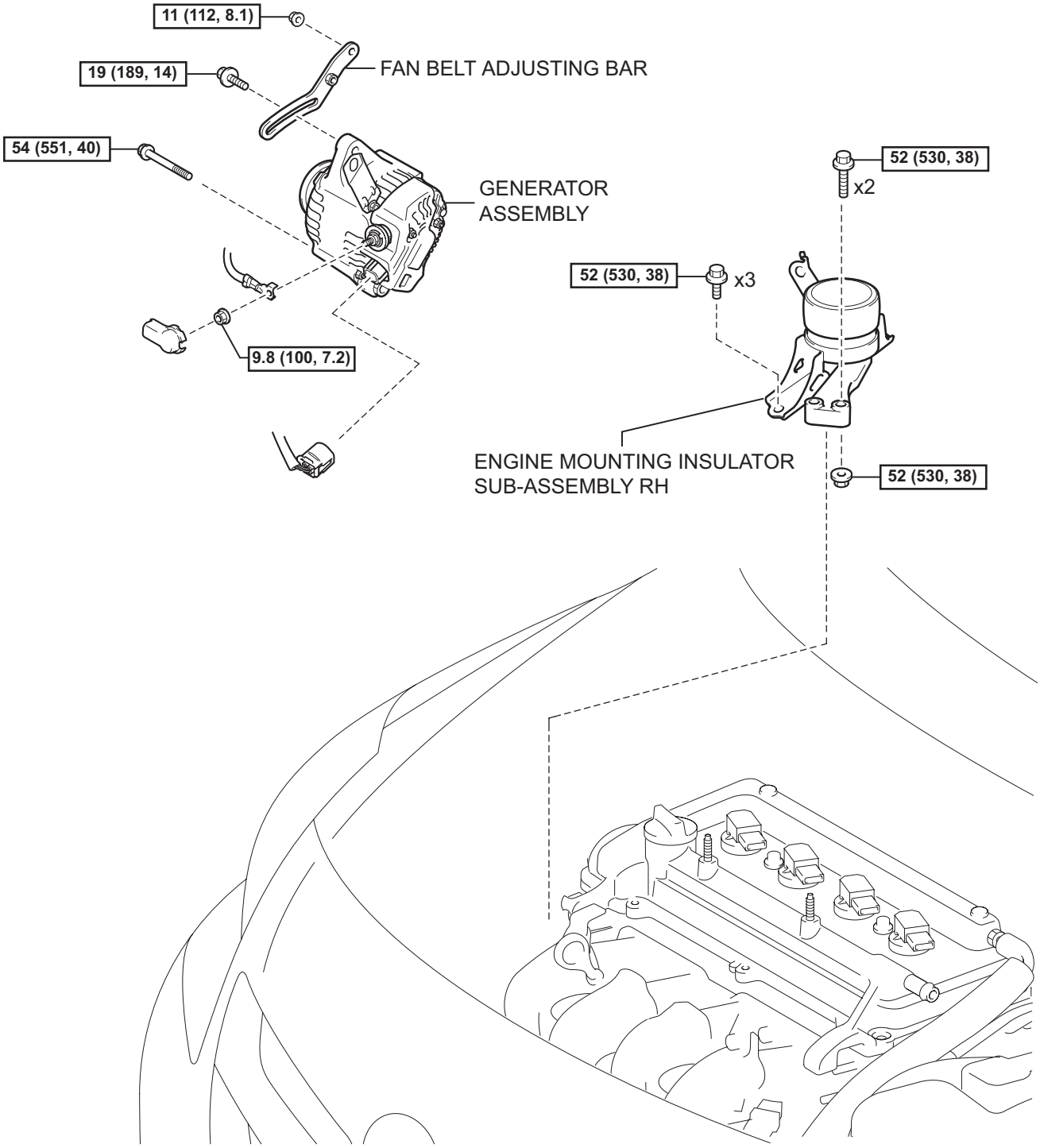

N*m (kgf*cm, ft*lbf) : Specified torque

T

A133594E01

CO

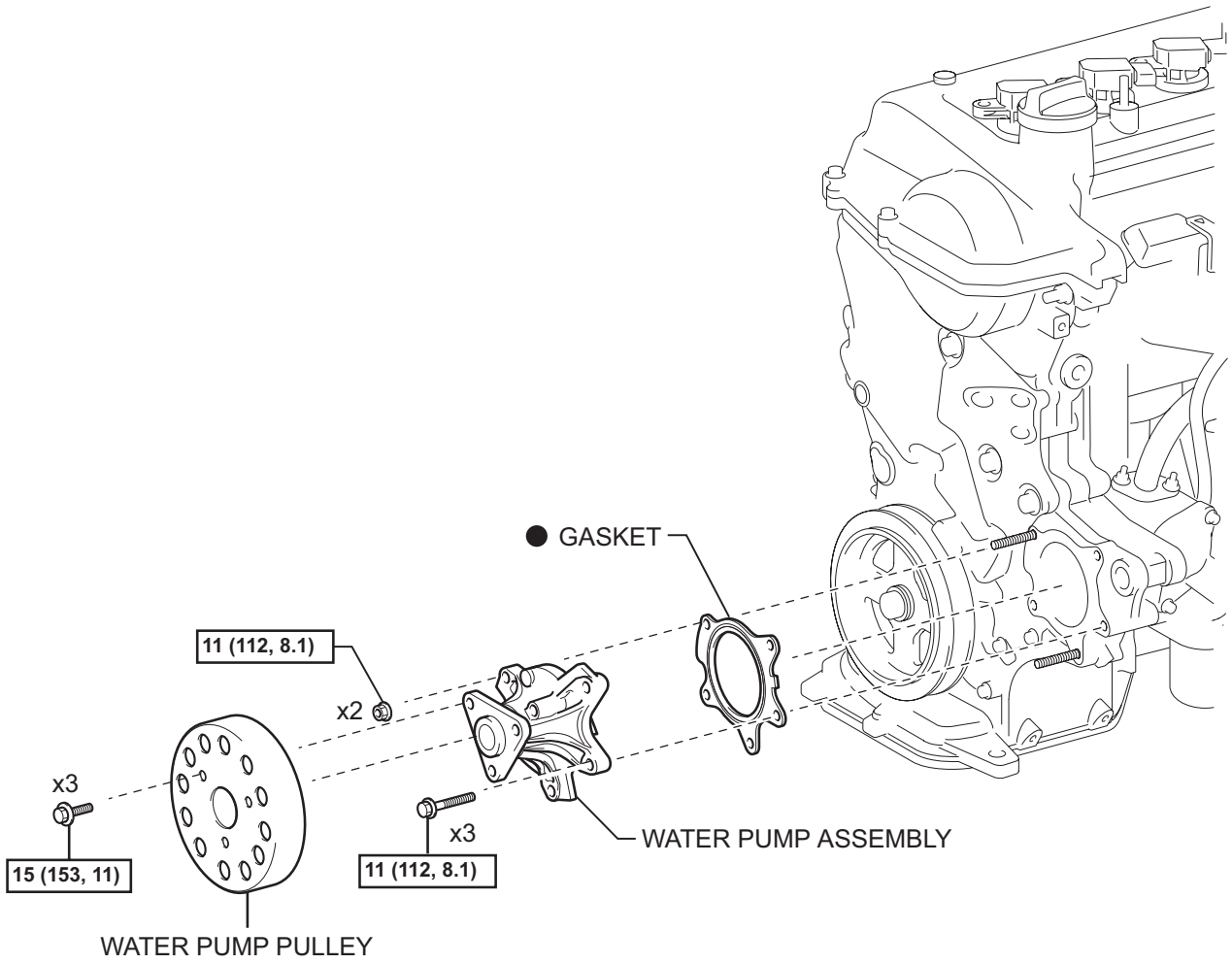

N*m (kgf*cm, ft.*lbf) : Specified torque

● Non-reusable part

T

A116194E01

REMOVAL

1. **DISCONNECT CABLE FROM NEGATIVE BATTERY TERMINAL**
2. **REMOVE ENGINE COOLANT (See page CO-8)**
3. **REMOVE ENGINE UNDER COVER RH**
4. **REMOVE FAN AND GENERATOR V BELT (See page EM-7)**
5. **REMOVE GENERATOR ASSEMBLY (See page CH-10)**
6. **REMOVE ENGINE MOUNTING INSULATOR SUB-ASSEMBLY RH (See page LU-17)**
7. **REMOVE WATER PUMP PULLEY**
   (a) Using SST, hold the water pump pulley.
   SST 09960-10010 (09962-01000, 09963-00700)
   (b) Remove the 3 bolts and remove the water pump pulley.

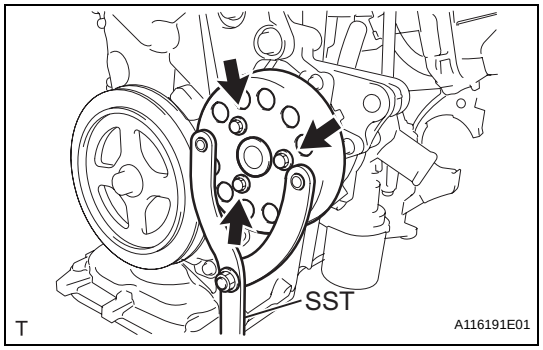

8. **REMOVE WATER PUMP ASSEMBLY**
   (a) Remove the 3 bolts and 2 nuts and remove the water pump assembly and gasket.

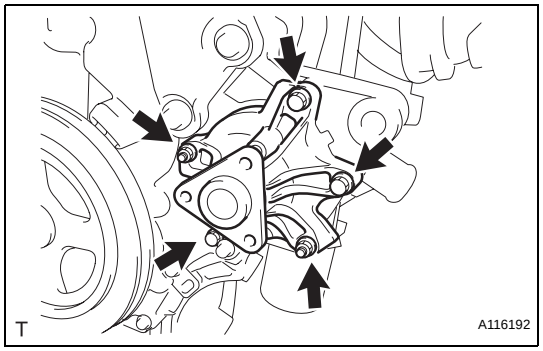

INSPECTION

1. **INSPECT WATER PUMP ASSEMBLY**
   (a) Visually check the drain hole for coolant leakage.
   (b) Turn the pulley and check that the water pump bearing moves smoothly and does not make any noise.
   If necessary, replace the water pump assembly.

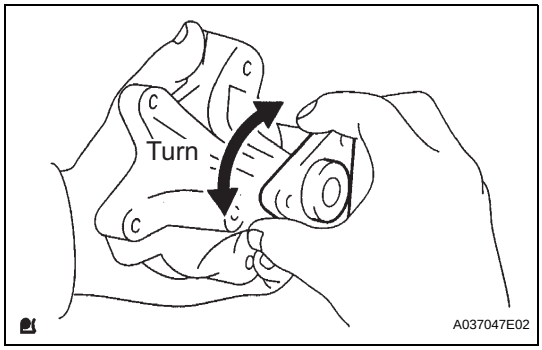

INSTALLATION

1. **INSTALL WATER PUMP ASSEMBLY**
   (a) Install the water pump assembly through a new gasket with the 3 bolts and 2 nuts.
   Torque: 11 N*m (112 kgf*cm, 8.1 ft.*lbf)

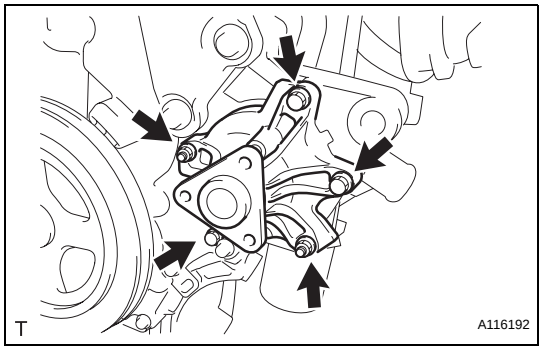

2. **INSTALL WATER PUMP PULLEY**
   (a) Provisionally install the water pump pulley with the 3 bolts.
   (b) Using SST, hold the water pump pulley.
   SST 09960-10010 (09962-01000, 09963-00700)
   (c) Tighten the 3 bolts to the specified torque.
   Torque: 15 N*m (153 kgf*cm, 11 ft.*lbf)

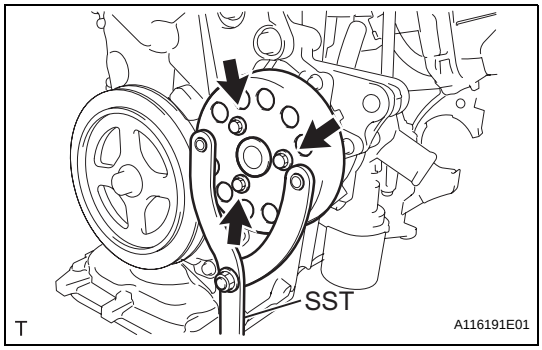

3. **INSTALL ENGINE MOUNTING INSULATOR SUB-ASSEMBLY RH (for Hatchback) (See page LU-26)**
4. **INSTALL ENGINE MOUNTING INSULATOR SUB-ASSEMBLY RH (for Sedan) (See page LU-26)**
5. **INSTALL GENERATOR ASSEMBLY (See page CH-17)**
6. **INSTALL FAN AND GENERATOR V BELT (See page EM-7)**
7. **ADJUST FAN AND GENERATOR V BELT (See page EM-7)**
8. **INSPECT FAN AND GENERATOR V BELT (See page EM-8)**
9. **CONNECT CABLE TO NEGATIVE BATTERY TERMINAL**
   Torque: 5.4 N*m (55 kgf*cm, 48 in.*lbf)
10. **ADD ENGINE COOLANT (See page CO-8)**
11. **CHECK FOR ENGINE COOLANT LEAKAGE (See page CO-1)**
12. **INSTALL ENGINE UNDER COVER RH**

THERMOSTAT

COMPONENTS

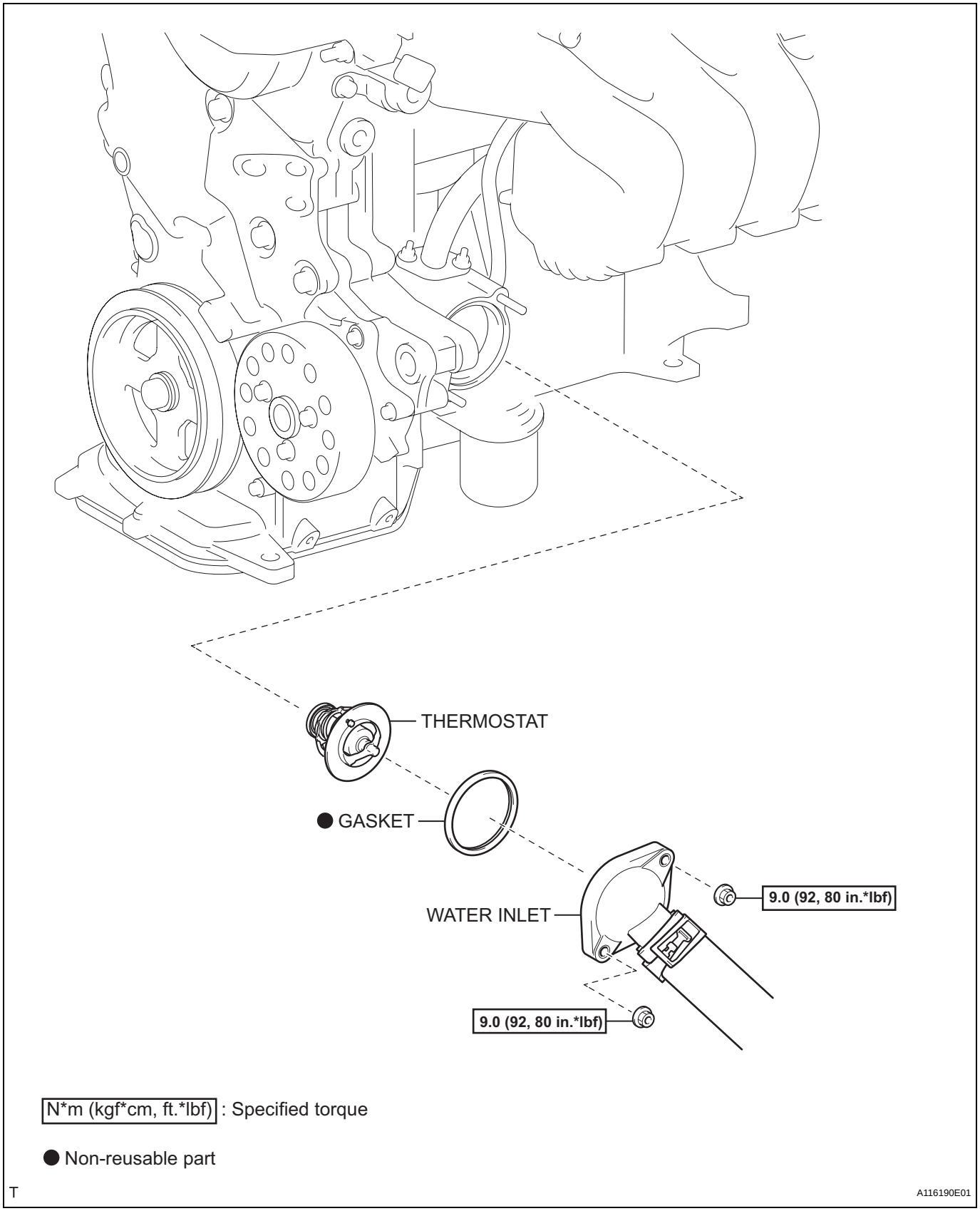

REMOVAL

1. DRAIN ENGINE COOLANT (See page CO-8)

2. REMOVE WATER INLET

(a) Remove the 2 nuts and separate the water inlet with radiator hose from the cylinder block.

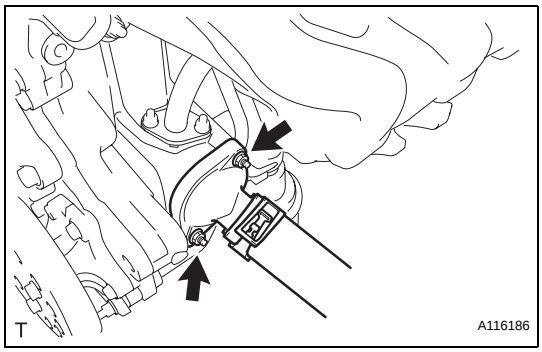

3. REMOVE THERMOSTAT

(a) Remove the thermostat from the cylinder block.

(b) Remove the gasket from the thermostat.

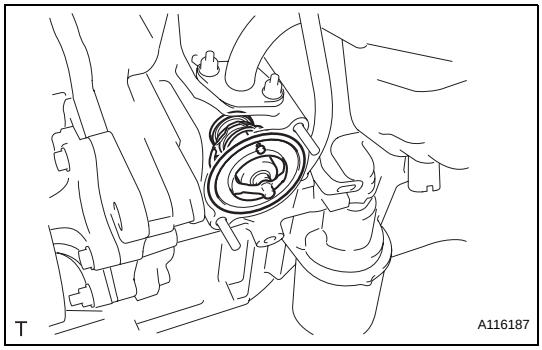

INSPECTION

1. INSPECT THERMOSTAT

HINT:
The valve opening temperature is inscribed on the thermostat.

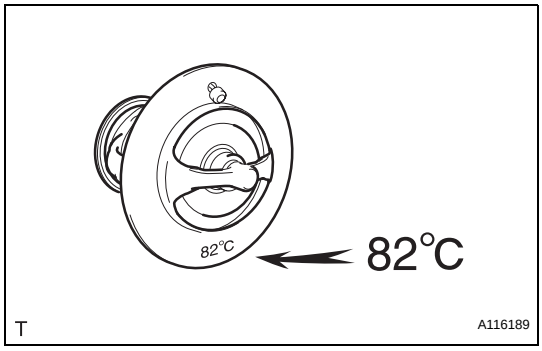

(a) Immerse the thermostat in water and gradually heat the water.

(b) Check the valve opening temperature of the thermostat.

Valve opening temperature:
80 to 84°C (176 to 183°F)

If the valve opening temperature is not as specified, replace the thermostat.

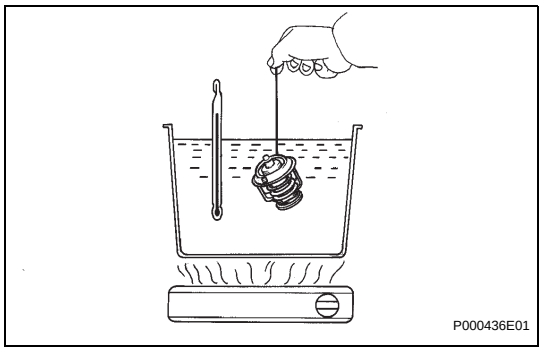

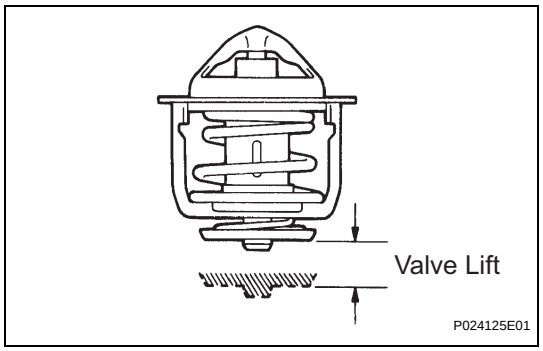

(c) Check the valve lift.
Valve lift:
8.5 mm (0.335 in.) or more at 95°C (203°F)
If the valve lift is not as specified, replace the thermostat.

(d) Check that the valve is fully closed when the thermostat is at low temperatures (below 77°C (171°F))
If not fully closed, replace the thermostat.

INSTALLATION

1. INSTALL THERMOSTAT

(a) Install a new gasket onto the thermostat.

(b) Install the thermostat with the jiggle valve facing upward.
HINT:
The jiggle valve may be set within 10° on either side, as shown in the illustration.

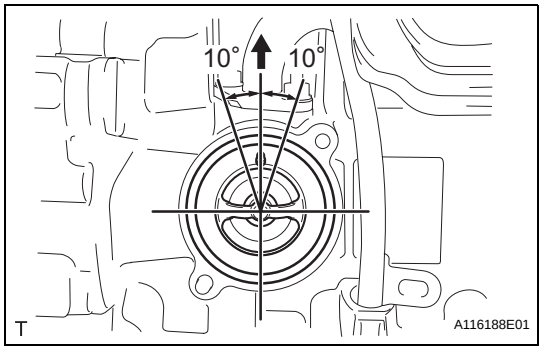

2. INSTALL WATER INLET

(a) Install the water inlet with radiator hose with the 2 nuts.
Torque: 9.0 N*m (92 kgf*cm, 80 in.*lbf)

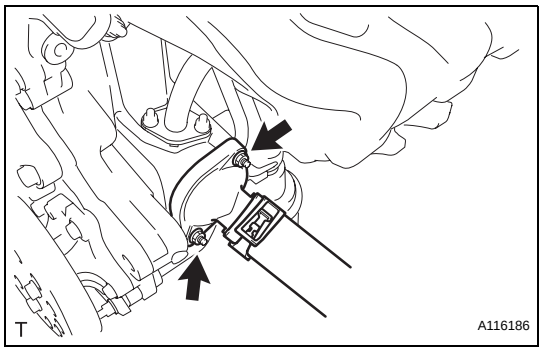

3. ADD ENGINE COOLANT (See page CO-8)

4. CHECK FOR ENGINE COOLANT LEAKAGE (See page CO-1)

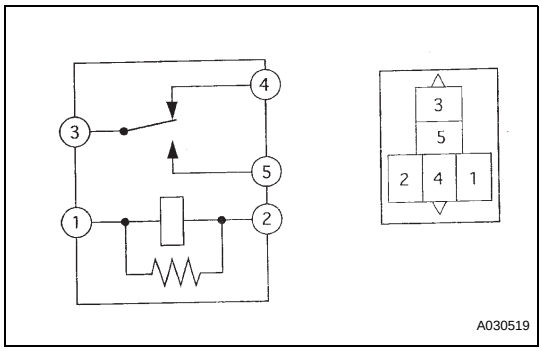

COOLING FAN RELAY

ON-VEHICLE INSPECTION

1. INSPECT COOLING FAN RELAY NO. 2

(a) Check the resistance.

(1) Using an ohmmeter, measure the resistance between the terminals.

Standard resistance

Tester Connection	Specified Condition
3 - 4	Below 1 Ω
3 - 4	10 kΩ or higher (When battery voltage applied to terminals 1 and 2)
3 - 5	10 kΩ or higher
3 - 5	Below 1 Ω (when battery voltage applied to terminals 1 and 2)

If the result is not as specified, replace the relay.

INTEGRATION RELAY

COMPONENTS

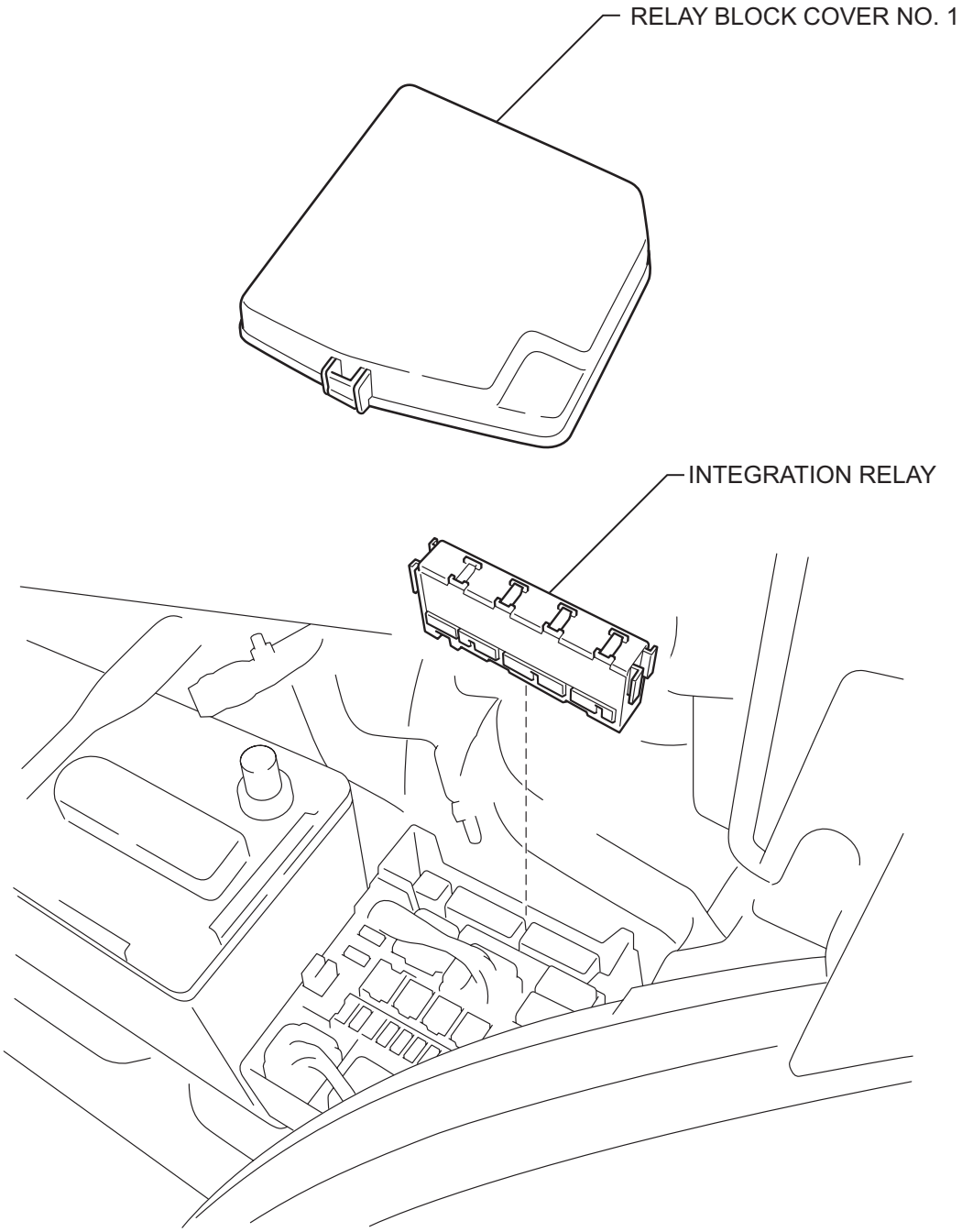

N

A115401E01

REMOVAL

1. **DISCONNECT CABLE FROM NEGATIVE BATTERY TERMINAL**
2. **REMOVE RELAY BLOCK COVER NO. 1**
3. **REMOVE INTEGRATION RELAY**
   (a) Using a screwdriver with its tip wrapped in protective tape, disengage the 2 claws and disconnect the integration relay.
   (b) Disconnect the 3 connectors.

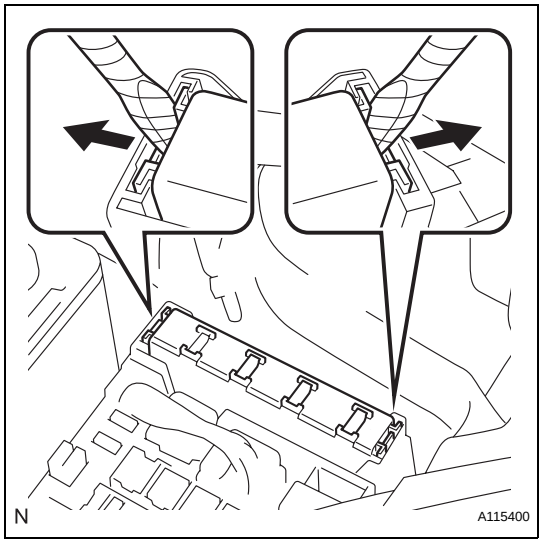

INSPECTION

1. **INSPECT INTEGRATION RELAY**
   (a) Inspect the cooling fan relay.
      (1) Using an ohmmeter, measure the resistance between the terminals.
      Standard resistance

Tester connection	Specified condition
B5 - B8	10 kΩ or higher
B5 - B8	Below 1 Ω (Battery voltage applied between terminals B6 and B7)

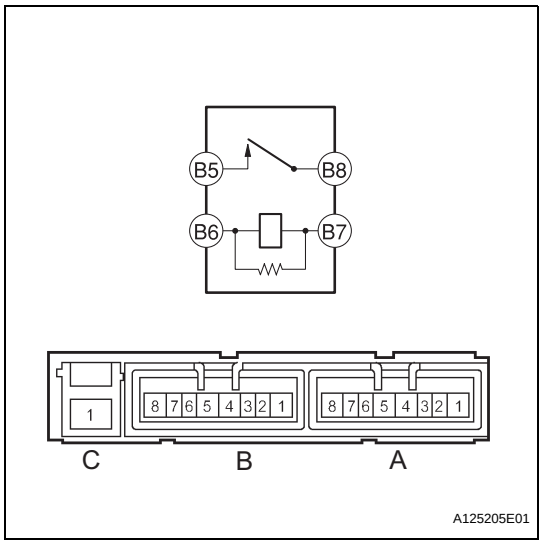

NOTICE:
While using the battery for the inspection, do not bring the positive and negative tester probes too close to each other as a short circuit may occur.

INSTALLATION

1. INSTALL INTEGRATION RELAY

(a) Connect the 3 connectors.

(b) Attach the integration relay to the engine room relay block.

2. INSTALL RELAY BLOCK COVER NO. 1

3. CONNECT CABLE TO NEGATIVE BATTERY TERMINAL

Torque: 5.4 N*m (55 kgf*cm, 4.8 in.*lbf)

COOLING FAN RESISTOR

COMPONENTS

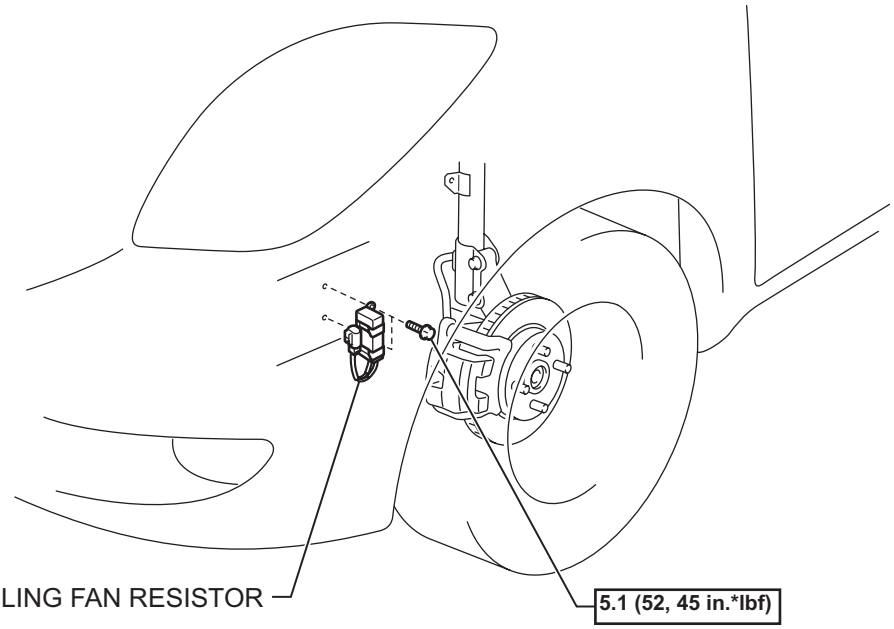

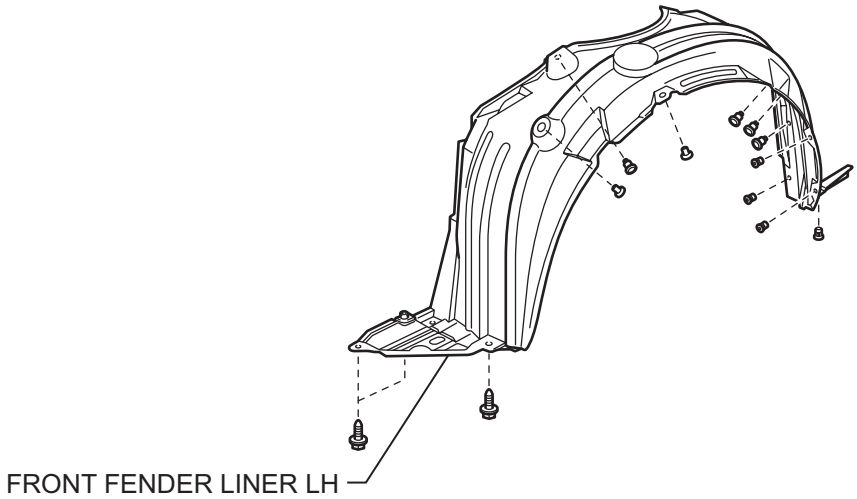

N*m (kgf*cm, ft.*lbf) : Specified torque

A108462E10

REMOVAL

1. **DISCONNECT CABLE FROM NEGATIVE BATTERY TERMINAL**
2. **REMOVE FRONT WHEEL LH**
3. **REMOVE FRONT FENDER LINER LH (See page BC-95)**
4. **REMOVE COOLING FAN RESISTOR**
   (a) Disconnect the connector from the cooling fan resistor.
   (b) Remove the 2 bolts and the cooling fan resistor.

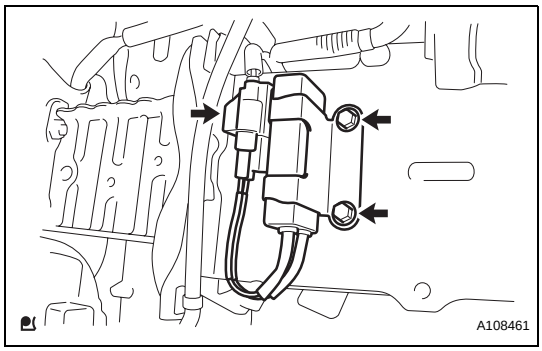

INSPECTION

1. **INSPECT COOLING FAN RESISTOR**
   (a) Using an ohmmeter, measure the resistance between the terminals.
   Standard resistance:
   1.17 to 1.43 Ω at 20°C (68°F)

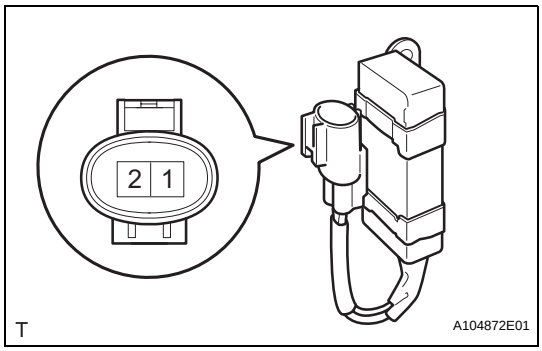

INSTALLATION

1. **INSTALL COOLING FAN RESISTOR**
   (a) Install the cooling fan resistor with the 2 bolts.
   Torque: 5.1 N*m (52 kgf*cm, 45 in.*lbf)
   (b) Connect the cooling fan resistor connector.
2. **INSTALL FRONT FENDER LINER LH (See page BC-96)**
3. **INSTALL FRONT WHEEL LH**
4. **CONNECT CABLE TO NEGATIVE BATTERY TERMINAL**
   Torque: 5.4 N*m (55 kgf*cm, 48 in.*lbf)

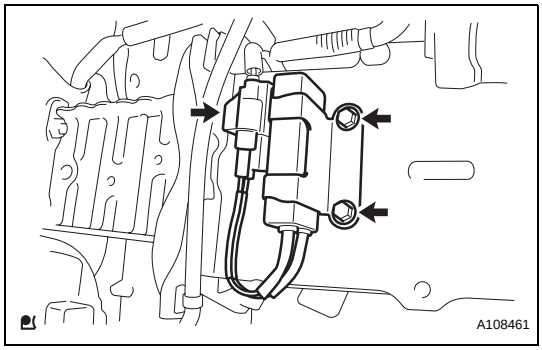

RADIATOR

COMPONENTS

for Hatchback:

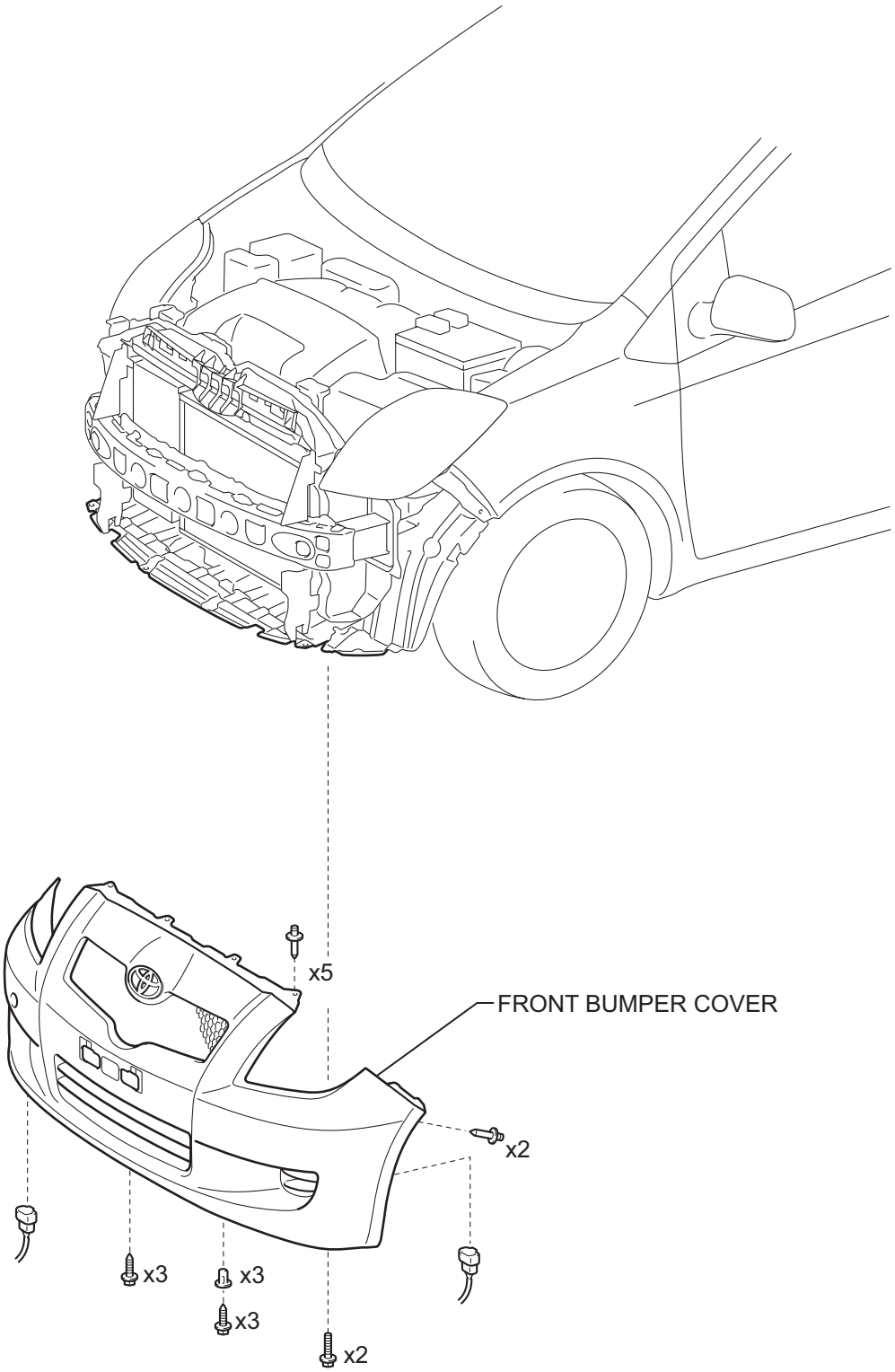

T

A117338E07

for Sedan:

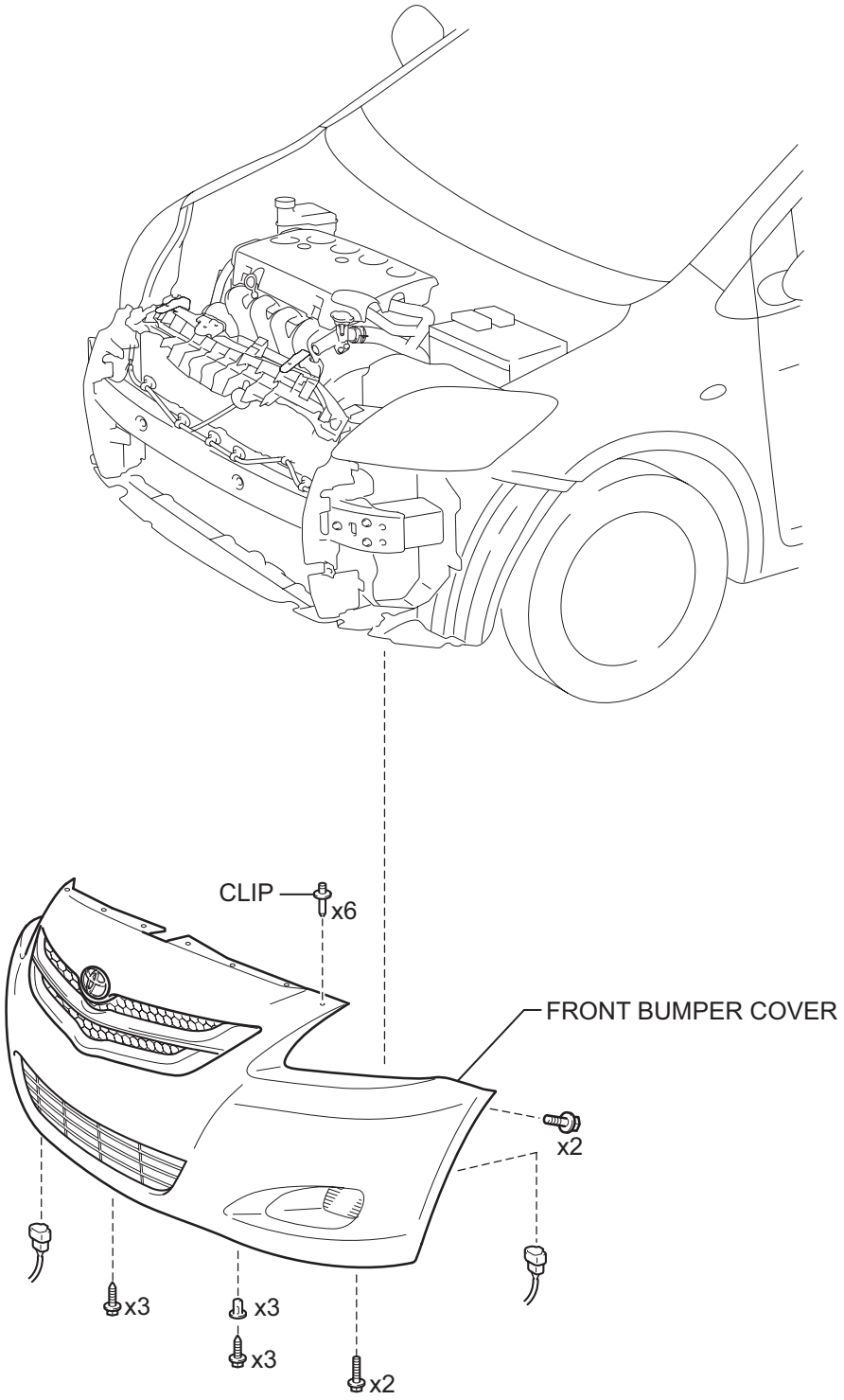

T

A128449E06

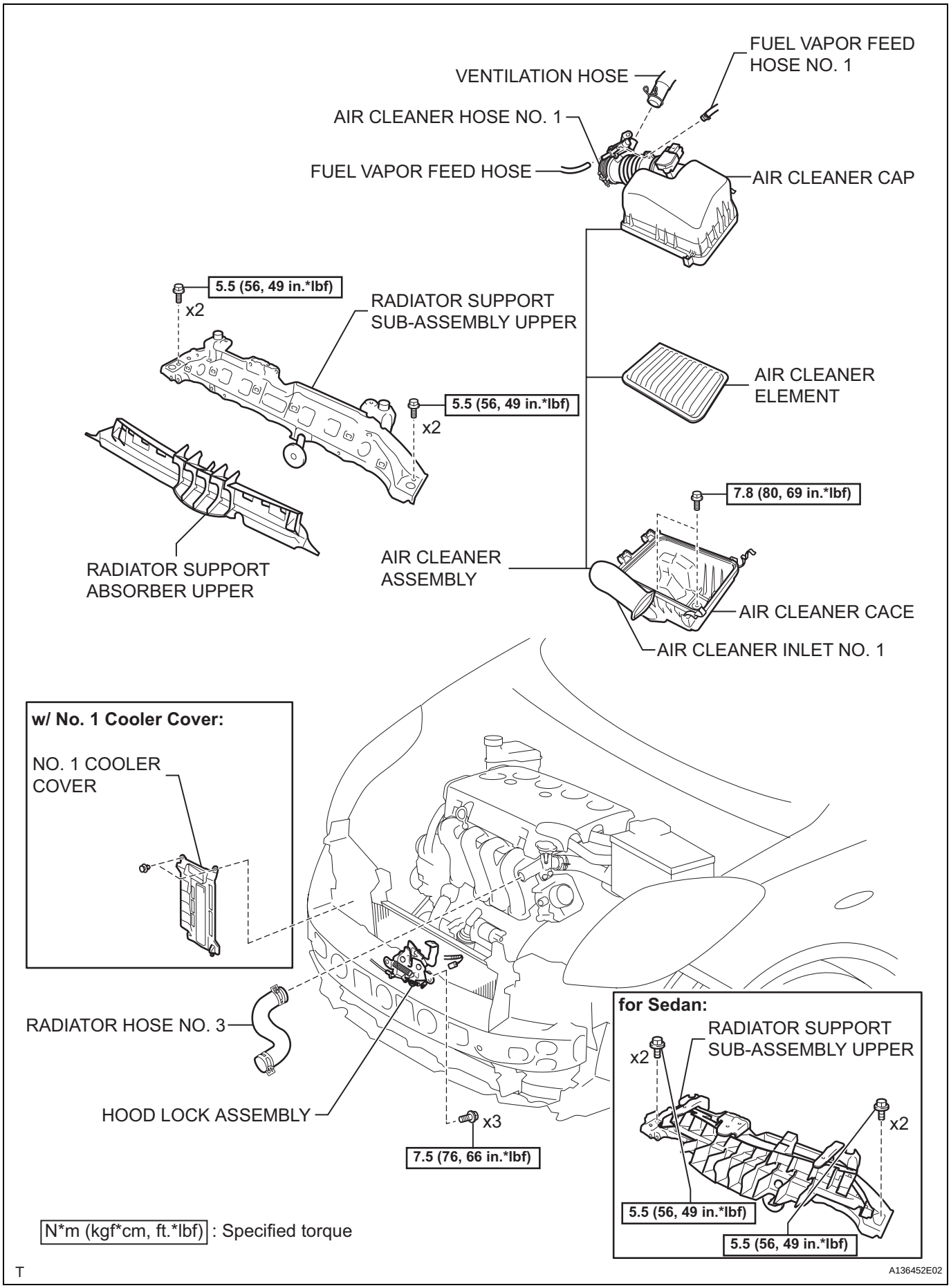
FUEL VAPOR FEED HOSE NO. 1
VENTILATION HOSE
AIR CLEANER HOSE NO. 1
FUEL VAPOR FEED HOSE
AIR CLEANER CAP
5.5 (56, 49 in.*lbf)
x2
RADIATOR SUPPORT SUB-ASSEMBLY UPPER
AIR CLEANER ELEMENT
5.5 (56, 49 in.*lbf)
x2
7.8 (80, 69 in.*lbf)
RADIATOR SUPPORT ABSORBER UPPER
AIR CLEANER ASSEMBLY
AIR CLEANER CACE
AIR CLEANER INLET NO. 1
w/ No. 1 Cooler Cover:
NO. 1 COOLER COVER
RADIATOR HOSE NO. 3
HOOD LOCK ASSEMBLY
x3
7.5 (76, 66 in.*lbf)
for Sedan:
RADIATOR SUPPORT SUB-ASSEMBLY UPPER
x2
x2
5.5 (56, 49 in.*lbf)
5.5 (56, 49 in.*lbf)
N*m (kgf*cm, ft.*lbf) : Specified torque
T
A136452E02

CO

for Automatic Transaxle:

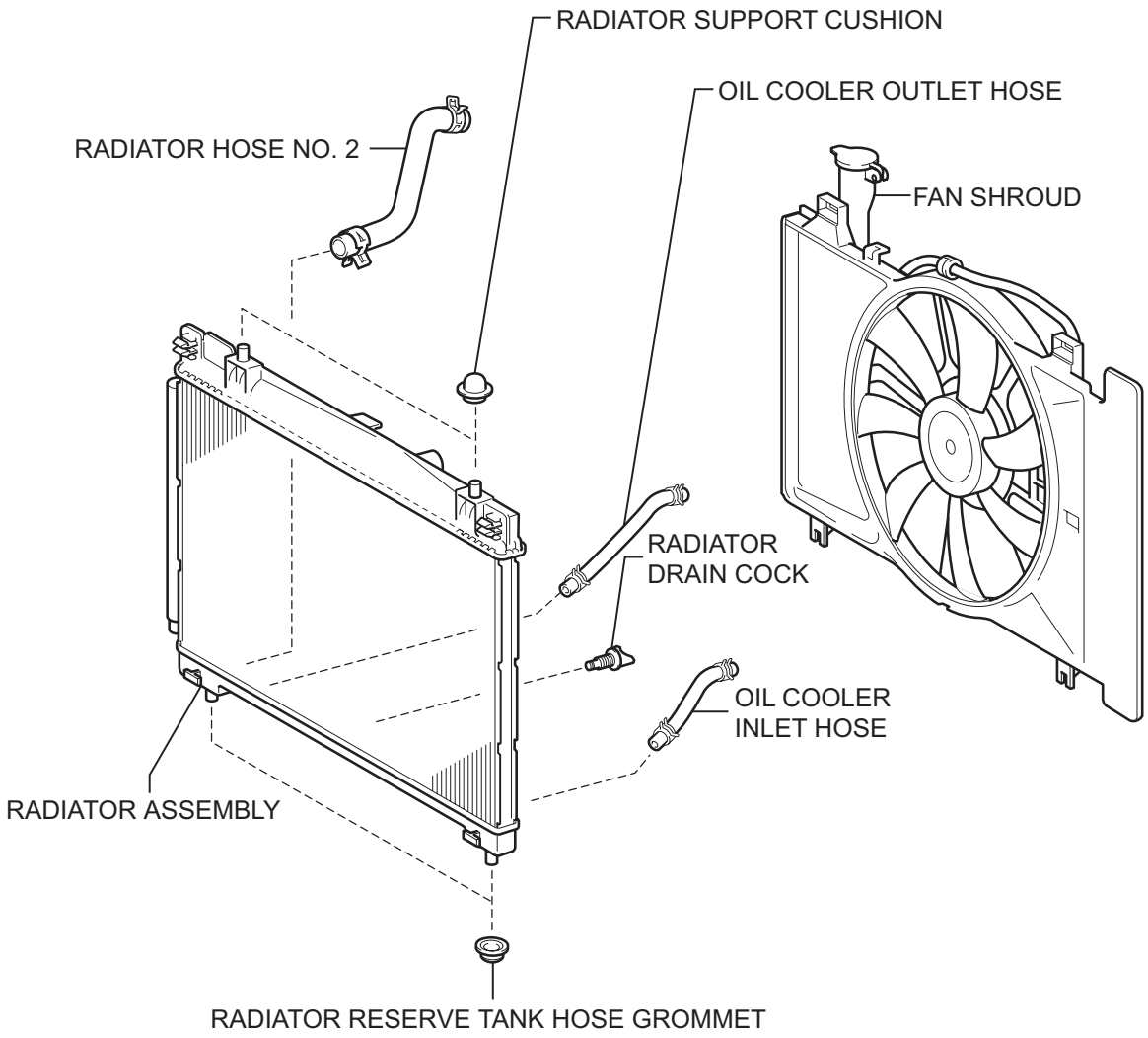

T

A117357E05

for Manual Transaxle:

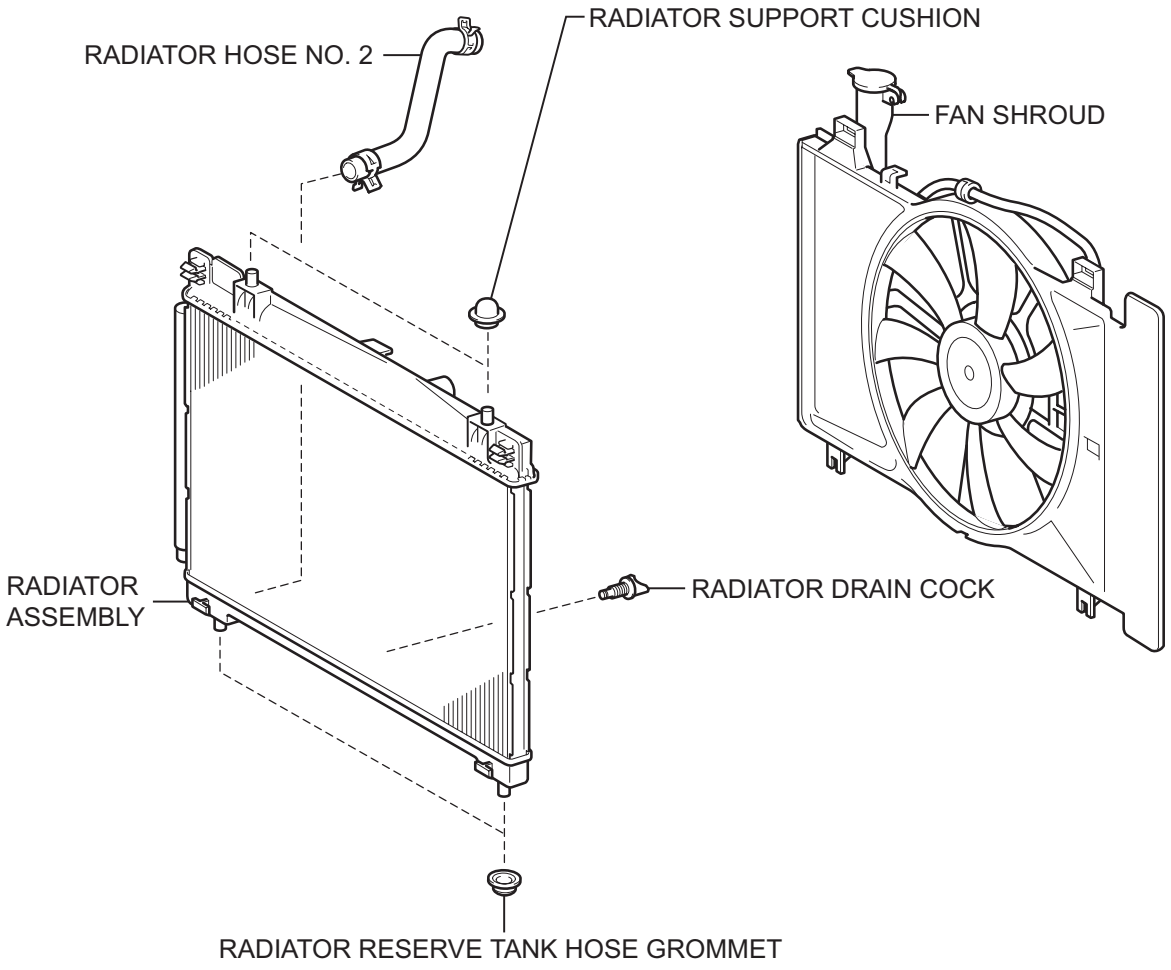

T

A117358E04

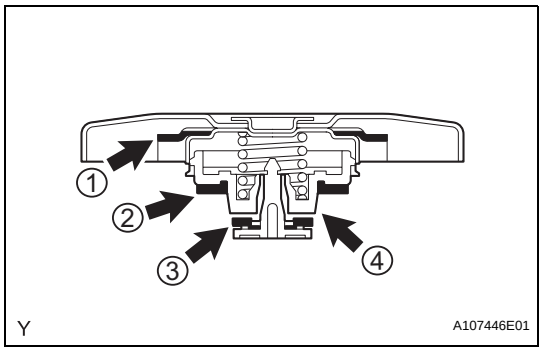

ON-VEHICLE INSPECTION

1. CHECK RADIATOR CAP SUB-ASSEMBLY

(a) Measure the valve opening pressure.

(1) If there are water stains or foreign matter on rubber packings 1, 2 or 3, clean the part(s) with water and finger scouring.

(2) Check that rubber packings 1, 2 and 3 are not deformed, cracked or swollen.

(3) Check that rubber packings 3 and 4 are not stuck together.

(4) Apply engine coolant to rubber packings 2 and 3 before using a radiator cap tester.

(5) When using the cap tester, tilt it to 30° or more above the horizontal.

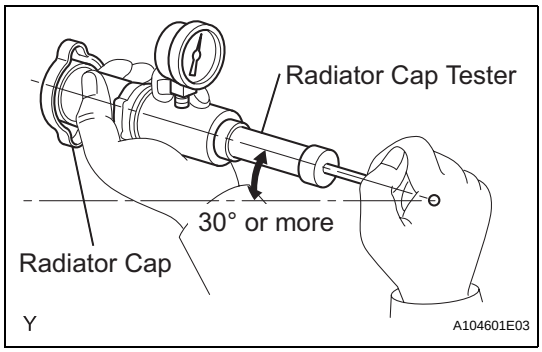

(6) Pump the cap tester several times, and check the maximum pressure *1.

Pumping speed:

1 pumps every second

*1: Even if the cap cannot maintain the maximum pressure, it is not a defect.

Judgment Criteria

Item	Specified Condition
Standard valve (for brand-new cap)	93.3 to 122.7 kPa (0.95 to 1.25 kgf/cm^2, 13.5 to 17.8 psi)
Minimum standard valve (after using cap)	78.5 kPa (0.8 kgf/cm^2, 11.4 psi)

If the maximum pressure is less than the specified pressure for the minimum standard valve, replace the radiator cap sub-assembly.

REMOVAL

CAUTION:
Be sure that the ignition is off if you work near the electric cooling fans or radiator grille. With the ignition on the electric cooling fans may automatically start to run if the engine coolant temperature is high and/or the air conditioning is on.

1. **DISCONNECT CABLE FROM NEGATIVE BATTERY TERMINAL**
2. **DRAIN ENGINE COOLANT (See page CO-8)**
3. **REMOVE FRONT BUMPER COVER (for Hatchback) (See page ET-24)**
4. **REMOVE FRONT BUMPER COVER (for Sedan) (See page ET-6)**
5. **REMOVE AIR CLEANER ASSEMBLY**
   (a) Separate the intake air flow meter connector and the wire harness clamp.
   (b) Separate the fuel vapor feed hose and fuel vapor feed hose No. 1 from the vacuum switching valve assembly.
   (c) Separate the vacuum switching valve connector and the wire harness clamp.
   (d) Separate the ventilation hose from the air cleaner hose.
   (e) Release the air cleaner cap with air cleaner hose No. 1.
   (f) Loosen the air cleaner hose clamp on the throttle body side and remove the air cleaner cap and the air cleaner hose.
   (g) Remove the air cleaner element.
   (h) Separate the wire harness clamp from the air cleaner case.
   (i) Remove the 2 bolts and remove the air cleaner case with air cleaner inlet No. 1.

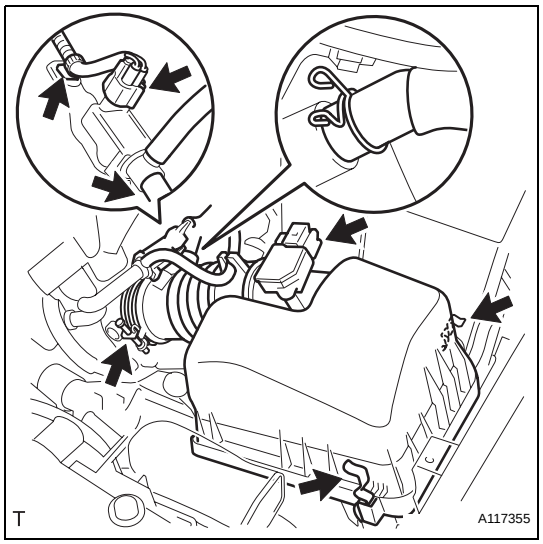

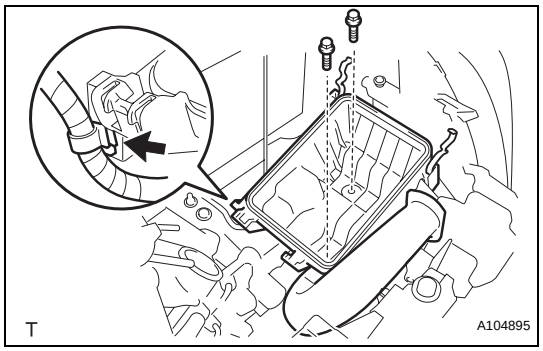

6. **REMOVE RADIATOR SUPPORT ABSORBER UPPER (for Hatchback)**
   (a) Disengage the 6 claws and remove the radiator support absorber upper.

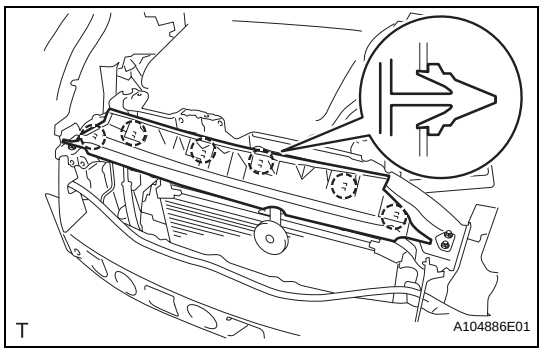

CO

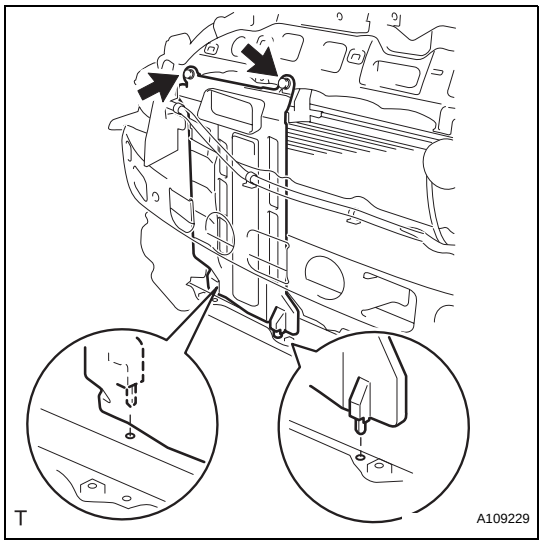

7. REMOVE NO. 1 COOLER COVER (w/ No. 1 Cooler Cover)

(a) Remove the 2 clips and No. 1 cooler cover.

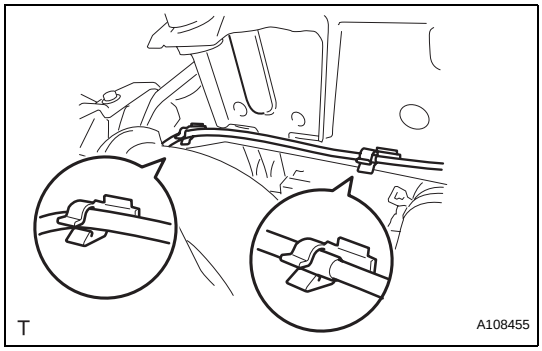

8. REMOVE HOOD LOCK ASSEMBLY (w/ Theft Deterrent System)

(a) Separate the hood lock control cable assembly from the 2 clamps.

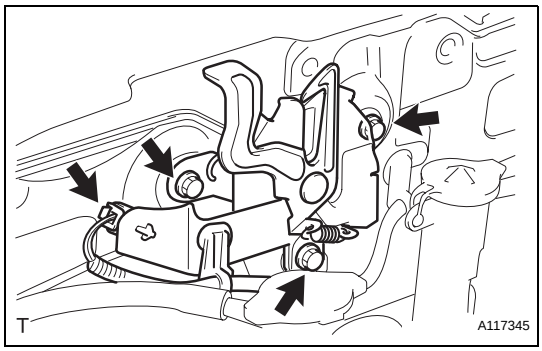

(b) Separate the engine hood courtesy switch connector.

(c) Remove the 3 bolts and remove the hood lock assembly.

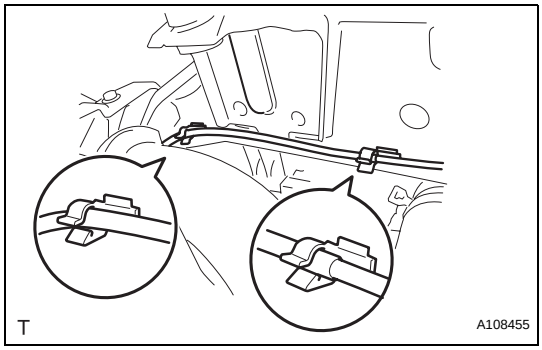

9. REMOVE HOOD LOCK ASSEMBLY (w/o Theft Deterrent System)

(a) Separate the hood lock control cable assembly from the 2 clamps.

CO

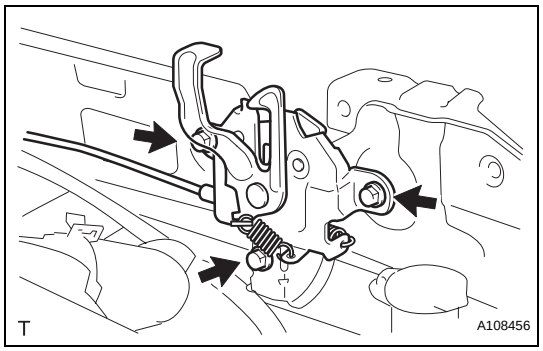

(b) Remove the 3 bolts and remove the hood lock assembly.

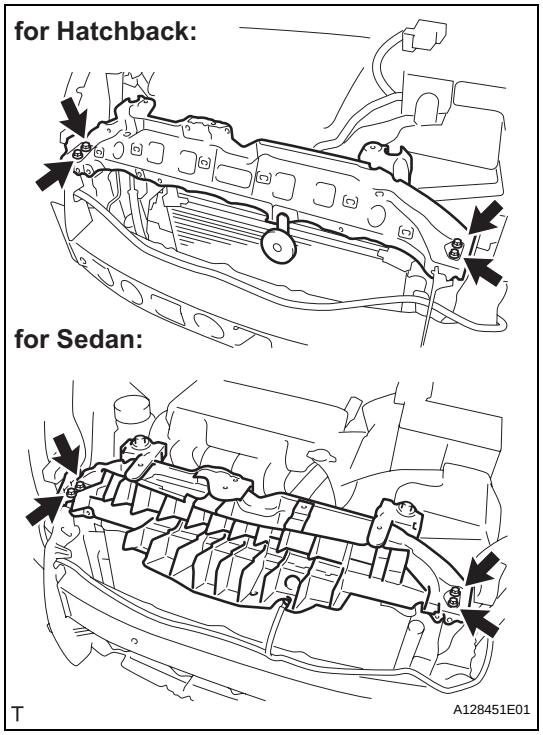

10. REMOVE RADIATOR SUPPORT SUB-ASSEMBLY UPPER

(a) Separate the horn assembly connector.

(b) Remove the 4 bolts and remove the radiator support sub-assembly upper.

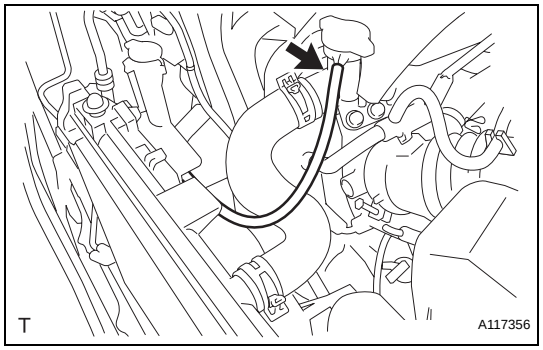

11. DISCONNECT RADIATOR RESERVOIR TANK HOSE

(a) Disconnect the radiator reservoir tank hose from the water filler.

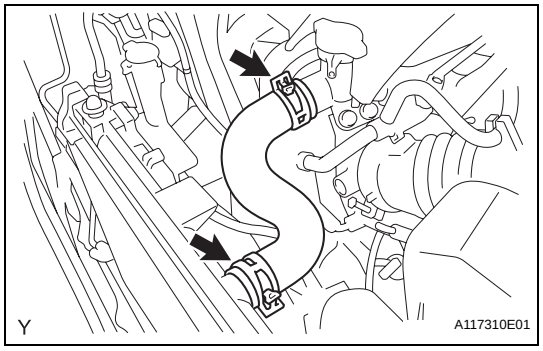

12. REMOVE RADIATOR HOSE NO. 3

(a) Loosen the 2 clips and remove radiator hose No. 3.

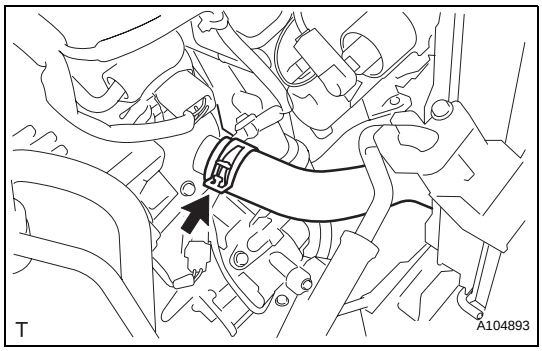

13. DISCONNECT RADIATOR HOSE NO. 2

(a) Loosen the clip and disconnect radiator hose No. 2.

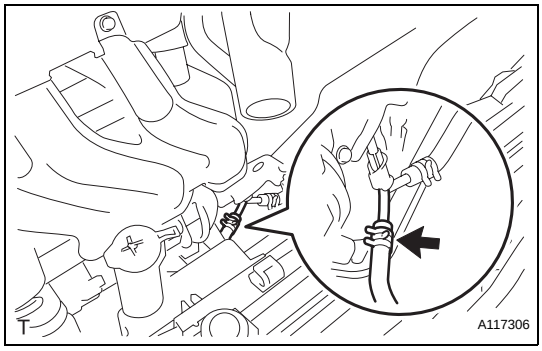

14. DISCONNECT OIL COOLER OUTLET HOSE (for Automatic Transaxle)

(a) Loosen the clip and disconnect the oil cooler outlet hose.

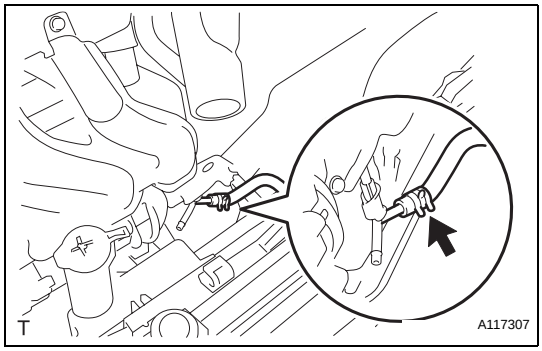

15. DISCONNECT OIL COOLER INLET HOSE (for Automatic Transaxle)

(a) Loosen the clip and disconnect the oil cooler inlet hose.

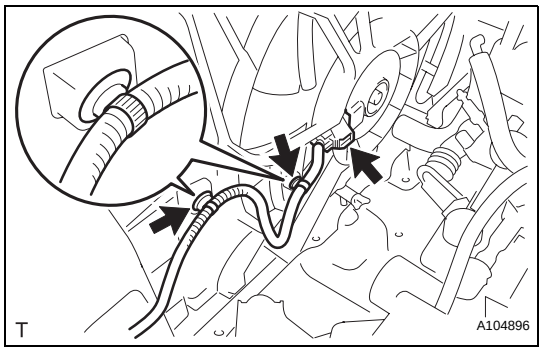

16. REMOVE RADIATOR ASSEMBLY (w/ Air Conditioning System)

(a) Separate the cooling fan motor connector and wire harness clamps.

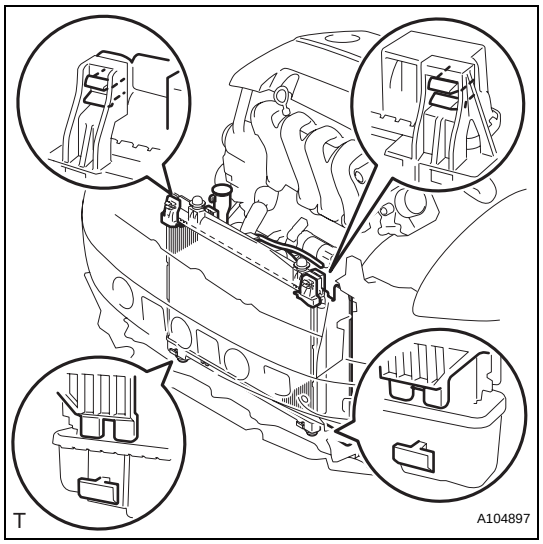

(b) Disengage the 2 claws and remove the radiator assembly from the vehicle.
NOTICE:
Do not apply excessive force to the cooler condenser assembly or piping when removing the radiator assembly.

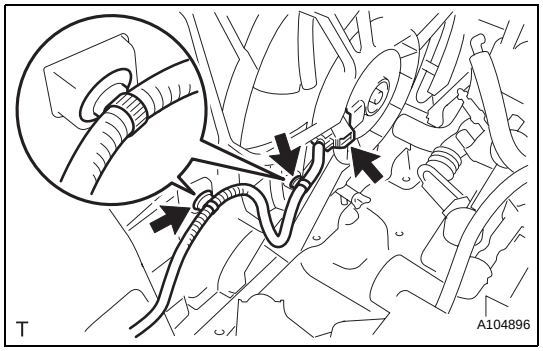

17. REMOVE RADIATOR ASSEMBLY (w/o Air Conditioning System)
(a) Separate the cooling fan motor connector and wire harness clamps.
(b) Remove the radiator assembly from the vehicle.

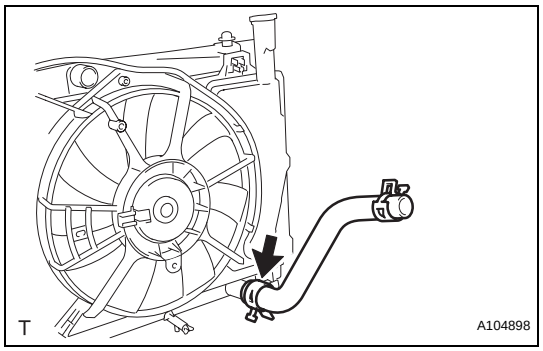

18. REMOVE RADIATOR HOSE NO. 2
(a) Loosen the clip and remove radiator hose No. 2.

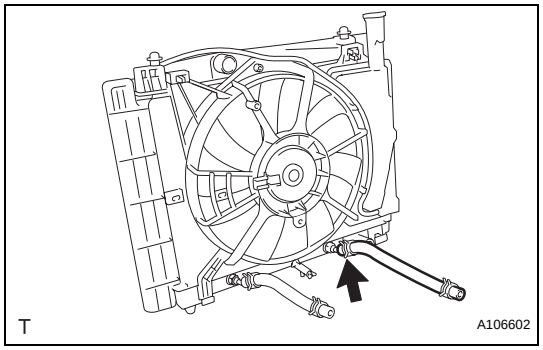

19. REMOVE OIL COOLER OUTLET HOSE (for Automatic Transaxle)
(a) Loosen the clip and remove the cooler outlet hose.

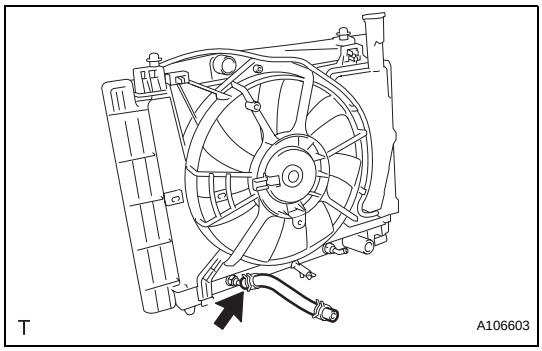

20. REMOVE OIL COOLER INLET HOSE (for Automatic Transaxle)

(a) Loosen the clip and remove the cooler inlet hose.

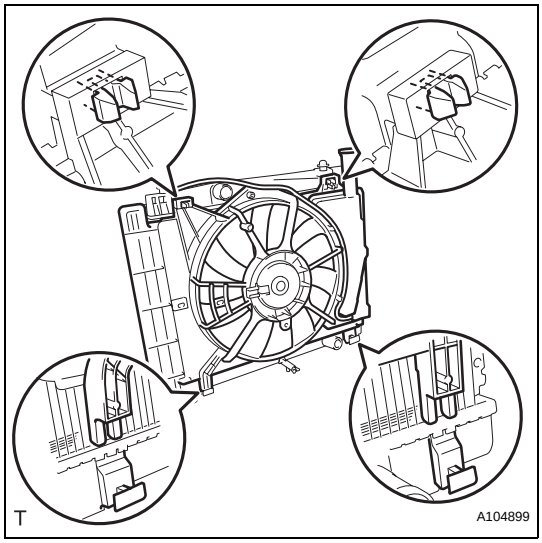

21. REMOVE FAN SHROUD

(a) Disengage the 2 claws and remove the fan shroud.

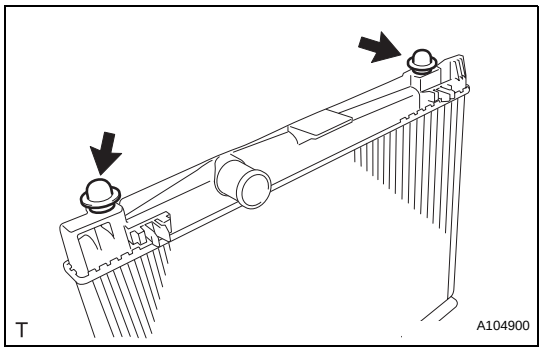

22. REMOVE RADIATOR SUPPORT CUSHION

(a) Remove the 2 radiator support cushions from the radiator assembly.

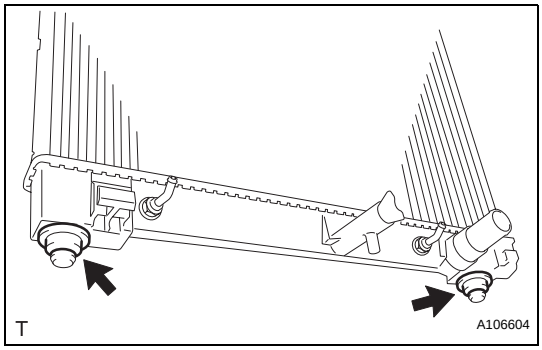

23. REMOVE RADIATOR RESERVE TANK HOSE GROMMET

(a) Remove the 2 radiator reserve tank hose grommets from the radiator assembly.

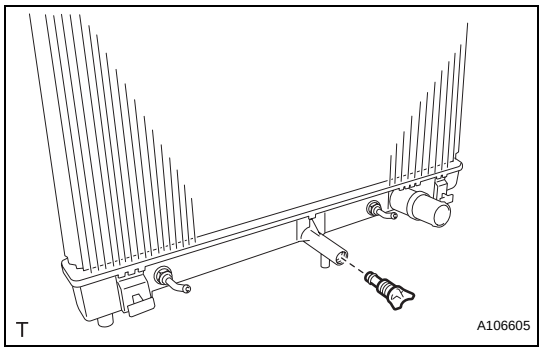

24. REMOVE RADIATOR DRAIN COCK

(a) Remove the radiator drain cock from the radiator assembly.

INSTALLATION

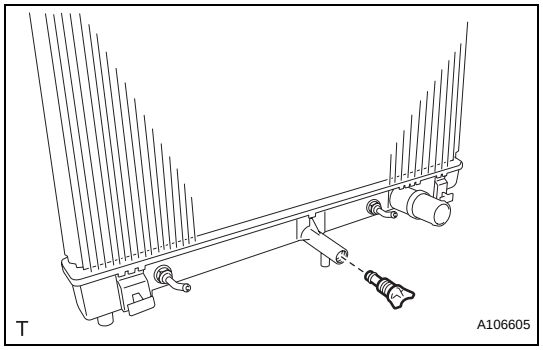

1. INSTALL RADIATOR DRAIN COCK

(a) Install the radiator drain cock onto the radiator assembly.

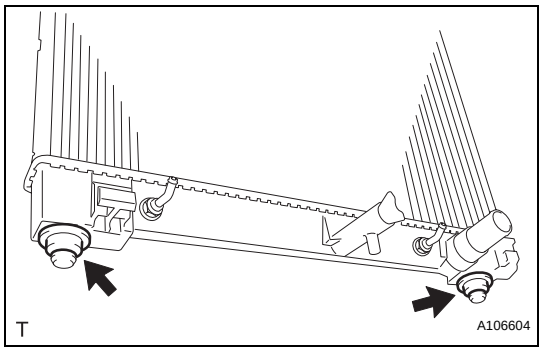

2. INSTALL RADIATOR RESERVE TANK HOSE GROMMET

(a) Install the 2 radiator reserve tank hose grommets onto the radiator assembly.

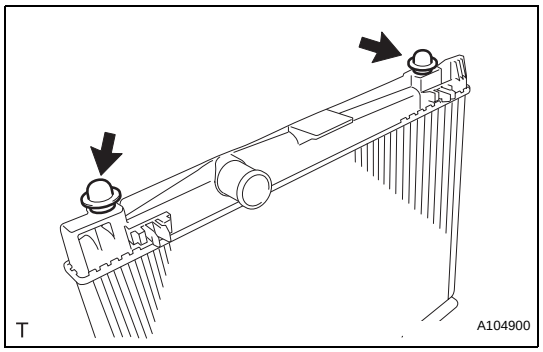

3. INSTALL RADIATOR SUPPORT CUSHION

(a) Install the 2 radiator support cushions onto the radiator assembly.

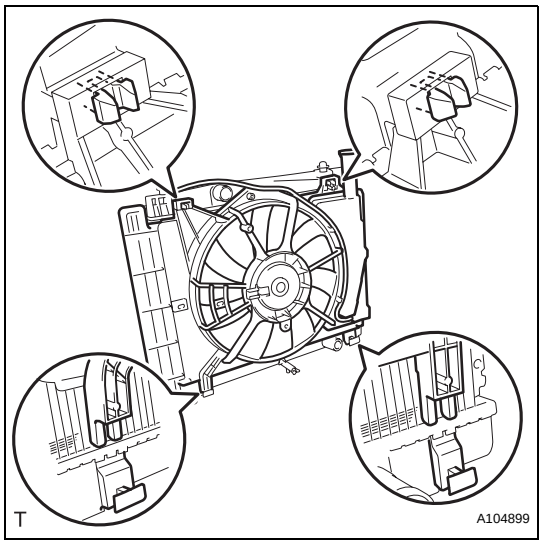

4. INSTALL FAN SHROUD

(a) Engage the 2 claws and install the fan shroud.

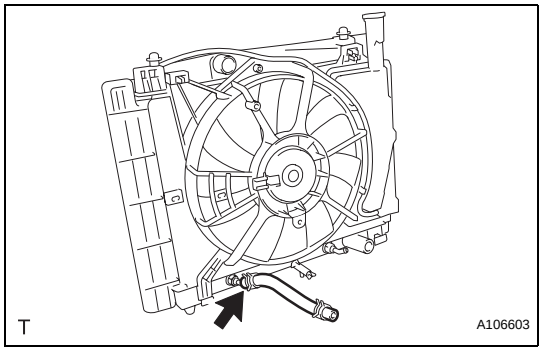

5. INSTALL OIL COOLER INLET HOSE (for Automatic Transaxle)

(a) Install the oil cooler inlet hose with the clip.

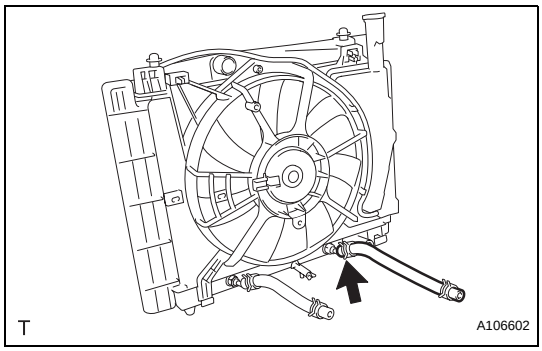

6. INSTALL OIL COOLER OUTLET HOSE (for Automatic Transaxle)

(a) Install the oil cooler outlet hose with the clip.

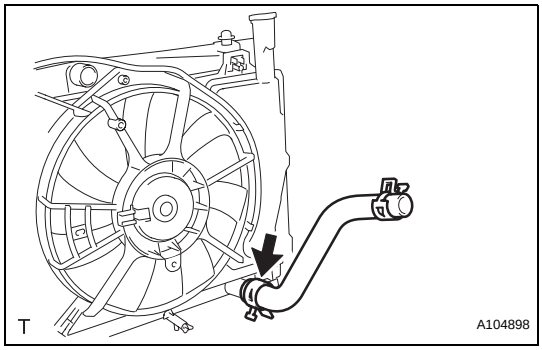

7. INSTALL RADIATOR HOSE NO. 2

(a) Install radiator hose No. 2 with the clip.

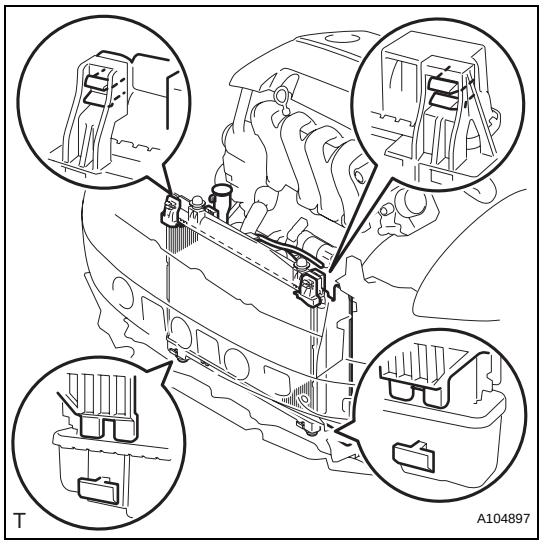

8. INSTALL RADIATOR ASSEMBLY (w/ Air Conditioning System)

(a) Engage the 2 claws and install the radiator assembly into the vehicle.

NOTICE:

Do not apply excessive force to the cooler condenser assembly or piping when installing the radiator assembly.

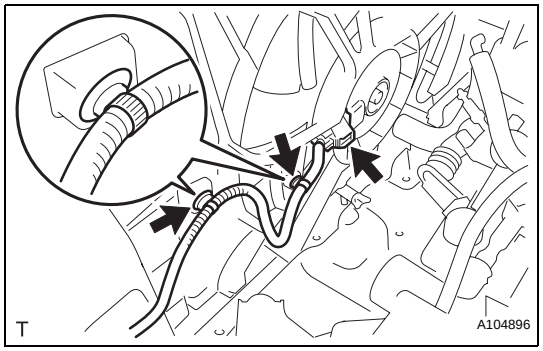

(b) Connect the cooling fan motor connector and wire harness clamps.

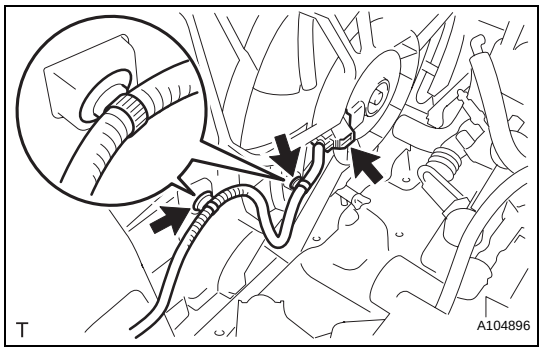

9. INSTALL RADIATOR ASSEMBLY (w/o Air Conditioning System)

(a) Install the radiator assembly into the vehicle.

(b) Connect the cooling fan motor connector and wire harness clamps.

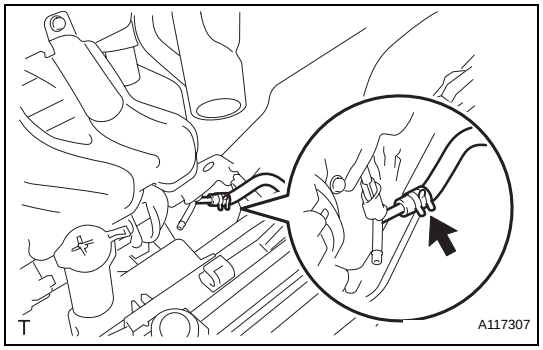

10. CONNECT OIL COOLER INLET HOSE (for Automatic Transaxle)

(a) Connect the oil cooler inlet hose with the clip.

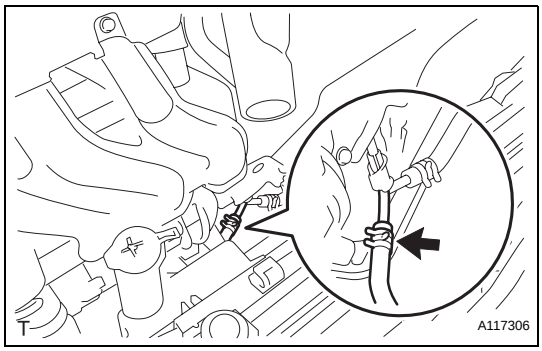

11. CONNECT OIL COOLER OUTLET HOSE (for Automatic Transaxle)

(a) Connect the oil cooler outlet hose with the clip.

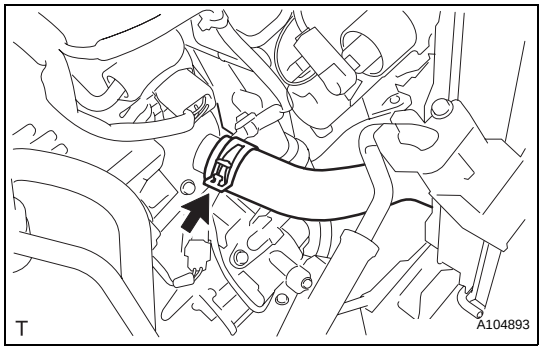

12. CONNECT RADIATOR HOSE NO. 2

(a) Connect radiator hose No. 2 with the clip.

CO

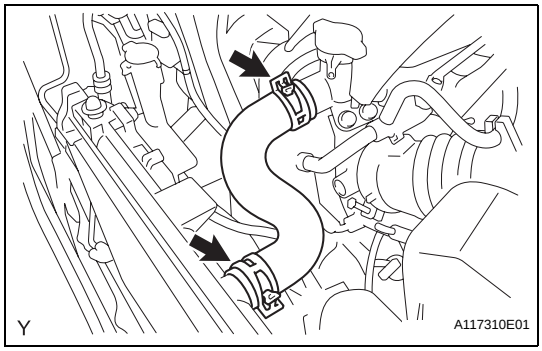

13. INSTALL RADIATOR HOSE NO. 3

(a) Install radiator hose No. 3 with the 2 clips.

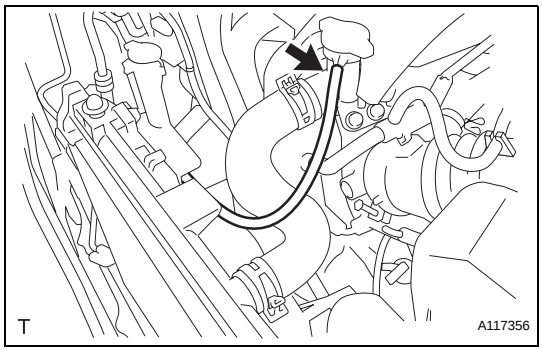

14. CONNECT RADIATOR RESERVOIR TANK HOSE

(a) Connect the radiator reservoir tank hose to the water filler.

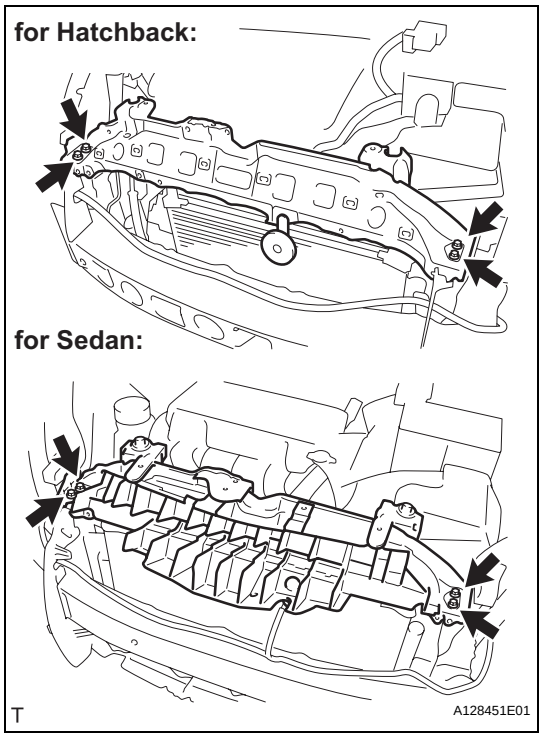

15. INSTALL RADIATOR SUPPORT SUB-ASSEMBLY UPPER

(a) Install the radiator support sub-assembly upper with the 4 bolts.
Torque: 5.5 N*m (56 kgf*cm, 49 in.*lbf)

(b) Connect the horn assembly connector.

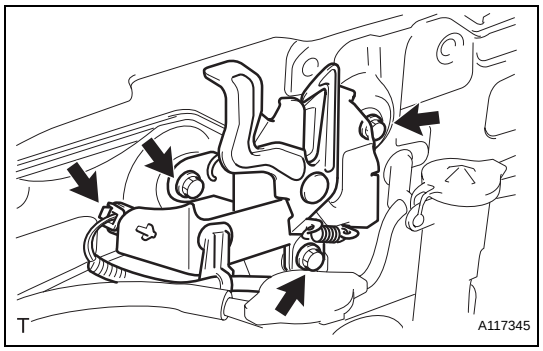

16. INSTALL HOOD LOCK ASSEMBLY (w/ Theft Deterrent System)

(a) Temporarily install the hood lock assembly with the 3 bolts.

(b) Connect the engine hood courtesy switch connector.

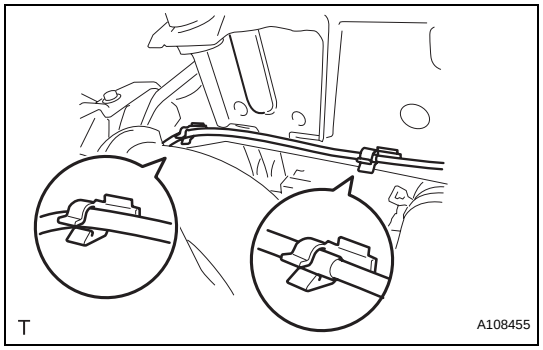

(c) Connect the hood lock control cable assembly to the 2 clamps.

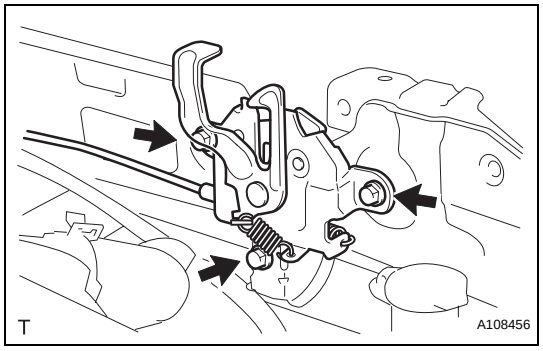

17. INSTALL HOOD LOCK ASSEMBLY (w/o Theft Deterrent System)

(a) Temporarily install the hood lock assembly with the 3 bolts.

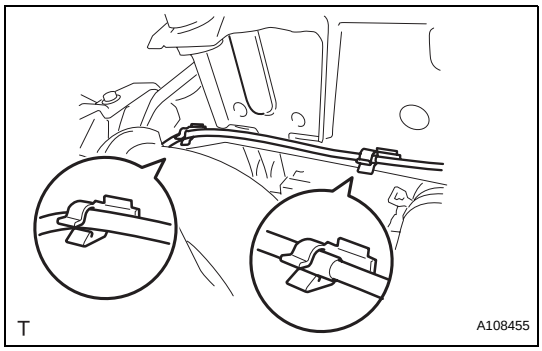

(b) Connect the hood lock control cable assembly to the 2 clamps.

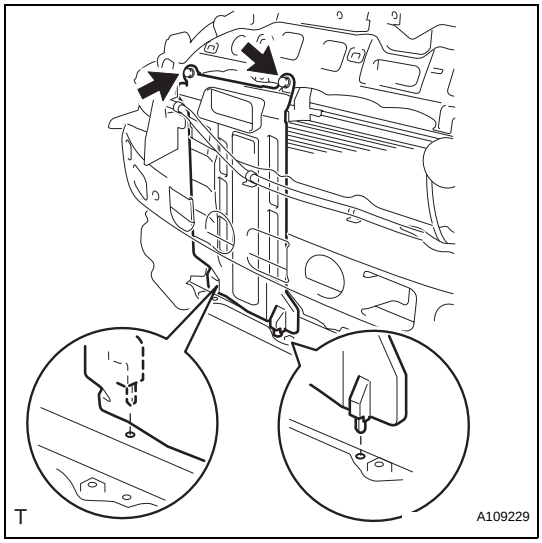

18. INSTALL NO. 1 COOLER COVER (w/ No. 1 Cooler Cover)

(a) Insert the 2 pins of No. 1 cooler cover into the radiator support LWR.

(b) Install No. 1 cooler cover with the 2 clips.

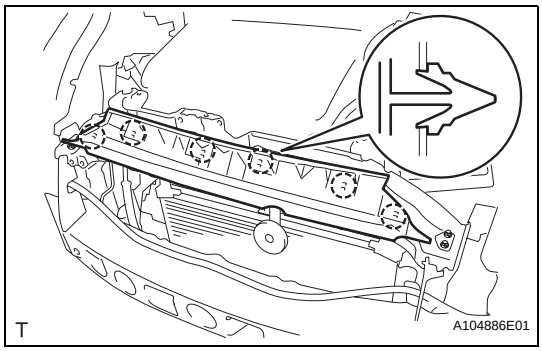

19. INSTALL RADIATOR SUPPORT ABSORBER UPPER (for Hatchback)

(a) Engage the 6 claws and install the radiator support absorber upper.

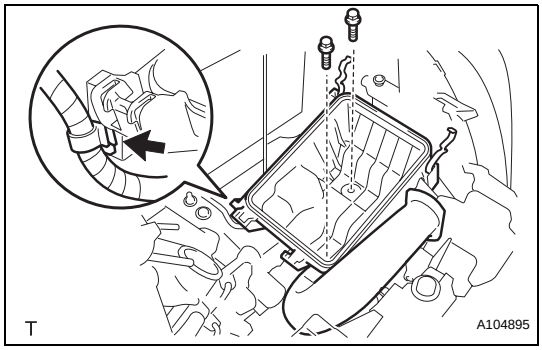

20. INSTALL AIR CLEANER ASSEMBLY

(a) Install the air cleaner case with air cleaner inlet No. 1 with the 2 bolts.
Torque: 7.8 N*m (80 kgf*cm, 69 in.*lbf)

(b) Connect the wire harness to the air cleaner case.

(c) Install the air cleaner element.

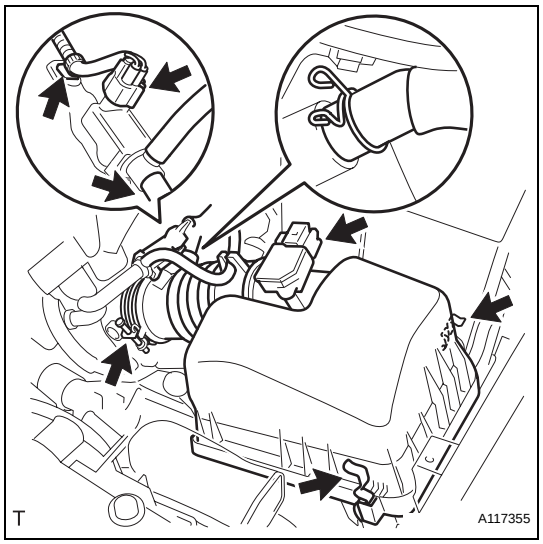

(d) Install and lock the air cleaner cap and air cleaner hose and then tighten the air cleaner hose clamp.
Torque: 4.0 N*m (41 kgf*cm, 35 in.*lbf)
(e) Connect the ventilation hose to the air cleaner hose.
(f) Connect the vacuum switching valve connector and wire harness clamp.
(g) Connect the fuel vapor feed hose and fuel vapor feed hose No. 1 to the vacuum switching valve assembly.
(h) Connect the intake air flow meter connector and wire harness clamp.

21. INSTALL FRONT BUMPER COVER (for Hatchback) (See page ET-33)

22. INSTALL FRONT BUMPER COVER (for Sedan) (See page ET-16)

23. CONNECT CABLE TO NEGATIVE BATTERY TERMINAL
Torque: 5.4 N*m (55 kgf*cm, 48 in.*lbf)

24. ADD ENGINE COOLANT (See page CO-8)

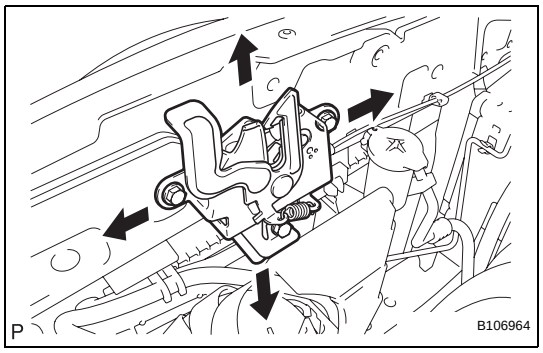

25. ADJUST HOOD LOCK ASSEMBLY
(a) Loosen the 3 bolts.
(b) Adjust the hood lock position so that the striker can enter it smoothly.
(c) Tighten the 3 bolts after the adjustment.
Torque: 7.5 N*m (76 kgf*cm, 66 in.*lbf)

26. CHECK FOR ENGINE COOLANT LEAKAGE (See page CO-1)