HYBRID TRANSAXLE SYSTEM

ON–VEHICLE INSPECTION

2200U–01

1. CHECK TRANSAXLE FLUID LEVEL

NOTICE:

- **Insufficient or excessive amounts of transaxle oil may be the cause of some trouble.**
- **Stop the vehicle on a flat road.**
- **Use genuine ATF WS.**

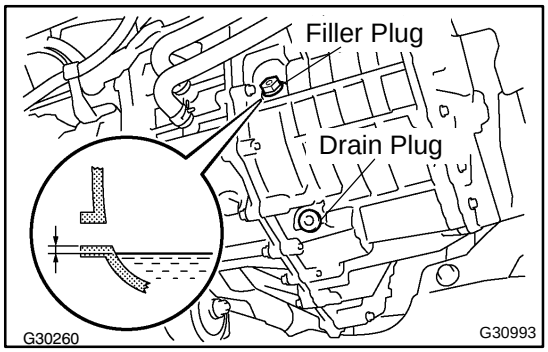

(a) Remove the filler plug.

(b) Ensure that there is transaxle oil within 0 to 5 mm of the filler plug hole.

NOTICE:

Recheck the transaxle oil level after driving when exchanging oil.

HINT:

Transaxle fluid quantity: 3.8 L (4.0 USqts, 3.3 Imp. qts.)

(c) Check for leaks if the quantity of oil is low.

(d) Install the filler plug using a new gasket.
Torque: 39 N·m (400 kgf·cm, 29 ft·lbf)

2. INSPECT OIL PRESSURE IN OIL PUMP

NOTICE:

Do the test at normal operating oil temperature 50 to 80 °C (122 to 176 °F).

(a) Lift up the vehicle.

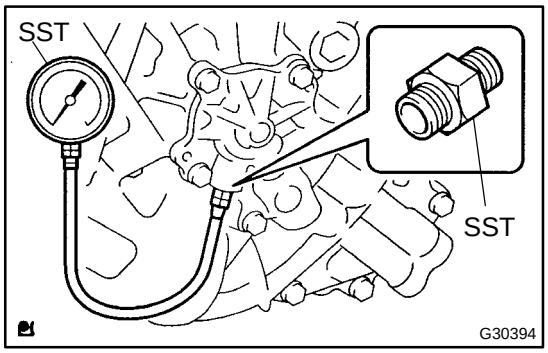

(b) Remove the fluid pump cover plug and install SST.
SST 09992–00095 (09992–00112, 09992–00271)

(c) Set the blower switch to HI.

(d) Turn the A/C switch on.

(e) Push the power switch with the brake pedal depressed to start the engine (start the hybrid system).

(f) Keeping the engine speed of 1,200 rpm, measure the oil pressure.
Oil pressure: 9.8 kPa (0.1 kgf/cm^2, 1.4 psi) or more

cardiagn.com

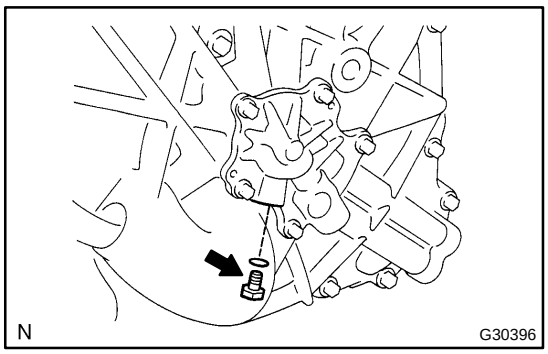

(g) Install a new O–ring and fluid pump cover plug.
Torque: 7.4 N·m (75 kgf·cm, 65 in.·lbf)

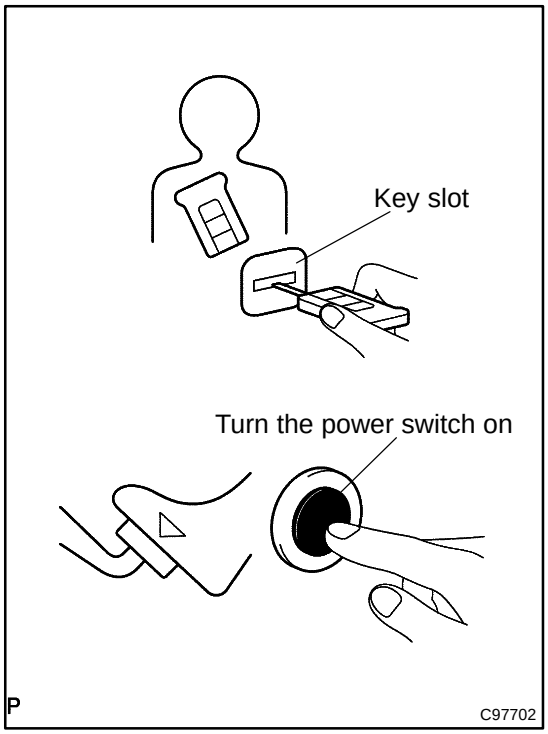

3. INSPECT SHIFT LEVER

(a) Inspect with the hybrid system started up
  (1) Insert the key into the key slot.
  (2) Carry the key with you or insert the key in the key slot (vehicles equipped with smart entry and start system)
  (3) Turn the power switch on (READY ON) while depressing the brake pedal.

Check if gears change according to the shift operation pattern. If the check result is abnormal, replace the shift lever assy.

HINT:

The shift operation pattern in READY ON (when the vehicle is stopped) is shown below.

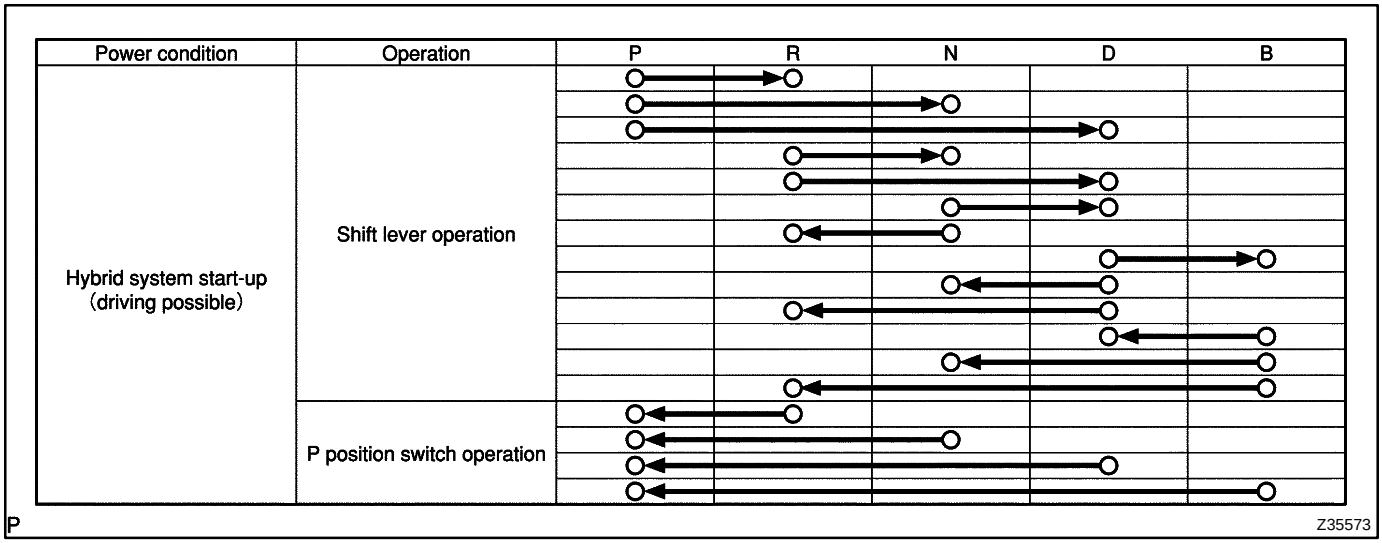

cardiagn.com

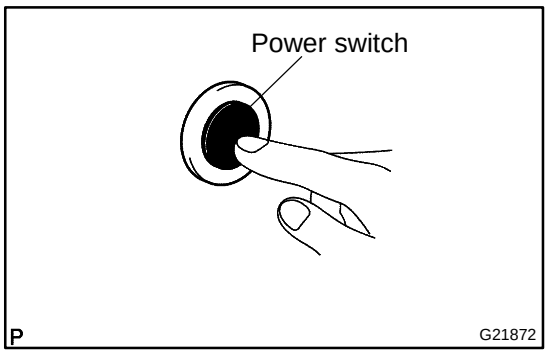

(b) Turn the power switch off when stopping.

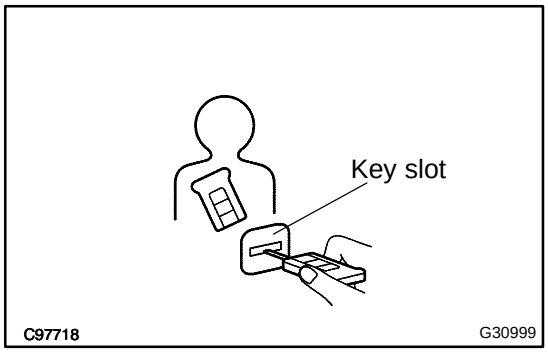

(c) Inspect with the power condition IG

HINT:

All electrical components operate but the hybrid system does not start–up.

(1) Insert the key into the key slot.

(2) Carry the key with you or insert the key in the key slot (vehicles equipped with smart entry and start system)

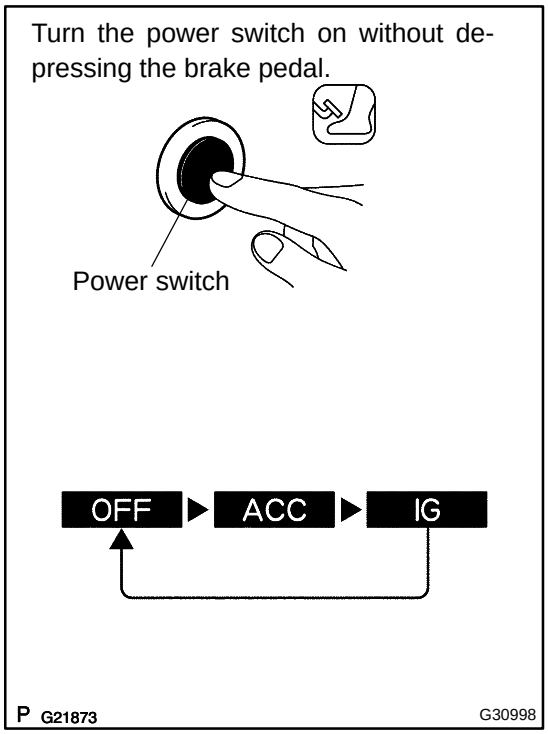

(d) Turn the power switch on once without depressing the brake pedal.

HINT:

This condition switches between OFF, ACC and IG each time the power switch is pressed.

Check if gears change according to the shift operation pattern. If the check result is abnormal, replace the shift lever assy.

HINT:

The shift operation pattern in power condition IG is shown below.

Power condition	Operation	P	R	N	D	B
IG (Driving not possible)	Shift lever operation	○	→	○		
	P position switch operation	○	←	○		

Z35574

cardiagn.com

COOLANT

2200V–01

REPLACEMENT

1. REMOVE ENGINE UNDER COVER LH

2. REMOVE ENGINE UNDER COVER RH

3. DRAIN COOLANT

(a) Remove the transaxle–side reserve tank cap.

NOTICE:

Do not remove the reserve tank cap when the engine is hot.

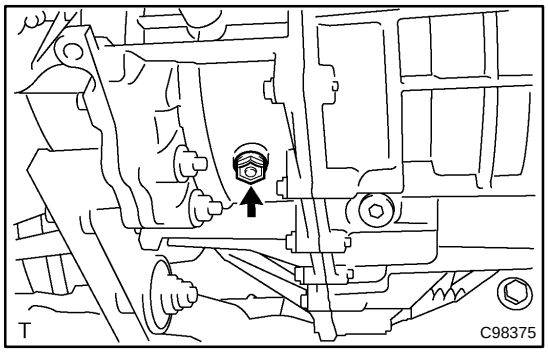

(b) Remove the plug shown in the illustration and drain the coolant.

(c) Install the plug using a new gasket.
Torque: 39 N·m (400 kgf·cm, 29 ft·lbf)

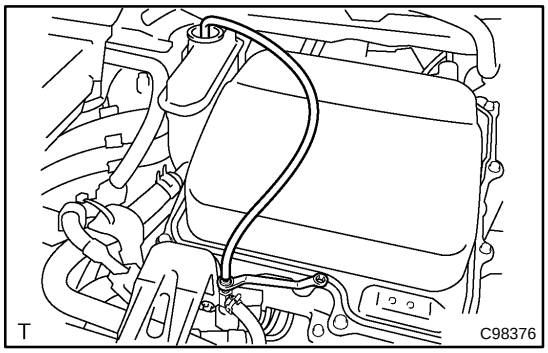

4. ADD COOLANT

(a) Loosen the bleeder plug shown in the illustration and connect a hose.

NOTICE:

Insert one end of the hose into the bleeder tank.

(b) Add coolant from the bleeder tank.

NOTICE:

Add genuine Toyota Super LLC coolant.

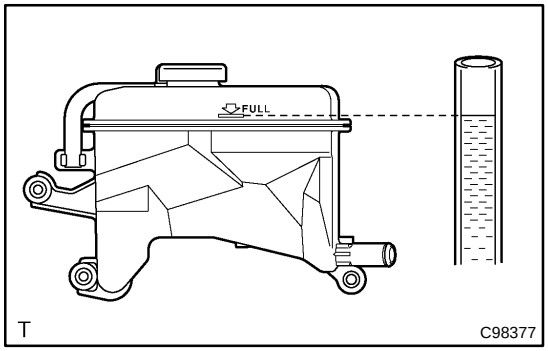

(c) Add coolant until the level of coolant in the hose attached to the bleeder tank reaches the same level as the FULL line of the reserve tank.

(d) Close the bleeder plug.

(e) Turn the power switch on (ON) and run the water pump for approximately 20 seconds before pushing the power switch off. (*1)

(f) Loosen the bleeder plug and bleed the air from within the transaxle after turn the power switch off. Close the bleeder plug again. (*2)

(g) Add coolant from the bleeder tank. (*3)

(h) Add coolant by repeating *1, *2 and *3.
Standard:
Air bleeding from the coolant system is completed when the noise made by the water pump becomes smaller and the circulation of coolant in the reserve tank improves.

cardiagn.com

HINT:
Loud noise made by the water pump and poor circulation of coolant in the reserve tank indicates that there is air in the coolant system.

(i) Turn the power switch on (ON) and run the water pump for approximately 5 minutes after completing air bleeding of the coolant system.

NOTICE:
Ensure that the bleeder plug is closed.

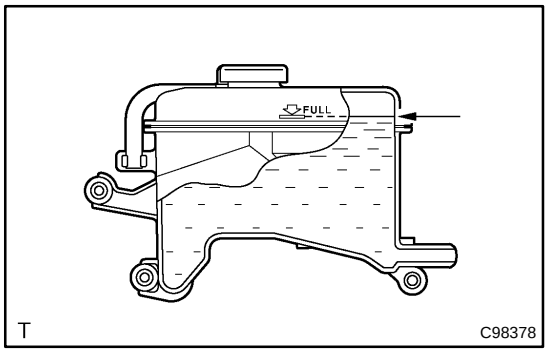

(j) Add coolant until the reserve tank is filled to the FULL mark.

5. CHECK FOR ENGINE COOLANT LEAKS (SEE PAGE 16–4)

cardiagn.com

SHIFT CONTROL ACTUATOR ASSY

2200W–01

REPLACEMENT

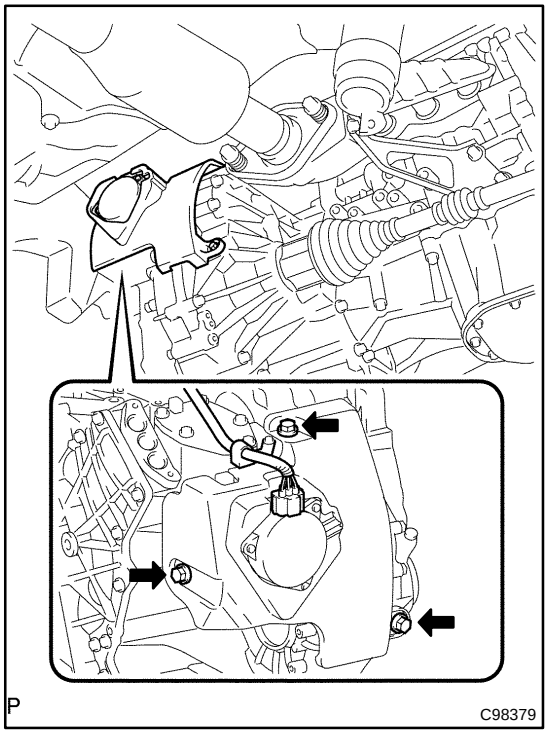

1. REMOVE SHIFT CONTROL ACTUATOR ASSY

(a) Disconnect the connector.

(b) Remove the 3 bolts. Remove the transmission case cover from the hybrid vehicle transaxle.

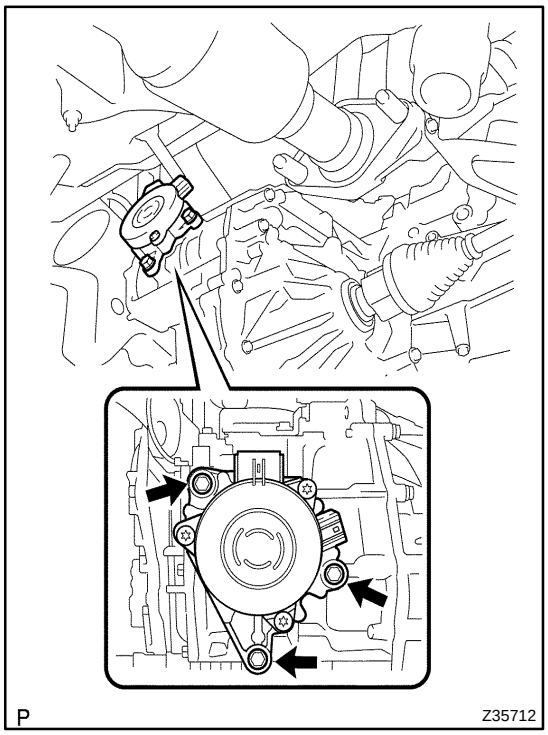

(c) Remove the 3 bolts. Remove the shift control actuator assy from the hybrid vehicle transaxle.

cardiagn.com

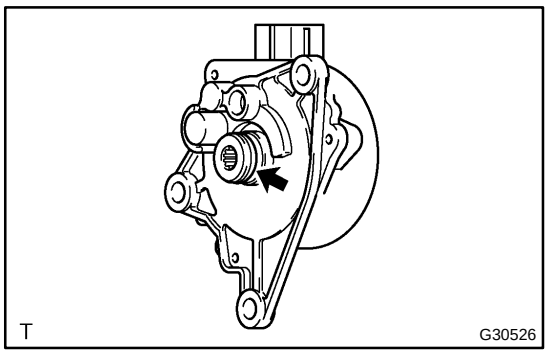

2. INSTALL SHIFT CONTROL ACTUATOR ASSY

(a) Apply a small amount of ATF WS to the O–ring.

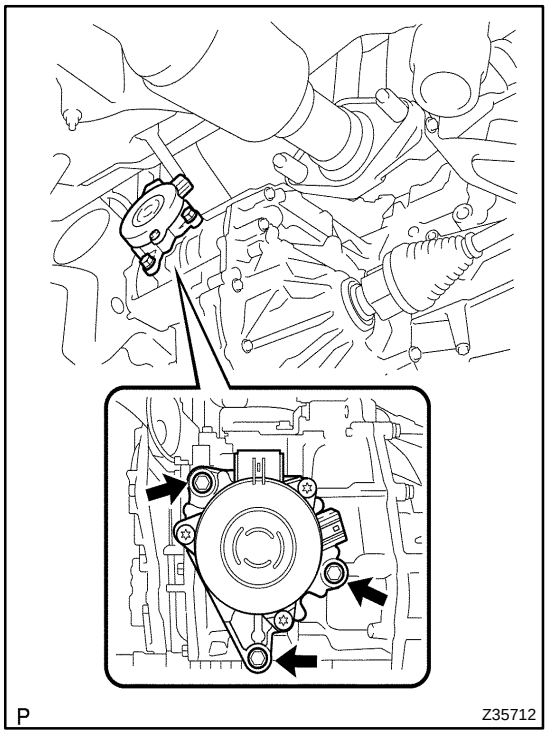

(b) Install the shift control actuator assy to the hybrid vehicle transaxle using the 3 bolts.
Torque: 16 N·m (160 kgf·cm, 12 ft·lbf)

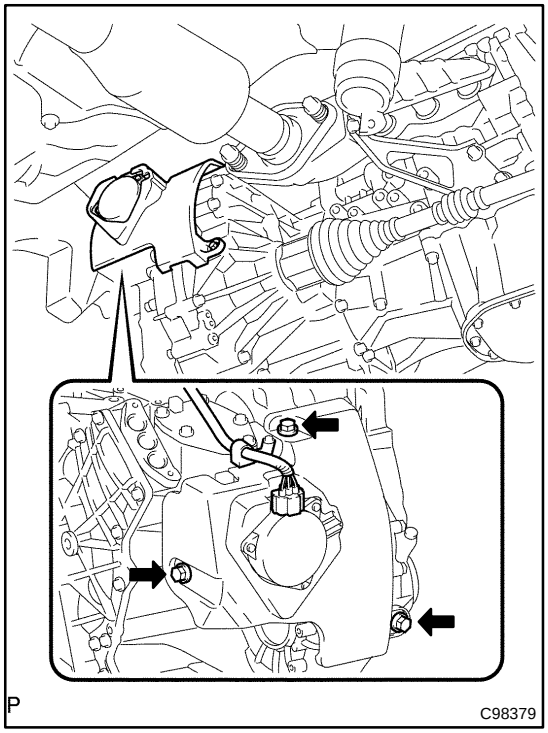

(c) Install the transmission case cover to the hybrid vehicle transaxle using the 3 bolts.
Torque: 7.0 N·m (71 kgf·cm, 62 in.·lbf)

(d) Connect the connector.

cardiagn.com

HYBRID VEHICLE TRANSAXLE ASSY

COMPONENTS

2200X–01

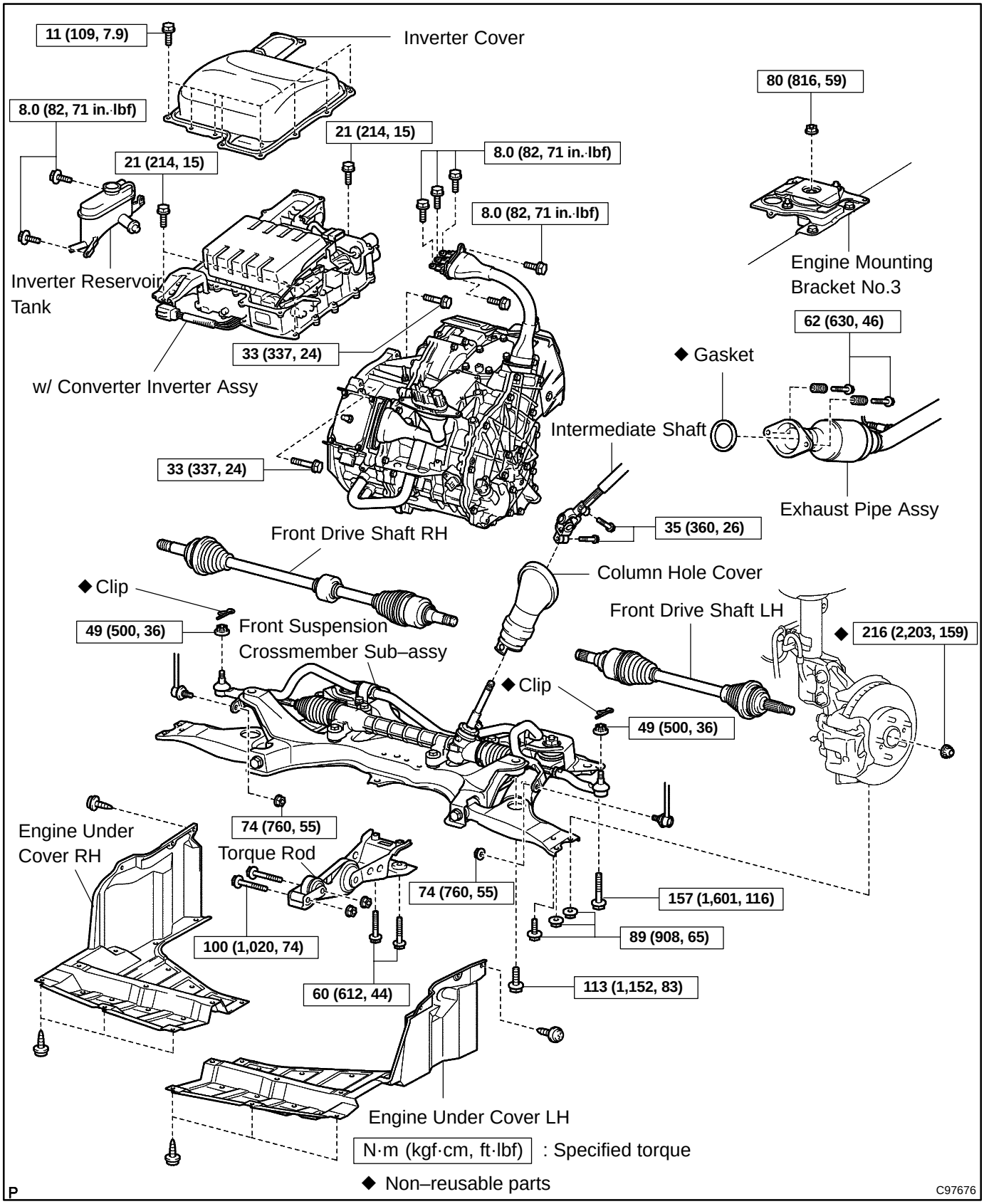

cardiagn.com

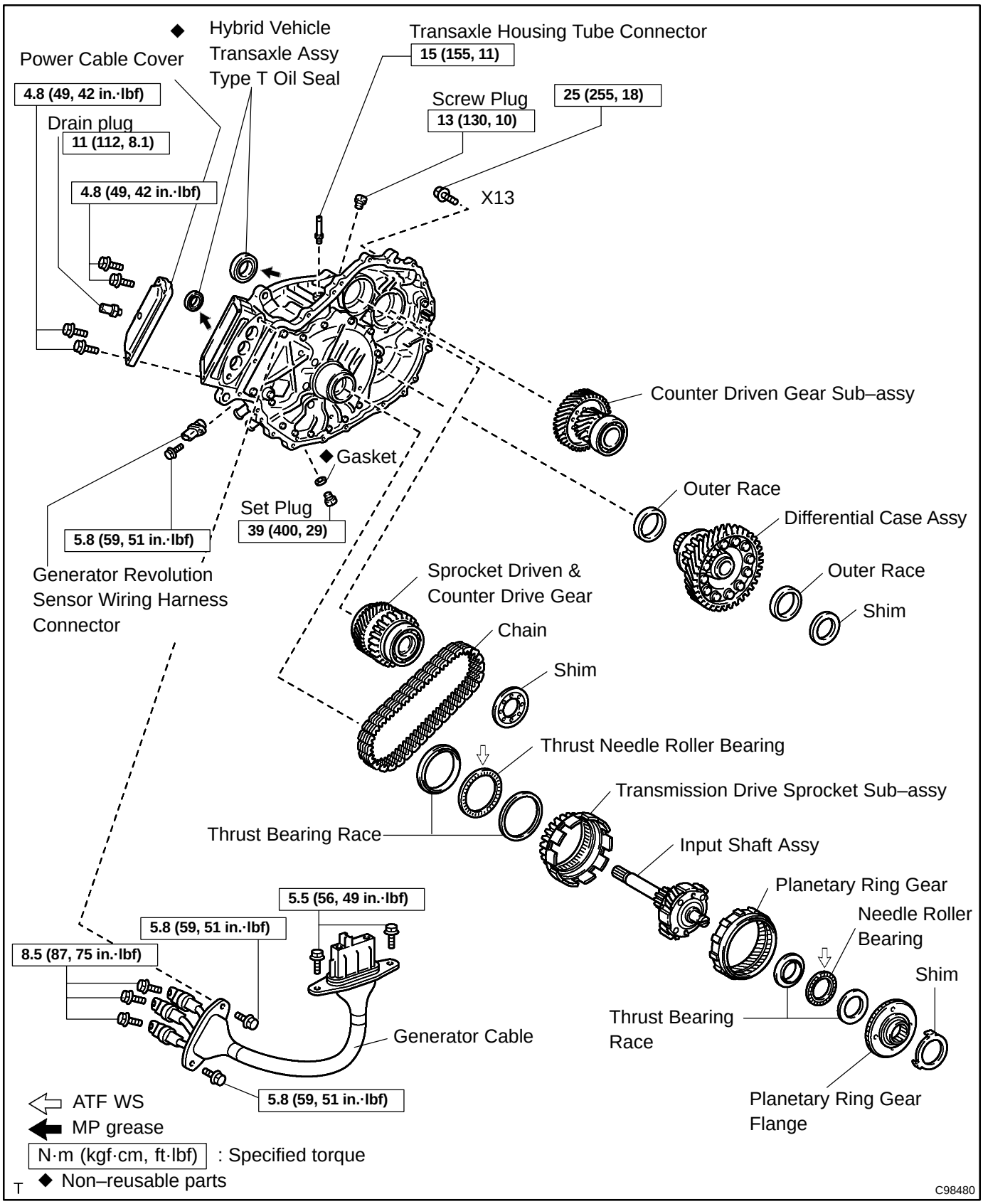

cardiagn.com

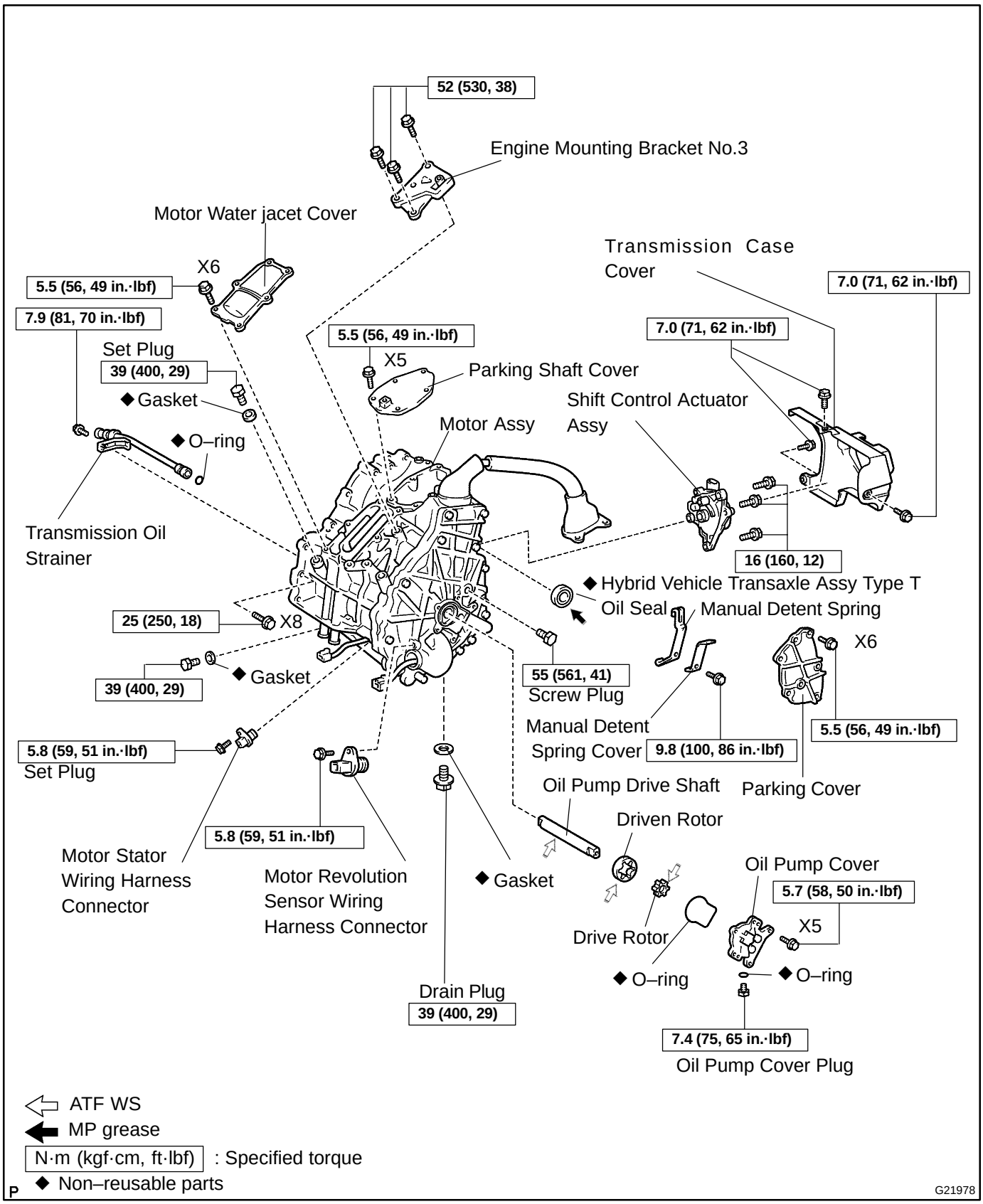

cardiagn.com

2200Y–01

REPLACEMENT

NOTICE:

- **When working on the high voltage systems, always wear insulated gloves.**
- **After removing the service plug grip, do not operate the power switch as it may damage the hybrid vehicle control ECU.**
- **Keep the removed service plug in your pocket to prevent other technicians from reconnecting it while you are servicing the vehicle.**
- **After removing the service plug grip, do not touch the high voltage connectors and terminals for 5 minutes.**

1. **DISCONNECT BATTERY NEGATIVE TERMINAL**
2. **REMOVE SERVICE PLUG GRIP (SEE PAGE 01–5)**
3. **REMOVE FRONT WHEELS**
4. **REMOVE ENGINE UNDER COVER LH**
5. **REMOVE ENGINE UNDER COVER RH**
6. **DRAIN COOLANT (SEE PAGE 22–4)**
7. **DRAIN TRANSAXLE OIL (SEE PAGE 22–1)**
8. **REMOVE HOOD SUB–ASSY (SEE PAGE 75–4)**
9. **REMOVE FR WIPER ARM RH (SEE PAGE 66–14)**
10. **REMOVE FR WIPER ARM LH (SEE PAGE 66–14)**
11. **REMOVE COWL TOP PANEL SUB–ASSY OUTER FRONT (SEE PAGE 21–23)**
12. **REMOVE W/CONVERTER INVERTER ASSY (SEE PAGE 21–23)**
13. **REMOVE AIR CLEANER ASSY (SEE PAGE 14–32)**

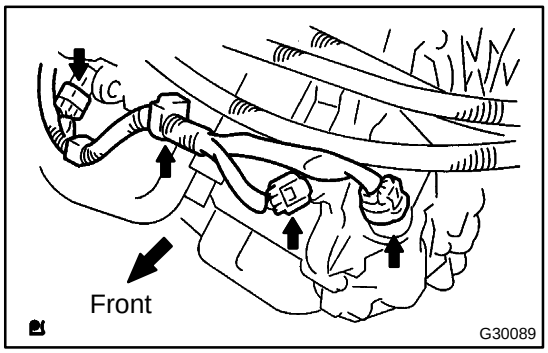

14. DISCONNECT WIRE HARNESS

(a) Disconnect the 3 connectors shown in the illustration and the clamp.

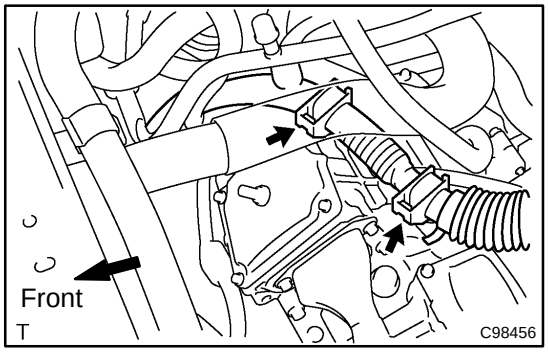

(b) Separate the 2 clamps shown in the illustration.

cardiagn.com

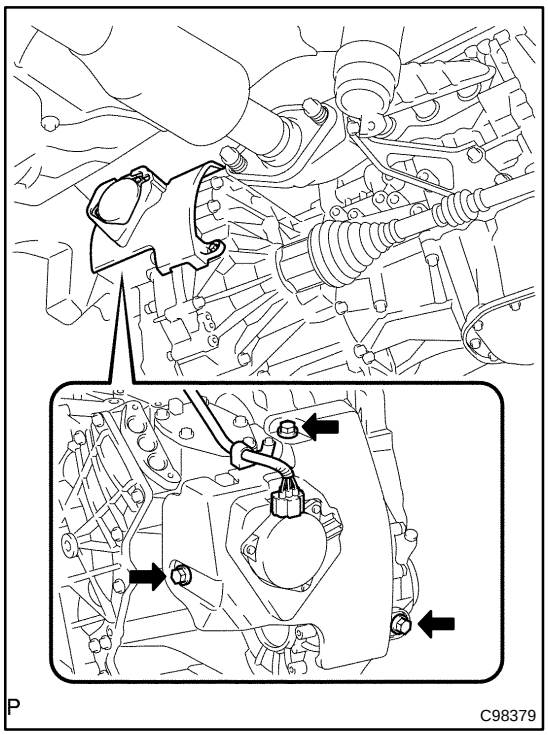

(c) Disconnect the connector.

(d) Remove the 3 bolts and the transmission case cover from the hybrid vehicle transaxle.

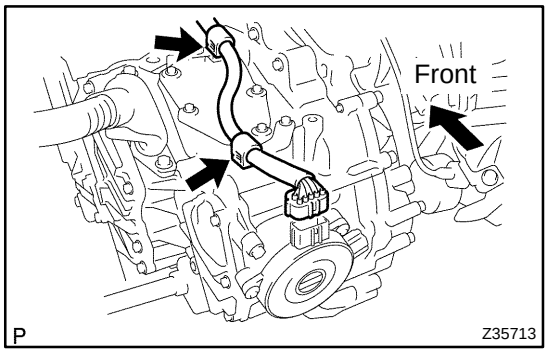

(e) Disconnect the 2 clamps.

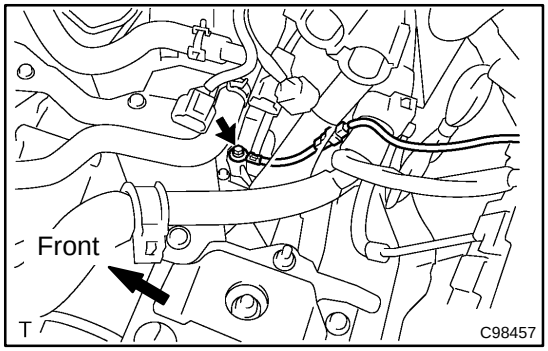

(f) Remove the bolt and the earth wire.

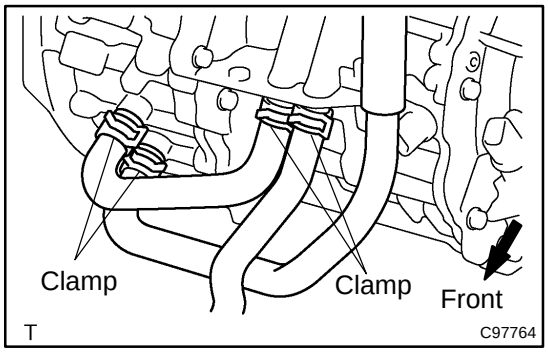

15. SEPARATE INVERTER COOLING HOSE NO.4

(a) Remove the 4 clamps and disconnect the 3 hoses.

cardiagn.com

16. REMOVE FRONT DRIVE SHAFT ASSY LH (SEE PAGE 30–7)

17. REMOVE FRONT DRIVE SHAFT ASSY RH (SEE PAGE 30–7)

SST 09520–01010, 09520–24010 (09520–32040)

18. SEPARATE EXHAUST PIPE ASSY (SEE PAGE 15–2)

19. REMOVE FRONT SUSPENSION CROSSMEMBER SUB–ASSY (SEE PAGE 14–32)

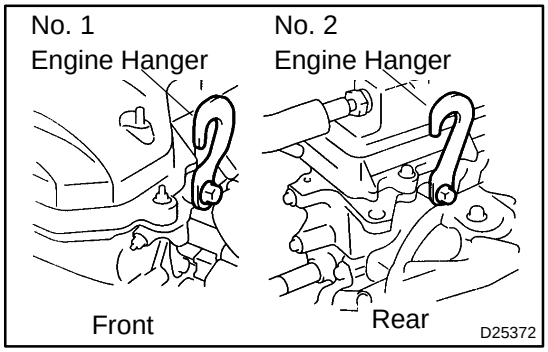

20. SUSPEND ENGINE ASSY

(a) Disconnect the 2 PCV hoses.

(b) Install the No.1 and No.2 engine hangers in the correct direction.

Parts No.:

No.1 engine hanger: 12281–22021

No.2 engine hanger: 12281–15040

Bolt: 91512–B1016

Torque: 38 N·m (387 kgf·cm, 28 ft·lbf)

(c) Attach the engine chain hoist to the engine hangers.

CAUTION:

Do not attempt to hang the engine by hooking the chain to any other parts.

21. SUPPORT HYBRID VEHICLE TRANSAXLE ASSY

(a) Using a transmission jack, support the hybrid vehicle transaxle assy.

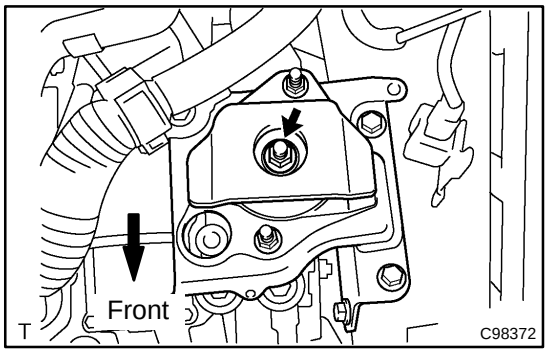

22. SEPARATE ENGINE MOUNTING BRACKET NO.3

(a) Remove the nut and disconnect engine mounting bracket No.3 from the engine mounting insulator.

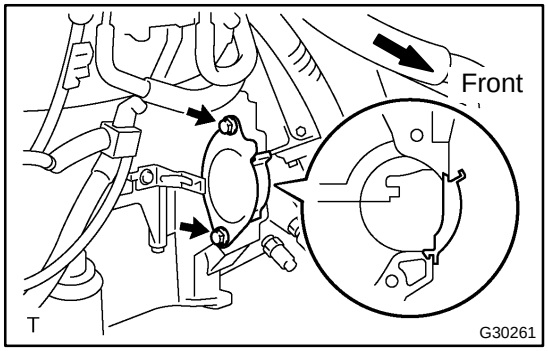

23. REMOVE HYBRID VEHICLE TRANSAXLE ASSY

(a) Remove the 2 bolts, starter cover and housing side cover.

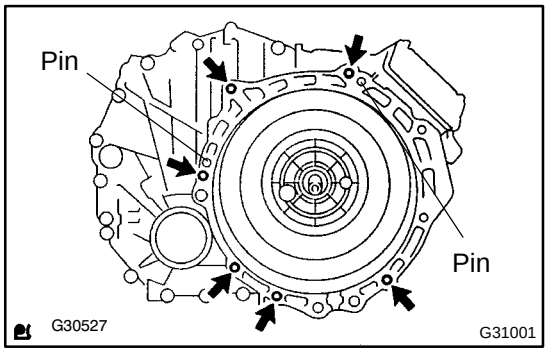

(b) Remove the 6 bolts and hybrid vehicle transaxle assy.

NOTICE:

To avoid damage to the knock pin, do not pry the connecting portion of the HV transaxle assy and the engine.

cardiagn.com

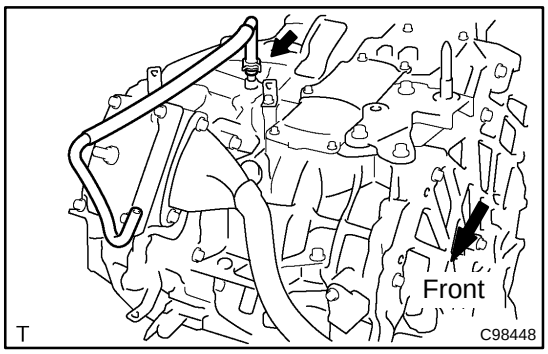

24. REMOVE INVERTER COOLING HOSE NO.6

(a) Remove the clamp and inverter cooling hose No.6.

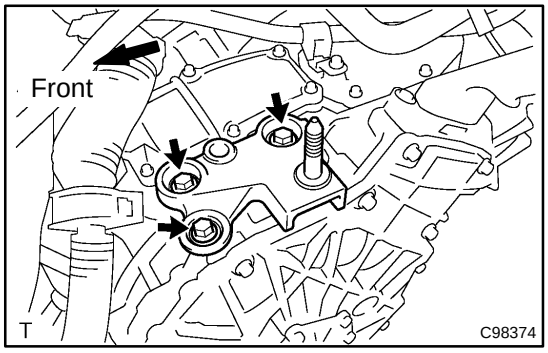

25. REMOVE ENGINE MOUNTING BRACKET NO.3

(a) Remove the 3 bolts and engine mounting bracket No.3.

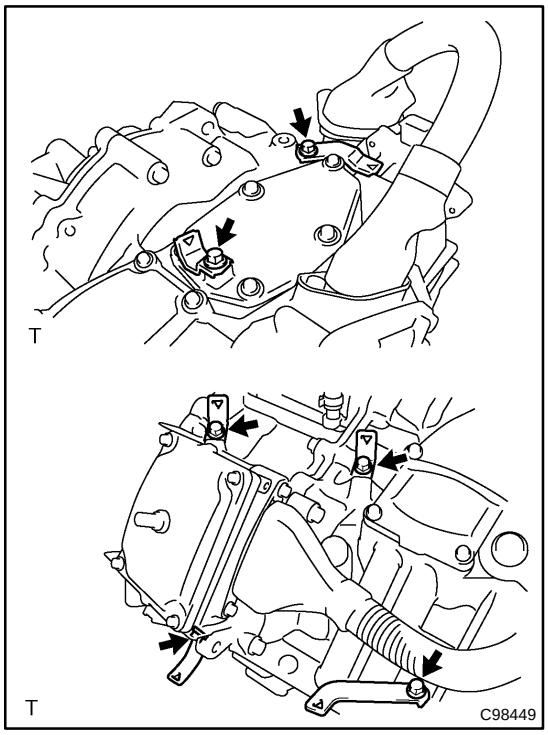

(b) Remove the 6 bolts and stay shown in the illustration.

cardiagn.com

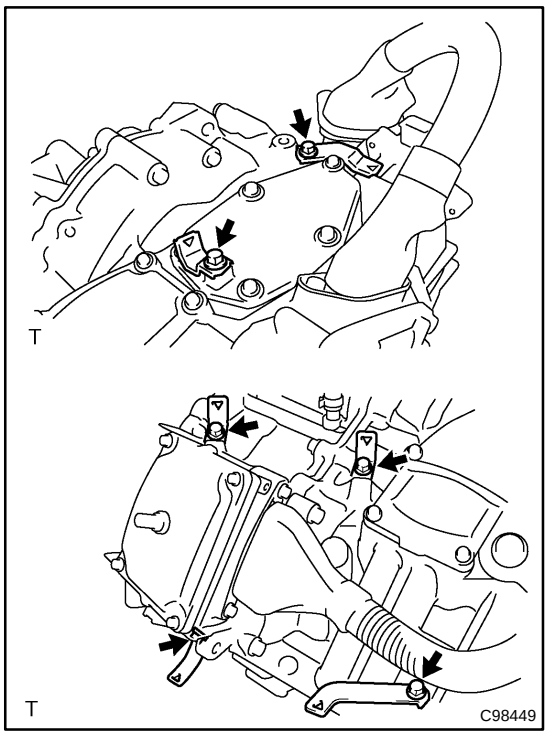

26. INSTALL ENGINE MOUNTING BRACKET NO.3

(a) Install the stay in the position shown in the illustration using 6 bolts.
Torque: 9.0 N·m (92 kgf·cm, 80 in.·lbf)

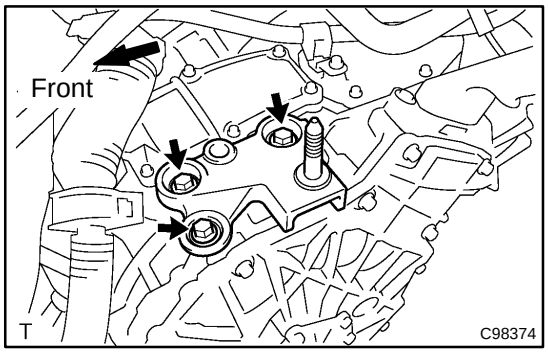

(b) Install engine mounting bracket No.3 using 3 bolts.
Torque: 52 N·m (530 kgf·cm, 38 ft·lbf)

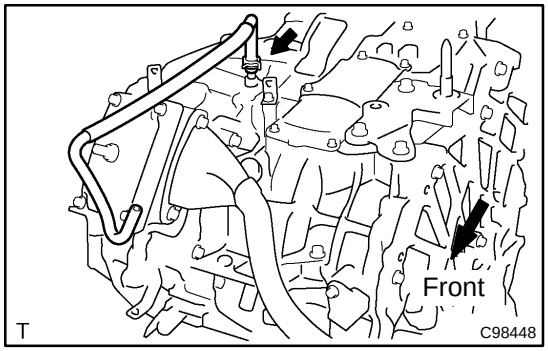

27. INSTALL INVERTER COOLING HOSE NO.6

(a) Connect the inverter cooling hose No.6 and install the clamp.

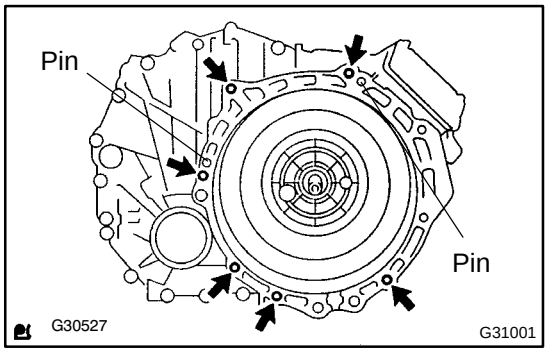

28. INSTALL HYBRID VEHICLE TRANSAXLE ASSY

(a) Install the hybrid vehicle transaxle assy with 6 bolts.
Torque: 33 N·m (337 kgf·cm, 24 ft·lbf)

NOTICE:

- **Ensure that the knock pin is installed on the engine side.**
- **Tighten the 6 bolts in the positions shown in the illustration by placing the HV transaxle assy in a horizontal position and aligning the knock pin and its hole.**

cardiagn.com

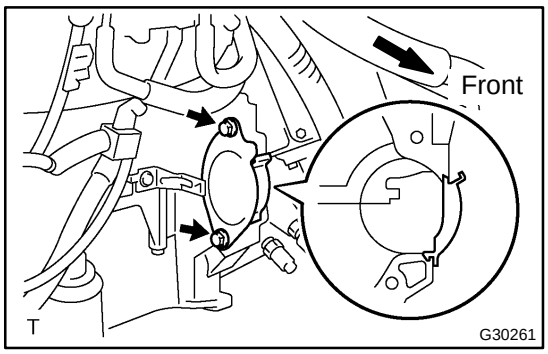

(b) Install the housing side cover and starter cover with the 2 bolts.
Torque: 32 N·m (326 kgf·cm, 23 ft·lbf)

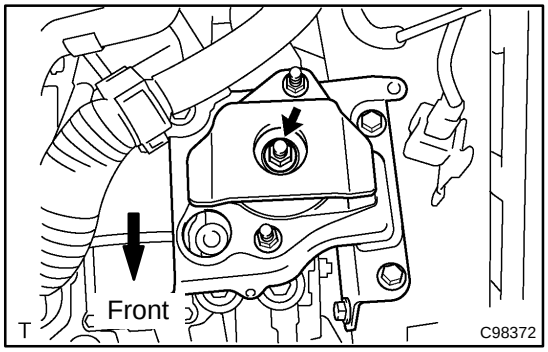

29. CONNECT ENGINE MOUNTING BRACKET NO.3
(a) Connect the engine mounting bracket No.3 to the engine mounting insulator using a nut.
Torque: 80 N·m (816 kgf·cm, 59 ft·lbf)

30. REMOVE ENGINE HANGER NO.1
(a) Remove the bolt and engine hanger.
31. INSTALL FRONT SUSPENSION CROSSMEMBER SUB–ASSY (SEE PAGE 14–32)
SST 09670–00010
32. CONNECT EXHAUST PIPE ASSY (SEE PAGE 15–2)
33. INSTALL FRONT DRIVE SHAFT ASSY LH (SEE PAGE 30–7)
34. INSTALL FRONT DRIVE SHAFT ASSY RH (SEE PAGE 30–7)

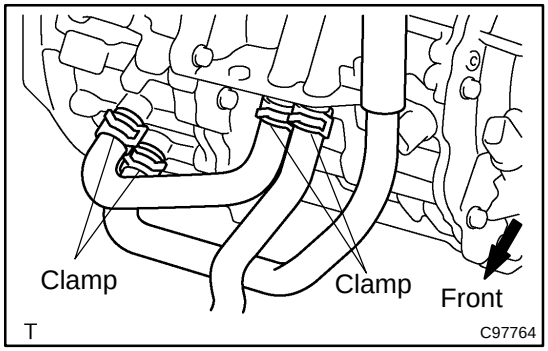

35. CONNECT INVERTER COOLING HOSE NO.4
(a) Connect the 3 hoses with the 4 clamps.

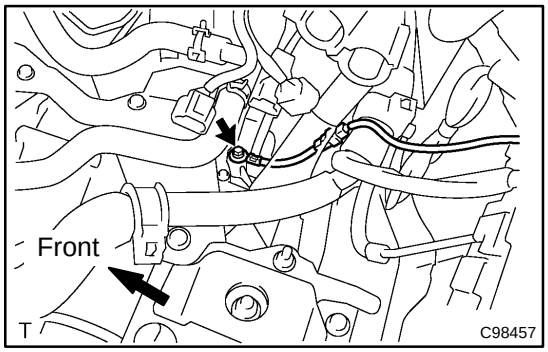

36. CONNECT CONNECTOR
(a) Connect the earth wire using a bolt.
Torque: 9.0 N·m (92 kgf·cm, 80 in.·lbf)

cardiagn.com

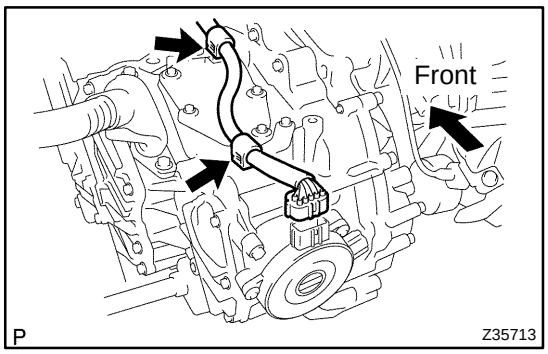

(b) Connect the 2 clamps.

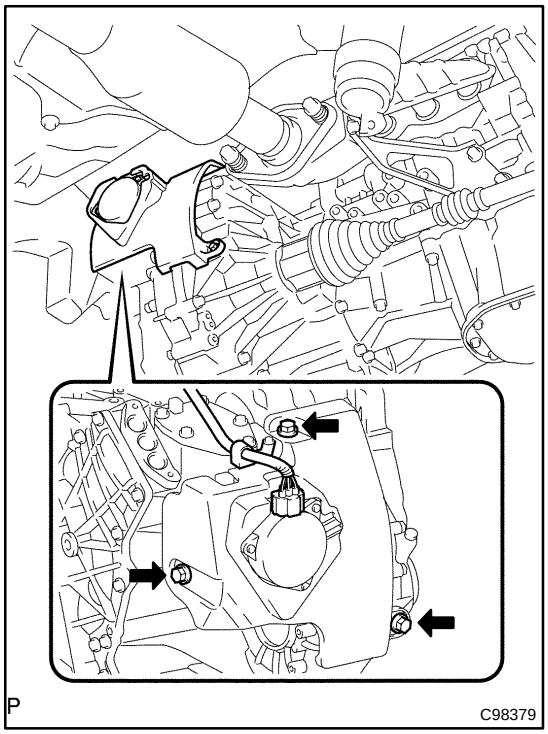

(c) Install the transmission case cover to the hybrid vehicle transaxle using the 3 bolts.
Torque: 7.0 N·m (71 kgf·cm, 62 in.·lbf)

(d) Connect the connector.

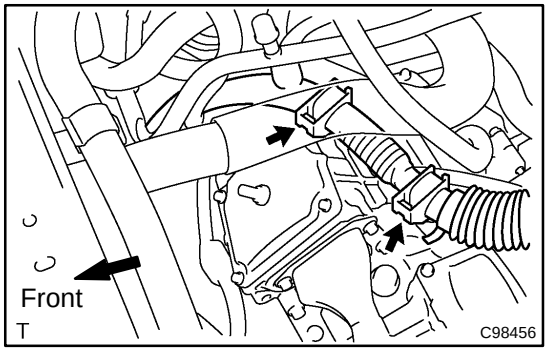

(e) Connect the clamps in the 2 locations shown in the illustration.

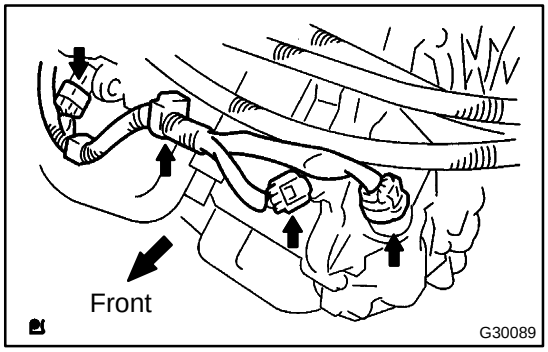

(f) Connect the clamp and the 3 connectors shown in the illustration.

cardiagn.com

37. INSTALL AIR CLEANER ASSY (SEE PAGE 14–32)
38. INSTALL W/CONVERTER INVERTER ASSY (SEE PAGE 21–23)
39. INSTALL COWL TOP PANEL SUB–ASSY OUTER FRONT (SEE PAGE 21–23)
40. INSTALL FR WIPER ARM LH (SEE PAGE 66–14)
41. INSTALL FR WIPER ARM RH (SEE PAGE 66–14)
42. INSTALL HOOD SUB–ASSY (SEE PAGE 75–4)
43. INSPECT HOOD SUB–ASSY (SEE PAGE 75–2)
44. ADJUST HOOD SUB–ASSY (SEE PAGE 75–2)
45. INSTALL ENGINE UNDER COVER RH
46. INSTALL ENGINE UNDER COVER LH
47. INSTALL FRONT WHEELS
48. INSTALL SERVICE PLUG GRIP (SEE PAGE 01–5)
49. CONNECT BATTERY NEGATIVE TERMINAL
50. ADD TRANSAXLE OIL
    Fluid type: AUTO FLUID WS
    Capacity: 3.8 liters (4.0 US qts, 3.3 Imp. qts)
51. INSPECT TRANSAXLE OIL (SEE PAGE 22–1)
52. ADD COOLANT (SEE PAGE 22–4)
53. CHECK FOR ENGINE COOLANT LEAKS (SEE PAGE 16–4)
54. INSPECT AND ADJUST FRONT WHEEL ALIGNMENT (SEE PAGE 26–6)
55. DELETE TORQUE ZERO POINT (SEE PAGE 05–1211)
56. PERFORM INITIALIZATION (SEE PAGE 01–28)

cardiagn.com

2200Z–01

OVERHAUL

NOTICE:

- **When working on the high voltage systems, always wear insulated gloves.**
- **After removing the service plug grip, do not operate the power switch as it may damage the hybrid vehicle control ECU.**
- **Keep the removed service plug in your pocket to prevent other technicians from reconnecting it while you are servicing the vehicle.**
- **After removing the service plug grip, do not touch the high voltage connectors and terminals for 5 minutes.**

1. REMOVE HYBRID VEHICLE TRANSAXLE ASSY (SEE PAGE 22–11)

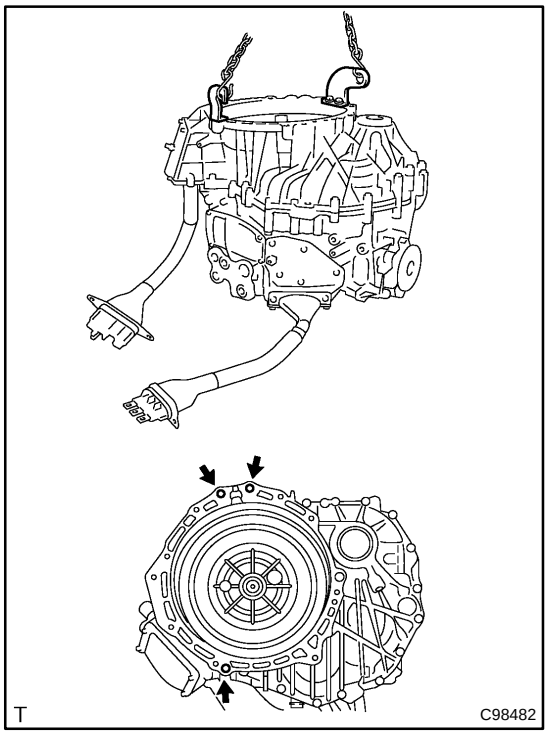

2. REMOVE HYBRID VEHICLE GENERATOR ASSY

(a) Install the engine hanger in the position shown in the illustration.

HINT:

- Engine hanger 12281–67070, S1228–11781
- Bolt 91642–81045, 91642–81265
- Nut 90178–10001, 90179–12147

(b) Using an engine sling device and chain block, set the transaxle assy with the generator side facing upward.

NOTICE:

- **Fix the transaxle assy on a wooden block, etc.**
- **Fix the transaxle assy so that no excessive force is applied to the cable.**

(c) Remove the drain pulg.

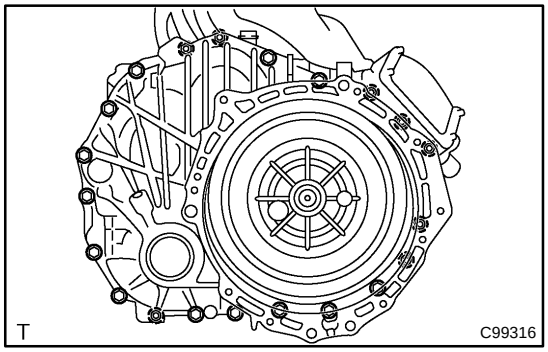

(d) Remove the 21 bolts shown in the illustration.

HINT:

- 13 bolts on the generator assy side.
- 8 bolts on the motor assy side.

cardiagn.com

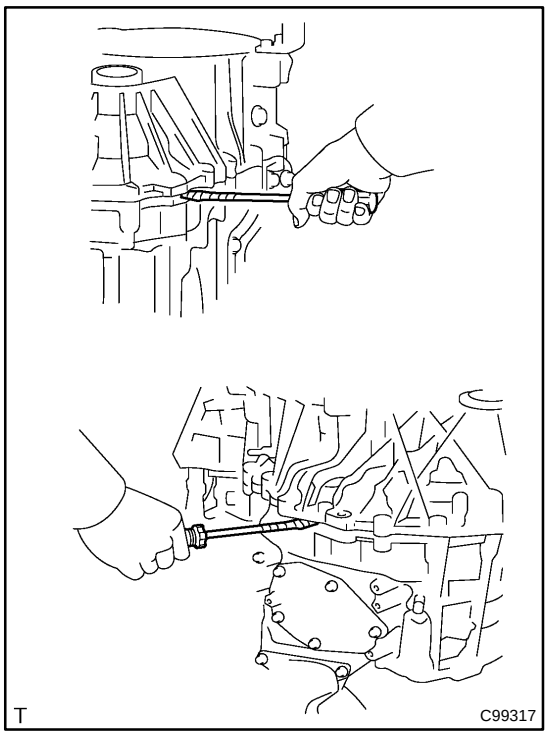

(e) Separate the motor assy and generator assy by inserting a flat–head screwdriver in the position shown and prying the two apart.

NOTICE:

Be careful not to damage the two faces of each part.

(f) Using an engine sliding device and a chain block, raise the generator assy.

HINT:

Raise the generator assy approximately 3 to 4 cm.

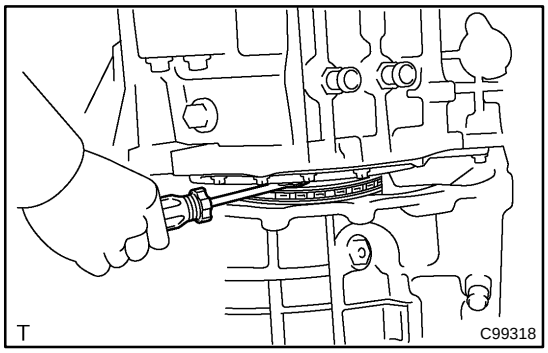

(g) Apply protective tape to the head of a flat–head screwdriver and use it to hold down the chain with input shaft assy while removing the generator assy.

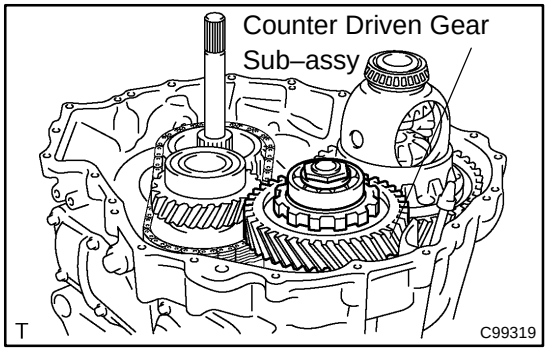

3. REMOVE DIFFERENTIAL DRIVE PINION

(a) Remove the counter driven gear from the HV motor.

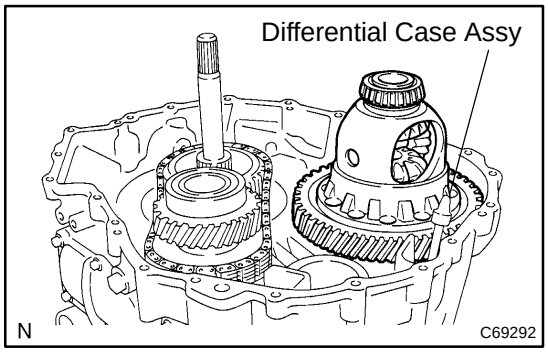

4. REMOVE DIFFERENTIAL CASE ASSY

(a) Remove the differential case assy from the HV motor.

cardiagn.com

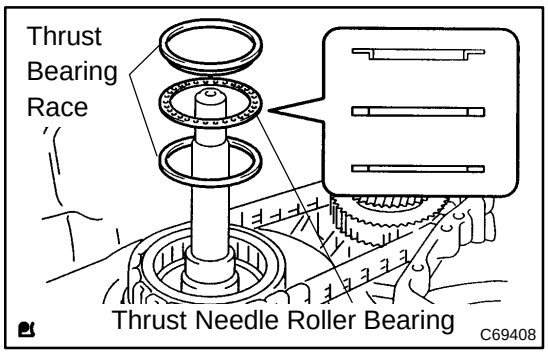

5. REMOVE TRANSMISSION DRIVE SPROCKET SUB–ASSY

(a) Remove the thrust bearing race, thrust needle roller bearing and thrust bearing race No.1.

HINT:
The thrust bearing race may be attached to the generator assy side.

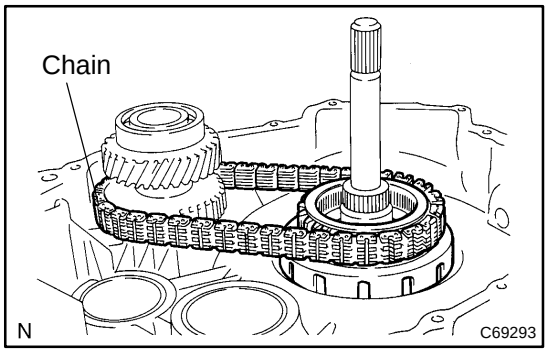

(b) Remove the drive sprocket and chain.

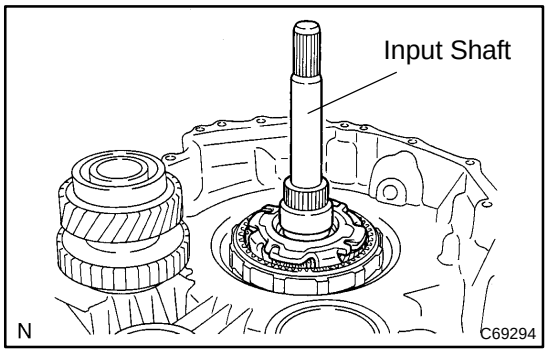

6. REMOVE INPUT SHAFT ASSY

(a) Remove the input shaft assy.

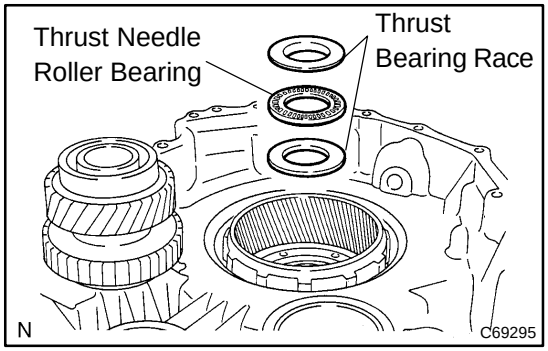

7. REMOVE PLANETARY RING GEAR

(a) Remove the thrust bearing race, thrust needle roller bearing and thrust bearing race No.1.

HINT:
The thrust bearing race may be attached to the input shaft side.

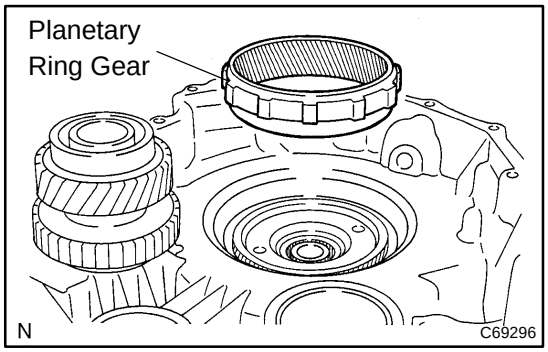

(b) Remove the planetary ring rear.

cardiagn.com

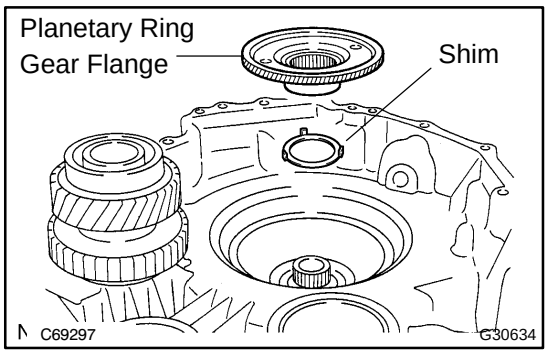

8. REMOVE PLANETARY RING GEAR FLANGE

(a) Remove the planetary ring gear flange and shim.

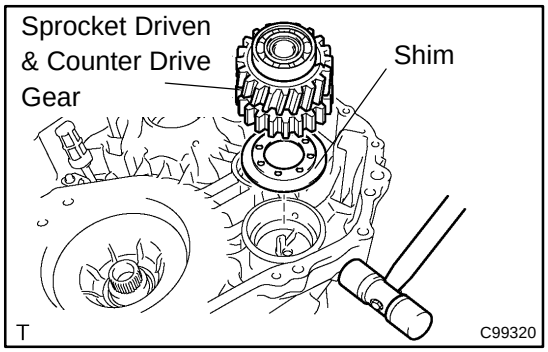

9. REMOVE SPROCKET DRIVEN & COUNTER DRIVE GEAR

(a) Use a plastic hammer to tap the motor assy case and remove the counter drive gear and shim.

HINT:
Remove the counter drive gear while pulling it vertically.

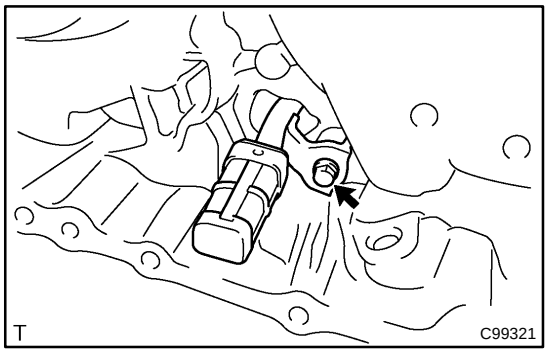

10. REMOVE TRANSMISSION OIL STRAINER

(a) Remove the bolt and oil strainer.

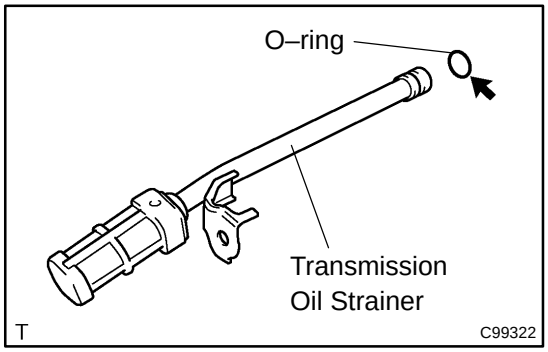

(b) Remove the O–ring from the oil strainer.

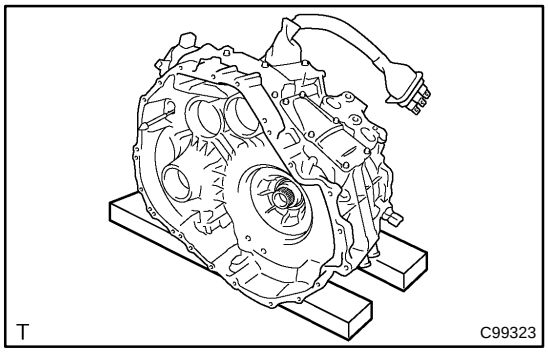

11. REMOVE HV MOTOR ASSY

(a) Fix the motor assy on a wooden block, etc.

cardiagn.com

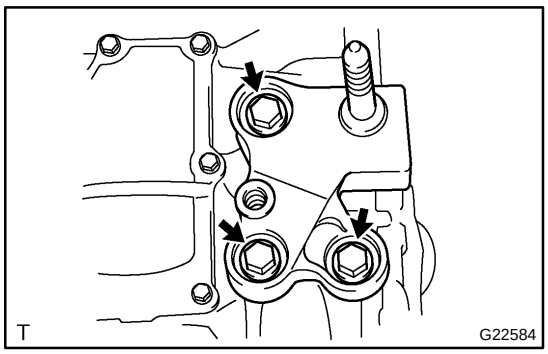

12. REMOVE ENGINE MOUNTING BRACKET NO.3

(a) Remove the 3 bolts and mounting bracket.

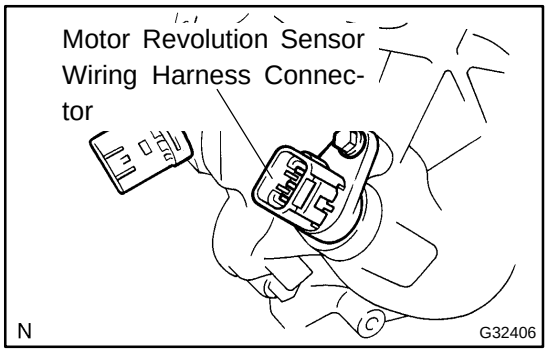

13. REMOVE MOTOR REVOLUTION SENSOR WIRING HARNESS CONNECTOR

(a) Remove the bolt and pull out the HV motor side motor revolution sensor wire harness connector (gray).

NOTICE:

Do not pull on the connector any more than necessary.

(b) Remove the connector and motor revolution sensor wire harness connector (gray).

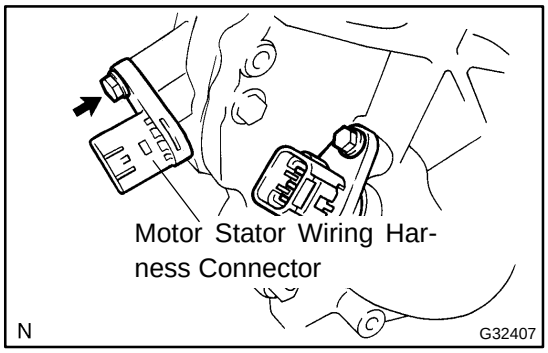

14. REMOVE MOTOR STATOR WIRING HARNESS CONNECTOR

(a) Remove the bolt and pull out the motor stator wire harness connector (black).

NOTICE:

Do not pull on the sensor connector any more than necessary.

(b) Remove the connector and the motor stator wire harness connector (black).

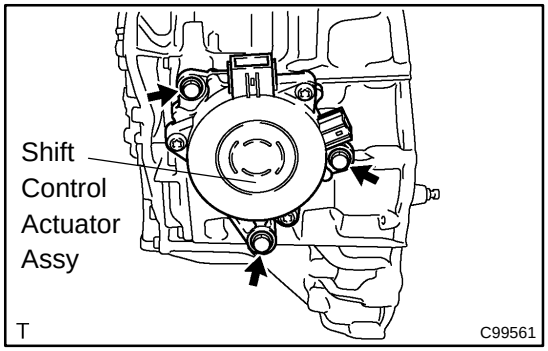

15. REMOVE SHIFT CONTROL ACTUATOR ASSY

(a) Remove the 3 bolts and shift control actuator assy.

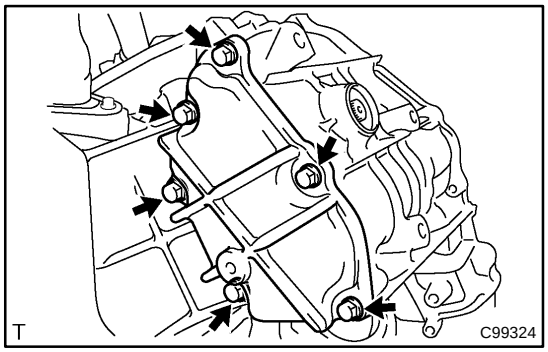

16. REMOVE PARKING COVER

(a) Remove the 6 bolts and the parking cover.

cardiagn.com

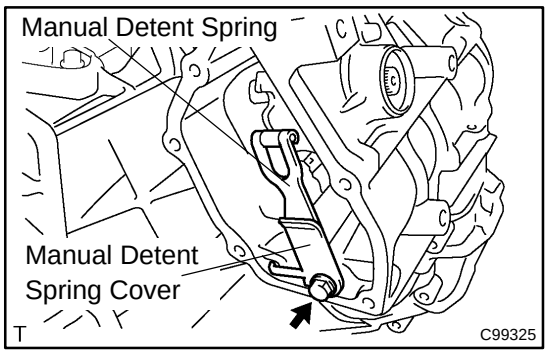

17. REMOVE MANUAL DETENT SPRING SUB–ASSY

(a) Remove the bolt, manual detent spring cover and manual detent spring.

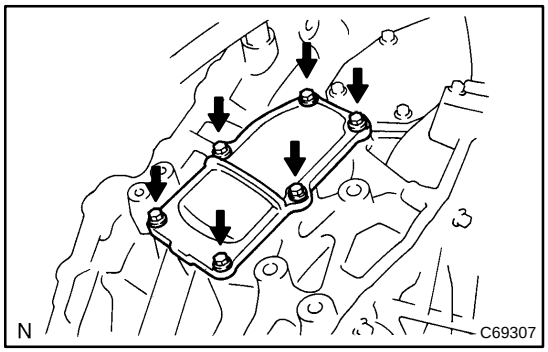

18. REMOVE MOTOR WATERJACET COVER

(a) Remove the 6 bolts and motor water jacket cover.

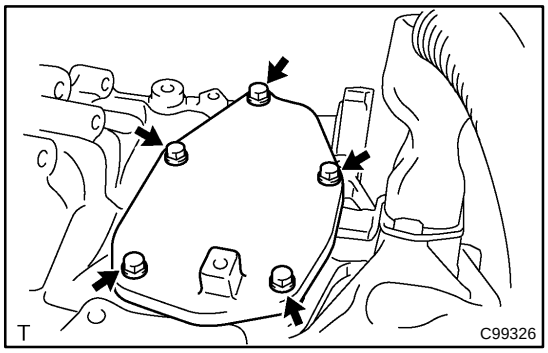

19. REMOVE PARKING SHAFT COVER

(a) Remove the 5 bolts and the parking shaft cover.

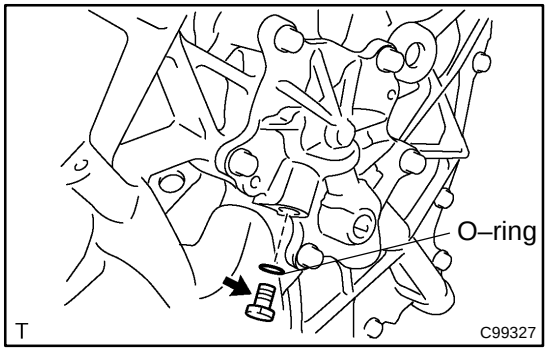

20. REMOVE TRANSMISSION OIL PUMP COVER SUB–ASSY

(a) Remove the oil pump cover plug and O–ring.

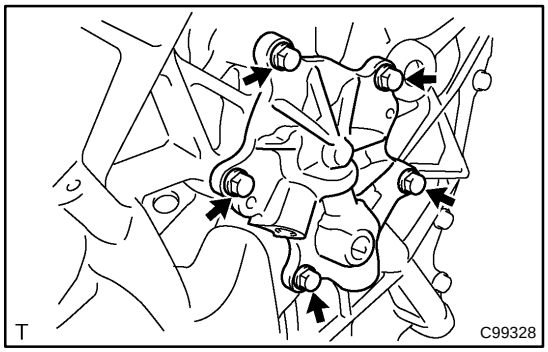

(b) Remove the 5 bolts and oil pump cover.

cardiagn.com

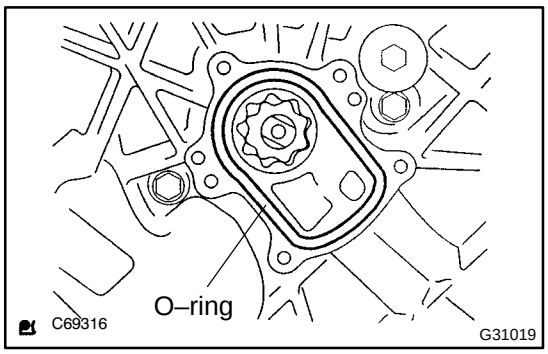

(c) Remove the O–ring.

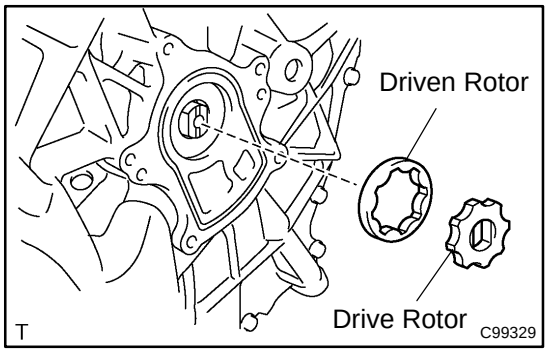

21. REMOVE OIL PUMP DRIVE SHAFT

(a) Remove the oil pump drive rotor and oil pump driven rotor.

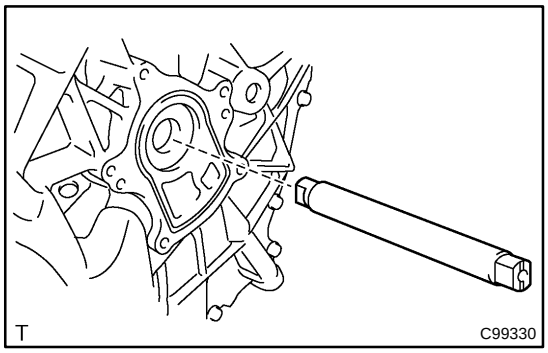

(b) Remove the oil pump drive shaft.

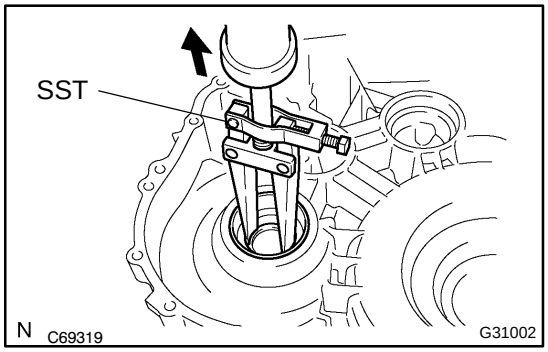

22. REMOVE DIFFERENTIAL CASE LH TAPERED ROLLER BEARING

(a) Using SST, remove the differential case tapered roller bearing LH outer race and shim.
SST 09308–00010

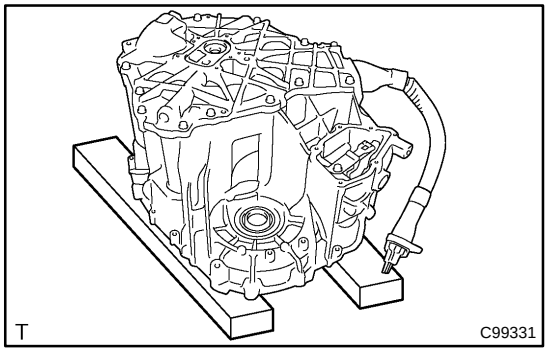

23. REMOVE HYBRID VEHICLE TRANSAXLE ASSY TYPE T OIL SEAL

(a) Fix the motor assy on a wooden block, etc.

NOTICE:

Do not use a wooden block with the parking lock rod.

cardiagn.com

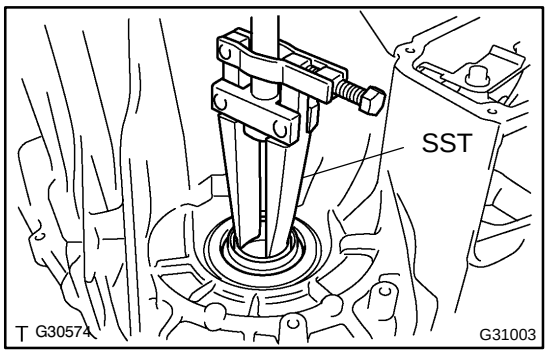

(b) Using SST, remove the oil seal.
SST 09308–00010

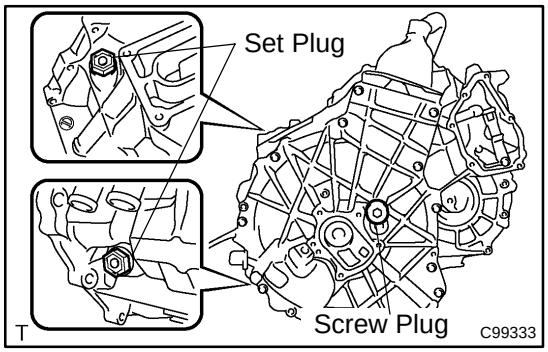

24. REMOVE TRANSAXLE HOUSING & CASE W/HEAD STRAIGHT SCREW PLUG

(a) Remove the set plug and gasket.

(b) Using a hexagon wrench (10 mm), remove the screw plugs.

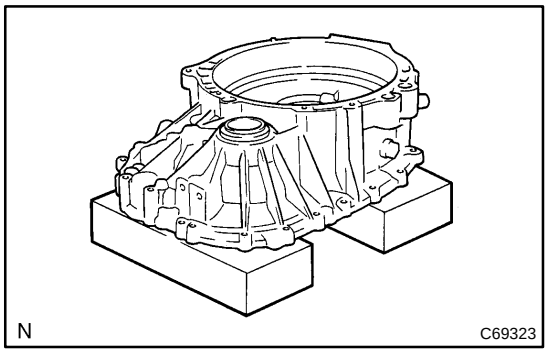

25. FIX HYBRID VEHICLE GENERATOR ASSY

(a) Fix the generator assy on a wooden block, etc.

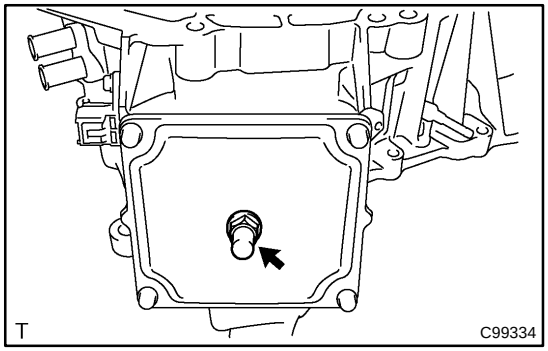

26. REMOVE POWER CABLE COVER

(a) Remove the breather plug.

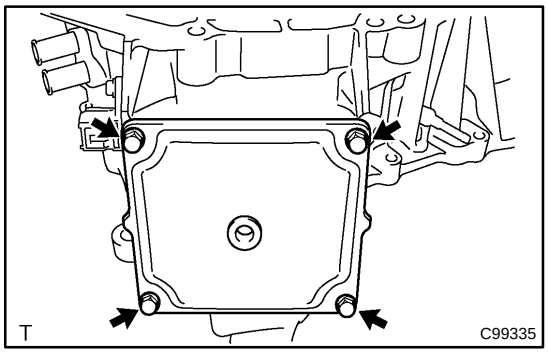

(b) Remove the 4 bolts and power cable cover.

cardiagn.com

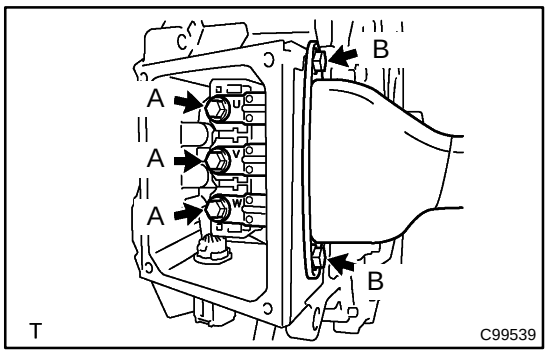

27. REMOVE GENERATOR CABLE

(a) Remove the 5 bolts and generator cable.

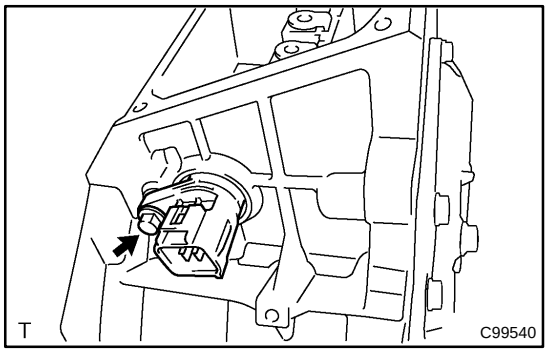

28. REMOVE GENERATOR MOTOR REVOLUTION SENSOR WIRING HARNESS CONNECTOR

(a) Remove the bolt and pull out the HV generator side generator revolution sensor wire harness connector.

NOTICE:

Do not pull on the sensor connector any more than necessary.

(b) Disconnect the connector and the HV generator side generator revolution sensor wire harness connector.

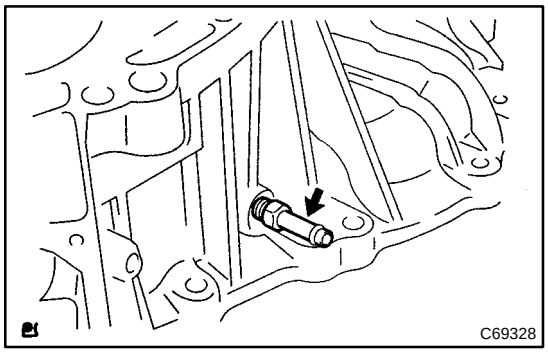

29. REMOVE TRANSAXLE HOUSING TUBE CONNECTOR

(a) Remove the transaxle housing tube connector.

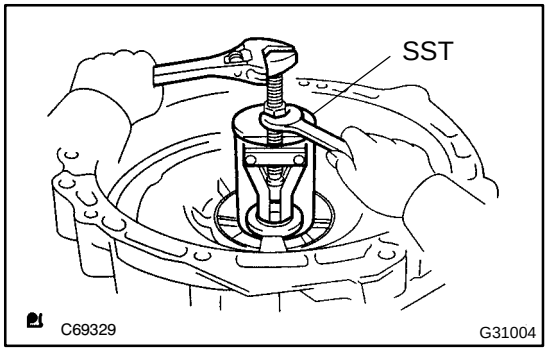

30. REMOVE HYBRID VEHICLE TRANSAXLE ASSY TYPE T OIL SEAL

(a) Using SST, remove the oil seal.
SST 09612–30012

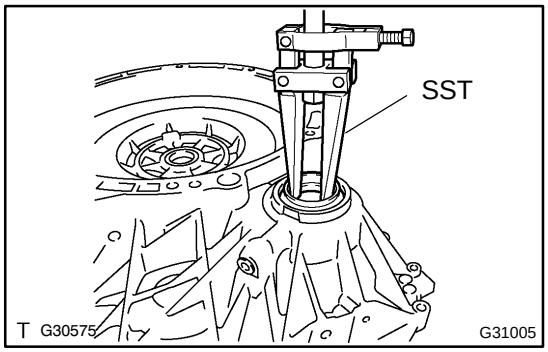

31. REMOVE HYBRID VEHICLE TRANSAXLE ASSY TYPE T OIL SEAL

(a) Using SST, remove the oil seal.
SST 09308–00010

cardiagn.com

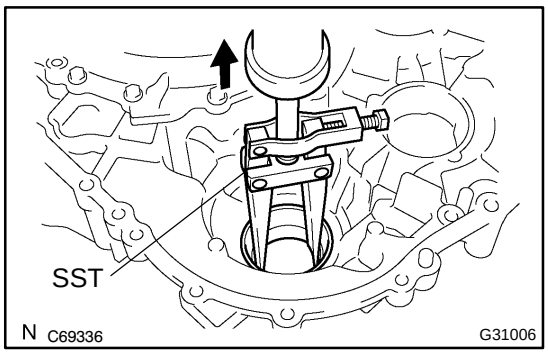

32. REMOVE DIFFERENTIAL CASE RH TAPERED ROLLER BEARING

(a) Using SST, remove the differential case tapered roller bearing LH outer race.
SST 09308–00010

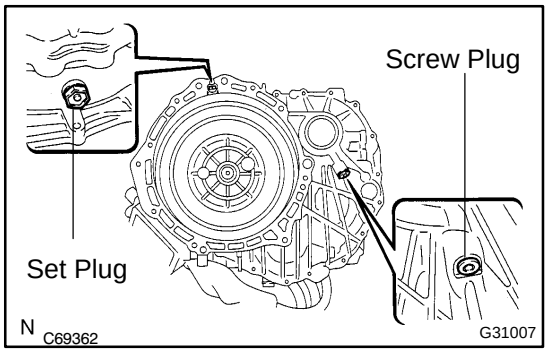

33. REMOVE TRANSAXLE HOUSING & CASE W/HEAD STRAIGHT SCREW PLUG

(a) Remove the set plug and gasket.
(b) Using a socket wrench (6 mm), remove the screw plug.

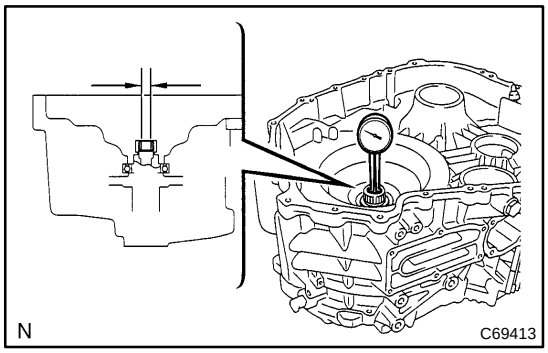

34. INSPECT HV MOTOR ASSY

(a) Inspect the inside diameter of the rotor bush
(1) Using a dial indicator, measure the inside diameter of the motor assy rotor bush.
Standard diameter:
20.025 to 20.046 mm (0.78838 to 0.78921 in.)
Maximum diameter:
20.096 mm (0.79118 in.)

NOTICE:
Take the measurement in different locations and use the average of the measurements taken.

HINT:
If the inside diameter exceeds the maximum, replace the motor assy with a new one.

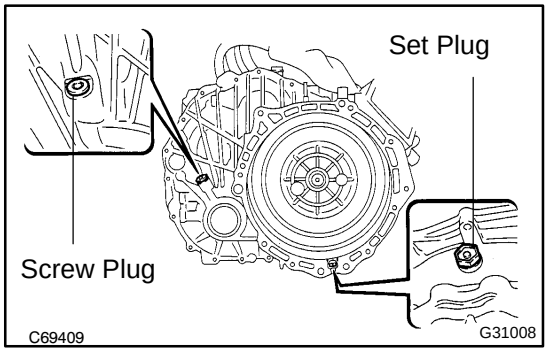

35. INSTALL TRANSAXLE HOUSING & CASE W/HEAD STRAIGHT SCREW PLUG

(a) Install a new gasket and the set plug.
Torque: 39 N·m (400 kgf·cm, 29 ft·lbf)
(b) Apply liquid sealant 1344 to the first 2 to 3 threads from the end of the screw plug.

NOTICE:
Clean and degrease the screw and screw hole.

(c) Using a socket hexagon wrench (6 mm), install the screw plug.
Torque: 13 N·m (130 kgf·cm, 9 ft·lbf)

cardiagn.com

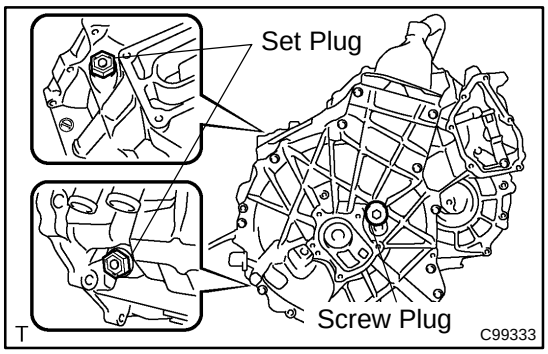

36. INSTALL TRANSAXLE HOUSING & CASE W/HEAD STRAIGHT SCREW PLUG

(a) Install a new gasket and the set plug.
Torque: 39 N·m (400 kgf·cm, 29 ft·lbf)

HINT:
Tighten the set plug after adding transaxle oil.

(b) Apply liquid sealant 1324 to the first 2 to 3 threads from the end of the screw plug.

NOTICE:
Clean and degrease the screw and screw hole.

(c) Using a socket hexagon wrench (10 mm), install the screw plug.
Torque: 55 N·m (561 kgf·cm, 41 ft·lbf)

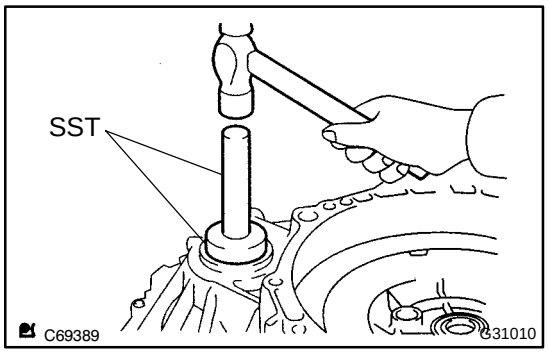

37. INSTALL HYBRID VEHICLE TRANSAXLE ASSY TYPE T OIL SEAL

(a) Using SST, install a new oil seal.
Oil seal depth: 2.7 ± 0.5 mm (0.106 ± 0.020 in.)

(b) Coat the lip of the oil seal with MP grease No.2.
SST 09350–32014 (09351–32130, 09351–32150), 09950–70010 (09951–07100)

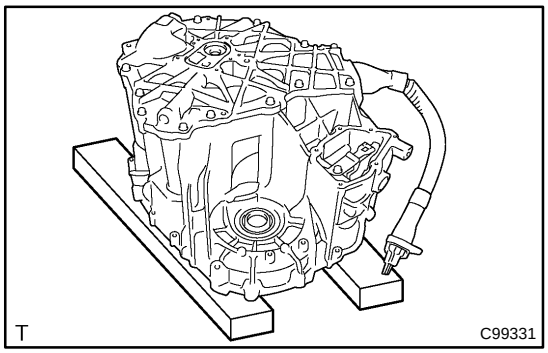

38. INSTALL HYBRID VEHICLE TRANSAXLE ASSY TYPE T OIL SEAL

(a) Fix the motor assy on a wooden block, etc.

NOTICE:
Do not use a wooden block with the parking lock rod.

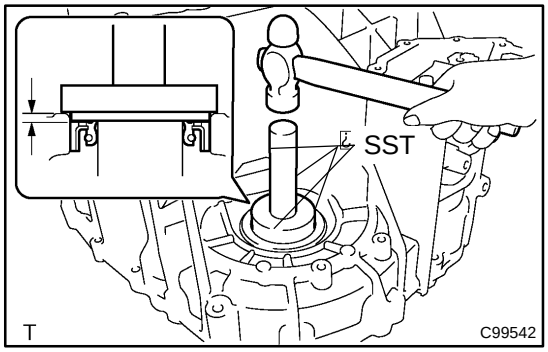

(b) Using SST, install the oil seal.
Oil seal depth: 2.7 ± 0.5 mm (0.106 ± 0.020 in.)

(c) Coat the lip of the oil seal with MP grease No.2.
SST 09350–32014 (09351–32130, 09351–32150), 09950–70010 (09951–07100)

cardiagn.com

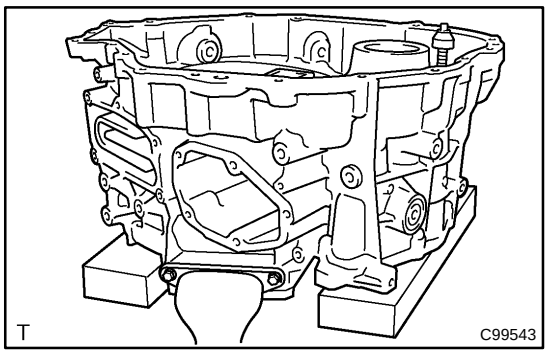

39. ADJUST PRELOAD

(a) Adjust the differential case assy preload.

(1) Fix the motor assy on a wooden block, etc.

NOTICE:

- **Fix the motor assy horizontally.**
- **Unreasonable force should not be applied to the cable.**

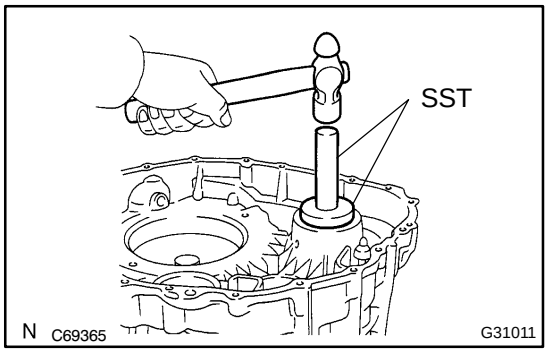

(2) Using SST, install the differential case tapered roller bearing LH outer race and shim to the motor assy.

SST 09950–60020 (09951–00680), 09950–70010 (09951–07100)

NOTICE:

Replace the shim and outer race with new ones if they are deformed or damaged.

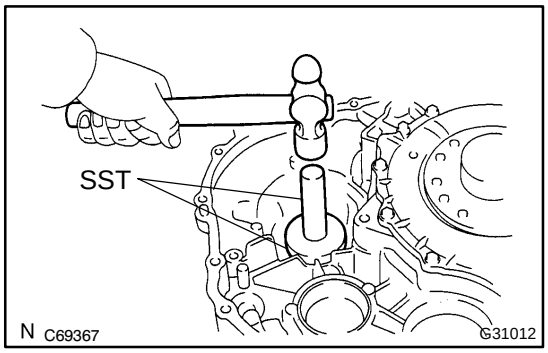

(3) Using SST, install the differential case tapered roller bearing RH outer race to the generator assy.

SST 09950–60020 (09951–00680), 09950–70010 (09951–07100)

NOTICE:

Replace the outer race with a new one if it is deformed or damaged.

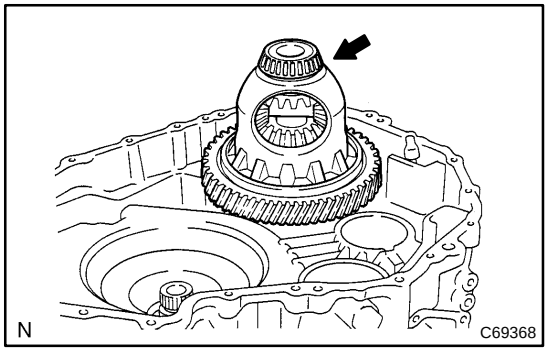

(4) Apply ATF WS to the sliding surfaces of the differential case tapered roller bearing and install to the motor assy.

cardiagn.com

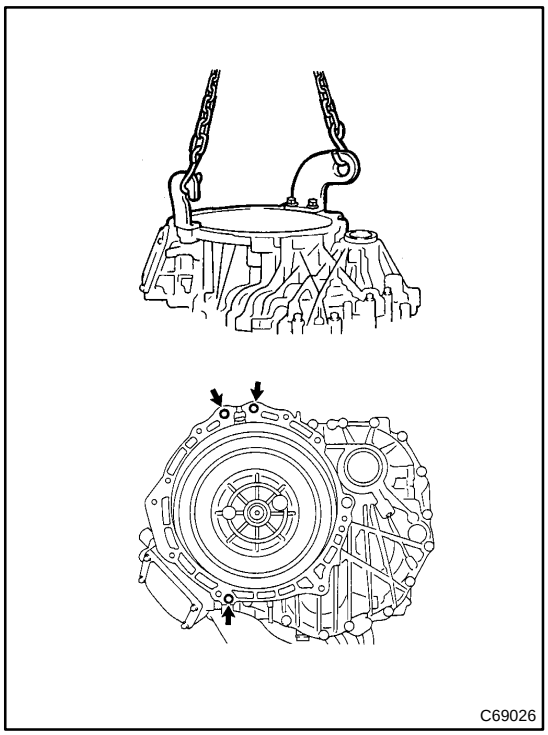

(5) Using an engine sling device and chain block, install the motor assy to the generator assy.

HINT:

- Engine hanger 12281–67070, S12228–11781
- Bolt 91642–81045, 91642–81265
- Nut 90178–10001, 90179–12147

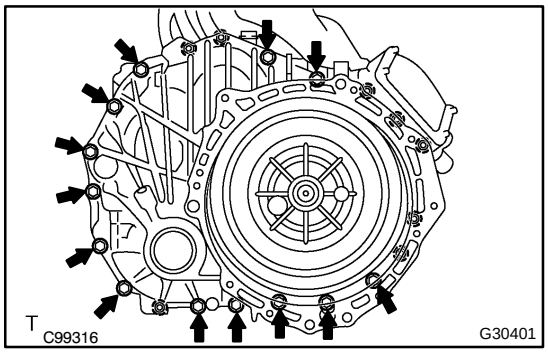

(6) Tighten the 13 bolts in the positions shown in the illustration.

Torque: 25 N·m (250 kgf·cm, 18 ft·lbf)

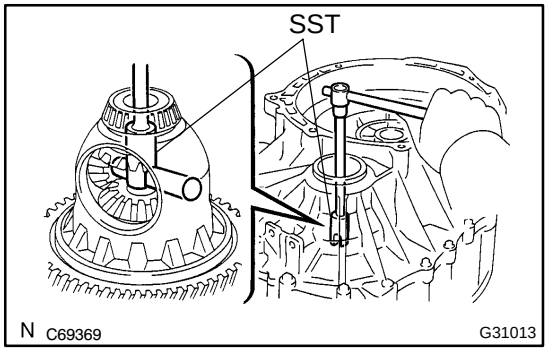

(7) Using SST, rotate the differential case assy in both directions to stabilize the bearings.

SST 09564–32011

cardiagn.com

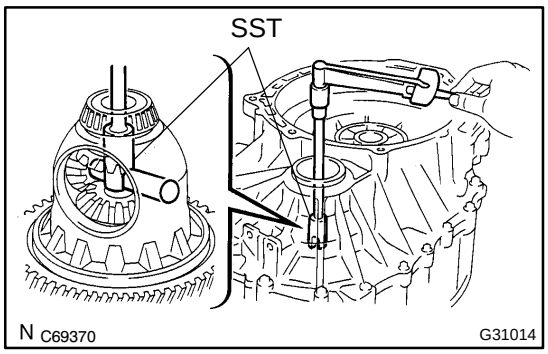

(8) Using SST, measure the differential preload of the differential case assy and rotation torque.

SST 09564–32011

Preload (Starting torque):
New bearing
0.98 to 1.57 N·m
(9.99 to 16.01 kgf·cm, 8.67 to 13.90 in.·lbf)
Reused bearing
0.49 to 0.78 N·m
(5.00 to 7.95 kgf·cm, 4.34 to 6.90 in.·lbf)
Preload (Turning torque):
0.61 to 1.35 N·m (20 rpm) at 20 °C
(6.2 to 13.77 kgf·cm, 5.4 to 11.95 in.·lbf)

HINT:

- If the preload is not within the specified range, select the shim to replace.
- Remove the motor assy side tapered roller bearing outer race and shim when replacing the shim.
- Replace the shim and outer race with new ones if they are deformed or damaged.
- As the shim thickness is increased 0.02 mm (0.0008 in.), the preload increases approximately 0.23 N·m (2.4 kgf·cm 2.04 in. lbf) accordingly.

cardiagn.com

Shim Types

Parts Number	Thickness mm (in.)	Mark
90564–45040	1.80 (0.0709)	1
90564–45041	1.83 (0.0720)	2
90564–45042	1.86 (0.0732)	3
90564–45043	1.89 (0.0744)	4
90564–45071	1.92 (0.0756)	50
90564–45072	1.94 (0.0764)	51
90564–45073	1.96 (0.0722)	52
90564–45074	1.98 (0.0780)	53
90564–45075	2.00 (0.0787)	54
90564–45076	2.02 (0.0795)	55
90564–45077	2.04 (0.0803)	56
90564–45078	2.06 (0.0811)	57
90564–45079	2.08 (0.0819)	58
90564–45080	2.10 (0.0827)	59
90564–45081	2.12 (0.0835)	60
90564–45082	2.14 (0.0843)	61
90564–45083	2.16 (0.0850)	62
90564–45084	2.18 (0.0858)	63
90564–45085	2.20 (0.0866)	64
90564–45086	2.22 (0.0874)	65
90564–45087	2.24 (0.0882)	66
90564–45088	2.26 (0.0890)	67
90564–45089	2.28 (0.0898)	68
90564–45090	2.30 (0.0906)	69
90564–45091	2.32 (0.0913)	70
90564–45060	2.34 (0.0921)	19
90564–45061	2.37 (0.0933)	20
90564–45011	2.40 (0.0945)	No indication
90564–45062	2.43 (0.0957)	22
90564–45063	2.46 (0.0969)	23

(9) Using an engine sling device and chain block, remove the 13 bolts and generator assy.

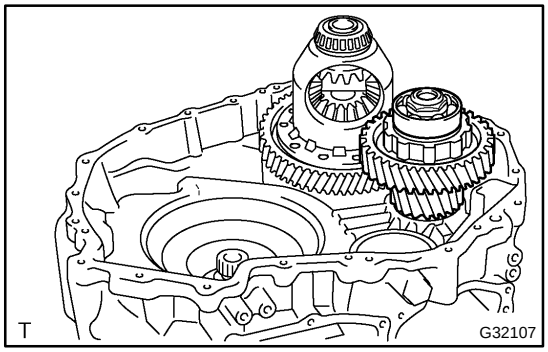

40. INSTALL DIFFERENTIAL DRIVE PINION

(a) Install the differential drive pinion.

NOTICE:

- **Insert the differential drive pinion vertically.**
- **Ensure that the differential drive pinion is fully inserted.**

41. SELECT THE SHIM

(a) Select the input shaft shim.

cardiagn.com

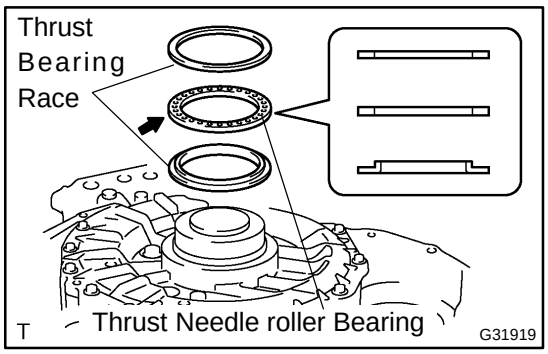

(1) Install the thrust bearing race No.1.
(2) Apply ATF WS to the sliding surfaces of the thrust needle roller flange and install.
(3) Install the thrust bearing race.

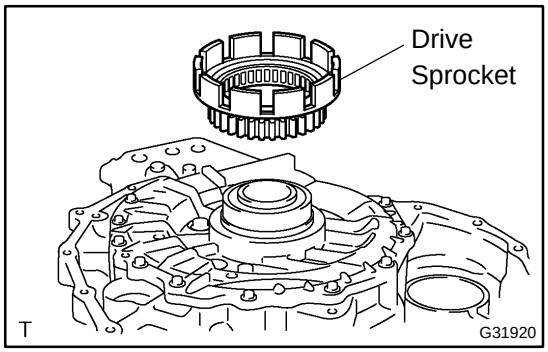

(4) Install the drive sprocket.

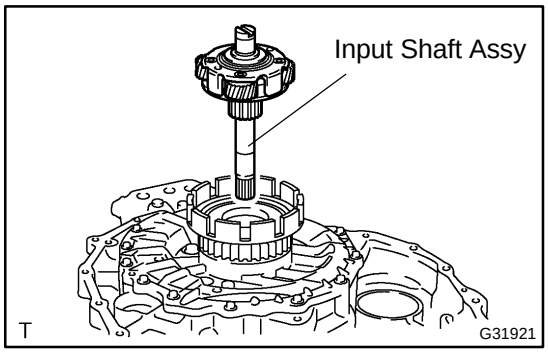

(5) Install the input shaft assy.

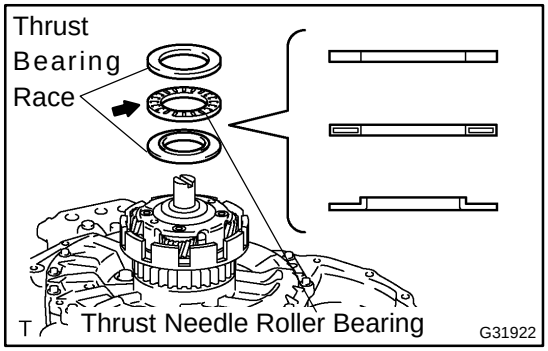

(6) Install the thrust bearing race No.1.
(7) Apply ATF WS to the sliding surfaces of the thrust needle roller flange and install.
(8) Install the thrust bearing race.

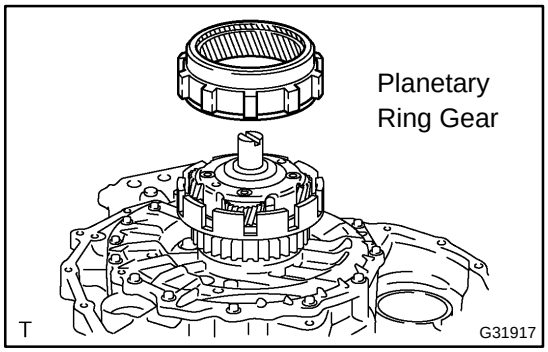

(9) Install the planetary ring gear.

cardiagn.com

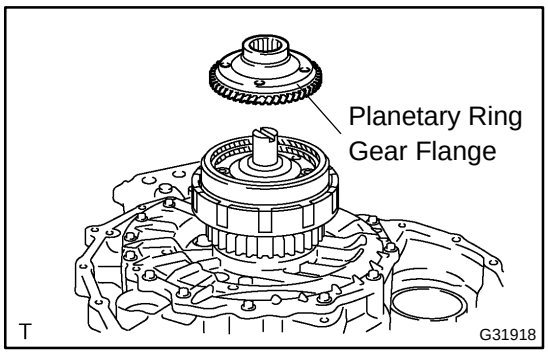

(10) Install the planetary ring gear flange.

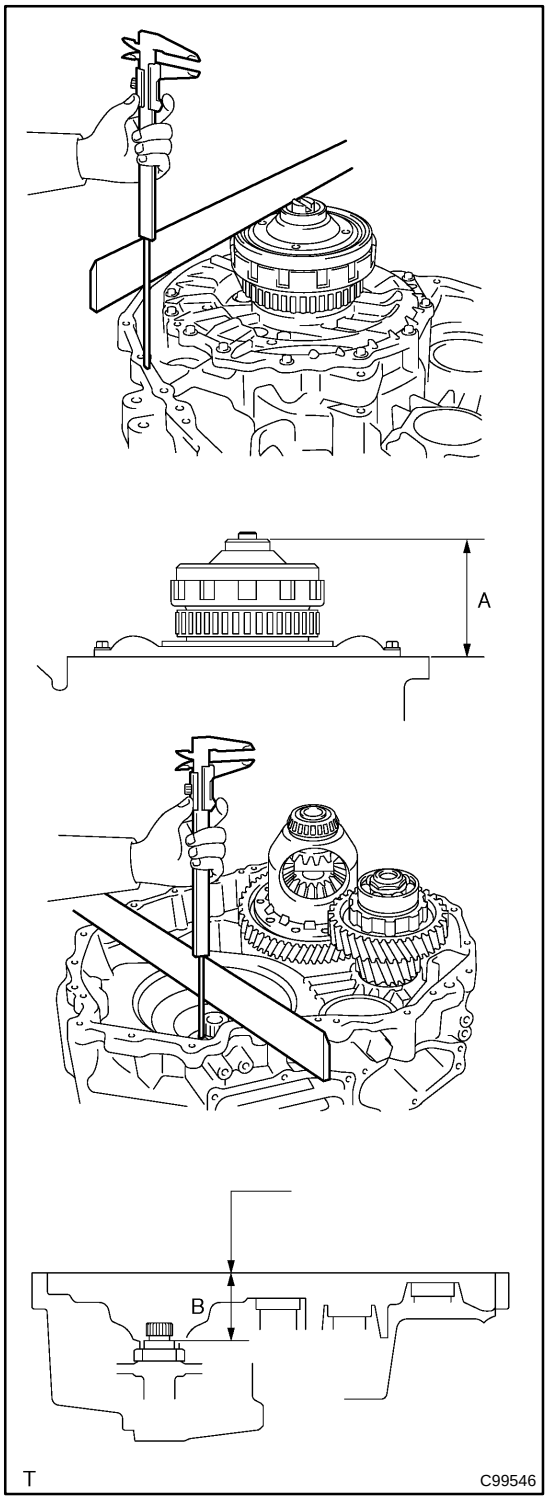

(11) Using a straight edge and vernier calipers, measure dimension A as shown in the illustration.

Standard value: Dimension A = Measured value–width of straight edge used

NOTICE:

- **Measure dimension A without the shim installed.**
- **Take the measurement 3 times each in 3 different locations and use the average of the measurements taken.**
- **Two people are required for this step because it is difficult to keep the straight edge level. One person should hold the straight edge, and the other person measure dimension A.**

(12) Using a straight edge and vernier calipers, measure dimension B as shown in the illustration.

Standard value: Dimension B = Measured value–thickness of straight edge used

NOTICE:

Dimension B is greater than dimention A.

cardiagn.com

(13) Select a shim.

Standard value: Select shim = (Dimension B–Dimension A) – 0.1 mm (0.0039 in.) to 0.4 mm (0.0157 in.)

NOTICE:

Subtract 0.1 mm (0.0039 in.) to 0.4 mm (0.0157 in.) from the difference of Dimension B and Dimension A and select a shim on the basis of the resulting value. This is done because clearance 0.1 mm (0.0039 in.) to 0.4 mm (0.0157 in.) with the input shaft is required.

Shim Types

Parts Number	Thickness mm (in.)	Mark
90564–36021	1.00 (0.0394)	1
90564–36022	1.20 (0.0472)	2
90564–36023	1.40 (0.0551)	3
90564–36024	1.60 (0.0630)	4
90564–36025	1.80 (0.0709)	5
90564–36026	2.00 (0.0787)	6
90564–36027	2.20 (0.0866)	7
90564–36028	2.40 (0.0945)	8
90564–36029	2.60 (0.1024)	9
90564–36030	2.80 (0.1102)	10
90564–36031	3.00 (0.1181)	11
90564–36032	3.20 (0.1260)	12

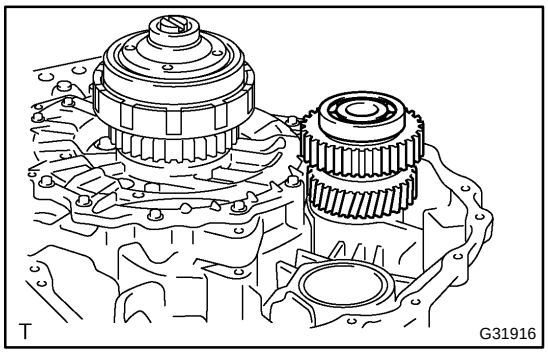

(b) Select a counter drive gear shim.

(1) Install the counter drive gear.

NOTICE:

- **Insert the counter drive gear vertically.**
- **Ensure that the counter drive gear is fully inserted.**

cardiagn.com

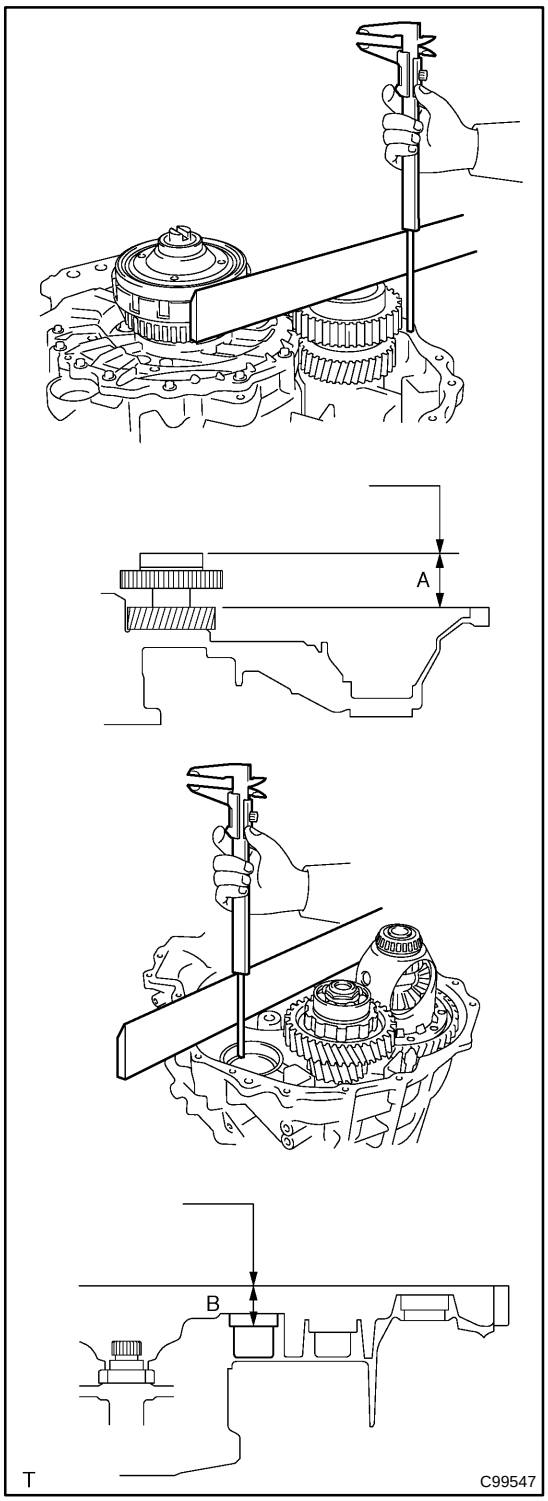

(2) Using a straight edge and vernier calipers, measure dimension A as shown in the illustration.

Standard value: Dimension A = Measured value–width of straight edge used

NOTICE:

- **Measure dimension A without the shim installed.**
- **Take the measurement 3 times each in 3 different locations and use the average of the measurements taken.**
- **Two people are required for this step because it is difficult to keep the straight edge level. One person should hold the straight edge, and the other person measure dimension A.**

(3) Using a straight edge and vernier calipers, measure dimension B as shown in the illustration.

Standard value: Dimension B = Measured value–thickness of straight edge used

NOTICE:

Dimension B is greater than dimention A.

cardiagn.com

(4) Select a shim.

Standard value: Selected shim = (Dimension B–Dimension A) – 0 mm (0 in.) to 0.1 mm (0.0039 in.)

NOTICE:

Subtract 0 mm (0 in.) to 0.1 mm (0.0039 in.) from the difference of Dimension B and Dimension A and select a shim on the basis of the resulting value. This is done because clearance 0 mm (0 in.) to 0.1 mm (0.0039 in.) with the counter drive gear is required.

Shim Types

Parts Number	Thickness mm (in.)	Marks
90564–35132	2.20 (0.0866)	A
90564–35133	2.25 (0.0886)	B
90564–35134	2.30 (0.0906)	C
90564–35135	2.35 (0.0925)	D
90564–35136	2.40 (0.0945)	E
90564–35137	2.45 (0.0965)	F
90564–35138	2.50 (0.0984)	G
90564–35139	2.55 (0.1003)	H
90564–35140	2.60 (0.1024)	J
90564–35141	2.65 (0.1043)	K
90564–35142	2.70 (0.1063)	L
90564–35143	2.75 (0.1083)	M
90564–35144	2.80 (0.1102)	N

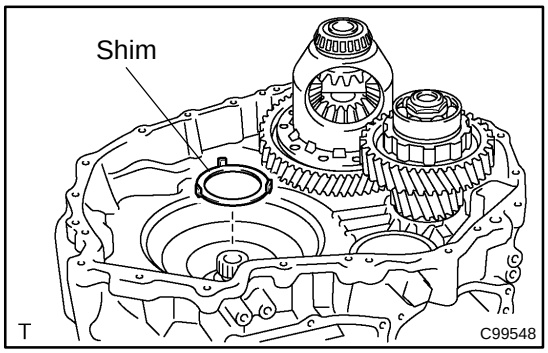

42. INSTALL INPUT SHAFT ASSY

(a) Install the shim selected.

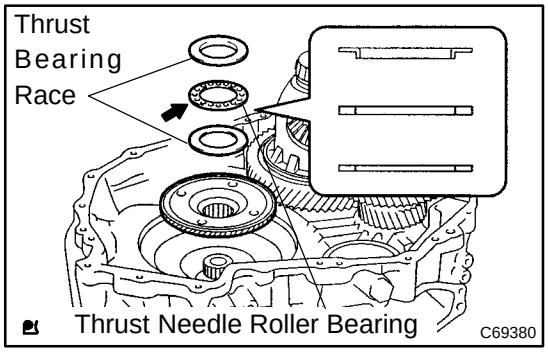

(b) Install the planetary ring gear flange.

(c) Install the thrust bearing race No.1.

(d) Install the thrust needle roller bearing.

(1) Apply ATF WS to the sliding surfaces of the thrust needle roller flange and install.

(e) Install the thrust bearing race.

cardiagn.com

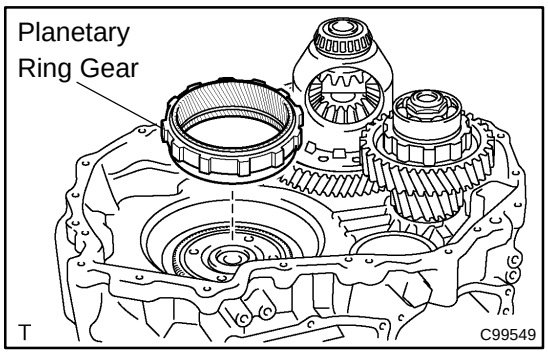

(f) Install the planetary ring gear.

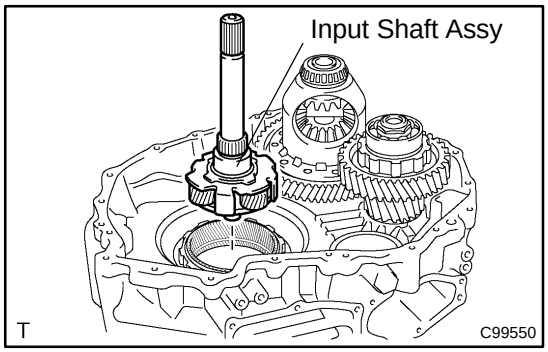

(g) Install the input shaft assy.

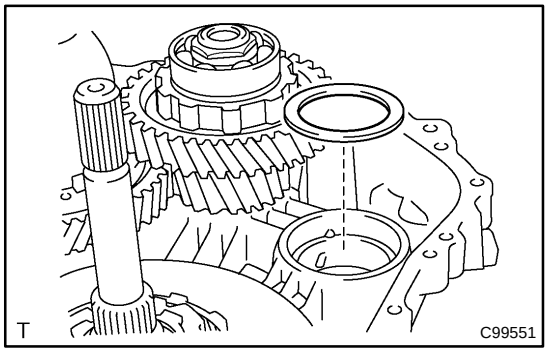

43. INSTALL SPROCKET DRIVEN & COUNTER DRIVE GEAR

(a) Install the counter drive gear selected.

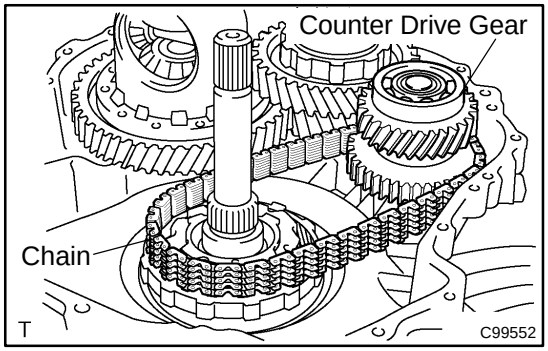

(b) Install the counter drive gear and chain.

NOTICE:

- **Insert the counter drive gear vertically.**
- **Ensure that the counter drive gear is fully inserted.**

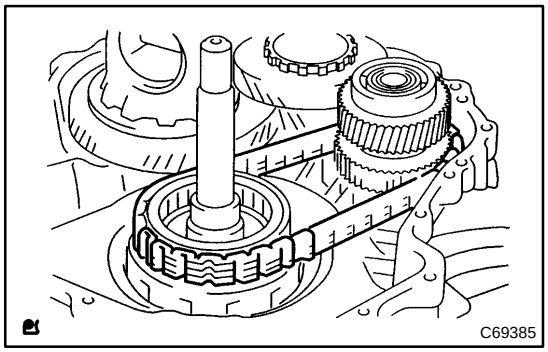

44. INSTALL TRANSMISSION DRIVE SPROCKET SUB–ASSY

(a) Apply ATF WS auto fluid to the drive sprocket needle roller bearing and put the drive sprocket on the chain.

(b) Align the recesses of the planetary ring gear and the drive sprocket and install the drive sprocket with chain.

cardiagn.com

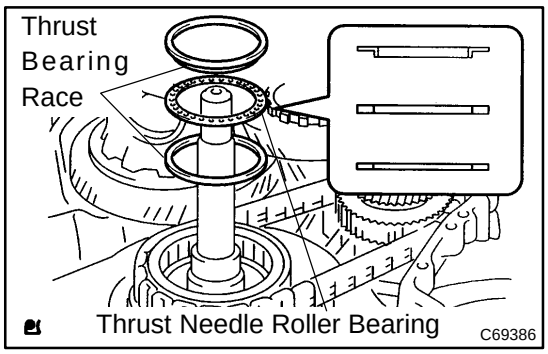

45. INSTALL THRUST BEARING RACE NO.2

(a) Install the drive sprocket thrust needle roller bearing No.1.

(b) Install the thrust bearing race No.2.

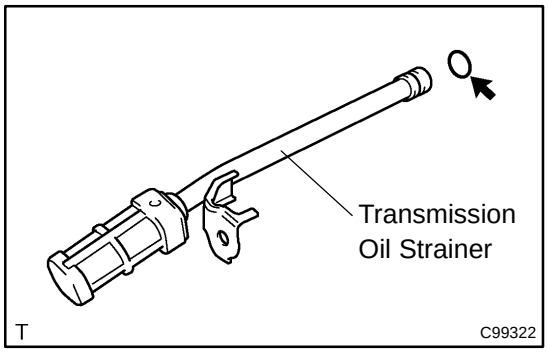

46. INSTALL TRANSMISSION OIL STRAINER

(a) Apply ATF WS to a new O–ring and install the fluid strainer.

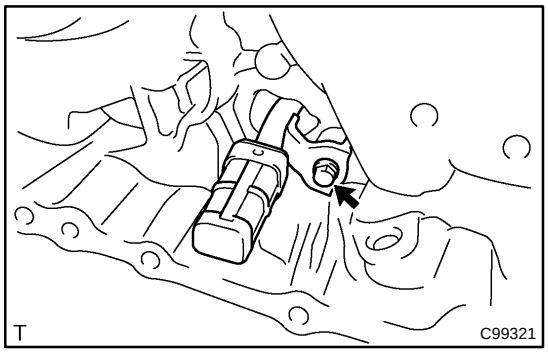

(b) Install the bolt and oil strainer.
Torque: 7.9 N·m (81 kgf·cm, 70 in.·lbf)

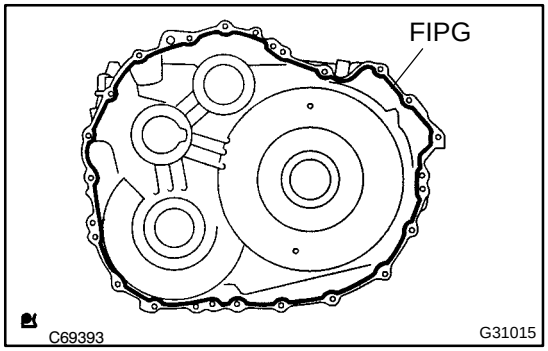

47. INSTALL HYBRID VEHICLE GENERATOR ASSY

(a) Apply seal packing 1281 in a continuous line of beads (diameter 1.5 mm 0.059 in.) to the motor assy side.

NOTICE:

- **Clean and degrease the installation surfaces.**
- **Install within 10 minutes of applying seal packing.**

cardiagn.com

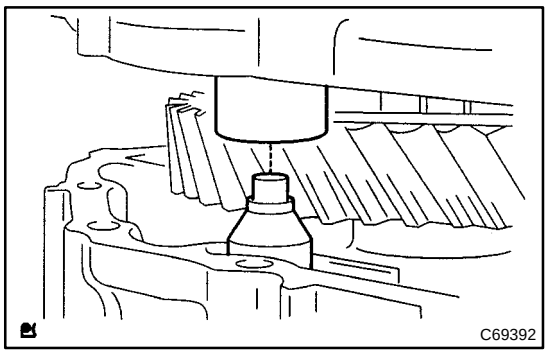

(b) Install the parking lock rod to the generator assy so that it is inserted into the cam guide sleeve. Use an engine sling device and chain block.

NOTICE:

Rotate the input shaft in both directions so that the gears interlock if the generator assy cannot be easily installed.

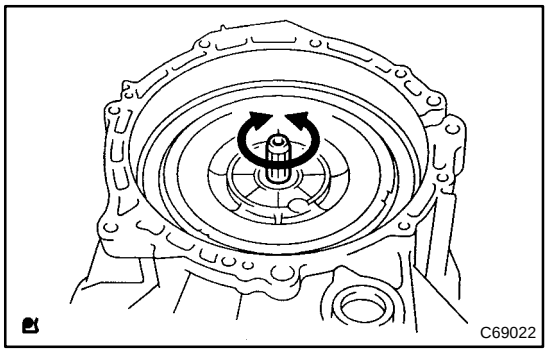

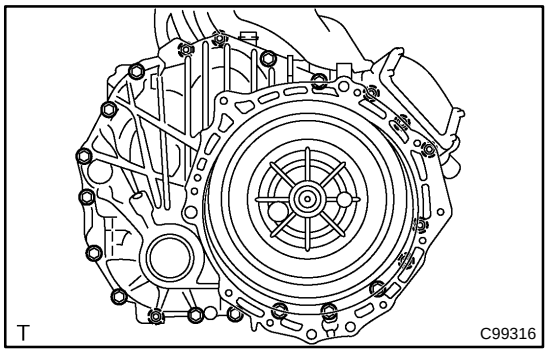

(c) Apply liquid sealant 1344 to the first 2 to 3 threads of the bolt (45 mm 1.772 in. long shaft) end.

NOTICE:

Clean and degrease the bolt and bolt holes.

(d) Install the 21 bolts as shown in the illustration.
Torque: 25 N·m (250 kgf·cm, 18 ft·lbf)

HINT:

- 13 bolts on the generator assy side
- 8 bolts on the motor assy side

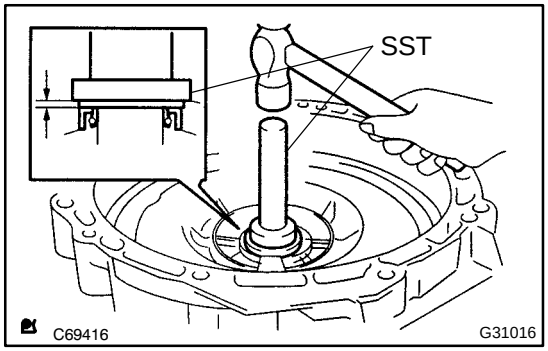

48. INSTALL HYBRID VEHICLE TRANSAXLE ASSY TYPE T OIL SEAL

(a) Coat the lip of the oil seal with MP grease No.2.

NOTICE:

Ensure that no foreign objects adhere to the oil seal lip.

(b) Using SST, install a new oil seal.
Oil seal depth: 1 to 1.5 mm (0.039 to 0.059 in.)

NOTICE:

Ensure that the oil seal is fitted straight.

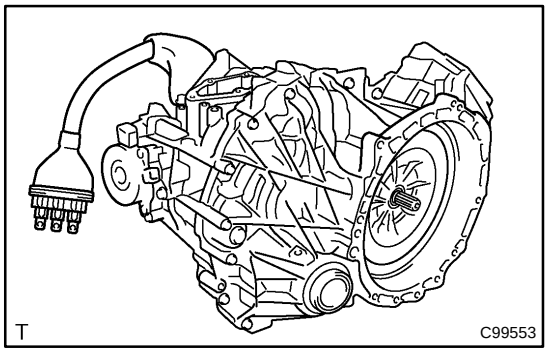

49. FIX HYBRID VEHICLE TRANSAXLE ASSY

(a) Set the hybrid transaxle as shown in the illustration.

cardiagn.com

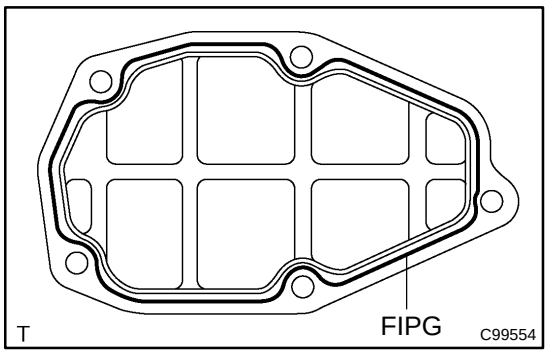

50. INSTALL PARKING COVER

(a) Apply seal packing 1281 in a continuous line of beads (diameter 1.5 mm, 0.06 in) as shown in the illustration.

NOTICE:

- **Clean and degrease the installation surfaces.**
- **Install within 10 minutes of applying seal packing.**

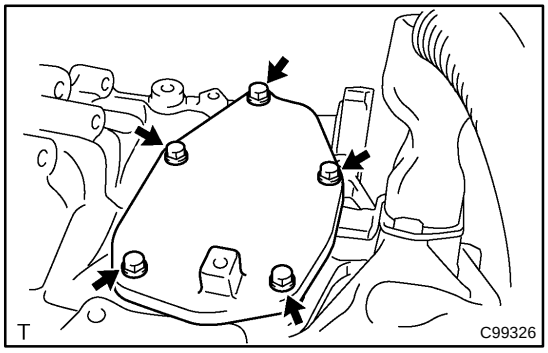

(b) Install the 5 bolts and parking shaft cover.
Torque: 5.5 N·m (56 kgf·cm, 49 in.·lbf)

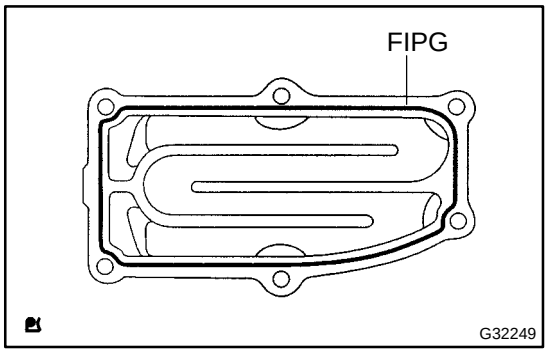

51. INSTALL MOTOR WATERJACET COVER

(a) Apply seal packing black in a continuous line of beads (diameter 1.5 mm, 0.06 in) as shown in the illustration.

NOTICE:

- **Clean and degrease the installation surfaces.**
- **Install within 10 minutes of applying seal packing.**

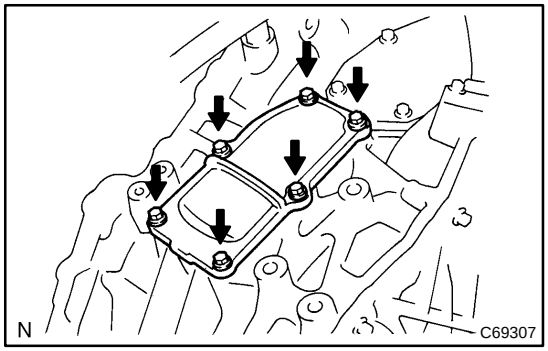

(b) Apply liquid sealant 1344 to the first 2 to 3 threads of each of the 6 bolts. Install the motor water jacket cover with the 6 bolts.
Torque: 5.5 N·m (56 kgf·cm, 49 in.·lbf)

NOTICE:

Clean and degrease the bolt and bolt holes.

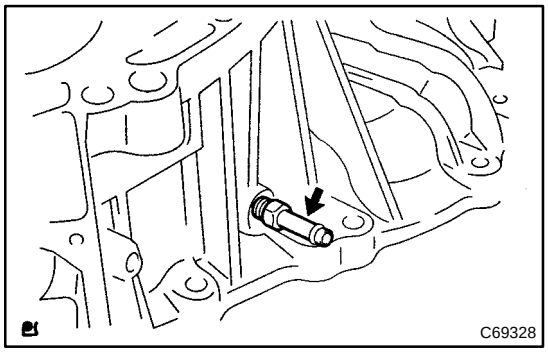

52. INSTALL TRANSAXLE HOUSING TUBE CONNECTOR

(a) Apply liquid sealant 1344 to the first 2 to 3 threads of the bolt and install.
Torque: 15 N·m (155 kgf·cm, 11 ft·lbf)

NOTICE:

Clean and degrease the bolt and bolt holes.

(b) Install the drain plug using a new gasket.
Torque: 39 N·m (400 kgf·cm, 29 ft·lbf)

cardiagn.com

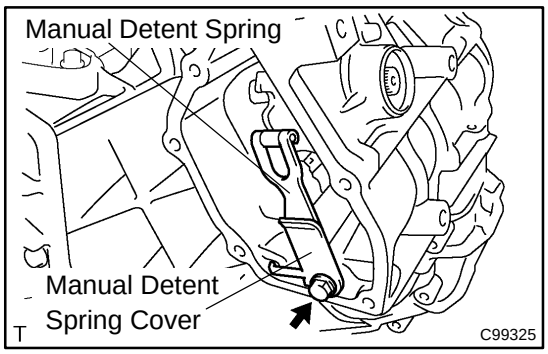

53. INSTALL MANUAL DETENT SPRING SUB–ASSY

(a) Install the manual detent spring and manual detent spring cover using the blot.
Torque: 9.8 N·m (100 kgf·cm, 86 in.·lbf)

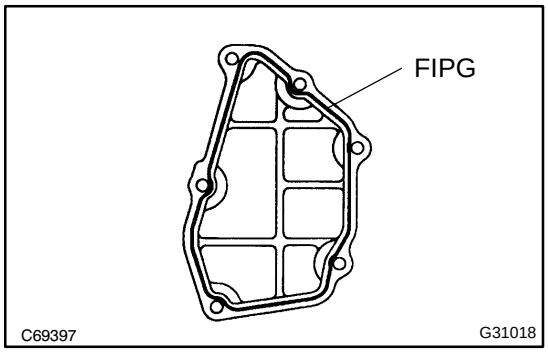

54. INSTALL PARKING COVER

(a) Apply seal packing 1281 in a continuous line of beads (diameter 1.5 mm, 0.06 in) as shown in the illustration.

NOTICE:

- **Clean and degrease the installation surfaces.**
- **Install within 10 minutes of applying seal packing.**

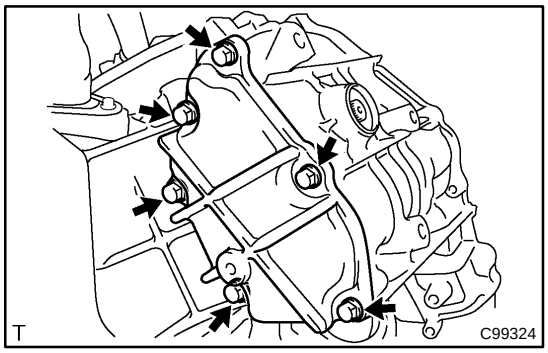

(b) Install the parking cover with the 6 bolts.
Torque: 5.5 N·m (56 kgf·cm, 49 in.·lbf)

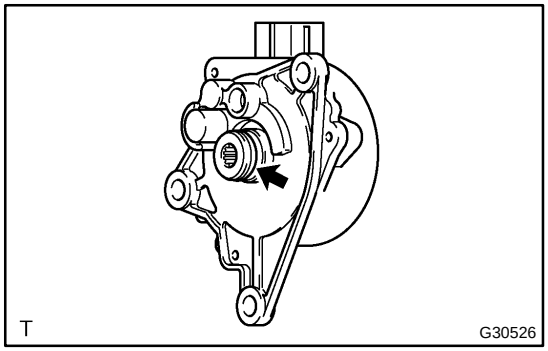

55. SHIFT CONTROL ACTUATOR ASSY

(a) Apply a small amount of genuine ATF WS to the O–ring.

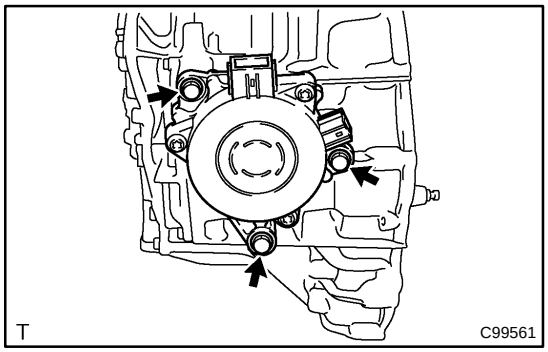

(b) Install the shift control actuator with the 3 bolts.
Torque: 16 N·m (160 kgf·cm, 12 ft·lbf)

(c) Install the transmission case cover with the 3 bolts.

cardiagn.com

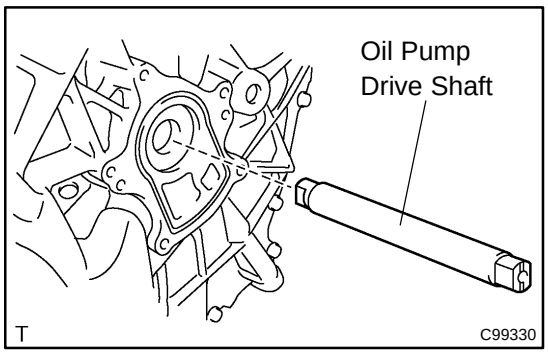

56. INSTALL OIL PUMP DRIVE SHAFT

(a) Apply ATF WS to the fluid pump drive shaft and install.

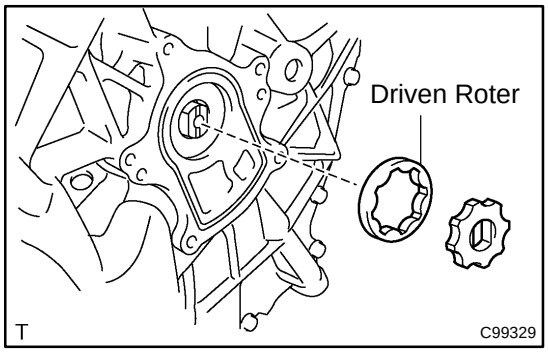

57. INSTALL OIL PUMP DRIVEN ROTOR

(a) Apply ATF WS to the fluid pump driven rotor and install.

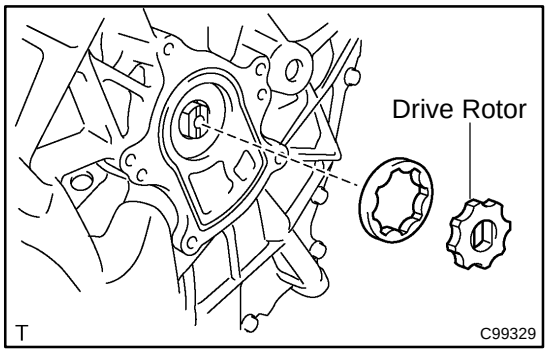

58. INSTALL TRANSAXLE OIL PUMP DRIVE ROTOR

(a) Apply ATF WS to the transaxle fluid pump drive rotor and install.

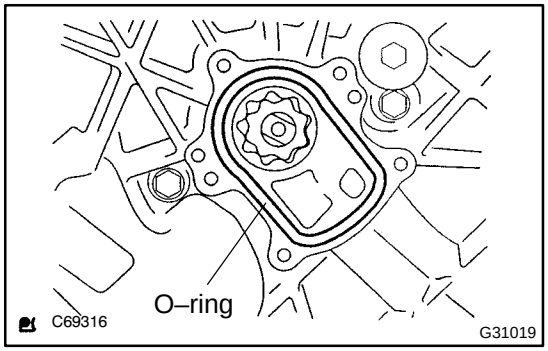

59. INSTALL TRANSMISSION OIL PUMP COVER SUB–ASSY

(a) Install a new O–ring.

NOTICE:

Ensure that the O–ring is not twisted.

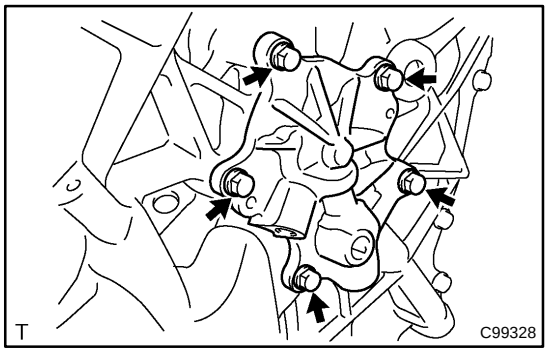

(b) Apply liquid sealant 1344 to the first 2 to 3 threads of the bolt end.

NOTICE:

Clean and degrease the bolts and bolt holes.

(c) Install the oil pump cover with the 5 bolts.
Torque: 5.5 N·m (56 kgf·cm, 49 in.·lbf)

cardiagn.com

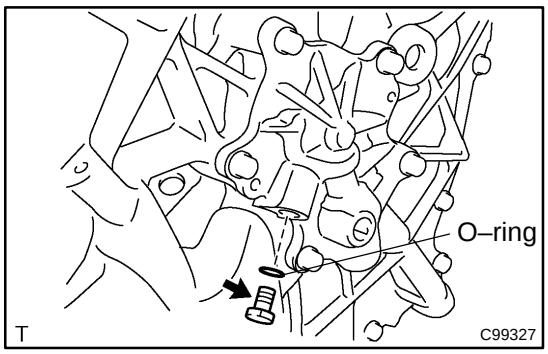

(d) Install a new O–ring and install the fluid pump cover plug.
Torque: 7.4 N·m (75 kgf·cm, 65 in.·lbf)

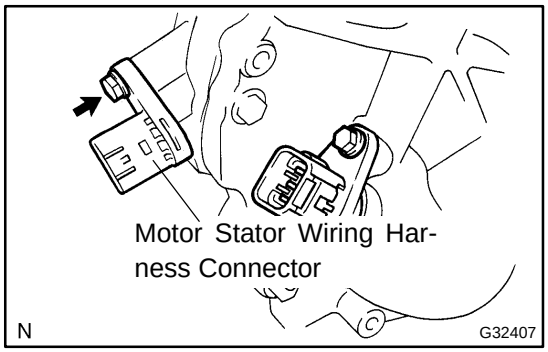

60. INSTALL MOTOR STATOR WIRING HARNESS CONNECTOR

(a) Apply ATF WS to the O–ring and install the motor stator wiring harness connectors (black) with the bolt.
Torque: 5.8 N·m (59 kgf·cm, 51 in.·lbf)

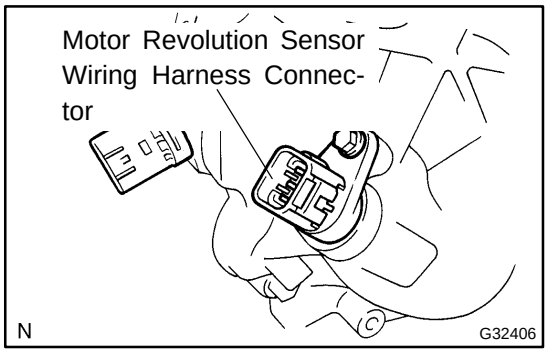

61. INSTALL MOTOR REVOLUTION SENSOR WIRING HARNESS CONNECTOR

(a) Apply ATF WS to the O–ring and install the HV motor side motor revolution sensor wiring harness connectors (gray) with the bolt.
Torque: 5.8 N·m (59 kgf·cm, 51 in.·lbf)

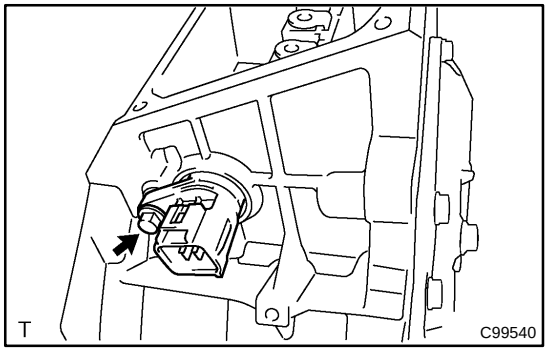

62. INSTALL GENERATOR MOTOR REVOLUTION SENSOR WIRING HARNESS CONNECTOR

(a) Apply ATF WS to the O–ring and install the HV generator side generator motor revolution sensor wiring harness connector with the bolt.
Torque: 5.8 N·m (59 kgf·cm, 51 in.·lbf)

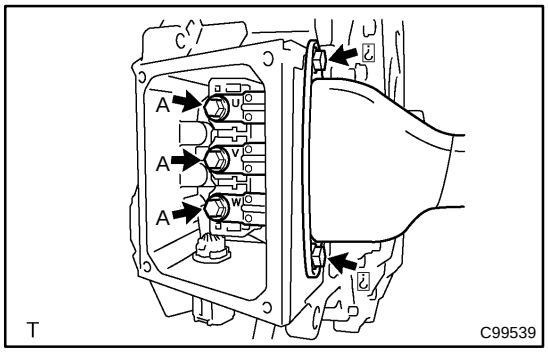

63. INSTALL GENERATOR CABLE

(a) Align the generator cables as shown in the illustration and connect.

NOTICE:

- **Connect by aligning the letters U, V and W.**
- **Apply a small amount of ATF WS to the O–ring.**

(b) Apply liquid sealant to the first 2 or 3 threads of bolts B and install the generator cable with the bolts.
Torque: 5.8 N·m (59 kgf·cm, 51 in.·lbf) (bolt B)

cardiagn.com

NOTICE:
Clean and degrease the bolts and bolt holes.

(c) Install the generator cable with the 3 bolts (A).
Torque: 8.5 N·m (87 kgf·cm, 75 in.·lbf) (bolt A)

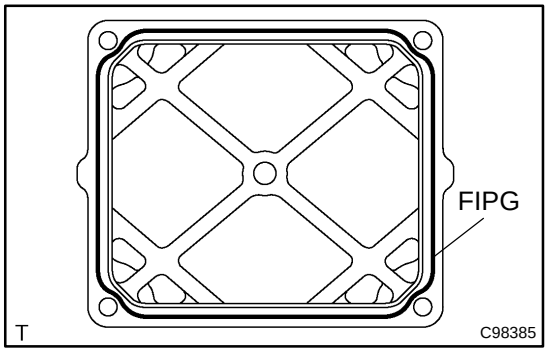

64. INSTALL POWER CABLE COVER

(a) Apply seal packing 1281 in a continuous line of beads (diameter 1.5 mm 0.06 in.) as shown in the illustration.

NOTICE:
- **Clean and degrease the installation surfaces.**
- **Install within 10 minutes of applying seal packing.**

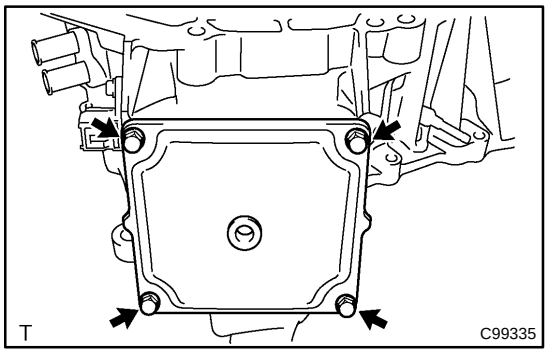

(b) Apply liquid sealant 1344 to the first 2 or 3 threads of the 4 bolts and install the power cable cover.
Torque: 4.8 N·m (49 kgf·cm, 42 in.·lbf)

NOTICE:
Clean and degrease the bolts and bolt holes.

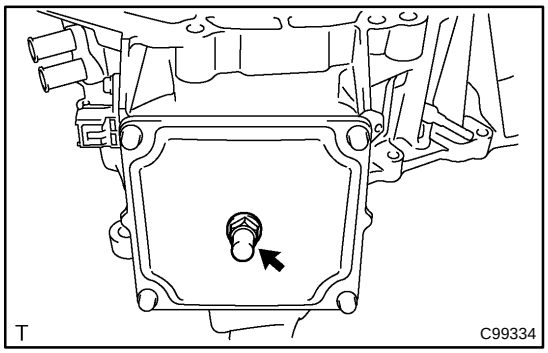

(c) Install the breather plug.
Torque: 11 N·m (112 kgf·cm, 8.1 ft·lbf)

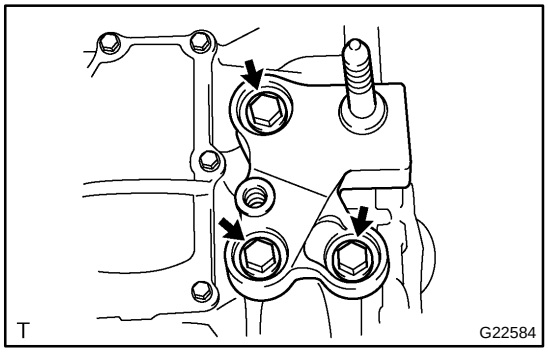

65. INSTALL ENGINE MOUNTING BRACKET NO.3

(a) Apply liquid sealant 1344 to the first 2 or 3 threads of the 3 bolts and install the engine mounting bracket.
Torque: 52 N·m (530 kgf·cm, 38 ft·lbf)

NOTICE:
Clean and degrease the bolts and bolt holes.

66. INSTALL HYBRID VEHICLE TRANSAXLE ASSY (SEE PAGE 22–11)

cardiagn.com

INPUT SHAFT ASSY

COMPONENTS

22016–01

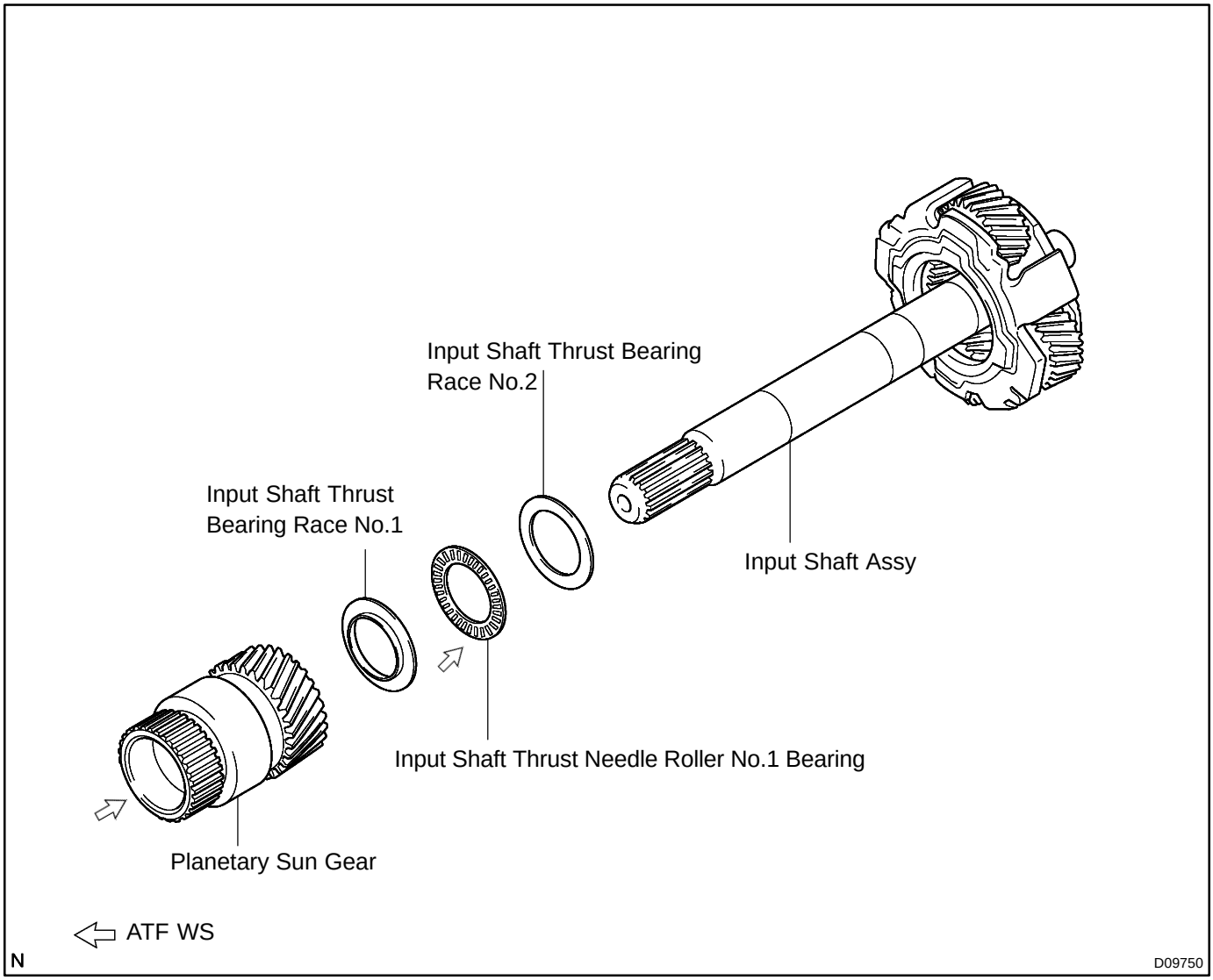

cardiagn.com

22017–01

OVERHAUL

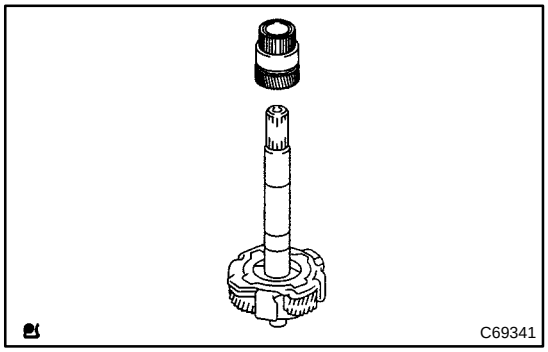

1. REMOVE PLANETARY SUN GEAR SUB–ASSY

(a) Remove the planetary sun gear from the input shaft.

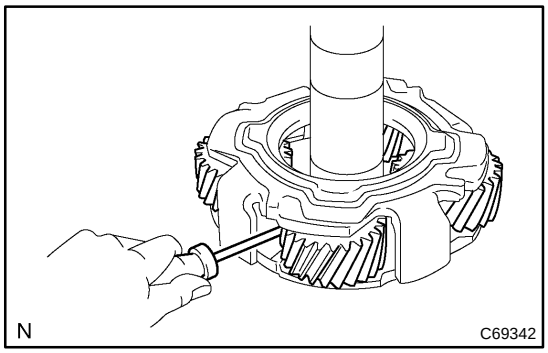

2. REMOVE INPUT SHAFT THRUST BEARING RACE

(a) Float the input shaft thrust bearing race using a thin flat–head screwdriver if it is attached to the planetary sun gear.

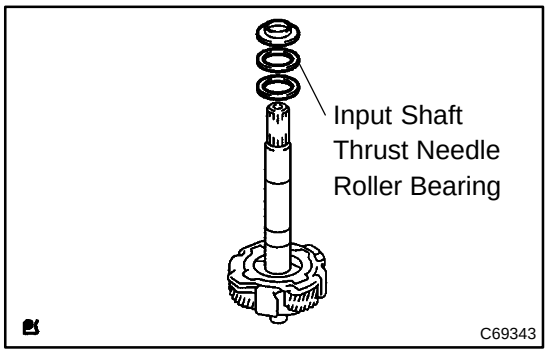

(b) Remove the input shaft thrust bearing race No.1, No.2 and input shaft thrust needle roller No.1 bearing.

cardiagn.com

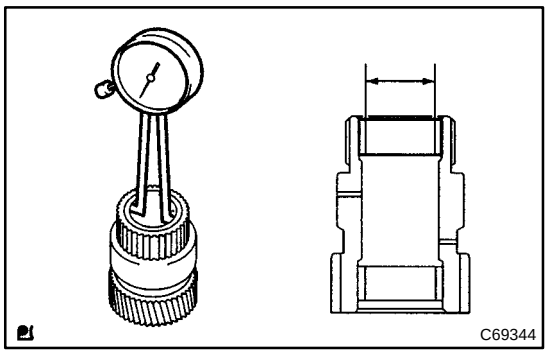

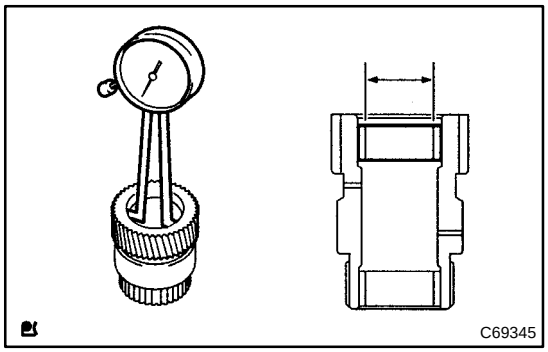

3. INSPECT PLANETARY SUN GEAR SUB–ASSY

(a) Ensure that there is no damage or color change in the bush.

(b) Using a caliper gauge, inspect the internal diameter of the planetary gear.
Maximum diameter: 25.596 mm (1.00771 in.)

NOTICE:
Measure the diameter in a number of locations and use the average of the measurements taken.

HINT:
Replace the planetary sun gear with a new one if the measurement exceeds the maximum diameter.

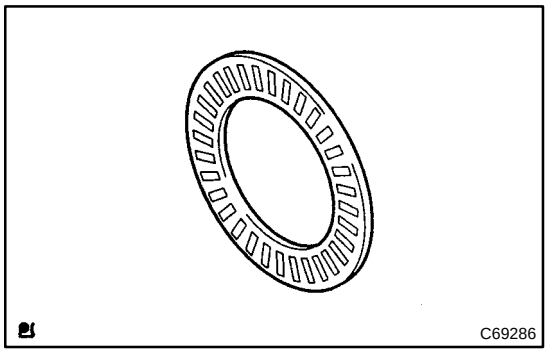

4. INSPECT INPUT SHAFT THRUST NEEDLE ROLLER NO.1 BEARING

(a) Ensure that there is no abnormal wear or color change in the bearing.

HINT:
Replace the input shaft thrust needle roller bearing with a new one if there is abnormal wear or color change.

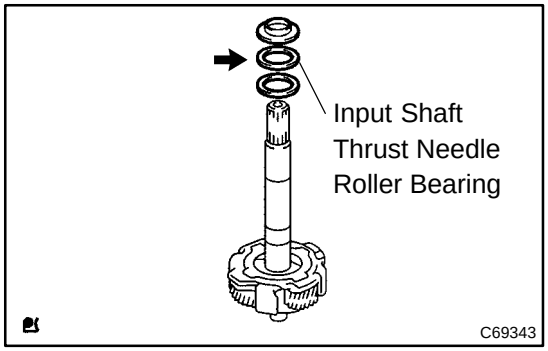

5. REMOVE INPUT SHAFT THRUST BEARING RACE

(a) Apply ATF WS to the sliding surfaces of the bearing and install input shaft thrust bearing No.1, No.2 and input shaft thrust needle roller No.1 bearing.

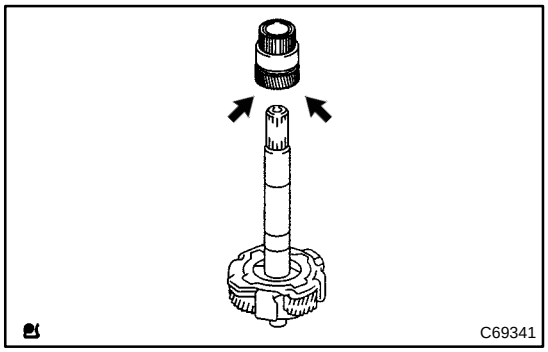

6. INSTALL PLANETARY SUN GEAR SUB–ASSY

(a) Apply ATF WS to the bush and install the planetary sun gear to the input shaft.

cardiagn.com

SPROCKET DRIVEN & COUNTER DRIVE GEAR

22018–01

COMPONENTS

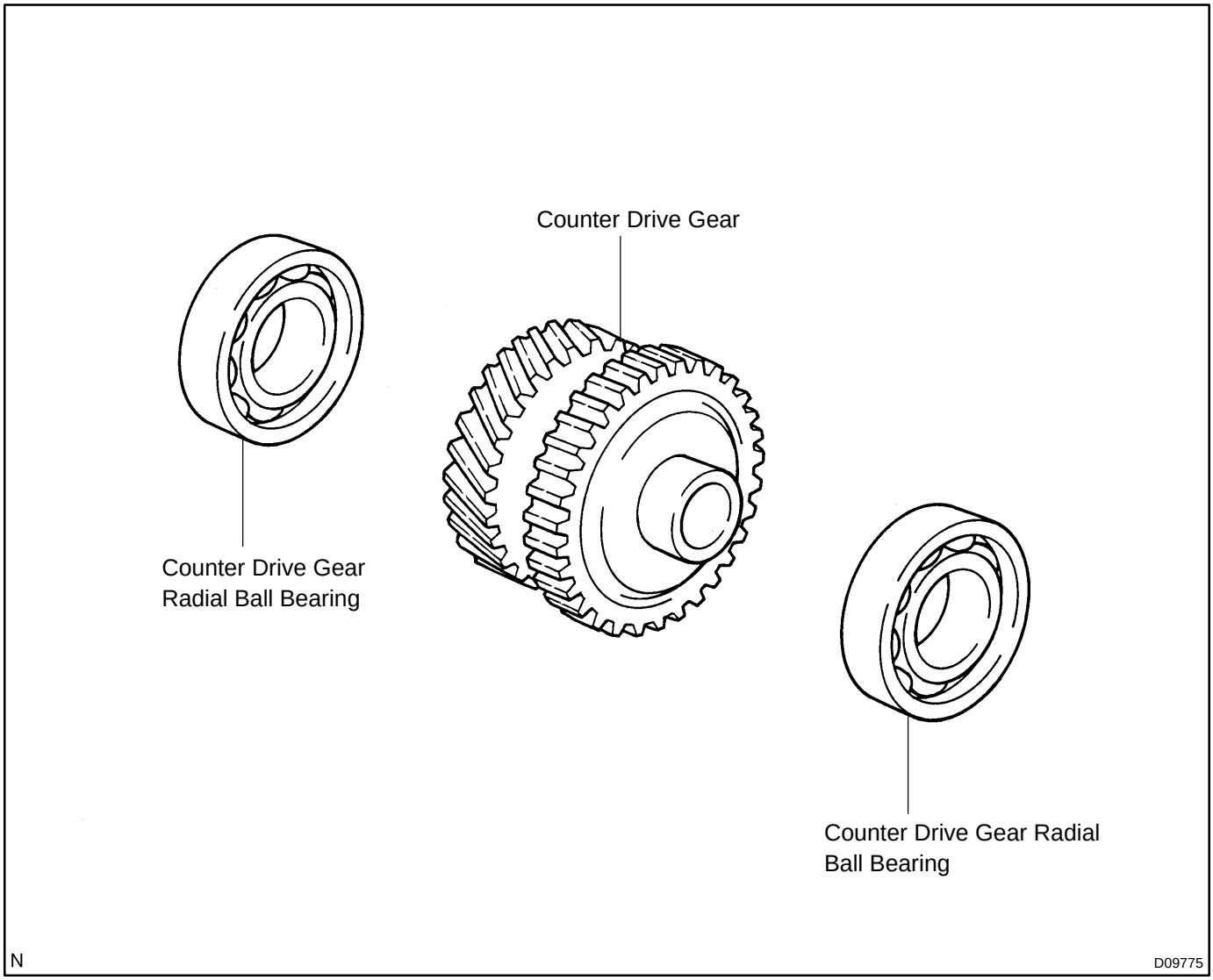

cardiagn.com

OVERHAUL

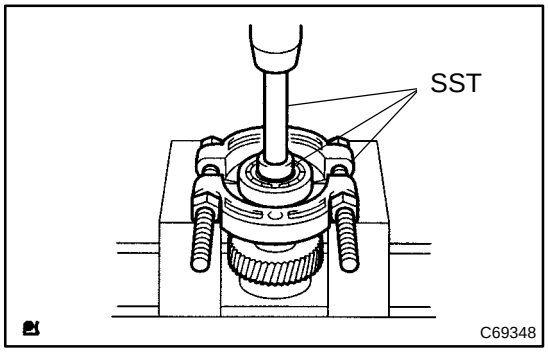

1. REMOVE COUNTER DRIVE GEAR RADIAL BALL BEARING

(a) Using SST and a press, remove the bearing from the counter drive gear.
SST 09950–00020, 09950–60010 (09951–00330), 09950–70010 (09951–07100)

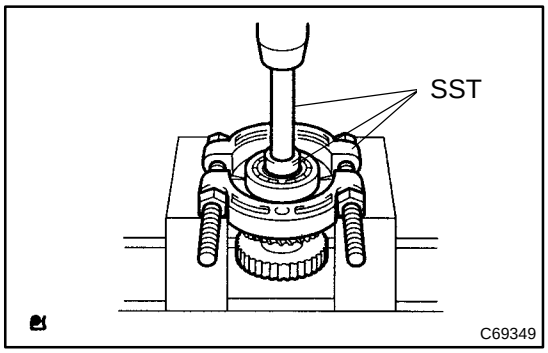

(b) Using SST and a press, remove the bearing from the counter drive gear.
SST 09950–00020, 09950–60010 (09951–00330), 09950–70010 (09951–07100)

2. INSPECT COUNTER DRIVE GEAR RADIAL BALL BEARING

(a) Check the bearing for abnormal wear or color change.

HINT:
Replace the bearing with a new one if abnormal wear or color change is observed.

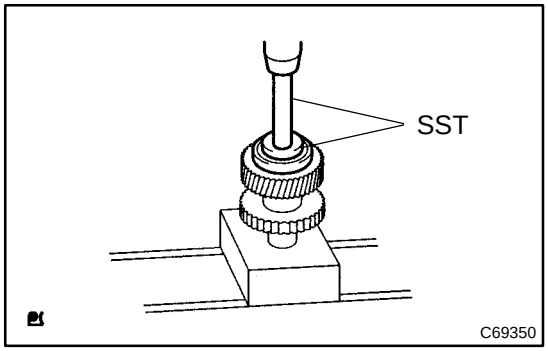

3. INSTALL COUNTER DRIVE GEAR RADIAL BALL BEARING

(a) Using SST and a press, install a new bearing into the counter drive gear.
SST 09950–60010 (09951–00330, 09951–00460), 09950–70010 (09951–07100)

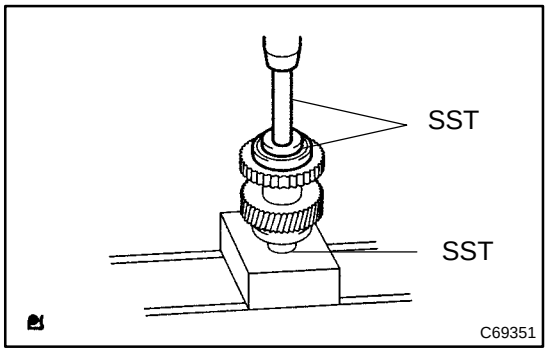

(b) Using SST and a press, install a new bearing into the counter drive gear.
SST 09950–60010 (09951–00330, 09951–00460), 09950–70010 (09951–07100)

cardiagn.com

DIFFERENTIAL DRIVE PINION

2201A–01

COMPONENTS

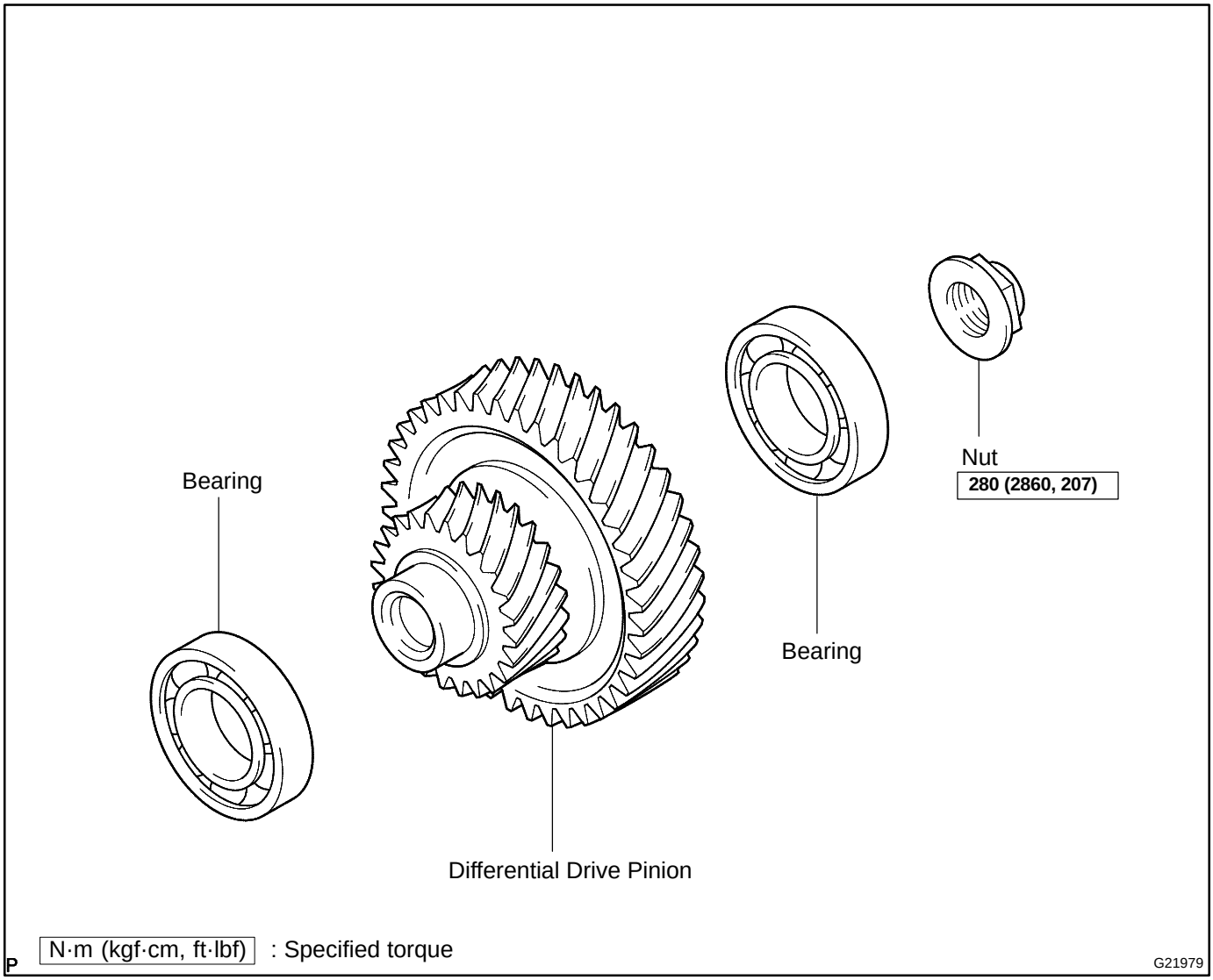

cardiagn.com

OVERHAUL

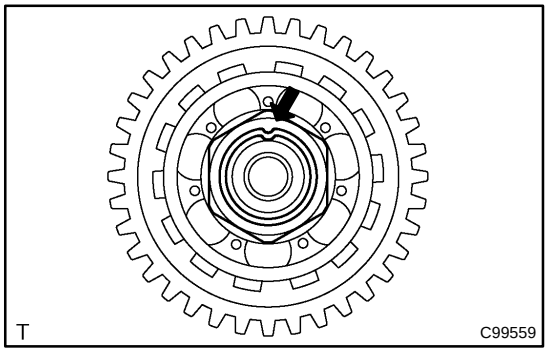

1. REMOVE TAPERED ROLLER BEARING

(a) Uncalk the nut.

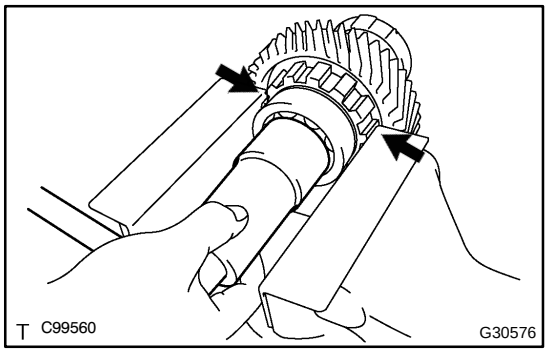

(b) Set the differential drive pinion in a vise and remove the nut using a deep socket wrench.

HINT:
Set the vise as shown in the illustration.

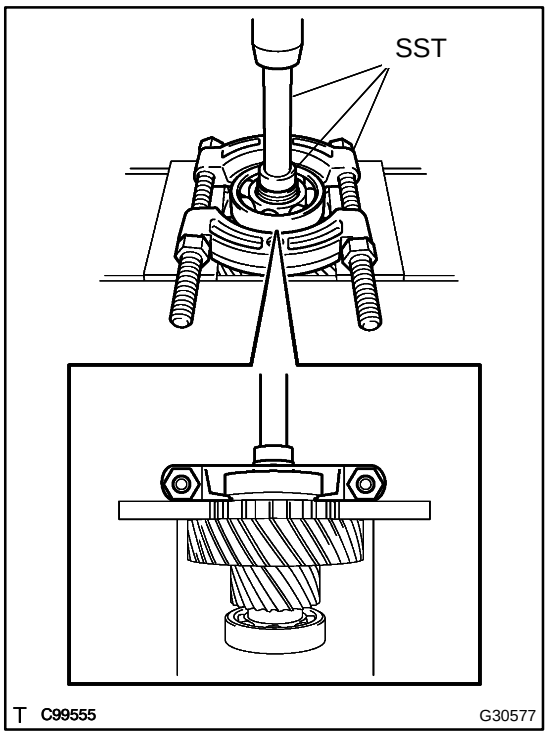

(c) Using SST and a press, remove the bearing from the differential driver pinion.

SST 09527–10011, 09950–00020, 09950–60010 (09951–00360), 09950–70010 (09951–07100)

cardiagn.com

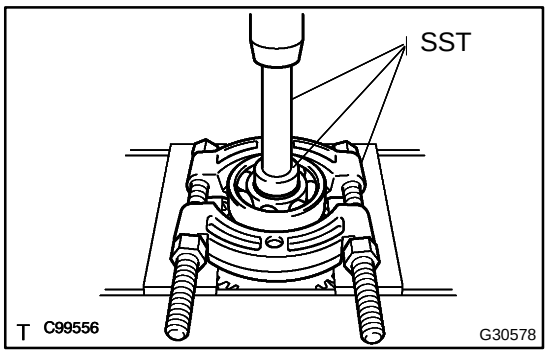

(d) Using SST and a press, remove the bearing from the differential drive pinion.
SST 09527–10011, 09950–00020, 09950–60010 (09951–00360), 09950–70010 (09951–07100)

2. INSPECT TAPERED ROLLER BEARING

(a) Check the bearing for abnormal wear or color change.

HINT:
Replace the bearing with a new one if abnormal wear or color change is observed.

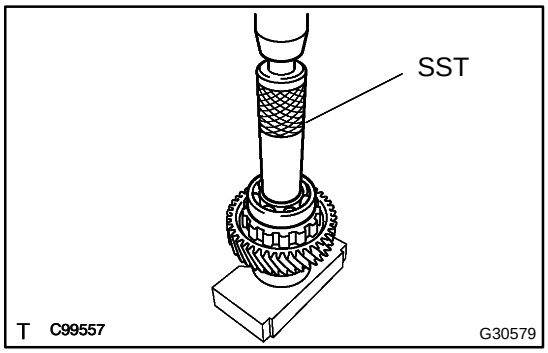

3. INSTALL TAPERED ROLLER BEARING

(a) Using SST and a press, install the bearing into the differential drive pinion.
SST 09608–06041

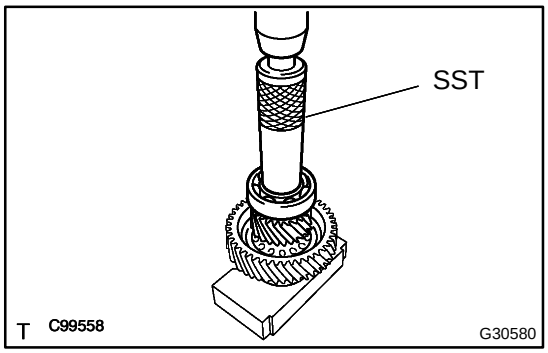

(b) Using SST and a press, install the bearing into the differential drive pinion.
SST 09608–06041, 09950–60010 (09951–00370)

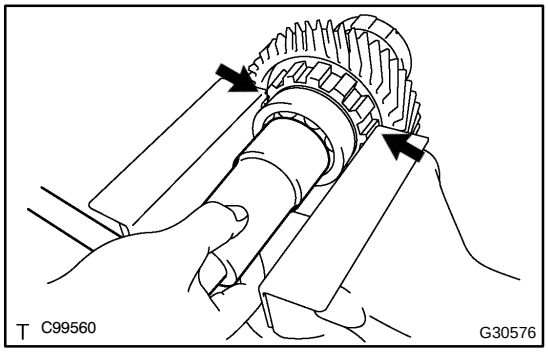

(c) Set the differential drive pinion in a vise and tighten the nut using a deep socket wrench.
Torque: 280 N·m (2,860 kgf·cm, 207 ft·lbf)

HINT:
Set the vise as shown in the illustration.

cardiagn.com

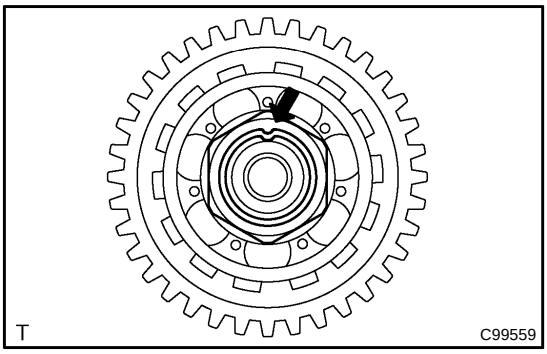

(d) Stake the nut.

cardiagn.com

TRANSMISSION DRIVE SPROCKET SUB–ASSY

2201C–01

COMPONENTS

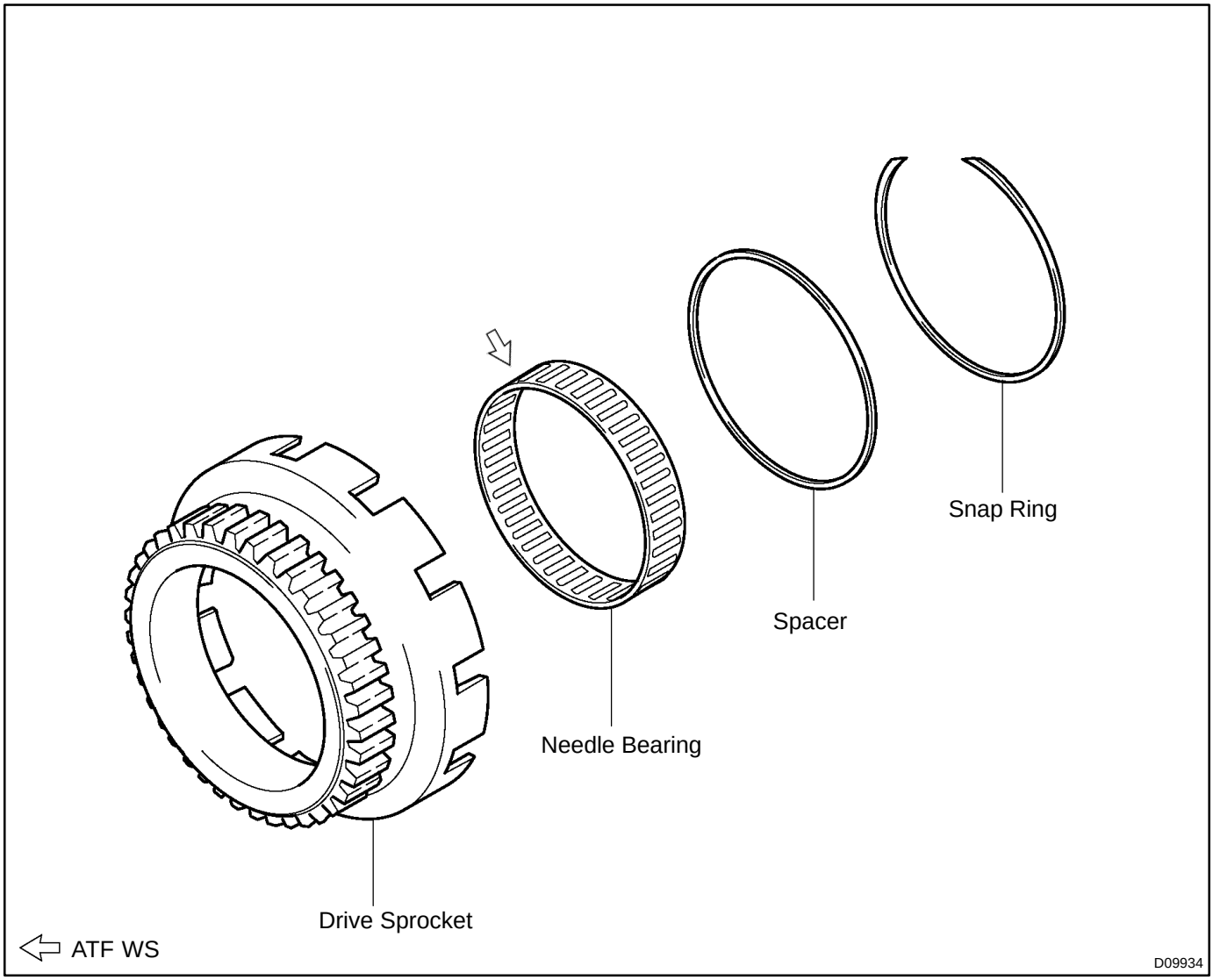

cardiagn.com

OVERHAUL

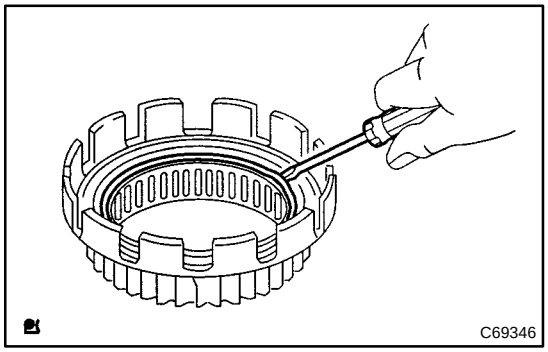

1. REMOVE TRANSMISSION DRIVE SPROCKET SUB–ASSY

(a) Using a thin screwdriver, remove the snap ring from the transmission drive sprocket.

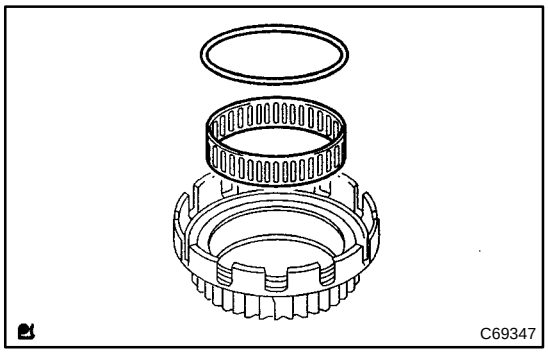

(b) Remove the spacer and the needle roller bearing from the transmission drive sprocket.

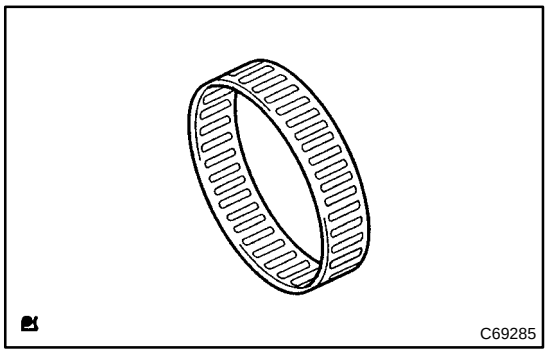

2. INSPECT DRIVE SPROCKET THRUST NEEDLE ROLLER NO.1 BEARING

(a) Check the bearing for abnormal wear or color change.

HINT:

Replace the needle roller bearing with a new one if abnormal wear or color change is observed.

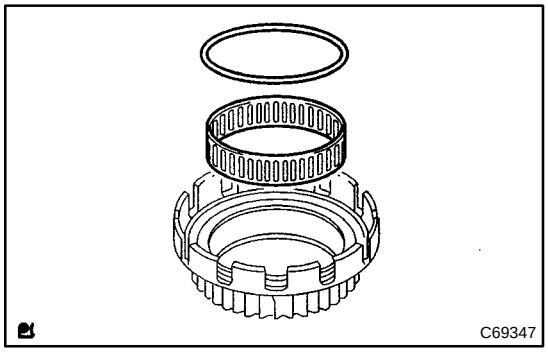

3. INSTALL TRANSMISSION DRIVE SPROCKET SUB–ASSY

(a) Apply ATF WS to the sliding surfaces of the bearing and install the needle roller bearing to the transmission drive sprocket.

(b) Install the spacer to the transmission drive sprocket.

cardiagn.com

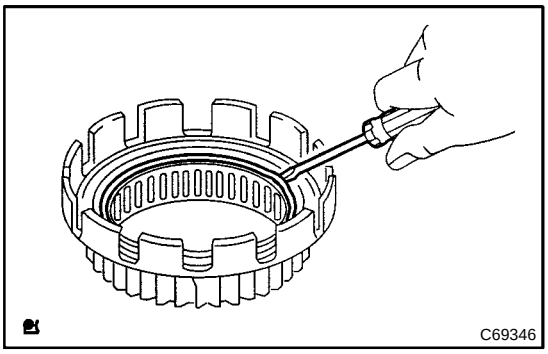

(c) Using a thin screwdriver, install the snap ring to the transmission drive sprocket.

cardiagn.com

DIFFERENTIAL CASE ASSY

COMPONENTS

2201E–01

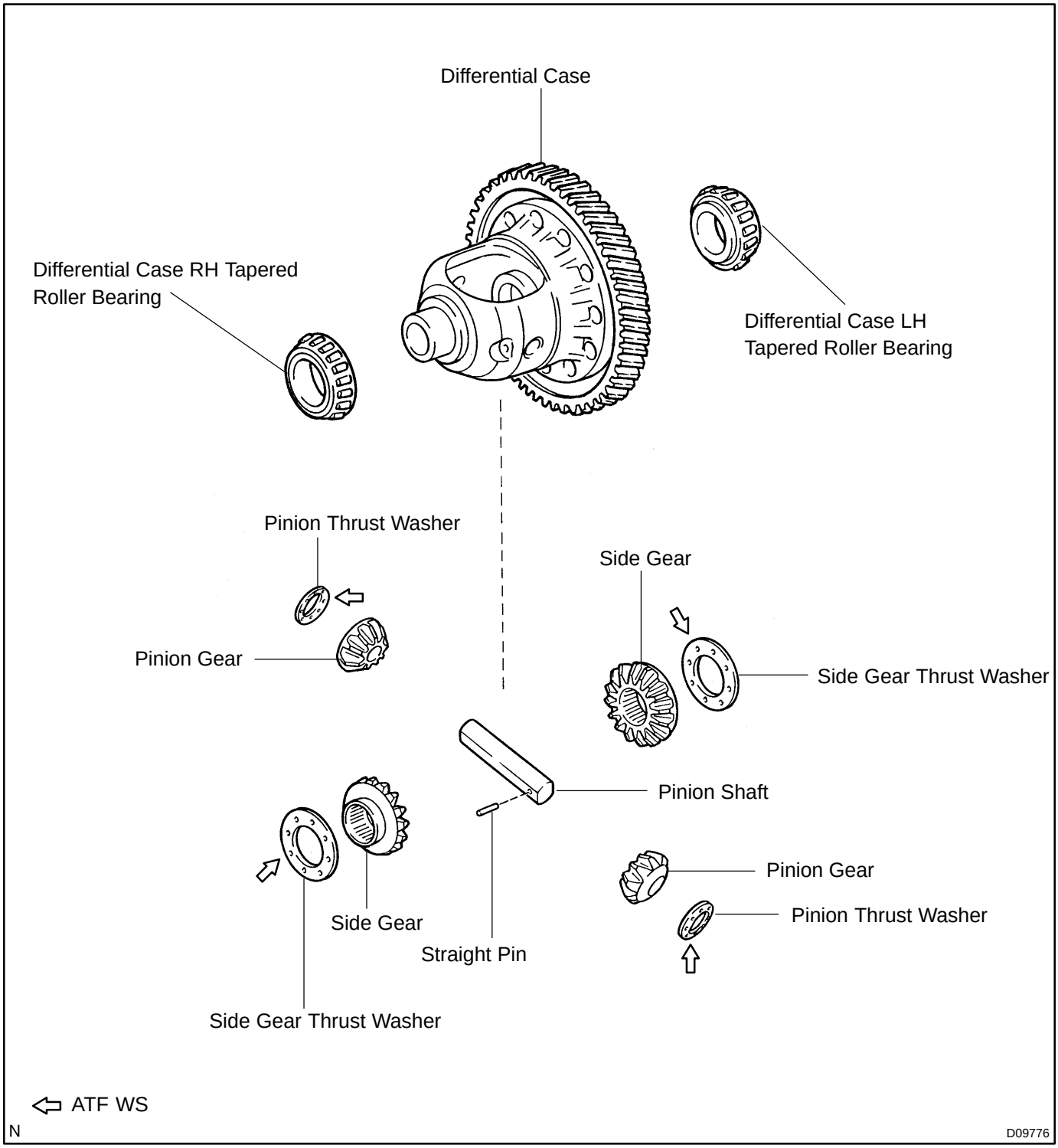

cardiagn.com

2201F–01

OVERHAUL

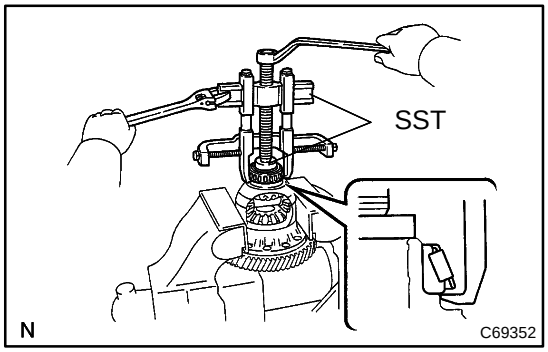

1. REMOVE DIFFERENTIAL CASE RH TAPERED ROLLER BEARING

(a) Set the differential case in a vise.

(b) Using SST, remove the bearing RH from the differential case.

SST 09950–40011 (09951–04010, 09952–04010, 09953–04020, 09954–04010, 09955–04061, 09958–04010)

NOTICE:

Apply oil, etc. to the ends and screw portions of the SST.

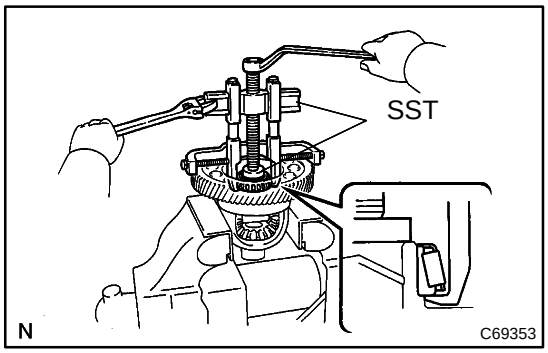

2. REMOVE DIFFERENTIAL CASE LH TAPERED ROLLER BEARING

(a) Set the differential case in a vise.

(b) Using SST, remove the bearing LH from the differential case.

SST 09950–40011 (09951–04010, 09952–04010, 09953–04020, 09954–04010, 09955–04061, 09958–04010)

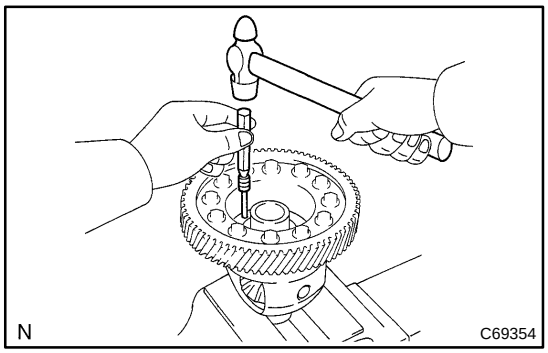

3. REMOVE DIFFERENTIAL CASE

(a) Set the differential case in a vise.

(b) Drive out the straight pin from the differential case using a pin punch (5 mm).

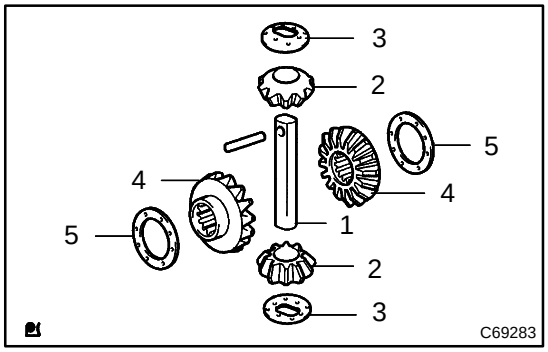

(c) Remove the following parts from the differential case.

Number	Part	Number of Parts
1	Pinion shaft	1
2	Pinion	2
3	Pinion thrust washer	2
4	Side gear	2
5	Side gear thrust washer	2

4. INSPECT DIFFERENTIAL CASE TAPERED ROLLER BEARING

(a) Check the bearing for abnormal wear or color change.

HINT:

Replace the bearing with a new one if abnormal wear or color change is observed.

cardiagn.com

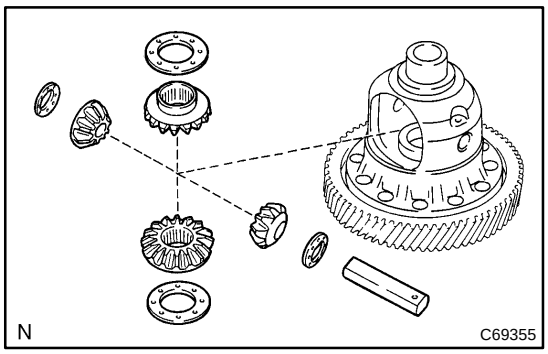

5. INSTALL DIFFERENTIAL CASE

(a) Apply ATF WS to the side gear thrust washer and install to the side gear.

(b) Apply ATF WS to the side gear thrust washer and install to the pinion.

(c) Install the side gear and pinion to the differential case.

(d) Install the pinion shaft to the differential case so that the straight pin holes of the pinion shaft and differential case are aligned.

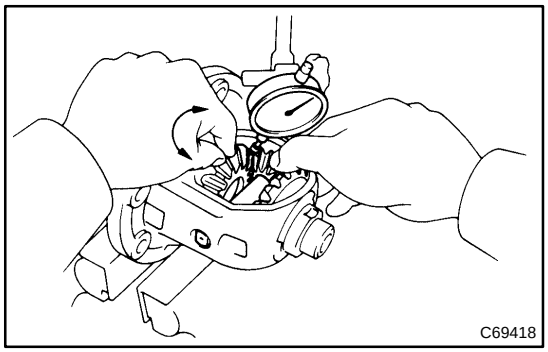

(e) Set the pinion side and inspect the side gear backlash.
Standard backlash:
0.05 to 0.20 mm (0.0020 to 0.0079 in.)

HINT:

- Replace the side gear thrust washers with the same size for both the right and left side gears if the value is outside the specified range.
- Ensure that rotation is smooth if side gear backlash is within the specified range.

If backlash exceeds the specified range, replace the side gear thrust washer with thinner ones.

If backlash is less then the specified range, replace the side-gear thrust washer with thicker ones.

Side gear thrust washers

Parts number	Washer thickness mm (in.)
41361–22140	0.95 (0.0374 in.)
41361–22020	1.00 (0.0394 in.)
41361–22150	1.05 (0.0414 in.)
41361–22030	1.10 (0.0433 in.)
41361–22160	1.15 (0.0453 in.)
41361–22040	1.20 (0.0472 in.)

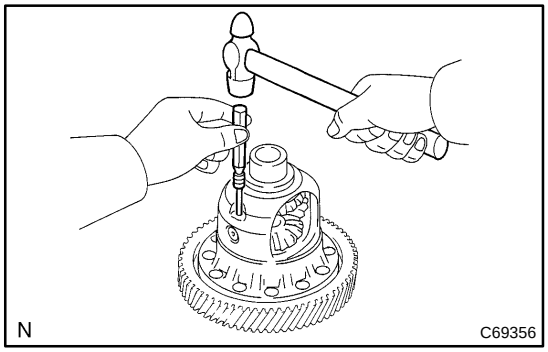

(f) Drive the straight pin into the differential case with a pin punch (5 mm).

cardiagn.com

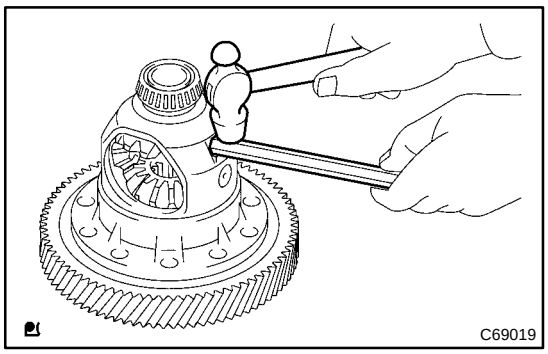

(g) Using a chisel, calk the external circumference of the differential case straight pin hole.

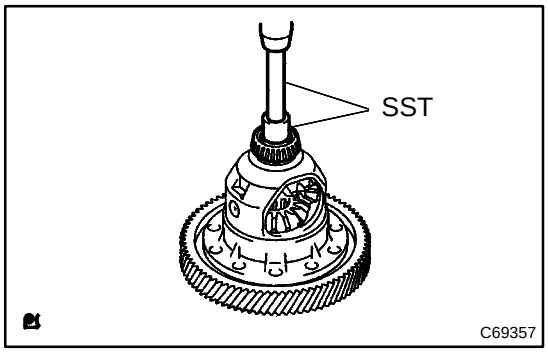

6. INSTALL DIFFERENTIAL CASE RH TAPERED ROLLER BEARING

(a) Using SST and a press, install the bearing RH to the differential case.

SST 09710–22021 (09710–01031), 09950–70010 (09951–07100)

HINT:
There are 24 bearing rollers in bearing RH.

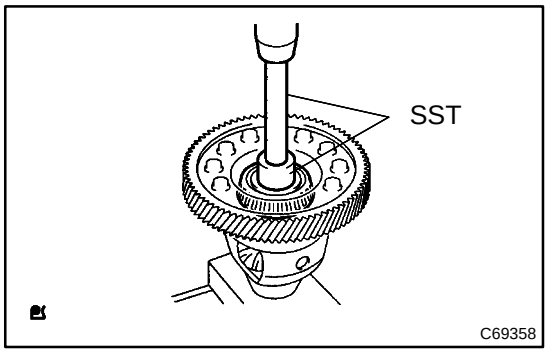

7. INSTALL DIFFERENTIAL CASE LH TAPERED ROLLER BEARING

(a) Using SST and a press, install the bearing LH to the differential case.

SST 09710–22021 (09710–01031), 09950–70010 (09951–07100)

HINT:
There are 22 bearing rollers in bearing LH.

cardiagn.com

HYBRID VEHICLE TRANSAXLE ASSY TYPE T OIL SEAL

22010–01

REPLACEMENT

1. **REMOVE FRONT WHEELS**
2. **REMOVE ENGINE UNDER COVER RH**
3. **REMOVE ENGINE UNDER COVER LH**
4. **DRAIN TRANSAXLE OIL (SEE PAGE 22–1)**
5. **REMOVE FRONT DRIVE SHAFT ASSY LH (SEE PAGE 30–7)**
6. **REMOVE FRONT DRIVE SHAFT ASSY RH (SEE PAGE 30–7)**
   SST 09520–01010, 09520–24010 (09520–32040)

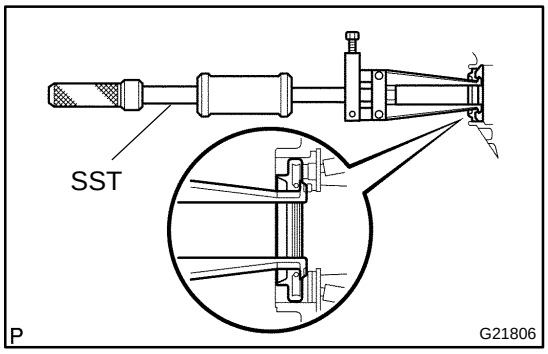

7. **REMOVE HYBRID VEHICLE TRANSAXLE ASSY TYPE T OIL SEAL**
   (a) Using SST, remove the oil seal.
   SST 09308–00010

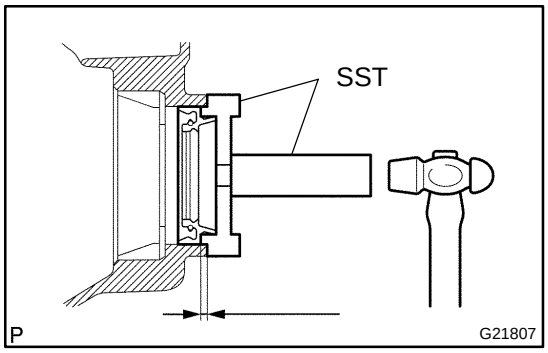

8. **INSTALL HYBRID VEHICLE TRANSAXLE ASSY TYPE T OIL SEAL**
   (a) Apply a small amount of MP grease No.2 to the oil seal lip.
   (b) Using SST, drive in a new oil seal to the standard depth.
   Oil seal drive in depth:
   2.7 ± 0.5 mm (0.106 ± 0.020 in.)
   SST 09950–70010 (09951–07200), 09350–32014 (09351–32130, 09351–32150)

9. **INSTALL FRONT DRIVE SHAFT ASSY LH (SEE PAGE 30–7)**
10. **INSTALL FRONT DRIVE SHAFT ASSY RH (SEE PAGE 30–7)**
11. **INSTALL FRONT WHEELS**
12. **ADD TRANSAXLE OIL (SEE PAGE 22–1)**
    Fluid type: AUTO FLUID WS
    Capacity: 3.8 liters (4.0 US qts, 3.3 Imp. qts)
13. **INSPECT TRANSAXLE OIL (SEE PAGE 22–1)**
14. **INSTALL ENGINE UNDER COVER RH**
15. **INSTALL ENGINE UNDER COVER LH**
16. **INSPECT AND ADJUST FRONT WHEEL ALIGNMENT (SEE PAGE 26–6)**
17. **DELETE TORQUE ZERO POINT (SEE PAGE 05–1211)**

cardiagn.com

GENERATOR CABLE

22011–01

REPLACEMENT

NOTICE:

- **When working on the high voltage systems, always wear insulated gloves.**
- **After removing the service plug grip, do not operate the power switch as it may damage the hybrid vehicle control ECU.**
- **Keep the removed service plug in your pocket to prevent other technicians from reconnecting it while you are servicing the vehicle.**
- **After removing the service plug grip, do not touch the high voltage connectors and terminals for 5 minutes.**

1. **DISCONNECT BATTERY NEGATIVE TERMINAL**
2. **REMOVE SERVICE PLUG GRIP (SEE PAGE 01–5)**
3. **REMOVE ENGINE UNDER COVER LH**
4. **REMOVE ENGINE UNDER COVER RH**
5. **DRAIN COOLANT (SEE PAGE 22–4)**
6. **REMOVE COWL TOP PANEL SUB–ASSY OUTER FRONT (SEE PAGE 21–23)**
7. **REMOVE W/CONVERTER INVERTER ASSY (SEE PAGE 21–23)**

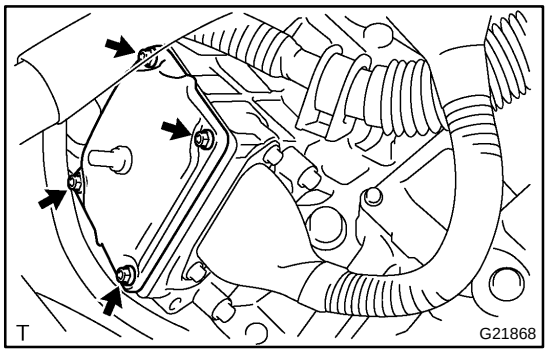

8. **REMOVE GENERATOR CABLE**

(a) Zero bolt confirmation process.

NOTICE:

Ensure that insulated gloves are worn when carrying out this procedure.

(1) Remove the 4 bolts and power cable cover.

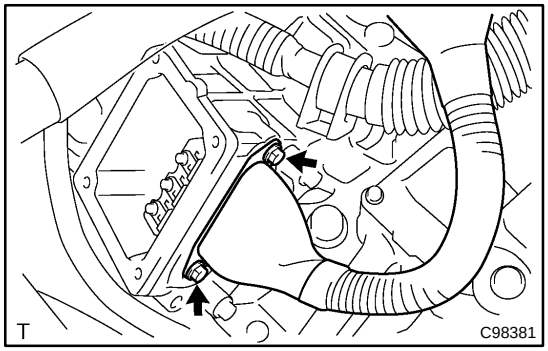

(2) Remove the two bolts from the generator cable.

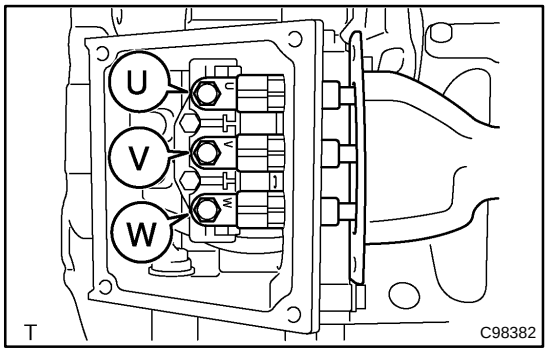

(3) Inspect the voltage between each of the 3 phase AC terminals (U to V, V to W, U to W) and body earth using the Toyota electrical tester.

Standard value: 0 V

HINT:

Use the Toyota Electrical Tester on measured ranges of DC 400 volts or more.

cardiagn.com

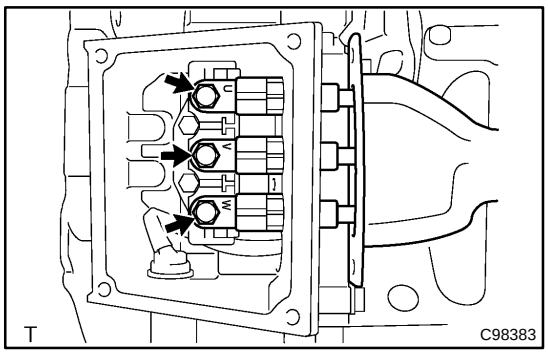

(b) Remove the 3 bolts and generator cable.

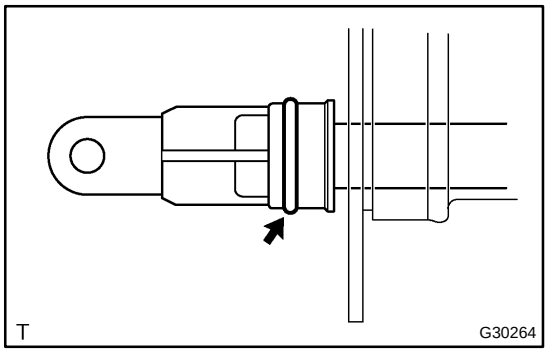

9. INSTALL GENERATOR CABLE

(a) Apply a small amount of ATF WS to the generator cable O–ring.

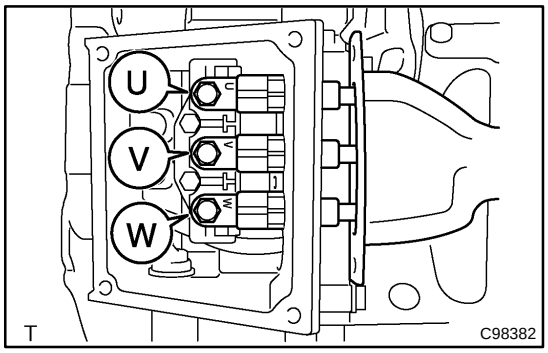

(b) Connect the generator cable as shown in the illustration.

NOTICE:

- **Connect by aligning the letters U, V and W.**
- **Ensure that no foreign objects are attached to the O–ring when connecting the cables.**

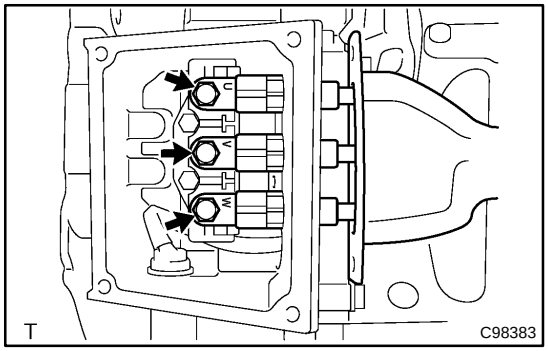

(c) Install the generator cable (terminals) with the 3 bolts.
Torque: 8.5 N·m (87 kgf·cm, 71 in.·lbf)

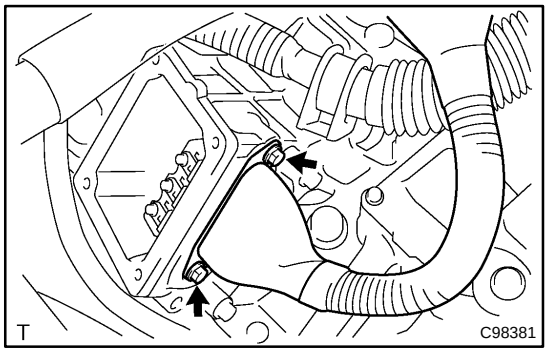

(d) Install the generator cable with the 2 bolts.
Torque: 5.8 N·m (59 kgf·cm, 51 in.·lbf)

cardiagn.com

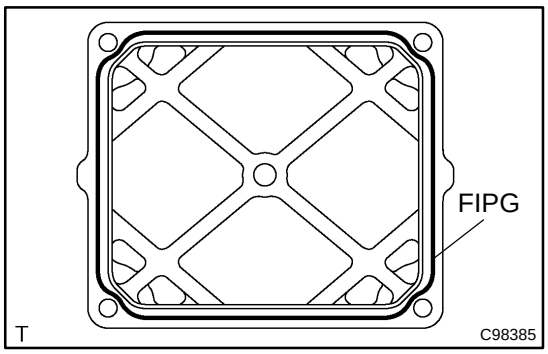

(e) Apply seal packing 1281 in a continuous line of beads (diameter 1.5 mm) to the power cable cover.

NOTICE:

- **Clean and degrease the installation surfaces.**
- **Install within 10 minutes of applying seal packing.**
- **Ensure that no foreign objects are inserted when the power cable cover is attached.**

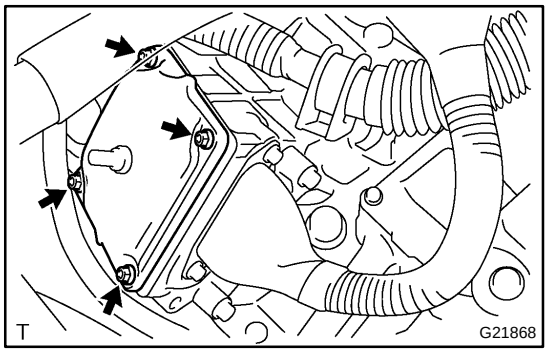

(f) Install the power cable cover with the 4 bolts.
Torque: 4.8 N·m (49 kgf·cm, 42 in.·lbf)

10. INSTALL W/CONVERTER INVERTER ASSY (SEE PAGE 21–23)
11. INSTALL COWL TOP PANEL SUB–ASSY OUTER FRONT (SEE PAGE 21–23)
12. INSTALL ENGINE UNDER COVER RH
13. INSTALL ENGINE UNDER COVER LH
14. INSTALL SERVICE PLUG GRIP (SEE PAGE 01–5)
15. CONNECT BATTERY NEGATIVE TERMINAL
16. ADD COOLANT (SEE PAGE 22–4)
17. CHECK FOR ENGINE COOLANT LEAKS (SEE PAGE 16–2)
18. PERFORM INITIALIZATION (SEE PAGE 01–28)

cardiagn.com

SHIFT LEVER ASSY

COMPONENTS

22012–01

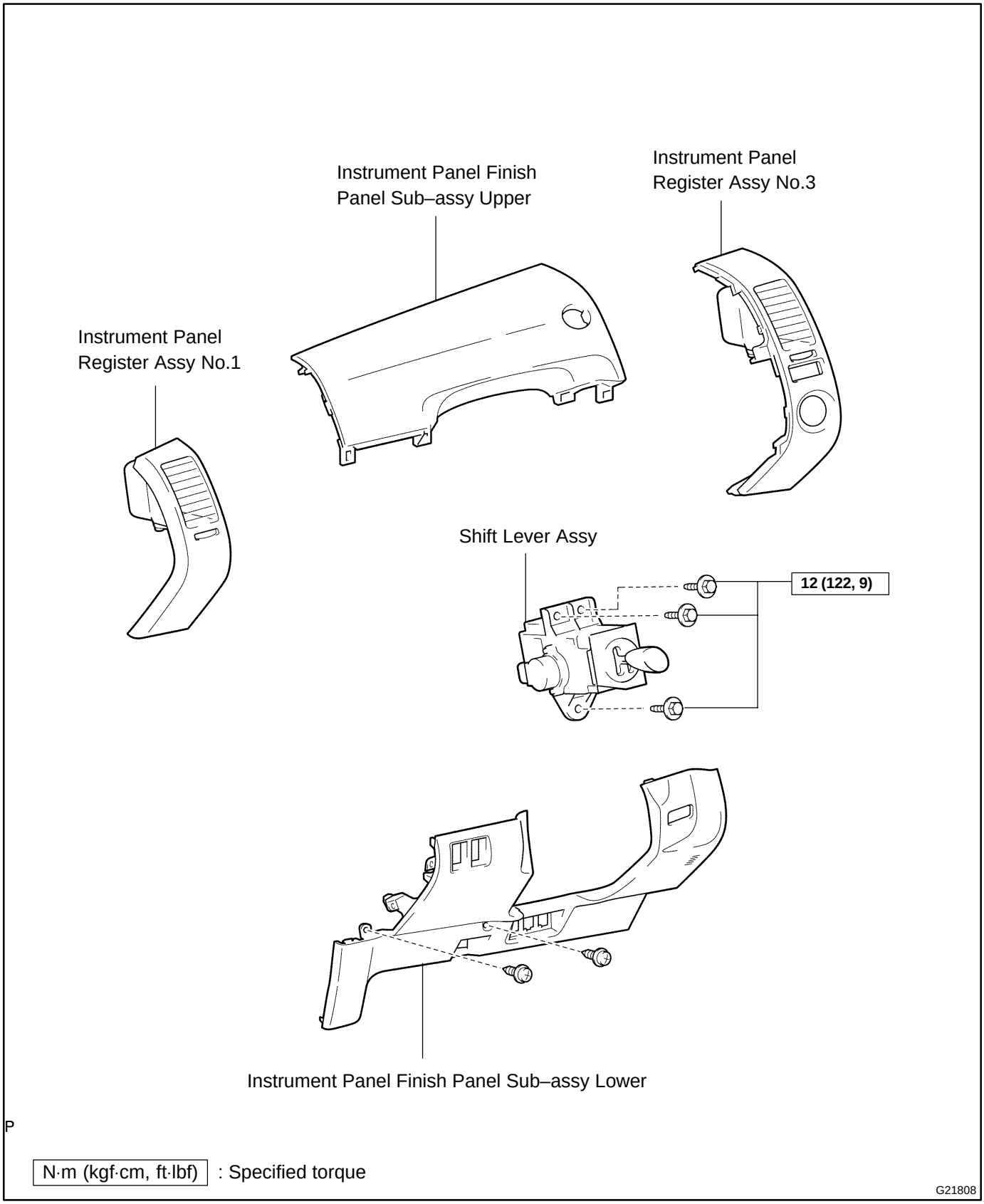

cardiagn.com

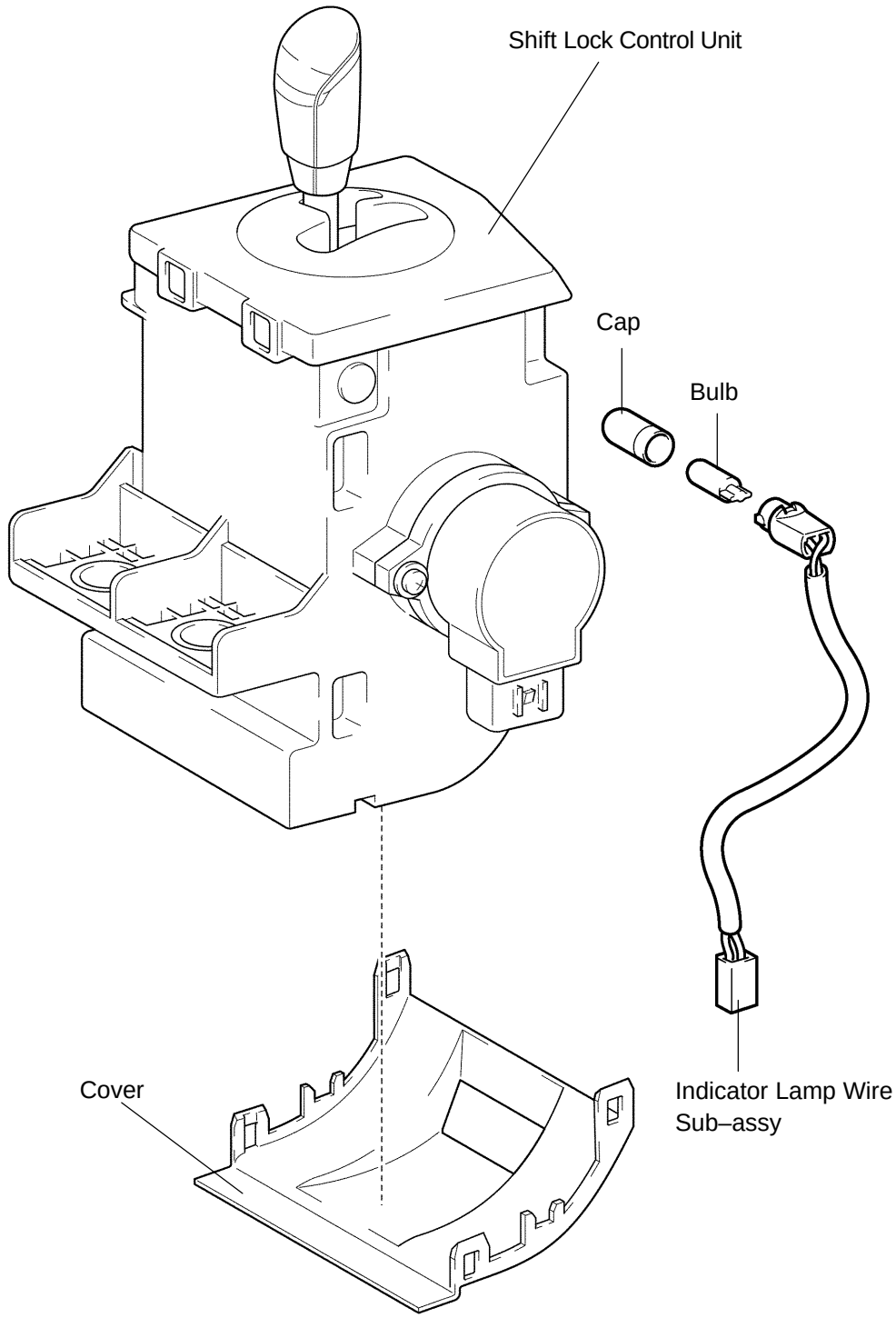

P C97763

cardiagn.com

22013–01

OVERHAUL

1. **REMOVE INSTRUMENT PANEL REGISTER ASSY NO.1 (SEE PAGE 71–7)**
2. **REMOVE INSTRUMENT PANEL FINISH PANEL SUB–ASSY LOWER (SEE PAGE 71–7)**
3. **REMOVE INSTRUMENT PANEL FINISH PANEL SUB–ASSY UPPER (SEE PAGE 71–7)**
4. **REMOVE INSTRUMENT PANEL REGISTER ASSY NO.3 (SEE PAGE 71–7)**

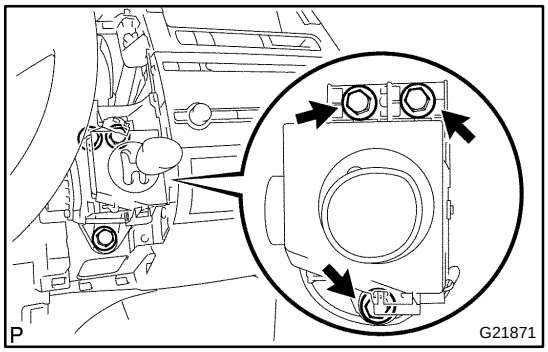

5. REMOVE SHIFT LEVER ASSY

(a) Remove the 3 bolts.

(b) Disconnect the 2 connectors and remove the shift lever assy.

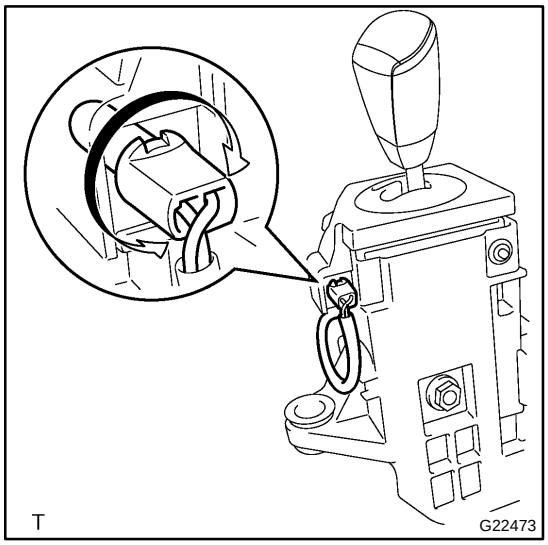

6. REMOVE INDICATOR LAMP WIRE SUB–ASSY

(a) Remove the position indicator lamp wire from the position indicator housing.

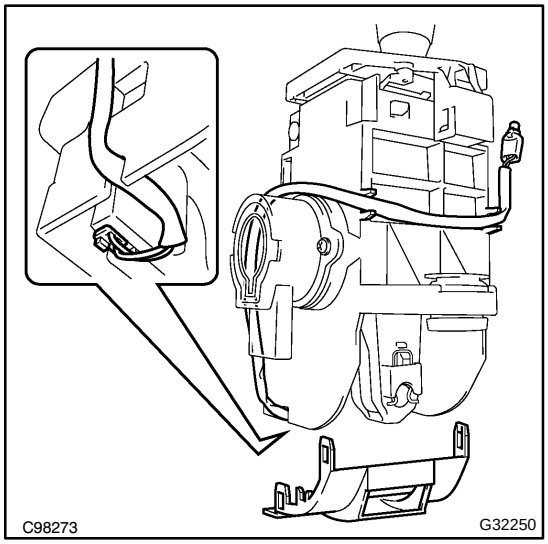

(b) Separate the connector from the 3 clamps and remove the position indicator lamp wire.

(c) Remove the cover.

cardiagn.com

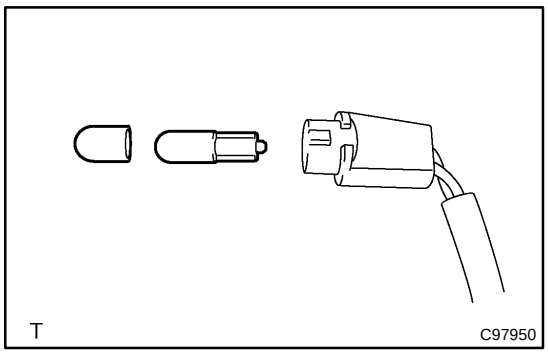

(d) Remove the bulb and cap from the position indicator lamp wire.

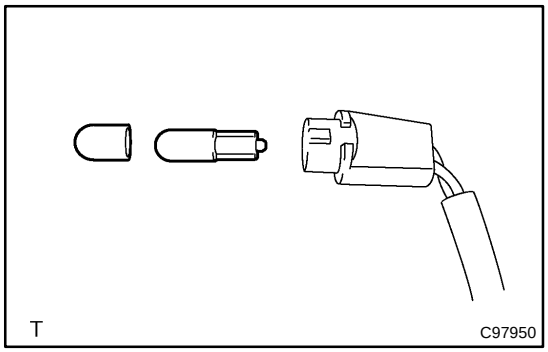

7. INSTALL INDICATOR LAMP WIRE SUB–ASSY

(a) Install the bulb and cap to the position indicator lamp wire.

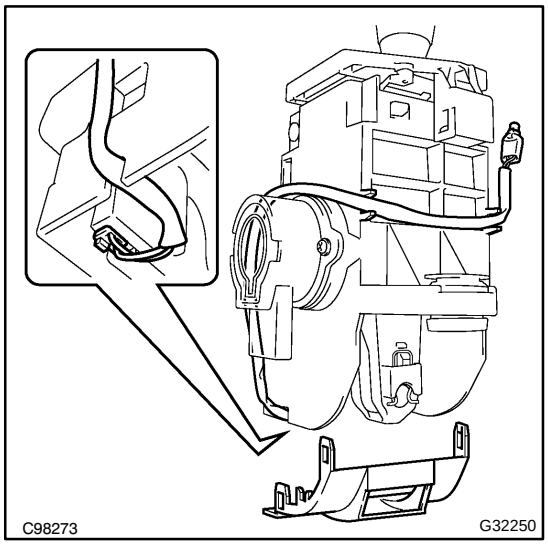

(b) Connect the connecter and 3 clamps.

(c) Install the cover.

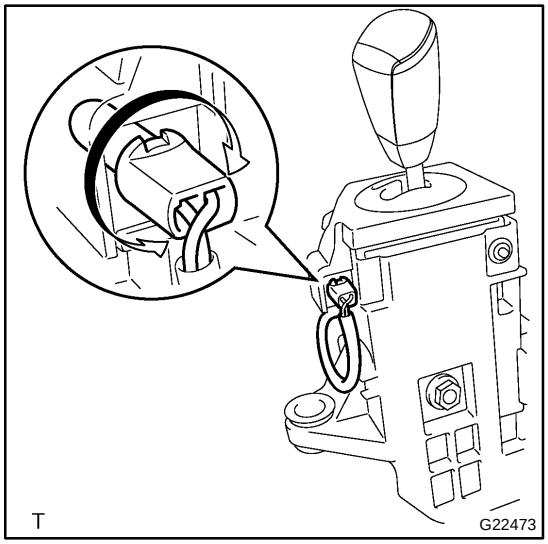

(d) Install the position indicator lamp wire to the position indicator housing.

NOTICE:

- **Securely attach by twisting to the right.**

cardiagn.com

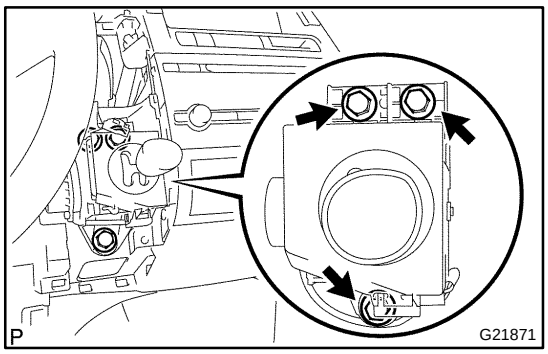

8. INSTALL SHIFT LEVER ASSY

(a) Install the 2 connectors to the shift lever assy.

(b) Install the shift lever assy with the 3 bolts.
Torque: 12 N·m (122 kgf·cm, 9 ft·lbf)

9. INSPECT SHIFT LEVER ASSY (SEE PAGE 22–1)

cardiagn.com

OIL PUMP DRIVE SHAFT

22014–01

REPLACEMENT

1. **REMOVE FRONT WHEEL LH**
2. **REMOVE ENGINE UNDER COVER LH**
3. **DRAIN TRANSAXLE OIL (SEE PAGE 22–1)**

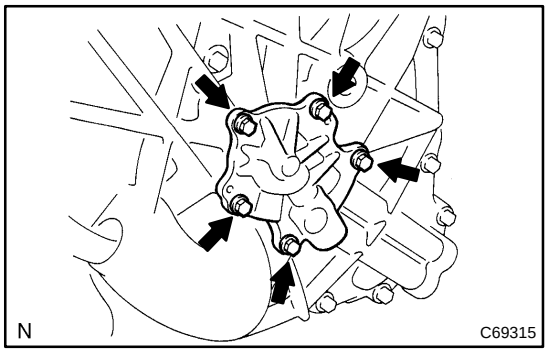

4. **REMOVE TRANSMISSION OIL PUMP COVER SUB–ASSY**

(a) Remove the 5 bolts and oil pump cover.

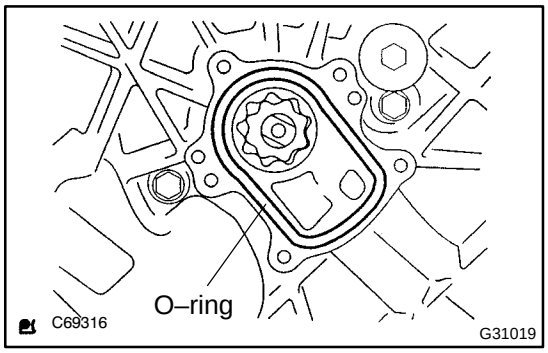

(b) Remove the O–ring.

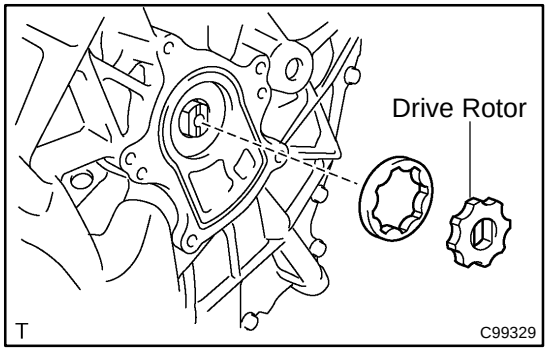

5. **REMOVE TRANSAXLE OIL PUMP DRIVE ROTOR**

(a) Remove the transaxle oil pump driver rotor from the hybrid vehicle transaxle.

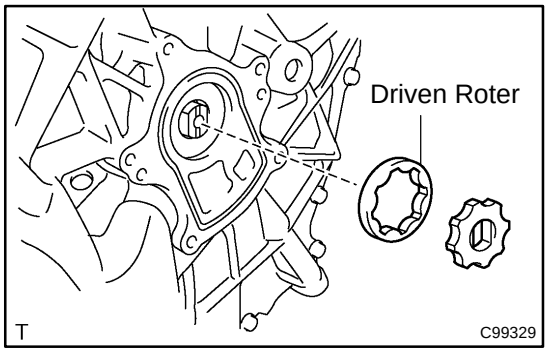

6. **REMOVE OIL PUMP DRIVEN ROTOR**

(a) Remove the oil pump driven rotor from the hybrid vehicle transaxle.

cardiagn.com

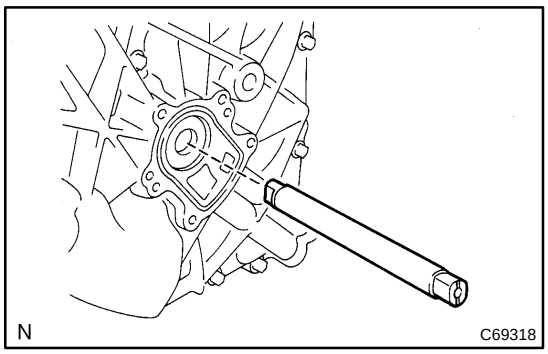

7. REMOVE OIL PUMP DRIVE SHAFT

(a) Remove the oil pump drive shaft from the hybrid vehicle transaxle.

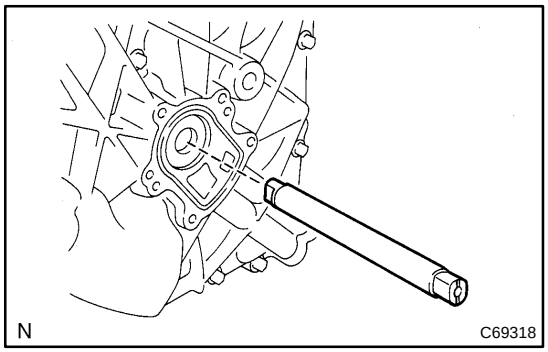

8. INSTALL OIL PUMP DRIVE SHAFT

(a) Apply ATF WS to the oil pump drive shaft and install to the hybrid vehicle transaxle.

HINT:

Use genuine ATF WS.

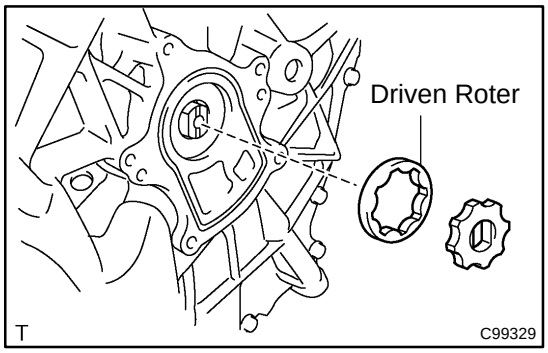

9. INSTALL OIL PUMP DRIVEN ROTOR

(a) Apply ATF WS to the oil pump driven rotor and install to the hybrid vehicle transaxle.

HINT:

Use genuine ATF WS.

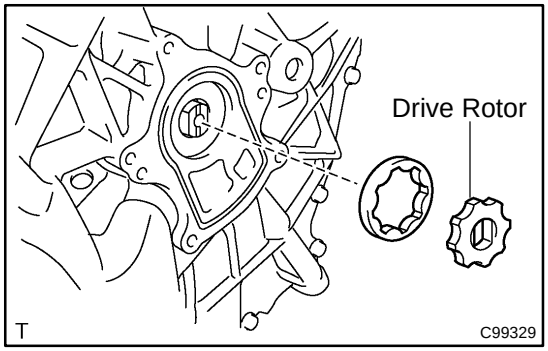

10. INSTALL TRANSAXLE OIL PUMP DRIVE ROTOR

(a) Apply ATF WS to the oil pump drive rotor and install to the hybrid vehicle transaxle.

HINT:

Use genuine ATF WS.

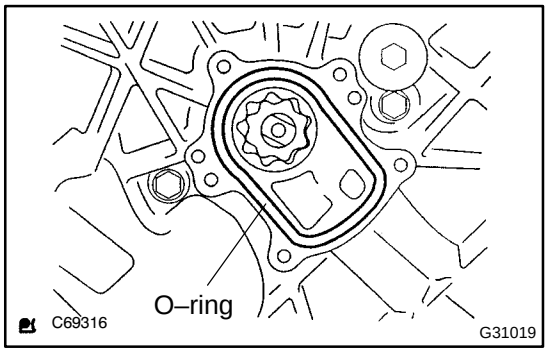

11. INSTALL TRANSMISSION OIL PUMP COVER SUB–ASSY

(a) Install a new O–ring to the hybrid transaxle.

NOTICE:

Do not twist the O–ring when installing it.

cardiagn.com

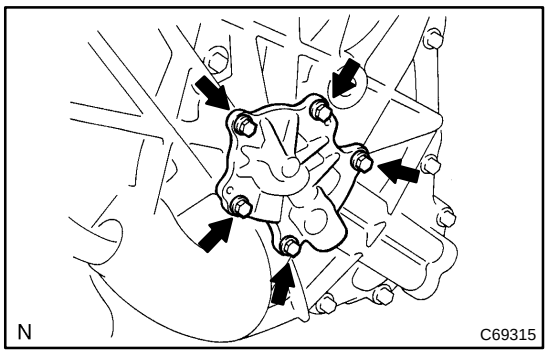

(b) Apply liquid sealant 1344 to the first 2 or 3 threads of the bolt end.

NOTICE:

Clean and degrease the bolts and bolt holes.

(c) Install the oil pump cover with the 5 bolts.
Torque: 5.5 N·m (56 kgf·cm, 49 in.·lbf)

12. INSTALL FRONT WHEEL LH

13. ADD TRANSAXLE OIL
Fluid type: AUTO FLUID WS
Capacity: 3.8 liters (4.0 US qts, 3.3 Imp. qts)

14. INSPECT TRANSAXLE OIL (SEE PAGE 22–1)

15. INSTALL ENGINE UNDER COVER LH

cardiagn.com

INPUT SHAFT OIR SEAL

22015–01

REPLACEMENT

NOTICE:

- **When working on the high voltage systems, always wear insulated gloves.**
- **After removing the service plug grip, do not operate the power switch as it may damage the hybrid vehicle control ECU.**
- **Keep the removed service plug in your pocket to prevent other technicians from reconnecting it while you are servicing the vehicle.**
- **After removing the service plug grip, do not touch the high voltage connectors and terminals for 5 minutes.**

1. REMOVE HYBRID VEHICLE TRANSAXLE ASSY (SEE PAGE 22–11)

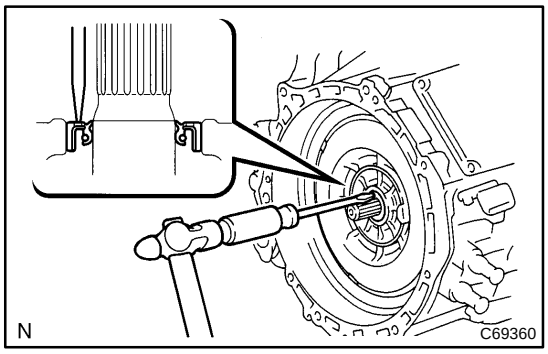

2. REMOVE INPUT SHAFT OIR SEAL

(a) Drive a flat–head screwdriver into the metal portion of the oil seal and remove the oil seal.

NOTICE:

Do not damage the input shaft and transaxle housing when driving the screwdriver or removing the oil seal.

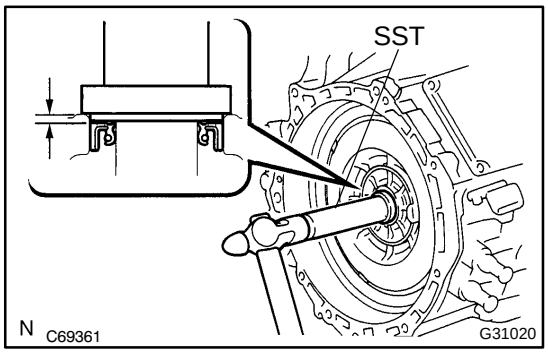

3. INSTALL INPUT SHAFT OIR SEAL

(a) Apply a small amount of MP grease No.2 to the oil seal lip.

(b) Using SST, install a new oil seal.

SST 09388–40010

Oil seal drive in depth:

1.0 to 1.5 mm (0.0393 ± 0.0590 in.)

NOTICE:

- **Ensure that no foreign objects adhere to the oil seal lip.**
- **Ensure that the oil seal is fitted straight.**

4. INSTALL HYBRID VEHICLE TRANSAXLE ASSY (SEE PAGE 22–11)

cardiagn.com