Contents

Introduction 2
In brief 6
Keys, doors and windows 17
Seats, restraints 30
Storage 51
Instruments and controls 59
Lighting 76
Climate control 83
Driving and operating 94
Vehicle care 116
Service and maintenance 149
Technical data 152
Customer information 170
Index 172

Introduction

Fuel	Designation			
Engine oil	Grade			
	Viscosity			
Tyre pressure		Tyre size	Front	Rear
	Summer tyres			
	Winter tyres			
Weights				
	Gross vehicle weight rating			
	- Kerb weight, basic model			
	= Loading			

Vehicle specific data

Please enter your vehicle's data on the previous page to keep it easily accessible. This information is available in the sections "Service and maintenance" and "Technical data" as well as on the identification plate.

Introduction

Your vehicle is a designed combination of advanced technology, safety, environmental friendliness and economy.

This Owner's Manual provides you with all the necessary information to enable you to drive your vehicle safely and efficiently.

Make sure your passengers are aware of the possible risk of accident and injury which may result from improper use of the vehicle.

You must always comply with the specific laws and regulations of the country that you are in. These laws may differ from the information in this Owner's Manual.

When this Owner's Manual refers to a workshop visit, we recommend your Opel Service Partner.

All Opel Service Partners provide first-class service at reasonable prices. Experienced mechanics trained by Opel work according to specific Opel instructions.

The customer literature pack should always be kept ready to hand in the vehicle.

Using this manual

- This manual describes all options and features available for this model. **Certain descriptions, including those for display and menu functions, may not apply to your vehicle due to model variant, country specifications, special equipment or accessories.**
- The "In brief" section will give you an initial overview.
- The table of contents at the beginning of this manual and within each section shows where the information is located.
- The index will enable you to search for specific information.
- This Owner's Manual depicts left-hand drive vehicles. Operation is similar for right-hand drive vehicles.
- The Owner's Manual uses the factory engine designations. The corresponding sales designations can be found in the section "Technical data".
- Directional data, e.g. left or right, or front or back, always relate to the direction of travel.
- The vehicle display screens may not support your specific language.
- Display messages and interior labelling are written in **bold** letters.

Danger, Warnings and Cautions

⚠ Danger
Text marked ⚠ **Danger** provides information on risk of fatal injury. Disregarding this information may endanger life.

⚠Warning

Text marked ⚠**Warning** provides information on risk of accident or injury. Disregarding this information may lead to injury.

Caution

Text marked **Caution** provides information on possible damage to the vehicle. Disregarding this information may lead to vehicle damage.

Symbols

Page references are indicated with ⇨.
⇨ means "see page".

We wish you many hours of pleasurable driving.

Adam Opel AG

In brief

Initial drive information

Vehicle unlocking

Press button to unlock the doors. Open the doors by pulling the handles.

Press button ; only the load compartment is unlocked.

Radio remote control ⇨ 17, Central locking system ⇨ 18, Anti-theft alarm system ⇨ 23.

Seat adjustment

Seat positioning

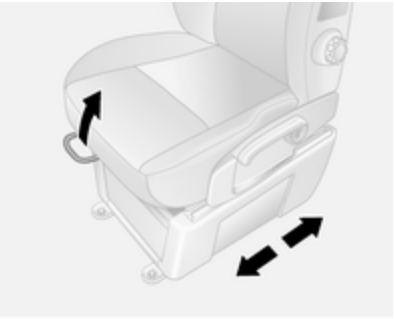

Pull handle, slide seat, release handle.

Seat position ⇨ 31, Seat adjustment ⇨ 32.

⚠ Danger

Do not sit nearer than 25 cm from the steering wheel, to permit safe airbag deployment.

Seat backrests

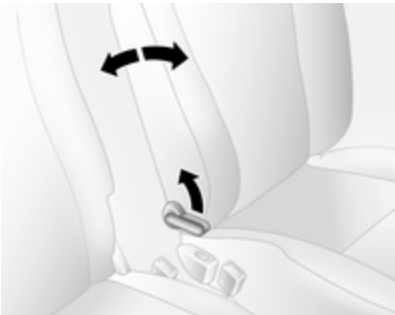

Pull lever, adjust inclination and release lever. Allow the seat to engage audibly.

Seat position ⇨ 31, Seat adjustment ⇨ 32.

Seat height

Lever motion

up = seat higher
down = seat lower

Seat position ⇨ 31, Seat adjustment ⇨ 32.

Lumbar support

To adjust, turn the handwheel.

Seat position ⇨ 31, Seat adjustment ⇨ 32.

Head restraint adjustment

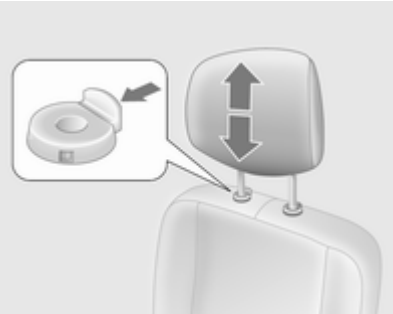

Press release catch, adjust height, engage.

Head restraints ⇨ 30.

Seat belt

Pull out the seat belt and engage in belt buckle. The seat belt must not be twisted and must fit close against the body. The backrest must not be tilted back too far (maximum approx. 25 °).

To release belt, press red button on belt buckle.

Seat position ⇨ 31, Seat belts ⇨ 37, Airbag system ⇨ 40.

Mirror adjustment

Interior mirror

Adjust the lever on the underside to reduce dazzle.

Interior mirror ⇨ 26.

Exterior mirrors

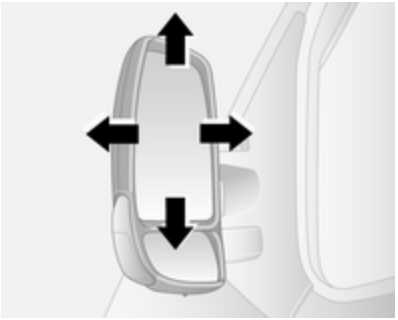

Select the relevant exterior mirror and adjust.

Convex exterior mirrors ⇨ 25, Electric adjustment ⇨ 25, Heated exterior mirrors ⇨ 26.

Steering wheel adjustment

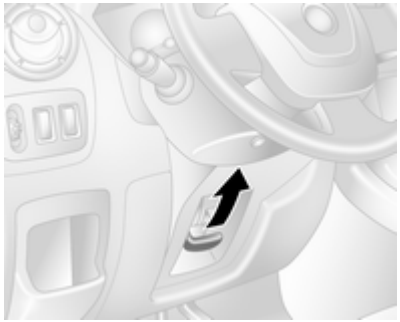

Unlock lever, adjust steering wheel, then engage lever and ensure it is fully locked.

Do not adjust steering wheel unless vehicle is stationary and steering wheel lock has been released.

Airbag system ⇨ 40, Ignition positions ⇨ 95.

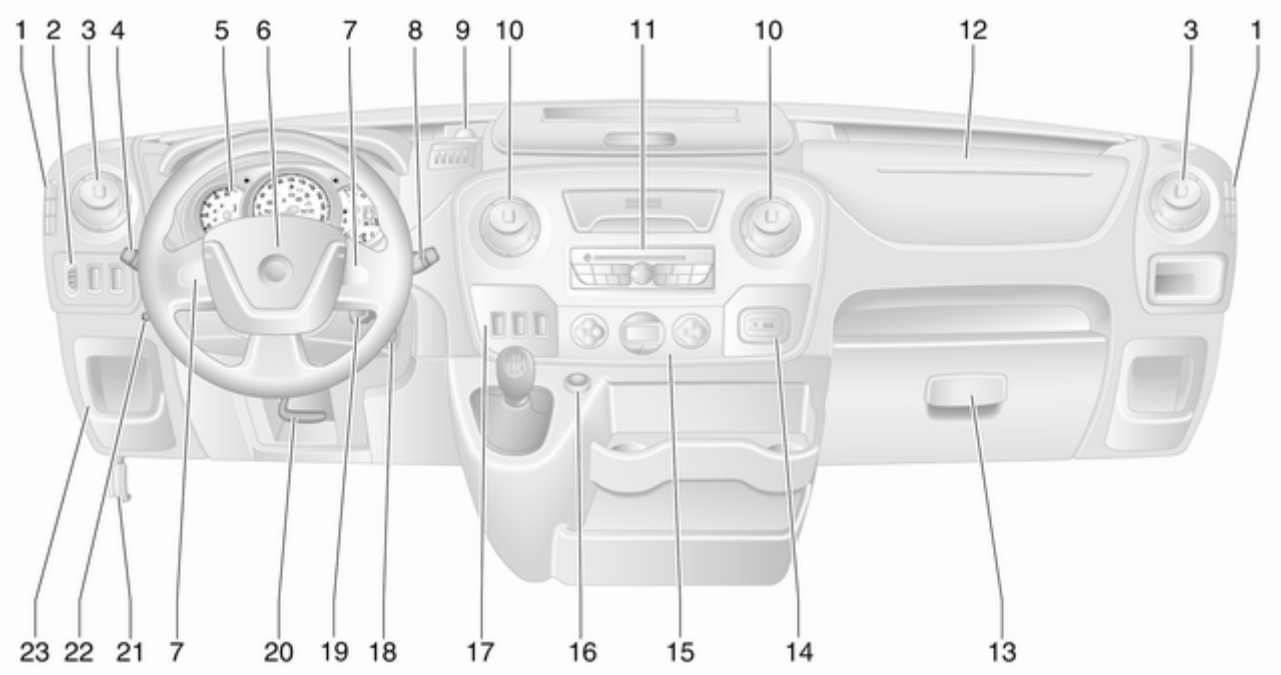
1
2
3
4
5
6
7
8
9
10
11
10
12
3
1
23
22
21
7
20
19
18
17
16
15
14
13

Instrument panel overview

1 Fixed air vents 92

2 Headlight range adjustment 77
Parking assist 109
Traction Control system 104
Electronic stability program 105

3 Side air vents 92

4 Turn and lane-change signals 78
High beam and low beam, headlight flash 77
Automatic light control 76
Exit lighting 81
Front fog lights 78
Rear fog light 79

5 Instruments 64

6 Horn 60
Driver airbag 40

7 Steering wheel controls 59
Cruise control 106

8 Windscreen wiper, windscreen washer system .. 60

9 Power outlet 63

10 Centre air vents 92

11 Infotainment system 10

12 Passenger airbag 40

13 Glovebox 52
Storage compartment 51

14 AUX input 10

15 Climate control system 83

16 Cigarette lighter 63

17 Cruise control and speed limiter 106
Manual transmission automated, Winter and Laden modes 101
Idle speed control 95

18 Ignition switch with steering wheel lock 95

19 Steering column controls 60

20 Steering wheel adjustment . . 59

21 Bonnet release lever 117

22 Auxiliary heater 88

23 Fuse box 132

Exterior lighting

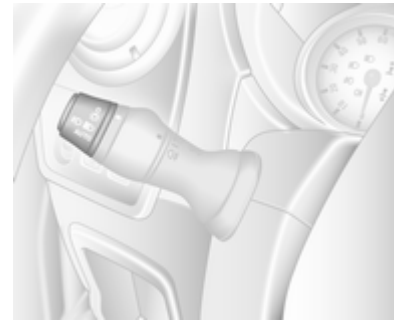

Turn light switch

0	=	Off
☼	=	Sidelights
≡D ≡D	=	Headlights
AUTO	=	Automatic light control: Headlights are switched on and off automatically.

Turn

≠D	=	Front fog lights
D≠	=	Rear fog lights

Lighting ⇨ 76.

Headlight flash, high beam and low beam

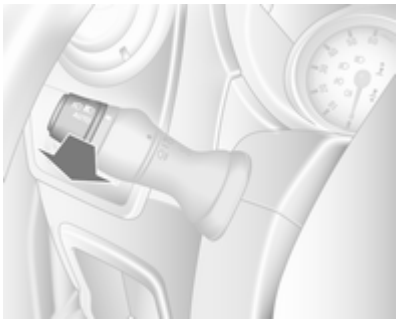

Pull lever.

High beam ⇨ 77, Headlight flash ⇨ 77.

Turn and lane-change signals

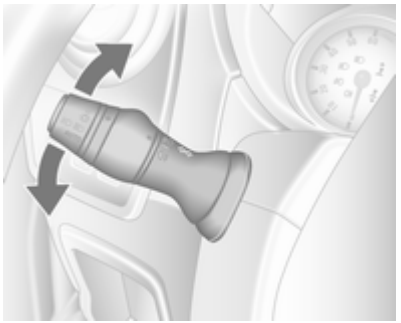

right = lever up
left = lever down

Turn and lane-change signals ⇨ 78.

Hazard warning flashers

Operated with the ⚠ button.

Hazard warning flashers ⇨ 78.

Horn

Press 📯.

Washer and wiper systems

Windscreen wiper

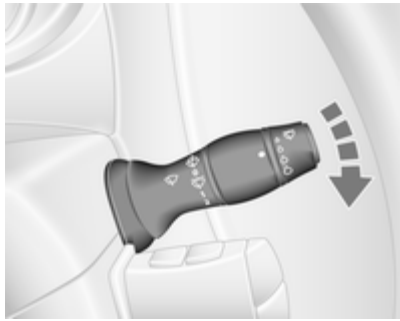

0 = off

⏲ = timed interval wiping or automatic wiping with rain sensor

1 = slow

2 = fast

Windscreen wiper ⇨ 60, Wiper blade replacement ⇨ 122.

Windscreen washer

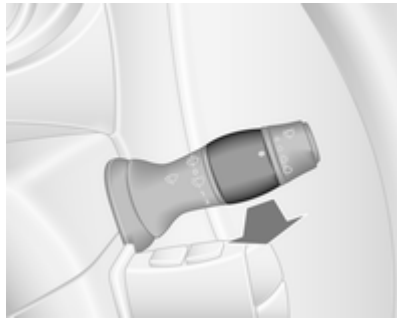

Pull lever.

Windscreen washer ⇨ 60, Washer fluid ⇨ 120.

Climate control

Heated rear window, heated exterior mirrors

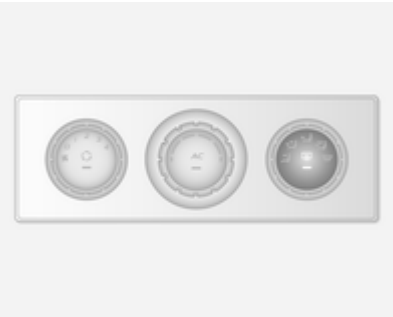

Heating is operated by pressing the button.

Heated exterior mirrors ⇨ 26,
Heated rear window ⇨ 28.

Demisting and defrosting the windows

Air distribution to .

Set temperature control to warmest level.

Set fan speed to highest level.

Cooling **AC** on.

Press button .

Climate control system ⇨ 83.

Vehicles with Electronic climate control, press button .
Temperature and air distribution are set automatically and the fan runs at a high speed.

Electronic climate control system ⇨ 84.

Transmission

Manual transmission

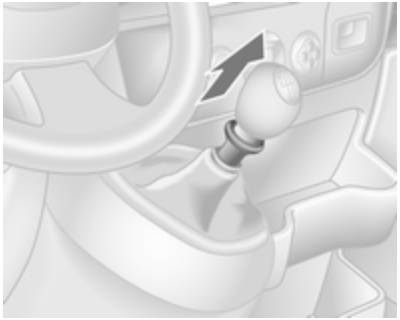

Reverse: with the vehicle stationary, depress clutch pedal and then pull up the collar on the selector lever and engage the gear.

If the gear does not engage, set the lever to neutral, release the clutch pedal and depress again; then repeat gear selection.

Manual transmission ⇨ 98.

Manual transmission automated

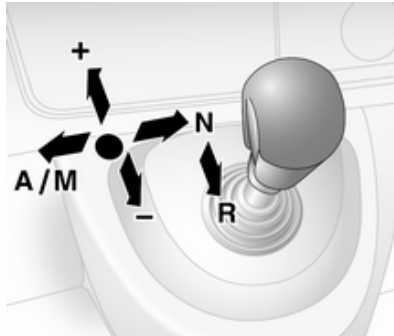

N	=	neutral
●	=	drive
+	=	higher gear
-	=	lower gear
A/M	=	switch between automatic and manual mode
R	=	reverse gear

Manual transmission automated ⇨ 98.

Starting off

Check before starting off

- Tyre pressure and condition ⇨ 135, ⇨ 167.
- Engine oil level and fluid levels ⇨ 118.
- All windows, mirrors, exterior lighting and number plates are free from dirt, snow and ice and are operational.
- Proper position of mirrors, seats and seat belts ⇨ 25, ⇨ 31, ⇨ 38.
- Brake function at low speed, particularly if the brakes are wet.

Starting the engine

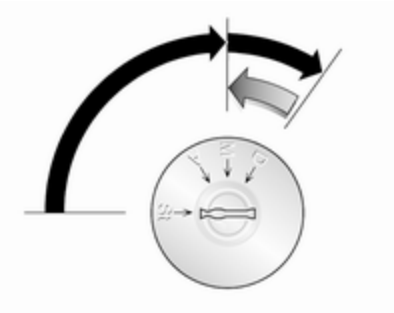

- Turn key to position **A**
- move the steering wheel slightly to release the steering wheel lock
- operate clutch and brake
- do not accelerate
- turn the key to position **M** for preheating and wait until control indicator goes out
- turn key to **D** and release

Starting the engine ⇨ 95.

Parking

- Always apply parking brake without pressing release button. Apply as firmly as possible on a downhill slope or uphill slope. Depress foot brake at the same time to reduce operating force.
- Switch off the engine. Turn the ignition key to **St** and remove it. Turn the steering wheel until the steering wheel lock is felt to engage.
- If the vehicle is on a level surface or uphill slope, engage first gear before switching off the ignition. On an uphill slope, turn the front wheels away from the kerb.

  If the vehicle is on a downhill slope, engage reverse gear before switching off the ignition. Turn the front wheels towards the kerb.
- Lock the vehicle with button on the radio remote control.
- Do not park the vehicle on an easily ignitable surface. The high temperature of the exhaust system could ignite the surface.
- Close the windows.
- The engine cooling fans may run after the engine has been switched off ⇨ 117.
- After running at high engine speeds or with high engine loads, operate the engine briefly at a low load or run in neutral for approx. 30 seconds before switching off, in order to protect the turbocharger.

Keys, locks ⇨ 17, Laying the vehicle up for a long period of time ⇨ 116.

Keys, doors and windows

Keys, locks 17
Doors 21
Vehicle security 23
Exterior mirrors 25
Interior mirrors 26
Windows 27
Roof 29

Keys, locks

Keys

Replacement keys

The key number is specified in the Car Pass or on a detachable tag.

The key number must be quoted when ordering replacement keys as it is a component of the immobiliser system.

Locks ⇨ 146.

Car Pass

The Car Pass contains security related vehicle data and should therefore be kept in a safe place.

When the vehicle is taken to a workshop, this vehicle data is needed in order to perform certain operations.

Radio remote control

Used to operate:

- Central locking system
- Anti-theft locking system
- Anti-theft alarm system

The radio remote control has an approximate range of up to 5 metres. It can be affected by external influences. The hazard warning flashers confirm operation.

Handle with care, protect it from moisture and high temperatures and avoid unnecessary operation.

Fault

If the central locking system cannot be operated with the radio remote control, it may be due to the following:

- Range exceeded.
- Battery voltage too low.
- Frequent, repeated operation of the radio remote control while not in range, which will require reprogramming by a workshop.
- Interference from higher-power radio waves from other sources.

Radio remote control battery replacement

Replace the battery as soon as the range reduces.

Batteries do not belong in household waste. They must be disposed of at an appropriate recycling collection point.

Remove screw and open battery compartment by inserting a coin into the slot and twisting.

Replace the battery (battery type CR2016), paying attention to the installation position.

Reattach both halves of cover ensuring it engages correctly.

Replace screw and tighten.

Central locking system

Unlocks and locks doors and load compartment.

With selective door locking, the passenger compartment and load compartment can be unlocked and locked separately.

Unlocking

Press button 🔓 once to unlock all doors and load compartment.

Selective door locking

On vehicles with selective door locking press button once to unlock the driver's door. To unlock all doors and load compartment, press button again.

If no door is opened within approx. 2 minutes after the vehicle has been unlocked with the remote control, the vehicle is re-locked automatically.

Locking

Close doors and load compartment. If the doors are not closed properly, the central locking system will not work.

Press button .

All doors are locked.

Load compartment

With selective door locking the load compartment can be locked and unlocked independently. The front doors remain locked.

Press button .

Central locking button

Locks or unlocks all doors and the load compartment from inside the vehicle.

Press button to lock or unlock all the doors.

Fault in radio remote control system

Unlocking

Manually unlock the driver's door by turning the key in the lock. Switch on the ignition and press the central locking button to open all doors and load compartment.

Locking

Manually lock the driver's door by turning the key in the lock.

Fault in central locking system

Unlocking

Manually unlock the door by turning the key in the lock. The other doors can be opened by pulling the interior handle.

Locking

Push inside locking knob of all doors except driver's door. Then close the driver's door and lock it from the outside with the key.

Automatic locking

This security feature can be configured to automatically lock all doors and load compartment as soon as the vehicle is driven.

To activate:

With the ignition switched on, press 🔒 and hold for approx. 5 seconds until an audible confirmation is heard.

To deactivate:

With the ignition switched on, press 🔓 and hold for approx. 5 seconds until an audible confirmation is heard.

Child locks

⚠ Warning

Use the child locks whenever children are occupying the rear seats.

Press down the child lock, door cannot be opened from the inside. Raise to deactivate.

Doors

Sliding door

The door can be locked from inside the vehicle with the interior lock switch.

Power sliding door

With the parking brake applied, press switch on the instrument panel to open automatically. The warning lamp illuminates on the instrument panel.

Press switch again, the warning lamp extinguishes and a chime sounds when the power sliding door is closing.

⚠Warning

Take care when operating the power sliding door. Risk of injury, particularly to children.

Keep a close watch on the moving door when operating. Ensure that nothing becomes trapped during operation and no one is standing within the moving area.

Emergency exit

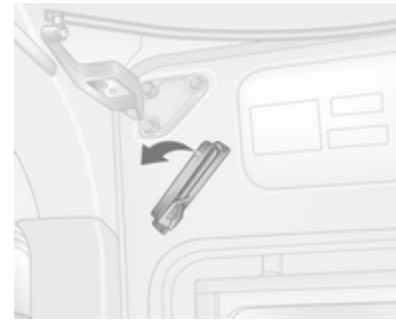

In an emergency, release the interior handle and slide door back to open it.

Power side step

The power side step operates automatically when the sliding door is opened or closed.

⚠Warning

Ensure there is adequate clearance to allow the power side step to fully extend and retract without obstruction.

Rear doors

To open the right hand rear door pull the outside handle. The door is opened from inside the vehicle by pulling the interior handle.

The left hand rear door is released using the lever.

⚠Warning

The rear lights may be obscured if the rear doors are open and the vehicle is parked on the roadside.

Make other road users aware of the vehicle, by using a warning triangle or other equipment specified in the road traffic regulations.

The doors are retained in the 90º position by locking stays.

To open the doors to 180º, release locking stays from the catches on the door frames.

When opening the doors to 270º, the doors are retained in the fully open position by magnets on the body side.

⚠ Warning

Ensure extended opening doors are secured when fully opened.

Opened doors may slam closed due to the force of the wind!

When closing the doors, secure each locking stay to the catch on the door frame.

Close the left hand door before the right hand door.

Vehicle security

Anti-theft locking system

⚠ Warning

Do not use the system if there are people in the vehicle! The doors cannot be unlocked from the inside.

The system deadlocks the doors. All doors must be closed or the system cannot be activated.

Unlocking the vehicle disables the mechanical anti-theft locking system. Unlocking is not possible with the central locking button.

When the hazard warning flashers or sidelights are switched on, the system cannot be activated.

Activating

Press 🔒 on the radio remote control twice within 10 seconds.

Anti-theft alarm system

The anti-theft alarm system is operated in conjunction with the central locking system.

It monitors:

- Doors, load compartment, bonnet
- Passenger compartment
- Interruption of alarm siren power supply

Activation

All doors and the bonnet must be closed.

Press button 🔒.

If the hazard warning flashers do not flash upon activation, a door or the bonnet is not fully closed.

Activation without monitoring of passenger compartment

Switch off monitoring of the passenger compartment when people or animals are being left in the vehicle:

Press and hold button 🔒. An audible beep will sound to confirm that the function has been disabled.

The status will remain until the anti-theft alarm system is deactivated or the doors are unlocked.

Deactivation

Unlocking the vehicle deactivates the anti-theft alarm system. Turn signal lights flash once upon deactivation.

When unlocking the vehicle using the key, the alarm siren will sound. To stop the siren, switch on the ignition.

Alarm

When triggered, the alarm sounds via a separate battery-backed power sounder, and the hazard warning lights flash simultaneously. The number and duration of alarm signals are stipulated by legislation.

In the event of its power supply being disconnected or disconnection of the vehicle battery, the alarm siren will sound. If vehicle battery is to be disconnected, first deactivate the anti-theft alarm system. To silence the alarm siren if activated, reconnect vehicle battery and unlock vehicle with radio remote control.

The siren is silenced and the anti-theft alarm system is deactivated by pressing button 🔓 or by switching on the ignition.

Immobiliser

The system is part of the ignition switch and checks whether the vehicle is allowed to be started with the key being used.

The electronic immobiliser activates automatically after the key has been removed from the ignition switch. It also activates if the key is left in the ignition switch when the engine has been turned off.

Note
The immobiliser does not lock the doors. Always lock the vehicle after leaving it ⇨ 18.

Exterior mirrors

Convex shape

The convex exterior mirror reduces blind spots. The shape of the mirror makes objects appear smaller, which will affect the ability to estimate distances.

Manual adjustment

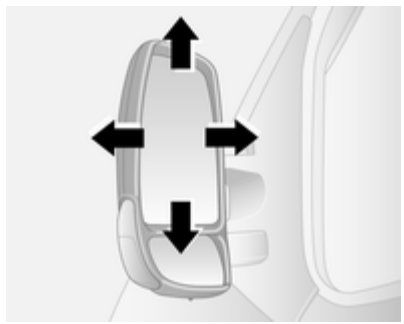

Adjust mirrors by swivelling in required direction.

The lower mirrors are not adjustable.

Electric adjustment

Select the relevant exterior mirror by turning the control to left or right. Then swivel the control to adjust the mirror.

In the central position no mirror is selected.

The lower mirrors are not adjustable.

Folding

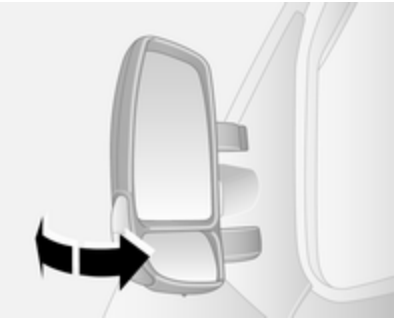

For pedestrian safety, the exterior mirrors will swing out of their normal mounting position if they are struck with sufficient force. Reposition the mirror by applying slight pressure to the mirror housing.

Heated

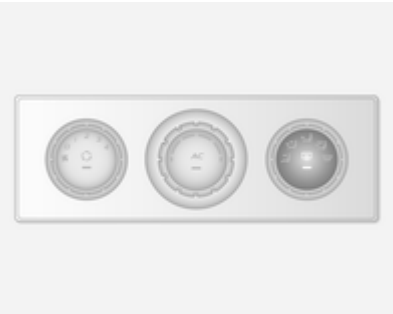

Operated by pressing the button.

Heating works with the engine running and is switched off automatically after a short time.

Electronic climate control system ⇨ 84.

Interior mirrors

Manual anti-dazzle

To reduce dazzle, adjust the lever on the underside of the mirror housing.

Windows

Manual windows

The door windows can be opened or closed with the window winders.

Power windows

⚠Warning

Take care when operating the power windows. Risk of injury, particularly to children.

Keep a close watch on the windows when closing them. Ensure that nothing becomes trapped in them as they move.

Switch on ignition to operate power windows.

Operate the switch for the respective window by pushing to open or pulling to close.

For vehicles with automatic feature on the driver's door window; when opening pull or press the switch again to stop window movement.

In the event of closing difficulties due to frost or the like, operate the switch several times to close the window in stages.

Rear windows

Sliding side windows

Press catch and slide window to open. Ensure catch engages when closing.

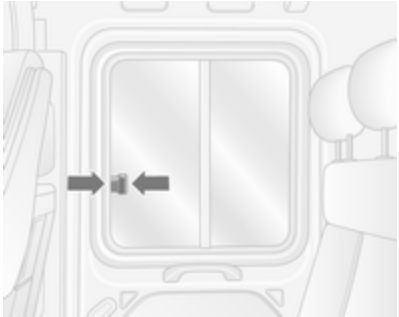

Press catch and slide window to open. Ensure catch engages when closing.

Emergency exit

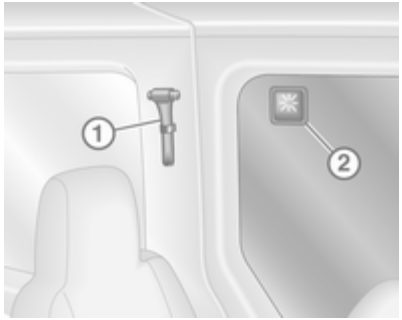

To provide an emergency exit from the vehicle, use hammer **1** to strike glass **2**.

Heated rear window

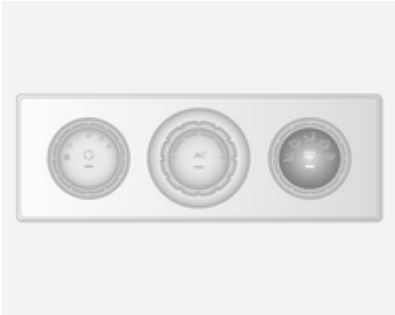

Operated by pressing the button on either system.

Heating works with the engine running and is switched off automatically after a short time.

Sun visors

The sun visors can be folded down or swivelled to the side to prevent dazzling.

If the sun visors have integral mirrors, the mirror covers should be closed when driving.

Roof

Glass panel

Emergency exit

In an emergency, the glass can be broken. Use the hammer to break the glass panel ⇨ 27.

Seats, restraints

Head restraints 30
Front seats 31
Rear seats 35
Seat belts 37
Airbag system 40
Child restraints 43

Head restraints

Position

⚠Warning

Only drive with the head restraint set to the proper position.

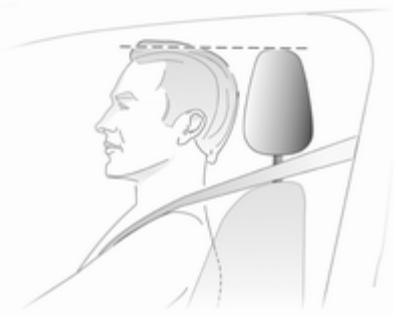

The upper edge of the head restraint should be at upper head level. If this is not possible for extremely tall people, set to highest position, and set to lowest position for small people.

Height adjustment

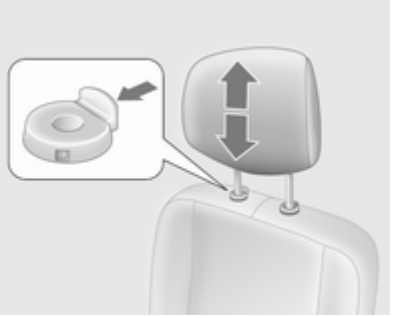

Press the catch, adjust height and engage.

Note
Approved accessories may only be attached to the front passenger seat head restraint if the seat is not in use.

Removal

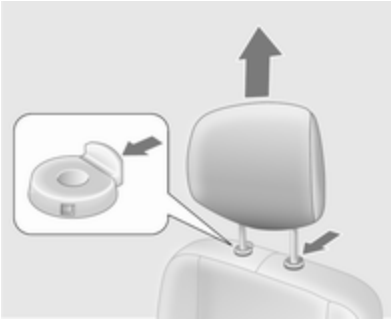

Press both catches, pull the head restraint upwards and remove.

Front seats

Seat position

⚠ Warning

Only drive with the seat correctly adjusted.

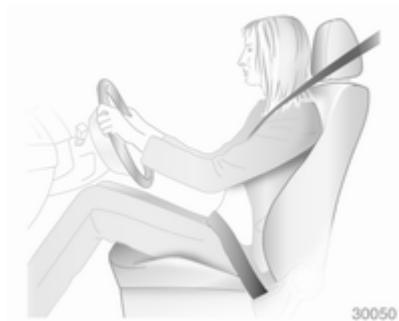

- Sit with buttocks as far back against the backrest as possible. Adjust the distance between the seat and the pedals so that legs are slightly angled when pressing the pedals. Slide the front passenger seat as far back as possible.
- Sit with shoulders as far back against the backrest as possible. Set the backrest rake so that it is possible to reach the steering wheel with arms slightly bent. Maintain contact between shoulders and the backrest when turning the steering wheel. Do not angle the backrest too far back. We recommend a maximum rake of approx. 25°.
- Adjust the steering wheel ⇨ 59.
- Set seat height high enough to have a clear field of vision on all sides and of all display instruments. There should be at least one hand of clearance between head and the roof frame. Thighs should rest lightly on the seat without pressing into it.
- Adjust the head restraint ⇨ 30.
- Adjust the height of the seat belt ⇨ 38.
- Adjust the lumbar support so that it supports the natural shape of the spine.

Seat adjustment

⚠ Danger

Do not sit nearer than 25 cm from the steering wheel, to permit safe airbag deployment.

⚠ Warning

Never adjust seats while driving as they could move uncontrollably.

Seat positioning

Pull handle, slide seat, release handle.

Suspension seat positioning

Pull handle, slide seat, release handle.

Seat backrests

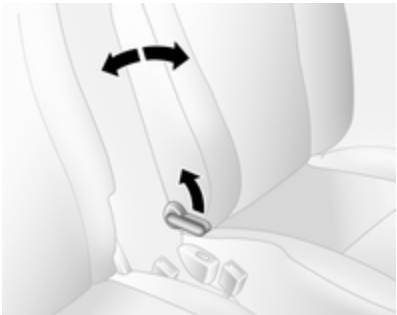

Pull lever, adjust inclination and release lever. Allow the seat to engage.

Suspension seat backrests

Pull lever, adjust inclination and release lever. Allow the seat to engage.

Seat height

Lever motion

up = seat higher
down = seat lower

Suspension seat height

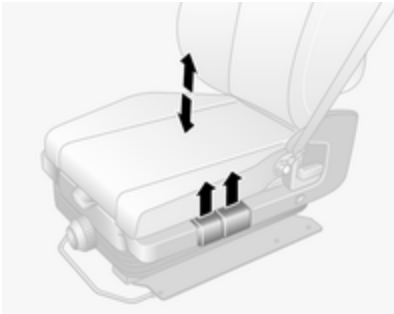

Pull forward lever up to adjust the front of the seat and rear lever to adjust the rear of the seat.

Lumbar support

Adjust lumbar support by turning the handwheel while relieving the load on the backrest.

Suspension seat lumbar support

Adjust lumbar support by activating bulb or releasing button.

Suspension seat sensitivity

To adjust the level of sensitivity rotate knob.

Armrest

Armrest can be folded up when not required.

Heating

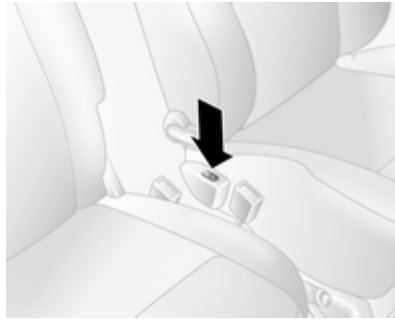

Press the button for the respective seat with the engine running. Press the button again to switch off.

Seat heating is thermostatically controlled and switches off automatically when seat temperature is sufficient.

Control indicator in the button illuminates when the system is on, not just when heating is active.

Rear seats

Second row seats

Rear seat access

To facilitate access to the rear seats, pull release lever and fold the seat backrest forwards.

⚠Warning

Ensure that the backrest returns to its correct position and the seat belt buckles engage securely.

Fitting seat belt ⇨ 38.

Removable rear seats

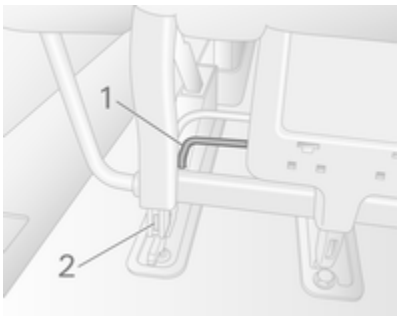

To remove: raise lever **1** on both sides of the seat. Pins **2** appear to indicate the seat is unlocked. Move the seat towards the rear and release from the floor anchor points. The seat can then be lifted out.

⚠Warning

Removable seats are heavy! Do not attempt to remove without assistance.

When installing the seats, ensure that the seats are properly located on the anchor points and that the locking catches are fully engaged.

Caution

The rear seats are not interchangeable and must be fitted back into their original position.

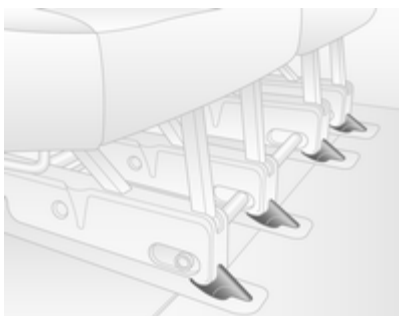

To replace: position the seat on the front anchor points and slide forward.

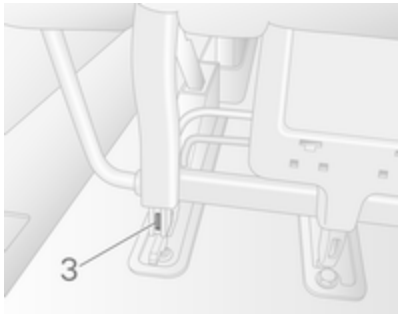

The seat locks automatically and pins **3** will no longer be visible.

Seat belts

The seat belts are locked during heavy acceleration or deceleration of the vehicle holding the occupants in the sitting position. Thereby the risk of injury is considerably reduced.

⚠Warning

Fasten seat belt before each trip.

In the event of an accident, people not wearing seat belts endanger their fellow occupants and themselves.

Seat belts are only designed to be used by only one person at a time. They are not suitable for people smaller than 150 cm.

Periodically check all parts of the belt system for damage and proper functionality.

Have damaged components replaced. After an accident, have the belts and triggered belt pretensioners replaced by a workshop.

Note
Make sure that the belts are not damaged by shoes or sharp-edged objects or trapped. Prevent dirt from getting into the belt retractors.

Belt pretensioners

In the event of a head-on or rear-end collision of a certain severity, the front seat belts are tightened.

⚠Warning

Incorrect handling (e.g. removal or fitting of belts) can trigger the belt pretensioners.

Deployment of the belt pretensioners is indicated by continuous illumination of control indicator ⇨ 69.

Triggered belt pretensioners must be replaced by a workshop. Belt pretensioners can only be triggered once.

Note
Do not affix or install accessories or other objects that may interfere with the operation of the belt pretensioners. Do not make any modifications to belt pretensioner components as this will invalidate the vehicle type approval.

Three-point seat belt

Fastening

Withdraw the belt from the retractor, guide it untwisted across the body and insert the latch plate into the buckle. Tighten the lap belt regularly whilst driving by pulling the shoulder belt.

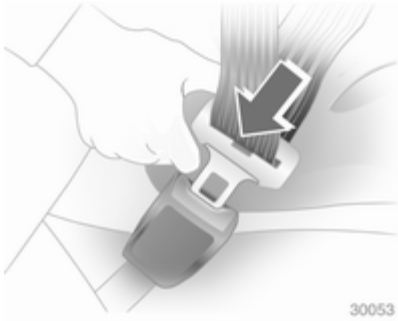

Loose or bulky clothing prevents the belt from fitting snugly. Do not place objects such as handbags or mobile phones between the belt and your body.

⚠ Warning

The belt must not rest against hard or fragile objects in the pockets of your clothing.

Height adjustment

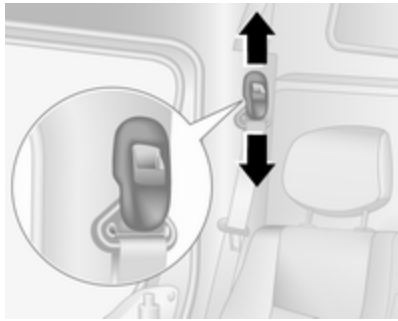

1. Pull belt out slightly.
2. Press button.
3. Adjust height and engage.

Adjust the height so that the belt lies across the shoulder. It must not lie across the throat or upper arm.

Do not adjust while driving.

Removing

To release belt, press red button on belt buckle.

Using the seat belt while pregnant

⚠ Warning

The lap belt must be positioned as low as possible across the pelvis to prevent pressure on the abdomen.

Airbag system

The airbag system consists of a number of individual systems depending on the scope of equipment.

When triggered the airbags inflate within milliseconds. They also deflate so quickly that it is often unnoticeable during the collision.

⚠ Warning

If handled improperly the airbag systems can be triggered in an explosive manner.

Note
The airbag systems and belt pretensioner control electronics are located in the centre console area. Do not put any magnetic objects in this area.

Do not stick anything on the airbag covers and do not cover them with other materials.

Each airbag is triggered only once. Have deployed airbags replaced by a workshop. Above that it might be necessary to have the steering wheel, the instrument panel, parts of the panelling, the door seals, handles and the seats replaced.

Do not make any modifications to the airbag system as this will invalidate the vehicle type approval.

Control indicator for airbag systems ⇨ 69.

Front airbag system

The front airbag system consists of one airbag in the steering wheel and one in the instrument panel on the front passenger side. These can be identified by the word AIRBAG.

There is also a warning label on the side of the instrument panel, visible when the front passenger door is open.

The front airbag system is triggered in the event of a front-end impact of a certain severity. The ignition needs to be switched on.

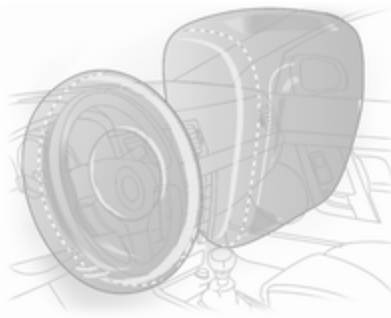

The inflated airbags cushion the impact, thereby considerably reducing the risk of injury to the upper body and head of the front seat occupants.

⚠Warning

Optimum protection is only provided when the seat is in the proper position ⇨ 31.

Keep the area in which the airbag inflates clear of obstructions.

Fit the seat belt correctly and engage securely. Only then the airbag is able to protect.

Side airbag system

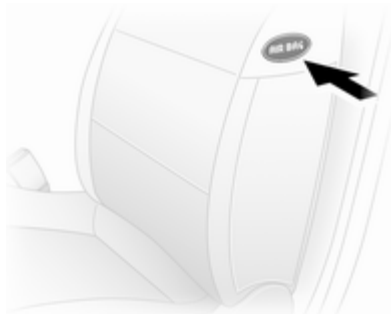

The side airbag system consists of an airbag in each front seat backrest. This can be identified by the word **AIRBAG**.

The side airbag system is triggered in the event of a side impact of a certain severity. The ignition needs to be switched on.

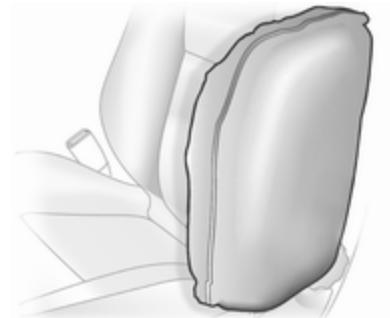

The inflated airbags cushion the impact, thereby reducing the risk of injury to the upper body and pelvis in the event of a side-on collision considerably.

⚠Warning

Keep the area in which the airbag inflates clear of obstructions.

Note
Only use protective seat covers that have been approved for the vehicle. Be careful not to cover the airbags.

Airbag deactivation

Front airbag and side airbag systems for the front passenger seat have to be deactivated if a child restraint system is to be fitted on this seat. The belt pretensioners and all driver airbag systems will remain active.

The front passenger airbag system can be deactivated via a switch on the side of the instrument panel.

With the front passenger door open, press switch in and rotate anti-clockwise to the **OFF** position.

Front passenger seat airbags are deactivated and will not inflate in the event of a collision. Control indicator illuminates continuously alongside the information display or on the instrument panel. A child restraint system can be installed in accordance with the installation locations chart ⇨ 44. An adult must not occupy the front passenger seat.

⚠ Danger

Risk of fatal injury for a child using a child restraint system together with activated front passenger airbag.

Risk of fatal injury for an adult person with deactivated front passenger airbag.

As long as control indicator is not illuminated, the airbag systems for the front passenger seat will inflate in the event of a collision.

If control indicator remains illuminated together with , this indicates a fault within the system. Seek the assistance of a workshop.

Change status only when the vehicle is stopped with the ignition off. Status remains until the next change.

Control indicator for airbag deactivation ⇨ 69.

Child restraints

Child restraint systems

We recommend the Opel child restraint system which is tailored specifically to the vehicle.

When a child restraint system is being used, pay attention to the following usage and installation instructions and also those supplied with the child restraint system.

Always comply with local or national regulations. In some countries, the use of child restraint systems is forbidden on certain seats.

⚠ Warning

When using a child restraint system on the front passenger seat, the airbag systems for the front passenger seat must be deactivated; if not, the triggering of the airbags poses a risk of fatal injury to the child.

This is especially the case if rear-facing child restraint systems are used on the front passenger seat.

Selecting the right system

Children should travel facing rearwards in the vehicle as long as possible. This makes sure that the child's backbone, which is still very weak, is under less strain in the event of an accident.

Children under the age of 12 years that are smaller than 150 cm are only allowed to travel in a restraint system that is suitable for the child. Suitable are restraint systems that comply with ECE 44-03 or ECE 44-04. Since a proper position of the belt is rarely possible with a child that is smaller than 150 cm, we strongly advise to use an appropriate child restraint system, even though this might, due to the age of the child, no longer be legally binding.

Ensure that the child restraint system to be installed is compatible with the vehicle type.

Ensure that the mounting location of the child restraint system within the vehicle is correct.

Allow children to enter and exit the vehicle only on the side facing away from the traffic.

When the child restraint system is not in use, secure the seat with a seat belt or remove it from the vehicle.

Note

Do not stick anything on the child restraint systems and do not cover them with any other materials.

A child restraint system which has been subjected to stress in an accident must be replaced.

Child restraint installation locations

Permissible options for fitting a child restraint system

Front seats - all variants

Weight and age class	Single seat - front passenger[1]		Bench seat - front passenger			
			without airbag		with airbag	
	without airbag	with airbag	centre	outer	centre	outer
Group 0: up to 10 kg or approx. 10 months **Group 0+: up to 13 kg** or approx. 2 years	U	U[2]	U	U	U[2]	U[2]
Group I: 9 to 18 kg or approx. 8 months to 4 years	U	U[2]	U	U	U[2]	U[2]
Group II: 15 to 25 kg or approx. 3 to 7 years **Group III: 22 to 36 kg** or approx. 6 to 12 years	U	U[2]	U	U	U[2]	U[2]

U = Suitable for universal category restraint systems for use in this mass group, in conjunction with three-point seat belt.

[1] If adjustable, ensure seat is in its rearmost position. Make sure vehicle seat belt is as straight as possible between shoulder and upper anchorage point.

[2] Ensure the front passenger airbag system is deactivated when installing a child restraint in this position.

Crew cab - rear seats

Weight and age class	2nd row bench seat Outer	Centre
Group 0: up to 10 kg or approx. 10 months **Group 0+: up to 13 kg** or approx. 2 years	U	X
Group I: 9 to 18 kg or approx. 8 months to 4 years	U	X
Group II: 15 to 25 kg or approx. 3 to 7 years **Group III: 22 to 36 kg** or approx. 6 to 12 years	U	X

U = Suitable for universal category restraint systems for use in this weight and age class, in conjunction with three-point seat belt.
X = Seat position not suitable for children in this weight and age class.

Combi - rear seats

Weight and age class	2nd row bench seat			3rd row bench seat
	Behind driver	Behind front passenger	Centre	
Group 0, 0+: up to 13 kg or approx. 2 years	U[3], +	X	X	X
Group I: 9 to 18 kg or approx. 8 months to 4 years	U[4], +	UF[4]	UF[4], +	X
Group II: 15 to 25 kg or approx. 3 to 7 years **Group III: 22 to 36 kg** or approx. 6 to 12 years	U[4]	UF[4]	UF[4]	X

[3] Move the front seat as far forward as possible to install a rear facing child seat, then move back the seat in front in accordance with the child seat instructions.

[4] Forward facing child seat; position the seatback of the child seat in contact with the seatback of the vehicle seat. Adjust the height of the headrest or remove it if necessary; do not push the seat in front of the child more than halfway back on its runners and do not recline the seatback more than 25°.

U = Suitable for universal category restraint systems for use in this weight and age class, in conjunction with three-point seat belt.
UF = Suitable for universal category forward-facing restraint systems for use in this weight and age class, in conjunction with three-point seat belt.
+ = Seat with ISOFIX mounting available. When mounting an ISOFIX child restraint system, only systems that have been approved for the vehicle may be used.
X = Seat position not suitable for children in this weight and age class.

Bus - rear seats

Weight and age class	Rear seats
Group 0: up to 10 kg or approx. 10 months **Group 0+: up to 13 kg** or approx. 2 years	X
Group I: 9 to 18 kg or approx. 8 months to 4 years	X
Group II: 15 to 25 kg or approx. 3 to 7 years **Group III: 22 to 36 kg** or approx. 6 to 12 years	X

X = Seat position not suitable for children in this weight and age class.

Permissible options for fitting an ISOFIX child restraint system

Combi - rear seats

Weight class	Size class	Fixture	On front passenger seat	On 2nd row bench seats: Behind driver	On 2nd row bench seats: Behind front passenger	On 2nd row bench seats: Centre	On 3rd row bench seats
Group 0: up to 10 kg	E	ISO/R1	X	IL	X	X	X
Group 0+: up to 13 kg	E	ISO/R1	X	IL	X	X	X
	D	ISO/R2	X	IL	X	X	X
	C	ISO/R3	X	IL	X	X	X
Group I: 9 to 18 kg	D	ISO/R2	X	IL	X	X	X
	C	ISO/R3	X	IL	X	X	X
	B	ISO/F2	X	IL, IUF	X	IL, IUF	X
	B1	ISO/F2X	X	IL, IUF	X	IL, IUF	X
	A	ISO/F3	X	IL, IUF	X	IL, IUF	X

IL = Suitable for particular ISOFIX restraint systems of the 'specific-vehicle', 'restricted' or 'semi-universal' categories. The ISOFIX restraint system must be approved for the specific vehicle type.

IUF = Suitable for ISOFIX forward-facing child restraint systems of universal category approved for use in this weight class.

X = No ISOFIX child restraint system approved in this weight class.

ISOFIX size class and seat device

A – ISO/F3	=	Forward-facing child restraint system for children of maximum size in the weight class 9 to 18 kg.
B – ISO/F2	=	Forward-facing child restraint system for smaller children in the weight class 9 to 18 kg.
B1 – ISO/F2X	=	Forward-facing child restraint system for smaller children in the weight class 9 to 18 kg.
C – ISO/R3	=	Rear-facing child restraint system for children of maximum size in the weight class up to 13 kg.
D – ISO/R2	=	Rear-facing child restraint system for smaller children in the weight class up to 13 kg.
E – ISO/R1	=	Rear-facing child restraint system for young children in the weight class up to 13 kg.

ISOFIX child restraint systems

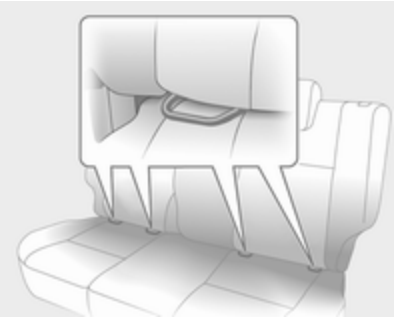

Fasten vehicle-approved ISOFIX child restraint systems to the mounting brackets.

Permitted installation positions for specific vehicle ISOFIX child restraint systems are marked in the table by IL.

When using ISOFIX mounting brackets for seat mounting, universally approved child restraint systems for ISOFIX may be used.

Top-tether fastening eyes

Top-Tether fastening eyes are located on the back of the seat.

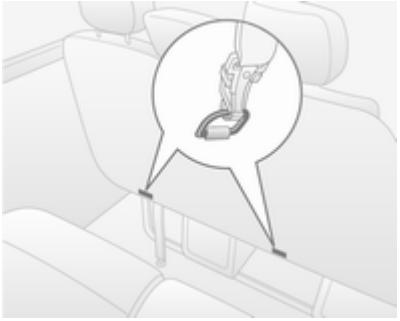

In addition to the ISOFIX mounting fasten the Top-Tether strap to the Top-Tether fastening eyes. The strap must run between the two guide rods of the head restraint.

ISOFIX child restraint systems of universal category positions are marked in the table by IUF.

Storage

Storage compartments 51
Load compartment 54
Roof rack system 57
Loading information 57

Storage compartments

Instrument panel storage

Storage compartments, pockets and trays are located in the instrument panel.

A phone pocket and coin holder with a clip for holding tickets is located on the top of the instrument panel.

The tray located centrally on top of the instrument panel has a lid.

Document holder

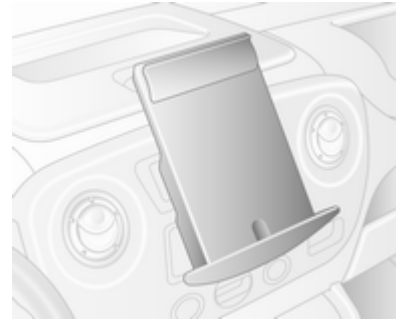

Withdraw the document holder from the instrument panel by pulling the base towards you and then swivelling it downwards. To fold away, raise the base until the document holder is horizontal, then push fully in.

Glovebox

The glovebox should be closed whilst driving.

Glovebox cooler ⇨ 92.

Cupholders

Cupholders are located at either end of the instrument panel and centrally in the lower instrument panel.

The cupholders can also be used to hold the portable ashtray unit.

Front storage

Three coat hooks are located on the cabin bulkhead

Folding passenger seatback

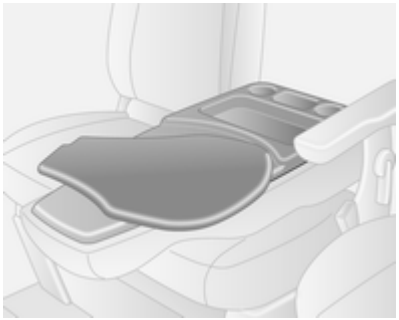

The passenger seat backrest, when folded fully forwards, features storage compartments and drink holders.

The swivelling shelf, which can be used for writing or documents, must be returned to its original position before raising the seat backrest.

Sunglasses storage

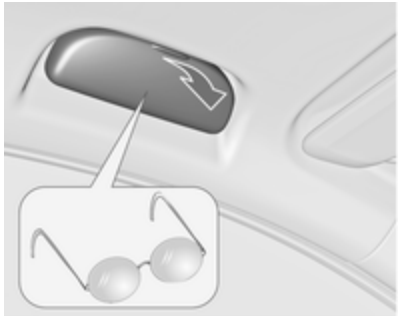

Fold down to open.

Do not use for storing heavy objects.

Overhead console

The total weight in these compartments must not exceed 5 kg.

Underseat storage

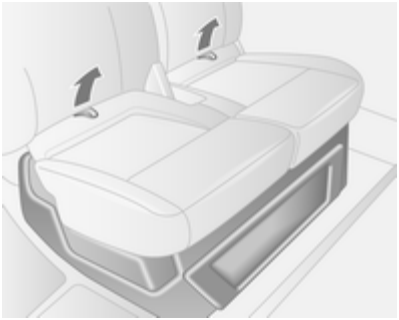

Using the two loops on the passenger seat cushion, pull the cushion forwards to gain access to the storage under the seat.

Overcab storage

The total weight in this compartment must not exceed 35 kg.

Rear storage

Bus

Objects can be stored in the overhead storage racks above the rear passenger seating.

The total weight in each storage rack must not exceed 35 kg.

Load compartment

Lashing eyes

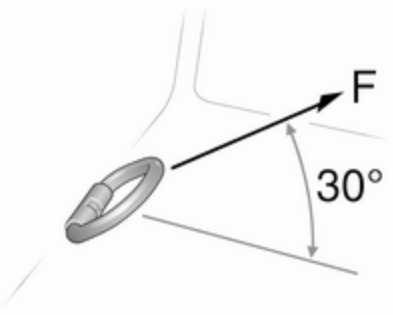

Lashing eyes are mounted in the load compartment to enable cargo to be secured in position using lashing straps or a luggage floor net.

The maximum force applied to the lashing eyes should not exceed 5000 N at 30°.

Removable lashing eyes

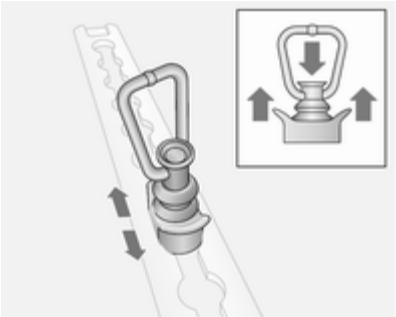

To reposition, press down on the centre cap and slide to the desired position. Ensure the lashing eye engages correctly in the recess.

Loading information ⇨ 57.

Cargo management system

Moveable partition wall

The moveable partition wall can be used between the floor and roof rails.

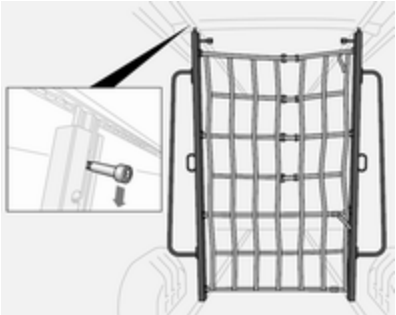

To move, pull down on the latch to release and position the wall as required. Ensure the latch engages fully and the partition wall is upright.

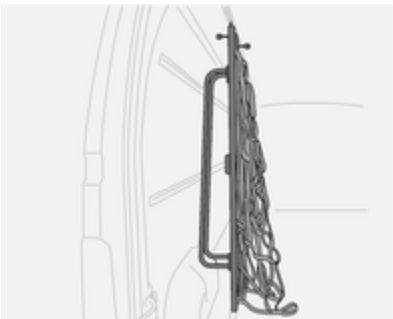

Store the partition wall to one side of the load compartment when not in use.

Telescopic blocking bars

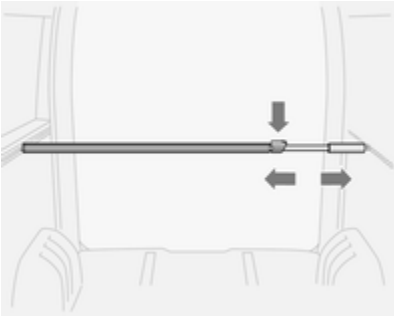

The telescope blocking bars can be used in a vertical or horizontal position.

Ensure the blocking bars are fully engaged in the load rails before loading.

To release, press down on the lock and slide the bar at the same time.

Maximum loading 100 daN/700mm.

Ratchet straps

Using the appropriate ratchet straps, objects can be secured to the removable lashing eyes in the side or floor load rails.

Using the ratchet straps, secure the object to the removable lashing eyes in the vehicle floor.

Maximum loading 500 daN/700mm.

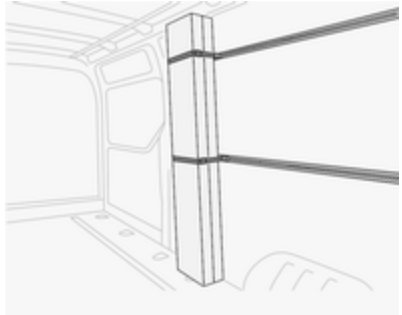

Maximum loading 100 daN/700mm.

Removable lashing eyes ⇨ 54, Loading information ⇨ 57.

Safety net

Lower the safety from the roof area and attach to the lashing eyes ⇨ 54.

Adjust the tension on the straps to ensure the load is secure.

When not in use the safety net should be stored in the roof area.

Loading information ⇨ 57.

Warning triangle

The warning triangle can be accommodated in the space under the front passenger seat.

Underseat storage ⇨ 53.

First aid kit

The first aid kit can be accommodated in the space under the front passenger seat or in the overhead console.

A label is located on the overhead console should the first aid kit be stored there.

Underseat storage ⇨ 53.

Overhead console ⇨ 53.

Fire extinguisher

The fire extinguisher can be accommodated in the space under the front passenger seat.

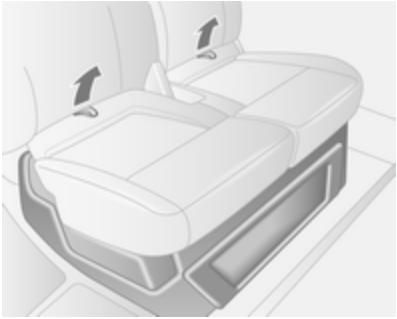

Using the two loops on the passenger seat cushion, pull the cushion forwards to gain access.

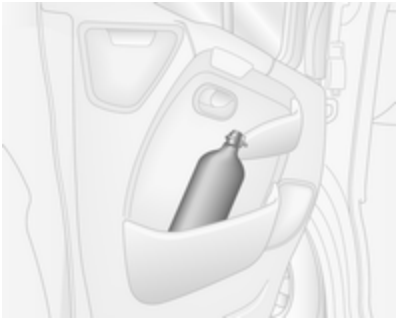

An additional extinguisher may be located in the front door panel.

As a visible indication of this, a label is located on the overhead console.

Roof rack system

Roof rack

For safety reasons and to avoid damage to the roof, the vehicle approved roof rack system is recommended.

Follow the installation instructions and remove the roof rack when not in use.

Further information ⇨ 57.

Loading information

- Heavy objects in the load compartment should be evenly distributed and placed as far forward as possible. If objects can be stacked, the heavier objects should be placed at the bottom.
- Secure objects with lashing straps attached to lashing eyes ⇨ 54.
- Secure loose objects in load compartment to prevent sliding.
- The load must not obstruct the operation of the pedals, parking brake and gear selector, or hinder the freedom of movement of the driver. Do not place any unsecured objects in the interior.
- Do not drive with an open load compartment. In addition, the number plate is only distinguishable and illuminated correctly if the doors are closed.
- The payload is the difference between the permitted gross vehicle weight (see identification

plate ⇨ 153) and the EC kerb weight.

To calculate the EC kerb weight, enter the data for your vehicle in the Weights table at the front of this manual.

The EC kerb weight includes weights for the driver (68 kg), luggage (7 kg) and all fluids (tank 90% full).

Optional equipment and accessories increase the kerb weight.

- Driving with a roof load increases the sensitivity of the vehicle to cross-winds and has a detrimental effect on vehicle handling due to the vehicle's higher centre of gravity. Distribute the load evenly and secure it properly with retaining straps. Adjust the tyre pressure and vehicle speed according to the load conditions. Check and retighten the straps frequently.
- The permissible roof load (which includes the weight of the roof rack) is 200 kg for standard roof variants. The roof load is the combined weight of the roof rack and the load.

Instruments and controls

Controls 59
Warning lights, gauges and indicators 64
Information displays 73
Vehicle messages 73
Trip computer 74
Tachograph 75

Controls

Steering wheel adjustment

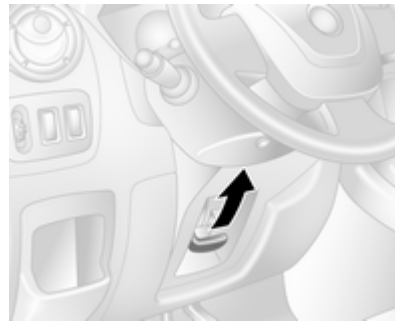

Unlock lever, adjust steering wheel, then engage lever and ensure it is fully locked.

Do not adjust steering wheel unless vehicle is stationary and steering wheel lock has been released.

Steering wheel controls

The cruise control and speed limiter can be operated via the controls on the steering wheel.

Cruise control ⇨ 106.

Horn

Press 🔈.

Steering column controls

The Infotainment system can be operated via the controls on the steering column.

Further information is available in the Infotainment manual.

Windscreen wiper/washer

Windscreen wiper

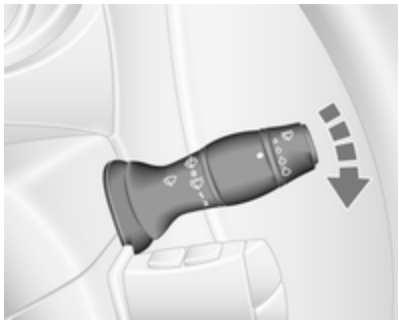

⊘ = timed interval wipe
1 = slow
2 = fast

Do not use if the windscreen is frozen.

Switch off in car washes.

Automatic wiping with rain sensor

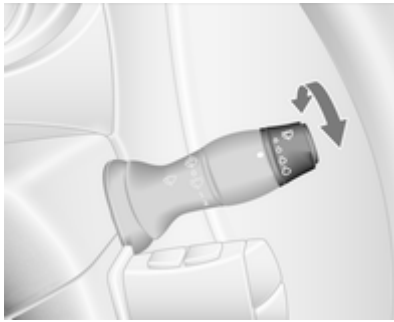

= automatic wiping with rain sensor

The rain sensor detects the amount of water on the windscreen and automatically regulates the frequency of the windscreen wipers.

Upon starting the engine, automatic wiping will need to be reselected.

Adjustable sensitivity of the rain sensor

Turn the adjuster wheel to adjust the sensitivity:

low sensitivity	=	turn adjuster wheel downwards
high sensitivity	=	turn adjuster wheel upwards

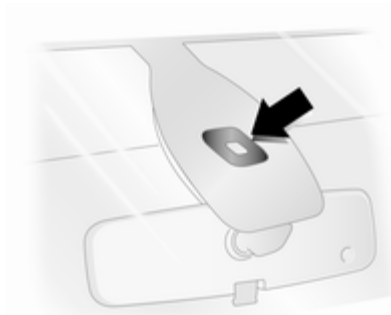

Keep the sensor free from dust, dirt and ice.

Windscreen washer

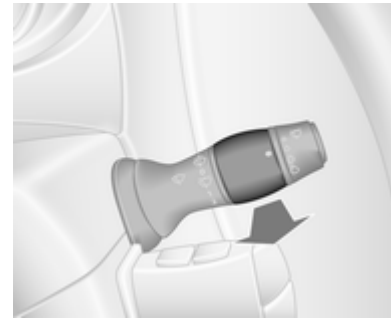

Pull lever. Washer fluid is sprayed onto the windscreen.

short pull	=	wiper swipes once
long pull	=	wiper swipes for a few strokes

Outside temperature

A drop in temperature is indicated immediately and a rise in temperature after a time delay.

If outside temperatures drop to 3 °C, the **°C** flashes in the information display as a warning for icy road conditions. This will continue to flash until temperatures rise above 3 °C.

⚠ Warning

The road surface may already be icy even though the display indicates a few degrees above 0 °C.

Clock

Date and time are shown in the information display or time only in the multifunction display.

Set date and time in information display

The Infotainment system must be off. Activate setting mode by holding the ◷ button depressed for approx. 2 seconds. The flashing value is adjusted using the ⊙ button. The ◷ button is used to switch to the next mode and to exit setting mode.

Set time in multifunction display

With the time displayed press and hold the bottom button on the end of the wiper lever, until the hour setting flashes. Press the top button and the hours reading will advance.

Press and hold the bottom button on the end of the wiper lever, until the minute setting flashes. Press the top button and the minute reading will advance.

Press and hold the lower button on the end of the wiper lever to exit setting mode.

Trip computer ⇨ 74.

Power outlets

12 V power outlets are located in the instrument panel and in the rear of the vehicle.

Connecting electrical accessories while the engine is off will discharge the battery. Do not exceed the maximum power consumption of 120 watts. Do not connect any current-delivering accessories, e.g. electrical charging devices or batteries.

Electrical accessories that are connected must comply with the electromagnetic compatibility requirements laid down in DIN VDE 40 839.

Do not connect any current-delivering accessories, e.g. electrical charging devices or batteries.

Caution
Do not damage the outlet by using unsuitable plugs.

Cigarette lighter

Press in cigarette lighter. It switches off automatically once the element is glowing. Pull out lighter.

Ashtrays

Caution
To be used only for ash and not for combustible rubbish.

Portable ashtray

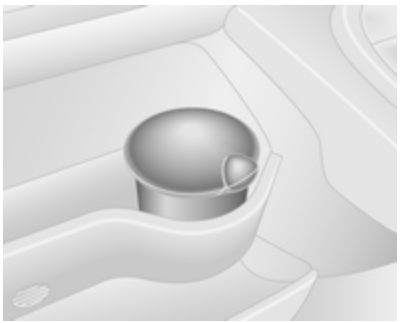

Ashtray container for mobile use in the vehicle. To use, open cover.

Warning lights, gauges and indicators

Speedometer

Indicates vehicle speed.

Maximum speed may be restricted by a speed regulator. As a visible indication of this, a warning label is located on the instrument panel.

Note
Under certain conditions (e.g. steep inclines) the vehicle speed may exceed the set limit.

Odometer

Displays the recorded distance.

Trip odometer

Press either button once on the end of the windscreen wiper lever to display the trip odometer.

To reset, press and hold either button for a few seconds with the ignition on. The display will flash and reset to zero.

Tachometer

Displays the engine speed.

Drive in a low engine speed range for each gear as much as possible.

Caution
If the needle is in the red warning zone, the maximum permitted engine speed is exceeded. Engine at risk.

Fuel gauge

Displays the fuel level in the tank.

Control indicator ⛽ illuminates if the level in the tank is low. Refuel immediately.

Never run the tank dry.

Because of the fuel remaining in the tank, the top-up quantity may be less than the specified tank capacity.

Engine coolant temperature gauge

Displays the coolant temperature.

left area	=	engine operating temperature not yet reached
central area	=	normal operating temperature
right area	=	temperature too high

Control indicator illuminates if the temperature is too high ⇨ 70.

Caution
If engine coolant temperature is too high, stop vehicle, switch off engine. Danger to engine. Check coolant level.

For physical reasons, the coolant temperature gauge shows the coolant temperature only if the coolant level is adequate.

Engine oil level monitor

If the engine oil level is correct when the ignition is switched on **OIL LEVEL CORRECT** appears briefly in the multifunction display.

If the engine oil is above the minimum level, press either trip computer button within 30 seconds of the ignition being switched on. **OIL LEVEL** is displayed in combination with the squares to indicate the oil level. As the oil level diminishes, the squares in the display are replaced with dashes.

□□□□□□ = Maximum level
□□□ _ _ _ = Intermediate level
_ _ _ _ _ _ = Minimum level

If the minimum engine oil level is reached **TOP-UP OIL LEVEL** is displayed in combination with after the ignition is switched on for 30 seconds. Check and top up engine oil ⇨ 118.

To exit the oil level monitor display, press either trip computer button. Trip computer ⇨ 74.

Service display

Based on driving conditions, the interval at which a service will be indicated can vary considerably.

When the remaining distance before the next service is less than 3000 km or two months, **SERVICE IN** appears in the multifunction display.

When the distance reaches 0 km or the service date is due, and will illuminate and **SERVICE DUE** appears in the multifunction display.

The vehicle needs a service.

Seek the assistance of a workshop.

Resetting the service display

Select the distance before service display function in the trip computer.

Press and hold either button on the end of the wiper lever until the distance before service is displayed continuously.

Trip computer ⇨ 74.

Transmission display

The mode or selected gear of the manual transmission automated is shown in the transmission display.

R = Reverse gear
N = Neutral
A = Automatic mode
kg = Laden mode
❄ = Winter mode
= Apply footbrake
= Transmission electronics

Control indicators

The control indicators described are not present in all vehicles. The description applies to all instrument versions. When the ignition is switched on, most control indicators will illuminate briefly as a functionality test.

The control indicator colours mean:

red = danger, important reminder
yellow = warning, information, fault
green = confirmation of activation
blue = confirmation of activation

Control indicators in the instrument cluster

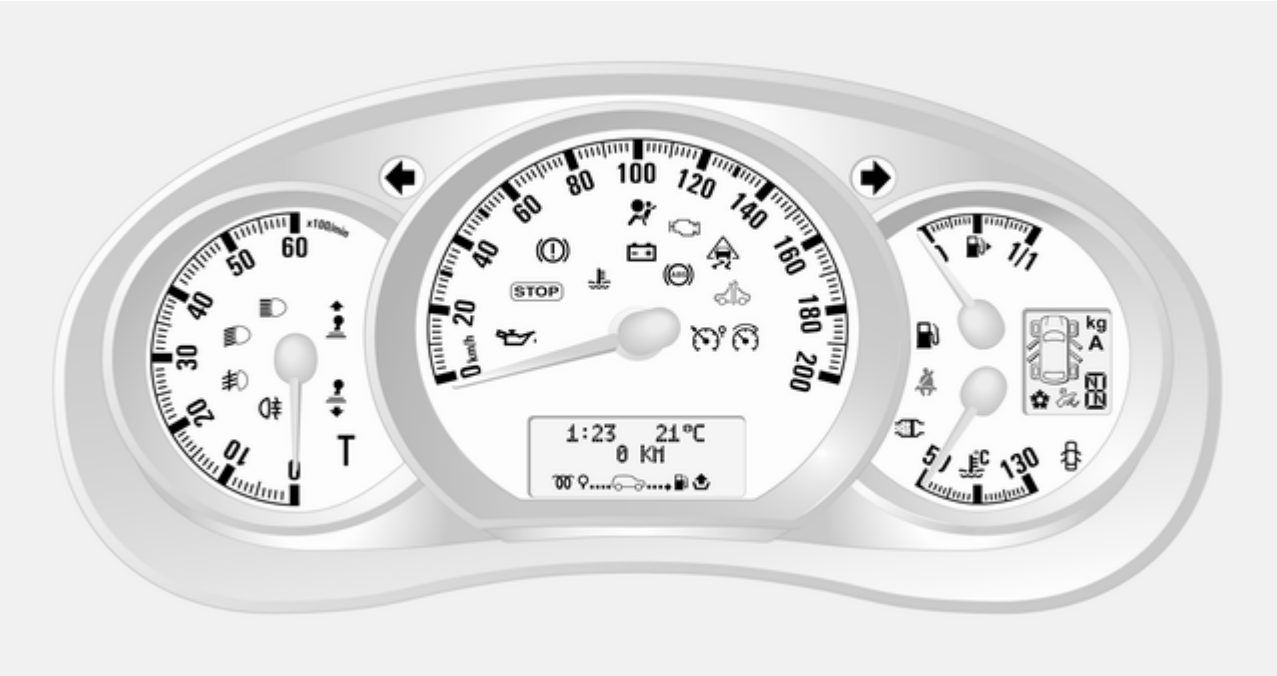

Turn signal

⇦⇨ flashes green.

Flashes if a turn signal or the hazard warning flashers are activated.

Rapid flashing: failure of a turn signal light or associated fuse.

An audible warning can be heard when the turn signals are on. When towing a trailer, the pitch of the audible warning changes.

Bulb replacement ⇨ 123.

Fuses ⇨ 130.

Turn signals ⇨ 78.

Airbag and belt tensioners

illuminates yellow.

When the ignition is switched on, the control indicator illuminates briefly. If it does not illuminate or illuminates whilst driving, there is a fault in the airbag or pretensioner system. The airbags and belt pretensioners may fail to trigger in the event of an accident.

Deployment of the belt pretensioners or airbags is indicated by continuous illumination of .

⚠ Warning

Have the cause of the fault remedied immediately by a workshop.

Belt pretensioners, airbag system ⇨ 37, ⇨ 40.

Airbag deactivation

illuminates yellow when the ignition is switched on and remains illuminated when the front passenger airbag has been deactivated ⇨ 42.

If control indicator is illuminated in conjunction with , seek the assistance of a workshop.

⚠ Danger

Risk of fatal injury for a child using a child restraint system together with activated front passenger airbag.

Risk of fatal injury for an adult person with deactivated front passenger airbag.

Charging system

illuminates red.

Illuminates when the ignition is switched on and goes out shortly after the engine starts.

Illuminates when the engine is running

Stop, switch off engine. Battery is not charging. Engine cooling may be interrupted. Power to the brake servo unit may be cut. Seek the assistance of a workshop.

Malfunction indicator light

illuminates or flashes yellow.

Illuminates when the ignition is switched on and goes out shortly after the engine starts.

Illuminates when the engine is running

Fault in the emission control system. The permitted emission limits may be exceeded. Seek the assistance of a workshop immediately.

Flashes when the engine is running

Fault that could lead to catalytic converter damage. Ease up on the accelerator until the flashing stops. Seek the immediate assistance of a workshop.

Stop engine

STOP illuminates red.

Illuminates for a few seconds when the ignition is switched on.

If STOP illuminates in combination with or , stop engine immediately and seek the assistance of a workshop.

Depending on the type of fault, a warning message may also appear in the multifunction display.

System check

illuminates in red.

Illuminates when the ignition is switched on and goes out shortly after the engine starts.

May illuminate in combination with another warning light or message in the multifunction display. Seek the assistance of a workshop immediately.

Brake system

illuminates red.

Illuminates when the parking brake is released if the brake fluid level is too low ⇨ 120.

⚠ Warning
Stop. Do not continue your journey. Consult a workshop.

Illuminates after the ignition is switched on if the parking brake is applied ⇨ 103.

Brake pad wear

illuminates yellow.

Illuminates when the brake pads are worn ⇨ 102.

Seek the assistance of a workshop.

Antilock brake system (ABS)

ABS illuminates yellow.

Illuminates briefly after the ignition is switched on. The system is ready for operation when ABS goes out.

If control indicators ABS and illuminate with the messages **CHECK ABS** and **CHECK ESP** in the multifunction display, there is a fault in the ABS. The brake system remains operational but without ABS regulation.

If control indicators (ABS), , (!) and STOP illuminate, the ABS and ESP are deactivated and the message **BRAKING FAULT** is displayed. Seek the assistance of a workshop.

Antilock brake system ⇨ 103.

Upshift

 or illuminates.

It is recommended to shift gear when illuminated for economical reasons.

Electronic Stability Program

 flashes or illuminates yellow.

Illuminates for a few seconds when the ignition is switched on.

Flashing during driving

The system is actively engaged. Engine output may be reduced and the vehicle may be braked automatically to a small degree ⇨ 105.

Illuminates while driving

The system is switched off. The message **ESP OFF** will also appear in the multifunction display.

ESP®Plus ⇨ 105.

Engine electronics

 illuminates yellow.

Illuminates when the engine is running

Indicates a fault in the electronic system.

Seek the assistance of a workshop.

Engine oil pressure

 illuminates red.

Illuminates when the ignition is switched on and goes out shortly after the engine starts.

Illuminates when the engine is running

Caution
Engine lubrication may be interrupted. This may result in damage to the engine and/or locking of the drive wheels.

1. Depress clutch.
2. Select neutral gear, set selector lever to **N**.
3. Move out of the flow of traffic as quickly as possible without impeding other vehicles.
4. Switch off ignition.

⚠ Warning

When the engine is off, considerably more force is needed to brake and steer.

Do not remove key until vehicle is stationary, otherwise the steering wheel lock could engage unexpectedly.

Check oil level before seeking assistance of a workshop ⇨ 118.

Low fuel

illuminates yellow.

Illuminates when level in fuel tank is too low.

Catalytic converter ⇨ 97.

Bleeding the diesel fuel system ⇨ 122.

Drain fuel filter

illuminates yellow.

Illuminates when the ignition is switched on and goes out shortly after the engine starts.

Illuminates when the engine is running

Indicates the presence of water in the diesel. Seek the assistance of a workshop immediately.

Exterior light

D illuminates green.

Illuminated when the exterior lights are on ⇨ 76.

High beam

D illuminates blue.

Illuminated when high beam is on and during headlight flash ⇨ 77.

Fog light

D illuminates green.

Illuminated when the front fog lights are on ⇨ 78.

Rear fog light

illuminates yellow.

Illuminated when the rear fog light is on ⇨ 79.

Cruise control

, illuminates green.

illuminates green when a certain speed is stored.

illuminates green when the system is on.

Speed limiter

illuminates orange.

illuminates orange when the system is on.

Cruise control, Speed limiter ⇨ 106.

Door open

illuminates red.

Illuminates when a door is open.

Information displays

Triple-Info-Display

Displays time, outside temperature and date when the ignition is on.

Vehicle messages

Messages appear in the multifunction display, in combination with ⚠ or STOP.

Information messages

Information messages
BATTERY MODE: ECONOMY
ESP OFF
AUTO LIGHTS DEACTIVATED
OIL LEVEL CORRECT

Fault messages

Displayed in combination with ⚠. Drive with caution and seek the assistance of a workshop.

To remove fault message, press either button on the end of the wiper lever. After a few seconds the message may disappear automatically and ⚠ remains illuminated. The fault will then be stored in the on board system.

Fault messages
CHECK ESP
CHECK FUEL FILTER
CHECK GEARBOX
CHECK AUTO LIGHTS

Warning messages

These may appear with STOP or in combination with other warning messages, control indicators or an audible warning. Stop engine immediately and seek the assistance of a workshop.

Warning messages
INJECTION FAULT
ENGINE OVERHEATING
GEARBOX OVERHEATING

Warning chimes

When starting the engine or whilst driving

- During operation of the turn and lane-change signals.
- If the low fuel control indicator illuminates.
- If seat belt is not fastened.
- If the vehicle has manual transmission automated and the clutch temperature is too high.

When the vehicle is parked and the driver's door is opened

- With exterior lights on.
- If the vehicle has manual transmission automated and the parking brake is not applied, neutral is not selected or the foot brake is not depressed.

Trip computer

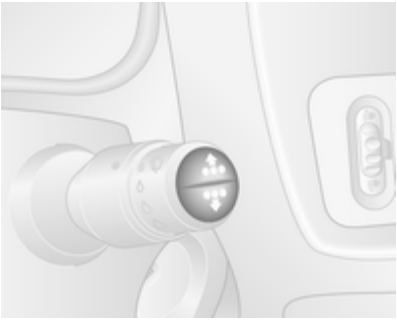

The functions can be selected by pressing either button repeatedly on the end of the wiper lever.

Press the button to select one of the functions:

- Fuel used
- Average consumption
- Instantaneous consumption
- Range
- Distance travelled
- Average speed
- Mileage before service interval
- Cruise control and speed limiter stored speed
- Fault and information messages shown in the multifunction display

Fuel used

Displays the amount of fuel consumed since the last reset.

The measurement can be restarted at any time by pressing and holding either button.

Average consumption

The value is displayed after driving a distance of 400 metres.

Average consumption is displayed, taking into consideration the distance travelled and the fuel used since the last reset.

The measurement can be restarted at any time.

Instantaneous consumption

The value is displayed after reaching a speed of 30 km/h.

Range

The value is displayed after driving a distance of 400 metres.

The range is calculated from the current contents of the fuel tank and the average consumption since the last reset.

The measurement can be restarted at any time.

Distance travelled

Displays the distance driven since the last reset.

The measurement can be restarted at any time.

Average speed

The value is displayed after driving a distance of 400 metres.

The average speed is displayed, since the last reset.

The measurement can be restarted at any time.

Interruptions in the journey with the ignition off are not included in the calculations.

Reset trip computer information

To reset the trip computer, select one of its functions then press and hold either button.

The trip computer will reset automatically when the maximum value of any of the parameters is exceeded.

Tachograph

The tachograph is operated as described in the operating instructions supplied. Observe regulations regarding use.

Lighting

Exterior lighting 76
Interior lighting 79
Lighting features 81

Exterior lighting

Light switch

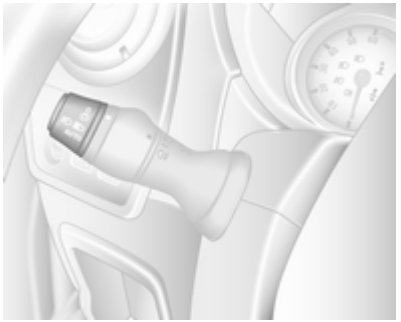

Turn light switch:

0	=	Off
☼	=	Side lights
≣D ≣D	=	Headlights
AUTO	=	Automatic light control
⚡D	=	Front fog lights
D⚡	=	Rear fog lights

High beam control indicator ≣D ⇨ 72.

Low beam control indicator ≣D ⇨ 72.

Automatic light control

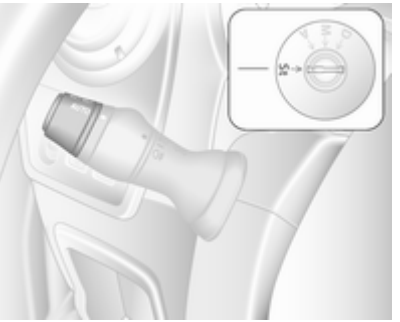

Light switch set to **AUTO**: When the engine is running, headlights are switched on when external light conditions are poor.

For reasons of safety, the light switch should always remain in the **AUTO** position.

The headlights go off automatically when the ignition is switched off.

High beam

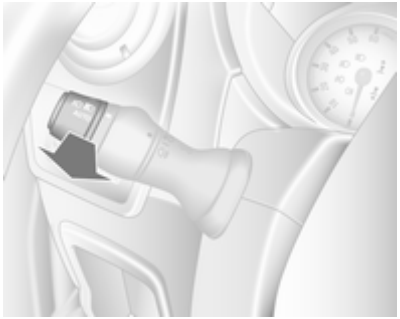

To change between low and high beam, pull lever until a click is felt.

Headlight flash

To activate the headlight flash, pull lever.

Headlight range adjustment

Manual headlight range adjustment

To adapt headlight range to the vehicle load to prevent dazzling: turn knob to required position.

0 = Front seat occupied
4 = Loaded up to permissible maximum weight

Headlights when driving abroad

The asymmetrical headlight beam extends visibility at the edge of the road at the passenger side.

However, when driving in countries where traffic drives on the opposite side of the road, adjust the headlights to prevent dazzling.

Have the headlights adjusted by a workshop.

Daytime running lights

Daytime running lights increase visibility of the vehicle during daylight.

When the ignition is on, the headlights come on and instrument illumination is subdued.

The daytime running lights switch off when the ignition is switched off.

Adaptive forward lighting

Cornering light

Depending on the steering angle, vehicle speed and gear selected when cornering, an additional light will illuminate the corner of the road.

Hazard warning flashers

Operated with the ⚠ button.

Turn and lane-change signals

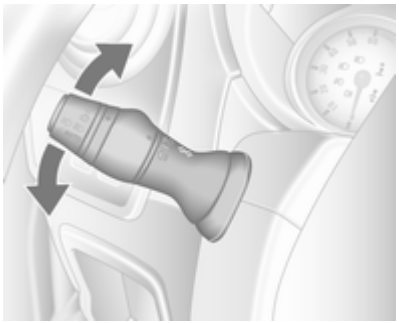

Lever up = right turn signal
Lever down = left turn signal

When the steering wheel is turned back, the lever automatically returns to its original position and the indicator is deactivated. This will not happen when making a minor steering manoeuvre such as lane changing.

When lane changing, move lever part way to first stop. When released, lever will spring back.

If the lever is moved past the first stop, the indicator is switched on constantly. Switch the indicator off manually by moving the lever to its original position.

Front fog lights

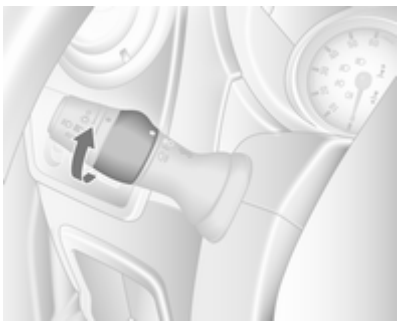

Turn inner switch to position ≢D and release.

Front fog lights will only operate when the ignition and headlights are switched on.

Rear fog lights

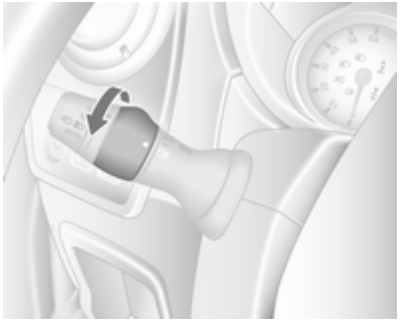

Turn inner switch to position ⌀ and release.

Rear fog lights will only operate when the ignition and headlights are switched on.

Reversing lights

The reversing lights come on when the ignition is on and reverse gear is selected.

Misted light covers

The inside of the light covers may mist up briefly in poor, wet and cold weather conditions, in heavy rain or after washing. The mist disappears quickly by itself; to help, switch on the headlights.

Interior lighting

Interior lights

With the switch in its central position, the light functions as a courtesy light and illuminates when the front doors are opened. Once the front doors are closed, the courtesy light goes out after a delay.

Front courtesy light

Operated with the button.

The interior light extinguishes immediately when the ignition is switched on.

Rear courtesy lights

Bus
Low level and overhead courtesy lights are located in the rear passenger compartment.

Operate rocker switch on the instrument panel:

press ⌒ = on.
press **OFF** = off.

Load compartment lighting

Operated by pressing the switch:

- On constantly
- Controlled by the function of the interior light
- Off constantly

Reading lights

Front reading light

Operated with the ⌒ button.

The reading light can be directed as required.

Rear reading lights

Bus

Operate rocker switch on the instrument panel:

press = on.
press **OFF** = off.

Each reading light can then be operated individindividually and directed as required.

Lighting features

Exit lighting

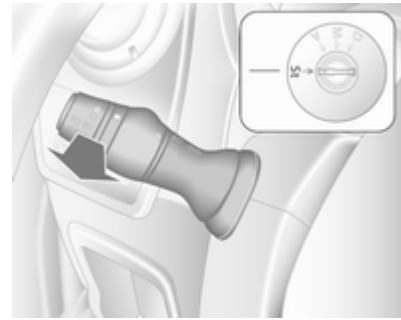

Headlights come on for approx. 1 minute after the vehicle is parked and the system is activated.

Activating

1. Switch off ignition.
2. Remove ignition key.
3. Pull turn signal lever towards steering wheel.

This action can be repeated up to four times to a maximum period of 4 minutes.

The lighting is turned off immediately by turning the light switch to any position and returning to **O**.

Climate control

Climate control systems 83
Air vents 92
Maintenance 93

Climate control systems

Heating and ventilation system

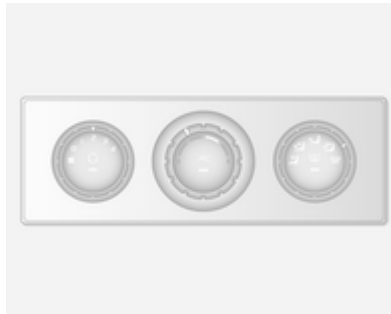

Controls for:

- Temperature
- Fan speed
- Air distribution

Heated rear window ⇨ 28.

Temperature

red = warm
blue = cold

Heating will not be fully effective until the engine has reached normal operating temperature.

Fan speed

Adjust the air flow by switching the fan to the desired speed.

Air distribution

= to head area
= to head area and foot well
= to foot well
= to windscreen, front door windows and foot well
= to windscreen and front door windows

Air conditioning system

Additional to the heating and ventilation system, the air conditioning system has:

AC = cooling
⟲ = air recirculation

Cooling (AC)

Operated with the AC button and functional only when the engine and fan are running.

The air conditioning system cools and dehumidifies (dries) the air when outside temperature is a little above the freezing point. Therefore condensation may form and drip from under the vehicle.

If no cooling or drying is required, switch the cooling system off to save fuel.

Air recirculation system

Operated with the ⟲ button.

⚠ Warning

The exchange of fresh air is reduced in air recirculation mode. In operation without cooling the air humidity increases, so the windows may mist up. The quality of the passenger compartment air deteriorates, which may cause the vehicle occupants to feel drowsy.

Maximum cooling

Briefly open the windows so that hot air can disperse quickly.

- Cooling AC on.
- Air recirculation system ⟲ on.
- Set air distribution control to ⇗.
- Set temperature control to coldest level.
- Set fan speed to highest level.
- Open all air vents.

Electronic climate control system

Controls for:

- Temperature
- Air distribution and menu selection
- Fan speed

AUTO = Automatic mode
⟲ = air recirculation
⊞ = demisting and defrosting

Heated rear window ⊞ ⇨ 28.

The preselected temperature is automatically regulated. In the automatic mode the fan speed and air distribution automatically regulate the air flow.

The system can be manually adapted by use of air distribution and air flow controls.

The electronic climate control system is only fully operational when the engine is running.

For correct operation do not cover the sensor on the instrument panel.

Automatic mode

Basic setting for maximum comfort:

- Press **AUTO** button.
- Open all air vents.
- **AC** on.
- Set desired temperature.

Temperature preselection

Temperatures can be set to the desired value.

For reasons of comfort, change temperature only in small increments.

red = warm
blue = cold

Heating will not be fully effective until the engine has reached normal operating temperature.

If the minimum temperature of 15 °C is set, the electronic climate control system runs at maximum cooling.

If the maximum temperature of 27 °C is set, the electronic climate control system runs at maximum heating.

Fan speed

The selected fan speed is indicated with ✤ in the display.

If the fan is switched off the air conditioning is also deactivated.

To return to automatic mode: Press **AUTO** button.

Demisting and defrosting the windows

Press the ⊞ button.

Temperature and air distribution are set automatically and the fan runs at a high speed.

To return to automatic mode: press button ⊞ or **AUTO**.

Air distribution

Press ⤴ or ⤵ repeatedly.

Arrows shown in the display indicate the distribution settings.

Cooling

The air conditioning system cools and dehumidifies (dries) when outside temperature is above a specific level. Therefore condensation may form and drip from under the vehicle.

If no cooling or drying is required press **AC OFF** to switch the cooling system off, thus saving fuel.

Manual air recirculation mode

Operated with the ⟲ button.

⚠ Warning

The exchange of fresh air is reduced in air recirculation mode. In operation without cooling the air humidity increases, so the windows may mist up. The quality of the passenger compartment air deteriorates, which may cause the vehicle occupants to feel drowsy.

Rear heating system

If the engine is switched off the rear compartment can be heated by the additional heating, through low level vents. By programming values using the control panel the user can adjust the time, day and temperature settings.

Heating will cease to operate if the vehicle fuel level drops too low.

During operation, power from the vehicle battery is used. For short journey times, check the battery regularly and recharge if necessary.

To ensure efficient performance, the low level air vents in the rear passenger compartment must not be obstructed.

⚠ Warning

Do not operate the system when refuelling, when dust or combustible vapours are present or in enclosed spaces (e.g. garage).

Setting the time and day

Press button ⏲ until the time display flashes.

If the battery supply has been interrupted prior to its use press the ◁ or ▷ button briefly to make the time display flash.

Adjust the time using the ◁ or ▷ buttons.

The time is set when the displayed time stops flashing.

The display for the day will then flash: adjust the day using the ◁ or ▷ buttons.

The day is set when the display stops flashing.

The display will remain illuminated for approximately 15 seconds after the ignition is switched off.

Operating and switching of the rear compartment additional heating

Press button ♨ to operate heating. ♨ will appear in the display to indicate that the heating is operating.

Changing the period for which heating is operating

With the heating switched off (extinguished in display), press button for briefly until the period for which heating is provided flashes in the display.

Use the or buttons to adjust the heating duration. The duration is set when the display extinguishes.

Programming the heating mode

It is possible to store up to three programmes which allow the heating to be switched on.

Press **P** button the number of times for selecting the desired stored programme.

Press the or buttons briefly, the programming time flashes in the display.

Using the or buttons adjust to the desired time, as soon as the time display stops flashing adjust the day using the or buttons.

The time and day are set when the display stops flashing.

Recalling a programming mode

To activate a stored programme press **P** button until the corresponding number appears on the display.

Neutral position or no stored programme activated

Press **P** button until their is no stored programme number visible in the display.

Adjusting the temperature

To adjust the temperature of the heating turn the rotary knob located on the control panel.

Turn clockwise	=	increase temperature
Turn anticlockwise	=	decrease temperature

Rear air conditioning system

The rear air conditioning system is actuated in conjunction with the front passenger compartment air conditioning system.

Bus

Rear air vents

Additional air conditioning is supplied to the rear passenger compartment via the overhead air vents.

Fan speed

Adjust the air flow to select the desired speed.

turn clockwise	=	increase air flow
turn anticlockwise	=	decrease air flow

Combi

Additional air conditioning is supplied to the rear passenger compartment via the air vents located above the driver and front passenger compartment.

With the front passenger compartment air conditioning system switched on, adjust the air flow to select the desired speed.

Ensure the air vents are open when in use to prevent ice forming in the system.

Auxiliary heater

Coolant heater

The Eberspächer engine-independent, fuel-powered coolant heater provides rapid heating of the engine coolant to enable heating of the vehicle interior without the engine running.

⚠ Warning

Do not operate the system when refuelling, when dust or combustible vapours are present or in enclosed spaces (e.g. garage).

Before starting or programming the system to start, turn the vehicle's climate control system to heat and the air distribution to .

Switch off when not required. Heating stops automatically after approx. 2 hours of continuous use, and will also cease to operate if the vehicle fuel level drops too low.

During operation, power from the vehicle battery is used. For short journey times, check the battery regularly and recharge if necessary.

To ensure efficient performance, briefly operate the auxiliary heater once a month.

Control units

The timer or remote control unit turns the system on and off, and is used to programme specific departure times.

Timer

1 ⏻ **Activation button** = Switches the control unit on/off and changes displayed information

2 ⬅ **Back button** = Selects functions in the menu bar and adjusts values

3 Menu bar = Displays the selectable functions ♨, ✤, **P**, ⏲ and ↻

4 ➡ **Next button** = Selects functions in the menu bar and adjusts values

5 OK button = Confirms selection

Remote control

The control buttons operate identically to the timer unit described previously.

To activate the remote control, press activation button ⏻ and release it when the menu bar appears in the display. The signal indicator and **SENd** appear briefly in the display, followed by the temperature.

⚠Warning

When refuelling, switch off the remote control unit as well as the heater!

To switch off, press and hold activation button ⏻ to prevent inadvertent operation.

The remote control has a maximum range of 600 metres. The range may be reduced due to environmental conditions and as the battery becomes weaker.

In addition to the remote control unit, the heating can also be switched on for 30 minutes, or off, using the button on the instrument panel.

Battery replacement

Replace the battery when the range of the remote control is reduced or when the battery charge symbol flashes.

Open the cover using a coin and replace the battery (CR 2430 or equivalent), ensuring the new battery is correctly installed with the positive (+) side facing the positive terminals. Replace the cover securely.

Dispose of old batteries in accordance with environmental regulations.

Batteries do not belong in household waste. They must be disposed of at an appropriate recycling collection point.

Remote control fault displays

cobA	=	Poor signal – adjust position
conP	=	No signal – move closer
bALo	=	Battery low – change battery
Err	=	System error – consult workshop
Add, AddE	=	System in learning mode

Teach remote control

If the vehicle battery is reconnected, the LED in the instrument panel button illuminates and the system configures the remote control menu automatically. If the LED flashes, press **OK** button on remote control, select **Add** or **AddE** and confirm.

Additional remote control units may also be configured. Press the button until LED flashes, switch on the remote control, select **Add** and confirm.

AddE teaches the current remote control unit exclusively and blocks all previously configured units. **Add** teaches up to 4 remote control units, but only one unit can operate the system at any one time.

Operation

Heating ⦚

Select ⦚ in the menu bar and confirm. The predetermined heating duration, e.g. **L 30**, flashes in the display.

To temporarily adjust the heating duration, adjust with the ▬ or ▬ button and confirm. The value can be set from 10 to 120 minutes.

To switch off, select ♨ in the menu bar again and confirm.

Ventilation ✠

Select ✠ in the menu bar and confirm.

The ventilation duration can be accepted or adjusted. The duration shown is accepted without confirmation.

To switch off, select ✠ in the menu bar again and confirm.

Programming P

Up to 3 preset departure times can be programmed, either during one day or over one week.

- Select **P** in the menu bar and confirm
- Select desired preset memory number **1**, **2** or **3** and confirm
- Select day and confirm
- Select hour and confirm
- Select minutes and confirm
- Select ♨ or ✠ and confirm
- If necessary, adjust the runtime duration prior to departure and confirm

The next preset memory number to be activated is underlined and the weekday is displayed. Repeat the procedure to programme the other preset memory numbers.

Pressing button ⏻ during the procedure will exit without storing programme adjustments.

To delete a preset departure time, follow the steps for programming until heating symbol ♨ flashes. Press button ▬ or ▬ until **oFF** appears in the display and confirm.

Heating stops automatically 5 minutes after the programmed departure time.

Note

The remote control system features a temperature sensor which calculates the runtime according to the ambient temperature and the desired heating level (ECO or HIGH). The system starts automatically between 5 and 60 minutes prior to the programmed departure time.

Set weekday, time and heating duration ◷

If the vehicle battery is disconnected or its voltage is too low, the unit will need to be reset.

- Select ◷ and confirm
- Select weekday and confirm
- Change hours and confirm
- Change minutes and confirm
- Change the default heating duration and confirm

Heating level ↻

The preferred heating level for programmed departure times can be set to either ECO or HIGH.

Select ↻ and confirm. ECO or HIGH flashes in the display. Adjust using the ▬ or ▬ button and confirm.

Air vents

Adjustable air vents

Centre air vents

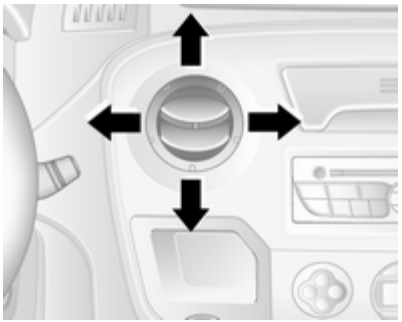

Press the vent to open.

Direct the flow of air by swivelling the vent.

Side air vents

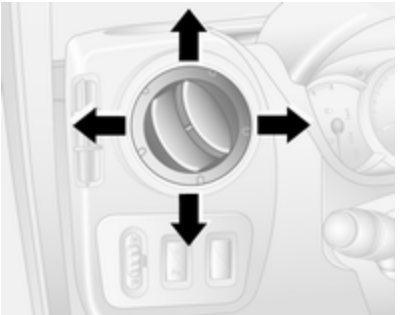

Press the vent to open.

Direct the flow of air by swivelling the vent.

Fixed air vents

Additional air vents are located beneath the windscreen and door windows and in the foot wells.

Glovebox cooler

The air conditioning system can also keep the contents of the glovebox cool.

Maintenance

Air intake

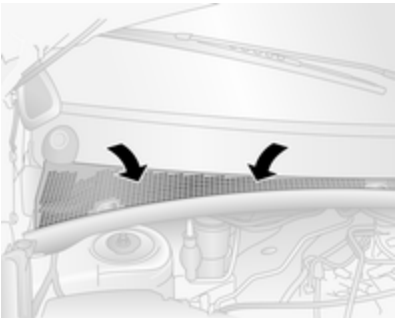

The air intake in front of the windscreen in the engine compartment must be kept clear to allow air intake. Remove any leaves, dirt or snow.

Pollen filter

The pollen filter cleans dust, soot, pollen and spores from the air entering the vehicle through the air intake.

Air conditioning regular operation

In order to ensure continuously efficient performance, cooling must be operated for a few minutes once a month, irrespective of the weather and time of year. Operation with cooling is not possible when outside temperature is too low.

Service

For optimal cooling performance, it is recommended that the climate control system be checked annually, starting three years after initial vehicle registration, including:

- Functionality and pressure test
- Heating functionality
- Leakage check
- Check of drive belts
- Cleaning of condenser and evaporator drainage
- Performance check

Driving and operating

Driving hints 94
Starting and operating 94
Engine exhaust 96
Manual transmission 98
Manual transmission automated 98
Brakes 102
Ride control systems 104
Cruise control 106
Object detection systems 109
Fuel 111
Towing 113
Auxiliary features 114

Driving hints

Control of the vehicle

Never coast with engine not running

Many systems will not function in this situation (e.g. brake servo unit, power steering). Driving in this manner is a danger to yourself and others.

Pedals

To ensure the pedal travel is uninhibited, there must be no mats in the area of the pedals.

Power steering

Never leave the steering wheel on full lock when the vehicle is stationary as this may damage the power steering pump.

Starting and operating

New vehicle running-in

Do not brake unnecessarily hard for the first few journeys and after new disc brake pads have been fitted.

During the first drive, smoke may occur because of wax and oil evaporating off the exhaust system. Park the vehicle in the open for a while after the first drive and avoid inhaling the fumes.

Do not drive the vehicle unnecessarily hard or at high engine speeds during the initial running-in period.

Fuel and engine oil consumption may be higher during the running-in period.

Ignition switch positions

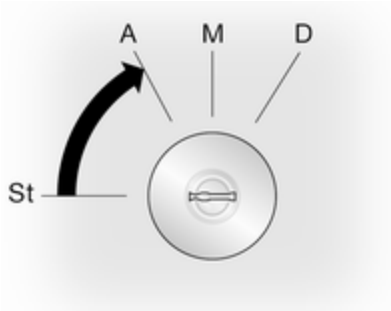

St = Ignition off
A = Steering wheel lock released, ignition off
M = Ignition on, for diesel engine: preheating
D = Starting

Starting the engine

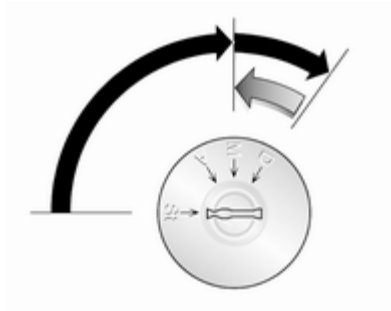

Manual transmission: operate clutch.

Manual transmission automated: operate brake; transmission automatically shifts to **N**.

Do not accelerate.

Turn the key to position **M** for preheating, until control indicator ⌀ goes out.

Turn key to position **D** and release.

The increased engine speed automatically returns to normal idling speed as the engine temperature rises.

Start attempts should not last longer than 15 seconds. If engine does not start, wait 15 seconds before repeating starting procedure. If necessary, depress accelerator before repeating starting procedure.

Before restarting or to switch off the engine, turn key back to **St**.

Idle speed control

To increase the idle speed press the switch. After a few seconds the function will be activated.

The function will be deactivated when:

- The clutch pedal is depressed
- The accelerator pedal is depressed
- MTA is not in neutral **N**
- Vehicle speed is above 0 km/h
- Control indicator , or STOP illuminate in the instrument cluster

To increase or decrease the fast idle speed rate, consult a workshop.

Overrun cut-off

The fuel supply is automatically cut off during overrun, i.e. when the vehicle is driven with a gear engaged but accelerator is released.

Parking

- Do not park the vehicle on an easily ignitable surface. The high temperature of the exhaust system could ignite the surface.
- Always apply parking brake without pressing release button. Apply as firmly as possible on a downhill or uphill slopes. Operate the foot brake at the same time to reduce operating force.
- Switch off the engine and ignition. Turn the steering wheel until the steering wheel lock is felt to engage.
- If the vehicle is on a level surface or uphill slope, engage first gear before switching off the ignition. On an uphill slope, turn the front wheels away from the kerb.

  If the vehicle is on a downhill slope, engage reverse gear before switching off the ignition. Turn the front wheels towards the kerb.
- Lock the vehicle and activate the anti-theft locking system.

Engine exhaust

⚠ Danger

Engine exhaust gases contain poisonous carbon monoxide, which is colourless and odourless and could be fatal if inhaled.

If exhaust gases enter the interior of the vehicle, open the windows. Have the cause of the fault rectified by a workshop.

Avoid driving with an open load compartment, otherwise exhaust gases could enter the vehicle.

Diesel particle filter

The diesel particle filter system filters harmful soot particles out of the exhaust gases. The system includes a self-cleaning function that runs automatically during driving without any notification. The filter is cleaned by periodically burning off the soot particles at high temperature. This process takes place automatically at speeds above 48 km/h and may take

up to 30 minutes. Fuel consumption may be higher during this period. The emission of smells and smoke during this process is normal.

Under certain driving conditions, e.g. short distances, the system cannot clean itself automatically.

If the cleaning of the filter is required and if previous driving conditions did not enable automatic cleaning, it will be indicated by the illumination of in the instrument cluster. Seek the assistance of a workshop immediately.

Catalytic converter

The catalytic converter reduces the amount of harmful substances in the exhaust gases.

Caution

Fuel grades other than those listed on page ⇨ 111, ⇨ 154 could damage the catalytic converter or electronic components.

Unburnt petrol will overheat and damage the catalytic converter. Therefore avoid excessive use of the starter, running the fuel tank dry and starting the engine by pushing or towing.

In the event of misfiring, uneven engine running, a reduction in engine performance or other unusual problems, have the cause of the fault rectified by a workshop as soon as possible. In an emergency, driving can be continued for a short period, keeping vehicle speed and engine speed low.

If control indicator flashes, the permitted emission limits may be exceeded. Lift your foot off the accelerator until stops flashing and is steadily illuminated. Contact a workshop immediately.

Malfunction indicator light ⇨ 69.

Manual transmission

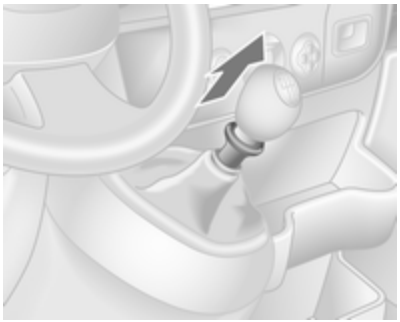

To engage reverse, with the vehicle stationary depress the clutch pedal, pull up the collar on the selector lever and engage the gear.

If the gear does not engage, set the lever in neutral, release the clutch pedal and depress again; then repeat gear selection.

Do not grind the clutch unnecessarily.

When operating, depress the clutch pedal completely. Do not use the pedal as a foot rest.

Caution
It is inadvisable to drive with hand resting on the selector lever.

Manual transmission automated

The MTA transmission permits manual (manual mode) or automatic gear shifting (automatic mode), both with automatic clutch control.

Transmission display

Shows the mode and current gear.

Starting the engine

Depress the foot brake when starting the engine. If the foot brake is not depressed, illuminates in the transmission display and the engine cannot be started.

When the foot brake is depressed, the transmission automatically shifts to **N** (neutral); "N" appears in the transmission display and the engine can be started. There may be a slight delay.

Selector lever

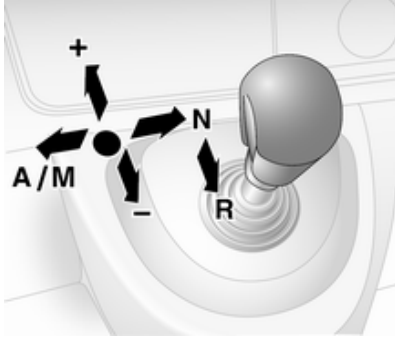

Always move the selector lever in the appropriate direction as far as it will go. Upon release, it automatically returns to the centre position.

N	=	Neutral.
A/M	=	Switch between automatic and manual mode. The transmission display shows "A" when in automatic mode.
R	=	Reverse gear. Engage only when vehicle is stationary. The transmission display shows "R" when reverse gear is engaged.
+	=	Shift to a higher gear.
-	=	Shift to a lower gear.

Starting off

When the engine is started, the transmission is in automatic mode. Depress the foot brake and move the selector lever towards **+** to engage 1st gear.

If **R** is selected, reverse gear is engaged. The vehicle starts to move when the foot brake is released. To start off quickly, release the foot brake and accelerate immediately after engaging a gear.

In automatic mode the transmission shifts to other gears automatically, dependent on driving conditions.

To engage manual mode, move the selector lever towards **A/M**. The current gear will appear in the transmission display.

To engage 1st gear, depress foot brake and move selector lever towards **+** or **-**. Shift to a higher or lower gear by moving selector lever to **+** or **-**. Gears can be skipped by moving the selector lever repeatedly at short intervals.

Stopping the vehicle

In automatic or manual mode, first gear is engaged and the clutch is released when the vehicle is stopped. In **R**, reverse gear remains engaged.

When stopping on gradients, engage parking brake or depress the foot brake. To prevent overheating of the clutch, an intermittent audible

warning may sound as a signal to depress the foot brake or apply the parking brake.

Switch off engine if stopping for a lengthy period, e.g. in traffic jams.

Engine braking

Automatic mode

When driving downhill, the manual transmission automated does not shift into higher gears until a fairly high engine speed has been reached. It shifts down in good time when braking.

Manual mode

To utilise the engine braking effect, select a lower gear in good time when driving downhill.

Rocking the vehicle

Rocking the vehicle is only permissible if the vehicle is stuck in sand, mud, snow or a hole. Move the selector lever between **R** and **A/M** (or between **+** and **-**) in a repeat pattern, while applying light pressure to the accelerator pedal. Do not race the engine and avoid sudden acceleration.

Parking

Apply the parking brake. The most recently engaged gear (see transmission display) remains engaged. With **N**, no gear is engaged.

When the ignition is switched off, the transmission no longer responds to movement of the selector lever.

If the ignition is not switched off, or the parking brake has not been applied, an intermittent audible warning will sound upon opening the driver's door.

Manual mode

If a higher gear is selected when the engine speed is too low, or a lower gear when the speed is too high, the shift is not executed. This prevents the engine from running at too low or too high an engine speed.

If engine speed is too low, the transmission automatically shifts to a lower gear.

If engine speed is too high, the transmission only switches to a higher gear via kickdown.

Electronic driving programmes

Winter mode ❄

Activate the Winter mode if you have problems starting off on a slippery road surface.

Activation

Press the ❄ button. Control indicator ❄ is shown in the transmission display. The transmission switches to automatic mode and the vehicle starts off in a suitable gear.

Deactivation

The Winter mode is switched off by:

- pressing the ❄ button again,
- turning off the ignition,
- switching to manual mode.

In order to protect the transmission at extremely high clutch temperatures, an intermittent audible warning may sound. In such cases, depress the foot brake, select "N" and apply the parking brake to allow the clutch to cool down.

Laden mode kg

It is possible to use the Laden mode in both manual and automatic modes. In both cases, the gearshifting patterns are adapted automatically for carrying an increased payload.

Activation

Press the **kg** button. Control indicator **kg** is shown in the transmission display. The transmission will then select optimized gearshift patterns.

Deactivation

The Laden mode is switched off by:

- pressing the **kg** button again,
- turning off the ignition.

Kickdown

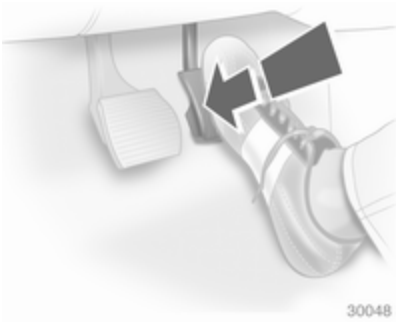

If the accelerator pedal is pressed past the pressure point, the transmission shifts to a lower gear depending on engine speed. Full engine power is available for acceleration.

If engine speed is too high the transmission switches to a higher gear, even in manual mode. Without kickdown this automatic shift is not effected in manual mode.

Fault

In the event of a fault, control indicator is shown in the transmission display. Continued driving is possible provided the vehicle is driven with care and anticipation.

Have the cause of the fault remedied by a workshop.

Interruption of power supply

The clutch is not disengaged if there is an interruption of the power supply when a gear is engaged. The vehicle cannot move.

If the battery is discharged, start the vehicle using jump leads ⇨ 143.

If the cause of the fault is not a discharged battery, seek the assistance of a workshop.

If neutral cannot be selected, the vehicle must only be towed with the drive wheels raised off the ground ⇨ 145.

Brakes

The brake system comprises two independent brake circuits.

If a brake circuit fails, the vehicle can still be braked using the other brake circuit. However, braking effect is achieved only when you depress the brake pedal firmly. You need to use considerably more force for this. The braking distance is extended. Seek the assistance of a workshop before continuing your journey.

When the engine is not running, the support of the brake servo unit disappears once the brake pedal has been depressed once or twice. Braking effect is not reduced, but braking requires significantly greater force. It is especially important to bear this in mind when being towed.

Control indicator ⇨ 70.

If the brake pads wear to a predetermined point, the braking system will require inspection. Seek the assistance of a workshop.

Control indicator ⇨ 70.

Antilock brake system

Antilock brake system (ABS) prevents the wheels from locking.

ABS starts to regulate brake pressure as soon as a wheel shows a tendency to lock. The vehicle remains steerable, even during hard braking.

ABS control is made apparent through a pulse in the brake pedal and the noise of the regulation process.

For optimum braking, keep the brake pedal fully depressed throughout the braking process, despite the fact that the pedal is pulsating. Do not reduce the pressure on the pedal.

Control indicator (ABS) ⇨ 70.

Fault

If control indicators (ABS) and ⚡ illuminate with the messages **CHECK ABS** and **CHECK ESP** in the multifunction display, there is a fault in the ABS. The brake system remains operational but without ABS regulation.

⚠Warning

If there is a fault in the ABS, the wheels may be liable to lock due to braking that is heavier than normal. The advantages of ABS are no longer available. During hard braking, the vehicle can no longer be steered and may swerve.

If control indicators (ABS), ⚡, (!) and STOP illuminate, the ABS and ESP are deactivated and the message **BRAKING FAULT** is shown in the multifunction display. Seek the assistance of a workshop.

Have the cause of the fault remedied by a workshop.

Parking brake

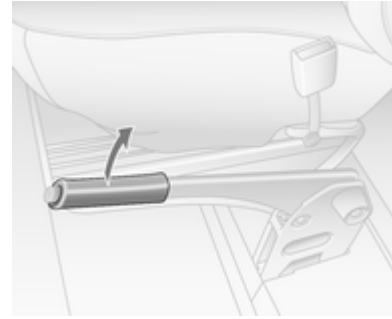

Always apply parking brake firmly without operating the release button, and apply as firmly as possible on a downhill or uphill slope.

To release the parking brake, pull the lever up slightly, press the release button and fully lower the lever.

To reduce the operating forces of the parking brake, depress the foot brake at the same time.

Control indicator (!) ⇨ 70.

Brake assist

If the brake pedal is depressed quickly and forcefully, maximum brake force is automatically applied (full braking).

Maintain steady pressure on the brake pedal for as long as full braking is required. Maximum brake force is automatically reduced when the brake pedal is released.

Ride control systems

Traction Control system

The Traction Control system (TC) is a component part of the Electronic Stability Program (ESP®Plus) which improves driving stability when necessary, regardless of the type of road surface or tyre grip, by preventing the drive wheels from spinning.

As soon as the drive wheels starts to spin, engine output is reduced and the wheel spinning the most is braked individually. This considerably improves the driving stability of the vehicle on slippery road surfaces.

TC is operational as soon as the ignition is switched on and control indicator extinguishes in the instrument cluster.

When TC is active flashes.

⚠ Warning

Do not let this special safety feature tempt you into taking risks when driving.

Adapt speed to the road conditions.

Control indicator ⇨ 71.

Deactivation

When spinning of the drive wheels is required TC can be deactivated:

Press the button. Control indicator illuminates in the instrument cluster.

TC is reactivated by pressing the button again. Control indicator extinguishes in the instrument cluster. TC is also reactivated the next time the ignition is switched on.

When vehicle speed reaches 50 km/h the TC function will be restored automatically.

Electronic stability program

The Electronic Stability Program (ESP®Plus) improves driving stability when necessary, regardless of the type of road surface or tyre grip. It also prevents the drive wheels from spinning.

As soon as the vehicle starts to swerve (understeer/oversteer), engine output is reduced and the wheels are braked individually. This considerably improves the driving stability of the vehicle on slippery road surfaces.

ESP®Plus is operational as soon as the ignition is switched on and control indicator extinguishes in the instrument cluster.

When ESP®Plus comes into action flashes.

⚠ Warning

Do not let this special safety feature tempt you into taking risks when driving.

Adapt speed to the road conditions.

Control indicator ⇨ 71.

Deactivation

When spinning of the drive wheels is required ESP®Plus can be deactivated:

Press the button. Control indicator illuminates in the instrument cluster and the message **ESP OFF** appears in the multifunction display.

ESP®Plus is reactivated by pressing the button again. Control indicator extinguishes in the instrument cluster. ESP®Plus is also reactivated the next time the ignition is switched on.

When vehicle speed reaches 50 km/h the ESP®Plus function will be restored automatically.

Fault

If the system detects a fault, control indicator illuminates in the instrument cluster and the message **CHECK ESP** appears in the multifunction display.

Have the cause of the fault remedied by a workshop.

Cruise control

The cruise control can store and maintain speeds of 30 km/h and above. Deviations from the stored speeds may occur when driving uphill or downhill.

For safety reasons the cruise control cannot be activated until the foot brake has been operated once.

Do not use the cruise control if it is not advisable to maintain a constant speed.

With manual transmission automated, only activate cruise control in automatic mode.

Control indicators and ⇨ 72.

Activation

Press switch , control indicator illuminates green in the instrument cluster.

Cruise control is now in standby mode and a corresponding message appears in the multifunction display.

Accelerate to the desired speed and press switch + or −. The current speed is now stored and maintained and the accelerator pedal can be released.

Control indicator illuminates green in the instrument cluster together with and a corresponding message appears in the multifunction display.

Vehicle speed can be increased by depressing the accelerator pedal. The stored speed flashes in the instrument cluster. When the accelerator pedal is released, the previously stored speed is resumed.

The speed is saved until the ignition is switched off.

Increase speed

With cruise control active, the vehicle speed can be increased continuously or in small increments by holding down or tapping switch + repeatedly.

When the switch is released the current speed is stored and maintained.

Alternatively, accelerate to the desired speed and store by pressing switch +.

Reduce speed

With cruise control active, the vehicle speed can be decreased continuously or in small increments by holding down or tapping switch − repeatedly.

When the switch is released the current speed is stored and maintained.

Deactivation

Press switch O: cruise control is deactivated and the green control indicator extinguishes in the instrument cluster.

Automatic deactivation:

- Vehicle speed drops below 30 km/h,
- The brake pedal is depressed,
- The clutch pedal is depressed,
- Selector lever in **N**.

The speed is stored and a corresponding message appears in the multifunction display.

Resume stored speed

Press switch **R** at a speed above 30 km/h.

If the stored speed is much higher than the current speed, the vehicle will accelerate powerfully until the stored speed is obtained.

Deleting the stored speed

Press switch : Green control indicators and extinguish in the instrument cluster.

Cruise control speed limiter

The speed limiter prevents the vehicle exceeding a preset maximum speed above 30 km/h.

Activation

Press switch , control indicator illuminates orange in the instrument cluster.

Cruise control speed limiter function is now in standby mode and a corresponding message appears in the multifunction display.

Accelerate to the desired speed and press switch **+** or **−**. The current speed is recorded.

The vehicle can be driven normally but it will not be possible to exceed the programmed speed limit except in an emergency.

Where the limit speed cannot be maintained, e.g. when driving on a steep decline, the limit speed will flash on the multifunction display.

Increase limit speed

The limit speed can be increased continuously or in small increments by holding down or tapping switch **+** repeatedly.

Reduce limit speed

The limit speed can be decreased continuously or in small increments by holding down or tapping switch **−** repeatedly.

Exceeding the limit speed

In the event of an emergency it is possible to exceed the limit speed by depressing the accelerator pedal firmly beyond the point of resistance.

The limit speed will flash on the multifunction display during this period.

Release the accelerator pedal and the speed limiter function is reactivated once a speed lower than the limit speed is obtained.

Deactivation

Press switch O: speed limiter is deactivated and the vehicle can be driven normally.

The limit speed is stored and a corresponding message appears in the multifunction display.

Reactivation

Press switch R. The speed limiter function is reactivated.

Deleting the limit speed

Press switch ⚠.

Orange control indicator ⚠ extinguishes in the instrument cluster.

Object detection systems

Parking assist

The parking assist makes reverse parking easier by measuring the distance between the rear of the vehicle and obstacles. It is the driver, however, who bears full responsibility for parking.

The system consists of four parking sensors in the rear bumper.

Note

Attached parts in the detection area cause system malfunction.

Activation

When reverse gear is engaged, the system switches itself on automatically. Readiness for operation is indicated by a brief acoustic alarm.

An obstacle is indicated by buzzers. The interval between the buzzers becomes shorter as the vehicle gets closer to the obstacle. When the distance is less than 30 cm, the buzzer is continuous.

⚠ Warning

Under certain circumstances, various reflective surfaces on objects or clothing as well as external noise sources may cause the system to fail to detect obstacles.

Deactivation

It is possible to deactivate or temporarily deactivate the system.

Deactivate the system by pressing and holding the P button on the instrument panel for approx. 3 seconds with the ignition on and reverse gear engaged. Control indicator in the button illuminates continuously.

The system is deactivated and will not operate. When reverse gear is selected no acoustic signal will sound, indicating deactivation.

The function is reactivated by pressing and holding button P for approx. 3 seconds.

Temporary deactivation

Temporarily deactivate the system by pressing the P button on the instrument panel with the ignition on and reverse gear engaged. Control indicator in the button illuminates.

When reverse gear is selected no acoustic signal will sound, indicating deactivation.

The function is reactivated by pressing button P again or the next time the ignition is switched on.

Fault

If the system detects an operating fault, a continuous acoustic alarm will sound for approx. 5 seconds when selecting reverse gear. Consult a workshop to have the cause of the fault remedied.

Rear view camera

The camera is typically installed under the number plate moulding with a display monitor fitted to the driver's sun visor.

Functionality

The rear view camera system enables the driver to view the rear of the vehicle in the display monitor whilst reversing.

The system can be activated or deactivated by selecting the Start / Stop button located on the right hand side of the display monitor. The other

buttons on the monitor enable the user to select source AV1 or AV2 and adjust the brightness and contrast of the display monitor.

To achieve the optimum visibility, the rear view camera must not be obscured by dirt, snow or ice.

⚠Warning

The system is intended as a reversing aid and does not replace driver vision.

Do not let this feature tempt you into take risks when reversing.

Failure to use proper care when reversing may result in damage to the vehicle, injury, or death. Always check the outside, rearview mirrors and glance over your shoulder before reversing.

The driver assistance systems do not relieve the driver from full responsibility for vehicle operation.

Fuel

Fuel for diesel engines

Only use diesel fuel that complies with DIN EN 590. The fuel must have low sulphur content (max. 10 ppm). Equivalent standardised fuels with a biodiesel (= FAME according to EN14214) content of max. 7% by volume (like DIN 51628 or equivalent standards) may be used.

Do not use marine diesel oils, heating oils or entirely plant-based diesel fuels, such as rape seed oil or bio diesel, Aquazole and similar diesel-water emulsions. Diesel fuels must not be diluted with fuels for petrol engines.

The flow and filterability of diesel fuels are temperature-dependent. When temperatures are low, refuel with diesel fuel with guaranteed winter properties.

Refuelling

⚠Danger

Before refuelling, switch off engine and any external heaters with combustion chambers (identified by sticker on fuel filler flap). Switch off any mobile phones.

Follow the operating and safety instructions of the filling station when refuelling.

⚠Danger

Fuel is flammable and explosive. No smoking. No naked flames or sparks.

If you can smell fuel in your vehicle, have the cause of this remedied immediately by a workshop.

The fuel tank filler neck with bayonet cap is located on the left front side of the vehicle.

The fuel filler flap can only be opened if the vehicle is unlocked and the door is opened. Open the fuel filler flap by hand.

Remove the fuel filler cap by turning it anticlockwise.

The fuel filler cap can be hung on the lower hook of the fuel filler flap.

When refuelling is complete, replace the filler cap and turn it clockwise.

Caution
Wipe off any overflowing fuel immediately.

Fuel consumption - CO_2-Emissions

The determination of fuel consumption is regulated by European directive 715/2007 692/2008 A.

The directive is oriented to actual driving practices: Urban driving is rated at approx. $^1/_3$ and extra urban driving at approx. $^2/_3$. Cold starts and acceleration phases are also taken into consideration.

The specification of CO_2 emission is also a constituent of the directive.

The figures given must not be taken as a guarantee for the actual fuel consumption of a particular vehicle. Furthermore, fuel consumption is dependent on personal driving style as well as road and traffic conditions.

All values are based on the EU base model with standard equipment.

The calculation of fuel consumption takes into account the vehicle's kerb weight, ascertained in accordance with the regulations. Optional equipment may result in slightly higher fuel consumption and CO_2 emission levels and a lower maximum speed.

Towing

General information

Only use towing equipment that has been approved for your vehicle. Entrust fitting of towing equipment at a later date to a workshop. It may be necessary to make changes that affect the cooling system, heat shields or other equipment.

Installation dimensions of factory-fitted towing equipment ⇨ 168.

Driving characteristics and towing tips

In the case of trailers with brakes, attach the breakaway stopping cable.

Before attaching a trailer, lubricate the coupling ball. However, do not do so if a stabiliser, which acts on the coupling ball, is being used to reduce snaking movements. For trailers with low driving stability the use of a stabiliser is recommended.

A maximum speed of 80 km/h must not be exceeded, even in countries where higher speeds are permitted.

If the trailer starts snaking, drive more slowly, do not attempt to correct the steering and brake sharply if necessary.

When driving downhill, drive in the same gear as if driving uphill and drive at a similar speed.

Adjust tyre pressure to the value specified for full load ⇨ 167.

Trailer towing

Trailer loads

The permissible trailer loads are vehicle-dependent and engine-dependent maximum values which must not be exceeded. The actual trailer load is the difference between the actual gross weight of the trailer and the actual coupling socket load with the trailer coupled.

The permissible trailer loads are specified in the vehicle documents. In general, they are valid for gradients up to max. 12 %.

The permitted trailer load applies up to the specified incline and up to an altitude of 1000 metres above sea level. Since engine power decreases as altitude increases due to the air becoming thinner, therefore reducing climbing ability, the permissible gross train weight also decreases by 10 % for every 1000 metres of additional altitude. The gross train weight does not have to be reduced when driving on roads with slight inclines (less than 8 %, e.g. motorways).

The permissible gross train weight must not be exceeded. This weight is specified on the identification plate ⇨ 153.

Vertical coupling load

The vertical coupling load is the load exerted by the trailer on the coupling ball. It can be varied by changing the weight distribution when loading the trailer.

The maximum permissible vertical coupling load is specified on the towing equipment identification plate and in the vehicle documents. Always aim for the maximum load, especially in the case of heavy trailers. The vertical coupling load should never fall below 25 kg.

In the case of trailer loads of 1200 kg or more, the vertical coupling load should not be less than 50 kg.

Rear axle load

When the trailer is coupled and the towing vehicle fully loaded (including all occupants), the permissible rear axle load (see identification plate or vehicle documents) must not be exceeded.

Towing equipment

Caution
When operating without a trailer, remove the coupling ball bar.

Towing equipment audible warning

For vehicles fitted with towing equipment, when connected to a trailer the pitch of the audible warning changes upon operation of the turn signals.

The pitch of the audible warning will change if a turn signal light on the trailer or the towing vehicle fails.

Auxiliary features

Power take-off

To activate, with the vehicle stationary and the engine idling:

- Select neutral (MTA = **N**)
- Depress the clutch pedal
- Press switch on the instrument panel
- Release clutch pedal

The engine idle speed increases to 1,200 rpm.

If the system does not operate, repeat the procedure or gradually release the clutch pedal.

To deactivate, depress the clutch pedal and press switch on the instrument panel.

Vehicle care

General Information 116
Vehicle checks 117
Bulb replacement 123
Electrical system 130
Vehicle tools 133
Wheels and tyres 134
Jump starting 143
Towing 145
Appearance care 146

General Information

Accessories and vehicle modifications

We recommend using Genuine Parts and Accessories and factory approved parts specific for your vehicle type. We cannot assess or guarantee reliability of other products - even if they have a regulatory or otherwise granted approval.

Do not make any modifications to the electrical system, e.g. changes of electronic control units (chip tuning).

Vehicle storage

Storage for a long period of time

The following tasks must be carried out if the vehicle is to be stored for several months:

- Wash and wax the vehicle.
- Have the wax in the engine compartment and underbody checked.
- Clean and preserve rubber seals.
- Change engine oil.
- Drain washer fluid reservoir.
- Check coolant antifreeze.
- Adjust tyre pressure to the value specified for full load.
- Park vehicle in a dry, well ventilated place. Engage first or reverse gear. Prevent the vehicle from rolling.
- Do not apply parking brake.
- Open bonnet, close all doors and lock the vehicle.
- Disconnect the clamp from the negative terminal of the vehicle battery. Beware that all systems are not functional.

Putting back into operation

The following tasks must be carried out if the vehicle is being put back into operation:

- Connect the clamp to the negative terminal of the vehicle battery. Activate the electronics of the power windows.
- Check tyre pressure.
- Fill up the washer fluid reservoir.

- Check the engine oil level.
- Check the coolant level.
- Fit the number plate, if necessary.

End-of-life vehicle recovery

Information on end-of-life vehicle recovery centres and the recycling of end-of-life vehicles is available on our website. Only entrust this work to an authorised recycling centre.

Vehicle checks

Performing work

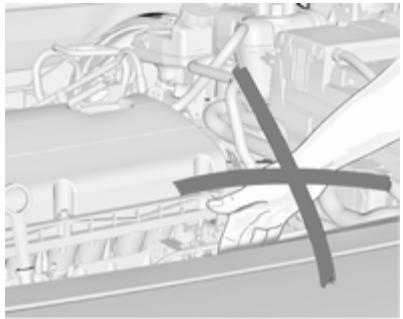

⚠ Warning

Only perform engine compartment checks when the ignition is off.

The cooling fan may start operating even if the ignition is off.

⚠ Danger

The ignition system generates extremely high voltages. Do not touch.

Bonnet

Opening

Pull the release lever and return it to its original position.

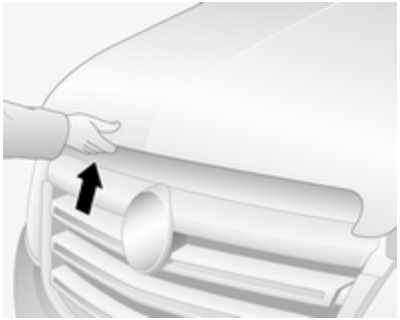

Pull the safety catch and open the bonnet.

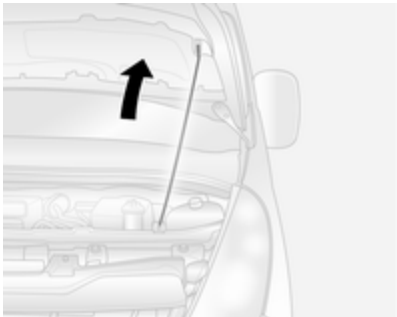

Secure the bonnet support.

Closing

Before closing the bonnet, press the support into the holder.

Lower the bonnet and allow it to drop into the catch. Check that the bonnet is engaged.

Engine oil

It is advisable to check the engine oil level manually before embarking on a long journey. Ensure that the correct specification of oil is used. Recommended fluids and lubricants ⇨ 150.

Check with the vehicle on a level surface. The engine must be at operating temperature and switched off for at least 10 minutes.

Pull out the dipstick, wipe it clean, insert it to the stop on the handle, pull out and read the engine oil level.

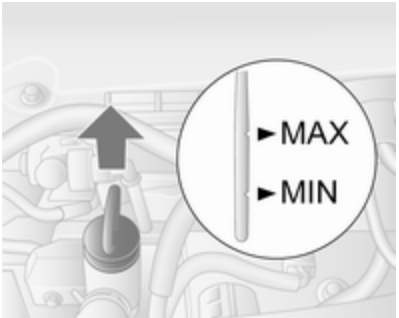

Remove the dipstick, wipe it clean and re-insert it as far as it will go.

When the engine oil level has dropped to the "MIN" mark, top up engine oil.

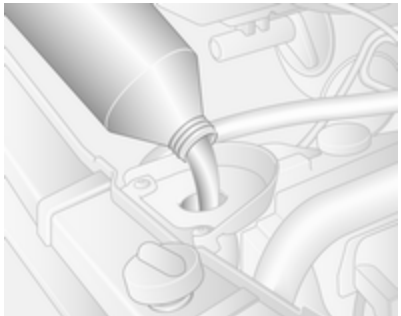

We recommend the use of the same type of engine oil that was used at the last change.

The engine oil level must not exceed the maximum mark "MAX" on the dipstick.

Caution
Overfilled engine oil must be drained or suctioned out.

Capacities ⇨ 166.

Fit the cap on straight and tighten it.

Engine coolant

The coolant provides freeze protection down to approx. -28 °C.

Caution
Only use approved antifreeze.

Coolant level

Caution
Too low a coolant level can cause engine damage.

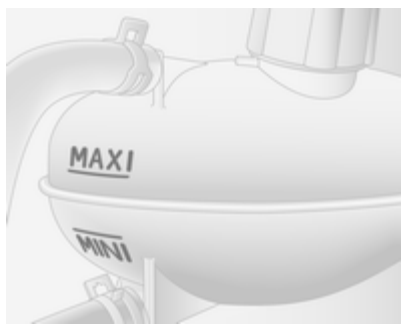

If the cooling system is cold, the coolant level should be just above the **MINI** mark. Top up if the level is low.

⚠Warning
Allow the engine to cool before opening the cap. Carefully open the cap, relieving the pressure slowly.

Top up with antifreeze. If no antifreeze is available, use clean tap water or distilled water. Install the cap tightly. Have the antifreeze concentration checked and have the cause of the coolant loss remedied by a workshop.

If a substantial amount of coolant is required, it will be necessary to bleed any trapped air from the cooling system. Seek the assistance of a workshop.

Power steering fluid

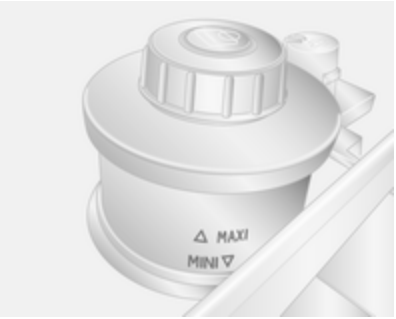

If the fluid level in the reservoir falls below the **MINI** mark consult a workshop.

Washer fluid

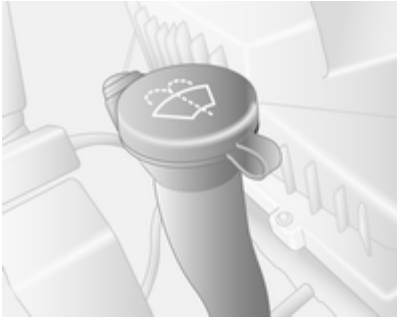

Fill with clean water mixed with a suitable quantity of windscreen washer fluid which contains antifreeze.

Brakes

A squealing noise, or illumination of brake pad wear indicator indicates that the brake lining is at its minimum thickness.

Continued driving is possible but have the brake linings replaced as soon as possible.

Once new brake linings are installed, do not brake unnecessarily hard for the first few journeys.

Brake pad wear indicator ⇨ 70, ⇨ 102.

Brake fluid

⚠ Warning

Brake fluid is poisonous and corrosive. Avoid contact with eyes, skin, fabrics and painted surfaces.

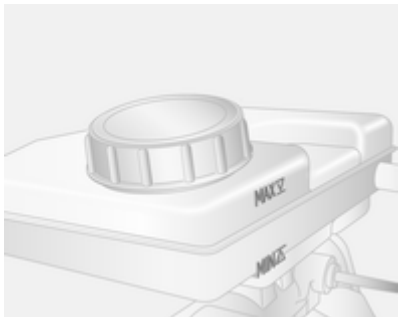

The brake fluid level must be between the **MIN** and **MAX** marks.

When topping up, ensure maximum cleanliness as contamination of the brake fluid can lead to brake system malfunctions. Have the cause of the loss of brake fluid remedied by a workshop.

Only use brake fluid approved for your vehicle.

Brake and clutch fluid ⇨ 150.

Battery

The vehicle battery is maintenance-free.

Batteries do not belong in household waste. They must be disposed of at an appropriate recycling collection point.

Laying up the vehicle for more than 4 weeks can lead to battery discharge. Disconnect the clamp from the negative terminal of the vehicle battery.

Ensure the ignition is switched off before connecting or disconnecting the vehicle battery.

Battery access

The battery is located underneath the vehicle, behind a panel in the front left hand door step. Remove the panel to access the battery.

Diesel fuel filter

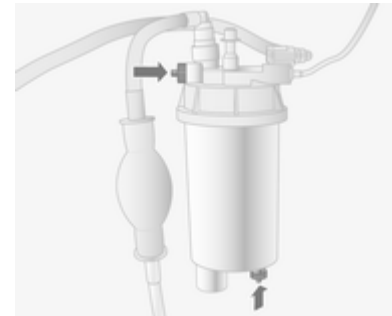

Drain diesel fuel filter of residual water at every engine oil change.

Place a container underneath the filter housing. Loosen the knurled screws on the filter cover and on the lower part of the filter by approx. one turn, to drain off the water.

The filter is drained as soon as diesel fuel emerges from the knurled screw at the bottom. Retighten the two screws.

Check diesel fuel filter at shorter intervals if the vehicle is subjected to extreme operating conditions.

Diesel fuel system bleeding

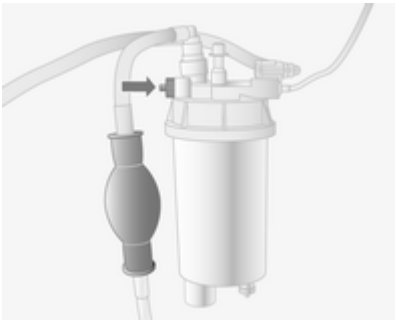

If the fuel tank has been run dry, it will be necessary to air vent or bleed the diesel fuel system.

Fill the tank with fuel and proceed as follows:

1. Place a suitable container underneath the fuel filter vent screw to collect fuel.
2. Loosen the vent screw (arrowed) by one turn.
3. Manually operate the in-line supply pump slowly and steadily until fuel discharging from the loosened vent screw is free of air bubbles.
4. Retighten the vent screw.

If the engine cannot be started after several attempts to bleed the diesel fuel system, seek the assistance of a workshop.

Wiper blade replacement

Wiper blades on the windscreen

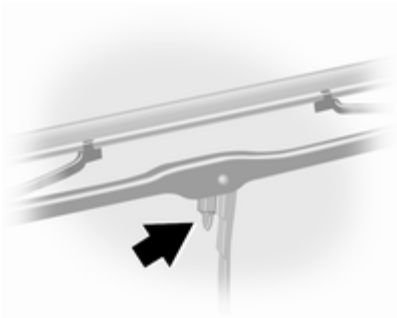

Lift wiper arm, press retaining clip towards wiper arm and detach wiper blade.

Bulb replacement

Switch off the ignition and turn off the relevant switch or close the doors.

Only hold a new bulb at the base! Do not touch the bulb glass with bare hands.

Use only the same bulb type for replacement.

Headlights

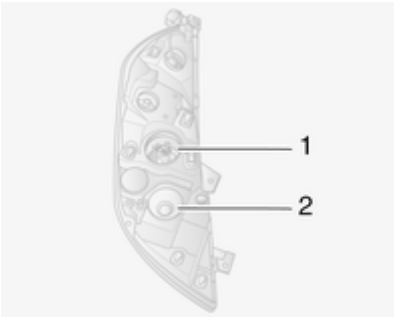

Headlights have separate systems for high beam **1** and low beam **2**.

High beam

1. Remove headlamp protective cover.
2. Detach wiring connector from bulb.

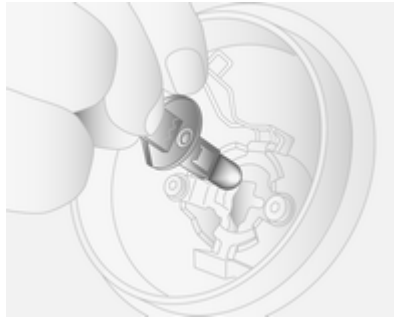

3. Release spring clip.
4. Withdraw bulb from reflector housing.
5. Renew bulb and secure with spring clip.
6. Reattach wiring connector to bulb.
7. Replace headlamp protective cover.

Low beam

1. Remove headlamp protective cover.
2. Detach wiring connector from bulb.
3. Rotate bulb holder anti-clockwise to disengage.
4. Withdraw bulb holder from reflector housing.

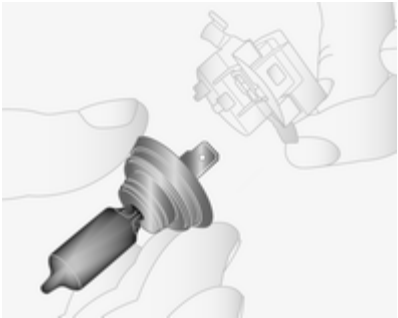

5. Detach bulb from bulb holder and renew the bulb.
6. Insert the bulb holder, engaging the two lugs in the reflector housing and rotate clockwise to secure.
7. Reattach wiring connector to bulb.
8. Replace headlamp protective cover.

Sidelights

1. Remove protective cover.
2. Detach wiring connector from bulb.
3. Rotate bulb holder anti-clockwise to disengage.
4. Withdraw bulb holder from reflector housing.

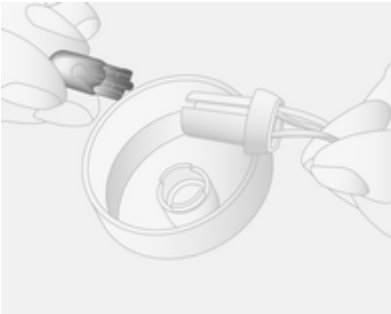

5. Detach bulb from bulb holder and renew the bulb.
6. Insert the bulb holder, engaging the two lugs in the reflector housing and rotate clockwise to secure.
7. Reattach wiring connector to bulb.
8. Replace protective cover.

Adaptive forward lighting

Cornering light

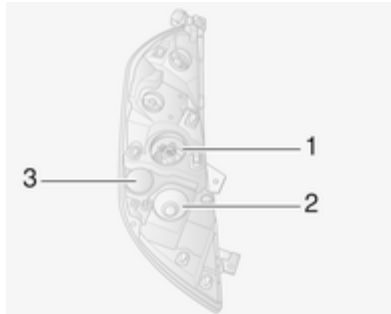

Headlights have separate systems for high beam **1** and low beam **2**. The cornering light **3** is located between the headlights.

1. Remove protective cover.
2. Detach wiring connector from bulb.
3. Rotate bulb holder anti-clockwise to disengage.
4. Withdraw bulb holder from reflector housing.

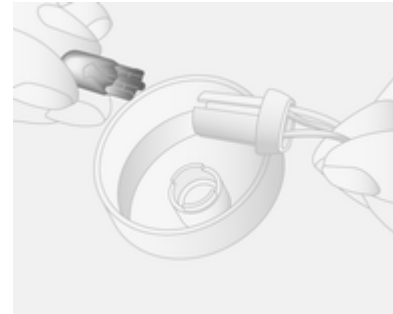

5. Detach bulb from bulb holder and renew the bulb.
6. Insert the bulb holder, engaging the two lugs in the reflector housing and rotate clockwise to secure.
7. Reattach wiring connector to bulb.
8. Replace protective cover.

Fog lights

Have bulbs replaced by a workshop.

Front turn signal lights

1. Remove protective cover.
2. Detach wiring connector from bulb.
3. Rotate bulb holder anti-clockwise to disengage.
4. Withdraw bulb holder from reflector housing.

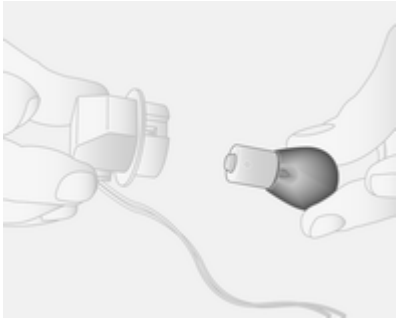

5. Detach bulb from bulb holder and renew the bulb.
6. Insert the bulb holder, engaging the two lugs in the reflector housing and rotate clockwise to secure.
7. Reattach wiring connector to bulb.
8. Replace protective cover.

Tail lights

Rear brake, tail, turn signal, reverse and fog tail lights

1. Remove the upper and lower trim panels from the rear pillar.
2. Unscrew the two nuts from the locating pins on the rear of the lamp assembly.
3. Withdraw the lamp assembly rearwards from the outer side.
4. Detach wiring connector from lamp assembly.

5. Remove the three screws from the rear of the lamp assembly.
6. Remove bulb holder from the lamp assembly.

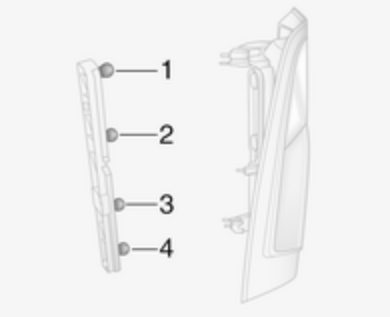

7. Push bulb into socket slightly, rotate anti-clockwise, remove and renew bulb.

   Turn signal light (**1**)

   Tail and brake light (**2**)

   Reverse light (**3**)

   Rear fog light, may be on one side only (**4**)
8. Replace bulb holder in lamp assembly.
9. Replace the three screws on the rear of the lamp assembly.
10. Reattach wiring connector to lamp assembly.
11. Replace lamp assembly from the outer side into original position, ensuring that it is seated correctly.
12. Replace the two nuts onto the locating pins on the rear of the lamp assembly.
13. Install the upper and lower trim panels to the rear pillar.

Side turn signal lights

1. Push the lamp assembly to the right and pull at the left-hand side of the lamp assembly to release from the aperture.

2. Detach wiring connector from lamp assembly.
3. Remove bulb holder from lamp assembly by rotating 90° and renew bulb.
4. Install bulb holder in lamp assembly.

5. Reattach wiring connector.
6. Install lamp assembly into aperture and push to the left to secure.

Mirror turn signal lights

1. Move the lower mirror assembly from the front to access the screw.
2. Remove the screw using a torx screwdriver.

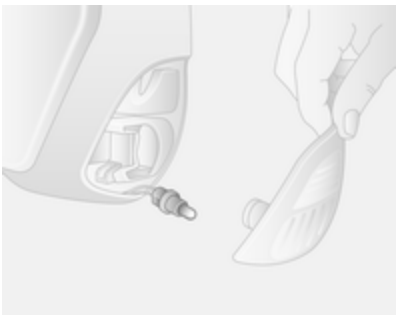

3. Remove bulb holder from the rear of the lower mirror assembly.
4. Renew bulb.
5. Replace bulb holder.
6. Replace the screw.

Centre high-mounted brake light

1. Remove cover from the inside of the rear door.
2. Unscrew the nut from the locating pin at the rear of the lamp assembly.

3. Remove the lamp assembly from the aperture on the outer side.
4. Detach wiring connector from lamp assembly.
5. Remove bulb holder from lamp assembly and renew bulb.
6. Install bulb holder in lamp assembly and reattach wiring connector to lamp assembly.
7. Replace lamp assembly into aperture, ensuring that it is seated correctly.

8. Replace the nut onto the locating pin on the rear of the lamp assembly.
9. Install cover on the inside of the rear door.

Number plate light

1. Unclip lens using a flat blade screwdriver.
2. Remove cover and renew bulb.
3. Reinstall lens.

Interior lights

Front courtesy light

1. Remove lens using a flat blade screwdriver.
2. Renew bulb.
3. Reinstall lens.

Load compartment light

1. Remove lamp assembly using a flat blade screwdriver.
2. Detach wiring connector from lamp assembly.
3. Remove lens cover and renew bulb.
4. Reattach wiring connector and reinstall lamp assembly.

Front door panel light

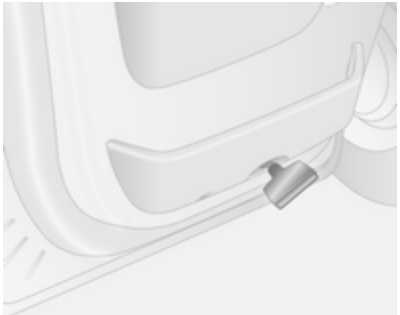

1. Remove lamp assembly using a flat blade screwdriver.
2. Remove lens on lamp assembly.
3. Renew bulb and install lens.
4. Reinstall lamp assembly.

Rear courtesy lights

Have bulbs replaced by a workshop.

Glovebox light

Have bulbs replaced by a workshop.

Instrument panel illumination

Have bulbs replaced by a workshop.

Electrical system

Fuses

Data on the replacement fuse must match the data on the defective fuse.

There are two fuse boxes in the vehicle:

- on the left-hand side of the instrument panel, behind the trim panel.
- in the engine compartment located next to the coolant expansion tank.

Before replacing a fuse, turn off the respective switch and the ignition.

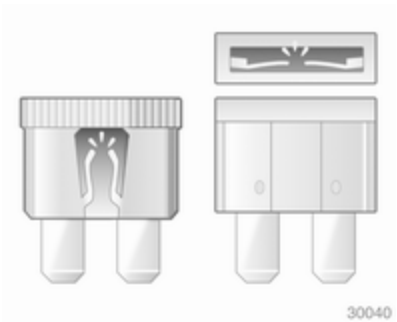

A blown fuse can be recognised by its melted wire. Do not replace the fuse until the cause of the fault has been remedied.

It is advisable to carry a full set of fuses. Consult a workshop.

Some functions are protected by several fuses.

Fuses may also be inserted without existence of a function.

Fuse extractor

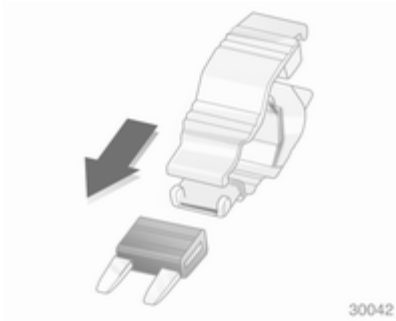

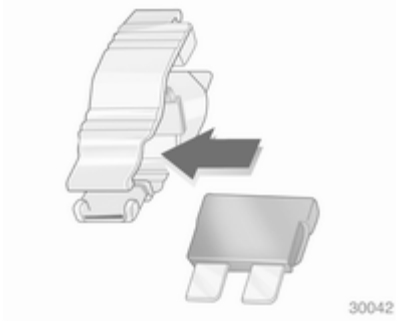

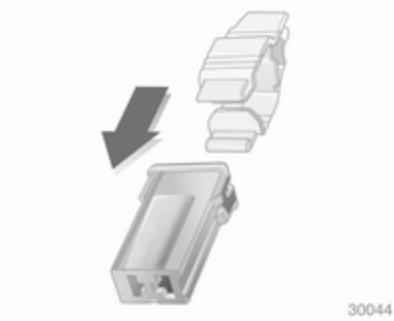

To help in replacing fuses, a fuse extractor is located in the instrument panel fuse box.

Place the fuse extractor on the various types of fuse from the top or side, and withdraw fuse.

Engine compartment fuse box

Located next to the coolant expansion tank.

Due to restricted accessibility, have fuses replaced by a workshop.

Symbol	Circuit
	Right side lights
	Left side lights
	Right low beam
	Left low beam
	Front fog light
	Left high beam
	Right high beam
ABS	ABS
	Windscreen wiper
	Air conditioning
	Heated windscreen

Instrument panel fuse box

Located behind the trim panel on the driver's side of the instrument panel. Pull upper part of trim panel to remove.

Do not store any objects behind this panel.

Some circuits may be protected by several fuses.

Symbol	Circuit
	Infotainment system, seat heating, vehicle display screen, audio connections, alarm
	Power outlet
	Cigarette lighter
	Instrument panel
	Central locking
	Turn signals, rear fog lights, body control module
DIAG	Diagnostic connector
ABS	ABS, Electronic Stability Program
	Interior lights, brake lights
	Body control module
STOP	Brake light
ALIM UCH	Body control module, power windows, air conditioning
	Left heated rear window

Symbol	Circuit
	Right heated rear window
	Windscreen washer
	Electronic immobiliser
	Heated seats
FBL	Cornering light
	Hands-free connection
T	Tachograph
	Climate control fan
ADP	Additional adaptations
	Power windows, body control module

Vehicle tools

Tools

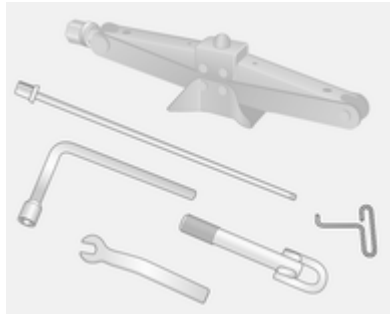

The jack, wheel wrench, adapter, hub cap hook, wrench and towing eye are contained in a unit, stowed under the driver's seat.

Vehicles with Rear Wheel Drive:
A hydraulic jack and a set of extension pieces for use with the jack are also included.

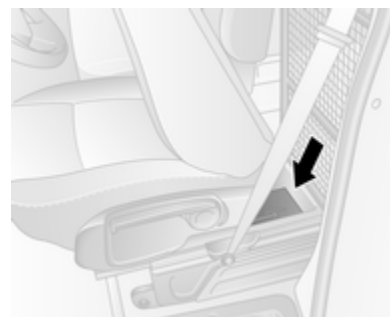

To access this unit, slide the seat fully forwards and fold down the backrest.

Tyre repair kit ⇨ 136.

Spare wheel ⇨ 142.

Wheels and tyres

Tyre condition, wheel condition

Drive over edges slowly and at right angles if possible. Driving over sharp edges can cause tyre and wheel damage. Do not trap tyres on the kerb when parking.

Regularly check the wheels for damage. Seek the assistance of a workshop in the event of damage or unusual wear.

Tyres

Factory-fitted tyres are matched to the chassis and offer optimum driving comfort and safety.

Winter tyres

Winter tyres improve driving safety at temperatures below 7 °C and should therefore be fitted on all wheels.

In accordance with country-specific regulations, a notice indicating the maximum permissible speed for the tyres must be affixed within the driver's field of vision.

Tyre designations

E.g. **215/65 R 16 C 109 R**

215 = Tyre width, mm
65 = Cross-section ratio (tyre height to tyre width), %
R = Belt type: Radial
RF = Type: RunFlat
16 = Wheel diameter, inches
C = Cargo or commercial use
88 = Load index e.g. 109 is equivalent to approx. 1030 kg
R = Speed code letter

Speed code letter:

Q = up to 160 km/h
S = up to 180 km/h
T = up to 190 km/h
H = up to 210 km/h
V = up to 240 km/h
W = up to 270 km/h

Tyre pressure

Check the pressure of cold tyres at least every 14 days and before any long journey. Do not forget the spare wheel.

Tyre pressures ⇨ 167.

The tyre pressure data refers to cold tyres. It applies to summer and winter tyres.

Always inflate the spare tyre to the pressure specified for full load.

Incorrect tyre pressures will impair safety, vehicle handling, comfort and fuel economy and will increase tyre wear.

⚠ Warning

If the pressure is too low, this can result in considerable tyre warm-up and internal damage, leading to tread separation and even to tyre blow-out at high speeds.

Rear-wheel drive, with twin wheels

When inflating the outer tyre, the inflation tube should be passed between the two wheels.

Tread depth

Check tread depth at regular intervals.

Tyres should be replaced for safety reasons at a tread depth of 2-3 mm (4 mm for winter tyres).

The legally permissible minimum tread depth (1.6 mm) has been reached when the tread has worn down as far as one of the tread wear indicators (TWI). Their position is indicated by markings on the sidewall.

Tyres age, even if they are not used. We recommend tyre replacement every 6 years.

Changing tyre and wheel size

If tyres of a different size than those fitted at the factory are used, it may be necessary to reprogramme the speedometer and make other vehicle modifications.

⚠ Warning

Use of unsuitable tyres or wheels may lead to accidents and will invalidate the vehicle type approval.

Wheel covers

Wheel covers and tyres that are factory approved for the respective vehicle and comply with all of the relevant wheel and tyre combination requirements must be used.

If the wheel covers and tyres used are not factory approved, the tyres must not have a rim protection ridge.

Wheel covers must not impair brake cooling.

⚠Warning
Use of unsuitable tyres or wheel covers could lead to sudden pressure loss and thereby accidents.

Tyre chains

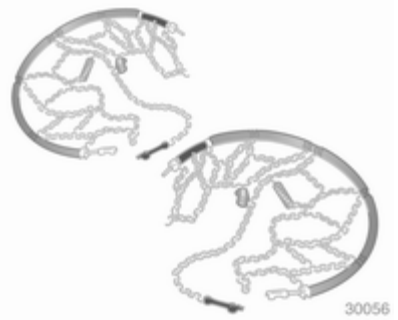

Tyre chains are only permitted on the drive wheels. On vehicles with twin rear wheels, tyre chains are only permitted on the outer wheels.

Always use fine mesh chains that add no more than 15 mm to the tyre tread and the inboard sides (including chain lock).

⚠Warning
Damage may lead to tyre blowout.

Wheel covers on steel wheels may come into contact with parts of the chains. In such cases, remove the wheel covers.

Tyre chains may only be used at speeds up to 50 km/h and, when travelling on roads that are free of snow, they may only be used for brief periods since they are subject to rapid wear on a hard road and may snap.

The use of tyre chains is not permitted on the temporary spare wheel.

Tyre repair kit

Minor damage to the tyre tread or sidewall can be repaired with the tyre repair kit.

Do not remove foreign bodies from the tyres.

Tyre damage exceeding 4 mm or that is at the tyre's sidewall near the rim cannot be repaired with the tyre repair kit.

⚠Warning

Do not drive faster than 80 km/h.

Do not use for a lengthy period.

Steering and handling may be affected.

If the vehicle has a flat tyre:

Apply the parking brake and engage first gear or reverse gear.

The tyre repair kit is located under the front seat. Slide seat forwards fully and fold backrest down to access kit.

1. Remove the compressor from the tyre repair kit.
2. Remove the electrical connection cable and air hose from the compartments on the underside of the compressor.

3. Screw the compressor air hose to the connection on the sealant bottle.
4. Fit the sealant bottle into the retainer on the compressor.

   Set the compressor near the tyre in such a way that the sealant bottle is upright.
5. Unscrew valve cap from defective tyre.

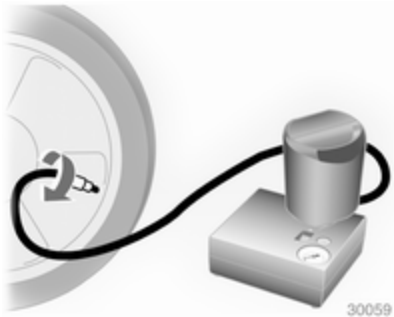

6. Screw the filler hose to the tyre valve.
7. The switch on the compressor must be set to **O**.

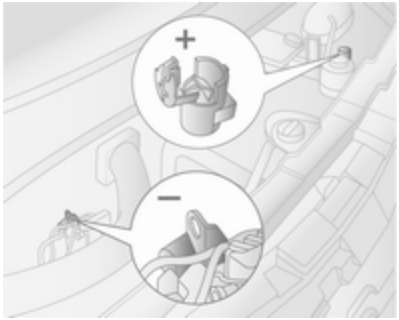

8. Connect the red + power supply lead on the compressor to the jump start terminal ⇨ 143.
9. Connect the black − power supply lead to a vehicle grounding point, such as the engine block or an engine mounting bolt.

   To avoid discharging the battery, we recommend running the engine.

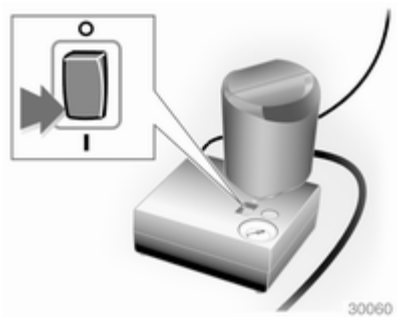

10. Set the rocker switch on the compressor to **I**. The tyre is filled with sealant.
11. The compressor pressure gauge briefly indicates up to 6 bar. Then the pressure starts to drop.
12. All of the sealant is pumped into the tyre. Then the tyre is inflated.

13. The prescribed tyre pressure should be obtained within 10 minutes. Tyre pressure ⇨ 167. When the correct pressure is obtained, switch off the compressor.

    If the prescribed tyre pressure is not obtained within 10 minutes, remove the tyre repair kit. Move the vehicle one tyre rotation (approx. 2 metres). Reattach the tyre repair kit and continue the filling procedure for 10 minutes. If the prescribed tyre pressure is still not obtained, the tyre is too badly

damaged. Seek the assistance of a workshop.

Drain excess tyre pressure with the button above the pressure indicator.

Do not run the compressor for longer than 10 minutes.

14. Detach the tyre repair kit. Screw the tyre inflation hose to the free connection on the sealant bottle. This prevents sealant from escaping. Stow tyre repair kit under the front seat.
15. Remove any excess sealant using a cloth.
16. Take the label indicating maximum permitted speed from the tyre repair kit and affix in the driver's field of view.

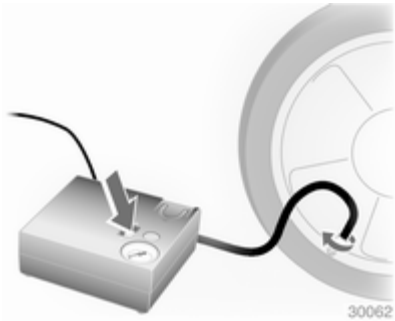

17. Continue driving immediately so that the sealant is evenly distributed throughout the tyre. After driving approx. 10 km, but no more than 10 minutes, stop and check tyre pressure using the compressor. Screw compressor air hose directly onto tyre valve and compressor when doing this.
18. If the tyre pressure is more than 3.1 bar, set it to the correct value. Repeat the procedure until there is no more loss of pressure.

    If the tyre pressure has fallen below 3.1 bar, the vehicle must not be driven. Seek the assistance of a workshop.
19. Stow tyre repair kit under the front seat.

⚠ Warning

Do not allow the sealant to contact skin, eyes or clothing. If swallowed seek medical assistance immediately.

Note
The driving characteristics of the repaired tyre is severely affected, therefore have this tyre replaced.

If unusual noise is heard or the compressor becomes hot, turn compressor off for at least 30 minutes.

The built-in safety valve opens at a pressure of 7 bar.

Note the expiry date of the kit. After this date its sealing capability is no longer guaranteed. Pay attention to storage information on sealant bottle.

Replace the used sealant bottle. Dispose of the bottle as prescribed by applicable laws.

The compressor and sealant can be used from approx. -30 °C.

The adapters supplied can be used to pump up other items e.g. footballs, air mattresses, inflatable dinghies etc. They are located on the underside of the compressor. To remove, screw on compressor air hose and withdraw adapter.

Wheel changing

Some vehicles are equipped with a tyre repair kit instead of a spare wheel ⇨ 136.

Make the following preparations and observe the following information:

- Park the vehicle on a level, firm and non-slippery surface. The front wheels must be in the straight-ahead position.
- Apply the parking brake and engage first gear or reverse gear.
- Remove the spare wheel ⇨ 142.
- Never change more than one wheel at a time.
- Use the jack only to change wheels in case of puncture, not for seasonal winter or summer tyre change.
- If the ground on which the vehicle is standing is soft, a solid board (max. 1 cm thick) should be placed under the jack.
- No people or animals may be in the vehicle when it is jacked-up.
- Never crawl under a jacked-up vehicle.
- Do not start the engine when the vehicle is raised on the jack.
- Clean wheel bolts/nuts and their threads before mounting the wheel.

⚠ Warning

Do not grease wheel bolt, wheel nut and wheel nut cone.

1. Remove the wheel cover using the hook supplied. Vehicle tools ⇨ 133.
2. Install the wheel wrench ensuring that it locates securely and loosen each wheel bolt/nut by half a turn.

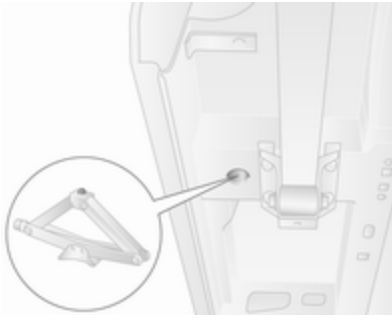

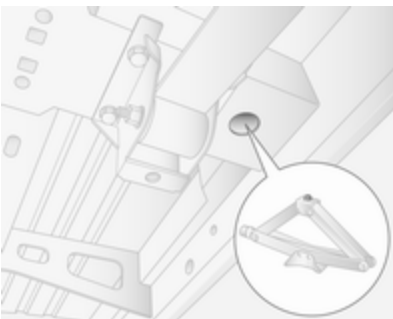

3. Vehicles with Front Wheel Drive:

   Raise vehicle by placing lifting pad spigot of the jack under the jacking hole located nearest the wheel concerned.

   Ensure the jack is positioned correctly. The jack base must be on the ground directly below the jacking hole in a manner that prevents it from slipping.

   Attach wheel wrench onto the jack and raise the vehicle by turning the wrench until the wheel is clear of the ground.

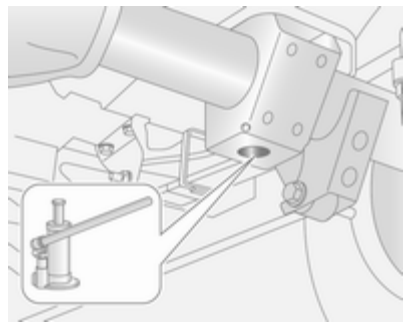

   Vehicles with Rear Wheel Drive:

   Pay attention to the operating instructions supplied with the hydraulic jack and assemble the parts required as specified.

   Position the adapter at the jacking hole located nearest the wheel concerned.

   Ensure the jack is positioned correctly. The jack head must be level with the jacking hole. Pump the jack by pressing the wheel wrench, to position the base plate correctly.

   Raise the vehicle by pressing the wheel wrench until the wheel is clear of the ground.

4. Unscrew wheel bolts/nuts completely and wipe clean with a cloth.

   Put wheel bolts/nuts somewhere where the threads will not be soiled.

5. Change the wheel.
6. Screw in the wheel bolts/nuts.
7. Lower vehicle.
8. Install the wheel wrench ensuring that it locates securely and tighten each wheel bolt/nut in a crosswise sequence. Tightening torque is: 172 Nm (Front-wheel drive), 235 Nm (Rear-wheel drive with

twin rear wheels), 264 Nm (Rear-wheel drive with single rear wheels).

9. Refit wheel cover.
10. Stow the replaced wheel ⇨ 142 and the vehicle tools ⇨ 133.
11. Have the new wheel balanced on the vehicle. Check the tyre pressure of the installed tyre ⇨ 167 and also the wheel bolt/nut torque as soon as possible.

Have the defective tyre renewed or repaired.

Spare wheel

Some vehicles are equipped with a tyre repair kit instead of a spare wheel ⇨ 136.

Use of a spare wheel that is smaller than the other wheels or together with winter tyres could affect driveability. Have the defective tyre replaced as soon as possible.

The spare wheel is held under the vehicle frame using a winch and secured by tightening a cable using the wheel wrench and adapter.

It may be necessary to jack the vehicle up to gain access to the spare wheel on a fully loaded vehicle with a flat rear tyre.

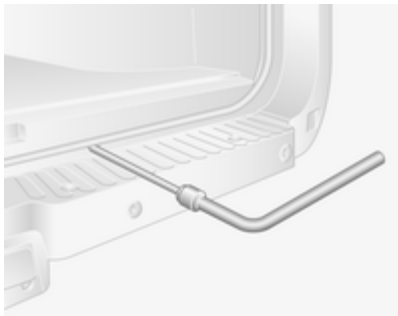

To release the spare wheel, loosen cable using the wheel wrench and adapter and lower the wheel fully.

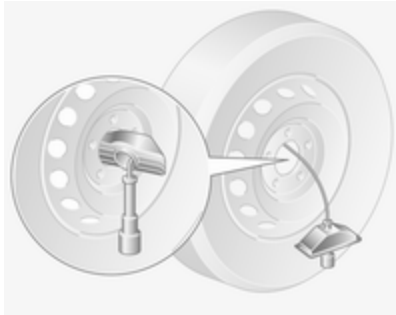

Place wheel upright, remove pin from retainer and release the wheel from the cable.

Twin wheel vehicles have an additional mounting plate attached to the spare wheel. Before using the wheel, undo the nut and remove the mounting plate.

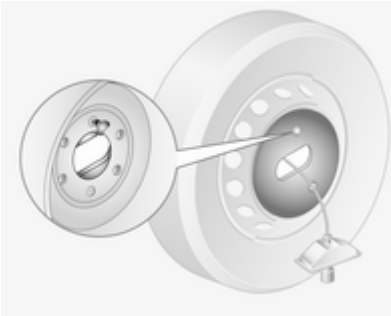

When reinstalling a spare wheel, attach the mounting plate and secure with the nut.

When installing a spare wheel, route the cable from the back and through the centre of the wheel. Attach the retainer and pin, ensuring it is correctly positioned and that the front of the wheel will be facing downwards. Tighten cable using the wheel wrench and adapter until the wheel is secured.

Summer and winter tyres

If you use winter tyres, the spare wheel may still be fitted with a summer tyre.

If you use the spare wheel when it is fitted with a summer tyre the vehicle's driveability may be affected, especially on slippery road surfaces.

Directional tyres

Fit directional tyres such that they roll in the direction of travel. The rolling direction is indicated by a symbol (e.g. an arrow) on the sidewall.

The following applies to tyres fitted opposing the rolling direction:

- Driveability may be affected. Have the defective tyre renewed or repaired as soon as possible.
- Do not drive faster than 80 km/h.
- Drive particularly carefully on wet and snow-covered road surfaces.

Jump starting

Do not start with a quick charger.

A vehicle with a discharged battery can be started using jump leads and the battery of another vehicle.

⚠Warning

Be extremely careful when starting with jump leads. Any deviation from the following instructions can lead to injuries or damage caused by battery explosion or damage to the electrical systems of both vehicles.

⚠Warning

Avoid contact with eyes, skin, fabrics, and painted surfaces. The fluid contains sulphuric acid which can cause injuries and damage in the event of direct contact.

- Never expose the battery to naked flames or sparks.

- A discharged battery can already freeze at a temperature of 0 °C. Defrost the frozen battery before connecting jump leads.
- Wear eye protection and protective clothing when handling a battery.
- Use a booster battery with the same voltage (12 volts). Its capacity (Ah) must not be much less than that of the discharged battery.
- Use jump leads with insulated terminals and a cross section of at least 25 mm^2.
- Do not disconnect the discharged battery from the vehicle.
- Switch off all unnecessary electrical consumers.
- Do not lean over the battery during jump starting.
- Do not allow the terminals of one lead to touch those of the other lead.
- The vehicles must not come into contact with each other during the jump starting process.
- Apply the parking brake, transmission in neutral.

Jump start terminal

In the event of a discharged battery, the jump start terminal enables the vehicle to be started without the need to access the battery inside the vehicle.

The jump start terminal is located in the engine compartment and identified by a "+" sign on the red insulating cover. Lift the red insulating cover to access the terminal connector.

Ensure the red insulating cover is latched back into position when not in use.

Jump starting procedure

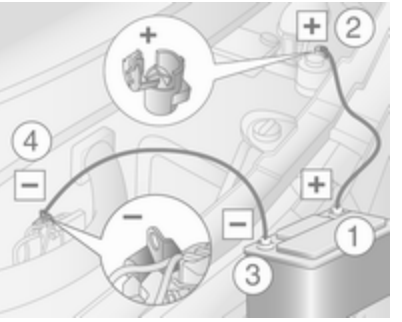

Lead connection order:

1. Connect the red lead to the positive terminal of the booster battery.
2. Connect the other end of the red lead to the jump start terminal of the vehicle with the discharged battery.
3. Connect the black lead to the negative terminal of the booster battery.
4. Connect the other end of the black lead to a vehicle grounding point, such as the engine block or an

engine mounting bolt. Connect as far away from the discharged battery as possible.

Route the leads so that they cannot catch on rotating parts in the engine compartment.

To start the engine:

1. Start the engine of the vehicle providing the jump start.
2. After 5 minutes, start the other engine. Start attempts should be made for no longer than 15 seconds at an interval of 1 minute.
3. Allow both engines to idle for approx. 3 minutes with the leads connected.
4. Switch on electrical consumers (e.g. headlights, heated rear window) of the vehicle receiving the jump start.
5. Reverse above sequence exactly when removing leads.

Towing

Towing the vehicle

The towing eye is stowed with the vehicle tools ⇨ 133.

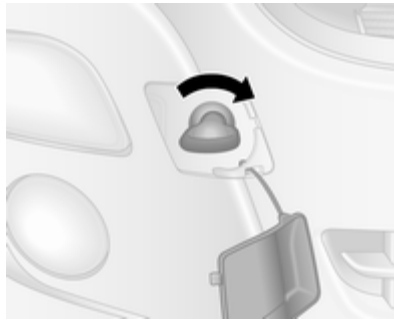

Disengage the cover and remove.

Screw the towing eye into the front towing point and tighten fully using the wheel wrench.

Attach a tow rope - or better still a tow rod - to the towing eye, never to the bumper or front suspension units.

Do not tow the vehicle from the rear. The front towing eye must only be used for towing and not recovering a vehicle.

Switch on ignition to release steering wheel lock and to permit operation of brake lights, horn and windscreen wipers.

Transmission in neutral.

If neutral cannot be selected on vehicles with MTA transmission, the vehicle must only be towed with the drive wheels raised off the ground.

Caution
Drive slowly. Do not drive jerkily. Excessive tractive force can damage the vehicle.

When the engine is not running, considerably more force is needed to brake and steer.

To prevent the entry of exhaust fumes from the towing vehicle, switch on the air recirculation system and close the windows.

Seek the assistance of a workshop.

After towing, unscrew the towing eye and refit the cover.

Towing another vehicle

Attach a tow rope - or better still a tow rod - to the rear towing eye, never to the rear axle and suspension units.

The rear towing eye must only be used for towing and not recovering a vehicle.

Caution
Drive slowly. Do not drive jerkily. Excessive tractive force can damage the vehicle.

Appearance care

Exterior care

Locks

The locks are lubricated at the factory using a high quality lock cylinder grease. Use de-icing agent only when absolutely necessary, as this has a degreasing effect and impairs lock function. After using de-icing agent, have the locks regreased by a workshop.

Washing

The paintwork of your vehicle is exposed to environmental influences. Wash and wax your vehicle regularly. When using automatic vehicle washes, select a programme that includes waxing.

Bird droppings, dead insects, resin, pollen and the like should be cleaned off immediately, as they contain aggressive constituents which can cause paint damage.

If using a vehicle wash, comply with the vehicle wash manufacturer's instructions. The windscreen wipers must be switched off. Remove antenna and external accessories such as roof racks etc.

If you wash your vehicle by hand, make sure that the insides of the wheel housings are also thoroughly rinsed out.

Clean edges and folds on opened doors and the bonnet as well as the areas they cover.

Have the door hinges of all doors greased by a workshop.

Do not clean the engine compartment with a steam-jet or high-pressure jet cleaner.

Thoroughly rinse and leather-off the vehicle. Rinse leather frequently. Use separate leathers for painted and glass surfaces: remnants of wax on the windows will impair vision.

Do not use hard objects to remove spots of tar. Use tar removal spray on painted surfaces.

Exterior lights

Headlight and other light covers are made of plastic. Do not use any abrasive or caustic agents, do not use an ice scraper, and do not clean them dry.

Polishing and waxing

Wax the vehicle regularly (at the latest when water no longer beads). Otherwise, the paintwork will dry out.

Polishing is necessary only if the paint has become dull or if solid deposits have become attached to it.

Paintwork polish with silicone forms a protective film, making waxing unnecessary.

Plastic body parts must not be treated with wax or polishing agents.

Windows and windscreen wiper blades

Use a soft lint-free cloth or chamois leather together with window cleaner and insect remover.

When cleaning the rear window, make sure the heating element inside is not damaged.

For mechanical removal of ice, use a sharp-edged ice scraper. Press the scraper firmly against the glass so that no dirt can get under it and scratch the glass.

Clean smearing wiper blades with a soft cloth and window cleaner.

Wheels and tyres

Do not use high-pressure jet cleaners.

Clean rims with a pH-neutral wheel cleaner.

Rims are painted and can be treated with the same agents as the body.

Paintwork damage

Rectify minor paintwork damage with a touch-up pen before rust forms. Have more extensive damage or rust areas repaired by a workshop.

Underbody

Some areas of the vehicle underbody have a PVC undercoating while other critical areas have a durable protective wax coating.

After the underbody is washed, check the underbody and have it waxed if necessary.

Bitumen/rubber materials could damage the PVC coating. Have underbody work carried out by a workshop.

Before and after winter, wash the underbody and have the protective wax coating checked.

Engine compartment

It is advisable to wash the engine compartment before and after winter and preserve it with wax. Protect the alternator and brake fluid reservoir with plastic sheets before washing the engine.

When washing the engine with a steam-jet cleaner, do not direct the steam jet towards components of the antilock brake system, air conditioning system or the belt drive and its components.

After an engine wash, have all engine compartment components preserved thoroughly by a workshop using protective wax.

Do not use high-pressure jet cleaners.

Towing equipment

Do not clean the coupling ball bar with a steam-jet or high-pressure jet cleaner.

Interior care

Interior and upholstery

Only clean the vehicle interior, including the instrument panel fascia and panelling, with a dry cloth or interior cleaner.

The instrument panel should only be cleaned using a soft damp cloth.

Clean fabric upholstery with a vacuum cleaner and brush. Remove stains with an upholstery cleaner.

Clean seat belts with lukewarm water or interior cleaner.

Caution

Close Velcro fasteners as open Velcro fasteners on clothing could damage seat upholstery.

Plastic and rubber parts

Plastic and rubber parts can be cleaned with the same cleaner as used to clean the body. Use interior cleaner if necessary. Do not use any other agent. Avoid solvents and petrol in particular. Do not use high-pressure jet cleaners.

Service and maintenance

General information 149
Recommended fluids, lubricants and parts 150

General information

Service information

In order to ensure economical and safe vehicle operation and to maintain the value of your vehicle, it is of vital importance that all maintenance work is carried out at the proper intervals as specified.

The detailed, up-to-date service schedule for the vehicle is available at the workshop.

Service display ⇨ 66.

European service intervals

Maintenance of your vehicle is required every 40,000 km or after 1 year, whichever occurs first, unless otherwise indicated by the service display.

The European service intervals are valid for the following countries:

Andorra, Austria, Belgium, Croatia, Czech Republic, Denmark, Estonia, Finland, France, Germany, Greece, Hungary, Iceland, Ireland, Israel, Italy, Latvia, Lichtenstein, Lithuania, Luxembourg, Netherlands, Norway, Poland, Portugal, Slovakia, Slovenia, Spain, Sweden, Switzerland, United Kingdom.

Romania and Bulgaria service intervals

Maintenance of your vehicle is required every 30,000 km or after 1 year, whichever occurs first, unless otherwise indicated by the service display.

Turkey service intervals

Maintenance of your vehicle is required every 20,000 km or after 1 year, whichever occurs first, unless otherwise indicated by the service display.

International service intervals

Maintenance of your vehicle is required every 15,000 km or after 1 year, whichever occurs first, unless otherwise indicated by the service display.

The International service intervals are valid for: Albania, Bosnia-Herzegovina, Cyprus, Kosovo,

Macedonia, Malta, Montenegro, Russia, Serbia, South Africa, Ukraine.

Confirmations

Confirmation of service is recorded in the Service and Warranty Booklet. The date and mileage is completed with the stamp and signature of the servicing workshop.

Make sure that the Service and Warranty Booklet is completed correctly as continuous proof of service is essential if any warranty or goodwill claims are to be met, and is also a benefit when selling the vehicle.

Service interval with remaining engine oil life duration

The service interval is based on several parameters depending on usage.

The service display lets you know when to change the engine oil.

Service display ⇨ 66.

Recommended fluids, lubricants and parts

Recommended fluids and lubricants

Only use products that have been tested and approved. Damage resulting from the use of non-approved materials will not be covered by the warranty.

⚠ Warning

Operating materials are hazardous and could be poisonous. Handle with care. Pay attention to information given on the containers.

Engine oil

Engine oil is identified by its quality and its viscosity. Quality is more important than viscosity when selecting which engine oil to use.

The oil quality ensures engine cleanliness, wear protection and oil aging control, whereas viscosity grade gives information on the oil's thickness over a temperature range. Dexos is the newest engine oil quality that provides optimum protection for petrol and diesel engines. If it is unavailable, engine oils of other listed qualities have to be used.

Engine oil quality

dexos 2 = All petrol and diesel engines

Alternative qualities if dexos is not available:

GM-LL-A-025 = Petrol engines
GM-LL-B-025 = Diesel engines

Alternative qualities if GM-LL-A-025 or GM-LL-B-025 are not available:

ACEA A3/B3 = Petrol engines
ACEA A3/B4 = Diesel engines without DPF
ACEA C3 = Diesel engines with DPF

Topping up engine oil

Engine oils of different manufacturers and brands can be mixed as long as they comply with the required engine oil quality and viscosity.

Use of engine oil of only ACEA A1/B1 or only A5/B5 quality is prohibited, since it can cause long-term engine damage under certain operating conditions.

Additional engine oil additives

The use of additional engine oil additives could cause damage and invalidate the warranty.

Engine oil viscosity

Use only engine oil viscosity grades SAE 5W-30 or 5W-40, 0W-30 or 0W-40.

The SAE viscosity grade defines the ability of an oil to flow. When cold, oil is more viscous than when hot.

Multigrade oil is indicated by two figures. The first figure, followed by a W, indicates the low temperature viscosity and the second figure the high temperature viscosity.

Select the appropriate viscosity grade depending on the minimum ambient temperature.

- down to -25°C:
  SAE 5W-30 or SAE 5W-40
- below -25°C:
  SAE 0W-30 or SAE 0W-40

Coolant and antifreeze

Use only silicate-free long life coolant (LLC) antifreeze.

The system is factory filled with coolant designed for excellent corrosion protection and frost protection down to approx. -28 °C. This concentration should be maintained all year round.

The use of additional coolant additives that intend to give additional corrosion protection or seal against minor leaks can cause function problems. Liability for consequences resulting from the use of additional coolant additives will be rejected.

Brake and clutch fluid

Use DOT4 brake fluid.

Over time, brake fluid absorbs moisture which will reduce braking effectiveness. The brake fluid should therefore be replaced at the specified interval.

Brake fluid should be stored in a sealed container to avoid water absorption.

Ensure brake fluid does not become contaminated.

Technical data

Vehicle identification 152
Vehicle data 154

Vehicle identification

Vehicle Identification Number

The Vehicle Identification Number is visible through the windscreen.

The VIN is also displayed behind a removable plastic cover on the right hand side door step. Unclip the covers using a flat blade screwdriver to access.

Identification plate

The identification plate is located on the right hand door pillar.

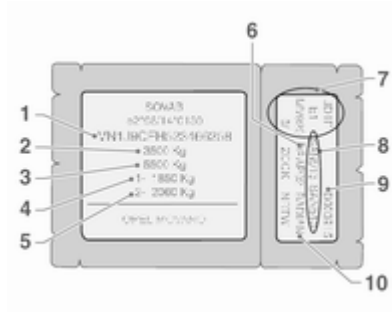

Information on identification plate[1]:

1 = Vehicle identification number
2 = Permissible gross vehicle weight rating
3 = Permissible gross combination weight
4 = Maximum permissible front axle load
5 = Maximum permissible rear axle load
6 = Trim code
7 = Technical specifications of vehicle, including: Vehicle paint code, equipment level and vehicle type
8 = Additional equipment specification
9 = Fabrication number
10 = Interior trim code

The combined total of front and rear axle loads must not exceed the permissible gross vehicle weight. For example, if the front axle is bearing its maximum permissible load, the rear axle can only bear a load that is equal to the gross vehicle weight minus the front axle load.

The technical data is determined in accordance with European Community standards. We reserve the right to make modifications. Specifications in the vehicle documents always have priority over those given in this manual.

Engine identifier code and engine number

Stamped on the engine block and on a label attached to the timing chain cover, depending on variant.

[1] The VIN plate on your vehicle may differ from the illustration shown.

Vehicle data
Engine data

Sales designation	2.3 CDTI[2)]	2.3 CDTI[2)]	2.3 CDTI[2)]
Engine identifier code	**M9T**	**M9T**	**M9T**
Number of cylinders	4	4	4
Piston displacement [cm^3]	2299	2299	2299
Engine power [kW] (brake horse power)	74 (100)	92 (125)	107 (145)
at rpm	3500	3500	3500
Torque [Nm]	280	310	350
at rpm	1250 - 2000	1250 - 2000	1500 - 2750
Fuel type	Diesel	Diesel	Diesel

2) With or without diesel particle filter.

Vehicle weight

Kerb weight, basic model

Model	Drive wheels	Length	Roof height	Gross vehicle weight	Kerb weight[3)4)]
Van	Rear-wheel drive	L3	H2	3500[5)]	2110
				3500[6)]	2246
				4500[6)]	2246
			H3	3500[5)]	2110
				3500[6)]	2246
				4500[6)]	2246
		L4	H2	3500[6)]	2324
				4500[6)]	2324
			H3	3500[6)]	2324
				4500[6)]	2324

3) Kerb weight and gross vehicle weight increase on models fitted with bad road equipment package - refer to VIN plate.
4) Minimum vehicle weight according to Type Approval, including all fluids, tool and a 90% fuel load. Excludes the weight of the driver and deleteable options, e.g. spare wheel, bulkhead and sliding side load door. Final weight may vary according to the specification of the vehicle, e.g. options, delete options and accessories.
5) With Single rear wheels.
6) With Twin rear wheels.

Model	Drive wheels	Length	Roof height	Gross vehicle weight	Kerb weight[3)4)]
Van	Rear-wheel drive	L3	H2	3500[7)]	2110
				3500[8)]	2246
				4500[6)]	2246
			H3	3500[5)]	2110
				3500[6)]	2246
				4500[6)]	2246
		L4	H2	3500[6)]	2324
				4500[6)]	2324
			H3	3500[6)]	2324
				4500[6)]	2324

3) Kerb weight and gross vehicle weight increase on models fitted with bad road equipment package - refer to VIN plate.
4) Minimum vehicle weight according to Type Approval, including all fluids, tool and a 90% fuel load. Excludes the weight of the driver and deleteable options, e.g. spare wheel, bulkhead and sliding side load door. Final weight may vary according to the specification of the vehicle, e.g. options, delete options and accessories.
7) With Single rear wheels.
8) With Twin rear wheels.
6) With Twin rear wheels.
5) With Single rear wheels.

Model	Drive wheels	Length	Roof height	Gross vehicle weight	Kerb weight[3)4)]
Platform Cab	Front-wheel drive	L1	H1	3500	1546
		L2	H1	3500	1555
			H2	3500	1555
		L3	H1	3500	1574
			H2	3500	1574

Model	Drive wheels	Length	Roof height	Gross vehicle weight	Kerb weight[3)4)]
Chassis Cab	Front-wheel drive	L2	H1	3500	1681

Model	Drive wheels	Length	Roof height	Gross vehicle weight	Kerb weight[3)4)]
Chassis Cab	Rear-wheel drive	L2	H1	3500	1825
		L3	H1	3500	1851
				4500	1966[9)]
		L4	H1	4500	1997[9)]

3) Kerb weight and gross vehicle weight increase on models fitted with bad road equipment package - refer to VIN plate.
4) Minimum vehicle weight according to Type Approval, including all fluids, tool and a 90% fuel load. Excludes the weight of the driver and deleteable options, e.g. spare wheel, bulkhead and sliding side load door. Final weight may vary according to the specification of the vehicle, e.g. options, delete options and accessories.
9) With Twin rear wheels.

Model	Drive wheels	Length	Roof height	Gross vehicle weight	Kerb weight[3)4)]
Crew Cab	Front-wheel drive	L3	H1	3500	1908

Model	Drive wheels	Length	Roof height	Gross vehicle weight	Kerb weight[3)4)]
Crew Cab	Rear-wheel drive	L2	H1	3500	2025
		L3	H1	3500	2053
				4500	2145[9)]
		L4	H1	4500	2210[9)]

3) Kerb weight and gross vehicle weight increase on models fitted with bad road equipment package - refer to VIN plate.
4) Minimum vehicle weight according to Type Approval, including all fluids, tool and a 90% fuel load. Excludes the weight of the driver and deleteable options, e.g. spare wheel, bulkhead and sliding side load door. Final weight may vary according to the specification of the vehicle, e.g. options, delete options and accessories.
9) With Twin rear wheels.

Vehicle dimensions

Van	Front-wheel drive		
Gross vehicle weight	2800, 3300, 3500	3300, 3500	3500
Length	L1	L2	L3
Length [mm]	5048	5548	6198
Width without mirrors [mm]	2070	2070	2070
Width with mirrors [mm]	2470	2470	2470
Height - unladen (without antenna) [mm] H1	2303	-	-
H2	2499	2502	2502
H3	-	2749	2749
Wheelbase [mm]	3182	3682	4332
Track width [mm] Front	1750	1750	1750
Rear	1730	1730	1730

Van	Rear-wheel drive		
Gross vehicle weight	3500[10)]	3500[11)], 4500[11)]	3500[11)], 4500[11)]
Length	L3	L3	L4
Length [mm]	6198	6198	6848
Width without mirrors [mm]	2070	2070	2070
Width with mirrors [mm]	2470	2470	2470
Height - unladen (without antenna) [mm] H1	-	-	-
H2	2539	2556	2553
H3	2788	2816	2803
Wheelbase [mm]	3682	3682	4332
Track width [mm] Front	1750	1750	1750
Rear	1730	1730	1730

[10)] With Single rear wheels.
[11)] With Twin rear wheels.

Combi	Front-wheel drive	
Gross vehicle weight	2800, 3500	2800, 3500
Length	L1	L2
Length [mm]	5048	5548
Width without exterior mirrors [mm]	2020	2020
Width with mirrors [mm]	2470	2470
Height - unladen (without antenna) [mm] H1	2303	-
H2	-	2502
H3	-	-
Wheelbase [mm]	3182	3682
Track width [mm] Front	1750	1750
Rear	1730	1730

Chassis Cab, Crew Cab	Front-wheel drive		Rear-wheel drive			
Gross vehicle weight	3500	3500	3500 [12]	3500[12]	3500[13], 4500[13]	3500[13], 4500[13]
Size	L2	L3	L2	L3	L3	L4
Length [mm]	5642	6292	5642	6292	6192	6842
Width without mirrors [mm]	2020	2020	2020	2020	2020	2020
Width with mirrors [mm]	2470	2470	2470	2470	2470	2470
Wheelbase [mm]	3682	4332	3682	4332	3682	4332
Track width [mm] Front	1750	1750	1750	1750	1750	1750
Rear	1730	1730	1730	1730	1730	1730

[12] With Single rear wheels.
[13] With Twin rear wheels.

Platform Cab	Front-wheel drive		
Gross vehicle weight	**3500**	**3500**	**3500**
Size	**L1**	**L2**	**L3**
Length [mm]	5142	5642	6292
Width without mirrors [mm]	2020	2020	2020
Width with mirrors [mm]	2470	2470	2470
Wheelbase [mm]	3182	3682	4332
Track width [mm] Front	1750	1750	1750
Rear	1730	1730	1730

Bus	Front-wheel drive	Rear-wheel drive
Gross vehicle weight	**3900**	**4500**[14)]
Length	**L3**	**L4**
Length [mm]	[15)]	[15)]
Width without mirrors [mm]	2020	2020
Width with mirrors [mm]	2470	2470

[14)] With Twin rear wheels.
[15)] Value not available at time of printing.

Bus	Front-wheel drive	Rear-wheel drive
Gross vehicle weight	**3900**	**4500[14)]**
Length	**L3**	**L4**
Wheelbase [mm]	4332	4332
Height - unladen (without antenna) [mm] H2	[15)]	-
H3	-	[15)]
Track width [mm] Front	1750	1750
Rear	1730	1730

[15)] Value not available at time of printing.

Loadspace dimensions

Van	Front-wheel drive					
Length	L1		L2		L3	
Roof height	H1	H2	H2	H3	H2	H3
Gross vehicle weight	2800, 3300, 3500	2800, 3300, 3500	3300, 3500	3300, 3500	3500	3500
Maximum rear door aperture height [mm]	1627	1820	1820	1820	1820	1820
Rear door aperture width (at floor) [mm]	1580	1580	1580	1580	1580	1580
Maximum load area height [mm]	1700	1894	1894	2144	1894	2144
Maximum load area width [mm]	1765	1765	1765	1765	1765	1765
Width between wheel arches [mm]	1380	1380	1380	1380	1380	1380
Maximum load floor length [mm]	2583	2583	3083	3083	3733	3733

Van	Rear-wheel drive					
Length	L3				L4	
Roof height	H2		H3		H2	H3
Gross vehicle weight	3500	4500	3500	4500	4500	4500
Maximum rear door aperture height [mm]	1724	1724	1724	1724	1724	1724
Rear door aperture width (at floor) [mm]	1580	1580	1580	1580	1580	1580
Maximum load area height [mm]	1798	1798	2048	2048	1798	2048
Maximum load area width [mm]	1765	1765	1765	1765	1765	1765
Width between wheel arches [mm]	1380	1080	1380	1080	1080	1080
Maximum load floor length [mm]	3733	3733	3733	3733	4383	4383

Capacities

Engine	M9T
Engine oil including filter [l]	Front wheel drive 8.9 Rear wheel drive 8.0
between MIN and MAX [l]	1.5 - 2.0
Fuel tank, nominal capacity [l]	80 or 105

Tyre pressures

Front-wheel drive			Tyre pressure with full load[16]	
Engine	GVW	Tyre	Front [kPa/bar] (psi)	Rear [kPa/bar] (psi)
M9T	2800	215/65 R16 C	340/3.4 (49)	360/3.6 (52)
	3300	215/65 R16 C	360/3.6 (52)	430/4.3 (62)
	3500	225/65 R16 C	380/3.8 (55)	460/4.6 (68)

Rear-wheel drive, with single wheels			Tyre pressure with full load[16]	
Engine	GVW	Tyre	Front [kPa/bar] (psi)	Rear [kPa/bar] (psi)
M9T	3500	235/65 R16 C	360/3.6 (52)	450/4.5 (65)

Rear-wheel drive, with twin wheels			Tyre pressure with full load[16]	
Engine	GVW	Tyre	Front [kPa/bar] (psi)	Rear [kPa/bar] (psi)
M9T	3500	195/75 R16 C	420/4.2 (61)	420/4.2 (61)
	4500	195/75 R16 C	420/4.2 (61)	420/4.2 (61)

[16] The spare wheel should be set to the highest applicable pressure shown in the table.

Towing hitch installation dimensions

Drive	Dimension A
Front-wheel drive [mm]	1100
Rear-wheel drive, with single wheels [mm]	1760
Rear-wheel drive, with twin wheels [mm]	1753

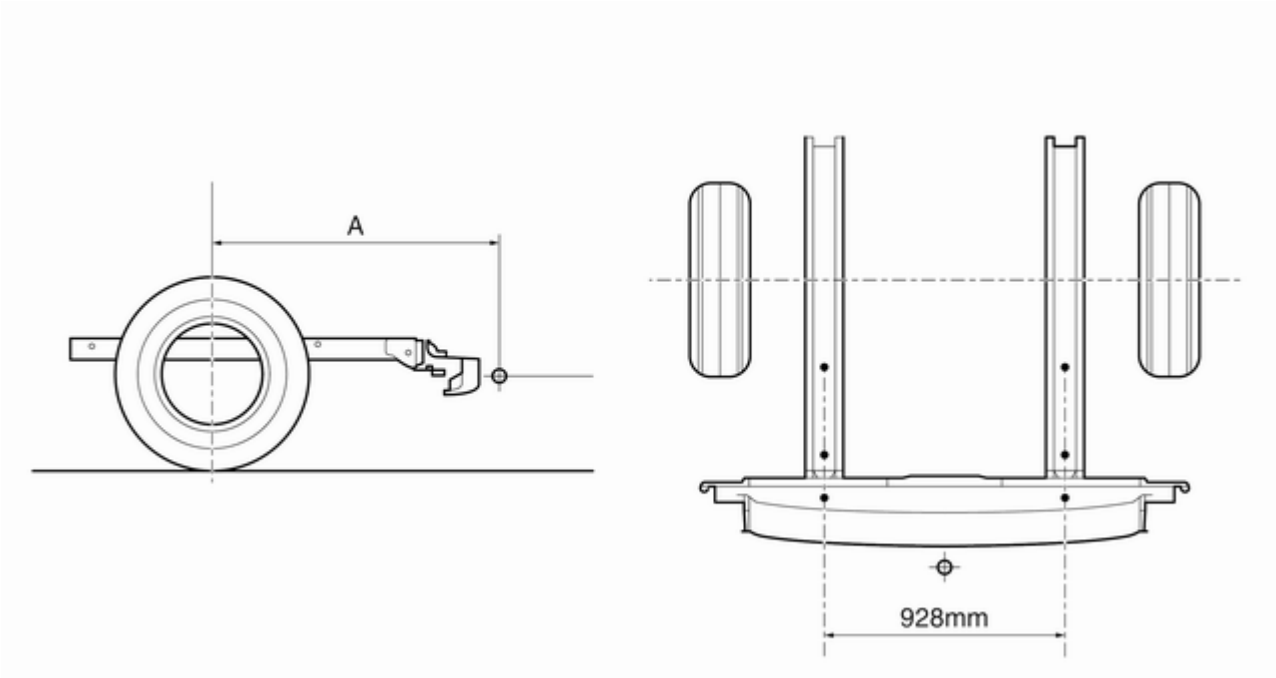
A
928mm

Customer information

Vehicle data recording and privacy 170

Vehicle data recording and privacy

Event data recorders

The vehicle has a number of sophisticated systems that monitor and control several vehicle data. Some data may be stored during regular operation to facilitate repair of detected malfunctions, other data is stored only in a crash or near crash event by systems commonly called event data recorders (EDR).

The systems may record data about the condition of the vehicle and how it was operated (e.g. engine speed, brake application, seat belt usage). To read this data special equipment and access to the vehicle is required. This will take place when the vehicle is serviced in a workshop. Some data is electronically fed into GM global diagnostic systems. The manufacturer will not access information about a crash event or share it with others except

- with the consent of the vehicle owner or, if the vehicle is leased, with the consent of the lessee,
- in response to an official request of police or similar government office,
- as part of the manufacturer’s defense in case of legal proceedings,
- as required by law.

In addition, the manufacturer may use the collected or received data

- for the manufacturer's research needs,
- to make it available for research needs where appropriate confidentiality is maintained and need is shown,
- to share summary data which is not tied to a specific vehicle with other organisations for research purposes.

Index

A
Accessories and vehicle modifications 116
Adaptive forward lighting 78, 125
Adjustable air vents 92
Airbag and belt tensioners 69
Airbag deactivation 42, 69
Airbag system 40
Air conditioning regular operation 93
Air conditioning system 84
Air intake 93
Antilock brake system 103
Antilock brake system (ABS) 70
Anti-theft alarm system 23
Anti-theft locking system 23
Armrest 35
Ashtrays 64
Automatic light control 76
Automatic locking 20
Auxiliary heater..... 88

B
Battery 121
Bonnet 117
Brake assist 104
Brake fluid 120
Brake pad wear..... 70
Brakes 102, 120
Brake system 70
Bulb replacement 123

C
Capacities 166
Cargo management system 54
Car Pass 17
Catalytic converter 97
Central locking system 18
Centre high-mounted brake light 128
Changing tyre and wheel size ... 135
Charging system 69
Child locks 20
Child restraint installation locations 44
Child restraint systems 43
Cigarette lighter 63
Climate control 14
Clock 62
Control indicators..... 67
Control of the vehicle 94
Convex shape 25
Cornering light..... 125
Cruise control 72, 106
Cupholders 52

D
Danger, Warnings and Cautions ... 3
Daytime running lights 77

Diesel fuel filter 121
Diesel fuel system bleeding 122
Diesel particle filter 96
Door open 72
Drain fuel filter 72
Driving characteristics and towing tips 113

E

Electric adjustment 25
Electronic climate control system 84
Electronic driving programmes .. 101
Electronic Stability Program 71, 105
Emergency exit..... 29
End-of-life vehicle recovery 117
Engine compartment fuse box ... 131
Engine coolant 119
Engine coolant temperature gauge 65
Engine data 154
Engine electronics..... 71
Engine exhaust 96
Engine oil 118
Engine oil level monitor..... 66
Engine oil pressure 71
Event data recorders..... 170
Exit lighting 81
Exterior care 146
Exterior light 72
Exterior lighting 11

F

Fault 102
Fire extinguisher..... 56
First aid kit 56
Fixed air vents 92
Fog light 72
Fog lights 125
Folding 26
Front airbag system 40
Front fog lights 78
Front storage..... 52
Front turn signal lights 126
Fuel consumption - CO_2-Emissions 112
Fuel for diesel engines 111
Fuel gauge 65
Fuses 130

G

General information 113
Glass panel 29
Glovebox 52
Glovebox cooler 92

H

Hand brake - see Parking brake. 103
Hazard warning flashers 78
Headlight flash 77
Headlight range adjustment 77
Headlights 123
Headlights when driving abroad .. 77
Head restraint adjustment 8
Head restraints 30
Heated 26
Heated exterior mirrors..... 26
Heated rear window 28
Heating 35
Heating and ventilation system ... 83
High beam 72, 77
Horn 13, 60

I

Identification plate 153
Idle speed control..... 95
Ignition switch positions 95
Immobiliser 25
Instrument panel fuse box 132
Instrument panel illumination 130
Instrument panel overview 11
Instrument panel storage..... 51
Interior care 148
Interior lights 79, 129
Interruption of power supply 102
Introduction 3
ISOFIX child restraint systems 50

J

Jump starting 143

K
Keys 17

L
Lashing eyes 54
Light switch 76
Load compartment lighting..... 80
Loading information 57
Low fuel 72

M
Malfunction indicator light 69
Manual adjustment 25
Manual anti-dazzle 26
Manual mode 100
Manual transmission 98
Manual transmission automated . 98
Manual windows 27
Mirror adjustment 8
Misted light covers 79

N
New vehicle running-in 94
Number plate light 129

O
Odometer 64
Outside temperature 62
Overcab storage 53
Overhead console 53
Overrun cut-off 96

P
Parking 16, 96
Parking assist 109
Parking brake 103
Performing work 117
Pollen filter 93
Power outlets 63
Power side step..... 21
Power sliding door..... 21
Power steering fluid..... 120
Power take-off..... 114
Power windows 27

R
Radio remote control 17
Reading lights 80
Rear air conditioning system 87
Rear doors 22
Rear fog light 72
Rear fog lights 79
Rear heating system 86
Rear view camera 110
Rear windows 27
Recommended fluids and lubricants 150
Refuelling 111
Reversing lights 79
Roof rack 57

S
Safety net 56
Seat adjustment 6, 32
Seat belt 8
Seat belts 37
Seat position 31
Second row seats 35
Selector lever 99
Service 93, 149
Service display 66
Service information 149
Side airbag system 41
Side turn signal lights 127
Sliding door 21
Spare wheel 142
Speedometer 64
Speed regulator..... 64
Starting off 15
Starting the engine 95, 99
Steering column controls..... 60
Steering wheel adjustment 9, 59
Steering wheel controls 59
Stop engine..... 70
Sunglasses storage 52
Sun visors 29
Suspension seat..... 32

Symbols 4
System check..... 70

T
Tachograph..... 75
Tachometer 65
Tail lights 126
Three-point seat belt 38
Tools 133
Top-tether fastening eyes 50
Towing another vehicle 146
Towing equipment 114
Towing hitch installation
dimensions 168
Towing the vehicle 145
Traction Control system 104
Trailer towing 113
Transmission 15
Transmission display 66, 98
Tread depth 135
Trip computer 74
Triple-Info-Display 73
Turn and lane-change signals 78
Turn signal 69
Tyre chains 136
Tyre designations 134
Tyre pressure 135
Tyre pressures 167
Tyre repair kit 136
Tyres 134

U
Underseat storage 53
Upshift..... 71
Using this manual 3

V
Vehicle dimensions 159
Vehicle Identification Number 152
Vehicle messages 73
Vehicle specific data 3
Vehicle storage..... 116
Vehicle unlocking 6
Vehicle weight 155

W
Warning chimes 74
Warning triangle 56
Washer and wiper systems 13
Washer fluid 120
Wheel changing 140
Wheel covers 136
Wheels and tyres 134
Windscreen wiper/washer 60
Winter tyres 134
Wiper blade replacement 122