2014 Chevrolet Captiva Sport Owner Manual

In Brief 1-1
Instrument Panel 1-2
Initial Drive Information 1-4
Vehicle Features 1-16
Performance and Maintenance 1-20

Keys, Doors, and Windows 2-1
Keys and Locks 2-1
Doors 2-8
Vehicle Security 2-9
Exterior Mirrors 2-11
Interior Mirrors 2-13
Windows 2-13
Roof 2-14

Seats and Restraints 3-1
Head Restraints 3-2
Front Seats 3-3
Rear Seats 3-8
Safety Belts 3-9
Airbag System 3-17
Child Restraints 3-30

Storage 4-1
Storage Compartments 4-1
Additional Storage Features ... 4-2
Roof Rack System 4-3

Instruments and Controls 5-1
Controls 5-2
Warning Lights, Gauges, and Indicators 5-8
Information Displays 5-24
Vehicle Messages 5-28
Vehicle Personalization 5-36
Universal Remote System 5-42

Lighting 6-1
Exterior Lighting 6-1
Interior Lighting 6-4
Lighting Features 6-6

Infotainment System 7-1
Introduction 7-1
Radio 7-5
Audio Players 7-11
Phone 7-24

Climate Controls 8-1
Climate Control Systems 8-1
Air Vents 8-9
Maintenance 8-9

Driving and Operating 9-1
Driving Information 9-2
Starting and Operating 9-14
Engine Exhaust 9-20
Automatic Transmission 9-21
Drive Systems 9-25
Brakes 9-25
Ride Control Systems 9-28
Cruise Control 9-30
Driver Assistance Systems ... 9-32
Fuel 9-35
Trailer Towing 9-40
Conversions and Add-Ons ... 9-47

Vehicle Care 10-1
General Information 10-2
Vehicle Checks 10-3
Headlamp Aiming 10-27
Bulb Replacement 10-27
Electrical System 10-30
Wheels and Tires 10-37

Information Provided by:
DEALER E-PROCESS

Downloaded from www.Manualslib.com manuals search engine

2014 Chevrolet Captiva Sport Owner Manual

Jump Starting 10-66
Towing the Vehicle 10-70
Appearance Care 10-74

Service and Maintenance . . . 11-1
General Information 11-1
Maintenance Schedule 11-2
Special Application Services 11-8
Additional Maintenance and Care 11-9
Recommended Fluids 11-12
Maintenance Records 11-15

Technical Data 12-1
Vehicle Identification 12-1
Vehicle Data 12-2

Customer Information 13-1
Customer Information 13-1
Reporting Safety Defects 13-12
Vehicle Data Recording and Privacy 13-13

OnStar 14-1
OnStar Overview 14-1
OnStar Services 14-2
OnStar Additional Information 14-5

Index i-1

Information Provided by:
DEALER E-PROCESS

Downloaded from www.Manualslib.com manuals search engine

Chevrolet Captiva Sport Owner Manual (GMNA-Localizing-U.S./Mexico-6014141) - 2014 - crc - 8/13/13

Black plate (3,1)

The names, logos, emblems, slogans, vehicle model names, and vehicle body designs appearing in this manual including, but not limited to, GM, the GM logo, CHEVROLET, the CHEVROLET Emblem, and CAPTIVA are trademarks and/or service marks of General Motors LLC, its subsidiaries, affiliates, or licensors.

This manual describes features that may or may not be on your specific vehicle either because they are options that you did not purchase or due to changes subsequent to the printing of this owner manual.

Please refer to the purchase documentation relating to your specific vehicle to confirm each of the features found on your vehicle.

Keep this manual in the vehicle for quick reference.

Using this Manual

To quickly locate information about the vehicle, use the Index in the back of the manual. It is an alphabetical list of what is in the manual and the page number where it can be found.

About Driving the Vehicle

As with other vehicles of this type, failure to operate this vehicle correctly may result in loss of control or an accident. Be sure to read the driving guidelines in this manual in the section called “Driving and Operating” and specifically *Driver Behavior on page 9-2*, *Driving Environment on page 9-2*, and *Vehicle Design on page 9-2*.

Danger, Warnings, and Cautions

⚠ Danger

Text marked ⚠ Danger provides information on risk of fatal injury. Disregarding this information may endanger life.

Litho in U.S.A.
Part No. 22893931 B Second Printing

Information Provided by: DEALER E-PROCESS

©2013 General Motors LLC. All Rights Reserved.

Downloaded from www.Manualslib.com manuals search engine

⚠ Warning

Text marked ⚠ Warning provides information on risk of accident or injury. Disregarding this information may lead to injury.

⚠ Caution

Text marked ⚠ Caution provides information that may indicate a hazard that could result in injury or death. It could also result in possible damage to the vehicle.

A circle with a slash through it is a safety symbol which means “Do Not,” “Do not do this,” or “Do not let this happen.”

Symbols

The vehicle has components and labels that use symbols instead of text. Symbols are shown along with the text describing the operation or information relating to a specific component, control, message, gauge, or indicator.

: This symbol is shown when you need to see your owner manual for additional instructions or information.

: This symbol is shown when you need to see a service manual for additional instructions or information.

Vehicle Symbol Chart

Here are some additional symbols that may be found on the vehicle and what they mean. For more information on the symbol, refer to the Index.

: Airbag Readiness Light

: Air Conditioning

: Antilock Brake System (ABS)

+/-: Audio Steering Wheel Controls

: Brake System Warning Light

: Charging System

: Cruise Control

: Engine Coolant Temperature

: Exterior Lamps

: Fog Lamps

: Fuel Gauge

: Fuses

: Headlamp High/Low-Beam Changer

Information Provided by: DEALER E-PROCESS

Downloaded from www.Manualslib.com manuals search engine

: LATCH System Child Restraints

: Malfunction Indicator Lamp

: Oil Pressure

: Power

: Remote Vehicle Start

: Safety Belt Reminders

: Tire Pressure Monitor

: Traction Control/StabiliTrak®

: Windshield Washer Fluid

Information Provided by:
DEALER E-PROCESS

Downloaded from www.Manualslib.com manuals search engine

✍ NOTES

Information Provided by:
DEALER E-PROCESS

Downloaded from www.Manualslib.com manuals search engine

In Brief

Instrument Panel

Instrument Panel Overview 1-2

Initial Drive Information

Initial Drive Information 1-4
Remote Keyless Entry (RKE) System 1-4
Remote Vehicle Start 1-4
Door Locks 1-5
Liftgate 1-6
Windows 1-6
Seat Adjustment 1-7
Second Row Seats 1-9
Heated Seats 1-9
Head Restraint Adjustment 1-10
Safety Belts 1-10
Passenger Sensing System 1-10
Mirror Adjustment 1-11
Steering Wheel Adjustment 1-12
Interior Lighting 1-12
Exterior Lighting 1-13
Windshield Wiper/Washer 1-13
Climate Controls 1-14
Transmission 1-15

Vehicle Features

Radio(s) 1-16
Satellite Radio 1-17
Portable Audio Devices 1-17
Bluetooth® 1-17
Steering Wheel Controls 1-17
Cruise Control 1-18
Infotainment System 1-18
Driver Information Center (DIC) 1-18
Rear Vision Camera (RVC) 1-19
Ultrasonic Parking Assist 1-19
Power Outlets 1-19
Universal Remote System ... 1-19

Performance and Maintenance

Traction Control/Electronic Stability Control 1-20
Tire Pressure Monitor 1-20
Engine Oil Life System 1-21
E85 or FlexFuel 1-21
Driving for Better Fuel Economy 1-21
Roadside Assistance Program 1-22
OnStar® 1-22

Information Provided by:
DEALER E-PROCESS

Downloaded from www.Manualslib.com manuals search engine

Instrument Panel

Instrument Panel Overview

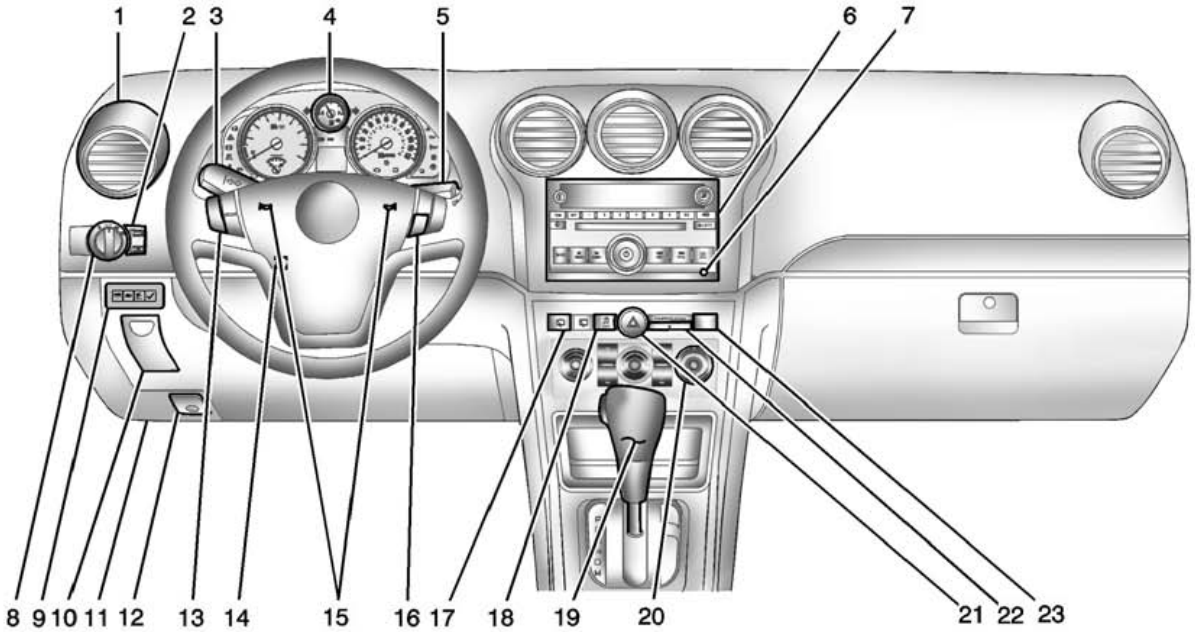

Information Provided by:
DEALER E-PROCESS

Downloaded from www.Manualslib.com manuals search engine

1. *Air Vents on page 8-9*.
2. *Instrument Panel Illumination Control on page 6-4*.
3. Turn Signal Lever. See *Turn and Lane-Change Signals on page 6-3*.
4. *Instrument Cluster on page 5-9*.
5. *Windshield Wiper/Washer on page 5-3*.
6. *AM-FM Radio on page 7-5*.
7. Auxiliary Input Jack (If Equipped). See *Auxiliary Devices on page 7-20*.
8. *Fog Lamps on page 6-4*.

   Exterior Lamp Controls on page 6-1.
9. Driver Information Center (DIC) Buttons. See *Driver Information Center (DIC) on page 5-24*.
10. *Instrument Panel Storage on page 4-1*.
11. Data Link Connector (DLC) (Out of View). See *Malfunction Indicator Lamp on page 5-14*.
12. Hood Release. See *Hood on page 10-3*.
13. *Cruise Control on page 9-30*.
14. *Steering Wheel Adjustment on page 5-2*.
15. *Horn on page 5-3*.
16. *Steering Wheel Controls on page 5-2* (If Equipped).
17. *Rear Window Wiper/Washer on page 5-4*.
18. *Traction Control/Electronic Stability Control on page 9-28*.
19. Shift Lever. See *Automatic Transmission on page 9-21*.
20. *Climate Control Systems on page 8-1* (If Equipped).

    Automatic Climate Control System on page 8-5 (If Equipped).
21. *Hazard Warning Flashers on page 6-3*.
22. Passenger Airbag Status Indicator. See *Passenger Sensing System (United States) on page 3-24*.
23. Passenger Safety Belt Reminder. See *Safety Belt Reminders on page 5-11*.

Information Provided by: DEALER E-PROCESS

Downloaded from www.Manualslib.com manuals search engine

Initial Drive Information

This section provides a brief overview about some of the important features that may or may not be on your specific vehicle.

For more detailed information, refer to each of the features which can be found later in this owner manual.

Remote Keyless Entry (RKE) System

The RKE transmitter functions work up to 20 m (65 ft) away from the vehicle.

Without Remote Start Shown, with Remote Start Similar

: Press to lock all the doors, including the liftgate.

: Press once to unlock the driver door. If is pressed again within five seconds, all remaining doors unlock.

: Press and release to locate the vehicle. Press and hold to activate the panic alarm. Press again to turn off the alarm.

See *Keys on page 2-1* and *Remote Keyless Entry (RKE) System Operation on page 2-2*.

Remote Vehicle Start

This vehicle may have a remote starting feature that starts the engine from outside of the vehicle.

Starting the Engine Using Remote Start

To start the vehicle:

1. Aim the RKE transmitter at the vehicle.
2. Press and release on the RKE transmitter.
3. Immediately after completing Step 2, press and hold until the parking lamps flash. If the vehicle's lights can not be seen, press and hold for at least four seconds.

When the vehicle starts, the parking lamps will turn on and remain on as long as the engine is running. The

Information Provided by: DEALER E-PROCESS

Downloaded from www.Manualslib.com manuals search engine

doors will be locked and the climate control system will operate at the same setting as when the vehicle was last turned off.

After entering the vehicle during a remote start, insert and turn the key to the ON/RUN position to drive the vehicle.

If the vehicle is left running, it automatically shuts off after 10 minutes unless a time extension has been done.

Shutting the Engine Off After a Remote Start

To manually shut off a remote start:

- Aim the RKE transmitter at the vehicle and press until the parking lamps turn off.
- Turn on the hazard warning flashers.
- Turn the ignition switch on and then off.

See *Remote Vehicle Start on page 2-4*.

Door Locks

From the outside, lock or unlock the door using the key or the Remote Keyless Entry (RKE) transmitter. See *Remote Keyless Entry (RKE) System Operation on page 2-2*.

From the inside, push or pull the manual door lock on each door.

Use the power door lock switch on the front doors.

: Press to lock the doors.

: Press to unlock the doors.

See *Door Locks on page 2-6* and *Power Door Locks on page 2-6*.

Safety Locks

The vehicle has rear door security locks to prevent passengers from opening the rear doors from the inside.

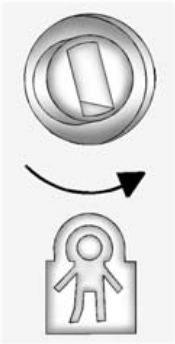

Open the rear doors to access the security locks on the inside edge of each door.

To activate, insert a key into the slot and turn it to the horizontal position. The door can only be opened from the outside.

To return the door to normal operation, open the door and turn the slot to the vertical position.

Information Provided by: DEALER E-PROCESS

Downloaded from www.Manualslib.com manuals search engine

Liftgate

To lock or unlock the liftgate from outside the vehicle, press 🔒 or 🔓 twice on the Remote Keyless Entry (RKE) transmitter. See *Remote Keyless Entry (RKE) System Operation on page 2-2*.

To lock or unlock the liftgate from inside the vehicle, press 🔒 or 🔓 on the power door lock switch.

To open the liftgate, press the touch pad on the underside of the liftgate handle and pull up.

To close the liftgate, pull down using the handle and close until it latches.

See *Liftgate on page 2-8*.

Windows

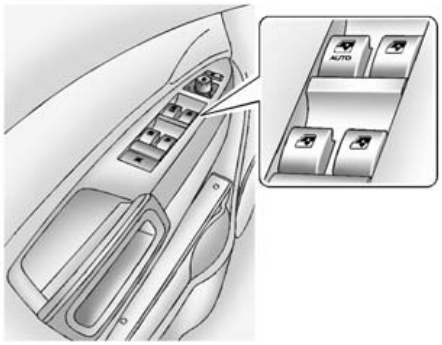

Press the front of the switch to open the window. Pull the switch up to close it.

The power windows operate when the ignition is in ON/RUN or ACC/ACCESSORY, or while in Retained Accessory Power (RAP). See *Retained Accessory Power (RAP) on page 9-18*.

Express-Down Window

The driver window switch has an express-down feature that lowers the window without holding the switch. Press the switch part way and the window will open a small amount. Press the switch down all the way and release it and the window lowers all the way.

To stop the window while it is lowering, press and release the switch.

See *Power Windows on page 2-13*.

Window Lockout

This feature prevents the rear seat passengers from operating the windows. Press the lockout switch on the driver door panel to activate the switch. Press it again to deactivate the switch.

Information Provided by: DEALER E-PROCESS

Downloaded from www.Manualslib.com manuals search engine

Seat Adjustment

Manual Seats

To adjust a manual seat:

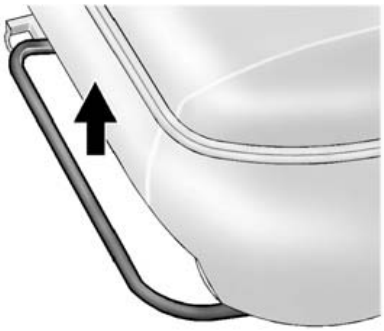

1. Lift the bar to unlock the seat.
2. Slide the seat to the desired position and release the bar.
3. Try to move the seat back and forth to be sure the seat is locked in place.

Seat Height Adjuster

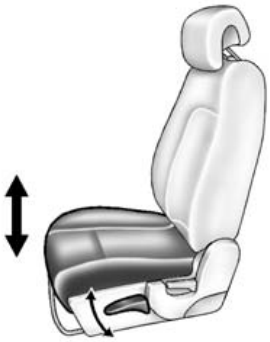

If available, move the lever up or down to raise or lower the seat.

See *Seat Adjustment on page 3-3*.

Power Seats

If available, move the control forward or rearward to adjust the seat position.

Information Provided by:
DEALER E-PROCESS

Downloaded from www.Manualslib.com manuals search engine

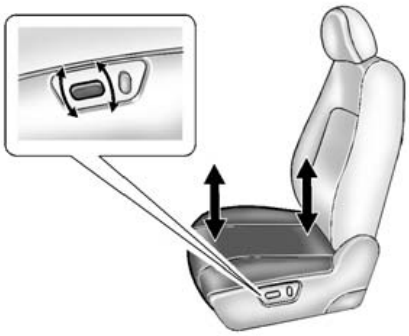

To raise or lower the front or rear part of the seat cushion, move the front or rear of the control up or down.

See *Power Seat Adjustment on page 3-4*.

Lumbar Adjustment

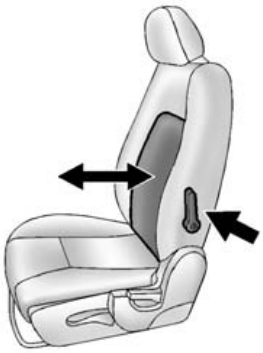

If available, move the lever forward or rearward to increase or decrease the lumbar support.

See *Lumbar Adjustment on page 3-4*.

Reclining Seatbacks

Manual Reclining Seatbacks

To recline the seatback:

1. Lift the lever on the outboard side of the seat.
2. Move the seatback to the desired position, and then release the lever to lock the seatback in place.
3. Push and pull on the seatback to make sure it is locked.

Information Provided by: DEALER E-PROCESS

Downloaded from www.Manualslib.com manuals search engine

To return the seatback to the upright position:

1. Lift the lever fully without applying pressure to the seatback, and the seatback will return to the upright position.
2. Push and pull on the seatback to make sure it is locked.

Power Reclining Seatbacks

To adjust a power seatback, if equipped:

- Tilt the top of the control rearward to recline.
- Tilt the top of the control forward to raise.

See *Reclining Seatbacks on page 3-5*.

Second Row Seats

The rear seatbacks can be folded down to increase cargo space.

See *Rear Seats on page 3-8*.

Heated Seats

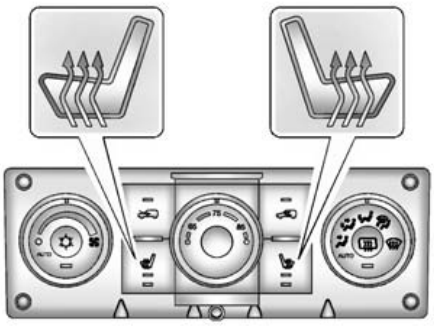

Automatic Climate Control System Shown

If available, the buttons are on the climate control panel. To operate, the ignition must be on.

Press or to heat the driver or passenger seat cushion and seatback.

Press the button once for the highest setting. With each press of the button, the heated seat will change to the next lower setting,

Information Provided by: DEALER E-PROCESS

Downloaded from www.Manualslib.com manuals search engine

and then to the off setting. The lights indicate two for the highest setting and one for the lowest.

See *Heated Front Seats on page 3-6*.

Head Restraint Adjustment

Do not drive until the head restraints for all occupants are installed and adjusted properly.

To achieve a comfortable seating position, change the seatback recline angle as little as necessary while keeping the seat and the head restraint height in the proper position.

See *Head Restraints on page 3-2* and *Seat Adjustment on page 3-3*.

Safety Belts

Refer to the following sections for important information on how to use safety belts properly:

- *Safety Belts on page 3-9*.
- *How to Wear Safety Belts Properly on page 3-11*.
- *Lap-Shoulder Belt on page 3-12*.
- *Lower Anchors and Tethers for Children (LATCH System) on page 3-38*.

Passenger Sensing System

The passenger sensing system will turn off the front outboard passenger frontal airbag under certain conditions. No other airbag is affected by the passenger sensing system.

The passenger airbag status indicator will light on the instrument panel when the vehicle is started. See *Passenger Sensing System (United States) on page 3-24* for more information.

Information Provided by: DEALER E-PROCESS

Downloaded from www.Manualslib.com manuals search engine

Mirror Adjustment

Exterior Mirrors

Power Outside Mirrors

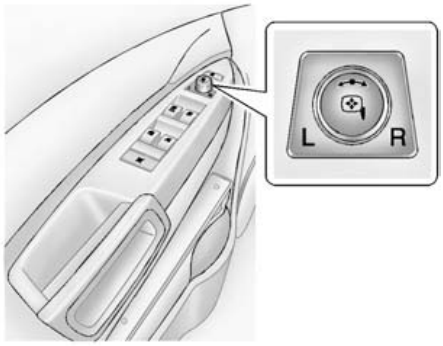

To adjust the power mirrors:

1. Turn the knob to choose the left (L) or the right (R) mirror.
2. Use the knob to move the selected mirror so the side and the area behind the vehicle is seen.
3. Return the control to the center position so the mirror cannot be moved.

Manual Folding Mirrors

The outside mirrors can be folded inward to prevent damage when going through an automatic car wash. To fold, pull the mirror toward the vehicle. Push the mirror outward to return it to the original position.

Automatic Dimming Feature

If equipped, the outside driver mirror automatically dims to reduce glare from vehicle headlamps. See *Automatic Dimming Rearview Mirror on page 2-13*.

Interior Mirrors

Adjustment

Adjust the rearview mirror for a clear view of the area behind your vehicle.

Manual Rearview Mirror

If equipped, push the tab forward for daytime use and pull it for nighttime use to avoid glare from headlamps. See *Manual Rearview Mirror on page 2-13*.

Automatic Dimming Rearview Mirror

If equipped, automatic dimming reduces the glare of the headlamps from behind. This feature comes on when the vehicle is started. See *Automatic Dimming Rearview Mirror on page 2-13*.

Information Provided by:
DEALER E-PROCESS

Downloaded from www.Manualslib.com manuals search engine

Steering Wheel Adjustment

To adjust the steering wheel:

1. Hold the steering wheel and pull the lever down.
2. Move the steering wheel up or down.
3. Pull or push the steering wheel closer or away from you.
4. Pull the lever up to lock the steering wheel in place.

Do not adjust the steering wheel while driving.

Interior Lighting

Dome Lamps

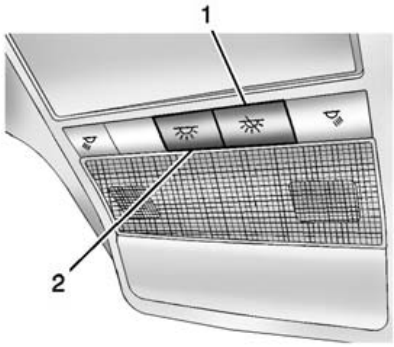

There are front and rear dome lamps in the overhead console and the headliner.

: Press the button (1) on the overhead console to keep the dome lamps and other interior lamps turned off while any door is open. Press this button again to return it to the out position and the lamps automatically come on when any door is opened.

: Press the button (2) to turn the dome lamps on and off while the doors are closed.

Reading Lamps

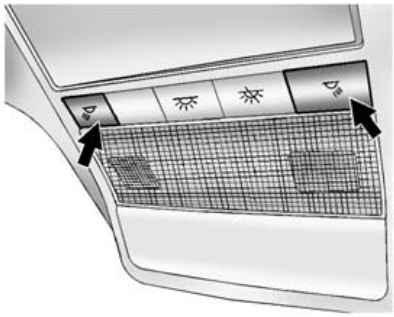

The front reading lamps are in the overhead console.

Information Provided by: DEALER E-PROCESS

Downloaded from www.Manualslib.com manuals search engine

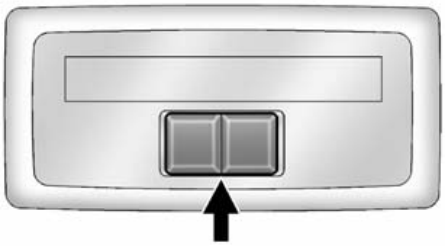

The rear reading lamps are in the headliner.

To turn the reading lamps on or off, press the button next to each lamp.

Exterior Lighting

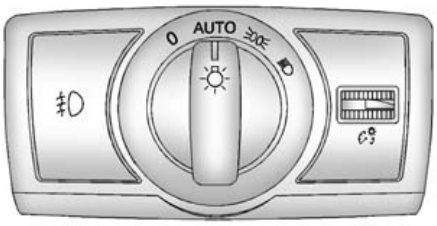

The exterior lamp control is on the instrument panel to the left of the steering wheel.

Turn the control to the following positions:

: Turns off the exterior lamps. The knob returns to the AUTO position after it is released.

AUTO: Automatically turns the exterior lamps on and off, depending on outside lighting.

: Turns on the parking lamps including all lamps, except the headlamps.

: Turns on the headlamps together with the parking lamps and instrument panel lights.

See:

- *Exterior Lamp Controls on page 6-1*
- *Turn and Lane-Change Signals on page 6-3*
- *Headlamp High/Low-Beam Changer on page 6-2*

Windshield Wiper/Washer

The windshield wiper lever is on the right side of the steering column.

Move the lever up or down to select the wiper speed.

: Single wipe, briefly move the lever down. The lever returns to its starting position when released. For several wipes, hold the lever down.

: Turns the windshield wipers off.

Information Provided by: DEALER E-PROCESS

Downloaded from www.Manualslib.com manuals search engine

: Sets a delay between wipes. Move the switch on top of the lever left for less frequent wipes or right for more frequent wipes.

: Slow wipes.

: Fast wipes.

Windshield Washer

Pull the windshield wiper lever to spray windshield washer fluid and activate the wipers. The wipers will continue until the lever is released or the maximum wash time is reached.

Rear Window Wiper/Washer

The rear wiper and rear wash button is on the instrument panel above the climate control system.

: Press to wash and wipe the rear window.

: Press to turn the delayed wiping on or off.

See *Windshield Wiper/Washer on page 5-3* and *Rear Window Wiper/Washer on page 5-4*.

Climate Controls

The heating, cooling, and ventilation for the vehicle can be controlled with this system. For vehicles with the remote start feature, the climate control system functions as part of the remote start feature. See *Remote Keyless Entry (RKE) System Operation on page 2-2*.

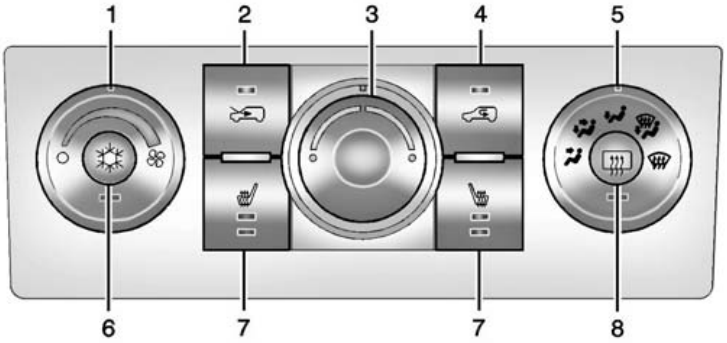

Climate Control System

1. Fan Control
2. Outside Air
3. Temperature Control
4. Recirculation
5. Air Delivery Mode Control
6. Air Conditioning
7. Driver and Passenger Heated Seats (If Equipped)
8. Rear Window Defogger

Information Provided by: DEALER E-PROCESS

Downloaded from www.Manualslib.com manuals search engine

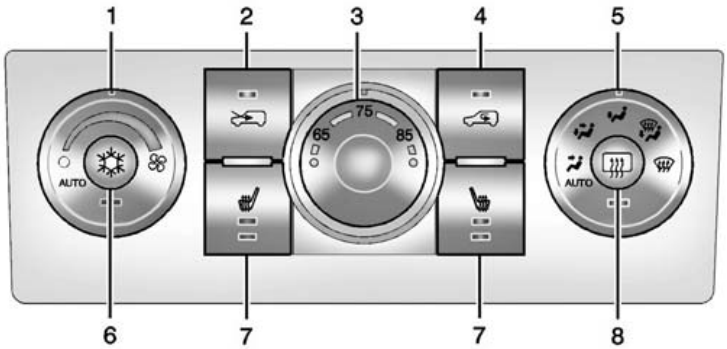

Automatic Climate Control System

1. Fan Control
2. Outside Air
3. Temperature Control
4. Recirculation
5. Air Delivery Mode Control
6. Air Conditioning
7. Driver and Passenger Heated Seats (If Equipped)
8. Rear Window Defogger

See *Climate Control Systems on page 8-1* or *Automatic Climate Control System on page 8-5* (If Equipped).

Transmission

Electronic Range Select (ERS) Mode

ERS mode allows you to choose the top-gear limit of the transmission and the vehicle's speed while driving downhill or towing a trailer. To use this feature:

1. Move the shift lever to M (Manual).

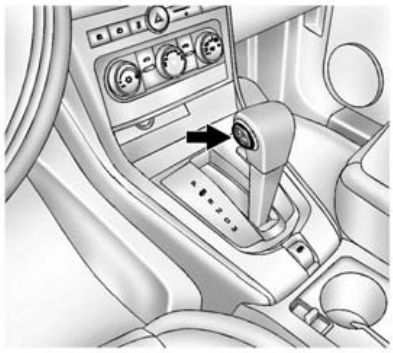

Information Provided by: DEALER E-PROCESS

Downloaded from www.Manualslib.com manuals search engine

2. Press the plus/minus button located on the shift lever, to increase or decrease the gear range available.

See *Manual Mode on page 9-23*.

Vehicle Features

Radio(s)

⏻ **:** Press to turn the system on and off. Turn to increase or decrease the volume.

BAND: Press to choose between FM, AM, or SiriusXM®, if equipped.

♫ **:** Select radio stations.

⏮ **SEEK or** ⏭ **SEEK:** Seek or scan stations.

i (Information): If equipped with XM, MP3, WMA, or RDS features, press to display additional text information related to the current FM-RDS or SiriusXM station, or CD, MP3, or WMA song. Song title information will be displayed on the top line of the display while the artist information will be displayed on the bottom line, if the information is available during XM, CD, MP3, or WMA playback. When information is not available, "No Info" displays.

For more information about these and other radio features, see *Operation on page 7-4*.

Storing a Favorite Station

A maximum of 36 stations can be stored as favorites using the six softkeys below the radio station frequency tabs and by using the radio FAV button. Press FAV to go through up to six pages of favorites, each having six favorite stations available per page. Each page of favorites can contain any combination of AM, FM, or SiriusXM stations.

See *Operation on page 7-4*.

Setting the Clock

To set the time and date:

1. Turn the ignition key to ACC/ACCESSORY or ON/RUN.
2. Press ⏻ to turn the radio on.
3. Press ◷ and HR, MIN, MM, DD, and YYYY (hour, minute, month, day, and year) display.

Information Provided by: DEALER E-PROCESS

Downloaded from www.Manualslib.com manuals search engine

4. Press the softkey below the tab to be changed.
5. Increase or decrease the time or date by turning ♫ clockwise or counterclockwise.

See *Clock on page 5-6*.

Satellite Radio

If equipped, SiriusXM® is a satellite radio service based in the 48 contiguous United States and 10 Canadian provinces. SiriusXM satellite radio has a wide variety of programming and commercial-free music, coast to coast, and in digital-quality sound.

A fee is required to receive the SiriusXM service.

For more information, refer to:

- www.siriusxm.com or call 1-866-635-2349 (U.S.)
- www.xmradio.ca or call 1-877-209-0079 (Canada)

See *Satellite Radio on page 7-6*.

Portable Audio Devices

The vehicle may have a 3.5 mm (1/8 in) auxiliary input jack on the audio faceplate and a USB port in the center console. Some portable audio devices such as iPods®, MP3 players, and USB storage devices can be connected to the vehicle using a 3.5 mm (1/8 in) cable or a USB cable.

See *Auxiliary Devices on page 7-20*.

Bluetooth®

If equipped with a Bluetooth system, it allows users with a Bluetooth-enabled cell phone to make and receive hands-free calls using the vehicle's audio system and controls.

The Bluetooth-enabled cell phone must be paired with the Bluetooth system before it can be used in the vehicle. Not all phones will support all functions. For more information, see www.gm.com/bluetooth and *Bluetooth on page 7-24*.

Information Provided by: DEALER E-PROCESS

Steering Wheel Controls

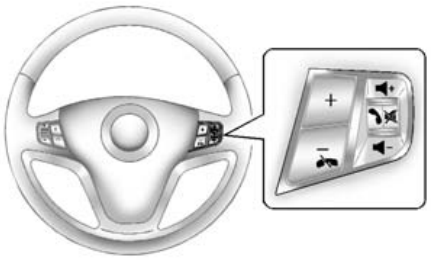

For vehicles with audio steering wheel controls, some audio controls can be adjusted at the steering wheel.

+ / −: Press and release to go to the next or the previous preset radio station or CD track.

/ : For vehicles with Bluetooth® and OnStar®, press and hold to interact with those systems. Press and release to mute the system. Press it again to turn the sound back on.

Downloaded from www.Manualslib.com manuals search engine

: Press to reject an incoming call, or end a current call.

+ or −: Move the thumbwheel up or down to increase or to decrease the volume.

Cruise Control

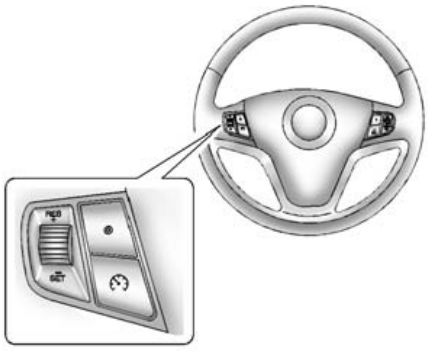

: Press to turn the cruise control system on and off. The indicator light on the button turns on or off.

RES+: Move the thumbwheel up briefly to make the vehicle resume to a previously set speed or hold upwards to accelerate. If cruise control is already active, use to increase vehicle speed.

−SET: Move the thumbwheel down briefly to set the speed and activate cruise control. If cruise control is already active, use to decrease speed.

See *Cruise Control on page 9-30*.

Infotainment System

If the vehicle has a base radio it is included in this manual. See the infotainment manual for information on the connected radios, audio players, phone, navigation system, settings, and voice or speech recognition.

Driver Information Center (DIC)

The DIC has different displays in the instrument cluster which can be accessed by pressing the DIC buttons on the instrument panel, below the exterior lamps control.

DIC Buttons

: Press to display the trip and fuel displays.

: Press to display the vehicle information displays.

: Press to customize the feature settings on the vehicle. See *Vehicle Personalization on page 5-36* for more information.

✓ : Press to set or reset certain functions and to turn off or acknowledge messages on the DIC.

See *Driver Information Center (DIC) on page 5-24*.

Information Provided by: DEALER E-PROCESS

Downloaded from www.Manualslib.com manuals search engine

Vehicle Personalization

Some vehicle features can be programmed by using the DIC buttons on the instrument panel to the left of the steering wheel. These features include:

- Language
- Door Lock and Unlock Settings
- Lighting
- Chime Volume
- Remote Start

See *Vehicle Personalization on page 5-36*.

Rear Vision Camera (RVC)

If equipped, RVC displays a view of the area behind the vehicle, on the center stack display, when the vehicle is shifted into R (Reverse).

See *Rear Vision Camera (RVC) on page 9-34*.

Ultrasonic Parking Assist

If equipped, this system uses sensors on the rear bumper to assist with parking and avoiding objects while in R (Reverse). It operates at speeds less than 8 km/h (5 mph). Ultrasonic Rear Parking Assist (URPA) uses audible beeps to provide distance and system information.

Keep the sensors on the vehicle's rear bumper clean to ensure proper operation.

See *Ultrasonic Parking Assist on page 9-32*.

Power Outlets

The accessory power outlets can be used to plug in electrical equipment, such as a cell phone or MP3 player.

The power outlets are located inside the center floor console, on the rear of the center floor console, and in the rear cargo compartment.

Remove the cover to access and replace when not in use.

See *Power Outlets on page 5-7*.

Universal Remote System

The Universal Home Remote System allows for garage door openers, security systems, and home automation devices to be programmed to work with these buttons in the vehicle.

See *Universal Remote System on page 5-42*.

Information Provided by: DEALER E-PROCESS

Downloaded from www.Manualslib.com manuals search engine

Performance and Maintenance

Traction Control/ Electronic Stability Control

The Traction Control System (TCS) limits wheel spin. The system turns on automatically every time the vehicle is started.

The StabiliTrak system assists with directional control of the vehicle in difficult driving conditions. The system also turns on automatically every time the vehicle is started.

- To turn off or on TCS, press and release the TCS/StabiliTrak button OFF on the instrument panel. The appropriate DIC message displays.
- To turn off both Traction Control and StabiliTrak, press and hold the TCS/StabiliTrak button OFF until the StabiliTrak Off light OFF illuminates and the appropriate DIC message displays.
- Press the TCS/StabiliTrak button OFF again to turn on both systems. The appropriate DIC message displays.

See *Traction Control/Electronic Stability Control on page 9-28*.

This vehicle also has a Brake Pedal Override feature that limits engine torque when the brake pedal is applied. See *Traction Control/ Electronic Stability Control on page 9-28*.

Tire Pressure Monitor

This vehicle may have a Tire Pressure Monitor System (TPMS).

The low tire pressure warning light alerts to a significant loss in pressure of one of the vehicle's tires. If the warning light comes on, stop as soon as possible and inflate the tires to the recommended pressure shown on the Tire and Loading Information label. See *Vehicle Load Limits on page 9-10*. The warning light will remain on until the tire pressure is corrected.

The low tire pressure warning light may come on in cool weather when the vehicle is first started, and then turn off as the vehicle is driven. This may be an early indicator that the

Information Provided by: DEALER E-PROCESS

Downloaded from www.Manualslib.com manuals search engine

tire pressures are getting low and the tires need to be inflated to the proper pressure.

The TPMS does not replace normal monthly tire maintenance. Maintain the correct tire pressures.

See *Tire Pressure Monitor System on page 10-46*.

Engine Oil Life System

The engine oil life system calculates engine oil life based on vehicle use and displays a CHANGE ENGINE OIL SOON message when it is time to change the engine oil and filter.

Resetting the Oil Life System

Reset the system whenever the engine oil is changed so that the system can calculate the next engine oil change. To reset the system:

1. Display OIL LIFE REMAINING on the DIC. See *Driver Information Center (DIC) on page 5-24* and *Engine Oil Messages on page 5-31*.
2. Press ✓ for five seconds to reset the oil life at 100%.

   Be careful not to reset the oil life display accidentally at any time other than after the oil is changed. It cannot be reset accurately until the next oil change.

The oil life system can also be reset as follows:

1. Turn the ignition key to ON/RUN with the engine off.
2. Fully press and release the accelerator pedal three times within five seconds.

   If the OIL LIFE REMAINING value is not 100%, the system needs to be reset again.

See *Engine Oil Life System on page 10-10*.

E85 or FlexFuel

Vehicles with a yellow fuel cap can use either unleaded gasoline or ethanol fuel containing up to 85% ethanol (E85). See *E85 or FlexFuel on page 9-37*. For all other vehicles, use only the unleaded gasoline described under *Recommended Fuel on page 9-36*.

Driving for Better Fuel Economy

Driving habits can affect fuel mileage. Here are some driving tips to get the best fuel economy possible.

- Avoid fast starts and accelerate smoothly.
- Brake gradually and avoid abrupt stops.
- Avoid idling the engine for long periods of time.
- When road and weather conditions are appropriate, use cruise control.

Information Provided by: DEALER E-PROCESS

Downloaded from www.Manualslib.com manuals search engine

- Always follow posted speed limits or drive more slowly when conditions require.
- Keep vehicle tires properly inflated.
- Combine several trips into a single trip.
- Replace the vehicle's tires with the same TPC Spec number molded into the tire's sidewall near the size.
- Follow recommended scheduled maintenance.

Roadside Assistance Program

U.S.: 1-800-243-8872

TTY Users (U.S. Only): 1-888-889-2438

Canada: 1-800-268-6800

New Chevrolet owners are automatically enrolled in the Roadside Assistance Program.

See *Roadside Assistance Program on page 13-5*.

OnStar®

If equipped, this vehicle has a comprehensive, in-vehicle system that can connect to a live Advisor for Emergency, Security, Navigation, Connection, and Diagnostic Services. See *OnStar Overview on page 14-1*.

Information Provided by: DEALER E-PROCESS

Downloaded from www.Manualslib.com manuals search engine

Keys, Doors, and Windows

Keys and Locks
Keys 2-1
Remote Keyless Entry (RKE) System 2-2
Remote Keyless Entry (RKE) System Operation 2-2
Remote Vehicle Start 2-4
Door Locks 2-6
Power Door Locks 2-6
Delayed Locking 2-6
Automatic Door Locks 2-6
Lockout Protection 2-7
Safety Locks 2-7

Doors
Liftgate 2-8

Vehicle Security
Vehicle Security 2-9
Vehicle Alarm System 2-9
Immobilizer 2-10
Immobilizer Operation 2-10

Exterior Mirrors
Convex Mirrors 2-11
Power Mirrors 2-12
Folding Mirrors 2-12
Heated Mirrors 2-12
Automatic Dimming Mirror . . . 2-12

Interior Mirrors
Interior Rearview Mirrors 2-13
Manual Rearview Mirror 2-13
Automatic Dimming Rearview Mirror 2-13

Windows
Windows 2-13
Power Windows 2-13
Sun Visors 2-14

Roof
Sunroof 2-14

Keys and Locks

Keys

⚠ Warning

Leaving children in a vehicle with the ignition key is dangerous and children or others could be seriously injured or killed. They could operate the power windows or other controls or make the vehicle move. The windows will function with the keys in the ignition, and children or others could be caught in the path of a closing window. Do not leave children in a vehicle with the ignition key.

Information Provided by: DEALER E-PROCESS

Downloaded from www.Manualslib.com manuals search engine

The two keys can be used for the ignition and all locks.

The key code is stamped on the key number plate and can be used to make new keys at any dealer. Store this information in a safe place outside the vehicle.

If it becomes difficult to turn a key, inspect the key blade for debris. Periodically clean with a brush or pick.

If equipped, with an active OnStar subscription, an OnStar Advisor may remotely unlock the vehicle. See “OnStar” if equipped.

Remote Keyless Entry (RKE) System

See *Radio Frequency Statement on page 13-15*.

If there is a decrease in the RKE operating range:

- Check the distance. The transmitter may be too far from the vehicle.
- Check the location. Other vehicles or objects may be blocking the signal.
- Check the transmitter's battery. See “Battery Replacement” later in this section.
- If the transmitter is still not working correctly, see your dealer or a qualified technician for service.

Remote Keyless Entry (RKE) System Operation

The Remote Keyless Entry (RKE) transmitter functions work up to 20 m (65 ft) away from the vehicle.

Some conditions can affect the performance of the transmitter. See *Remote Keyless Entry (RKE) System on page 2-2*.

Information Provided by: DEALER E-PROCESS

Downloaded from www.Manualslib.com manuals search engine

Without Remote Start Shown, with Remote Start Similar

(Remote Vehicle Start): For vehicles with this feature, this button is used to operate the remote start feature. See *Remote Vehicle Start on page 2-4*.

(Lock): Press to lock all the doors, including the liftgate. The vehicle's lamps may flash and the horn may sound. See “Remote Door Lock” under *Vehicle Personalization on page 5-36*.

On some models, the fuel door will also be locked when the doors are locked.

(Unlock): Press once to unlock the driver door. If is pressed again within five seconds, all remaining doors unlock. The interior lamps come on and stay on for 20 seconds or until the ignition is turned on. The exterior lamps may flash when unlocking the vehicle. See “Remote Door Unlock” under *Vehicle Personalization on page 5-36* for more information.

(Vehicle Locator/Panic Alarm): Press and release to locate the vehicle. The turn signal lamps flash and the horn sounds three times. Press and hold to activate the panic alarm. The turn signal lamps flash and the horn sounds repeatedly for 30 seconds. The alarm turns off when the ignition is turned to ON/RUN or when is pressed again. The ignition must be in LOCK/OFF for the panic alarm to work.

Programming Transmitters to the Vehicle

Only RKE transmitters programmed to the vehicle will work. If a transmitter is lost or stolen, a replacement can be purchased and programmed through your dealer. When the replacement transmitter is programmed to the vehicle, all remaining transmitters must also be programmed. Any lost or stolen transmitters no longer work once the new transmitter is programmed. Each vehicle can have up to eight transmitters programmed to it.

Battery Replacement

Replace the battery if the REPLACE REMOTE KEY FOB BATTERY message displays on the Driver Information Center (DIC). See “REPLACE REMOTE KEY FOB BATTERY” under *Key and Lock Messages on page 5-32*.

Information Provided by: DEALER E-PROCESS

Downloaded from www.Manualslib.com manuals search engine

⚠ Caution

When replacing the battery, do not touch any of the circuitry on the transmitter. Static from your body could damage the transmitter.

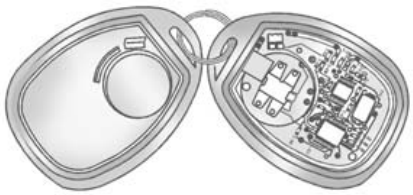

To replace the battery:

1. Separate the transmitter with a flat, thin object inserted into the notch on the side.
2. Remove the old battery. Do not use a metal object.
3. Insert the new battery, positive side facing down. Replace with a CR2032 or equivalent battery.
4. Reassemble the transmitter.

Remote Vehicle Start

If equipped with a remote starting feature, the engine can be started from outside of the vehicle.

(Remote Start): This button is on the RKE transmitter if the vehicle has remote start.

Laws in some communities may restrict the use of remote starters. For example, some laws may require a person using the remote start to have the vehicle in view when doing so. Check local regulations for any requirements on remote starting of vehicles.

Do not use the remote start feature if the vehicle is low on fuel. The vehicle could run out of fuel.

The Remote Keyless Entry (RKE) range may be less while the vehicle is running.

Other conditions can affect the performance of the transmitter. See *Remote Keyless Entry (RKE) System on page 2-2*.

Starting the Engine Using Remote Start

To start the vehicle:

1. Aim the RKE transmitter at the vehicle.
2. Press and release on the RKE transmitter.
3. Immediately after completing Step 2, press and hold until the parking lamps flash. If the vehicle's lights can not be seen, press and hold for at least four seconds.

When the vehicle starts, the parking lamps will turn on and remain on as long as the engine is running. The doors will be locked and the climate

Information Provided by: DEALER E-PROCESS

Downloaded from www.Manualslib.com manuals search engine

control system will operate at the same setting as when the vehicle was last turned off.

After entering the vehicle during a remote start, insert and turn the key to the ON/RUN position to drive the vehicle.

If the vehicle is left running, it automatically shuts off after 10 minutes unless a time extension has been done.

Extending Engine Run Time

To extend the engine run time by 10 minutes, repeat Steps 1–3 while the engine is still running. The engine run time can only be extended if it is the first remote start since the vehicle has been driven. Remote start can be extended one time.

If the remote start procedure is used again before the first 10-minute time frame has ended, the first 10 minutes will immediately expire and the second 10-minute time frame will start.

For example, if 🔒 and then ⟲ are pressed again after the vehicle has been running for five minutes, 10 minutes are added, allowing the engine to run for a total of 15 minutes.

A maximum of two remote starts or remote start attempts are allowed between ignition cycles.

After the vehicle's engine has been started two times using the remote start button, the ignition must be turned on and then back off before the remote start procedure can be used again.

Shutting the Engine Off After a Remote Start

To manually shut off a remote start:

- Aim the RKE transmitter at the vehicle and press ⟲ until the parking lamps turn off.
- Turn on the hazard warning flashers.
- Turn the ignition switch on and then off.

Information Provided by: DEALER E-PROCESS

Conditions in Which the Remote Start Will Not Work

The vehicle cannot be started using the remote start feature if the key is in the ignition, the hood is open, or if there is an emission control system malfunction.

The engine turns off during a remote start if the coolant temperature gets too high or if the oil pressure gets low.

Remote Start Ready

If the vehicle does not have the remote vehicle start feature, it may have the remote start ready feature. This feature allows your dealer to add the manufacturer's remote vehicle start feature.

To add the manufacturer's remote vehicle start feature to the vehicle, see your dealer.

Downloaded from www.Manualslib.com manuals search engine

Door Locks

⚠ Warning

Unlocked doors can be dangerous.

- Passengers, especially children, can easily open the doors and fall out of a moving vehicle. When a door is locked, the handle will not open it. The chance of being thrown out of the vehicle in a crash is increased if the doors are not locked. So, all passengers should wear safety belts properly and the doors should be locked whenever the vehicle is driven.
- Young children who get into unlocked vehicles may be unable to get out. A child can be overcome by extreme heat and can suffer permanent

(Continued)

Warning (Continued)

injuries or even death from heat stroke. Always lock the vehicle whenever leaving it.

- Outsiders can easily enter through an unlocked door when you slow down or stop the vehicle. Locking the doors can help prevent this from happening.

To lock or unlock a door, use the key from the outside or the door lock from the inside.

Power Door Locks

Use the power door lock switch on the front doors.

🔒 : Press to lock the doors.

🔓 : Press to unlock the doors.

Delayed Locking

A chime will sound to indicate a door or the liftgate is open when you try to lock the doors with the power door lock switch. The doors will not lock, and the theft-deterrent system will not arm until all the doors are closed and five seconds have passed.

Automatic Door Locks

Automatic Door Lock

The doors are programmed to automatically lock when the shift lever is moved out of P (Park).

This feature can be programmed through the Driver Information Center (DIC). See “Auto Door Lock” in *Vehicle Personalization on page 5-36*.

Information Provided by: DEALER E-PROCESS

Downloaded from www.Manualslib.com manuals search engine

Automatic Door Unlock

The doors can be programmed to automatically unlock when the shift lever is moved into P (Park). See “Auto Door Unlock” in *Vehicle Personalization on page 5-36*.

Lockout Protection

When the power door lock switch is pressed with the key in the ignition, and any door is open, all the doors lock and the driver door unlocks. When doors are closed with the key in the ignition, the horn will sound as a reminder.

If the doors are locked with the Remote Keyless Entry (RKE) transmitter, and the key is in the ignition, a chime sounds and all except the driver door lock.

The lockout protection feature can be overridden by holding the power door lock switch for three seconds.

Safety Locks

⚠ Caution

Pulling the inside door handle while the rear door safety locks are engaged could damage your vehicle. Do not pull the inside door handle while the rear door safety locks are engaged.

The vehicle has rear door security locks to prevent passengers from opening the rear doors from the inside.

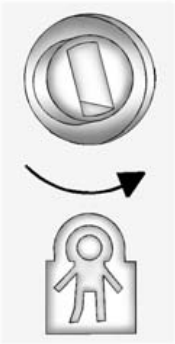

Open the rear doors to access the security locks on the inside edge of each door.

To activate, insert a key into the slot and turn it to the horizontal position. The door can only be opened from the outside.

To return the door to normal operation, open the door and turn the slot to the vertical position.

Information Provided by: DEALER E-PROCESS

Downloaded from www.Manualslib.com manuals search engine

Doors

Liftgate

⚠ Warning

Exhaust gases can enter the vehicle if it is driven with the liftgate, trunk/hatch open, or with any objects that pass through the seal between the body and the trunk/hatch or liftgate. Engine exhaust contains Carbon Monoxide (CO) which cannot be seen or smelled. It can cause unconsciousness and even death.

If the vehicle must be driven with the liftgate, or trunk/hatch open:

- Close all of the windows.
- Fully open the air outlets on or under the instrument panel.

(Continued)

Warning (Continued)

- Adjust the Climate Control system to a setting that brings in only outside air and set the fan speed to the highest setting. See Climate Control System in the Index.
- If the vehicle is equipped with a power liftgate, disable the power liftgate function.

For more information about carbon monoxide, see *Engine Exhaust on page 9-20*.

⚠ Caution

To avoid damage to the liftgate or liftgate glass, make sure the area above and behind the liftgate is clear before opening it.

To lock or unlock the liftgate from outside the vehicle, press 🔒 or 🔓 twice on the Remote Keyless Entry (RKE) transmitter. See *Remote Keyless Entry (RKE) System Operation on page 2-2*.

To lock or unlock the liftgate from inside the vehicle, press 🔒 or 🔓 on the power door lock switch. See *Power Door Locks on page 2-6*.

To open the liftgate, press the touch pad on the underside of the liftgate handle and pull up.

To close the liftgate, pull down using the handle and close until it latches.

Information Provided by: DEALER E-PROCESS

Downloaded from www.Manualslib.com manuals search engine

Liftgate Operation with Loss of Power

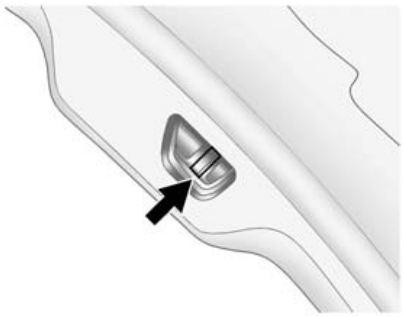

To open the liftgate if the vehicle's battery is disconnected or the voltage is low, access the release lever. Remove the interior trim cover on the inside of the liftgate. Use a tool to push the lever on the latch until the liftgate releases.

Vehicle Security

This vehicle has theft-deterrent features; however, they do not make the vehicle impossible to steal.

Vehicle Alarm System

The vehicle may have a content theft-deterrent alarm system.

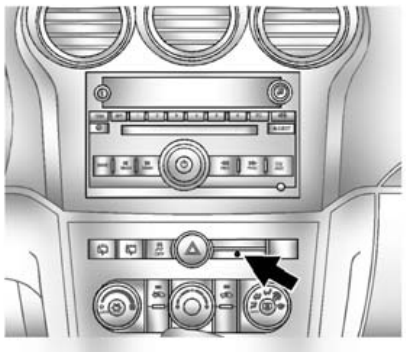

The security light is near the center of the instrument panel.

To arm the theft-deterrent system, press 🔒 on the RKE transmitter when all doors and the hood, on vehicles equipped with the remote start feature only, are closed. The security light will come on solid for approximately 30 seconds and then flash slowly. If 🔒 on the RKE transmitter is pressed a second time, the theft-deterrent system will arm immediately, bypassing the 30-second delay. The content theft-deterrent alarm is not armed until the security light flashes slowly.

If any door, liftgate, or the hood, on vehicles equipped with the remote start feature only, are opened without using the key or pressing 🔓 on the RKE transmitter, the exterior lamps flash and the horn will sound for about 30 seconds. If 🔒 or 🔓 on the RKE transmitter is not pressed, the alarm sounds and periodically repeats. If the system does not operate as described above, see your dealer for service.

The theft-deterrent system does not arm if you lock the doors with a key.

Information Provided by: DEALER E-PROCESS

Downloaded from www.Manualslib.com manuals search engine

To avoid setting off the alarm by accident, always unlock a door with the RKE transmitter or a key. Unlocking a door any other way will set off the alarm if the system has been armed.

If you set off the alarm by accident, turn off the alarm by pressing 🔒 or 🔓 on the RKE transmitter or by placing the key in the ignition and turning it to START.

Testing the Alarm

To test the alarm:

1. From inside the vehicle, lower the driver window and open the driver door.
2. Get out of the vehicle, close the door, and activate the system by locking the doors with the RKE transmitter.
3. Wait for the security light to flash slowly.
4. Reach in through the window, unlock the door with the manual door lock, and open the door. This should set off the alarm.

If the alarm does not sound when it should, but the vehicle's headlamps flash, check to see if the horn works. The horn fuse may be blown. To replace the fuse, see *Fuses and Circuit Breakers on page 10-31*.

If the alarm does not sound or the vehicle's headlamps do not flash, see your dealer for service.

Immobilizer

See *Radio Frequency Statement on page 13-15*.

Immobilizer Operation

This vehicle has PASS-Key® III+ (Personalized Automotive Security System) theft-deterrent system. PASS-Key III+ is a passive theft-deterrent system.

The system is automatically armed when the key is removed from the ignition.

You do not have to manually arm or disarm the system.

The security light comes on if there is a problem with the theft-deterrent system operation.

When the PASS-Key III+ system senses that someone is using the wrong key, it prevents the vehicle from starting. Anyone using a trial-and-error method to start the vehicle will be discouraged because of the high number of electrical key codes.

When trying to start the vehicle if the engine does not start and the security light on the instrument cluster comes on, there may be a problem with the theft-deterrent system. Turn the ignition off and try again.

If the engine still does not start, and the key does not appear to be damaged, wait about five minutes

Information Provided by: DEALER E-PROCESS

Downloaded from www.Manualslib.com manuals search engine

and try another ignition key and check the fuse. See *Fuses and Circuit Breakers on page 10-31*. If the engine still does not start with the other key, the vehicle needs service. If the vehicle does start, the first key may be faulty. See your dealer who can service the PASS-Key III+ to have a new key made.

It is possible for the PASS-Key III+ decoder to “learn” the transponder value of a new or replacement key. Up to 10 keys may be programmed for the vehicle. The following procedure is for programming additional keys only. If all the currently programmed keys are lost or do not operate, you must see your dealer or a locksmith who can service PASS-Key III+ to have keys made and programmed to the system.

See your dealer or a locksmith who can service PASS-Key III+ to get a new key blank that is cut exactly as the ignition key that operates the system.

To program the new key:

1. Verify that the new key has ⊕ stamped on it.
2. Insert the already programmed key in the ignition and start the engine. If the engine does not start, see your dealer for service.
3. After the engine has started, turn the key to LOCK/OFF, and remove the key.
4. Insert the key to be programmed and turn it to the ON/RUN position within five seconds of the original key being turned to the LOCK/OFF position.

   The security light turns off once the key has been programmed.
5. Repeat Steps 1–4 if additional keys are to be programmed.

If the PASS-Key III+ key is lost or damaged, see your dealer or a locksmith to have a new key made.

Do not leave the key or device that disarms or deactivates the theft-deterrent system in the vehicle.

Exterior Mirrors

Convex Mirrors

⚠ Warning

A convex mirror can make things, like other vehicles, look farther away than they really are. If you cut too sharply into the right lane, you could hit a vehicle on the right. Check the inside mirror or glance over your shoulder before changing lanes.

The passenger side mirror is convex shaped. A convex mirror's surface is curved so more can be seen from the driver seat.

Information Provided by: DEALER E-PROCESS

Downloaded from www.Manualslib.com manuals search engine

Power Mirrors

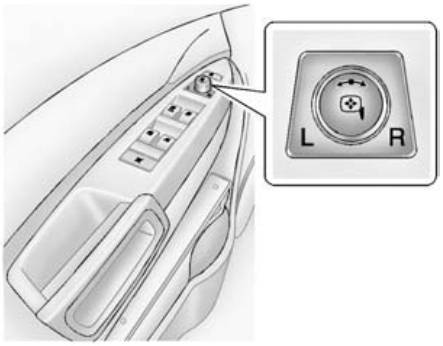

To adjust the power mirrors:

1. Turn the knob to choose the left (L) or the right (R) mirror.
2. Use the knob to move the selected mirror so the side and the area behind the vehicle is seen.
3. Return the control to the center position so the mirror cannot be moved.

Automatic Dimming Feature

If equipped, the automatic dimming mirror on the driver side reduces the glare from the headlamps from behind.

Folding Mirrors

Manual Folding Mirrors

The vehicle has manual folding mirrors. These mirrors can be folded inward to prevent damage when going through an automatic car wash. To fold, pull the mirror toward the vehicle. Push the mirror outward to return it to the original position.

Heated Mirrors

The vehicle may have heated mirrors.

(Rear Window Defogger): Press to heat the outside rearview mirrors. See “Rear Window Defogger” under *Automatic Climate Control System on page 8-5*.

Automatic Dimming Mirror

The driver outside mirror automatically adjusts for the glare of headlamps from behind.

Information Provided by: DEALER E-PROCESS

Downloaded from www.Manualslib.com manuals search engine

Interior Mirrors

Interior Rearview Mirrors

Adjust the rearview mirror for a clear view of the area behind your vehicle.

Do not spray glass cleaner directly on the mirror. Use a soft towel dampened with water.

Manual Rearview Mirror

If equipped, push the tab forward for daytime use and pull it for nighttime use to avoid glare from the headlamps from behind.

Automatic Dimming Rearview Mirror

If equipped, automatic dimming reduces the glare of the headlamps from behind. This feature comes on when the vehicle is started.

Windows

⚠ Warning

Never leave a child, a helpless adult, or a pet alone in a vehicle, especially with the windows closed in warm or hot weather. They can be overcome by the extreme heat and suffer permanent injuries or even death from heat stroke.

Power Windows

⚠ Warning

Children could be seriously injured or killed if caught in the path of a closing window. Never leave keys in a vehicle with children. When there are children in the rear seat, use the window lockout button to prevent operation of the windows. See *Keys on page 2-1*.

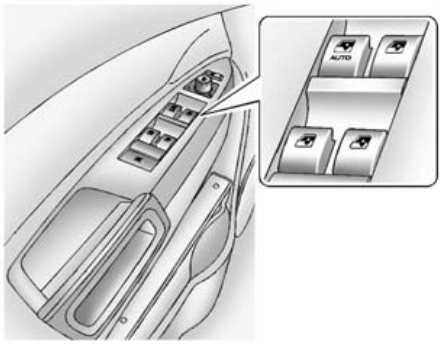

Information Provided by:
DEALER E-PROCESS

Downloaded from www.Manualslib.com manuals search engine

Press the front of the switch to open the window. Pull the switch up to close it.

The power windows operate when the ignition is in ON/RUN or ACC/ACCESSORY, or while in Retained Accessory Power (RAP). See *Retained Accessory Power (RAP) on page 9-18*.

Express-Down Window

The driver window switch has an express-down feature that lowers the window without holding the switch. Press the switch part way and the window will open a small amount. Press the switch down all the way and release it and the window lowers all the way.

To stop the window while it is lowering, press and release the switch.

Window Lockout

This feature prevents the rear seat passengers from operating the windows. Press the lockout switch on the driver door panel to activate the switch. Press it again to deactivate the switch.

Sun Visors

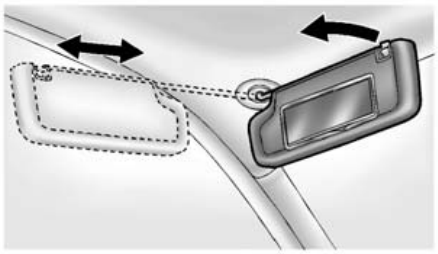

Pull the sun visor down to block glare. If equipped, detach the sun visor from the center mount to pivot to the side window or to extend along the rod.

Roof

Sunroof

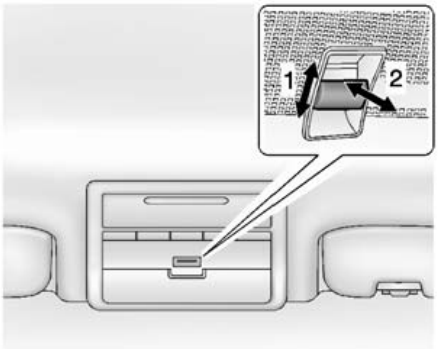

To operate the sunroof, the ignition must be in ON/RUN, or ACC/ACCESSORY, or Retained Accessory Power (RAP) must be active. See *Retained Accessory Power (RAP) on page 9-18*.

Information Provided by:
DEALER E-PROCESS

Downloaded from www.Manualslib.com manuals search engine

1. **Open/Close:** Slide and release the switch rearward to express open the sunroof. Slide the switch forward or rearward to stop movement.

   The sunshade opens automatically with the sunroof or can be manually operated. The sunshade cannot be closed with the sunroof open.

   Slide and hold the switch forward to close the sunroof. The sunshade must be closed manually.

2. **Vent Open/Close:** Press and hold the switch to vent the sunroof. Pull and hold the switch to close it. The sunshade must be manually operated when the sunroof is in the vent position.

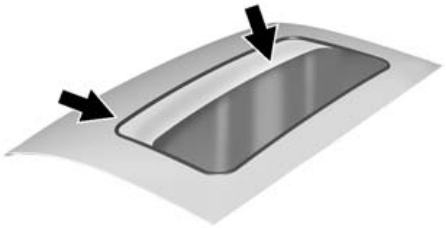

Dirt and debris may collect on the sunroof seal or in the track. This could cause an issue with sunroof operation or noise. It could also plug the water drainage system. Periodically open the sunroof and remove any obstacles or loose debris. Wipe the sunroof seal and roof sealing area using a clean cloth, mild soap, and water. Do not remove grease from the sunroof.

If water is seen dripping into the water drainage system, that is normal.

Information Provided by:
DEALER E-PROCESS

Downloaded from www.Manualslib.com manuals search engine

✍ NOTES

Information Provided by:
DEALER E-PROCESS

Downloaded from www.Manualslib.com manuals search engine

Seats and Restraints

Head Restraints
Head Restraints 3-2
Active Head Restraints 3-3

Front Seats
Seat Adjustment 3-3
Power Seat Adjustment 3-4
Lumbar Adjustment 3-4
Reclining Seatbacks 3-5
Heated Front Seats 3-6
Folding Seatback 3-7

Rear Seats
Rear Seats 3-8

Safety Belts
Safety Belts 3-9
How to Wear Safety Belts Properly 3-11
Lap-Shoulder Belt 3-12
Safety Belt Use During Pregnancy 3-15
Safety Belt Extender 3-16
Safety System Check 3-16
Safety Belt Care 3-16
Replacing Safety Belt System Parts after a Crash 3-17

Airbag System
Airbag System 3-17
Where Are the Airbags? 3-19
When Should an Airbag Inflate? 3-21
What Makes an Airbag Inflate? 3-22
How Does an Airbag Restrain? 3-22
What Will You See after an Airbag Inflates? 3-22
Passenger Sensing System (United States) 3-24
Servicing the Airbag-Equipped Vehicle 3-28
Adding Equipment to the Airbag-Equipped Vehicle . . . 3-28
Airbag System Check 3-29
Replacing Airbag System Parts after a Crash 3-30

Child Restraints
Older Children 3-30
Infants and Young Children 3-32
Child Restraint Systems 3-35
Where to Put the Restraint . . . 3-36
Lower Anchors and Tethers for Children (LATCH System) 3-38
Replacing LATCH System Parts After a Crash 3-44
Securing Child Restraints (Rear Seat) 3-44
Securing Child Restraints (Front Passenger Seat) 3-46

Information Provided by:
DEALER E-PROCESS

Downloaded from www.Manualslib.com manuals search engine

Head Restraints

⚠ Warning

With head restraints that are not installed and adjusted properly, there is a greater chance that occupants will suffer a neck/spinal injury in a crash. Do not drive until the head restraints for all occupants are installed and adjusted properly.

Adjust the head restraint so that the top of the restraint is at the same height as the top of the occupant's head. This position reduces the chance of a neck injury in a crash.

Front Seats

The vehicle's front seats have adjustable head restraints in the outboard seating positions.

The height of the head restraint can be adjusted. Pull the head restraint up to raise it. Try to move the head restraint to make sure that it is locked in place.

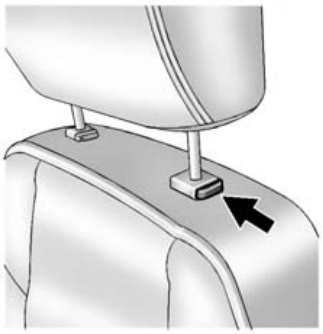

To lower the head restraint, press the button located on the top of the seatback, and push the head restraint down. Try to move the head restraint after the button is released to make sure that it is locked in place.

The front seat outboard head restraints are not designed to be removed.

Information Provided by: DEALER E-PROCESS

Downloaded from www.Manualslib.com manuals search engine

Rear Seats

The vehicle's rear seats have adjustable head restraints in the outboard seating positions that can be adjusted the same way as the front head restraints.

Rear outboard head restraints are not designed to be removed.

Active Head Restraints

The vehicle has an active head restraint system in the front seating positions. These automatically tilt forward to reduce the risk of neck injury if the vehicle is hit from behind.

Front Seats

Seat Adjustment

⚠ Warning

You can lose control of the vehicle if you try to adjust a driver seat while the vehicle is moving. Adjust the driver seat only when the vehicle is not moving.

To adjust a manual seat:

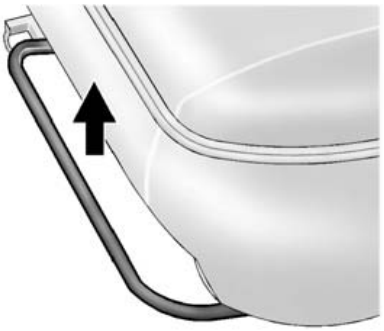

1. Lift the bar to unlock the seat.
2. Slide the seat to the desired position and release the bar.
3. Try to move the seat back and forth to be sure the seat is locked in place.

Seat Height Adjuster

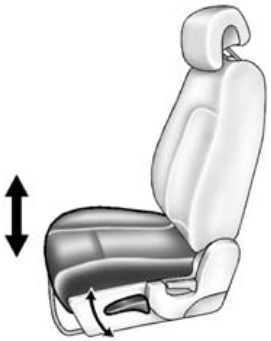

If available, move the lever up or down to raise or lower the seat.

Information Provided by DEALER E-PROCESS

Downloaded from www.Manualslib.com manuals search engine

Power Seat Adjustment

If available, move the control forward or rearward to adjust the seat position.

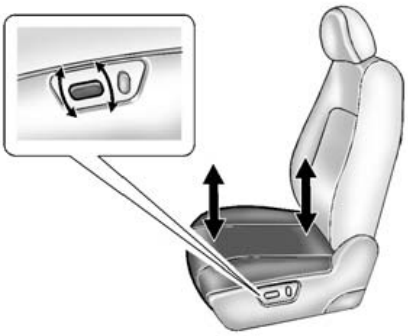

To raise or lower the front or rear part of the seat cushion, move the front or rear of the control up or down.

Lumbar Adjustment

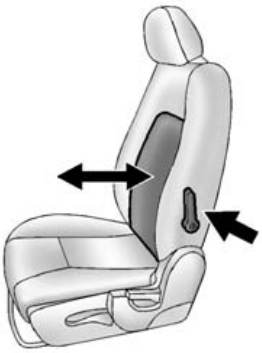

If equipped, move the lever forward or rearward to increase or decrease the lumbar support.

Information Provided by:
DEALER E-PROCESS

Downloaded from www.Manualslib.com manuals search engine

Reclining Seatbacks

⚠ Warning

Sitting in a reclined position when the vehicle is in motion can be dangerous. Even when buckled up, the safety belts cannot do their job.

The shoulder belt will not be against your body. Instead, it will be in front of you. In a crash, you could go into it, receiving neck or other injuries.

The lap belt could go up over your abdomen. The belt forces would be there, not at your pelvic bones. This could cause serious internal injuries.

For proper protection when the vehicle is in motion, have the seatback upright. Then sit well back in the seat and wear the safety belt properly.

Do not have a seatback reclined if the vehicle is moving.

Manual Reclining Seatbacks

⚠ Warning

If either seatback is not locked, it could move forward in a sudden stop or crash. That could cause injury to the person sitting there. Always push and pull on the seatbacks to be sure they are locked.

To recline the seatback:

1. Lift the lever on the outboard side of the seat.
2. Move the seatback to the desired position, and then release the lever to lock the seatback in place.
3. Push and pull on the seatback to make sure it is locked.

Information Provided by: DEALER E-PROCESS

Downloaded from www.Manualslib.com manuals search engine

To return the seatback to the upright position:

1. Lift the lever fully without applying pressure to the seatback, and the seatback will return to the upright position.
2. Push and pull on the seatback to make sure it is locked.

Power Reclining Seatbacks

To adjust a power seatback, if equipped:

- Tilt the top of the control rearward to recline.
- Tilt the top of the control forward to raise.

Heated Front Seats

⚠ Warning

If you cannot feel temperature change or pain to the skin, the seat heater may cause burns. To reduce the risk of burns, people with such a condition should use care when using the seat heater, especially for long periods of time. Do not place anything on the seat that insulates against heat, such as a blanket, cushion, cover, or similar item. This may cause the seat heater to overheat. An overheated seat heater may cause a burn or may damage the seat.

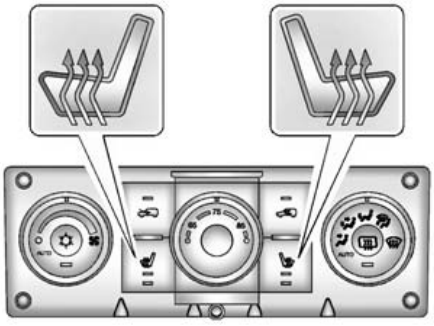

Automatic Climate Control System Shown

If available, the buttons are on the climate control panel. To operate, the ignition must be on.

Press ⇓ or ⇓ to heat the driver or passenger seat cushion and seatback.

Press the button once for the highest setting. With each press of the button, the heated seat will change to the next lower setting, and then to the off setting. The lights indicate two for the highest setting and one for the lowest.

Information Provided by: DEALER E-PROCESS

Downloaded from www.Manualslib.com manuals search engine

The passenger seat may take longer to heat up.

Folding Seatback

The front passenger seatback may fold flat.

⚠ Warning

If you fold the seatback forward to carry longer objects, such as skis, be sure any such cargo is not near an airbag. In a crash, an inflating airbag might force that object toward a person. This could cause severe injury or even death. Secure objects away from the area in which an airbag would inflate. For more information, see *Where Are the Airbags? on page 3-19* and *Vehicle Load Limits on page 9-10*.

⚠ Warning

Things you put on this seatback can strike and injure people in a sudden stop or turn, or in a crash. Remove or secure all items before driving.

To fold the seatback:

1. Lower the head restraint all the way. See *Head Restraints on page 3-2*.
2. Move the seat as far back as possible. See *Seat Adjustment on page 3-3*.

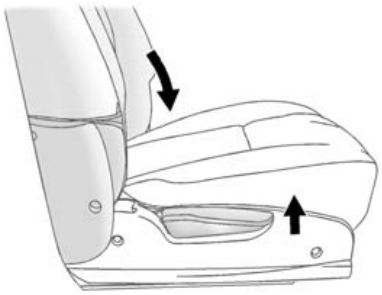

3. Lift the lever fully and fold the seatback forward until it disengages.
4. Continue lowering the seatback until it is completely folded.

To raise the seatback:

1. Raise the seatback and push it rearward until it re-engages.

Information Provided by: DEALER E-PROCESS

Downloaded from www.Manualslib.com manuals search engine

⚠ Warning

If either seatback is not locked, it could move forward in a sudden stop or crash. That could cause injury to the person sitting there. Always push and pull on the seatbacks to be sure they are locked.

2. Push and pull on the seatback to make sure it is locked in place.

Rear Seats

Folding the Seatback

⚠ Caution

Folding a rear seat with the safety belts still fastened may cause damage to the seat or the safety belts. Always unbuckle the safety belts and return them to their normal stowed position before folding a rear seat.

To fold a seatback:

1. Unbuckle the rear safety belts and put the front seatback in the upright position. See *Reclining Seatbacks on page 3-5*.

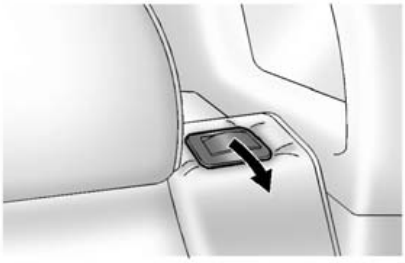

2. Lift the lever on the top of the seatback and fold the seatback forward.
3. Repeat Steps 1 and 2 for the other seatback, if desired.

Information Provided by: DEALER E-PROCESS

Downloaded from www.Manualslib.com manuals search engine

Raising the Seatback

⚠ Warning

If either seatback is not locked, it could move forward in a sudden stop or crash. That could cause injury to the person sitting there. Always push and pull on the seatbacks to be sure they are locked.

⚠ Warning

A safety belt that is improperly routed, not properly attached, or twisted will not provide the protection needed in a crash. The person wearing the belt could be seriously injured. After raising the rear seatback, always check to be sure that the safety belts are properly routed and attached, and are not twisted.

To return the seatback to the upright position:

1. Lift the seatback up and push it back into place.
2. Push and pull the top of the seatback to be sure it is locked into position.
3. Make sure the safety belts are not twisted or caught in the seatback.
4. Repeat Steps 1 and 2 for the other seatback, if necessary.

When the seatback is not in use, it should be kept in the upright, locked position.

Reclining the Seatback

To recline the seatback:

1. Lift and hold the lever on top of the seatback.
2. Tilt the seatback rearward, and then release the lever.
3. Repeat Steps 1 and 2 for the other seatback, if desired.

Information Provided by: DEALER E-PROCESS

Safety Belts

This section of the manual describes how to use safety belts properly. It also describes some things not to do with safety belts.

⚠ Warning

Do not let anyone ride where a safety belt cannot be worn properly. In a crash, if you or your passenger(s) are not wearing safety belts, injuries can be much worse than if you are wearing safety belts. You can be seriously injured or killed by hitting things inside the vehicle harder or by being ejected from the vehicle. In addition, anyone who is not buckled up can strike other passengers in the vehicle.

It is extremely dangerous to ride in a cargo area, inside or outside of a vehicle. In a collision, passengers riding in these areas

(Continued)

Downloaded from www.Manualslib.com manuals search engine

Warning (Continued)

are more likely to be seriously injured or killed. Do not allow passengers to ride in any area of the vehicle that is not equipped with seats and safety belts.

Always wear a safety belt, and check that all passenger(s) are restrained properly too.

This vehicle has indicators as a reminder to buckle the safety belts. See *Safety Belt Reminders on page 5-11*.

Why Safety Belts Work

When riding in a vehicle, you travel as fast as the vehicle does. If the vehicle stops suddenly, you keep going until something stops you. It could be the windshield, the instrument panel, or the safety belts!

When you wear a safety belt, you and the vehicle slow down together. There is more time to stop because you stop over a longer distance and, when worn properly, your strongest bones take the forces from the safety belts. That is why wearing safety belts makes such good sense.

Questions and Answers About Safety Belts

Q: Will I be trapped in the vehicle after a crash if I am wearing a safety belt?

A: You *could* be — whether you are wearing a safety belt or not. Your chance of being conscious during and after a crash, so you *can* unbuckle and get out, is *much* greater if you are belted.

Q: If my vehicle has airbags, why should I have to wear safety belts?

A: Airbags are supplemental systems only; so they work *with* safety belts — not instead of them. Whether or not an airbag is provided, all occupants still have to buckle up to get the most protection.

Information Provided by: DEALER E-PROCESS

Downloaded from www.Manualslib.com manuals search engine

Also, in nearly all states and in all Canadian provinces, the law requires wearing safety belts.

How to Wear Safety Belts Properly

This section is only for people of adult size.

There are special things to know about safety belts and children. And there are different rules for smaller children and infants. If a child will be riding in the vehicle, see *Older Children on page 3-30* or *Infants and Young Children on page 3-32*. Follow those rules for everyone's protection.

It is very important for all occupants to buckle up. Statistics show that unbelted people are hurt more often in crashes than those who are wearing safety belts.

There are important things to know about wearing a safety belt properly.

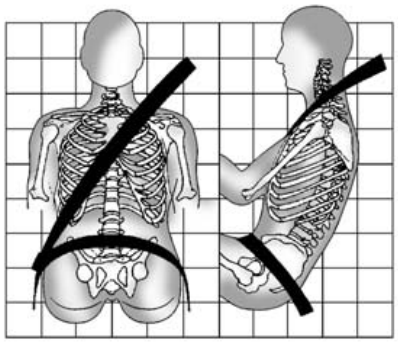

- Sit up straight and always keep your feet on the floor in front of you.
- Always use the correct buckle for your seating position.
- Wear the lap part of the belt low and snug on the hips, just touching the thighs. In a crash, this applies force to the strong pelvic bones and you would be less likely to slide under the lap belt. If you slid under it, the belt would apply force on your abdomen. This could cause serious or even fatal injuries.
- Wear the shoulder belt over the shoulder and across the chest. These parts of the body are best able to take belt restraining forces. The shoulder belt locks if there is a sudden stop or crash.

⚠ Warning

You can be seriously injured, or even killed, by not wearing your safety belt properly.

- Never allow the lap or shoulder belt to become loose or twisted.
- Never wear the shoulder belt under both arms or behind your back.
- Never route the lap or shoulder belt over an armrest.

Information Provided by: DEALER E-PROCESS

Downloaded from www.Manualslib.com manuals search engine

Lap-Shoulder Belt

All seating positions in the vehicle have a lap-shoulder belt.

The following instructions explain how to wear a lap-shoulder belt properly.

1. Adjust the seat, if the seat is adjustable, so you can sit up straight. To see how, see “Seats” in the Index.

2. Pick up the latch plate and pull the belt across you. Do not let it get twisted.

   The lap-shoulder belt may lock if you pull the belt across you very quickly. If this happens, let the belt go back slightly to unlock it. Then pull the belt across you more slowly.

   If the shoulder portion of a passenger belt is pulled out all the way, the child restraint locking feature may be engaged. If this happens, let the belt go back all the way and start again.

   On vehicles with a Passenger Sensing System, engaging the child restraint locking feature in the right front seating position may affect the passenger sensing system. See *Passenger Sensing System (United States) on page 3-24* for more information.

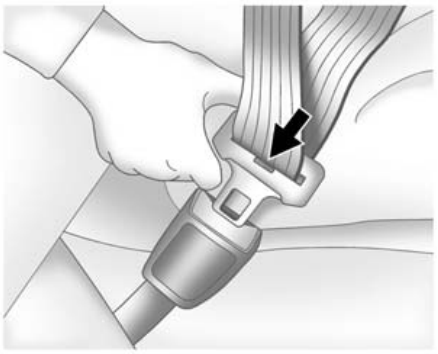

3. Push the latch plate into the buckle until it clicks.

   Pull up on the latch plate to make sure it is secure. If the belt is not long enough, see *Safety Belt Extender on page 3-16*.

   Position the release button on the buckle so that the safety belt could be quickly unbuckled if necessary.

Information Provided by: DEALER E-PROCESS

Downloaded from www.Manualslib.com manuals search engine

4. If equipped with a shoulder belt height adjuster, move it to the height that is right for you. See “Shoulder Belt Height Adjuster” later in this section for instructions on use and important safety information.

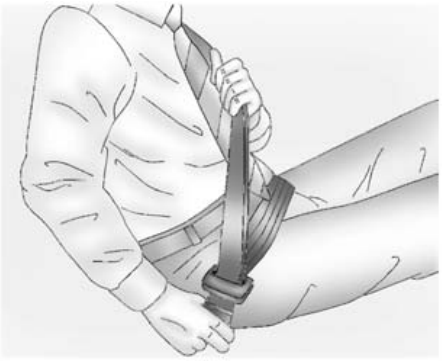

5. To make the lap part tight, pull up on the shoulder belt.

   It may be necessary to pull the stitching on the safety belt through the latch plate to fully tighten the lap belt on smaller occupants.

To unlatch the belt, push the button on the buckle. The belt should return to its stowed position. Slide the latch plate up the safety belt webbing when the safety belt is not in use. The latch plate should rest on the stitching on the safety belt, near the guide loop on the side wall.

Before a door is closed, be sure the safety belt is out of the way. If a door is slammed against a safety belt, damage can occur to both the safety belt and the vehicle.

Shoulder Belt Height Adjuster

The vehicle has a shoulder belt height adjuster for the driver and right front passenger seating positions.

Adjust the height so the shoulder portion of the belt is on the shoulder and not falling off of it. The belt should be close to, but not contacting, the neck. Improper shoulder belt height adjustment could reduce the effectiveness of the safety belt in a crash. See *How to Wear Safety Belts Properly on page 3-11*.

Information Provided by: DEALER E-PROCESS

Downloaded from www.Manualslib.com manuals search engine

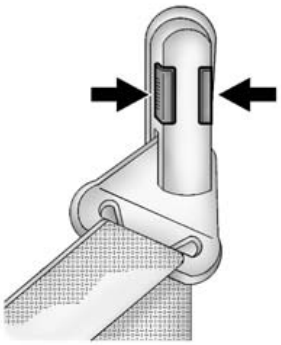

Squeeze the release buttons together and move the height adjuster up or down to the desired position.

After the adjuster is set to the desired position, try to move it up or down without squeezing the release buttons to make sure it has locked into position.

Safety Belt Pretensioners

This vehicle has safety belt pretensioners for the front outboard occupants. Although the safety belt pretensioners cannot be seen, they are part of the safety belt assembly. They can help tighten the safety belts during the early stages of a moderate to severe frontal or near frontal crash if the threshold conditions for pretensioner activation are met. And, for vehicles with side impact airbags, safety belt pretensioners can help tighten the safety belts in a side crash or a rollover event.

Pretensioners work only once. If the pretensioners activate in a crash, they will need to be replaced, and probably other new parts for the vehicle's safety belt system. See *Replacing Safety Belt System Parts after a Crash on page 3-17*.

Rear Safety Belt Comfort Guides

This vehicle may have rear shoulder belt comfort guides. If not, they are available through your dealer. The guides may provide added safety belt comfort for older children who have outgrown booster seats and for some adults. When installed and properly adjusted, the comfort guide positions the shoulder belt away from the neck and head.

There is one guide, if equipped, for each outboard passenger position in the rear seat. Here is how to install a comfort guide to the safety belt:

1. Remove the guide from its storage location, which is a pocket on the side of the seat.

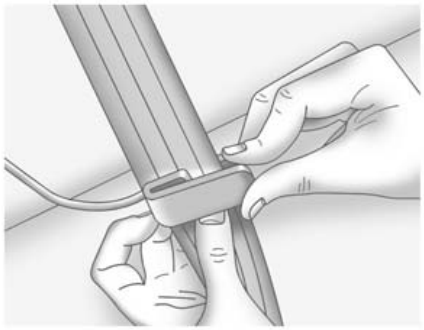

2. Place the guide over the belt and insert the two edges of the belt into the slots of the guide.

Information Provided by: DEALER E-PROCESS

Downloaded from www.Manualslib.com manuals search engine

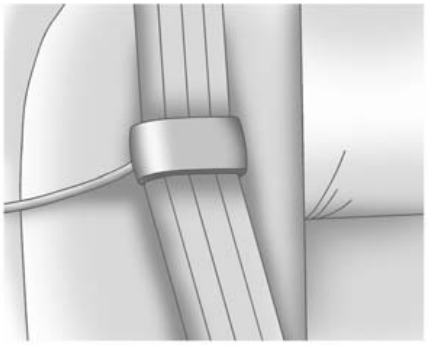

3. Be sure that the belt is not twisted and it lies flat. The elastic cord must be under the belt and the guide on top.

⚠ Warning

A safety belt that is not properly worn may not provide the protection needed in a crash. The person wearing the belt could be seriously injured. The shoulder belt should go over the shoulder

(Continued)

Warning (Continued)

and across the chest. These parts of the body are best able to take belt restraining forces.

4. Buckle, position, and release the safety belt as described previously in this section. Make sure the shoulder portion of the belt is on the shoulder and not falling off of it. The belt should be close to, but not contacting, the neck.

To remove and store the comfort guide, squeeze the belt edges together so that the safety belt can be removed from the guide. Store the comfort guide in its storage location, which is a pocket on the side of the seat.

Safety Belt Use During Pregnancy

Safety belts work for everyone, including pregnant women. Like all occupants, they are more likely to be seriously injured if they do not wear safety belts.

Information Provided by: DEALER E-PROCESS

Downloaded from www.Manualslib.com manuals search engine

A pregnant woman should wear a lap-shoulder belt, and the lap portion should be worn as low as possible, below the rounding, throughout the pregnancy.

The best way to protect the fetus is to protect the mother. When a safety belt is worn properly, it is more likely that the fetus will not be hurt in a crash. For pregnant women, as for anyone, the key to making safety belts effective is wearing them properly.

Safety Belt Extender

If the vehicle's safety belt will fasten around you, you should use it.

But if a safety belt is not long enough, your dealer will order you an extender. When you go in to order it, take the heaviest coat you will wear, so the extender will be long enough for you. To help avoid personal injury, do not let someone else use it, and use it only for the seat it is made to fit. The extender has been designed for adults. Never use it for securing child seats. To wear it, attach it to the regular safety belt. See the instruction sheet that comes with the extender.

Safety System Check

Now and then, check that the safety belt reminder light, safety belts, buckles, latch plates, retractors, and anchorages are all working properly. Look for any other loose or damaged safety belt system parts that might keep a safety belt system from doing its job. See your dealer to have it repaired. Torn or frayed safety belts may not protect you in a crash. They can rip apart under impact forces. If a belt is torn or frayed, get a new one right away.

Make sure the safety belt reminder light is working. See *Safety Belt Reminders on page 5-11*.

Keep safety belts clean and dry. See *Safety Belt Care on page 3-16*.

Safety Belt Care

Keep belts clean and dry.

⚠ Warning

Do not bleach or dye safety belts. It may severely weaken them. In a crash, they might not be able to provide adequate protection. Clean safety belts only with mild soap and lukewarm water.

Information Provided by: DEALER E-PROCESS

Downloaded from www.Manualslib.com manuals search engine

Replacing Safety Belt System Parts after a Crash

⚠ Warning

A crash can damage the safety belt system in the vehicle.
A damaged safety belt system may not properly protect the person using it, resulting in serious injury or even death in a crash. To help make sure the safety belt systems are working properly after a crash, have them inspected and any necessary replacements made as soon as possible.

After a minor crash, replacement of safety belts may not be necessary. But the safety belt assemblies that were used during any crash may have been stressed or damaged.

See your dealer to have the safety belt assemblies inspected or replaced.

New parts and repairs may be necessary even if the safety belt system was not being used at the time of the crash.

Have the safety belt pretensioners checked if the vehicle has been in a crash, or if the airbag readiness light stays on after you start the vehicle or while you are driving. See *Airbag Readiness Light on page 5-12*.

Airbag System

The vehicle has the following airbags:

- A frontal airbag for the driver.
- A frontal airbag for the front outboard passenger.
- A seat-mounted side impact airbag for the driver.
- A seat-mounted side impact airbag for the front outboard passenger.
- A roof-rail airbag for the driver and the passenger seated directly behind the driver.
- A roof-rail airbag for the front outboard passenger and the passenger seated directly behind the front outboard passenger.

All vehicle airbags have the word AIRBAG on the trim or on a label near the deployment opening.

Information Provided by: DEALER E-PROCESS

Downloaded from www.Manualslib.com manuals search engine

For frontal airbags, the word AIRBAG is on the center of the steering wheel for the driver and on the instrument panel for the front outboard passenger.

For seat-mounted side impact airbags, the word AIRBAG is on the side of the seatback closest to the door.

For roof-rail airbags, the word AIRBAG is on the ceiling or trim.

Even if you do not have a front outboard passenger seat in the vehicle, there is still an active frontal airbag in the right side of the instrument panel. Do not place cargo in front of this airbag.

⚠ Warning

Be sure that cargo is not near an airbag. In a crash, an inflating airbag might force that object toward a person. This could cause severe injury or even

(Continued)

Warning (Continued)

death. Secure objects away from the area in which an airbag would inflate. For more information, see *Where Are the Airbags? on page 3-19* and *Vehicle Load Limits on page 9-10*.

Airbags are designed to supplement the protection provided by safety belts. Even though today's airbags are also designed to help reduce the risk of injury from the force of an inflating bag, all airbags must inflate very quickly to do their job.

Here are the most important things to know about the airbag system:

⚠ Warning

You can be severely injured or killed in a crash if you are not wearing your safety belt, even with airbags. Airbags are

(Continued)

Warning (Continued)

designed to work with safety belts, not replace them. Also, airbags are not designed to inflate in every crash. In some crashes safety belts are the only restraint. See *When Should an Airbag Inflate? on page 3-21*.

Wearing your safety belt during a crash helps reduce the chance of hitting things inside the vehicle or being ejected from it. Airbags are “supplemental restraints” to the safety belts. Everyone in the vehicle should wear a safety belt properly, whether or not there is an airbag for that person.

Information Provided by: DEALER E-PROCESS

Downloaded from www.Manualslib.com manuals search engine

⚠ Warning

Because airbags inflate with great force and faster than the blink of an eye, anyone who is up against, or very close to any airbag when it inflates can be seriously injured or killed. Do not sit unnecessarily close to any airbag, as you would be if sitting on the edge of the seat or leaning forward. Safety belts help keep you in position before and during a crash. Always wear a safety belt, even with airbags. The driver should sit as far back as possible while still maintaining control of the vehicle.

Occupants should not lean on or sleep against the door or side windows in seating positions with seat-mounted side impact airbags and/or roof-rail airbags.

⚠ Warning

Children who are up against, or very close to, any airbag when it inflates can be seriously injured or killed. Always secure children properly in the vehicle. To read how, see *Older Children on page 3-30* or *Infants and Young Children on page 3-32*.

There is an airbag readiness light on the instrument cluster, which shows the airbag symbol. The system checks the airbag electrical system for malfunctions. The light tells you if there is an electrical problem. See *Airbag Readiness Light on page 5-12* for more information.

Where Are the Airbags?

The driver frontal airbag is in the middle of the steering wheel.

Information Provided by: DEALER E-PROCESS

Downloaded from www.Manualslib.com manuals search engine

The front outboard passenger frontal airbag is in the instrument panel on the passenger side.

Driver Side Shown, Passenger Side Similar

The seat-mounted side impact airbags for the driver and front outboard passenger are in the side of the seatbacks closest to the door.

Driver Side Shown, Passenger Side Similar

The roof-rail airbags for the driver, front outboard passenger, and second row outboard passengers are in the ceiling above the side windows.

⚠ Warning

If something is between an occupant and an airbag, the airbag might not inflate properly or it might force the object into

(Continued)

Information Provided by: DEALER E-PROCESS

Downloaded from www.Manualslib.com manuals search engine

Warning (Continued)

that person causing severe injury or even death. The path of an inflating airbag must be kept clear. Do not put anything between an occupant and an airbag, and do not attach or put anything on the steering wheel hub or on or near any other airbag covering.

Do not use seat accessories that block the inflation path of a seat-mounted side impact airbag.

Never secure anything to the roof of a vehicle with roof-rail airbags by routing a rope or tie-down through any door or window opening. If you do, the path of an inflating roof-rail airbag will be blocked.

When Should an Airbag Inflate?

This vehicle is equipped with airbags. See *Airbag System on page 3-17*. Airbags are designed to inflate if the impact exceeds the specific airbag system's deployment threshold. Deployment thresholds are used to predict how severe a crash is likely to be in time for the airbags to inflate and help restrain the occupants. The vehicle has electronic sensors that help the airbag system determine the severity of the impact. Deployment thresholds can vary with specific vehicle design.

Frontal airbags are designed to inflate in moderate to severe frontal or near frontal crashes to help reduce the potential for severe injuries, mainly to the driver's or front outboard passenger's head and chest.

Whether the frontal airbags will or should inflate is not based primarily on how fast the vehicle is traveling. It depends on what is hit, the direction of the impact, and how quickly the vehicle slows down.

Frontal airbags may inflate at different crash speeds depending on whether the vehicle hits an object straight on or at an angle, and whether the object is fixed or moving, rigid or deformable, narrow or wide.

Frontal airbags are not intended to inflate during vehicle rollovers, in rear impacts, or in many side impacts.

In addition, the vehicle has advanced technology frontal airbags. Advanced technology frontal airbags adjust the restraint according to crash severity.

Seat-mounted side impact airbags are designed to inflate in moderate to severe side crashes depending on the location of the impact. Seat-mounted side impact airbags are not designed to inflate in frontal impacts, near frontal impacts, rollovers, or rear impacts.

Downloaded from www.Manualslib.com manuals search engine

A seat-mounted side impact airbag is designed to inflate on the side of the vehicle that is struck.

Roof-rail airbags are designed to inflate in moderate to severe side crashes depending on the location of the impact. In addition, these roof-rail airbags are designed to inflate during a rollover or in a severe frontal impact. Roof-rail airbags are not designed to inflate in rear impacts. Both roof-rail airbags will inflate when either side of the vehicle is struck, if the sensing system predicts that the vehicle is about to roll over on its side, or in a severe frontal impact.

In any particular crash, no one can say whether an airbag should have inflated simply because of the vehicle damage or repair costs.

What Makes an Airbag Inflate?

In a deployment event, the sensing system sends an electrical signal triggering a release of gas from the inflator. Gas from the inflator fills the airbag causing the bag to break out of the cover. The inflator, the airbag, and related hardware are all part of the airbag module.

For airbag locations, see *Where Are the Airbags? on page 3-19*.

How Does an Airbag Restrain?

In moderate to severe frontal or near frontal collisions, even belted occupants can contact the steering wheel or the instrument panel. In moderate to severe side collisions, even belted occupants can contact the inside of the vehicle.

Airbags supplement the protection provided by safety belts by distributing the force of the impact more evenly over the occupant's body.

Rollover capable roof-rail airbags are designed to help contain the head and chest of occupants in the outboard seating positions in the first and second rows. The rollover capable roof-rail airbags are designed to help reduce the risk of full or partial ejection in rollover events, although no system can prevent all such ejections.

But airbags would not help in many types of collisions, primarily because the occupant's motion is not toward those airbags. See *When Should an Airbag Inflate? on page 3-21*.

Airbags should never be regarded as anything more than a supplement to safety belts.

What Will You See after an Airbag Inflates?

After the frontal airbags and seat-mounted side impact airbags inflate, they quickly deflate, so quickly that some people may not even realize an airbag inflated. Roof-rail airbags may still be at least partially inflated for some time after they deploy. Some components of the airbag module may be hot for

Information Provided by: DEALER E-PROCESS

Downloaded from www.Manualslib.com manuals search engine

several minutes. For location of the airbag modules, see *What Makes an Airbag Inflate? on page 3-22*.

The parts of the airbag that come into contact with you may be warm, but not too hot to touch. There may be some smoke and dust coming from the vents in the deflated airbags. Airbag inflation does not prevent the driver from seeing out of the windshield or being able to steer the vehicle, nor does it prevent people from leaving the vehicle.

⚠ Warning

When an airbag inflates, there may be dust in the air. This dust could cause breathing problems for people with a history of asthma or other breathing trouble. To avoid this, everyone in the vehicle should get out as soon as it is safe to do so. If you have breathing problems but cannot get out of the vehicle after an

(Continued)

Warning (Continued)

airbag inflates, then get fresh air by opening a window or a door. If you experience breathing problems following an airbag deployment, you should seek medical attention.

The vehicle has a feature that may automatically unlock the doors, turn on the interior lamps and hazard warning flashers, and shut off the fuel system after the airbags inflate. You can lock the doors, turn off the interior lamps and hazard warning flashers by using the controls for those features. You must first, however, turn the ignition key to the following ignition switch positions:

1. Turn the ignition key to LOCK/OFF.
2. Turn the ignition key to ON/RUN.

⚠ Warning

A crash severe enough to inflate the airbags may have also damaged important functions in the vehicle, such as the fuel system, brake and steering systems, etc. Even if the vehicle appears to be drivable after a moderate crash, there may be concealed damage that could make it difficult to safely operate the vehicle.

Use caution if you should attempt to restart the engine after a crash has occurred.

In many crashes severe enough to inflate the airbag, windshields are broken by vehicle deformation. Additional windshield breakage may also occur from the right front passenger airbag.

- Airbags are designed to inflate only once. After an airbag inflates, you will need some new

Information Provided by: DEALER E-PROCESS

Downloaded from www.Manualslib.com manuals search engine

parts for the airbag system. If you do not get them, the airbag system will not be there to help protect you in another crash. A new system will include airbag modules and possibly other parts. The service manual for your vehicle covers the need to replace other parts.

- The vehicle has a crash sensing and diagnostic module which records information after a crash. See *Vehicle Data Recording and Privacy on page 13-13* and *Event Data Recorders on page 13-14*.
- Let only qualified technicians work on the airbag systems. Improper service can mean that an airbag system will not work properly. See your dealer for service.

Passenger Sensing System (United States)

The vehicle has a passenger sensing system for the front outboard passenger position. The passenger airbag status indicator will light on the instrument panel when the vehicle is started.

The words ON and OFF will be visible during the system check. When the system check is complete, either the word ON or OFF will be visible. See *Passenger Airbag Status Indicator on page 5-13*.

The passenger sensing system turns off the front outboard passenger frontal airbag under certain conditions. No other airbag is affected by the passenger sensing system.

The passenger sensing system works with sensors that are part of the front outboard passenger seat and safety belt. The sensors are designed to detect the presence of a properly-seated occupant and determine if the front outboard passenger frontal airbag should be allowed to inflate or not.

According to accident statistics, children are safer when properly secured in a rear seat in a correct child restraint for their weight and size.

Whenever possible, children age 12 and under should be secured in a rear seating position.

Never put a rear-facing child seat in the front. This is because the risk to the rear-facing child is so great, if the airbag deploys.

Information Provided by: DEALER E-PROCESS

Downloaded from www.Manualslib.com manuals search engine

⚠ Warning

A child in a rear-facing child restraint can be seriously injured or killed if the passenger frontal airbag inflates. This is because the back of the rear-facing child restraint would be very close to the inflating airbag. A child in a forward-facing child restraint can be seriously injured or killed if the passenger frontal airbag inflates and the passenger seat is in a forward position.

Even if the passenger sensing system has turned off the passenger frontal airbag, no system is fail-safe. No one can guarantee that an airbag will not inflate under some unusual circumstance, even though the airbag is off.

(Continued)

Warning (Continued)

Secure rear-facing child restraints in a rear seat, even if the airbag is off. If you secure a forward-facing child restraint in the front outboard passenger seat, always move the seat as far back as it will go. It is better to secure the child restraint in a rear seat.

If the vehicle does not have a rear seat that will accommodate a rear-facing child restraint, a rear-facing child restraint should not be installed in the vehicle, even if the airbag is off.

The passenger sensing system is designed to turn off the front outboard passenger airbag if:

- The front outboard passenger seat is unoccupied.
- The system determines that an infant is present in a rear-facing infant seat.
- The system determines that a small child is present in a child restraint.
- The system determines that a small child is present in a booster seat.
- A front outboard passenger takes his/her weight off of the seat for a period of time.
- The front outboard passenger seat is occupied by a smaller person, such as a child who has outgrown child restraints.
- There is a critical problem with the airbag system or the passenger sensing system.

When the passenger sensing system has turned off the front outboard passenger frontal airbag, the off indicator will light and stay lit as a reminder that the airbag is off. See *Passenger Airbag Status Indicator on page 5-13*.

The passenger sensing system is designed to turn on the front outboard passenger frontal airbag

Information Provided by: DEALER E-PROCESS

Downloaded from www.Manualslib.com manuals search engine

anytime the system senses that a person of adult size is sitting properly in the front outboard passenger seat.

When the passenger sensing system has allowed the airbag to be enabled, the on indicator will light and stay lit as a reminder that the airbag is active.

For some children who have outgrown child restraints, and for very small adults, the passenger sensing system may or may not turn off the front outboard passenger frontal airbag, depending upon the person's seating posture and body build. Everyone in the vehicle who has outgrown child restraints should wear a safety belt properly — whether or not there is an airbag for that person.

⚠ Warning

If the airbag readiness light ever comes on and stays on, it means that something may be wrong with the airbag system. To help avoid injury to yourself or others, have the vehicle serviced right away. See *Airbag Readiness Light on page 5-12* for more information, including important safety information.

If the On Indicator Is Lit for a Child Restraint

If a child restraint has been installed and the on indicator is lit:

1. Turn the vehicle off.
2. Remove the child restraint from the vehicle.
3. Remove any additional items from the seat such as blankets, cushions, seat covers, seat heaters, or seat massagers.
4. Reinstall the child restraint following the directions provided by the child restraint manufacturer and refer to *Securing Child Restraints (Rear Seat) on page 3-44* or *Securing Child Restraints (Front Passenger Seat) on page 3-46*.
5. If, after reinstalling the child restraint and restarting the vehicle, the on indicator is still lit, turn the vehicle off. Then slightly recline the vehicle seatback and adjust the seat cushion, if adjustable, to make sure that the vehicle seatback is not pushing the child restraint into the seat cushion.

   Also make sure the child restraint is not trapped under the vehicle head restraint. If this happens, adjust the head restraint. See *Head Restraints on page 3-2*.

Information Provided by: DEALER E-PROCESS

Downloaded from www.Manualslib.com manuals search engine

6. Restart the vehicle.

   If the on indicator is still lit, secure the child restraint in a rear seat position in the vehicle, and check with your dealer.

   If no rear seat is available, do not install a child restraint in this vehicle.

If the Off Indicator Is Lit for an Adult-Sized Occupant

If a person of adult size is sitting in the front outboard passenger seat, but the off indicator is lit, it could be because that person is not sitting properly in the seat or that the child restraint locking feature is engaged. Use the following steps to allow the system to detect that person and enable the front outboard passenger frontal airbag:

1. Turn the vehicle off.
2. Remove any additional material from the seat, such as blankets, cushions, seat covers, seat heaters, or seat massagers.
3. Place the seatback in the fully upright position.
4. Have the person sit upright in the seat, centered on the seat cushion, with legs comfortably extended.

   If the shoulder portion of the belt is pulled out all the way, the child restraint locking feature will be engaged. This may unintentionally cause the passenger sensing system to turn the airbag off for some adult-sized occupants. If this happens, let the belt go back all the way and start again without pulling the belt out all the way.
5. Restart the vehicle and have the person remain in this position for two to three minutes after the on indicator is lit.

⚠ Warning

If the front outboard passenger airbag is turned off for an adult-sized occupant, the airbag will not be able to inflate and help protect that person in a crash, resulting in an increased risk of serious injury or even death. An adult-sized occupant should not ride in the front outboard passenger seat, if the passenger airbag off indicator is lit.

Information Provided by: DEALER E-PROCESS

Downloaded from www.Manualslib.com manuals search engine

Additional Factors Affecting System Operation

Safety belts help keep the passenger in position on the seat during vehicle maneuvers and braking, which helps the passenger sensing system maintain the passenger airbag status. See “Safety Belts” and “Child Restraints” in the Index for additional information about the importance of proper restraint use.

A thick layer of additional material, such as a blanket or cushion, or aftermarket equipment such as seat covers, seat heaters, and seat massagers can affect how well the passenger sensing system operates. We recommend that you not use seat covers or other aftermarket equipment except when approved by GM for your specific vehicle. See *Adding Equipment to the Airbag-Equipped Vehicle on page 3-28* for more information about modifications that can affect how the system operates.

The on indicator may be lit if an object, such as a briefcase, handbag, grocery bag, laptop or other electronic device, is put on an unoccupied seat. If this is not desired remove the object from the seat.

⚠ Warning

Stowing of articles under the passenger seat or between the passenger seat cushion and seatback may interfere with the proper operation of the passenger sensing system.

Servicing the Airbag-Equipped Vehicle

Airbags affect how the vehicle should be serviced. There are parts of the airbag system in several places around the vehicle. Your dealer and the service manual have information about servicing the vehicle and the airbag system. To purchase a service manual, see *Service Publications Ordering Information on page 13-11*.

⚠ Warning

For up to 10 seconds after the vehicle is turned off and the battery is disconnected, an airbag can still inflate during improper service. You can be injured if you are close to an airbag when it inflates. Avoid yellow connectors. They are probably part of the airbag system. Be sure to follow proper service procedures, and make sure the person performing work for you is qualified to do so.

Adding Equipment to the Airbag-Equipped Vehicle

Adding accessories that change the vehicle's frame, bumper system, height, front end, or side sheet metal may keep the airbag system from working properly. The

Information Provided by: DEALER E-PROCESS

Downloaded from www.Manualslib.com manuals search engine

operation of the airbag system can also be affected by changing any parts of the front seats, safety belts, the airbag sensing and diagnostic module, steering wheel, instrument panel, any of the airbag modules, ceiling or pillar garnish trim, front sensors, side impact sensors, or airbag wiring.

Your dealer and the service manual have information about the location of the airbag sensors, sensing and diagnostic module, and airbag wiring.

In addition, the vehicle has a passenger sensing system for the front outboard passenger position, which includes sensors that are part of the passenger seat. The passenger sensing system may not operate properly if the original seat trim is replaced with non-GM covers, upholstery, or trim; or with GM covers, upholstery, or trim designed for a different vehicle. Any object, such as an aftermarket seat heater or a comfort-enhancing pad or device, installed under or on top of the seat fabric, could also interfere with the operation of the passenger sensing system. This could either prevent proper deployment of the passenger airbag(s) or prevent the passenger sensing system from properly turning off the passenger airbag(s). See *Passenger Sensing System (United States) on page 3-24*.

The vehicle has rollover roof-rail airbags. See *Different Size Tires and Wheels on page 10-54* for additional important information.

If you have to modify your vehicle because you have a disability and have questions about whether the modifications will affect the vehicle's airbag system, or if you have questions about whether the airbag system will be affected if the vehicle is modified for any other reason, call Customer Assistance. See *Customer Assistance Offices on page 13-3*.

Airbag System Check

The airbag system does not need regularly scheduled maintenance or replacement. Make sure the airbag readiness light is working. See *Airbag Readiness Light on page 5-12*.

⚠ Caution

If an airbag covering is damaged, opened, or broken, the airbag may not work properly. Do not open or break the airbag coverings. If there are any opened or broken airbag coverings, have the airbag covering and/or airbag module replaced. For the location of the airbags, see *Where Are the Airbags? on page 3-19*. See your dealer for service.

Information Provided by: DEALER E-PROCESS

Downloaded from www.Manualslib.com manuals search engine

Replacing Airbag System Parts after a Crash

⚠ Warning

A crash can damage the airbag systems in the vehicle.
A damaged airbag system may not work properly and may not protect you and your passenger(s) in a crash, resulting in serious injury or even death. To help make sure the airbag systems are working properly after a crash, have them inspected and any necessary replacements made as soon as possible.

If an airbag inflates, you will need to replace airbag system parts. See your dealer for service.

If the airbag readiness light stays on after the vehicle is started or comes on when you are driving, the airbag system may not work properly. Have the vehicle serviced right away. See *Airbag Readiness Light on page 5-12*.

Child Restraints

Older Children

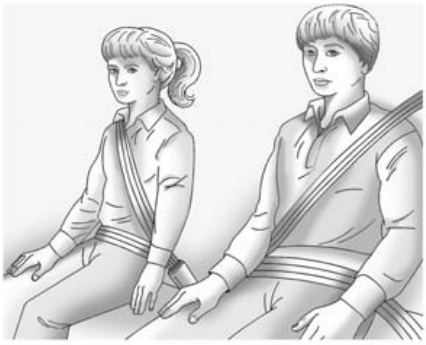

Older children who have outgrown booster seats should wear the vehicle safety belts.

Information Provided by: DEALER E-PROCESS

Downloaded from www.Manualslib.com manuals search engine

The manufacturer instructions that come with the booster seat state the weight and height limitations for that booster. Use a booster seat with a lap-shoulder belt until the child passes the fit test below:

- Sit all the way back on the seat. Do the knees bend at the seat edge? If yes, continue. If no, return to the booster seat.
- Buckle the lap-shoulder belt. Does the shoulder belt rest on the shoulder? If yes, continue. If no, try using the rear safety belt comfort guide. See “Rear Safety Belt Comfort Guides” under *Lap-Shoulder Belt on page 3-12*. If the shoulder belt still does not rest on the shoulder, then return to the booster seat.
- Does the lap belt fit low and snug on the hips, touching the thighs? If yes, continue. If no, return to the booster seat.
- Can proper safety belt fit be maintained for the length of the trip? If yes, continue. If no, return to the booster seat.

Q: What is the proper way to wear safety belts?

A: An older child should wear a lap-shoulder belt and get the additional restraint a shoulder belt can provide. The shoulder belt should not cross the face or neck. The lap belt should fit snugly below the hips, just touching the top of the thighs. This applies belt force to the child's pelvic bones in a crash. It should never be worn over the abdomen, which could cause severe or even fatal internal injuries in a crash.

Also see “Rear Safety Belt Comfort Guides” under *Lap-Shoulder Belt on page 3-12*.

According to accident statistics, children are safer when properly restrained in a rear seating position.

In a crash, children who are not buckled up can strike other people who are buckled up, or can be thrown out of the vehicle. Older children need to use safety belts properly.

⚠ Warning

Never allow more than one child to wear the same safety belt. The safety belt cannot properly spread the impact forces. In a crash, they can be crushed together and seriously injured. A safety belt must be used by only one person at a time.

Information Provided by: DEALER E-PROCESS

Downloaded from www.Manualslib.com manuals search engine

⚠ Warning

Never allow a child to wear the safety belt with the shoulder belt behind their back. A child can be seriously injured by not wearing the lap-shoulder belt properly. In a crash, the child would not be restrained by the shoulder belt. The child could move too far forward increasing the chance of head and neck injury. The child might also slide under the lap

(Continued)

Warning (Continued)

belt. The belt force would then be applied right on the abdomen. That could cause serious or fatal injuries. The shoulder belt should go over the shoulder and across the chest.

Infants and Young Children

Everyone in a vehicle needs protection! This includes infants and all other children. Neither the distance traveled nor the age and size of the traveler changes the need, for everyone, to use safety restraints. In fact, the law in every state in the United States and in every Canadian province says children up to some age must be restrained while in a vehicle.

⚠ Warning

Children can be seriously injured or strangled if a shoulder belt is wrapped around their neck and the safety belt continues to tighten. Never leave children unattended in a vehicle and never allow children to play with the safety belts.

Information Provided by: DEALER E-PROCESS

Downloaded from www.Manualslib.com manuals search engine

Every time infants and young children ride in vehicles, they should have the protection provided by appropriate child restraints. Neither the vehicle's safety belt system nor its airbag system is designed for them.

Children who are not restrained properly can strike other people, or can be thrown out of the vehicle.

⚠ Warning

Never hold an infant or a child while riding in a vehicle. Due to crash forces, an infant or a child will become so heavy it is not possible to hold it during a crash. For example, in a crash at only 40 km/h (25 mph), a 5.5 kg (12 lb) infant will suddenly become a 110 kg (240 lb) force on a person's arms. An infant should be secured in an appropriate restraint.

⚠ Warning

Children who are up against, or very close to, any airbag when it inflates can be seriously injured or killed. Never put a rear-facing child restraint in the right front seat. Secure a rear-facing child restraint in a rear seat. It is also better to secure a forward-facing child restraint in a rear seat. If you must secure a forward-facing child restraint in the right front

(Continued)

Warning (Continued)

seat, always move the front passenger seat as far back as it will go.

Information Provided by: DEALER E-PROCESS

Downloaded from www.Manualslib.com manuals search engine

Q: What are the different types of add-on child restraints?

A: Add-on child restraints, which are purchased by the vehicle owner, are available in four basic types. Selection of a particular restraint should take into consideration not only the child's weight, height, and age but also whether or not the restraint will be compatible with the motor vehicle in which it will be used.

For most basic types of child restraints, there are many different models available. When purchasing a child restraint, be sure it is designed to be used in a motor vehicle. If it is, the restraint will have a label saying that it meets federal motor vehicle safety standards.

The restraint manufacturer instructions that come with the restraint state the weight and height limitations for a particular child restraint. In addition, there are many kinds of restraints available for children with special needs.

⚠ Warning

To reduce the risk of neck and head injury during a crash, infants need complete support. In a crash, if an infant is in a rear-facing child restraint, the crash forces can be distributed across the strongest part of an infant's body, the back and shoulders. Infants should always be secured in rear-facing child restraints.

⚠ Warning

A young child's hip bones are still so small that the vehicle's regular safety belt may not remain low on the hip bones, as it should.

(Continued)

Warning (Continued)

Instead, it may settle up around the child's abdomen. In a crash, the belt would apply force on a body area that is unprotected by any bony structure. This alone could cause serious or fatal injuries. To reduce the risk of serious or fatal injuries during a crash, young children should always be secured in appropriate child restraints.

Information Provided by: DEALER E-PROCESS

Downloaded from www.Manualslib.com manuals search engine

Child Restraint Systems

Rear-Facing Infant Seat

A rear-facing infant seat provides restraint with the seating surface against the back of the infant.

The harness system holds the infant in place and, in a crash, acts to keep the infant positioned in the restraint.

Forward-Facing Child Seat

A forward-facing child seat provides restraint for the child's body with the harness.

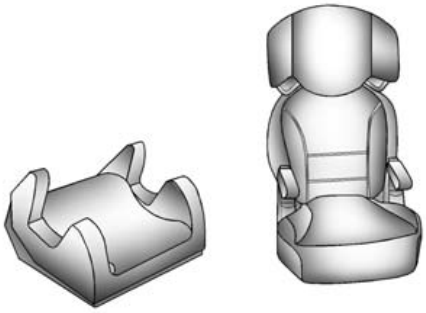

Booster Seats

A booster seat is a child restraint designed to improve the fit of the vehicle's safety belt system.
A booster seat can also help a child to see out the window.

Information Provided by:
DEALER E-PROCESS

Downloaded from www.Manualslib.com manuals search engine

Securing an Add-On Child Restraint in the Vehicle

⚠ Warning

A child can be seriously injured or killed in a crash if the child restraint is not properly secured in the vehicle. Secure the child restraint properly in the vehicle using the vehicle safety belt or LATCH system, following the instructions that came with that child restraint and the instructions in this manual.

To help reduce the chance of injury, the child restraint must be secured in the vehicle. Child restraint systems must be secured in vehicle seats by lap belts or the lap belt portion of a lap-shoulder belt, or by the LATCH system. See *Lower Anchors and Tethers for Children (LATCH System) on page 3-38* for more information. Children can be endangered in a crash if the child restraint is not properly secured in the vehicle.

When securing an add-on child restraint, refer to the instructions that come with the restraint which may be on the restraint itself or in a booklet, or both, and to this manual. The child restraint instructions are important, so if they are not available, obtain a replacement copy from the manufacturer.

Keep in mind that an unsecured child restraint can move around in a collision or sudden stop and injure people in the vehicle. Be sure to properly secure any child restraint in the vehicle — even when no child is in it.

In some areas of the United States, Certified Child Passenger Safety Technicians (CPSTs) are available to inspect and demonstrate how to correctly use and install child restraints. In the U.S., refer to the National Highway Traffic Safety Administration (NHTSA) website to locate the nearest child safety seat inspection station.

Securing the Child Within the Child Restraint

⚠ Warning

A child can be seriously injured or killed in a crash if the child is not properly secured in the child restraint. Secure the child properly following the instructions that came with that child restraint.

Where to Put the Restraint

According to accident statistics, children and infants are safer when properly restrained in a child restraint system or infant restraint system secured in a rear seating position.

Information Provided by: DEALER E-PROCESS

Downloaded from www.Manualslib.com manuals search engine

Whenever possible, children age 12 and under should be secured in a rear seating position.

Never put a rear-facing child restraint in the front. This is because the risk to the rear-facing child is so great if the airbag deploys.

⚠ Warning

A child in a rear-facing child restraint can be seriously injured or killed if the front outboard passenger airbag inflates. This is because the back of the rear-facing child restraint would be very close to the inflating airbag. A child in a forward-facing child restraint can be seriously injured or killed if the front outboard passenger airbag inflates and the passenger seat is in a forward position.

(Continued)

Warning (Continued)

The vehicle may have a passenger sensing system which is designed to turn off the front outboard passenger frontal airbag under certain conditions.

Even if the passenger sensing system, if equipped, has turned off the front outboard passenger frontal airbag, no system is fail-safe. No one can guarantee that an airbag will not deploy under some unusual circumstance, even though it is turned off.

Secure rear-facing child restraints in a rear seat, even if the airbag is off. If you secure a forward-facing child restraint in the front outboard seat, always move the front passenger seat as

(Continued)

Warning (Continued)

far back as it will go. It is better to secure the child restraint in a rear seat.

See *Passenger Sensing System (United States) on page 3-24* for additional information.

When securing a child restraint in a rear seating position, study the instructions that came with the child restraint to make sure it is compatible with this vehicle.

Child restraints and booster seats vary considerably in size, and some may fit in certain seating positions better than others. Always make sure the child restraint is properly secured.

Depending on where you place the child restraint and the size of the child restraint, you may not be able to access adjacent safety belt assemblies or LATCH anchors for additional passengers or child

Information Provided by: DEALER E-PROCESS

Downloaded from www.Manualslib.com manuals search engine

restraints. Adjacent seating positions should not be used if the child restraint prevents access to or interferes with the routing of the safety belt.

Wherever a child restraint is installed, be sure to secure the child restraint properly.

Keep in mind that an unsecured child restraint can move around in a collision or sudden stop and injure people in the vehicle. Be sure to properly secure any child restraint in the vehicle — even when no child is in it.

Lower Anchors and Tethers for Children (LATCH System)

The LATCH system secures a child restraint during driving or in a crash. LATCH attachments on the child restraint are used to attach the child restraint to the anchors in the vehicle. The LATCH system is designed to make installation of a child restraint easier.

In order to use the LATCH system in your vehicle, you need a child restraint that has LATCH attachments. LATCH-compatible rear-facing and forward-facing child seats can be properly installed using either the LATCH anchors or the vehicle's safety belts. Do not use both the safety belts and the LATCH anchorage system to secure a rear-facing or forward-facing child seat.

Booster seats use the vehicle's safety belts to secure the child in the booster seat. If the manufacturer recommends that the booster seat be secured with the LATCH system, this can be done as long as the booster seat can be positioned properly and there is no interference with the proper positioning of the lap-shoulder belt on the child.

Make sure to follow the instructions that came with the child restraint, and also the instructions in this manual.

When installing a child restraint with a top tether, you must also use either the lower anchors or the safety belts to properly secure the child restraint. A child restraint must never be installed using only the top tether and anchor.

The LATCH anchorage system can be used until the combined weight of the child plus the child restraint is 29.5 kg (65 lbs). Use the safety belt alone instead of the LATCH anchorage system once the combined weight is more than 29.5 kg (65 lbs).

The following explains how to attach a child restraint with these attachments in the vehicle.

Not all vehicle seating positions or child restraints have lower anchors and attachments or top tether anchors and attachments.

Information Provided by: DEALER E-PROCESS

Downloaded from www.Manualslib.com manuals search engine

Lower Anchors

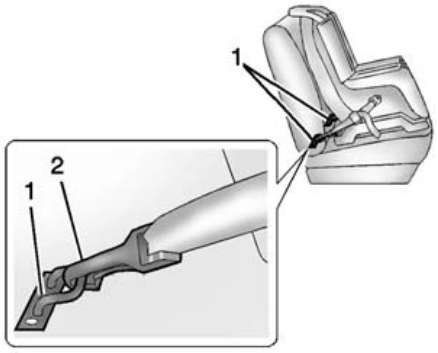

Lower anchors (1) are metal bars built into the vehicle. There are two lower anchors for each LATCH seating position that will accommodate a child restraint with lower attachments (2).

Top Tether Anchor

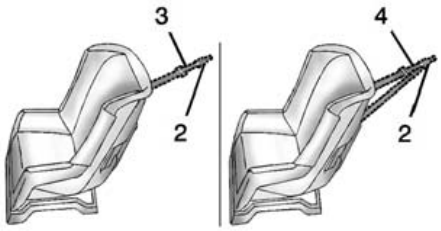

A top tether (3, 4) anchors the top of the child restraint to the vehicle. A top tether anchor is built into the vehicle. The top tether attachment (2) on the child restraint connects to the top tether anchor in the vehicle in order to reduce the forward movement and rotation of the child restraint during driving or in a crash.

The child restraint may have a single tether (3) or a dual tether (4). Either will have a single attachment (2) to secure the top tether to the anchor.

Some child restraints that have top tethers are designed for use with or without the top tether being attached. Others require the top tether always to be attached. Be sure to read and follow the instructions for the child restraint.

Information Provided by:
DEALER E-PROCESS

Downloaded from www.Manualslib.com manuals search engine

Lower Anchor and Top Tether Anchor Locations

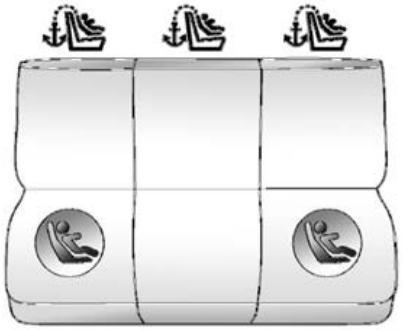

Rear Seat

(Top Tether Anchor): Seating positions with top tether anchors.

(Lower Anchor): Seating positions with two lower anchors.

To assist in locating the lower anchors, each seating position with lower anchors has two labels, near the crease between the seatback and the seat cushion.

To assist in locating the top tether anchors, the top tether anchor symbol is near the top tether anchors.

The top tether anchors are on the back of the rear seatback. Be sure to use an anchor on the same side of the vehicle as the seating position where the child restraint will be placed.

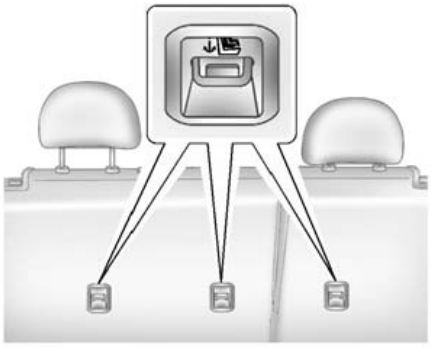

Do not secure a child restraint in a position without a top tether anchor if a national or local law requires that the top tether be attached, or if the instructions that come with the child restraint say that the top tether must be attached.

According to accident statistics, children and infants are safer when properly restrained in a child restraint system or infant restraint system secured in a rear seating

Information Provided by: DEALER E-PROCESS

Downloaded from www.Manualslib.com manuals search engine

position. See *Where to Put the Restraint on page 3-36* for additional information.

Securing a Child Restraint Designed for the LATCH System

⚠ Warning

If a LATCH-type child restraint is not attached to anchors, the child restraint will not be able to protect the child correctly. In a crash, the child could be seriously injured or killed. Install a LATCH-type child restraint properly using the anchors, or use the vehicle safety belts to secure the restraint, following the instructions that came with the child restraint and the instructions in this manual.

⚠ Warning

Do not attach more than one child restraint to a single anchor. Attaching more than one child restraint to a single anchor could cause the anchor or attachment to come loose or even break during a crash. A child or others could be injured. To reduce the risk of serious or fatal injuries during a crash, attach only one child restraint per anchor.

⚠ Warning

Children can be seriously injured or strangled if a shoulder belt is wrapped around their neck and the safety belt continues to tighten. Buckle any unused safety belts behind the child restraint so children cannot reach them. Pull the shoulder belt all the way out

(Continued)

Warning (Continued)

of the retractor to set the lock, if the vehicle has one, after the child restraint has been installed.

⚠ Caution

Do not let the LATCH attachments rub against the vehicle's safety belts. This may damage these parts. If necessary, move buckled safety belts to avoid rubbing the LATCH attachments.

Do not fold the empty rear seat with a safety belt buckled. This could damage the safety belt or the seat. Unbuckle and return the safety belt to its stowed position, before folding the seat.

Information Provided by: DEALER E-PROCESS

Downloaded from www.Manualslib.com manuals search engine

If you need to secure more than one child restraint in the rear seat, see *Where to Put the Restraint on page 3-36*.

This system is designed to make the installation of child restraints easier. When using lower anchors, do not use the vehicle's safety belts. Instead, use the vehicle's anchors and child restraint attachments to secure the restraints. Some restraints also use another vehicle anchor to secure a top tether.

1. Attach and tighten the lower attachments to the lower anchors. If the child restraint does not have lower attachments or the desired seating position does not have lower anchors, secure the child restraint with the top tether and the safety belts. Refer to the child restraint manufacturer instructions and the instructions in this manual.
   1.1. Find the lower anchors for the desired seating position.
   1.2. Put the child restraint on the seat.
   1.3. Attach and tighten the lower attachments on the child restraint to the lower anchors.
2. If the child restraint manufacturer recommends that the top tether be attached, attach and tighten the top tether to the top tether anchor, if equipped. Refer to the child restraint instructions and the following steps:
   2.1. Find the top tether anchor.
   2.2. Route, attach, and tighten the top tether according to the child restraint instructions and the following instructions:

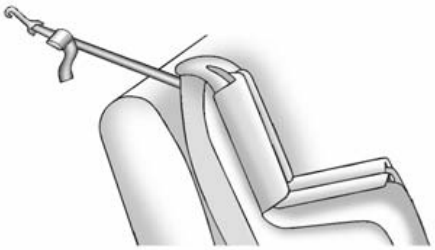

If the position you are using does not have a headrest or head restraint and you are using a single tether, route the tether over the seatback.

Information Provided by: DEALER E-PROCESS

Downloaded from www.Manualslib.com manuals search engine

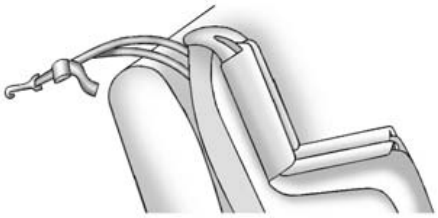

If the position you are using does not have a headrest or head restraint and you are using a dual tether, route the tether over the seatback.

If the position you are using has an adjustable headrest or head restraint and you are using a dual tether, route the tether around the headrest or head restraint.

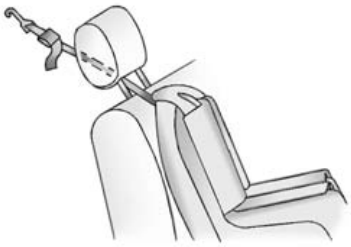

If the position you are using has an adjustable headrest or head restraint and you are using a single tether, raise the headrest or head restraint and route the tether under the headrest or head restraint and in between the headrest or head restraint posts.

3. Before placing a child in the child restraint, make sure it is securely held in place. To check, grasp the child restraint at the LATCH path and attempt to move it side to side and back and forth. There should be no more than 2.5 cm (1 in) of movement, for proper installation.

Information Provided by: DEALER E-PROCESS

Downloaded from www.Manualslib.com manuals search engine

Replacing LATCH System Parts After a Crash

⚠ Warning

A crash can damage the LATCH system in the vehicle. A damaged LATCH system may not properly secure the child restraint, resulting in serious injury or even death in a crash. To help make sure the LATCH system is working properly after a crash, see your dealer to have the system inspected and any necessary replacements made as soon as possible.

If the vehicle has the LATCH system and it was being used during a crash, new LATCH system parts may be needed.

New parts and repairs may be necessary even if the LATCH system was not being used at the time of the crash.

Securing Child Restraints (Rear Seat)

When securing a child restraint in a rear seating position, study the instructions that came with the child restraint to make sure it is compatible with this vehicle.

If the child restraint has the LATCH system, see *Lower Anchors and Tethers for Children (LATCH System) on page 3-38* for how and where to install the child restraint using LATCH. If a child restraint is secured in the vehicle using a safety belt and it uses a top tether, see *Lower Anchors and Tethers for Children (LATCH System) on page 3-38* for top tether anchor locations.

Do not secure a child seat in a position without a top tether anchor if a national or local law requires that the top tether be anchored, or if the instructions that come with the child restraint say that the top strap must be anchored.

If the child restraint does not have the LATCH system, you will be using the safety belt to secure the child restraint in this position. Be sure to follow the instructions that came with the child restraint. Secure the child in the child restraint when and as the instructions say.

If more than one child restraint needs to be installed in the rear seat, be sure to read *Where to Put the Restraint on page 3-36*.

1. Put the child restraint on the seat.
2. Pick up the latch plate, and run the lap and shoulder portions of the vehicle's safety belt through or around the restraint. The child restraint instructions will show you how.

Information Provided by: DEALER E-PROCESS

Downloaded from www.Manualslib.com manuals search engine

3. Push the latch plate into the buckle until it clicks.

   Position the release button on the buckle so that the safety belt could be quickly unbuckled if necessary.

4. Pull the shoulder belt all the way out of the retractor to set the lock. When the retractor lock is set, the belt can be tightened but not pulled out of the retractor.

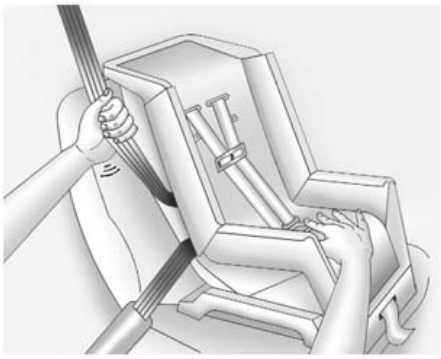

5. To tighten the belt, push down on the child restraint, pull the shoulder portion of the belt to tighten the lap portion of the belt and feed the shoulder belt back into the retractor. When installing a forward-facing child restraint, it may be helpful to use your knee to push down on the child restraint as you tighten the belt.

   Try to pull the belt out of the retractor to make sure the retractor is locked. If the retractor is not locked, repeat Steps 4 and 5.

Information Provided by:
DEALER E-PROCESS

Downloaded from www.Manualslib.com manuals search engine

6. If the child restraint has a top tether, follow the child restraint manufacturer's instructions regarding the use of the top tether. See *Lower Anchors and Tethers for Children (LATCH System) on page 3-38* for more information.
7. Before placing a child in the child restraint, make sure it is securely held in place. To check, grasp the child restraint at the safety belt path and attempt to move it side to side and back and forth. When the child restraint is properly installed, there should be no more than 2.5 cm (1 in) of movement.

To remove the child restraint, unbuckle the vehicle safety belt and let it return to the stowed position. If the top tether is attached to a top tether anchor, disconnect it.

Securing Child Restraints (Front Passenger Seat)

The vehicle has airbags. A rear seat is a safer place to secure a forward-facing child restraint. See *Where to Put the Restraint on page 3-36*.

In addition, the vehicle may have a passenger sensing system which is designed to turn off the front outboard passenger frontal airbag under certain conditions. See *Passenger Sensing System (United States) on page 3-24* and *Passenger Airbag Status Indicator on page 5-13* for more information, including important safety information.

Never put a rear-facing child seat in the front. This is because the risk to the rear-facing child is so great, if the airbag deploys.

⚠ Warning

A child in a rear-facing child restraint can be seriously injured or killed if the front passenger airbag inflates. This is because the back of the rear-facing child restraint would be very close to the inflating airbag. A child in a forward-facing child restraint can be seriously injured or killed if the front passenger airbag inflates and the passenger seat is in a forward position.

Even if the passenger sensing system has turned off the front passenger frontal airbag, no system is fail-safe. No one can guarantee that an airbag will not deploy under some unusual circumstance, even though it is turned off.

(Continued)

Information Provided by: DEALER E-PROCESS

Downloaded from www.Manualslib.com manuals search engine

Warning (Continued)

Secure rear-facing child restraints in a rear seat, even if the airbag is off. If you secure a forward-facing child restraint in the front seat, always move the front passenger seat as far back as it will go. It is better to secure the child restraint in a rear seat.

See *Passenger Sensing System (United States) on page 3-24* for additional information.

If the vehicle does not have a rear seat that will accommodate a rear-facing child restraint, a rear-facing child restraint should not be installed in the vehicle, even if the airbag is off.

If the child restraint has the LATCH system, see *Lower Anchors and Tethers for Children (LATCH System) on page 3-38* for how and where to install the child restraint using LATCH. If a child restraint is secured using a safety belt and it uses a top tether, see *Lower Anchors and Tethers for Children (LATCH System) on page 3-38* for top tether anchor locations.

Do not secure a child seat in a position without a top tether anchor if a national or local law requires that the top tether be anchored, or if the instructions that come with the child restraint say that the top strap must be anchored.

You will be using the lap-shoulder belt to secure the child restraint in this position. Follow the instructions that came with the child restraint.

1. Move the seat as far back as it will go before securing the forward-facing child restraint.

   When the passenger sensing system, if equipped, has turned off the front outboard passenger frontal airbag, the off indicator on the passenger airbag status indicator should light and stay lit when the vehicle is started. See *Passenger Airbag Status Indicator on page 5-13*.

2. Put the child restraint on the seat.

3. Pick up the latch plate, and run the lap and shoulder portions of the vehicle's safety belt through or around the restraint. The child restraint instructions will show you how.

Information Provided by: DEALER E-PROCESS

Downloaded from www.Manualslib.com manuals search engine

4. Push the latch plate into the buckle until it clicks.

   Position the release button on the buckle so that the safety belt could be quickly unbuckled if necessary.

5. Pull the shoulder belt all the way out of the retractor to set the lock. When the retractor lock is set, the belt can be tightened but not pulled out of the retractor.

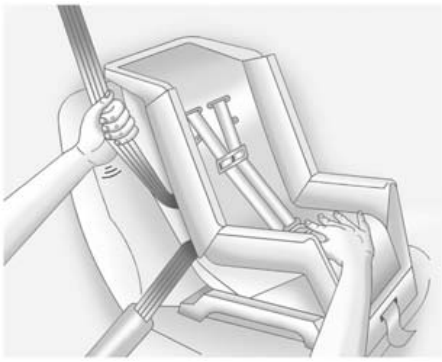

6. To tighten the belt, push down on the child restraint, pull the shoulder portion of the belt to tighten the lap portion of the belt and feed the shoulder belt back into the retractor. When installing a forward-facing child restraint, it may be helpful to use your knee to push down on the child restraint as you tighten the belt.

   Try to pull the belt out of the retractor to make sure the retractor is locked. If the retractor is not locked, repeat Steps 5 and 6.

7. If the vehicle does not have a rear seat and the child restraint has a top tether, follow the child restraint manufacturer's instructions regarding the use of the top tether. See *Lower Anchors and Tethers for Children (LATCH System) on page 3-38* for more information.

8. Before placing a child in the child restraint, make sure it is securely held in place. To check, grasp the child restraint at the safety belt path and attempt to move it side to side and back and forth. When the child restraint is properly installed, there should be no more than 2.5 cm (1 in) of movement.

Information Provided by: DEALER E-PROCESS

Downloaded from www.Manualslib.com manuals search engine

If the airbag is off, the off indicator in the passenger airbag status indicator, if equipped, will come on and stay on when the vehicle is started.

If a child restraint has been installed and the on indicator is lit, see “If the On Indicator is Lit for a Child Restraint ” under *Passenger Sensing System (United States) on page 3-24* for more information.

To remove the child restraint, unbuckle the vehicle safety belt and let it return to the stowed position.

Information Provided by:
DEALER E-PROCESS

Downloaded from www.Manualslib.com manuals search engine

✍ NOTES

Information Provided by:
DEALER E-PROCESS

Downloaded from www.Manualslib.com manuals search engine

Storage

Storage Compartments
Storage Compartments 4-1
Instrument Panel Storage 4-1
Glove Box 4-1
Cupholders 4-1
Front Storage 4-1
Sunglasses Storage 4-1
Center Console Storage 4-2

Additional Storage Features
Cargo Cover 4-2
Cargo Tie-Downs 4-2
Cargo Management System 4-2
Convenience Net 4-3

Roof Rack System
Roof Rack System 4-3

Storage Compartments

⚠ Warning

Do not store heavy or sharp objects in storage compartments. In a crash, these objects may cause the cover to open and could result in injury.

Instrument Panel Storage

The vehicle has a storage area to the left of the steering wheel. Pull down on the handle to access.

Glove Box

To open the glove box, lift up on the lever. If the glove box has a lock, use the key to lock and unlock it.

Cupholders

There are cupholders in the center console and in the second row seat armrest. Pull down the armrest to access the cupholders.

Front Storage

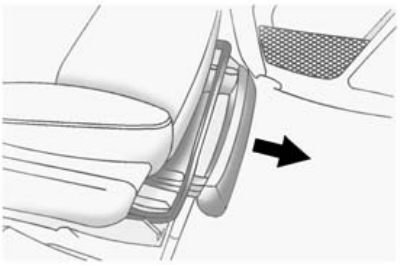

For vehicles with a storage area located under the front passenger seat, lift up on the end of the tray and pull it forward to access it.

Sunglasses Storage

This vehicle may have a sunglasses storage compartment near the rearview mirror. Push the cover to open.

Information Provided by: DEALER E-PROCESS

Downloaded from www.Manualslib.com manuals search engine

Center Console Storage

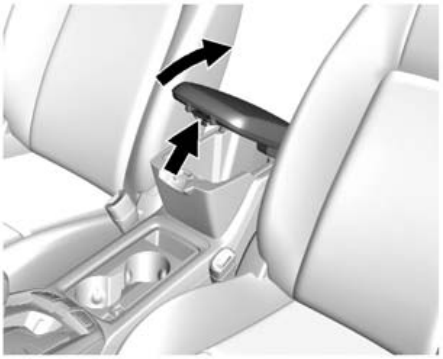

This vehicle has a center console with an upper and lower storage area. To access the upper storage area pull on the latch to lift the armrest. Slide the cupholder back to access a larger storage area underneath.

Additional Storage Features

Cargo Cover

For vehicles with a cargo cover, use it to cover items in the rear of the vehicle.

To remove the cover and remove it from the vehicle, pull both ends toward each other. To reinstall, place each end of the cover in the holes behind the rear seat.

Cargo Tie-Downs

Four cargo tie-downs are located in the rear compartment of the vehicle. The tie-downs can be used to secure small loads.

Cargo Management System

If the vehicle has a cargo management system in the rear of the vehicle, it will have rails with adapters and hooks. These are used to hold the net and mesh pocket.

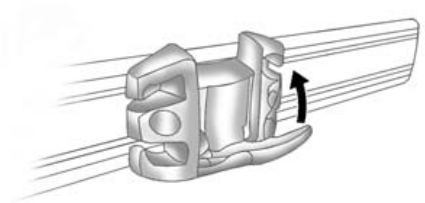

The adapters are used to hold the net. Slide the adapters to the desired location on the upper and lower rail and turn the handle up to lock it in place. Compress the rods of the net and insert them into the corresponding openings of the adapter. The longer rod is for the upper adapter.

Information Provided by: DEALER E-PROCESS

Downloaded from www.Manualslib.com manuals search engine

The hooks hold the mesh pocket. To insert a hook on the rail, place the hook in the upper groove of the rail and press it into the lower groove.

Convenience Net

For vehicles with a convenience net, located in the rear, use it to store small loads as far forward as possible. The net should not be used to store heavy loads.

Roof Rack System

⚠ Warning

If something is carried on top of the vehicle that is longer or wider than the roof rack — like paneling, plywood, or a mattress — the wind can catch it while the vehicle is being driven. The item being carried could be violently torn off, and this could cause a collision and damage the vehicle. Never carry something longer or wider than the roof rack on top of the vehicle unless using a GM certified accessory carrier.

If equipped with a roof rack it can be used to load items. For roof racks that do not have crossrails included, GM Certified crossrails can be purchased as an accessory. See your dealer for additional information.

⚠ Caution

Loading cargo on the roof rack that weighs more than 75 kg (165 lb) or hangs over the rear or sides of the vehicle may damage the vehicle. Load cargo so that it rests evenly between the crossrails, making sure to fasten cargo securely.

To prevent damage or loss of cargo when driving, check to make sure crossrails and cargo are securely fastened. Loading cargo on the roof rack will make the vehicle's center of gravity higher. Avoid high speeds, sudden starts, sharp turns, sudden braking, or abrupt maneuvers; otherwise it may result in loss of control. If driving for a long distance, on rough roads, or at high speeds, occasionally stop the vehicle to make sure the cargo remains in its place.

Information Provided by: DEALER E-PROCESS

Downloaded from www.Manualslib.com manuals search engine

4-4 Storage

Do not exceed the maximum vehicle capacity when loading the vehicle. For more information on vehicle capacity and loading, see *Vehicle Load Limits on page 9-10*.

Check that all cargo is securely fastened to prevent damage or loss while driving.

Information Provided by:
DEALER E-PROCESS

Downloaded from www.Manualslib.com manuals search engine

Instruments and Controls

Controls

Steering Wheel Adjustment . . . 5-2
Steering Wheel Controls 5-2
Horn 5-3
Windshield Wiper/Washer 5-3
Rear Window Wiper/ Washer 5-4
Compass 5-4
Clock 5-6
Power Outlets 5-7

Warning Lights, Gauges, and Indicators

Warning Lights, Gauges, and Indicators 5-8
Instrument Cluster 5-9
Speedometer 5-10
Odometer 5-10
Trip Odometer 5-10
Tachometer 5-10
Fuel Gauge 5-10
Safety Belt Reminders 5-11
Airbag Readiness Light 5-12
Passenger Airbag Status Indicator 5-13
Charging System Light 5-13
Malfunction Indicator Lamp 5-14
Service Vehicle Soon Light 5-16
Brake System Warning Light 5-16
Electric Parking Brake Light 5-17
Antilock Brake System (ABS) Warning Light 5-18
All-Wheel-Drive Light 5-19
Power Steering Warning Light 5-19
StabiliTrak® Indicator Light . . . 5-19
Traction Control System (TCS) Warning Light 5-20
Engine Coolant Temperature Warning Light 5-20
Tire Pressure Light 5-21
Fuel Economy Light 5-21
Low Fuel Warning Light 5-21
Security Light 5-21
Reduced Engine Power Light 5-22
High-Beam On Light 5-22
Front Fog Lamp Light 5-22
Low Washer Fluid Warning Light 5-23
Cruise Control Light 5-23
Door Ajar Light 5-23
Gate Ajar Light 5-23

Information Displays

Driver Information Center (DIC) 5-24

Vehicle Messages

Vehicle Messages 5-28
Brake System Messages 5-29
Compass Messages 5-29
Cruise Control Messages 5-30
Door Ajar Messages 5-30
Engine Cooling System Messages 5-30
Engine Oil Messages 5-31
Engine Power Messages 5-32
Fuel System Messages 5-32
Key and Lock Messages 5-32
Lamp Messages 5-32
Object Detection System Messages 5-33
Ride Control System Messages 5-33
Airbag System Messages 5-34
Service Vehicle Messages . . . 5-34

Information Provided by:
DEALER E-PROCESS

Downloaded from www.Manualslib.com manuals search engine

Tire Messages 5-34
Transmission Messages 5-35
Vehicle Reminder Messages 5-36

Vehicle Personalization
Vehicle Personalization 5-36

Universal Remote System
Universal Remote System . . . 5-42
Universal Remote System Programming 5-42
Universal Remote System Operation 5-45

Controls

Steering Wheel Adjustment

To adjust the steering wheel:

1. Hold the steering wheel and pull the lever down.
2. Move the steering wheel up or down.
3. Pull or push the steering wheel closer or away from you.
4. Pull the lever up to lock the steering wheel in place.

Do not adjust the steering wheel while driving.

Steering Wheel Controls

For vehicles with audio steering wheel controls, some audio controls can be adjusted at the steering wheel.

+ / − (Next/Previous): Press and release to go to the next or the previous preset radio station or CD track.

Information Provided by: DEALER E-PROCESS

Downloaded from www.Manualslib.com manuals search engine

/ (Call/Mute): For vehicles with Bluetooth® and OnStar®, press and hold to interact with those systems. See *Bluetooth on page 7-24* or "OnStar," if equipped. Press and release to mute the system. Press it again to turn the sound back on.

(End Call): Press to reject an incoming call, or end a current call.

+ or − (Volume): Move the thumbwheel up or down to increase or to decrease the volume.

Horn

Press on the steering wheel pad to sound the horn.

Windshield Wiper/Washer

The windshield wiper lever is on the right side of the steering column.

Move the lever up or down to select the wiper speed.

(Mist): Single wipe, briefly move the lever down. The lever returns to its starting position when released. For several wipes, hold the lever down.

(Off): Turns the windshield wipers off.

(Adjustable Interval Wipes): Sets a delay between wipes. Move the switch on top of the lever left for less frequent wipes or right for more frequent wipes.

(Low): Slow wipes.

(High): Fast wipes.

Clear ice and snow from the wiper blades before using them. If frozen to the windshield, carefully loosen or thaw them. Damaged wiper blades should be replaced. See *Wiper Blade Replacement on page 10-25*.

Heavy snow or ice can overload the wiper motor. A circuit breaker will stop the motor until it cools down.

Rainsense™

⚠ Caution

Going through an automatic car wash with the wipers on can damage them. Turn the wipers off when going through an automatic car wash.

Information Provided by: DEALER E-PROCESS

Downloaded from www.Manualslib.com manuals search engine

If equipped with Rainsense™ windshield wipers, the moisture sensor is next to the inside rearview mirror and is mounted on the windshield. When active, these sensors are able to detect moisture on the windshield and automatically turn on the wipers.

To turn on the Rainsense feature, the wipers must be set to one of the five delay settings on the lever. Each of the five settings adjusts the sensitivity of the sensor.

Since different drivers have different setting preferences, it is recommended that the mid-range setting (position 3) be used initially. For more wipes, select the higher settings; for fewer wipes, select the lower settings located closer to the off position on the lever.

The sensor automatically controls the frequency of the wipes from the off setting to the high speed setting according to the weather conditions.

The wipers can be left in a Rainsense mode even when it is not raining.

Windshield Washer

⚠ Warning

In freezing weather, do not use the washer until the windshield is warmed. Otherwise the washer fluid can form ice on the windshield, blocking your vision.

Pull the windshield wiper lever to spray windshield washer fluid and activate the wipers. The wipers will continue until the lever is released or the maximum wash time is reached.

Rear Window Wiper/ Washer

The rear wiper and rear wash button is on the instrument panel above the climate control system.

(Rear Wiper/Washer): Press to wash and wipe the rear window.

The rear window washer uses the same reservoir as the windshield washer. Check the windshield washer reservoir level if the front windshield can be worked, but no fluid is sprayed when the rear washer is activated. See *Washer Fluid on page 10-20*.

(Delay): Press to turn the delayed wiping on or off.

Compass

The vehicle may have a compass in the Driver Information Center (DIC).

Compass Zone

The zone is set to Zone 8 upon leaving the factory. Your dealer will set the correct zone for your location.

Under certain circumstances, such as during a long distance cross-country trip or moving to a new state or province, it will be

Information Provided by: DEALER E-PROCESS

Downloaded from www.Manualslib.com manuals search engine

necessary to compensate for compass variance by resetting the zone through the DIC if the zone is not set correctly.

Compass variance is the difference between the earth's magnetic north and true geographic north. If the compass is not set to the zone where you live, the compass may give false readings. The compass must be set to the variance zone in which the vehicle is traveling.

To adjust for compass variance, use the following procedure:

Compass Variance (Zone) Procedure

1. Do not set the compass zone when the vehicle is moving. Only set it when the vehicle is in P (Park).

   Press the vehicle information button until PRESS ✓ TO SET COMPASS ZONE: ## displays.

2. Find the vehicle's current location and variance zone number on the map.

   Zones 1 through 15 are available.

3. Press and hold the set/reset button to scroll through and select the appropriate variance zone.

4. Press the trip/fuel button until the vehicle heading, for example, N for North, is displayed in the DIC.

5. If calibration is necessary, calibrate the compass. See “Compass Calibration Procedure” following.

Compass Calibration

The compass can be manually calibrated. Only calibrate the compass in a magnetically clean and safe location, such as an open parking lot, where driving the vehicle in circles is not a danger. It is suggested to calibrate away from tall buildings, utility wires, manhole covers, or other industrial structures, if possible.

If CAL should ever appear in the DIC display, the compass should be calibrated.

If the DIC display does not show a heading, for example, N for North, or the heading does not change after making turns, there may be a strong magnetic field interfering with the compass. Such interference may be caused by a magnetic CB or cell phone antenna mount, a magnetic emergency light, magnetic

Information Provided by:
DEALER E-PROCESS

Downloaded from www.Manualslib.com manuals search engine

note pad holder, or any other magnetic item. Turn off the vehicle, move the magnetic item, then turn on the vehicle and calibrate the compass.

To calibrate the compass, use the following procedure:

Compass Calibration Procedure

1. Before calibrating the compass, make sure the compass is set to the variance zone in which the vehicle is located. See “Compass Variance (Zone) Procedure” earlier in this section.

   Do not operate any switches such as window, sunroof, climate controls, seats, etc. during the calibration procedure.
2. Press the vehicle information button until PRESS ✓ TO CALIBRATE COMPASS displays.
3. Press the set/reset button to start the compass calibration.
4. The DIC will display CALIBRATING COMPASS: TURN IN CIRCLES. Drive the vehicle in tight circles at less than 8 km/h (5 mph) to complete the calibration. The DIC will display COMPASS CALIBRATION COMPLETE for a few seconds when the calibration is complete. The DIC display will then return to the previous menu.

Clock

To set the time and date:

1. Turn the ignition key to ACC/ACCESSORY or ON/RUN.

   Press ⏻ to turn the radio on.
2. Press ◷ and HR, MIN, MM, DD, and YYYY (hour, minute, month, day, and year) display.
3. Press the softkey below any one of the tabs to be changed.
4. To increase the time or date do one of the following:
   - Press the softkey below the selected tab.
   - Press ⏭ SEEK, or ▷▷ FWD.
   - Turn ♫ clockwise.
5. To decrease the time or date do one of the following:
   - Press ⏮ SEEK or ◁◁ REV.
   - Turn ♫ counterclockwise.

The date does not automatically display. To see the date press ◷ while the radio is on. The date with display times out after a few seconds and goes back to the normal radio and time display.

Information Provided by: DEALER E-PROCESS

Downloaded from www.Manualslib.com manuals search engine

To change the time default setting from 12 hour to 24 hour or to change the date default setting from month/day/year to day/month/year:

1. Press ◷ and then the softkey below the forward arrow label to select the time 12H and 24H, and the date MM/DD/YYYY (month, day, and year) and DD/MM/YYYY (day, month, and year) display.
2. Press the softkey below the desired option.
3. Press ◷ again to apply the selected default, or let the screen time out.

Power Outlets

The accessory power outlets can be used to plug in electrical equipment, such as a cell phone or MP3 player.

The power outlets are inside the center floor console, on the rear of the center floor console, and in the rear cargo compartment.

The power outlet located in the rear cargo area is powered at all times.

Remove the cover to access and replace when not in use.

⚠ Caution

Leaving electrical equipment plugged in for an extended period of time while the vehicle is off will drain the battery. Always unplug electrical equipment when not in use and do not plug in equipment that exceeds the maximum 20 amp rating.

Certain electrical accessories may not be compatible with the accessory power outlet and could overload vehicle or adapter fuses. If a problem is experienced, see your dealer.

When adding electrical equipment, be sure to follow the installation instructions included with the equipment. See *Add-On Electrical Equipment on page 9-47*.

⚠ Caution

Hanging heavy equipment from the power outlet can cause damage not covered by the vehicle warranty. The power outlets are designed for accessory power plugs only, such as cell phone charge cords.

Information provided by: DEALER E-PROCESS

Downloaded from www.Manualslib.com manuals search engine

Warning Lights, Gauges, and Indicators

Warning lights and gauges can signal that something is wrong before it becomes serious enough to cause an expensive repair or replacement. Paying attention to the warning lights and gauges could prevent injury.

Warning lights come on when there could be a problem with a vehicle function. Some warning lights come on briefly when the engine is started to indicate they are working.

Gauges can indicate when there could be a problem with a vehicle function. Often gauges and warning lights work together to indicate a problem with the vehicle.

When one of the warning lights comes on and stays on while driving, or when one of the gauges shows there may be a problem, check the section that explains what to do. Follow this manual's advice. Waiting to do repairs can be costly and even dangerous.

Information Provided by:
DEALER E-PROCESS

Downloaded from www.Manualslib.com manuals search engine

Instrument Cluster

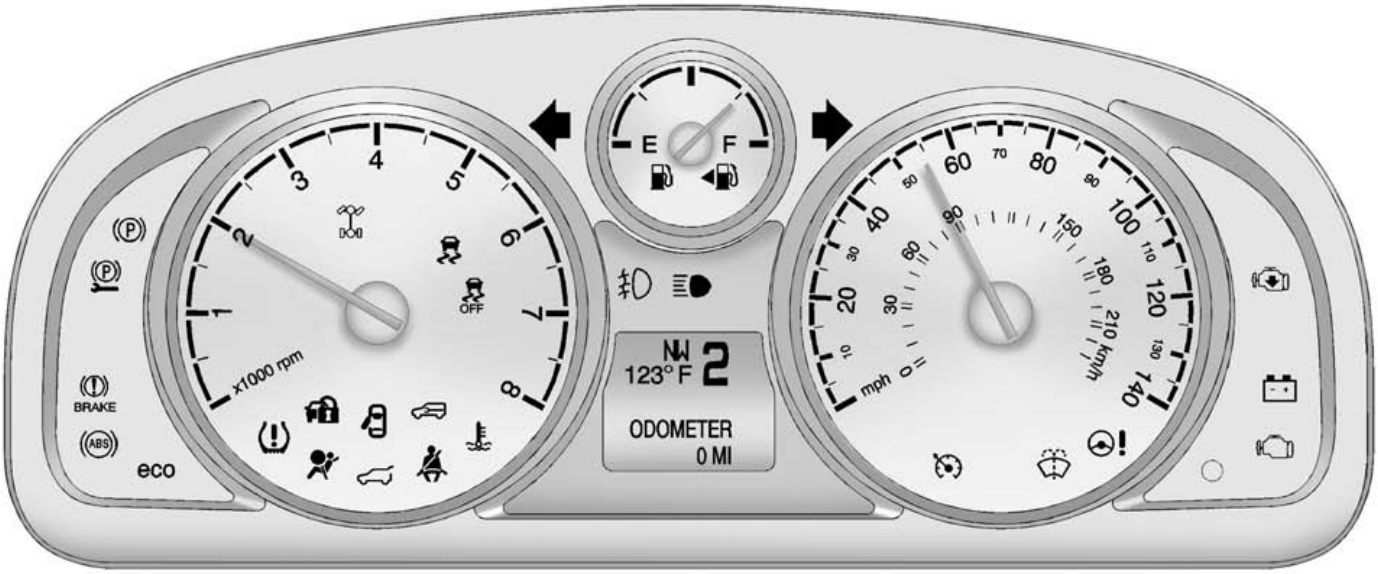

English Cluster Shown, Metric Cluster Similar

Information Provided by:
DEALER E-PROCESS

Downloaded from www.Manualslib.com manuals search engine

Speedometer

The speedometer shows the vehicle's speed in either kilometers per hour (km/h) or miles per hour (mph).

Odometer

The odometer shows how far the vehicle has been driven, in either kilometers or miles.

This vehicle has a tamper-resistant odometer. If the vehicle needs a new odometer installed, the new one is set to the mileage of the old odometer. If this is not possible, it is set at zero and a label is put on the driver door to show the old mileage reading.

Trip Odometer

The trip odometer can record the number of miles, or kilometers, traveled for up to two trips.

Cycle between the odometer and trip odometers A and B by pressing the reset button located in the lower right area of the speedometer. Press the reset button to tell how many miles or kilometers have been recorded on either Trip A or Trip B since the trip odometer was last set back to zero.

To reset each trip odometer to zero, press and hold the reset button. The reset button resets only the trip odometer that is being displayed. Each trip odometer must be reset individually.

Tachometer

The tachometer displays the engine speed in revolutions per minute (rpm).

Fuel Gauge

Metric

English

Information Provided by: DEALER E-PROCESS

Downloaded from www.Manualslib.com manuals search engine

When the ignition is on, the fuel gauge indicates how much fuel is left in the tank.

When the indicator nears empty, the low fuel light comes on. There is still a little fuel left, but the fuel tank should be refilled soon. See *Low Fuel Warning Light on page 5-21* for more information.

An arrow on the fuel gauge indicates the side of the vehicle the fuel door is on.

Here are four things that some owners ask about. None of these means the fuel gauge is not working properly:

- At the service station, the fuel pump shuts off before the gauge reads full.
- It takes a little more or less fuel to fill up than the gauge indicated. For example, the gauge may have indicated the tank was half full, but it actually took a little more or less than half the tank's capacity to fill the tank.
- The gauge moves a little while turning a corner or speeding up.
- The gauge takes a few seconds to stabilize after the ignition is turned on, but it goes back to empty when the ignition is turned off.

For fuel tank capacity, see *Capacities and Specifications on page 12-2*.

Safety Belt Reminders

Driver Safety Belt Reminder Light

There is a driver safety belt reminder light on the instrument cluster.

When the vehicle is started this light flashes and a chime may come on to remind the driver to fasten their safety belt. Then the light stays on solid until the belt is buckled. This cycle may continue several times if the driver remains or becomes unbuckled while the vehicle is moving.

If the driver safety belt is buckled, neither the light nor the chime comes on.

Passenger Safety Belt Reminder Light

There may be a passenger safety belt reminder light near the passenger airbag status indicator. See *Passenger Sensing System (United States) on page 3-24*.

Information Provided by: DEALER E-PROCESS

Downloaded from www.Manualslib.com manuals search engine

For vehicles equipped with the passenger safety belt warning light, when the vehicle is started this light flashes and a chime may come on to remind passengers to fasten their safety belt. Then the light stays on solid until the belt is buckled. This cycle continues several times if the passenger remains or becomes unbuckled while the vehicle is moving.

If the passenger safety belt is buckled, neither the chime nor the light comes on.

The front passenger safety belt warning light and chime may turn on if an object is put on the seat such as a briefcase, handbag, grocery bag, laptop, or other electronic device. To turn off the warning light and/or chime, remove the object from the seat or buckle the safety belt.

Airbag Readiness Light

This light shows if there is an electrical problem with the airbag system. The system check includes the airbag sensor(s), passenger sensing system, the pretensioners, the airbag modules, the wiring, and the crash sensing and diagnostic module. For more information on the airbag system, see *Airbag System on page 3-17*.

The airbag readiness light comes on for several seconds when the vehicle is started. If the light does not come on then, have it fixed immediately.

⚠ Warning

If the airbag readiness light stays on after the vehicle is started or comes on while driving, it means the airbag system might not be working properly. The airbags in the vehicle might not inflate in a crash, or they could even inflate without a crash. To help avoid injury, have the vehicle serviced right away.

If there is a problem with the airbag system, a Driver Information Center (DIC) message may also come on. See *Airbag System Messages on page 5-34*.

Information Provided by: DEALER E-PROCESS

Downloaded from www.Manualslib.com manuals search engine

Passenger Airbag Status Indicator

The vehicle has the passenger sensing system. See *Passenger Sensing System (United States) on page 3-24* for important safety information. The instrument panel has a passenger airbag status indicator.

When the vehicle is started, the passenger airbag status indicator will light the words ON and OFF, for several seconds as a system check. Then, after several more seconds, the status indicator will light either the word ON or the word OFF, to let you know the status of the front outboard passenger frontal airbag.

If the word ON is lit on the passenger airbag status indicator, it means that the front outboard passenger frontal airbag is allowed to inflate.

If the word OFF is lit on the airbag status indicator, it means that the passenger sensing system has turned off the front outboard passenger frontal airbag.

If, after several seconds, both status indicator lights remain on, or if there are no lights at all, there may be a problem with the lights or the passenger sensing system. See your dealer for service.

⚠ Warning

If the airbag readiness light ever comes on and stays on, it means that something may be wrong with the airbag system. To help avoid injury to yourself or others, have the vehicle serviced right away. See *Airbag Readiness*

(Continued)

Warning (Continued)

Light on page 5-12 for more information, including important safety information.

Charging System Light

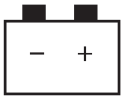

The charging system light comes on briefly when the ignition is turned on, but the engine is not running, as a check to show the light is working. The light turns off when the engine is started. If it does not, have the vehicle serviced by your dealer.

If the light stays on, or comes on while driving, there could be a problem with the electrical charging

Information Provided by DEALER E-PROCESS

Downloaded from www.Manualslib.com manuals search engine

system. Have it checked by your dealer. Driving while this light is on could drain the battery.

If a short distance must be driven with the light on, be sure to turn off all accessories, such as the radio and air conditioner.

Malfunction Indicator Lamp

A computer system called OBD II (On-Board Diagnostics-Second Generation) monitors the operation of the vehicle to ensure emissions are at acceptable levels, helping to maintain a clean environment. The malfunction indicator lamp comes on when the vehicle is placed in ON/RUN, as a check to show it is working. If it does not, have the vehicle serviced by your dealer. See *Ignition Positions on page 9-15*.

If the malfunction indicator lamp comes on while the engine is running, this indicates that the OBD II system has detected a problem and diagnosis and service might be required.

Malfunctions often are indicated by the system before any problem is apparent. Being aware of the light can prevent more serious damage to the vehicle. This system also assists the service technician in correctly diagnosing any malfunction.

⚠ Caution

If the vehicle is continually driven with this light on, the emission controls might not work as well,

(Continued)

Caution (Continued)

the vehicle fuel economy might not be as good, and the engine might not run as smoothly. This could lead to costly repairs that might not be covered by the vehicle warranty.

⚠ Caution

Modifications made to the engine, transmission, exhaust, intake, or fuel system of the vehicle or the replacement of the original tires with other than those of the same Tire Performance Criteria (TPC) can affect the vehicle's emission controls and can cause this light to come on. Modifications to these systems could lead to costly repairs not covered by the vehicle warranty. This could also result in a failure

(Continued)

Information Provided by: DEALER E-PROCESS

Downloaded from www.Manualslib.com manuals search engine

Caution (Continued)

to pass a required Emission Inspection/Maintenance test. See *Accessories and Modifications on page 10-2*.

This light comes on during a malfunction in one of two ways:

Light Flashing: A misfire condition has been detected. A misfire increases vehicle emissions and could damage the emission control system on the vehicle. Diagnosis and service might be required.

To prevent more serious damage to the vehicle:

- Reduce vehicle speed.
- Avoid hard accelerations.
- Avoid steep uphill grades.
- If towing a trailer, reduce the amount of cargo being hauled as soon as it is possible.

If the light continues to flash, find a safe place to stop and park the vehicle. Turn the vehicle off, wait at least 10 seconds, and restart the engine. If the light is still flashing, follow the previous steps and see your dealer for service as soon as possible.

Light On Steady: An emission control system malfunction has been detected on the vehicle. Diagnosis and service might be required.

The following may correct an emission control system malfunction:

- Check that the fuel cap is fully installed. See *Filling the Tank on page 9-38*. The diagnostic system can determine if the fuel cap has been left off or improperly installed. A loose or missing fuel cap allows fuel to evaporate into the atmosphere. A few driving trips with the cap properly installed should turn the light off.
- Check that good quality fuel is used. Poor fuel quality causes the engine not to run as efficiently as designed and may cause stalling after start-up, stalling when the vehicle is changed into gear, misfiring, hesitation on acceleration, or stumbling on acceleration. These conditions might go away once the engine is warmed up.

If one or more of these conditions occurs, change the fuel brand used. It may require at least one full tank of the proper fuel to turn the light off.

See *Recommended Fuel on page 9-36*.

If none of the above have made the light turn off, your dealer can check the vehicle. The dealer has the proper test equipment and diagnostic tools to fix any mechanical or electrical problems that might have developed.

Information Provided by: DEALER E-PROCESS

Downloaded from www.Manualslib.com manuals search engine

Emissions Inspection and Maintenance Programs

Depending on where you live, your vehicle may be required to participate in an emission control system inspection and maintenance program. For the inspection, the emission system test equipment will likely connect to the vehicle's Data Link Connector (DLC).

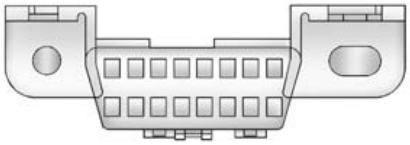

The DLC is under the instrument panel to the left of the steering wheel. See your dealer if assistance is needed.

The vehicle may not pass inspection if:

- The malfunction indicator lamp is on with the engine running, or if the light does not come on when the ignition is turned to ON/RUN while the engine is off. See your dealer for assistance in verifying proper operation of the malfunction indicator lamp.
- The OBD II (On-Board Diagnostics) system determines that critical emission control systems have not been completely diagnosed. The vehicle would be considered not ready for inspection. This can happen if the 12-volt battery has recently been replaced or run down. The diagnostic system is designed to evaluate critical emission control systems during normal driving. This can take several days of routine driving. If this has been done and the vehicle still does not pass the inspection for lack of OBD II system readiness, your dealer can prepare the vehicle for inspection.

Service Vehicle Soon Light

The service vehicle soon light comes on if a condition exists that may require the vehicle to be taken in for service.

If the light comes on, take the vehicle to your dealer for service as soon as possible.

Brake System Warning Light

The vehicle brake system consists of two hydraulic circuits. If one circuit is not working, the remaining circuit can still work to stop the vehicle. For normal braking performance, both circuits need to be working

Information Provided by: DEALER E-PROCESS

Downloaded from www.Manualslib.com manuals search engine

Metric

English

The brake indicator light should come on briefly as the engine is started. If it does not come on have the vehicle serviced by your dealer.

When the ignition is on, the brake system warning light may also come on when the parking brake is set. The light stays on if the parking brake does not fully release. If it stays on after the parking brake is fully released, there is a brake problem. Have the brake system inspected immediately.

⚠ Warning

The brake system might not be working properly if the brake system warning light is on. Driving with the brake system warning light on can lead to a crash. If the light is still on after the vehicle has been pulled off the road and carefully stopped, have the vehicle towed for service.

If the light comes on while driving, a chime sounds. Pull off the road and stop. The pedal might be harder to push or go closer to the floor. It might also take longer to stop. If the light is still on, have the vehicle towed for service. See *Towing the Vehicle on page 10-70*.

Electric Parking Brake Light

The parking brake status light comes on when the brake is applied. If the light continues flashing after the parking brake is released, or while driving, there is a problem with the EPB system. A SERVICE PARKING BRAKE message may also display in the Driver Information Center (DIC). See *Brake System Messages on page 5-29* for more information.

If the light does not come on, or remains flashing, see your dealer.

Information Provided by: DEALER E-PROCESS

Downloaded from www.Manualslib.com manuals search engine

The parking brake warning light should come on briefly when ignition is placed in ON/RUN. If it does not come on then, have it fixed so it will be ready to warn if there is a problem.

If this light comes on, there is a problem with a system on the vehicle that is causing the EPB system to work at a reduced level. The vehicle can still be driven, but should be taken to a dealer as soon as possible. See *Parking Brake on page 9-26*.

Antilock Brake System (ABS) Warning Light

This light should come on briefly when the vehicle is in ON/RUN. If it does not come on, have the vehicle serviced by your dealer.

If the ABS warning light stays on longer than a few seconds after the vehicle is in ON/RUN, or comes on and stays on while driving, try resetting the system. To reset the system:

1. While driving, pull over when it is safe to do so.
2. Place the vehicle in P (Park).
3. Turn the vehicle off.
4. Restart the vehicle.

If the ABS warning light remains on after resetting the system or comes on again while driving, the vehicle needs service. If the ABS warning light is on, but the regular brake system warning light is not on, the antilock brakes are not working properly, but the regular brakes are still functioning. Have the vehicle serviced right away. If both brake lights are on, the vehicle does not have antilock brakes, and there is a problem with the regular brakes as well. Have the vehicle towed for service. See *Towing the Vehicle on page 10-70*.

Information Provided by: DEALER E-PROCESS

Downloaded from www.Manualslib.com manuals search engine

All-Wheel-Drive Light

For vehicles with the All-Wheel-Drive light, it comes on briefly when the ignition is turned to ON/RUN.

If it does not, have the vehicle serviced by your dealer. If the system is working normally, the indicator light then goes off.

This light comes on when there is a malfunction in the All-Wheel-Drive (AWD) system.

This light flashes when the AWD system is temporarily disabled.

For more information see *All-Wheel Drive on page 9-25*.

This light comes on when the compact spare tire is installed. See *Compact Spare Tire on page 10-65* for more information.

Power Steering Warning Light

This light comes on briefly when the ignition is turned to ON/RUN as a check to show it is working.

If it does not come on have the vehicle serviced by your dealer.

If this light stays on, or comes on while driving, the system may not be working. If this happens, see your dealer for service.

StabiliTrak® Indicator Light

The StabiliTrak light comes on briefly as the engine is started. If it does not come on, have the vehicle serviced by your dealer.

This light flashes while the StabiliTrak system or the Traction Control System (TCS) is working. The light comes on when there is a problem with the StabiliTrak system. See *Traction Control/Electronic Stability Control on page 9-28*.

Information Provided by: DEALER E-PROCESS

Downloaded from www.Manualslib.com manuals search engine

Traction Control System (TCS) Warning Light

This light comes on briefly as the engine is started. If it does not come on, have the vehicle serviced by your dealer.

It also comes on when the Traction Control System (TCS) has been turned off. See *Traction Control/ Electronic Stability Control on page 9-28*.

Engine Coolant Temperature Warning Light

This light comes on briefly while starting the vehicle.

If it does not, have the vehicle serviced by the dealer. If the system is working normally the indicator light goes off.

⚠ Caution

The engine coolant temperature warning light indicates that the vehicle has overheated. Driving with this light on can damage the engine and it may not be covered by the vehicle warranty. See *Engine Overheating on page 10-18*.

The engine coolant temperature warning light comes on when the engine has overheated.

If this happens, pull over and turn off the engine as soon as possible. See *Engine Overheating on page 10-18*.

Information Provided by: DEALER E-PROCESS

Downloaded from www.Manualslib.com manuals search engine

Tire Pressure Light

For vehicles with the Tire Pressure Monitor System (TPMS), this light comes on briefly when the engine is started. It provides information about tire pressures and the TPMS.

When the Light Is On Steady

This indicates that one or more of the tires are significantly underinflated.

A Driver Information Center (DIC) tire pressure message may also display. See *Tire Messages on page 5-34*. Stop as soon as possible, and inflate the tires to the pressure value shown on the Tire and Loading Information label. See *Tire Pressure on page 10-44*.

When the Light Flashes First and Then Is On Steady

If the light flashes for about a minute and then stays on, there may be a problem with the TPMS. If the problem is not corrected, the light will come on at every ignition cycle. See *Tire Pressure Monitor Operation on page 10-47*.

Fuel Economy Light

For vehicles with the fuel economy mode, this light comes on when the eco (economy) button, located on the center console near the shift lever, is pressed. Press the button again to turn off the light and exit the fuel economy mode.

See *Fuel Economy Mode on page 9-24* for more information.

Low Fuel Warning Light

The low fuel warning light comes on briefly when the vehicle is started.

This light also comes on when the fuel level is low. When fuel is added, the light should go off. If it does not, have the vehicle serviced.

Security Light

The security light should come on briefly as the engine is started. If the system is working normally, the

Information Provided by: DEALER E-PROCESS

Downloaded from www.Manualslib.com manuals search engine

indicator light turns off. If it does not come on, have the vehicle serviced by your dealer.

If the light stays on and the engine does not start, there could be a problem with the theft-deterrent system.

This light is also used to indicate the status of the anti-theft alarm system when the ignition is turned off. The light will flash rapidly if the alarm system is arming and one or more of the monitored entry points is not closed. The light will stay on if the alarm is arming and all entry points are closed.

For information regarding this light and the vehicle's security system, see *Vehicle Alarm System on page 2-9*.

Reduced Engine Power Light

The reduced engine power light should come on briefly as the engine is started. If it does not come on, have the vehicle serviced by your dealer.

This light, along with the malfunction indicator lamp, displays when a noticeable reduction in the vehicle's performance occurs.

The vehicle can be driven at a reduced speed when the reduced engine power light is on but acceleration and speed might be reduced. If this light stays on, see your dealer as soon as possible for diagnosis and repair.

High-Beam On Light

The high-beam on light comes on when the high-beam headlamps are in use.

See *Headlamp High/Low-Beam Changer on page 6-2* for more information.

Front Fog Lamp Light

The fog lamp light comes on when the fog lamps are in use.

Information Provided by: DEALER E-PROCESS

Downloaded from www.Manualslib.com manuals search engine

The light goes out when the fog lamps are turned off. See *Fog Lamps on page 6-4* for more information.

Low Washer Fluid Warning Light

The low washer fluid warning light comes on when the windshield washer fluid is low. See *Washer Fluid on page 10-20* for more information.

Cruise Control Light

This light comes on when the cruise control is set.

This light goes out when the cruise control is canceled. See *Cruise Control on page 9-30*.

Door Ajar Light

This light comes on when a door is open or not securely latched. Before driving, check that all doors are properly closed.

Gate Ajar Light

If the gate ajar light comes on, the liftgate is not completely closed. Driving with the liftgate open can cause carbon monoxide (CO) to enter the vehicle.

See *Engine Exhaust on page 9-20* for more information.

Information Provided by: DEALER E-PROCESS

Downloaded from www.Manualslib.com manuals search engine

Information Displays

Driver Information Center (DIC)

The vehicle has a Driver Information Center (DIC).

All information appears in the DIC display in the instrument cluster.

The DIC comes on when the ignition is on. After a short delay, the DIC displays the information that was last displayed before the engine was turned off.

The DIC displays trip, fuel, and vehicle system information, and warning messages if a system problem is detected.

The DIC also displays the compass direction, outside air temperature, and shift position indicator at the top of the DIC display. If there is a problem with the system that controls the temperature display, the numbers will be replaced with dashes. If this occurs, have the vehicle serviced by your dealer. If an abnormal temperature reading is displayed for an extended period of time, consult your dealer. Under certain circumstances, especially when the engine is idling, a delay in updating the temperature display is normal.

See *Compass on page 5-4* and *Automatic Transmission on page 9-21*.

The DIC has different displays which can be accessed by pressing the DIC buttons on the instrument panel, below the exterior lamps control.

DIC Buttons

The buttons are the trip/fuel, vehicle information, customization, and set/reset buttons. The button functions are detailed in the following pages.

(Trip/Fuel): Press this button to display the odometer, trip odometer, fuel range, average economy, fuel used, and elapsed time. Some vehicles also display instantaneous economy. The compass and outside temperature will also be shown in the display. The temperature will be shown in °C or °F depending on the units selected.

(Vehicle Information): Press this button to display the oil life, rear park assist, units, tire pressure readings and tire pressure sensor learning for vehicles with the Tire Pressure Monitor System (TPMS), compass zone setting, compass recalibration on vehicles with this feature, coolant temperature, and battery voltage.

Information Provided by: DEALER E-PROCESS

Downloaded from www.Manualslib.com manuals search engine

(Customization): Press this button to customize the feature settings on the vehicle. See *Vehicle Personalization on page 5-36* for more information.

✓ **(Set/Reset):** Press this button to set or reset certain functions and to turn off or acknowledge messages on the DIC.

Trip/Fuel Menu Items

(Trip/Fuel): Press this button to scroll through the following menu items:

Odometer

Press until ODOMETER displays. This display shows the distance the vehicle has been driven in either kilometers (km) or miles (mi). Pressing the trip odometer reset stem will also display the odometer.

To switch between metric and English measurements, see “Units” later in this section.

Trip Odometer

Press until TRIP A or TRIP B displays. This display shows the current distance traveled in either kilometers (km) or miles (mi) since the last reset for the trip odometer. Pressing the trip odometer reset stem will also display the trip odometer.

Each trip odometer can be reset to zero separately by pressing ✓ while the trip odometer is displayed. You can also reset the trip odometer while it is displayed by pressing and holding the trip odometer reset stem.

Fuel Range

Press until RANGE displays. This display shows the approximate number of remaining kilometers (km) or miles (mi) the vehicle can be driven without refueling. This display will show LOW if the fuel level is low.

The fuel range estimate is based on an average of the vehicle's fuel economy over recent driving history and the amount of fuel remaining in the fuel tank. This estimate will change if driving conditions change. For example, if driving in traffic and making frequent stops, this display may read one number, but if the vehicle is driven on a freeway, the number may change even though the same amount of fuel is in the fuel tank. This is because different driving conditions produce different fuel economies. Generally, freeway driving produces better fuel economy than city driving. Fuel range cannot be reset.

If the vehicle is low on fuel, the FUEL LEVEL LOW message will be displayed. See “FUEL LEVEL LOW” under *Fuel System Messages on page 5-32*.

Information Provided by: DEALER E-PROCESS

Downloaded from www.Manualslib.com manuals search engine

Average Fuel Economy

Press until AVERAGE FUEL ECONOMY displays. This display shows the approximate average liters per 100 kilometers (L/100 km) or kilometers per liter (km/L) or miles per gallon (mpg). This number is calculated based on the number of L/100 km (km/L) (mpg) recorded since the last time this menu item was reset. To reset the AVERAGE FUEL ECONOMY, press and hold ✓. The display will show zero.

Fuel Used

Press until FUEL USED displays. This display shows the number of liters (L) or gallons (gal) of fuel used since the last reset of this menu item. To reset the fuel used information, press and hold ✓ while FUEL USED is displayed.

Elapsed Time

Press until ELAPSED TIME displays. This display can be used as a timer.

To start the timer, press the set/reset button while ELAPSED TIME is displayed. The display will show the amount of time that has passed since the timer was last reset, not including time the ignition is off. Time will continue to be counted as long as the ignition is on, even if another display is being shown on the DIC. The timer will record up to 99 hours, 59 minutes and 59 seconds (99:59:59) after which the display will return to zero.

To stop the timer, press ✓ briefly while ELAPSED TIME is displayed.

To reset the timer to zero, press and hold ✓ while ELAPSED TIME is displayed.

Instantaneous Fuel Economy

If the vehicle has this display, press until INSTANT FUEL ECONOMY displays. This display shows the current fuel economy at a particular moment and will change frequently as driving conditions change. This display shows the instantaneous fuel economy in liters per 100 kilometers (L/100 km) or miles per gallon (mpg). Unlike average fuel economy, this display cannot be reset.

Blank Display

This display shows no information.

Vehicle Information Menu Items

(Vehicle Information): Press this button to scroll through the following menu items:

Oil Life

Press until OIL LIFE REMAINING displays. This display shows an estimate of the oil's remaining useful life. If you see 99% OIL LIFE REMAINING on the display, that means 99% of the current oil life remains. The engine oil life system will alert you to change the oil on a schedule consistent with the driving conditions.

Information Provided by: DEALER E-PROCESS

Downloaded from www.Manualslib.com manuals search engine

When the remaining oil life is low, the CHANGE ENGINE OIL SOON message will appear on the display. See “CHANGE ENGINE OIL SOON” under *Engine Oil Messages on page 5-31*. You should change the oil as soon as you can. See *Engine Oil on page 10-8*. In addition to the engine oil life system monitoring the oil life, additional maintenance is recommended in the Maintenance Schedule in this manual. See *Maintenance Schedule on page 11-2* for more information. Whenever the oil is changed, the Oil Life System will need to be reset. To reset the system through the DIC, press and hold ✓ while this display is shown. When the system is reset, the display will show 100% OIL LIFE REMAINING.

Park Assist

If the vehicle has the Ultrasonic Rear Parking Assist (URPA) system, press 🚗i until PARK ASSIST displays. This display allows the system to be turned on or off. Once in this display, press ✓ to select between ON or OFF. The URPA system automatically turns back on after each vehicle start. When the URPA system is turned off and the vehicle is shifted out of P (Park), the DIC will display the PARK ASSIST OFF message as a reminder that the system has been turned off. See *Object Detection System Messages on page 5-33* and *Ultrasonic Parking Assist on page 9-32* for more information.

Units

Press 🚗i until UNITS displays. This display allows you to select between metric or English units of measurement. Once in this display, press ✓ to select between METRIC or ENGLISH units. All of the vehicle information will then be displayed in the unit of measurement selected.

Coolant Temperature

Press 🚗i until the coolant temperature is displayed. The temperature will be shown in °C or ° F depending on the units selected.

If the coolant temperature display shows dashes instead of a value, there may be a problem with the vehicle. If this happens often, see your dealer for service.

Battery Voltage

Press 🚗i until the battery voltage is displayed.

If the battery voltage display shows dashes instead of a value, there may be a problem with the vehicle. If this happens often, see your dealer for service.

Tire Pressure

If the vehicle has the Tire Pressure Monitor System (TPMS), the pressure for each tire can be viewed in the DIC. The tire pressure will be shown in either kilopascals (kPa) or pounds per square inch (psi). Press

Information Provided by: DEALER E-PROCESS

Downloaded from www.Manualslib.com manuals search engine

until the DIC displays FRONT TIRES kPa (PSI) LEFT ## RIGHT ##. Press again until the DIC displays REAR TIRES kPa (PSI) LEFT ## RIGHT ##.

If a low or high tire pressure condition is detected by the system while driving, a message advising you to check the pressure in a specific tire will appear in the display. See *Tire Pressure on page 10-44* and *Tire Messages on page 5-34* for more information.

If the tire pressure display shows dashes instead of a value, there may be a problem with the vehicle. If this consistently occurs, see your dealer for service.

For information on relearning tire positions see “TPMS Sensor Matching Process” under *Tire Pressure Monitor Operation on page 10-47*.

Compass Zone Setting

This display allows for setting the compass zone. See *Compass on page 5-4* for more information.

Compass Recalibration

This display allows for calibrating the compass. See *Compass on page 5-4* for more information.

Blank Display

This display shows no information.

Vehicle Messages

Messages are displayed on the DIC to notify the driver that the status of the vehicle has changed and that some action may be needed by the driver to correct the condition. Multiple messages may appear one after another.

Some messages may not require immediate action, but you can press any of the DIC buttons, or the trip odometer reset stem on the instrument cluster, to acknowledge that you received the messages and to clear them from the display.

Some messages cannot be cleared from the DIC display because they are more urgent. These messages require action before they can be cleared. Take any messages that appear on the display seriously and remember that clearing the messages will only make the messages disappear, not correct the problem.

Information Provided by: DEALER E-PROCESS

Downloaded from www.Manualslib.com manuals search engine

You will find the possible messages that can be displayed and some information about them grouped by subject in the following information.

Brake System Messages

PARK BRAKE RELEASED

For vehicles with the Electric Parking Brake, this message displays when the parking brake has been released from the set position. See *Parking Brake on page 9-26* for more information.

PARK BRAKE SET

For vehicles with the Electric Parking Brake, this message displays when the parking brake has been applied to the set position. See *Parking Brake on page 9-26* for more information.

RELEASE PARK BRAKE SWITCH

For vehicles with the Electric Parking Brake, this message displays if the Park Brake switch is pulled while the vehicle is moving. See *Parking Brake on page 9-26* for more information.

SERVICE BRAKE SYSTEM

This message displays along with the brake system warning light if there is a problem with the brake system or when the brake fluid level is low. See *Brake System Warning Light on page 5-16*. Have the brake system serviced by your dealer as soon as possible.

SERVICE PARKING BRAKE

For vehicles with the Electric Parking Brake, this message displays if a problem is detected with the electric parking brake system. See *Parking Brake on page 9-26* for more information.

STEP ON BRAKE TO RELEASE PARK BRAKE

For vehicles with the Electric Parking Brake, this message displays if you try to release the parking brake without first pressing the brake pedal. See *Parking Brake on page 9-26* for more information.

Compass Messages

CALIBRATING COMPASS: TURN IN CIRCLES

This message displays when calibrating the compass. Drive the vehicle in circles at less than 8 km/h (5 mph) to complete the calibration. See *Compass on page 5-4*.

COMPASS CALIBRATION COMPLETE

This message displays when the compass calibration is complete. See *Compass on page 5-4*.

Information Provided by: DEALER E-PROCESS

Downloaded from www.Manualslib.com manuals search engine

Cruise Control Messages

CRUISE SET TO XXX

This message will display when the cruise control is set and it will show the speed it was set to. See *Cruise Control on page 9-30* for more information.

Door Ajar Messages

DRIVER DOOR OPEN

This message will display when the driver door is not closed properly. Close the door completely.

HOOD OPEN

If the vehicle has the remote start feature, this message displays along with a chime when the hood is not closed properly. Make sure that the hood is closed completely. See *Hood on page 10-3*. This message displays while the ignition is in ON/RUN. Press any of the DIC buttons to acknowledge this message and to clear it from the screen. This message continues to display for two seconds if it has not been acknowledged when the engine is turned off. The message comes back on for two seconds if it has been acknowledged, but the condition still exists when the engine is turned off. If the condition still exists, the message reappears when the engine is turned on.

LIFTGATE OPEN

This message will display when the liftgate is not closed properly. Close the liftgate completely.

PASSENGER DOOR OPEN

This message will display when the passenger doors are not closed properly. Close the door completely.

Engine Cooling System Messages

ENGINE HOT A/C (Air Conditioning) OFF

This message displays when the engine coolant becomes hotter than the normal operating temperature. To avoid added strain on a hot engine, the air conditioning compressor is automatically turned off. When the coolant temperature returns to normal, the A/C operation automatically resumes. You can continue to drive the vehicle.

ENGINE OVERHEATED IDLE ENGINE

This message displays when the engine coolant temperature is too hot. Stop and allow the vehicle to idle until it cools down.

Information Provided by: DEALER E-PROCESS

Downloaded from www.Manualslib.com manuals search engine

ENGINE OVERHEATED STOP ENGINE

This message displays along with a continuous chime when the engine has overheated. Stop and turn the engine off immediately to avoid severe engine damage. See *Engine Overheating on page 10-18*.

Engine Oil Messages

CHANGE ENGINE OIL NOW

This message displays when service is urgently required. This indicates that the oil life remaining is less than one percent and the oil cannot work correctly to avoid engine wear or damage. See your dealer. See *Engine Oil on page 10-8* and *Maintenance Schedule on page 11-2*.

Acknowledging this message will not reset the OIL LIFE REMAINING display. That must be done at the OIL LIFE screen. See “Oil Life” under *Driver Information Center (DIC) on page 5-24* and *Engine Oil Life System on page 10-10*.

CHANGE ENGINE OIL SOON

This message displays when oil life remaining is between one and five percent and service is required for the vehicle. See your dealer. See *Engine Oil on page 10-8* and *Maintenance Schedule on page 11-2*.

Acknowledging this message will not reset the OIL LIFE REMAINING display. That must be done at the OIL LIFE screen. See “Oil Life” under *Driver Information Center (DIC) on page 5-24* and *Engine Oil Life System on page 10-10*.

ENGINE OIL LOW — ADD OIL

On some vehicles, this message displays when the engine oil level may be too low. Check the oil level before filling to the recommended level. If the oil is not low and this message remains on, take the vehicle to your dealer for service. See *Engine Oil on page 10-8*.

OIL PRESSURE LOW STOP ENGINE

⚠ Caution

If you drive the vehicle while the engine oil pressure is low, severe engine damage may occur. Stop the vehicle as soon as possible. Do not drive the vehicle until the cause of the low oil pressure is corrected. See *Engine Oil on page 10-8*.

This message displays when the vehicle's engine oil pressure is low.

Stop the vehicle immediately, as engine damage can result from driving a vehicle with low oil

Information Provided by: DEALER E-PROCESS

Downloaded from www.Manualslib.com manuals search engine

pressure. Have the vehicle serviced by your dealer as soon as possible when this message is displayed.

Engine Power Messages

ENGINE POWER IS REDUCED

This message displays when the vehicle's engine power is reduced. Reduced engine power can affect the vehicle's ability to accelerate. If this message is on, but there is no reduction in performance, proceed to your destination. The performance may be reduced the next time the vehicle is driven. The vehicle may be driven at a reduced speed while this message is on, but maximum acceleration and speed may be reduced. Anytime this message stays on, the vehicle should be taken to your dealer for service as soon as possible.

Fuel System Messages

FUEL LEVEL LOW

This message displays when the vehicle is low on fuel. Refill the fuel tank as soon as possible. See *Fuel Gauge on page 5-10* and *Filling the Tank on page 9-38* for more information.

TIGHTEN GAS CAP

This message may display along with the malfunction indicator lamp on the instrument cluster if the vehicle's fuel cap is not tightened properly. See *Malfunction Indicator Lamp on page 5-14*. Reinstall the fuel cap fully. See *Filling the Tank on page 9-38*. The diagnostic system can determine if the fuel cap has been left off or improperly installed. A loose or missing fuel cap allows fuel to evaporate into the atmosphere. A few driving trips with the cap properly installed should turn this light and message off.

Key and Lock Messages

REPLACE REMOTE KEY FOB BATTERY

This message displays if a Remote Keyless Entry (RKE) transmitter battery is low. The battery needs to be replaced in the transmitter. See “Battery Replacement” under *Remote Keyless Entry (RKE) System Operation on page 2-2*.

Lamp Messages

AUTOMATIC LIGHT CONTROL ON

This message displays when the automatic headlamp system is activated by turning the exterior lamps control to AUTO.

AUTOMATIC LIGHT CONTROL OFF

This message displays when the automatic headlamp system has been turned off.

Information Provided by: DEALER E-PROCESS

Downloaded from www.Manualslib.com manuals search engine

Object Detection System Messages

PARK ASST (Assist) BLOCKED SEE OWNERS MANUAL

This message displays if there is something interfering with the park assist system. See *Ultrasonic Parking Assist on page 9-32*.

PARK ASSIST OFF

After the vehicle has been started, this message displays to remind the driver that the URPA system has been turned off. Press the set/reset button or the trip odometer reset stem to acknowledge this message and clear it from the DIC display. For more information see *Ultrasonic Parking Assist on page 9-32*.

SERVICE PARK ASSIST

This message displays if there is a problem with the Ultrasonic Rear Parking Assist (URPA) system. Do not use this system to help you park. See *Ultrasonic Parking Assist on page 9-32*. See your dealer for service.

Ride Control System Messages

SERVICE STABILITRAK

This message displays if there is a problem with the StabiliTrak® system. A warning light also appears on the instrument cluster. See *Traction Control/Electronic Stability Control on page 9-28*.

If this message turns on while you are driving, pull off the road as soon as possible and stop carefully. Try resetting the system by turning the ignition off and then back on. If this message still stays on or turns back on again while you are driving, the vehicle needs service. Have the system inspected by your dealer as soon as possible.

SERVICE TRACTION CONTROL

This message displays when the Traction Control System (TCS) is not functioning properly. A warning light also appears on the instrument cluster. See *Traction Control/ Electronic Stability Control on page 9-28*. Have the TCS serviced by your dealer as soon as possible.

STABILITRAK OFF

If the vehicle has StabiliTrak, this message displays when you turn off the StabiliTrak, or when the stability control has been automatically disabled. To limit wheel spin and realize the full benefits of the stability enhancement system, you should normally leave StabiliTrak on. However, you should turn StabiliTrak off if the vehicle gets stuck in sand, mud, ice, or snow and you want to rock the vehicle to attempt to free it, or if you are driving in extreme off-road conditions and require more wheel spin.

Information Provided by: DEALER E-PROCESS

Downloaded from www.Manualslib.com manuals search engine

See *If the Vehicle Is Stuck on page 9-9*. To turn the StabiliTrak system on or off, see *Traction Control/Electronic Stability Control on page 9-28*.

TRACTION CONTROL OFF

This message displays when the Traction Control System (TCS) turns off. See *Traction Control/Electronic Stability Control on page 9-28*.

This message only displays while the ignition is in ON/RUN and disappears after 10 seconds, unless it is acknowledged or an urgent warning appears.

Any of the following conditions may cause the TCS to turn off:

- The TCS is turned off by pressing the TCS/StabiliTrak button. See *Traction Control/ Electronic Stability Control on page 9-28*.
- The battery is low.
- There is a TCS failure. See your dealer for service.

TRACTION CONTROL ON

This message displays when the Traction Control System (TCS) turns on. See *Traction Control/Electronic Stability Control on page 9-28* for more information.

Airbag System Messages

SERVICE AIR BAG

This message displays when there is a problem with the airbag system. Have the vehicle serviced by your dealer immediately. See *Airbag Readiness Light on page 5-12* for more information.

Service Vehicle Messages

SERVICE A/C (Air Conditioning) SYSTEM

This message displays when there is a problem detected in the air conditioning system. Have the vehicle serviced by your dealer.

SERVICE VEHICLE SOON

This message displays when a non-emissions-related malfunction occurs. Have the vehicle serviced by your dealer as soon as possible.

Tire Messages

CHECK TIRE PRESSURE

On vehicles with the Tire Pressure Monitor System (TPMS), this message displays when the pressure in one or more of the vehicle's tires needs to be checked. This message also displays LEFT FRONT, RIGHT FRONT, LEFT REAR, or RIGHT REAR to indicate which tire needs to be checked. You can receive more than one tire pressure message at a time. To read the other messages that may have been sent at the same time, press the set/reset button. If a tire pressure message appears on the DIC, stop as soon as you can. Have the tire pressures checked and set to those shown on the Tire and Loading Information label.

Information Provided by: DEALER E-PROCESS

Downloaded from www.Manualslib.com manuals search engine

See *Tires on page 10-37*, *Vehicle Load Limits on page 9-10*, and *Tire Pressure on page 10-44*. The DIC also shows the tire pressure values. See *Driver Information Center (DIC) on page 5-24*. If the tire pressure is low, the low tire pressure warning light comes on. See *Tire Pressure Light on page 5-21*.

SERVICE TIRE MONITORING SYSTEM

On vehicles with the Tire Pressure Monitor System (TPMS), this message displays if a part on the TPMS is not working properly. The tire pressure light also flashes and then remains on during the same ignition cycle. See *Tire Pressure Light on page 5-21*. Several conditions may cause this message to appear. See *Tire Pressure Monitor Operation on page 10-47* for more information. If the warning comes on and stays on, there may be a problem with the TPMS. See your dealer.

TIRE LEARNING ACTIVE

On vehicles with the Tire Pressure Monitor System (TPMS), this message displays when the TPMS is re-learning the tire positions on the vehicle. The tire positions must be re-learned after rotating the tires or after replacing a tire or sensor. See *Tire Rotation on page 10-50*, *Tire Pressure Monitor System on page 10-46*, and *Tire Pressure on page 10-44* for more information.

Transmission Messages

CHANGE TRANSMISSION FLUID

⚠ Caution

Use of the incorrect automatic transmission fluid may damage the vehicle, and the damages may not be covered by the vehicle warranty. Always use the

(Continued)

Caution (Continued)

automatic transmission fluid listed in *Recommended Fluids and Lubricants on page 11-12*.

This message displays when the life of the transmission fluid has expired and it should be changed. See *Maintenance Schedule on page 11-2* and *Recommended Fluids and Lubricants on page 11-12* for the proper fluid and change intervals.

SERVICE TRANSMISSION

This message displays when there is a problem with the transmission. See your dealer for service.

Information Provided by: DEALER E-PROCESS

Downloaded from www.Manualslib.com manuals search engine

TRANSMISSION HOT IDLE ENGINE

> **⚠ Caution**
>
> Do not drive the vehicle while the transmission fluid is overheating, or the transmission can be damaged. This could lead to costly repairs that would not be covered by the warranty.

This message displays along with a chime if the transmission fluid in the vehicle gets hot. Driving with the transmission fluid temperature high can cause damage to the vehicle. Stop the vehicle and let it idle to allow the transmission to cool. This message clears and the chime stops when the fluid temperature reaches a safe level.

Vehicle Reminder Messages

ICE POSSIBLE DRIVE WITH CARE

This message displays when the outside air temperature is cold enough to create icy road conditions. Adjust your driving accordingly.

TURN SIGNAL ON

This message displays and a chime sounds as a reminder to turn off the turn signal if you drive the vehicle for more than about 1.2 km (0.75 mile) with a turn signal on. See *Turn and Lane-Change Signals on page 6-3* for more information.

Vehicle Personalization

The vehicle may have customization capabilities that allow you to program certain features to one preferred setting. Customization features can only be programmed to one setting on the vehicle and cannot be programmed to a preferred setting for two different drivers.

All of the customization options may not be available on the vehicle. Only the options available will be displayed on the DIC.

The default settings for the customization features were set when the vehicle left the factory, but may have been changed from their default state since then.

The customization preferences are automatically recalled.

To change customization preferences, use the following procedure.

Information Provided by: DEALER E-PROCESS

Downloaded from www.Manualslib.com manuals search engine

Entering the Feature Settings Menu

1. Turn the ignition on and place the vehicle in P (Park).

   To avoid excessive drain on the battery, it is recommended that the headlamps are turned off.

2. Press to scroll through the available customizable options.

Feature Settings Menu Items

The following are customization features that allow you to program settings to the vehicle:

DISPLAY IN ENGLISH

This feature will only display if a language other than English has been set. This feature allows you to change the language in which the DIC messages appear to English.

Press until the PRESS ✓ TO DISPLAY IN ENGLISH screen appears on the DIC display. Press ✓ once to display all DIC messages in English.

DISPLAY LANGUAGE

This feature allows you to select the language in which the DIC messages will appear.

Press until the PRESS ✓ TO SET DISPLAY LANGUAGE screen appears on the DIC display. Press ✓ once to access the settings for this feature. Then press to scroll through the following settings:

ENGLISH (default): All messages will appear in English.

FRANCAIS: All messages will appear in French.

ESPANOL: All messages will appear in Spanish.

PORTUGUESE: All messages will appear in Portuguese.

NO CHANGE: No change will be made to this feature. The current setting will remain.

To select a setting, press ✓ while the desired setting is displayed on the DIC.

AUTO DOOR LOCK

This feature allows you to select when the vehicle's doors will automatically lock. See *Automatic Door Locks on page 2-6*.

Press until PRESS ✓ TO SET AUTO DOOR LOCK appears on the DIC display. Press ✓ once to access the settings for this feature. Then press to scroll through the following settings:

SHIFT OUT OF PARK (default): The doors will automatically lock when the vehicle is shifted out of P (Park).

AT VEHICLE SPEED: The doors will automatically lock when the vehicle speed is above 13 km/h (8 mph) for three seconds.

NO CHANGE: No change will be made to this feature. The current setting will remain.

To select a setting, press ✓ while the desired setting is displayed on the DIC.

Information Provided by: DEALER E-PROCESS

Downloaded from www.Manualslib.com manuals search engine

AUTO DOOR UNLOCK

This feature allows you to select whether or not to turn off the automatic door unlocking feature. It also allows you to select which doors and when the doors will automatically unlock. See *Automatic Door Locks on page 2-6*.

Press ☑ until PRESS ✓ TO SET AUTO DOOR UNLOCK appears on the DIC display. Press ✓ once to access the settings for this feature. Then press ☑ to scroll through the following settings:

OFF: None of the doors will automatically unlock.

DRIVER DOOR AT KEY OUT: Only the driver door will unlock when the key is taken out of the ignition.

DRIVER DOOR IN PARK: Only the driver door will unlock when the vehicle is shifted into P (Park).

ALL DOORS AT KEY OUT: All of the doors will unlock when the key is taken out of the ignition.

ALL DOORS IN PARK (default): All of the doors will unlock when the vehicle is shifted into P (Park).

NO CHANGE: No change will be made to this feature. The current setting will remain.

To select a setting, press ✓ while the desired setting is displayed on the DIC.

REMOTE DOOR LOCK

This feature allows you to select the type of feedback you will receive when locking the vehicle with the Remote Keyless Entry (RKE) transmitter. You will not receive feedback when locking the vehicle with the RKE transmitter if the doors are open. See *Remote Keyless Entry (RKE) System Operation on page 2-2*.

Press ☑ until PRESS ✓ TO SET REMOTE DOOR LOCK appears on the DIC display. Press ✓ once to access the settings for this feature. Then press ☑ to scroll through the following settings:

VERIFICATION OFF: There will be no feedback when you press 🔒 on the RKE transmitter.

VERIFICATION LIGHTS ONLY: The exterior lamps will flash when you press 🔒 on the RKE transmitter.

VERIFICATION HORN ONLY: The horn will sound on the second press of 🔒 on the RKE transmitter.

VERIFICATION HORN & LIGHTS (default): The exterior lamps will flash when you press 🔒 on the RKE transmitter, and the horn will sound when 🔒 is pressed again within five seconds of the previous command.

Information Provided by: DEALER E-PROCESS

Downloaded from www.Manualslib.com manuals search engine

VERIFICATION NO CHANGE: No change will be made to this feature. The current setting will remain.

To select a setting, press ✓ while the desired setting is displayed on the DIC.

REMOTE DOOR UNLOCK

This feature allows you to select the type of feedback you will receive when unlocking the vehicle with the Remote Keyless Entry (RKE) transmitter. You will not receive feedback when unlocking the vehicle with the RKE transmitter if the doors are open. See *Remote Keyless Entry (RKE) System Operation on page 2-2*.

Press until PRESS ✓ TO SET REMOTE DOOR UNLOCK appears on the DIC display. Press ✓ once to access the settings for this feature. Then press to scroll through the following settings:

VERIF LIGHTS OFF: The exterior lamps will not flash when you press on the RKE transmitter.

VERIF LIGHTS ON (default): The exterior lamps will flash when you press on the RKE transmitter.

VERIF NO CHANGE: No change will be made to this feature. The current setting will remain.

To select a setting, press ✓ while the desired setting is displayed on the DIC.

DELAY DOOR LOCK

This feature allows you to select whether or not the locking of the vehicle's doors will be delayed. When locking the doors with the power door lock switch and a door is open, this feature will delay locking the doors until five seconds after the last door is closed. You will hear three chimes to signal that the delayed locking feature is in use. The key must be out of the ignition for this feature to work. You can temporarily override delayed locking by pressing the power door lock switch twice or the lock button on the RKE transmitter twice. See *Delayed Locking on page 2-6*.

Press until PRESS ✓ TO SET DELAY DOOR LOCK appears on the DIC display. Press ✓ once to access the settings for this feature. Then press to scroll through the following settings:

OFF: There will be no delayed locking of the vehicle's doors.

ON (default): The doors will not lock until five seconds after the last door is closed.

NO CHANGE: No change will be made to this feature. The current setting will remain.

Information Provided by: DEALER E-PROCESS

Downloaded from www.Manualslib.com manuals search engine

To select a setting, press ✓ while the desired setting is displayed on the DIC.

EXIT LIGHTING

This feature allows you to select the amount of time you want the exterior lamps to remain on when it is dark enough outside. This happens after the key is turned from ON/RUN to LOCK/OFF.

Press until PRESS ✓ TO SET EXIT LIGHTING appears on the DIC display. Press ✓ once to access the settings for this feature. Then press to scroll through the following settings:

OFF: The exterior lamps will not turn on.

10 SECONDS (default): The exterior lamps will stay on for 10 seconds.

30 SECONDS: The exterior lamps will stay on for 30 seconds.

2 MINUTES: The exterior lamps will stay on for two minutes.

NO CHANGE: No change will be made to this feature. The current setting will remain.

To select a setting, press ✓ while the desired setting is displayed on the DIC.

APPROACH LIGHTING

This feature allows you to select whether or not to have the exterior lamps turn on briefly during low light periods after unlocking the vehicle using the Remote Keyless Entry (RKE) transmitter.

Press until PRESS ✓ TO SET APPROACH LIGHTING appears on the DIC display. Press ✓ once to access the settings for this feature. Then press to scroll through the following settings:

OFF: The exterior lamps will not turn on when you unlock the vehicle with the RKE transmitter.

ON (default): If it is dark enough outside, the exterior lamps will turn on briefly when you unlock the vehicle with the RKE transmitter.

The lamps will remain on for 20 seconds or until on the RKE transmitter is pressed, or the vehicle is no longer off. See *Remote Keyless Entry (RKE) System Operation on page 2-2*.

NO CHANGE: No change will be made to this feature. The current setting will remain.

To select a setting, press ✓ while the desired setting is displayed on the DIC.

CHIME VOLUME

This feature allows you to select the volume level of the chime.

Information Provided by: DEALER E-PROCESS

Downloaded from www.Manualslib.com manuals search engine

Press until PRESS ✓ TO SET CHIME VOLUME appears on the DIC display. Press ✓ once to access the settings for this feature. Then press to scroll through the following settings:

NORMAL: The chime volume will be set to a normal level.

LOUD: The chime volume will be set to a loud level.

NO CHANGE: No change will be made to this feature. The current setting will remain.

There is no default for chime volume. The volume will stay at the last known setting.

To select a setting, press ✓ while the desired setting is displayed on the DIC.

REMOTE START

If the vehicle has this feature, it allows you to turn the remote start off or on. The remote start feature allows you to start the engine from outside of the vehicle using the Remote Keyless Entry (RKE) transmitter. See *Remote Vehicle Start on page 2-4*.

Press until PRESS ✓ TO SET REMOTE START appears on the DIC display. Press ✓ once to access the settings for this feature. Then press to scroll through the following settings:

OFF: The remote start feature will be disabled.

ON (default): The remote start feature will be enabled.

NO CHANGE: No change will be made to this feature. The current setting will remain.

To select a setting, press ✓ while the desired setting is displayed on the DIC.

FACTORY SETTINGS

This feature allows you to set all of the customization features back to their factory default settings.

Press until PRESS ✓ TO RESTORE DEFAULTS appears on the DIC display. Press ✓ once to access the settings for this feature. Then press to scroll through the following settings:

RESTORE (default): The customization features will be set to their factory default settings.

NO CHANGE: The customization features will not be set to their factory default settings.

To select a setting, press ✓ while the desired setting is displayed on the DIC.

EXIT FEATURE SETTINGS

This feature allows you to exit the feature settings menu.

Press until PRESS ✓ TO EXIT FEATURE SETTINGS appears in the DIC display. Press ✓ once to exit the menu.

Information Provided by: DEALER E-PROCESS

Downloaded from www.Manualslib.com manuals search engine

If you do not exit, pressing again will return you to the beginning of the feature settings menu.

Exiting the Feature Settings Menu

The feature settings menu will be exited when any of the following occurs:

- The vehicle is no longer in ON/RUN.
- The or DIC buttons are pressed.
- The end of the feature settings menu is reached and exited.
- A 40-second time period has elapsed with no selection made.

Universal Remote System

See *Radio Frequency Statement on page 13-15*.

Universal Remote System Programming

If equipped, these buttons are in the overhead console.

This system can replace up to three remote control transmitters used to activate devices such as garage door openers, security systems, and home automation devices. These instructions refer to a garage door opener, but can be used for other devices.

Do not use the Universal Remote system with any garage door opener that does not have the stop and reverse feature. This includes any garage door opener model manufactured before April 1, 1982.

Read these instructions completely before programming the Universal Remote system. It may help to have another person assist with the programming process.

Keep the original hand-held transmitter for use in other vehicles as well as for future programming. Erase the programming when vehicle ownership is terminated. See “Erasing Universal Remote System Buttons” later in this section.

To program a garage door opener, park outside directly in line with and facing the garage door opener receiver. Clear all people and objects near the garage door.

Information Provided by: DEALER E-PROCESS

Downloaded from www.Manualslib.com manuals search engine

Make sure the hand-held transmitter has a new battery for quicker and more accurate transmission of the radio-frequency signal.

Programming the Universal Remote System

For questions or help programming the Universal Remote system, call 1-800-355-3515 or see www.homelink.com.

Programming involves time-sensitive actions, and may time out causing the procedure to be repeated.

To program up to three devices:

1. Hold the end of the hand-held transmitter about 3 to 8 cm (1 to 3 in) away from the Universal Remote system buttons with the indicator light in view. The hand-held transmitter was supplied by the manufacturer of the garage door opener receiver.
2. At the same time, press and hold both the hand-held transmitter button and one of the three Universal Remote system buttons to be used to operate the garage door. Do not release either button until the indicator light changes from a slow to a rapid flash. Then release both buttons.

   Some garage door openers may require substitution of Step 2 with the procedure under “Radio Signals for Canada and Some Gate Operators” later in this section.
3. Press and hold the newly programmed Universal Remote system button for five seconds while watching the indicator light and garage door activation.
   - If the indicator light stays on continuously or the garage door moves when the button is pressed, then programming is complete. There is no need to complete Steps 4–6.
   - If the indicator light does not come on or the garage door does not move, a second button press may be required. For a second time, press and hold the newly programmed button for five seconds. If the light stays on or the garage door moves, programming is complete.
   - If the indicator light blinks rapidly for two seconds, then changes to a solid light and the garage door does not move, continue with programming Steps 4–6.

Information Provided by: DEALER E-PROCESS

Downloaded from www.Manualslib.com manuals search engine

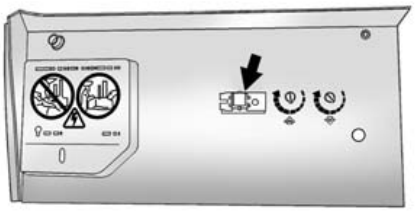

Learn or Smart Button

4. After completing Steps 1–3, locate the Learn or Smart button inside the garage on the garage door opener receiver. The name and color of the button may vary by manufacturer.
5. Press and release the Learn or Smart button. Step 6 must be completed within 30 seconds of pressing this button.
6. Inside the vehicle, press and hold the newly programmed Universal Remote system button for two seconds, then release it. If the garage door does not move or the lamp on the garage door opener receiver does not flash, press and hold the same button a second time for two seconds, then release it. Again, if the door does not move or the garage door lamp does not flash, press and hold the same button a third time for two seconds, then release it.

The Universal Remote system should now activate the garage door.

Repeat the process for programming the two remaining buttons.

Radio Signals for Canada and Some Gate Operators

For questions or programming help, call 1-800-355-3515 or see www.homelink.com.

Canadian radio-frequency laws and some U.S. gate operators require transmitter signals to time out or quit after several seconds of transmission. This may not be long enough for the Universal Remote system to pick up the signal during programming.

If the programming did not work, replace Step 2 under “Programming the Universal Remote System” with the following:

Press and hold the Universal Remote system button while pressing and releasing the hand-held transmitter button every two seconds until the signal has been successfully accepted by the Universal Remote system. The Universal Remote system indicator light will flash slowly at first and then rapidly. Proceed with Step 3 under “Programming the Universal Remote System” to complete.

Information Provided by: DEALER E-PROCESS

Downloaded from www.Manualslib.com manuals search engine

Universal Remote System Operation

Using the Universal Home Remote

Press and hold the appropriate Universal Home Remote button for at least half of a second. The indicator light will come on while the signal is being transmitted.

Erasing Universal Home Remote Buttons

The programmed buttons should be erased when the vehicle is sold or the lease ends.

To erase all programmed buttons on the Universal Home Remote device:

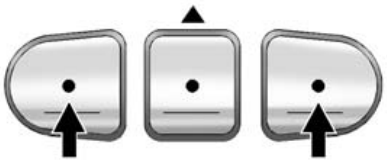

1. Press and hold down the two outside buttons until the indicator light begins to flash, after 20 seconds.
2. Release both buttons.

Reprogramming a Single Universal Home Remote Button

To reprogram any of the three Universal Home Remote buttons, repeat the programming instructions earlier in this section, beginning with Step 2.

For help or information on the Universal Home Remote System, call 1-800-355-3515 or go to www.homelink.com.

Information Provided by:
DEALER E-PROCESS

Downloaded from www.Manualslib.com manuals search engine

✍ NOTES

Information Provided by:
DEALER E-PROCESS

Downloaded from www.Manualslib.com manuals search engine

Lighting

Exterior Lighting
Exterior Lamp Controls 6-1
Headlamp High/Low-Beam Changer 6-2
Flash-to-Pass 6-2
Daytime Running Lamps (DRL) 6-2
Automatic Headlamp System 6-2
Hazard Warning Flashers 6-3
Turn and Lane-Change Signals 6-3
Fog Lamps 6-4

Interior Lighting
Instrument Panel Illumination Control 6-4
Dome Lamps 6-5
Reading Lamps 6-5

Lighting Features
Entry Lighting 6-6
Battery Load Management 6-6
Battery Power Protection 6-6

Exterior Lighting

Exterior Lamp Controls

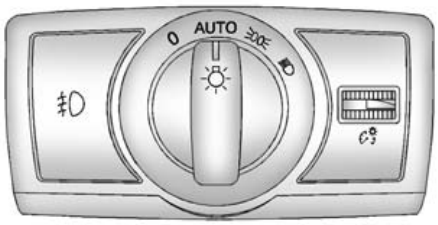

The exterior lamp control is on the instrument panel to the left of the steering wheel.

Turn the control to the following positions:

(Off): Turns off the exterior lamps. The knob returns to the AUTO position after it is released.

AUTO (Automatic): Automatically turns the exterior lamps on and off, depending on outside lighting.

The current status of the AUTO system is displayed in the Driver Information Center (DIC) display. See *Vehicle Reminder Messages on page 5-36*.

(Parking Lamps): Turns on the parking lamps including all lamps, except the headlamps.

(Headlamps): Turns on the headlamps together with the parking lamps and instrument panel lights.

Lamps On Reminder

A warning chime sounds, if the driver door is opened while the ignition is off and the lamps are on.

Wiper-Activated Headlamps

The headlamps and parking lamps turn on automatically if the exterior lamp control is set in the AUTO position and the windshield wipers are turned on and have completed eight wipe cycles.

Information Provided by: DEALER E-PROCESS

Downloaded from www.Manualslib.com manuals search engine

When the ignition is turned off, the wiper-activated headlamps immediately turn off. They also turn off if the windshield wiper control is turned off.

Headlamp High/ Low-Beam Changer

(Headlamp High/Low-Beam Changer): Push the turn signal lever away from you to turn the high beams on.

Pull the lever toward you to return to low beams.

This indicator light turns on in the instrument cluster when the high-beam headlamps are on.

Flash-to-Pass

To flash the high beams, pull the turn signal lever toward you, and release.

Daytime Running Lamps (DRL)

On vehicles equipped with DRL, the low-beam headlamps come on in daylight when all the following conditions are met:

- The engine is running,
- The exterior lamp control is in AUTO, and
- The light sensor determines it is daytime.

Fully functional DRL are required on all vehicles first sold in Canada.

When the DRL are on, the low-beam headlamps will be on. The taillamps, sidemarker lamps, instrument panel lights, and other lamps will not be on.

When the exterior lamp control is turned to the headlamp position, the regular headlamps will come on. The other lamps that come on with the headlamps will also come on.

When the headlamps are turned off, the regular lamps also turn off, and the low-beam headlamps turn on.

The regular headlamp system should be used when needed.

Automatic Headlamp System

When it is dark enough outside, the headlamps come on automatically.

Information Provided by: DEALER E-PROCESS

Downloaded from www.Manualslib.com manuals search engine

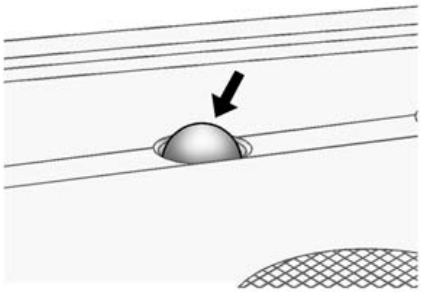

Do not cover the light sensor on top of the instrument panel or the headlamps will come on when they are not needed.

The system may also turn on the headlamps when driving through a parking garage or tunnel.

Lights On with Wipers

If the windshield wipers are activated in daylight with the engine on, and the exterior lamp control is in AUTO, the headlamps, parking lamps, and other exterior lamps come on. The transition time for the lamps coming on varies based on wiper speed. When the wipers are not operating, these lamps turn off. Move the exterior lamp control to ◯ or ≋ to disable this feature.

Hazard Warning Flashers

⚠ (Hazard Warning Flasher): Press this button to make the front and rear turn signal lamps flash on and off. This warns others that you are having trouble.

Press ⚠ again to turn the flashers off.

Turn and Lane-Change Signals

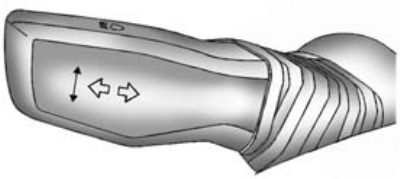

Move the lever all the way up or down to signal a turn.

An arrow on the instrument cluster flashes in the direction of the turn or lane change.

Raise or lower the lever until the arrow starts to flash and then release, to signal a lane change. The turn signal flashes automatically three times.

The lever returns to its starting position whenever it is released.

Information Provided by: DEALER E-PROCESS

Downloaded from www.Manualslib.com manuals search engine

If after signaling a turn or lane change the arrow flashes rapidly or does not come on, a signal bulb may be burned out.

Have any burned out bulbs replaced. If a bulb is not burned out, check the fuse. See *Instrument Panel Fuse Block on page 10-34*.

Fog Lamps

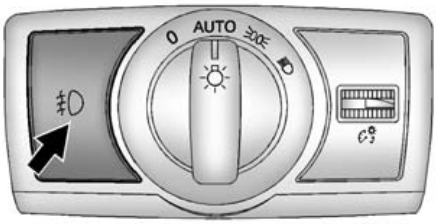

For vehicles with fog lamps, the button is on the instrument panel next to the exterior lamp control.

(Fog Lamps): Press to turn the fog lamps on or off.

The fog lamp indicator in the instrument panel comes on when the fog lamps are in use.

The parking lamps or low-beam headlamps must be on, before the fog lamps can be turned on.

If the exterior lamp control is set to AUTO mode, the parking lamps and low-beam headlamps come on simultaneously when the fog lamps are turned on.

When the high-beam headlamps are turned on, the fog lamps turn off automatically. When the high-beam headlamps are turned off, the fog lamps come on again.

Some localities have laws that require the headlamps to be on with the fog lamps.

Interior Lighting

Instrument Panel Illumination Control

The thumbwheel for this feature is on the left side of the steering wheel next to the exterior lamp control.

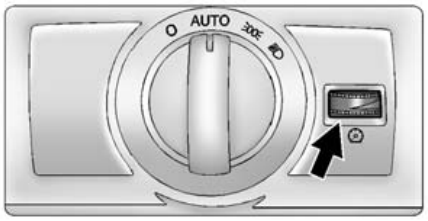

Turn the thumbwheel to the right or left to brighten or dim the instrument panel lights.

Information Provided by: DEALER E-PROCESS

Downloaded from www.Manualslib.com manuals search engine

Dome Lamps

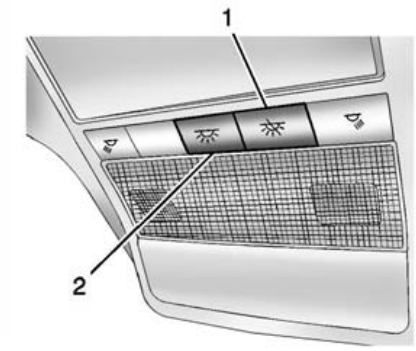

There are front and rear dome lamps in the overhead console and the headliner.

(Dome Lamp Override): Press the button (1) on the overhead console to keep the dome lamps and other interior lamps turned off while any door is open. Press this button again to return it to the out position and the lamps automatically come on when any door is opened.

(On/Off): Press the button (2) to turn the dome lamps on and off while the doors are closed.

Reading Lamps

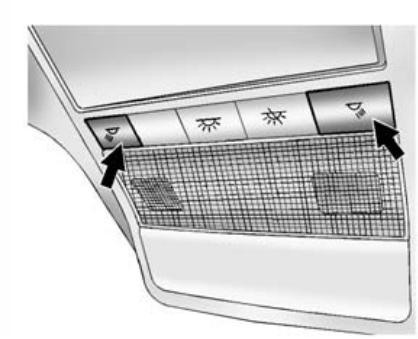

The front reading lamps are in the overhead console.

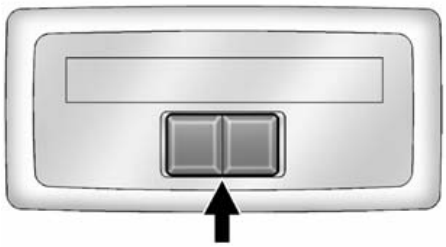

The rear reading lamps are in the headliner.

To turn the reading lamps on or off, press the button next to each lamp.

Information Provided by: DEALER E-PROCESS

Downloaded from www.Manualslib.com manuals search engine

Lighting Features

Entry Lighting

If the dome lamp override button is in the out position, the lamps inside the vehicle automatically come on when any door is opened, or when 🔓 is pressed on the Remote Keyless Entry (RKE) transmitter. After the door is opened, the lamps remain on and stay on for 20 seconds after the doors are closed, or until the key is put into the ignition and turned to the ACC/ ACCESSORY position. The lamps will then gradually dim until they are no longer lit.

Battery Load Management

The vehicle has Electric Power Management (EPM) that estimates the battery's temperature and state of charge. It then adjusts the voltage for best performance and extended life of the battery.

When the battery's state of charge is low, the voltage is raised slightly to quickly bring the charge back up. When the state of charge is high, the voltage is lowered slightly to prevent overcharging. The voltage may move up or down on the voltmeter gauge or the voltage display on vehicles with the Driver Information Center. This is normal. If there is a problem, an alert will be displayed.

The battery can be discharged at idle if the electrical loads are very high. This is true for all vehicles. This is because the generator (alternator) may not be spinning fast enough at idle to produce all the power that is needed for very high electrical loads.

A high electrical load occurs when several of the following are on, such as: headlamps, high beams, fog lamps, rear window defogger, climate control fan at high speed, heated seats, engine cooling fans, trailer loads, and loads plugged into accessory power outlets.

EPM works to prevent excessive discharge of the battery. It does this by balancing the generator's output and the vehicle's electrical needs. It can increase engine idle speed to generate more power, whenever needed. It can temporarily reduce the power demands of some accessories. Normally, these actions occur in steps or levels, without being noticeable.

Battery Power Protection

The battery saver feature is designed to protect the vehicle's battery.

If any interior or exterior lamp is left on and the ignition is turned off, the battery rundown protection system automatically turns the lamp off after 10 minutes.

Information Provided by: DEALER E-PROCESS

Downloaded from www.Manualslib.com manuals search engine

Infotainment System

Introduction
Infotainment 7-1
Theft-Deterrent Feature 7-2
Overview 7-2
Operation 7-4

Radio
AM-FM Radio 7-5
Satellite Radio 7-6
Radio Reception 7-10
Fixed Mast Antenna 7-10
Satellite Radio Antenna 7-10

Audio Players
CD Player 7-11
MP3 7-16
Auxiliary Devices 7-20

Phone
Bluetooth 7-24

Introduction

Infotainment

Read the following pages to become familiar with the infotainment system features.

⚠ Warning

Taking your eyes off the road for extended periods could cause a crash resulting in injury or death to you or others. Do not give extended attention to infotainment tasks while driving.

This system provides access to many audio and non-audio listings.

To minimize taking your eyes off the road while driving, do the following while the vehicle is parked:

- Become familiar with the operation and controls of the audio system.
- Set up the tone, speaker adjustments, and preset radio stations.

For more information, see *Defensive Driving on page 9-3*.

⚠ Caution

Contact your dealer before adding any equipment.

Adding audio or communication equipment could interfere with the operation of the engine, radio, or other systems, and could damage them. Follow federal rules covering mobile radio and telephone equipment.

The vehicle has Retained Accessory Power (RAP). With RAP, the infotainment system can play even after the ignition is turned off. See *Retained Accessory Power (RAP) on page 9-18* for more information.

Information Provided by: DEALER E-PROCESS

Downloaded from www.Manualslib.com manuals search engine

7-2 Infotainment System

If the vehicle has a base radio it is included in this manual. See the infotainment manual for information on the connected radios, audio players, phone, navigation system, and voice or speech recognition. There is also information on settings and downloadable applications (if equipped).

Theft-Deterrent Feature

TheftLock® is designed to discourage theft of the vehicle's radio by learning a portion of the Vehicle Identification Number (VIN). The radio does not operate if it is stolen or moved to a different vehicle.

Overview

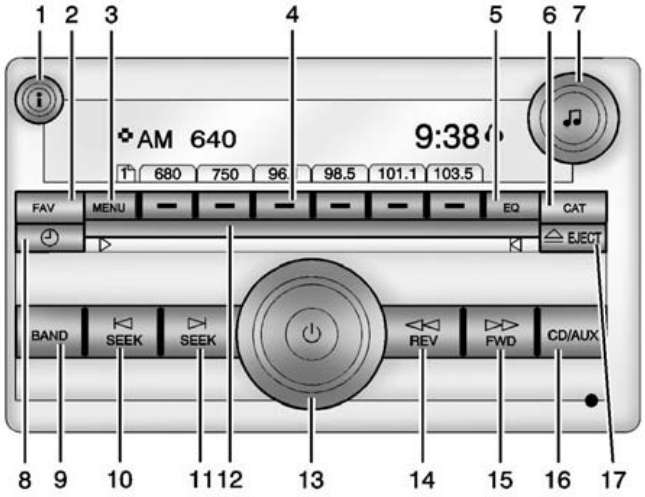

Information Provided by: DEALER E-PROCESS

Downloaded from www.Manualslib.com manuals search engine

1. ℹ (Information)
   - Press to show information on the current station or track.
2. FAV (Favorites Pages)
   - Press to scroll through the favorite pages.
3. MENU
   - Press to open the tone menu to adjust the bass, midrange, treble, fade, and balance.
4. Buttons 1 - 6
   - Save and select favorite stations.
5. EQ (Equalizer)
   - Press to adjust the equalizer settings.
6. CAT (Category)
   - Press to display a list of XM categories.
7. ♫ (Tone)
   - Press to set the bass or treble.
8. ◷ (Clock)
   - Press to set the clock.
9. BAND
   - Press to scroll through the available bands AM, FM, or XM if equipped.
10. ⏮ SEEK
    - Seeks the previous station.
11. ⏭ SEEK
    - Seeks the next station.
12. DVD Slot
13. ⏻ (Power/Volume)
    - Press to turn the infotainment system on or off.
    - Turn to adjust the volume.
14. ◁◁ REV (Reverse)
    - Press and hold to go backward fast through a track.
15. ▷▷ FWD (Forward)
    - Press and hold to fast forward through a track.
16. CD/AUX
    - Press to scroll through selecting the CD or an auxiliary device.
17. ⏏ EJECT
    - Press to eject the loaded CD.

Information Provided by: DEALER E-PROCESS

Downloaded from www.Manualslib.com manuals search engine

Operation

Playing the Radio

⏻ (Power/Volume): Press to turn the system on and off.

Turn to increase or decrease the volume.

ℹ (Information) (MP3 and RDS Features): Press to display additional text information related to the current FM-RDS, CD, MP3, or WMA. If information is available during FM-RDS, CD, MP3, or WMA playback, the song title information displays on the top line of the display and artist information displays on the bottom line. When information is not available, NO INFO displays.

Setting the Tone (Bass/ Midrange/Treble)

BASS/MID/TREB (Bass, Midrange, or Treble): To adjust bass, midrange, or treble:

1. Press the ♫ knob until the tone control labels display.
2. Continue pressing the ♫ knob to highlight the desired label, or press the pushbutton under the desired label.
3. To adjust the highlighted setting, do one of the following:
   - Turn the ♫ knob clockwise or counterclockwise.
   - Press the ▷▷ FWD, or ◁◁ REV button.

If a station's frequency is weak or if there is static, decrease the treble.

To quickly adjust bass, midrange, or treble to the middle position, press the pushbutton under the BASS, MID, or TREB label for more than two seconds. A beep sounds and the level adjusts to the middle position.

To quickly adjust all speaker and tone controls to the middle position, press the ♫ knob for more than two seconds until a beep sounds.

EQ (Equalization): Press to select preset equalization settings.

To return to the manual mode, press the EQ button until Manual displays or manually adjust the bass, midrange, or treble by pressing the ♫ knob.

Adjusting the Speakers (Balance/Fade)

BAL/FADE (Balance/Fade): To adjust the balance or fade:

1. Press the ♫ knob until the speaker control labels display.
2. Continue pressing the ♫ knob to highlight the desired label, or press the pushbutton under the desired label.

Information Provided by: DEALER E-PROCESS

Downloaded from www.Manualslib.com manuals search engine

3. To adjust the highlighted setting, do one of the following until the desired levels are obtained:
   - Turn the ♫ knob clockwise or counterclockwise.
   - Press the ▷▷ FWD, or ◁◁ REV button.

To quickly adjust balance or fade to the middle position, press the pushbutton under the BAL or FADE label for more than two seconds. A beep sounds and the level adjusts to the middle position.

To quickly adjust all speaker and tone controls to the middle position, press the ♫ knob for more than two seconds until a beep sounds.

Chime Volume

The radio may be used to adjust the vehicle's chime level. If the radio can be used to change the volume level of the chime, press and hold the sixth FAV pushbutton with the ignition on and the radio power off. The volume level changes between Normal and Loud. The selected volume level appears on the radio display.

Removing the radio and not replacing it with a factory radio or chime module will disable vehicle chimes.

Radio Messages

Calibration Error: The audio system has been calibrated for the vehicle from the factory.
If Calibration Error displays, it means that the radio has not been configured properly for the vehicle and it must be returned to your dealer for service.

Locked: This message displays when the TheftLock system has locked up the radio. Take the vehicle to your dealer for service.

If any error occurs repeatedly or if an error cannot be corrected, contact your dealer.

Radio

AM-FM Radio

Radio Data System (RDS)

The RDS feature is available for use only on FM stations that broadcast RDS information. This system relies upon receiving specific information from these stations and only works when the information is available. While the radio is tuned to an FM-RDS station, the station name or call letters display. In rare cases, a radio station could broadcast incorrect information that causes the radio features to work improperly. If this happens, contact the radio station.

Finding a Station

BAND: Press to switch between AM or FM.

♫ (Tune): Turn to select radio stations.

⏮ SEEK or ⏭ SEEK: Press to go to the previous or to the next station.

Information Provided by: DEALER E-PROCESS

Downloaded from www.Manualslib.com manuals search engine

To scan stations, press and hold either button for a few seconds until a beep sounds. The radio goes to a station, plays for a few seconds, then goes to the next station. Press either button again to stop scanning.

The radio only seeks and scans stations with a strong signal that are in the selected band.

Storing a Radio Station as a Favorite

Drivers are encouraged to set up their radio station favorites while the vehicle is in P (Park). Tune to favorite stations using the presets, favorites button, and steering wheel controls. See *Steering Wheel Controls on page 5-2*.

FAV (Favorites): A maximum of 36 stations can be stored as favorites using the six softkeys below the radio station frequency tabs and by using the radio FAV button. Press FAV to go through up to six pages of favorites, each having six favorite stations available per page. Each page of favorites can contain any combination of AM, FM, or SiriusXM stations (if equipped).

The balance/fade and tone settings that were previously adjusted, are stored with the favorite stations.

To store a station as a favorite:

1. Tune to a radio station.
2. Press FAV to display the page where to store the station.
3. Press and hold one of the six pushbuttons until a beep sounds. When that pushbutton is pressed and released, the station that was set returns.
4. Repeat the steps for each radio station to be stored as a favorite.

To set up the number of favorites pages:

1. Press MENU to display the radio setup menu.
2. Press the pushbutton below the FAV 1-6 label.
3. Select the desired number of favorites pages by pressing the pushbutton below the displayed page numbers.
4. Press FAV, or let the menu time out, to return to the original main radio screen showing the radio station frequency labels and to begin the process of programming favorites for the chosen number of numbered pages.

Satellite Radio

If equipped with a SiriusXM® Satellite Radio tuner and a valid SiriusXM Satellite subscription can receive SiriusXM programming.

SiriusXM Satellite Radio Service

SiriusXM is a satellite radio service based in the 48 contiguous United States and 10 Canadian provinces. SiriusXM Satellite Radio has a wide variety of programming and commercial-free music, coast to

Information Provided by: DEALER E-PROCESS

Downloaded from www.Manualslib.com manuals search engine

coast, and in digital-quality sound. A service fee is required to receive the SiriusXM service. For more information, contact SiriusXM at www.siriusxm.com or 1-866-635-2349 (U.S) and www.xmradio.ca or call 1-877-209-0079 (Canada).

Finding a Station

BAND: Press to switch between AM, FM, or SiriusXM. The selection displays.

♫ (Tune): Turn to select radio stations.

⏮ SEEK or ⏭ SEEK: Press to go to the previous or to the next station and stay there.

To scan stations, press and hold ⏮ SEEK or ⏭ SEEK until a beep sounds. The radio goes to a station, plays for a few seconds, then goes to the next station. Press either arrow again to stop scanning.

Finding a Category (CAT) Station

CAT (Category): The CAT button is used to find SiriusXM stations when the radio is in the XM mode. To find SiriusXM channels within a desired category:

1. Press BAND until the XM frequency displays.
2. Press CAT to display the category tabs.
3. To navigate through the categories, do one of the following:
   - Press the CAT button.
   - Press the ◁◁ REV or ▷▷ FWD button.
   - Turn the ♫ knob.
4. To tune to a station in the selected category, do one of the following:
   - Turn the ♫ knob.
   - Press the pushbutton below the right or left arrows on the display.
   - Press the ⏮ SEEK or ⏭ SEEK button.
5. To exit the category search mode, press the FAV button or the BAND button to display the favorites again.

Removing SiriusXM Categories

Undesired SiriusXM categories can be removed through the setup menu. To remove an undesired category:

1. Press the MENU button.
2. Press the pushbutton below the XM CAT label.
3. Turn the ♫ knob, then press the ⏮ SEEK or ⏭ SEEK button or the ◁◁ REV or ▷▷ FWD button to display the category to be removed.

Information Provided by: DEALER E-PROCESS

Downloaded from www.Manualslib.com manuals search engine

4. Press the pushbutton under the Remove tab until the category name along with the word Removed displays.
5. Repeat the steps to remove more categories.

Removed categories can be restored by pressing the pushbutton under the Add label when a removed category is displayed or by pressing the pushbutton under the Restore All label.

Categories cannot be removed or added while the vehicle is moving faster than 8 km/h (5 mph).

Storing a Radio Station as a Favorite

Drivers are encouraged to set up their radio station favorites while the vehicle is in P (Park). Tune to favorite stations using the presets, favorites button, and steering wheel controls. See *Steering Wheel Controls on page 5-2*.

FAV (Favorites): A maximum of 36 stations can be programmed as favorites using the six pushbuttons below the radio station frequency labels and by using the radio favorites page button (FAV button). Press to go through up to six pages of favorites, each having six favorite stations available per page. Each page of favorites can contain any combination of AM, FM, or SiriusXM stations.

The balance/fade and tone settings that were previously adjusted, are stored with the favorite stations.

To store a station as a favorite:

1. Tune to a radio station.
2. Press FAV to display the page where to store the station.
3. Press and hold one of the six pushbuttons until a beep sounds. When that pushbutton is pressed and released, the station that was set returns.
4. Repeat the steps for each radio station to be stored as a favorite.

To set up the number of favorites pages:

1. Press MENU to display the radio setup menu.
2. Press the pushbutton below the FAV 1-6 label.
3. Select the desired number of favorites pages by pressing the pushbutton below the displayed page numbers.
4. Press FAV, or let the menu time out, to return to the original main radio screen showing the radio station frequency labels and to begin the process of programming favorites for the chosen number of favorites pages.

SiriusXM Radio Messages

XL (Explicit Language Channels): These channels, or any others, can be blocked at a customer's request, by calling 1-866-635-2349 (U.S) or 1-877-209-0079 (Canada).

Information Provided by: DEALER E-PROCESS

Downloaded from www.Manualslib.com manuals search engine

XM Updating: The encryption code in the receiver is being updated, and no action is required. This process should take no longer than 30 seconds.

No XM Signal: The system is functioning correctly, but the vehicle is in a location that is blocking the SiriusXM signal. When the vehicle is moved into an open area, the signal should return.

Loading XM: The audio system is acquiring and processing audio and text data. No action is needed. This message should disappear shortly.

Channel Off Air: This channel is not currently in service. Tune in to another channel.

Channel Unauth: This channel is blocked or cannot be received with your SiriusXM Subscription package.

Channel Unavail: This previously assigned channel is no longer assigned. Tune to another station. If this station was one of the presets, choose another station for that preset button.

No Artist Info: No artist information is available at this time on this channel. The system is working properly.

No Title Info: No song title information is available at this time on this channel. The system is working properly.

No CAT Info: No category information is available at this time on this channel. The system is working properly.

No Information: No text or informational messages are available at this time on this channel. The system is working properly.

No Subscription Please Renew: SiriusXM subscription needs to be reactivated. Contact SiriusXM at www.siriusxm.com or 1-866-635-2349 (U.S) and www.xmradio.ca or call 1-877-209-0079 (Canada).

CAT Not Found: There are no channels available for the selected category. The system is working properly.

XM Theftlocked: The SiriusXM receiver in the vehicle could have previously been in another vehicle. For security purposes, SiriusXM receivers cannot be swapped between vehicles. If this message is received after having the vehicle serviced, check with your dealer.

XM Radio ID: If tuned to channel 0, this message alternates with the SiriusXM Radio eight digit radio ID label. This label is needed to activate the service.

Unknown: If this message is received when tuned to channel 0, there could be a receiver fault. Consult with your dealer.

Information Provided by: DEALER E-PROCESS

Downloaded from www.Manualslib.com manuals search engine

Check XM Receiver: If this message does not clear within a short period of time, the receiver could have a fault. Consult with your dealer.

XM Not Available: If this message does not clear within a short period of time, the receiver could have a fault. Consult with your dealer.

Radio Reception

Frequency interference and static can occur during normal radio reception if items such as cell phone chargers, vehicle convenience accessories, and external electronic devices are plugged into the accessory power outlet. If there is interference or static, unplug the item from the accessory power outlet.

AM

The range for most AM stations is greater than for FM, especially at night. The longer range can cause station frequencies to interfere with each other. For better radio reception, most AM radio stations boost the power levels during the day, and then reduce these levels during the night. Static can also occur when things like storms and power lines interfere with radio reception. When this happens, try reducing the treble on the radio.

FM Stereo

FM signals only reach about 16 to 65 km (10 to 40 miles). Although the radio has a built-in electronic circuit that automatically works to reduce interference, some static can occur, especially around tall buildings or hills, causing the sound to fade in and out.

Cellular Phone Usage

Cellular phone usage may cause interference with the vehicle's radio. This interference may occur when making or receiving phone calls, charging the phone's battery, or simply having the phone on. This interference causes an increased level of static while listening to the radio. If static is received while listening to the radio, unplug the cellular phone and turn it off.

Fixed Mast Antenna

The fixed mast antenna can withstand most car washes without being damaged as long as it is securely attached to the base. If the mast becomes slightly bent, straighten it out by hand. If the mast is badly bent, replace it.

Occasionally check to make sure the antenna is tightened to its base. If tightening is required, tighten by hand.

Satellite Radio Antenna

The SiriusXM Satellite Radio antenna is on the roof of the vehicle. Keep the antenna clear of obstructions for clear radio reception.

Information Provided by: DEALER E-PROCESS

Downloaded from www.Manualslib.com manuals search engine

Tall buildings or hills can interfere with satellite radio signals, causing the sound to fade in and out. In addition, traveling or standing under heavy foliage, bridges, garages, or tunnels may cause loss of the SiriusXM signal for a period of time.

If the vehicle has a sunroof, the performance of the SiriusXM system may be affected if the sunroof is open.

Audio Players

CD Player

Care of the CD Player

Do not add any label to a CD. It could get caught in the CD player. If a CD is recorded on a personal computer and a description label is needed, try labeling the top of the recorded CD with a marking pen.

The use of CD lens cleaners for CDs is not advised, due to the risk of contaminating the lens of the CD optics with lubricants internal to the CD player mechanism.

⚠ Caution

If a label is added to a CD, more than one CD is inserted into the slot at a time, or an attempt is made to play scratched or damaged CDs, the CD player could be damaged. While using

(Continued)

Caution (Continued)

the CD player, use only CDs in good condition without any label, load one CD at a time, and keep the CD player and the loading slot free of foreign materials, liquids, and debris.

If an error displays, see “CD Player Messages” later in this section.

Care of CDs

If playing a CD-R, the sound quality can be reduced due to CD-R or CD-RW quality, the method of recording, the quality of the music that has been recorded, and the way the CD-R or CD-RW has been handled. Handle them carefully. Store CD-R(s) or CD-RW(s) in their original cases or other protective cases and away from direct sunlight and dust. The CD player scans the bottom surface of the disc. If the surface of a CD is damaged, such as cracked, broken, or scratched,

Information Provided by: DEALER E-PROCESS

Downloaded from www.Manualslib.com manuals search engine

the CD does not play properly or not at all. Do not touch the bottom side of a CD while handling it; this could damage the surface. Pick up CDs by grasping the outer edges or the edge of the hole and the outer edge.

If the surface of a CD is soiled, clean it with a soft, lint-free cloth or dampen a clean, soft cloth in a mild, neutral detergent solution mixed with water. Make sure the wiping process starts from the center to the edge.

Inserting a CD

Insert a CD partway into the slot, label side up. The player pulls it in and the CD should begin playing.

Ejecting a CD

⏏ **EJECT:** Press and release to eject the disc. Remove the CD when Remove Disc displays. If the disc is not removed, after several seconds, the disc is automatically pulled back into the player.

Playing a CD

If the ignition or radio is turned off with a CD in the player, it stays in the player. When the ignition or radio is turned on, the CD starts playing where it stopped if it was the last selected audio source.

When a CD is inserted, the CD symbol displays on the left side of the radio display. As each new track starts to play, the track number displays.

The CD player can play the smaller 8 cm (3 in) single CDs with an adapter ring. Full-size CDs and the smaller CDs are loaded in the same manner.

CD/AUX (CD/Auxiliary): Press to cycle through CD or Auxiliary when listening to the radio. The CD icon and a message showing the disc and/or track number display when a CD is in the player. Press again and the system automatically searches for an auxiliary input device. See *Auxiliary Devices on page 7-20*. If a portable audio player is not connected, No Input Device Found displays.

i (Information): Press to display additional text information related to the current song. If information is available, the song title information displays on the top line of the display and artist information displays on the bottom line. When information is not available, NO INFO displays.

♫ **(Tune):** Turn to select tracks on the CD currently playing.

⏮ **SEEK:** Press to go to the start of the current track, if more than 10 seconds on the CD have played.

Press to go to the previous track if less than 10 seconds on the CD have played.

Press and hold, or press multiple times to continue moving backward through the tracks on the CD.

⏭ **SEEK:** Press to go to the next track.

Information Provided by: DEALER E-PROCESS

Downloaded from www.Manualslib.com manuals search engine

Press and hold, or press multiple times to continue moving forward through the tracks on the CD.

◁◁ **REV (Fast Reverse):** Press and hold to reverse playback quickly within a track.

▷▷ **FWD (Fast Forward):** Press and hold to advance playback quickly within a track.

RDM (Random): Press to listen to tracks in random, rather than sequential order. To use random:

1. Press the softkey under the RDM tab until Random Current Disc displays.
2. Press the softkey again to turn off random play.

MP3 Supported Files

Format

Radios that have the capability of playing MP3s can play .mp3 or .wma files that were recorded onto a CD-R or CD-RW disc. The files can be recorded with the following fixed bit rates: 32 kbps, 40 kbps, 56 kbps, 64 kbps, 80 kbps, 96 kbps, 112 kbps, 128 kbps, 160 kbps, 192 kbps, 224 kbps, 256 kbps, and 320 kbps or a variable bit rate.

Compressed Audio or Mixed Mode Discs

The radio can play discs that contain both uncompressed CD audio and MP3 files. If both formats are on the disc, the radio reads all MP3 files first, then the uncompressed CD audio files.

CD-R or CD-RW Supported File and Folder Structure

The radio supports:

- Up to 50 folders.
- Up to eight folders in depth.
- Up to 50 playlists.
- Up to 255 files.
- Playlists with an .m3u or .wpl extension.
- Files with an .mp3, .wma, or .cda extension.

Root Directory

The root directory is treated as a folder. Files are stored in the root directory when the disc or storage device does not contain folders. Files accessed from the root directory of a CD display as F1 ROOT.

Empty Folder

Folders that do not contain files are skipped, and the player advances to the next folder that contains files.

Order of Play

Compressed audio files are accessed in the following order:

- Playlists (Px).
- Files stored in the root directory.
- Files stored in folders in the root directory.

Information Provided by: DEALER E-PROCESS

Downloaded from www.Manualslib.com manuals search engine

Tracks are played in the following order:

- Play begins from the first track in the first playlist and continues sequentially through all tracks in each playlist. When the last track of the last playlist has played, play continues from the first track of the first playlist.
- Play begins from the first track in the first folder and continues sequentially through all tracks in each folder. When the last track of the last folder has played, play continues from the first track of the first folder.

File System and Naming

The song name that displays is the song name contained in the ID3 tag. If the song name is not present in the ID3 tag, then the radio displays the file name without the extension (such as .mp3) as the track name.

Track names longer than 32 characters or 4 pages are shortened. The display does not show parts of words on the last page of text and the extension of the file name is not displayed.

Preprogrammed Playlists

CDs that have preprogrammed playlists that were created using WinAmp®, MusicMatch®, or Real Jukebox® software can be accessed; however, there is no playlist editing capability using the radio. These playlists are treated as special folders containing compressed audio song files.

Playlists that have an .m3u or .pls file extension and are stored on a USB device may be supported by the radio with a USB port.

Playlists can be changed by using the softkeys below the < 🗀 and 🗀 > tabs, the ♫ knob, the ⏮ SEEK button, or the ⏭ SEEK button. An MP3 CD-R or CD-RW that has been recorded without using file folders can be played. If a CD-R or CD-RW contains more than the maximum of 50 folders, 15 playlists, and 512 folders and files, the player allows access and navigates up to the maximum, but all items over the maximum are not accessible.

Playing an MP3

i (Information): Press to display additional text information related to the current song. If information is available, the song title information displays on the top line of the display and artist information displays on the bottom line. When information is not available, NO INFO displays.

♫ (Tune): Turn to select MP3 files on the CD currently playing.

⏮ SEEK: Press to go to the start of the track, if more than 10 seconds have played. Press and hold or press multiple times to continue moving backward through tracks.

⏭ SEEK: Press to go to the next track. Press and hold or press multiple times to continue moving forward through tracks.

Information Provided by: DEALER E-PROCESS

Downloaded from www.Manualslib.com manuals search engine

◁◁ **REV (Reverse):** Press and hold to reverse playback quickly. Sound is heard at a reduced volume and the elapsed time of the file displays. Release ◁◁ REV to resume playing.

▷▷ **FWD (Fast Forward):** Press and hold to advance playback quickly. Sound is heard at a reduced volume and the elapsed time of the file displays. Release ▷▷ FWD to resume playing. The elapsed time of the file displays.

< 🗀 **(Previous Folder):** Press the softkey below the < 🗀 tab to go to the first track in the previous folder.

🗀 > **(Next Folder):** Press the softkey below the 🗀 > tab to go to the first track in the next folder.

RDM (Random): Press to listen to tracks in random, rather than sequential order. To use random:

1. Press the softkey under the RDM tab until Random Current Disc displays.
2. Press the softkey again to turn off random play.

(Music Navigator): Press the softkey below the tab to have the files played in order by artist or album. The player scans the disc to sort the files by artist and album ID3 tag information. It can take several minutes to scan the disc depending on the number of files on the disc. The radio may begin playing while it is scanning in the background.

When the scan is finished, the disc begins playing files in order by artist. The current artist playing is shown on the second line of the display. Once all songs by that artist are played, the player moves to the next artist in alphabetical order and begins playing files by that artist.

To listen to files by another artist, press the softkey below either arrow tab. The disc goes to the next or previous artist in alphabetical order. Continue pressing either softkey below the arrow tab until the desired artist displays.

To change from playback by artist to playback by album:

1. Press the softkey below the Sort By tab.
2. Press one of the softkeys below the album tab from the sort screen.
3. Press the softkey below the back tab to return to the main music navigator screen.

The album name displays on the second line between the arrows, and songs from the current album begin to play. Once all songs from that album have played, the player moves to the next album in alphabetical order on the CD and begins playing MP3 files from that album.

To exit music navigator mode, press the softkey below the Back tab to return to normal MP3 playback.

Information Provided by: DEALER E-PROCESS

Downloaded from www.Manualslib.com manuals search engine

CD Player Messages

CHECK DISC: If this message displays and/or the CD ejects, it could be for one of the following reasons:

- It is very hot. When the temperature returns to normal, the CD should play.
- The road is very rough. When the road becomes smoother, the CD should play.
- The CD is dirty, scratched, wet, or upside down.
- The air is very humid. If so, wait about an hour and try again.
- There was a problem while burning the CD.
- The label is caught in the CD player.

If the CD is not playing correctly, for any other reason, try a known good CD.

If any error occurs repeatedly or if an error cannot be corrected, contact your dealer. If the radio displays an error message, write it down and provide it to your dealer when reporting the problem.

MP3

MP3 CD-R or CD-RW Disc

The radio plays MP3 files that were recorded on a CD-R or CD-RW disc. The files can be recorded with the following fixed bit rates: 32 kbps, 40 kbps, 56 kbps, 64 kbps, 80 kbps, 96 kbps, 112 kbps, 128 kbps, 160 kbps, 192 kbps, 224 kbps, 256 kbps, and 320 kbps or a variable bit rate. Song title, artist name, and album are available for display by the radio when recorded using ID3 tags version 1 and 2.

Playing an MP3

♫ (Tune): Turn to select MP3 files on the CD-R or CD-RW currently playing.

⏮ SEEK: Press ⏮ SEEK to go to the start of the current MP3 file, if more than 10 seconds have played. If ⏮ SEEK is held or pressed multiple times, the player continues moving backward through MP3 files on the CD.

⏭ SEEK: Press ⏭ SEEK to go to the next track. Press ⏭ SEEK and hold or press multiple times to continue moving forward through tracks.

< 🗀 (Previous Folder): Press the softkey under the Folder label to go to the first track in the previous folder.

🗀 > (Next Folder): Press the softkey under the Folder label to go to the first track in the next folder.

◁◁ REV (Reverse): Press and hold to reverse playback quickly within an MP3 file. Sound is heard at a reduced volume. Release to resume playing the file. The elapsed time of the file displays.

▷▷ FWD (Fast Forward): Press and hold to advance playback quickly within an MP3 file. Sound is

Downloaded from www.Manualslib.com manuals search engine

heard at a reduced volume. Release to resume playing the file. The elapsed time of the file displays.

RDM (Random): With the random setting, the MP3 files on the CD-R or CD-RW can be listened to in random, rather than sequential order, on one CD-R/CD-RW. To play MP3 files from the CD-R or CD-RW in random order, press the softkey under the RDM label until Random Current Disc displays. Press the same softkey again to turn off random play.

(Music Navigator): Use the music navigator feature to play MP3 files on the CD-R or CD-RW in order by artist or album. Press the softkey below the music navigator label. The player scans the disc to sort the files by artist and album ID3 tag information. It can take several minutes to scan the disc depending on the number of MP3 files recorded to the CD-R or CD-RW. The radio can begin playing while it is scanning the disc in the background. When the scan is finished, the CD-R or CD-RW begins playing again.

Once the disc has been scanned, the player defaults to playing MP3 files in order by artist. The current artist playing is shown on the second line of the display between the arrows. Once all songs by that artist are played, the player moves to the next artist in alphabetical order on the CD-R/CD-RW and begins playing MP3 files by that artist. To listen to MP3 files by another artist, press the softkey below either arrow button. The disc goes to the next or previous artist in alphabetical order. Continue pressing either softkey until the desired artist is displayed.

To change from playback by artist to playback by album, press the softkey below the Sort By label. From the sort screen, push one of the softkeys below the album label. Press the softkey below the Back label to return to the main music navigator screen. Now the album name is displayed on the second line between the arrows, and songs from the current album begin to play. Once all songs from that album are played, the player moves to the next album in alphabetical order on the CD-R/CD-RW and begins playing MP3 files from that album.

To exit music navigator mode, press the softkey below the Back label to return to normal MP3 playback.

Compressed Audio

The radio also plays discs that contain both uncompressed CD audio (.CDA files) and MP3 files. By default the radio reads only the uncompressed audio and ignores the MP3 files. Pressing the CAT (category) button toggles between compressed and uncompressed audio format.

Information Provided by: DEALER E-PROCESS

Downloaded from www.Manualslib.com manuals search engine

MP3 Supported File and Folder Structure

To burn an MP3 disc on a personal computer:

- Make sure the MP3 files are recorded on a CD-R or CD-RW disc.
- Do not mix standard audio and MP3 files on one disc.
- The CD player is able to read and play a maximum of 50 folders, 50 playlists, and 255 files.
- Create a folder structure that makes it easy to find songs while driving. Organize songs by albums using one folder for each album. Each folder or album should contain 18 songs or less.
- Avoid subfolders. The system can support up to eight subfolders deep; however, keep the total number of folders to a minimum in order to reduce the complexity and confusion in trying to locate a particular folder during playback.
- Make sure playlists have a .m3u or .wpl extension; other file extensions may not work.
- Minimize the length of the file, folder, or playlist names. Long file, folder, or playlist names, or a combination of a large number of files, folders, or playlists can cause the player to be unable to play up to the maximum number of files, folders, playlists, or sessions. To play a large number of files, folders, playlists or sessions, minimize the length of the file, folder, or playlist name. Long names also take up more space on the display, potentially getting cut off.
- Finalize the audio disc before burning it. Trying to add music to an existing disc can cause the disc not to function in the player.

Playlists can be changed by using < 🗀 and 🗀 >, the tune knob, or the SEEK arrows. An MP3 CD-R or CD-RW that was recorded using no file folders can also be played. If a CD-R or CD-RW contains more than the maximum of 50 folders, 50 playlists, and 255 files, the player can access and navigate up to the maximum, but all items over the maximum are not accessible.

Root Directory

The root directory of the CD-R or CD-RW is treated as a folder. If the root directory has compressed audio files, the directory displays as F1 ROOT. All files contained directly under the root directory are accessed prior to any root directory folders. However, playlists (Px) are always accessed before root folders or files.

Empty Directory or Folder

If a root directory or a folder exists somewhere in the file structure that contains only folders/subfolders and no compressed files directly

Information Provided by: DEALER E-PROCESS

Downloaded from www.Manualslib.com manuals search engine

beneath them, the player advances to the next folder in the file structure that contains compressed audio files. The empty folder does not display.

No Folder

When the CD contains only compressed files, the files are under the root folder. The next and previous folder functions do not display on a CD that was recorded without folders or playlists. When displaying the name of the folder, the radio displays ROOT.

When the CD contains only playlists and compressed audio files, but no folders, all files are under the root folder. The folder down and up buttons search playlists (Px) first and then go to the root folder. When the radio displays the name of the folder the radio displays ROOT.

Order of Play

Tracks recorded to the CD-R or CD-RW are played in the following order:

- Play begins from the first track in the first playlist and continues sequentially through all tracks in each playlist. When the last track of the last playlist has played, play continues from the first track of the first playlist.
- Play begins from the first track in the first folder and continues sequentially through all tracks in each folder. When the last track of the last folder has been played, play continues from the first track of the first folder.

When play enters a new folder, the display does not automatically show the new folder name unless the folder mode is chosen as the default display. The new track name displays.

File System and Naming

The song name displayed is the song name contained in the ID3 tag. If the song name is not present in the ID3 tag, then the radio displays the file name without the extension (such as .mp3) as the track name.

Track names longer than 32 characters or four pages are shortened. Parts of words on the last page of text and the extension of the file name do not display.

Preprogrammed Playlists

Preprogrammed playlists created by WinAmp, MusicMatch, or Real Jukebox software can be accessed; however, they cannot be edited using the radio. These playlists are treated as special folders containing compressed audio song files.

Information Provided by: DEALER E-PROCESS

Downloaded from www.Manualslib.com manuals search engine

Auxiliary Devices

Using the Auxiliary Input Jack

Radios with an auxiliary input jack on the lower right side of the faceplate can connect to an external audio device such as an iPod®, MP3 player, or CD player, for use as another source for audio listening. This input jack is not an audio output; do not plug headphones into the front auxiliary input jack.

To use a portable audio player, connect a 3.5 mm (1/8 in) cable to the radio's front auxiliary input jack. When a device is connected, press the radio CD/AUX button to begin playing audio from the device over the vehicle speakers.

For optimal sound quality, increase the portable audio device's volume to the loudest level.

It is always best to power the portable audio device through its own battery while playing.

⏻ **(Power/Volume):** Turn clockwise or counterclockwise to increase or decrease the volume of the portable player. Additional volume adjustments might have to be made from the portable device if the volume is not loud or soft enough.

BAND: Press to listen to the radio when a portable audio device is playing. The portable audio device continues playing.

CD/AUX (CD/Auxiliary): Press to play a CD when a portable audio device is playing. Press again and the system begins playing audio from the connected portable audio player. If a portable audio player is not connected, No Input Device Found displays.

Using the USB Port

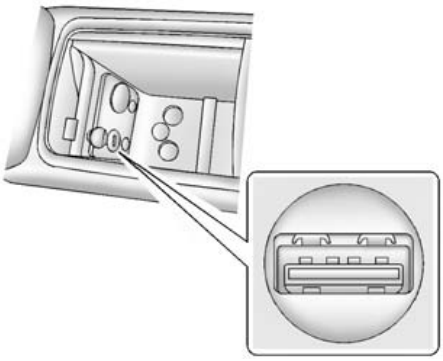

Radios with a USB port can control a USB storage device or an iPod using the radio buttons and knobs. The USB port is in the center console.

USB Support

The USB connector is in the center console, and uses the USB 2.0 standard.

Information Provided by: DEALER E-PROCESS

Downloaded from www.Manualslib.com manuals search engine

USB Supported Devices

- USB Flash Drives
- Portable USB Hard Drives
- Fifth generation or later iPod
- iPod nano®
- iPod touch®
- iPod classic®

Not all iPods and USB drives are compatible with the USB port.

Make sure the iPod has the latest firmware from Apple® for proper operation. iPod firmware can be updated using the latest iTunes® application. See www.apple.com/itunes.

For help with identifying your iPod, go to www.apple.com/support.

Radios that have a USB port can play .mp3 and .wma files stored on a USB storage device as well as AAC files stored on an iPod.

USB Supported File and Folder Structure

The radio supports:

- Up to 700 folders.
- Up to eight folders in depth.
- Up to 65,535 files.
- Folder and file names up to 64 bytes.
- Files with an .mp3 or .wma file extension.
- AAC files stored on an iPod.
- FAT16.
- FAT32.

Connecting a USB Storage Device or iPod

The USB port can be used to control an iPod or a USB storage device.

To connect a USB storage device, connect the device to the USB port in the center console or on the instrument panel.

To connect an iPod, connect one end of the USB cable that came with the iPod to the iPod's dock connector and connect the other end to the USB port in the center console. If the vehicle is on and the USB connection works, OK to disconnect and a GM logo may appear on the iPod and iPod appears on the radio display. The iPod music appears on the radio's display and begins playing.

The iPod charges while it is connected to the vehicle if the vehicle is in the ACC/ACCESSORY or ON/RUN position. When the vehicle is turned off, the iPod automatically powers off and will not charge or draw power from the vehicle's battery.

If you have an older iPod model that is not supported, it can still be used by connecting it to the auxiliary input jack using a standard 3.5 mm (1/8 in) stereo cable. See "Using the Auxiliary Input Jack" earlier for more information.

Information Provided by: DEALER E-PROCESS

Downloaded from www.Manualslib.com manuals search engine

Using the Radio to Control a USB Storage Device or iPod

The radio can control a USB storage device or an iPod using the radio buttons and knobs, and display song information on the radio's display.

(Tune): Turn to select files.

SEEK: Press to go to the start of the track, if more than 10 seconds have played. Press and hold or press multiple times to continue moving backward through tracks.

SEEK: Press to go to the next track. Press and hold or press multiple times to continue moving forward through tracks.

REV (Reverse): Press and hold to reverse playback quickly. Sound is heard at a reduced volume.

Release REV to resume playing. The elapsed time of the file displays.

FWD (Fast Forward): Press and hold to advance playback quickly. Sound is heard at a reduced volume. Release FWD to resume playing. The elapsed time of the file displays.

(Information): Press to display additional information about the selected track.

Using Softkeys to Control a USB Storage Device or iPod

The six softkeys below the radio display are used to control the functions listed below.

To use the softkeys:

1. Press the first or fifth softkey below the radio display to display the functions listed below, or press the softkey below the function if it is currently displayed.
2. Press the softkey below the tab with the function on it to use that function.

(Pause): Press the softkey below to pause the track. The tab appears raised when pause is being used. Press the softkey below again to resume playback.

Back: Press the softkey below the radio display to go back to the main display screen on an iPod, or the root directory on a USB storage device.

(Folder View): Press the softkey below to view the contents of the current folder on the USB drive. To browse and select files:

1. Press the softkey below .
2. Turn to scroll through the list of folders.
3. Press to select the desired folder. If there is more then one folder, repeat Steps 1 and 2 until the desired folder is reached.
4. Turn to scroll through the files in the selected folder.

Information Provided by: DEALER E-PROCESS

Downloaded from www.Manualslib.com manuals search engine

5. Press ♫ to select the desired file to be played.

To skip through large lists, the five softkeys can be used to navigate in the following order:

- First softkey, first item in the list.
- Second softkey, 1% through the list each time the softkey is pressed.
- Third softkey, 5% through the list each time the softkey is pressed.
- Fourth softkey, 10% through the list each time the softkey is pressed.
- Fifth softkey, end of the list.

(Music Navigator): Press the softkey below to view and select a file on an iPod, using the iPod's menu system. Files are sorted by:

- Playlists
- Artists
- Albums
- Genres
- Songs
- Composers

To select files:

1. Press the softkey below .
2. Turn ♫ to scroll through the list of menus.
3. Press ♫ to select the desired menu.
4. Turn ♫ to scroll through the folders or files in the selected menu.
5. Press ♫ to select the desired file to be played.

To skip through large lists, the five softkeys can be used to navigate in the following order:

- First softkey, first item in the list.
- Second softkey, 1% through the list each time the softkey is pressed.
- Third softkey, 5% through the list each time the softkey is pressed.
- Fourth softkey, 10% through the list each time the softkey is pressed.
- Fifth softkey, end of the list.

Repeat Functionality

To use Repeat:

Press the softkey below or 1 to select between Repeat All and Repeat Track.

(Repeat All): Press the softkey below to repeat all tracks. The tab appears lowered when Repeat All is being used. This is the default mode when a USB storage device or iPod is first connected.

1 **(Repeat Track):** Press the softkey below 1 to repeat one track. The tab appears raised when Repeat Track is being used.

Information Provided by: DEALER E-PROCESS

Downloaded from www.Manualslib.com manuals search engine

Shuffle Functionality

To use Shuffle:

Press the softkey below ⇄, ⤮S, ⤮A , or ⤮F to select between Shuffle Off, Shuffle All Songs/ Shuffle Songs, Shuffle Album, or Shuffle Folder.

⇄ **(Shuffle Off):** Press the softkey below ⤮S to turn shuffle off. This is the default mode when a USB storage device or iPod is first connected.

⤮S **(Shuffle All Songs/Shuffle Songs):** Press the softkey below ⤮F or ⤮A to shuffle all songs on the USB storage device or iPod.

⤮A **(Shuffle Album):** Press the softkey below ⇄ to shuffle all songs in the current album on an iPod.

⤮F **(Shuffle Folder):** Press the softkey below ⇄ to shuffle all songs in the current folder on a USB storage device.

Phone

Bluetooth

For vehicles equipped with Bluetooth capability, the system can interact with many cell phones, allowing:

- Placement and receipt of calls in a hands-free mode.
- Sharing of the cell phone's address book or contact list with the vehicle.

To minimize driver distraction, before driving, and with the vehicle parked:

- Become familiar with the features of the cell phone. Organize the phone book and contact lists clearly and delete duplicate or rarely used entries. If possible, program speed dial or other shortcuts.
- Review the controls and operation of the infotainment system.
- Pair cell phone(s) to the vehicle. The system may not work with all cell phones. See "Pairing" in this section for more information.
- If the cell phone has voice dialing capability, learn to use that feature to access the address book or contact list. See "Voice Pass-Thru" in this section for more information.
- See "Storing and Deleting Phone Numbers" in this section for more information.

⚠ Warning

When using a cell phone, it can be distracting to look too long or too often at the screen of the phone or the infotainment system. Taking your eyes off the road too long or too often could cause a crash resulting in injury or death. Focus your attention on driving.

Information Provided by: DEALER E-PROCESS

Downloaded from www.Manualslib.com manuals search engine

A Bluetooth system can use a Bluetooth-capable cell phone with a Hands-Free Profile to make and receive phone calls. The system can be used while the key is in the ON/RUN or ACC/ACCESSORY position. The range of the Bluetooth system can be up to 9.1 m (30 ft). Not all phones support all functions, and not all phones work with the in-vehicle Bluetooth system. See www.gm.com/bluetooth for more information on compatible phones.

Voice Recognition

The Bluetooth system uses voice recognition to interpret voice commands to dial phone numbers and name tags.

For additional information, say “Help” while you are in a voice recognition menu.

Noise: Keep interior noise levels to a minimum. The system may not recognize voice commands if there is too much background noise.

When to Speak: A short tone sounds after the system responds indicating when it is waiting for a voice command. Wait until the tone and then speak.

How to Speak: Speak clearly in a calm and natural voice.

Audio System

When using the in-vehicle Bluetooth system, sound comes through the vehicle's front audio system speakers and overrides the audio system. Use the audio system volume knob, during a call, to change the volume level. The adjusted volume level remains in memory for later calls. To prevent missed calls, a minimum volume level is used if the volume is turned down too low.

Bluetooth Controls

Use the buttons on the steering wheel to operate the in-vehicle Bluetooth system. See *Steering Wheel Controls on page 5-2*.

/ (Call/Mute): Press to answer incoming calls, confirm system information, and start speech recognition.

(End Call): Press to end a call, reject a call, or cancel an operation.

Pairing

A Bluetooth-enabled cell phone must be paired to the Bluetooth system and then connected to the vehicle before it can be used. See the cell phone manufacturer's user guide for Bluetooth functions before pairing the cell phone. If a Bluetooth phone is not connected, calls will be made using OnStar Hands-Free Calling, if equipped. See “OnStar,” if equipped.

Pairing Information

- A Bluetooth phone with MP3 capability cannot be paired to the vehicle as a phone and an MP3 player at the same time.
- Up to five cell phones can be paired to the Bluetooth system.

Information Provided by: DEALER E-PROCESS

Downloaded from www.Manualslib.com manuals search engine

- The pairing process is disabled when the vehicle is moving.
- Pairing only needs to be completed once, unless the pairing information on the cell phone changes or the cell phone is deleted from the system.
- Only one paired cell phone can be connected to the Bluetooth system at a time.
- If multiple paired cell phones are within range of the system, the system connects to the first available paired cell phone in the order that they were first paired to the system. To connect to a different paired phone, see "Connecting to a Different Phone" later in this section.

Pairing a Phone

1. Press and hold / for two seconds.
2. Say "Bluetooth." This command can be skipped.
3. Say "Pair." The system responds with instructions and a four-digit Personal Identification Number (PIN). The PIN is used in Step 5.
4. Start the pairing process on the cell phone that you want to pair. For help with this process, see the cell phone manufacturer's user guide.
5. Locate the device named "Your Vehicle" in the list on the cell phone. Follow the instructions on the cell phone to enter the PIN provided in Step 3. After the PIN is successfully entered, the system prompts you to provide a name for the paired cell phone. This name will be used to indicate which phones are paired and connected to the vehicle. The system responds with "<phone name> has been successfully paired" after the pairing process is complete.
6. Repeat Steps 1–5 to pair additional phones.

Listing All Paired and Connected Phones

The system can list all cell phones paired to it. If a paired cell phone is also connected to the vehicle, the system responds with "is connected" after that phone name.

1. Press and hold / for two seconds.
2. Say "Bluetooth."
3. Say "List."

Deleting a Paired Phone

If the phone name you want to delete is unknown, see "Listing All Paired and Connected Phones."

1. Press and hold / for two seconds.
2. Say "Bluetooth."
3. Say "Delete." The system asks which phone to delete.
4. Say the name of the phone you want to delete.

Information Provided by: DEALER E-PROCESS

Downloaded from www.Manualslib.com manuals search engine

Connecting to a Different Phone

To connect to a different cell phone, the Bluetooth system looks for the next available cell phone in the order in which all available cell phones were paired. Depending on which cell phone you want to connect to, you may have to use this command several times.

1. Press and hold / for two seconds.
2. Say “Bluetooth.”
3. Say “Change phone.”
   - If another cell phone is found, the response will be “<Phone name> is now connected.”
   - If another cell phone is not found, the original phone remains connected.

Storing and Deleting Phone Numbers

The system can store up to 30 phone numbers as name tags in the Hands-Free Directory that is shared between the Bluetooth and OnStar systems, if equipped.

The following commands are used to delete and store phone numbers.

Store: This command will store a phone number, or a group of numbers as a name tag.

Digit Store: This command allows a phone number to be stored as a name tag by entering the digits one at a time.

Delete: This command is used to delete individual name tags.

Delete All Name Tags: This command deletes all stored name tags in the Hands-Free Calling Directory and the OnStar Turn-by-Turn Destinations Directory, if equipped.

Using the “Store” Command

1. Press and hold / for two seconds.
2. Say “Store.”
3. Say the phone number or group of numbers you want to store all at once with no pauses, then follow the directions given by the system to save a name tag for this number.

Using the “Digit Store” Command

If an unwanted number is recognized by the system, say “Clear” at any time to clear the last number.

To hear all of the numbers recognized by the system, say “Verify” at any time.

1. Press and hold / for two seconds.
2. Say “Digit Store.”

Information Provided by: DEALER E-PROCESS

Downloaded from www.Manualslib.com manuals search engine

3. Say each digit, one at a time, that you want to store. After each digit is entered, the system repeats back the digit it heard followed by a tone. After the last digit has been entered, say "Store," and then follow the directions given by the system to save a name tag for this number.

Using the "Delete" Command

1. Press and hold / for two seconds.
2. Say "Delete."
3. Say the name tag you want to delete.

Using the "Delete All Name Tags" Command

This command deletes all stored name tags in the Hands-Free Calling Directory and the OnStar Turn-by-Turn Destinations Directory, if equipped.

To delete all name tags:

1. Press and hold / for two seconds.
2. Say "Delete all name tags."

Listing Stored Numbers

The list command will list all stored numbers and name tags.

Using the "List" Command

1. Press and hold / for two seconds.
2. Say "Directory."
3. Say "Hands-Free Calling."
4. Say "List."

Making a Call

Calls can be made using the following commands.

Dial or Call: The dial or call command can be used interchangeably to dial a phone number or a stored name tag.

Digit Dial: This command allows a phone number to be dialed by entering the digits one at a time.

Re-dial: This command is used to dial the last number used on the cell phone.

Using the "Dial" or "Call" Command

1. Press and hold / for two seconds.
2. Say "Dial" or "Call."
3. Say the entire number without pausing, or say the name tag.

Once connected, the person called will be heard through the audio speakers.

Calling 911 Emergency

1. Press and hold / for two seconds.
2. Say "Dial" or "Call."
3. Say "911."
4. Say "Dial" or "Call."

Information Provided by: DEALER E-PROCESS

Downloaded from www.Manualslib.com manuals search engine

Once connected, the person called will be heard through the audio speakers.

Using the "Digit Dial" Command

The digit dial command allows a phone number to be dialed by entering the digits one at a time. After each digit is entered, the system repeats back the digit it heard followed by a tone.

If an unwanted number is recognized by the system, say "Clear" at any time to clear the last number.

To hear all of the numbers recognized by the system, say "Verify" at any time.

1. Press and hold / for two seconds.
2. Say "Digit Dial."
3. Say each digit, one at a time, that you want to dial. After each digit is entered, the system repeats back the digit it heard followed by a tone. After the last digit has been entered, say "Dial."

Once connected, the person called will be heard through the audio speakers.

Using the "Re-dial" Command

1. Press and hold / for two seconds.
2. After the tone, say "Re-dial."

Once connected, the person called will be heard through the audio speakers.

Receiving a Call

When an incoming call is received, the audio system mutes and a ring tone is heard in the vehicle.

- Press / to answer the call.
- Press to ignore a call.

Call Waiting

Call waiting must be supported on the cell phone and enabled by the wireless service carrier.

- Press / to answer an incoming call when another call is active. The original call is placed on hold.
- Press / again to return to the original call.
- To ignore the incoming call, no action is required.
- Press to disconnect the current call and switch to the call on hold.

Three-Way Calling

Three-way calling must be supported on the cell phone and enabled by the wireless service carrier.

1. While on a call, press /.
2. Say "Three-way call."

Information Provided by: DEALER E-PROCESS

Downloaded from www.Manualslib.com manuals search engine

3. Use the dial or call command to dial the number of the third party to be called.
4. Once the call is connected, press / to link all callers together.

Ending a Call

Press to end a call.

Muting a Call

During a call, all sounds from inside the vehicle can be muted so that the person on the other end of the call cannot hear them.

- To mute a call, press / , and then say “Mute call.”
- To cancel mute, press / , and then say “Un-mute call.”

Transferring a Call

Audio can be transferred between the Bluetooth system and the cell phone.

The cell phone must be paired and connected with the Bluetooth system before a call can be transferred. The connection process can take up to two minutes after the ignition is turned to ON/RUN.

Transferring Audio from the Bluetooth System to a Cell Phone

During a call with the audio in the vehicle:

1. Press / .
2. Say “Transfer Call.”

Transferring Audio to the Bluetooth System from a Cell Phone

During a call with the audio on the cell phone, press / . The audio transfers to the vehicle. If the audio does not transfer to the vehicle, use the audio transfer feature on the cell phone. See your cell phone manufacturer's user guide for more information.

Voice Pass-Thru

Voice pass-thru allows access to the voice recognition commands on the cell phone. See your cell phone manufacturer's user guide to see if the cell phone supports this feature.

To access contacts stored in the cell phone:

1. Press and hold / for two seconds.
2. Say “Bluetooth.” This command can be skipped.
3. Say “Voice.” The system responds “OK, accessing <phone name>.”

The cell phone's normal prompt messages will go through their cycle according to the phone's operating instructions.

Information Provided by: DEALER E-PROCESS

Downloaded from www.Manualslib.com manuals search engine

Dual Tone Multi-Frequency (DTMF) Tones

The Bluetooth system can send numbers and the numbers stored as name tags during a call. You can use this feature when calling a menu-driven phone system. Account numbers can also be stored for use.

Sending a Number or Name Tag During a Call

1. Press / . The system responds “Ready,” followed by a tone.
2. Say “Dial.”
3. Say the number or name tag to send.

Clearing the System

Unless information is deleted out of the in-vehicle Bluetooth system, it will be retained indefinitely. This includes all saved name tags in the phone book and phone pairing information. For information on how to delete this information, see the previous section “Deleting a Paired Phone” and the previous sections on deleting name tags.

Other Information

The Bluetooth® word mark and logos are owned by the Bluetooth® SIG, Inc. and any use of such marks by General Motors is under license. Other trademarks and trade names are those of their respective owners.

See *Radio Frequency Statement on page 13-15*.

Information Provided by:
DEALER E-PROCESS

Downloaded from www.Manualslib.com manuals search engine

✍ NOTES

Information Provided by:
DEALER E-PROCESS

Downloaded from www.Manualslib.com manuals search engine

Climate Controls

Climate Control Systems
Climate Control Systems 8-1
Automatic Climate Control System 8-5

Air Vents
Air Vents 8-9

Maintenance
Passenger Compartment Air Filter 8-9

Climate Control Systems

The heating, cooling, and ventilation for the vehicle can be controlled with this system. For vehicles with the remote start feature, the climate control system functions as part of the remote start feature. See *Remote Keyless Entry (RKE) System Operation on page 2-2*.

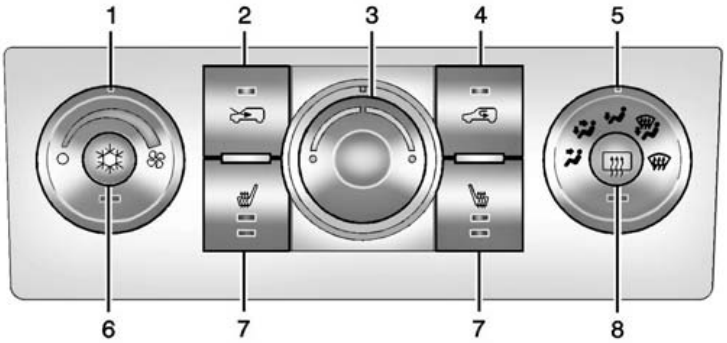

1. Fan Control
2. Outside Air
3. Temperature Control
4. Recirculation
5. Air Delivery Mode Control
6. Air Conditioning
7. Driver and Passenger Heated Seats (If Equipped)
8. Rear Window Defogger

Information Provided by:
DEALER E-PROCESS

Downloaded from www.Manualslib.com manuals search engine

8-2 Climate Controls

(Fan Control): Turn clockwise or counterclockwise to increase or decrease the fan speed. To turn the fan off, turn the knob all the way counterclockwise. In any setting other than off, the fan runs continuously with the ignition on. There will be some airflow noticeable from the various outlets when driving, even with the fan in the off position. To turn off the air completely, turn the fan to ◯ and select the button.

Temperature Control: Turn clockwise or counterclockwise to increase or decrease the temperature inside the vehicle.

Air Delivery Mode Control: Turn clockwise or counterclockwise to change the current airflow mode.

Select from the following air delivery modes:

(Vent): Air is directed to the instrument panel outlets.

(Bi-Level): Air is divided between the instrument panel and the floor outlets.

(Floor): Air is directed to the floor outlets with some air directed to the windshield.

When this mode is selected, the system turns the recirculation mode off. Recirculation mode cannot be selected while in floor mode. This helps prevent window fogging.

(Defog): Clears the windows of fog or moisture. Air is directed to the floor outlets, with some air directed to the windshield and side window outlets. In this mode, the system turns the recirculation mode off and runs the air conditioning compressor unless the outside air is at or below freezing. Recirculation mode cannot be selected while in defog mode. This helps prevent window fogging.

(Defrost): Removes fog or frost from the windshield more quickly. Air is directed to the windshield and the side window outlets. In this mode, the system turns the recirculation mode off automatically and runs the air conditioning compressor unless the outside air is at or below freezing. Recirculation mode cannot be selected while in defrost mode. This helps prevent window fogging.

For best results, clear all snow and ice from the windshield before defrosting.

(Air Conditioning): Press to turn the air conditioning system on or off. An indicator light comes on to show that the air conditioning is on. The air conditioning can be selected in any mode as long as the fan is on and the outside temperature is above freezing. A flashing indicator light indicates that the air conditioning compressor is currently not available.

On hot days, open the windows to let hot inside air escape; then close them. This helps reduce the time it takes for the vehicle to cool down and helps the system to operate more efficiently.

Information Provided by: DEALER E-PROCESS

Downloaded from www.Manualslib.com manuals search engine

For quick cool down on hot days, select the following settings together:

1. Select mode.
2. Select .
3. Turn the on.
4. Select the coolest temperature and highest fan speed.
5. Once the vehicle's interior temperature is below the outside temperature, select recirculation mode for enhanced cooling.

Using these settings together for long periods of time may cause the air inside the vehicle to become too dry. To prevent this from happening, after the air inside of the vehicle has cooled, turn the recirculation mode off.

The air conditioning system removes moisture from the air, so a small amount of water might drip under the vehicle while idling or after turning off the engine. This is normal.

(Outside Air): Press to turn the outside air mode on. An indicator light comes on to show that outside air is on. Air from outside the vehicle will circulate throughout the vehicle. The outside air mode can be used with all modes, but it cannot be used with the recirculation mode. Pressing this button will cancel the recirculation mode.

(Recirculation): Press to turn on the recirculation mode. An indicator light comes on to show that recirculation is on. This mode recirculates and helps to quickly cool or heat the air inside the vehicle. It can be used to prevent outside air and odors from entering the vehicle. Avoid using the recirculation mode during high periods of humidity and cool outside temperatures since this may result in increased window fogging. If window fogging is experienced, select the defrost mode.

Recirculation mode is not available in floor, defog, or defrost modes and will shut off automatically and change to outside air. The indicator will flash if the button is selected in any of these modes. This helps prevent window fogging and moisture building up inside the vehicle.

Rear Window Defogger

The rear window defogger uses a warming grid to remove fog from the rear window.

The rear window defogger only works when the ignition is in ON/RUN.

(Rear Window Defogger): Press to turn the rear window defogger on or off. An indicator light on the button comes on to show that the rear window is activated.

The rear window defogger stays on for approximately 10 minutes after the button is pressed, unless the ignition is turned to ACC/ACCESSORY or LOCK/OFF.

Information Provided by: DEALER E-PROCESS

Downloaded from www.Manualslib.com manuals search engine

If turned on again, the defogger only runs for approximately five minutes before turning off again. At higher vehicle speeds, the defogger may stay on continuously. The defogger can also be turned off by turning off the engine.

⚠ Caution

Using a razor blade or sharp object on the inside rear window can damage the antenna or defogger. Repairs would not be covered by the vehicle warranty. Do not stick anything to the rear window.

or (Heated Front Seats, If Equipped): Press to heat the driver or passenger seat cushion and seatback. To turn off, press the button until the indicator lights turn off. See *Heated Front Seats on page 3-6*.

Remote Start Climate Control Operation

For vehicles with the remote start feature, when it is activated, the climate control system heats and cools the inside of the vehicle using the modes that were set before the vehicle was turned off.

Information Provided by: DEALER E-PROCESS

Downloaded from www.Manualslib.com manuals search engine

Automatic Climate Control System

The heating, cooling, and ventilation for the vehicle can be controlled with this system. If equipped with remote start, the climate control system functions as part of the remote start feature. See *Remote Keyless Entry (RKE) System Operation on page 2-2*.

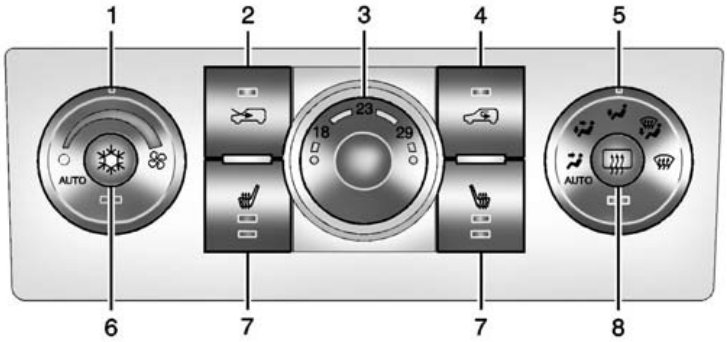

1. Fan Control
2. Outside Air
3. Temperature Control
4. Recirculation
5. Air Delivery Mode Control
6. Air Conditioning
7. Driver and Passenger Heated Seats (If Equipped)
8. Rear Window Defogger

Automatic Operation

This climate control system automatically maintains the desired temperature inside the vehicle. Do not cover the sensor on the top of the instrument panel near the windshield, or the sensor grille below the climate control faceplate. These two sensors help regulate the inside air temperature.

AUTO (Automatic Fan): Turn the fan knob to AUTO for the system to automatically adjust the fan speed to reach the desired inside temperature.

Temperature Control: Select the desired cabin air temperature between 16-32°C (60-90°F). Choosing the coldest or warmest temperature setting does not cause the system to heat or cool any faster.

Information Provided by:
DEALER E-PROCESS

Downloaded from www.Manualslib.com manuals search engine

8-6 Climate Controls

AUTO (Automatic Air Delivery Mode): Turn the air delivery mode knob to AUTO for the system to automatically control the direction of the airflow to help reach the desired inside temperature.

The system automatically controls the air inlet to supply the outside air or recirculated inside air needed to heat or cool the vehicle faster. The button indicator light is lit whenever the recirculation mode is on.

Press the button to change to outside air. However, the recirculation mode may turn back on automatically.

In cold weather, if the fan and air delivery modes are in automatic, the system starts at lower fan speeds to avoid directing cold air into the vehicle until warmer air is available. The climate control system directs air to the floor, but may automatically change modes as the vehicle warms up to maintain the chosen temperature setting. The length of time needed to warm the interior depends on the outside temperature and inside temperature of the vehicle.

Manual Operation

(Fan Control): Turn clockwise or counterclockwise to increase or decrease the fan speed. To turn the fan off, turn the left knob to the position. In any setting other than off, the fan runs continuously with the ignition on. The fan must be turned on to run the air conditioning compressor. There will be some airflow noticeable from the various outlets when driving, even with the fan in the off position. To turn off the air completely, turn the fan to and select the button.

Temperature Control: Turn clockwise or counterclockwise to increase or decrease the temperature. Select the desired cabin air temperature between 16-32°C (60-90°F). Typically, the best setting is near 23°C (75°F). Choosing the coldest or warmest temperature setting does not cause the system to heat or cool any faster.

Air Delivery Mode Control: Turn clockwise or counterclockwise to change the current airflow mode.

Select from the following air delivery modes:

(Vent): Air is directed to the instrument panel outlets.

(Bi-Level): Air is divided between the instrument panel outlets and the floor outlets.

(Floor): Air is directed to the floor outlets with some air directed to the windshield.

When this mode is selected, the system turns the recirculation mode off. Recirculation mode cannot be selected while in floor mode. This is to help prevent window fogging.

(Defog): Clears the windows of fog or moisture. Air is directed to the floor outlets, with some air directed to the windshield and side window

Information Provided by: DEALER E-PROCESS

Downloaded from www.Manualslib.com manuals search engine

outlets. In this mode, the system turns the recirculation mode off and runs the air conditioning compressor unless the outside air is at or below freezing. Recirculation mode cannot be selected while in defog mode. This helps prevent window fogging.

(Defrost): Removes fog or frost from the windshield more quickly. Air is directed to the windshield and the side window outlets. In this mode, the system turns the recirculation mode off automatically and runs the air conditioning compressor unless the outside air is at or below freezing. Recirculation mode cannot be selected while in defrost mode. This helps prevent window fogging.

For best results, clear all snow and ice from the windshield before defrosting.

(Air Conditioning): Press to turn the air conditioning system on or off. An indicator light comes on to show that the air conditioning is on. The air conditioning can be selected in any mode as long as the fan is on and the outside temperature is above freezing. A flashing indicator light indicates that the air conditioning compressor is currently not available.

On hot days, use the automatic fan and automatic air delivery mode settings and the vehicle will reach the desired temperature more quickly. The desired fan and air delivery mode settings can still be adjusted manually. Open the windows to let the hot inside air escape, then close them. This helps reduce the time it takes for the vehicle to cool down and helps the system to operate more efficiently.

The air conditioning system removes moisture from the air, so a small amount of water might drip under the vehicle while idling or after turning off the engine.

(Outside Air): Press to turn the outside air mode on. An indicator light comes on to show that outside air is on. Air from outside the vehicle will circulate throughout the vehicle. The outside air mode can be used with all modes, but it cannot be used with the recirculation mode. Pressing this button will cancel the recirculation mode.

(Recirculation): Press to turn on the recirculation mode. An indicator light comes on to show that recirculation is on. This mode recirculates and helps to quickly cool or heat the air inside the vehicle. It can be used to prevent outside air and odors from entering the vehicle. Avoid using the recirculation mode during high periods of humidity and cool outside temperatures since this may result in increased window fogging. If window fogging is experienced, select the defrost mode.

Recirculation mode is not available in floor, defog, or defrost modes and will shut off automatically and change to outside air. If the button is selected in any of these modes, the indicator will flash. This helps

Information Provided by: DEALER E-PROCESS

Downloaded from www.Manualslib.com manuals search engine

prevent window fogging and moisture building up inside the vehicle.

Rear Window Defogger

The rear window defogger uses a warming grid to remove fog from the rear window.

The rear window defogger only works when the ignition is in ON/RUN.

(Rear Window Defogger): Press to turn the rear window defogger on or off. An indicator light on the button comes on to show that it is activated.

The rear window defogger stays on for approximately 10 minutes after the button is pressed, unless the ignition is turned to ACC/ACCESSORY or LOCK/OFF.
If turned on again, the defogger only runs for approximately five minutes before turning off. At higher vehicle speeds, the defogger may stay on continuously. The defogger can also be turned off by turning off the engine.

⚠ Caution

Using a razor blade or sharp object on the inside rear window can damage the antenna or defogger. Repairs would not be covered by the vehicle warranty. Do not stick anything to the rear window.

or (Heated Front Seats, If Equipped): Press to heat the driver or passenger seat cushion and seatback. To turn off, press the button until the indicator lights turn off. See *Heated Front Seats on page 3-6*.

Remote Start Climate Control Operation

If equipped with the remote start feature, when it is activated, the climate control system heats and cools the inside of the vehicle using the modes that were set before the vehicle was turned off.

Information Provided by: DEALER E-PROCESS

Downloaded from www.Manualslib.com manuals search engine

Air Vents

Move the louvers on the air outlets up or down to change the direction of the airflow. The louvers do not turn.

Use the thumbwheels near each vent to open and close off the airflow.

Operation Tips

- Clear away any ice, snow, or leaves from the air inlets at the base of the vehicle that may block the flow of air into the vehicle.
- Do not use any non-GM approved hood deflectors that could adversely affect the performance of the system.
- Keep the path under the front seats clear of objects to help circulate the air inside of the vehicle more effectively.
- Do not insert objects into the air outlets. This may affect the operation of the outlet.

Maintenance

Passenger Compartment Air Filter

The filter removes dust, pollen, and other airborne irritants from outside air that is pulled into the vehicle.

The filter should be replaced as part of routine scheduled maintenance. See *Maintenance Schedule on page 11-2* for replacement intervals. To find out what type of filter to use, see *Maintenance Replacement Parts on page 11-13*.

The passenger compartment air filter can be accessed by removing the entire glove box.

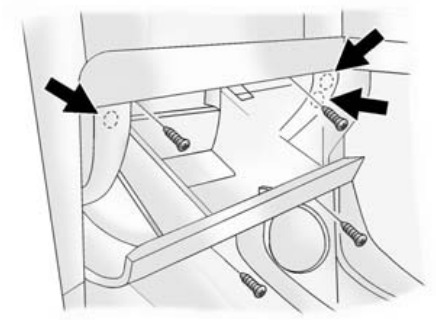

1. Remove the four screws from around the glove box and detach the three inner clips from the glove box.
2. Lower the loosened glove box housing.

Information Provided by:
DEALER E-PROCESS

Downloaded from www.Manualslib.com manuals search engine

8-10 Climate Controls

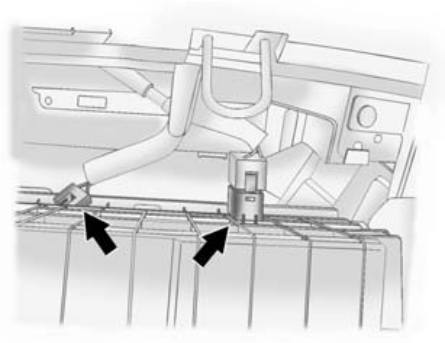

3. Unplug both wire cables and remove the glove box.

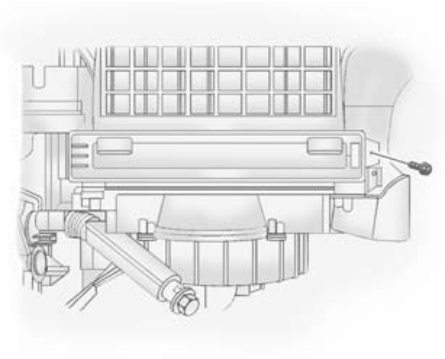

4. Remove the air filter cover screw.

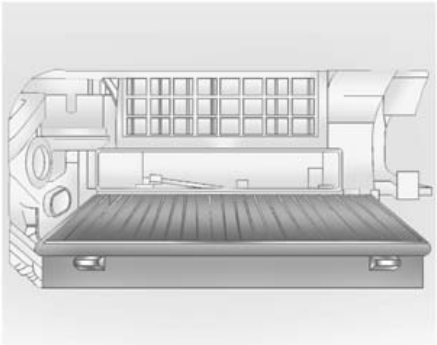

5. Remove the filter cover and pull out the old air filter.
6. Install the new air filter.
7. Reinstall the air filter cover. Reconnect the wire cabling and reinstall the glove box.

See your dealer if additional assistance is needed.

Information Provided by:
DEALER E-PROCESS

Downloaded from www.Manualslib.com manuals search engine

Driving and Operating

Driving Information
Driver Behavior 9-2
Driving Environment 9-2
Vehicle Design 9-2
Distracted Driving 9-2
Defensive Driving 9-3
Drunk Driving 9-3
Control of a Vehicle 9-4
Braking 9-4
Steering 9-4
Off-Road Recovery 9-5
Loss of Control 9-5
Driving on Wet Roads 9-6
Highway Hypnosis 9-7
Hill and Mountain Roads 9-7
Winter Driving 9-8
If the Vehicle Is Stuck 9-9
Vehicle Load Limits 9-10

Starting and Operating
New Vehicle Break-In 9-14
Ignition Positions 9-15
Starting the Engine 9-17
Retained Accessory Power (RAP) 9-18
Shifting Into Park 9-18
Shifting out of Park 9-19
Parking over Things That Burn 9-20

Engine Exhaust
Engine Exhaust 9-20
Running the Vehicle While Parked 9-21

Automatic Transmission
Automatic Transmission 9-21
Manual Mode 9-23
Fuel Economy Mode 9-24

Drive Systems
All-Wheel Drive 9-25

Brakes
Antilock Brake System (ABS) 9-25
Parking Brake 9-26

Ride Control Systems
Traction Control/Electronic Stability Control 9-28

Cruise Control
Cruise Control 9-30

Driver Assistance Systems
Ultrasonic Parking Assist 9-32
Rear Vision Camera (RVC) 9-34

Fuel
Fuel 9-35
Recommended Fuel 9-36
Gasoline Specifications 9-36
California Fuel Requirements 9-36
Fuels in Foreign Countries . . . 9-37
Fuel Additives 9-37
E85 or FlexFuel 9-37
Filling the Tank 9-38
Filling a Portable Fuel Container 9-40

Trailer Towing
General Towing Information 9-40
Driving Characteristics and Towing Tips 9-41
Trailer Towing 9-44
Towing Equipment 9-46

Conversions and Add-Ons
Add-On Electrical Equipment 9-47

Information Provided by DEALER E-PROCESS

Downloaded from www.Manualslib.com manuals search engine

Driving Information

Driver Behavior

Driving is an important responsibility. Driver behavior, the driving environment, and the vehicle's design all affect how well a vehicle performs.

Being aware of these factors can help in understanding how the vehicle handles and what can be done to avoid many types of crashes, including a rollover crash.

Most serious injuries and fatalities to unbelted occupants can be reduced or prevented by the use of safety belts. In a rollover crash, an unbelted person is significantly more likely to die than a person wearing a safety belt. In addition, avoiding excessive speed, sudden or abrupt turns, and drunken or aggressive driving can help make trips safer and avoid the possibility of a crash.

Driving Environment

Be prepared for driving in inclement weather, at night, or during other times where visibility or traction may be limited, such as on curves, slippery roads, or hilly terrain. Unfamiliar surroundings can also have hidden hazards.

Learn more about driving in different conditions and off-road driving in this section.

Vehicle Design

Utility vehicles have a significantly higher rollover rate than other types of vehicles. This is because they have a higher ground clearance and a narrower track or shorter wheelbase than passenger cars, which makes them more capable for off-road driving. While these design characteristics provide the driver with a better view of the road, these vehicles do have a higher center of gravity than other types of vehicles. A utility vehicle does not handle the same as a vehicle with a lower center of gravity, like a car, in similar situations.

Safe driver behavior and understanding of the environment can help avoid a rollover crash in any type of vehicle, including utility vehicles.

Distracted Driving

Distraction comes in many forms and can take your focus from the task of driving. Exercise good judgment and do not let other activities divert your attention away from the road. Many local governments have enacted laws regarding driver distraction. Become familiar with the local laws in your area.

Information Provided by: DEALER E-PROCESS

Downloaded from www.Manualslib.com manuals search engine

To avoid distracted driving, always keep your eyes on the road, hands on the wheel, and mind on the drive.

- Do not use a phone in demanding driving situations. Use a hands-free method to place or receive necessary phone calls.
- Watch the road. Do not read, take notes, or look up information on phones or other electronic devices.
- Designate a front seat passenger to handle potential distractions.
- Become familiar with vehicle features before driving, such as programming favorite radio stations and adjusting climate control and seat settings. Program all trip information into any navigation device prior to driving.
- Wait until the vehicle is parked to retrieve items that have fallen to the floor.
- Stop or park the vehicle to tend to children.
- Keep pets in an appropriate carrier or restraint.
- Avoid stressful conversations while driving, whether with a passenger or on a cell phone.

⚠ Warning

Taking your eyes off the road too long or too often could cause a crash resulting in injury or death. Focus your attention on driving.

Refer to the Infotainment section for more information on using that system, including pairing and using a cell phone.

Defensive Driving

Defensive driving means “always expect the unexpected.” The first step in driving defensively is to wear the safety belt. See *Safety Belts on page 3-9*.

- Assume that other road users (pedestrians, bicyclists, and other drivers) are going to be careless and make mistakes. Anticipate what they might do and be ready.
- Allow enough following distance between you and the driver in front of you.
- Focus on the task of driving.

Drunk Driving

Death and injury associated with drinking and driving is a global tragedy.

⚠ Warning

Drinking and then driving is very dangerous. Your reflexes, perceptions, attentiveness, and judgment can be affected by even a small amount of alcohol. You

(Continued)

Information Provided by: DEALER E-PROCESS

Downloaded from www.Manualslib.com manuals search engine

Warning (Continued)

can have a serious — or even fatal — collision if you drive after drinking.

Do not drink and drive or ride with a driver who has been drinking. Ride home in a cab; or if you are with a group, designate a driver who will not drink.

Control of a Vehicle

Braking, steering, and accelerating are important factors in helping to control a vehicle while driving.

Braking

Braking action involves perception time and reaction time. Deciding to push the brake pedal is perception time. Actually doing it is reaction time.

Average driver reaction time is about three-quarters of a second. In that time, a vehicle moving at 100 km/h (60 mph) travels 20 m (66 ft), which could be a lot of distance in an emergency.

Helpful braking tips to keep in mind include:

- Keep enough distance between you and the vehicle in front of you.
- Avoid needless heavy braking.
- Keep pace with traffic.

If the engine ever stops while the vehicle is being driven, brake normally but do not pump the brakes. Doing so could make the pedal harder to push down. If the engine stops, there will be some power brake assist but it will be used when the brake is applied. Once the power assist is used up, it can take longer to stop and the brake pedal will be harder to push.

Steering

Hydraulic Power Steering

This vehicle has hydraulic power steering. It may require maintenance. See *Power Steering Fluid on page 10-20*.

If power steering assist is lost because the engine stops or because of a system malfunction, the vehicle can be steered but may require increased effort. See your dealer if there is a problem.

⚠ Caution

If the steering wheel is turned until it reaches the end of its travel, and is held in that position for more than 15 seconds, damage may occur to the power steering system and there may be loss of power steering assist.

Information Provided by: DEALER E-PROCESS

Downloaded from www.Manualslib.com manuals search engine

Curve Tips

- Take curves at a reasonable speed.
- Reduce speed before entering a curve.
- Maintain a reasonable steady speed through the curve.
- Wait until the vehicle is out of the curve before accelerating gently into the straightaway.

Steering in Emergencies

- There are some situations when steering around a problem may be more effective than braking.
- Holding both sides of the steering wheel allows you to turn 180 degrees without removing a hand.
- Antilock Brake System (ABS) allows steering while braking.

Off-Road Recovery

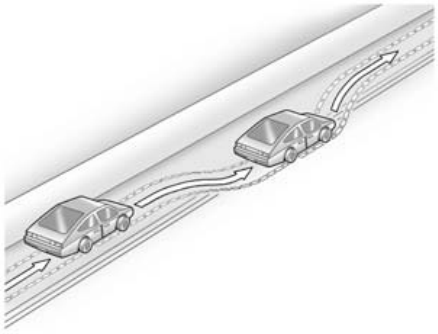

The vehicle's right wheels can drop off the edge of a road onto the shoulder while driving. Follow these tips:

1. Ease off the accelerator and then, if there is nothing in the way, steer the vehicle so that it straddles the edge of the pavement.
2. Turn the steering wheel about one-eighth of a turn, until the right front tire contacts the pavement edge.
3. Turn the steering wheel to go straight down the roadway.

Loss of Control

Skidding

There are three types of skids that correspond to the vehicle's three control systems:

- Braking Skid — wheels are not rolling.
- Steering or Cornering Skid — too much speed or steering in a curve causes tires to slip and lose cornering force.
- Acceleration Skid — too much throttle causes the driving wheels to spin.

Defensive drivers avoid most skids by taking reasonable care suited to existing conditions, and by not overdriving those conditions. But skids are always possible.

Information provided by: DEALER E-PROCESS

Downloaded from www.Manualslib.com manuals search engine

If the vehicle starts to slide, follow these suggestions:

- Ease your foot off the accelerator pedal and steer the way you want the vehicle to go. The vehicle may straighten out. Be ready for a second skid if it occurs.
- Slow down and adjust your driving according to weather conditions. Stopping distance can be longer and vehicle control can be affected when traction is reduced by water, snow, ice, gravel, or other material on the road. Learn to recognize warning clues — such as enough water, ice, or packed snow on the road to make a mirrored surface — and slow down when you have any doubt.
- Try to avoid sudden steering, acceleration, or braking, including reducing vehicle speed by shifting to a lower gear. Any sudden changes could cause the tires to slide.

Remember: Antilock brakes help avoid only the braking skid.

Driving on Wet Roads

Rain and wet roads can reduce vehicle traction and affect your ability to stop and accelerate. Always drive slower in these types of driving conditions and avoid driving through large puddles and deep-standing or flowing water.

⚠ Warning

Wet brakes can cause crashes. They might not work as well in a quick stop and could cause pulling to one side. You could lose control of the vehicle.

After driving through a large puddle of water or a car/vehicle wash, lightly apply the brake pedal until the brakes work normally.

(Continued)

Warning (Continued)

Flowing or rushing water creates strong forces. Driving through flowing water could cause the vehicle to be carried away. If this happens, you and other vehicle occupants could drown. Do not ignore police warnings and be very cautious about trying to drive through flowing water.

Hydroplaning

Hydroplaning is dangerous. Water can build up under the vehicle's tires so they actually ride on the water. This can happen if the road is wet enough and you are going fast enough. When the vehicle is hydroplaning, it has little or no contact with the road.

There is no hard and fast rule about hydroplaning. The best advice is to slow down when the road is wet.

Information Provided by: DEALER E-PROCESS

Downloaded from www.Manualslib.com manuals search engine

Other Rainy Weather Tips

Besides slowing down, other wet weather driving tips include:

- Allow extra following distance.
- Pass with caution.
- Keep windshield wiping equipment in good shape.
- Keep the windshield washer fluid reservoir filled.
- Have good tires with proper tread depth. See *Tires on page 10-37*.
- Turn off cruise control.

Highway Hypnosis

Always be alert and pay attention to your surroundings while driving. If you become tired or sleepy, find a safe place to park the vehicle and rest.

Other driving tips include:

- Keep the vehicle well ventilated.
- Keep the interior temperature cool.
- Keep your eyes moving — scan the road ahead and to the sides.
- Check the rearview mirror and vehicle instruments often.

Hill and Mountain Roads

Driving on steep hills or through mountains is different than driving on flat or rolling terrain. Tips for driving in these conditions include:

- Keep the vehicle serviced and in good shape.
- Check all fluid levels and brakes, tires, cooling system, and transmission.
- Shift to a lower gear when going down steep or long hills.

⚠ Warning

Using the brakes to slow the vehicle on a long downhill slope can cause brake overheating, can reduce brake performance, and

(Continued)

Warning (Continued)

could result in a loss of braking. Shift the transmission to a lower gear to let the engine assist the brakes on a steep downhill slope.

⚠ Warning

Coasting downhill in N (Neutral) or with the ignition off is dangerous. This can cause overheating of the brakes and loss of steering. Always have the engine running and the vehicle in gear.

- Stay in your own lane. Do not swing wide or cut across the center of the road. Drive at speeds that let you stay in your own lane.
- Be alert on top of hills; something could be in your lane (stalled car, accident).

Information Provided by: DEALER E-PROCESS

Downloaded from www.Manualslib.com manuals search engine

- Pay attention to special road signs (falling rocks area, winding roads, long grades, passing or no-passing zones) and take appropriate action.

Winter Driving

Driving on Snow or Ice

Drive carefully when there is snow or ice between the tires and the road, creating less traction or grip. Wet ice can occur at about 0°C (32° F) when freezing rain begins to fall, resulting in even less traction. Avoid driving on wet ice or in freezing rain until roads can be treated with salt or sand.

Drive with caution, whatever the condition. Accelerate gently so traction is not lost. Accelerating too quickly causes the wheels to spin and makes the surface under the tires slick, so there is even less traction.

Try not to break the fragile traction. If you accelerate too fast, the drive wheels will spin and polish the surface under the tires even more.

Traction Control should be turned on. See *Traction Control/Electronic Stability Control on page 9-28*.

The Antilock Brake System (ABS) improves vehicle stability during hard stops on slippery roads, but apply the brakes sooner than when on dry pavement. See *Antilock Brake System (ABS) on page 9-25*.

Allow greater following distance on any slippery road and watch for slippery spots. Icy patches can occur on otherwise clear roads in shaded areas. The surface of a curve or an overpass can remain icy when the surrounding roads are clear. Avoid sudden steering maneuvers and braking while on ice.

Turn off cruise control on slippery surfaces.

Blizzard Conditions

Being stuck in snow can be a serious situation. Stay with the vehicle unless there is help nearby. If possible, use Roadside Assistance. See *Roadside Assistance Program on page 13-5*. To get help and keep everyone in the vehicle safe:

- Turn on the hazard warning flashers.
- Tie a red cloth to an outside mirror.

Information Provided by: DEALER E-PROCESS

Downloaded from www.Manualslib.com manuals search engine

⚠ Warning

Snow can trap engine exhaust under the vehicle. This may cause exhaust gases to get inside. Engine exhaust contains carbon monoxide (CO) which cannot be seen or smelled. It can cause unconsciousness and even death.

If the vehicle is stuck in the snow:

- Clear away snow from around the base of your vehicle, especially any that is blocking the exhaust pipe.
- Check again from time to time to be sure snow does not collect there.
- Open a window about 5 cm (2 in) on the side of the vehicle that is away from the wind to bring in fresh air.

(Continued)

Warning (Continued)

- Fully open the air outlets on or under the instrument panel.
- Adjust the climate control system to a setting that circulates the air inside the vehicle and set the fan speed to the highest setting. See “Climate Control Systems”.

For more information about carbon monoxide, see *Engine Exhaust on page 9-20*.

To save fuel, run the engine for only short periods as needed to warm the vehicle and then shut the engine off and close the window most of the way to save heat. Repeat this until help arrives but only when you feel really uncomfortable from the cold. Moving about to keep warm also helps.

If it takes some time for help to arrive, now and then when you run the engine, push the accelerator pedal slightly so the engine runs faster than the idle speed. This keeps the battery charged to restart the vehicle and to signal for help with the headlamps. Do this as little as possible to save fuel.

If the Vehicle Is Stuck

Slowly and cautiously spin the wheels to free the vehicle when stuck in sand, mud, ice, or snow.

If stuck too severely for the traction system to free the vehicle, turn the traction system off and use the rocking method. See *Traction Control/Electronic Stability Control on page 9-28*.

Information Provided by: DEALER E-PROCESS

Downloaded from www.Manualslib.com manuals search engine

⚠ Warning

If the vehicle's tires spin at high speed, they can explode, and you or others could be injured. The vehicle can overheat, causing an engine compartment fire or other damage. Spin the wheels as little as possible and avoid going above 56 km/h (35 mph).

Rocking the Vehicle to Get it Out

Turn the steering wheel left and right to clear the area around the front wheels. Turn off any traction system. Shift back and forth between R (Reverse) and a low forward gear, spinning the wheels as little as possible. To prevent transmission wear, wait until the wheels stop spinning before shifting gears. Release the accelerator pedal while shifting, and press lightly on the accelerator pedal when the transmission is in gear.

Slowly spinning the wheels in the forward and reverse directions causes a rocking motion that could free the vehicle. If that does not get the vehicle out after a few tries, it might need to be towed out. If the vehicle does need to be towed out, see *Towing the Vehicle on page 10-70*.

Vehicle Load Limits

It is very important to know how much weight the vehicle can carry. This weight is called the vehicle capacity weight and includes the weight of all occupants, cargo and all nonfactory-installed options. Two labels on the vehicle show how much weight it may properly carry, the Tire and Loading Information label and the Certification label.

⚠ Warning

Do not load the vehicle any heavier than the Gross Vehicle Weight Rating (GVWR), or either the maximum front or rear Gross Axle Weight Rating (GAWR). This can cause systems to break and change the way the vehicle handles. This could cause loss of control and a crash. Overloading can also shorten the life of the vehicle.

Information Provided by: DEALER E-PROCESS

Downloaded from www.Manualslib.com manuals search engine

Tire and Loading Information Label

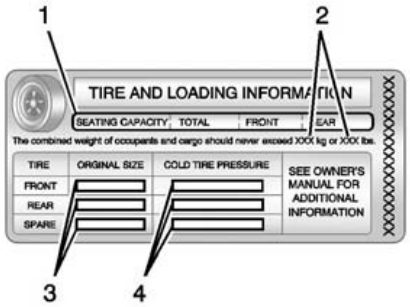

Label Example

A vehicle specific Tire and Loading Information label is attached to the vehicle's center pillar (B-pillar). With the driver door open, you will find the label attached near the door lock post. The Tire and Loading Information label shows the number of occupant seating positions (1), and the maximum vehicle capacity weight (2) in kilograms and pounds.

The Tire and Loading Information label also shows the tire size of the original equipment tires (3) and the recommended cold tire inflation pressures (4). For more information on tires and inflation, see *Tires on page 10-37* and *Tire Pressure on page 10-44*.

There is also important loading information on the Certification label. It tells you the Gross Vehicle Weight Rating (GVWR) and the Gross Axle Weight Rating (GAWR) for the front and rear axle. See “Certification Label” later in this section.

“Steps for Determining Correct Load Limit–

1. Locate the statement "The combined weight of occupants and cargo should never exceed XXX kg or XXX lbs." on your vehicle’s placard.
2. Determine the combined weight of the driver and passengers that will be riding in your vehicle.
3. Subtract the combined weight of the driver and passengers from XXX kg or XXX lbs.
4. The resulting figure equals the available amount of cargo and luggage load capacity. For example, if the "XXX" amount equals 1400 lbs. and there will be five 150 lb passengers in your vehicle, the amount of available cargo

Information Provided by: DEALER E-PROCESS

Downloaded from www.Manualslib.com manuals search engine

and luggage load capacity is 650 lbs. (1400-750 (5 x 150) = 650 lbs.)

5. Determine the combined weight of luggage and cargo being loaded on the vehicle. That weight may not safely exceed the available cargo and luggage load capacity calculated in Step 4.
6. If your vehicle will be towing a trailer, load from your trailer will be transferred to your vehicle. Consult this manual to determine how this reduces the available cargo and luggage load capacity of your vehicle."

See *Trailer Towing on page 9-44* for important information on towing a trailer, towing safety rules and trailering tips.

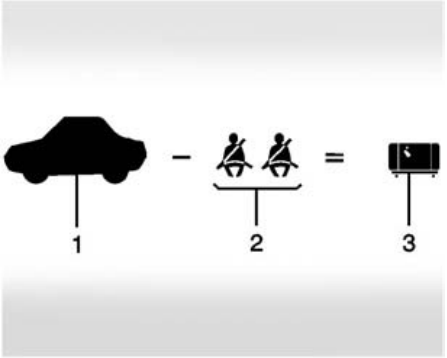

Example 1

1. Vehicle Capacity Weight for Example 1 = 453 kg (1,000 lbs).
2. Subtract Occupant Weight @ 68 kg (150 lbs) × 2 = 136 kg (300 lbs).
3. Available Occupant and Cargo Weight = 317 kg (700 lbs).

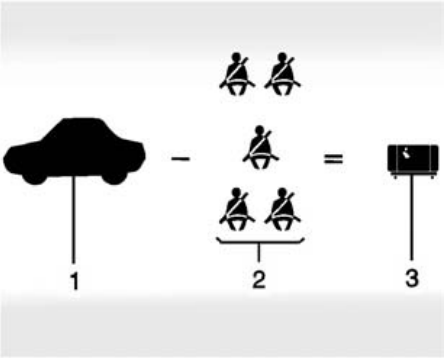

Example 2

1. Vehicle Capacity Weight for Example 2 = 453 kg (1,000 lbs).
2. Subtract Occupant Weight @ 68 kg (150 lbs) × 5 = 340 kg (750 lbs).
3. Available Cargo Weight = 113 kg (250 lbs).

Information Provided by: DEALER E-PROCESS

Downloaded from www.Manualslib.com manuals search engine

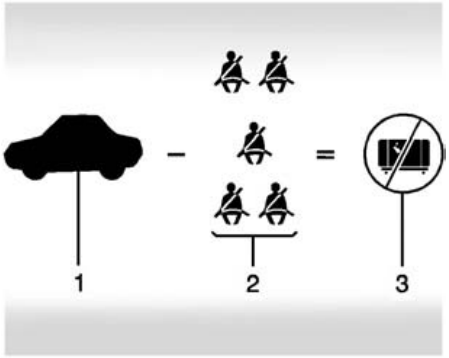

Example 3

1. Vehicle Capacity Weight for Example 3 = 453 kg (1,000 lbs).
2. Subtract Occupant Weight @ 91 kg (200 lbs) × 5 = 453 kg (1,000 lbs).
3. Available Cargo Weight = 0 kg (0 lbs).

Refer to the vehicle's Tire and Loading Information label for specific information about the vehicle's capacity weight and seating positions. The combined weight of the driver, passengers, and cargo should never exceed the vehicle's capacity weight.

Certification Label

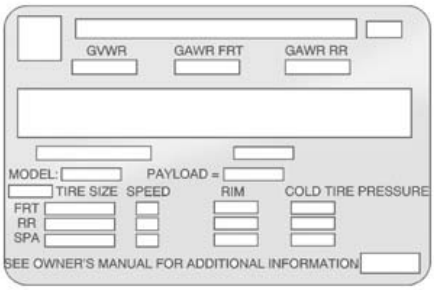

Label Example

A vehicle specific Certification label is attached to the lower area of the center pillar (B-Pillar) on the driver side of the vehicle. The label tells the gross weight capacity of the vehicle, called the Gross Vehicle Weight Rating (GVWR). The GVWR includes the weight of the vehicle, all occupants, fuel, and cargo. Never exceed the GVWR for the vehicle, or the Gross Axle Weight Rating (GAWR) for either the front or rear axle.

If the vehicle is carrying a heavy load, it should be spread out. See “Steps for Determining Correct Load Limit” earlier in this section.

⚠ Warning

Do not load the vehicle any heavier than the Gross Vehicle Weight Rating (GVWR), or either the maximum front or rear Gross Axle Weight Rating (GAWR). This can cause systems to break and change the way the vehicle handles. This could

(Continued)

DEALER E-PROCESS

Downloaded from www.Manualslib.com manuals search engine

Warning (Continued)

cause loss of control and a crash. Overloading can also shorten the life of the vehicle.

⚠ Warning

Things inside the vehicle can strike and injure people in a sudden stop or turn, or in a crash.

- Put things in the cargo area of the vehicle. In the cargo area, put them as far forward as possible. Try to spread the weight evenly.

(Continued)

Warning (Continued)

- Never stack heavier things, like suitcases, inside the vehicle so that some of them are above the tops of the seats.
- Do not leave an unsecured child restraint in the vehicle.
- Secure loose items in the vehicle.
- Do not leave a seat folded down unless needed.

Starting and Operating

New Vehicle Break-In

⚠ Caution

The vehicle does not need an elaborate break-in. But it will perform better in the long run if you follow these guidelines:

- Do not drive at any one constant speed, fast or slow, for the first 805 km (500 mi). Do not make full-throttle starts. Avoid downshifting to brake or slow the vehicle.
- Avoid making hard stops for the first 322 km (200 mi) or so. During this time the new brake linings are not yet broken in. Hard stops with new linings can mean premature wear and earlier replacement. Follow this

(Continued)

Information Provided by: DEALER E-PROCESS

Downloaded from www.Manualslib.com manuals search engine

Caution (Continued)

breaking-in guideline every time you get new brake linings.

- Do not tow a trailer during break-in. See *Trailer Towing on page 9-44* for the trailer towing capabilities of the vehicle and more information.

Following break-in, engine speed and load can be gradually increased.

Ignition Positions

The ignition switch has four different positions.

To shift out of P (Park), turn the ignition to ON/RUN or ACC/ACCESSORY and apply the regular brake pedal.

⚠ Caution

Using a tool to force the key to turn in the ignition could cause damage to the switch or break the key. Use the correct key, make sure it is all the way in, and turn it only with your hand. If the key cannot be turned by hand, see your dealer.

LOCK (STOPPING THE ENGINE/ LOCK/OFF): When the vehicle is stopped, turn the ignition switch to LOCK/OFF to turn the engine off. Retained Accessory Power (RAP) will remain active. See *Retained Accessory Power (RAP) on page 9-18*.

This position locks the ignition. It also locks the steering wheel and the transmission. The key can only be removed in LOCK/OFF. The shift lever must be in P (Park) to turn the ignition switch to LOCK/OFF.

Information Provided by: DEALER E-PROCESS

Downloaded from www.Manualslib.com manuals search engine

The steering can bind with the wheels turned off center. If this happens, move the steering wheel from right to left while turning the key to ACC/ACCESSORY. If this does not work, the vehicle needs service.

Do not turn the engine off when the vehicle is moving. This will cause a loss of power assist in the brake and steering systems and disable the airbags.

If the vehicle must be shut off in an emergency:

1. Brake using a firm and steady pressure. Do not pump the brakes repeatedly. This may deplete power assist, requiring increased brake pedal force.
2. Shift the vehicle to N (Neutral). This can be done while the vehicle is moving. After shifting to N (Neutral), firmly apply the brakes and steer the vehicle to a safe location.
3. Come to a complete stop, shift to P (Park), and turn the ignition to LOCK/OFF. On vehicles with an automatic transmission, the shift lever must be in P (Park) to turn the ignition switch to the LOCK/OFF position.
4. Set the parking brake. See *Parking Brake on page 9-26*

⚠ Warning

Turning off the vehicle while moving may cause loss of power assist in the brake and steering systems and disable the airbags. While driving, only shut the vehicle off in an emergency.

If the vehicle cannot be pulled over, and must be shut off while driving, turn the ignition to ACC/ACCESSORY.

ACC (ACC/ACCESSORY): This is the position in which you can operate some electrical accessories or items plugged into the accessory power outlets.

Use this position if the vehicle must be pushed or towed.

ON (ON/RUN): This position can be used to operate the electrical accessories and to display some instrument cluster warning and indicator lights. This position can also be used for service and diagnostics, and to verify the proper operation of the malfunction indicator lamp as may be required for emission inspection purposes. The switch stays in this position when the engine is running. The transmission is also unlocked in this position. If you leave the key in the ACC/ACCESSORY or ON/RUN positions with the engine off, the battery could be drained. You may not be able to start the vehicle if the battery is allowed to drain for an extended period of time.

Information Provided by: DEALER E-PROCESS

Downloaded from www.Manualslib.com manuals search engine

START: This is the position that starts the engine. When the engine starts, release the key. The ignition switch returns to ON/RUN for driving.

A warning tone will sound when the driver door is opened, the ignition is in ACC/ACCESSORY or LOCK/OFF, and the key is in the ignition.

Starting the Engine

Move the shift lever to P (Park) or N (Neutral). The engine will not start in any other position. To restart the engine when the vehicle is already moving, use N (Neutral) only.

⚠ Caution

Do not try to shift to P (Park) if the vehicle is moving. If you do, you could damage the transmission. Shift to P (Park) only when the vehicle is stopped.

⚠ Caution

If the steering wheel is turned until it reaches the end of its travel, and is held in that position while starting the vehicle, damage may occur to the hydraulic power steering system and there may be loss of power steering assist.

Starting Procedure

1. With your foot off the accelerator pedal, turn the ignition to START. When the engine starts, let go of the key. The idle speed will slow down as the engine warms. Do not race the engine immediately after starting it. Operate the engine and transmission gently to allow the oil to warm up and lubricate all moving parts.

   The vehicle has a Computer-Controlled Cranking System. This feature assists in starting the engine and protects components. If the ignition key is turned to the START position, and then released when the engine begins cranking, the engine will continue cranking for a few seconds or until the vehicle starts. If the engine does not start and the key is held in START, cranking will be stopped after 15 seconds to prevent cranking motor damage. To prevent gear damage, this system also prevents cranking if the engine is already running. Engine cranking can be stopped by turning the ignition switch to the ACC/ACCESSORY or LOCK/OFF position.

⚠ Caution

Cranking the engine for long periods of time, by returning the ignition to the START position immediately after cranking has ended, can overheat and damage the cranking motor, and drain the

(Continued)

Information Provided by: DEALER E-PROCESS

Downloaded from www.Manualslib.com manuals search engine

Caution (Continued)

battery. Wait at least 15 seconds between each try, to let the cranking motor cool down.

2. If the engine does not start after five to 10 seconds, especially in very cold weather (below −18°C or 0°F), it could be flooded with too much gasoline. Try pushing the accelerator pedal all the way to the floor and holding it there as you hold the key in START for up to a maximum of 15 seconds. Wait at least 15 seconds between each try, to allow the cranking motor to cool down. When the engine starts, let go of the key and accelerator. If the vehicle starts briefly but then stops again, repeat these steps. This clears the extra gasoline from the engine. Do not race the engine immediately after starting it. Operate the engine and transmission gently until the oil warms up and lubricates all moving parts.

⚠ Caution

If you add electrical parts or accessories, you could change the way the engine operates. Any resulting damage would not be covered by the vehicle warranty. See *Add-On Electrical Equipment on page 9-47*.

Retained Accessory Power (RAP)

These vehicle accessories may be used for up to 10 minutes after the ignition key is turned to the LOCK position:

- Outside Mirror
- Power Windows
- Sunroof (if equipped)
- Radio

The outside mirror, power windows and sunroof will function until a door is opened.

The radio will function until the driver door is opened.

Shifting Into Park

To shift into P (Park):

1. Hold the brake pedal down and set the parking brake. See *Parking Brake on page 9-26* for more information.
2. Move the shift lever into P (Park) by holding in the button on the shift lever and pushing the lever all the way toward the front of the vehicle.
3. Turn the ignition key to LOCK/OFF.

Information Provided by: DEALER E-PROCESS

Downloaded from www.Manualslib.com manuals search engine

Leaving the Vehicle With the Engine Running

⚠ Warning

It can be dangerous to leave the vehicle with the engine running. It could overheat and catch fire.

It is dangerous to get out of the vehicle if the shift lever is not fully in P (Park) with the parking brake firmly set. The vehicle can roll.

Do not leave the vehicle when the engine is running. If you have left the engine running, the vehicle can move suddenly. You or others could be injured. To be sure the vehicle will not move, even when you are on fairly level ground, always set the parking brake and move the shift lever to P (Park). See *Shifting Into Park on page 9-18*. If you are towing a trailer, see *Driving Characteristics and Towing Tips on page 9-41*.

If you have to leave an automatic transmission vehicle with the engine running, be sure the vehicle is in P (Park) and the parking brake is firmly set before you leave it. After you have moved the shift lever into P (Park), hold the brake pedal down. Then, see if you can move the shift lever away from P (Park) without first pushing the button. If you can, it means that the shift lever was not fully locked into P (Park).

Torque Lock

If you are parking on a hill and you do not shift into P (Park) properly, the weight of the vehicle may put too much force on the parking pawl in the transmission. You may find it difficult to pull the shift lever out of P (Park). This is called “torque lock.” To prevent torque lock, set the parking brake and then shift into P (Park) properly before you leave the driver seat. To find out how, see *Shifting Into Park on page 9-18*.

Move the shift lever out of P (Park) before you release the parking brake.

If torque lock does occur, you may need to have another vehicle push yours a little uphill to take some of the pressure from the parking pawl in the transmission, so you can pull the shift lever out of P (Park).

Shifting out of Park

The vehicle has an electronic shift lock release system. The shift lock release is designed to:

- Prevent ignition key removal unless the shift lever is in P (Park) with the shift lever button fully released.
- Prevent movement of the shift lever out of P (Park), unless the ignition is in ON/RUN or ACC/ACCESSORY and the regular brake pedal is applied.

Information Provided by: DEALER E-PROCESS

Downloaded from www.Manualslib.com manuals search engine

The shift lock release is always functional except in the case of an uncharged or low voltage (less than 9 volt) battery.

If the vehicle has an uncharged battery or a battery with low voltage, try charging or jump starting the battery. See *Jump Starting on page 10-66* for more information.

To shift out of P (Park):

1. Apply the brake pedal.
2. Press the shift lever button.
3. Move the shift lever to the desired position.

If you still are unable to shift out of P (Park):

1. Fully release the shift lever button.
2. Hold the brake pedal down and press the shift lever button again.
3. Move the shift lever to the desired position.

If you still cannot move the shift lever from P (Park), consult your dealer or a professional towing service.

Parking over Things That Burn

⚠ Warning

Things that can burn could touch hot exhaust parts under the vehicle and ignite. Do not park over papers, leaves, dry grass, or other things that can burn.

Engine Exhaust

⚠ Warning

Engine exhaust contains carbon monoxide (CO) which cannot be seen or smelled. Exposure to CO can cause unconsciousness and even death.

Exhaust may enter the vehicle if:

- The vehicle idles in areas with poor ventilation (parking garages, tunnels, deep snow that may block underbody airflow or tail pipes).
- The exhaust smells or sounds strange or different.
- The exhaust system leaks due to corrosion or damage.
- The vehicle exhaust system has been modified, damaged, or improperly repaired.

(Continued)

Information Provided by: DEALER E-PROCESS

Downloaded from www.Manualslib.com manuals search engine

Warning (Continued)

- There are holes or openings in the vehicle body from damage or aftermarket modifications that are not completely sealed.

If unusual fumes are detected or if it is suspected that exhaust is coming into the vehicle:

- Drive it only with the windows completely down.
- Have the vehicle repaired immediately.

Never park the vehicle with the engine running in an enclosed area such as a garage or a building that has no fresh air ventilation.

Running the Vehicle While Parked

It is better not to park with the engine running.

If the vehicle is left with the engine running, follow the proper steps to be sure the vehicle will not move. See *Shifting Into Park on page 9-18* and *Engine Exhaust on page 9-20*.

If parking on a hill and pulling a trailer, see *Driving Characteristics and Towing Tips on page 9-41*.

Automatic Transmission

There are several different positions for the automatic transmission.

P (Park): This position locks the wheels. It is the best position to use when starting the engine because the vehicle cannot move easily.

Information Provided by: DEALER E-PROCESS

Downloaded from www.Manualslib.com manuals search engine

⚠ Warning

It is dangerous to get out of the vehicle if the shift lever is not fully in P (Park) with the parking brake firmly set. The vehicle can roll.

Do not leave the vehicle when the engine is running. If you have left the engine running, the vehicle can move suddenly. You or others could be injured. To be sure the vehicle will not move, even when you are on fairly level ground, always set the parking brake and move the shift lever to P (Park). See *Shifting Into Park on page 9-18* and *Driving Characteristics and Towing Tips on page 9-41*.

Make sure the shift lever is fully in P (Park) before starting the engine. The vehicle has an automatic transmission shift lock control system. You have to fully apply the regular brakes first and then press the shift lever button before you can shift from P (Park) when the ignition key is in ON/RUN. If you cannot shift out of P (Park), ease pressure on the shift lever and push the shift lever all the way into P (Park) as you maintain brake application. Then press the shift lever button and move the shift lever into another gear. See *Shifting out of Park on page 9-19*.

R (Reverse): Use this gear to back up.

⚠ Caution

Shifting to R (Reverse) while the vehicle is moving forward could damage the transmission. The repairs would not be covered by the vehicle warranty. Shift to R (Reverse) only after the vehicle is stopped.

To rock the vehicle back and forth to get out of snow, ice, or sand without damaging the transmission, see *If the Vehicle Is Stuck on page 9-9*.

N (Neutral): In this position, the engine does not connect with the wheels. To restart the engine when the vehicle is already moving, use N (Neutral) only. Also, use N (Neutral) when the vehicle is being towed.

⚠ Warning

Shifting into a drive gear while the engine is running at high speed is dangerous. Unless your foot is firmly on the brake pedal, the vehicle could move very rapidly. You could lose control and hit people or objects. Do not shift into a drive gear while the engine is running at high speed.

Information Provided by: DEALER E-PROCESS

Downloaded from www.Manualslib.com manuals search engine

⚠ Caution

Shifting out of P (Park) or N (Neutral) with the engine running at high speed may damage the transmission. The repairs would not be covered by the vehicle warranty. Be sure the engine is not running at high speed when shifting the vehicle.

D (Drive): This position is for normal driving with the automatic transmission. It provides the best fuel economy. If you need more power for passing, and you are:

- Going less than about 55 km/h (35 mph), push the accelerator pedal about halfway down.
- Going about 55 km/h (35 mph), push the accelerator all the way down.

Downshifting the transmission in slippery road conditions could result in skidding. See “Skidding” under *Loss of Control on page 9-5*.

M (Manual): This position allows you to change gears similar to a manual transmission. If equipped, see *Manual Mode on page 9-23*.

⚠ Caution

Spinning the tires or holding the vehicle in one place on a hill using only the accelerator pedal may damage the transmission. The repair will not be covered by the vehicle warranty. If you are stuck, do not spin the tires. When stopping on a hill, use the brakes to hold the vehicle in place.

Manual Mode

Electronic Range Select (ERS) Mode

ERS mode allows you to choose the top-gear limit of the transmission and the vehicle's speed while driving downhill or towing a trailer. The vehicle has an electronic shift position indicator within the instrument panel cluster. When using the ERS mode a number will display in place of the D (Drive), indicating the current gear range that has been selected.

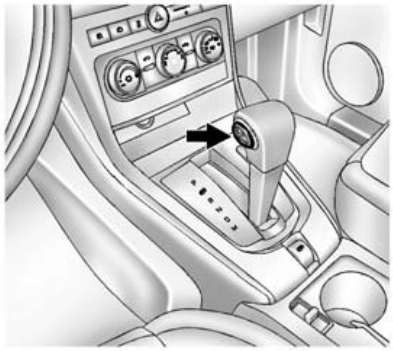

To use this feature:

1. Move the shift lever to M (Manual).
2. Press the plus/minus button located on the shift lever, to increase or decrease the gear range available.

Information Provided by: DEALER E-PROCESS

Downloaded from www.Manualslib.com manuals search engine

When you shift from D (Drive) to M (Manual), the transmission will shift to a pre-determined lower gear range. The highest gear available for this pre-determined range is displayed in the DIC. See *Driver Information Center (DIC) on page 5-24*. The number displayed in the DIC is the highest gear that the transmission will be allowed to operate in. This means that all gears below that number are available. For example, when 4 (Fourth) is shown, 1 (First) through 4 (Fourth) gears are automatically shifted by the vehicle. The transmission will not shift into 5 (Fifth) until the + (Plus) button is used or you shift back into D (Drive).

While in M (Manual), the transmission will prevent shifting to a lower gear range if the engine speed is too high. You have a brief period of time to slow the vehicle. If vehicle speed is not reduced within the time allowed, the lower gear range shift will not be completed. You must further slow the vehicle, then press the − (Minus) button to the desired lower gear range.

Automatic Engine Grade Braking is not available when the ERS is active. It is available in D (Drive). While using the ERS, cruise control can be used.

Fuel Economy Mode

The vehicle may have a fuel economy mode. When engaged, fuel economy mode can improve the vehicle's fuel economy.

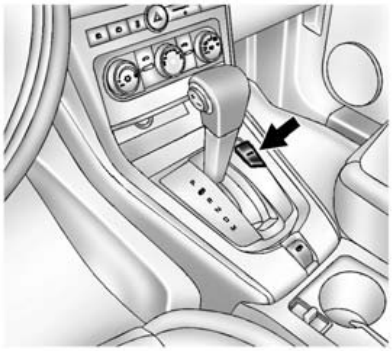

Information Provided by: DEALER E-PROCESS

Pressing the eco button by the shift lever will engage fuel economy mode. When activated, the eco light in the instrument cluster will come on. See *Fuel Economy Light on page 5-21*. Pressing the button a second time will turn fuel economy mode off.

When fuel economy mode is on:

- The transmission will upshift sooner, and downshift later.
- The torque converter will lock–up sooner, and stay on longer.
- The gas pedal will be less sensitive.
- The vehicle’s driving performance will be more conservative.
- The vehicle's computers will more aggressively shut off fuel to the engine under deceleration.
- The engine idle speed will be lower.

Do not use fuel economy mode while towing.

Downloaded from www.Manualslib.com manuals search engine

Drive Systems

All-Wheel Drive

Vehicles with this feature always send engine power to all four wheels. It is fully automatic, and adjusts itself as needed for road conditions.

When using a compact spare tire on an AWD vehicle, the system automatically detects the compact spare and disables AWD. To restore AWD operation and prevent excessive wear on the system, replace the compact spare with a full-size tire as soon as possible. See *Compact Spare Tire on page 10-65*.

Brakes

Antilock Brake System (ABS)

This vehicle has ABS, an advanced electronic braking system that helps prevent a braking skid.

When the vehicle begins to drive away, ABS checks itself.
A momentary motor or clicking noise might be heard while this test is going on, and it might even be noticed that the brake pedal moves a little. This is normal.

If there is a problem with ABS, this warning light stays on. See *Antilock Brake System (ABS) Warning Light on page 5-18*.

If driving safely on a wet road and it becomes necessary to slam on the brakes and continue braking to avoid a sudden obstacle, a computer senses that the wheels are slowing down. If one of the wheels is about to stop rolling, the computer will separately work the brakes at each wheel.

ABS can change the brake pressure to each wheel, as required, faster than any driver could. This can help you steer around the obstacle while braking hard.

As the brakes are applied, the computer keeps receiving updates on wheel speed and controls braking pressure accordingly.

Remember: ABS does not change the time needed to get a foot up to the brake pedal or always decrease stopping distance. If you get too close to the vehicle in front of you, there will not be enough time to apply the brakes if that vehicle

Information Provided by:
DEALER E-PROCESS

Downloaded from www.Manualslib.com manuals search engine

suddenly slows or stops. Always leave enough room up ahead to stop, even with ABS.

Using ABS

Do not pump the brakes. Just hold the brake pedal down firmly and let ABS work. You might hear the ABS pump or motor operating and feel the brake pedal pulsate, but this is normal.

Braking in Emergencies

ABS allows you to steer and brake at the same time. In many emergencies, steering can help more than even the very best braking.

Parking Brake

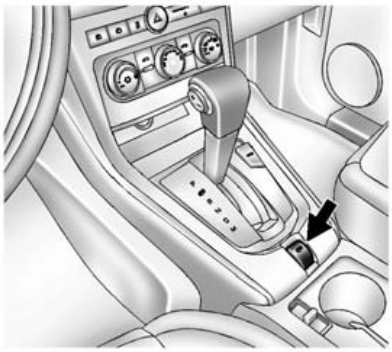

The vehicle has an Electric Parking Brake (EPB). The switch for the EPB is in the center console. The EPB can always be activated, even if the ignition is OFF. To prevent draining the battery, avoid repeated cycles of the EPB system when the engine is not running.

The system has a parking brake status light and a parking brake warning light. See *Electric Parking Brake Light on page 5-17*. There are also several Driver Information Center (DIC) messages. See *Brake System Messages on page 5-29*. In case of insufficient electrical power, the EPB cannot be applied or released.

Before leaving the vehicle, check the parking brake status light to insure the parking brake is applied.

EPB Apply

The EPB can be applied any time the vehicle is stopped. The EPB is applied by momentarily lifting up on the EPB switch. Once fully applied, the parking brake status light and brake system warning light will be on. While the brake is being applied, the status light will flash until full apply is reached. Once fully applied, the DIC message PARK BRAKE SET will be displayed. If the status light does not come on, or remains flashing, have the vehicle serviced. Do not drive the vehicle if the parking brake status light is flashing. See your dealer. See *Electric Parking Brake Light on page 5-17*.

Information Provided by: DEALER E-PROCESS

Downloaded from www.Manualslib.com manuals search engine

If the EPB is applied while the vehicle is in motion, a chime will sound, and the DIC message RELEASE PARK BRAKE SWITCH will be displayed. The vehicle will decelerate as long as the switch is held in the up position. Releasing the EPB switch during deceleration will release the parking brake. If the switch is held in the up position until the vehicle comes to a stop, the EPB will remain applied.

If the parking brake status light flashes continuously, the EPB is only partially applied or released, or there is a problem with the EPB. The DIC message SERVICE PARKING BRAKE will be displayed. If this light flashes continuously, release the EPB, and attempt to apply it again. If this light continues to flash, do not drive the vehicle. See your dealer.

If the parking brake warning light is on, the EPB has detected an error in another system and is operating with reduced functionality. To apply the EPB when this light is on, lift up on the EPB switch and hold it in the up position. Full application of the parking brake by the EPB system may take a longer period of time than normal when this light is on. Continue to hold the switch until the parking brake status light remains on. If the parking brake warning light is on, see your dealer.

If the EPB fails to apply, the rear wheels should be blocked to prevent vehicle movement.

EPB Release

To release the EPB, place the ignition in the ACC/ACCESSORY or ON/RUN position, apply and hold the brake pedal, and push down momentarily on the EPB switch. If you attempt to release the EPB without the brake pedal applied, a chime will sound, and the DIC message STEP ON BRAKE TO RELEASE PARK BRAKE will be displayed. The EPB is released when the parking brake status light is off.

If the parking brake warning light is on, the EPB has detected an error in another system and is operating with reduced functionality. To release the EPB when this light is on, push down on the EPB switch and hold it in the down position. EPB release may take a longer period of time than normal when this light is on. Continue to hold the switch until the parking brake status light is off. If the light is on, see your dealer.

⚠ Caution

Driving with the parking brake on can overheat the brake system and cause premature wear or damage to brake system parts. Make sure that the parking brake is fully released and the brake warning light is off before driving.

Information Provided by: DEALER E-PROCESS

Downloaded from www.Manualslib.com manuals search engine

Automatic EPB Release

The EPB will automatically release if the vehicle is running, placed into gear and an attempt is made to drive away. Avoid rapid acceleration when the EPB is applied, to preserve parking brake lining life.

For maximum EPB force when towing a trailer or parking on a hill, pull the EPB switch twice. If you are towing a trailer and parking on a hill, see *Driving Characteristics and Towing Tips on page 9-41*.

Ride Control Systems

Traction Control/ Electronic Stability Control

System Operation

The vehicle has a Traction Control System (TCS) and StabiliTrak®, an electronic stability control system. These systems help limit wheel slip and assist the driver in maintaining control, especially on slippery road conditions.

TCS activates if it senses that any of the drive wheels are spinning or beginning to lose traction. When this happens, TCS applies the brakes to the spinning wheels and reduces engine power to limit wheel spin.

StabiliTrak activates when the vehicle senses a difference between the intended path and the direction the vehicle is actually traveling. StabiliTrak selectively applies braking pressure to any one of the vehicle wheel brakes to assist the driver in keeping the vehicle on the intended path.

If cruise control is being used and traction control or StabiliTrak begins to limit wheel spin, cruise control will disengage. Cruise control may be turned back on when road conditions allow.

Both systems come on automatically when the vehicle is started and begins to move. The systems may be heard or felt while they are operating or while performing diagnostic checks. This is normal and does not mean there is a problem with the vehicle.

It is recommended to leave both systems on for normal driving conditions, but it may be necessary to turn TCS off if the vehicle gets stuck in sand, mud, ice, or snow. See *If the Vehicle Is Stuck on page 9-9* and “Turning the Systems Off and On” later in this section.

Information Provided by: DEALER E-PROCESS

Downloaded from www.Manualslib.com manuals search engine

The indicator light for both systems is in the instrument cluster. This light will:

- Flash when TCS is limiting wheel spin.
- Flash when StabiliTrak is activated.
- Turn on and stay on when either system is not working.

If either system fails to turn on or to activate, a message displays in the Driver Information Center (DIC), and comes on and stays on to indicate that the system is inactive and is not assisting the driver in maintaining control. The vehicle is safe to drive, but driving should be adjusted accordingly.

If comes on and stays on:

1. Stop the vehicle.
2. Turn the engine off and wait 15 seconds.
3. Start the engine.

Drive the vehicle. If comes on and stays on, the vehicle may need more time to diagnose the problem. If the condition persists, see your dealer.

Turning the Systems Off and On

OFF

The button for TCS and StabiliTrak is on the instrument panel.

⚠ Caution

Do not repeatedly brake or accelerate heavily when TCS is off. The vehicle driveline could be damaged.

To turn off only TCS, press and release the button. The appropriate message displays in the DIC. To turn TCS on again, press and release the button. The appropriate message displays in the DIC.

If TCS is limiting wheel spin when the button is pressed, the system will not turn off until the wheels stop spinning.

To turn off both TCS and StabiliTrak, press and hold the button until the StabiliTrak Off light comes on and stays on in the instrument cluster. To turn TCS and StabiliTrak on again, press and release the

Information Provided by: DEALER E-PROCESS

Downloaded from www.Manualslib.com manuals search engine

button. The StabiliTrak Off light in the instrument cluster turns off. The appropriate message displays in the DIC.

Adding accessories can affect the vehicle performance. See *Accessories and Modifications on page 10-2*.

Brake Pedal Override

This vehicle has this feature that limits engine torque when the brake pedal is applied. If there is one foot on the brake pedal and the other foot on the accelerator, the engine rpm will only climb to slightly more than idle speed.

This feature is enabled at vehicle start. Press and release the TCS/StabiliTrak button to disable or enable this feature and TCS. The appropriate message will display on the DIC. See *Ride Control System Messages on page 5-33*.

Cruise Control

With cruise control, the vehicle can maintain a speed of about 40 km/h (25 mph) or more without keeping your foot on the accelerator. Cruise control does not work at speeds below 40 km/h (25 mph).

If the brakes are applied, the cruise control shuts off.

On vehicles with the StabiliTrak® feature, the system may begin to limit wheel spin while you are using cruise control. If this happens, the cruise control will automatically disengage. See *Traction Control/ Electronic Stability Control on page 9-28*.

⚠ Warning

Cruise control can be dangerous where you cannot drive safely at a steady speed. Do not use the cruise control on winding roads or in heavy traffic.

(Continued)

Warning (Continued)

Cruise control can be dangerous on slippery roads. On such roads, fast changes in tire traction can cause excessive wheel slip, and you could lose control. Do not use cruise control on slippery roads.

Setting Cruise Control

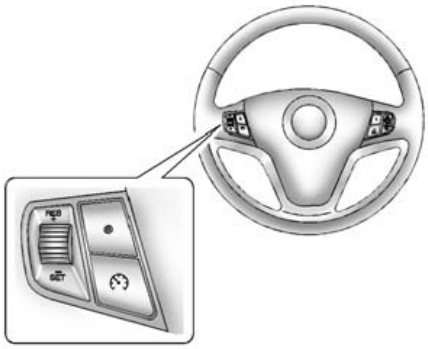

Information Provided by: DEALER E-PROCESS

Downloaded from www.Manualslib.com manuals search engine

(On/Off): Press to turn the cruise control system on and off. The indicator light on the button turns on or off.

RES+ (Resume/Accel): Move the thumbwheel up briefly to make the vehicle resume to a previously set speed or hold upwards to accelerate. If cruise control is already active, use to increase vehicle speed.

−SET (Set/Coast): Move the thumbwheel down briefly to set the speed and activate cruise control. If cruise control is already active, use to decrease speed.

Setting Cruise Control

If the cruise control is on when not in use, it could get bumped and go into cruise when not desired. Keep the cruise control switch off when cruise is not being used.

1. Press to turn cruise control on. The indicator light on the button comes on.
2. Get to the speed desired.
3. Move the thumbwheel down and release it.
4. Remove foot from the accelerator.

When the cruise control has been set to the desired speed, a green cruise control indicator appears on the instrument cluster.

Resuming a Set Speed

If the cruise control is set at a desired speed and then the brakes are applied, the cruise control is disengaged without erasing the set speed from memory. The indicator light on the instrument cluster goes out when cruise control is no longer engaged.

Once the vehicle reaches about 40 km/h (25 mph) or greater, move the thumbwheel up toward RES+ briefly. The vehicle returns to the previously set speed.

Increasing Speed While Using Cruise Control

If the cruise control system is already activated:

- Move the thumbwheel up toward RES+ and hold it until the vehicle accelerates to the desired speed, and then release the switch.
- To increase the speed in small increments, move the thumbwheel up toward RES+ briefly and then release it. Each time this is done, the vehicle goes about 1.6 km/h (1 mph) faster.

Reducing Speed While Using Cruise Control

If the cruise control system is already activated:

- Move the thumbwheel toward −SET and hold until the desired lower speed is reached, then release it.

Information Provided by: DEALER E-PROCESS

Downloaded from www.Manualslib.com manuals search engine

- To slow down in small increments, move the thumbwheel toward −SET briefly. Each time this is done, the vehicle goes about 1.6 km/h (1 mph) slower.

Passing Another Vehicle While Using Cruise Control

Use the accelerator pedal to increase the vehicle speed. When you take your foot off the pedal, the vehicle slows down to the previous set cruise control speed. While pressing the accelerator pedal or shortly following the release to override cruise control, briefly moving the thumbwheel toward –SET will result in cruise control set to the current vehicle speed.

Using Cruise Control on Hills

How well the cruise control works on hills depends upon the vehicle's speed, load, and the steepness of the hills. When going up steep hills, you might have to step on the accelerator pedal to maintain the vehicle's speed. When going downhill, you might have to brake or shift to a lower gear to maintain the vehicle's speed. For some vehicles the transmission may automatically downshift when going down hills to help maintain the vehicle's speed. When the brakes are applied, the cruise control shuts off.

Ending Cruise Control

There are two ways to disengage the cruise control:

- Step lightly on the brake pedal; when cruise control disengages, the indicator light on the instrument cluster goes out.
- Press ⏲ to turn off the cruise control system.

Erasing Speed Memory

The cruise control set speed memory is erased when the cruise control or the ignition is turned off.

Driver Assistance Systems

Ultrasonic Parking Assist

If available, the Ultrasonic Rear Parking Assist (URPA) system assists the driver with parking and avoiding objects while in R (Reverse). URPA operates at speeds less than 8 km/h (5 mph). The sensors on the rear bumper are used to detect objects up to 2.5 m (8 ft) behind the vehicle, and at least 25 cm (10 in) off the ground and below liftgate level. Detection distances may be less during warmer or humid weather.

⚠ Warning

The URPA system does not detect children, pedestrians, bicyclists, animals, or objects below the bumper or that are too close or too far from the vehicle.

(Continued)

Information Provided by: DEALER E-PROCESS

Downloaded from www.Manualslib.com manuals search engine

Warning (Continued)

It is not available at speeds greater than 8 km/h (5 mph). To prevent injury, death, or vehicle damage, even with URPA, always check the area around the vehicle and check all mirrors before backing.

How the System Works

URPA comes on automatically when the shift lever is moved into R (Reverse). A single beep sounds to indicate the system is working.

An obstacle is indicated by audible beeps. The interval between the beeps becomes shorter as the vehicle gets closer to the obstacle. When the distance is less than 30 cm (12 in) the beeping is continuous for five seconds.

Turning the System On and Off

The system can be disabled through the Driver Information Center (DIC). See “Park Assist” under *Driver Information Center (DIC) on page 5-24* for more information.

Turn off URPA when towing a trailer.

URPA defaults to the on setting each time the vehicle is started.

When the System Does Not Seem to Work Properly

The following messages may be displayed on the DIC:

SERVICE PARK ASSIST: If this message occurs, take the vehicle to your dealer to repair the system.

PARK ASST BLOCKED SEE OWNERS MANUAL: This message can occur under the following conditions:

- The ultrasonic sensors are not clean. Keep the vehicle's rear bumper free of mud, dirt, snow, ice, and slush. For cleaning instructions, see *Exterior Care on page 10-74*.
- The park assist sensors are covered by frost or ice. Frost or ice can form around and behind the sensors and may not always be seen; this can occur after washing the vehicle in cold weather. The message may not clear until the frost or ice has melted.
- A trailer was attached to the vehicle, or an object was hanging out of the liftgate during the last drive cycle. Once the object is removed, URPA will return to normal operation.
- A tow bar is attached to the vehicle.
- The bumper is damaged. Take the vehicle to your dealer to repair the system.

Information Provided by: DEALER E-PROCESS

Downloaded from www.Manualslib.com manuals search engine

- Other conditions, such as vibrations from a jackhammer or the compression of air brakes on a very large truck, are affecting system performance.

Rear Vision Camera (RVC)

The vehicle may have an RVC system. Read this entire section before using it.

The RVC can assist the driver when backing up by displaying a view of the area behind the vehicle.

⚠ Warning

The RVC system does not display children, pedestrians, bicyclists, animals, or any other object located outside the camera's field of view, below the bumper, or under the vehicle. Perceived distances may be different from actual distances. Do not back the

(Continued)

Warning (Continued)

vehicle using only the RVC screen, during longer, higher speed backing maneuvers, or where there could be cross traffic. Failure to use proper care before backing may result in injury, death, or vehicle damage. Always check behind and around the vehicle before backing.

An image appears on the radio screen with the message Check Surroundings for Safety when the vehicle is shifted into R (Reverse). The radio screen goes to the previous screen after approximately 10 seconds once the vehicle is shifted out of R (Reverse).

To see the previous screen sooner, do one of the following:

- Press a hard key on the infotainment system.
- Shift into P (Park).
- Reach a vehicle speed of 8 km/h (5 mph).

Rear Vision Camera Location

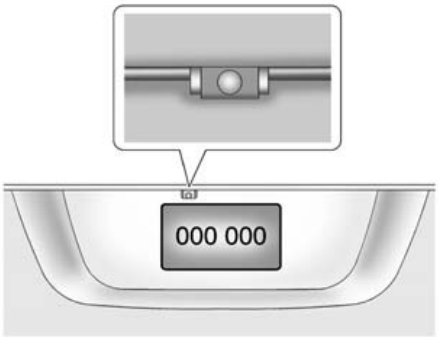

The camera is above the license plate.

The area displayed by the camera is limited.

It does not display objects that are close to either corner or under the bumper and can vary depending on vehicle orientation or road conditions. Displayed images may be farther or closer than they appear.

Information Provided by: DEALER E-PROCESS

Downloaded from www.Manualslib.com manuals search engine

The following illustrations show the field of view that the camera provides.

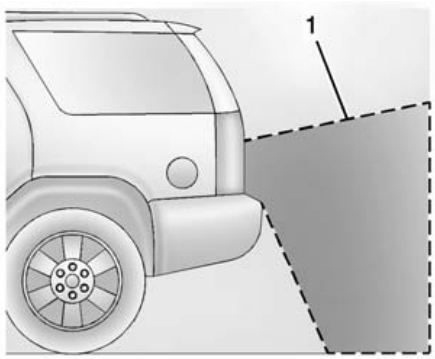

1. View displayed by the camera.

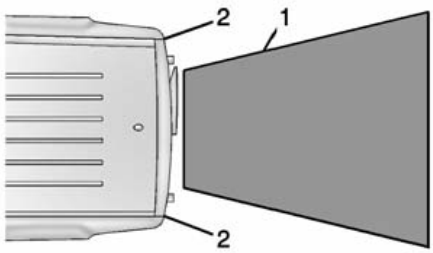

1. View displayed by the camera.

2. Corner of the rear bumper.

When the System Does Not Seem To Work Properly

The RVC system may not work properly or display a clear image if:

- It is dark.
- The sun or the beam of headamps is shining directly into the camera lens.
- Ice, snow, mud, or anything else builds up on the camera lens. Clean the lens, rinse it with water, and wipe it with a soft cloth.
- The back of the vehicle is in an accident. The position and mounting angle of the camera can change or the camera can be affected. Be sure to have the camera and its position and mounting angle checked at your dealer.
- There are extreme temperature changes.

Information Provided by: DEALER E-PROCESS

Fuel

Use of the recommended fuel is an important part of the proper maintenance of this vehicle. When driving in the U.S., to help keep the engine clean and maintain optimum vehicle performance, we recommend using TOP TIER Detergent Gasolines. See www.toptiergas.com for a list of TOP TIER Detergent Gasolines.

TOP TIER™ Detergent Gasoline

CATÉGORIE SUPERIÉURE™ Essences Détergentes

Downloaded from www.Manualslib.com manuals search engine

If the vehicle has a yellow fuel cap, E85 or FlexFuel can be used in the vehicle. See *E85 or FlexFuel on page 9-37*.

Recommended Fuel

Use regular unleaded gasoline with a posted octane rating of 87 or higher. If the octane rating is less than 87, an audible knocking noise may be heard. If this occurs, use a gasoline rated at 87 octane or higher as soon as possible. If heavy knocking is heard when using gasoline with a higher octane rating, the engine needs service.

Use of Seasonal Fuels

Use summer and winter fuels in the appropriate season. Driving or starting could be affected if the incorrect fuel is used. Drive the vehicle with the engine running until the fuel is a half tank or less, then refuel with the current seasonal fuel.

Prohibited Fuels

Gasolines containing oxygenates, such as ethers and ethanol, as well as reformulated gasolines are available in some cities. If these gasolines comply with the previously described specification, then they are acceptable to use. However, E85 and other fuels containing more than 15% ethanol must be used only in FlexFuel vehicles.

⚠ Caution

Do not use fuel containing methanol. It can corrode metal parts in the fuel system and also damage plastic and rubber parts. That damage would not be covered under the vehicle warranty.

Some gasolines that are not reformulated for low emissions can contain an octane-enhancing additive called methylcyclopentadienyl manganese tricarbonyl (MMT). Do not use gasolines with MMT as they can reduce spark plug life and affect emission control system performance. The malfunction indicator lamp may turn on. If this occurs, see your dealer for service.

Gasoline Specifications

At a minimum, gasoline should meet ASTM specification D 4814. Some gasolines contain an octane-enhancing additive called methylcyclopentadienyl manganese tricarbonyl (MMT). We recommend against the use of gasolines containing MMT. See “Prohibited Fuels" in *Recommended Fuel on page 9-36*.

California Fuel Requirements

If the vehicle is certified to meet California Emissions Standards, it is designed to operate on fuels that meet California specifications. See

Information Provided by: DEALER E-PROCESS

Downloaded from www.Manualslib.com manuals search engine

the underhood emission control label. If this fuel is not available in states adopting California Emissions Standards, the vehicle will operate satisfactorily on fuels meeting federal specifications, but emission control system performance might be affected. The malfunction indicator lamp could turn on and the vehicle may not pass a smog-check test. See *Malfunction Indicator Lamp on page 5-14*. If this occurs, return to your authorized dealer for diagnosis. If it is determined that the condition is caused by the type of fuel used, repairs may not be covered by the vehicle warranty.

Fuels in Foreign Countries

If planning to drive in countries outside the U.S. or Canada, the proper fuel might be hard to find. Check regional auto club or fuel retail brand websites for availability in the country where driving. Never use leaded gasoline, fuel containing methanol, or any other fuel not recommended. Costly repairs caused by use of improper fuel would not be covered by the vehicle warranty.

Fuel Additives

To keep fuel systems clean, TOP TIER Detergent Gasoline is recommended. See *Fuel on page 9-35*.

If TOP TIER Detergent Gasoline is not available, one bottle of Fuel System Treatment PLUS, part number 88861013, added to the fuel tank at every engine oil change, can help. Fuel System Treatment PLUS is the only gasoline additive recommended by General Motors. It is available at your dealer.

Do not use additives with E85 or FlexFuel.

E85 or FlexFuel

Vehicles with a yellow fuel cap can use either unleaded gasoline or fuel containing up to 85% ethanol (E85). All other vehicles should use only the unleaded gasoline as described in *Recommended Fuel on page 9-36*.

The use of E85 or FlexFuel is encouraged when the vehicle is designed to use it. E85 or FlexFuel is made from renewable sources.

To help locate fuel stations that carry E85 or FlexFuel, the U.S. Department of Energy has an alternative fuel website. See www.afdc.energy.gov/afdc/locator/stations.

E85 or FlexFuel should meet ASTM Specification D 5798 or CAN/CGSB–3.512 in Canada. Do not use the fuel if the ethanol content is greater than 85%. Fuel mixtures that do not meet ASTM or CGSB specifications can affect driveability and could cause the malfunction indicator lamp to come on.

Information Provided by:
DEALER E-PROCESS

Downloaded from www.Manualslib.com manuals search engine

The starting characteristics of E85 or FlexFuel make it unsuitable for use when temperatures fall below −18°C (0°F). Use gasoline or add gasoline to the E85 or FlexFuel.

Because E85 or FlexFuel has less energy per liter (gallon) than gasoline, the vehicle will need to be refilled more often. See *Filling the Tank on page 9-38*.

⚠ Caution

Some additives are not compatible with E85 or FlexFuel and can harm the vehicle's fuel system. Do not add anything to E85 or FlexFuel. Damage caused by additives would not be covered by the vehicle warranty.

⚠ Caution

Do not use fuel containing methanol. It can corrode metal parts in the fuel system and also damage plastic and rubber parts. That damage would not be covered under the vehicle warranty.

Filling the Tank

⚠ Warning

Fuel vapors and fuel fires burn violently and can cause injury or death.

- To help avoid injuries to you and others, read and follow all the instructions on the fuel pump island.
- Turn off the engine when refueling.

(Continued)

Warning (Continued)

- Keep sparks, flames, and smoking materials away from fuel.
- Do not leave the fuel pump unattended.
- Do not reenter the vehicle while pumping fuel.
- Keep children away from the fuel pump and never let children pump fuel.
- Fuel can spray out if the fuel cap is opened too quickly. This spray can happen if the tank is nearly full, and is more likely in hot weather. Open the fuel cap slowly and wait for any hiss noise to stop then unscrew the cap all the way

Information Provided by: DEALER E-PROCESS

Downloaded from www.Manualslib.com manuals search engine

The tethered fuel cap is located behind a hinged fuel door on the driver side of the vehicle. On some vehicles with Remote Keyless Entry, the fuel door is locked and unlocked when the vehicle doors are locked and unlocked.

To remove the fuel cap, turn it slowly counterclockwise. The fuel cap has a spring in it; if the cap is released too soon, it will spring back to the right. To avoid fuel contact on the painted surface of the vehicle when filling the fuel tank, place the tethered cap on the fuel filler door.

Be careful not to spill fuel. Do not top off or overfill the tank and wait a few seconds after you have finished pumping before removing the nozzle. Clean fuel from painted surfaces as soon as possible. See *Exterior Care on page 10-74*.

When replacing the fuel cap, turn it clockwise until it clicks. Make sure the cap is fully installed. The diagnostic system can determine if the fuel cap has been left off or improperly installed. This would allow fuel to evaporate into the atmosphere. See *Malfunction Indicator Lamp on page 5-14*.

⚠ Warning

If a fire starts while you are refueling, do not remove the nozzle. Shut off the flow of fuel by shutting off the pump or by notifying the station attendant. Leave the area immediately.

⚠ Caution

If a new fuel cap is needed, be sure to get the right type of cap from your dealer. The wrong type of fuel cap might not fit properly, might cause the malfunction indicator lamp to light, and could damage the fuel tank and emissions system. See *Malfunction Indicator Lamp on page 5-14*.

Information Provided by: DEALER E-PROCESS

Downloaded from www.Manualslib.com manuals search engine

Filling a Portable Fuel Container

⚠ Warning

Filling a portable fuel container while it is in the vehicle can cause fuel vapors that can ignite either by static electricity or other means. You or others could be badly burned and the vehicle could be damaged. Always:

- Use approved fuel containers.
- Remove the container from the vehicle, trunk, or pickup bed before filling.
- Place the container on the ground.
- Place the nozzle inside the fill opening of the container before dispensing fuel, and

(Continued)

Warning (Continued)

keep it in contact with the fill opening until filling is complete.

- Fill the container no more than 95% full to allow for expansion.
- Do not smoke, light matches, or use lighters while pumping fuel.
- Avoid using cell phones or other electronic devices.

Trailer Towing

General Towing Information

Only use towing equipment that has been designed for the vehicle. Contact your dealer or trailering dealer for assistance with preparing the vehicle for towing a trailer. Read the entire section before towing a trailer.

For towing a disabled vehicle, see *Towing the Vehicle on page 10-70*. For towing the vehicle behind another vehicle such as a motor home, see *Recreational Vehicle Towing on page 10-71*.

Information Provided by: DEALER E-PROCESS

Downloaded from www.Manualslib.com manuals search engine

Driving Characteristics and Towing Tips

Driving with a Trailer

When towing a trailer:

- Become familiar with the state and local laws that apply specifically to trailer towing.
- Do not tow a trailer during the first 800 km (500 mi), to prevent damage to the engine, axle or other parts.
- Then, during the first 800 km (500 mi) trailer towing, do not drive over 80 km/h (50 mph) and do not make starts at full throttle.
- The vehicle can tow in D (Drive) but M (Manual Mode) is recommended. See *Manual Mode on page 9-23*. Use a lower gear if the transmission shifts too often.
- Turn off Park Assist when towing.

⚠ Warning

When towing a trailer, exhaust gases may collect at the rear of the vehicle and enter if the liftgate, trunk/hatch, or rear-most window is open.

When towing a trailer:

- Do not drive with the liftgate, trunk/hatch, or rear-most window open.
- Fully open the air outlets on or under the instrument panel.
- Also adjust the Climate Control system to a setting that brings in only outside air. See “Climate Control Systems” in the Index.

For more information about Carbon Monoxide, see *Engine Exhaust on page 9-20*.

Towing a trailer requires a certain amount of experience. The combination you are driving is longer and not as responsive as the vehicle itself. Get acquainted with the handling and braking of the rig before setting out for the open road.

Before starting, check all trailer hitch parts and attachments, safety chains, electrical connectors, lamps, tires and mirrors. If the trailer has electric brakes, start the combination moving and then apply the trailer brake controller by hand to be sure the brakes work.

During the trip, check occasionally to be sure that the load is secure and the lamps and any trailer brakes still work.

Towing with a Stability Control System

When towing, the sound of the stability control system might be heard. The system is reacting to the vehicle movement caused by the

Information Provided by: DEALER E-PROCESS

Downloaded from www.Manualslib.com manuals search engine

trailer, which mainly occurs during cornering. This is normal when towing heavier trailers.

Following Distance

Stay at least twice as far behind the vehicle ahead as you would when driving the vehicle without a trailer. This can help to avoid situations that require heavy braking and sudden turns.

Passing

More passing distance is needed when towing a trailer. Because the rig is longer, it is necessary to go farther beyond the passed vehicle before returning to the lane.

Backing Up

Hold the bottom of the steering wheel with one hand. To move the trailer to the left, move your hand to the left. To move the trailer to the right, move your hand to the right. Always back up slowly and, if possible, have someone guide you.

Making Turns

⚠ Caution

Making very sharp turns while trailering could cause the trailer to come in contact with the vehicle. The vehicle could be damaged. Avoid making very sharp turns while trailering.

When turning with a trailer, make wider turns than normal so the trailer will not strike soft shoulders, curbs, road signs, trees or other objects. Use the turn signal well in advance and avoid jerky or sudden maneuvers.

Turn Signals When Towing a Trailer

The turn signal indicators on the instrument cluster flash whenever signaling a turn or lane change. Properly hooked up, the trailer lamps also flash, telling other drivers the vehicle is turning, changing lanes or stopping.

When towing a trailer, the arrows on the instrument cluster flash for turns even if the bulbs on the trailer are burned out. Check occasionally to be sure the trailer bulbs are still working.

Driving on Grades

Reduce speed and shift to a lower gear before starting down a long or steep downgrade. If the transmission is not shifted down, the brakes might have to be used so much that they would get hot and no longer work well.

The vehicle can tow in D (Drive). Use a lower gear if the transmission shifts too often.

When towing at high altitude on steep uphill grades, engine coolant boils at a lower temperature than at normal altitudes. If the engine is turned off immediately after towing at high altitude on steep uphill

Information Provided by: DEALER E-PROCESS

Downloaded from www.Manualslib.com manuals search engine

grades, the vehicle could show signs similar to engine overheating. To avoid this, let the engine run while parked, preferably on level ground, with the transmission in P (Park) for a few minutes before turning the engine off. If the overheat warning comes on, see *Engine Overheating on page 10-18*.

Parking on Hills

⚠ Warning

Parking the vehicle on a hill with the trailer attached can be dangerous. If something goes wrong, the rig could start to move. People can be injured, and both the vehicle and the trailer can be damaged. When possible, always park the rig on a flat surface.

If parking the rig on a hill:

1. Press the brake pedal, but do not shift into P (Park) yet. Turn the wheels into the curb if facing downhill or into traffic if facing uphill.
2. Have someone place chocks under the trailer wheels.
3. When the wheel chocks are in place, release the brake pedal until the chocks absorb the load.
4. Reapply the brake pedal. Then apply the parking brake and shift into P (Park).
5. Release the brake pedal.

Leaving After Parking on a Hill

1. Apply and hold the brake pedal while you:
   - Start the engine.
   - Shift into a gear.
   - Release the parking brake.
2. Let up on the brake pedal.
3. Drive slowly until the trailer is clear of the chocks.
4. Stop and have someone pick up and store the chocks.

Maintenance When Trailer Towing

The vehicle needs service more often when pulling a trailer. See the *Maintenance Schedule on page 11-2*. Things that are especially important in trailer operation are automatic transmission fluid, engine oil, axle lubricant, belts, cooling system and brake system. Inspect these before and during the trip.

Check periodically to see that all hitch nuts and bolts are tight.

Information Provided by: DEALER E-PROCESS

Downloaded from www.Manualslib.com manuals search engine

Engine Cooling When Trailer Towing

The cooling system may temporarily overheat during severe operating conditions. See *Engine Overheating on page 10-18*.

Trailer Towing

Three important considerations have to do with weight:

- The weight of the trailer
- The weight of the trailer tongue
- The total weight on the vehicle's tires

Weight of the Trailer

How heavy can a trailer safely be?

Speed, altitude, road grades, outside temperature, special equipment, and the amount of tongue weight the vehicle can carry must be considered. See “Weight of the Trailer Tongue” later in this section for more information.

Maximum trailer weight is calculated assuming only the driver is in the tow vehicle and it has all the required trailering equipment. The weight of additional optional equipment, passengers and cargo in the tow vehicle must be subtracted from the maximum trailer weight.

Use the following chart to determine how much the vehicle can weigh, based upon the vehicle model and options.

Information Provided by: DEALER E-PROCESS

Downloaded from www.Manualslib.com manuals search engine

Vehicle	Axle Ratio	Max. Trailer Wt.	*GCWR
2WD – 2.4L L4 Engine	3.23	680 kg (1,500 lbs)	2 650 kg (5,840 lbs)
AWD – 3.0L V6 Engine	3.23	1 588 kg (3,500 lbs)	3 629 kg (8,000 lbs)
2WD – 3.0L V6 Engine	3.23	1 588 kg (3,500 lbs)	3 549 kg (7,820 lbs)
*The Gross Combination Weight Rating (GCWR) is the total allowable weight of the completely loaded vehicle and trailer including any passengers, cargo, equipment and conversion. The GCWR for the vehicle should not be exceeded.			

Ask your dealer for our trailering information or advice.

Weight of the Trailer Tongue

The tongue load (1) of any trailer is an important weight to measure because it affects the total gross weight of the vehicle. The Gross Vehicle Weight (GVW) includes the curb weight of the vehicle, any cargo carried in it, and the people who will be riding in the vehicle. If there are a lot of options, equipment, passengers or cargo in the vehicle, it will reduce the tongue weight the vehicle can carry, which will also reduce the trailer weight the vehicle can tow. If towing a trailer, the tongue load must be added to the GVW because the vehicle will be carrying that weight, too. See *Vehicle Load Limits on page 9-10*.

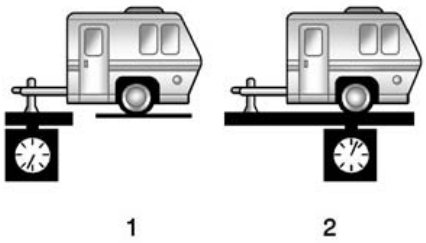

If a weight-carrying hitch or a weight-distributing hitch is being used, the trailer tongue (1) should weigh 10-15 percent of the total loaded trailer weight (2).

Information Provided by:
DEALER E-PROCESS

Downloaded from www.Manualslib.com manuals search engine

After loading the trailer, weigh the trailer and then the tongue, separately, to see if the weights are proper. If they are not, adjustments might be made by moving some items around in the trailer.

Trailering may be limited by the vehicle's ability to carry tongue weight. Tongue weight cannot cause the vehicle to exceed the GVWR (Gross Vehicle Weight Rating) or the RGAWR (Rear Gross Axle Weight Rating). The effect of additional weight may reduce the trailering capacity more than the total of the additional weight.

It is important that the vehicle does not exceed any of its ratings — GCWR, GVWR, RGAWR, Maximum Trailer Rating or Tongue Weight. The only way to be sure it is not exceeding any of these ratings is to weigh the vehicle and trailer.

Total Weight on the Vehicle's Tires

Inflate the vehicle's tires to the upper limit for cold tires. These numbers can be found on the Certification label or see *Vehicle Load Limits on page 9-10* for more information. Do not go over the GVW limit for the vehicle, or the GAWR, including the weight of the trailer tongue. If using a weight distributing hitch, do not go over the rear axle limit before applying the weight distribution spring bars.

Towing Equipment

Hitches

It is important to have the correct hitch equipment. Crosswinds, large trucks going by, and rough roads are a few reasons why the right hitch is needed.

- The rear bumper on the vehicle is not intended for hitches. Do not attach rental hitches or other bumper-type hitches to it. Use only a frame-mounted hitch that does not attach to the bumper.
- Will any holes be made in the body of the vehicle when the trailer hitch is installed? If there are, then be sure to seal the holes when the hitch is removed. If the holes are not sealed, dirt, water, and deadly carbon monoxide (CO) from the exhaust may get into the vehicle. See *Engine Exhaust on page 9-20*.

Safety Chains

Always attach chains between the vehicle and the trailer. Cross the safety chains under the tongue of the trailer to help prevent the tongue from contacting the road if it becomes separated from the hitch. Always leave just enough slack so the rig can turn. Never allow safety chains to drag on the ground.

Information Provided by: DEALER E-PROCESS

Downloaded from www.Manualslib.com manuals search engine

Trailer Brakes

A loaded trailer that weighs more than 450 kg (1,000 lbs) needs to have its own brake system that is adequate for the weight of the trailer. Be sure to read and follow the instructions for the trailer brakes so they are installed, adjusted and maintained properly.

Because the vehicle has antilock brakes, do not try to tap into the vehicle's hydraulic brake system. If you do, both brake systems will not work well, or at all.

Conversions and Add-Ons

Add-On Electrical Equipment

⚠ Caution

Some electrical equipment can damage the vehicle or cause components to not work and would not be covered by the warranty. Always check with your dealer before adding electrical equipment.

Add-on equipment can drain the vehicle's 12-volt battery, even if the vehicle is not operating.

The vehicle has an airbag system. Before attempting to add anything electrical to the vehicle, see *Servicing the Airbag-Equipped Vehicle on page 3-28* and *Adding Equipment to the Airbag-Equipped Vehicle on page 3-28*.

Information Provided by: DEALER E-PROCESS

Downloaded from www.Manualslib.com manuals search engine

✍ NOTES

Information Provided by:
DEALER E-PROCESS

Downloaded from www.Manualslib.com manuals search engine

Vehicle Care

General Information
General Information 10-2
Accessories and Modifications 10-2

Vehicle Checks
Doing Your Own Service Work 10-3
Hood 10-3
Engine Compartment Overview 10-4
Engine Cover 10-7
Engine Oil 10-8
Engine Oil Life System 10-10
Automatic Transmission Fluid 10-11
Engine Air Cleaner/Filter 10-12
Cooling System 10-13
Engine Coolant 10-14
Engine Overheating 10-18
Power Steering Fluid 10-20
Washer Fluid 10-20
Brakes 10-21
Brake Fluid 10-22
Battery 10-23
All-Wheel Drive 10-24
Starter Switch Check 10-24
Automatic Transmission Shift Lock Control Function Check 10-24
Ignition Transmission Lock Check 10-25
Park Brake and P (Park) Mechanism Check 10-25
Wiper Blade Replacement 10-25

Headlamp Aiming
Headlamp Aiming 10-27

Bulb Replacement
Bulb Replacement 10-27
Halogen Bulbs 10-27
Headlamps 10-27
Fog Lamps 10-28
Front Turn Signal and Parking Lamps 10-28
Taillamps, Turn Signal, Stoplamps, and Back-Up Lamps 10-29
License Plate Lamp 10-29
Replacement Bulbs 10-30

Electrical System
Electrical System Overload 10-30
Fuses and Circuit Breakers 10-31
Engine Compartment Fuse Block 10-31
Instrument Panel Fuse Block 10-34

Wheels and Tires
Tires 10-37
All-Season Tires 10-38
Winter Tires 10-38
Summer Tires 10-38
Tire Sidewall Labeling 10-39
Tire Designations 10-41
Tire Terminology and Definitions 10-42
Tire Pressure 10-44
Tire Pressure for High-Speed Operation 10-46
Tire Pressure Monitor System 10-46
Tire Pressure Monitor Operation 10-47
Tire Inspection 10-50
Tire Rotation 10-50

Information Provided by: DEALER E-PROCESS

Downloaded from www.Manualslib.com manuals search engine

When It Is Time for New Tires 10-51
Buying New Tires 10-52
Different Size Tires and Wheels 10-54
Uniform Tire Quality Grading 10-54
Wheel Alignment and Tire Balance 10-56
Wheel Replacement 10-56
Tire Chains 10-57
If a Tire Goes Flat 10-57
Tire Changing 10-59
Compact Spare Tire 10-65

Jump Starting
Jump Starting 10-66

Towing the Vehicle
Towing the Vehicle 10-70
Recreational Vehicle Towing 10-71

Appearance Care
Exterior Care 10-74
Interior Care 10-78
Floor Mats 10-82

General Information

For service and parts needs, visit your dealer. You will receive genuine parts and trained and supported service people.

Accessories and Modifications

Adding non-dealer accessories or making modifications to the vehicle can affect vehicle performance and safety, including such things as airbags, braking, stability, ride and handling, emissions systems, aerodynamics, durability, and electronic systems like antilock brakes, traction control, and stability control. These accessories or modifications could even cause malfunction or damage not covered by the vehicle warranty.

Damage to vehicle components resulting from modifications or the installation or use of non-GM certified parts, including control module or software modifications, is not covered under the terms of the vehicle warranty and may affect remaining warranty coverage for affected parts.

GM Accessories are designed to complement and function with other systems on the vehicle. See your dealer to accessorize the vehicle using genuine GM Accessories installed by a dealer technician.

Also, see *Adding Equipment to the Airbag-Equipped Vehicle on page 3-28*.

Information Provided by: DEALER E-PROCESS

Downloaded from www.Manualslib.com manuals search engine

Vehicle Checks

Doing Your Own Service Work

⚠ Warning

It can be dangerous to work on your vehicle if you do not have the proper knowledge, service manual, tools, or parts. Always follow owner manual procedures and consult the service manual for your vehicle before doing any service work.

If doing some of your own service work, use the proper service manual. It tells you much more about how to service the vehicle than this manual can.

This vehicle has an airbag system. Before attempting to do your own service work, see *Airbag System Check on page 3-29*.

Keep a record with all parts receipts and list the mileage and the date of any service work performed.

⚠ Caution

Even small amounts of contamination can cause damage to vehicle systems. Do not allow contaminants to contact the fluids, reservoir caps, or dipsticks.

Hood

To open the hood:

1. Pull the handle with this symbol. It is located below the instrument panel to the left of the steering wheel.

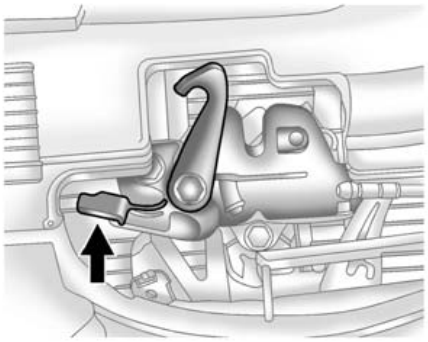

2. Go to the front of the vehicle and lift up on the secondary hood release lever.
3. Lift the hood.

To close the hood:

1. Before closing the hood, be sure that all the filler caps are properly installed.
2. Lower the hood 20 cm (8 in) above the vehicle and release it so it fully latches.
3. Check to make sure the hood is firmly closed. Repeat the process if necessary.

Information Provided by: DEALER E-PROCESS

Downloaded from www.Manualslib.com manuals search engine

Engine Compartment Overview

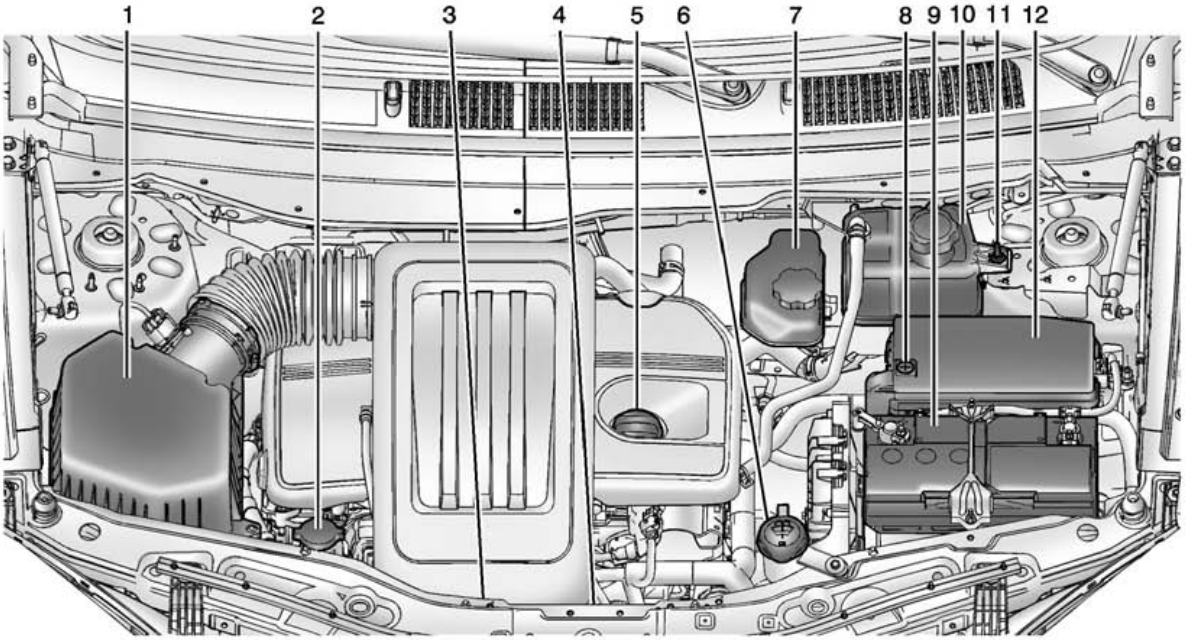

2.4L L4 Engine

Information Provided by:
DEALER E-PROCESS

Downloaded from www.Manualslib.com manuals search engine

1. *Engine Air Cleaner/Filter on page 10-12*.
2. Power Steering Fluid Reservoir. See *Power Steering Fluid on page 10-20*.
3. Engine Cooling Fan (Out of View). See *Cooling System on page 10-13*.
4. Engine Oil Dipstick (Out of View). See “Checking Engine Oil” under *Engine Oil on page 10-8*.
5. Engine Oil Fill Cap. See “When to Add Engine Oil” under *Engine Oil on page 10-8*.
6. Windshield Washer Fluid Reservoir. See “Adding Washer Fluid” under *Washer Fluid on page 10-20*.
7. Brake Fluid Reservoir. See *Brakes on page 10-21*.
8. Remote Positive (+) Terminal. See *Jump Starting on page 10-66*.
9. *Battery on page 10-23*.
10. Engine Coolant Surge Tank and Pressure Cap. See “Checking Coolant” under *Engine Coolant on page 10-14*.
11. Remote Negative (-) Terminal. See *Jump Starting on page 10-66*.
12. *Engine Compartment Fuse Block on page 10-31*.

Information Provided by:
DEALER E-PROCESS

Downloaded from www.Manualslib.com manuals search engine

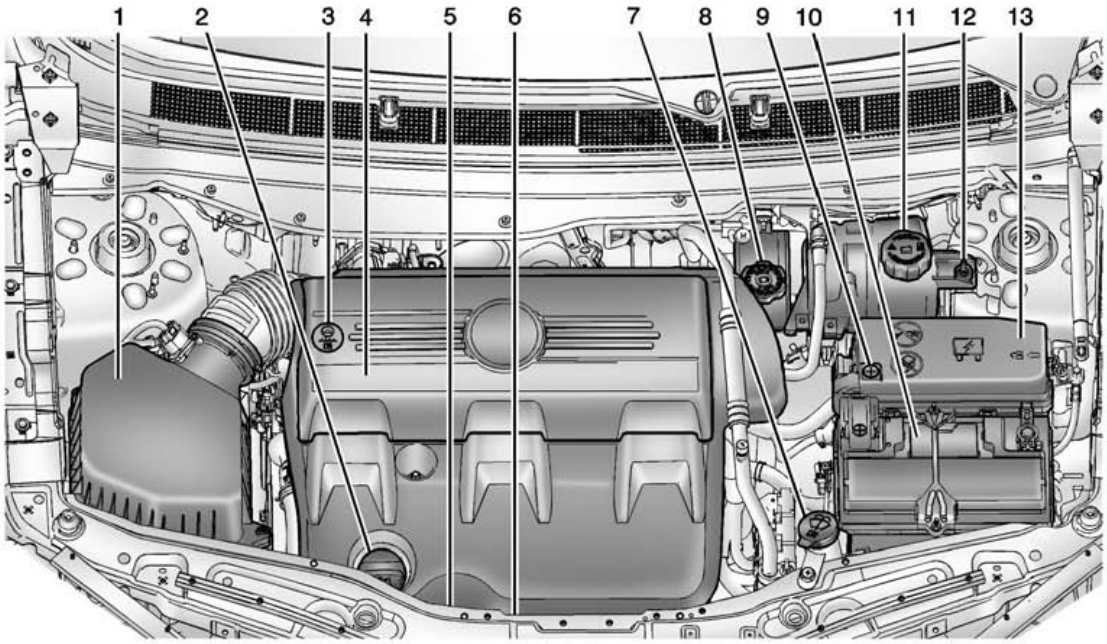

3.0L V6 Engine

Information Provided by:
DEALER E-PROCESS

Downloaded from www.Manualslib.com manuals search engine

1. *Engine Air Cleaner/Filter on page 10-12*.
2. Engine Oil Fill Cap (Out of View). See “When to Add Engine Oil” under *Engine Oil on page 10-8*.
3. Power Steering Fluid Reservoir (Out of View). See *Power Steering Fluid on page 10-20*.
4. Engine Cover. See *Engine Cover on page 10-7*.
5. Engine Oil Dipstick (Out of View). See “Checking Engine Oil” under *Engine Oil on page 10-8*.
6. Engine Cooling Fans (Out of View). See *Cooling System on page 10-13*.
7. Windshield Washer Fluid Reservoir. See “Adding Washer Fluid” under *Washer Fluid on page 10-20*.
8. Brake Fluid Reservoir. See *Brakes on page 10-21*.
9. Remote Positive (+) Terminal. See *Jump Starting on page 10-66*.
10. *Battery on page 10-23*.
11. Engine Coolant Surge Tank. See “Checking Coolant” under *Engine Coolant on page 10-14*.
12. Remote Negative (-) Terminal. See *Jump Starting on page 10-66*.
13. *Engine Compartment Fuse Block on page 10-31*.

Engine Cover

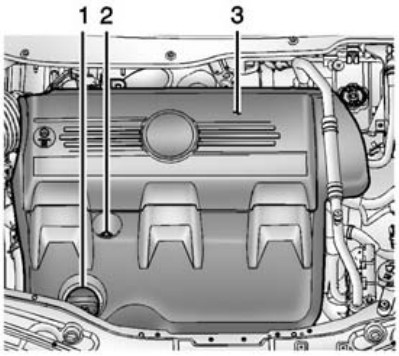

Engine Cover (3.0L V6)

1. Oil Fill Cap
2. Engine Cover Bolt
3. Engine Cover

To remove:

1. Remove the oil fill cap (1).
2. Remove the engine cover bolt (2).
3. Raise the engine cover (3) to release it from the retainers.

Information Provided by: DEALER E-PROCESS

Downloaded from www.Manualslib.com manuals search engine

4. Lift and remove the engine cover.
5. Reverse Steps 1–4 to reinstall the engine cover.

Engine Oil

To ensure proper engine performance and long life, careful attention must be paid to engine oil. Following these simple, but important steps will help protect your investment:

- Always use engine oil approved to the proper specification and of the proper viscosity grade. See “Selecting the Right Engine Oil” in this section.
- Check the engine oil level regularly and maintain the proper oil level. See “Checking Engine Oil” and “When to Add Engine Oil” in this section.
- Change the engine oil at the appropriate time. See *Engine Oil Life System on page 10-10*.
- Always dispose of engine oil properly. See “What to Do with Used Oil” in this section.

Checking Engine Oil

It is a good idea to check the engine oil level at each fuel fill. In order to get an accurate reading, the vehicle must be on level ground. The engine oil dipstick handle is a loop. See *Engine Compartment Overview on page 10-4* for the location of the engine oil dipstick.

Obtaining an accurate oil level reading is essential:

1. If the engine has been running recently, turn off the engine and allow several minutes for the oil to drain back into the oil pan. Checking the oil level too soon after engine shutoff will not provide an accurate oil level reading.

⚠ Warning

The engine oil dipstick handle may be hot; it could burn you. Use a towel or glove to touch the dipstick handle.

2. Pull out the dipstick and clean it with a paper towel or cloth, then push it back in all the way. Remove it again, keeping the tip down, and check the level.

When to Add Engine Oil

If the oil is below the MIN (minimum) mark, add 1 L (1 qt) of the recommended oil and then recheck the level. See “Selecting the Right Engine Oil” in this section for an explanation of what kind of oil

Information Provided by: DEALER E-PROCESS

Downloaded from www.Manualslib.com manuals search engine

to use. For engine oil crankcase capacity, see *Capacities and Specifications on page 12-2*.

⚠ Caution

Do not add too much oil. Oil levels above or below the acceptable operating range shown on the dipstick are harmful to the engine. If you find that you have an oil level above the operating range, i.e., the engine has so much oil that the oil level gets above the upper mark that shows the proper operating range, the engine could be damaged. You should drain out the excess oil or limit driving of the vehicle and seek a service professional to remove the excess amount of oil.

See *Engine Compartment Overview on page 10-4* for the location of the engine oil fill cap.

Add enough oil to put the level somewhere in the proper operating range. Push the dipstick all the way back in when through.

Selecting the Right Engine Oil

Selecting the right engine oil depends on both the proper oil specification and viscosity grade. See *Recommended Fluids and Lubricants on page 11-12*.

Specification

Use and ask for licensed engine oils with the dexos1® approved certification mark. Engine oils meeting the requirements for the vehicle should have the dexos1 approved certification mark. This certification mark indicates that the oil has been approved to the dexos1 specification.

⚠ Caution

Failure to use the recommended engine oil can result in engine damage not covered by the vehicle warranty. Check with your dealer or service provider on whether the oil is approved to the dexos1 specification.

Viscosity Grade

SAE 5W-30 is the best viscosity grade for the vehicle. Do not use other viscosity grade oils such as SAE 10W-30, 10W-40, or 20W-50.

Cold Temperature Operation: In an area of extreme cold, where the temperature falls below −29°C (−20°F), an SAE 0W-30 oil may be used. An oil of this viscosity grade

Information Provided by: DEALER E-PROCESS

Downloaded from www.Manualslib.com manuals search engine

will provide easier cold starting for the engine at extremely low temperatures. When selecting an oil of the appropriate viscosity grade, always select an oil of the correct specification. See “Specification” earlier in this section for more information.

Engine Oil Additives/Engine Oil Flushes

Do not add anything to the oil. The recommended oils with the dexos specification and displaying the dexos certification mark are all that is needed for good performance and engine protection.

Engine oil system flushes are not recommended and could cause engine damage not covered by the vehicle warranty.

What to Do with Used Oil

Used engine oil contains certain elements that can be unhealthy for your skin and could even cause cancer. Do not let used oil stay on your skin for very long. Clean your skin and nails with soap and water, or a good hand cleaner. Wash or properly dispose of clothing or rags containing used engine oil. See the manufacturer's warnings about the use and disposal of oil products.

Used oil can be a threat to the environment. If you change your own oil, be sure to drain all the oil from the filter before disposal. Never dispose of oil by putting it in the trash or pouring it on the ground, into sewers, or into streams or bodies of water. Recycle it by taking it to a place that collects used oil.

Engine Oil Life System

When to Change Engine Oil

This vehicle has a computer system that indicates when to change the engine oil and filter. This is based on a combination of factors which include engine revolutions, engine temperature, and miles driven. Based on driving conditions, the mileage at which an oil change is indicated can vary considerably. For the oil life system to work properly, the system must be reset every time the oil is changed.

When the system has calculated that oil life has been diminished, it indicates that an oil change is necessary. A CHANGE ENGINE OIL SOON message displays. See *Engine Oil Messages on page 5-31*. If the CHANGE ENGINE OIL SOON message displays, change the oil as soon as possible within the next 1 000 km (600 mi). If the CHANGE ENGINE OIL NOW message displays, change the oil as soon as possible. It is possible that, if driving under the best conditions, the oil life system might indicate that an oil change is not necessary for up to a year. The engine oil and filter must be changed at least once a year and, at this time, the system must be reset. Your dealer has trained service people who will perform this work and reset the system. It is also important to check the oil regularly

Information Provided by: DEALER E-PROCESS

Downloaded from www.Manualslib.com manuals search engine

over the course of an oil drain interval and keep it at the proper level.

If the system is ever reset accidentally, the oil must be changed at 5 000 km (3,000 mi) since the last oil change. Remember to reset the oil life system whenever the oil is changed.

How to Reset the Engine Oil Life System

Reset the system whenever the engine oil is changed so that the system can calculate the next engine oil change. To reset the system:

1. Display OIL LIFE REMAINING on the DIC. See *Driver Information Center (DIC) on page 5-24* and *Engine Oil Messages on page 5-31*.
2. Press ✓ for five seconds to reset the oil life at 100%.

   Be careful not to reset the oil life display accidentally at any time other than after the oil is changed. It cannot be reset accurately until the next oil change.

The oil life system can also be reset as follows:

1. Turn the ignition key to ON/RUN with the engine off.
2. Fully press and release the accelerator pedal three times within five seconds.

If the OIL LIFE REMAINING value is not 100%, the system needs to be reset again.

Automatic Transmission Fluid

It is not necessary to check the transmission fluid level.
A transmission fluid leak is the only reason for fluid loss. If a leak occurs, take the vehicle to the dealer and have it repaired as soon as possible.

Change the fluid and filter at the intervals listed in *Maintenance Schedule on page 11-2*, and be sure to use the transmission fluid listed in *Recommended Fluids and Lubricants on page 11-12*.

⚠ Caution

Use of the incorrect automatic transmission fluid may damage the vehicle, and the damage may not be covered by the vehicle warranty. Always use the automatic transmission fluid listed in *Recommended Fluids and Lubricants on page 11-12*.

For the 2.4L L4 and 3.0L V6 engines, the transmission fluid will not reach the end of the dipstick unless the transmission is at operating temperature. If you need

Information Provided by: DEALER E-PROCESS

Downloaded from www.Manualslib.com manuals search engine

to check the transmission fluid level, please take the vehicle to your dealer.

Engine Air Cleaner/Filter

See *Engine Compartment Overview on page 10-4* for the location of the engine air cleaner/filter.

When to Inspect the Engine Air Cleaner/Filter

Inspect and replace the air cleaner/filter at the scheduled maintenance intervals. See the *Maintenance Schedule on page 11-2*. If driving in dusty/dirty conditions, inspect the filter at each engine oil change.

How to Inspect the Engine Air Cleaner/Filter

To inspect the air cleaner/filter, remove the filter from the vehicle and lightly shake the filter to release loose dust and dirt. If the filter remains covered with dirt, a new filter is required. Never use compressed air to clean the filter.

To inspect or replace:

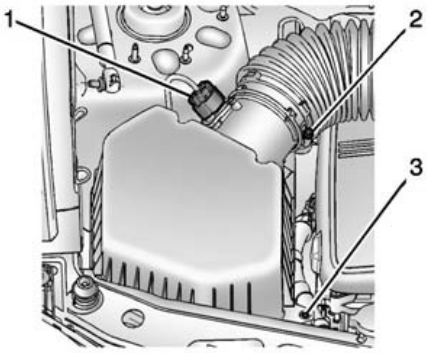

2.4L L4 Engine Shown, 3.0L V6 Engine Similar

1. Electrical Connector
2. Air Duct Clamp
3. Screws

1. Disconnect the electrical connector (1).
2. Loosen the air duct clamp (2) on the air duct hose. Disconnect the air duct hose.
3. Remove the screws (3) on the sides of the air cleaner cover assembly.
4. Turn the cover upward to disengage the cover hinges.
5. Lift and remove the air cleaner cover assembly and air filter element.
6. Inspect or replace the air filter element.

   If the air filter element is dirty, you should replace it.

   Wipe all dust from inside of the housing and inspect the air cleaner and air outlet duct for cracks, cuts, and deterioration. The air outlet duct must be replaced if damaged.
7. Reverse Steps 1–5 to reinstall the engine air cleaner/filter cover and air duct hose.

Information Provided by: DEALER E-PROCESS

Downloaded from www.Manualslib.com manuals search engine

⚠ Warning

Operating the engine with the air cleaner/filter off can cause you or others to be burned. The air cleaner not only cleans the air; it helps to stop flames if the engine backfires. Use caution when working on the engine and do not drive with the air cleaner/filter off.

⚠ Caution

If the air cleaner/filter is off, dirt can easily get into the engine, which could damage it. Always have the air cleaner/filter in place when you are driving.

Cooling System

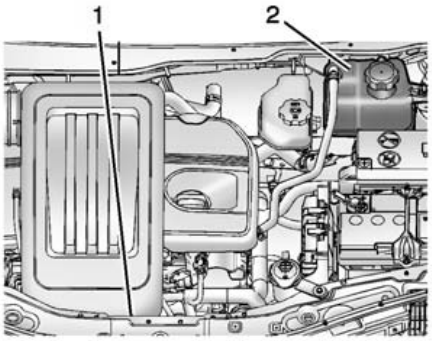

2.4L L4 Engine

1. Engine Fan (Out of View)
2. Coolant Surge Tank and Pressure Cap

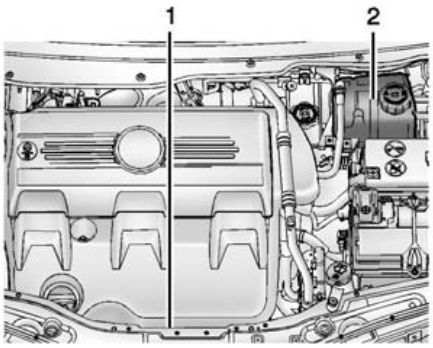

3.0L V6 Engine

1. Engine Fans (Out of View)
2. Coolant Surge Tank and Pressure Cap

⚠ Warning

An electric engine cooling fan under the hood can start up even when the engine is not running and can cause injury. Keep hands, clothing, and tools away from any underhood electric fan.

Information Provided by: DEALER E-PROCESS

Downloaded from www.Manualslib.com manuals search engine

If the coolant inside the coolant surge tank is hot, do not do anything else until it cools down. The vehicle should be parked on a level surface.

The coolant level should be between the MIN and MAX lines. If it is not, you may have a leak at the radiator hoses, heater hoses, radiator, water pump, or somewhere else in the cooling system.

⚠ Warning

Heater and radiator hoses, and other engine parts, can be very hot. Do not touch them. If you do, you can be burned.

Do not run the engine if there is a leak. If you run the engine, it could lose all coolant. That could cause an engine fire, and you could be burned. Get any leak fixed before you drive the vehicle.

If there seems to be no leak, with the engine on, check to see if the engine cooling fan(s) is running. If the engine is overheating, the fan should be running. If it is not, the vehicle needs service. Turn off the engine.

⚠ Caution

Running the engine without coolant may cause damage or a fire. Vehicle damage would not be covered by the vehicle warranty.

⚠ Caution

Using coolant other than DEX-COOL® can cause premature engine, heater core, or radiator corrosion. In addition, the engine coolant could require changing sooner. Any repairs would not be covered by the vehicle warranty. Always use DEX-COOL (silicate-free) coolant in the vehicle.

Engine Coolant

The cooling system in the vehicle is filled with DEX-COOL® engine coolant. This coolant is designed to remain in the vehicle for 5 years or 240 000 km (150,000 mi), whichever occurs first, if only DEX-COOL extended life coolant is added.

The following explains the cooling system and how to add coolant when it is low. If there is a problem with engine overheating, see *Engine Overheating on page 10-18*.

A 50/50 mixture of clean, drinkable water and DEX-COOL coolant will:

- Give freezing protection down to −37°C (−34°F).
- Give boiling protection up to 129°C (265°F).
- Protect against rust and corrosion.
- Help keep the proper engine temperature.
- Let the warning lights and gauges work as they should.

Information Provided by: DEALER E-PROCESS

Downloaded from www.Manualslib.com manuals search engine

⚠ Caution

Using coolant other than DEX-COOL® can cause premature engine, heater core, or radiator corrosion. In addition, the engine coolant could require changing sooner. Any repairs would not be covered by the vehicle warranty. Always use DEX-COOL (silicate-free) coolant in the vehicle.

What to Use

Use a mixture of one-half clean, drinkable water and one-half DEX-COOL coolant which will not damage aluminum parts. If you use this coolant mixture, you do not need to add anything else.

⚠ Warning

Adding only plain water or some other liquid to the cooling system can be dangerous. Plain water and other liquids, can boil before the proper coolant mixture will. The coolant warning system is set for the proper coolant mixture. With plain water or the wrong mixture, the engine could get too hot but you would not get the overheat warning. The engine could catch fire and you or others could be burned. Use a 50/50 mixture of clean, drinkable water and DEX-COOL coolant.

⚠ Caution

If improper coolant mixture, inhibitors, or additives are used in the vehicle cooling system, the engine could overheat and be

(Continued)

Caution (Continued)

damaged. Too much water in the mixture can freeze and crack engine cooling parts. The repairs would not be covered by the vehicle warranty. Use only the proper mixture of engine coolant for the cooling system. See *Recommended Fluids and Lubricants on page 11-12*.

If coolant has to be added more than four times a year, have the dealer check the vehicle cooling system.

Never dispose of engine coolant by putting it in the trash, pouring it on the ground, or into sewers, streams, or bodies of water. Have the coolant changed by an authorized service center, familiar with legal requirements regarding used coolant disposal. This will help protect the environment and your health.

Information Provided by: DEALER E-PROCESS

Downloaded from www.Manualslib.com manuals search engine

Checking Coolant

The coolant surge tank is located on the driver side of the engine compartment. See *Engine Compartment Overview on page 10-4* for more information on location.

⚠ Warning

Turning the surge tank pressure cap when the engine and radiator are hot can allow steam and scalding liquids to blow out and burn you badly. Never turn the surge tank pressure cap — even a little — when the engine and radiator are hot.

The vehicle must be on a level surface. When the engine is cold, the coolant level should be between the MIN and MAX lines.

Adding Coolant

If more coolant is needed, add the proper DEX-COOL coolant mixture at the coolant surge tank, but only when the engine is cool. See below for instructions on "How to Add Coolant to the Coolant Surge Tank."

⚠ Warning

You can be burned if you spill coolant on hot engine parts. Coolant contains ethylene glycol, and it will burn if the engine parts are hot enough. Do not spill coolant on a hot engine.

When replacing the pressure cap, make sure it is hand-tight and fully seated.

How to Add Coolant to the Coolant Surge Tank

⚠ Caution

This vehicle has a specific coolant fill procedure. Failure to follow this procedure could cause the engine to overheat and be severely damaged.

If a problem yet has not been found, check to see if coolant is visible in the coolant surge tank. If coolant is visible but the coolant level is not at between the MIN and MAX lines, add a 50/50 mixture of clean, drinkable water and DEX-COOL coolant at the coolant surge tank, but be sure the cooling system, including the coolant surge tank pressure cap, is cool before doing it. See *Engine Overheating on page 10-18* for more information.

Information Provided by: DEALER E-PROCESS

Downloaded from www.Manualslib.com manuals search engine

⚠ Warning

Steam and scalding liquids from a hot cooling system can blow out and burn you badly. They are under pressure, and if you turn the coolant surge tank pressure cap — even a little — they can come out at high speed. Never turn the cap when the cooling system, including the coolant surge tank pressure cap, is hot. Wait for the cooling system and coolant surge tank pressure cap to cool if you ever have to turn the pressure cap.

⚠ Warning

Adding only plain water or some other liquid to the cooling system can be dangerous. Plain water and other liquids, can boil before the proper coolant mixture will.

(Continued)

Warning (Continued)

The coolant warning system is set for the proper coolant mixture. With plain water or the wrong mixture, the engine could get too hot but you would not get the overheat warning. The engine could catch fire and you or others could be burned. Use a 50/50 mixture of clean, drinkable water and DEX-COOL coolant.

⚠ Caution

In cold weather, water can freeze and crack the engine, radiator, heater core, and other parts. Use the recommended coolant and the proper coolant mixture.

⚠ Warning

You can be burned if you spill coolant on hot engine parts. Coolant contains ethylene glycol and it will burn if the engine parts are hot enough. Do not spill coolant on a hot engine.

1. Remove the coolant surge tank pressure cap when the cooling system, including the coolant surge tank pressure cap and upper radiator hose, is no longer hot.

Information Provided by: DEALER E-PROCESS

Downloaded from www.Manualslib.com manuals search engine

Turn the pressure cap slowly counterclockwise about one-quarter of a turn. If a hiss is heard, wait for that to stop. This will allow any pressure still left to be vented out the discharge hose.

2. Keep turning the pressure cap slowly, and remove it.

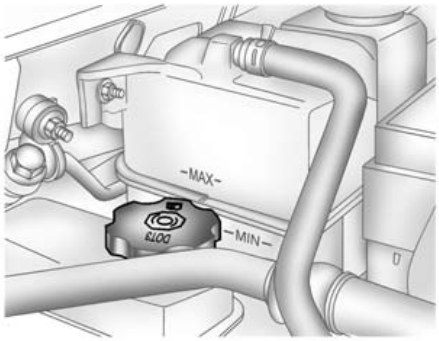

3. Fill the coolant surge tank with the proper DEX-COOL coolant mixture, to between the MIN and MAX lines.

4. With the coolant surge tank pressure cap off, start the engine and let it run until the upper radiator hose can be felt getting hot. Watch out for the engine cooling fan.

   By this time, the coolant level inside the coolant surge tank may be lower. If the level is lower, add more of the proper DEX-COOL coolant mixture to the coolant surge tank until the level reaches between the MIN and MAX lines.

5. Replace the pressure cap tightly.

⚠ Caution

If the pressure cap is not tightly installed, coolant loss and possible engine damage may occur. Be sure the cap is properly and tightly secured.

Check the level in the surge tank when the cooling system has cooled down. If the coolant is not at the proper level, repeat Steps 1–3 and reinstall the pressure cap. If the coolant still is not at the proper level when the system cools down again, see the dealer.

Engine Overheating

There is a coolant temperature warning light on the instrument panel. See *Engine Coolant Temperature Warning Light on page 5-20*.

If Steam is Coming from the Engine

⚠ Warning

Steam from an overheated engine can cause serious injury, even if the hood is opened just a little. Stay away from the engine if steam is seen or heard coming from it. Just turn it off and get everyone away from the vehicle

(Continued)

Information Provided by: DEALER E-PROCESS

Downloaded from www.Manualslib.com manuals search engine

Warning (Continued)

until it cools down. Wait until there is no sign of steam or coolant before opening the hood.

If driving continues when the engine is overheated, the liquids in it can catch fire. Someone could get badly burned. Stop the engine if it overheats, and get out of the vehicle until the engine has cooled.

⚠ Caution

Running the engine without coolant may cause damage or a fire. Vehicle damage would not be covered by the vehicle warranty.

If No Steam is Coming from the Engine

If there is an engine overheat warning, but no steam can be seen or heard, the problem may not be too serious. Sometimes the engine can get a little too hot when the vehicle:

- Climbs a long hill on a hot day.
- Stops after high-speed driving.
- Idles for long periods in traffic.
- Tows a trailer.

If there is an overheat warning with no sign of steam, try this for a minute or so:

1. If there is an a/c and it is on, turn it off.
2. Turn on the heater to full hot at the highest fan speed and open the windows as necessary.
3. Try to minimize engine load. If in a traffic jam, shift to N (Neutral); otherwise, shift to the highest gear possible while driving.

If the overheat warning is no longer on, the vehicle can be driven. Just to be safe, drive slowly for about 10 minutes. If the warning does not come back on, drive normally.

If the warning continues and the vehicle is not stopped, pull over, stop, and park the vehicle right away.

If there is still no sign of steam, idle the engine for three minutes while parked. If the warning continues, turn off the engine and get everyone out of the vehicle until it cools down.

The decision may be made to not lift the hood but to get service help right away.

Information Provided by: DEALER E-PROCESS

Downloaded from www.Manualslib.com manuals search engine

Power Steering Fluid

See *Engine Compartment Overview on page 10-4* for reservoir location.

When to Check Power Steering Fluid

It is not necessary to regularly check power steering fluid unless a leak in the system is suspected or an unusual noise is heard. A fluid loss in this system could indicate a problem. Have the system inspected and repaired.

How to Check Power Steering Fluid

To check the power steering fluid:

1. Turn the ignition off and let the engine compartment cool down.
2. Remove the engine cover, if required. See *Engine Cover on page 10-7*.
3. Wipe the cap and the top of the reservoir clean.
4. Unscrew the cap and wipe the dipstick with a clean rag.
5. Replace the cap and completely tighten it.
6. Remove the cap again and look at the fluid level on the dipstick.

The fluid level should be within the area indicated on the dipstick when the engine is cold. If necessary, add only enough fluid to bring the level within the area indicated.

What to Use

To determine what kind of fluid to use, refer to *Recommended Fluids and Lubricants on page 11-12*. Always use the proper fluid.

⚠ Caution

Use of the incorrect fluid may damage the vehicle and the damages may not be covered by the vehicle warranty. Always use the correct fluid listed in *Recommended Fluids and Lubricants on page 11-12*.

Washer Fluid

What to Use

When windshield washer fluid is needed, be sure to read the manufacturer instructions before use. If operating the vehicle in an area where the temperature can fall below freezing, use a fluid that has sufficient protection against freezing.

Information Provided by: DEALER E-PROCESS

Downloaded from www.Manualslib.com manuals search engine

Adding Windshield Washer Fluid

Open the cap with the washer symbol on it. Add washer fluid until the tank is full. See *Engine Compartment Overview on page 10-4*.

⚠ Caution

- Do not use engine coolant (antifreeze) in the windshield washer. It can damage the windshield washer system and paint.
- Do not mix water with ready-to-use washer fluid. Water can cause the solution

(Continued)

Caution (Continued)

to freeze and damage the washer fluid tank and other parts of the washer system.

- When using concentrated washer fluid, follow the manufacturer instructions for adding water.
- Fill the washer fluid tank only three-quarters full when it is very cold. This allows for fluid expansion if freezing occurs, which could damage the tank if it is completely full.

Brakes

This vehicle has disc brakes. Disc brake pads have built-in wear indicators that make a high-pitched warning sound when the brake pads are worn and new pads are needed. The sound can come and go or be heard all the time when the vehicle is moving, except when applying the brake pedal firmly.

⚠ Warning

The brake wear warning sound means that soon the brakes will not work well. That could lead to a crash. When the brake wear warning sound is heard, have the vehicle serviced.

⚠ Caution

Continuing to drive with worn-out brake pads could result in costly brake repair.

Some driving conditions or climates can cause a brake squeal when the brakes are first applied or lightly applied. This does not mean something is wrong with the brakes.

Properly torqued wheel nuts are necessary to help prevent brake pulsation. When tires are rotated, inspect brake pads for wear and evenly tighten wheel nuts in the

Information Provided by: DEALER E-PROCESS

Downloaded from www.Manualslib.com manuals search engine

proper sequence to torque specifications. See *Capacities and Specifications on page 12-2*.

Brake pads should be replaced as complete sets.

Brake Pedal Travel

See your dealer if the brake pedal does not return to normal height, or if there is a rapid increase in pedal travel. This could be a sign that brake service might be required.

Brake Adjustment

Every time the brakes are applied, with or without the vehicle moving, the brakes adjust for wear.

Replacing Brake System Parts

The braking system on a vehicle is complex. Its many parts have to be of top quality and work well together if the vehicle is to have really good braking. The vehicle was designed and tested with top-quality brake parts. When parts of the braking system are replaced, be sure to get new, approved replacement parts. If this is not done, the brakes might not work properly. For example, installing disc brake pads that are wrong for the vehicle, can change the balance between the front and rear brakes — for the worse. The braking performance expected can change in many other ways if the wrong replacement brake parts are installed.

Brake Fluid

The brake master cylinder reservoir is filled with DOT 3 brake fluid as indicated on the reservoir cap. See *Engine Compartment Overview on page 10-4* for the location of the reservoir.

There are only two reasons why the brake fluid level in the reservoir might go down:

- The brake fluid level goes down because of normal brake lining wear. When new linings are installed, the fluid level goes back up.
- A fluid leak in the brake hydraulic system can also cause a low fluid level. Have the brake hydraulic system fixed, since a leak means that sooner or later the brakes will not work well.

Do not top off the brake fluid. Adding fluid does not correct a leak. If fluid is added when the linings are worn, there will be too much fluid when new brake linings are installed. Add or remove brake fluid, as necessary, only when work is done on the brake hydraulic system.

Information Provided by: DEALER E-PROCESS

Downloaded from www.Manualslib.com manuals search engine

⚠ Warning

If too much brake fluid is added, it can spill on the engine and burn, if the engine is hot enough. You or others could be burned, and the vehicle could be damaged. Add brake fluid only when work is done on the brake hydraulic system.

When the brake fluid falls to a low level, the brake warning light comes on. See *Brake System Warning Light on page 5-16*.

What to Add

Use only new DOT 3 brake fluid from a sealed container.

Always clean the brake fluid reservoir cap and the area around the cap before removing it. This helps keep dirt from entering the reservoir.

⚠ Warning

With the wrong kind of fluid in the brake hydraulic system, the brakes might not work well. This could cause a crash. Always use the proper brake fluid.

⚠ Caution

- Using the wrong fluid can badly damage brake hydraulic system parts. For example, just a few drops of mineral-based oil, such as engine oil, in the brake hydraulic system can damage brake hydraulic system parts so badly that they will have to be replaced. Do not let someone put in the wrong kind of fluid.

(Continued)

Caution (Continued)

- If brake fluid is spilled on the vehicle's painted surfaces, the paint finish can be damaged. Be careful not to spill brake fluid on the vehicle. If you do, wash it off immediately.

Battery

Refer to the replacement number shown on the original battery label when a new battery is needed. See *Engine Compartment Overview on page 10-4* for battery location.

⚠ Warning

Battery posts, terminals, and related accessories contain lead and lead compounds, chemicals known to the State of California to cause cancer and reproductive harm. Wash hands after handling.

Information Provided by: DEALER E-PROCESS

Downloaded from www.Manualslib.com manuals search engine

Vehicle Storage

⚠ Warning

Batteries have acid that can burn you and gas that can explode. You can be badly hurt if you are not careful. See *Jump Starting on page 10-66* for tips on working around a battery without getting hurt.

Infrequent Usage: Remove the black, negative (−) cable from the battery to keep the battery from running down.

Extended Storage: Remove the black, negative (−) cable from the battery or use a battery trickle charger.

All-Wheel Drive

When to Check Lubricant

It is not necessary to regularly check the transfer case fluid unless a leak is suspected or an unusual noise is heard. A fluid loss could indicate a problem. Have it inspected and repaired.

Starter Switch Check

⚠ Warning

When you are doing this inspection, the vehicle could move suddenly. If the vehicle moves, you or others could be injured.

1. Before starting this check, be sure there is enough room around the vehicle.
2. Apply both the parking brake and the regular brake.

   Do not use the accelerator pedal, and be ready to turn off the engine immediately if it starts.
3. Try to start the engine in each gear. The vehicle should start only in P (Park) or N (Neutral). If the vehicle starts in any other position, contact your dealer for service.

Automatic Transmission Shift Lock Control Function Check

⚠ Warning

When you are doing this inspection, the vehicle could move suddenly. If the vehicle moves, you or others could be injured.

1. Before starting this check, be sure there is enough room around the vehicle. It should be parked on a level surface.
2. Apply the parking brake. Be ready to apply the regular brake immediately if the vehicle begins to move.

Information Provided by: DEALER E-PROCESS

Downloaded from www.Manualslib.com manuals search engine

3. With the engine off, turn the ignition on, but do not start the engine. Without applying the regular brake, try to move the shift lever out of P (Park) with normal effort. If the shift lever moves out of P (Park), contact your dealer for service.

Ignition Transmission Lock Check

If equipped with a key type ignition, while parked and with the parking brake set, try to turn the ignition to LOCK/OFF in each shift lever position.

- The ignition should turn to LOCK/OFF only when the shift lever is in P (Park).
- The ignition key should come out only in LOCK/OFF.

Contact your dealer if service is required.

Park Brake and P (Park) Mechanism Check

⚠ Warning

When you are doing this check, the vehicle could begin to move. You or others could be injured and property could be damaged. Make sure there is room in front of the vehicle in case it begins to roll. Be ready to apply the regular brake at once should the vehicle begin to move.

Park on a fairly steep hill, with the vehicle facing downhill. Keeping your foot on the regular brake, set the parking brake.

- To check the parking brake's holding ability: With the engine running and the transmission in N (Neutral), slowly remove foot pressure from the regular brake pedal. Do this until the vehicle is held by the parking brake only.
- To check the P (Park) mechanism's holding ability: With the engine running, shift to P (Park). Then release the parking brake followed by the regular brake.

Contact your dealer if service is required.

Wiper Blade Replacement

Windshield wiper blades should be inspected for wear and cracking. See *Maintenance Schedule on page 11-2*.

Replacement blades come in different types and are removed in different ways. For proper type and length, see *Maintenance Replacement Parts on page 11-13*.

Information Provided by: DEALER E-PROCESS

Downloaded from www.Manualslib.com manuals search engine

⚠ Caution

Allowing the wiper arm to touch the windshield when no wiper blade is installed could damage the windshield. Any damage that occurs would not be covered by your warranty. Do not allow the wiper arm to touch the windshield.

Front Wiper Blade Replacement

To replace the windshield wiper blade:

1. Lift the wiper arm away from the windshield.

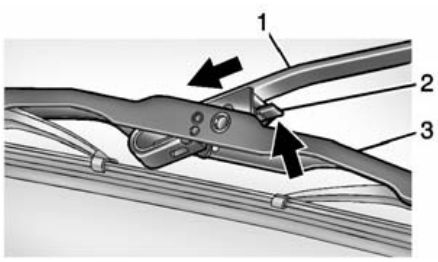

2. Push the release lever (2) to disengage the hook and push the wiper arm (1) out of the blade assembly (3).
3. Push the new blade assembly securely on the wiper arm until the release lever clicks into place.
4. Lower the wiper arm.

Rear Wiper Blade Replacement

To replace the rear wiper blade:

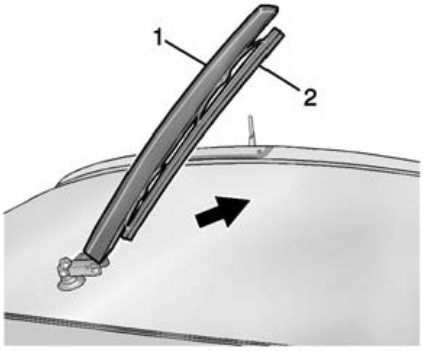

1. Lift the rear wiper arm (1) from the window.
2. Turn the bottom edge of the blade assembly (2) slightly away from the underside of the wiper arm.
3. Apply downward pressure to the blade assembly and remove from the wiper arm.
4. Install the new wiper blade.
5. Return the wiper arm and blade assembly to the rest position on the window.

Information Provided by: DEALER E-PROCESS

Downloaded from www.Manualslib.com manuals search engine

Headlamp Aiming

Headlamp aim has been preset and should need no further adjustment.

If the vehicle is damaged in a crash, the headlamp aim may be affected. If adjustment to the headlamps is necessary, see your dealer.

Bulb Replacement

For the proper type of replacement bulbs, see *Replacement Bulbs on page 10-30*.

For any bulb-changing procedure not listed in this section, contact your dealer.

Halogen Bulbs

⚠ Warning

Halogen bulbs have pressurized gas inside and can burst if you drop or scratch the bulb. You or others could be injured. Be sure to read and follow the instructions on the bulb package.

Headlamps

To replace one of the headlamp bulbs, use the following procedure. To replace the parking/turn signal lamp bulb, see *Front Turn Signal and Parking Lamps on page 10-28*.

1. Open the hood. See *Hood on page 10-3*.

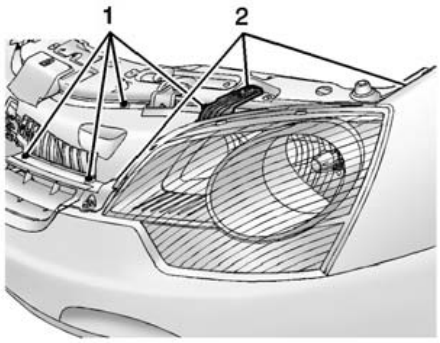

2. Remove the filler panel fasteners (1) and remove the filler panel.
3. Remove the three screws (2) retaining the headlamp assembly.
4. Pull the headlamp assembly straight forward releasing the retaining studs from the grommets.

Information Provided by: DEALER E-PROCESS

Downloaded from www.Manualslib.com manuals search engine

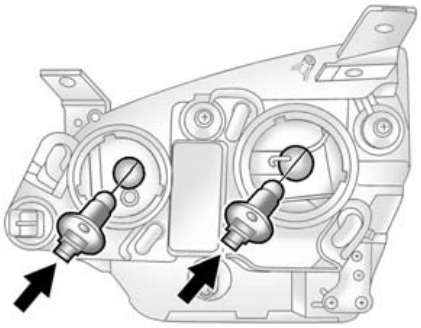

5. Disconnect the electrical connector from the bulb assembly.
6. Turn the bulb assembly counterclockwise to remove it from the housing.
7. Replace the old bulb with a new one.
8. Reverse Steps 1–6 to reinstall.

Fog Lamps

To replace the front fog lamp bulb:

1. Locate the fog lamp located under the front fascia.
2. Remove the bulb by turning it counterclockwise and pulling it straight out of the assembly.
3. Disconnect the electrical connector from the fog lamp bulb assembly.
4. Install the new bulb by turning it clockwise into the assembly.
5. Reconnect the electrical connector.

Front Turn Signal and Parking Lamps

To replace a front turn signal or parking lamp bulb:

1. Follow Steps 1–4 under *Headlamps on page 10-27* to access the front turn signal or parking lamp.

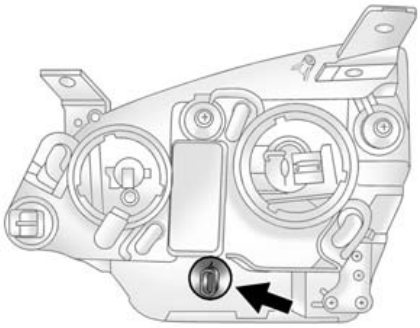

2. Turn the bulb to be replaced counterclockwise to remove it from the headlamp assembly.
3. Pull the bulb out of the bulb socket assembly.
4. Push the new bulb into the bulb socket assembly.
5. Insert the bulb assembly into the headlamp assembly.
6. Turn the bulb assembly clockwise until seated.
7. Reverse the steps to reinstall the headlamp assembly.

Information Provided by:
DEALER E-PROCESS

Downloaded from www.Manualslib.com manuals search engine

Taillamps, Turn Signal, Stoplamps, and Back-Up Lamps

To replace one of these bulbs:

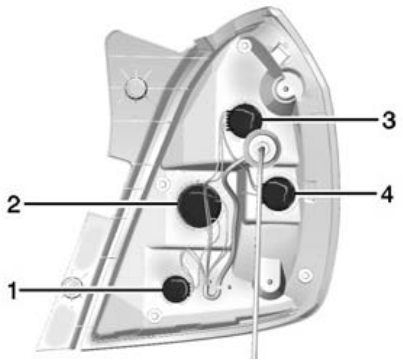

1. Back-Up Lamp
2. Turn Signal Lamp
3. Stoplamp/Taillamp
4. Taillamp

1. Open the liftgate. See *Liftgate on page 2-8*.

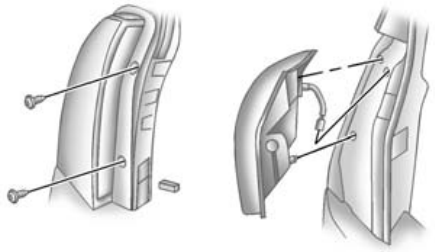

2. Remove the two screws holding in the taillamp assembly.
3. Slide the taillamp assembly rearward and away from the vehicle.
4. Turn the bulb socket being replaced counterclockwise to disconnect it.
5. Pull the bulb out of the bulb socket.
6. Push the new bulb into the bulb socket.
7. Reverse Steps 2–4 to reinstall the taillamp assembly.

License Plate Lamp

To replace one of these bulbs:

1. Remove the two screws holding each of the license plate lamps to the fascia.

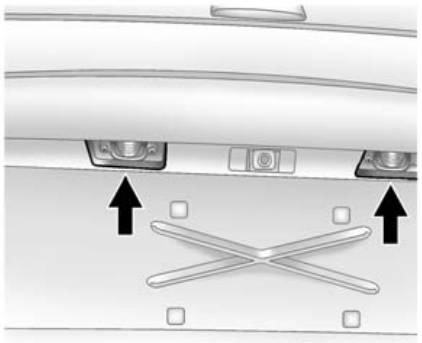

2. Turn and pull the license plate lamp forward through the fascia opening.
3. Turn the bulb socket counterclockwise and pull the bulb straight out of the socket.

Information Provided by: DEALER E-PROCESS

Downloaded from www.Manualslib.com manuals search engine

4. Push the new bulb into the bulb socket and turn it clockwise to lock it into place.
5. Push and turn the license plate lamp back through the fascia opening.
6. Reinstall the two screws holding the license plate lamp to the fascia.

Replacement Bulbs

Exterior Lamp	Bulb Number
Back-Up Lamp	921
Front Fog Lamp	H11
Front Turn Signal/ Parking Lamp	3157K
Headlamps	
High-Beam	9005 or HB3
Low-Beam/DRL	9006 or HB4
License Plate Lamp	168LL
Rear Stoplamp, and Taillamp	7443
Rear Turn Signal Lamp	3757 NAK

For replacement bulbs not listed here, contact your dealer.

Electrical System

Electrical System Overload

The vehicle has fuses and circuit breakers to protect against an electrical system overload.

When the current electrical load is too heavy, the circuit breaker opens and closes, protecting the circuit until the current load returns to normal or the problem is fixed. This greatly reduces the chance of circuit overload and fire caused by electrical problems.

Fuses and circuit breakers protect power devices in the vehicle.

Replace a bad fuse with a new one of the identical size and rating.

If there is a problem on the road and a fuse needs to be replaced, the same amperage fuse can be borrowed. Choose some feature of the vehicle that is not needed to use and replace it as soon as possible.

Information Provided by: DEALER E-PROCESS

Downloaded from www.Manualslib.com manuals search engine

Headlamp Wiring

An electrical overload may cause the lamps to go on and off, or in some cases to remain off. Have the headlamp wiring checked right away if the lamps go on and off or remain off.

Windshield Wipers

If the wiper motor overheats due to heavy snow or ice, the windshield wipers will stop until the motor cools and will then restart.

Although the circuit is protected from electrical overload, overload due to heavy snow or ice may cause wiper linkage damage. Always clear ice and heavy snow from the windshield before using the windshield wipers.

If the overload is caused by an electrical problem and not snow or ice, be sure to get it fixed.

Fuses and Circuit Breakers

The wiring circuits in the vehicle are protected from short circuits by fuses. This greatly reduces the chance of circuit overload and fire caused by electrical problems.

There are two fuse blocks — the engine compartment fuse block, and the instrument panel fuse block.

To identify and check fuses and relays, refer to the Fuse Usage Chart on the inside surface of the fuse panel door or cover.

Engine Compartment Fuse Block

The engine compartment fuse block is on the right side of the engine compartment, near the battery.

⚠ Caution

Spilling liquid on any electrical component on the vehicle may damage it. Always keep the covers on any electrical component.

Information Provided by: DEALER E-PROCESS

Downloaded from www.Manualslib.com manuals search engine

10-32 Vehicle Care

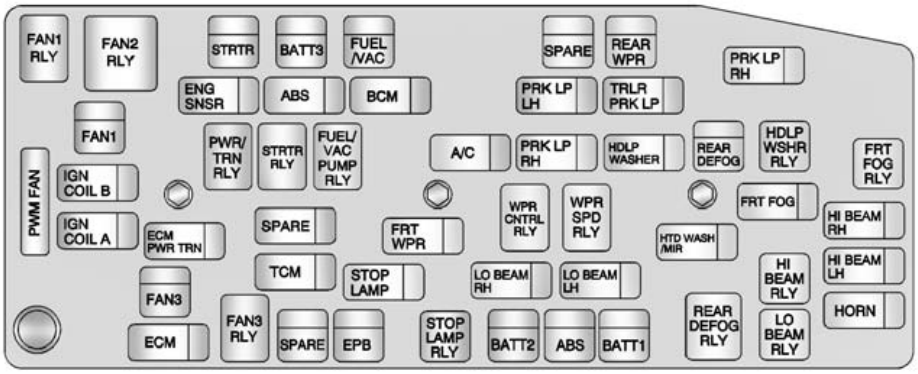

The vehicle may not be equipped with all of the fuses, relays, and features shown.

Fuses	Usage
ABS	Antilock Brake System

Fuses	Usage
A/C	Heater, Ventilation, and Air Conditioning System
BATT1	Instrument Panel Fuse Block Main Feed 1

Fuses	Usage
BATT2	Instrument Panel Fuse Block Main Feed 2
BATT3	Instrument Panel Fuse Block Main Feed 3
BCM	Body Control Module
ECM	Engine Control Module
ECM PWR TRN	Engine Control Module/Powertrain
ENG SNSR	Miscellaneous Engine Sensors
EPB	Electric Parking Brake
FAN1	Cooling Fan 1
FAN3	Cooling Fan 3
FRT FOG	Front Fog Lamps
FRT WPR	Front Wiper Motor

Information Provided by: DEALER E-PROCESS

Downloaded from www.Manualslib.com manuals search engine

Fuses	Usage
FUEL/VAC	Fuel Pump/ Vacuum Pump
HDLP WASHER	Headlamp Washer
HI BEAM LH	High-Beam Headlamp (Left)
HI BEAM RH	High-Beam Headlamp (Right)
HORN	Horn
HTD WASH/MIR	Heated Washer Fluid/Heated Mirrors
IGN COIL A	Ignition Coil A
IGN COIL B	Ignition Coil B
LO BEAM LH	Low-Beam Headlamp (Left)
LO BEAM RH	Low-Beam Headlamp (Right)
PRK LP LH	Parking Lamps (Left)
PRK LP RH	Parking Lamps (Right)

Fuses	Usage
PRK LP RH*	Parking Lamps (Right) (Europe Park Lamps)
PWM FAN	Pulse Width Modulation Fan
REAR DEFOG	Rear Window Defogger
REAR WPR	Rear Wiper Motor
SPARE	Not Used
STOP LAMP	Stoplamps
STRTR	Starter
TCM	Transmission Control Module
TRLR PRK LP	Trailer Parking Lamps

Relays	Usage
FAN1 RLY	Cooling Fan 1
FAN2 RLY	Cooling Fan 2
FAN3 RLY	Cooling Fan 3

Relays	Usage
FRT FOG RLY	Front Fog Lamps
FUEL/VAC PUMP RLY	Fuel Pump/Vacuum Pump Relay
HDLP WSHR RLY	Headlamp Washer
HI BEAM RLY	High-Beam Headlamps
LO BEAM RLY	Low-Beam Headlamps
PWR/ TRN RLY	Powertrain
REAR DEFOG RLY	Rear Window Defogger
STOP LAMP RLY	Stoplamps
STRTR RLY	Starter
WPR CNTRL RLY	Wiper Control
WPR SPD RLY	Wiper Speed

Information Provided by DEALER E-PROCESS

Downloaded from www.Manualslib.com manuals search engine

Instrument Panel Fuse Block

The instrument panel fuse block is on the passenger side of the lower console.

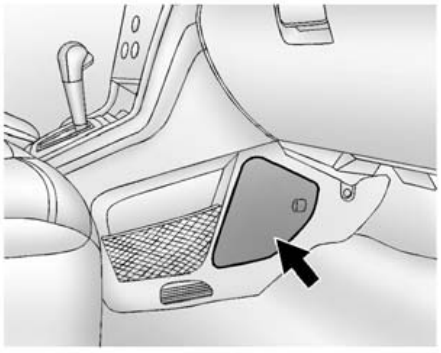

Pull the latch of the fuse box cover straight back to access the fuses.

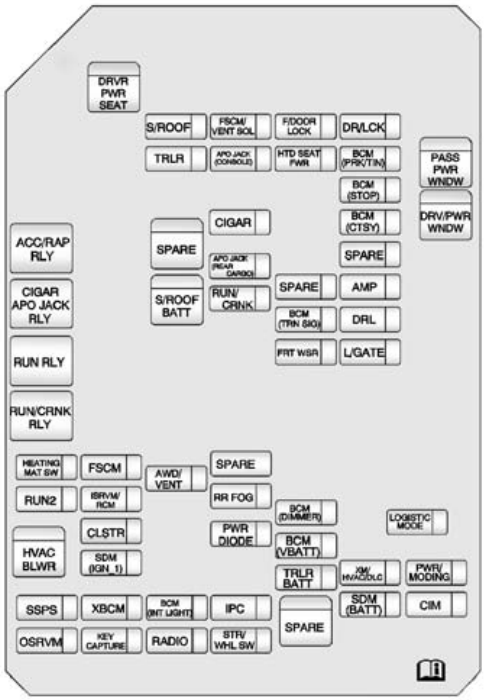

Information Provided by:
DEALER E-PROCESS

Downloaded from www.Manualslib.com manuals search engine

The vehicle may not have all of the fuses, relays, and features shown.

Fuses	Usage
AMP	Amplifier
APO JACK (CONSOLE)	Auxiliary Power Outlet Jack
APO JACK (REAR CARGO)	Auxiliary Power Outlet Jack Rear Cargo
AWD/VENT	All-Wheel Drive/ Ventilation
BCM (CTSY)	Body Control Module (Courtesy)
BCM (DIMMER)	Body Control Module (Dimmer)
BCM (INT LIGHT)	Body Control Module (Interior Light)
BCM (PRK/TN)	Body Control Module (Parking/ Turn Signal)
BCM (STOP)	Body Control Module (Stoplamp)

Fuses	Usage
BCM (TRN SIG)	Body Control Module (Turn Signal)
BCM (VBATT)	Body Control Module (Battery Voltage)
CIGAR	Cigarette Lighter
CIM	Communications Integration Module
CLSTR	Instrument Cluster
DRL	Daytime Running Lamps
DR/LCK	Driver Door Lock
DRVR PWR SEAT	Driver Power Seat
DRV/ PWR WNDW	Driver Power Window
F/DOOR LOCK	Fuel Door Lock
FRT WSR	Front Washer

Fuses	Usage
FSCM	Fuel System Control Module
FSCM VENT SOL	Fuel System Control Module Vent Solenoid
HEATING MAT SW	Heating Mat Switch
HTD SEAT PWR	Heated Seat Power
HVAC BLWR	Heating, Ventilation, and Air Conditioning Blower
IPC	Instrument Panel Cluster
ISRVM/RCM	Inside Rearview Mirror/Remote Compass Module
KEY CAPTURE	Key Capture
L/GATE	Liftgate

Information Provided by: DEALER E-PROCESS

Downloaded from www.Manualslib.com manuals search engine

Fuses	Usage
LOGISTIC MODE	Logistic Mode
OSRVM	Outside Rearview Mirror
PASS PWR WNDW	Passenger Power Window
PWR DIODE	Power Diode
PWR/ MODING	Power Moding
RADIO	Radio
RR FOG	Rear Defogger
RUN 2	Power Battery Key On Run
RUN/CRNK	Run Crank
SDM (BATT)	Safety Diagnosis Module (Battery)
SDM (IGN 1)	Safety Diagnosis Module (Ignition 1)
SPARE	Spare
S/ROOF	Sunroof

Fuses	Usage
S/ROOF BATT	Sunroof Battery
SSPS	Speed Sensitive Power Steering
STR/ WHL SW	Steering Wheel Switch
TRLR	Trailer
TRLR BATT	Trailer Battery
XBCM	Export Body Control Module
XM/ HVAC/DLC	SiriusXM Satellite Radio (If Equipped)/Heating, Ventilation, and Air Conditioning/Data Link Connection

Relays	Usage
ACC/ RAP RLY	Accessory/Run Accessory Power
CIGAR APO JACK RLY	Cigarette and Auxiliary Power Outlet
RUN/ CRNK RLY	Run/Crank
RUN RLY	Run

Information Provided by: DEALER E-PROCESS

Downloaded from www.Manualslib.com manuals search engine

Wheels and Tires

Tires

Every new GM vehicle has high-quality tires made by a leading tire manufacturer. See the warranty manual for information regarding the tire warranty and where to get service. For additional information refer to the tire manufacturer.

⚠ Warning

- Poorly maintained and improperly used tires are dangerous.
- Overloading the tires can cause overheating as a result of too much flexing. There could be a blowout

(Continued)

Warning (Continued)

and a serious crash. See *Vehicle Load Limits on page 9-10*.

- Underinflated tires pose the same danger as overloaded tires. The resulting crash could cause serious injury. Check all tires frequently to maintain the recommended pressure. Tire pressure should be checked when the tires are cold.
- Overinflated tires are more likely to be cut, punctured, or broken by a sudden impact — such as when hitting a pothole. Keep tires at the recommended pressure.

(Continued)

Warning (Continued)

- Worn or old tires can cause a crash. If the tread is badly worn, replace them.
- Replace any tires that have been damaged by impacts with potholes, curbs, etc.
- Improperly repaired tires can cause a crash. Only the dealer or an authorized tire service center should repair, replace, dismount, and mount the tires.
- Do not spin the tires in excess of 56 km/h (35 mph) on slippery surfaces such as snow, mud, ice, etc. Excessive spinning may cause the tires to explode.

Information Provided by: DEALER E-PROCESS

Downloaded from www.Manualslib.com manuals search engine

See *Tire Pressure for High-Speed Operation on page 10-46* for inflation pressure adjustment for high-speed driving.

All-Season Tires

This vehicle may come with all-season tires. These tires are designed to provide good overall performance on most road surfaces and weather conditions. Original equipment tires designed to GM's specific tire performance criteria have a TPC specification code molded onto the sidewall. Original equipment all-season tires can be identified by the last two characters of this TPC code, which will be “MS.”

Consider installing winter tires on the vehicle if frequent driving on snow or ice-covered roads is expected. All-season tires provide adequate performance for most winter driving conditions, but they may not offer the same level of traction or performance as winter tires on snow or ice-covered roads. See *Winter Tires on page 10-38*.

Winter Tires

This vehicle was not originally equipped with winter tires. Winter tires are designed for increased traction on snow and ice-covered roads. Consider installing winter tires on the vehicle if frequent driving on ice or snow covered roads is expected. See your dealer for details regarding winter tire availability and proper tire selection. Also, see *Buying New Tires on page 10-52*.

With winter tires, there may be decreased dry road traction, increased road noise, and shorter tread life. After changing to winter tires, be alert for changes in vehicle handling and braking.

If using winter tires:

- Use tires of the same brand and tread type on all four wheel positions.
- Use only radial ply tires of the same size, load range, and speed rating as the original equipment tires.

Winter tires with the same speed rating as the original equipment tires may not be available for H, V, W, Y, and ZR speed rated tires. If winter tires with a lower speed rating are chosen, never exceed the tire's maximum speed capability.

Summer Tires

This vehicle may come with high performance summer tires. These tires have a special tread and compound that are optimized for maximum dry and wet road performance. This special tread and compound will decrease performance in cold climates, and on ice and snow. We recommend installing winter tires on the vehicle if frequent driving in cold temperatures or on snow or ice covered roads is expected. See *Winter Tires on page 10-38*.

Information Provided by: DEALER E-PROCESS

Downloaded from www.Manualslib.com manuals search engine

Tire Sidewall Labeling

Useful information about a tire is molded into its sidewall. The examples show a typical passenger vehicle tire and a compact spare tire sidewall.

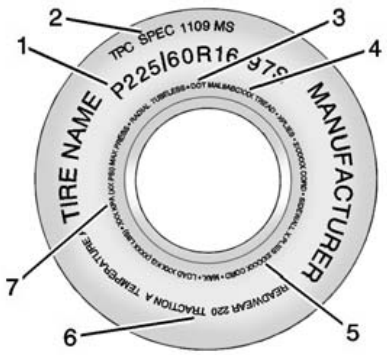

Passenger (P-Metric) Tire Example

(1) Tire Size: The tire size is a combination of letters and numbers used to define a particular tire's width, height, aspect ratio, construction type, and service description. See the "Tire Size" illustration later in this section.

(2) TPC Spec (Tire Performance Criteria Specification): Original equipment tires designed to GM's specific tire performance criteria have a TPC specification code molded onto the sidewall. GM's TPC specifications meet or exceed all federal safety guidelines.

(3) DOT (Department of Transportation): The Department of Transportation (DOT) code indicates that the tire is in compliance with the U.S. Department of Transportation Motor Vehicle Safety Standards.

DOT Tire Date of Manufacture: The last four digits of the TIN indicate the tire manufactured date. The first two digits represent the week (01–52) and the last two digits, the year. For example, the third week of the year 2010 would have a four-digit DOT date of 0310.

(4) Tire Identification Number (TIN): The letters and numbers following the DOT (Department of Transportation) code are the Tire Identification Number (TIN). The TIN shows the manufacturer and plant code, tire size, and date the tire was manufactured. The TIN is molded onto both sides of the tire, although only one side may have the date of manufacture.

(5) Tire Ply Material: The type of cord and number of plies in the sidewall and under the tread.

Information Provided by: DEALER E-PROCESS

Downloaded from www.Manualslib.com manuals search engine

(6) Uniform Tire Quality Grading (UTQG): Tire manufacturers are required to grade tires based on three performance factors: treadwear, traction, and temperature resistance. For more information see *Uniform Tire Quality Grading on page 10-54*.

(7) Maximum Cold Inflation Load Limit: Maximum load that can be carried and the maximum pressure needed to support that load.

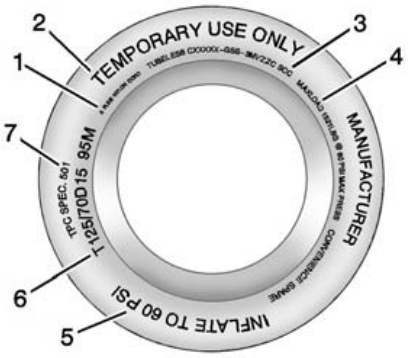

Compact Spare Tire Example

(1) Tire Ply Material: The type of cord and number of plies in the sidewall and under the tread.

(2) Temporary Use Only: The compact spare tire or temporary use tire should not be driven at speeds over 80 km/h (50 mph). The compact spare tire is for emergency use when a regular road tire has lost air and gone flat. If the vehicle has a compact spare tire, see *Compact Spare Tire on page 10-65* and *If a Tire Goes Flat on page 10-57*.

(3) Tire Identification Number (TIN): The letters and numbers following the DOT (Department of Transportation) code are the Tire Identification Number (TIN). The TIN shows the manufacturer and plant code, tire size, and date the tire was manufactured. The TIN is molded onto both sides of the tire, although only one side may have the date of manufacture.

(4) Maximum Cold Inflation Load Limit: Maximum load that can be carried and the maximum pressure needed to support that load.

(5) Tire Inflation: The temporary use tire or compact spare tire should be inflated to 420 kPa (60 psi).

Information Provided by: DEALER E-PROCESS

Downloaded from www.Manualslib.com manuals search engine

For more information on tire pressure and inflation see *Tire Pressure on page 10-44*.

(6) Tire Size: A combination of letters and numbers define a tire's width, height, aspect ratio, construction type, and service description. The letter T as the first character in the tire size means the tire is for temporary use only.

(7) TPC Spec (Tire Performance Criteria Specification): Original equipment tires designed to GM's specific tire performance criteria have a TPC specification code molded onto the sidewall. GM's TPC specifications meet or exceed all federal safety guidelines.

Tire Designations

Tire Size

The following is an example of a typical passenger vehicle tire size.

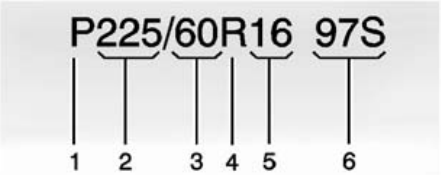

(1) Passenger (P-Metric) Tire: The United States version of a metric tire sizing system. The letter P as the first character in the tire size means a passenger vehicle tire engineered to standards set by the U.S. Tire and Rim Association.

(2) Tire Width: The three-digit number indicates the tire section width in millimeters from sidewall to sidewall.

(3) Aspect Ratio: A two-digit number that indicates the tire height-to-width measurements. For example, if the tire size aspect ratio is 60, as shown in item 3 of the illustration, it would mean that the tire's sidewall is 60 percent as high as it is wide.

(4) Construction Code: A letter code is used to indicate the type of ply construction in the tire. The letter R means radial ply construction; the letter D means diagonal or bias ply construction; and the letter B means belted-bias ply construction.

(5) Rim Diameter: Diameter of the wheel in inches.

(6) Service Description: These characters represent the load index and speed rating of the tire. The load index represents the load carrying capacity a tire

Information Provided by:
DEALER E-PROCESS

Downloaded from www.Manualslib.com manuals search engine

is certified to carry. The speed rating is the maximum speed a tire is certified to carry a load.

Tire Terminology and Definitions

Air Pressure: The amount of air inside the tire pressing outward on each square inch of the tire. Air pressure is expressed in kPa (kilopascal) or psi (pounds per square inch).

Accessory Weight: The combined weight of optional accessories. Some examples of optional accessories are automatic transmission, power windows, power seats, and air conditioning.

Aspect Ratio: The relationship of a tire's height to its width.

Belt: A rubber coated layer of cords between the plies and the tread. Cords may be made from steel or other reinforcing materials.

Bead: The tire bead contains steel wires wrapped by steel cords that hold the tire onto the rim.

Bias Ply Tire: A pneumatic tire in which the plies are laid at alternate angles less than 90 degrees to the centerline of the tread.

Cold Tire Pressure: The amount of air pressure in a tire, measured in kPa (kilopascal) or psi (pounds per square inch) before a tire has built up heat from driving. See *Tire Pressure on page 10-44*.

Curb Weight: The weight of a motor vehicle with standard and optional equipment including the maximum capacity of fuel, oil, and coolant, but without passengers and cargo.

DOT Markings: A code molded into the sidewall of a tire signifying that the tire is in compliance with the U.S. Department of Transportation (DOT) Motor Vehicle Safety Standards. The DOT code includes the Tire Identification Number (TIN), an alphanumeric designator which can also identify the tire manufacturer, production plant, brand, and date of production.

GVWR: Gross Vehicle Weight Rating. See *Vehicle Load Limits on page 9-10*.

GAWR FRT: Gross Axle Weight Rating for the front axle. See *Vehicle Load Limits on page 9-10*.

Information Provided by: DEALER E-PROCESS

Downloaded from www.Manualslib.com manuals search engine

GAWR RR: Gross Axle Weight Rating for the rear axle. See *Vehicle Load Limits on page 9-10*.

Intended Outboard Sidewall: The side of an asymmetrical tire that must always face outward when mounted on a vehicle.

Kilopascal (kPa): The metric unit for air pressure.

Light Truck (LT-Metric) Tire: A tire used on light duty trucks and some multipurpose passenger vehicles.

Load Index: An assigned number ranging from 1 to 279 that corresponds to the load carrying capacity of a tire.

Maximum Inflation Pressure: The maximum air pressure to which a cold tire can be inflated. The maximum air pressure is molded onto the sidewall.

Maximum Load Rating: The load rating for a tire at the maximum permissible inflation pressure for that tire.

Maximum Loaded Vehicle Weight: The sum of curb weight, accessory weight, vehicle capacity weight, and production options weight.

Normal Occupant Weight: The number of occupants a vehicle is designed to seat multiplied by 68 kg (150 lb). See *Vehicle Load Limits on page 9-10*.

Occupant Distribution: Designated seating positions.

Outward Facing Sidewall: The side of an asymmetrical tire that has a particular side that faces outward when mounted on a vehicle. The side of the tire that contains a whitewall, bears white lettering, or bears manufacturer, brand, and/or model name molding that is higher or deeper than the same moldings on the other sidewall of the tire.

Passenger (P-Metric) Tire: A tire used on passenger cars and some light duty trucks and multipurpose vehicles.

Recommended Inflation Pressure: Vehicle manufacturer's recommended tire inflation pressure as shown on the tire placard. See *Tire Pressure on page 10-44* and *Vehicle Load Limits on page 9-10*.

Radial Ply Tire: A pneumatic tire in which the ply cords that extend to the beads are laid at 90 degrees to the centerline of the tread.

Rim: A metal support for a tire and upon which the tire beads are seated.

Information Provided by:
DEALER E-PROCESS

Downloaded from www.Manualslib.com manuals search engine

Sidewall: The portion of a tire between the tread and the bead.

Speed Rating: An alphanumeric code assigned to a tire indicating the maximum speed at which a tire can operate.

Traction: The friction between the tire and the road surface. The amount of grip provided.

Tread: The portion of a tire that comes into contact with the road.

Treadwear Indicators: Narrow bands, sometimes called wear bars, that show across the tread of a tire when only 1.6 mm (1/16 in) of tread remains. See *When It Is Time for New Tires on page 10-51*.

UTQGS (Uniform Tire Quality Grading Standards): A tire information system that provides consumers with ratings for a tire's traction, temperature, and treadwear. Ratings are determined by tire manufacturers using government testing procedures. The ratings are molded into the sidewall of the tire. See *Uniform Tire Quality Grading on page 10-54*.

Vehicle Capacity Weight: The number of designated seating positions multiplied by 68 kg (150 lb) plus the rated cargo load. See *Vehicle Load Limits on page 9-10*.

Vehicle Maximum Load on the Tire: Load on an individual tire due to curb weight, accessory weight, occupant weight, and cargo weight.

Vehicle Placard: A label permanently attached to a vehicle showing the vehicle capacity weight and the original equipment tire size and recommended inflation pressure. See “Tire and Loading Information Label” under *Vehicle Load Limits on page 9-10*.

Tire Pressure

Tires need the correct amount of air pressure to operate effectively.

⚠ Caution

Neither tire underinflation nor overinflation is good. Underinflated tires, or tires that do not have enough air, can result in:

- Tire overloading and overheating which could lead to a blowout.
- Premature or irregular wear.
- Poor handling.

(Continued)

Information Provided by: DEALER E-PROCESS

Downloaded from www.Manualslib.com manuals search engine

Caution (Continued)

- Reduced fuel economy.

Overinflated tires, or tires that have too much air, can result in:

- Unusual wear.
- Poor handling.
- Rough ride.
- Needless damage from road hazards.

The Tire and Loading Information label on the vehicle indicates the original equipment tires and the correct cold tire inflation pressures. The recommended pressure is the minimum air pressure needed to support the vehicle's maximum load carrying capacity. See *Vehicle Load Limits on page 9-10*.

How the vehicle is loaded affects vehicle handling and ride comfort. Never load the vehicle with more weight than it was designed to carry.

When to Check

Check the tires once a month or more. Do not forget the compact spare, if the vehicle has one. The cold compact spare tire pressure should be at 420 kPa (60 psi). See *Compact Spare Tire on page 10-65*.

How to Check

Use a good quality pocket-type gauge to check tire pressure. Proper tire inflation cannot be determined by looking at the tire. Check the tire inflation pressure when the tires are cold, meaning the vehicle has not been driven for at least three hours or no more than 1.6 km (1 mi).

Remove the valve cap from the tire valve stem. Press the tire gauge firmly onto the valve to get a pressure measurement. If the cold tire inflation pressure matches the recommended pressure on the Tire and Loading Information label, no further adjustment is necessary. If the inflation pressure is low, add air until the recommended pressure is reached. If the inflation pressure is high, press on the metal stem in the center of the tire valve to release air.

Recheck the tire pressure with the tire gauge.

Return the valve caps on the valve stems to prevent leaks and keep out dirt and moisture.

Information Provided by: DEALER E-PROCESS

Downloaded from www.Manualslib.com manuals search engine

Tire Pressure for High-Speed Operation

⚠ Warning

Driving at high speeds, 160 km/h (100 mph) or higher, puts an additional strain on tires. Sustained high-speed driving causes excessive heat buildup and can cause sudden tire failure. You could have a crash and you or others could be killed. Some high-speed rated tires require inflation pressure adjustment for high-speed operation. When speed limits and road conditions are such that a vehicle can be driven at high speeds, make sure the tires are rated for high-speed operation, in excellent condition, and set to the correct cold tire inflation pressure for the vehicle load.

Vehicles with P235/55R18 size tires require inflation pressure adjustment when driving the vehicle at speeds of 160 km/h (100 mph) or higher. Set the cold inflation pressure to the maximum inflation pressure shown on the tire sidewall, or 262 kPa (38 psi), whichever is lower. See the example following. Return the tires to the recommended cold tire inflation pressure when high-speed driving has ended. See *Vehicle Load Limits on page 9-10* and *Tire Pressure on page 10-44*.

Example:

The maximum load and inflation pressure is molded on the tire sidewall, in small letters, near the rim flange. It will read something like this: Maximum load 690 kg (1521 lbs) 300 kPa (44 psi) Max. Press.

For this example, set the inflation pressure for high-speed driving at 262 kPa (38 psi).

Tire Pressure Monitor System

The Tire Pressure Monitor System (TPMS) uses radio and sensor technology to check tire pressure levels. The TPMS sensors monitor the air pressure in your tires and transmit tire pressure readings to a receiver located in the vehicle.

Each tire, including the spare (if provided), should be checked monthly when cold and inflated to the inflation pressure recommended by the vehicle manufacturer on the vehicle placard or tire inflation pressure label. (If your vehicle has tires of a different size than the size indicated on the vehicle placard or tire inflation pressure label, you should determine the proper tire inflation pressure for those tires.)

As an added safety feature, your vehicle has been equipped with a tire pressure monitoring system (TPMS) that illuminates a low tire

Information Provided by: DEALER E-PROCESS

Downloaded from www.Manualslib.com manuals search engine

pressure telltale when one or more of your tires is significantly under-inflated.

Accordingly, when the low tire pressure telltale illuminates, you should stop and check your tires as soon as possible, and inflate them to the proper pressure. Driving on a significantly under-inflated tire causes the tire to overheat and can lead to tire failure. Under-inflation also reduces fuel efficiency and tire tread life, and may affect the vehicle's handling and stopping ability.

Please note that the TPMS is not a substitute for proper tire maintenance, and it is the driver's responsibility to maintain correct tire pressure, even if under-inflation has not reached the level to trigger illumination of the TPMS low tire pressure telltale.

Your vehicle has also been equipped with a TPMS malfunction indicator to indicate when the system is not operating properly.

The TPMS malfunction indicator is combined with the low tire pressure telltale. When the system detects a malfunction, the telltale will flash for approximately one minute and then remain continuously illuminated. This sequence will continue upon subsequent vehicle start-ups as long as the malfunction exists.

When the malfunction indicator is illuminated, the system may not be able to detect or signal low tire pressure as intended. TPMS malfunctions may occur for a variety of reasons, including the installation of replacement or alternate tires or wheels on the vehicle that prevent the TPMS from functioning properly. Always check the TPMS malfunction telltale after replacing one or more tires or wheels on your vehicle to ensure that the replacement or alternate tires and wheels allow the TPMS to continue to function properly.

See *Tire Pressure Monitor Operation on page 10-47*.

Information Provided by: DEALER E-PROCESS

See *Radio Frequency Statement on page 13-15*.

Tire Pressure Monitor Operation

This vehicle may have a Tire Pressure Monitor System (TPMS). The TPMS is designed to warn the driver when a low tire pressure condition exists. TPMS sensors are mounted onto each tire and wheel assembly, excluding the spare tire and wheel assembly. The TPMS sensors monitor the air pressure in the tires and transmit the tire pressure readings to a receiver located in the vehicle.

When a low tire pressure condition is detected, the TPMS illuminates the low tire pressure warning light

Downloaded from www.Manualslib.com manuals search engine

on the instrument cluster. If the warning light comes on, stop as soon as possible and inflate the tires to the recommended pressure shown on the tire loading information label. See *Vehicle Load Limits on page 9-10*.

The low tire pressure warning light comes on at each ignition cycle until the tires are inflated to the correct inflation pressure.

The low tire pressure warning light may come on in cool weather when the vehicle is first started, and then turn off as the vehicle is driven. This may be an early indicator that the air pressure is getting low and needs to be inflated to the proper pressure.

A Tire and Loading Information label shows the size of the original equipment tires and the correct inflation pressure for the tires when they are cold. See *Vehicle Load Limits on page 9-10*, for an example of the Tire and Loading Information label and its location. Also see *Tire Pressure on page 10-44*.

The TPMS system can warn about a low tire pressure condition but it does not replace normal tire maintenance. See *Tire Inspection on page 10-50*, *Tire Rotation on page 10-50* and *Tires on page 10-37*.

⚠ Caution

Tire sealant materials are not all the same. A non-approved tire sealant could damage the TPMS sensors. TPMS sensor damage caused by using an incorrect tire sealant is not covered by the vehicle warranty. Always use only the GM approved tire sealant available through your dealer or included in the vehicle.

TPMS Malfunction Light

The TPMS will not function properly if one or more of the TPMS sensors are missing or inoperable. When the system detects a malfunction, the low tire pressure warning light flashes for about one minute and then stays on for the remainder of the ignition cycle. The malfunction light comes on at each ignition cycle until the problem is corrected. Some of the conditions that can cause the malfunction light to come on are:

- One of the road tires has been replaced with the spare tire. The spare tire does not have a TPMS sensor. The malfunction light should go off after the road tire is replaced and the sensor matching process is performed successfully. See "TPMS Sensor Matching Process" later in this section.
- The TPMS sensor matching process was not done or not completed successfully after rotating the vehicle's tires. The

Information Provided by: DEALER E-PROCESS

Downloaded from www.Manualslib.com manuals search engine

malfunction light should go off once the TPMS sensor matching process is performed successfully. See “TPMS Sensor Matching Process” later in this section.

- One or more TPMS sensors are missing or damaged. The malfunction light should go off when the TPMS sensors are installed and the sensor matching process is performed successfully. See your dealer for service.
- Replacement tires or wheels do not match the original equipment tires or wheels. Tires and wheels other than those recommended could prevent the TPMS from functioning properly. See *Buying New Tires on page 10-52*.
- Operating electronic devices or being near facilities using radio wave frequencies similar to the TPMS could cause the TPMS sensors to malfunction.

TPMS Sensor Matching Process

Each TPMS sensor has a unique identification code. The identification code needs to be matched to a new tire/wheel position after rotating the vehicle’s tires or replacing one or more of the TPMS sensors. Also, the TPMS sensor matching process should be performed after replacing a spare tire with a road tire containing the TPMS sensor. The malfunction light should go off at the next ignition cycle. The sensors are matched to the tire/wheel positions, using a TPMS relearn tool, in the following order: driver side front tire, passenger side front tire, passenger side rear tire, and driver side rear. See your dealer for service or to purchase a relearn tool.

There are two minutes to match the first tire/wheel position, and five minutes overall to match all four tire/wheel positions. If it takes longer, the matching process stops and must be restarted.

The TPMS matching process is:

1. Set the parking brake.
2. Turn the ignition to ON/RUN with the engine off.
3. Press and hold the RKE transmitter's 🔒 and 🔓 buttons at the same time, for about three seconds. The horn will sound twice to indicate the receiver is ready for the sensor matching process to begin.
4. Start with the driver side front tire. The driver side turn signal lamp comes on.
5. Place the relearn tool against the tire sidewall, near the valve stem. Then press the button to activate the TPMS sensor. A horn chirp confirms that the sensor identification code has been matched to this tire and wheel position.
6. Proceed to the passenger side front tire. The passenger side front turn signal lamp comes on. Repeat the procedure in Step 5.

Information Provided by: DEALER E-PROCESS

Downloaded from www.Manualslib.com manuals search engine

7. Proceed to the passenger side rear tire. The passenger side rear turn signal lamp comes on. Repeat the procedure in Step 5.
8. Proceed to the driver side rear tire. The driver side rear turn signal lamp comes on. Repeat the procedure in Step 5. The horn sounds two times to indicate the sensor identification code has been matched to the driver side rear tire, and the TPMS sensor matching process is no longer active.
9. Turn the ignition to LOCK/OFF.
10. Set all four tires to the recommended air pressure level as indicated on the Tire and Loading Information label.

Tire Inspection

We recommend that the tires, including the spare tire, if the vehicle has one, be inspected for signs of wear or damage at least once a month.

Replace the tire if:

- The indicators at three or more places around the tire can be seen.
- There is cord or fabric showing through the tire's rubber.
- The tread or sidewall is cracked, cut, or snagged deep enough to show cord or fabric.
- The tire has a bump, bulge, or split.
- The tire has a puncture, cut, or other damage that cannot be repaired well because of the size or location of the damage.

Tire Rotation

Tires should be rotated every 12 000 km (7,500 mi). See *Maintenance Schedule on page 11-2*.

Tires are rotated to achieve a uniform wear for all tires. The first rotation is the most important.

Anytime unusual wear is noticed, rotate the tires as soon as possible, check for proper tire inflation pressure, and check for damaged tires or wheels. If the unusual wear continues after the rotation, check the wheel alignment. See *When It Is Time for New Tires on page 10-51* and *Wheel Replacement on page 10-56*.

Information Provided by: DEALER E-PROCESS

Downloaded from www.Manualslib.com manuals search engine

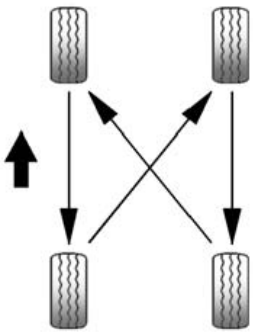

Use this rotation pattern when rotating the tires.

Do not include the compact spare tire in the tire rotation.

Adjust the front and rear tires to the recommended inflation pressure on the Tire and Loading Information label after the tires have been rotated. See *Tire Pressure on page 10-44* and *Vehicle Load Limits on page 9-10*.

Reset the Tire Pressure Monitor System. See *Tire Pressure Monitor Operation on page 10-47*.

Check that all wheel nuts are properly tightened. See “Wheel Nut Torque” under *Capacities and Specifications on page 12-2*.

⚠ Warning

Rust or dirt on a wheel, or on the parts to which it is fastened, can make wheel nuts become loose after time. The wheel could come off and cause an accident. When changing a wheel, remove any rust or dirt from places where the wheel attaches to the vehicle. In an emergency, a cloth or a paper towel can be used; however, use a scraper or wire brush later to remove all rust or dirt.

Lightly coat the center of the wheel hub with wheel bearing grease after a wheel change or tire rotation to prevent corrosion or rust build-up. Do not get grease on the flat wheel mounting surface or on the wheel nuts or bolts.

When It Is Time for New Tires

Factors such as maintenance, temperatures, driving speeds, vehicle loading, and road conditions affect the wear rate of the tires.

Information Provided by: DEALER E-PROCESS

Downloaded from www.Manualslib.com manuals search engine

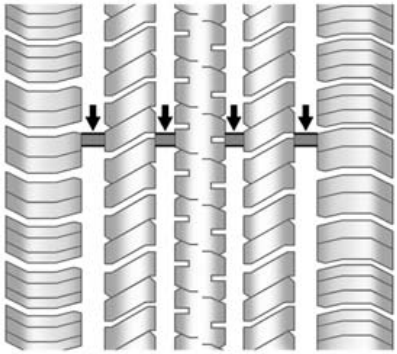

Treadwear indicators are one way to tell when it is time for new tires. Treadwear indicators appear when the tires have only 1.6 mm (1/16 in) or less of tread remaining. See *Tire Inspection on page 10-50* and *Tire Rotation on page 10-50*.

The rubber in tires ages over time. This also applies to the spare tire, if the vehicle has one, even if it is never used. Multiple factors including temperatures, loading conditions, and inflation pressure maintenance affect how fast aging takes place. GM recommends that tires, including the spare if equipped, be replaced after six years, regardless of tread wear. The tire manufacturer date is the last four digits of the DOT Tire Identification Number (TIN) which is molded into one side of the tire sidewall. The first two digits represent the week (01–52) and the last two digits, the year. For example, the third week of the year 2010 would have a four-digit DOT date of 0310.

Vehicle Storage

Tires age when stored normally mounted on a parked vehicle. Park a vehicle that will be stored for at least a month in a cool, dry, clean area away from direct sunlight to slow aging. This area should be free of grease, gasoline, or other substances that can deteriorate rubber.

Parking for an extended period can cause flat spots on the tires that may result in vibrations while driving. When storing a vehicle for at least a month, remove the tires or raise the vehicle to reduce the weight from the tires.

Buying New Tires

GM has developed and matched specific tires for the vehicle. The original equipment tires installed were designed to meet General Motors Tire Performance Criteria Specification (TPC Spec) system rating. When replacement tires are needed, GM strongly recommends buying tires with the same TPC Spec rating.

GM's exclusive TPC Spec system considers over a dozen critical specifications that impact the overall performance of the vehicle, including brake system performance, ride and handling, traction control, and tire pressure monitoring performance. GM's TPC Spec

Information Provided by: DEALER E-PROCESS

Downloaded from www.Manualslib.com manuals search engine

number is molded onto the tire's sidewall near the tire size. If the tires have an all-season tread design, the TPC Spec number will be followed by MS for mud and snow. See *Tire Sidewall Labeling on page 10-39*.

GM recommends replacing worn tires in complete sets of four. Uniform tread depth on all tires will help to maintain the performance of the vehicle. Braking and handling performance may be adversely affected if all the tires are not replaced at the same time. If proper rotation and maintenance have been done, all four tires should wear out at about the same time. See *Tire Rotation on page 10-50*. However, if it is necessary to replace only one axle set of worn tires, place the new tires on the rear axle.

Winter tires with the same speed rating as the original equipment tires may not be available for H, V, W, Y and ZR speed rated tires. Never exceed the winter tires' maximum speed capability when using winter tires with a lower speed rating.

⚠ Warning

Tires could explode during improper service. Attempting to mount or dismount a tire could cause injury or death. Only your dealer or authorized tire service center should mount or dismount the tires.

⚠ Warning

Mixing tires of different sizes, brands, or types may cause loss of control of the vehicle, resulting in a crash or other vehicle damage. Use the correct size, brand, and type of tires on all wheels.

⚠ Warning

Using bias-ply tires on the vehicle may cause the wheel rim flanges to develop cracks after many miles of driving. A tire and/or wheel could fail suddenly and cause a crash. Use only radial-ply tires with the wheels on the vehicle.

If the vehicle tires must be replaced with a tire that does not have a TPC Spec number, make

Information Provided by: DEALER E-PROCESS

Downloaded from www.Manualslib.com manuals search engine

sure they are the same size, load range, speed rating, and construction (radial) as the original tires.

Vehicles that have a tire pressure monitoring system could give an inaccurate low-pressure warning if non-TPC Spec rated tires are installed. See *Tire Pressure Monitor System on page 10-46*.

The Tire and Loading Information label indicates the original equipment tires on the vehicle. See *Vehicle Load Limits on page 9-10*.

Different Size Tires and Wheels

If wheels or tires are installed that are a different size than the original equipment wheels and tires, vehicle performance, including its braking, ride and handling characteristics, stability, and resistance to rollover may be affected. If the vehicle has electronic systems such as antilock brakes, rollover airbags, traction control, electronic stability control, or All-Wheel Drive, the performance of these systems can also be affected.

⚠ Warning

If different sized wheels are used, there may not be an acceptable level of performance and safety if tires not recommended for those wheels are selected. This increases the chance of a crash and serious injury. Only use GM specific wheel and tire systems developed for the vehicle, and have them properly installed by a GM certified technician.

See *Buying New Tires on page 10-52* and *Accessories and Modifications on page 10-2*.

Uniform Tire Quality Grading

Quality grades can be found where applicable on the tire sidewall between tread shoulder and maximum section width. For example:

Treadwear 200 Traction AA Temperature A

The following information relates to the system developed by the United States National Highway Traffic Safety Administration (NHTSA), which grades tires by treadwear, traction, and temperature performance. This applies only to vehicles sold in the United States. The grades are molded on the sidewalls of most passenger car tires. The Uniform Tire Quality Grading (UTQG) system does not apply to deep tread, winter tires, compact spare tires, tires with

Information Provided by: DEALER E-PROCESS

Downloaded from www.Manualslib.com manuals search engine

nominal rim diameters of 10 to 12 inches (25 to 30 cm), or to some limited-production tires.

While the tires available on General Motors passenger cars and light trucks may vary with respect to these grades, they must also conform to federal safety requirements and additional General Motors Tire Performance Criteria (TPC) standards.

All Passenger Car Tires Must Conform to Federal Safety Requirements In Addition To These Grades.

Treadwear

The treadwear grade is a comparative rating based on the wear rate of the tire when tested under controlled conditions on a specified government test course. For example, a tire graded 150 would wear one and one-half (1½) times as well on the government course as a tire graded 100. The relative performance of tires depends upon the actual conditions of their use, however, and may depart significantly from the norm due to variations in driving habits, service practices and differences in road characteristics and climate.

Traction

The traction grades, from highest to lowest, are AA, A, B, and C. Those grades represent the tire's ability to stop on wet pavement as measured under controlled conditions on specified government test surfaces of asphalt and concrete. A tire marked C may have poor traction performance. Warning: The traction grade assigned to this tire is based on straight-ahead braking traction tests, and does not include acceleration, cornering, hydroplaning, or peak traction characteristics.

Temperature

The temperature grades are A (the highest), B, and C, representing the tire's resistance to the generation of heat and its ability to dissipate heat when tested under controlled conditions on a specified indoor laboratory test wheel. Sustained high temperature can cause the material of the tire to degenerate and reduce tire life, and excessive temperature can lead to sudden tire failure. The grade C corresponds to a level of performance which all passenger car tires must meet under the Federal Motor Safety Standard No. 109. Grades B and A represent higher levels of

Information Provided by: DEALER E-PROCESS

Downloaded from www.Manualslib.com manuals search engine

performance on the laboratory test wheel than the minimum required by law. Warning: The temperature grade for this tire is established for a tire that is properly inflated and not overloaded. Excessive speed, underinflation, or excessive loading, either separately or in combination, can cause heat buildup and possible tire failure.

Wheel Alignment and Tire Balance

The tires and wheels were aligned and balanced at the factory to provide the longest tire life and best overall performance. Adjustments to wheel alignment and tire balancing are not necessary on a regular basis. Consider an alignment check if there is unusual tire wear or the vehicle is significantly pulling to one side or the other. Some slight pull to the left or right, depending on the crown of the road and/or other road surface variations such as troughs or ruts, is normal. If the vehicle is vibrating when driving on a smooth road, the tires and wheels may need to be rebalanced. See your dealer for proper diagnosis.

Wheel Replacement

Replace any wheel that is bent, cracked, or badly rusted or corroded. If wheel nuts keep coming loose, the wheel, wheel bolts, and wheel nuts should be replaced. If the wheel leaks air, replace it. Some aluminum wheels can be repaired. See your dealer if any of these conditions exist.

Your dealer will know the kind of wheel that is needed.

Each new wheel should have the same load-carrying capacity, diameter, width, offset, and be mounted the same way as the one it replaces.

Replace wheels, wheel bolts, wheel nuts, or Tire Pressure Monitor System (TPMS) sensors with new GM original equipment parts.

⚠ Warning

Using the wrong replacement wheels, wheel bolts, or wheel nuts can be dangerous. It could affect the braking and handling of the vehicle. Tires can lose air, and cause loss of control, causing a crash. Always use the correct wheel, wheel bolts, and wheel nuts for replacement.

Information Provided by: DEALER E-PROCESS

Downloaded from www.Manualslib.com manuals search engine

⚠ Caution

The wrong wheel can also cause problems with bearing life, brake cooling, speedometer or odometer calibration, headlamp aim, bumper height, vehicle ground clearance, and tire or tire chain clearance to the body and chassis.

Used Replacement Wheels

⚠ Warning

Replacing a wheel with a used one is dangerous. How it has been used or how far it has been driven may be unknown. It could fail suddenly and cause a crash. When replacing wheels, use a new GM original equipment wheel.

Tire Chains

⚠ Warning

Do not use tire chains. There is not enough clearance. Tire chains used on a vehicle without the proper amount of clearance can cause damage to the brakes, suspension, or other vehicle parts. The area damaged by the tire chains could cause loss of control and a crash.

Use another type of traction device only if its manufacturer recommends it for the vehicle's tire size combination and road conditions. Follow that manufacturer's instructions. To avoid vehicle damage, drive slow and readjust or remove the traction device if it contacts the vehicle. Do not spin the wheels. If traction devices are used, install them on the front tires.

If a Tire Goes Flat

It is unusual for a tire to blow out while driving, especially if the tires are maintained properly. See *Tires on page 10-37*. If air goes out of a tire, it is much more likely to leak out slowly. But if there ever is a blowout, here are a few tips about what to expect and what to do:

If a front tire fails, the flat tire creates a drag that pulls the vehicle toward that side. Take your foot off the accelerator pedal and grip the steering wheel firmly. Steer to maintain lane position, and then gently brake to a stop, well off the road, if possible.

A rear blowout, particularly on a curve, acts much like a skid and may require the same correction as used in a skid. Stop pressing the accelerator pedal and steer to straighten the vehicle. It may be very bumpy and noisy. Gently brake to a stop, well off the road, if possible.

Information Provided by: DEALER E-PROCESS

Downloaded from www.Manualslib.com manuals search engine

⚠ Warning

Driving on a flat tire will cause permanent damage to the tire. Re-inflating a tire after it has been driven on while severely underinflated or flat may cause a blowout and a serious crash. Never attempt to re-inflate a tire that has been driven on while severely underinflated or flat. Have your dealer or an authorized tire service center repair or replace the flat tire as soon as possible.

⚠ Warning

Lifting a vehicle and getting under it to do maintenance or repairs is dangerous without the appropriate safety equipment and training. If a jack is provided with the vehicle, it is designed only for changing a flat tire. If it is used for anything else, you or others could be badly injured or killed if the vehicle slips off the jack. If a jack is provided with the vehicle, only use it for changing a flat tire.

If a tire goes flat, avoid further tire and wheel damage by driving slowly to a level place, well off the road, if possible. Turn on the hazard warning flashers. See *Hazard Warning Flashers on page 6-3*.

⚠ Warning

Changing a tire can be dangerous. The vehicle can slip off the jack and roll over or fall causing injury or death. Find a level place to change the tire. To help prevent the vehicle from moving:

1. Set the parking brake firmly.
2. Put an automatic transmission in P (Park) or a manual transmission in 1 (First) or R (Reverse).
3. Turn off the engine and do not restart while the vehicle is raised.
4. Do not allow passengers to remain in the vehicle.
5. Place wheel blocks on both sides of the tire at the opposite corner of the tire being changed.

Information Provided by: DEALER E-PROCESS

Downloaded from www.Manualslib.com manuals search engine

When the vehicle has a flat tire (2), use the following example as a guide to assist in the placement of the wheel blocks (1).

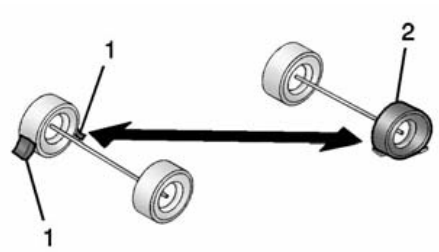

1. Wheel Block
2. Flat Tire

The following information explains how to repair or change a tire.

Tire Changing

Removing the Spare Tire and Tools

To access the spare tire:

1. Open the liftgate.

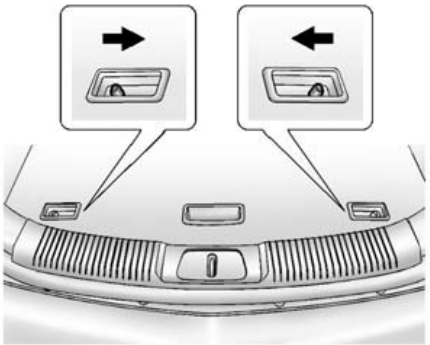

2. Push the levers on the load floor.
3. Lift the load floor and hang the hook to the tailgate opening.

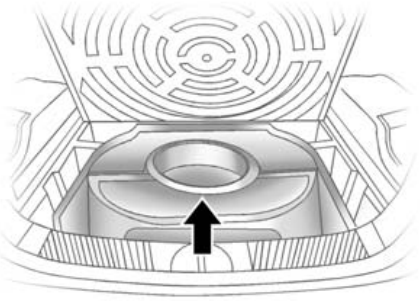

4. Remove the tire protector foam.

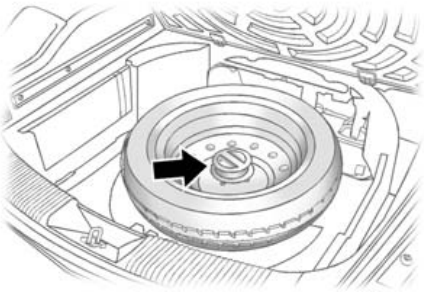

Information Provided by:
DEALER E-PROCESS

Downloaded from www.Manualslib.com manuals search engine

5. Remove the wheel retainer bolt holding down the spare tire by turning it counterclockwise.
6. Remove the compact spare tire. See *Compact Spare Tire on page 10-65* for more information.

The tools are located between the compact spare tire and the liftgate. To access the tools:

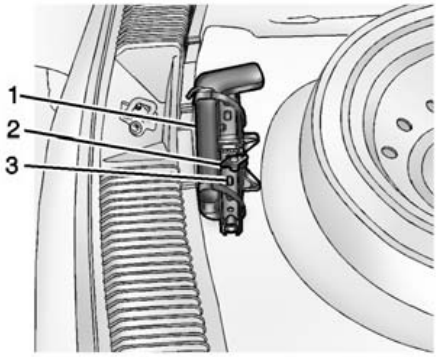

1. Tool Bag
2. Wing-bolt
3. Jack

1. Remove the wing-bolt (2) from the jack.
2. Remove the jack (3) and tool bag (1).
3. Remove the straps holding the bag containing the wheel wrench and extension jack handle, if the vehicle has one.

   Remove the wheel wrench and extension jack handle, if the vehicle has one, from the bag.

Removing the Flat Tire and Installing the Spare Tire

1. Do a safety check before proceeding. See *If a Tire Goes Flat on page 10-57* for more information.

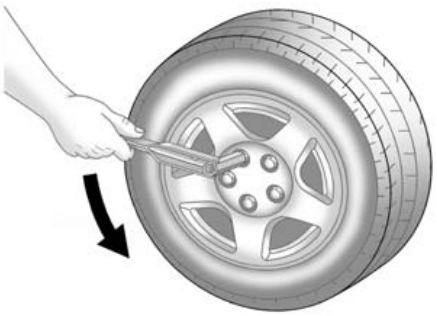

2. Use the wheel wrench to loosen all the wheel nuts. Do not remove them yet.

Information Provided by: DEALER E-PROCESS

Downloaded from www.Manualslib.com manuals search engine

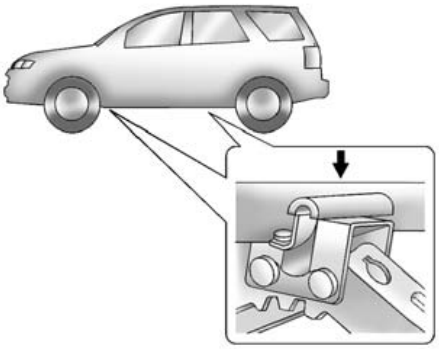

3. Position the lift head at the jack location nearest the flat tire. Make sure all of the jack lift head is touching the jacking flange under the body. Do not place the jack under a body panel. The lower body panel has an arrow to aid in locating the jacking location.

⚠ Warning

Getting under a vehicle when it is lifted on a jack is dangerous. If the vehicle slips off the jack, you could be badly injured or killed. Never get under a vehicle when it is supported only by a jack.

⚠ Warning

Raising the vehicle with the jack improperly positioned can damage the vehicle and even make the vehicle fall. To help avoid personal injury and vehicle damage, be sure to fit the jack lift head into the proper location before raising the vehicle.

⚠ Warning

Lifting a vehicle and getting under it to do maintenance or repairs is dangerous without the appropriate safety equipment and training. If a jack is provided with the vehicle, it is designed only for changing a flat tire. If it is used for anything else, you or others could be badly injured or killed if the vehicle slips off the jack. If a jack is provided with the vehicle, only use it for changing a flat tire.

⚠ Caution

Make sure that the jack lift head is in the correct position or you may damage your vehicle. The repairs would not be covered by your warranty.

Information Provided by: DEALER E-PROCESS

Downloaded from www.Manualslib.com manuals search engine

4. If you have a coin/pierce jack, attach the jack handle extension to the jack by sliding the hook through the end of the jack and insert the other end of the jack handle into the wrench.

   If you have a hex-head jack, attach the jack lift-assist tool by placing the hex of the jack lift-assist tool over the hex head of the jack.

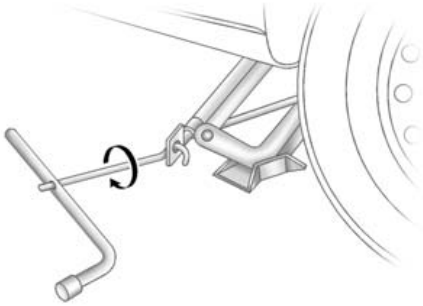

Coin/Pierce Jack and Wrench

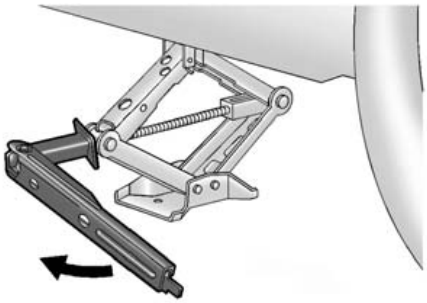

Hex Head Jack and Wrench

5. Raise the vehicle by turning the jack handle clockwise. Raise the vehicle far enough off the ground so there is enough room for the road tire to be removed.
6. Remove all of the wheel nuts.
7. Remove the flat tire.
8. Remove any rust or dirt from the wheel bolts, mounting surfaces and spare wheel.

⚠ Warning

Rust or dirt on a wheel, or on the parts to which it is fastened, can make wheel nuts become loose after time. The wheel could come off and cause an accident. When changing a wheel, remove any rust or dirt from places where the wheel attaches to the vehicle. In an emergency, a cloth or a paper towel can be used; however, use a scraper or wire brush later to remove all rust or dirt.

9. Place the compact spare tire on the wheel-mounting surface.
10. Reinstall the wheel nuts. Tighten each nut by hand until the wheel is held against the hub.

Information Provided by: DEALER E-PROCESS

Downloaded from www.Manualslib.com manuals search engine

⚠ Warning

Never use oil or grease on bolts or nuts because the nuts might come loose. The vehicle's wheel could fall off, causing a crash.

11. Lower the vehicle by turning the jack handle counterclockwise.

12. Tighten the wheel nuts firmly in a crisscross sequence, as shown.

⚠ Warning

Wheel nuts that are improperly or incorrectly tightened can cause the wheels to become loose or come off. The wheel nuts should be tightened with a torque wrench to the proper torque specification after replacing. Follow the torque specification supplied by the aftermarket manufacturer when using accessory locking wheel nuts. See *Capacities and Specifications on page 12-2* for original equipment wheel nut torque specifications.

⚠ Caution

Improperly tightened wheel nuts can lead to brake pulsation and rotor damage. To avoid expensive brake repairs, evenly tighten the wheel nuts in the proper

(Continued)

Caution (Continued)

sequence and to the proper torque specification. See Capacities and Specifications for the wheel nut torque specification.

13. Lower the jack all the way and remove the jack from under the vehicle.
14. Tighten the bolts firmly with the wheel wrench.

When reinstalling full plastic covers or center caps, tighten all the plastic caps hand snug, then tighten with the wheel wrench an additional one-quarter of a turn.

⚠ Caution

Wheel covers will not fit on the vehicle's compact spare. If you try to put a wheel cover on the compact spare, the cover or the spare could be damaged.

Information Provided by: DEALER E-PROCESS

Downloaded from www.Manualslib.com manuals search engine

Storing a Flat or Spare Tire and Tools

⚠ Warning

Storing a jack, a tire, or other equipment in the passenger compartment of the vehicle could cause injury. In a sudden stop or collision, loose equipment could strike someone. Store all these in the proper place.

To store the flat or spare tire and tools:

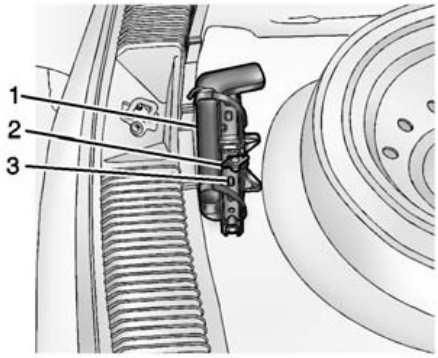

1. Tool Bag
2. Wing-bolt
3. Jack

1. Place the wheel wrench and extension, if the vehicle has one, into the tool bag (1) and use the straps to secure the tool bag (1) to the fully collapsed jack (3).
2. Install the jack (3) between the back of the trunk and the compact spare tire and secure with the wing bolt (2).
3. Reverse Steps 1–3 under “Removing the Spare Tire and Tools” to replace the floor and lock in place.
4. Place the flat, or damaged tire, face down, on the bottom of the spare tire compartment.

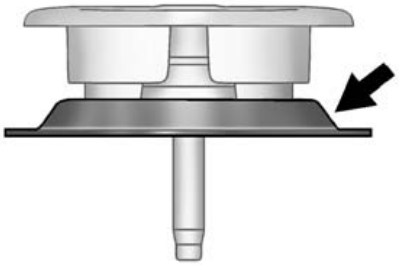

Before

Downloaded from www.Manualslib.com manuals search engine

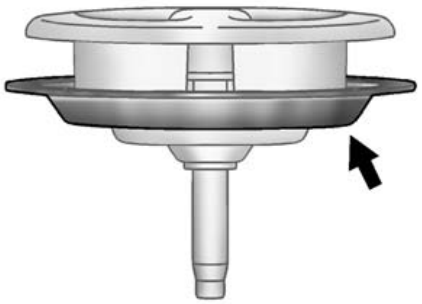

After

5. Remove the disk from the retainer bolt. Turn the disk over and place it back on the retainer bolt.

   Return the disk back to its original position after removing the flat tire from the spare tire compartment and before storing the spare tire.

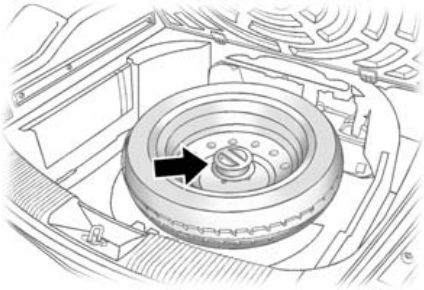

6. Place the wheel retainer bolt onto the wheel stow rod and tighten by turning it clockwise.

The compact spare is for temporary use only. Replace the compact spare tire with a full-size tire as soon as possible.

Compact Spare Tire

⚠ Warning

Driving with more than one compact spare tire at a time could result in loss of braking and handling. This could lead to a crash and you or others could be injured. Use only one compact spare tire at a time.

If this vehicle has a compact spare tire, it was fully inflated when new; however, it can lose air over time. Check the inflation pressure regularly. It should be 420 kPa (60 psi).

Stop as soon as possible and check that the spare tire is correctly inflated after being installed on the vehicle. The compact spare tire is designed for temporary use only. The vehicle will perform differently with the spare tire installed and it is recommended that the vehicle speed be limited to 80 km/h

Information Provided by: DEALER E-PROCESS

Downloaded from www.Manualslib.com manuals search engine

(50 mph). To conserve the tread of the spare tire, have the standard tire repaired or replaced as soon as convenient and return the spare tire to the storage area.

When using a compact spare tire, the ABS and Traction Control systems may engage until the spare tire is recognized by the vehicle, especially on slippery roads. Adjust driving to reduce possible wheel slip.

⚠ Caution

When the compact spare is installed, do not take the vehicle through an automatic car wash with guide rails. The compact spare can get caught on the rails which can damage the tire, wheel, and other parts of the vehicle.

Do not use the compact spare on other vehicles.

Do not mix the compact spare tire or wheel with other wheels or tires. They will not fit. Keep the spare tire and its wheel together.

⚠ Caution

Tire chains will not fit the compact spare. Using them can damage the vehicle and the chains. Do not use tire chains on the compact spare.

Jump Starting

For more information about the vehicle battery, see *Battery on page 10-23*.

If the vehicle battery has run down, you may want to use another vehicle and some jumper cables to start your vehicle. Be sure to use the following steps to do it safely.

⚠ Warning

Batteries can hurt you. They can be dangerous because:

- They contain acid that can burn you.
- They contain gas that can explode or ignite.
- They contain enough electricity to burn you.

If you do not follow these steps exactly, some or all of these things can hurt you.

Information Provided by: DEALER E-PROCESS

Downloaded from www.Manualslib.com manuals search engine

⚠ Caution

Ignoring these steps could result in costly damage to the vehicle that would not be covered by the vehicle warranty. Trying to start the vehicle by pushing or pulling it will not work, and it could damage the vehicle.

1. Check the other vehicle. It must have a 12-volt battery with a negative ground system.

⚠ Caution

If the other vehicle does not have a 12-volt system with a negative ground, both vehicles can be damaged. Only use a vehicle that has a 12-volt system with a negative ground for jump starting.

2. Get the vehicles close enough so the jumper cables can reach, but be sure the vehicles are not touching each other. If they are, it could cause a ground connection you do not want. You would not be able to start your vehicle, and the bad grounding could damage the electrical systems.

   To avoid the possibility of the vehicles rolling, set the parking brake firmly on both vehicles involved in the jump start procedure. Put the transmission in P (Park) before setting the parking brake.

⚠ Caution

If any accessories are left on or plugged in during the jump starting procedure, they could be damaged. The repairs would not be covered by the vehicle

(Continued)

Caution (Continued)

warranty. Whenever possible, turn off or unplug all accessories on either vehicle when jump starting.

3. Turn off the ignition on both vehicles. Unplug unnecessary accessories plugged into the cigarette lighter or the accessory power outlet. Turn off the radio and all lamps that are not needed. This will avoid sparks, helping save both batteries and the radio.

Information Provided by: DEALER E-PROCESS

Downloaded from www.Manualslib.com manuals search engine

4. Open the hood on the other vehicle and locate the positive (+) and negative (−) terminal locations on that vehicle.

   Open the hood on your vehicle and find the remote positive (+) and remote negative (−) jump starting terminals.

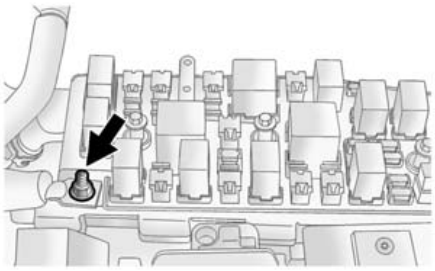

Your vehicle is equipped with a remote positive (+) terminal. This is located in the engine compartment on the driver side of the vehicle, on the underhood fuse block. See *Engine Compartment Overview on page 10-4* for more information on location.

To uncover the remote positive (+) terminal, press the tab on the bottom of the fuse block and lift the cover up.

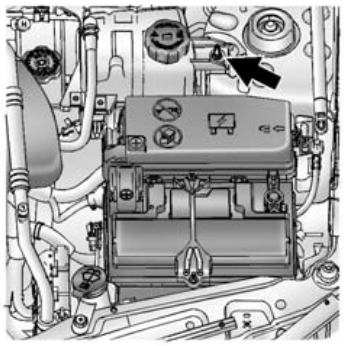

Your vehicle is equipped with a remote negative (−) terminal. This is a stud next to the engine coolant surge tank, located at the back of the engine compartment on the driver side of the vehicle. See *Engine Compartment Overview on page 10-4* for more information on location.

⚠ Warning

An electric fan can start up even when the engine is not running and can injure you. Keep hands, clothing and tools away from any underhood electric fan.

Information Provided by: DEALER E-PROCESS

Downloaded from www.Manualslib.com manuals search engine

⚠ Warning

Using an open flame near a battery can cause battery gas to explode. People have been hurt doing this, and some have been blinded. Use a flashlight if you need more light.

Be sure the battery has enough water. You do not need to add water to the battery installed in your new vehicle. But if a battery has filler caps, be sure the right amount of fluid is there. If it is low, add water to take care of that first. If you do not, explosive gas could be present.

Battery fluid contains acid that can burn you. Do not get it on you. If you accidentally get it in your eyes or on your skin, flush the place with water and get medical help immediately.

⚠ Warning

Fans or other moving engine parts can injure you badly. Keep your hands away from moving parts once the engine is running.

5. Check that the jumper cables do not have loose or missing insulation. If they do, you could get a shock. The vehicles could also be damaged.

   Before you connect the cables, here are some basic things you should know. Positive (+) will go to positive (+) or to a remote positive (+) terminal if the vehicle has one. Negative (−) will go to a heavy, unpainted metal engine part or to a remote negative (−) terminal if the vehicle has one.

   Do not connect positive (+) to negative (−) or you will get a short that would damage the battery and maybe other parts. Do not connect the negative (−) cable to the negative (−) terminal on the dead battery because this can cause sparks.

6. Connect the red positive (+) cable to the positive (+) terminal on the vehicle with the dead battery. Use a remote positive (+) terminal if the vehicle has one.

7. Do not let the other end touch metal. Connect it to the positive (+) terminal of the good battery. Use a remote positive (+) terminal if the vehicle has one.

8. Now connect the black negative (−) cable to the negative (−) terminal of the good battery. Use a remote negative (−) terminal if the vehicle has one.

   Do not let the other end touch anything until the next step. The other end of the negative (−) cable does not go to the dead battery. It goes to a heavy, unpainted metal engine part or

Information Provided by: DEALER E-PROCESS

Downloaded from www.Manualslib.com manuals search engine

to a remote negative (−) terminal on the vehicle with the dead battery.

9. Connect the other end of the negative (−) cable away from the dead battery, but not near engine parts that move. The electrical connection is just as good there, and the chance of sparks getting back to the battery is much less.
10. Now start the vehicle with the good battery and run the engine for a while.
11. Press the unlock symbol on the remote keyless entry transmitter to disarm your security system, if equipped.
12. Try to start the vehicle that had the dead battery. If it will not start after a few tries, it probably needs service.

⚠ Caution

If the jumper cables are connected or removed in the wrong order, electrical shorting may occur and damage the vehicle. The repairs would not be covered by the vehicle warranty. Always connect and remove the jumper cables in the correct order, making sure that the cables do not touch each other or other metal.

Jumper Cable Removal

Reverse the sequence exactly when removing the jumper cables.

Towing the Vehicle

⚠ Caution

Incorrectly towing a disabled vehicle may cause damage. The damage would not be covered by the vehicle warranty. Do not lash or hook to the chassis components — including the front and rear subframes, suspension control arms, and links — during towing and recovery of a disabled vehicle, or when securing the vehicle. Use the proper nylon strap harnesses around the tires to secure the vehicle.

Have the vehicle towed on a flatbed car carrier. A wheel lift tow truck could damage the vehicle.

Consult your dealer or a professional towing service if the disabled vehicle must be towed.

Information Provided by: DEALER E-PROCESS

Downloaded from www.Manualslib.com manuals search engine

To tow the vehicle behind another vehicle for recreational purposes, such as behind a motor home, see “Recreational Vehicle Towing” following.

Recreational Vehicle Towing

Recreational vehicle towing means towing the vehicle behind another vehicle, such as behind a motor home. The two most common types of recreational vehicle towing are known as dinghy towing and dolly towing. Dinghy towing is towing the vehicle with all four wheels on the ground. Dolly towing is towing the vehicle with two wheels on the ground and two wheels up on a device known as a dolly.

Here are some important things to consider before recreational vehicle towing:

- What is the towing capacity of the towing vehicle? Be sure to read the tow vehicle manufacturer's recommendations.
- What is the distance that will be traveled? Some vehicles have restrictions on how far and how long they can tow.
- Is the proper towing equipment going to be used? See your dealer or trailering professional for additional advice and equipment recommendations.
- Is the vehicle ready to be towed? Just as preparing the vehicle for a long trip, make sure the vehicle is prepared to be towed.

Dinghy Towing

Front-wheel-drive and all-wheel-drive vehicles may be dinghy towed from the front. These vehicles can also be towed by placing them on a platform trailer with all four wheels off of the ground. For other towing options, see “Dolly Towing” following in this section.

For vehicles being dinghy towed, the vehicle should be run at the beginning of each day and at each RV fuel stop for about five minutes. This will ensure proper lubrication of transmission components.

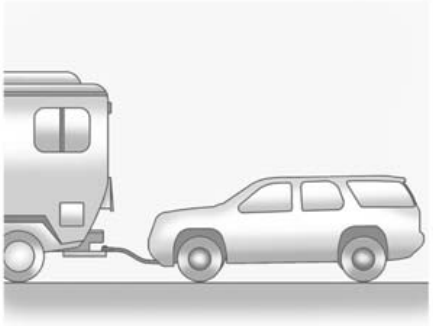

Information Provided by: DEALER E-PROCESS

Downloaded from www.Manualslib.com manuals search engine

To tow the vehicle from the front with all four wheels on the ground:

1. Position the vehicle that will be towed and secure it to the towing vehicle.
2. Turn the ignition key to ACC/ ACCESSORY.
3. Shift the transmission to N (Neutral).
4. Turn fog lamps and all accessories off.
5. To prevent the battery from draining while the vehicle is being towed, remove the 2 amp PWR/MODING fuse from the instrument panel fuse block and store it in a safe location. See *Instrument Panel Fuse Block on page 10-34*.

⚠ Caution

If the vehicle is towed without performing each of the steps listed under “Dinghy Towing,” the

(Continued)

Caution (Continued)

automatic transmission could be damaged. Be sure to follow all steps of the dinghy towing procedure prior to and after towing the vehicle.

⚠ Caution

If 105 km/h (65 mph) is exceeded while towing the vehicle, it could be damaged. Never exceed 105 km/h (65 mph) while towing the vehicle.

Once the destination has been reached:

1. Set the parking brake.
2. Shift the transmission to P (Park).
3. Reinstall the 2 amp PWR/ MODING fuse to the instrument panel fuse block.
4. Turn the ignition key to LOCK/ OFF and remove the key from the ignition.

⚠ Caution

Do not tow a vehicle with the front drive wheels on the ground if one of the front tires is a compact spare tire. Towing with two different tire sizes on the front of the vehicle can cause severe damage to the transmission.

Dolly Towing (All-Wheel-Drive Vehicles)

All-wheel-drive vehicles should not be towed with two wheels on the ground. To properly tow these vehicles, they should be placed on a platform trailer with all four wheels off of the ground or dinghy towed from the front. See “Dinghy Towing” earlier in this section.

Information Provided by: DEALER E-PROCESS

Downloaded from www.Manualslib.com manuals search engine

Dolly Towing (Front-Wheel-Drive Vehicles)

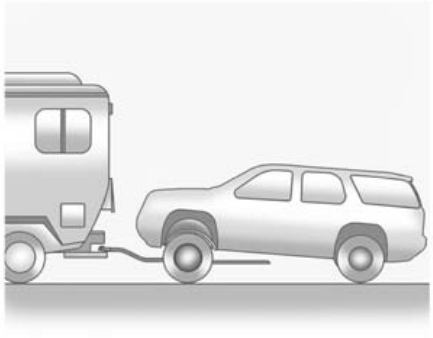

To tow the vehicle from the front with the rear wheels on the ground:

1. Put the front wheels on a dolly.
2. Move the shift lever to P (Park).
3. Set the parking brake.
4. Clamp the steering wheel in a straight-ahead position with a clamping device designed for towing.
5. Remove the key from the ignition.
6. Secure the vehicle to the dolly.
7. Release the parking brake.

Towing the Vehicle from the Rear

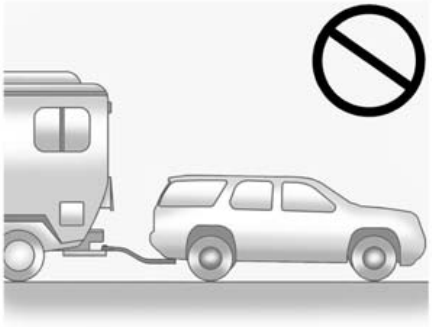

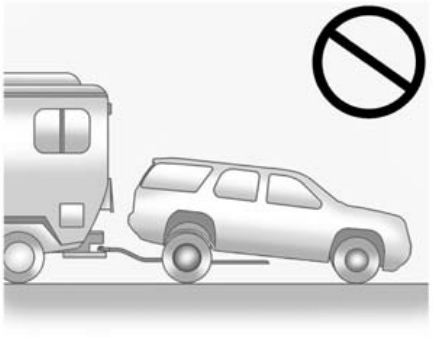

⚠ Caution

Towing the vehicle from the rear could damage it. Also, repairs would not be covered by the vehicle warranty. Never have the vehicle towed from the rear.

Information Provided by: DEALER E-PROCESS

Downloaded from www.Manualslib.com manuals search engine

Appearance Care

Exterior Care

Locks

Locks are lubricated at the factory. Use a de-icing agent only when absolutely necessary, and have the locks greased after using. See *Recommended Fluids and Lubricants on page 11-12*.

Washing the Vehicle

To preserve the vehicle's finish, wash it often and out of direct sunlight.

⚠ Caution

Do not use petroleum-based, acidic, or abrasive cleaning agents as they can damage the vehicle's paint, metal, or plastic parts. If damage occurs, it would not be covered by the vehicle warranty. Approved cleaning

(Continued)

Caution (Continued)

products can be obtained from your dealer. Follow all manufacturer directions regarding correct product usage, necessary safety precautions, and appropriate disposal of any vehicle care product.

⚠ Caution

Avoid using high-pressure washes closer than 30 cm (12 in) to the surface of the vehicle. Use of power washers exceeding 8,274 kPa (1,200 psi) can result in damage or removal of paint and decals.

The symbol is on any underhood compartment electrical center that should not be power washed. This could cause damage that would not be covered by the vehicle warranty.

If using an automatic car wash, follow the car wash instructions. The windshield wiper and rear window wiper, if equipped, must be off. Remove any accessories that may be damaged or interfere with the car wash equipment.

Rinse the vehicle well, before washing and after, to remove all cleaning agents completely. If they are allowed to dry on the surface, they could stain.

Dry the finish with a soft, clean chamois or an all-cotton towel to avoid surface scratches and water spotting.

Finish Care

Application of aftermarket clearcoat sealant/wax materials is not recommended. If painted surfaces are damaged, see your dealer to have the damage assessed and repaired. Foreign materials such as

Information Provided by: DEALER E-PROCESS

Downloaded from www.Manualslib.com manuals search engine

calcium chloride and other salts, ice melting agents, road oil and tar, tree sap, bird droppings, chemicals from industrial chimneys, etc., can damage the vehicle's finish if they remain on painted surfaces. Wash the vehicle as soon as possible. If necessary, use non-abrasive cleaners that are marked safe for painted surfaces to remove foreign matter.

Occasional hand waxing or mild polishing should be done to remove residue from the paint finish. See your dealer for approved cleaning products.

Do not apply waxes or polishes to uncoated plastic, vinyl, rubber, decals, simulated wood, or flat paint as damage can occur.

⚠ Caution

Machine compounding or aggressive polishing on a basecoat/clearcoat paint finish

(Continued)

Caution (Continued)

may damage it. Use only non-abrasive waxes and polishes that are made for a basecoat/clearcoat paint finish on the vehicle.

To keep the paint finish looking new, keep the vehicle garaged or covered whenever possible.

Protecting Exterior Bright Metal Moldings

⚠ Caution

Failure to clean and protect the bright metal moldings can result in a hazy white finish or pitting. This damage would not be covered by the vehicle warranty.

The bright metal moldings on the vehicle are aluminum. To prevent damage always follow these cleaning instructions:

- Be sure the molding is cool to the touch before applying any cleaning solution.
- Use a cleaning solution approved for aluminum. Some cleaners are highly acidic or contain alkaline substances and can damage the moldings.
- Always dilute a concentrated cleaner according to the manufacturer’s instructions.
- Do not use chrome cleaners.
- Do not use cleaners that are not intended for automotive use.
- Use a nonabrasive wax on the vehicle after washing to protect and extend the molding finish.

Information Provided by: DEALER E-PROCESS

Downloaded from www.Manualslib.com manuals search engine

Cleaning Exterior Lamps/ Lenses, Emblems, Decals and Stripes

Use only lukewarm or cold water, a soft cloth, and a car washing soap to clean exterior lamps, lenses and emblems. Follow instructions under "Washing the Vehicle" previously in this section.

Lamp covers are made of plastic, and some have a UV protective coating.

Use only lukewarm water, a soft cloth, and mild car washing soap to clean exterior lamps and lenses. Do not clean or wipe them while they are dry.

Do not use any of the following on lamp covers:

- Abrasive or caustic agents.
- Washer fluids and other cleaning agents in higher concentrations than suggested by the manufacturer.
- Solvents, alcohols, fuels, or other harsh cleaners.
- Ice scrapers or other hard items.
- Aftermarket appearance caps or covers while the lamps are illuminated, due to excessive heat generated.

⚠ Caution

Failure to clean lamps properly can cause damage to the lamp cover that would not be covered by the vehicle warranty.

⚠ Caution

Using wax on low gloss black finish stripes can increase the gloss level and create a non-uniform finish. Clean low gloss stripes with soap and water only.

Air Intakes

Clear debris from the air intakes, between the hood and windshield when washing the vehicle.

Windshield and Wiper Blades

Clean the outside of the windshield with glass cleaner.

Clean rubber blades using a lint-free cloth or paper towel soaked with windshield washer fluid or a mild detergent. Wash the windshield thoroughly when cleaning the blades. Bugs, road grime, sap, and a buildup of vehicle wash/wax treatments may cause wiper streaking.

Replace the wiper blades if they are worn or damaged. Damage can be caused by extreme dusty conditions, sand, salt, heat, sun, snow, and ice.

Weatherstrips

Apply Dielectric silicone grease on weatherstrips to make them last longer, seal better, and not stick or

Information Provided by: DEALER E-PROCESS

Downloaded from www.Manualslib.com manuals search engine

squeak. Lubricate weatherstrips at least once a year. Hot, dry climates may require more frequent application. Black marks from rubber material on painted surfaces can be removed by rubbing with a clean cloth. See *Recommended Fluids and Lubricants on page 11-12*.

Tires

Use a stiff brush with tire cleaner to clean the tires.

⚠ Caution

Using petroleum-based tire dressing products on the vehicle may damage the paint finish and/or tires. When applying a tire dressing, always wipe off any overspray from all painted surfaces on the vehicle.

Wheels and Trim — Aluminum or Chrome

Use a soft, clean cloth with mild soap and water to clean the wheels. After rinsing thoroughly with clean water, dry with a soft, clean towel. A wax may then be applied.

⚠ Caution

Chrome wheels and other chrome trim may be damaged if the vehicle is not washed after driving on roads that have been sprayed with magnesium, calcium, or sodium chloride. These chlorides are used on roads for conditions such as ice and dust. Always wash the chrome with soap and water after exposure.

⚠ Caution

To avoid surface damage, do not use strong soaps, chemicals, abrasive polishes, cleaners, brushes, or cleaners that contain acid on aluminum or chrome-plated wheels. Use only approved cleaners. Also, never drive a vehicle with aluminum or chrome-plated wheels through an automatic car wash that uses silicone carbide tire cleaning brushes. Damage could occur and the repairs would not be covered by the vehicle warranty.

Steering, Suspension, and Chassis Components

Visually inspect steering, suspension, and chassis components for damaged, loose or missing parts or signs of wear at least once a year. Inspect the power steering for proper hook-up, binding, leaks, cracks, chafing, etc. Visually

Information Provided by: DEALER E-PROCESS

Downloaded from www.Manualslib.com manuals search engine

check constant velocity joints, rubber boots, and axle seals for leaks.

Body Component Lubrication

Lubricate all key lock cylinders, hood hinges, liftgate hinges, and the fuel door hinge unless the components are plastic. Applying silicone grease on weatherstrips with a clean cloth will make them last longer, seal better, and not stick or squeak.

Underbody Maintenance

At least twice a year, Spring and Fall, use plain water to flush dirt and debris from the vehicle's underbody. Your dealer or an underbody car washing system can do this. If not removed, rust and corrosion can develop.

Sheet Metal Damage

If the vehicle is damaged and requires sheet metal repair or replacement, make sure the body repair shop applies anti-corrosion material to parts repaired or replaced to restore corrosion protection.

Original manufacturer replacement parts will provide the corrosion protection while maintaining the vehicle warranty.

Finish Damage

Quickly repair minor chips and scratches with touch-up materials available from your dealer to avoid corrosion. Larger areas of finish damage can be corrected in your dealer's body and paint shop.

Chemical Paint Spotting

Airborne pollutants can fall upon and attack painted vehicle surfaces causing blotchy, ring-shaped discolorations, and small, irregular dark spots etched into the paint surface. See “Finish Care” previously in this section.

Interior Care

To prevent dirt particle abrasions, regularly clean the vehicle's interior. Immediately remove any soils. Note that newspapers or dark garments that can transfer color to home furnishings can also permanently transfer color to the vehicle's interior.

Use a soft bristle brush to remove dust from knobs and crevices on the instrument cluster. Using a mild soap solution, immediately remove hand lotions, sunscreen, and insect repellent from all interior surfaces or permanent damage may result.

Your dealer may have products for cleaning the interior. Use cleaners specifically designed for the surfaces being cleaned to prevent permanent damage. Apply all cleaners directly to the cleaning cloth. Do not spray cleaners directly on any switches or controls. Cleaners should be removed quickly. Never allow cleaners to

Information Provided by: DEALER E-PROCESS

Downloaded from www.Manualslib.com manuals search engine

remain on the surface being cleaned for extended periods of time.

Cleaners may contain solvents that can become concentrated in the interior. Before using cleaners, read and adhere to all safety instructions on the label. While cleaning the interior, maintain adequate ventilation by opening the doors and windows.

To prevent damage, do not clean the interior using the following cleaners or techniques:

- Never use a razor or any other sharp object to remove a soil from any interior surface.
- Never use a brush with stiff bristles.
- Never rub any surface aggressively or with excessive pressure.
- Do not use laundry detergents or dishwashing soaps with degreasers. For liquid cleaners, use approximately 20 drops per 3.8 L (1 gal) of water. A concentrated soap solution will leave a residue that creates streaks and attracts dirt. Do not use solutions that contain strong or caustic soap.
- Do not heavily saturate the upholstery when cleaning.
- Do not use solvents or cleaners containing solvents.

Interior Glass

To clean, use a terry cloth fabric dampened with water. Wipe droplets left behind with a clean dry cloth. Commercial glass cleaners may be used, if necessary, after cleaning the interior glass with plain water.

⚠ Caution

To prevent scratching, never use abrasive cleaners on automotive glass. Abrasive cleaners or aggressive cleaning may damage the rear window defogger.

Cleaning the windshield with water during the first three to six months of ownership will reduce tendency to fog.

Speaker Covers

Vacuum around a speaker cover gently, so that the speaker will not be damaged. Clean spots with just water and mild soap.

Coated Moldings

Coated moldings should be cleaned.

- When lightly soiled, wipe with a sponge or soft lint-free cloth dampened with water.
- When heavily soiled, use warm soapy water.

Information Provided by: DEALER E-PROCESS

Downloaded from www.Manualslib.com manuals search engine

Fabric/Carpet/Suede

Start by vacuuming the surface using a soft brush attachment. If a rotating brush attachment is being used during vacuuming, only use it on the floor carpet. Before cleaning, gently remove as much of the soil as possible using one of the following techniques:

- Gently blot liquids with a paper towel. Continue blotting until no more soil can be removed.
- For solid soils, remove as much as possible prior to vacuuming.

To clean:

1. Saturate a clean lint-free colorfast cloth with water. Microfiber cloth is recommended to prevent lint transfer to the fabric or carpet.
2. Remove excess moisture by gently wringing until water does not drip from the cleaning cloth.
3. Start on the outside edge of the soil and gently rub toward the center. Fold the cleaning cloth to a clean area frequently to prevent forcing the soil in to the fabric.
4. Continue gently rubbing the soiled area until there is no longer any color transfer from the soil to the cleaning cloth.
5. If the soil is not completely removed, use a mild soap solution followed only by plain water.

If the soil is not completely removed, it may be necessary to use a commercial upholstery cleaner or spot lifter. Test a small hidden area for colorfastness before using a commercial upholstery cleaner or spot lifter. If ring formation occurs, clean the entire fabric or carpet.

Following the cleaning process, a paper towel can be used to blot excess moisture.

Cleaning High Gloss Surfaces and Vehicle Information and Radio Displays

For vehicles with high gloss surfaces or vehicle displays, use a microfiber cloth to wipe surfaces. Before wiping the surface with the microfiber cloth, use a soft bristle brush to remove dirt that could scratch the surface. Then use the microfiber cloth by gently rubbing to clean. Never use window cleaners or solvents. Periodically hand wash the microfiber cloth separately, using mild soap. Do not use bleach or fabric softener. Rinse thoroughly and air dry before next use.

⚠ Caution

Do not attach a device with a suction cup to the display. This may cause damage and would not be covered by the warranty.

Information Provided by: DEALER E-PROCESS

Downloaded from www.Manualslib.com manuals search engine

Instrument Panel, Leather, Vinyl, Other Plastic Surfaces, Low Gloss Paint Surfaces and Natural Open Pore Wood Surfaces

Use a soft microfiber cloth dampened with water to remove dust and loose dirt. For a more thorough cleaning, use a soft microfiber cloth dampened with a mild soap solution.

⚠ Caution

Soaking or saturating leather, especially perforated leather, as well as other interior surfaces, may cause permanent damage. Wipe excess moisture from these surfaces after cleaning and allow them to dry naturally. Never use heat, steam, spot lifters, or spot removers. Do not use cleaners that contain silicone or wax-based products. Cleaners containing

(Continued)

Caution (Continued)

these solvents can permanently change the appearance and feel of leather or soft trim and are not recommended.

Do not use cleaners that increase gloss, especially on the instrument panel. Reflected glare can decrease visibility through the windshield under certain conditions.

⚠ Caution

Use of air fresheners may cause permanent damage to plastics and painted surfaces. If an air freshener comes in contact with any plastic or painted surface in the vehicle, blot immediately and clean with a soft cloth dampened with a mild soap solution. Damage caused by air fresheners would not be covered by the vehicle warranty.

Cargo Cover and Convenience Net

Wash with warm water and mild detergent. Do not use chlorine bleach. Rinse with cold water, and then dry completely.

Care of Safety Belts

Keep belts clean and dry.

⚠ Warning

Do not bleach or dye safety belts. It may severely weaken them. In a crash, they might not be able to provide adequate protection. Clean safety belts only with mild soap and lukewarm water.

Information Provided by: DEALER E-PROCESS

Downloaded from www.Manualslib.com manuals search engine

Floor Mats

⚠ Warning

If a floor mat is the wrong size or is not properly installed, it can interfere with the pedals. Interference with the pedals can cause unintended acceleration and/or increased stopping distance which can cause a crash and injury. Make sure the floor mat does not interfere with the pedals.

Use the following guidelines for proper floor mat usage.

- The original equipment floor mats were designed for your vehicle. If the floor mats need replacing, it is recommended that GM certified floor mats be purchased. Non-GM floor mats may not fit properly and may interfere with the accelerator or brake pedal. Always check that the floor mats do not interfere with the pedals.
- Use the floor mat with the correct side up. Do not turn it over.
- Do not place anything on top of the driver side floor mat.
- Use only a single floor mat on the driver side.
- Do not place one floor mat on top of another.

The driver side floor mat is held in place by two hook-type retainers.

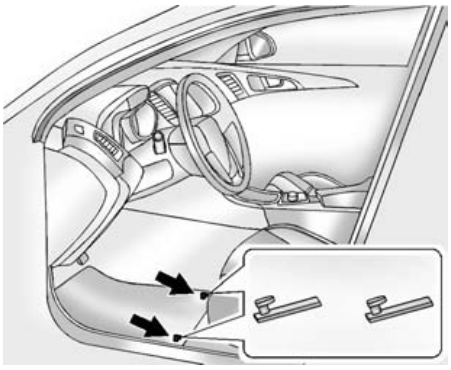

Removing and Replacing the Floor Mats

1. Pull up on the rear of the mat to remove it from the hooks.
2. Reinstall by lining up the floor mat retainer openings over the carpet retainers and hook into position.
3. Make sure the floor mat is properly secured and verify that it does not interfere with the pedals.

Information Provided by: DEALER E-PROCESS

Downloaded from www.Manualslib.com manuals search engine

Service and Maintenance

General Information
General Information 11-1

Maintenance Schedule
Maintenance Schedule 11-2

Special Application Services
Special Application Services 11-8

Additional Maintenance and Care
Additional Maintenance and Care 11-9

Recommended Fluids
Recommended Fluids and Lubricants 11-12
Maintenance Replacement Parts 11-13

Maintenance Records
Maintenance Records 11-15

General Information

Your vehicle is an important investment. This section describes the required maintenance for the vehicle. Follow this schedule to help protect against major repair expenses resulting from neglect or inadequate maintenance. It may also help to maintain the value of the vehicle if it is sold. It is the responsibility of the owner to have all required maintenance performed.

Your dealer has trained technicians who can perform required maintenance using genuine replacement parts. They have up-to-date tools and equipment for fast and accurate diagnostics. Many dealers have extended evening and Saturday hours, courtesy transportation, and online scheduling to assist with service needs.

Your dealer recognizes the importance of providing competitively priced maintenance and repair services. With trained technicians, the dealer is the place for routine maintenance such as oil changes and tire rotations and additional maintenance items like tires, brakes, batteries, and wiper blades.

⚠ Caution

Damage caused by improper maintenance can lead to costly repairs and may not be covered by the vehicle warranty. Maintenance intervals, checks, inspections, recommended fluids, and lubricants are important to keep the vehicle in good working condition.

The Tire Rotation and Required Services are the responsibility of the vehicle owner. It is recommended to have your dealer perform these services every 12 000 km/7,500 mi. Proper vehicle maintenance helps to keep the vehicle in good working condition, improves fuel economy, and reduces vehicle emissions.

Information Provided by: DEALER E-PROCESS

Downloaded from www.Manualslib.com manuals search engine

Because of the way people use vehicles, maintenance needs vary. There may need to be more frequent checks and services. The Additional Required Services - Normal are for vehicles that:

- Carry passengers and cargo within recommended limits on the Tire and Loading Information label. See *Vehicle Load Limits on page 9-10*.
- Are driven on reasonable road surfaces within legal driving limits.
- Use the recommended fuel. See *Recommended Fuel on page 9-36*.

Refer to the information in the Maintenance Schedule Additional Required Services - Normal chart.

The Additional Required Services - Severe are for vehicles that are:

- Mainly driven in heavy city traffic in hot weather.
- Mainly driven in hilly or mountainous terrain.
- Frequently towing a trailer.
- Used for high speed or competitive driving.
- Used for taxi, police, or delivery service.

Refer to the information in the Maintenance Schedule Additional Required Services - Severe chart.

⚠ Warning

Performing maintenance work can be dangerous and can cause serious injury. Perform maintenance work only if the required information, proper tools, and equipment are available. If they are not, see your dealer to have a trained technician do the work. See *Doing Your Own Service Work on page 10-3*.

Maintenance Schedule

Owner Checks and Services

At Each Fuel Stop

- Check the engine oil level. See *Engine Oil on page 10-8*.

Once a Month

- Check the tire inflation pressures. See *Tire Pressure on page 10-44*.
- Inspect the tires for wear. See *Tire Inspection on page 10-50*.
- Check the windshield washer fluid level. See *Washer Fluid on page 10-20*.

Engine Oil Change

When the CHANGE ENGINE OIL SOON message displays, have the engine oil and filter changed within the next 1 000 km/600 mi. When the CHANGE ENGINE OIL NOW message displays, have the engine oil and filter changed as soon as

Information Provided by: DEALER E-PROCESS

Downloaded from www.Manualslib.com manuals search engine

possible. If driven under the best conditions, the engine oil life system might not indicate the need for vehicle service for more than a year. The engine oil and filter must be changed at least once a year and the oil life system must be reset. Your trained dealer technician can perform this work. If the engine oil life system is reset accidentally, service the vehicle within 5 000 km/ 3,000 mi since the last service. Reset the oil life system when the oil is changed. See *Engine Oil Life System on page 10-10*.

Tire Rotation and Required Services Every 12 000 km/ 7,500 mi

Rotate the tires, if recommended for the vehicle, and perform the following services. See *Tire Rotation on page 10-50*.

- Check engine oil level and oil life percentage. If needed, change engine oil and filter, and reset oil life system. See *Engine Oil on page 10-8* and *Engine Oil Life System on page 10-10*.
- Check engine coolant level. See *Engine Coolant on page 10-14*.
- Check windshield washer fluid level. See *Washer Fluid on page 10-20*.
- Visually inspect windshield wiper blades for wear, cracking, or contamination. See *Exterior Care on page 10-74*. Replace worn or damaged wiper blades. See *Wiper Blade Replacement on page 10-25*.
- Check tire inflation pressures. See *Tire Pressure on page 10-44*.
- Inspect tire wear. See *Tire Inspection on page 10-50*.
- Visually check for fluid leaks.
- Inspect engine air cleaner filter. See *Engine Air Cleaner/Filter on page 10-12*.
- Inspect brake system.
- Visually inspect steering, suspension, and chassis components for damaged, loose, or missing parts or signs of wear. See *Exterior Care on page 10-74*.
- Check restraint system components. See *Safety System Check on page 3-16*.
- Visually inspect fuel system for damage or leaks.
- Visually inspect exhaust system and nearby heat shields for loose or damaged parts.
- Lubricate body components. See *Exterior Care on page 10-74*.
- Check starter switch. See *Starter Switch Check on page 10-24*.
- Check automatic transmission shift lock control function. See *Automatic Transmission Shift Lock Control Function Check on page 10-24*.

Information Provided by: DEALER E-PROCESS

Downloaded from www.Manualslib.com manuals search engine

11-4 Service and Maintenance

- Check ignition transmission lock. See *Ignition Transmission Lock Check on page 10-25*.
- Check parking brake and automatic transmission park mechanism. See *Park Brake and P (Park) Mechanism Check on page 10-25*.
- Check accelerator pedal for damage, high effort, or binding. Replace if needed.
- Visually inspect gas strut for signs of wear, cracks, or other damage. Check the hold open ability of the strut. See your dealer if service is required.
- Inspect sunroof track and seal, if equipped. See *Sunroof on page 2-14*.

Information Provided by:
DEALER E-PROCESS

Downloaded from www.Manualslib.com manuals search engine

Maintenance Schedule Additional Required Services - Normal	12 000 km/7,500 mi	24 000 km/15,000 mi	36 000 km/22,500 mi	48 000 km/30,000 mi	60 000 km/37,500 mi	72 000 km/45,000 mi	84 000 km/52,500 mi	96 000 km/60,000 mi	108 000 km/67,500 mi	120 000 km/75,000 mi	132 000 km/82,500 mi	144 000 km/90,000 mi	156 000 km/97,500 mi	168 000 km/105,000 mi	180 000 km/112,500 mi	192 000 km/120,000 mi	204 000 km/127,500 mi	216 000 km/135,000 mi	228 000 km/142,500 mi	240 000 km/150,000 mi
Rotate tires and perform Required Services. Check engine oil level and oil life percentage. Change engine oil and filter, if needed.	✓	✓	✓	✓	✓	✓	✓	✓	✓	✓	✓	✓	✓	✓	✓	✓	✓	✓	✓	✓
Replace passenger compartment air filter. (1)			✓			✓			✓			✓			✓			✓		
Inspect evaporative control system. (2)						✓						✓						✓		
Replace engine air cleaner filter. (3)						✓						✓						✓		
Replace spark plugs. Inspect spark plug wires.													✓							
Change automatic transmission fluid. Change filter if serviceable.													✓							
Change transfer case fluid, if equipped with AWD. (4)													✓							
Drain and fill engine cooling system. (5)																				✓
Visually inspect accessory drive belts. (6)																				✓
Replace brake fluid. (7)																				✓

Information Provided by:
DEALER E-PROCESS

Downloaded from www.Manualslib.com manuals search engine

Footnotes — Maintenance Schedule Additional Required Services - Normal

(1) Or every two years, whichever comes first. More frequent replacement may be needed if the vehicle is driven in areas with heavy traffic, areas with poor air quality, or areas with high dust levels. Replacement may also be needed if there is a reduction in air flow, excessive window fogging, or odors.

(2) Check all fuel and vapor lines and hoses for proper hook-up, routing, and condition.

(3) Or every four years, whichever comes first.

(4) Do not directly power wash the transfer case output seals. High pressure water can overcome the seals and contaminate the transfer case fluid. Contaminated fluid will decrease the life of the transfer case and should be replaced.

(5) Or every five years, whichever comes first. See *Cooling System on page 10-13*.

(6) Or every 10 years, whichever comes first. Inspect for fraying, excessive cracking, or damage; replace, if needed.

(7) Or every 10 years, whichever comes first.

Information Provided by:
DEALER E-PROCESS

Downloaded from www.Manualslib.com manuals search engine

Maintenance Schedule Additional Required Services - Severe	12 000 km/7,500 mi	24 000 km/15,000 mi	36 000 km/22,500 mi	48 000 km/30,000 mi	60 000 km/37,500 mi	72 000 km/45,000 mi	84 000 km/52,500 mi	96 000 km/60,000 mi	108 000 km/67,500 mi	120 000 km/75,000 mi	132 000 km/82,500 mi	144 000 km/90,000 mi	156 000 km/97,500 mi	168 000 km/105,000 mi	180 000 km/112,500 mi	192 000 km/120,000 mi	204 000 km/127,500 mi	216 000 km/135,000 mi	228 000 km/142,500 mi	240 000 km/150,000 mi
Rotate tires and perform Required Services. Check engine oil level and oil life percentage. Change engine oil and filter, if needed.	✓	✓	✓	✓	✓	✓	✓	✓	✓	✓	✓	✓	✓	✓	✓	✓	✓	✓	✓	✓
Replace passenger compartment air filter. (1)			✓			✓			✓			✓			✓			✓		
Inspect evaporative control system. (2)						✓						✓						✓		
Replace engine air cleaner filter. (3)						✓						✓						✓		
Change automatic transmission fluid. Change filter if serviceable.						✓						✓						✓		
Change transfer case fluid, if equipped with AWD. (4)						✓						✓						✓		
Replace spark plugs. Inspect spark plug wires.													✓							
Drain and fill engine cooling system. (5)																				✓
Visually inspect accessory drive belts. (6)																				✓
Replace brake fluid. (7)																				✓

Information Provided by:
DEALER E-PROCESS

Downloaded from www.Manualslib.com manuals search engine

Footnotes — Maintenance Schedule Additional Required Services - Severe

(1) Or every two years, whichever comes first. More frequent replacement may be needed if the vehicle is driven in areas with heavy traffic, areas with poor air quality, or areas with high dust levels. Replacement may also be needed if there is a reduction in air flow, excessive window fogging, or odors.

(2) Check all fuel and vapor lines and hoses for proper hook-up, routing, and condition.

(3) Or every four years, whichever comes first.

(4) Do not directly power wash the transfer case output seals. High pressure water can overcome the seals and contaminate the transfer case fluid. Contaminated fluid will decrease the life of the transfer case and should be replaced.

(5) Or every five years, whichever comes first. See *Cooling System on page 10-13*.

(6) Or every 10 years, whichever comes first. Inspect for fraying, excessive cracking, or damage; replace, if needed.

(7) Or every 10 years, whichever comes first.

Special Application Services

- Severe Commercial Use Vehicles Only: Lubricate chassis components every 5 000 km/ 3,000 mi.
- Have underbody flushing service performed. See "Underbody Maintenance" in *Exterior Care on page 10-74*.

Information Provided by:
DEALER E-PROCESS

Downloaded from www.Manualslib.com manuals search engine

Additional Maintenance and Care

Your vehicle is an important investment and caring for it properly may help to avoid future costly repairs. To maintain vehicle performance, additional maintenance services may be required.

It is recommended that your dealer perform these services — their trained dealer technicians know your vehicle best. Your dealer can also perform a thorough assessment with a multi-point inspection to recommend when your vehicle may need attention.

The following list is intended to explain the services and conditions to look for that may indicate services are required.

Battery

The battery supplies power to start the engine and operate any additional electrical accessories.

- To avoid break-down or failure to start the vehicle, maintain a battery with full cranking power.
- Trained dealer technicians have the diagnostic equipment to test the battery and ensure that the connections and cables are corrosion-free.

Belts

- Belts may need replacing if they squeak or show signs of cracking or splitting.
- Trained dealer technicians have access to tools and equipment to inspect the belts and recommend adjustment or replacement when necessary.

Brakes

Brakes stop the vehicle and are crucial to safe driving.

- Signs of brake wear may include chirping, grinding, or squealing noises, or difficulty stopping.
- Trained dealer technicians have access to tools and equipment to inspect the brakes and recommend quality parts engineered for the vehicle.

Fluids

Proper fluid levels and approved fluids protect the vehicle's systems and components. See *Recommended Fluids and Lubricants on page 11-12* for GM approved fluids.

- Engine oil and windshield washer fluid levels should be checked at every fuel fill.
- Instrument cluster lights may come on to indicate that fluids may be low and need to be filled.

Information Provided by:
DEALER E-PROCESS

Downloaded from www.Manualslib.com manuals search engine

Hoses

Hoses transport fluids and should be regularly inspected to ensure that there are no cracks or leaks. With a multi-point inspection, your dealer can inspect the hoses and advise if replacement is needed.

Lamps

Properly working headlamps, taillamps, and brake lamps are important to see and be seen on the road.

- Signs that the headlamps need attention include dimming, failure to light, cracking, or damage. The brake lamps need to be checked periodically to ensure that they light when braking.
- With a multi-point inspection, your dealer can check the lamps and note any concerns.

Shocks and Struts

Shocks and struts help aid in control for a smoother ride.

- Signs of wear may include steering wheel vibration, bounce/sway while braking, longer stopping distance, or uneven tire wear.
- As part of the multi-point inspection, trained dealer technicians can visually inspect the shocks and struts for signs of leaking, blown seals, or damage, and can advise when service is needed.

Tires

Tires need to be properly inflated, rotated, and balanced. Maintaining the tires can save money and fuel, and can reduce the risk of tire failure.

- Signs that the tires need to be replaced include three or more visible treadwear indicators; cord or fabric showing through the rubber; cracks or cuts in the tread or sidewall; or a bulge or split in the tire.
- Trained dealer technicians can inspect and recommend the right tires. Your dealer can also provide tire/wheel balancing services to ensure smooth vehicle operation at all speeds. Your dealer sells and services name brand tires.

Vehicle Care

To help keep the vehicle looking like new, vehicle care products are available from your dealer. For information on how to clean and protect the vehicle's interior and exterior, see *Interior Care on page 10-78* and *Exterior Care on page 10-74*.

Information Provided by: DEALER E-PROCESS

Downloaded from www.Manualslib.com manuals search engine

Wheel Alignment

Wheel alignment is critical for ensuring that the tires deliver optimal wear and performance.

- Signs that the alignment may need to be adjusted include pulling, improper vehicle handling, or unusual tire wear.
- Your dealer has the required equipment to ensure proper wheel alignment.

Windshield

For safety, appearance, and the best viewing, keep the windshield clean and clear.

- Signs of damage include scratches, cracks, and chips.
- Trained dealer technicians can inspect the windshield and recommend proper replacement if needed.

Wiper Blades

Wiper blades need to be cleaned and kept in good condition to provide a clear view.

- Signs of wear include streaking, skipping across the windshield, and worn or split rubber.
- Trained dealer technicians can check the wiper blades and replace them when needed.

Information Provided by:
DEALER E-PROCESS

Downloaded from www.Manualslib.com manuals search engine

Recommended Fluids

Recommended Fluids and Lubricants

Usage	Fluid/Lubricant
Engine Oil	Use only engine oil licensed to the dexos1 specification of the proper SAE viscosity grade. ACDelco dexos1 Synthetic Blend is recommended. See *Engine Oil on page 10-8*.
Engine Coolant	50/50 mixture of clean, drinkable water and use only DEX-COOL Coolant. See *Engine Coolant on page 10-14*.
Hydraulic Brake System	DOT 3 Hydraulic Brake Fluid (GM Part No. 19299818).
Windshield Washer	Automotive windshield washer fluid that meets regional freeze protection requirements.
Hydraulic Power Steering System	DEXRON®-VI Automatic Transmission Fluid.
Parking Brake Cable Guides	Chassis Lubricant (GM Part No. 12377985) or lubricant meeting requirements of NLGI #2, Category LB or GC-LB.
Automatic Transmission	DEXRON®-VI Automatic Transmission Fluid.
Transfer Case (All-Wheel Drive)	Transfer Case Fluid (GM Part No. 88900401).
Key Lock Cylinders	Multi-Purpose Lubricant, Superlube (GM Part No. 12346241).
Hood Latch Assembly, Secondary Latch, Pivots, Spring Anchor, and Release Pawl	Lubriplate Lubricant Aerosol (GM Part No. 89021668) or lubricant meeting requirements of NLGI #2, Category LB or GC-LB.

Information Provided by: DEALER E-PROCESS

Downloaded from www.Manualslib.com manuals search engine

Usage	Fluid/Lubricant
Hood and Liftgate Door Hinges	Multi-Purpose Lubricant, Superlube (GM Part No. 12346241).
Sunroof Track	Lubriplate Lubricant Aerosol (GM Part No. 89021668) or lubricant meeting requirements of NLGI #2, Category LB or GC-LB.
Weatherstrip Conditioning	Weatherstrip Lubricant (GM Part No. 3634770) or Dielectric Silicone Grease (GM Part No. 12345579).

Maintenance Replacement Parts

Replacement parts identified below by name, part number, or specification can be obtained from your dealer.

Part	GM Part Number	ACDelco Part Number
Engine Air Cleaner/Filter	96815102	—
Engine Oil Filter		
2.4L L4 Engine	12605566	PF457G
3.0L V6 Engine	89017525	PF63
Passenger Compartment Air Filter Element	20901295	CF177
Spark Plugs		
2.4L L4 Engine	12620540	41-108
3.0L V6 Engine	12622561	41-109

Information Provided by:
DEALER E-PROCESS

Downloaded from www.Manualslib.com manuals search engine

11-14 Service and Maintenance

Part	GM Part Number	ACDelco Part Number
Wiper Blades		
Driver Side – 60.0 cm (24.0 in)	95479599	—
Passenger Side – 40.0 cm (16.0 in)	95479597	—
Rear – 30.0 cm (12.0 in)	96624648	—

Information Provided by: DEALER E-PROCESS

Downloaded from www.Manualslib.com manuals search engine

Maintenance Records

After the scheduled services are performed, record the date, odometer reading, who performed the service, and the type of services performed in the boxes provided. Retain all maintenance receipts.

Date	Odometer Reading	Serviced By	Services Performed

Information Provided by:
DEALER E-PROCESS

Downloaded from www.Manualslib.com manuals search engine

11-16 Service and Maintenance

Date	Odometer Reading	Serviced By	Services Performed

Information Provided by:
DEALER E-PROCESS

Downloaded from www.Manualslib.com manuals search engine

Date	Odometer Reading	Serviced By	Services Performed

Information Provided by:
DEALER E-PROCESS

Downloaded from www.Manualslib.com manuals search engine

11-18 Service and Maintenance

Date	Odometer Reading	Serviced By	Services Performed

Information Provided by: DEALER E-PROCESS

Downloaded from www.Manualslib.com manuals search engine

Technical Data

Vehicle Identification
Vehicle Identification Number (VIN) 12-1
Service Parts Identification Label 12-1

Vehicle Data
Capacities and Specifications 12-2
Engine Drive Belt Routing . . . 12-4

Vehicle Identification

Vehicle Identification Number (VIN)

This legal identifier is in the front corner of the instrument panel, on the left side of the vehicle. It can be seen through the windshield from outside. The VIN also appears on the Vehicle Certification and Service Parts labels and certificates of title and registration.

Engine Identification

The eighth character in the VIN is the engine code. This code identifies the vehicle's engine, specifications, and replacement parts. See “Engine Specifications” under *Capacities and Specifications on page 12-2* for the vehicle's engine code.

Service Parts Identification Label

This label, on the inside of the glove box, has the following information:

- Vehicle Identification Number (VIN).
- Model designation.
- Paint information.
- Production options and special equipment.

Do not remove this label from the vehicle.

Information Provided by:
DEALER E-PROCESS

Downloaded from www.Manualslib.com manuals search engine

Vehicle Data

Capacities and Specifications

Application	Capacities	
	Metric	English
Air Conditioning Refrigerant	For the air conditioning system refrigerant type and charge amount, see the refrigerant label under the hood. See your dealer for more information.	
Engine Cooling System		
2.4L L4 Engine	8.5 L	9.0 qt
3.0L V6 Engine	10.9 L	11.5 qt
Engine Oil with Filter		
2.4L L4 Engine	4.7 L	5.0 qt
3.0L V6 Engine	5.7 L	6.0 qt
Fuel Tank	63.1 L	16.6 gal
Wheel Nut Torque	140 N•m	100 lb ft
All capacities are approximate. When adding, be sure to fill to the approximate level, as recommended in this manual. Recheck fluid level after filling.		

Information Provided by: DEALER E-PROCESS

Downloaded from www.Manualslib.com manuals search engine

Engine Specifications

Engine	VIN Code	Transmission	Spark Plug Gap
2.4L L4 (LEA)	K	Automatic	0.75–0.90 mm (0.030–0.035 in)
3.0L V6 (LFW)	5	Automatic	0.95–1.10 mm (0.037–0.043 in)

Information Provided by:
DEALER E-PROCESS

Downloaded from www.Manualslib.com manuals search engine

Engine Drive Belt Routing

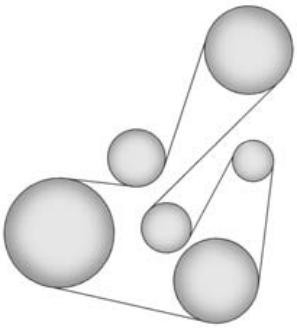

2.4L L4 Engine

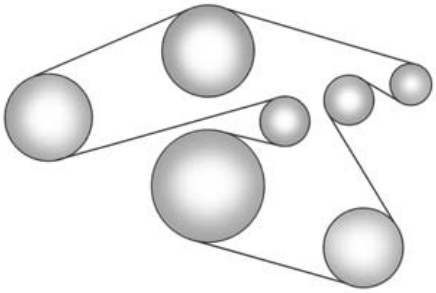

3.0L V6 Engine

Information Provided by:
DEALER E-PROCESS

Downloaded from www.Manualslib.com manuals search engine

Customer Information

Customer Information

Customer Satisfaction Procedure 13-1
Customer Assistance Offices 13-3
Customer Assistance for Text Telephone (TTY) Users 13-4
Online Owner Center 13-4
GM Mobility Reimbursement Program 13-5
Roadside Assistance Program 13-5
Scheduling Service Appointments 13-7
Courtesy Transportation Program 13-7
Collision Damage Repair 13-9
Service Publications Ordering Information 13-11

Reporting Safety Defects

Reporting Safety Defects to the United States Government 13-12
Reporting Safety Defects to the Canadian Government 13-13
Reporting Safety Defects to General Motors 13-13

Vehicle Data Recording and Privacy

Vehicle Data Recording and Privacy 13-13
Event Data Recorders 13-14
OnStar® 13-14
Radio Frequency Identification (RFID) 13-15
Radio Frequency Statement 13-15

Customer Information

Customer Satisfaction Procedure

Your satisfaction and goodwill are important to your dealer and to Chevrolet. Normally, any concerns with the sales transaction or the operation of the vehicle will be resolved by your dealer's sales or service departments. Sometimes, however, despite the best intentions of all concerned, misunderstandings can occur. If your concern has not been resolved to your satisfaction, the following steps should be taken:

STEP ONE: Discuss your concern with a member of dealership management. Normally, concerns can be quickly resolved at that level. If the matter has already been reviewed with the sales, service, or parts manager, contact the owner of your dealership or the general manager.

Information Provided by: DEALER E-PROCESS

Downloaded from www.Manualslib.com manuals search engine

13-2 Customer Information

STEP TWO: If after contacting a member of dealership management, it appears your concern cannot be resolved by your dealership without further help, in the U.S., call the Chevrolet Customer Assistance Center at 1-800-222-1020. In Canada, call General Motors of Canada Customer Care Centre at 1-800-263-3777 (English), or 1-800-263-7854 (French).

We encourage you to call the toll-free number in order to give your inquiry prompt attention. Have the following information available to give the Customer Assistance representative:

- Vehicle Identification Number (VIN). This is available from the vehicle registration or title, or the plate at the top left of the instrument panel and visible through the windshield.
- Dealership name and location.
- Vehicle delivery date and present mileage.

When contacting Chevrolet, remember that your concern will likely be resolved at a dealer's facility. That is why we suggest following Step One first.

STEP THREE — U.S. Owners: Both General Motors and your dealer are committed to making sure you are completely satisfied with your new vehicle. However, if you continue to remain unsatisfied after following the procedure outlined in Steps One and Two, you can file with the Better Business Bureau (BBB) Auto Line® Program to enforce your rights.

The BBB Auto Line Program is an out-of-court program administered by the Council of Better Business Bureaus to settle automotive disputes regarding vehicle repairs or the interpretation of the New Vehicle Limited Warranty. Although you may be required to resort to this informal dispute resolution program prior to filing a court action, use of the program is free of charge and your case will generally be heard within 40 days. If you do not agree with the decision given in your case, you may reject it and proceed with any other venue for relief available to you.

You may contact the BBB Auto Line Program using the toll-free telephone number or write them at the following address:

BBB Auto Line Program
Council of Better Business Bureaus, Inc.
4200 Wilson Boulevard
Suite 800
Arlington, VA 22203-1838

Telephone: 1-800-955-5100
www.dr.bbb.org/goauto

This program is available in all 50 states and the District of Columbia. Eligibility is limited by vehicle age, mileage, and other factors. General Motors reserves the right to change eligibility limitations and/or discontinue its participation in this program.

Information Provided by DEALER E-PROCESS

Downloaded from www.Manualslib.com manuals search engine

STEP THREE — Canadian Owners: In the event that you do not feel your concerns have been addressed after following the procedure outlined in Steps One and Two, General Motors of Canada Limited wants you to be aware of its participation in a no-charge Mediation/Arbitration Program. General Motors of Canada Limited has committed to binding arbitration of owner disputes involving factory-related vehicle service claims. The program provides for the review of the facts involved by an impartial third party arbiter, and may include an informal hearing before the arbiter. The program is designed so that the entire dispute settlement process, from the time you file your complaint to the final decision, should be completed in about 70 days. We believe our impartial program offers advantages over courts in most jurisdictions because it is informal, quick, and free of charge.

For further information concerning eligibility in the Canadian Motor Vehicle Arbitration Plan (CAMVAP), call toll-free 1-800-207-0685, or call the General Motors Customer Care Centre, 1-800-263-3777 (English), 1-800-263-7854 (French), or write to:

The Mediation/Arbitration Program
c/o Customer Care Centre
General Motors of Canada Limited
Mail Code: CA1-163-005
1908 Colonel Sam Drive
Oshawa, Ontario L1H 8P7

Your inquiry should be accompanied by the Vehicle Identification Number (VIN).

Customer Assistance Offices

Chevrolet encourages customers to call the toll-free number for assistance. However, if a customer wishes to write or e-mail Chevrolet, the letter should be addressed to:

United States and Puerto Rico

Chevrolet Motor Division
Chevrolet Customer Assistance Center
P.O. Box 33170
Detroit, MI 48232-5170
www.Chevrolet.com

1-800-222-1020
1-800-833-2438 (For Text Telephone Devices (TTYs))
Roadside Assistance:
1-800-243-8872

From U.S. Virgin Islands:

1-800-496-9994

Information Provided by:
DEALER E-PROCESS

Downloaded from www.Manualslib.com manuals search engine

Canada

General Motors of Canada Limited
Customer Care Centre, Mail Code: CA1-163-005
1908 Colonel Sam Drive
Oshawa, Ontario L1H 8P7
www.gm.ca

1-800-263-3777 (English)
1-800-263-7854 (French)
1-800-263-3830 (For Text Telephone devices (TTYs))
Roadside Assistance:
1-800-268-6800

Overseas

Please contact the local General Motors Business Unit.

Customer Assistance for Text Telephone (TTY) Users

To assist customers who are deaf, hard of hearing, or speech-impaired and who use Text Telephones (TTYs), Chevrolet has TTY equipment available at its Customer Assistance Center. Any TTY user in the U.S. can communicate with Chevrolet by dialing: 1-800-833-2438. TTY users in Canada can dial 1-800-263-3830.

Online Owner Center

Online Owner Experience (U.S.) my.chevrolet.com

The Chevrolet online owner experience is a one-stop resource that allows interaction with Chevrolet and keeps important vehicle-specific information in one place.

Membership Benefits

(Vehicle Information): Download owner manuals and view vehicle-specific how-to videos.

(Maintenance Information): View maintenance schedules, required alerts, OnStar onboard vehicle diagnostic information, and schedule service appointments.

(Service History): View printable dealer-recorded service records and self-recorded service records.

(Preferred Dealer Information): Select a preferred dealer and view dealer location, maps, phone numbers, and hours.

(Warranty Tracking Information): Track the vehicle's warranty information.

(Recall Information): View active recalls or search by Vehicle Identification Number (VIN). See *Vehicle Identification Number (VIN) on page 12-1*.

(Other Account Information): View GM Card, SiriusXM Satellite radio, and OnStar account information.

(Live Chat Support): Chat live with online help representatives.

Visit my.chevrolet.com to register your vehicle.

Information Provided by: DEALER E-PROCESS

Downloaded from www.Manualslib.com manuals search engine

Chevrolet Owner Centre (Canada) chevroletowner.ca

Take a trip to the Chevrolet Owner Centre:

- Chat live with online help representatives.
- Use the Vehicle Tools section.
- Access third party enthusiast sites and social media networks.
- Locate owner resources such as lease-end, financing, and warranty information.
- Retrieve your favorite articles, quizzes, tips, and multimedia galleries organized into the Features and Auto Care Sections.
- Download the owner manual for your vehicle, quickly and easily.
- Find the Chevrolet-recommended maintenance services for your vehicle.

GM Mobility Reimbursement Program

This program is available to qualified applicants for cost reimbursement of eligible aftermarket adaptive equipment required for the vehicle, such as hand controls or a wheelchair/scooter lift for the vehicle.

For more information on the limited offer, visit www.gmmobility.com or call the GM Mobility Assistance Center at 1-800-323-9935. Text Telephone (TTY) users, call 1-800-833-9935.

General Motors of Canada also has a Mobility Program. Visit www.gm.ca or call 1-800-GM-DRIVE (463-7483) for details. TTY users call 1-800-263-3830.

Roadside Assistance Program

For U.S.-purchased vehicles, call 1-800-243-8872; (Text Telephone (TTY): 1-888-889-2438).

For Canadian-purchased vehicles, call 1-800-268-6800.

Service is available 24 hours a day, 365 days a year.

Calling for Assistance

When calling Roadside Assistance, have the following information ready:

- Your name, home address, and home telephone number.
- Telephone number of your location.
- Location of the vehicle.

Information Provided by: DEALER E-PROCESS

Downloaded from www.Manualslib.com manuals search engine

- Model, year, color, and license plate number of the vehicle.
- Odometer reading, Vehicle Identification Number (VIN), and delivery date of the vehicle.
- Description of the problem.

Coverage

Services are provided up to 5 years/ 160 000 km (100,000 mi), whichever comes first.

In the U.S., anyone driving the vehicle is covered. In Canada, a person driving the vehicle without permission from the owner is not covered.

Roadside Assistance is not a part of the New Vehicle Limited Warranty. Chevrolet and General Motors of Canada Limited reserve the right to make any changes or discontinue the Roadside Assistance program at any time without notification.

Chevrolet and General Motors of Canada Limited reserve the right to limit services or payment to an owner or driver if they decide the claims are made too often, or the same type of claim is made many times.

Services Provided

- **Emergency Fuel Delivery:** Delivery of enough fuel for the vehicle to get to the nearest service station.
- **Lock-Out Service:** Service to unlock the vehicle if you are locked out. A remote unlock may be available if you have OnStar. For security reasons, the driver must present identification before this service is given.
- **Emergency Tow from a Public Road or Highway:** Tow to the nearest Chevrolet dealer for warranty service, or if the vehicle was in a crash and cannot be driven. Assistance is also given when the vehicle is stuck in the sand, mud, or snow.
- **Flat Tire Change:** Service to change a flat tire with the spare tire. The spare tire, if equipped, must be in good condition and properly inflated. It is the owner's responsibility for the repair or replacement of the tire if it is not covered by the warranty.
- **Battery Jump Start:** Service to jump start a dead battery.

Services Not Included in Roadside Assistance

- Impound towing caused by violation of any laws.
- Legal fines.
- Mounting, dismounting, or changing of snow tires, chains, or other traction devices.
- Towing or services for vehicles driven on a non-public road or highway.

Information Provided by: DEALER E-PROCESS

Downloaded from www.Manualslib.com manuals search engine

Services Specific to Canadian-Purchased Vehicles

- **Fuel Delivery:** Reimbursement is approximately $5 Canadian. Diesel fuel delivery may be restricted. Propane and other fuels are not provided through this service.
- **Lock-Out Service:** Vehicle registration is required.
- **Trip Interruption Benefits and Assistance:** Must be over 250 kilometers from where your trip was started to qualify. General Motors of Canada Limited requires pre-authorization, original detailed receipts, and a copy of the repair orders. Once authorization has been received, the Roadside Assistance advisor will help to make arrangements and explain how to receive payment.
- **Alternative Service:** If assistance cannot be provided right away, the Roadside Assistance advisor may give permission to get local emergency road service. You will receive payment, up to $100, after sending the original receipt to Roadside Assistance. Mechanical failures may be covered, however any cost for parts and labor for repairs not covered by the warranty are the owner responsibility.

Scheduling Service Appointments

When the vehicle requires warranty service, contact your dealer and request an appointment. By scheduling a service appointment and advising the service consultant of your transportation needs, your dealer can help minimize your inconvenience.

If the vehicle cannot be scheduled into the service department immediately, keep driving it until it can be scheduled for service, unless, of course, the problem is safety related. If it is, please call your dealership, let them know this, and ask for instructions.

If your dealer requests you to bring the vehicle for service, you are urged to do so as early in the work day as possible to allow for same-day repair.

Courtesy Transportation Program

To enhance your ownership experience, we and our participating dealers are proud to offer Courtesy Transportation, a customer support program for vehicles with the Bumper-to-Bumper (Base Warranty Coverage period in Canada), extended powertrain, and/or hybrid-specific warranties in both the U.S. and Canada.

Several Courtesy Transportation options are available to assist in reducing inconvenience when warranty repairs are required.

Information Provided by: DEALER E-PROCESS

Downloaded from www.Manualslib.com manuals search engine

Courtesy Transportation is not a part of the New Vehicle Limited Warranty. A separate booklet entitled “Limited Warranty and Owner Assistance Information” furnished with each new vehicle provides detailed warranty coverage information.

Transportation Options

Warranty service can generally be completed while you wait. However, if you are unable to wait, GM helps to minimize inconvenience by providing several transportation options. Depending on the circumstances, your dealer can offer one of the following:

Shuttle Service

Shuttle service is the preferred means of offering Courtesy Transportation. Dealers may provide shuttle service to get you to your destination with minimal interruption of your daily schedule. This includes one-way or round-trip shuttle service within reasonable time and distance parameters of your dealer's area.

Public Transportation or Fuel Reimbursement

If the vehicle requires overnight warranty repairs, and public transportation is used instead of your dealer's shuttle service, the expense must be supported by original receipts and can only be up to the maximum amount allowed by GM for shuttle service. In addition, for U.S. customers, should you arrange transportation through a friend or relative, limited reimbursement for reasonable fuel expenses may be available. Claim amounts should reflect actual costs and be supported by original receipts. See your dealer for information regarding the allowance amounts for reimbursement of fuel or other transportation costs.

Courtesy Rental Vehicle

Your dealer may arrange to provide you with a courtesy rental vehicle or reimburse you for a rental vehicle that you obtain if the vehicle is kept for an overnight warranty repair. Rental reimbursement will be limited and must be supported by original receipts. This requires that you sign and complete a rental agreement and meet state/provincial, local, and rental vehicle provider requirements. Requirements vary and may include minimum age requirements, insurance coverage, credit card, etc. You are responsible for fuel usage charges and may also be responsible for taxes, levies, usage fees, excessive mileage, or rental usage beyond the completion of the repair.

It may not be possible to provide a like vehicle as a courtesy rental.

Information Provided by: DEALER E-PROCESS

Downloaded from www.Manualslib.com manuals search engine

Additional Program Information

All program options, such as shuttle service, may not be available at every dealer. Please contact your dealer for specific information about availability. All Courtesy Transportation arrangements will be administered by appropriate dealer personnel.

General Motors reserves the right to unilaterally modify, change, or discontinue Courtesy Transportation at any time and to resolve all questions of claim eligibility pursuant to the terms and conditions described herein at its sole discretion.

Collision Damage Repair

If the vehicle is involved in a collision and it is damaged, have the damage repaired by a qualified technician using the proper equipment and quality replacement parts. Poorly performed collision repairs diminish the vehicle resale value, and safety performance can be compromised in subsequent collisions.

Collision Parts

Genuine GM Collision parts are new parts made with the same materials and construction methods as the parts with which the vehicle was originally built. Genuine GM Collision parts are the best choice to ensure that the vehicle's designed appearance, durability, and safety are preserved. The use of Genuine GM parts can help maintain the GM New Vehicle Limited Warranty.

Recycled original equipment parts may also be used for repair. These parts are typically removed from vehicles that were total losses in prior crashes. In most cases, the parts being recycled are from undamaged sections of the vehicle. A recycled original equipment GM part may be an acceptable choice to maintain the vehicle's originally designed appearance and safety performance; however, the history of these parts is not known. Such parts are not covered by the GM New Vehicle Limited Warranty, and any related failures are not covered by that warranty.

Aftermarket collision parts are also available. These are made by companies other than GM and may not have been tested for the vehicle. As a result, these parts may fit poorly, exhibit premature durability/corrosion problems, and may not perform properly in subsequent collisions. Aftermarket parts are not covered by the GM New Vehicle Limited Warranty, and any vehicle failure related to such parts is not covered by that warranty.

Repair Facility

GM also recommends that you choose a collision repair facility that meets your needs before you ever need collision repairs. Your dealer may have a collision repair center with GM-trained technicians and state-of-the-art equipment, or be able to recommend a collision repair

Information Provided by: DEALER E-PROCESS

Downloaded from www.Manualslib.com manuals search engine

center that has GM-trained technicians and comparable equipment.

Insuring the Vehicle

Protect your investment in the GM vehicle with comprehensive and collision insurance coverage. There are significant differences in the quality of coverage afforded by various insurance policy terms. Many insurance policies provide reduced protection to the GM vehicle by limiting compensation for damage repairs through the use of aftermarket collision parts. Some insurance companies will not specify aftermarket collision parts. When purchasing insurance, we recommend that you ensure that the vehicle will be repaired with GM original equipment collision parts. If such insurance coverage is not available from your current insurance carrier, consider switching to another insurance carrier.

If the vehicle is leased, the leasing company may require you to have insurance that ensures repairs with Genuine GM Original Equipment Manufacturer (OEM) parts or Genuine Manufacturer replacement parts. Read the lease carefully, as you may be charged at the end of the lease for poor quality repairs.

If a Crash Occurs

If there has been an injury, call emergency services for help. Do not leave the scene of a crash until all matters have been taken care of. Move the vehicle only if its position puts you in danger, or you are instructed to move it by a police officer.

Give only the necessary information to police and other parties involved in the crash.

For emergency towing see *Roadside Assistance Program on page 13-5*.

Gather the following information:

- Driver name, address, and telephone number.
- Driver license number.
- Owner name, address, and telephone number.
- Vehicle license plate number.
- Vehicle make, model, and model year.
- Vehicle Identification Number (VIN).
- Insurance company and policy number.
- General description of the damage to the other vehicle.

Choose a reputable repair facility that uses quality replacement parts. See “Collision Parts” earlier in this section.

If the airbag has inflated, see *What Will You See after an Airbag Inflates? on page 3-22*.

Information Provided by: DEALER E-PROCESS

Downloaded from www.Manualslib.com manuals search engine

Managing the Vehicle Damage Repair Process

In the event that the vehicle requires damage repairs, GM recommends that you take an active role in its repair. If you have a pre-determined repair facility of choice, take the vehicle there, or have it towed there. Specify to the facility that any required replacement collision parts be original equipment parts, either new Genuine GM parts or recycled original GM parts. Remember, recycled parts will not be covered by the GM vehicle warranty.

Insurance pays the bill for the repair, but you must live with the repair. Depending on your policy limits, your insurance company may initially value the repair using aftermarket parts. Discuss this with the repair professional, and insist on Genuine GM parts. Remember, if the vehicle is leased, you may be obligated to have the vehicle repaired with Genuine GM parts, even if your insurance coverage does not pay the full cost.

If another party's insurance company is paying for the repairs, you are not obligated to accept a repair valuation based on that insurance company's collision policy repair limits, as you have no contractual limits with that company. In such cases, you can have control of the repair and parts choices as long as the cost stays within reasonable limits.

Service Publications Ordering Information

Service Manuals

Service Manuals have the diagnosis and repair information on the engines, transmission, axle, suspension, brakes, electrical, steering, body, etc.

Service Bulletins

Service Bulletins give additional technical service information needed to knowledgeably service General Motors cars and trucks.

Each bulletin contains instructions to assist in the diagnosis and service of the vehicle.

Owner Information

Owner publications are written specifically for owners and intended to provide basic operational information about the vehicle. The Owner Manual includes the Maintenance Schedule for all models.

In-Portfolio: Includes a Portfolio, Owner Manual, and Warranty Manual.

RETAIL SELL PRICE:
$35.00 (U.S.) plus handling and shipping fees.

Without Portfolio: Owner Manual only.

RETAIL SELL PRICE:
$25.00 (U.S.) plus handling and shipping fees.

Information Provided by:
DEALER E-PROCESS

Downloaded from www.Manualslib.com manuals search engine

Current and Past Models

Technical Service Bulletins and Manuals are available for current and past model GM vehicles.

ORDER TOLL FREE:
1-800-551-4123 Monday – Friday
8:00 AM – 6:00 PM Eastern Time

For Credit Card Orders Only (VISA-MasterCard-Discover), see Helm, Inc. at: www.helminc.com.

Or write to:

Helm, Incorporated
Attention: Customer Service
47911 Halyard Drive
Plymouth, MI 48170

Prices are subject to change without notice and without incurring obligation. Allow ample time for delivery.

All listed prices are quoted in U.S. funds. Make checks payable in U.S. funds.

Reporting Safety Defects

Reporting Safety Defects to the United States Government

If you believe that your vehicle has a defect which could cause a crash or could cause injury or death, you should immediately inform the National Highway Traffic Safety Administration (NHTSA) in addition to notifying General Motors.

If NHTSA receives similar complaints, it may open an investigation, and if it finds that a safety defect exists in a group of vehicles, it may order a recall and remedy campaign. However, NHTSA cannot become involved in individual problems between you, your dealer, or General Motors.

To contact NHTSA, you may call the Vehicle Safety Hotline toll-free at 1-888-327-4236 (TTY: 1-800-424-9153); go to *http://www.safercar.gov;* or write to:

Administrator, NHTSA
1200 New Jersey Avenue, S.E.
Washington, D.C. 20590

You can also obtain other information about motor vehicle safety from *http://www.safercar.gov*.

Information Provided by: DEALER E-PROCESS

Downloaded from www.Manualslib.com manuals search engine

Reporting Safety Defects to the Canadian Government

If you live in Canada, and you believe that the vehicle has a safety defect, notify Transport Canada immediately, and notify General Motors of Canada Limited. Call Transport Canada at 1-800-333-0510 or write to:

Transport Canada
Road Safety Branch
80 rue Noel
Gatineau, QC J8Z 0A1

Reporting Safety Defects to General Motors

In addition to notifying NHTSA (or Transport Canada) in a situation like this, notify General Motors.

Call 1-800-222-1020, or write:

Chevrolet Motor Division
Chevrolet Customer Assistance Center
P.O. Box 33170
Detroit, MI 48232-5170

In Canada, call 1-800-263-3777 (English) or 1-800-263-7854 (French), or write:

General Motors of Canada Limited
Customer Care Centre, Mail Code: CA1-163-005
1908 Colonel Sam Drive
Oshawa, Ontario L1H 8P7

Vehicle Data Recording and Privacy

The vehicle has a number of computers that record information about the vehicle's performance and how it is driven. For example, the vehicle uses computer modules to monitor and control engine and transmission performance, to monitor the conditions for airbag deployment and deploy them in a crash, and, if equipped, to provide antilock braking to help the driver control the vehicle. These modules may store data to help the dealer technician service the vehicle. Some modules may also store data about how the vehicle is operated, such as rate of fuel consumption or average speed. These modules may retain personal preferences, such as radio presets, seat positions, and temperature settings.

Information Provided by:
DEALER E-PROCESS

Downloaded from www.Manualslib.com manuals search engine

Event Data Recorders

This vehicle is equipped with an event data recorder (EDR). The main purpose of an EDR is to record, in certain crash or near crash-like situations, such as an air bag deployment or hitting a road obstacle, data that will assist in understanding how a vehicle's systems performed. The EDR is designed to record data related to vehicle dynamics and safety systems for a short period of time, typically 30 seconds or less. The EDR in this vehicle is designed to record such data as:

- How various systems in your vehicle were operating;
- Whether or not the driver and passenger safety belts were buckled/fastened;
- How far (if at all) the driver was depressing the accelerator and/or brake pedal; and,
- How fast the vehicle was traveling.

These data can help provide a better understanding of the circumstances in which crashes and injuries occur. NOTE: EDR data are recorded by your vehicle only if a non-trivial crash situation occurs; no data are recorded by the EDR under normal driving conditions and no personal data (e.g., name, gender, age, and crash location) are recorded. However, other parties, such as law enforcement, could combine the EDR data with the type of personally identifying data routinely acquired during a crash investigation.

To read data recorded by an EDR, special equipment is required, and access to the vehicle or the EDR is needed. In addition to the vehicle manufacturer, other parties, such as law enforcement, that have the special equipment, can read the information if they have access to the vehicle or the EDR.

GM will not access this data or share it with others except: with the consent of the vehicle owner or, if the vehicle is leased, with the consent of the lessee; in response to an official request by police or similar government office; as part of GM's defense of litigation through the discovery process; or, as required by law. Data that GM collects or receives may also be used for GM research needs or may be made available to others for research purposes, where a need is shown and the data is not tied to a specific vehicle or vehicle owner.

OnStar®

If the vehicle is equipped with OnStar® and has an active subscription, additional data may be collected through the OnStar system. This includes information about the vehicle's operation; collisions involving the vehicle; the use of the vehicle and its features; and, in certain situations, the location and approximate GPS speed of the vehicle. Refer to the

Information Provided by: DEALER E-PROCESS

Downloaded from www.Manualslib.com manuals search engine

OnStar Terms and Conditions and Privacy Statement on the OnStar website.

Radio Frequency Identification (RFID)

RFID technology is used in some vehicles for functions such as tire pressure monitoring and ignition system security, as well as in connection with conveniences such as Remote Keyless Entry (RKE) transmitters for remote door locking/unlocking and starting, and in-vehicle transmitters for garage door openers. RFID technology in GM vehicles does not use or record personal information or link with any other GM system containing personal information.

Radio Frequency Statement

This vehicle has systems that operate on a radio frequency that comply with Part 15 of the Federal Communications Commission (FCC) rules and with Industry Canada Standards RSS-GEN/210/220/310.

Operation is subject to the following two conditions:

1. The device may not cause harmful interference.
2. The device must accept any interference received, including interference that may cause undesired operation of the device.

Changes or modifications to any of these systems by other than an authorized service facility could void authorization to use this equipment.

Information Provided by:
DEALER E-PROCESS

Downloaded from www.Manualslib.com manuals search engine

✍ NOTES

Information Provided by:
DEALER E-PROCESS

Downloaded from www.Manualslib.com manuals search engine

OnStar

OnStar Overview
OnStar Overview 14-1

OnStar Services
Emergency 14-2
Security 14-2
Navigation 14-2
Connections 14-3
Diagnostics 14-5

OnStar Additional Information
OnStar Additional Information 14-5

OnStar Overview

If equipped, this vehicle has a comprehensive, in-vehicle system that can connect to a live Advisor for Emergency, Security, Navigation, Connection, and Diagnostic Services.

The OnStar system status light is next to the OnStar buttons. If the status light is:

- Solid Green: System is ready.
- Flashing Green: On a call.
- Red: Indicates a problem.

Press on or call 1-888-4-ONSTAR (1-888-466-7827) to speak to an Advisor.

Press to:

- Make a call, end a call, or answer an incoming call.
- Give OnStar Hands-Free Calling voice commands.
- Give OnStar Turn-by-Turn Navigation voice commands. Requires the available Directions and Connections service plan.

Press on to connect to a live Advisor to:

- Verify account information or update contact information.
- Get driving directions. Requires the available Directions and Connections service plan.
- Receive On-Demand Diagnostics for a check of the vehicle's key operating systems.
- Receive Roadside Assistance.

Press the OnStar Emergency button SOS to get a priority connection to an Emergency Advisor available 24/7 to:

Information Provided by: DEALER E-PROCESS

Downloaded from www.Manualslib.com manuals search engine

- Get help for an emergency.
- Be a Good Samaritan or respond to an AMBER Alert.
- Get assistance in severe weather or other crisis and evacuation routes.

OnStar Services

Emergency

With Automatic Crash Response, the built-in system can automatically connect to help in most crashes, even if help cannot be requested.

Press SOS to connect to an Emergency Advisor. GPS technology is used to identify the vehicle location and can provide critical information to emergency personnel. The Advisor is also trained to offer critical assistance in emergency situations.

Security

OnStar provides services like Stolen Vehicle Assistance, Remote Ignition Block, and Roadside Assistance, if equipped. OnStar can unlock the vehicle doors remotely, if equipped with automatic door locks, and can help police locate the vehicle if it is stolen.

Navigation

OnStar navigation requires the Directions and Connections service plan.

Press On to receive directions or have them sent to the vehicle navigation screen, if equipped. Destinations can also be forwarded to the vehicle from MapQuest.com. The OnStar mapping database is continuously updated. For coverage maps, see www.onstar.com (U.S.) or www.onstar.ca (Canada).

Turn-by-Turn Navigation

1. Press On to connect to a live Advisor.
2. Request directions.
3. Directions are downloaded to the vehicle.
4. Follow the voice-guided commands.

Information Provided by: DEALER E-PROCESS

Downloaded from www.Manualslib.com manuals search engine

Using Voice Commands During a Planned Route

Cancel Route

1. Press . System responds: “OnStar ready,” then a tone. Say “Cancel route.” System responds: “Do you want to cancel directions?”
2. Say “Yes.” System responds: “OK, request completed, thank you, goodbye.”

Route Preview

1. Press . System responds: “OnStar ready,” then a tone.
2. Say “Route preview.” System responds with the next three maneuvers.

Repeat

1. Press . System responds: “OnStar ready,” then a tone.
2. Say “Repeat.” System responds with the last direction given, then responds with “OnStar ready,” then a tone.

Get My Destination

1. Press . System responds: “OnStar ready,” then a tone.
2. Say “Get my destination.” System responds with the address and the distance to the destination, then responds with “OnStar ready,” then a tone.

Other Navigation Services Available from OnStar

OnStar eNav: Allows subscribers to send destinations from MapQuest.com to their Turn-by-Turn Navigation or screen-based navigation system. When ready, the directions will be downloaded to the vehicle.

Destination Download: Press , then request the Advisor to download directions to the navigation system in the vehicle. After the call ends, press the “Go” button on the navigation screen to begin driving directions.

If directions are downloaded to the navigation system, the route can only be canceled through the navigation system.

Destinations can also be downloaded on the go. For information about eNav, Destination Download, and coverage maps see www.onstar.com (U.S.) or www.onstar.ca (Canada).

Connections

OnStar Hands-Free Calling allows calls to be made and received from the vehicle. The vehicle can also be controlled through the OnStar RemoteLink® mobile app. For coverage maps, see www.onstar.com (U.S.) or www.onstar.ca (Canada).

Information Provided by: DEALER E-PROCESS

Downloaded from www.Manualslib.com manuals search engine

OnStar Mobile App

Download the OnStar RemoteLink mobile app to select Apple®, Android™, and BlackBerry® devices to check vehicle fuel level, oil life, or tire pressure; to start the vehicle (if equipped) or unlock it; or to connect to an OnStar Advisor. For OnStar RemoteLink information and compatibility, see www.onstar.com (U.S.) or www.onstar.ca (Canada).

Hands-Free Calling

1. Press . System responds: “OnStar ready.”
2. Say “Call.” System responds: “Please say the name or number to call.”
3. Say the entire number without pausing, including a “1” and the area code. System responds: “OK calling.”

Calling 911 Emergency

1. Press . System responds: “OnStar ready,” followed by a tone.
2. Say “Call.” System responds: “Please say the name or number to call.”
3. Say “911” without pausing. System responds: “911.”
4. Say “Call.” System responds: “OK, dialing 911.”

Retrieve My Number

1. Press . System responds: “OnStar ready.”
2. Say “My number.” System responds: “Your OnStar Hands-Free Calling number is,” then says the number.

End a Call

Press . System responds: “Call ended.”

Store a Name Tag for Speed Dialing

1. Press . System responds: “OnStar ready.”
2. Say “Store.” System responds: “Please say the number you would like to store.”
3. Say the entire number without pausing. System responds: “Please say the name tag.”
4. Pick a name tag. System responds: “About to store <name tag>. Does that sound OK?”
5. Say “Yes” or say “No” to try again. System responds: “OK, storing <name tag>.”

Place a Call Using a Stored Number

1. Press . System responds: “OnStar ready.”
2. Say “Call <name tag>.” System responds: “OK, calling <name tag>.”

Information Provided by: DEALER E-PROCESS

Downloaded from www.Manualslib.com manuals search engine

Verify Minutes and Expiration

Press and say “Minutes” then “Verify” to check how many minutes remain and their expiration date.

Diagnostics

OnStar Vehicle Diagnostics will perform a vehicle check every month. It will check the engine, transmission, antilock brakes, and major vehicle systems. It also checks the tire pressures, if the vehicle is equipped with the Tire Pressure Monitoring System. If an On-Demand Diagnostics check is needed between e-mails, press , and an Advisor can run a check.

OnStar Additional Information

Transferring Service

Press to request account transfer eligibility information. The Advisor can assist in canceling or removing account information. If OnStar receives information that vehicle ownership has changed, OnStar may send a voice message to the vehicle, requesting updated account information.

Reactivation for Subsequent Owners

Press and follow the prompts to speak to an Advisor as soon as possible after acquiring the vehicle. The Advisor will update vehicle records and will explain the OnStar service offers and options available.

How OnStar Service Works

Automatic Crash Response, Emergency Services, Crisis Assist, Stolen Vehicle Assistance, Vehicle Diagnostics, Remote Door Unlock, Roadside Assistance, Turn-by-Turn Navigation, and Hands-Free Calling are available on most vehicles. Not all OnStar services are available everywhere or on all vehicles. For more information, a full description of OnStar services, system limitations, and OnStar terms and conditions:

- Call 888-4-ONSTAR (888-466-7827).
- See www.onstar.com (U.S.).
- See www.onstar.ca (Canada).
- Call TTY 1-877-248-2080.
- Press to speak with an Advisor.

OnStar services require a vehicle electrical system, wireless service, and GPS satellite technologies to be available and operating for features

Information Provided by: DEALER E-PROCESS

Downloaded from www.Manualslib.com manuals search engine

to function properly. These systems may not operate if the battery is discharged or disconnected.

OnStar service cannot work unless your vehicle is in a place where OnStar has an agreement with a wireless service provider for service in that area, and the wireless service provider has coverage, network capacity, reception, and technology compatible with OnStar service. Service involving location information about the vehicle cannot work unless GPS signals are available, unobstructed, and compatible with the OnStar hardware. OnStar service may not work if the OnStar equipment is not properly installed or it has not been properly maintained. If equipment or software is added, connected, or modified, OnStar service may not work. Other problems beyond the control of OnStar may prevent service such as hills, tall buildings, tunnels, weather, electrical system design and architecture of the vehicle, damage to the vehicle in a crash, or wireless phone network congestion or jamming.

See *Radio Frequency Statement on page 13-15*.

Services for People with Disabilities

Advisors provide services to help subscribers with physical disabilities and medical conditions.

Press on for help with:

- Locating a gas station with an attendant to pump gas.
- Finding a hotel, restaurant, etc., that meets accessibility needs.
- Providing directions to the closest hospital or pharmacy in urgent situations.

TTY Users

OnStar has the ability to communicate to the deaf, hard-of-hearing, or speech-impaired customers while in the vehicle. The available dealer-installed TTY system can provide in-vehicle access to all of the OnStar services, except Virtual Advisor and OnStar Turn-by-Turn Navigation.

OnStar.com (U.S.) or OnStar.ca (Canada)

The website provides access to account information, allows management of the OnStar subscription, and viewing of videos of each service. Get subscription plan pricing and sign up for OnStar Vehicle Diagnostics. Click on the “My Account” tab on the home page. The website navigation and services provided may vary by country.

OnStar Personal Identification Number (PIN)

A PIN is needed to access some of the OnStar services, like Remote Door Unlock and Stolen Vehicle Assistance. You will be prompted to change the PIN the first time when speaking with an Advisor. To

Information Provided by: DEALER E-PROCESS

Downloaded from www.Manualslib.com manuals search engine

change the OnStar PIN, call OnStar and provide the Advisor with the current number.

Warranty

OnStar equipment may be warranted as part of the New Vehicle Limited Warranty. The manufacturer of the vehicle furnishes detailed warranty information.

Languages

The vehicle can be programmed to respond in multiple languages. Press and ask an Advisor. Advisors are available in English, Spanish and French. Available languages may vary by country.

Potential Issues

OnStar cannot perform Remote Door Unlock or Stolen Vehicle Assistance after the vehicle has been off continuously for five days. After five days, OnStar can contact Roadside Assistance and a locksmith to help gain access to the vehicle.

Global Positioning System (GPS)

- Obstruction of the GPS can occur in a large city with tall buildings; in parking garages; around airports; in tunnels, underpasses, or parking garages; or in an area with very dense trees. If GPS signals are not available, the OnStar system should still operate to call OnStar. However, OnStar could have difficulty identifying the exact location.
- In emergency situations, OnStar can use the last stored GPS location to send to emergency responders.
- A temporary loss of GPS can cause loss of the ability to send a Turn-by-Turn Navigation route. The Advisor may give a verbal route or may ask for a call back after the vehicle is driven into an open area.

Cellular and GPS Antennas

Avoid placing items over or near the antenna to prevent blocking cellular and GPS signal reception. Cellular reception is required for OnStar to send remote signals to the vehicle.

Unable to Connect to OnStar Message

If there is limited cellular coverage or the cellular network has reached maximum capacity, this message may come on. Press to try the call again or try again after driving a few miles into another cellular area.

Vehicle and Power Issues

OnStar services require a vehicle electrical system, wireless service, and GPS satellite technologies to be available and operating for features to function properly. These systems may not operate if the battery is discharged or disconnected.

Information Provided by: DEALER E-PROCESS

Downloaded from www.Manualslib.com manuals search engine

Add-on Electrical Equipment

The OnStar system is integrated into the electrical architecture of the vehicle. Do not add any electrical equipment. See *Add-On Electrical Equipment on page 9-47*. Added electrical equipment may interfere with the operation of the OnStar system and cause it to not operate.

Privacy

The complete OnStar Privacy Statement may be found at www.onstar.com (U.S.), or www.onstar.ca (Canada). Privacy-sensitive users of wireless communications are cautioned that the privacy of any information sent via wireless cellular communications cannot be assured. Third parties may unlawfully intercept or access transmissions and private communications without consent.

OnStar - libcurl and unzip acknowledgments

Certain OnStar components include libcurl and unzip software. Below are the notices and licenses associated with this software:

libcurl:

COPYRIGHT AND PERMISSION NOTICE

Copyright (c) 1996 - 2010, Daniel Stenberg, <daniel@haxx.se>.

All rights reserved.

Permission to use, copy, modify, and distribute this software for any purpose with or without fee is hereby granted, provided that the above copyright notice and this permission notice appear in all copies.

THE SOFTWARE IS PROVIDED “AS IS,” WITHOUT WARRANTY OF ANY KIND, EXPRESS OR IMPLIED, INCLUDING BUT NOT LIMITED TO THE WARRANTIES OF MERCHANTABILITY, FITNESS FOR A PARTICULAR PURPOSE AND NONINFRINGEMENT OF THIRD PARTY RIGHTS. IN NO EVENT SHALL THE AUTHORS OR COPYRIGHT HOLDERS BE LIABLE FOR ANY CLAIM, DAMAGES OR OTHER LIABILITY, WHETHER IN AN ACTION OF CONTRACT, TORT OR OTHERWISE, ARISING FROM, OUT OF OR IN CONNECTION WITH THE SOFTWARE OR THE USE OR OTHER DEALINGS IN THE SOFTWARE.

Except as contained in this notice, the name of a copyright holder shall not be used in advertising or otherwise to promote the sale, use or other dealings in this Software without prior written authorization of the copyright holder.

Information Provided by: DEALER E-PROCESS

Downloaded from www.Manualslib.com manuals search engine

unzip:

This is version 2005-Feb-10 of the Info-ZIP copyright and license. The definitive version of this document should be available at ftp://ftp.info-zip.org/pub/infozip/license.html indefinitely.

Copyright (c) 1990-2005 Info-ZIP. All rights reserved.

For the purposes of this copyright and license, “Info-ZIP” is defined as the following set of individuals:

Mark Adler, John Bush, Karl Davis, Harald Denker, Jean-Michel Dubois, Jean-loup Gailly, Hunter Goatley, Ed Gordon, Ian Gorman, Chris Herborth, Dirk Haase, Greg Hartwig, Robert Heath, Jonathan Hudson, Paul Kienitz, David Kirschbaum, Johnny Lee, Onno van der Linden, Igor Mandrichenko, Steve P. Miller, Sergio Monesi, Keith Owens, George Petrov, Greg Roelofs, Kai Uwe Rommel, Steve Salisbury, Dave Smith, Steven M. Schweda, Christian Spieler, Cosmin Truta, Antoine Verheijen, Paul von Behren, Rich Wales, Mike White

This software is provided “as is,” without warranty of any kind, express or implied. In no event shall Info-ZIP or its contributors be held liable for any direct, indirect, incidental, special or consequential damages arising out of the use of or inability to use this software.

Permission is granted to anyone to use this software for any purpose, including commercial applications, and to alter it and redistribute it freely, subject to the following restrictions:

1. Redistributions of source code must retain the above copyright notice, definition, disclaimer, and this list of conditions.
2. Redistributions in binary form (compiled executables) must reproduce the above copyright notice, definition, disclaimer, and this list of conditions in documentation and/or other materials provided with the distribution. The sole exception to this condition is redistribution of a standard UnZipSFX binary (including SFXWiz) as part of a self-extracting archive; that is permitted without inclusion of this license, as long as the normal SFX banner has not been removed from the binary or disabled.
3. Altered versions–including, but not limited to, ports to new operating systems, existing ports with new graphical interfaces, and dynamic, shared, or static library versions–must be plainly marked as such and must not be misrepresented as being the original source. Such altered versions also must not be misrepresented as being Info-ZIP releases–including, but not limited to, labeling of the altered versions with the names “Info-ZIP” (or any variation thereof, including, but not limited to, different capitalizations),

Information Provided by: DEALER E-PROCESS

Downloaded from www.Manualslib.com manuals search engine

"Pocket UnZip," "WiZ" or "MacZip" without the explicit permission of Info-ZIP. Such altered versions are further prohibited from misrepresentative use of the Zip-Bugs or Info-ZIP e-mail addresses or of the Info-ZIP URL(s).

4. Info-ZIP retains the right to use the names "Info-ZIP," "Zip," "UnZip," "UnZipSFX," "WiZ," "Pocket UnZip," "Pocket Zip," and "MacZip" for its own source and binary releases.

Information Provided by: DEALER E-PROCESS

Downloaded from www.Manualslib.com manuals search engine

A

About Driving the Vehicle iii
Accessories and
Modifications 10-2
Accessory Power 9-18
Add-On Electrical
Equipment 9-47
Additional Information
OnStar® 14-5
Adjustments
Lumbar, Front Seats 3-4
Air Cleaner/Filter, Engine 10-12
Air Conditioning 8-5
Air Filter, Passenger
Compartment 8-9
Air Vents 8-9
Airbag System
Check 3-29
How Does an Airbag
Restrain? 3-22
Passenger Sensing
System 3-24
What Makes an Airbag
Inflate? 3-22
Airbag System (cont'd)
What Will You See after an
Airbag Inflates? 3-22
When Should an Airbag
Inflate? 3-21
Where Are the Airbags? 3-19
Airbags
Adding Equipment to the
Vehicle 3-28
Passenger Status Indicator . . .5-13
Readiness Light 5-12
Servicing Airbag-Equipped
Vehicles 3-28
System Check 3-17
Alarm
Vehicle Security 2-9
All-Wheel Drive 9-25, 10-24
Light 5-19
AM-FM Radio 7-5
Antenna
Satellite Radio 7-10
Antilock Brake
System (ABS) 9-25
Warning Light 5-18
Appearance Care
Exterior 10-74
Interior 10-78
Assistance Program,
Roadside 13-5
Audio Players 7-11
CD 7-11
MP3 7-16
Audio System
Fixed Mast Antenna 7-10
Radio Reception 7-10
Theft-Deterrent Feature 7-2
Automatic
Climate Control System 8-5
Dimming Mirrors 2-12
Door Locks 2-6
Headlamp System 6-2
Transmission 9-21
Transmission Fluid 10-11
Automatic Transmission
Manual Mode 9-23
Shift Lock Control
Function Check 10-24
Auxiliary
Devices 7-20

Information Provided by:
DEALER E-PROCESS

Downloaded from www.Manualslib.com manuals search engine

B

Battery 10-23
Jump Starting 10-66
Load Management 6-6
Power Protection 6-6
Blade Replacement, Wiper . . . 10-25
Bluetooth
Overview 7-24
Brake
System Warning Light 5-16
Brakes 10-21
Antilock 9-25
Fluid 10-22
Parking 9-26
System Messages 5-29
Braking 9-4
Break-In, New Vehicle 9-14
Bulb Replacement 10-30
Fog Lamps 6-4, 10-28
Front Turn Signal and
Parking Lamps 10-28
Halogen Bulbs 10-27
Headlamp Aiming 10-27
Bulb Replacement (cont'd)
Headlamps 10-27
License Plate Lamps 10-29
Taillamps, Turn Signal,
Stoplamps, and
Back-up Lamps 10-29
Buying New Tires 10-52

C

Calibration 5-4
California
Fuel Requirements 9-36
Camera
Rear Vision (RVC) 9-34
Capacities and
Specifications 12-2
Carbon Monoxide
Engine Exhaust 9-20
Liftgate 2-8
Winter Driving 9-8
Cargo
Cover 4-2
Management System 4-2
Tie-Downs 4-2
Cautions, Danger, and
Warnings iii
CD Player 7-11
Center Console Storage 4-2
Chains, Tire 10-57
Charging System Light 5-13
Check
Engine Light 5-14
Ignition
Transmission Lock 10-25
Child Restraints
Infants and Young
Children 3-32
Lower Anchors and
Tethers for Children 3-38
Older Children 3-30
Securing 3-44, 3-46
Systems 3-35
Circuit Breakers 10-31
Cleaning
Exterior Care 10-74
Interior Care 10-78
Climate Control Systems 8-1
Air Conditioning 8-1
Automatic 8-5
Heating 8-1
Clock 5-6
Cluster, Instrument 5-9

Information Provided by:
DEALER E-PROCESS

Downloaded from www.Manualslib.com manuals search engine

Collision Damage Repair 13-9
Compact Spare Tire 10-65
Compartments
  Storage 4-1
Compass 5-4
  Messages 5-29
Connections
  OnStar® 14-3
Control
  Traction and Electronic
    Stability 9-28
Control of a Vehicle 9-4
Convenience Net 4-3
Convex Mirrors 2-11
Coolant
  Engine 10-14
  Engine Temperature
    Warning Light 5-20
Cooling System 10-13
  Engine Messages 5-30
Courtesy Transportation
  Program 13-7
Cover
  Cargo 4-2
  Engine 10-7
Cruise Control 9-30
  Light 5-23
  Messages 5-30
Cupholders 4-1
Customer Assistance 13-4
  Offices 13-3
  Text Telephone (TTY)
    Users 13-4
Customer Information
  Service Publications
    Ordering Information 13-11
Customer Satisfaction
  Procedure 13-1

D

Damage Repair, Collision 13-9
Danger, Warnings, and
  Cautions iii
Data Recorders, Event 13-14
Daytime Running
  Lamps (DRL) 6-2
Defensive Driving 9-3
Delayed Locking 2-6
Devices
  Auxiliary 7-20
Diagnostics
  OnStar® 14-5
Distracted Driving 9-2
Dome Lamps 6-5
Door
  Ajar Light 5-23
  Ajar Messages 5-30
  Delayed Locking 2-6
  Locks 2-6
  Power Locks 2-6
Drive Belt Routing, Engine 12-4
Drive Systems
  All-Wheel Drive 9-25, 10-24
Driver Behavior 9-2
Driver Information
  Center (DIC) 5-24
Driving
  Characteristics and
    Towing Tips 9-41
  Defensive 9-3
  Drunk 9-3
  Environment 9-2
  For Better Fuel Economy 1-21
  Highway Hypnosis 9-7
  Hill and Mountain Roads 9-7
  If the Vehicle is Stuck 9-9

Information Provided by:
DEALER E-PROCESS

Downloaded from www.Manualslib.com manuals search engine

Driving (cont'd)
Loss of Control 9-5
Off-Road Recovery 9-5
Vehicle Load Limits 9-10
Wet Roads 9-6
Winter 9-8
Driving the Vehicle iii

E

E85 or FlexFuel 9-37
ECO Button 9-24
Economy Mode
Fuel 9-24
Electric Parking Brake Light . . . 5-17
Electrical Equipment,
Add-On 9-47
Electrical System
Engine Compartment
Fuse Block 10-31
Fuses and Circuit
Breakers 10-31
Instrument Panel Fuse
Block 10-34
Overload 10-30
Emergency
OnStar® 14-2
Engine
Air Cleaner/Filter 10-12
Check and Service Engine
Soon Light 5-14
Compartment Overview 10-4
Coolant 10-14
Coolant Temperature
Warning Light 5-20
Cooling System 10-13
Cooling System Messages . . . 5-30
Cover 10-7
Drive Belt Routing 12-4
Exhaust 9-20
Oil Life System 10-10
Oil Messages 5-31
Overheating 10-18
Power Messages 5-32
Reduced Power Light 5-22
Running While Parked 9-21
Starting 9-17
Entry Lighting 6-6
Equipment, Towing 9-46
Event Data Recorders 13-14
Extender, Safety Belt 3-16
Exterior Lamp Controls 6-1

F

Filter,
Engine Air Cleaner 10-12
Flash-to-Pass 6-2
Flashers, Hazard Warning 6-3
Flat Tire 10-57
Changing 10-59
FlexFuel
E85 9-37
Floor Mats 10-82
Fluid
Automatic Transmission 10-11
Brakes 10-22
Power Steering 10-20
Washer 10-20
Fog Lamps
Bulb Replacement 6-4, 10-28
Folding Mirrors 2-12
Folding Seatback 3-7
Front Fog Lamp
Light 5-22
Front Seats
Adjustment 3-3
Heated 3-6
Front Storage 4-1

Information Provided by:
DEALER E-PROCESS

Downloaded from www.Manualslib.com manuals search engine

Fuel 9-35
Additives 9-37
Economy Driving 1-21
Economy Light 5-21
Filling a Portable Fuel Container 9-40
Filling the Tank 9-38
Foreign Countries 9-37
Gasoline Specifications 9-36
Gauge 5-10
Low Fuel Warning Light 5-21
Recommended 9-36
Requirements, California 9-36
System Messages 5-32
Fuel Economy Mode 9-24
Fuses
Engine Compartment Fuse Block 10-31
Fuses and Circuit Breakers 10-31
Instrument Panel Fuse Block 10-34

G

Garage Door Opener 5-42
Programming 5-42
Gasoline
Specifications 9-36
Gate Ajar Light 5-23
Gauges
Fuel 5-10
Odometer 5-10
Speedometer 5-10
Tachometer 5-10
Trip Odometer 5-10
Warning Lights and Indicators 5-8
General Information
Service and Maintenance 11-1
Towing 9-40
Vehicle Care 10-2
Glove Box 4-1
GM Mobility Reimbursement Program 13-5

H

Halogen Bulbs 10-27
Hazard Warning Flashers 6-3
Head Restraints 3-2
Active 3-3
Headlamps 10-27
Aiming 10-27
Automatic 6-2
Bulb Replacement 10-27
Daytime Running Lamps (DRL) 6-2
Flash-to-Pass 6-2
High-Beam On Light 5-22
High/Low Beam Changer 6-2
Heated Front Seats 3-6
Heated Mirrors 2-12
Heating and Air Conditioning 8-1, 8-5
High-Beam On Light 5-22
High-Speed Operation 10-46
Highway Hypnosis 9-7
Hill and Mountain Roads 9-7
Hood 10-3
Horn 5-3
How to Wear Safety Belts Properly 3-11

Information Provided by:
DEALER E-PROCESS

Downloaded from www.Manualslib.com manuals search engine

I

Ignition Positions 9-15
Ignition Transmission Lock
Check 10-25
Immobilizer 2-10
Infants and Young Children,
Restraints 3-32
Infotainment 7-1
Instrument Cluster 5-9
Instrument Panel
Storage Area 4-1
Instrument Panel Overview 1-2
Interior Rearview Mirrors 2-13
Introduction iii

J

Jump Starting 10-66

K

Key and Lock Messages 5-32
Keyless Entry
Remote (RKE) System 2-2
Keys 2-1

L

Labeling, Tire Sidewall 10-39
Lamps
Daytime Running (DRL) 6-2
Dome 6-5
Exterior Controls 6-1
Front Turn Signal and
Parking Lamps 10-28
License Plate 10-29
Malfunction Indicator 5-14
Messages 5-32
Reading 6-5
Lap-Shoulder Belt 3-12
LATCH System
Replacing Parts after a
Crash 3-44
LATCH, Lower Anchors and
Tethers for Children 3-38
Liftgate
Carbon Monoxide 2-8
Lighting
Entry 6-6
Illumination Control 6-4
Lights
Airbag Readiness 5-12
All-Wheel Drive 5-19
Antilock Brake System
(ABS) Warning 5-18
Brake System Warning 5-16
Charging System 5-13
Cruise Control 5-23
Door Ajar 5-23
Electric Parking Brake 5-17
Engine Coolant
Temperature Warning 5-20
Flash-to-Pass 6-2
Front Fog Lamp 5-22
Fuel Economy 5-21
Gate Ajar 5-23
High-Beam On 5-22
High/Low Beam Changer 6-2
Low Fuel Warning 5-21
Low Washer Fluid Warning . . . 5-23
Reduced Engine Power 5-22
Safety Belt Reminders 5-11
Security 5-21
Service Vehicle Soon 5-16
StabiliTrak® Indicator 5-19

Information Provided by:
DEALER E-PROCESS

Downloaded from www.Manualslib.com manuals search engine

Lights (cont'd)
Tire Pressure 5-21
Traction Control System (TCS) Warning 5-20
Warning, Power Steering 5-19
Locks
Automatic Door 2-6
Delayed Locking 2-6
Door 2-6
Lockout Protection 2-7
Power Door 2-6
Safety 2-7
Loss of Control 9-5
Low Fuel Warning Light 5-21
Low Washer Fluid Warning Light 5-23
Lower Anchors and Tethers for Children (LATCH System) 3-38
Lumbar Adjustment 3-4
Front Seats 3-4

M

Maintenance Records 11-15
Maintenance Schedule Recommended Fluids and Lubricants 11-12
Malfunction Indicator Lamp 5-14
Manual Mode 9-23
Messages
Airbag System 5-34
Brake System 5-29
Compass 5-29
Door Ajar 5-30
Engine Cooling System 5-30
Engine Oil 5-31
Engine Power 5-32
Fuel System 5-32
Key and Lock 5-32
Lamp 5-32
Object Detection System 5-33
Ride Control System 5-33
Service Vehicle 5-34
Tire 5-34
Transmission 5-35
Vehicle 5-28
Vehicle Reminder 5-36
Mirrors
Automatic Dimming 2-12
Automatic Dimming Rearview 2-13
Convex 2-11
Folding 2-12
Heated 2-12
Manual Rearview 2-13
Power 2-12
Mirrors, Interior Rearview 2-13
Monitor System, Tire Pressure 10-46
MP3 7-16

N

Navigation
OnStar® 14-2
Net, Convenience 4-3
New Vehicle Break-In 9-14

O

Object Detection System Messages 5-33
Odometer 5-10
Trip 5-10

Information Provided by: DEALER E-PROCESS

Downloaded from www.Manualslib.com manuals search engine

Off-Road
Recovery 9-5
Oil
Engine 10-8
Engine Oil Life System 10-10
Messages 5-31
Older Children, Restraints 3-30
Online Owner Center 13-4
OnStar®
System, In Brief 1-22
OnStar® Additional
Information 14-5
OnStar® Connections 14-3
OnStar® Diagnostics 14-5
OnStar® Emergency 14-2
OnStar® Navigation 14-2
OnStar® Overview 14-1
OnStar® Security 14-2
Operation, Infotainment
System 7-4
Ordering
Service Publications 13-11
Outlets
Power 5-7
Overheating, Engine 10-18
Overview, Infotainment
System 7-2

P

Park
Shifting Into 9-18
Shifting Out of 9-19
Parking
Brake 9-26
Brake and P (Park)
Mechanism Check 10-25
Over Things That Burn 9-20
Parking Assist
Ultrasonic 9-32
Passenger Airbag Status
Indicator 5-13
Passenger Compartment Air
Filter 8-9
Passenger Sensing System . . . 3-24
Personalization
Vehicle 5-36
Phone
Bluetooth 7-24
Power
Door Locks 2-6
Mirrors 2-12
Outlets 5-7
Protection, Battery 6-6
Reduced Engine Light 5-22
Retained Accessory (RAP) . . . 9-18
Seat Adjustment 3-4
Steering Fluid 10-20
Windows 2-13
Power Steering Warning
Lights 5-19
Pregnancy, Using Safety
Belts 3-15
Privacy
Radio Frequency
Identification (RFID) 13-15
Program
Courtesy Transportation 13-7

Information Provided by:
DEALER E-PROCESS

Downloaded from www.Manualslib.com manuals search engine

R

Radio Frequency
Identification (RFID) 13-15
Statement 13-15
Radios
AM-FM Radio 7-5
Reception 7-10
Satellite 7-6
Reading Lamps 6-5
Rear Seats 3-8
Rear Vision Camera (RVC) 9-34
Rear Window Washer/Wiper 5-4
Rearview Mirrors 2-13
Automatic Dimming 2-13
Reclining Seatbacks 3-5
Recommended
Fuel 9-36
Recommended Fluids and
Lubricants 11-12
Records
Maintenance 11-15
Recreational Vehicle
Towing 10-71
Reduced Engine Power
Light 5-22
Reimbursement Program,
GM Mobility 13-5
Remote Keyless Entry (RKE)
System 2-2
Remote Vehicle Start 2-4
Replacement Bulbs 10-30
Replacement Parts
Airbags 3-30
Maintenance 11-13
Replacing Airbag System 3-30
Replacing LATCH System
Parts after a Crash 3-44
Replacing Safety Belt
System Parts after a Crash ... 3-17
Reporting Safety Defects
Canadian Government 13-13
General Motors 13-13
U.S. Government 13-12
Restraints
Where to Put 3-36
Retained Accessory
Power (RAP) 9-18
Ride Control Systems
Messages 5-33
Roads
Driving, Wet 9-6
Roadside Assistance
Program 13-5
Roof
Sunroof 2-14
Roof Rack System 4-3
Rotation, Tires 10-50
Routing, Engine Drive Belt 12-4
Running the Vehicle While
Parked 9-21

S

Safety Belts 3-9
Care 3-16
Extender 3-16
How to Wear Safety Belts
Properly 3-11
Lap-Shoulder Belt 3-12
Reminders 5-11
Replacing after a Crash 3-17
Use During Pregnancy 3-15
Safety Defects Reporting
Canadian Government 13-13
General Motors 13-13
U.S. Government 13-12
Safety Locks 2-7
Safety System Check 3-16

Information Provided by:
DEALER E-PROCESS

Downloaded from www.Manualslib.com manuals search engine

i-10 INDEX

Satellite Radio 7-6
Scheduling Appointments 13-7
Seats
  Adjustment, Front 3-3
  Folding Seatback 3-7
  Head Restraints 3-2
  Heated Front 3-6
  Lumbar Adjustment, Front 3-4
  Power Adjustment, Front 3-4
  Rear 3-8
  Reclining Seatbacks 3-5
Securing Child
  Restraints 3-44, 3-46
Security
  Light 5-21
  OnStar® 14-2
  Vehicle 2-9
  Vehicle Alarm 2-9
Service
  Accessories and
    Modifications 10-2
  Doing Your Own Work 10-3
  Engine Soon Light 5-14
  Maintenance Records 11-15
  Maintenance, General
    Information 11-1
Service (cont'd)
  Parts Identification Label 12-1
  Publications Ordering
    Information 13-11
  Scheduling Appointments 13-7
  Vehicle Messages 5-34
  Vehicle Soon Light 5-16
Servicing the Airbag 3-28
Shift Lock Control Function
  Check, Automatic
  Transmission 10-24
Shifting
  Into Park 9-18
  Out of Park 9-19
Signals, Turn and
  Lane-Change 6-3
Spare Tire
  Compact 10-65
Specifications and
  Capacities 12-2
Speedometer 5-10
StabiliTrak
  Indicator Light 5-19
Start Vehicle, Remote 2-4
Starter Switch Check 10-24
Starting the Engine 9-17
Steering 9-4
  Fluid, Power 10-20
  Power, Warning Lights 5-19
  Wheel Adjustment 5-2
  Wheel Controls 5-2
Stoplamps and Back-up Lamps
  Bulb Replacement 10-29
Storage Areas
  Cargo Cover 4-2
  Cargo Management System . . . 4-2
  Center Console 4-2
  Convenience Net 4-3
  Front 4-1
  Glove Box 4-1
  Instrument Panel 4-1
  Roof Rack System 4-3
  Sunglasses 4-1
Storage Compartments 4-1
Stuck Vehicle 9-9
Sun Visors 2-14
Sunglass Storage 4-1
Sunroof 2-14
Symbols iv
System
  Infotainment 7-1
  Roof Rack 4-3

Information Provided by: DEALER E-PROCESS

Downloaded from www.Manualslib.com manuals search engine

T

Tachometer 5-10
Taillamps
  Bulb Replacement 10-29
Text Telephone (TTY) Users . . . 13-4
Theft-Deterrent Systems 2-10
  Immobilizer 2-10
Time 5-6
Tires
  Buying New Tires 10-52
  Chains 10-57
  Changing 10-59
  Compact Spare 10-65
  Designations 10-41
  Different Size 10-54
  If a Tire Goes Flat 10-57
  Inflation Monitor System 10-47
  Inspection 10-50
  Messages 5-34
  Pressure 10-46
  Pressure Light 5-21
  Pressure Monitor System . . . 10-46
  Rotation 10-50
  Sidewall Labeling 10-39
  Terminology and
    Definitions 10-42
Tires (cont'd)
  Uniform Tire Quality
    Grading 10-54
  Wheel Alignment and Tire
    Balance 10-56
  Wheel Replacement 10-56
  When It Is Time for New
    Tires 10-51
  Winter 10-38
Towing
  Driving Characteristics 9-41
  Equipment 9-46
  General Information 9-40
  Recreational Vehicle 10-71
  Trailer 9-44
  Vehicle 10-70
Traction
  Control System Warning
    Light 5-20
Traction Control/Electronic
  Stability Control 9-28
Trailer
  Towing 9-44
Transmission
  Automatic 9-21
  Fluid, Automatic 10-11
  Messages 5-35
Transportation Program,
  Courtesy 13-7
Trip Odometer 5-10
Turn and Lane-Change
  Signals 6-3
Turn Signal
  Bulb Replacement 10-29

U

Ultrasonic Parking Assist 9-32
Uniform Tire Quality
  Grading 10-54
Universal Remote System 5-42
  Operation 5-45
  Programming 5-42
Using This Manual iii

V

Vehicle
  Alarm System 2-9
  Control 9-4
  Design 9-2
  Identification
    Number (VIN) 12-1
  Load Limits 9-10
  Messages 5-28

Information Provided by: DEALER E-PROCESS

Downloaded from www.Manualslib.com manuals search engine

Vehicle (cont'd)
Personalization 5-36
Reminder Messages 5-36
Remote Start 2-4
Security 2-9
Service Soon Light 5-16
Towing 10-70
Vehicle Care
Tire Pressure 10-44
Ventilation, Air 8-9
Visors 2-14

W

Warning
Brake System Light 5-16
Warning Lights, Gauges, and Indicators 5-8
Warnings iii
Cautions and Danger iii
Hazard Flashers 6-3
Washer Fluid 10-20
Washer Fluid, Low Warning Light 5-23
Wheels
Alignment and Tire Balance 10-56
Different Size 10-54
Replacement 10-56
When It Is Time for New Tires 10-51
Where to Put the Restraint 3-36
Windows 2-13
Power 2-13
Windshield
Wiper/Washer 5-3
Winter
Driving 9-8
Winter Tires 10-38
Wiper Blade Replacement 10-25
Wipers
Rear Washer 5-4

Information Provided by:
DEALER E-PROCESS

Downloaded from www.Manualslib.com manuals search engine