2022

GMC

Canyon/Canyon Denali Owner's Manual

Contents

Introduction 1
Keys, Doors, and Windows 6
Seats and Restraints 21
Storage 73
Instruments and Controls 75
Lighting 102
Infotainment System 109
Climate Controls 162
Driving and Operating 168
Vehicle Care 232
Service and Maintenance 310
Technical Data 324
Customer Information 328
Reporting Safety Defects 336
OnStar 340
Connected Services 345
Index. 348

Litho in U.S.A.
Part No. 84754497 B Second Printing

Introduction

The names, logos, emblems, slogans, vehicle model names, and vehicle body designs appearing in this manual including, but not limited to, GM, the GM logo, GMC, the GMC Truck Emblem, CANYON, and DENALI are trademarks and/or service marks of General Motors LLC, its subsidiaries, affiliates, or licensors.

For vehicles first sold in Canada, substitute the name "General Motors of Canada Company" for GMC wherever it appears in this manual.

This manual describes features that may or may not be on the vehicle because of optional equipment that was not purchased on the vehicle, model variants, country specifications, features/applications that may not be available in your region, or changes subsequent to the printing of this owner's manual, including changes in standard or optional content.

If this vehicle has the Duramax diesel engine, see the Duramax diesel supplement for additional and specific information on this engine.

Refer to the purchase documentation relating to your specific vehicle to confirm the features.

Keep this manual in the vehicle for quick reference.

Canadian Vehicle Owners

A French language manual can be obtained from your dealer, at www.helminc.com, or from:

Propriétaires Canadiens

On peut obtenir un exemplaire de ce guide en français auprès du concessionnaire ou à l'adresse suivante:

©2021 General Motors LLC. All Rights Reserved.

Helm, Incorporated
Attention: Customer Service
47911 Halyard Drive
Plymouth, MI 48170
USA

Using this Manual

To quickly locate information about the vehicle, use the Index in the back of the manual. It is an alphabetical list of what is in the manual and the page number where it can be found.

Danger, Warning, and Caution

Warning messages found on vehicle labels and in this manual describe hazards and what to do to avoid or reduce them.

⚠ Danger

Danger indicates a hazard with a high level of risk which will result in serious injury or death.

⚠ Warning

Warning indicates a hazard that could result in injury or death.

Caution

Caution indicates a hazard that could result in property or vehicle damage.

A circle with a slash through it is a safety symbol which means “Do not,” “Do not do this,” or “Do not let this happen.”

Symbols

The vehicle has components and labels that use symbols instead of text. Symbols are shown along with the text describing the operation or information relating to a specific component, control, message, gauge, or indicator.

: Shown when the owner’s manual has additional instructions or information.

: Shown when the service manual has additional instructions or information.

: Shown when there is more information on another page — “see page.”

Vehicle Symbol Chart

Here are some additional symbols that may be found on the vehicle and what they mean. See the features in this manual for information.

: Air Conditioning System

: Air Conditioning Refrigerant Oil

: Airbag Readiness Light

: Antilock Brake System (ABS)

: Brake System Warning Light

: Dispose of Used Components Properly

: Do Not Apply High Pressure Water

: Engine Coolant Temperature

: Flame/Fire Prohibited

: Flammable

: Forward Collision Alert

: Fuse Block Cover Lock Location

: Fuses

: ISOFIX/LATCH System Child Restraints

: Keep Fuse Block Covers Properly Installed

: Lane Change Alert

: Lane Departure Warning

: Lane Keep Assist

: Malfunction Indicator Lamp

: Oil Pressure

P : Park Assist

: Pedestrian Ahead Indicator

: Power

: Rear Cross Traffic Alert

: Registered Technician

: Remote Vehicle Start

: Risk of Electrical Fire

: Seat Belt Reminders

: Side Blind Zone Alert

: Tire Pressure Monitor

: Traction Control/StabiliTrak/Electronic Stability Control (ESC)

: Under Pressure

: Vehicle Ahead Indicator

Instrument Panel Overview

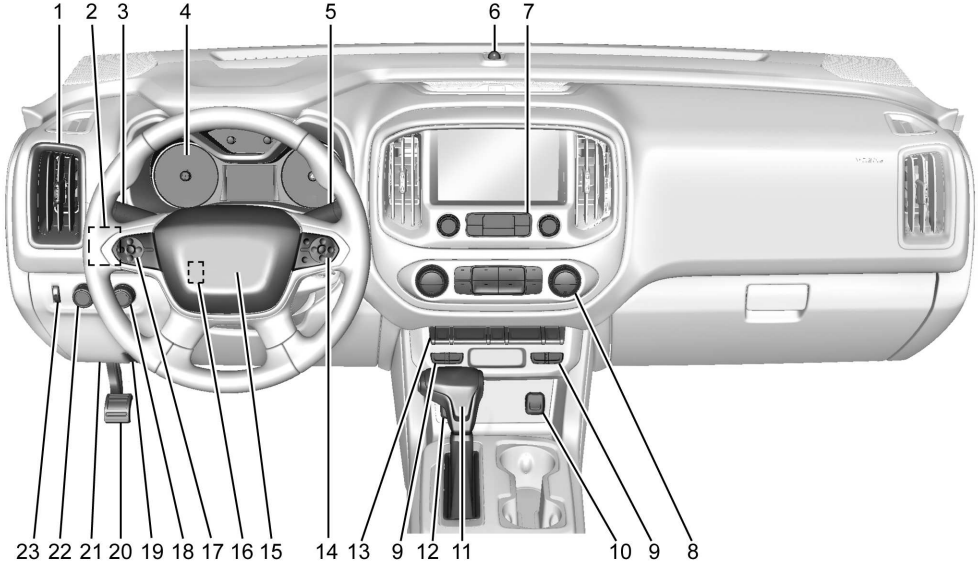

1. *Air Vents* ⇨ *167*.
2. Trailer Brake Control Panel (If Equipped) (Out of View). See "Integrated Trailer Brake Control System" under *Towing Equipment* ⇨ *223*.
3. Turn Signal Lever. See *Turn and Lane-Change Signals* ⇨ *104*.

   Driver Information Center (DIC) (Base Level) Controls (If Equipped). See *Driver Information Center (DIC) (Base Level)* ⇨ *93* or *Driver Information Center (DIC) (Uplevel)* ⇨ *96*.
4. *Instrument Cluster* ⇨ *81*.
5. *Windshield Wiper/Washer* ⇨ *77*.
6. Light Sensor. See *Automatic Headlamp System* ⇨ *103*.

   Vehicle Alarm System Indicator (If Equipped). See *Vehicle Alarm System* ⇨ *14*.
7. Infotainment Controls. See *Overview* ⇨ *110*.
8. *Climate Control Systems* ⇨ *162* (If Equipped).

   Automatic Climate Control System ⇨ *164* (If Equipped).
9. *Heated and Ventilated Front Seats* ⇨ *25* (If Equipped).
10. *Power Outlets* ⇨ *78* (If Equipped).
11. Shift Lever. See *Automatic Transmission* ⇨ *190* or *Manual Mode* ⇨ *192*.
12. Auxiliary Jack. See the infotainment manual.

    USB Port. See the infotainment manual.
13. *Hazard Warning Flashers* ⇨ *104*.

    Traction Control/Electronic Stability Control ⇨ *201*.

    Exterior Cargo Lamps ⇨ *105*.

    Lane Departure Warning (LDW) ⇨ *211* (If Equipped).

    Hill Descent Control (HDC) ⇨ *202* (If Equipped).

    Tow/Haul Mode ⇨ *194* (If Equipped).
14. *Steering Wheel Controls* ⇨ *76* (If Equipped).

    Driver Information Center (DIC) (Uplevel) Controls (If Equipped). See *Driver Information Center (DIC) (Base Level)* ⇨ *93* or *Driver Information Center (DIC) (Uplevel)* ⇨ *96*.
15. *Horn* ⇨ *77*.
16. *Steering Wheel Adjustment* ⇨ *76* (Out of View).
17. *Cruise Control* ⇨ *203*.
18. Transfer Case Knob (If Equipped). See *Four-Wheel Drive* ⇨ *194*.
19. Hood Release. See *Hood* ⇨ *234*.
20. *Parking Brake* ⇨ *200*.
21. Data Link Connector (DLC) (Out of View). See *Malfunction Indicator Lamp (Check Engine Light)* ⇨ *87*.
22. *Exterior Lamp Controls* ⇨ *102*.

    Fog Lamps ⇨ *105* (If Equipped).
23. *Instrument Panel Illumination Control* ⇨ *106*.

Keys, Doors, and Windows

Keys and Locks
Keys 6
Remote Keyless Entry (RKE) System 8
Remote Keyless Entry (RKE) System Operation 9
Remote Vehicle Start 11
Door Locks 12
Power Door Locks 12
Delayed Locking 12
Automatic Door Locks 13
Lockout Protection 13
Safety Locks 13

Doors
Tailgate 14
Transporting Items That Can Catch Fire 14

Vehicle Security
Vehicle Security 14
Vehicle Alarm System 14
Immobilizer 15
Immobilizer Operation 15

Exterior Mirrors
Convex Mirrors 16
Manual Mirrors 16
Power Mirrors 16
Folding Mirrors 17
Heated Mirrors 17
Blind Spot Mirrors 17

Interior Mirrors
Interior Rearview Mirrors 18
Manual Rearview Mirror 18
Automatic Dimming Rearview Mirror ... 18

Windows
Windows 18
Power Windows 18
Rear Windows 20
Sun Visors 20

Keys and Locks

Keys

⚠ Warning

Leaving children in a vehicle with the ignition key is dangerous and children or others could be seriously injured or killed. They could operate the power windows or other controls or make the vehicle move. The windows will function with the keys in the ignition, and children or others could be caught in the path of a closing window. Do not leave children in a vehicle with the ignition key.

⚠ Warning

If the key is unintentionally rotated while the vehicle is running, the ignition could be moved out of the RUN position. This could be caused by heavy items hanging from the key ring, or by large or long items attached to the key ring that could be contacted by the driver or steering wheel. If the ignition moves out of the RUN position, the engine will shut off, braking and steering power assist may be impacted, and airbags may not deploy. To reduce the risk of unintentional rotation of the ignition key, do not change the way the ignition key and Remote Keyless Entry (RKE) transmitter, if equipped, are connected to the provided key rings.

The ignition key and key rings, and RKE transmitter, if equipped, are designed to work together as a system to reduce the risk of unintentionally moving the key out of the RUN position. The ignition key has a small hole to allow attachment of the provided key ring. It is important that any replacement ignition keys have a small hole. See your dealer if a replacement key is required.

The combination and size of the rings that came with your keys were specifically selected for your vehicle. The rings are connected to the key like two links of a chain to reduce the risk of unintentionally moving the key out of the RUN position. Do not add any additional items to the ring attached to the ignition key. Attach additional items only to the second ring, and limit added items to a few essential keys or small, light items no larger than an RKE transmitter.

Interference from radio-frequency identification (RFID) tags may prevent the key from starting the vehicle. Keep RFID tags away from the key when starting the vehicle.

The key is used for the ignition and all door locks.

Programming Keys

Follow these procedures to program up to eight keys to the vehicle.

Programming with Two Recognized Keys

To program a new key:

1. Insert the original, already programmed key in the ignition and turn the ignition on.

2. Turn the ignition off and remove the key.
3. Quickly, within five seconds, insert the second original already programmed key in the ignition and turn the ignition on.
4. Turn the ignition off, and remove the key.
5. Insert the new key to be programmed and turn the ignition on within five seconds.

   The security light will turn off once the key has been programmed.
6. Repeat Steps 1–5 if additional keys are to be programmed.

If a key is lost or damaged, see your dealer to have a new key made.

Programming without Two Recognized Keys

Program a new key to the vehicle when a recognized key is not available. Canadian regulations require that owners see their dealer.

If two currently recognized keys are not available, follow this procedure to program the first key.

This procedure will take approximately 30 minutes to complete for the first key. The vehicle must be off and all of the keys you wish to program must be with you.

1. Insert the new vehicle key into the ignition.
2. Turn the ignition on. The security light will come on.
3. Wait 10 minutes until the security light turns off.
4. Turn the ignition off.
5. Repeat Steps 2–4 two more times. After the third time, turn the ignition on; the key is learned and all previously known keys will no longer work with the vehicle.
6. To learn the second key, turn the ignition off. Insert the second key to be learned and turn the ignition on.

After two keys are learned, the remaining keys can be learned by following the procedure in “Programming with Two Recognized Keys.”

If it becomes difficult to turn a key, inspect the key blade for debris. Periodically clean with a brush or pick.

See your dealer if a replacement key or additional key is needed.

If locked out of the vehicle, see *Roadside Assistance Program* ⇨ *331*.

With an active OnStar or connected service plan, an OnStar Advisor may remotely unlock the vehicle. See *OnStar Overview* ⇨ *340*.

Remote Keyless Entry (RKE) System

See *Radio Frequency Statement* ⇨ *336*.

If there is a decrease in the Remote Keyless Entry (RKE) operating range:

- Check the distance. The transmitter may be too far from the vehicle.
- Check the location. Other vehicles or objects may be blocking the signal.
- Check the transmitter's battery. See “Battery Replacement” later in this section.
- If the transmitter is still not working correctly, see your dealer or a qualified technician for service.

Remote Keyless Entry (RKE) System Operation

The Keyless Access system allows for vehicle entry when the Remote Keyless Entry (RKE) transmitter is within 1 m (3 ft).

The RKE transmitter functions may work up to 60 m (197 ft) away from the vehicle.

Other conditions can affect the performance of the transmitter. See *Remote Keyless Entry (RKE) System* ⇨ *8*.

With Remote Start, without Similar

: If equipped, is used to start the engine from outside the vehicle using the RKE transmitter. See *Remote Vehicle Start* ⇨ *11*.

: Press to lock all doors and the tailgate.

If enabled, the turn signal lamps flash once to indicate locking has occurred. If enabled, the horn chirps when is pressed again within three seconds. See *Vehicle Personalization* ⇨ *99*.

Pressing arms the vehicle alarm system. See *Vehicle Alarm System* ⇨ *14*.

: Press once to unlock only the driver door. If is pressed again within three seconds, all remaining doors and the tailgate unlock. The interior lamps may come on and stay on for 20 seconds or until the ignition is turned on.

If enabled, the turn signal lamps flash twice to indicate unlocking has occurred.
If enabled, the exterior lamps may turn on. See *Vehicle Personalization* ⇨ *99*.

Pressing on the RKE transmitter disarms the vehicle alarm system. See *Vehicle Alarm System* ⇨ *14*.

: Press and release one time to initiate vehicle locator. The exterior lamps flash and the horn chirps three times.

Press and hold for at least three seconds to sound the panic alarm. The turn signal lamps flash and the horn sounds repeatedly for 30 seconds. The alarm turns off when the ignition is turned on or is pressed again. The ignition must be off for the panic alarm to work.

Programming Transmitters to the Vehicle

Only RKE transmitters programmed to the vehicle will work. If a transmitter is lost or stolen, a replacement can be purchased and programmed through your dealer.

The vehicle can be reprogrammed so that lost or stolen transmitters no longer work. Any remaining transmitters will need to be programmed. Each vehicle can have up to eight transmitters matched to it.

Battery Replacement

⚠ Warning

Never allow children to play with the RKE transmitter. The transmitter contains a small battery, which can be a choking hazard. If swallowed, internal burns can

(Continued)

Warning (Continued)

occur, resulting in severe injury or death. Seek medical attention immediately if a battery is swallowed.

⚠ Warning

To avoid personal injury, do not touch metal surfaces on the RKE transmitter when it has been exposed to extreme heat. These surfaces can be hot to the touch at temperatures above 59 °C (138 °F).

Caution

When replacing the battery, do not touch any of the circuitry on the transmitter. Static from your body could damage the transmitter.

Caution

Always replace the battery with the correct type. Replacing the battery with an incorrect type could potentially create a risk of battery explosion. Dispose of used batteries according to instructions and local laws. Do not attempt to burn, crush, or cut the used battery, and avoid exposing the battery to environments with extremely low air pressures or high temperatures.

Caution

If the RKE transmitter is not reassembled properly, liquids could enter the housing and damage the circuitry, resulting in an RKE transmitter malfunction and/or failure. To prevent damage, always follow the steps for RKE transmitter reassembly in this manual to ensure the transmitter is sealed properly whenever the RKE transmitter is opened.

Replace the battery in the transmitter soon if the DIC displays REPLACE BATTERY IN REMOTE KEY.

To replace the battery:

1. Separate and remove the back cover of the transmitter with a flat, thin object, such as a coin.

2. Press and slide the battery down toward the pocket of the transmitter in the direction of the key ring. Do not use a metal object.
3. Remove the battery.
4. Insert the new battery, positive side facing up. Replace with a CR2032 or equivalent battery.
5. Push together the transmitter back cover top side first, and then the bottom toward the key ring.

Remote Vehicle Start

If equipped, the engine can be started from outside of the vehicle. The climate controls and rear window defogger may also come on.

If the vehicle has heated and ventilated seats and the feature is turned on in vehicle personalization, the heated or ventilated seats will turn on during cold or hot outside temperatures and will shut off when the ignition is turned on. See *Heated and Ventilated Front Seats* ⇨ *25*.

Laws in some communities may restrict the use of remote starters. Check local regulations for any requirements on remote starting of vehicles.

If your vehicle is low on fuel, do not use the remote start feature. The vehicle may run out of fuel.

The vehicle cannot be remote started if:

- The key is in the ignition.
- The hood is not closed.
- There is an emission control system malfunction and the malfunction indicator lamp is on.
- The hazard warning flashers are on.
- Two remote vehicle starts, or a single remote start with an extension, have already been used.
- The vehicle is not in P (Park).

The engine will turn off during a remote vehicle start if:

- The coolant temperature gets too high.
- The oil pressure gets low.

The RKE transmitter range may be less while the vehicle is running.

Other conditions can affect the performance of the transmitter. See *Remote Keyless Entry (RKE) System* ⇨ *8* or *Vehicle Personalization* ⇨ *99*.

Starting the Engine Using Remote Start

1. Press and release 🔒.
2. Immediately press and hold ⟲ until the turn signal lamps flash or for at least four seconds.

   When the vehicle starts, the parking lamps will turn on. The doors will be locked and the climate control system may come on.

The engine will continue to run for 15 minutes. Repeat the steps for one 15-minute time extension. Turn the ignition on to operate the vehicle.

Extending Engine Run Time

The engine run time can be extended by 15 minutes, for a total of 30 minutes, if during the first 15 minutes Steps 1 and 2 are repeated while the engine is still running. An extension can be requested 30 seconds after starting.

A maximum of two remote starts, or a single start with an extension, is allowed between ignition cycles.

The ignition must be turned on and then back off to use remote start again.

Canceling a Remote Start

To cancel a remote start, do one of the following:

- Press and hold ⟲ until the parking lamps turn off.
- Turn on the hazard warning flashers.
- Turn the vehicle on and then off.

Door Locks

⚠ Warning

Unlocked doors can be dangerous.

- Passengers, especially children, can easily open the doors and fall out of a moving vehicle. The doors can be unlocked and opened while the vehicle is moving. The chance of being thrown out of the vehicle in a crash is increased if the doors are not locked. So, all passengers should wear seat belts properly and the doors should be locked whenever the vehicle is driven.
- Young children who get into unlocked vehicles may be unable to get out. A child can be overcome by extreme heat and can suffer permanent injuries

(Continued)

Warning (Continued)

(Continued)

or even death from heat stroke. Always lock the vehicle whenever leaving it.

- Outsiders can easily enter through an unlocked door when you slow down or stop the vehicle. Locking the doors can help prevent this from happening.

To lock or unlock a door from the outside press 🔒 or 🔓 on the Remote Keyless Entry (RKE) transmitter or use the key in the driver door.

To lock a door from the inside, push down on the door lock knob. To unlock, pull the door handle once to unlock the door and again to unlatch it. The power door lock switch on the interior of the door can also be used to lock or unlock the doors from the inside.

Free-Turning Locks

The door key lock cylinder turns freely when either the wrong key is used, or the correct key is not fully inserted. The free-turning door lock feature prevents the lock from being forced open. To reset the lock, turn it to the vertical position with the correct key fully inserted. Remove the key and insert it again. If this does not reset the lock, turn the key halfway around in the cylinder and repeat the reset procedure.

Power Door Locks

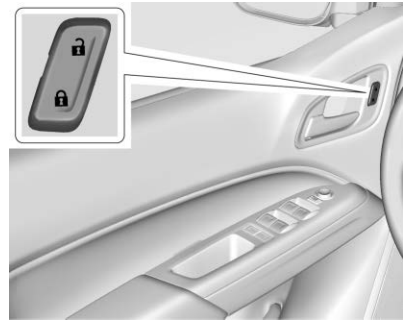

Crew Cab Shown, Extended Cab Similar

If equipped with power door locks:

🔒 **:** Press to lock the doors.

🔓 **:** Press to unlock the doors.

Delayed Locking

This feature delays the actual locking of the doors until five seconds after all doors are closed.

Delayed locking can only be turned on when the Open Door Anti-Lockout feature has been turned off.

When 🔒 is pressed on the power door lock switch with the door open, a chime will sound three times indicating that delayed locking is active.

The doors will then lock automatically five seconds after all doors are closed. If a door is reopened before five seconds have elapsed, the five-second timer will reset once all the doors are closed again.

Press 🔒 on the door lock switch again, or press 🔒 on the RKE transmitter, to override this feature and lock the doors immediately.

Delayed locking can be programmed. See *Vehicle Personalization* ⇨ *99*.

Automatic Door Locks

If equipped, the doors will lock automatically when all doors are closed, the ignition is on, and the shift lever is moved out of P (Park). If a vehicle door is unlocked and then opened and closed, the doors will lock either when your foot is removed from the brake or the vehicle speed becomes faster than 13 km/h (8 mph).

To unlock the doors:

- Press 🔓 on a power door lock switch.
- Shift the transmission into P (Park).

Automatic door locking cannot be disabled. Automatic door unlocking can be programmed. See *Vehicle Personalization* ⇨ *99*.

Lockout Protection

When locking is requested with the driver door open and the key in the ignition, all the doors will lock and then the driver door will unlock. This can be manually overridden by pressing and holding 🔒 on the power door lock switch.

Open Door Anti-Lockout

If Open Door Anti-Lockout has been turned on and the vehicle is off, the driver door is open, and locking is requested, all the doors will lock and the driver door will remain unlocked. The Open Door Anti-Lockout feature can be turned on or off. See *Vehicle Personalization* ⇨ *99*.

Safety Locks

If equipped, the rear door safety locks prevent passengers from opening the rear doors from inside the vehicle.

Press 🔒 to activate the safety locks on the rear doors. The indicator light comes on when activated. The vehicle must be on, in ACC/ACCESSORY, or in Retained Accessory Power (RAP). See *Retained Accessory Power (RAP)* ⇨ *187*.

If the indicator light flashes, the feature may not be working properly.

Doors

Tailgate

⚠ Warning

It is extremely dangerous to ride on the tailgate, even when the vehicle is operated at low speeds. People riding on the tailgate can easily lose their balance and fall in response to vehicle maneuvers. Falling from a moving vehicle may result in serious injuries or death. Do not allow people to ride on the tailgate. Be sure everyone in your vehicle is in a seat and using a seat belt properly.

On vehicles with a lock on the tailgate, use the key to lock or unlock the tailgate.

If equipped, to lock or unlock the tailgate, use the RKE transmitter or the key. See *Remote Keyless Entry (RKE) System Operation* ⇨ *9*

Open the tailgate by lifting up on its handle while pulling the tailgate down.

To shut the tailgate, firmly push it upward until it latches.

After closing the tailgate, pull it back to be sure it latches securely.

Transporting Items That Can Catch Fire

⚠ Warning

To avoid personal injury and/or vehicle damage when transporting items that can catch fire, such as leaves, mulch, hay, or cardboard, in the truck bed:

- Make sure items are securely contained inside the truck bed. Never allow them to hang over the sides or fall in between the truck bed and the cab.
- Never place items between the cab and the truck bed. They could touch hot exhaust parts and ignite.

⚠ Warning

Keep cigarettes, sparks, and other ignition sources away from the area between the bed of the truck and cab. They could fall onto the fuel system below and start a fire. You or others could be injured and/or the vehicle damaged.

Vehicle Security

This vehicle has theft-deterrent features; however, they do not make the vehicle impossible to steal.

Vehicle Alarm System

If equipped with the anti-theft alarm system, the indicator light, on the instrument panel near the windshield, indicates the status of the system.

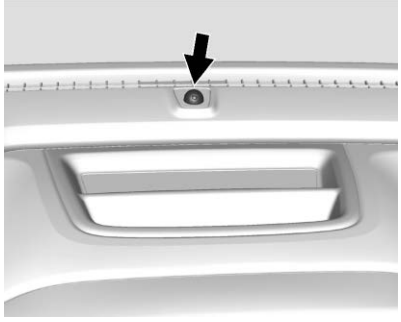

Off : Alarm system is disarmed.

On Solid : Vehicle is secured during the delay to arm the system.

Fast Flash : Vehicle is unsecured. A door or the hood is open.

Slow Flash : Alarm system is armed.

Arming the Alarm System

1. Turn off the vehicle.
2. Lock the vehicle with one of the following:
   - Use the Remote Keyless Entry (RKE) transmitter.
   - With a door open, press 🔒 on the interior of the door.
3. After 30 seconds the alarm system will arm, and the indicator light will begin to slowly flash indicating the alarm system is operating. Pressing 🔒 on the RKE transmitter a second time will bypass the 30-second delay and immediately arm the alarm system.

The theft-deterrent alarm system will not arm if the doors are locked with the key.

If the driver door is opened without first unlocking with the RKE transmitter, the horn will chirp and the lights will flash to indicate pre-alarm. If the vehicle is not started, or the door is not unlocked by pressing 🔓 on the RKE transmitter during the 10-second pre-alarm, the alarm will be activated.

If a door or the hood is opened without first disarming the system, the turn signals will flash and the horn will sound for about 30 seconds. The alarm system will then re-arm to monitor for the next unauthorized event.

Disarming the Alarm System

To disarm the alarm system or turn off the alarm if it has been activated:

- Press 🔓 on the RKE transmitter.
- Start the vehicle.

To avoid setting off the alarm by accident:

- Lock the vehicle after all occupants have left the vehicle and all doors are closed.
- Always unlock a door with the RKE transmitter.

Unlocking the driver door with the key will not disarm the system or turn off the alarm.

Detecting a Tamper Condition

If 🔓 is pressed on the RKE transmitter and the horn chirps three times, an alarm occurred previously while the alarm system was armed.

Immobilizer

See *Radio Frequency Statement* ⇨ *336*.

Immobilizer Operation

This vehicle has a passive theft-deterrent system.

The system does not have to be manually armed or disarmed.

The vehicle is automatically immobilized when the vehicle is turned off.

The system is automatically disarmed when the ignition is turned from off to on.

The security light, in the instrument cluster, comes on if there is a problem with arming or disarming the theft-deterrent system.

When trying to start the vehicle, the security light comes on briefly when the ignition is turned on.

If the engine does not start and the security light stays on, there is a problem with the system. Turn the ignition off and try again.

If the engine still does not start, and the key appears to be undamaged, try another ignition key. It may be necessary to check the fuse. See *Fuses and Circuit Breakers* ⇨ *258*. If the engine still does not start with the other key, the vehicle needs service. If the vehicle does start, the first key may be faulty. See your dealer.

It is possible for the immobilizer system to learn new or replacement keys. Up to eight keys can be programmed for the vehicle. To program additional transmitters, see *Remote Keyless Entry (RKE) System Operation* ⇨ *9*.

Do not leave the transmitter or device that disarms or deactivates the vehicle theft-deterent system in the vehicle.

See your dealer to get a new key blank cut exactly as the ignition key that operates the system.

Exterior Mirrors

Convex Mirrors

⚠ Warning

A convex mirror can make things, like other vehicles, look farther away than they really are. If you cut too sharply into the right lane, you could hit a vehicle on the right. Check the inside mirror or glance over your shoulder before changing lanes.

The passenger side mirror is convex shaped. A convex mirror's surface is curved so more can be seen from the driver seat.

Manual Mirrors

If equipped, adjust manual mirrors by moving the mirror up and down or left to right to see a little of the side of the vehicle and to have a clear view behind the vehicle.

Using hood-mounted air deflectors and add-on convex mirror attachments could decrease mirror performance.

Power Mirrors

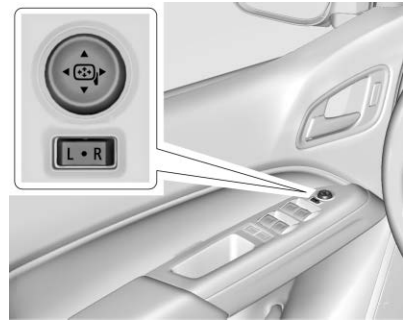

If equipped, adjust the power mirrors:

1. Move the selector switch to L (Left) or R (Right) to choose driver or passenger mirror.

2. Press the arrows on the control pad to move each mirror in the desired direction.
3. Return the selector switch to the center position.

Folding Mirrors

Manual Folding Mirrors

The mirrors can be folded inward toward the vehicle to prevent damage when going through an automatic car wash. Push the mirror outward to return it to the original position.

Heated Mirrors

If equipped, the rear window defogger also heats the outside mirrors.

REAR : Press to heat the outside mirrors. See "Rear Window Defogger" under *Climate Control Systems* ⇨ *162*.

Blind Spot Mirrors

The blind spot mirror is a small convex mirror built into the upper and outer corner of the driver outside mirror. It can show objects that may be in the vehicle's blind zone.

Driving with the Blind Spot Mirror

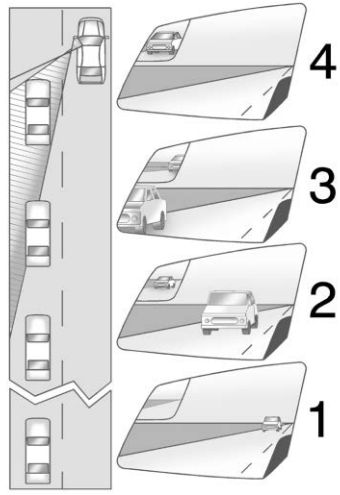

Actual Mirror View

1. When the approaching vehicle is a long distance away, the image in the main mirror is small and near the inboard edge of the mirror.
2. As the vehicle gets closer, the image in the main mirror gets larger and moves outboard.
3. As the vehicle enters the blind zone, the image transitions from the main mirror to the blind spot mirror.
4. When the vehicle is in the blind zone, the image only appears in the blind spot mirror.

Using the Outside Mirror with the Blind Spot Mirror

1. Set the main mirror so that the side of the vehicle can just be seen and the blind spot mirror has an unobstructed view.
2. When checking for traffic or before changing a lane, look at the main driver/passenger side mirror to observe traffic in the adjacent lane, behind your vehicle. Check the blind spot mirror for a vehicle in the blind zone. Then, glance over your shoulder to double check before moving slowly into the adjacent lane.

Interior Mirrors

Interior Rearview Mirrors

Adjust the rearview mirror for a clear view of the area behind your vehicle.

If equipped with OnStar, the vehicle may have three control buttons at the bottom of the mirror. See *OnStar Overview* ⇨ *340*.

To avoid accidental OnStar calls, clean the mirror with the ignition off. Do not spray glass cleaner directly on the mirror. Use a soft towel dampened with water.

Manual Rearview Mirror

If equipped, push the tab forward for daytime use and pull it rearward for nighttime use to avoid glare from the headlamps from behind.

Automatic Dimming Rearview Mirror

If equipped, the mirror will automatically reduce the glare of the headlamps from behind. The dimming feature comes on each time the vehicle is started.

Windows

⚠ Warning

Never leave a child, a helpless adult, or a pet alone in a vehicle, especially with the windows closed in warm or hot weather. They can be overcome by the extreme heat and suffer permanent injuries or even death from heat stroke.

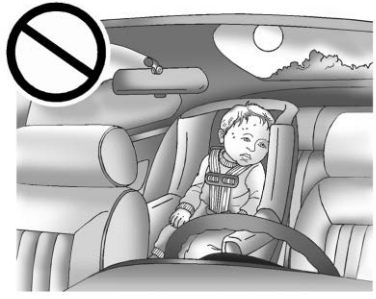

The vehicle aerodynamics are designed to improve fuel economy performance. This may result in a pulsing sound when either rear window is down and the front windows are up. To reduce the sound, open either a front window or the sunroof, if equipped.

Power Windows

⚠ Warning

Children could be seriously injured or killed if caught in the path of a closing window. Never leave keys in a vehicle with children. When there are children in the rear seat, use the window lockout button to prevent operation of the windows. See *Keys* ⇨ *6*.

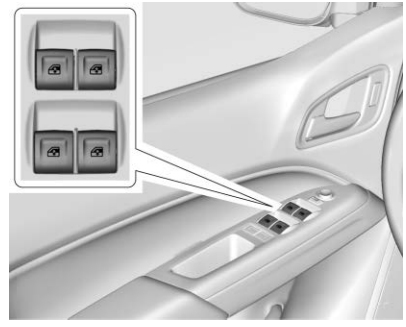

Crew Cab Shown, Extended Cab Similar

Power windows work when the ignition is on, in ACC/ACCESSORY, or when Retained Accessory Power (RAP) is active. See *Retained Accessory Power (RAP)* ⇨ *187*.

Using the window switch, press to open or pull to close the window.

The windows may be temporarily disabled if they are used repeatedly within a short time.

Rear Window Lockout (Crew Cab Only)

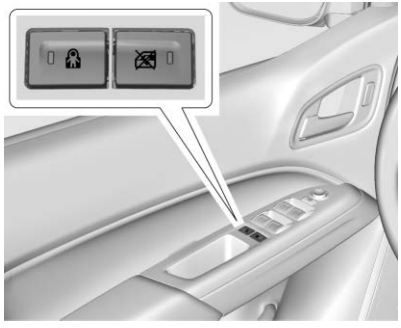

This feature stops the rear passenger windows from working.

- Press to engage the rear window lockout feature. The indicator light is on when engaged.
- Press again to disengage.

Window Express Movement

All windows can be opened without holding the window switch. Press the switch down fully and quickly release to express open the window.

If equipped, pull the window switch up fully and quickly release to express close the window.

Briefly press or pull the window switch in the same direction to stop that window's express movement.

Window Automatic Reversal System

The express-close feature will reverse window movement if it comes in contact with an object. Extreme cold or ice could cause the window to auto-reverse. The window will operate normally after the object or condition is removed.

Automatic Reversal System Override

⚠ Warning

If automatic reversal system override is active, the window will not reverse automatically. You or others could be injured and the window could be

(Continued)

Warning (Continued)

damaged. Before using automatic reversal system override, make sure that all people and obstructions are clear of the window path.

When the engine is on, override the automatic reversal system by pulling and holding the window switch if conditions prevent it from closing.

Programming the Power Windows

Programming may be necessary if the vehicle battery has been disconnected or discharged. If the window is unable to express-up, program each express-close window:

1. Close all doors.
2. Turn the ignition on or to ACC/ACCESSORY.
3. Partially open the window to be programmed. Then close it and continue to pull the switch briefly after the window has fully closed.
4. Open the window and continue to press the switch briefly after the window has fully opened.

Rear Windows

Sliding Rear Window

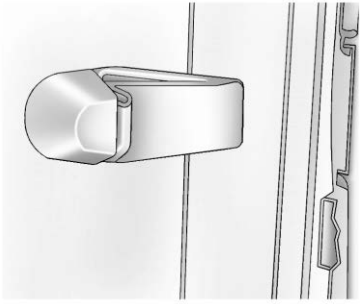

If the vehicle has this feature, squeeze the latch in the center of the window and slide the glass to open it.

Be sure the latch is engaged when the window is closed.

Sun Visors

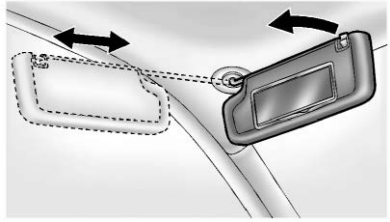

Pull the sun visor down to block glare. Detach the sun visor from the center mount to pivot to the side window and, if equipped, extend along the rod.

Seats and Restraints

Head Restraints
Head Restraints 21

Front Seats
Seat Adjustment 23
Power Seat Adjustment 23
Reclining Seatbacks 23
Lumbar Adjustment 24
Heated and Ventilated Front Seats 25

Rear Seats
Rear Seats 25

Seat Belts
Seat Belts 27
Buckle To Drive 28
How to Wear Seat Belts Properly 28
Lap-Shoulder Belt 30
Seat Belt Use During Pregnancy 33
Seat Belt Extender 33
Safety System Check 33
Seat Belt Care 34
Replacing Seat Belt System Parts after a Crash 34

Airbag System
Airbag System 34
Where Are the Airbags? 36
When Should an Airbag Inflate? 37
What Makes an Airbag Inflate? 37
How Does an Airbag Restrain? 38
What Will You See after an Airbag Inflates? 38
Passenger Sensing System 39
Servicing the Airbag-Equipped Vehicle 42
Adding Equipment to the Airbag-Equipped Vehicle 43
Airbag System Check 43
Replacing Airbag System Parts after a Crash 44

Child Restraints
Older Children 44
Infants and Young Children 45
Child Restraint Systems 47
Where to Put the Restraint 49
Lower Anchors and Tethers for Children (LATCH System) 51
Replacing LATCH System Parts After a Crash 64
Securing Child Restraints (With the Seat Belt in the Rear Seat) 64
Securing Child Restraints (With the Seat Belt in the Front Seat) 69

Head Restraints

The vehicle's front seats have adjustable head restraints in the outboard seating positions.

⚠ Warning

With head restraints that are not installed and adjusted properly, there is a greater chance that occupants will suffer a neck/spinal injury in a crash. Do not drive until the head restraints for all occupants are installed and adjusted properly.

Adjust the head restraint so that the top of the restraint is at the same height as the top of the occupant's head. This position reduces the chance of a neck injury in a crash.

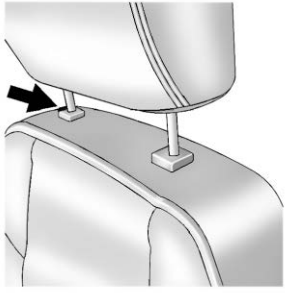

The height of the head restraint can be adjusted. Pull the head restraint up to raise it. Try to move the head restraint to make sure that it is locked in place.

To lower the head restraint, press the button, located on the top of the seatback, and push the restraint down. Try to move the head restraint after the button is released to make sure that it is locked in place.

The front seat outboard head restraints are not removable.

Rear Head Restraints

Crew Cab

The vehicle's rear seats have head restraints in the outboard seating positions that cannot be adjusted up or down.

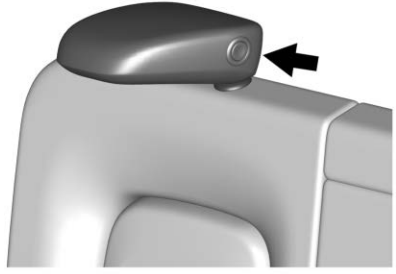

The rear outboard head restraints are designed to be folded. When folding the seatback down, the head restraint must first be manually folded forward out of the way to fold the seatback down.

The head restraint can be folded forward to allow for better visibility when the rear seat is unoccupied. To fold the head restraint, press the button on the side of the head restraint.

When an occupant is in the seat, always return the head restraint to the upright position until it locks into place. Push and pull on the head restraint to make sure that it is locked.

If you are installing a child restraint in the rear seat, see *Lower Anchors and Tethers for Children (LATCH System)* ⇨ 51.

Extended Cab

The vehicle's rear seats have headrests in the outboard seating positions that cannot be adjusted.

If you are installing a child restraint in the rear seat, see *Lower Anchors and Tethers for Children (LATCH System)* ⇨ 51.

Front Seats

Seat Adjustment

⚠ Warning

You can lose control of the vehicle if you try to adjust a driver seat while the vehicle is moving. Adjust the driver seat only when the vehicle is not moving.

To adjust the seat:

1. Pull the handle at the front of the seat.
2. Slide the seat to the desired position and release the handle.
3. Try to move the seat back and forth to be sure the seat is locked in place.

Power Seat Adjustment

⚠ Warning

The power seats will work with the ignition off. Children could operate the power seats and be injured. Never leave children alone in the vehicle.

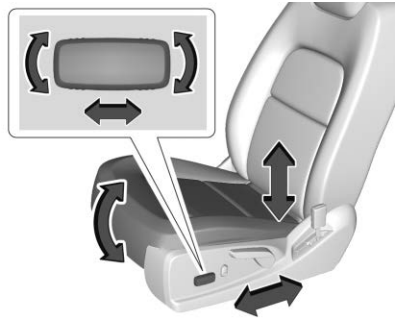

To adjust a power driver seat, if equipped:

- Move the seat forward or rearward by sliding the control forward or rearward.
- Raise or lower the entire seat by moving the rear of the control up or down.
- If equipped, raise or lower the front part of the seat cushion by moving the front of the control up or down.

To adjust the seatback, see *Reclining Seatbacks* ⇨ *23*.

Reclining Seatbacks

⚠ Warning

Sitting in a reclined position when the vehicle is in motion can be dangerous. Even when buckled up, the seat belts cannot do their job.

The shoulder belt will not be against your body. Instead, it will be in front of you. In a crash, you could go into it, receiving neck or other injuries.

The lap belt could go up over your abdomen. The belt forces would be there, not at your pelvic bones. This could cause serious internal injuries.

For proper protection when the vehicle is in motion, have the seatback upright. Then sit well back in the seat and wear the seat belt properly.

Do not have a seatback reclined if the vehicle is moving.

⚠ Warning

You can lose control of the vehicle if you try to adjust a driver seat while the vehicle is moving. Adjust the driver seat only when the vehicle is not moving.

⚠ Warning

If either seatback is not locked, it could move forward in a sudden stop or crash. That could cause injury to the person sitting there. Always push and pull on the seatbacks to be sure they are locked.

To recline the seatback:

1. Lift the lever.
2. Move the seatback to the desired position, and then release the lever to lock the seatback in place.
3. Push and pull on the seatback to make sure it is locked.

To return the seatback to the upright position:

1. Lift the lever fully without applying pressure to the seatback.
2. Push and pull on the seatback to make sure it is locked.

Lumbar Adjustment

Power Lumbar

If equipped, press and hold the top of the control to increase lumbar support. Press and hold the bottom of the control to decrease lumbar support. Release the control when the seatback reaches the desired level of lumbar support.

Heated and Ventilated Front Seats

⚠ Warning

If temperature change or pain to the skin cannot be felt, the seat heater may cause burns. To reduce the risk of burns, use care when using the seat heater, especially for long periods of time. Do not place anything on the seat that insulates against heat, such as a blanket, cushion, cover, or similar item. This may cause the seat heater to overheat. An overheated seat heater may cause a burn or may damage the seat.

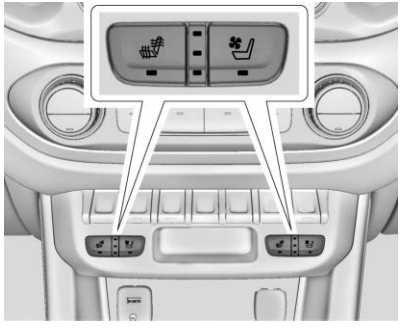

If equipped, the buttons are on the center stack. To operate, the engine must be running.

If equipped, press to heat the driver or passenger seatback only.

Press to heat the driver or passenger cushion and seatback.

If equipped, press to ventilate the driver or passenger seat. A ventilated seat has a fan that pulls or pushes air through the seat. The air is not cooled.

The indicator light on the button comes on when this feature is on.

Press the button once for the highest setting. With each press of the button, the seat will change to the next lower setting, and then to the off setting. The indicator lights next to the buttons indicate three for the highest setting and one for the lowest. If left on the highest setting, the heated seats will automatically lower after approximately 30 minutes.

Remote Start Auto Heated and Ventilated Seats

During a remote start, the heated or ventilated seats can be turned on automatically. When it is cold outside, the heated seats turn on, and when it is hot outside the ventilated seats turn on. The heated or ventilated seats are canceled when the ignition is turned on. Press the heated or ventilated seat button to use the heated or ventilated seats after the vehicle is started.

The heated or ventilated seat indicator lights do not turn on during a remote start.

The temperature performance of an unoccupied seat may be reduced. This is normal.

The heated or ventilated seats will not turn on during a remote start unless they are enabled in the vehicle personalization menu.

Rear Seats

Rear Seat Reminder

If equipped, the message REAR SEAT REMINDER LOOK IN REAR SEAT displays under certain conditions indicating there may be an item or passenger in the rear seat. Check before exiting the vehicle.

This feature will activate when a second row door is opened while the vehicle is on or up to 10 minutes before the vehicle is turned on. There will be an alert when the vehicle

is turned off. The alert does not directly detect objects in the rear seat; instead, under certain conditions, it detects when a rear door is opened and closed, indicating that there may be something in the rear seat.

The feature is active only once each time the vehicle is turned on and off, and will require reactivation by opening and closing the second row doors. There may be an alert even when there is nothing in the rear seat; for example, if a child entered the vehicle through the rear door and left the vehicle without the vehicle being shut off.

The feature can be turned on or off. See *Vehicle Personalization* ⇨ *99*.

Folding the Rear Seat

On crew cab models, the rear seatbacks can be folded forward.

Caution

Folding a rear seat with the seat belts still fastened may cause damage to the seat or the seat belts. Always unbuckle the seat belts and return them to their normal stowed position before folding a rear seat.

To fold a rear seatback:

1. Fold the head restraint. See *Head Restraints* ⇨ *21*.

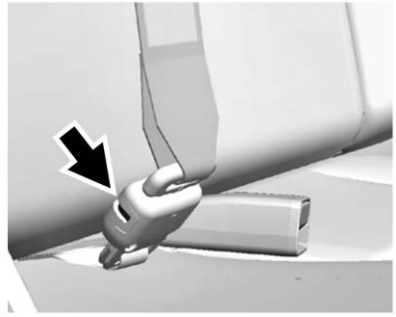

2. Disconnect the rear center seat belt latch from the mini-buckle by inserting the tip of the seat belt tongue into the slot on the buckle. Let the belt retract.

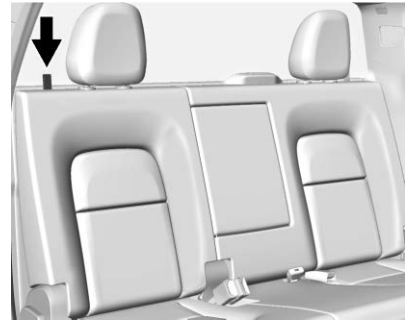

3. Pull the release strap on the outboard side of the seatback.
4. Fold the seatback forward.

To return a seatback to the upright position:

1. Lift the seatback up and push it rearward.
2. Return the head restraint to the upright position. See *Head Restraints* ⇨ *21*.

⚠ Warning

If either seatback is not locked, it could move forward in a sudden stop or crash. That could cause injury to the person sitting there. Always push and pull on the seatbacks to be sure they are locked.

3. Push and pull on the seatback to make sure it is locked in place.

⚠ Warning

A seat belt that is improperly routed, not properly attached, or twisted will not provide the protection needed in a crash. The person wearing the belt could be seriously injured. After raising the rear seatback, always check to be sure that the seat belts are properly routed and attached, and are not twisted.

4. Reconnect the center seat belt latch plate to the mini-buckle. Make sure the seat belt is not twisted.
5. Push and pull on the latch plate to be sure it is secure.

When the seatback is not in use, it should be kept in the upright, locked position.

Seat Belts

This section describes how to use seat belts properly, and some things not to do.

⚠ Warning

Do not let anyone ride where a seat belt cannot be worn properly. In a crash, if you or your passenger(s) are not wearing seat belts, injuries can be much worse than if you are wearing seat belts. You can be seriously injured or killed by hitting things inside the vehicle harder or by being ejected from the vehicle. In addition, anyone who is not buckled up can strike other passengers in the vehicle.

It is extremely dangerous to ride in a cargo area, inside or outside of a vehicle. In a collision, passengers riding in these areas are more likely to be seriously injured or killed. Do not allow passengers to ride in any area of the vehicle that is not equipped with seats and seat belts.

Always wear a seat belt, and check that all passenger(s) are restrained properly too.

This vehicle has indicators as a reminder to buckle the seat belts. See *Seat Belt Reminders* ⇨ *85*.

Why Seat Belts Work

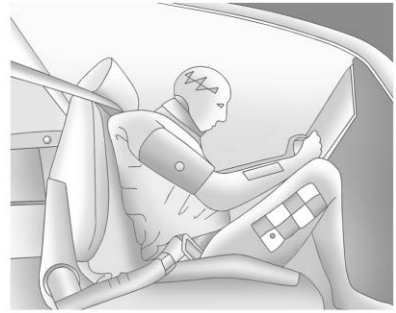

When riding in a vehicle, you travel as fast as the vehicle does. If the vehicle stops suddenly, you keep going until something stops you. It could be the windshield, the instrument panel, or the seat belts!

When you wear a seat belt, you and the vehicle slow down together. There is more time to stop because you stop over a longer distance and, when worn properly, your strongest bones take the forces from the seat belts. That is why wearing seat belts makes such good sense.

Questions and Answers About Seat Belts

Q: Will I be trapped in the vehicle after a crash if I am wearing a seat belt?

A: You *could* be — whether you are wearing a seat belt or not. Your chance of being conscious during and after a crash, so you *can* unbuckle and get out, is *much* greater if you are belted.

Q: If my vehicle has airbags, why should I have to wear seat belts?

A: Airbags are supplemental systems only. They work *with* seat belts — not instead of them. Whether or not an airbag is provided, all occupants still have to buckle up to get the most protection.

Also, in nearly all states and in all Canadian provinces, the law requires wearing seat belts.

Buckle To Drive

If equipped, this feature prevents the vehicle from being shifted out of P (Park) when Teen Driver is active, and the driver seat belt is not buckled. See *Teen Driver* ⇨ *151*. If the engine is running, the driver seat belt is not buckled, and the brake pedal is pressed with the vehicle in P (Park), a message displays in the Driver Information Center (DIC). Buckle the driver seat belt to shift out of P (Park). Shifting from P (Park) will be prevented once for each ignition cycle.

For some fleet vehicles, shifting from P (Park) will be prevented each time the above conditions exist whether Teen Driver is ON or OFF.

On some models, Buckle to Drive may also prevent shifting out of P (Park) if a front passenger is unbuckled under similar conditions. A message displays in the DIC. Buckle the front passenger seat belt to shift out of P (Park). This feature may not allow the vehicle to shift out of P (Park) if an object, such as a briefcase, handbag, grocery bag, laptop, or other electronic device, is on the front passenger seat. If this happens, remove the object from the seat or buckle the seat belt to shift out of P (Park).

If the driver, or on some vehicles, the present front passenger, remains unbuckled, the DIC message will turn off after several seconds and the vehicle can be shifted out of P (Park). See “Seat Belts” and “Child Restraints” in the Index for information about the importance of proper restraint use.

If the driver seat belt or the front passenger seat belt is unbuckled when driving, the seat belt reminder chime and light(s) will come on. See *Seat Belt Reminders* ⇨ *85*. This feature may not function properly if the airbag readiness light is on. See *Airbag Readiness Light* ⇨ *86*.

How to Wear Seat Belts Properly

Follow these rules for everyone's protection.

There are additional things to know about seat belts and children, including smaller children and infants. If a child will be riding in the vehicle, see *Older Children* ⇨ *44* or *Infants and Young Children* ⇨ *45*. Review and follow the rules for children in addition to the following rules.

It is very important for all occupants to buckle up. Statistics show that unbelted people are hurt more often in crashes than those who are wearing seat belts.

There are important things to know about wearing a seat belt properly.

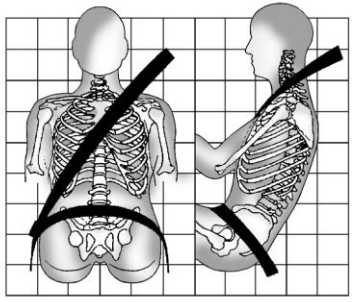

- Sit up straight and always keep your feet on the floor in front of you (if possible).
- Wear the lap part of the belt low and snug on the hips, just touching the thighs. In a crash, this applies force to the strong pelvic bones and you would be less likely to slide under the lap belt. If you slid under it, the belt would apply force on your abdomen. This could cause serious or even fatal injuries.
- Wear the shoulder belt over the shoulder and across the chest. These parts of the body are best able to take belt restraining forces. The shoulder belt locks if there is a sudden stop or crash.

⚠ Warning

You can be seriously injured, or even killed, by not wearing your seat belt properly.

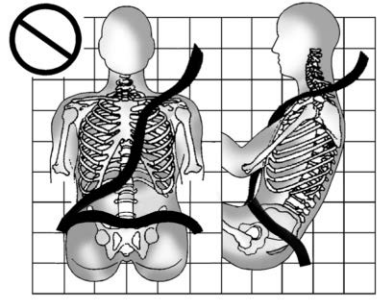

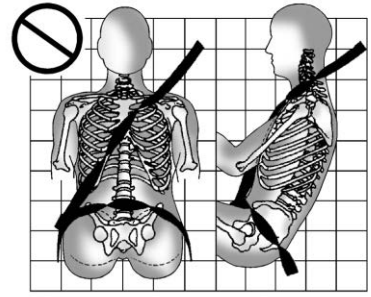

Never allow the lap or shoulder belt to become loose or twisted.

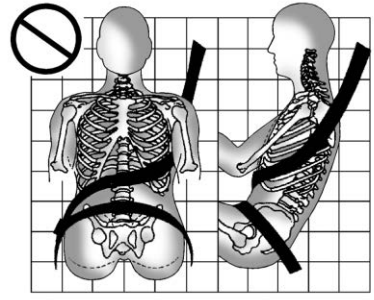

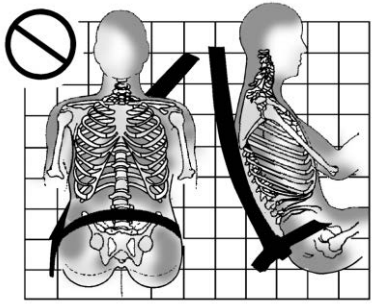

Never wear the shoulder belt under both arms or behind your back.

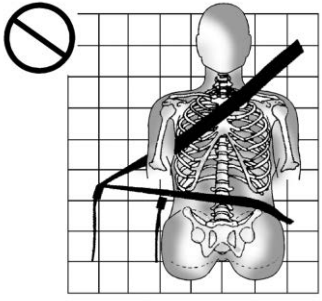

Always use the correct buckle for your seating position.

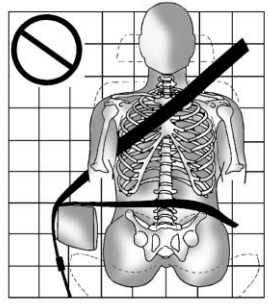

Never route the lap or shoulder belt over an armrest.

⚠ Warning

The seat belt can be pinched if it is routed under plastic trim on the seat, such as trim around the rear seatback folding handle or side airbag. In a crash, pinched seat belts might not provide adequate protection. Never allow seat belts to be routed under plastic trim pieces.

⚠ Warning

You can be seriously injured or killed if the shoulder belt is worn behind your back, under your legs, or wrapped around your neck. The shoulder belt can tighten but cannot be loosened if it is locked. The shoulder belt locks when it is pulled all the way out of the retractor. It unlocks when the shoulder belt is allowed to go all the way back into the retractor, but it cannot do this if it is wrapped around you. You may have to cut the seat belt if it is locked and tightened around you.

Lap-Shoulder Belt

All seating positions in the vehicle have a lap-shoulder belt.

If you are using a rear seating position with a detachable seat belt and the seat belt is not attached, see *Rear Seats* ⇨ *25* for instructions on reconnecting the seat belt to the mini-buckle.

The following instructions explain how to wear a lap-shoulder belt properly.

1. Adjust the seat, if the seat is adjustable, so you can sit up straight. To see how, see “Seats” in the Index.

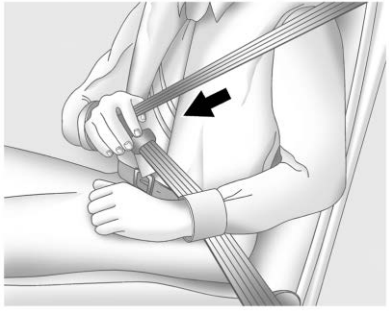

2. Pick up the latch plate and pull the belt across you. Do not let it get twisted.

   The lap-shoulder belt may lock if you pull the belt across you very quickly. If this happens, let the belt go back slightly to unlock it. Then pull the belt across you more slowly.

   If the shoulder portion of a passenger belt is pulled out all the way, the child restraint locking feature may be engaged. See *Child Restraint Systems* ⇨ *47*. If this occurs, let the belt go back all the way and start again. If the locking feature stays engaged after letting the belt go back to stowed position on the seat, move the seat rearward or recline the seat until the shoulder belt retractor lock releases.

   If the webbing locks in the latch plate before it reaches the buckle, tilt the latch plate flat to unlock.

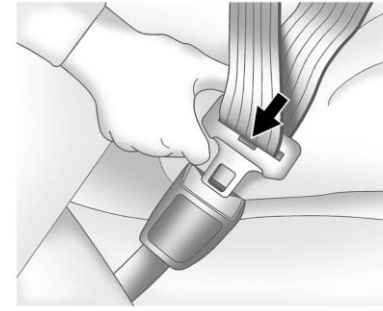

3. Push the latch plate into the buckle until it clicks.

   Pull up on the latch plate to make sure it is secure. If the belt is not long enough, see *Seat Belt Extender* ⇨ *33*.

   Position the release button on the buckle so that the seat belt could be quickly unbuckled if necessary.

4. If equipped with a shoulder belt height adjuster, move it to the height that is right for you. See “Shoulder Belt Height Adjuster” later in this section for instructions on use and important safety information.

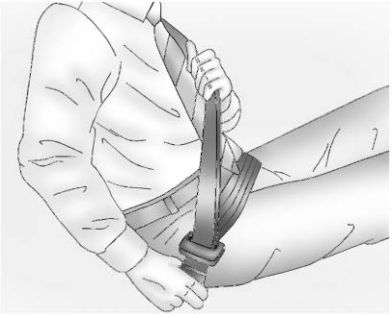

5. To make the lap part tight, pull up on the shoulder belt.

To unlatch the belt, push the button on the buckle. The belt should return to its stowed position.

Always stow the seat belt slowly. If the seat belt webbing returns quickly to the stowed position, the retractor may lock and cannot be pulled out. If this happens, pull the seat belt straight out firmly to unlock the webbing, and then release it. If the webbing is still locked in the retractor, see your dealer.

Before a door is closed, be sure the seat belt is out of the way. If a door is slammed against a seat belt, damage can occur to both the seat belt and the vehicle.

Shoulder Belt Height Adjuster

The vehicle has a shoulder belt height adjuster for the driver and front outboard passenger seating positions.

Adjust the height so the shoulder portion of the belt is on the shoulder and not falling off of it. The belt should be close to, but not contacting, the neck. Improper shoulder belt height adjustment could reduce the effectiveness of the seat belt in a crash. See *How to Wear Seat Belts Properly* ⇨ *28*.

Push up on the release button and move the height adjuster to the desired position.

After the adjuster is set to the desired position, try to move it down without pushing the release button to make sure it has locked into position.

Seat Belt Pretensioners

This vehicle has seat belt pretensioners for the front outboard occupants. Although the seat belt pretensioners cannot be seen, they are part of the seat belt assembly. They can help tighten the seat belts during the early stages of a moderate to severe frontal, near frontal, or rear crash if the threshold conditions for pretensioner activation are

met. Seat belt pretensioners can also help tighten the seat belts in a side crash or a rollover event.

Pretensioners work only once. If the pretensioners activate in a crash, the pretensioners and probably other parts of the vehicle's seat belt system will need to be replaced. See *Replacing Seat Belt System Parts after a Crash* ⇨ *34*.

Do not sit on the outboard seat belt while entering or exiting the vehicle or at any time while sitting in the seat. Sitting on the seat belt can damage the webbing and hardware.

Rear Seat Belt Comfort Guides

Rear seat belt comfort guides may provide added seat belt comfort for older children who have outgrown booster seats and for some adults. When installed on a shoulder belt, the comfort guide positions the shoulder belt away from the neck and head.

Comfort guides are available through your dealer for the rear outboard seating positions. Instructions are included with the guides.

Seat Belt Use During Pregnancy

Seat belts work for everyone, including pregnant women. Like all occupants, they are more likely to be seriously injured if they do not wear seat belts.

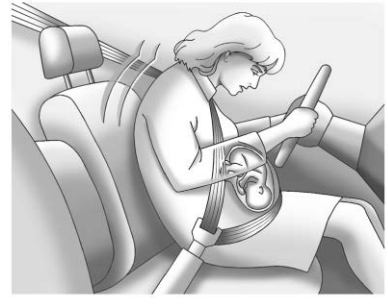

A pregnant woman should wear a lap-shoulder belt, and the lap portion should be worn as low as possible, below the rounding, throughout the pregnancy.

The best way to protect the fetus is to protect the mother. When a seat belt is worn properly, it is more likely that the fetus will not be hurt in a crash. For pregnant women, as for anyone, the key to making seat belts effective is wearing them properly.

Seat Belt Extender

If the vehicle's seat belt will fasten around you, you should use it.

But if a seat belt is not long enough, your dealer will order you an extender. Only a GM dealer issued extender should be used. When you go in to order it, take the heaviest coat you will wear, so the extender will be long enough for you. To help avoid personal injury, do not let someone else use it, and use it only for the seat it is made to fit. The extender has been designed for adults. Never use it for securing child restraints. For more information on the proper use and fit of seat belt extenders see the instruction sheet that comes with the extender.

Safety System Check

Periodically check the seat belt reminder, seat belts, buckles, latch plates, retractors, shoulder belt height adjusters (if equipped), and seat belt anchorages to make sure they are all in working order. Look for any other loose or damaged seat belt system parts that might keep a seat belt system from performing properly. See your dealer to have it repaired. Torn, frayed, or twisted seat belts may not protect you in a crash.

Torn or frayed seat belts can rip apart under impact forces. If a belt is torn or frayed, have it replaced immediately. If a belt is twisted, it may be possible to untwist by reversing the latch plate on the webbing. If the twist cannot be corrected, ask your dealer to fix it.

Make sure the seat belt reminder light is working. See *Seat Belt Reminders* ⇨ *85*.

Keep seat belts clean and dry. See *Seat Belt Care* ⇨ *34*.

Seat Belt Care

Keep belts clean and dry.

Seat belts should be properly cared for and maintained.

Seat belt hardware should be kept dry and free of dust or debris. As necessary, exterior hard surfaces and seat belt webbing may be lightly cleaned with mild soap and water. Ensure there is not excessive dust or debris in the mechanism. If dust or debris exists in the system please see the dealer. Parts may need to be replaced to ensure proper functionality of the system.

⚠ Warning

Do not bleach or dye seat belt webbing. It may severely weaken the webbing. In a crash, they might not be able to provide adequate protection. Clean and rinse seat belt webbing only with mild soap and lukewarm water. Allow the webbing to dry.

Replacing Seat Belt System Parts after a Crash

⚠ Warning

A crash can damage the seat belt system in the vehicle. A damaged seat belt system may not properly protect the person using it, resulting in serious injury or even death in a crash. To help make sure the seat belt systems are working properly after a crash, have them inspected and any necessary replacements made as soon as possible.

After a minor crash, replacement of seat belts may not be necessary. But the seat belt assemblies that were used during any crash may have been stressed or damaged. See your dealer to have the seat belt assemblies inspected or replaced.

New parts and repairs may be necessary even if the seat belt system was not being used at the time of the crash.

Have the seat belt pretensioners checked if the vehicle has been in a crash, or if the airbag readiness light stays on after you start the vehicle or while you are driving. See *Airbag Readiness Light* ⇨ *86*.

Airbag System

The vehicle has the following airbags:

- A frontal airbag for the driver
- A frontal airbag for the front outboard passenger
- A seat-mounted side impact airbag for the driver
- A seat-mounted side impact airbag for the front outboard passenger
- A roof-rail airbag for the driver and the passenger seated directly behind the driver

- A roof-rail airbag for the front outboard passenger and the passenger seated directly behind the front outboard passenger

All vehicle airbags have the word AIRBAG on the trim or on a label near the deployment opening.

For frontal airbags, the word AIRBAG is on the center of the steering wheel for the driver and on the instrument panel for the front outboard passenger.

For seat-mounted side impact airbags, the word AIRBAG is on the side of the seatback or side of the seat closest to the door.

For roof-rail airbags, the word AIRBAG is on the ceiling or trim.

Airbags are designed to supplement the protection provided by seat belts. Even though today's airbags are also designed to help reduce the risk of injury from the force of an inflating bag, all airbags must inflate very quickly to do their job.

Here are the most important things to know about the airbag system:

⚠ Warning

You can be severely injured or killed in a crash if you are not wearing your seat belt, even with airbags. Airbags are designed to work with seat belts, not replace them. Also, airbags are not designed to inflate in every crash. In some crashes seat belts are the only restraint. See *When Should an Airbag Inflate?* ⇨ *37*.

Wearing your seat belt during a crash helps reduce your chance of hitting things inside the vehicle or being ejected from it. Airbags are “supplemental restraints” to the seat belts. Everyone in the vehicle should wear a seat belt properly, whether or not there is an airbag for that person.

⚠ Warning

Because airbags inflate with great force and faster than the blink of an eye, anyone who is up against, or very close to, any airbag when it inflates can be seriously injured or killed. Do not sit

(Continued)

Warning (Continued)

unnecessarily close to any airbag, as you would be if sitting on the edge of the seat or leaning forward. Seat belts help keep you in position before and during a crash. Always wear a seat belt, even with airbags. The driver should sit as far back as possible while still maintaining control of the vehicle. The seat belts and the front outboard passenger airbags are most effective when you are sitting well back and upright in the seat with both feet on the floor.

Occupants should not lean on or sleep against the door or side windows in seating positions with seat-mounted side impact airbags and/or roof-rail airbags.

⚠ Warning

Children who are up against, or very close to, any airbag when it inflates can be seriously injured or killed. Always secure children properly in the vehicle. To read how, see *Older Children* ⇨ *44* or *Infants and Young Children* ⇨ *45*.

There is an airbag readiness light on the instrument cluster, which shows the airbag symbol. The system checks the airbag electrical system for malfunctions. The light tells you if there is an electrical problem. See *Airbag Readiness Light* ⇨ *86*.

Where Are the Airbags?

The driver frontal airbag is in the center of the steering wheel.

The front outboard passenger frontal airbag is in the passenger side instrument panel.

Driver Side Shown, Passenger Side Similar

The driver and front outboard passenger seat-mounted side impact airbags are in the side of the seatbacks closest to the door.

Driver Side Crew Cab Shown, Passenger Side and Extended Cab Similar

The roof-rail airbags for the driver, front outboard passenger, and second row outboard passengers are in the ceiling above the side windows.

⚠ Warning

If something is between an occupant and an airbag, the airbag might not inflate properly or it might force the object into that person causing severe injury or even

(Continued)

Warning (Continued)

death. The path of an inflating airbag must be kept clear. Do not put anything between an occupant and an airbag, and do not attach or put anything on the steering wheel hub or on or near any other airbag covering.

Do not use seat accessories that block the inflation path of a seat-mounted side impact airbag.

Never secure anything to the roof of a vehicle with roof-rail airbags by routing a rope or tie-down through any door or window opening. If you do, the path of an inflating roof-rail airbag will be blocked.

When Should an Airbag Inflate?

This vehicle is equipped with airbags. See *Airbag System* ⇨ *34*. Airbags are designed to inflate if the impact exceeds the specific airbag system's deployment threshold. Deployment thresholds are used to predict how severe a crash is likely to be in time for the airbags to inflate and help restrain the occupants. The vehicle has electronic sensors that help the airbag system determine the severity of the impact. Deployment thresholds can vary with specific vehicle design.

Frontal airbags are designed to inflate in moderate to severe frontal or near frontal crashes to help reduce the potential for severe injuries, mainly to the driver's or front outboard passenger's head and chest.

Whether the frontal airbags will or should inflate is not based primarily on how fast the vehicle is traveling. It depends on what is hit, the direction of the impact, and how quickly the vehicle slows down.

Frontal airbags may inflate at different crash speeds depending on whether the vehicle hits an object straight on or at an angle, and whether the object is fixed or moving, rigid or deformable, narrow or wide.

Frontal airbags are not intended to inflate during vehicle rollovers, in rear impacts, or in many side impacts.

In addition, the vehicle has advanced technology frontal airbags. Advanced technology frontal airbags adjust the restraint according to crash severity.

Seat-mounted side impact airbags are designed to inflate in moderate to severe side crashes depending on the location of the impact. Seat-mounted side impact airbags are not designed to inflate in frontal impacts, near frontal impacts, rollovers, or rear impacts. A seat-mounted side impact airbag is designed to inflate on the side of the vehicle that is struck.

Roof-rail airbags are designed to inflate in moderate to severe side crashes depending on the location of the impact. In addition, these roof-rail airbags are designed to inflate during a rollover or in a severe frontal impact. Roof-rail airbags are not designed to inflate in rear impacts. Both roof-rail airbags will inflate when either side of the vehicle is struck, if the sensing system predicts that the vehicle is about to roll over on its side, or in a severe frontal impact.

In any particular crash, no one can say whether an airbag should have inflated simply because of the vehicle damage or repair costs.

What Makes an Airbag Inflate?

In a deployment event, the sensing system sends an electrical signal triggering a release of gas from the inflator. Gas from the inflator fills the airbag causing the bag to

break out of the cover. The inflator, the airbag, and related hardware are all part of the airbag module.

For airbag locations, see *Where Are the Airbags?* ⇨ *36*.

How Does an Airbag Restrain?

In moderate to severe frontal or near frontal collisions, even belted occupants can contact the steering wheel or the instrument panel. In moderate to severe side collisions, even belted occupants can contact the inside of the vehicle.

Airbags supplement the protection provided by seat belts by distributing the force of the impact more evenly over the occupant's body.

Rollover capable roof-rail airbags are designed to help contain the head and chest of occupants in the outboard seating positions in the first and second rows. The rollover capable roof-rail airbags are designed to help reduce the risk of full or partial ejection in rollover events, although no system can prevent all such ejections.

But airbags would not help in many types of collisions, primarily because the occupant's motion is not toward those airbags. See *When Should an Airbag Inflate?* ⇨ *37*.

Airbags should never be regarded as anything more than a supplement to seat belts.

What Will You See after an Airbag Inflates?

After frontal and seat-mounted side impact airbags inflate, they quickly deflate, so quickly that some people may not even realize the airbags inflated. Roof-rail airbags may still be at least partially inflated for some time after they inflate. Some components of the airbag module may be hot for several minutes. For location of the airbags, see *Where Are the Airbags?* ⇨ *36*.

The parts of the airbag that come into contact with you may be warm, but not too hot to touch. There may be some smoke and dust coming from the vents in the deflated airbags. Airbag inflation does not prevent the driver from seeing out of the windshield or being able to steer the vehicle, nor does it prevent people from leaving the vehicle.

⚠ Warning

When an airbag inflates, there may be dust in the air. This dust could cause breathing problems for people with a history of asthma or other breathing trouble. To avoid this, everyone in the vehicle should get out as soon as it is safe to do so. If you have breathing problems but cannot get out of the vehicle after an airbag inflates, then get fresh air by opening a window or a door. If you experience breathing problems following an airbag deployment, you should seek medical attention.

The vehicle has a feature that may automatically unlock the doors, turn on the interior lamps and hazard warning flashers, and shut off the fuel system after the airbags inflate. The feature may also activate, without airbag inflation, after an event that exceeds a predetermined threshold. After turning the ignition off and then on again, the fuel system will return to normal operation; the doors can be locked, the interior lamps can be turned off, and the hazard warning flashers can be turned

off using the controls for those features. If any of these systems are damaged in the crash they may not operate as normal.

⚠ Warning

A crash severe enough to inflate the airbags may have also damaged important functions in the vehicle, such as the fuel system, brake and steering systems, etc. Even if the vehicle appears to be drivable after a moderate crash, there may be concealed damage that could make it difficult to safely operate the vehicle.

Use caution if you should attempt to restart the engine after a crash has occurred.

In many crashes severe enough to inflate the airbag, windshields are broken by vehicle deformation. Additional windshield breakage may also occur from the front outboard passenger airbag.

- Airbags are designed to inflate only once. After an airbag inflates, you will need some new parts for the airbag system. If you do not get them, the airbag system will not be there to help protect you in another crash. A new system will include airbag modules and possibly other parts. The service manual for the vehicle covers the need to replace other parts.
- The vehicle has a crash sensing and diagnostic module which records information after a crash. See *Vehicle Data Recording and Privacy* ⇨ *337* and *Event Data Recorders* ⇨ *338*.
- Let only qualified technicians work on the airbag systems. Improper service can mean that an airbag system will not work properly. See your dealer for service.

Passenger Sensing System

The vehicle has a passenger sensing system for the front outboard passenger position. The passenger airbag status indicator will light on the overhead console when the vehicle is started.

United States

Canada

The words ON and OFF, or the symbols for on and off, will be visible during the system check. When the system check is complete, either the word ON or OFF, or the symbol for on and off, will be visible. See *Passenger Airbag Status Indicator* ⇨ *86*.

The passenger sensing system turns off the front outboard passenger frontal airbag under certain conditions. No other airbag is affected by the passenger sensing system.

The passenger sensing system works with sensors that are part of the front outboard passenger seat and seat belt. The sensors are designed to detect the presence of a properly seated occupant and determine if the front outboard passenger frontal airbag should be allowed to inflate or not.

According to accident statistics, children are safer when properly secured in a rear seat in the correct child restraint for their weight and size.

Whenever possible, children aged 12 and under should be secured in a rear seating position.

Never put a rear-facing child seat in the front. This is because the risk to the rear-facing child is so great, if the airbag inflates.

⚠ Warning

A child in a rear-facing child restraint can be seriously injured or killed if the passenger frontal airbag inflates. This is because the back of the rear-facing child restraint would be very close to the inflating airbag. A child in a forward-facing child restraint can be seriously injured or killed if the passenger frontal airbag inflates and the passenger seat is in a forward position.

Even if the passenger sensing system has turned off the passenger frontal airbag, no system is fail-safe. No one can guarantee that an airbag will not deploy under some unusual circumstance, even though the airbag is turned off.

(Continued)

Warning (Continued)

Never put a rear-facing child restraint in the front seat, even if the airbag is off. If securing a forward-facing child restraint in the front outboard passenger seat, always move the seat as far back as it will go. It is better to secure child restraints in the rear seat. Consider using another vehicle to transport the child when a rear seat is not available.

If the vehicle does not have a rear seat that will accommodate a rear-facing child restraint, a rear-facing child restraint should not be installed in the vehicle, even if the airbag is off.

The passenger sensing system is designed to turn off the front outboard passenger frontal airbag if:

- The front outboard passenger seat is unoccupied.
- The system determines that an infant is present in a rear-facing infant seat.
- The system determines that a small child is present in a child restraint.
- The system determines that a small child is present in a booster seat.
- A front outboard passenger takes his/her weight off of the seat for a period of time.
- The front outboard passenger seat is occupied by a smaller person, such as a child who has outgrown child restraints.
- There is a critical problem with the airbag system or the passenger sensing system.

When the passenger sensing system has turned off the front outboard passenger frontal airbag, the OFF indicator will light and stay lit as a reminder that the airbag is off. See *Passenger Airbag Status Indicator* ⇨ *86*.

The passenger sensing system is designed to turn on the front outboard passenger frontal airbag anytime the system senses that a person of adult size is sitting properly in the front outboard passenger seat. When the passenger sensing system has allowed the airbag to be enabled, the ON indicator will light and stay lit as a reminder that the airbag is active.

For some children who have outgrown child restraints, and for very small adults, the passenger sensing system may or may not turn off the front outboard passenger frontal airbag, depending upon the person's seating posture and body build. Everyone in

the vehicle who has outgrown child restraints should wear a seat belt properly — whether or not there is an airbag for that person.

⚠ Warning

If the airbag readiness light ever comes on and stays on, it means that something may be wrong with the airbag system. To help avoid injury to yourself or others, have the vehicle serviced right away. See *Airbag Readiness Light* ⇨ *86* for more information, including important safety information.

If the On Indicator Is Lit for a Child Restraint

If a child restraint has been installed and the ON indicator is lit:

1. Turn the vehicle off.
2. Remove the child restraint from the vehicle.
3. Remove any additional items from the seat such as blankets, cushions, seat covers, seat heaters, or seat massagers.
4. Reinstall the child restraint following the directions provided by the child restraint manufacturer and refer to *Securing Child Restraints (With the Seat Belt in the Rear Seat)* ⇨ *64* or *Securing Child Restraints (With the Seat Belt in the Front Seat)* ⇨ *69*.
5. If, after reinstalling the child restraint and restarting the vehicle, the ON indicator is still lit, turn the vehicle off. Then slightly recline the vehicle seatback and adjust the seat cushion, if adjustable, to make sure that the vehicle seatback is not pushing the child restraint into the seat cushion. Also make sure the child restraint is not trapped under the vehicle head restraint. If this happens, adjust the head restraint. See *Head Restraints* ⇨ *21*.
6. Restart the vehicle.

If the ON indicator is still lit, secure the child in the child restraint in a rear seat position in the vehicle, and check with your dealer.

If no rear seat is available, do not install a child restraint in this vehicle and check with your dealer.

If the Off Indicator Is Lit for an Adult-Sized Occupant

If a person of adult-size is sitting in the front outboard passenger seat, but the OFF indicator is lit, it could be because that person is not sitting properly in the seat or that the child restraint locking feature is engaged. Use the following steps to allow the system to detect that person and enable the front outboard passenger frontal airbag:

1. Turn the vehicle off.
2. Remove any additional material from the seat, such as blankets, cushions, seat covers, seat heaters, or seat massagers.
3. Place the seatback in the fully upright position.

4. Have the person sit upright in the seat, centered on the seat cushion, with legs comfortably extended.
5. If the shoulder portion of the belt is pulled out all the way, the child restraint locking feature will be engaged. This may unintentionally cause the passenger sensing system to turn the airbag off for some adult-sized occupants. If this happens, unbuckle the belt, let the belt go back all the way, and then buckle the belt again without pulling the belt out all the way.
6. Restart the vehicle and have the person remain in this position for two to three minutes after the ON indicator is lit.

⚠ Warning

If the front outboard passenger airbag is turned off for an adult-sized occupant, the airbag will not be able to inflate and help protect that person in a crash, resulting in an increased risk of serious injury or even death. An adult-sized occupant should not ride in the front outboard passenger seat, if the passenger airbag off indicator is lit.

Additional Factors Affecting System Operation

Seat belts help keep the passenger in position on the seat during vehicle maneuvers and braking, which helps the passenger sensing system maintain the passenger airbag status. See “Seat Belts” and “Child Restraints” in the Index for additional information about the importance of proper restraint use.

A thick layer of additional material, such as a blanket or cushion, or aftermarket equipment such as seat covers, seat heaters, and seat massagers can affect how well the passenger sensing system operates. We recommend that you not use seat covers or other aftermarket equipment except when approved by GM for your specific vehicle. See *Adding Equipment to the Airbag-Equipped Vehicle* ⇨ *43* for more information about modifications that can affect how the system operates.

The ON indicator may be lit if an object, such as a briefcase, handbag, grocery bag, laptop, or other electronic device, is put on an unoccupied seat. If this is not desired remove the object from the seat.

⚠ Warning

Stowing articles under the passenger seat or between the passenger seat cushion and seatback may interfere with the proper operation of the passenger sensing system.

Servicing the Airbag-Equipped Vehicle

Airbags affect how the vehicle should be serviced. There are parts of the airbag system in several places around the vehicle. Your dealer and the service manual have information about servicing the vehicle and the airbag system. To purchase a service manual, see *Publication Ordering Information* ⇨ *335*.

⚠ Warning

For up to 10 seconds after the vehicle is turned off and the battery is disconnected, an airbag can still inflate during improper service. You can be injured if you are close to an airbag when it inflates. Avoid yellow connectors. They are probably part of the airbag

(Continued)

Warning (Continued)

system. Be sure to follow proper service procedures, and make sure the person performing work for you is qualified to do so.

Adding Equipment to the Airbag-Equipped Vehicle

⚠ Warning

If a snow plow or similar equipment is installed on the vehicle, the airbag system may not function properly. An airbag could inflate when it is not supposed to inflate. People riding in the vehicle could be injured, and the vehicle and/or snow plow could be damaged. Do not install a snow plow or similar equipment on the vehicle.

Adding accessories that change the vehicle's frame, bumper system, height, front end, or side sheet metal may keep the airbag system from working properly.

The operation of the airbag system can also be affected by changing any parts of the front seats, seat belts, airbag sensing and diagnostic module, steering wheel, instrument panel, inner door seals including the speakers, any of the airbag modules, ceiling or pillar garnish trim, overhead console, front sensors, side impact sensors, or airbag wiring.

Your dealer and the service manual have information about the location of the airbag sensors, sensing and diagnostic module, and airbag wiring.

In addition, the vehicle has a passenger sensing system for the front outboard passenger position, which includes sensors that are part of the passenger seat. The passenger sensing system may not operate properly if the original seat trim is replaced with non-GM covers, upholstery, or trim; or with GM covers, upholstery, or trim designed for a different vehicle. Any object, such as an aftermarket seat heater or a comfort-enhancing pad or device, installed under or on top of the seat fabric, could also interfere with the operation of the passenger sensing system. This could either prevent proper deployment of the passenger airbag(s) or prevent the passenger sensing system from properly turning off the passenger airbag(s). See *Passenger Sensing System* ⇨ *39*.

If the vehicle has rollover roof-rail airbags, see *Different Size Tires and Wheels* ⇨ *280* for additional important information.

If the vehicle must be modified because you have a disability and have questions about whether the modifications will affect the vehicle's airbag system, or if you have questions about whether the airbag system will be affected if the vehicle is modified for any other reason, call Customer Assistance. See *Customer Assistance Offices* ⇨ *330*.

Airbag System Check

The airbag system does not need regularly scheduled maintenance or replacement. Make sure the airbag readiness light is working. See *Airbag Readiness Light* ⇨ *86*.

Caution

If an airbag covering is damaged, opened, or broken, the airbag may not work properly. Do not open or break the airbag coverings. If there are any opened or broken airbag coverings, have the airbag covering and/or airbag module replaced. For the location of the airbags, see *Where Are the Airbags?* ⇨ *36*. See your dealer for service.

Replacing Airbag System Parts after a Crash

⚠ Warning

A crash can damage the airbag systems in the vehicle. A damaged airbag system may not properly protect you and your passenger(s) in a crash, resulting in serious injury or even death. To help make sure the airbag systems are working properly after a crash, have them inspected and any necessary replacements made as soon as possible.

If an airbag inflates, you will need to replace airbag system parts. See your dealer for service.

If the airbag readiness light stays on after the vehicle is started or comes on when you are driving, the airbag system may not work properly. Have the vehicle serviced right away. See *Airbag Readiness Light* ⇨ *86*.

Child Restraints

Older Children

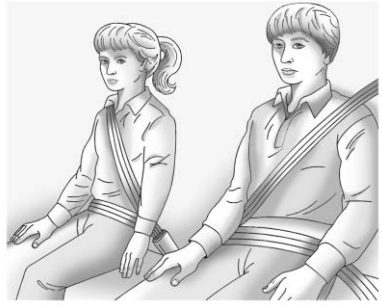

Older children who have outgrown booster seats should wear the vehicle's seat belts.

The manufacturer instructions that come with the booster seat state the weight and height limitations for that booster. Use a booster seat with a lap-shoulder belt until the child passes the fit test below:

- Sit all the way back on the seat. Do the knees bend at the seat edge? If yes, continue. If no, return to the booster seat.
- Buckle the lap-shoulder belt. Does the shoulder belt rest on the shoulder? If yes, continue. If no, try using the rear seat belt comfort guide, if available. See "Rear Seat Belt Comfort Guides" under *Lap-Shoulder Belt* ⇨ *30*. If a comfort guide is not available, or if the shoulder belt still does not rest on the shoulder, then return to the booster seat.
- Does the lap belt fit low and snug on the hips, touching the thighs? If yes, continue. If no, return to the booster seat.
- Can proper seat belt fit be maintained for the length of the trip? If yes, continue. If no, return to the booster seat.

Q: What is the proper way to wear seat belts?

A: An older child should wear a lap-shoulder belt and get the additional restraint a shoulder belt can provide. The shoulder belt should not cross the face or neck. The lap belt should fit snugly below the hips, just touching the top of the thighs. This applies belt force to the child's pelvic bones in a crash. It should never be worn over the abdomen, which could cause severe or even fatal internal injuries in a crash.

Also see "Rear Seat Belt Comfort Guides" under *Lap-Shoulder Belt* ⇨ *30*.

According to accident statistics, children are safer when properly restrained in a rear seating position.

In a crash, children who are not buckled up can strike other people who are buckled up, or can be thrown out of the vehicle. Older children need to use seat belts properly.

⚠ Warning

Never allow more than one child to wear the same seat belt. The seat belt cannot properly spread the impact forces. In a crash, they can be crushed together and seriously injured. A seat belt must be used by only one person at a time.

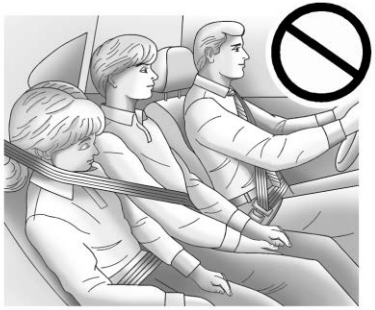

⚠ Warning

Never allow a child to wear the seat belt shoulder belt under both arms or behind their back. A child can be seriously injured by not wearing the lap-shoulder belt properly. In a crash, the child would not be restrained by the shoulder belt. The child could move too far forward increasing the chance of head and neck injury. The child might also slide under the lap belt. The belt force would then be applied right on the abdomen. That could cause serious or fatal injuries. The shoulder belt should go over the shoulder and across the chest.

Infants and Young Children

Everyone in a vehicle needs protection! This includes infants and all other children. Neither the distance traveled nor the age and size of the traveler changes the need, for everyone, to use safety restraints. In fact, the law in every state in the United States and in every Canadian province says children up to some age must be restrained while in a vehicle.

⚠ Warning

Children can be seriously injured or killed if the shoulder belt is worn behind their back, under their legs, or wrapped around their neck. The shoulder belt can tighten but cannot be loosened if it is locked. The shoulder belt locks when it is pulled all the way out of the retractor. It unlocks when the shoulder belt is allowed to go all the way back into the retractor, but it cannot do this if it is wrapped around the child. Never leave children unattended in a vehicle and never allow children to improperly wear, or play with, the seat belts.

Every time infants and young children ride in vehicles, they should have the protection provided by appropriate child restraints. Neither the vehicle's seat belt system nor its airbag system is designed for them.

Children who are not restrained properly can strike other people, or can be thrown out of the vehicle.

⚠ Warning

Never hold an infant or a child while riding in a vehicle. Due to crash forces, an infant or a child will become so heavy it is not possible to hold it during a crash. For example, in a crash at only 40 km/h (25 mph), a 5.5 kg (12 lb) infant will suddenly become a 110 kg (240 lb) force on a person's arms. An infant or child should be secured in an appropriate child restraint.

⚠ Warning

Children who are up against, or very close to, any airbag when it inflates can be seriously injured or killed. Never put a rear-facing child restraint in the front outboard seat. Secure a rear-facing child restraint in a rear seat. It is also better to secure a forward-facing child restraint in a rear seat. If you must secure a forward-facing child restraint in the front outboard seat, always move the front passenger seat as far back as it will go.

Child restraints are devices used to restrain, seat, or position children in the vehicle and are sometimes called child seats or car seats.

There are three basic types of child restraints:

- Forward-facing child restraints
- Rear-facing child restraints
- Belt-positioning booster seats

The proper child restraint for your child depends on their size, weight, and age, and also on whether the child restraint is compatible with the vehicle in which it will be used.

For each type of child restraint, there are many different models available. When purchasing a child restraint, be sure it is designed to be used in a motor vehicle and is certified to comply with US Federal or Canadian Motor Vehicle Safety Standards. If it is, the child restraint will have a label saying that it meets federal motor vehicle safety standards. The NHTSA website includes a list of registered car seat manufacturers (https://www.nhtsa.gov) and links to their registration pages for consumers. Registration helps manufacturers identify purchasers for recall notices.

The instruction manual that is provided with the child restraint states the weight and height limitations for that particular child restraint. In addition, there are many kinds of child restraints available for children with special needs.

⚠ Warning

To reduce the risk of neck and head injury in a crash, infants and toddlers should be secured in a rear-facing child restraint until age two, or until they reach the maximum height and weight limits of their child restraint.

⚠ Warning

A young child's hip bones are still so small that the vehicle seat belt may not remain low on the hip bones, as it should. Instead, it may settle up around the child's abdomen. In a crash, the belt would apply force on a body area that is unprotected by any bony structure. This alone could cause serious or fatal injuries. To reduce the risk of serious or fatal injuries during a crash, young children should always be secured in an appropriate child restraint.

Child Restraint Systems

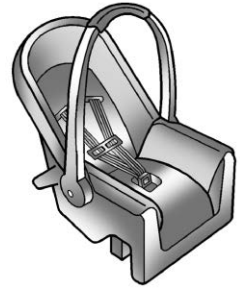

Rear-Facing Infant Restraint

A rear-facing child restraint provides restraint with the seating surface against the back of the infant.

The harness system holds the infant in place and, in a crash, acts to keep the infant positioned in the restraint.

Forward-Facing Child Restraint

A forward-facing child restraint provides restraint for the child's body with the harness.

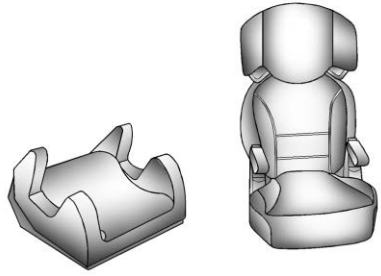

Booster Seats

A belt-positioning booster seat is used for children who have outgrown their forward-facing child restraint. Boosters are designed to improve the fit of the vehicle's seat belt system until the child is large enough for the vehicle seat belts to fit properly without a booster seat. See the seat belt fit test in *Older Children* ⇨ *44*.

Securing an Add-On Child Restraint in the Vehicle

⚠ Warning

A child can be seriously injured or killed in a crash if the child restraint is not properly secured in the vehicle. Secure the child restraint properly in the vehicle using the vehicle seat belt or LATCH system, following the instructions that came with that child restraint and the instructions in this manual.

To help reduce the chance of injury, the child restraint must be secured in the vehicle. Child restraints must be secured in vehicle seats by lap belts or the lap belt portion of a lap-shoulder belt, or by the LATCH system. See *Lower Anchors and Tethers for Children (LATCH System)* ⇨ *51* for more information. Never use a seat belt extender when installing a child restraint. Use only seats and related equipment that are certified to comply with US Federal or Canadian Motor Vehicle Safety Standards to secure a child restraint. Children can be endangered in a crash if the child restraint is not properly secured in the vehicle.

When securing an add-on child restraint, refer to the following:

1. Instruction labels provided on the child restraint
2. Instruction manual provided with the child restraint
3. This vehicle owner's manual

The child restraint instructions are important, so if they are not available, obtain a replacement copy from the manufacturer.

Keep in mind that an unsecured child restraint can move around in a collision or sudden stop and injure people in the vehicle. Be sure to properly secure any child restraint in the vehicle — even when no child is in it.

In some areas Certified Child Passenger Safety Technicians (CPSTs) are available to inspect and demonstrate how to correctly use and install child restraints. In the U.S., refer to the National Highway Traffic Safety Administration (NHTSA) website to locate the nearest child safety seat inspection station. For CPST availability in Canada, check with Transport Canada or the Provincial Ministry of Transportation office.

Securing the Child Within the Child Restraint

⚠ Warning

A child can be seriously injured or killed in a crash if the child is not properly secured in the child restraint. Secure the child properly following the instructions that came with that child restraint.

Where to Put the Restraint

According to accident statistics, children and infants are safer when properly restrained in an appropriate child restraint secured in a rear seating position.

Whenever possible, children aged 12 and under should be secured in a rear seating position.

Never put a rear-facing child restraint in the front. This is because the risk to the rear-facing child is so great if the airbag deploys.

⚠ Warning

A child in a rear-facing child restraint can be seriously injured or killed if the front passenger airbag inflates. This is because the back of the rear-facing child restraint would be very close to the inflating airbag. A child in a forward-facing child restraint can be seriously injured or killed if the front passenger airbag inflates and the passenger seat is in a forward position.

Even if the passenger sensing system has turned off the front passenger frontal airbag, no system is fail-safe. No one can guarantee that an airbag will not deploy under some unusual circumstance, even though it is turned off.

Secure rear-facing child restraints in a rear seat, even if the airbag is off. If you secure a forward-facing child restraint in the front seat, always move the front passenger seat as far back as it will go. It is better to secure the child restraint in a rear seat.

See *Passenger Sensing System* ⇨ *39* for additional information.

If the vehicle does not have a rear seat that will accommodate a rear-facing child restraint, a rear-facing child restraint should not be secured in the vehicle, even if the airbag is off.

⚠ Warning

Never secure a rear-facing or forward-facing child restraint in the left rear seating position in an extended cab model. This seating position is not suitable for child restraint installation. The seat cushion is too short to properly support a rear-facing or forward-facing child restraint. A child could be seriously injured or killed in a sudden stop or crash.

A rear-facing or forward-facing child restraint can be installed in the right rear seating position using the seat cushion extension in an extended cab model.

(Continued)

Warning (Continued)

Never install a child restraint in the right rear seating position without the seat cushion extension. See *Lower Anchors and Tethers for Children (LATCH System)* ⇨ *51* and *Securing Child Restraints (With the Seat Belt in the Rear Seat)* ⇨ *64* or *Securing Child Restraints (With the Seat Belt in the Front Seat)* ⇨ *69*.

Never secure a rear-facing or forward-facing child restraint in the left rear seating position in an extended cab model.

When securing a child restraint with the seat belts in a rear seat position, study the instructions that came with the child restraint to make sure it is compatible with this vehicle.

Child restraints and booster seats vary considerably in size, and some may fit in certain seating positions better than others. Do not install a child restraint in any rear seating position where it cannot be installed securely.

Depending on where you place the child restraint and the size of the child restraint, you may not be able to access adjacent seat belts or LATCH anchors for additional passengers or child restraints. Adjacent seating positions should not be used if the child restraint prevents access to or interferes with the routing of the seat belt.

The seat in front of an installed child restraint should be adjusted to ensure proper installation according to the child restraint manual.

Wherever a child restraint is installed, be sure to follow the instructions that came with the child restraint and secure the child restraint properly.

Keep in mind that an unsecured child restraint can move around in a collision or sudden stop and injure people in the vehicle. Be sure to properly secure any child restraint in the vehicle — even when no child is in it.

Lower Anchors and Tethers for Children (LATCH System)

The LATCH system secures a child restraint during driving or in a crash. LATCH attachments on the child restraint are used to attach the child restraint to the anchors in the vehicle. The LATCH system is designed to make installation of a child restraint easier.

In order to use the LATCH system in your vehicle, you need a child restraint that has LATCH attachments. LATCH-compatible rear-facing and forward-facing child seats can be properly installed using either the LATCH anchors or the vehicle's seat belts. Do not use both the seat belts and the LATCH anchorage system to secure a rear-facing or forward-facing child seat.

Booster seats use the vehicle's seat belts to secure the child and the booster seat. If the manufacturer recommends that the booster seat be secured with the LATCH system, this can be done as long as the booster seat can be positioned properly and there is no interference with the proper positioning of the lap-shoulder belt on the child.

Make sure to follow the instructions that came with the child restraint, and also the instructions in this manual.

When installing a child restraint with a top tether, you must also use either the lower anchors or the seat belts to properly secure the child restraint. A child restraint must never be attached using only the top tether.

For a forward-facing 5-pt harness child restraint where the combined weight of the child and restraint are up to 29.5 kg (65 lb), use either the lower LATCH anchorages with the top tether anchorage, or the seat belt with the top tether anchorage. Where the combined weight of the child and restraint are greater than 29.5 kg (65 lb), use the seat belt with the top tether anchorage only.

Recommended Methods for Attaching Child Restraints

Restraint Type	Combined Weight of the Child + Child Restraint	Use Only Approved Attachment Methods Shown with an X			
		LATCH – Lower Anchors Only	**Seat Belt Only**	**LATCH** – Lower Anchors and Top Tether Anchor	**Seat Belt and Top Tether Anchor**
Rear-Facing Child Restraint	Up to 29.5 kg (65 lb)	X	X		
Rear-Facing Child Restraint	Greater than 29.5 kg (65 lb)		X		
Forward-Facing Child Restraint	Up to 29.5 kg (65 lb)			X	X
Forward-Facing Child Restraint	Greater than 29.5 kg (65 lb)				X

See *Securing Child Restraints (With the Seat Belt in the Rear Seat)* ⇨ *64* or *Securing Child Restraints (With the Seat Belt in the Front Seat)* ⇨ *69*.

Child restraints built after March 2014 will be labeled with the specific child weight up to which the LATCH system can be used to install the restraint.

The following explains how to attach a child restraint with these attachments in the vehicle.

Not all vehicle seating positions have lower anchors. In this case, the seat belt must be used (with top tether where available) to secure the child restraint. See *Securing Child Restraints (With the Seat Belt in the Rear Seat)* ⇨ *64* or *Securing Child Restraints (With the Seat Belt in the Front Seat)* ⇨ *69*.

Lower Anchors

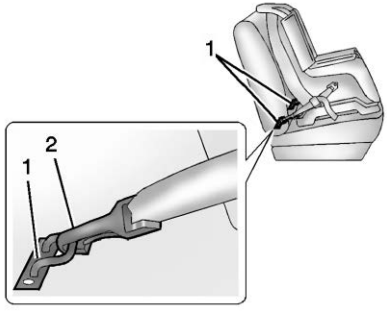

Lower anchors (1) are metal bars built into the vehicle. There are two lower anchors for each LATCH seating position that will accommodate a child restraint with lower attachments (2).

Top Tether Anchor

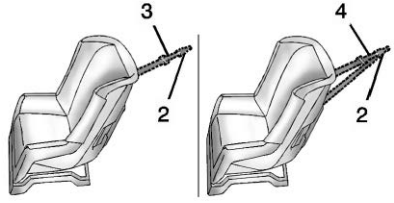

A top tether (3,4) is used to secure the top of the child restraint to the vehicle. A top tether anchor is built into the vehicle. The top tether attachment hook (2) on the child restraint connects to the top tether anchor in the vehicle in order to reduce the forward movement and rotation of the child restraint during driving or in a crash.

The child restraint may have a single tether (3) or a dual tether (4). Either will have a single attachment hook (2) to secure the top tether to the anchor.

Some child restraints with top tethers are designed for use with or without the top tether being attached. Others require the top tether always to be attached. In Canada, the law requires that forward-facing child restraints have a top tether, and that the tether be attached. Be sure to read and follow the instructions for your child restraint.

Lower Anchor and Top Tether Anchor Locations

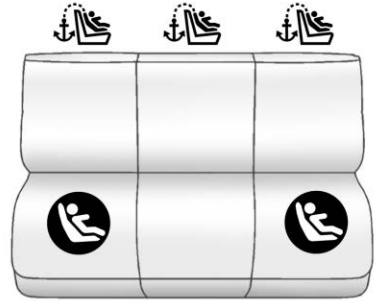

Crew Cab

: Seating positions with top tether anchors.

: Seating positions with two lower anchors.

To assist in locating the lower anchors on crew cab models, each seating position with lower anchors has two labels near the crease between the seatback and the seat cushion.

A child restraint in the rear center seating position must be installed with a seat belt as it is not equipped with lower LATCH anchors. See *Securing Child Restraints (With the Seat Belt in the Rear Seat)* ⇨ *64* or *Securing Child Restraints (With the Seat Belt in the Front Seat)* ⇨ *69*.

Extended Cab (Rear Seats Shown)

: Seating positions with top tether anchors.

: Seating positions with two lower anchors.

For extended cab models with rear seats, there are exposed metal lower anchors for each rear seating position, attached to the back wall, near the seat cushion.

Even though LATCH anchors are required for this position, a child restraint (forward-facing or rear-facing) should not be installed in the left rear seat.

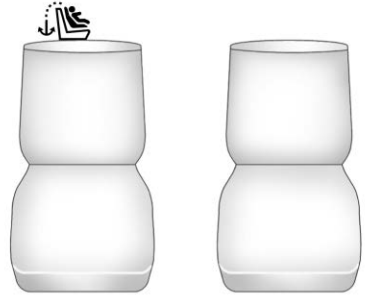

Extended Cab without Rear Seats (Front Seats Shown)

For extended cab models without rear seats, there is a top tether anchor provided for the front passenger seat.

: Seating positions with top tether anchors.

For extended cab without rear seat and crew cab models, there are top tether anchor symbols to assist you in locating the top tether anchors.

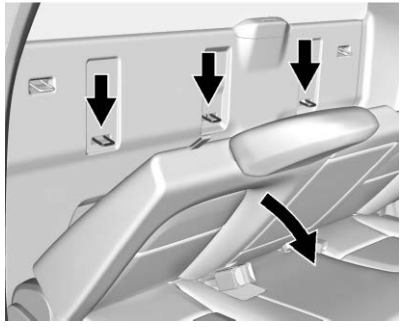

Crew Cab

The top tether anchors in a crew cab model are on the back wall behind each rear seating position. Fold down the rear seatback to access the anchor. See instructions for crew cab under *Rear Seats* ⇨ *25*. Be sure to use an anchor located directly behind the seating position where the child restraint will be placed.

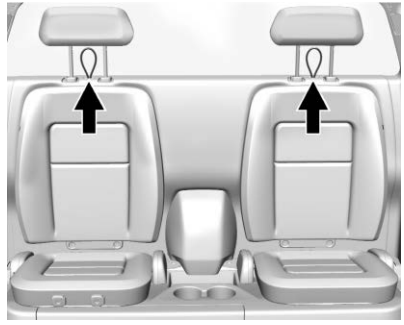

Extended Cab with Rear Seats

The top tether anchors in an extended cab model are loops near the top of each rear seatback. See the instructions under "Securing a Child Restraint with the LATCH System" later in this section on how to attach a top tether.

Do not attach a top tether to the loop near the top of the seatback of the seating position in which the child restraint is installed.

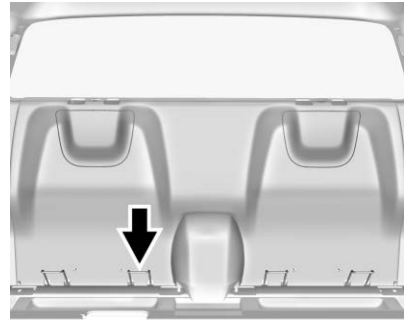

Extended Cab without Rear Seats

The top tether anchor in an extended cab without rear seats is a metal wire on the lower inboard side of the cab wall directly behind the front passenger seat.

Do not place heavy objects on the top tether anchor or use it as a tie down for cargo as this may cause damage to the anchor.

Do not secure a child restraint in a position without a top tether anchor if a national or local law requires that the top tether be attached, or if the instructions that come with the child restraint say that the top tether must be attached.

According to accident statistics, children and infants are safer when properly restrained in a child restraint system or infant restraint system secured in a rear seating position. See *Where to Put the Restraint* ⇨ *49* for additional information.

Securing a Child Restraint with the LATCH System

⚠ Warning

A child could be seriously injured or killed in a crash if the child restraint is not properly attached to the vehicle using either the LATCH anchors or the vehicle seat belt. Follow the instructions that came with the child restraint and the instructions in this manual.

⚠ Warning

To reduce the risk of serious or fatal injuries during a crash, do not attach more than one child restraint to a single anchor. Attaching more than one child restraint to a single anchor could cause

(Continued)

Warning (Continued)

the anchor or attachment to come loose or even break during a crash. A child or others could be injured.

⚠ Warning

Children can be seriously injured or strangled if a shoulder belt is wrapped around their neck. The shoulder belt can tighten but cannot be loosened if it is locked. The shoulder belt locks when it is pulled all the way out of the retractor. It unlocks when the shoulder belt is allowed to go all the way back into the retractor, but it cannot do this if it is wrapped around a child's neck. If the shoulder belt is locked and tightened around a child's neck, the only way to loosen the belt is to cut it.

Buckle any unused seat belts behind the child restraint so children cannot reach them. Pull the shoulder belt all the way out of the retractor to set the lock, and

(Continued)

Warning (Continued)

tighten the belt behind the child restraint after the child restraint has been installed.

Caution

Do not let the LATCH attachments rub against the vehicle's seat belts. This may damage these parts. If necessary, move buckled seat belts to avoid rubbing the LATCH attachments.

Do not fold the rear seatback when the seat is occupied. Do not fold the empty rear seat with a seat belt buckled. This could damage the seat belt or the seat. Unbuckle and return the seat belt to its stowed position, before folding the seat.

If you need to secure more than one child restraint in the rear seat, see *Where to Put the Restraint* ⇨ *49*.

Crew Cab

1. When installing a rear-facing child restraint, it may be necessary to move the front seat forward to properly install per the child restraint manufacturer instructions. See *Seat Adjustment* ⇨ *23* or *Power Seat Adjustment* ⇨ *23*.
2. For rear outboard seating positions, if the head restraint interferes with the proper installation of the child restraint, the head restraint may be removed. See "Head Restraint/Headrest Removal and Reinstallation" at the end of this section.
3. If the child restraint manufacturer's instructions recommend that the top tether be attached, attach the top tether to the top tether anchor. Refer to the child restraint instructions and the following steps:
   - 3.1. Release and pull the rear seatback forward to access the top tether anchors. See *Rear Seats* ⇨ *25*.
   - 3.2. Put the child restraint on the seat.
   - 3.3. Route the top tether according to your child restraint instructions and the following instructions:

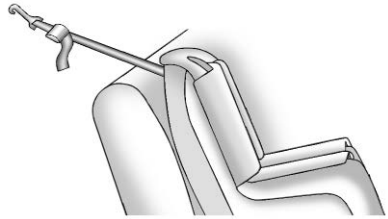

If the position you are using does not have a head restraint and you are using a single tether, route the tether over the seatback.

If the position you are using has a fixed head restraint and you are using a single tether, route the tether around the inboard or outboard side of the head restraint.

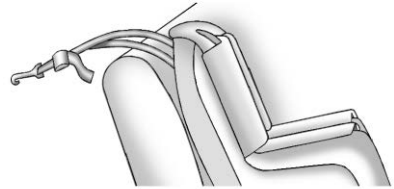

If the position you are using does not have a head restraint and you are using a dual tether, route the tether over the seatback.

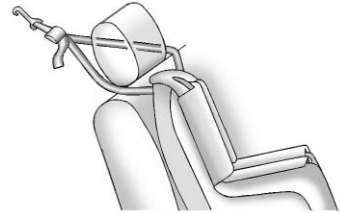

If the position you are using has a fixed head restraint and you are using a dual tether, route the tether around the sides of the head restraint.

If the child restraint is installed next to a center seat, make sure the top tether does not interfere with the center seating position shoulder belt/retractor. If it does, find another suitable seating position to install the child restraint.

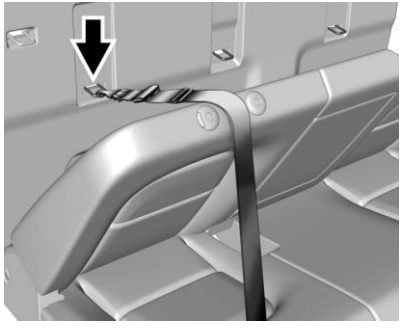

3.4. Adjust the top tether to its full length and attach the top tether hook to the anchor. Make sure that you secure the top tether to the top tether anchor and not to the seatback latch.

3.5. Push rearward on the seatback until it locks into its upright position. Push and pull on the seatback to make sure it is secured properly.

4. Attach and tighten the lower attachments to the lower anchors. If the child restraint does not have lower attachments or the desired seating position does not have lower anchors, secure the child restraint with the seat belt and the top tether. Refer to your child restraint manufacturer instructions and *Securing Child Restraints (With the Seat Belt in the Rear Seat)* ⇨ *64* or *Securing Child Restraints (With the Seat Belt in the Front Seat)* ⇨ *69*.
5. Tighten the top tether.
6. Before placing a child in the child restraint, make sure it is securely held in place. To check, grasp the child restraint at the LATCH path and attempt to move it side to side and back and forth. There should be no more than 2.5 cm (1 in) of movement for proper installation.

Extended Cab with Rear Seats

⚠ Warning

Never secure a rear-facing or forward-facing child restraint in the left rear seating position in an extended cab model. This seating position is not suitable for child restraint installation. The seat cushion is too short to properly support a rear-facing or forward-facing child restraint. A child could be seriously injured or killed in a sudden stop or crash.

A booster seat can be used in the left or right rear seating position if the base of the booster seat fits on the seat cushion and does not extend past the front edge. If it does, it should be installed in the right rear seating position using the seat cushion extension. Only install a booster seat in either rear seating position if it can be properly installed according to the child restraint manufacturer's instructions.

A rear-facing or forward-facing child restraint can be installed in the right rear seating position using the seat cushion

(Continued)

Warning (Continued)

extension in an extended cab model. Never install a rear-facing or forward-facing child restraint in the right rear seating position without the seat cushion extension.

⚠ Warning

Do not let anyone ride in the front passenger seat when a rear-facing child restraint is installed in the right rear seating position. To properly fit the rear-facing child restraint, the front seatback will need to be tilted forward which will not allow a passenger to sit properly in the front outboard passenger seat. The passenger could be seriously injured or killed in a sudden stop or crash.

⚠ Warning

Do not attach a top tether to the loop near the top of the seatback and directly behind the seating position in which the

(Continued)

Warning (Continued)

child restraint is installed in an extended cab with rear seats. The top tether will not be able to be properly tightened. See instructions below for how to properly attach a top tether.

Extended Cab Rear Seat Cushion Extension

The vehicle is equipped with a headrest that is used as a seat cushion extension for installation of child restraints in the right rear seat.

⚠ Warning

The right rear seat cushion extension is designed to support the weight of a child in a child restraint or booster seat. It is neither designed nor intended to support the weight of an adult. Use the seat cushion extension only when a child restraint or booster seat is installed in the right rear seating position.

When installing a rear-facing child restraint in the right rear seating position, move the front seat all the way forward and tilt the seatback forward to properly install the child restraint. See *Power Seat Adjustment* ⇨ *23*, *Seat Adjustment* ⇨ *23*, and *Reclining Seatbacks* ⇨ *23*. When a rear-facing child restraint is installed properly, the front passenger seat cannot be used.

1. Always install the seat cushion extension in the right rear seating position when installing a forward-facing or rear-facing child restraint. Also use the seat cushion extension for booster seats that extend past the front edge of the seat cushion.

2. Press the button for the passenger side headrest at the top of the seatback and pull up.

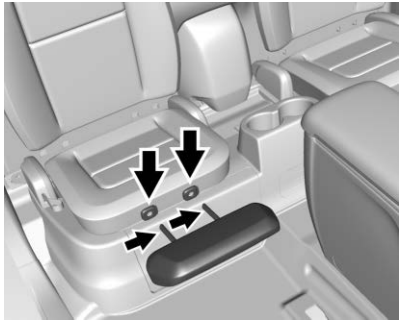

3. Insert the headrest posts into the holes on the front of the passenger side seat cushion to install the seat cushion extension. The notches on the posts should face the passenger side of the vehicle. Try to move the headrest to make sure it is locked in place.
4. If the child restraint manufacturer recommends that the top tether be attached, adjust the top tether to its full length and attach the top tether hook to the anchor. Refer to the child restraint instructions and the following:

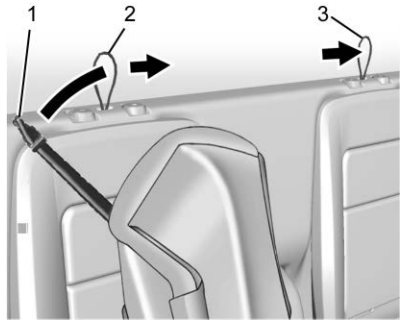

Route the top tether (1) through the loop (2) at the top of the seatback directly behind the child restraint and attach the top tether hook to the top tether loop at the top of the seatback for the opposite rear seating position (3).

5. Attach and tighten the lower attachments to the lower anchors. If the child restraint does not have lower attachments, secure the child restraint with the seat belt and the top tether (if appropriate). See *Securing Child Restraints (With the Seat Belt in the Rear Seat)* ⇨ *64* or *Securing Child Restraints (With the Seat Belt in the Front Seat)* ⇨ *69*.
6. Tighten the top tether. The child restraint instructions will show you how.
7. Before placing a child in the child restraint, make sure it is securely held in place. To check, grasp the child restraint at the LATCH path and attempt to move it side to side and back and forth. There should be no more than 2.5 cm (1 in) of movement for proper installation.
8. Always reinstall the headrest before the seating position is used by another occupant. See “Head Restraint/Headrest Removal and Reinstallation” at the end of this section.

Extended Cab without Rear Seats

⚠ Warning

A child in a rear-facing child restraint can be seriously injured or killed if the right front passenger airbag inflates. This is because the back of the rear-facing child restraint would be very close to the inflating airbag. A child in a forward-facing child restraint can be seriously injured or killed if the right front passenger airbag inflates and the passenger seat is in a forward position.

(Continued)

Warning (Continued)

Even if the passenger sensing system has turned off the right front passenger frontal airbag, no system is fail-safe. No one can guarantee that an airbag will not deploy under some unusual circumstance, even though it is turned off.

Since this vehicle does not have a rear seat that will accommodate a rear-facing child restraint, a rear-facing child restraint should not be installed in your vehicle, even if the airbag is off.

See *Passenger Sensing System* ⇨ *39* for additional information.

The vehicle has a front outboard passenger frontal airbag and a passenger sensing system. The passenger sensing system is designed to turn off the front passenger frontal airbag when an infant in a rear-facing infant seat or a small child in a forward-facing child restraint or booster seat is detected. See *Securing Child Restraints (With the Seat Belt in the Rear Seat)* ⇨ *64* or *Securing Child Restraints (With the Seat Belt in the Front Seat)* ⇨ *69* and *Passenger Sensing System* ⇨ *39* for important seat information and additional information on installing a child restraint in the front passenger position.

1. Put the child restraint on the right front passenger seat.
2. If the child restraint manufacturer's instructions recommend that the top tether be attached, attach and tighten the top tether hook to the top tether anchor.
   2.1. Route the top tether according to your child restraint instructions and the following instructions:

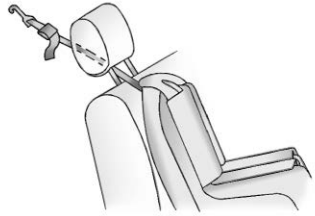

If you are using a single tether, raise the headrest or head restraint and route the tether under the headrest or head restraint and in between the headrest or head restraint posts.

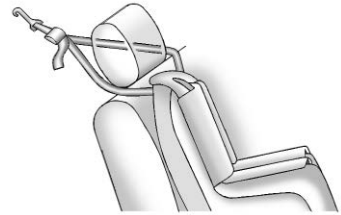

If you are using a dual tether, route the tether around the headrest or head restraint.

If the child restraint is installed next to a center seat, make sure the top tether does not interfere with the center seating position shoulder belt/retractor. If it does, find another suitable seating position to install the child restraint.

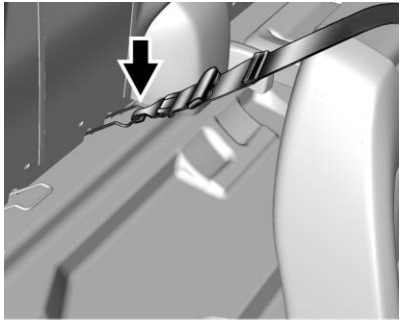

2.2. Attach the top tether hook to the metal wire on the lower inboard side of the cab wall directly behind the front passenger seat.

2.3. Tighten the top tether.

3. Before placing a child in the child restraint, make sure it is securely held in place. To check, grasp the child restraint at the LATCH path and attempt to move it side to side and back and forth. There should be no more than 2.5 cm (1 in) of movement for proper installation.

Head Restraint/Headrest Removal and Reinstallation

⚠ Warning

With head restraints that are not installed and adjusted properly, there is a greater chance that occupants will suffer a neck/spinal injury in a crash. Do not drive until the head restraints for all occupants are installed and adjusted properly.

Crew Cab

The rear outboard head restraints can be removed if they interfere with the proper installation of the child restraint.

To remove the head restraint:

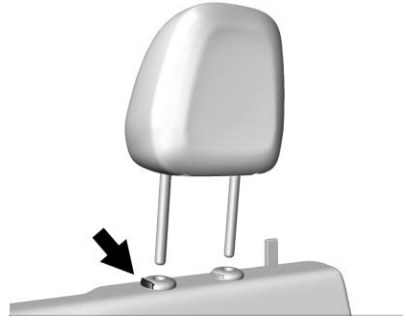

1. Partially fold the seat forward.
2. Press the button on the side of the head restraint post at the top of the seatback and pull up on the head restraint.
3. Store the head restraint in a secure place.
4. Always reinstall the head restraint before the seating position is used by another occupant.

To reinstall the head restraint:

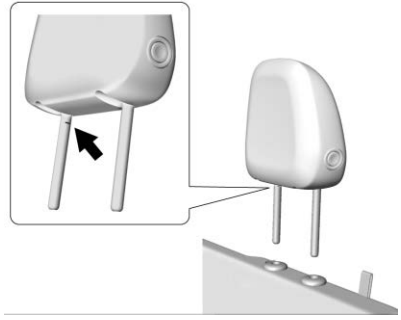

1. Insert the posts into the holes in the top of the seatback. The notch on the post should face the driver side of the vehicle.
2. Push the head restraint down. Pull up on the head restraint to make sure it is locked in place.

Extended Cab

To remove the headrest:

1. Press the button on the side of the headrest post on the top of the seatback and pull up.
2. If removing the headrest to install a booster seat in the left rear seating position, store the headrest in a secure place.

   Never install a forward-facing or rearward-facing child restraint in the left rear seating position.
3. If removing the headrest to install as a seat cushion extension for a forward-facing or rearward-facing child restraint in the right rear seating position, see the instructions in “Securing a Child Restraint with the LATCH System” earlier in this section.
4. Always reinstall the headrest before the seating position is used by another occupant.

To reinstall the headrest:

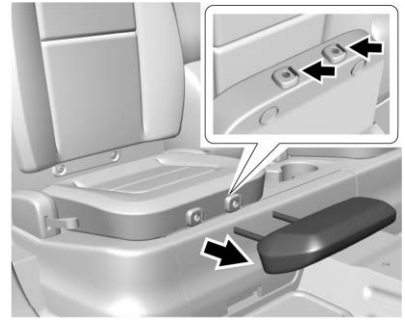

1. If installed as a seat cushion extension, first press both buttons on the front of the seat cushion to remove the headrest.

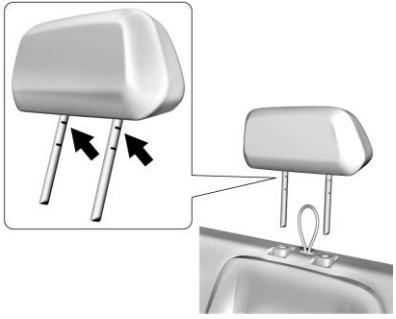

2. To reinstall the headrest, insert the posts into the holes in the top of the seatback. The notches on the posts should face the driver side of the vehicle.
3. Push the headrest down. Pull up on the headrest to make sure it is locked in place.

Replacing LATCH System Parts After a Crash

⚠ Warning

A crash can damage the LATCH system in the vehicle. A damaged LATCH system may not properly secure the child restraint, resulting in serious injury or even death in a crash. To help make sure the LATCH system is working properly after a crash, see your dealer to have the system inspected and any necessary replacements made as soon as possible.

If the vehicle has the LATCH system and it was being used during a crash, new LATCH system parts may be needed.

New parts and repairs may be necessary even if the LATCH system was not being used at the time of the crash.

Securing Child Restraints (With the Seat Belt in the Rear Seat)

When securing a child restraint with the seat belts in a rear seat position, study the instructions that came with the child restraint to make sure it is compatible with this vehicle.

If the child restraint has the LATCH system, see *Lower Anchors and Tethers for Children (LATCH System)* ⇨ *51* for how and where to install the child restraint using LATCH. If a child restraint is secured in the vehicle using a seat belt and it uses a top tether, see *Lower Anchors and Tethers for Children (LATCH System)* ⇨ *51* for top tether anchor locations.

Do not secure a child seat in a position without a top tether anchor if a national or local law requires that the top tether be anchored, or if the instructions that come with the child restraint say that the top tether must be anchored.

In Canada, the law requires that forward-facing child restraints have a top tether, and that the tether be attached.

If the child restraint or vehicle seat position does not have the LATCH system, you will be using the seat belt to secure the child restraint. Be sure to follow the instructions that came with the child restraint.

If more than one child restraint needs to be installed in the rear seat, be sure to read *Where to Put the Restraint* ⇨ *49*.

Extended Cab

⚠ Warning

Never secure a rear-facing or forward-facing child restraint in the left rear seating position in an extended cab model. This seating position is not suitable for child restraint installation. The seat cushion is too short to properly support a rear-facing or forward-facing child restraint. A child could be seriously injured or killed in a sudden stop or crash.

A booster seat can be used in the left or right rear seating position if the base of the booster seat fits on the seat cushion and does not extend past the front edge. If it does, it should be installed in the right rear seating position using the seat cushion extension. Only install a booster seat in either rear seating position if it can be properly installed according to the child restraint manufacturer's instructions.

A rear-facing or forward-facing child restraint can be installed in the right rear seating position using the seat cushion

(Continued)

Warning (Continued)

extension in an extended cab model. Never install a rear-facing or forward-facing child restraint in the right rear seating position without the seat cushion extension.

⚠ Warning

Do not let anyone ride in the front passenger seat when a rear-facing child restraint is installed in the right rear seating position. To properly fit the rear-facing child restraint, the front seatback will need to be tilted forward which will not allow a passenger to sit properly in the front outboard passenger seat. The passenger could be seriously injured or killed in a sudden stop or crash.

A booster seat may be used in the left rear seating position if the base of the booster seat fits on the seat cushion and does not extend past the front edge of the seat cushion. If the booster seat extends past the front of the seat cushion, it should be used in the right rear seating position with the seat cushion extension.

When using the lap-shoulder belt to secure the child restraint in this position, follow the instructions that came with the child restraint and the following instructions:

1. Always install the seat cushion extension in the right rear seat position when installing a forward-facing or rear-facing child restraint. Also use the seat cushion extension for booster seats that extend past the front edge of the seat cushion.

2. Press the button on the passenger side headrest and pull up.

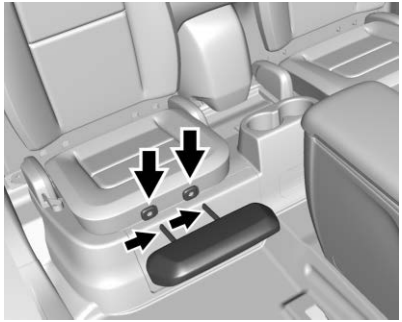

3. Insert the headrest posts into the holes on the front of the passenger side seat cushion to install the seat cushion extension. The notches on the post should face the passenger side of the vehicle. Try to move the headrest to make sure it is locked in place.
4. Put the child restraint on the seat.

   When installing a rear-facing child restraint, move the front seat all the way forward and tilt the seatback forward to properly install the child restraint per the child restraint manufacturer instructions. See *Seat Adjustment* ⇨ *23* and *Reclining Seatbacks* ⇨ *23*. When a rear-facing child restraint is installed properly, the front passenger seat cannot be used.
5. If the child restraint manufacturer recommends using a top tether, adjust the top tether to its full length and attach it to the top tether anchor. Refer to the instructions that came with the child restraint and see *Lower Anchors and Tethers for Children (LATCH System)* ⇨ *51*.
6. Pick up the latch plate, and run the lap and shoulder portions of the vehicle seat belt through or around the child restraint. The child restraint instructions will show you how.

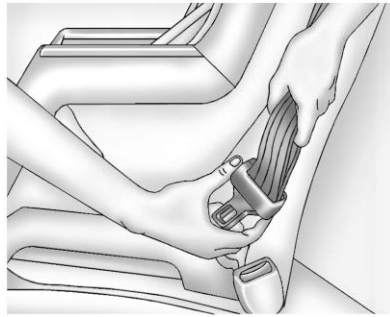

   Tilt the latch plate to adjust the belt if needed.

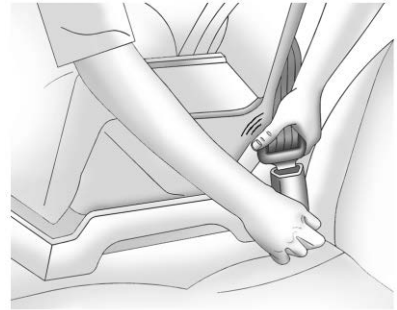

7. Push the latch plate into the buckle until it clicks.

   Position the release button on the buckle, away from the child restraint, so that the seat belt could be quickly unbuckled if necessary.

   The push button used to release the latch plate must be visible and not obscured by the child restraint. There must not be direct contact of the child restraint to the push button.

8. Pull the shoulder belt all the way out of the retractor to set the lock. When the retractor lock is set, the belt can be tightened but not pulled out of the retractor.

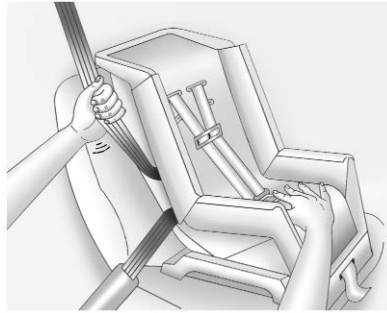

9. To tighten the belt, push down on the child restraint, pull the shoulder portion of the belt to tighten the lap portion of the belt, and feed the shoulder belt back into the retractor. When installing a forward-facing child restraint, it may be helpful to use your knee to push down on the child restraint as you tighten the belt.

   Try to pull the belt out of the retractor to make sure the retractor is locked. If the retractor is not locked, repeat Steps 6 and 7.

10. Tighten the top tether. See *Lower Anchors and Tethers for Children (LATCH System)* ⇨ *51*.
11. Before placing a child in the child restraint, make sure it is securely held in place. To check, grasp the child restraint at the seat belt path and attempt to move it side to side and back and forth. When the child restraint is properly installed, there should be no more than 2.5 cm (1 in) of movement.

To remove the child restraint, unbuckle the vehicle's seat belt and let it return to the stowed position. If the top tether is attached to a top tether anchor, disconnect it. Reinstall the headrest in the seatback before the seating position is used. See "Head Restraint/Headrest Removal and Reinstallation" under *Lower Anchors and Tethers for Children (LATCH System)* ⇨ *51* for additional information on installing the headrest properly.

Crew Cab

When using the lap-shoulder belt to secure the child restraint in this position, follow the instructions that came with the child restraint and the following instructions:

1. If the head restraint interferes with the proper installation of the child restraint, the head restraint may be removed. See "Head Restraint/Headrest Removal and Reinstallation" under *Lower Anchors and Tethers for Children (LATCH System)* ⇨ *51*.
2. If the child restraint manufacturer recommends using a top tether, adjust the top tether to its full length and attach it to the top tether anchor. Refer to the instructions that came with the child restraint and see *Lower Anchors and Tethers for Children (LATCH System)* ⇨ *51*.
3. Put the child restraint on the seat.
4. Pick up the latch plate, and run the lap and shoulder portions of the vehicle's seat belt through or around the child restraint. The child restraint instructions will show you how.

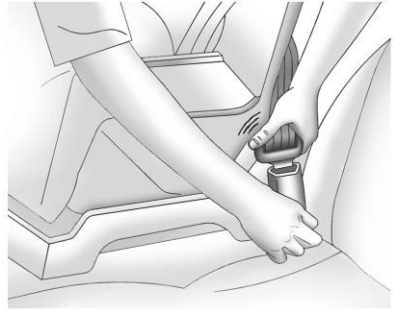

5. Push the latch plate into the buckle until it clicks.

   Position the release button on the buckle, away from the child restraint, so that the seat belt could be quickly unbuckled if necessary.

   The push button used to release the latch plate must be visible and not obscured by the child restraint. There must not be direct contact of the child restraint to the push button.

6. Pull the shoulder belt all the way out of the retractor to set the lock. When the retractor lock is set, the belt can be tightened but not pulled out of the retractor.

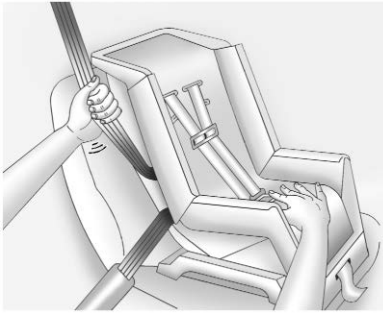

7. To tighten the belt, push down on the child restraint, pull the shoulder portion of the belt to tighten the lap portion of the belt, and feed the shoulder belt back into the retractor. When installing a forward-facing child restraint, it may be helpful to use your knee to push down on the child restraint as you tighten the belt.

   Try to pull the belt out of the retractor to make sure the retractor is locked. If the retractor is not locked, repeat Steps 6 and 7.

8. Tighten the top tether. See *Lower Anchors and Tethers for Children (LATCH System)* ⇨ *51*.

9. Before placing a child in the child restraint, make sure it is securely held in place. To check, grasp the child restraint at the seat belt path and attempt to move it side to side and back and forth. When the child restraint is properly installed, there should be no more than 2.5 cm (1 in) of movement.

To remove the child restraint, unbuckle the vehicle's seat belt and let it return to the stowed position. If the top tether is attached to a top tether anchor, disconnect it. If the head restraint was removed, reinstall it before the seating position is used. See "Head Restraint/Headrest Removal and Reinstallation" under *Lower Anchors and Tethers for Children (LATCH System)* ⇨ *51* for additional information on installing the head restraint properly.

Securing Child Restraints (With the Seat Belt in the Front Seat)

This vehicle has airbags. A rear seat is a safer place to secure a forward-facing child restraint. See *Where to Put the Restraint* ⇨ *49*.

In addition, the vehicle has a passenger sensing system which is designed to turn off the front outboard passenger's frontal airbag under certain conditions. See *Passenger Sensing System* ⇨ *39* and *Passenger Airbag Status Indicator* ⇨ *86* for more information, including important safety information.

Never put a rear-facing child restraint in the front. This is because the risk to the rear-facing child is so great, if the airbag deploys.

⚠ Warning

A child in a rear-facing child restraint can be seriously injured or killed if the front outboard passenger frontal airbag inflates. This is because the back of the rear-facing child restraint would be very close to the inflating airbag. A child in a forward-facing child restraint can be seriously injured or killed if the front outboard passenger frontal airbag inflates and the passenger seat is in a forward position.

Even if the passenger sensing system has turned off the front outboard passenger frontal airbag, no system is fail-safe. No

(Continued)

Warning (Continued)

one can guarantee that an airbag will not deploy under some unusual circumstance, even though it is turned off.

Secure rear-facing child restraints in a rear seat, even if the airbag is off. If you secure a forward-facing child restraint in the front outboard passenger seat, always move the seat as far back as it will go. It is better to secure the child restraint in a rear seat.

See *Passenger Sensing System* ⇨ *39* for additional information.

If the vehicle does not have a rear seat that will accommodate a rear-facing child restraint, a rear-facing child restraint should not be installed in the vehicle, even if the airbag is off.

If a child restraint uses a top tether, see *Lower Anchors and Tethers for Children (LATCH System)* ⇨ *51* for top tether anchor locations.

Do not secure a child seat in a position without a top tether anchor if a national or local law requires that the top tether be anchored, or if the instructions that come with the child restraint say that the top tether must be anchored.

In Canada, the law requires that forward-facing child restraints have a top tether, and that the tether be attached.

When using the lap-shoulder belt to secure the child restraint in this position, follow the instructions that came with the child restraint and the following instructions:

1. Move the seat as far back as it will go before securing the forward-facing child restraint. Move the seat upward or the seatback to an upright position, if needed, to get a tight installation of the child restraint.

   The push button used to release the latch plate must be visible and not obscured by the child restraint. There must not be direct contact of the child restraint to the push button.

   When the passenger sensing system has turned off the front outboard passenger frontal airbag, the OFF indicator on the passenger airbag status indicator should light and stay lit when you start the vehicle. See *Passenger Airbag Status Indicator* ⇨ *86*.

2. Put the child restraint on the seat.
3. Pick up the latch plate, and run the lap and shoulder portions of the vehicle seat belt through or around the child restraint. The child restraint instructions will show you how.

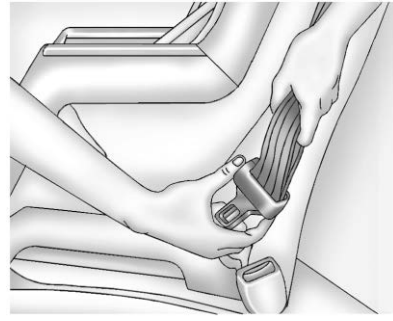

   Tilt the latch plate to adjust the belt if needed.

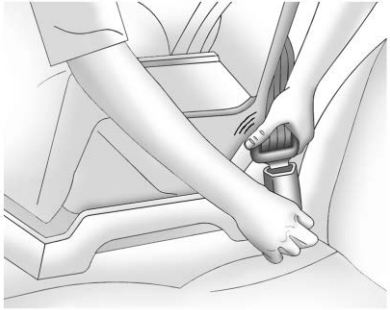

4. Push the latch plate into the buckle until it clicks.

   Position the release button on the buckle, away from the child restraint, so that the seat belt could be quickly unbuckled if necessary.

5. Pull the shoulder belt all the way out of the retractor to set the lock. When the retractor lock is set, the belt can be tightened but not pulled out of the retractor.
6. If the vehicle does not have a rear seat and the child restraint manufacturer recommends using a top tether anchor, attach the top tether to the top tether anchor. Refer to the instructions that came with the child restraint and to *Lower Anchors and Tethers for Children (LATCH System)* ⇨ *51*.

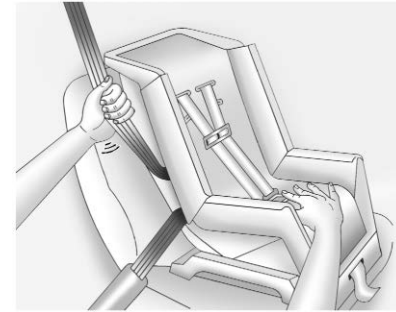

7. To tighten the belt, push down on the child restraint, pull the shoulder portion of the belt to tighten the lap portion of the belt, and feed the shoulder belt back into the retractor. When installing a forward-facing child restraint, it may be helpful to use your knee to push down on the child restraint as you tighten the belt.

   Try to pull the belt out of the retractor to make sure the retractor is locked. If the retractor is not locked, repeat Steps 5 and 7.
8. Tighten the top tether. See *Lower Anchors and Tethers for Children (LATCH System)* ⇨ *51*.

9. Before placing a child in the child restraint, make sure it is securely held in place. To check, grasp the child restraint at the seat belt path and attempt to move it side to side and back and forth. When the child restraint is properly installed, there should be no more than 2.5 cm (1 in) of movement.

If the airbag is off, the OFF indicator on the passenger airbag status indicator will come on and stay on when the vehicle is started. If a child restraint has been installed and on indicator is lit, see "If the On Indicator Is Lit for a Child Restraint" under *Passenger Sensing System* ⇨ *39*.

To remove the child restraint, unbuckle the vehicle seat belt and let it return to the stowed position. If the top tether is attached to a top tether anchor, disconnect it.

Storage

Storage Compartments

Storage Compartments 73
Glove Box 73
Cupholders 73
Sunglasses Storage 73
Underseat Storage 74
Center Console Storage 74

Storage Compartments

⚠ Warning

Do not store heavy or sharp objects in storage compartments. In a crash, these objects may cause the cover to open and could result in injury.

Glove Box

Lift up on the glove box lever to open it.

Cupholders

Crew Cab

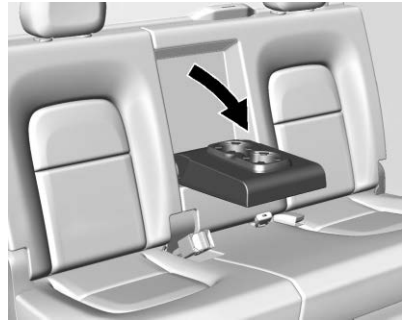

If equipped, pull the armrest to lower. There are two cupholders in the armrest.

Sunglasses Storage

If equipped, press and release to access.

Underseat Storage

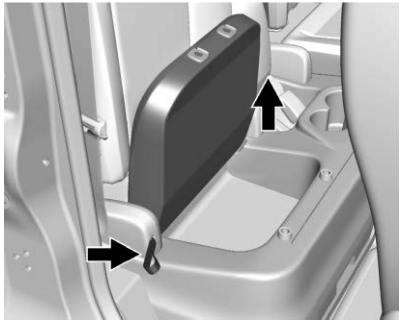

Extended Cab Shown, Crew Model Similar

If equipped, there is storage under the rear seat. Pull the release strap or lever and then raise the seat cushion. Pull the strap or lever again to lower the cushion.

Center Console Storage

There is storage under the armrest in the center console. Press the button and lift.

There may be a USB port and/or auxiliary jack inside. See *Power Outlets* ⇨ *78* or the infotainment manual.

Instruments and Controls

Controls

Steering Wheel Adjustment 76
Steering Wheel Controls 76
Heated Steering Wheel 76
Horn 77
Windshield Wiper/Washer 77
Compass 78
Clock 78
Power Outlets 78
Wireless Charging 79

Warning Lights, Gauges, and Indicators

Warning Lights, Gauges, and Indicators 81
Instrument Cluster 81
Speedometer 84
Odometer 84
Trip Odometer 84
Tachometer 84
Fuel Gauge 84
Engine Coolant Temperature Gauge 85
Seat Belt Reminders 85
Airbag Readiness Light 86
Passenger Airbag Status Indicator 86
Charging System Light 87
Malfunction Indicator Lamp (Check Engine Light) 87
Brake System Warning Light 88
Antilock Brake System (ABS) Warning Light 89
Four-Wheel-Drive Light 89
Tow/Haul Mode Light 90
Hill Descent Control Light 90
Lane Departure Warning (LDW) Light 90
Vehicle Ahead Indicator 90
Traction Off Light 90
StabiliTrak OFF Light 91
Traction Control System (TCS)/StabiliTrak Light 91
Tire Pressure Light 91
Engine Oil Pressure Light 92
Low Fuel Warning Light 92
Security Light 92
High-Beam On Light 93
Front Fog Lamp Light 93
Lamps On Reminder 93
Cruise Control Light 93
Door Ajar Light (Uplevel Cluster) 93

Information Displays

Driver Information Center (DIC) (Base Level) 93
Driver Information Center (DIC) (Uplevel) 96

Vehicle Messages

Vehicle Messages 98
Engine Power Messages 99
Vehicle Speed Messages 99

Vehicle Personalization

Vehicle Personalization 99

Controls

Steering Wheel Adjustment

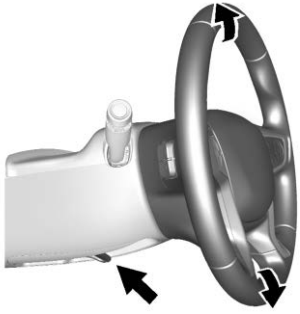

To adjust the steering wheel:

1. Pull the lever down.
2. Move the steering wheel up or down.
3. Pull the lever up to lock the steering wheel in place.

Tilt and Telescoping Steering Wheel

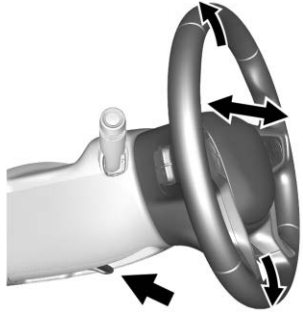

To adjust the tilt and telescoping steering wheel, if equipped:

1. Pull the lever down.
2. Move the steering wheel up or down.
3. Pull or push the steering wheel closer or away from you.
4. Pull the lever up to lock the steering wheel in place.

Do not adjust the steering wheel while driving.

Steering Wheel Controls

The infotainment system can be operated by using the steering wheel controls. See *Steering Wheel Controls* ⇨ *112*.

Heated Steering Wheel

: If equipped, press to turn it on or off. A light next to the button displays when the feature is turned on.

The steering wheel takes about three minutes to start heating.

Horn

To sound the horn, press on the steering wheel.

Windshield Wiper/Washer

The windshield wiper/washer lever is on the right side of the steering column. With the ignition on or in ACC/ACCESSORY, move the windshield wiper lever to select the wiper speed.

HI : Use for fast wipes.

LO : Use for slow wipes.

INT : Move the lever up to INT for intermittent wipes, then turn the INT band up for more frequent wipes or down for less frequent wipes.

OFF : Use to turn the wipers off.

1X : For a single wipe, briefly move the wiper lever down. For several wipes, hold the wiper lever down.

: Pull the windshield wiper lever toward you to spray windshield washer fluid and activate the wipers. The wipers will continue until the lever is released or the maximum wash time is reached. When the windshield wiper lever is released, additional wipes may occur depending on how long the windshield washer had been activated. See *Washer Fluid* ⇨ *247* for information on filling the windshield washer fluid reservoir.

Clear snow and ice from the wiper blades and windshield before using them. If frozen to the windshield, carefully loosen or thaw them. Damaged blades should be replaced. See *Wiper Blade Replacement* ⇨ *252*.

Heavy snow or ice can overload the wiper motor.

⚠ Warning

In freezing weather, do not use the washer until the windshield is warmed. Otherwise the washer fluid can form ice on the windshield, blocking your vision.

⚠ Warning

Before driving the vehicle, always clear snow and ice from the hood, windshield, washer nozzles, roof, and rear of the vehicle, including all lamps and windows. Reduced visibility from snow and ice buildup could lead to a crash.

Wiper Parking

If the ignition is turned off while the wipers are on LO, HI, or INT, they will immediately stop.

If the windshield wiper lever is then moved to OFF before the driver door is opened or within 10 minutes, the wipers will restart and move to the base of the windshield.

If the ignition is turned off while the wipers are performing wipes due to windshield washing, the wipers continue to run until they reach the base of the windshield.

Compass

The vehicle may have a compass display on the Driver Information Center (DIC). The compass receives its heading and other information from the Global Positioning System (GPS) antenna, StabiliTrak/Electronic Stability Control (ESC), and vehicle speed information.

The compass system is designed to operate for a certain number of miles or degrees of turn before needing a signal from the GPS satellites. When the compass display shows CAL, drive the vehicle for a short distance in an open area where it can receive a GPS signal. The compass system will automatically determine when a GPS signal is restored and provide a heading again.

Clock

Set the time and date using the infotainment system. See "Time/Date" under *Settings* ⇨ *144*.

Power Outlets

For USB charging port locations, see the infotainment manual.

Accessory power outlets can be used to plug in electrical equipment, such as a cell phone, MP3 player, etc.

The vehicle may have accessory power outlets:

- On the center stack below the climate control system, if equipped.
- On the center floor console, if equipped.
- On the rear of the center storage console.

Lift the cover to access and replace when not in use.

⚠ Warning

Power is supplied to the outlets when the ignition is on. When not in use, do not leave electrical equipment plugged in. The vehicle could catch fire and cause injury or death.

Caution

Leaving electrical equipment plugged in for an extended period of time while the vehicle is off will drain the battery. Always unplug electrical equipment when not in use and do not plug in equipment that exceeds the maximum 15 amp rating.

Certain power accessory plugs may not be compatible with the accessory power outlet and could overload vehicle or adapter fuses. If a problem is experienced, see your dealer.

When adding electrical equipment, be sure to follow the proper installation instructions included with the equipment. See *Add-On Electrical Equipment* ⇨ *230*.

Caution

Hanging heavy equipment from the power outlet can cause damage not covered by the vehicle warranty. The power outlets are designed for accessory power plugs only, such as cell phone charge cords.

Wireless Charging

If equipped and enabled, the vehicle has wireless charging in front of the center floor console. The system operates at 145 kHz and wirelessly charges one Qi compatible smartphone. The power output of the system is capable of charging at a rate up to 1 amp (5 W), as requested by the compatible smartphone. See *Radio Frequency Statement* ⇨ *336*.

⚠ Warning

Wireless charging may affect the operation of an implanted pacemaker or other medical devices. If you have one, it is recommended to consult with your doctor before using the wireless charging system.

The vehicle must be on, in ACC/ACCESSORY, or Retained Accessory Power (RAP) must be active. The wireless charging feature may not correctly indicate charging when the vehicle is in RAP, during a Bluetooth phone call, or when phone projection (e.g. Apple CarPlay / Android Auto) is active. See *Retained Accessory Power (RAP)* ⇨ *187*.

The operating temperature is −40 °C (−40 °F) to 85 °C (185 °F) for the charging system and 0 °C (32 °F) to 35 °C (95 °F) for the phone. A charging stopped alert may be displayed on the infotainment screen, if the wireless charger or smartphone are outside of normal operating temperature. Charging will automatically resume when a normal operating temperature is reached.

⚠ Warning

Remove all objects from the charger before charging your compatible smartphone. Objects, such as coins, keys, rings, paper clips, or cards, between the smartphone and charger may become very hot.

On the rare occasion that the charging system does not detect an object, and the object gets wedged between the smartphone and charger, remove the smartphone and allow the object to cool before removing it from the charger, to prevent burns.

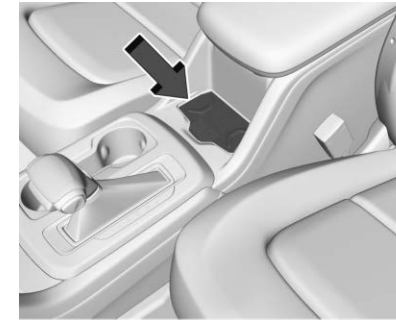

To charge a compatible smartphone:

1. Confirm the smartphone is capable of wireless charging.
2. Remove all objects from the charging pad. The system may not charge if there are any objects between the smartphone and charger.
3. Place the smartphone face up against the rear of the charger.

   To maximize the charge rate, ensure the smartphone is fully seated and centered in the holder with nothing under it.

   A thick smartphone case may prevent the charger from working, or reduce the charging performance. See your dealer for additional information.

4. A green ⚡ will appear on the infotainment display, next to the phone icon. This indicates that the smartphone is detected.
5. If a smartphone is placed on the charger and ⚡ turns off or turns yellow, remove the smartphone and any objects from the pad. Turn the smartphone 180 degrees and wait a few seconds before placing/aligning it on the pad again.
6. If a smartphone is placed on the charger and ⚡ turns red, the charger and/or the smartphone is overheated. Remove the smartphone and any objects from the charger in order to cool the system.

The smartphone may become warm during charging. This is normal. In warmer temperatures, the speed of charging may be reduced.

Software Acknowledgements

Certain Wireless Charging Module product from LG Electronics, Inc. ("LGE") contains the open source software detailed below. Refer to the indicated open source licenses (as are included following this notice) for the terms and conditions of their use.

OSS Notice Information

To obtain the source code that is contained in this product, please visit https://opensource.lge.com. In addition to the source code, all referred license terms, warranty disclaimers and copyright notices are available for download. LG Electronics will also provide open source code to you on CD-ROM for a charge covering the cost of performing such distribution (such as the cost of media, shipping, and handling) upon email request to opensource@lge.com. This offer is valid for three (3) years from the date on which you purchased the product.

Freescale-WCT library

Copyright (c) 2012-2014 Freescale Semiconductor, Inc.. All rights reserved.

Redistribution and use in source and binary forms, with or without modification, are permitted provided that the following conditions are met:

1. Redistributions of source code must retain the above copyright notice, this list of conditions and the following disclaimer.
2. Redistributions in binary form must reproduce the above copyright notice, this list of conditions and the following disclaimer in the documentation and/or other materials provided with the distribution.
3. Neither the name of the copyright holder nor the names of its contributors may be used to endorse or promote products derived from this software without specific prior written permission.

THIS SOFTWARE IS PROVIDED BY THE COPYRIGHT HOLDERS AND CONTRIBUTORS "AS IS" AND ANY EXPRESS OR IMPLIED WARRANTIES, INCLUDING, BUT NOT LIMITED TO, THE IMPLIED WARRANTIES OF MERCHANTABILITY AND FITNESS FOR A PARTICULAR PURPOSE ARE DISCLAIMED. IN NO EVENT SHALL THE COPYRIGHT HOLDER OR CONTRIBUTORS BE LIABLE FOR ANY DIRECT, INDIRECT, INCIDENTAL, SPECIAL, EXEMPLARY, OR CONSEQUENTIAL DAMAGES (INCLUDING, BUT NOT LIMITED TO, PROCUREMENT OF SUBSTITUTE GOODS OR SERVICES; LOSS OF USE, DATA, OR PROFITS; OR BUSINESS INTERRUPTION) HOWEVER CAUSED AND ON ANY THEORY OF LIABILITY, WHETHER IN CONTRACT, STRICT LIABILITY, OR TORT (INCLUDING NEGLIGENCE OR OTHERWISE) ARISING IN ANY WAY OUT OF THE USE OF THIS SOFTWARE, EVEN IF ADVISED OF THE POSSIBILITY OF SUCH DAMAGE.

Warning Lights, Gauges, and Indicators

Warning lights and gauges can signal that something is wrong before it becomes serious enough to cause an expensive repair or replacement. Paying attention to the warning lights and gauges could prevent injury.

Some warning lights come on briefly when the engine is started to indicate they are working. When one of the warning lights comes on and stays on while driving, or when one of the gauges shows there may be a problem, check the section that explains what to do. Waiting to do repairs can be costly and even dangerous.

Instrument Cluster

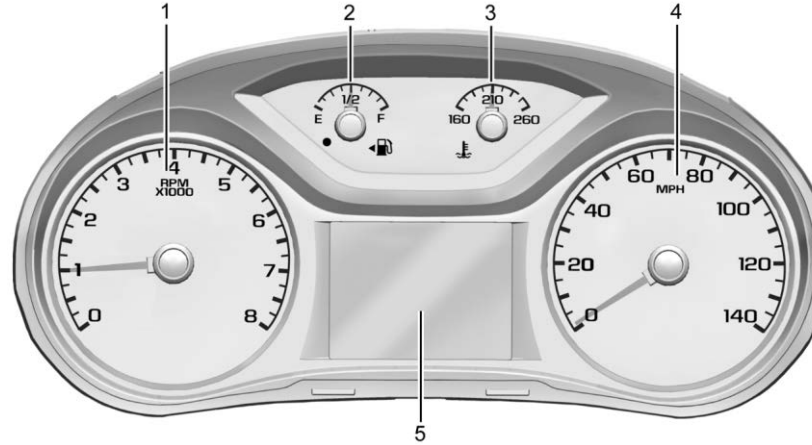

Base Level English Shown, Metric Similar

1. *Tachometer* ⇨ *84*
2. *Fuel Gauge* ⇨ *84*
3. *Engine Coolant Temperature Gauge* ⇨ *85*
4. *Speedometer* ⇨ *84*
5. *Driver Information Center (DIC) (Base Level)* ⇨ *93* or *Driver Information Center (DIC) (Uplevel)* ⇨ *96*

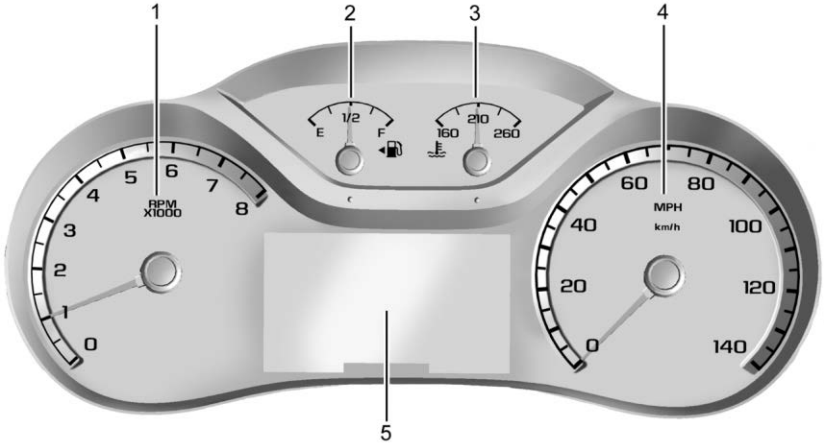

Uplevel English Shown, Metric Similar

1. *Tachometer* ⇨ *84*
2. *Fuel Gauge* ⇨ *84*
3. *Engine Coolant Temperature Gauge* ⇨ *85*
4. *Speedometer* ⇨ *84*
5. *Driver Information Center (DIC) (Base Level)* ⇨ *93* or *Driver Information Center (DIC) (Uplevel)* ⇨ *96*

If the vehicle has a diesel engine, see the Duramax diesel supplement for more information.

Uplevel Cluster Menu

There is an interactive display area in the center of the instrument cluster.

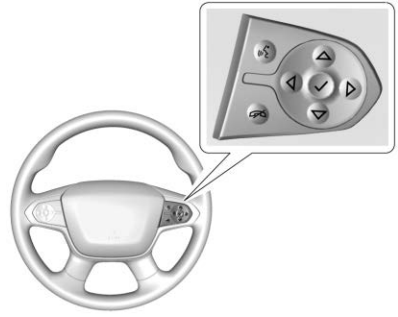

Use the right steering wheel control to open and scroll through the different items and displays.

Press ◁ or ▷ to change between the cluster applications. Press △ or ▽ to scroll through the list of available features within each application. Press ✓ to select. Not all applications will be available on all vehicles. Some may be temporarily restricted when the vehicle is off or in ACC/ACCESSORY.

- Home Page
- Info App. This is where the selected Driver Information Center (DIC) displays can be viewed. See “Driver Information Center (DIC) (Uplevel)” in the Index.
- Audio
- Phone
- Navigation
- Options

Home

Information displayed here can be customized from the Options menu.

Speedometer : Displays how fast the vehicle is moving in either kilometers per hour (km/h) or miles per hour (mph).

Speed Sign : Shows sign information, which comes from a roadway database in the onboard navigation, if equipped.

Time : Displays the current time.

Fuel Range : Displays the approximate distance the vehicle can be driven without refueling. The fuel range estimate is based on an average of the vehicle’s fuel economy over recent driving history and the amount of fuel remaining in the fuel tank. Fuel range cannot be reset.

Audio

Press △ or ▽ to scroll through radio stations or move to the next or previous track of a CD/USB/Bluetooth device that is connected to the vehicle. Press ✓ to enter the Audio menu to browse for music, select from favorites, or change the audio source.

Phone

In the Phone menu, if there is no active phone call, view recent calls, scroll through contacts, select from the favorites, or change the phone source. If there is an active call, mute the phone or switch to handset operation.

Navigation

In the Navigation menu, if there is no active route, you can resume the last route and turn the voice prompts on or off. If there is an active route, press ✓ to cancel route guidance or turn the voice prompts on or off.

Options

Press △ or ▽ to scroll through items in the Options menu. Press ✓ to select the item. Press ◁ to exit the item.

Units : Choose US or Metric units. A selected mark will be displayed next to the selected item.

Info Page Options : Select the items to be displayed in the Info app. A selected mark will be displayed next to the selected item.

Home Page Options : Select the available elements to display. Not all elements will be available on all vehicles: Speedometer, Speed Sign, Time, and Fuel Range.

Speed Warning : Allows the driver to set a speed that they do not want to exceed. Press △ or ▽ to adjust the value. Press ✓ to set the speed. Once the speed is set, this feature can be turned off by pressing ✓ while viewing this page. If the selected speed limit is exceeded, a pop-up warning is displayed with a chime.

Software Information : Displays open source software information.

Speedometer

The speedometer shows the vehicle speed in either kilometers per hour (km/h) or miles per hour (mph).

Odometer

The odometer shows how far the vehicle has been driven, in either kilometers or miles.

Trip Odometer

The trip odometer shows how far the vehicle has been driven since the trip odometer was last reset.

The trip odometer is accessed and reset through the Driver Information Center (DIC). See *Driver Information Center (DIC) (Base Level)* ⇨ *93* or *Driver Information Center (DIC) (Uplevel)* ⇨ *96*.

Tachometer

The tachometer displays the engine speed in revolutions per minute (rpm).

Fuel Gauge

Base Level Metric Shown, Uplevel Similar

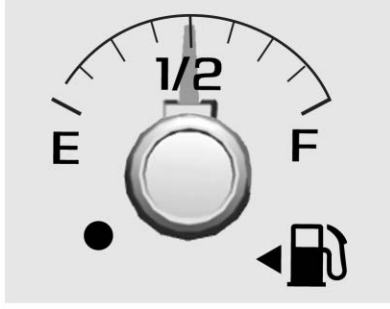

Base Level English Shown, Uplevel Similar

When the ignition is on, the fuel gauge indicates about how much fuel is left in the tank.

There is an arrow near the fuel gauge pointing to the side of the vehicle the fuel door is on.

When the indicator nears empty, the low fuel light comes on. There still is a little fuel left, but the vehicle should be refueled soon.

Here are three things that some owners ask about. None of these show a problem with the fuel gauge:

- It takes a little more, or less fuel to fill up than the gauge indicated. For example, the gauge may have indicated the tank was half full, but it actually took a little more, or less than half the tank's capacity to fill the tank.
- The gauge moves a little while turning a corner, speeding up or braking.
- The gauge takes a few seconds to stabilize after the ignition is turned on and goes back to empty when the ignition is turned off.

Engine Coolant Temperature Gauge

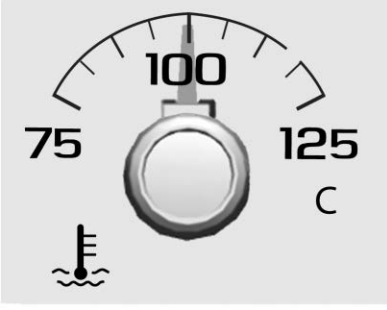

Base Level Metric Shown, Uplevel Similar

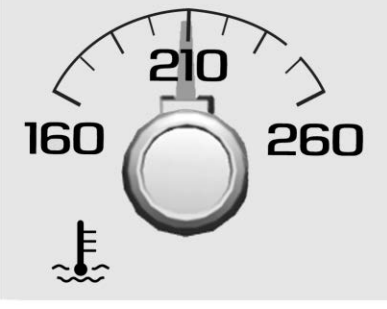

Base Level English Shown, Uplevel Similar

This gauge shows the engine coolant temperature.

If the pointer moves toward the warning area at the high end of the gauge, the engine is too hot.

This reading indicates the same thing as the warning light. It means that the engine coolant has overheated. If the vehicle has been operating under normal driving conditions, pull off the road, stop the vehicle, and turn off the engine as soon as possible. See *Engine Overheating* ⇨ *246*.

Seat Belt Reminders

Driver Seat Belt Reminder Light

There is a driver seat belt reminder light on the instrument cluster.

When the vehicle is started, this light flashes and a chime may come on to remind the driver to fasten their seat belt.

Then the light stays on solid until the belt is buckled. This cycle may continue several times if the driver remains or becomes unbuckled while the vehicle is moving.

If the driver seat belt is buckled, neither the light nor the chime comes on.

Front Passenger Seat Belt Reminder Light

The vehicle may have a front passenger seat belt reminder light near the passenger airbag status indicator. See *Passenger Sensing System* ⇨ *39*.

When the vehicle is started, this light flashes and a chime may come on to remind passengers to fasten their seat belt.

Then the light stays on solid until the belt is buckled. This cycle continues several times if the front passenger remains or becomes unbuckled while the vehicle is moving.

If the front passenger seat belt is buckled, neither the chime nor the light comes on.

The front passenger seat belt reminder light and chime may come on if an object is put on the seat such as a briefcase, handbag, grocery bag, laptop, or other electronic device. To turn off the reminder light and/or chime, remove the object from the seat or buckle the seat belt.

Airbag Readiness Light

This light shows if there is an electrical problem with the airbag system. It is located in the instrument cluster. The system check includes the airbag sensor(s), the passenger sensing system, the pretensioners, the airbag modules, the wiring, and the crash sensing and diagnostic module. For more information on the airbag system, see *Airbag System* ⇨ *34*.

The airbag readiness light comes on for several seconds when the vehicle is started. If the light does not come on then, have it fixed immediately.

⚠ Warning

If the airbag readiness light stays on after the vehicle is started or comes on while driving, it means the airbag system might not be working properly. The airbags in the vehicle might not inflate in a crash, or they could even inflate without a crash. To help avoid injury, have the vehicle serviced right away.

If there is a problem with the airbag system, a Driver Information Center (DIC) message may also come on.

Passenger Airbag Status Indicator

The vehicle has a passenger sensing system. See *Passenger Sensing System* ⇨ *39* for important safety information. The overhead console has a passenger airbag status indicator.

United States

Canada

When the vehicle is started, the passenger airbag status indicator will light ON and OFF, or the symbol for on and off, for several seconds as a system check. Then, after several more seconds, the status indicator will light either ON or OFF, or either the on or off symbol, to let you know the status of the front outboard passenger frontal airbag.

If the word ON or the on symbol is lit on the passenger airbag status indicator, it means that the front outboard passenger frontal airbag is allowed to inflate.

If the word OFF or the off symbol is lit on the airbag status indicator, it means that the passenger sensing system has turned off the front outboard passenger frontal airbag.

If, after several seconds, both status indicator lights remain on, or if there are no lights at all, there may be a problem with the lights or the passenger sensing system. See your dealer for service.

⚠ Warning

If the airbag readiness light ever comes on and stays on, it means that something may be wrong with the airbag system. To help avoid injury to yourself or others, have the vehicle serviced right away. See *Airbag Readiness Light* ⇨ *86* for more information, including important safety information.

Charging System Light

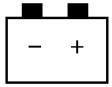

The charging system light comes on briefly when the ignition is turned on, but the engine is not running, as a check to show the light is working. It should go out when the engine is started.

If the light stays on, or comes on while driving, there may be a problem with the electrical charging system. Have it checked by your dealer. Driving while this light is on could drain the battery.

When this light comes on, or is flashing, the Driver Information Center (DIC) also displays a message.

If a short distance must be driven with the light on, be sure to turn off all accessories, such as the radio and air conditioner. Find a safe place to stop the vehicle.

Malfunction Indicator Lamp (Check Engine Light)

This light is part of the vehicle's emission control on-board diagnostic system. If this light is on while the engine is running, a malfunction has been detected and the vehicle may require service. The light should come on to show that it is working when the ignition is on and the engine is not running. See *Ignition Positions* ⇨ *184*.

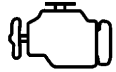

Malfunctions are often indicated by the system before any problem is noticeable. Being aware of the light and seeking service promptly when it comes on may prevent damage.

Caution

If the vehicle is driven continually with this light on, the emission control system may not work as well, the fuel economy may be lower, and the vehicle may not run smoothly. This could lead to costly repairs that might not be covered by the vehicle warranty.

Caution

Modifications to the engine, transmission, exhaust, intake, or fuel system, or the use of replacement tires that do not meet the original tire specifications, can cause this light to come on. This could lead to costly repairs not covered by the vehicle warranty. This could also affect the vehicle's ability to pass an Emissions Inspection/Maintenance test. See *Accessories and Modifications* ⇨ *233*.

If the light is flashing : A malfunction has been detected that could damage the emission control system and increase vehicle emissions. Diagnosis and service may be required.

To help prevent damage, reduce vehicle speed and avoid hard accelerations and uphill grades. If towing a trailer, reduce the amount of cargo being hauled as soon as possible.

If the light continues to flash, find a safe place to park. Turn the vehicle off and wait at least 10 seconds before restarting the engine. If the light is still flashing, follow the previous guidelines and see your dealer for service as soon as possible.

If the light is on steady : A malfunction has been detected. Diagnosis and service may be required.

Check the following:

- If fuel has been added to the vehicle using the capless funnel adapter, make sure that it has been removed. See "Filling the Tank with a Portable Gas Can" under *Filling the Tank* ⇨ *213*. The diagnostic system can detect if the adapter has been left installed in the vehicle, allowing fuel to evaporate into the atmosphere. A few driving trips with the adapter removed may turn off the light.
- Poor fuel quality can cause inefficient engine operation and poor driveability, which may go away once the engine is warmed up. If this occurs, change the fuel brand. It may require at least one full tank of the proper fuel to turn the light off. See *Recommended Fuel* ⇨ *212*.

If the light remains on, see your dealer.

Emissions Inspection and Maintenance Programs

If the vehicle requires an Emissions Inspection/Maintenance test, the test equipment will likely connect to the vehicle's Data Link Connector (DLC).

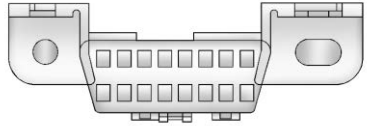

The DLC is under the instrument panel to the left of the steering wheel. Connecting devices that are not used to perform an Emissions Inspection/Maintenance test or to service the vehicle may affect vehicle operation. See *Add-On Electrical Equipment* ⇨ *230*. See your dealer if assistance is needed.

The vehicle may not pass inspection if:

- The light is on when the engine is running.
- The light does not come on when the ignition is on while the engine is off.
- Critical emission control systems have not been completely diagnosed. If this happens, the vehicle would not be ready for inspection and might require several days of routine driving before the system is ready for inspection. This can happen if the 12-volt battery has recently been replaced or run down, or if the vehicle has been recently serviced.

See your dealer if the vehicle will not pass or cannot be made ready for the test.

Brake System Warning Light

Metric

BRAKE

English

This light should come on briefly when the vehicle is turned on. If it does not come on then, have it fixed so it will be ready to warn you if there is a problem.

When the vehicle is on, the brake system warning light also comes on when the parking brake is set. The light stays on if the parking brake does not fully release. If it stays on after the parking brake is fully released, there is a brake problem. Have the brake system inspected right away.

If the light comes on while driving, pull off the road and stop carefully. The brake pedal might be harder to push, or the brake pedal may go closer to the floor. It could take longer to stop. If the light is still on, have the vehicle towed for service. See *Towing the Vehicle* ⇨ *297*.

⚠ Warning

The brake system might not be working properly if the brake system warning light is on. Driving with the brake system warning light on can lead to a crash.
If the light is still on after the vehicle has been pulled off the road and carefully stopped, have the vehicle towed for service.

Antilock Brake System (ABS) Warning Light

This warning light should come on briefly when the vehicle is turned on. If the light does not come on, have it fixed so it will be ready to warn if there is a problem.

Engagement of the 4WD front axle lock will disable ABS and illuminate the ABS warning light. The ABS warning light will turn off when the front axle lock is disengaged.

If the ABS warning light comes on while driving, safely stop as soon as it is possible and turn off the vehicle. Then turn on the vehicle again to reset the system.

If the ABS warning light stays on, or comes on again while driving, the vehicle needs service. A chime may also sound when the light stays on.

If the ABS warning light is the only light on, the vehicle has regular brakes, but ABS is not functioning.

If both the ABS warning light and the brake system warning light are on, ABS is not functioning and there is a problem with the regular brakes. See your dealer for service.

See *Brake System Warning Light* ⇨ *88*.

Four-Wheel-Drive Light

The four-wheel-drive light comes on when a vehicle with a manual transfer case is shifted into four-wheel drive and the front axle engages.

Some delay between the shifting and the light coming on is normal.

See Four-Wheel Drive.

Tow/Haul Mode Light

For vehicles with the Tow/Haul Mode feature, this light comes on when the Tow/Haul Mode has been activated.

See *Tow/Haul Mode* ⇨ *194*.

Hill Descent Control Light

If equipped, the Hill Descent Control light comes on when the system is ready for use. When the light flashes, the system is active.

See *Hill Descent Control (HDC)* ⇨ *202*.

Lane Departure Warning (LDW) Light

If equipped, this light is green if LDW is on and ready to operate.

This light changes to amber and flashes to indicate that the lane marking has been crossed without using a turn signal in that direction.

See *Lane Departure Warning (LDW)* ⇨ *211*.

Vehicle Ahead Indicator

If equipped, this indicator will display green when a vehicle is detected ahead and amber when you are following a vehicle ahead much too closely.

See *Forward Collision Alert (FCA) System* ⇨ *208*.

Traction Off Light

This light comes on briefly when the vehicle is turned on. If it does not, have the vehicle serviced by your dealer. If the system is working normally, the indicator light then turns off.

The traction off light comes on when the Traction Control System (TCS) has been turned off. If StabiliTrak/Electronic Stability Control (ESC) is turned off, TCS is also turned off. To turn TCS and ESC off and on, see *Traction Control/Electronic Stability Control* ⇨ *201*.

If TCS is off, wheel spin is not limited unless necessary to help protect the driveline from damage. Adjust driving accordingly.

StabiliTrak OFF Light

This light comes on briefly when the vehicle is turned on. If the light does not come on, have the vehicle serviced by your dealer. If the system is working normally, the indicator light then turns off.

This light comes on when the StabiliTrak/ Electronic Stability Control (ESC) system is turned off. If StabiliTrak/ESC is off, the Traction Control System (TCS) is also off. To turn ESC off and on, see *Traction Control/ Electronic Stability Control* ⇨ *201*.

If ESC and TCS are off, the systems do not assist in controlling the vehicle. Adjust driving accordingly.

Traction Control System (TCS)/ StabiliTrak Light

This light comes on briefly when the vehicle is turned on.

If the light does not come on, have the vehicle serviced by your dealer. If the system is working normally, the indicator light turns off.

If the light is on and not flashing, the TCS and potentially the StabiliTrak/ESC system are not fully operational and may not assist in maintaining control. Adjust driving accordingly. If the condition persists, see your dealer as soon as possible. A Driver Information Center (DIC) message may display.

The light flashes when the TCS and/or the StabiliTrak/ESC system is actively working.

See *Traction Control/Electronic Stability Control* ⇨ *201*.

Tire Pressure Light

For vehicles with the Tire Pressure Monitor System (TPMS), this light comes on briefly when the vehicle is started. It provides information about tire pressures and the TPMS.

When the Light Is On Steady

This indicates that one or more of the tires are significantly underinflated.

A Driver Information Center (DIC) tire pressure message may also display. Stop as soon as possible, and inflate the tires to the pressure value shown on the Tire and Loading Information label. See *Tire Pressure* ⇨ *273*.

When the Light Flashes First and Then Is On Steady

If the light flashes for about a minute and then stays on, there may be a problem with the TPMS. If the problem is not corrected,

the light will come on at every ignition cycle. See *Tire Pressure Monitor Operation* ⇨ *274*.

Engine Oil Pressure Light

Caution
Lack of proper engine oil maintenance can damage the engine. Driving with the engine oil low can also damage the engine. The repairs would not be covered by the vehicle warranty. Check the oil level as soon as possible. Add oil if required, but if the oil level is within the operating range and the oil pressure is still low, have the vehicle serviced. Always follow the maintenance schedule for changing engine oil.

This light should come on briefly as the engine is started. If it does not come on, have the vehicle serviced by your dealer.

If the light comes on and stays on, it means that oil is not flowing through the engine properly. The vehicle could be low on oil and might have some other system problem. See your dealer.

Low Fuel Warning Light

Base Level English Shown, Metric Similar

Uplevel

A Low Fuel Warning Light near the fuel gauge comes on briefly when the ignition is turned on as a check to show it is working.

It also comes on when the fuel gauge indicator nears empty. The light turns off when fuel is added. If it does not, have the vehicle serviced.

Security Light

The security light should come on briefly as the engine is started. If it does not come on, have the vehicle serviced by your dealer. If the system is working normally, the indicator light turns off.

If the light stays on and the engine does not start, there could be a problem with the theft-deterrent system. See *Immobilizer Operation* ⇨ *15*.

High-Beam On Light

This light comes on when the high-beam headlamps are in use.

See *Headlamp High/Low-Beam Changer* ⇨ *103*.

Front Fog Lamp Light

For vehicles with fog lamps, this light comes on when the fog lamps are turned on.

The light goes out when the fog lamps are turned off. See *Fog Lamps* ⇨ *105*.

Lamps On Reminder

This light comes on when the exterior lamps are in use, except when only the Daytime Running Lamps (DRL) are active. See *Exterior Lamp Controls* ⇨ *102*.

Cruise Control Light

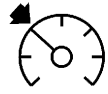

The cruise control light is white when the cruise control is on and ready, and turns green when the cruise control is set and active.

The light goes out when the cruise control is turned off. See *Cruise Control* ⇨ *203*.

Door Ajar Light (Uplevel Cluster)

This light comes on when a door is open or not securely latched. Before driving, check that all doors are properly closed.

Information Displays

Driver Information Center (DIC) (Base Level)

The DIC displays information about your vehicle. It also displays warning messages if a system problem is detected. See *Vehicle Messages* ⇨ *98*. All messages appear in the DIC display in the center of the instrument cluster.

DIC Operation and Displays

The DIC has different displays which can be accessed by using the DIC buttons on the turn signal lever.

DIC Buttons

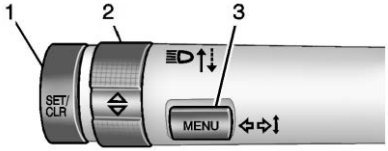

1. **SET/CLR:** Press to set, or press and hold to clear, the menu item displayed.
2. △ ▽ **:** Use the band to scroll through the items in each menu.
3. **MENU:** Press to display the Trip/Fuel Menu, the Vehicle Information Menu, and the ECO Menu. This button is also used to return to or exit the last screen displayed on the DIC.

If the vehicle has a diesel engine, see the Duramax diesel supplement for additional DIC pages.

Trip/Fuel Menu (TRIP) Items

Press MENU on the turn signal lever until the TRIP menu displays. Use △ ▽ to scroll through the menu items. Not all items are available on every vehicle. The following is a list of all possible menu items:

Digital Speed : Displays how fast the vehicle is moving in either kilometers per hour (km/h) or miles per hour (mph). The speedometer cannot be reset.

Trip 1 or Trip 2, Average Fuel Economy : Displays the current distance traveled, in either kilometers (km) or miles (mi), from the last reset for the trip odometer. The trip odometer can be reset to zero by pressing and holding the SET/CLR button while the trip odometer display is showing.

Also displays the approximate average liters per 100 kilometers (L/100 km) or miles per gallon (mpg). This number is based on the number of L/100 km (mpg) recorded since the last time this menu item was reset. This number reflects only the approximate average fuel economy that the vehicle has right now, and will change as driving conditions change. Reset the average consumption by pressing SET/CLR when it is displayed.

Fuel Range : Displays the approximate distance the vehicle can be driven without refueling. The fuel range estimate is based on an average of the vehicle's fuel economy over recent driving history and the amount of fuel remaining in the fuel tank. Fuel range cannot be reset.

Average Vehicle Speed : Displays the average vehicle speed of the vehicle in kilometers per hour (km/h) or miles per hour (mph). This average is based on the various vehicle speeds recorded since the last reset. Reset the average speed by pressing SET/CLR when it is displayed.

Timer : To start the timer, press SET/CLR while Timer is displayed. The display will show the amount of time that has passed since the timer was last reset, not including time the ignition is off. Time will continue to be counted as long as the ignition is on, even if another display is being shown on the DIC. The timer will record up to 99 hours, 59 minutes, and 59 seconds (99:59:59) after which the display will return to zero. To stop the timer, press SET/CLR briefly while Timer is displayed. To reset the timer to zero, press and hold SET/CLR.

Blank Display : Displays no information.

Vehicle Information Menu (VEHICLE) Items

Press MENU on the turn signal lever until the VEHICLE menu is displayed. Use △ ▽ to scroll through the menu items. Not all items are available on every vehicle. The following is a list of all possible menu items:

Remaining Oil Life : Displays an estimate of the oil's remaining useful life. If REMAINING OIL LIFE 99% is displayed, that means 99% of the current oil life remains.

When the remaining oil life is low, the CHANGE ENGINE OIL SOON message will appear on the display. The oil should be changed as soon as possible. See *Engine Oil* ⇨ *238*. In addition to the engine oil life system monitoring the oil life, additional maintenance is recommended in the Maintenance Schedule in this manual. See *Maintenance Schedule* ⇨ *311*.

The Oil Life display must be reset after each oil change. Do not reset the Oil Life display accidentally at any time other than when the oil has just been changed. It cannot be reset accurately until the next oil change. To reset the engine oil life system, see *Engine Oil Life System* ⇨ *240*.

Oil Pressure : Oil pressure is displayed in either kilopascal (kPa) or in pounds per square inch (psi).

Tire Pressure : Displays a vehicle with the approximate pressures of all four tires. Tire pressure is displayed in either kilopascal (kPa) or in pounds per square inch (psi). See *Tire Pressure Monitor System* ⇨ *274* and *Tire Pressure Monitor Operation* ⇨ *274*.

Battery Voltage : Displays the current battery voltage, if equipped. Battery voltage changes are normal while driving. See *Charging System Light* ⇨ *87*. If there is a problem with the battery charging system, the DIC will display a message.

Engine Hours : Shows the total number of hours the engine has run.

Transmission Fluid Temperature : Shows the temperature of the automatic transmission fluid in either degrees Celsius (°C) or degrees Fahrenheit (°F).

Trailer Brake (If Equipped) : TRAILER GAIN shows the trailer gain setting. This setting can be adjusted from 0.0 to 10.0 with either a trailer connected or disconnected.

OUTPUT shows the power output to the trailer anytime a trailer with electric brakes is connected. Output is displayed as a bar graph. Dashes may appear in the OUTPUT display if a trailer is not connected.

Units : Move △ ▽ to change between Metric or US when the Unit display is active. Press SET/CLR to confirm the setting. This will change the displays on the DIC to the type of measurements you select.

ECO Drive Assist Menu (ECO) Items

This menu is only available on some vehicles. Press MENU on the turn signal lever until the ECO menu is displayed. Use △ ▽ to scroll through the menu items. Not all items are available on every vehicle. The following is a list of all possible menu items:

Best Average Fuel Economy : The bottom displays the best average fuel economy (AFE) that is achieved for a selected distance. The top displays a running average of fuel economy for the most recently traveled selected distance. The center bar graph displays the instantaneous fuel economy. Quickly press the SET/CLR button to change the settings for the distance options.

When viewing best AFE, a several second press and hold of SET/CLR will reset the best value. The best value will show "- - -" until the selected distance has been traveled.

The display provides feedback on how current driving behavior in the bar graph affects the running average in the top display and how well recent driving compares to the best that has been achieved.

Driver Information Center (DIC) (Uplevel)

The DIC displays are shown in the center of the instrument cluster in the Info app. See *Instrument Cluster* ⇨ *81*. The displays show the status of many vehicle systems. The controls for the DIC are on the right steering wheel control.

△ **or** ▽ **:** Press to move up or down in a list.

◁ **or** ▷ **:** Press to move between the interactive display zones in the cluster.

✓ **:** Press to open a menu or select a menu item. Press and hold to reset values on certain screens.

If the vehicle has a diesel engine, see the Duramax diesel supplement for additional DIC pages.

DIC Info Page Options

The info pages on the DIC can be turned on or off through the Options menu.

1. Press ◁ or ▷ to scroll to the Options application.
2. Scroll to Info Page Options and press ✓.
3. Press △ or ▽ to move through the list of possible information displays.
4. Press ✓ while an item is highlighted to select or deselect that item. When an item is selected, a checkmark will appear next to it.

DIC Info Pages

The following is the list of all possible DIC info page displays. Some may not be available for your particular vehicle. Some items may not be turned on by default but can be turned on through the Settings app. See "DIC Info Page Options" earlier in this section.

Speed : Shows the vehicle speed in either kilometers per hour (km/h) or miles per hour (mph). If equipped, press ✓ to open the menu and select to display speed limit signs. The sign will show "– –" when there is no detected speed limit or the system is unavailable.

Trip 1 or Trip 2 : Shows the current distance traveled, in either kilometers (km) or miles (mi), since the trip odometer was last reset.

This also shows the approximate average liters per 100 kilometers (L/100 km) or miles per gallon (mpg). This number is calculated based on the number of L/100 km (mpg) recorded since the last time this menu item was reset. This number reflects only the approximate average fuel economy that the vehicle has right now, and will change as driving conditions change.

Press and hold ✓ while this display is active to reset the trip odometer and the average fuel economy. Trip 1 and Trip 2 can also be reset by pressing ✓ and choosing reset.

Fuel Range : Shows the approximate distance the vehicle can be driven without refueling. LOW will be displayed when the vehicle is low on fuel. The fuel range estimate is based on an average of the vehicle's fuel economy over recent driving history and the amount of fuel remaining in the fuel tank.

Oil Life : Shows an estimate of the oil's remaining useful life. If REMAINING OIL LIFE 99% is displayed, that means 99% of the current oil life remains.

When the remaining oil life is low, the CHANGE ENGINE OIL SOON message will appear on the display. The oil should be changed as soon as possible. See *Engine Oil* ⇨ *238*. In addition to the engine oil life system monitoring the oil life, additional maintenance is recommended. See *Maintenance Schedule* ⇨ *311*.

The Oil Life display must be reset after each oil change. It will not reset itself. Do not to reset the Oil Life display at any time other than when the oil has just been changed. It cannot be reset accurately until the next oil change. To reset the engine oil life system, press and hold ✓ for several seconds while the Oil Life display is active. See *Engine Oil Life System* ⇨ *240*.

Tire Pressure : Shows the approximate pressures of all four tires. Tire pressure is displayed in either kilopascal (kPa) or in pounds per square inch (psi). If the pressure is low, the value for that tire is shown in amber. See *Tire Pressure Monitor System* ⇨ *274* and *Tire Pressure Monitor Operation* ⇨ *274*.

Instantaneous Fuel Economy : Displays the current fuel economy in liters per 100 kilometers (L/100 km) or miles per gallon (mpg). This number reflects only the approximate fuel economy that the vehicle has right now and changes frequently as driving conditions change. This display cannot be reset.

Average Vehicle Speed : Displays the average vehicle speed of the vehicle in kilometers per hour (km/h) or miles per hour (mph). This average is based on the various vehicle speeds recorded since the last reset. Reset the average speed by pressing ✓ when it is displayed.

Fuel Economy : The center displays the approximate instantaneous fuel economy as a number and bar graph. Displayed above the bar graph is a running average of fuel economy for the most recently traveled selected distance. Displayed below the bar graph is the best average fuel economy that has been achieved for the selected distance. The selected distance is displayed at the top of the page as “last xxx mi/km.”

Press ✓ to select the distance or reset best value. Use △ and ▽ to choose the distance and press ✓. Press △ and ▽ to

select "Reset Best Score." Press ✓ to reset the best average fuel economy. After reset, the best value displays "-,-" until the selected distance has been traveled.

The display provides information on how current driving behavior affects the running average and how well recent driving compares to the best that has been achieved for the selected distance.

Engine Hours (Hourmeter) : Shows the total number of hours the engine has run. This display also shows the engine idle hours.

Timer : This display can be used as a timer. To start the timer, press ✓ while this display is active. The display will show the amount of time that has passed since the timer was last reset. To stop the timer, press ✓ briefly while this display is active and the timer is running. To reset the timer to zero, press and hold ✓ while this display is active.

Battery Voltage : Displays the current battery voltage, if equipped. Battery voltage changes are normal while driving. See *Charging System Light* ⇨ *87*. If there is a problem with the battery charging system, the DIC will display a message.

Oil Pressure : Oil pressure is displayed in either kilopascal (kPa) or in pounds per square inch (psi).

Engine Hours : Shows the total number of hours the engine has run.

Transmission Fluid Temperature : Shows the temperature of the automatic transmission fluid in either degrees Celsius (°C) or degrees Fahrenheit (°F).

Trailer Brake (If Equipped) : TRAILER GAIN shows the trailer gain setting. This setting can be adjusted from 0.0 to 10.0 with either a trailer connected or disconnected.

OUTPUT shows the power output to the trailer anytime a trailer with electric brakes is connected. Output is displayed as a bar graph. Dashes may appear in the OUTPUT display if a trailer is not connected.

Blank Page : Shows no information.

Vehicle Messages

Messages displayed on the DIC indicate the status of the vehicle or some action that may be needed to correct a condition. Multiple messages may appear one after another.

The messages that do not require immediate action can be acknowledged and cleared by pressing ✓. The messages that require immediate action cannot be cleared until that action is performed.

All messages should be taken seriously; clearing the message does not correct the problem.

If a SERVICE message appears, see your dealer.

Follow the instructions given in the messages. The system displays messages regarding the following topics:

- Service Messages
- Fluid Levels
- Vehicle Security
- Brakes
- Steering
- Ride Control Systems
- Driver Assistance Systems
- Cruise Control
- Lighting and Bulb Replacement
- Wiper/Washer Systems
- Doors and Windows
- Seat Belts
- Airbag Systems

- Engine and Transmission
- Tire Pressure
- Battery

Engine Power Messages

ENGINE POWER IS REDUCED

This message displays when the vehicle's propulsion power is reduced. A reduction in propulsion power can affect the vehicle's ability to accelerate. If this message is on, but there is no observed reduction in performance, proceed to your destination. Under certain conditions the performance may be reduced the next time the vehicle is driven. The vehicle may be driven while this message is on, but maximum acceleration and speed may be reduced. Anytime this message stays on, or displays repeatedly, the vehicle should be taken to your dealer for service as soon as possible.

Under certain operating conditions, propulsion will be disabled. Try restarting after the ignition has been off for 30 seconds.

Vehicle Speed Messages

SPEED LIMITED TO XXX KM/H (MPH)

This message shows that the vehicle speed has been limited to the speed displayed. The limited speed is a protection for various propulsion and vehicle systems, such as lubrication, thermal, brakes, suspension, Teen Driver if equipped, or tires.

If equipped with a diesel engine, see the Duramax Diesel supplement.

Vehicle Personalization

The following are all possible vehicle personalization features. Depending on the vehicle, some may not be available.

For System, Apps, and Personal features and functions, see “Settings” in the infotainment manual.

To access the vehicle personalization menu:

1. Touch the SETTINGS icon on the Home Page of the infotainment display.
2. Touch Vehicle to display a list of available options.
3. Touch to select the desired feature setting.
4. Touch ◯ or | to turn a feature off or on.
5. Touch ✕ to go to the top level of the Settings menu.

The menu may contain the following:

Rear Seat Reminder

This allows for a chime and a message when the rear door has been opened before or during operation of the vehicle.

Touch Off or On.

Climate and Air Quality

Touch and the following may display:

- Auto Fan Speed
- Auto Defog
- Auto Rear Defog

Auto Fan Speed

This setting specifies the amount of airflow when the climate control fan setting is Auto Fan.

Touch Low, Medium, or High.

Auto Defog

This setting automatically turns the front defogger on when the engine is started.

Touch Off or On.

Auto Rear Defog

This setting automatically turns the rear defogger on when the engine is started.

Touch Off or On.

Collision/Detection Systems

Touch and the following may display:

- Park Assist
- Rear Camera Park Assist Symbols

Park Assist

This allows the feature to be turned on or off. See *Assistance Systems for Parking or Backing* ⇨ *206*.

Touch Off or On.

Rear Camera Park Assist Symbols

This setting enables the Rear Camera Park Assist Symbols. See *Assistance Systems for Parking or Backing* ⇨ *206*.

Touch Off or On.

Comfort and Convenience

Touch and the following may display:

- Chime Volume

Chime Volume

This determines the chime volume level.

Touch the controls on the infotainment display to adjust the volume.

Lighting

Touch and the following may display:

- Vehicle Locator Lights
- Exit Lighting

Vehicle Locator Lights

This setting flashes the vehicle's headlamps when 🔒 is pressed on the Remote Keyless Entry (RKE) transmitter.

Touch Off or On.

Exit Lighting

This setting specifies how long the headlamps stay on after the vehicle is turned off and exited.

Touch Off, 30 Seconds, 60 Seconds, or 120 Seconds.

Power Door Locks

Touch and the following may display:

- Open Door Anti-Lockout
- Auto Door Unlock
- Delayed Door Lock

Open Door Anti Lock Out

This setting prevents the driver door from locking when the door is open. If this setting is on, the Delayed Door Lock menu will not be available.

Touch Off or On.

Auto Door Unlock

This allows selection of which of the doors will automatically unlock when the vehicle is shifted into P (Park).

Touch Off, All Doors, or Driver Door.

Delayed Door Lock

When on, this feature will delay the locking of the doors. To override the delay, press the power door lock switch on the door.

Touch Off or On.

Remote Lock, Unlock, and Start

Touch and the following may display:

- Remote Unlock Light Feedback
- Remote Lock Feedback
- Remote Door Unlock
- Remote Start Auto Cool Seats
- Remote Start Auto Heat Seats

Remote Unlock Light Feedback

When on, the exterior lamps will flash when unlocking the vehicle with the RKE transmitter.

Touch Off or Flash Lights.

Remote Lock Feedback

This allows selection of what type of feedback is given when locking the vehicle with the RKE transmitter.

Touch Off, Lights and Horn, Lights Only, or Horn Only.

Remote Door Unlock

This allows selection of which doors will unlock when pressing 🔓 on the RKE transmitter.

Touch All Doors or Driver Door.

Remote Start Auto Cool Seats

If equipped and turned on, this feature will turn the ventilated seats on when using remote start on warm days. See *Heated and Ventilated Front Seats* ⇨ *25*.

Touch Off or On.

Remote Start Auto Heat Seats

If equipped and turned on, this feature will turn on the heated seats when using remote start on cold days. See *Heated and Ventilated Front Seats* ⇨ *25* and *Remote Vehicle Start* ⇨ *11*.

Touch Off or On.

Teen Driver

See “Teen Driver” under “Settings” in the infotainment manual.

Valet Mode

This will lock the infotainment system and steering wheel controls. It may also limit access to vehicle storage locations, if equipped.

To enable valet mode:

1. Enter a four-digit code on the keypad.
2. Select Enter to go to the confirmation screen.
3. Re-enter the four-digit code.

Touch Lock or Unlock to lock or unlock the system. Touch Back to go back to the previous menu.

Lighting

Exterior Lighting
Exterior Lamp Controls 102
Exterior Lamps Off Reminder 103
Headlamp High/Low-Beam Changer ... 103
Flash-to-Pass 103
Daytime Running Lamps (DRL) 103
Automatic Headlamp System 103
Hazard Warning Flashers 104
Turn and Lane-Change Signals 104
Fog Lamps 105
Exterior Cargo Lamps 105

Interior Lighting
Instrument Panel Illumination Control 106
Dome Lamps 106
Reading Lamps 106

Lighting Features
Entry Lighting 107
Exit Lighting 107
Battery Load Management 107
Battery Power Protection 108
Exterior Lighting Battery Saver 108

Exterior Lighting

Exterior Lamp Controls

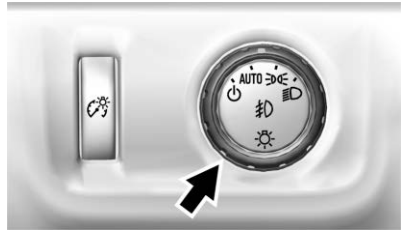

The exterior lamp control is on the instrument panel to the left of the steering wheel.

⏻ **:** Turns off the automatic headlamps and Daytime Running Lamps (DRL). Turn the headlamp control to ⏻ again to turn the automatic headlamps or DRL back on.

For vehicles first sold in Canada, off will only work when the vehicle is in P (Park).

AUTO : Automatically turns on the headlamps at normal brightness, together with the following:

- Parking Lamps
- Instrument Panel Lights
- Taillamps
- License Plate Lamps
- Front/Rear Sidemarker Lamps

When the vehicle is turned off and the headlamps are in AUTO, the headlamps turn off. When the key is removed, they automatically turn on for a set time. The time of the delay can be changed using the DIC. See *Driver Information Center (DIC) (Base Level)* ⇨ *93* or *Driver Information Center (DIC) (Uplevel)* ⇨ *96*.

: Turns on the parking lamps including all lamps, except the headlamps.

: Turns on the headlamps together with the parking lamps and instrument panel lights.

When the headlamps are turned on while the vehicle is on, the headlamps turn off automatically 10 minutes after the ignition is turned off. When the headlamps are turned on while the vehicle is off, the headlamps will stay on for 10 minutes before turning off to prevent the battery from being drained. Turn the headlamp control off and then back to the headlamp on position to make the headlamps stay on

for an additional 10 minutes. To keep the lamps on for more than 10 minutes, the ignition must be on or in ACC/ACCESSORY.

: If equipped, this turns on the fog lamps. See *Fog Lamps* ⇨ *105*.

Exterior Lamps Off Reminder

A reminder chime sounds when the headlamps or parking lamps are manually turned on, the ignition is off, and a door is open. To disable the chime, turn the lamps off.

Headlamp High/Low-Beam Changer

Push the turn signal lever away from you and release to turn the high beams on.

To return to low beams, push the lever again or pull it toward you and release.

When the high-beam headlamps are on, this indicator light on the instrument cluster will also be on.

Flash-to-Pass

This feature lets you use the high-beam headlamps to signal a driver in front of you that you want to pass. It works even if the headlamps are in the automatic position.

To use it, pull the turn signal lever toward you, then release it.

If the headlamps are in the automatic position or on low beam, the high-beam headlamps will turn on. They will stay on as long as you hold the lever toward you. The high-beam indicator on the instrument cluster will come on. Release the lever to return to normal operation.

Daytime Running Lamps (DRL)

DRL can make it easier for others to see the front of the vehicle during the day. Fully functional DRL are required on all vehicles first sold in Canada.

The DRL system comes on when the following conditions are met:

- The ignition is on.
- The exterior lamp control is in AUTO.
- The parking brake is released or the vehicle is not in P (Park).
- The light sensor determines it is daytime.

When the DRL system is on, only the DRL are on. The taillamps, sidemarker lamps, instrument panel lights, and other lamps will not be on.

When it begins to get dark, the automatic headlamp system switches from DRL to the headlamps.

To turn off the DRL, turn the exterior lamp control to ⏻ and then release. For vehicles first sold in Canada, off will only work when the vehicle is parked.

Automatic Headlamp System

When the exterior lamp control is set to AUTO and it is dark enough outside, the headlamps come on automatically.

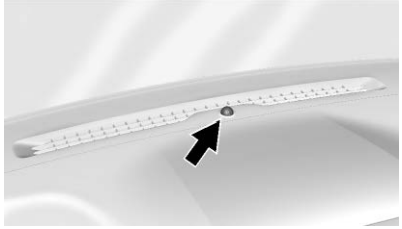

There is a light sensor on top of the instrument panel. Do not cover the sensor, otherwise the headlamps will come on when they are not needed.

The system may also turn on the headlamps when driving through a parking garage or tunnel.

If the vehicle is started in a dark garage, the automatic headlamp system comes on immediately. If it is light outside when the vehicle leaves the garage, there is a slight delay before the automatic headlamp system changes to the DRL. During that delay, the instrument cluster may not be as bright as usual. Make sure the instrument panel brightness control is in the full bright position. See *Instrument Panel Illumination Control* ⇨ *106*.

When it is bright enough outside, the headlamps will turn off or may change to Daytime Running Lamps (DRL).

The automatic headlamp system turns off when the exterior lamp control is turned to ⏻ or the ignition is off.

Lights On with Wipers

If the windshield wipers are activated in daylight with the engine on, and the exterior lamp control is in AUTO, the headlamps, parking lamps, and other exterior lamps come on. The transition time for the lamps coming on varies based on wiper speed. When the wipers are not operating, these lamps turn off. Move the exterior lamp control to ⏻ or ≋00≋ to disable this feature.

Hazard Warning Flashers

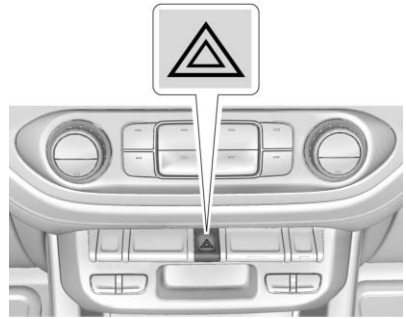

⚠ **:** Press to make the front and rear turn signal lamps flash on and off. Press again to turn the flashers off.

When the hazard warning flashers are on, the vehicle's turn signals will not work.

Turn and Lane-Change Signals

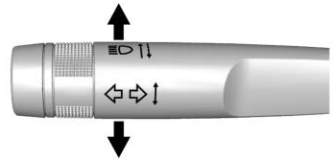

An arrow on the instrument cluster flashes in the direction of the turn or lane change.

Move the turn signal lever all the way up or down to signal a turn.

Raise or lower the lever for less than one second until the arrow starts to flash to signal a lane change. This causes the turn signals to automatically flash three times. Holding the turn signal lever for more than one second will cause the turn signals to flash until the lever is released.

The lever returns to its starting position whenever it is released.

If after signaling a turn or a lane change the arrows flash rapidly or do not come on, a signal bulb could be burned out.

Replace any burned out bulbs. If a bulb is not burned out, check the fuse. See *Fuses and Circuit Breakers* ⇨ *258*.

Turn Signal On Chime

If the turn signal is left on for more than 1.2 km (0.75 mi), a chime sounds at each flash of the turn signal. The message TURN SIGNAL ON will also appear in the Driver Information Center (DIC). To turn the chime and message off, move the turn signal lever to the off position.

Fog Lamps

If equipped, the control is on the center of the exterior lamp control, to the left of the steering column.

The ignition must be on for the fog lamps to come on.

: Press to turn the fog lamps on or off. A light will come on in the instrument cluster.

When the fog lamps are turned on, the parking lamps automatically turn on.

When the headlamps are changed to high beam, the fog lamps go off. When the high-beam headlamps are turned off, the fog lamps will come on again.

Some localities have laws that require the headlamps to be on with the fog lamps.

Exterior Cargo Lamps

The exterior cargo lamps provide more light in the cargo area of the vehicle, if needed. The lamps inside the pickup box, tailgate handle, hitch, and the cargo mirror lamps also turn on, if equipped.

Press the exterior cargo lamp button once to turn on the cargo lamps and cargo mirror lamps. An indicator light will come on when the lamps are turned on. The shift lever must be in P (Park), R (Reverse), or N (Neutral) to operate the cargo lamps and cargo mirror lamps.

Press the exterior cargo lamp button again within five seconds to turn the cargo mirror lamps off. The cargo lamps will remain on.

Press the exterior cargo lamp button for a third time to turn off all the cargo lamps.

Become familiar with and follow all state and local laws that apply to cargo lamp operation.

Interior Lighting

Instrument Panel Illumination Control

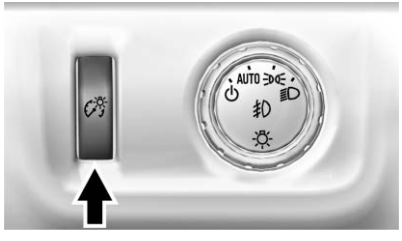

This feature adjusts the brightness of all illuminated controls. The instrument panel illumination control is next to the exterior lamp control.

: Move the thumbwheel up or down to brighten or dim the lights.

The thumbwheel is functional at night, or when the headlamps or parking lamps are ON.

Dome Lamps

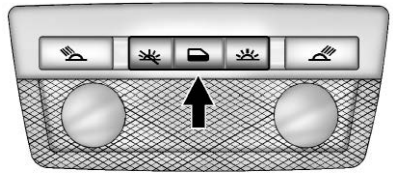

The interior lamps control in the overhead console controls both the front and rear interior lamps.

To operate:

: Turns the lamps off.

: Turns the lamps on when any door is opened.

: Keeps the lamps on all the time.

The interior lamps turn on automatically if the airbags are deployed.

Reading Lamps

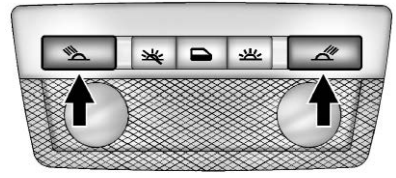

The front reading lamps, if equipped, are in the overhead console.

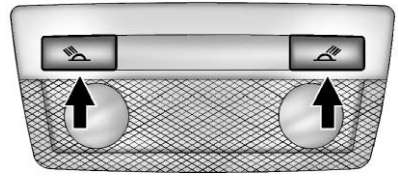

The rear reading lamps, if equipped, are in the headliner.

or **:** Press to turn each lamp on or off.

Lighting Features

Entry Lighting

Some exterior lamps and the interior lamps turn on briefly at night, or in areas with limited lighting, when 🔓 is pressed on the Remote Keyless Entry (RKE) transmitter. When a door is opened, the interior lamps come on if the dome lamp control is in the DOOR position. After about 30 seconds the exterior lamps turn off. Entry lighting can be disabled manually by changing the ignition out of the OFF position, or by pressing the RKE transmitter 🔓 button.

This feature can be changed. See “Vehicle Locator Lights” under *Vehicle Personalization* ⇨ *99*.

Exit Lighting

Some exterior lamps and interior lamps turn on when the key is removed from the ignition.

The exterior and interior lamps remain on for a set amount of time, then automatically turn off. If equipped with Keyless Access, the exterior lamps automatically turn on when the driver door is opened after the ignition is turned off.

The interior lights turn on when the ignition is turned off.

The exterior lamps turn off immediately by turning the exterior lamp control off.

This feature can be changed. See *Vehicle Personalization* ⇨ *99*.

Battery Load Management

The vehicle has Electric Power Management (EPM), which estimates the battery's temperature and state of charge. It then adjusts the voltage for best performance and extended life of the battery.

When the battery's state of charge is low, the voltage is raised slightly to quickly bring the charge back up. When the state of charge is high, the voltage is lowered slightly to prevent overcharging. The voltmeter gauge or the voltage display on the Driver Information Center (DIC), if equipped, may show the voltage moving up or down. This is normal. If there is a problem, an alert will be displayed.

The battery can be discharged at idle if the electrical loads are very high. This is true for all vehicles. This is because the generator (alternator) may not be spinning fast enough at idle to produce all the power that is needed for very high electrical loads.

A high electrical load occurs when several of the following are on, such as: headlamps, high beams, fog lamps, rear window defogger, climate control fan at high speed, heated seats, engine cooling fans, trailer loads, and loads plugged into accessory power outlets.

EPM works to prevent excessive discharge of the battery. It does this by balancing the generator's output and the vehicle's electrical needs. It can increase engine idle speed to generate more power, whenever needed. It can temporarily reduce the power demands of some accessories.

Normally, these actions occur in steps or levels, without being noticeable. In rare cases at the highest levels of corrective action, this action may be noticeable to the driver. If so, a DIC message might be displayed and it is recommended that the driver reduce the electrical loads as much as possible.

Battery Power Protection

This feature helps prevent the battery from being drained, if the interior courtesy lamps or reading lamps are accidentally left on. If any of these lamps are left on, they automatically turn off after 10 minutes, if the ignition is off. The lamps will not come back on again until one of the following occurs:

- The ignition is turned on.
- The doors are closed and then re-opened.

Exterior Lighting Battery Saver

The exterior lamps turn off about 10 minutes after the ignition is turned off, if the parking lamps or headlamps have been manually left on. This protects against draining the battery. To restart the 10-minute timer, turn the exterior lamp control to the ⏻ position and then back to the ≡DO≡ or ≡D position.

To keep the lamps on for more than 10 minutes, the ignition must be on or in ACC/ACCESSORY.

Infotainment System

Introduction
Introduction 109
Overview 110
Steering Wheel Controls 112
Using the System 113
Software Updates 116

Radio
AM-FM Radio 116
HD Radio Technology 117
Radio Data System (RDS) 118
Satellite Radio 118
Radio Reception 119
Multi-Band Antenna 119

Audio Players
Avoiding Untrusted Media Devices 119
USB Port 119
Auxiliary Jack 122
Bluetooth Audio 123

Navigation
Using the Navigation System 123
Maps 126
Navigation Symbols 126
Destination 127
Global Positioning System (GPS) 133
Vehicle Positioning 133
Problems with Route Guidance 133
If the System Needs Service 134
Map Data Updates 134
Database Coverage Explanations 134

Voice Recognition
Voice Recognition 134

Phone
Bluetooth (Overview) 139
Bluetooth (Pairing and Using a Phone) 140
Apple CarPlay and Android Auto 144

Settings
Settings 144
Teen Driver 151

Trademarks and License Agreements
Trademarks and License Agreements 154

Introduction

Read the following pages to become familiar with the features.

⚠ Warning

Taking your eyes off the road for too long or too often while using any infotainment feature can cause a crash. You or others could be injured or killed. Do not give extended attention to infotainment tasks while driving. Limit your glances at the vehicle displays and focus your attention on driving. Use voice commands whenever possible.

The infotainment system has built-in features intended to help avoid distraction by disabling some features when driving. These features may gray out when they are unavailable. Many infotainment features are also available through the instrument cluster and steering wheel controls.

Before driving:

- Become familiar with the operation, center stack controls, steering wheel controls, and infotainment display.

- Set up the audio by presetting favorite stations, setting the tone, and adjusting the speakers.
- Set up phone numbers in advance so they can be called easily by pressing a single control or by using a single voice command.

See *Distracted Driving* ⇨ *169*.

Active Noise Cancellation (ANC)

If equipped, ANC reduces engine noise in the vehicle's interior. ANC requires the factory-installed audio system, radio, speakers, amplifier (if equipped), induction system, and exhaust system to work properly. Deactivation is required by your dealer if related aftermarket equipment is installed.

Overview

Infotainment System

The infotainment system is controlled by using the infotainment display, controls on the center stack, steering wheel controls, and voice recognition.

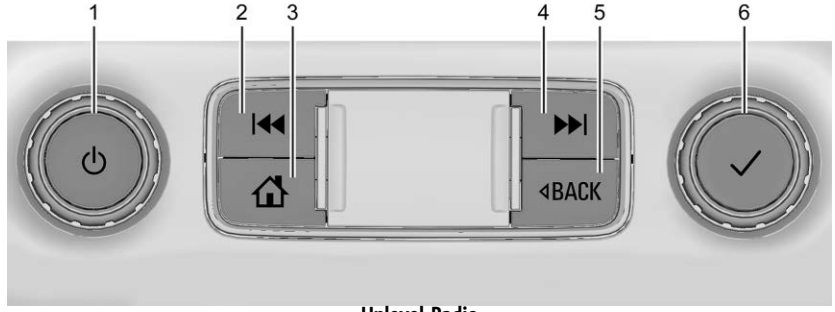

Uplevel Radio

1. ⏻ (Power)
   - Press to turn the power on.
   - Press and hold to turn the power off.
   - Press to mute/unmute the system when on.
   - When the power is on and the system is not muted, a quick status pane will display when ⏻ is pressed. Pressing ⏻ will mute the system and trigger this pane to show a long press is required to actually power down the system.
   - Turn to decrease or increase the volume.
2. ⏮
   - Radio: Press and release to go to the previous station or channel. Press and hold to fast seek the next strongest previous station or channel. See *AM-FM Radio* ⇨ *116*.
   - USB/Bluetooth: Press to seek to the beginning of the current or previous track. Press and hold to quickly reverse through a track. Release to return to playing speed. See *USB Port* ⇨ *119* or *Bluetooth Audio* ⇨ *123*.

3. ⌂
   - Press to go to the Home Page. See "Home Page" later in this section.
   - Press to exit Android Auto or Apple CarPlay. To enter back into Android Auto or Apple CarPlay, press and hold. See *Apple CarPlay and Android Auto* ⇨ *144*.
4. ⏭
   - Radio: Press and release to go to the next station or channel. Press and hold to fast seek the next strongest station or channel.
   - USB/Bluetooth: Press to seek the next track. Press and hold to fast forward through a track. Release to return to playing speed. See *USB Port* ⇨ *119* or *Bluetooth Audio* ⇨ *123*.
5. ◁ BACK
   - Press to return to the previous display in a menu.
6. ✓
   - Turn to highlight a feature. Press to activate the highlighted feature.

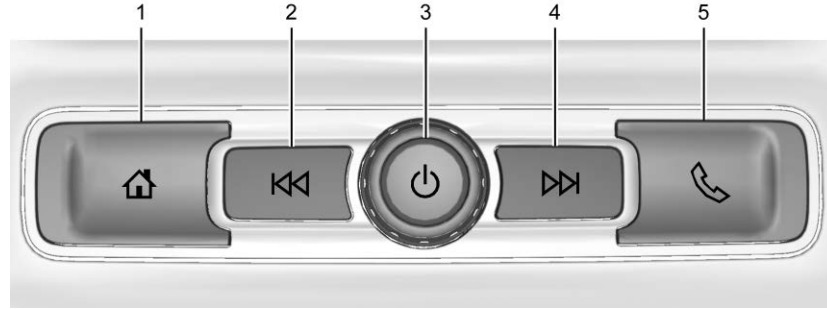

1. ⌂ (Home Page)
   - Press to go to the Home Page. See "Home Page" later in this section.
   - Press to exit Android Auto or Apple CarPlay. To enter back into Android Auto or Apple CarPlay, press and hold. See *Apple CarPlay and Android Auto* ⇨ *144*.
2. ⏮
   - Radio: Press and release to go to the previous station or channel. Press and hold to fast seek the next strongest previous station or channel. See *AM-FM Radio* ⇨ *116*.
   - USB/Bluetooth: Press to seek to the beginning of the current or previous track. Press and hold to quickly reverse through a track. Release to return to playing speed. See *USB Port* ⇨ *119* or *Bluetooth Audio* ⇨ *123*.
3. ⏻ (Power)
   - Press to turn the power on.
   - Press and hold to turn the power off.
   - Press to mute/unmute the system when on.

- When the power is on and the system is not muted, a quick status pane will display when ⏻ is pressed. Pressing ⏻ will mute the system and trigger this pane to show a long press is required to actually power down the system.
- Turn to decrease or increase the volume.

4. ⏭
   - Radio: Press and release to go to the next station or channel. Press and hold to fast seek the next strongest station or channel.
   - USB/Bluetooth: Press to seek the next track. Press and hold to fast forward through a track. Release to return to playing speed. See *USB Port* ⇨ *119* or *Bluetooth Audio* ⇨ *123*.
5. 📞
   - Press and release to access the phone display or answer an incoming call.

Home Page

The Home Page is where vehicle application icons are accessed. Some applications are disabled when the vehicle is moving.

Swipe left or right across the display to access the pages of icons.

Managing Home Page Icons

1. Touch and hold any of the Home Page icons to enter edit mode.
2. Continue holding the icon and drag it to the desired position.
3. Release your finger to drop the icon in the desired position.
4. To move an application to another page, drag the icon to the edge of the display toward the desired page.
5. Continue dragging and dropping application icons as desired.

Steering Wheel Controls

If equipped, some audio controls can be adjusted at the steering wheel.

: Press to answer an incoming call or start voice recognition (if equipped). Press and hold to activate Bluetooth Voice Recognition/Siri Eyes Free. See *Voice Recognition* ⇨ *134* and *Bluetooth (Pairing and Using a Phone)* ⇨ *140* or *Bluetooth (Overview)* ⇨ *139*.

: Press to decline an incoming call or end a current call. Press to mute or unmute the infotainment system when not on a call.

◁ **or** ▷ **:** Press the five-way control to go to the previous or next area of a display in the instrument cluster.

△ **or** ▽ **:** Press the five-way control to go up or down in a list on the instrument cluster.

✓ **:** Press to select a highlighted menu option.

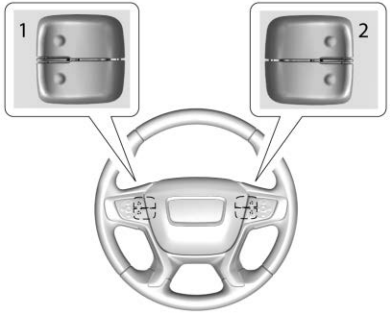

The favorites and volume switches are on the back of the steering wheel.

1. Favorite: When on a radio source, press to select the next or previous audio broadcast favorite. When listening to a media device, press to select the next or previous track.
2. Volume: Press to increase or decrease the volume.

Using the System

Audio

Touch the Audio icon to display the active audio source page. Examples of available sources may include AM, FM, SXM (if equipped), USB, AUX, and Bluetooth.

Phone

Touch the Phone icon to display the Phone main page. See *Bluetooth (Pairing and Using a Phone)* ⇨ *140* or *Bluetooth (Overview)* ⇨ *139*.

Nav

If equipped, touch the Nav icon to display the navigation map. See *Using the Navigation System* ⇨ *123*.

Users

If equipped, touch the Users icon to sign in or create a new user profile, and follow the on-screen instructions.

Only four user profiles can be active at one time in the vehicle. It may be necessary to remove a profile from the menu before creating or signing into an existing profile. The removed profile can be logged into at a later time.

Settings

Touch the Settings icon to display the Settings menu. See *Settings* ⇨ *144*.

Apple CarPlay

Touch the Apple CarPlay icon to activate Apple CarPlay (if equipped) after a supported device is connected. See *Apple CarPlay and Android Auto* ⇨ *144*.

Android Auto

Touch the Android Auto icon to activate Android Auto (if equipped) after a supported device is connected. See *Apple CarPlay and Android Auto* ⇨ *144*.

Apps

If equipped, in-vehicle apps are available for download. Touch the Apps icon on the Home Page to begin.

Downloading and using in-vehicle apps requires Internet connectivity which can be accessed with a data plan through the vehicle's built-in 4G LTE Wi-Fi hotspot, if equipped, or a compatible mobile device

hotspot. On most mobile devices, activation of the Wi-Fi hotspot is in the device's Settings menu under Mobile Network Sharing, Personal Hotspot, Mobile Hotspot, or similar.

Availability of apps and connectivity varies by vehicle, conditions, and location. Data plan rates apply. Features are subject to change. For more information, see www.my.gmc.com/learn.

OnStar Services

If equipped, touch the OnStar Services icon to display the OnStar Services and Account pages. See *OnStar Overview* ⇨ *340*.

Camera

If equipped, touch the Camera icon to access the camera application. See *Assistance Systems for Parking or Backing* ⇨ *206*.

Shortcut Tray

The shortcut tray is near the bottom of the display. It shows up to four applications.

Infotainment Display Features

Infotainment display features show on the display when available. When a feature is unavailable, it may gray out. When a feature is touched, it may highlight.

Haptic Feedback

If equipped, haptic feedback is a pulse that occurs when an icon or option is touched on the display or when controls on the center stack are pressed.

Infotainment Gestures

Use the following finger gestures to control the infotainment system.

Touch/Tap

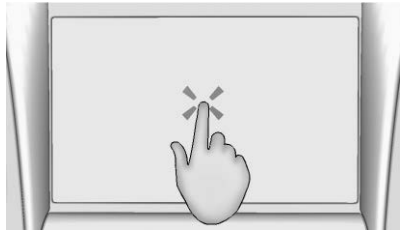

Touch/tap is used to select an icon or option, activate an application, or change the location inside a map.

Touch and Hold

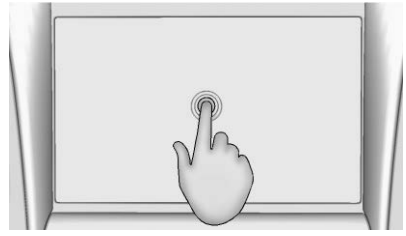

Touch and hold can be used to start another gesture, or to move or delete an application.

Drag

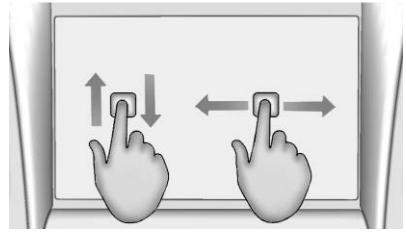

Drag is used to move applications on the Home Page, or to pan the map. To drag the item, it must be held and moved along the display to the new location. This can be

done up, down, right, or left. This feature is only available when vehicle is parked and not in motion.

Nudge

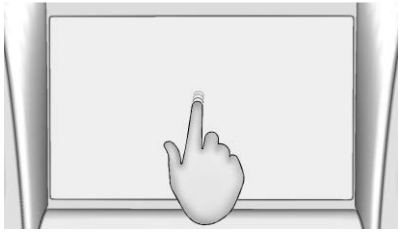

Nudge is used to move items a short distance on a list or a map. To nudge, hold and move the selected item up or down to a new location.

Fling or Swipe

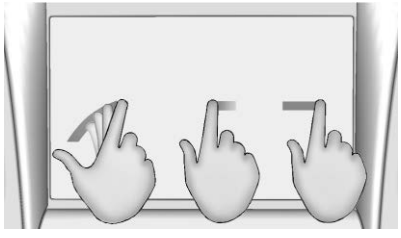

Fling or swipe is used to scroll through a list, pan the map, or change page views. Do this by placing a finger on the display then moving it rapidly up and down or right and left.

Spread

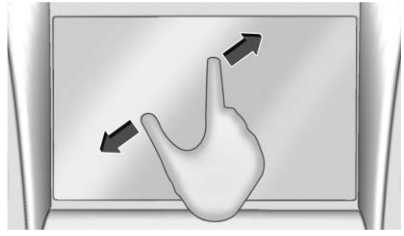

Spread is used to zoom in on a map, certain images, or a web page. Place finger and thumb together on the display, then move them apart.

Pinch

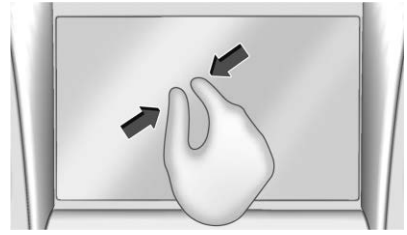

Pinch is used to zoom out on a map, certain images, or a web page. Place finger and thumb apart on the display, then move them together.

Cleaning High Gloss Surfaces and Vehicle Information and Radio Displays

For vehicles with high gloss surfaces or vehicle displays, use a microfiber cloth to wipe surfaces. Before wiping the surface with the microfiber cloth, use a soft bristle brush to remove dirt that could scratch the surface. Then use the microfiber cloth by gently rubbing to clean. Never use window cleaners or solvents. Periodically hand wash the microfiber cloth separately, using mild soap. Do not use bleach or fabric softener. Rinse thoroughly and air dry before next use.

Software Updates

Over-the-Air Software Updates

If equipped, see “Updates” under *Settings* ⇨ *144* for details on software updates.

Radio

AM-FM Radio

Playing the Radio

From the Home Page, touch the Audio icon to display the active audio source page. Choose from the three most recently used sources listed at the left side of the display or touch the More option to display a list of available sources. Examples of available sources may include AM, FM, SXM (if equipped), MyMedia, USB, AUX (if equipped), and Bluetooth.

Infotainment System Sound Menu

From any of the audio source main pages, touch Sound to display the following:

Equalizer : Touch to adjust Bass, Midrange, Treble, and Surround (if equipped) using the options on the infotainment display.

Fade/Balance : Touch to adjust by using the controls on the infotainment display or by tapping/dragging the crosshair.

Finding a Station

Seeking a Station

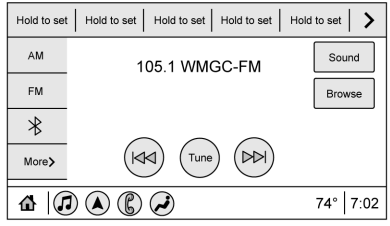

From the AM, FM, or SXM (if equipped) option, press ⏭ or ⏮ on the center stack to search for the previous or next strong station or channel.

Browsing Stations

Touch the Browse option to list all available stations or channels. Navigate up and down through all stations by scrolling the list. Touch the station or channel you want to listen to. Touch ☆ to save the station or channel as a favorite.

If equipped, touch Update Station List to update the active stations in your area.

Direct Tune

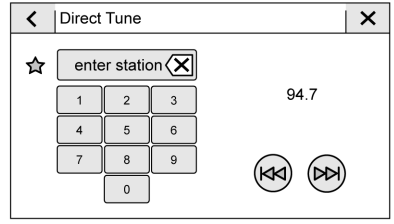

Access Direct Tune by touching the Tune icon on the infotainment display to bring up the keypad. Navigate through all frequencies using the arrows on the right side of the Direct Tune display. Directly enter a station or channel using the keypad. When a new station or channel is entered, the information about that station or channel displays on the right side. This information will update with each new valid frequency. Touch ☆ to save the station or channel as a favorite.

The keypad will gray out entries that do not contribute to a valid frequency and will automatically place a decimal point within the frequency number.

Touch (X) to delete one number at a time. Touch and hold (X) to delete all numbers.

A valid AM or FM station will automatically tune to the new frequency but not close the Direct Tune display. When listening to SXM (if equipped), touch Go after entering the channel. Touch the Back icon on the infotainment display or touch ✕ to exit out of Direct Tune.

The tune arrows on the right side of the Direct Tune display will tune through the complete station or channel list one station step at a time per touch. A touch and hold advances through stations or channels quickly.

If equipped, HD Radio multicast stations cannot be tuned directly through the Direct Tune feature. Only the analog or HD1 station can use that feature. Use the display arrows to adjust to the multicast stations.

AM, FM, and SXM Categories

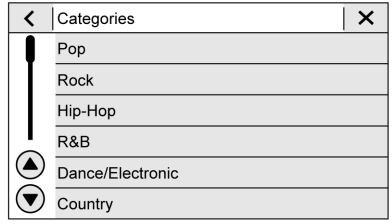

From the AM stations, if equipped with HD Radio, FM, or SXM (if equipped) display, touch Categories at the top of the Browse menu to access the categories list. The list contains names associated with the AM or FM stations, or SXM channels. Touch a category name to display a list of stations or channels for that category. Touching a station or channel from the list will tune the radio to that station or channel.

Storing Radio Station Presets

Favorites show in the area at the top of the display.

AM, FM, SXM (if equipped), and HD Radio Stations (if equipped) : Press and hold a preset to store the current station or channel as a favorite. Touch a saved favorite to recall a favorite station or channel.

Favorites can also be stored by touching ☆ in a station or channel list. This will highlight indicating that it is now saved as a favorite.

The number of favorites displayed is automatically adjusted by default, but can be manually adjusted in Settings in the System tab under Favorites and then Set Number of Audio Favorites. It can also be adjusted in Settings in the Apps tab under Audio and then Set Number of Audio Favorites.

HD Radio Technology

If equipped, HD Radio is a free service with features such as digital quality sound, more stations available on a single frequency such as HD2 and HD3, and display information such as artist and song title.

From the Now Playing display, touch the HD Radio icon to turn HD on or off.

Station Access

To access HD Radio stations:

1. Tune the radio to the station. If HD Radio is turned on and the station is broadcasting in HD Radio, the radio will automatically tune to the HD version of the current channel (HD1) after several

seconds. The radio will also display icons representing additional channels (HD2, ...HD8), that may be available. When the radio successfully tunes to a HD station, the HD logo will display and digital audio will play.

2. Touch the display arrows to tune to the previous or next HD Radio station.

There may be a delay before the station starts playing.

The HD Radio station number is indicated next to the HD logo.

HD Radio stations can be saved as favorites.

For a list of all stations, see www.hdradio.com.

HD Radio Troubleshooting

Digital Audio Delay : Wait for the signal to process. This can take several seconds.

Volume Change, Audio Skip, Echo, Digital Audio Lost : Station signal strength may be weak, the station is out of range, or the station may be out of alignment. Verify proper reception on another station.

If the HD Radio signal weakens while listening to HD1, the radio will automatically switch to the analog version of the radio station.

If the HD Radio signal loses reception while listening to stations HD2 to HD8, the radio mutes until the signal can be recovered or until the station is changed.

HD Radio can be disabled if driving in a weak signal area. Touch HD Radio On/Off to toggle HD Radio reception on and off.

Radio Data System (RDS)

If equipped, RDS features are available for use only on FM stations that broadcast RDS information. With RDS, the radio can:

- Group stations by Category (i.e., Program Type) such as Rock, Jazz, Classical, etc.
- Display messages from radio stations.

This system relies on receiving specific information from these stations and only works when the information is available. It is possible that a radio station could broadcast incorrect information that causes the radio features to work improperly. If this happens, contact the radio station.

When information is broadcast from a RDS station, the station name or call letters display on the audio screen. Radio text supporting the currently playing broadcast may also appear.

Satellite Radio

SiriusXM Radio Service

If equipped, vehicles with a valid SiriusXM radio subscription can receive SiriusXM programming.

SiriusXM radio has a wide variety of programming and commercial-free music, coast to coast, in digital-quality sound. In the U.S., see www.siriusxm.com or call 1-888-601-6296. In Canada, see www.siriusxm.ca or call 1-877-438-9677.

When SiriusXM is active, the channel name, number, song title, and artist appear on the display.

SiriusXM with 360L

SiriusXM with 360L interface has enhanced in-vehicle listening experience for subscribers. The experience now offers more categories and system learned recommendations toward discovering more personalized content.

To use the full SiriusXM 360L program, including streaming content and listening recommendations, OnStar Connected Access is required. Connected vehicle services vary

by model and require a complete working electrical system, cell reception, and GPS signal. An active connected plan is required.

Reference the SiriusXM user guide for use and subscription information.

Radio Reception

Unplug electronic devices from the accessory power outlets if there is interference or static in the radio.

FM

FM signals only reach about 16 to 65 km (10 to 40 mi). Although the radio has a built-in electronic circuit that automatically works to reduce interference, some static can occur, especially around tall buildings or hills, causing the sound to fade in and out.

AM

The range for most AM stations is greater than for FM, especially at night. The longer range can cause station frequencies to interfere with each other. Static can also occur when things like storms and power lines interfere with radio reception. When this happens, try reducing the treble on the radio.

SiriusXM Satellite Radio Service

If equipped, SiriusXM Satellite Radio Service provides digital radio reception. Tall buildings or hills can interfere with satellite radio signals, causing the sound to fade in and out. In addition, traveling or standing under heavy foliage, bridges, garages, or tunnels may cause loss of the SiriusXM signal for a period of time. Some cellular services may interfere with SXM reception causing loss of signal.

Mobile Device Usage

Mobile device usage, such as making or receiving calls, charging, or just having the mobile device on may cause static interference in the radio. Unplug the mobile device or turn it off if this happens.

Multi-Band Antenna

The roof antenna is for AM, FM, SiriusXM Satellite Radio, OnStar, and GPS (Global Positioning System). Keep clear of obstructions for clear reception. If the vehicle has a sunroof, and it is open, reception can also be affected.

Audio Players

Avoiding Untrusted Media Devices

When using media devices such as SD cards, USB devices, and mobile devices, consider the source. Untrusted media devices could contain files that affect system operation or performance. Avoid use if the content or origin cannot be trusted.

USB Port

Audio stored on a USB device may be listened to.

The vehicle may be equipped with two USB ports on the center stack. These ports are for data and charging. There may also be two USB ports for charging only at the rear of the center console.

Caution

To avoid vehicle damage, unplug all accessories and disconnect all accessory cables from the vehicle when not in use. Accessory cables left plugged into the vehicle, unconnected to a device, could be damaged or cause an electrical short if

(Continued)

Caution (Continued)

the unconnected end comes in contact with liquids or another power source such as the accessory power outlet.

Playing from a USB

A USB mass storage device can be connected to the USB port.

Audio extensions supported by the USB may include:

- MP3
- AAC
- OGG
- 3GP

Gracenote

When plugging in a USB device, Gracenote service builds voice tags for music. Voice tags allow artists, albums with hard to pronounce names, and nicknames to be used to play music through voice recognition, if equipped.

While indexing, infotainment features may be available.

My Media Library

MyMedia is only available when more than one indexed device is connected. It allows access to content from all indexed media sources. MyMedia will show as an available source in the Source page.

USB MP3 Player and USB Devices

The USB MP3 players and USB devices connected must comply with the USB Mass Storage Class specification (USB MSC).

To play a USB device:

1. Connect the USB.
2. Touch Audio from the Home Page.
3. Touch the More option and then touch the USB device.

Use the following when playing an active USB source:

▷ **:** Touch to play the current media source.

II : Touch to pause playback of the current media source.

⏮ **:**

- Touch to seek the beginning of the current or previous track.
- Touch and hold to reverse quickly through playback. Release to return to playing speed. Elapsed time displays.

⏭ **:**

- Touch to seek the next track.
- Touch and hold to advance quickly through playback. Release to return to playing speed. Elapsed time displays.

Shuffle : Touch the shuffle icon to play music in random order.

USB Sound Menu

See “Infotainment System Sound Menu” under *AM-FM Radio* ⇨ *116*.

USB Browse Menu

When a list of songs, albums, artists, or other types of media displays, the up and down arrows and A-Z appear on the left side. Select A-Z to view a display that will show all letters of the alphabet and select the letter to go to.

Touch the up and down arrows to move the list up and down.

Touch Browse and the following may display:

Playlists:

1. Touch to view the playlists stored on the USB.
2. Touch a playlist to view the list of all songs in that playlist.
3. Touch a song from the list to begin playback.

Supported playlist extensions are m3u and pls.

Artists:

1. Touch to view the list of artists stored on the USB.
2. Touch an artist name to view a list of all albums by the artist.
3. To select a song, touch All Songs or touch an album and then touch a song from the list.

Songs:

1. Touch to display a list of all songs on the USB.
2. To begin playback, touch a song from the list.

Albums:

1. Touch to view the albums on the USB.
2. Touch the album to view a list of all songs on the album.
3. Touch a song from the list to begin playback.

Genres:

1. Touch to view the genres on the USB.
2. Touch a genre to view a list of artists.
3. Touch an artist to view albums by that artist.
4. Touch an album to view songs on the album.
5. Touch a song to start playback.

Composers:

1. Touch to view the composers on the USB.
2. Touch a Composer to view a list of albums by that composer.
3. Touch an album or All Songs to view a list of songs.
4. Touch a song from the list to begin playback.

Folders:

1. Touch to view the directories on the USB.
2. Touch a folder to view a list of all files.
3. Touch a file from the list to begin playback.

Podcasts : Touch to view the podcasts on the connected Apple device and get a list of podcast episodes.

Audiobooks:

1. Touch to view the audiobooks stored on the Apple device.
2. Touch an audiobook to get a list of chapters.
3. Touch the chapter from the list to begin playback.

File System and Naming

File systems supported by the USB may include:

- FAT32
- NTFS
- HFS+

The songs, artists, albums, and genres are taken from the file's song information and are only displayed if present. The radio displays the file name as the track name if the song information is not available.

Supported Apple Devices

To view supported devices, see my.gmc.com/learn.

Storing and Recalling Media Favorites

To store media favorites, touch Browse to display a list of media types.

Touch one of the following Browse options to save a favorite:

Playlists : Touch ☆ next to any playlist to store the playlist as a favorite. Touch a saved favorite to recall a favorite playlist. The first song in the playlist begins to play.

Artists : Touch ☆ next to any artist to store the artist as a favorite. Touch a saved favorite to recall a favorite artist. The first song in the artist list begins to play.

Songs : Touch ☆ next to any song to store the song as a favorite. Touch a saved favorite to recall a favorite song.

Albums : Touch ☆ next to any album to store the album as a favorite. Touch a saved favorite to recall a favorite album. The first song in the album list begins to play.

Genres : Touch ☆ next to any genre to store the genre as a favorite. Touch a saved favorite to recall a favorite genre. The first song of the genre begins to play.

Podcasts : Touch ☆ next to any podcast to store the podcast as a favorite. Touch a saved favorite to recall a favorite podcast. The podcast begins to play.

Audiobooks : Touch ☆ next to any audiobook to store the audiobook as a favorite. Touch a saved favorite to recall a favorite audiobook. The first chapter in the audiobook begins to play.

Media Playback and Mute

USB playback will be paused if the system is muted. If the steering wheel mute control is pressed again, playback will resume.

If the source is changed while in mute, playback resumes and audio will unmute.

Auxiliary Jack

If equipped, this vehicle has an auxiliary input jack in the center stack. Possible auxiliary audio sources include:

- Laptop computer
- Audio music player

This jack is not an audio output. Do not plug headphones into the auxiliary input jack. Set up an auxiliary device while the vehicle is in P (Park).

Connect a 3.5 mm (1/8 in) cable from the auxiliary device to the auxiliary input jack. When a device is connected, the system can play audio from the device over the vehicle speakers.

If an auxiliary device has already been connected, but a different source is currently active, touch More and then touch AUX to make the source active.

Shuffle and Browse are not available in the AUX source menu.

Bluetooth Audio

Music may be played from a paired Bluetooth device. See *Bluetooth (Pairing and Using a Phone)* ⇨ *140* or *Bluetooth (Overview)* ⇨ *139* for help pairing a device.

Volume and song selection may be controlled by using the infotainment controls or the mobile device. If Bluetooth is selected and no volume is present, check the volume setting on the infotainment system.

Music can be launched by touching Bluetooth from the recent sources list on the left of the display or by touching the More option and then touching the Bluetooth device.

To play music via Bluetooth:

1. Power on the device, and pair to connect the device.
2. Once paired, touch Audio from the Home Page, then touch Bluetooth from the recent sources list on the left of the display.

Bluetooth Sound Menu

See "Infotainment System Sound Menu" under *AM-FM Radio* ⇨ *116*.

Manage Bluetooth Devices

From the Home Page:

1. Touch Audio.
2. Touch Bluetooth.
3. Touch Devices to add or delete devices.

A Bluetooth device can only be paired when the vehicle is parked.

When touching Bluetooth, the radio may not be able to launch the audio player on the connected device to start playing. When the vehicle is not moving, use the mobile device to begin playback.

All devices launch audio differently. When selecting Bluetooth as a source, the radio may show as paused on the display. Press play on the device or touch ▷ on the display to begin playback.

Browse functionality will be provided where supported by the Bluetooth device. This media content will not be part of the MyMedia source mode.

Some smartphones support sending Bluetooth music information to display on the radio. When the radio receives this information, it will check to see if any is available and display it. For more information about supported Bluetooth features, see my.gmc.com/learn.

Navigation

Using the Navigation System

If equipped, launch the Nav application by touching the Nav icon on the Home Page or on the shortcut tray near the bottom of the infotainment display.

When the Nav application is launched for the first time, a product walkthrough is available. Use of the feature requires the Terms and Conditions and the Privacy statement to be confirmed. If available and signed into a profile, it is also suggested to enable and confirm Predictive Navigation.

Predictive Navigation (If Equipped)

If Predictive Navigation is available and confirmed, this feature learns preferences by remembering where the vehicle has been. It uses the locations and navigation history to personalize routes and results.

Predictive Navigation may learn elements such as:

- Personalized routes based on preferred streets.

- Search results that provide best matches at the top of the list.
- Predictive traffic.
- Local map content updating.

Predictive Navigation can also be enabled or disabled at a later time by touching ··· (Options). While in Options, touch Settings, then Map and Navigation Settings, and then Predictive Navigation. See *Settings* ⇨ *144*.

Navigation Map View

After opening the Nav application for the first time, the application will always open in full map view displaying the vehicle's current location. When the vehicle is stopped, the search bar will appear along the top of the navigation map view. Manually close the search bar by touching ✕. When the vehicle is moving, the 🔍 (Search) icon will replace the search bar to maximize the full map view.

Destination Card Preferences

From the Nav application, set up Home and Work addresses to enable one-touch navigation. To set up Home and Work addresses, touch ··· and select Settings, then Map and Navigation Settings, and then Destination Card Preferences. Show My Places on Map should be on by default. Select and enter Home and/or Work address and save.

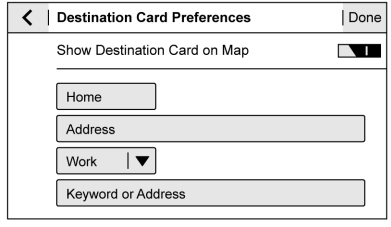

If the vehicle's system is not signed into a customized profile, the current location icon uses a generic symbol. Once signed into a customized profile, the current location symbol will show a customized icon. See *Navigation Symbols* ⇨ *126*.

Map and Navigation Settings

Touch ··· while in the map view to display options. The following may display:

- 3D Heading Up, 2D Heading Up, 2D North
- Show on Map
- Traffic Events (available with OnStar Connected Navigation)
- Settings
- Edit Destination (if a route has been set)
- Avoid on Route (if a route has been set)

Touch Settings to view Map and Navigation Settings. The following may display:

- Destination Card Preferences
- Map Preferences
- Route Preferences
- Navigation Voice Control
- Traffic Preferences
- Alert Preferences
- Fuel Grade Preferences
- Manage History
- Predictive Navigation: See "Predictive Navigation (If Equipped)" previously in this section.
- About

To exit a list, touch ✕ in the top right corner to return to the main map view.

Make sure to set up preferences before setting a destination and starting active guidance.

Map Preferences

Touch to choose between basic map feature configurations:

Map Colors

- Auto – Touch to automatically change modes based on lighting conditions.
- Day (Light)
- Night (Dark)

3D Landmark (Default is On) : Touch On or Off. When turned on, the system will display all 3D Landmarks on the map depending on the zoom level.

3D Building (Default is Off) : Touch On or Off. When turned on, the system will display all of the possible 3D building shapes on the map depending on the zoom level.

Show Terrain in 3D (Default is Off) : If equipped, touch On or Off. When turned on, the system will display terrain information on the map in 3D view.

Auto-Zoom (Default is On) : Touch On or Off. When turned on, the system will automatically adjust the zoom level when the vehicle is approaching a turn. After the turn is completed, the system automatically brings the zoom back to the originally set level. If the vehicle is approaching a turn with the next turn occurring shortly after, the Auto-Zoom will remain on until both turns are completed.

Route Preferences

Touch to access the Route Preferences. The choices are:

- Preferred Route – Choose from two different route options: Fastest or Eco-Friendly.
  - Fastest would be the route with the shortest drive time.
  - Eco-Friendly would be the most fuel-efficient route.
- Avoid on Current Route – Choose any of the road features to avoid while on route:
  - Highways
  - Unpaved Roads
  - Ferries
  - Carpool Lanes
  - Toll Roads
  - Tunnels
  - Country Borders

Navigation Voice Control

Touch to access the voice control setting display.

- Navigation Volume – To adjust the volume level, touch the up and down arrows. If the voice guidance prompt is being heard, volume can also be adjusted using the knob on the center stack or the volume switch on the steering wheel.
- Navigation Voice Prompt Level during a Call. Options available are:
  - Full Prompt (Selected by default)
  - Tone Only
  - None

Traffic Events (If Equipped)

This feature provides a list of events that are on the route or nearby. Touch ··· and then select Traffic Events. An OnStar connected Navigation service plan is required.

Traffic Preferences (If Equipped)

While in Map View, touch ···, then Settings and then Map and Navigation Settings to access Traffic Preferences. When Show Traffic on Map is turned on, the feature

provides an overview of the traffic flow using different coded colors. The following options are available for rerouting:

- Auto Reroute to Better Route – The system will automatically reroute if the system detects there is a traffic issue ahead.
- Ask Before Rerouting (Default) – If the system detects there is a traffic issue ahead, it will display a pop-up with details about the issue. Choose to reroute or cancel the alert.
- Never Search for Better Route – The system will not check for a better route until one of the above options is selected.

Alert Preferences

Set alerts on or off during both inactive and active guidance views. The following alerts may be available:

- Road Safety Alerts – Touch to display upcoming School Zones.
- Traffic Camera Alerts

Manage History

Touch Manage History to access the History options:

- Clear Recent Destinations – Touch ⊗ to clear the recent destinations.
- Clear Search History – Touch ⊗ to clear the search history.

About

Touch to display software information, such as:

- Telenav Terms and Conditions
- Telenav Privacy Statement
- Navigation Version

Maps

The Nav application requires a map database to run. It is stored on an SD card that is connected to the infotainment system. If the map database is not available, a missing SD card error message will be displayed.

SD Card Error Messages

The SD card only works for one unique vehicle. The SD card must pass authentication verification to be used for that specific vehicle. Do not remove SD card while the ignition is on.

Potential error scenarios and messages include:

- The SD card has initialized for the first time: “Once initialized, this SD card can only be used for navigation in this vehicle.” Make sure the SD card switch is in an upward position.
- The SD card is not working properly: “SD card is not functioning properly. (Error Code).”
- The SD card is not paired with the existing system: “This SD card is not valid in this vehicle for navigation. See Owner’s Manual for more detail or visit your dealer. (Error Code).”
- The SD card has been removed from the slot: “SD card has been removed. (Error Code).” Make sure the Nav SD card is in the slot.

Touch Continue to resume after the initialization error message. For the other messages, touch OK to return to the Home Page.

If any errors continue, see your dealer.

Navigation Symbols

Following are the most common symbols that may appear in the Nav application.

This indicates the vehicle's current location and direction on the map.

This is the vehicle's current location icon during inactive guidance mode. Once a user profile is created, the current location icon can be customized.

This icon indicates the vehicle's current location and direction on the map.

The destination pin marks the location of the final destination. Touch the pin to view the destination address or to add it or remove it from the Favorites list. Hide the information by touching the pin one more time. It will automatically time out if no action is taken.

If equipped, smart Points of Interest (POIs) are places of interest for parking and gas stations.

The progress bar provides an overview of the route progress and may show traffic and incidents along the way. As the route proceeds, the vehicle icon moves up the bar.

Touch the icon to zoom out on the map and view the entire route. Touch it again to return to the previous view.

View the drive time by touching the estimated time of arrival (ETA).

Current Location

When the vehicle is parked and not in a Navigation session, the user icon is centered on the map view, highlighting the current location.

Destination

Receiving Destination Directions from Different Sources

Destinations can be received or transferred from different sources to the Nav application for route guidance. If equipped, some of these sources may include:

- Navigation from search results.
- OnStar Advisor destination download.
- An address from the Contacts list.
- An application on the smartphone that can send destinations to the vehicle.
- An application downloaded to the vehicle such as OnStar Services that can send destinations to the navigation system.

Waypoints

Add up to five waypoints, which are additional destinations, along the route. To add an additional stop or waypoint:

1. From active guidance, touch 🔍.
2. Search for the destination using One-Box, Voice search, or the Quick Category icons.
3. Choose search results Along Route, Nearby, or Near Destination.
4. Choose the desired waypoint and touch Add to Trip or replace the current destination by touching New Destination.

Route options are not available for waypoints.

Arriving at a Waypoint

When approaching a waypoint, the system will display a Destination Arrival view. To continue on to the next destination touch the Drive to message on the infotainment display.

If the vehicle passes the waypoint or gets out of the current route, the system will automatically reroute back to this waypoint. At the same time, it will show a Drive to icon along with the next waypoint address so the current waypoint can be skipped and guidance can resume to the next waypoint or destination.

Editing a Waypoint

When waypoints are added during active guidance, the system allows a stop to be deleted or the order to be changed. To edit a waypoint:

1. Touch ⋯.
2. Touch Edit Destinations.
   - Modify destination order by touching and holding the arrow until it is highlighted. Drag to move the waypoint up or down the list.
   - Delete a waypoint by touching 🗑. A pop-up will appear to confirm waypoint removal. Once the request is confirmed, the system will remove the address from the destinations list. Touch ✕ on the top right corner so the system can recalculate the route.

     If there is only one address in the destinations list, the system will disable the move and delete functions. The system will not allow the final destination to be deleted.

Map Information

Road network attributes are contained in the map database for map information. Attributes include information such as street names, street addresses, and turn restrictions. A detailed area includes all major highways, service roads, and residential roads. The detailed areas include Places of Interest (POIs) such as restaurants, airports, banks, hospitals, police stations, gas stations, tourist attractions, and historical monuments.

If the vehicle does not have an applicable service plan, the map database may not include data for newly constructed areas or map database corrections that are completed after production. The navigation system provides full route guidance in the detailed map areas.

Zoom Control

The zoom control display is shown on the map view. A few ways to zoom in or out are:

- Touch + or – to zoom in or out on the map.
- Double tap with one finger to zoom in or single tap with two fingers to zoom out on the map.

- Use the index finger and thumb to zoom out by pinching and then zoom in by spreading those two fingers on the map.

Map Gestures and Map Scale

Use the following gestures on the infotainment display to adjust the map scale and display options.

- Pinch to zoom in or out.
- Pan the map.
- Use two fingers to tilt down and change from 2D to 3D. Tilt up to change back to 2D.
- Rotate the map.

See *Using the System* ⇨ *113*.

Mute

When in active guidance, the audio prompts while using navigation can be muted. Touch the speaker icon on the right side of the upper bar. A slash will appear on the speaker to indicate voice guidance is muted.

Active Guidance View

When a destination is chosen and a navigation session is active, the navigation system enters into an Active Guidance View (AGV).

Map Orientation

Touch ··· on the map to access map orientation settings. Map orientation is 3D Heading Up by default.

Available settings are:

- 3D Heading Up (Default): 3D map with the vehicle pointing up. In this mode, the current location icon will always head up and the map will rotate around it.
- 2D Heading Up: 2D map with the vehicle pointing up. In this mode, the current location icon will always head up and the map will rotate around it.
- 2D North Up: 2D map with North pointing up. In this mode, the current location icon will shift as the vehicle turns left and right.

Touch the icon to change the map type. The icon and label will also update accordingly.

Depending on the zoom level of the 2D Heading Up and 3D Heading Up maps, the system may automatically switch to the 2D North Up map.

When in AGV, the entire route can be viewed in 2D North Up by touching the traffic bar. The map will zoom out and readjust to display the full route. When in 2D North Up Route View, the Recenter icon will appear in the middle of the display. Touch either the Recenter icon or the traffic bar again to return to the previous view, either 2D or 3D.

Lane Guidance

The map will display the lane information for the upcoming maneuver if it is available.

Junction View

When a vehicle is on the highway and approaching the exit, an image displays the lane that the vehicle must stay in to complete the next maneuver.

Quick-Turn View

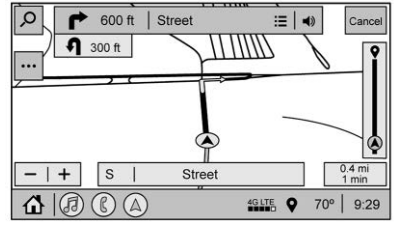

When the vehicle is approaching a turn with the next turn following in quick succession, a quick-turn list appears below the primary turn indicator. An audio prompt will announce the quick turn.

Auto-Zoom

When approaching a maneuver, the map will automatically zoom in to show both the vehicle icon and the upcoming maneuver to give a better view of the maneuver. Once the maneuver is complete, the system will zoom back to the previous zoom level. Touch ··· on the map to access Settings, then touch Map Preferences to access Auto-Zoom. This feature can be enabled or disabled.

Directions

Touch the menu option next to the next turn street name to display Directions.

Directions displays the turns and directions from the current location to the final destination.

Editing Directions

Directions can be edited by choosing , which expands the list to fill the display and enters the Edit Mode. While in Edit Mode, an unwanted route segment can be removed from the route by touching 🗑 next to the segment. A pop-up appears to confirm segment removal.

When the route segment has been removed, all segments are replaced by an activity indicator while the new route is recalculated. When the recalculation is complete, the activity indicator is replaced with the new route segments.

Highway Exits List

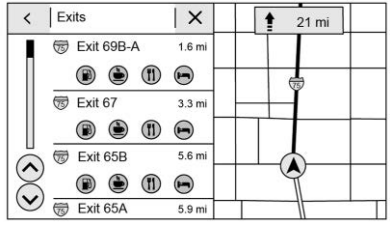

Touch to open the Exit list. This icon displays next to the current street name near the bottom of the display. The icon only appears when on a highway with defined exits.

While traveling on roads with designated exits, an Exit list may be available. The Exit list displays the exit number, distance to the exit from the current vehicle position, and convenience stops that may be available, such as gas, coffee, food, and lodging.

Next Maneuver Menu

When in Active Guidance, the Next Maneuver Turn Arrow, Street Name, and Maneuver Distance are shown in the Next Maneuver at the top of the display overlaying the map. ETA, Distance to Destination, and Traffic Indicator are displayed in a panel pinned on the right of the display.

Navigation Next Turn Maneuver Alert

If the Navigation application is not open when a near maneuver prompt is given, it is shown as an alert. Touch the alert to go to the main navigation view or touch ✕ to dismiss the alert.

Repeat Voice Guidance

This symbol indicates the next guidance maneuver. Touch it to repeat the last spoken guidance instruction.

Incident Alert (If Equipped)

During active guidance, if the system determines that there is an incident ahead but there is not a better route, the system will play a tone and show a Quick Notice. This will only show once per incident.

Incident Reports (If Equipped)

Incident report icons, along with traffic flow data, display on the map during both active and inactive guidance.

End Route

Touch Cancel at the top right corner to end active guidance and return to inactive guidance. If active guidance is canceled before the destination has been reached, a pop-up option to Resume Trip will appear.

Resume Trip

The trip can be resumed if it was canceled by touching the Resume Trip pop-up option.

If the system has determined that the destination has been reached, either because the arrival view displayed or the destination has been passed, the Resume Trip option will not appear.

Favorites

The navigation favorites can have contacts, addresses, or POIs that have been saved through the favorite icon on the details view.

Accessing Favorites

In the Nav application, view the Favorites list by touching ☆ in the search bar along the top of the Nav map view. If the search bar is closed, touch 🔍 and select ☆.

Saving Favorites

Favorites can be added from a number of the system's applications. Touch the favorites icon to save content as a favorite.

Renaming Navigation Favorites

1. Touch the Settings icon on the Home Page and touch the System tab.
2. Touch Favorites to access the Manage Favorites option.
3. Touch a saved Navigation favorite to access the edit icon. Touch the edit icon to rename the favorite.
4. Touch Save to store the renamed favorite.

Recents

Touch 🕘 to access a list of recent destinations.

Recenter Position Icon

Touch the Recenter Position arrow in the middle of the map view to reset the map to the current location.

Last Parked Location

The Last Parked Location is the last location the vehicle engine was turned off. That location is displayed in the first row of the Recents list. Touching the last Parked Location shows the Address Details view to either save the address or drive to it. The Last Parked Location can be deleted by entering the Edit display. Once the Last Parked Location is deleted, it no longer appears in the Recents list, unless the vehicle is started at that location again.

Show POI Icons

To see the POI categories, touch Options, then touch Show on Map. Up to eight categories of icons can be selected.

Smart POI Icons on Map (If Equipped)

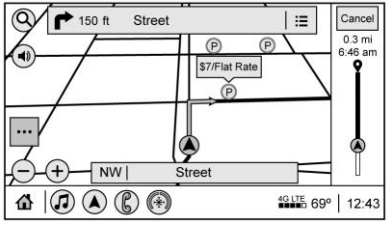

The smart POI icons such as fuel stations and parking may appear based on time, location, driver search behavior, driving conditions, and vehicle conditions.

Touch a smart POI icon to open the corresponding details:

- Left side: Name and address of the POI.
- Right side: + ETE (Estimated Time Enroute.)

Smart Fuel Station Icons

Fuel station prices are shown if available for nearby stations when the vehicle is low on fuel.

Smart Parking Icons

When reaching a densely populated destination and the system determines that parking may be limited, the system will attempt to display nearby parking destinations with pricing information, if available.

Report an Issue Using POI Details (If Equipped)

In the POI details page, a POI issue can be reported if the data is not accurate or the address is incorrect. Touch Report an Issue near the bottom of the display to access the issue selection page. Touch one of the predefined issues on the selection page, then touch Send. The system will send the information for analysis.

Search

Touch Search on the infotainment display to open the search display. It has a search field entry box, quick category icon shortcuts, recents icon, favorites icon, and keyboard.

Auto Complete

Enter a partial location in the field entry box on the search display. Auto complete will attempt to complete the destination based on what is being entered. Touch the suggested item to search.

Search While in Motion with No Front Seat Passenger Present

The search display will not allow changes or text input with the keyboard when the vehicle is in motion. As a result, a display showing three rows of the most commonly used categories appears. Touching the search box will activate speech recognition.

Search While in Motion with Front Seat Passenger Present

If the system detects that the front seat passenger is present with both driver and passenger seat belts buckled, touching the search icon will display an alert message that allows the passenger to search for a destination as if the vehicle were stopped.

Connected Navigation

Connected Navigation is a subscription service that enables certain capabilities within the navigation system, such as Traffic, Smart Search/Routing, and Predictive

Navigation capabilities. The system will show an alert when the subscription is expiring and will ask to renew the plan.

Global Positioning System (GPS)

If equipped, the position of the vehicle is determined by using satellite signals, various vehicle signals, and map data.

At times, other interference such as the satellite condition, road configuration, condition of the vehicle, and/or other circumstances can affect the navigation system's ability to determine the accurate position of the vehicle.

The GPS shows the current position of the vehicle using signals sent by GPS satellites. When the vehicle is not receiving signals from the satellites, a symbol appears in the status bar.

This system might not be available or interference can occur if any of the following are true:

- Signals are obstructed by tall buildings, trees, large trucks, or a tunnel.
- Satellites are being repaired or improved.

For more information if the GPS is not functioning properly, see *Problems with Route Guidance* ⇨ *133* and *If the System Needs Service* ⇨ *134*.

Vehicle Positioning

At times, the position of the vehicle on the map could be inaccurate due to one or more of the following reasons:

- The road system has changed.
- The vehicle is driving on slippery road surfaces such as sand, gravel, or snow.
- The vehicle is traveling on winding roads or long, straight roads.
- The vehicle is approaching a tall building or a large vehicle.
- The surface streets run parallel to a freeway.
- The vehicle has been transferred by a vehicle carrier or a ferry.
- The current position calibration is set incorrectly.
- The vehicle is traveling at high speed.
- The vehicle changes directions more than once, or the vehicle is turning on a turn table in a parking lot.
- The vehicle is entering and/or exiting a parking lot, garage, or a lot with a roof.
- The GPS signal is not received.
- A roof carrier is installed on the vehicle.
- Tire chains are installed on the vehicle.
- The tires are replaced or worn.
- The tire pressure for the tires is incorrect.
- This is the first navigation use after the map data is updated.
- The 12-volt battery has been disconnected for several days.
- The vehicle is driving in heavy traffic where driving is at low speeds, and the vehicle is stopped and started repeatedly.

Problems with Route Guidance

Inappropriate route guidance can occur under one or more of the following conditions:

- The turn was not made on the road indicated.
- Route guidance might not be available when using automatic rerouting for the next right or left turn.
- The route might not be changed when using automatic rerouting.
- There is no route guidance when turning at an intersection.
- Plural names of places might be announced occasionally.

- It could take a long time to operate automatic rerouting during high-speed driving.
- Automatic rerouting might display a route returning to the set waypoint if heading for a destination without passing through a set waypoint.
- The route prohibits the entry of a vehicle due to a regulation by time or season or any other regulation which may be given.
- Some routes might not be searched.
- The route to the destination might not be shown if there are new roads, if roads have recently changed, or if certain roads are not listed in the map data. See *Maps* ⇨ *126*.

To recalibrate the vehicle's position on the map, park with the vehicle running for two to five minutes, until the vehicle position updates. Make sure the vehicle is parked in a location that is safe and has a clear view of the sky and away from large obstructions.

If the System Needs Service

If the navigation system needs service, see your dealer.

Map Data Updates

The map data in the vehicle is the most up-to-date information available when the vehicle was produced. The map data is updated periodically, provided that the map information has changed and the vehicle has a relevant service plan.

See www.gmnavdisc.com for details on ordering, purchasing, and installing a new or replacement SD card. Features are subject to change. For more information on this feature, see my.gmc.com/learn.

If the vehicle is equipped with Connected Navigation, which is a subscription service that enables certain features of the navigation system, such as Traffic, Smart Search/Routing, and Predictive Navigation, then the system will download the latest map data from the cloud.

Database Coverage Explanations

Coverage areas vary with respect to the level of map detail available for any given area. Some areas feature greater levels of detail than others. If this happens, it does not mean there is a problem with the system. As the map data is updated, more detail can become available for areas that previously had limited detail. See *Map Data Updates* ⇨ *134*.

Voice Recognition

If equipped, voice recognition allows for hands-free operation within the navigation, audio, phone, and weather applications. This feature can be started by pressing on the steering wheel or touching on the infotainment display.

However, not all features within these areas are supported by voice commands. Generally, only complex tasks that require multiple manual interactions to complete are supported by voice commands.

For example, tasks that take more than one or two touches, such as a song or artist to play from a media device, would be supported by voice commands. Other tasks, like adjusting the volume or seeking up or down, are audio features that are easily performed by touching one or two options, and are not supported by voice commands.

In general there are flexible ways to speak commands for completing the tasks.

If your language supports it, try stating a one-shot command, such as “Directions to address <number, street, city, state/province>.” Do not include the ZIP code while stating the address during the command. Another example of a one-shot Destination Entry command is, “Directions to Place of Interest at <hotel>.” If these commands do not work, try saying, “Take me to Place of Interest” or “Find address” and the system will walk you through by asking additional questions.

Hybrid Speech Recognition

If equipped, this feature helps distinguish words by using Internet-based information along with the system’s voice recognition database. This allows you to speak more naturally when using voice recognition.

Using Voice Recognition

Voice recognition becomes available once the system has been initialized. This begins when the ignition is turned on. Initialization may take a few moments.

1. Press on the steering wheel controls to activate voice recognition.
2. The audio system mutes and the system plays a prompt.
3. Clearly speak one of the commands described in this section.

   A voice recognition system prompt can be interrupted while it is playing by pressing again.

Once voice recognition is started, both the infotainment display and instrument cluster show the selections and visual dialog content. These displays can be turned on or off in the Tutorial Mode under *Settings* ⇨ *144*.

There are three voice prompt modes supported:

- Informative verbal prompts: This type of prompt will provide more information regarding the supported actions.
- Short prompts: This type of prompt will provide simple instructions about what can be stated.
- Auto informative prompts: This type of prompt plays during the first few speech sessions, then automatically switches to the short prompt after some experience has been gained through using the system.

If a command is not spoken, the voice recognition system says a help prompt.

Prompts and Infotainment Displays

While a voice recognition session is active, there may be corresponding options showing on the displays. A selection can be made by manually touching the option, or by speaking the number for the option to select. Manual interaction in the voice recognition session is permitted. Interaction during a voice session may be completed entirely using voice commands while some manual commands may expedite a task. If a selection is made using a manual control, the voice recognition dialog will progress in the same way as if the selection were made using a voice command. Once the system completes the task, or the session is terminated, the voice recognition dialog stops.

An example of this type of manual intervention is touching an entry of a displayed number list instead of speaking the number associated with the entry desired.

Canceling Voice Recognition

- Touch or say “Cancel” or “Exit” to terminate the voice recognition session and show the display where voice recognition was initiated.

- Press ⌓ on the steering wheel controls to terminate the voice recognition session and show the display where voice recognition was initiated.

Natural Language Commands

Most languages do not support natural language commands in sentence form. For those languages, use direct commands like the examples shown on the display.

Helpful Hints for Speaking Commands

Voice recognition can understand commands that are naturally stated in sentence form or direct commands that state the application and the task.

For best results:

- Listen for the prompt before saying a command or reply.
- Speak the command naturally, not too fast, not too slow.
- Use direct commands without a lot of extra words. For example, “Call <name> at work,” “Play” followed by the artist or song name, or “Tune” followed by the radio station number.
- Navigation destinations can be made in a single command using keywords. A few examples are: “I want directions to an address,” “I need to find a place of interest or (POI),” or “Find contact.”

  The system responds by requesting more details. For other POIs, say the name of a category like “Restaurants,” “Shopping Malls,” or “Hospitals.”
- Navigating to a destination outside of the current country takes more than one command. The first command is to tell the system where the navigation will take place, such as an Address, Intersection, POI, or Contact. If Address or Intersection is selected, the second command is to say, “Change Country.” Once the system responds, say the country before saying the rest of the address and/or intersection.

  If POI is asked for, say “Change Location,” then “Change Country.”

Direct commands might be more clearly understood by the system. An example of a direct command would be “Call <number>.” Examples of these direct commands are displayed on most of the screens while a voice session is active. If “Phone” or “Phone Commands,” is spoken, the system understands that a phone call is requested and will respond with questions until enough details are gathered to make a call.

If a cell phone number has been saved with a name and a place, the direct command should include both, for example “Call <name> at work.”

Using Voice Recognition for List Options

When a list is displayed, a voice prompt will ask to confirm or select an option from that list.

When a display contains a list, there may be options that are available but not displayed. The list on a voice recognition screen functions the same as a list on other displays. Scrolling or flinging can be used to help display other entries from the list.

Manually scrolling or paging the list on a display during a voice recognition session suspends the current voice recognition event and plays the prompt “Please select manually or touch the Back icon on the infotainment display to try again.”

If manual selection takes more than 15 seconds, the session terminates and prompts that it has timed out. The display returns to the display where voice recognition was initiated.

The Back Command

Say "Back" or touch the Back icon on the infotainment display to go to the previous menu.

If in voice recognition, and "Back" is spoken all the way back to the starting display, and then "Back" is spoken one more time, the voice recognition session will cancel.

Help

Say "Help" on any voice recognition display and the help prompt for the display is played.

Voice Recognition for the Radio

If browsing the audio sources when voice is touched, the voice recognition commands for AM, FM, and SiriusXM (if equipped) are available.

"Switch to AM" : Switch bands to AM and tune to the last AM radio station.

"Switch to FM" : Switch bands to FM and tune to the last FM radio station.

"Switch to SXM" : Switch bands to SiriusXM and tune to the last SiriusXM channel.

"Tune to <AM frequency> AM" : Tune to the radio station whose frequency is identified in the command (like "nine fifty").

"Tune to <FM frequency> FM" : Tune to the radio station whose frequency is identified in the command (like "one oh one point one").

"Tune to <AM frequency> AM HD" : Tune to the HD Radio station (if equipped) whose frequency is identified in the command.

"Tune to <FM frequency> FM HD" : Tune to the HD Radio station (if equipped) whose frequency is identified in the command.

"Tune to <FM frequency> FM HD <HD channel number>" : Tune to the HD Radio station (if equipped) whose frequency and HD channel are identified in the command.

"Tune to SXM <SXM channel number>" : Tune to the SiriusXM radio station whose channel number is identified in the command.

"Tune to SXM <SXM channel name>" : Tune to the SiriusXM radio station whose channel name is identified in the command.

Voice Recognition for Audio MyMedia

The available voice recognition commands for [browsing] MyMedia are:

"Play Artist" : Begin a dialog to enter a specific artist name.

"Play Artist <artist name>" : Begin playback of a specific artist.

"Play Album" : Begin a dialog to enter a specific album name.

"Play Album <album name>" : Begin playback of a specific album.

"Play Song" : Begin a dialog to enter a specific song name.

"Play Song <song name>" : Begin playback of a specific song, if available.

"Play Genre" : Begin a dialog to enter a specific genre.

"Play Genre <genre name>" : Begin playback of a specific genre.

"Play Playlist" : Begin a dialog to enter a specific playlist name.

"Play Playlist <playlist name>" : Begin playback of a specific playlist.

"Play <device name>" : Play music from a specific device identified by name. The device name is the name displayed on the display when the device is first selected as an audio source.

"Play Chapter" : Begin a dialog to enter a specific name.

"Play Chapter <chapter name>" : Begin playback of a specific chapter.

"Play Audiobook" : Begin a dialog to enter a specific audiobook.

"Play Audiobook <audiobook name>" : Begin playback of a specific audiobook.

"Play Episode" : Begin a dialog to enter a specific name.

"Play Episode <episode name>" : Begin playback of a specific episode.

"Play Podcast" : Begin a dialog to enter a specific podcast.

"Play Podcast <podcast name>" : Begin playback of a specific podcast.

"My Media" : Begin a dialog to enter the desired media content.

Handling Large Amounts of Media Content

It is expected that large amounts of media content will be brought into the vehicle. It may be necessary to handle large amounts of media content in a different way than smaller amounts of media. The system may limit the options of voice recognition by not allowing selection of files by voice at the highest level if the number of files exceeds the maximum limit.

Changes to voice commands due to media content limits are:

- Files including other individual files of all media types such as songs, audiobook chapters, podcast episodes, and videos.
- Album type folders including types such as albums and audiobooks.

There are no restrictions if the number of files and albums is fewer than 12,000. When the number of files connected to the system is between 12,000 and 24,000, the content cannot be accessed directly with one command like "Play <song name>."

The restriction is that the command "Play Song" must be spoken first; the system will then ask for the song name. The reply command would be to say the name of the song to play.

Similar limits exist for album content. If there are more than 12,000 albums, but fewer than 24,000, the content cannot be accessed directly with one command like, "Play <album name>." The command "Play Album" must first be spoken; the system will then ask for the album name. The reply would be to say the name of the album to play.

Once the number of files has exceeded approximately 24,000, there is no support for accessing the songs directly through voice commands. There will still be access to the media content by using commands for playlists, artists, and genres.

The access commands for playlists, artists, and genres are prohibited after the number of this type of media exceeds 12,000.

The system will provide feedback the first time voice recognition is initiated if it has become apparent that any of these limits are reached during a device initializing process.

Voice recognition performance will degrade to some extent based on many factors when adding large amounts of data to recognize. If this is the case, perhaps accessing songs through playlists or artist name would work better.

Voice Recognition for Navigation (If Equipped)

"Navigation" : Begin a dialog to enter specific destination information.

"Navigation Commands" : Begin a dialog to enter specific destination information.

"Address" : Begin a dialog to enter a specific destination address, which includes the entire address consisting of the house number, street name, city, state/province, and country. Do not include the ZIP code.

"Place of Interest" : Begin a dialog to enter a destination Place of Interest category or major brand name.

The name must be precisely spoken. Nicknames or short names for the businesses will not likely be found. Lesser known businesses might have to be located by category, such as fast food, hotels, or banks.

"Navigate to Contact" : Begin a dialog to enter a specific destination contact name.

"Cancel Route" : End route guidance.

"Take Me Home" : Create a route to a stored home location.

Voice Recognition for the Phone

"Call <contact name>" : Initiate a call to a stored contact. The command may include location if the contact has location numbers stored.

"Call <contact> At Home," "At Work," "On Mobile," or "On Other" : Initiate a call to a stored contact and location at home, at work, on mobile device, or on another phone.

"Call <cell phone number>" : Initiate a call to a cell phone number of seven digits, 10 digits, or three digit emergency numbers.

"Pair Phone" : Begin the Bluetooth pairing process. Follow the instructions on the infotainment display.

"Redial" : Initiate a call to the last dialed number.

"Switch Phone" : Select a different connected cell phone for outgoing calls.

"Voice Keypad" : Begin a dialog to enter special numbers like international numbers. The numbers can be entered in groups of digits with each group of digits being repeated back by the system. If the group of digits is not correct, the command "Delete" will remove the last group of digits and allow them to be re-entered. Once the entire number has been entered, the command "Call" will start dialing the number.

Phone Assistant Voice Recognition

Press and hold on the steering wheel controls to pass through and launch Google phone assistant or Siri.

For the low radio, whether connected by Bluetooth or phone projection, the only available voice recognition is either Siri (iPhone) or the Google Assistant (Android).

Phone

Bluetooth (Overview)

The Bluetooth-capable system can interact with many mobile devices, allowing:

- Placement and receipt of calls in a hands-free mode.
- Sharing of the device's address book or contact list with the vehicle.

To minimize driver distraction, before driving, and with the vehicle parked:

- Become familiar with the features of the mobile device. Organize the phone book and contact lists clearly and delete

duplicate or rarely used entries.
If possible, program speed dial or other shortcuts.

- Review the controls and operation of the infotainment system.
- Pair mobile device(s) to the vehicle. The system may not work with all mobile devices. See “Pairing” later in this section.

Vehicles with a Bluetooth system can use a Bluetooth-capable mobile device with a Hands-Free Profile to make and receive phone calls. The infotainment system and voice recognition are used to control the system. The system can be used while the ignition is on or in accessory mode. The range of the Bluetooth system can be up to 9.1 m (30 ft). Not all mobile devices support all functions and not all mobile devices work with the Bluetooth system. See my.gmc.com for more information about compatible mobile devices.

Controls

Use the controls on the center stack and the steering wheel to operate the Bluetooth system.

Steering Wheel Controls

: Press to answer incoming calls and start voice recognition on your connected Bluetooth mobile device.

: Press to end a call, decline a call, or cancel an operation. Press to mute or unmute the infotainment system when not on a call.

Infotainment System Controls

For information about how to navigate the menu system using the infotainment controls, see *Using the System* ⇨ *113*.

Audio System

When using the Bluetooth mobile device system, sound comes through the vehicle's front audio system speakers and overrides the audio system. The volume level while on a mobile device call can be adjusted by pressing the steering wheel controls or the volume control on the center stack. The adjusted volume level remains in memory for later calls. The volume cannot be lowered beyond a certain level.

Bluetooth (Pairing and Using a Phone)

Pairing

A Bluetooth-enabled mobile device must be paired to the Bluetooth system and then connected to the vehicle before it can be used. See the mobile device manufacturer's user guide for Bluetooth functions before pairing the device.

Pairing Information

- If no mobile device has been connected, the Phone main page on the infotainment display will show the Connect Phone option. Touch this option to connect. Another way to connect is to touch the Phones tab at the top right of the display and then touch Add Phone.
- A Bluetooth smartphone with music capability can be paired to the vehicle as a smartphone and a music player at the same time.
- Up to 10 devices can be paired to the Bluetooth system.
- The pairing process is disabled when the vehicle is moving.

- Pairing only needs to be completed once, unless the pairing information on the cell phone changes or the cell phone is deleted from the system.
- If multiple paired cell phones are within range of the system, the system connects to the paired cell phone that is set to First to Connect. If there is no cell phone set to First to Connect, it will link to the cell phone which was used last. To link to a different paired cell phone, see “Linking to a Different Phone” later in this section.

Pairing a Phone

1. Make sure Bluetooth has been enabled on the cell phone before the pairing process is started.
2. Touch the Phone icon on the Home Page or the phone icon on the shortcut tray near the bottom of the display.
3. Touch Phones at the top of the infotainment display. There is also a Connect Phones option in the middle of the Phone display which will shortcut to the Phone List menu.
4. Touch Add Phone.
5. Select the vehicle name shown on the infotainment display from your cell phone’s Bluetooth Settings list.
6. Follow the instructions on the cell phone to confirm the six-digit code showing on the infotainment display and touch Pair. The code on the cell phone and infotainment display will need to be acknowledged for a successful pair.
7. Start the pairing process on the cell phone to be paired to the vehicle. See the cell phone manufacturer's user guide for information on this process. Once the cell phone is paired, it will show under Connected.
8. If the vehicle name does not appear on your cell phone, there are a few ways to start the pairing process over:
   - Turn the cell phone off and then back on.
   - Go back to the beginning of the Phone menus on the infotainment display and restart the pairing process.
   - Reset the cell phone, but this step should be done as a last effort.
9. If the cell phone prompts to accept connection or allow phone book download, touch Always Accept and Allow. The phone book may not be available if not accepted.
10. Repeat Steps 1–8 to pair additional cell phones.

First to Connect Paired Phones

If multiple paired cell phones are within range of the system, the system connects to the paired cell phone that is set as First to Connect. To enable a paired cell phone as the First to Connect phone:

1. Make sure the cell phone is turned on.
2. Touch Settings, then touch System.
3. Touch Phones to access all paired and all connected cell phones and mobile devices.
4. Touch the information icon to the right of the cell phone to open the cell phone’s settings menu.
5. Touch the First to Connect option, to enable the setting for that device.

Cell phones and mobile devices can be added, removed, connected, and disconnected. A sub-menu will display whenever a request is made to add or manage cell phones and mobile devices.

Secondary Phone

A cell phone can be enabled as a Secondary Phone by touching the information icon to the right of the paired cell phone name to

open the phone settings menu. If a cell phone is enabled as a Secondary Phone, it can connect simultaneously alongside another Bluetooth mobile device. In doing so, the Secondary Phone will be labeled as Incoming Calls. This means the mobile device can only receive calls. The Address Book of a Secondary Phone will not be available and hands-free outgoing calls cannot be placed using this cell phone.

If needed, touch the Secondary Phone while in the Phones list to swap it into the Outgoing and Incoming role. This role makes it possible to place outgoing calls from the Contacts and Recents list.

Listing All Paired and Connected Phones

1. Touch the Phone icon on the Home Page or the phone icon on the shortcut tray near the bottom of the display.
2. Touch Phones.

Disconnecting a Connected Phone

1. Touch the Phone icon on the Home Page.
2. Touch Phones.
3. Touch the information icon or the pencil icon next to the connected cell phone or mobile device to show the cell phone's or mobile device's information display.
4. Touch Disconnect.

Deleting a Paired Phone

1. Touch the Phone icon on the Home Page or the phone icon on the shortcut tray near the bottom of the display.
2. Touch Phones.
3. Touch the information icon or the pencil icon next to the connected cell phone to display the cell phone's or mobile device's information display.
4. Touch Forget Device.

Linking to a Different Phone

To link to a different cell phone, the new cell phone must be in the vehicle and paired to the Bluetooth system.

1. Touch the Phone icon on the Home Page or the phone icon on the shortcut tray near the bottom of the display.
2. Touch Phones.
3. Touch the new cell phone to link to from the not connected phone list. See "First to Connect Paired Phones" and "Secondary Phone" previously in this section.

Switching to Handset or Handsfree Mode

To switch between handset or handsfree mode:

- While the active call is hands-free, touch the Handset option to switch to the handset mode.

  The mute icon will not be available or functional while Handset mode is active.
- While the active call is on the handset, touch the Handset option to switch to the hands-free mode.

Making a Call Using Contacts and Recent Calls

Calls can be made through the Bluetooth system using personal cell phone contact information for all cell phones that support the Phone Book feature. Become familiar with the cell phone settings and operation. Verify the cell phone supports this feature.

The Contacts menu accesses the phone book stored in the cell phone.

The Recents menu accesses the recents call list from your cell phone.

To make a call using the Contacts menu:

1. Touch the Phone icon on the Home Page.

2. Touch Contacts.
3. The Contacts list can be searched by using the first character. Touch A-Z on the infotainment display to scroll through the list of names.

   Touch the name to call.
4. Touch the desired contact number to call.

To make a call using the Recents menu:

1. Touch Phone on the Home Page.
2. Touch Recents.
3. Touch the name or number to call.

Making a Call Using the Keypad

To make a call by dialing the numbers:

1. Touch the Phone icon on the Home Page.
2. Touch Keypad and enter a phone number.
3. Touch on the infotainment display to start dialing the number.

Searching Contacts Using the Keypad

To search for contacts using the keypad:

1. Touch the Phone icon on the Home Page.
2. Touch Keypad and enter partial phone numbers or contact names using the digits on the keypad to search.

   Results will show on the right side of the display. Touch one to place a call.

Accepting or Declining a Call

When an incoming call is received, the infotainment system mutes and a ring tone is heard in the vehicle.

Accepting a Call

There are two ways to accept a call:

- Press on the steering wheel controls.
- Touch Answer on the infotainment display.

Declining a Call

There are two ways to decline a call:

- Press on the steering wheel controls.
- Touch Ignore on the infotainment display.

Call Waiting

Call waiting must be supported on the Bluetooth cell phone and enabled by the wireless service carrier to work.

Accepting a Call

Press to answer, then touch Switch on the infotainment display.

Declining a Call

Press to decline, then touch Ignore on the infotainment display

Switching Between Calls (Call Waiting Calls Only)

To switch between calls, touch Phone on the Home Page to display Call View. While in Call View, touch the call information of the call on hold to change calls.

Three-Way Calling

Three-way calling must be supported on the Bluetooth cell phone and enabled by the wireless service carrier to work.

To start a three-way call while in a current call:

1. In the Call View, touch Add Call to add another call.
2. Initiate the second call by selecting from Recents, Contacts, or Keypad.
3. When the second call is active, touch the merge icon to conference the three-way call together.

Ending a Call

- Press on the steering wheel controls.
- Touch on the infotainment display, next to a call, to end only that call.

Dual Tone Multi-Frequency (DTMF) Tones

The in-vehicle Bluetooth system can send numbers during a call. This is used when calling a menu-driven phone system. Use the Keypad to enter the number.

Apple CarPlay and Android Auto

If equipped, Android Auto and/or Apple CarPlay capability may be available through a compatible smartphone. If available, the Android Auto and Apple CarPlay icons will change from gray to color on the Home Page of the infotainment display.

To use Android Auto and/or Apple CarPlay:

For Wired Phone Projection

1. Download the Android Auto app to your smartphone from the Google Play store. There is no app required for Apple CarPlay.
2. Connect your Android phone or Apple iPhone by using the factory-provided phone USB cable and plugging into a USB data port. For best performance, it is highly recommended to use the device's factory-provided USB cable, which should be replaced after significant wear to maintain connection quality. Aftermarket or third-party cables may not work.
3. When the phone is first connected to activate Apple CarPlay or Android Auto, accept the terms and conditions on both the infotainment system and the phone.
4. Follow the instructions on the phone.

The Android Auto and Apple CarPlay icons on the Home Page will illuminate depending on the smartphone. Android Auto and/or Apple CarPlay may automatically launch upon USB connection. If not, touch the Android Auto or Apple CarPlay icon on the Home Page to launch.

Press on the center stack to return to the Home Page.

Features are subject to change. For further information on how to set up Android Auto and Apple CarPlay in the vehicle, see my.gmc.com.

Android Auto is provided by Google and is subject to Google's terms and privacy policy. Apple CarPlay is provided by Apple and is subject to Apple's terms and privacy policy. Data plan rates apply. For Android Auto support and to see if your phone is compatible, see https://support.google.com/androidauto. For Apple CarPlay support and to see if your phone is compatible, see www.apple.com/ios/carplay/. Apple or Google may change or suspend availability at any time. Android Auto, Android, Google, Google Play, and other marks are trademarks of Google Inc.; Apple CarPlay is a trademark of Apple Inc.

Press on the center stack to exit Android Auto or Apple CarPlay. To enter back into Android Auto or Apple CarPlay, press and hold on the center stack.

Apple CarPlay and Android Auto can be disabled from the infotainment system. To do this, touch Home, Settings, and then touch the Apps tab along the top of the display. Use the On/Off toggled to turn off Apple CarPlay or Android Auto.

Settings

Certain settings can be managed in the Owner Center sites when an account is established, and may be modified if other users have accessed the vehicle or created accounts. This may result in changes to the

security or functionality of the infotainment system. Some settings may also be transferred to a new vehicle, if equipped. For instructions, in the U.S. see my.gmc.com or in Canada see mygmc.ca or mongmc.ca.

Refer to the User Terms and Privacy Statement for important details. To view, touch the Settings icon on the Home Page of the infotainment display.

The settings menu may be organized into three categories. Select the desired category by touching System, Apps, or Vehicle.

To access the personalization menus:

1. Touch Settings on the Home Page on the infotainment display.
2. Touch the desired category to display a list of available options.
3. Touch to select the desired feature setting.
4. Touch the options on the infotainment display to disable or enable a feature.
5. Touch ✕ to go to the top level of the Settings menu.

System

The menu may contain the following:

Time / Date

Use the following features to set the clock:

- Automatic Time and Date: Touch Off or On to enable or disable automatic update of the time and date. When this feature is on, the time and date cannot be manually set.
- Set Time: Touch to manually set the time using the controls on the infotainment display.
- Set Date: Touch to manually set the date using the controls on the infotainment display.
- Automatic Time Zone (If Equipped): Touch Off or On to disable or enable automatic update of the time zone based on vehicle location. When this feature is on, the time zone cannot be manually set.
- Select Time Zone: Touch to manually set the time zone. Touch a time zone from the list.
- Use 24-hour Format: Touch to specify the clock format shown.

  Touch Off or On to disable or enable.

Language

This will set the display language used on the infotainment display. It may also use the selected language for voice recognition and audio feedback. Touch Language and touch the appropriate language.

Phones

Touch to connect to a different cell phone or mobile device source, disconnect a cell phone or media device, or delete a cell phone or media device.

Wi-Fi Networks

This will show connected and available Wi-Fi networks.

If a 4G LTE data package is not active on the vehicle, the infotainment system can be connected to an external protected Wi-Fi network, such as a mobile device or home hotspot, to utilize connected services.

Wi-Fi Hotspot

Touch and the following may display:

- Wi-Fi Services: This allows devices to use the vehicle hotspot.

  Touch the controls on the infotainment display to disable or enable.

- Wi-Fi Name: Touch to change the vehicle Wi-Fi name.
- Wi-Fi Password: Touch to change the vehicle Wi-Fi password.
- Connected Devices: Touch to show connected devices.
- Share Hotspot Data: Touch On to allow devices to use the vehicle hotspot and its data, or touch Off to allow devices to only use the vehicle hotspot but not its data.

Privacy

Touch and the following may display:

- Location Services: This setting enables or disables sharing of vehicle location outside the vehicle. Emergency services will not be affected when Off is selected.
- Data Services: If equipped, this setting determines if data sharing can be used by features including Wi-Fi, Hotspot, and applications. Touch Off to disable data services. Emergency services and phone calls, such as calls with OnStar Advisors or others, will not be affected when Off is selected.
- Voice Recognition Sharing: This setting determines if voice commands can be shared with a cloud-based voice recognition system. Touch Off to prevent the sharing and possible recording of your voice commands with this system. This may limit the system's ability to understand your voice commands and may disable some features.
- Types: This setting lists all Android-defined as dangerous permissions currently used by the infotainment system, the number of applications that have requested this permission, and the number of applications that are allowed to use this permission.
- Used By Applications: This setting lists all applications that are requested or are using Android-defined as dangerous permissions. Only requested and active permissions are shown.

Display

Touch and the following may display:

- Mode: This adjusts the appearance of the navigation map view and any downloaded apps optimized for day or night time conditions. Set to Auto for the display to automatically adjust based on bright/dark conditions.

  Touch Auto, Day, or Night to adjust the display.
- Calibrate Touchscreen: Touch to calibrate the infotainment display and follow the prompts.
- Turn Display Off: Touch to turn the display off. Touch anywhere on the infotainment display or press any infotainment control on the center stack again to turn the display on.

Sounds

Touch and the following may display:

- Maximum Startup Volume: This feature adjusts the maximum volume of the infotainment system when you start your vehicle. To set the maximum startup volume, touch the controls on the infotainment display to increase or decrease.
- Audio Cues: This feature determines if sounds play when the infotainment system starts up and shuts down. This feature can be turned off or on.
- Set Audio Cue Volume: This setting controls the volume of Audio Cues played on startup and shut down. Touch the controls on the infotainment display to increase or decrease.

- Audible Touch Feedback: This setting determines if a sound plays when touching the infotainment display or radio controls. This feature can be turned off or on.

Voice

Touch and the following may display:

- Confirm More/Less: This setting specifies how often the voice recognition system confirms commands. Touch Confirm More to have the system check with you more often before acting on your commands.
- Prompt Length: This setting specifies the amount of detail the voice recognition system provides when giving you feedback. Touch Auto to have the system automatically adjust to your speech habits. Touch Informative, Short, or Auto.
- Audio Feedback Speed: Touch Slow, Medium, or Fast to adjust how quickly the voice recognition system speaks.
- Friendly Prompts: This setting adjusts the formality of voice prompts. Touch Off for shorter prompts. Touch On to hear prompts with more personality. Touch Auto to have the prompt match your command style.
- Tutorial Mode: Touch Off or On to provide tutorial feedback on the display.
- Allow Prompt Interruptions: This setting controls whether voice commands can be spoken before voice prompts finish. Turn this on to speak commands without hearing the full prompt. Speaking while the prompt is still playing will immediately stop playing the current prompt and recognize your command. Background noise may cause accidental interruptions. Touch Off or On.

Favorites

Touch and the following may display:

- Manage Favorites: Touch to display a list of Audio, Phone, and Navigation favorites.

  Favorites can be moved, renamed, or deleted.

  To move, touch and hold the favorite, and then drag up or down to rearrange the position.
- Set Number of Audio Favorites: Touch to select how many favorites pages can be viewed from the audio application. The Auto setting will automatically adjust this number based on the number of favorites you have saved. Touch Auto, 5, 10, 15, 20, 25, 30, 35, or 40.

Updates

If equipped, the vehicle can download and install select software updates over a wireless connection. The system will prompt for certain updates to be downloaded and installed. There is also an option to check for updates manually.

To manually check for updates, touch Settings on the Home Page and select the System tab. Go to the Vehicle Software section and touch Updates. Follow the on-screen prompts. The steps to check for, download, and install updates may vary by vehicle.

The vehicle can be used normally during the software download. Once the download is complete, there may be a prompt to accept the installation of the update upon the next ignition cycle or the next time the vehicle is shifted into P (Park). For most updates, the vehicle will be disabled and cannot be driven during the installation. The system will deliver messages indicating success or error during and after the download and installation processes.

Downloading Over-the-Air vehicle software updates requires Internet connectivity, which can be accessed through the vehicle's built-in 4G LTE connection, if equipped and

active. If required, data plans are provided by a third party. Optionally, a secure Wi-Fi hotspot such as a compatible mobile device hotspot, home hotspot, or public hotspot can be used. Applicable data rates may apply.

To connect the infotainment system to a secured mobile device hotspot, home hotspot, or public hotspot, touch Settings on the Home Page, select the System tab, followed by Wi-Fi Networks. Select the appropriate Wi-Fi network, and follow the on-screen prompts. Download speeds may vary.

On most compatible mobile devices, activation of the Wi-Fi hotspot is in the Settings menu under Mobile Network Sharing, Personal Hotspot, Mobile Hotspot, or similar.

Availability of Over-the-Air software updates varies by vehicle and country. Features are subject to change. For more information on this feature, see my.gmc.com/learn.

Preferences

Touch the controls on the infotainment display to disable or enable the download of new updates in the background.

About

Touch to view the infotainment system software information.

Running Applications

Touch to see a complete list of applications that are currently running on the infotainment system.

Return to Factory Settings

Touch and the following may display:

- Reset Vehicle Settings: Resets all vehicle settings for the current user.

  Touch Reset or Cancel.
- Erase Settings and Personal Data: Erases app data settings, user profiles, and personal data including navigation and mobile device data.

  Touch Erase or Cancel.
- Clear Default Applications: Resets preferred applications that have been set to open when selecting a function. No application data will be lost.

  Touch Clear or Cancel.

Apps

The menu may contain the following:

Android Auto

This feature allows you to interact directly with your mobile device on the infotainment display. See *Apple CarPlay and Android Auto* ⇨ *144*.

Touch the controls on the infotainment display to disable or enable.

Apple CarPlay

This feature allows you to interact directly with your mobile device on the infotainment display. See *Apple CarPlay and Android Auto* ⇨ *144*.

Touch the controls on the infotainment display to disable or enable.

Apps

Touch and the following may display:

- Update Apps Automatically: This allows downloaded applications to be updated automatically.

  Touch the controls on the infotainment display to disable or enable.
- About Apps: Touch to view the versions of the shop software.

Audio

Depending on the current audio source, different options will be available.

Touch and the following may display:

- Tone Settings: Touch to adjust Equalizer, Fade/Balance, or Sound Mode. See "Infotainment System Sound Menu" in *AM-FM Radio* ⇨ *116*.
- Auto Volume: This feature adjusts the volume based on the vehicle speed.

  Touch Off, Low, Medium-Low, Medium, Medium-High, or High.
- Bose AudioPilot Noise Compensation Technology (If Equipped): This feature adjusts the volume based on the noise in the vehicle and the speed.

  Touch Off or On.
- Manage Favorites: Touch to display a list of Audio, Mobile Devices, and Navigation favorites.

  Favorites can be moved, renamed, or deleted.

  To move, touch and hold the favorite, and then drag up or down to rearrange the position.
- Set Number of Audio Favorites: Touch to select how many favorites pages can be viewed from the audio application. The Auto setting will automatically adjust this number based on the number of favorites you have saved. Touch Auto, 5, 10, 15, 20, 25, 30, 35, or 40.
- RDS: This allows the Radio Data System (RDS) to be turned on or off.

  Touch the controls on the infotainment display to disable or enable.
- HD Radio: This allows HD Radio reception to be turned on or off.

  Touch the controls on the infotainment display to disable or enable.
- Explicit Content Filter: This setting allows access to explicit content SiriusXM channels.

  Touch Off or On.
- Manage Phones: Select to connect to a different phone source, disconnect a phone, or delete a phone.
- Reset Music Index: This allows the music index to be reset if you are having difficulty accessing all of the media content on your device.

  Touch Yes or No.

Climate

Touch and the following may display:

- Auto Fan Speed: This setting specifies the amount of airflow when the climate control fan setting is Auto Fan.

  Touch Low, Medium, or High.
- Air Quality Sensor: This setting switches the system into Recirculation Mode based on the quality of the outside air.

  Touch Off, Low Sensitivity, or High Sensitivity.
- Auto Cooled Seats: This setting automatically turns on and regulates the ventilated seats when the cabin temperature is warm.

  Touch the controls on the infotainment display to disable or enable.
- Auto Heated Seats: This setting automatically turns on and regulates the heated seats when the cabin temperature is cool. The auto heated seats can be turned off by using the heated seat controls on the center stack.

  Touch the controls on the infotainment display to disable or enable.
- Auto Defog: This setting automatically turns the front defogger on when the vehicle engine is started.

Touch the controls on the infotainment display to disable or enable.

- Auto Rear Defog: This setting automatically turns the rear window defogger on when the vehicle engine is started.

  Touch the controls on the infotainment display to disable or enable.

Navigation

Touch and the following may display:

- Set Up My Places
- Map Preferences
- Route Preferences
- Navigation Voice Control
- Traffic Preferences
- Alert Preferences
- Manage History
- Predictive Navigation
- About

See *Using the Navigation System* ⇨ *123*.

Phone

Touch and the following may display:

- My Number: Displays the cell phone number of the Bluetooth connected device.
- Active Call View: Shows active call display when answering a call.

  Touch the controls on the infotainment display to disable or enable.
- Privacy: Only show call alerts in the instrument cluster.

  Touch Off or On.
- Sort Contacts: Touch to sort by first or last name.
- Re-sync Device Contacts:

  This allows the device contacts to re-sync if you are having difficulty accessing all of the contacts on your cell phone.
- Delete All Vehicle Contacts: Touch to delete all vehicle stored contacts.
- OnStar Phone TTY Mode: This enables OnStar cell phone TTY mode.

  Touch Disable or Enable.

Vehicle

This menu allows adjustment of different vehicle features. See *Vehicle Personalization* ⇨ *99*.

Personal

If equipped, this menu allows adjustment of different user profile settings. See “Users” in *Using the System* ⇨ *113* for information on setting up user profiles.

The menu may contain the following:

Name

Touch to edit your user name that will be displayed in the vehicle.

Vehicle Account Information

Touch to view the vehicle account information and to change the account password.

An “unverified user account” pop-up will display until the account information verification process has been completed on the Internet. Check your registered e-mail account for an activation e-mail to complete the verification process.

Profile Picture

Touch to choose or change your profile picture.

Profile Identifiers

Touch to have the vehicle recognize the identifier you choose.

Touch Vehicle Key 1 and/or Vehicle Key 2.

If the Remote Keyless Entry (RKE) transmitter is lost or stolen, see your dealer.

Security

Touch to have your profile secured with a PIN.

Touch No or Yes.

Vehicle Name

Touch to edit your vehicle name.

Vehicle Account

Touch to view the vehicle account information and to change the account password.

Delete Profile

Touch to remove the profile from the vehicle.

Touch Remove or Cancel.

Teen Driver

If equipped, this allows multiple keys to be registered for beginner drivers to encourage safe driving habits. When the vehicle is started with a Teen Driver key, it will automatically activate certain safety systems, allow setting of some features, and limit the use of others. The Report Card will record vehicle data about driving behavior that can be viewed later. When the vehicle is started with a registered key, the Driver Information Center (DIC) displays a message that Teen Driver is active.

To access:

1. Touch Settings on the Home Page, then touch Vehicle, and then Teen Driver.
2. Create a Personal Identification Number (PIN) by choosing a four-digit PIN. Re-enter the PIN to confirm. To change the PIN, touch Change PIN.

The PIN is required to:

- Register or unregister keys.
- Change Teen Driver settings.
- Change or clear the Teen Driver PIN.
- Access or delete Report Card data.

Register keys to activate Teen Driver and assign restrictions to the key:

Any vehicle key can be registered, up to a maximum of eight keys. Label the key to tell it apart from the other keys.

For a pushbutton start system:

1. Start the engine.
2. For automatic transmissions, the vehicle must be in P (Park). For manual transmissions, the vehicle must be stopped with the parking brake set.
3. From the Settings menu, touch Vehicle and then Teen Driver.
4. Enter the PIN.
5. Place the Remote Keyless Entry (RKE) transmitter key you wish to register in the transmitter pocket. The key does not need to be the one that started the vehicle. See *Remote Keyless Entry (RKE) System Operation* ⇨ *9* for transmitter pocket location.
6. From the Teen Driver menu, touch Setup Keys.
   - If the transmitter key has not previously been registered, the option to add the key displays. Touch Add and a confirmation message displays. Teen Driver restrictions will be applied whenever this key is used to operate the vehicle.
   - If the transmitter key has already been registered, the option to remove the key displays. If Remove is touched, the transmitter key is no longer registered. A confirmation message displays, and Teen Driver

restrictions will not be applied if this transmitter key is used to operate the vehicle.

In vehicles with a pushbutton start system, if a Teen Driver and a non-Teen Driver key are both present at start up, the vehicle will recognize the non-Teen Driver key to start the vehicle. The Teen Driver settings will not be active.

For a keyed ignition system:

1. Start the engine.
2. For automatic transmissions, the vehicle must be in P (Park). For manual transmissions, the vehicle must be stopped with the parking brake set.
3. From the Settings menu, touch Vehicle and then Teen Driver.
4. Enter the PIN.
5. Touch Setup Keys. The system displays instructions for registering or unregistering a key. A confirmation message displays.

Manage Settings

Audio Volume Limit : Allows the audio volume limit to be turned on or off. Touch Set Audio Volume Limit to choose the maximum allowable audio volume level.

Set Audio Volume Limit : Allows a maximum radio volume to be set. Use the arrows to choose the maximum allowable level for the audio volume.

Teen Driver Speed Limiter : Limits the maximum speed of the vehicle. When the speed limiter is turned on and the vehicle is started with a Teen Driver key, the DIC displays a message that the top speed is limited.

On certain vehicles, when the Speed Limiter is turned ON, the vehicle's maximum acceleration will be limited. The DIC will display a message that the acceleration is limited.

Teen Driver Speed Warning : Allows the speed warning to be turned on or off. Touch Set Teen Driver Speed Warning to set the warning speed.

Set Teen Driver Speed Warning : Displays a warning in the DIC when exceeding a selectable speed. Choose the desired speed warning level. The speed warning does not limit the speed of the vehicle.

SiriusXM Explicit Content Filter (if equipped) : Allows the SiriusXM Explicit Content Filter to be turned ON or OFF. When ON, the teen driver will not be able to listen to SiriusXM stations that contain explicit content, and the Explicit Content Filter selection in the Audio Settings will be unavailable for change.

When Teen Driver is Active:

- If equipped with Buckle to Drive, shifting out of P (Park) will be prevented if the driver seat belt, and in some vehicles the front passenger seat belt, is not buckled.
- The radio will mute when the driver seat belt, and in some vehicles the front passenger seat belt, is not buckled. The audio from any device paired to the vehicle will also be muted.
- An object placed on the front passenger seat, such as a briefcase, handbag, grocery bag, laptop, or other electronic device, could cause the passenger sensing system to falsely sense an unbuckled front passenger and mute the radio. If this happens, remove the object from the seat. See *Passenger Sensing System* ⇨ *39*.
- Some safety systems, such as Forward Collision Alert, if equipped, cannot be turned off.
- The gap setting for the Forward Collision Alert and Adaptive Cruise Control, if equipped, cannot be changed.

- When trying to change a safety feature that is not configurable in Teen Driver, the DIC displays a message indicating that Teen Driver is active and the action is not available.
- Super Cruise, if equipped, is not available.
- Enhanced Low Fuel Warning (if equipped) – When the vehicle is low on fuel, the low fuel light on the instrument cluster flashes and the DIC low fuel warning cannot be dismissed.
- Do not tow a trailer.

Report Card

The vehicle owner must secure the driver's consent to record certain vehicle data when the vehicle is driven with a registered Teen Driver key. There is one Report Card per vehicle. Data is only recorded when a registered Teen Driver key is used to operate the vehicle.

The Report Card data is collected from the time Teen Driver is activated or the last time the Report Card was reset. The following items may be recorded:

- Distance Driven – the total distance driven.
- Maximum Speed – the maximum vehicle speed detected.
- Overspeed Warnings – the number of times the speed warning setting was exceeded.
- Wide Open Throttle – the number of times the accelerator pedal was pressed nearly all the way down.
- Forward Collision Alerts – the number of times the driver was notified when approaching a vehicle ahead too quickly and at potential risk for a crash.
- Forward Automatic Braking, also called Automatic Emergency Braking (if equipped) – the number of times the vehicle detected that a forward collision was imminent and applied the brakes.
- Reverse Automatic Braking (if equipped) – the number of times the vehicle detected that a rearward collision was imminent and applied the brakes.
- Traction Control – the number of times the Traction Control System activated to reduce wheel spin or loss of traction.
- Stability Control – the number of events which required the use of electronic stability control.
- Antilock Braking System Active – The number of Antilock Brake System activations.
- Tailgating Alerts – the number of times the driver was alerted for following a vehicle ahead too closely.

Report Card Data

Cumulative Data is saved for all trips until the Report Card is reset or until the maximum count is exceeded. If the maximum count is exceeded for a Report Card line item, that item will no longer be updated in the Report Card until it is reset. Each item will report a maximum of 1,000 counts. The distance driven will report a maximum of 64 374 km (40,000 mi).

To delete Report Card data, do one of the following:

- From the Report Card display, touch Reset.
- Touch Clear All Teen Keys and PIN from the Teen Driver menu. This will also unregister any Teen Driver keys and delete the PIN.

Forgotten PIN

See your dealer to reset the PIN.

Trademarks and License Agreements

FCC Information

See *Radio Frequency Statement* ⇨ *336*.

Made for iPod iPhone

"Made for iPod," and "Made for iPhone," mean that an electronic accessory has been designed to connect specifically to iPod or iPhone, respectively, and has been certified by the developer to meet Apple performance standards. Apple is not responsible for the operation of this device or its compliance with safety and regulatory standards. Please note that the use of this accessory with iPod or iPhone may affect wireless performance. iPhone, iPod, iPod classic, iPod nano, iPod shuffle, and iPod touch are trademarks of Apple Inc., registered in the U.S. and other countries.

SiriusXM

If you decide to continue service after your trial, your selected subscription plan will automatically renew thereafter. You will be charged at then-current rates. Fees and taxes apply. Please see the SiriusXM Customer Agreement at siriusxm.com for complete terms and how to cancel, which includes calling SiriusXM at 1-866-635-2349. All fees and programming are subject to change.

Fees and Taxes: Subscription fee, taxes, one time activation fee, and other fees may apply. Subscription fee is consumer only. All fees and programming subject to change. Subscriptions subject to Customer Agreement available at www.siriusxm.com. SiriusXM service is only available in the 48 contiguous United States and Canada.

In Canada: Some deterioration of service may occur in extreme northern latitudes. This is beyond the control of SiriusXM Satellite Radio.

Explicit Language Notice: Channels with frequent explicit language are indicated with an “XL” preceding the channel name. Channel blocking is available for SiriusXM Satellite Radio receivers by notifying SiriusXM:

- USA Customers — See www.siriusxm.com or call 1-888-601–6296.
- Canada Customers — See www.siriusxm.ca or call 1-877-438-9677.

It is prohibited to copy, decompile, disassemble, reverse engineer, hack, manipulate, or otherwise make available any technology or software incorporated in receivers compatible with the SiriusXM Satellite Radio System or that support the SiriusXM website, the Online Service or any of its content. Furthermore, the AMBER voice compression software included in this product is protected by intellectual property rights including patent rights, copyrights, and trade secrets of Digital Voice Systems, Inc.

General Requirements:

1. A License Agreement from SiriusXM is required for any product that incorporates SiriusXM Technology and/or for use of any of the SiriusXM marks to

be manufactured, distributed, or marketed in the SiriusXM Service Area.

2. For products to be distributed, marketed, and/or sold in Canada, a separate agreement is required with Canadian Satellite Radio Inc. (operating as SiriusXM Canada).

TouchSense Technology and TouchSense System 1000 Series Licensed from Immersion Corporation. TouchSense System 1000 protected under one or more of the U.S. Patents at the following address www.immersion.com/patent-marking.html and other patents pending.

Bose

Bose AudioPilot and Bose Centerpoint surround are registered trademarks of Bose Corporation in the U.S. and other countries.

HD Radio Technology

HD Radio Technology manufactured under license from iBiquity Digital Corporation. U.S. and Foreign Patents. For patents see https://dts.com/patents. HD Radio and the HD, HD Radio, and “ARC” logos are registered trademarks or trademarks of iBiquity Digital Corporation in the United States and/or other countries.

Bluetooth

The Bluetooth word mark and logos are owned by the Bluetooth SIG, Inc. and any use of such marks by General Motors is under license. Other trademarks and trade names are those of their respective owners.

Java

Java is a registered trademark of Oracle and/or its affiliates.

Schedule I: Gracenote EULA

Music recognition technology and related data are provided by Gracenote. Gracenote is the industry standard in music recognition technology and related content delivery. For more information see www.gracenote.com.

Music-related data from Gracenote, Inc., copyright © 2000 to present Gracenote. Gracenote Software, copyright © 2000 to present Gracenote. One or more patents owned by Gracenote may apply to this product and service. See the Gracenote website for a non-exhaustive list of applicable Gracenote patents. Gracenote, CDDB, MusicID, MediaVOCS, the Gracenote logo and logotype, and the "Powered by Gracenote" logo are either registered trademarks or trademarks of Gracenote in the United States and/or other countries.

Gracenote Terms of Use

This application or device contains software from Gracenote, Inc. of Emeryville, California ("Gracenote"). The software from Gracenote (the "Gracenote Software") enables this application to do disc or file identification and obtain music-related information, including name, artist, track, and title information ("Gracenote Data") from online servers or embedded databases (collectively, "Gracenote Servers") and to perform other functions. You may use Gracenote Data only by means of the intended End-User functions of this application or device.

This application or device may contain content belonging to Gracenote's providers. If so, all of the restrictions set forth herein with respect to Gracenote Data shall also apply to such content and such content providers shall be entitled to all of the benefits and protections set forth herein that are available to Gracenote.

You agree that you will use Gracenote Data, the Gracenote Software, and Gracenote Servers for your own personal non-commercial use only. You agree not to assign, copy, transfer or transmit the Gracenote Software or any Gracenote Data to any third party. YOU AGREE NOT TO USE OR EXPLOIT GRACENOTE DATA, THE GRACENOTE SOFTWARE, OR GRACENOTE SERVERS, EXCEPT AS EXPRESSLY PERMITTED HEREIN.

You agree that your non-exclusive license to use the Gracenote Data, the Gracenote Software, and Gracenote Servers will terminate if you violate these restrictions. If your license terminates, you agree to cease any and all use of the Gracenote Data, the Gracenote Software, and Gracenote Servers. Gracenote reserves all rights in Gracenote Data, the Gracenote Software, and the Gracenote Servers, including all ownership rights. Under no circumstances will Gracenote become liable for any payment to you for any information that you provide. You agree that Gracenote may enforce its rights under this Agreement against you directly in its own name.

The Gracenote service uses a unique identifier to track queries for statistical purposes. The purpose of a randomly assigned numeric identifier is to allow the Gracenote service to count queries without knowing anything about who you are. For more information, see the web page for the Gracenote Privacy Policy for the Gracenote service.

The Gracenote Software and each item of Gracenote Data are licensed to you "AS IS." Gracenote makes no representations or warranties, express or implied, regarding the accuracy of any Gracenote Data. Gracenote reserves the right to delete data from the Gracenote Servers or to change data categories for any cause that Gracenote deems sufficient. No warranty is made that the Gracenote Software or Gracenote Servers are error-free or that functioning of Gracenote Software or Gracenote Servers will be uninterrupted. Gracenote is not obligated to provide you with new enhanced or additional data types or categories that Gracenote may provide in the future and is free to discontinue its services at any time.

GRACENOTE DISCLAIMS ALL WARRANTIES EXPRESS OR IMPLIED, INCLUDING, BUT NOT LIMITED TO, IMPLIED WARRANTIES OF MERCHANTABILITY, FITNESS FOR A PARTICULAR PURPOSE, TITLE, AND NON-INFRINGEMENT. GRACENOTE DOES NOT WARRANT THE RESULTS THAT WILL BE OBTAINED BY YOUR USE OF THE GRACENOTE SOFTWARE OR ANY GRACENOTE SERVER. IN NO CASE WILL GRACENOTE BE LIABLE FOR ANY CONSEQUENTIAL OR INCIDENTAL DAMAGES OR FOR ANY LOST PROFITS OR LOST REVENUES.

© 2014. Gracenote, Inc. All Rights Reserved.

MPEG4–AVC (H.264)

THIS PRODUCT IS LICENSED UNDER THE AVC PATENT PORTFOLIO LICENSE FOR THE PERSONAL AND NON-COMMERCIAL USE OF A CONSUMER TO (i) ENCODE VIDEO IN COMPLIANCE WITH THE AVC STANDARD ("AVC VIDEO") AND/OR (ii) DECODE AVC VIDEO THAT WAS ENCODED BY A CONSUMER ENGAGED IN A PERSONAL AND NON-COMMERCIAL ACTIVITY AND/OR WAS OBTAINED FROM A VIDEO PROVIDER LICENSED TO PROVIDE AVC VIDEO. NO LICENSE IS GRANTED OR SHALL BE IMPLIED FOR ANY OTHER USE. ADDITIONAL INFORMATION MAY BE OBTAINED FROM MPEG LA, LLC. SEE HTTPS://WWW.MPEGLA.COM.

VC-1

THIS PRODUCT IS LICENSED UNDER THE VC-1 PATENT PORTFOLIO LICENSE FOR THE PERSONAL AND NON-COMMERCIAL USE OF A CONSUMER TO (i) ENCODE VIDEO IN COMPLIANCE WITH THE VC-1 STANDARD ("VC-1 VIDEO") AND/OR (ii) DECODE VC-1 VIDEO THAT WAS ENCODED BY A CONSUMER ENGAGED IN A PERSONAL AND NON-COMMERCIAL ACTIVITY AND/OR WAS OBTAINED FROM A VIDEO PROVIDER LICENSED TO PROVIDE VC-1 VIDEO. NO LICENSE IS GRANTED OR SHALL BE IMPLIED FOR ANY OTHER USE. ADDITIONAL INFORMATION MAY BE OBTAINED FROM MPEG LA, LLC. SEE HTTPS://WWW.MPEGLA.COM.

MPEG4–Visual

USE OF THIS PRODUCT IN ANY MANNER THAT COMPLIES WITH THE MPEG-4 VISUAL STANDARD IS PROHIBITED, EXCEPT FOR USE BY A CONSUMER ENGAGING IN PERSONAL AND NON-COMMERCIAL ACTIVITIES.

MP3

MPEG Layer-3 audio coding technology licensed from Fraunhofer IIS and Thomson.

WMV/WMA

This product includes technology owned by Microsoft Corporation and under a license from Microsoft Licensing, GP. Use or distribution of such technology outside of this product is prohibited without a license from Microsoft Corporation and/or Microsoft Licensing, GP as applicable.

Map End User License Agreement

END USER TERMS

The Map Data SD card ("Data") is provided for your personal, internal use only and not for resale. It is protected by copyright, and is subject to the following terms (this "End User License Agreement") and conditions which are agreed to by you, on the one hand, and HERE North America, LLC ("HERE") and its licensors (including their licensors and suppliers) on the other hand.

The Data for areas of Canada includes information taken with permission from Canadian authorities, including: © Her Majesty the Queen in Right of Canada, © Queen's Printer for Ontario, © Canada Post Corporation, GeoBase®.

HERE holds a nonexclusive license from the United States Postal Service® to publish and sell ZIP+4® information.

© United States Postal Service 2013. Prices are not established, controlled, or approved by the United States Postal Service. The following trademarks and registrations are owned by the USPS: United States Postal Service, USPS, and ZIP+4.

TERMS AND CONDITIONS

Personal Use Only: You agree to use this Data for the solely personal, noncommercial purposes for which you were licensed, and not for service bureau, timesharing or other similar purposes. Except as otherwise set forth herein, you agree not to otherwise reproduce, copy, modify, decompile, disassemble or reverse engineer any portion of this Data, and may not transfer or distribute it in any form, for any purpose, except to the extent permitted by mandatory laws. You may transfer the Data and all accompanying materials on a permanent basis if you retain no copies and the recipient agrees to the terms of this End User License Agreement. Multi-disc sets may only be transferred or sold as a complete set as provided to you and not as a subset thereof.

Restrictions

Except where you have been specifically licensed to do so by HERE and without limiting the preceding paragraph, you may not (a) use this Data with any products, systems, or applications installed or otherwise connected to or in communication with vehicles capable of vehicle navigation, positioning, dispatch, real time route guidance, fleet management or similar applications; or (b) with, or in communication with, including without limitation, cellular phones, palmtop and handheld computers, pagers, and personal digital assistants or PDAs.

Warning

This Data may contain inaccurate or incomplete information due to the passage of time, changing circumstances, sources used, and the nature of collecting comprehensive geographic data, any of which may lead to incorrect results.

No Warranty

This Data is provided to you “as is,” and you agree to use it at your own risk. HERE and its licensors (and their licensors and suppliers) make no guarantees, representations, or warranties of any kind, express or implied, arising by law or otherwise, including but not limited to, content, quality, accuracy, completeness, effectiveness, reliability, fitness for a particular purpose, usefulness, use or results to be obtained from this Data, or that the Data or server will be uninterrupted or error free.

Disclaimer of Warranty

THE DATABASE IS PROVIDED ON AN “AS IS” AND “WITH ALL FAULTS BASIS” AND HARMAN (AND THEIR LICENSORS AND SUPPLIERS) EXPRESSLY DISCLAIM ALL OTHER WARRANTIES, EXPRESS OR IMPLIED, INCLUDING BUT NOT LIMITED TO, THE IMPLIED WARRANTIES OF NON-INFRINGEMENT, MERCHANTABILITY, SATISFACTORY QUALITY, ACCURACY, TITLE AND FITNESS FOR A PARTICULAR PURPOSE. NO ORAL OR WRITTEN ADVICE OR INFORMATION PROVIDED BY HARMAN (OR ANY OF THEIR LICENSORS, AGENTS, EMPLOYEES, OR THIRD PARTY PROVIDERS) SHALL CREATE A WARRANTY, AND YOU ARE NOT ENTITLED TO RELY ON ANY SUCH ADVICE OR INFORMATION. THIS DISCLAIMER OF WARRANTIES IS AN ESSENTIAL CONDITION OF THIS AGREEMENT.

Disclaimer of Liability

HERE AND ITS LICENSORS (INCLUDING THEIR LICENSORS AND SUPPLIERS) SHALL NOT BE LIABLE TO YOU IN RESPECT OF ANY CLAIM, DEMAND OR ACTION, IRRESPECTIVE OF THE NATURE OF THE CAUSE OF THE CLAIM, DEMAND OR ACTION ALLEGING ANY LOSS, INJURY OR DAMAGES, DIRECT OR INDIRECT, WHICH MAY RESULT FROM THE USE OR

POSSESSION OF THIS DATA; OR FOR ANY LOSS OF PROFIT, REVENUE, CONTRACTS OR SAVINGS, OR ANY OTHER DIRECT, INDIRECT, INCIDENTAL, SPECIAL OR CONSEQUENTIAL DAMAGES ARISING OUT OF YOUR USE OF OR INABILITY TO USE THIS DATA, ANY DEFECT IN THIS DATA, OR THE BREACH OF THESE TERMS OR CONDITIONS, WHETHER IN AN ACTION IN CONTRACT OR TORT OR BASED ON A WARRANTY, EVEN IF HERE OR ITS LICENSORS HAVE BEEN ADVISED OF THE POSSIBILITY OF SUCH DAMAGES. Some States, Territories, and Countries do not allow certain liability exclusions or damages limitations, so to that extent the above may not apply to you.

Export Control

You agree not to export from anywhere any part of the Data provided to you or any direct product thereof except in compliance with, and with all licenses and approvals required under, applicable export laws, rules and regulations. Entire Agreement: These terms and conditions constitute the entire agreement between HERE (and its licensors, including their licensors and suppliers) and you pertaining to the subject matter hereof, and supersedes in their entirety any and all written or oral agreements previously existing between us with respect to such subject matter.

Governing Law

The above terms and conditions shall be governed by the laws of the State of Illinois, without giving effect to (i) its conflict of laws provisions, or (ii) the United Nations Convention for Contracts for the International Sale of Goods, which is explicitly excluded. You agree to submit to the jurisdiction of the State of Illinois for any and all disputes, claims, and actions arising from or in connection with the Data provided to you hereunder.

Government End Users

If the Data is being acquired by or on behalf of the United States government or any other entity seeking or applying rights similar to those customarily claimed by the United States government, this Data is a “commercial item” as that term is defined at 48 C.F.R. (“FAR”) 2.101, is licensed in accordance with this End User License Agreement, and each copy of Data delivered or otherwise furnished shall be marked and embedded as appropriate with the following “Notice of Use,” and be treated in accordance with such Notice:

Maps for Life

NOTICE OF USE

CONTRACTOR (MANUFACTURER/ SUPPLIER)

NAME:

HERE North America, LLC

CONTRACTOR (MANUFACTURER/SUPPLIER)

ADDRESS:

425 West Randolph Street, Chicago, IL 60606.

This Data is a commercial item as defined in FAR 2.101 and is subject to the End User License Agreement under which this Data was provided.

© 2014 HERE North America, LLC. All rights reserved.

If the Contracting Officer, federal government agency, or any federal official refuses to use the legend provided herein,

the Contracting Officer, federal government agency, or any federal official must notify HERE prior to seeking additional or alternative rights in the Data.

Unicode

Copyright © 1991-2010 Unicode, Inc. All rights reserved. Distributed under the Terms of Use in https://www.unicode.org/copyright.html.

Free Type Project

Portions of this software are copyright © 2010 The FreeType Project (https://www.freetype.org). All rights reserved.

Open Source SW

Further information concerning the OSS licenses is shown in the infotainment display.

QNX

Portions of this software are copyright © 2008-2011, QNX Software Systems. All rights reserved.

Part C – EULA

Copyright © 2011, Software Systems GmbH & Co. KG. All Rights Reserved.

The product you have purchased ("Product") contains Software (Runtime Configuration No. 505962; "Software") which is distributed by or on behalf of the Product manufacturer "Manufacturer") under license from Software Systems Co. ("QSSC"). You may only use the Software in the Product and in compliance with the license terms below.

Subject to the terms and conditions of this License, QSSC hereby grants you a limited, non-exclusive, non-transferable license to use the Software in the Product for the purpose intended by the Manufacturer. If permitted by the Manufacturer, or by applicable law, you may make one backup copy of the Software as part of the Product software. QSSC and its licensors reserve all license+C31 rights not expressly granted herein, and retain all right, title and interest in and to all copies of the Software, including all intellectual property rights therein. Unless required by applicable law you may not reproduce, distribute or transfer, or de-compile, disassemble or otherwise attempt to unbundle, reverse engineer, modify or create derivative works of, the Software. You agree: (1) not to remove, cover or alter any proprietary notices, labels or marks in or on the Software, and to ensure that all copies bear any notice contained on the original; and (2) not to export the Product or the Software in contravention of applicable export control laws.

EXCEPT TO THE EXTENT OTHERWISE REQUIRED BY APPLICABLE LAW, QSSC AND ITS LICENSORS PROVIDE THE SOFTWARE ON AN "AS IS" BASIS, WITHOUT WARRANTIES OR CONDITIONS OF ANY KIND, EITHER EXPRESS OR IMPLIED INCLUDING, WITHOUT LIMITATION, ANY WARRANTIES OR CONDITIONS OF TITLE, NON-INFRINGEMENT, MERCHANTABILITY OR FITNESS FOR A PARTICULAR PURPOSE. ANY WARRANTIES OR OTHER PROVISIONS OFFERED BY THE MANUFACTURER OR ITS DISTRIBUTOR(S) THAT DIFFER FROM THIS LICENSE ARE OFFERED BY THE MANUFACTURER OR ITS DISTRIBUTOR(S) ALONE AND NOT BY QSSC, ITS AFFILIATES OR THEIR LICENSORS. YOU ASSUME ANY RISKS ASSOCIATED WITH YOUR USE OF THE SOFTWARE UNDER THIS LICENSE.

EXCEPT TO THE EXTENT OTHERWISE REQUIRED BY APPLICABLE LAW (SUCH AS IN THE CASE OF DELIBERATE OR GROSSLY NEGLIGENT ACTS), IN NO EVENT SHALL QSSC, ITS AFFILIATES OR THEIR LICENSORS BE LIABLE TO YOU UNDER ANY LEGAL THEORY, WHETHER IN TORT (INCLUDING NEGLIGENCE),

CONTRACT OR OTHERWISE, FOR DAMAGES, INCLUDING ANY DIRECT, INDIRECT, SPECIAL, INCIDENTAL, OR CONSEQUENTIAL DAMAGES OF ANY CHARACTER ARISING AS A RESULT OF THIS LICENSE OR OUT OF THE USE OR INABILITY TO USE THE PRODUCT (INCLUDING BUT NOT LIMITED TO DAMAGES FOR LOSS OF GOODWILL, WORK STOPPAGE, PRODUCT FAILURE OR MALFUNCTION, OR ANY AND ALL OTHER COMMERCIAL DAMAGES OR LOSSES), EVEN IF QSSC, ITS AFFILIATES OR THEIR LICENSORS HAVE BEEN ADVISED OF THE POSSIBILITY OF SUCH DAMAGES.

WMA

This product is protected by certain intellectual property rights of Microsoft. Use or distribution of such technology outside of this product is prohibited without a license from Microsoft.

For more information on the Software, including any open source software license terms (and available source code) as well as copyright attributions applicable to the Runtime Configuration indicated above, please contact the Manufacturer or contact QSSC at 175 Terence Matthews Crescent, Kanata, Ontario, Canada K2M 1W8 (licensing@qnx.com).

Linotype

Helvetica is a trademark of Linotype Corp. registered in the U.S. Patent and Trademark Office and may be registered in certain other jurisdictions in the name of Linotype Corp. or its licensee Linotype GmbH.

Usage in text form of each of the Licensed Trademarks is:

The trademark attribution requirements for the Licensed Trademarks may be viewed at https://www.linotype.com/2061-19414/trademarks.html.

END USER NOTICE

The marks of companies displayed by this product to indicate business locations are the marks of their respective owners. The use of such marks in this product does not imply any sponsorship, approval, or endorsement by such companies of this product.

Climate Controls

Climate Control Systems
Climate Control Systems 162
Automatic Climate Control System 164

Air Vents
Air Vents 167

Maintenance
Passenger Compartment Air Filter 167
Service 167

Climate Control Systems

With this system the heating, cooling, and ventilation can be controlled.

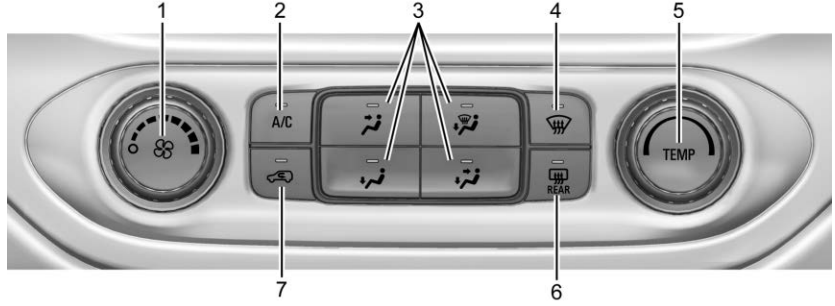

1. Fan Control
2. A/C (Air Conditioning)
3. Air Delivery Mode Controls
4. Defrost
5. TEMP (Temperature Control)
6. Rear Window Defogger (If Equipped)
7. Air Recirculation

TEMP : Turn clockwise or counterclockwise to increase or decrease the temperature inside the vehicle.

: Turn clockwise or counterclockwise to increase or decrease the fan speed. There is about a five second delay when the fan is turned on. Turn the knob all the way counterclockwise to turn the fan off.

Air Delivery Mode Control : Press , , , or to change the direction of the airflow. An indicator light comes on in the selected mode button.

: Air is directed to the instrument panel outlets.

: Air is divided between the instrument panel and floor outlets.

: Air is directed to the floor outlets, with some air directed to the windshield, outboard instrument panel, and side window outlets.

: This mode clears the windows of fog or moisture. Air is directed to the windshield, with some air directed to the floor, outboard instrument panel outlets, and side window outlets.

: Press to clear the windshield of fog or frost more quickly. Air is directed to the windshield and side window vents, with some air directed to the outboard instrument panel. The system automatically forces outside air into the vehicle and the air conditioning compressor will run, unless the outside temperature is close to freezing.

Do not drive the vehicle until all the windows are clear.

See *Air Vents* ⇨ *167*.

: Press to turn on recirculation. An indicator light comes on. Air is recirculated to quickly cool the inside of the vehicle. It can also be used to help reduce outside air and odors that enter the vehicle.

: If equipped, press to turn on outside air. An indicator light comes on. Outside air is circulated throughout the vehicle.

A/C : Press to turn the air conditioning system on or off. An indicator light comes on to show that the air conditioning is enabled. If the fan is turned off, the air conditioner will not run. The A/C light will stay on even if the outside temperatures are below freezing.

Rear Window Defogger

REAR **:** If equipped, press to turn the rear window defogger on or off. An indicator light on the button comes on to show that the rear window defogger is on.

The rear window defogger only works when the ignition is on. The defogger also turns off if the ignition is turned to off or ACC/ACCESSORY.

Caution

Using a razor blade or sharp object to clear the inside rear window can damage the rear window defogger. Repairs would not be covered by the vehicle warranty. Do not clear the inside rear window with sharp objects.

Heated Mirrors : If equipped with heated outside mirrors, the mirrors heat to help clear fog or frost from the surface of the mirror when the rear window defog button is pressed. See *Heated Mirrors* ⇨ *17*.

Afterblow Feature

Under certain conditions, the fan may stay on or may turn on and off several times after you turn off and lock the vehicle. This is normal.

Automatic Climate Control System

With this system the heating, cooling, and ventilation in the vehicle can be controlled.

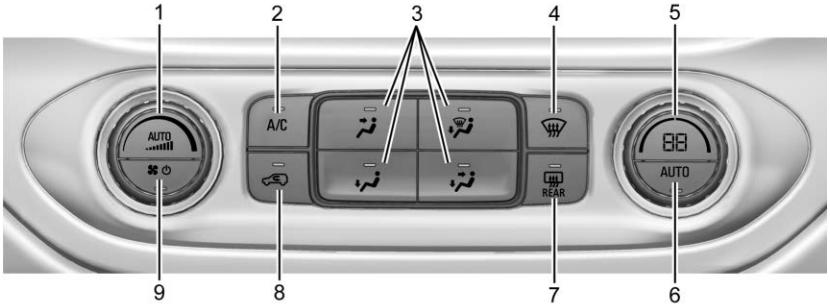

Uplevel Shown

1. Fan Control
2. A/C (Air Conditioning)
3. Air Delivery Mode Controls
4. Defrost
5. Temperature Control
6. AUTO (Automatic Operation)
7. Rear Window Defogger
8. Air Recirculation
9. Power Button

Climate Control Display

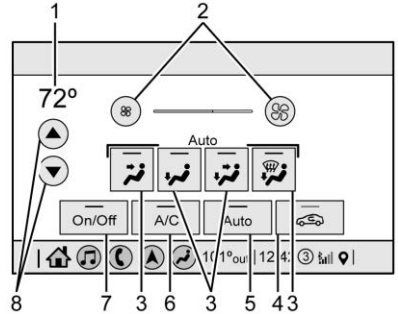

1. Temperature Setting
2. Fan Control
3. Air Delivery Mode Control
4. Air Recirculation
5. Auto (Automatic Operation)
6. A/C (Air Conditioning)
7. On/Off (Power)
8. Driver Temperature Controls

Climate Control Status Display

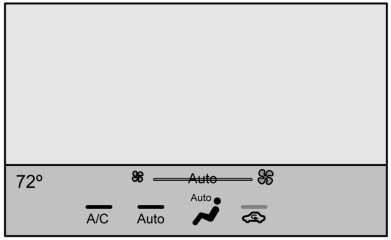

The climate control status display appears briefly when the climate controls on the center stack are adjusted.

Automatic Operation

The system automatically heats or cools the vehicle to the desired temperature:

- Fan Speed
- Air Delivery Mode
- Air Conditioning
- Recirculation

When AUTO is lit, all functions operate automatically. Each function can also be manually set. Functions not manually set will continue to be automatically controlled.

To place the system in full automatic operation:

1. Press AUTO.
2. Set the temperature.

   To find your comfort setting, start with 22 °C (72 °F) and allow the system time to stabilize. Then adjust the temperature as needed for best comfort.

To improve fuel efficiency and to cool the vehicle faster, recirculation may be automatically selected in warm weather.

The recirculation light will not come on when automatically controlled. Press to manually select recirculation; press it again to select outside air.

Do not cover the solar sensor on the top of the instrument panel near the windshield. This sensor regulates air temperature based on sun load. See “Sensors” later in this section.

Manual Operation

: Press to turn the climate control system on or off. When the system is turned off, air will stop flowing into the cabin. Press again or adjust any of the climate controls to turn the system back on and the airflow will continue based on the selected climate control settings.

: Turn clockwise or counterclockwise to increase or decrease the fan speed. There is about a five second delay when the fan is turned on. Press the knob to turn the fan off. Press AUTO to return to automatic operation.

Temperature Control : Turn the knob clockwise or counterclockwise to increase or decrease the temperature setting. On some models, the temperature display shows the temperature setting increasing or decreasing.

Air Delivery Mode Controls : Press , , , or to change the direction of the airflow. An indicator light comes on in the selected mode button.

Changing the mode cancels the automatic operation and the system goes into manual mode.

Press AUTO to return to automatic operation.

: Air is directed to the instrument panel outlets.

: Air is divided between the instrument panel and floor outlets.

: Air is directed to the floor outlets, with some to the windshield, outboard instrument panel outlets, side window outlets, and second row floor outlets.

: This mode clears the windows of fog or moisture. Air is directed to the windshield, floor outlets, outboard instrument panel outlets, and side window outlets. The system automatically forces outside air into the vehicle and the air conditioning compressor will run, unless the outside temperature is close to or below freezing.

: Press to clear the windshield of fog or frost more quickly. Air is directed to the windshield and the side window vents, with some air directed to the outboard instrument panel outlets. The system automatically forces outside air into the vehicle and the air conditioning compressor will run, unless the outside temperature is close to or below freezing.

Do not drive the vehicle until all windows are clear.

See *Air Vents* ⇨ *167*.

A/C : Press to turn the air conditioning system on or off. An indicator light comes on to show that the air conditioning is enabled. The A/C light will stay on even if the outside temperatures are below freezing. If the fan is turned off, the air conditioner will not run. Press AUTO to return to automatic operation.

: Press to turn on recirculation. An indicator light comes on. Air is recirculated to quickly cool the inside of the vehicle. It can also be used to help reduce outside air and odors that enter the vehicle. The air conditioning compressor also comes on when this mode is activated. Press AUTO to return to automatic operation.

Auto Defog : The climate control system may have a sensor to automatically detect high humidity inside the vehicle. When high humidity is detected, the climate control system may adjust air delivery modes, outside air supply, and turn on the air conditioner. If the climate control system does not detect possible window fogging, it returns to normal operation. To turn Auto Defog off or on, see “Climate and Air Quality” under *Vehicle Personalization* ⇨ *99*.

Rear Window Defogger

The rear window defogger uses a warming grid to remove fog from the rear window.

REAR **:** Press to turn the rear window defogger on or off. An indicator light on the button comes on to show that the rear window defogger is on.

The rear window defogger only works when the ignition is on. The defogger also turns off if the ignition is turned to off or ACC/ACCESSORY.

Caution
Using a razor blade or sharp object to clear the inside rear window can damage the rear window defogger. Repairs would not be covered by the vehicle warranty. Do not clear the inside rear window with sharp objects.

Heated Mirrors : If equipped with heated outside mirrors, the mirrors heat to help clear fog or frost from the surface of the mirror when the rear window defog button is pressed. See *Heated Mirrors* ⇨ *17*.

Afterblow Feature

Under certain conditions, the fan may stay on or may turn on and off several times after you turn off and lock the vehicle. This is normal.

Air Vents

Adjustable air vents are in the center and on the side of the instrument panel. Use the sliding knobs on the air vents to change the direction of the airflow. Slide the knob up or down to open or close off the airflow.

Air vents blow warm air on the side windows in cold weather. If Floor, Defog, or Defrost modes are selected, a small amount of air will come from the vents close to the window. If the airflow is shut off using the sliding knobs, warm air will be directed to the other instrument panel vents. This is normal operation.

Use the sliding knobs to turn vent airflow on or off based on the mode selected.

Operation Tips

- Clear away any ice, snow, or leaves from air inlets at the base of the windshield that could block the flow of air into the vehicle.
- Clear snow off the hood to improve visibility and help decrease moisture drawn into the vehicle.
- Keep the path under the front seats clear of objects to help circulate the air inside of the vehicle more effectively.
- Use of non-GM approved hood deflectors can adversely affect the performance of the system. Check with your dealer before adding equipment to the outside of the vehicle.

Maintenance

Passenger Compartment Air Filter

The passenger compartment air filter reduces dust, pollen, and other airborne irritants from outside air that is pulled into the vehicle. The filter will need to be replaced periodically. See *Maintenance Schedule* ⇨ *311*.

Using the climate control system without an air filter installed is not recommended. Water or other debris could enter the system and result in leaks or noises. Always install a new filter when removing the old filter.

For more information on filter replacement, see your dealer.

Service

All vehicles have a label underhood that identifies the refrigerant used in the vehicle. The refrigerant system should only be serviced by trained and certified technicians. The air conditioning evaporator should never be repaired or replaced by one from a salvage vehicle. It should only be replaced by a new evaporator to ensure proper and safe operation.

During service, all refrigerants should be reclaimed with proper equipment. Venting refrigerants directly to the atmosphere is harmful to the environment and may also create unsafe conditions based on inhalation, combustion, frostbite, or other health-based concerns.

The air conditioning system requires periodic maintenance. See *Maintenance Schedule* ⇨ *311*.

Driving and Operating

Driving Information
Driving for Better Fuel Economy 169
Distracted Driving 169
Defensive Driving 169
Impaired Driving 170
Control of a Vehicle 170
Braking 170
Steering 170
Off-Road Recovery 171
Loss of Control 171
Off-Road Driving 172
Driving on Wet Roads 175
Hill and Mountain Roads 176
Winter Driving 176
If the Vehicle Is Stuck 177
Vehicle Load Limits 178
Truck-Camper Loading Information 183

Starting and Operating
New Vehicle Break-In 183
Ignition Positions 184
Starting the Engine 185
Engine Heater 186
Retained Accessory Power (RAP) 187
Shifting Into Park 188
Shifting out of Park 189
Parking over Things That Burn 189
Active Fuel Management 189

Engine Exhaust
Engine Exhaust 189
Running the Vehicle While Parked 190

Automatic Transmission
Automatic Transmission 190
Manual Mode 192
Tow/Haul Mode 194

Drive Systems
Four-Wheel Drive 194

Brakes
Antilock Brake System (ABS) 199
Parking Brake 200
Brake Assist 200
Hill Start Assist (HSA) 201

Ride Control Systems
Traction Control/Electronic Stability Control 201
Hill Descent Control (HDC) 202
Limited-Slip Differential 203

Cruise Control
Cruise Control 203

Driver Assistance Systems
Driver Assistance Systems 205
Assistance Systems for Parking or Backing 206
Rear Vision Camera (RVC) 206
Park Assist 208
Forward Collision Alert (FCA) System 208
Automatic Emergency Braking (AEB) . . . 210
Lane Departure Warning (LDW) 211

Fuel
Top Tier Fuel 212
Recommended Fuel 212
Prohibited Fuels 213
Fuels in Foreign Countries 213
Fuel Additives 213
Filling the Tank 213
Filling a Portable Fuel Container 215

Trailer Towing
General Towing Information 215
Driving Characteristics and Towing Tips 215
Trailer Towing 219
Towing Equipment 223
Trailer Sway Control (TSC) 229

Conversions and Add-Ons
Add-On Electrical Equipment 230

Driving Information

Driving for Better Fuel Economy

Driving habits can affect fuel mileage. Here are some driving tips to get the best fuel economy possible:

- Set the climate controls to the desired temperature after the engine is started, or turn them off when not required.
- Avoid fast starts and accelerate smoothly.
- Brake gradually and avoid abrupt stops.
- Avoid idling the engine for long periods of time.
- When road and weather conditions are appropriate, use cruise control.
- Always follow posted speed limits or drive more slowly when conditions require.
- Keep vehicle tires properly inflated.
- Combine several trips into a single trip.
- Replace the vehicle's tires with the same TPC Spec number molded into the tire's sidewall near the size.
- Follow recommended scheduled maintenance.

Distracted Driving

Distraction comes in many forms and can take your focus from the task of driving. Exercise good judgment and do not let other activities divert your attention away from the road. Many local governments have enacted laws regarding driver distraction. Become familiar with the local laws in your area.

To avoid distracted driving, keep your eyes on the road, keep your hands on the steering wheel, and focus your attention on driving.

- Do not use a phone in demanding driving situations. Use a hands-free method to place or receive necessary phone calls.
- Watch the road. Do not read, take notes, or look up information on phones or other electronic devices.
- Designate a front seat passenger to handle potential distractions.
- Become familiar with vehicle features before driving, such as programming favorite radio stations and adjusting climate control and seat settings. Program all trip information into any navigation device prior to driving.
- Wait until the vehicle is parked to retrieve items that have fallen to the floor.
- Stop or park the vehicle to tend to children.
- Keep pets in an appropriate carrier or restraint.
- Avoid stressful conversations while driving, whether with a passenger or on a cell phone.

⚠ Warning

Taking your eyes off the road too long or too often could cause a crash resulting in injury or death. Focus your attention on driving.

Refer to the infotainment section for more information on using that system and the navigation system, if equipped, including pairing and using a cell phone.

Defensive Driving

Defensive driving means “always expect the unexpected.” The first step in driving defensively is to wear the seat belt. See *Seat Belts* ⇨ *27*.

- Assume that other road users (pedestrians, bicyclists, and other drivers) are going to be careless and make mistakes. Anticipate what they may do and be ready.
- Allow enough following distance between you and the driver in front of you.
- Focus on the task of driving.

Impaired Driving

Death and injury associated with impaired driving is a global tragedy.

⚠ Warning

Drinking alcohol or taking drugs and then driving is very dangerous. Your reflexes, perceptions, attentiveness, and judgment can be affected by even a small amount of alcohol or drugs. You can have a serious — or even fatal — collision if you drive after drinking or taking drugs.

Do not drive while under the influence of alcohol or drugs, or ride with a driver who has been drinking or is impaired by drugs. Find alternate transportation home; or if you are with a group, designate a driver who will remain sober.

Control of a Vehicle

Braking, steering, and accelerating are important factors in helping to control a vehicle while driving.

Braking

Braking action involves perception time and reaction time. Deciding to push the brake pedal is perception time. Actually doing it is reaction time.

Average driver reaction time is about three-quarters of a second. In that time, a vehicle moving at 100 km/h (60 mph) travels 20 m (66 ft), which could be a lot of distance in an emergency.

Helpful braking tips to keep in mind include:

- Keep enough distance between you and the vehicle in front of you.
- Avoid needless heavy braking.
- Keep pace with traffic.

If the engine ever stops while the vehicle is being driven, brake normally but do not pump the brakes. Doing so could make the pedal harder to push down. If the engine stops, there will be some power brake assist but it will be used when the brake is applied. Once the power assist is used up, it can take longer to stop and the brake pedal will be harder to push.

Steering

Caution

To avoid damage to the steering system, do not drive over curbs, parking barriers, or similar objects at speeds greater than 3 km/h (1 mph). Use care when driving over other objects such as lane dividers and speed bumps. Damage caused by misuse of the vehicle is not covered by the vehicle warranty.

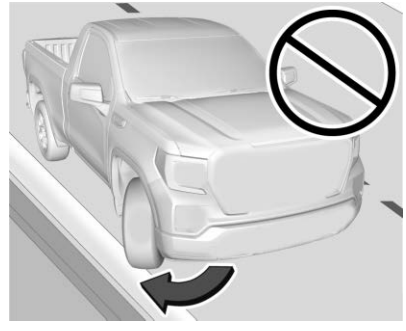

Electric Power Steering

The vehicle has electric power steering. It does not have power steering fluid. Regular maintenance is not required.

If power steering assist is lost due to a system malfunction, the vehicle can be steered, but may require increased effort.

If the steering assist is used for an extended period of time while the vehicle is not moving, power assist may be reduced.

If the steering wheel is turned until it reaches the end of its travel and is held against that position for an extended period of time, power steering assist may be reduced.

Normal use of the power steering assist should return when the system cools down.

See your dealer if there is a problem.

Curve Tips

- Take curves at a reasonable speed.
- Reduce speed before entering a curve.
- Maintain a reasonable steady speed through the curve.
- Wait until the vehicle is out of the curve before accelerating gently into the straightaway.

Steering in Emergencies

- There are some situations when steering around a problem may be more effective than braking.
- Holding both sides of the steering wheel allows you to turn 180 degrees without removing a hand.
- The Antilock Brake System (ABS) allows steering while braking.

Off-Road Recovery

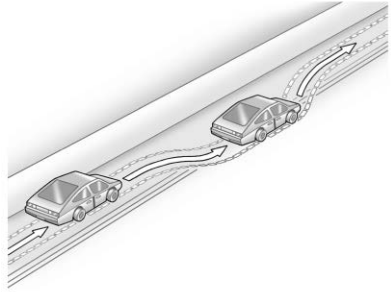

The vehicle's right wheels can drop off the edge of a road onto the shoulder while driving. Follow these tips:

1. Ease off the accelerator and then, if there is nothing in the way, steer the vehicle so that it straddles the edge of the pavement.
2. Turn the steering wheel about one-eighth of a turn, until the right front tire contacts the pavement edge.
3. Turn the steering wheel to go straight down the roadway.

Loss of Control

Skidding

There are three types of skids that correspond to the vehicle's three control systems:

- Braking Skid — wheels are not rolling.
- Steering or Cornering Skid — too much speed or steering in a curve causes tires to slip and lose cornering force.
- Acceleration Skid — too much throttle causes the driving wheels to spin.

Defensive drivers avoid most skids by taking reasonable care suited to existing conditions, and by not overdriving those conditions. But skids are always possible.

If the vehicle starts to slide, follow these suggestions:

- Ease your foot off the accelerator pedal and steer the way you want the vehicle to go. The vehicle may straighten out. Be ready for a second skid if it occurs.
- Slow down and adjust your driving according to weather conditions. Stopping distance can be longer and vehicle control can be affected when traction is reduced by water, snow, ice, gravel, or other material on the road. Learn to recognize warning clues — such as enough water, ice, or packed snow on the road to make a mirrored surface — and slow down when you have any doubt.
- Try to avoid sudden steering, acceleration, or braking, including reducing vehicle speed by shifting to a lower gear. Any sudden changes could cause the tires to slide.

Remember: Antilock brakes help avoid only the braking skid.

Off-Road Driving

Four-wheel-drive vehicles can be used for off-road driving. Vehicles without four-wheel drive and vehicles not equipped with All Terrain (AT) or On-Off Road (OOR) tires must not be driven off-road except on a level, solid surface. For contact information about the original equipment tires, see the warranty manual.

One of the best ways for successful off-road driving is to control the speed.

⚠ Warning

When driving off-road, bouncing and quick changes in direction can easily throw you out of position. This could cause you to lose control and crash. You and your passengers should always wear seat belts.

Before Driving Off-Road

- Have all necessary maintenance and service work completed.
- Fuel the vehicle, fill fluid levels, and check inflation pressure in all tires, including the spare, if equipped.
- Read all the information about four-wheel-drive vehicles in this manual.
- Remove any underbody air deflector, if equipped. Re-attach the air deflector after off-road driving.
- Know the local laws that apply to off-road driving.

To gain more ground clearance if needed, it may be necessary to remove the front fascia lower air dam, if equipped. However, driving without the air dam reduces fuel economy.

Caution

Operating the vehicle for extended periods without the front fascia lower air dam installed can cause improper airflow to the engine. Reattach the front fascia air dam after off-road driving.

Loading the Vehicle for Off-Road Driving

⚠ Warning

- Unsecured cargo on the load floor can be tossed about when driving over rough terrain. You or your passengers can be struck by flying objects. Secure the cargo properly.
- Keep cargo in the cargo area as far forward and as low as possible. The heaviest things should be on the floor, forward of the rear axle.
- Heavy loads on the roof raise the vehicle's center of gravity, making it more likely to roll over. You can be

(Continued)

Warning (Continued)

seriously or fatally injured if the vehicle rolls over. Put heavy loads inside the cargo area, not on the roof.

For more information about loading the vehicle, see *Vehicle Load Limits* ⇨ *178* and *Tires* ⇨ *267*.

Environmental Concerns

- Always use established trails, roads, and areas that have been set aside for public off-road recreational driving and obey all posted regulations.
- Do not damage shrubs, flowers, trees, or grasses or disturb wildlife.
- Do not park over things that burn. See *Parking over Things That Burn* ⇨ *189*.

Driving on Hills

Driving safely on hills requires good judgment and an understanding of what the vehicle can and cannot do.

⚠ Warning

Many hills are simply too steep for any vehicle. Driving up hills can cause the vehicle to stall. Driving down hills can cause loss of control. Driving across hills can cause a rollover. You could be injured or killed. Do not drive on steep hills.

Before driving on a hill, assess the steepness, traction, and obstructions. If the terrain ahead cannot be seen, get out of the vehicle and walk the hill before driving further.

When driving on hills:

- Use a low gear and keep a firm grip on the steering wheel.
- Maintain a slow speed.
- When possible, drive straight up or down the hill.
- Slow down when approaching the top of the hill.
- Use headlamps even during the day to make the vehicle more visible.

⚠ Warning

Driving to the top of a hill at high speed can cause a crash. There could be a drop-off, embankment, cliff, or even another vehicle. You could be seriously injured or killed. As you near the top of a hill, slow down and stay alert.

- Never go downhill forward or backward with either the transmission or transfer case in N (Neutral). The brakes could overheat and you could lose control.

⚠ Warning

If the vehicle has the two-speed automatic or electronic transfer case, shifting the transfer case to N (Neutral) can cause your vehicle to roll even if the transmission is in P (Park). This is because the N (Neutral) position on the transfer case overrides the transmission. You or someone else could be injured. If leaving the vehicle, set the parking brake and shift the transmission to P (Park). Shift the transfer case to any position but N (Neutral).

- When driving down a hill, keep the vehicle headed straight down. Use a low gear because the engine will work with the brakes to slow the vehicle and help keep the vehicle under control.

⚠ Warning

Heavy braking when going down a hill can cause your brakes to overheat and fade. This could cause loss of control and you or others could be injured or killed. Apply the brakes lightly when descending a hill and use a low gear to keep vehicle speed under control.

If the vehicle stalls on a hill:

1. Apply the brakes to stop the vehicle, and then apply the parking brake.
2. Shift into P (Park) and then restart the engine.
   - If driving uphill when the vehicle stalls, shift to R (Reverse), release the parking brake, and back straight down.
   - Never try to turn the vehicle around. If the hill is steep enough to stall the vehicle, it is steep enough to cause it to roll over.
   - If you cannot make it up the hill, back straight down the hill.
   - Never back down a hill in N (Neutral) using only the brake. The vehicle can roll backward quickly and you could lose control.
   - If driving downhill when the vehicle stalls, shift to a lower gear, release the parking brake, and drive straight down the hill.
3. If the vehicle cannot be restarted after stalling, set the parking brake, shift into P (Park), and turn the vehicle off.
   3.1. Leave the vehicle and seek help.
   3.2. Stay clear of the path the vehicle would take if it rolled downhill.

- Avoid turns that take the vehicle across the incline of the hill. A hill that can be driven straight up or down might be too steep to drive across. Driving across an incline puts more weight on the downhill wheels, which could cause a downhill slide or a rollover.
- Surface conditions can be a problem. Loose gravel, muddy spots, or even wet grass can cause the tires to slip sideways, downhill. If the vehicle slips sideways, it can hit something that will trip it — a rock, a rut, etc. — and roll over.
- Hidden obstacles can make the steepness of the incline more severe. If a rock is driven across with the uphill wheels, or if the downhill wheels drop into a rut or depression, the vehicle can tilt even more.
- If an incline must be driven across, and the vehicle starts to slide, turn downhill. This should help straighten out the vehicle and prevent the side slipping.

⚠ Warning

Getting out of the vehicle on the downhill side when stopped across an incline is dangerous. If the vehicle rolls over, you could be crushed or killed. Always get out on the uphill side of the vehicle and stay well clear of the rollover path.

Driving in Mud, Sand, Snow, or Ice

Use a low gear when driving in mud — the deeper the mud, the lower the gear. Keep the vehicle moving to avoid getting stuck.

Traction changes when driving on sand. On loose sand, such as on beaches or sand dunes, the tires tend to sink into the sand.

This affects steering, accelerating, and braking. Drive at a reduced speed and avoid sharp turns or abrupt maneuvers.

Traction is reduced on hard packed snow and ice and it is easy to lose control. Reduce vehicle speed when driving on hard packed snow and ice.

⚠ Warning

Driving on frozen lakes, ponds, or rivers can be dangerous. Ice conditions vary greatly and the vehicle could fall through the ice; you and your passengers could drown. Drive your vehicle on safe surfaces only.

Driving in Water

⚠ Warning

Driving through rushing water can be dangerous. Deep water can sweep your vehicle downstream and you and your passengers could drown. If it is only shallow water, it can still wash away the ground from under your tires. Traction could be lost, and the vehicle could roll over. Do not drive through rushing water.

Caution

Do not drive through standing water if it is deep enough to cover the wheel hubs, axles, or exhaust pipe. Deep water can damage the axle and other vehicle parts.

If the standing water is not too deep, drive through it slowly. At faster speeds, water can get into the engine and cause it to stall. Stalling can occur if the exhaust pipe is under water. Do not turn off the ignition when driving through water. If the exhaust pipe is under water, the engine will not start. When going through water, the brakes get wet and it may take longer to stop. See "Driving on Wet Roads" later in this section.

After Off-Road Driving

Remove any brush or debris that has collected on the underbody or chassis, or under the hood. These accumulations can be a fire hazard.

After operation in mud or sand, have the brake linings cleaned and checked. These substances can cause glazing and uneven braking. Check the body structure, driveline, steering, suspension, wheels, tires, and exhaust system for damage and check the fuel lines and cooling system for any leakage.

More frequent maintenance service is required. See the *Maintenance Schedule* ⇨ *311*.

Driving on Wet Roads

Rain and wet roads can reduce vehicle traction and affect your ability to stop and accelerate. Always drive slower in these types of driving conditions and avoid driving through large puddles and deep-standing or flowing water.

⚠ Warning

Wet brakes can cause crashes. They might not work as well in a quick stop and could cause pulling to one side. You could lose control of the vehicle.

After driving through a large puddle of water or a car/vehicle wash, lightly apply the brake pedal until the brakes work normally.

(Continued)

Warning (Continued)

Flowing or rushing water creates strong forces. Driving through flowing water could cause the vehicle to be carried away. If this happens, you and other vehicle occupants could drown. Do not ignore police warnings and be very cautious about trying to drive through flowing water.

Hydroplaning

Hydroplaning is dangerous. Water can build up under the vehicle's tires so they actually ride on the water. This can happen if the road is wet enough and you are going fast enough. When the vehicle is hydroplaning, it has little or no contact with the road.

There is no hard and fast rule about hydroplaning. The best advice is to slow down when the road is wet.

Other Rainy Weather Tips

Besides slowing down, other wet weather driving tips include:

- Allow extra following distance.
- Pass with caution.
- Keep windshield wiping equipment in good shape.
- Keep the windshield washer fluid reservoir filled.
- Have good tires with proper tread depth. See *Tires* ⇨ *267*.
- Turn off cruise control.

Hill and Mountain Roads

Driving on steep hills or through mountains is different than driving on flat or rolling terrain. Tips include:

- Keep the vehicle serviced and in good shape.
- Check all fluid levels and brakes, tires, and cooling system.
- Shift to a lower gear when going down steep or long hills.

⚠ Warning

Using the brakes to slow the vehicle on a long downhill slope can cause brake overheating, can reduce brake performance, and could result in a loss of braking. Shift the transmission to a lower gear to let the engine assist the brakes on a steep downhill slope.

⚠ Warning

Coasting downhill in N (Neutral) or with the ignition off is dangerous. This can cause overheating of the brakes and loss of steering assist. Always have the engine running and the vehicle in gear.

- Drive at speeds that keep the vehicle in its own lane. Do not swing wide or cross the center line.
- Be alert on top of hills; something could be in your lane (e.g., stalled car, crash).
- Pay attention to special road signs (e.g., falling rocks area, winding roads, long grades, passing or no-passing zones) and take appropriate action.

Winter Driving

Driving on Snow or Ice

Caution

To avoid damage to the wheels and brake components, always clear snow and ice from inside the wheels and underneath the vehicle before driving.

Snow or ice between the tires and the road creates less traction or grip, so drive carefully. Wet ice can occur at about 0 °C (32 °F) when freezing rain begins to fall. Avoid driving on wet ice or in freezing rain until roads can be treated.

For Slippery Road Driving:

- Accelerate gently. Accelerating too quickly causes the wheels to spin and makes the surface under the tires slick.
- Turn on Traction Control. See *Traction Control/Electronic Stability Control* ⇨ *201*.
- The Antilock Brake System (ABS) improves vehicle stability during hard stops, but the brakes should be applied sooner than when on dry pavement. See *Antilock Brake System (ABS)* ⇨ *199*.
- Allow greater following distance and watch for slippery spots. Icy patches can occur on otherwise clear roads in shaded areas. The surface of a curve or an overpass can remain icy when the surrounding roads are clear. Avoid sudden steering maneuvers and braking while on ice.
- Turn off cruise control.

Blizzard Conditions

Stop the vehicle in a safe place and signal for help. Stay with the vehicle unless there is help nearby. If possible, use Roadside Assistance. See *Roadside Assistance Program* ⇨ *331*. To get help and keep everyone in the vehicle safe:

- Turn on the hazard warning flashers.
- Tie a red cloth to an outside mirror.

⚠ Warning

Snow can trap engine exhaust under the vehicle. This may cause exhaust gases to get inside. Engine exhaust contains carbon monoxide (CO), which cannot be seen or smelled. It can cause unconsciousness and even death.

If the vehicle is stuck in snow:

- Clear snow from the base of the vehicle, especially any blocking the exhaust pipe.
- Open a window about 5 cm (2 in) on the vehicle side that is away from the wind, to bring in fresh air.
- Fully open the air outlets on or under the instrument panel.

(Continued)

Warning (Continued)

- Adjust the climate control system to circulate the air inside the vehicle and set the fan speed to the highest setting. See "Climate Control Systems."

For more information about CO, see *Engine Exhaust* ⇨ *189*.

To save fuel, run the engine for short periods to warm the vehicle and then shut the engine off and partially close the window. Moving about to keep warm also helps.

If it takes time for help to arrive, when running the engine, push the accelerator pedal slightly so the engine runs faster than the idle speed. This keeps the battery charged to restart the vehicle and to signal for help with the headlamps. Do this as little as possible, to save fuel.

If the Vehicle Is Stuck

Slowly and cautiously spin the wheels to free the vehicle when stuck in sand, mud, ice, or snow. See "Rocking the Vehicle to Get It Out" later in this section.

The Traction Control System (TCS) can often help to free a stuck vehicle. See *Traction Control/Electronic Stability Control* ⇨ *201*. If TCS cannot free the vehicle, see "Rocking the Vehicle to Get it Out" following.

⚠ Warning

If the vehicle's tires spin at high speed, they can explode, and you or others could be injured. The vehicle can overheat, causing an engine compartment fire or other damage. Spin the wheels as little as possible and avoid going above 56 km/h (35 mph).

For information about using tire chains on the vehicle, see *Tire Chains* ⇨ *283*.

Rocking the Vehicle to Get It Out

Turn the steering wheel left and right to clear the area around the front wheels. For four-wheel-drive vehicles, shift into Four-Wheel Drive High. Turn the TCS off. Shift back and forth between R (Reverse) and a forward gear, spinning the wheels as little as possible. To prevent transmission wear, wait until the wheels stop spinning before shifting gears. Slowly spinning the wheels in the forward and reverse directions causes a rocking motion that could free the vehicle. If that does not get the vehicle out after a few tries, it might need to be towed out. See *Towing the Vehicle* ⇨ *297*. Recovery hooks can be used, if the vehicle has them.

Recovery Hooks

⚠ Warning

Never pull on recovery hooks from the side. The hooks could break and you and others could be injured. When using recovery hooks, always pull the vehicle from the front.

Caution

Never use recovery hooks to tow the vehicle. The vehicle could be damaged, and the repairs would not be covered by the vehicle warranty.

If equipped, there may be recovery hooks at the front of the vehicle. Use them if the vehicle is stuck off-road and needs to be pulled some place to continue driving.

Vehicle Load Limits

It is very important to know how much weight the vehicle can carry. This weight is called the vehicle capacity weight and includes the weight of all occupants, cargo, and all nonfactory-installed options. Two labels on the vehicle may show how much weight it was designed to carry: the Tire and Loading Information label and the Certification/Tire label.

⚠ Warning

Do not load the vehicle any heavier than the Gross Vehicle Weight Rating (GVWR), or either the maximum front or rear Gross Axle Weight Rating (GAWR). This can cause systems to break and change the way the vehicle handles. This could cause loss of control and a crash. Overloading can also reduce stopping performance, damage the tires, and shorten the life of the vehicle.

Tire and Loading Information Label

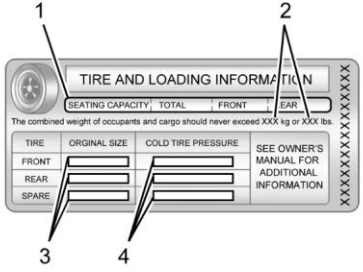

Label Example

A vehicle-specific Tire and Loading Information label is attached to the B-pillar or on the forward edge of the rear door. The Tire and Loading Information label shows the number of occupant seating positions (1), and the maximum vehicle capacity weight (2) in kilograms and pounds.

The Tire and Loading Information label also shows the size of the original equipment tires (3) and the recommended cold tire inflation pressures (4). For more information on tires and inflation see *Tires* ⇨ *267* and *Tire Pressure* ⇨ *273*.

There is also important loading information on the vehicle Certification/Tire label. It may show the Gross Vehicle Weight Rating (GVWR) and the Gross Axle Weight Rating (GAWR) for the front and rear axles. See "Certification/Tire Label" later in this section.

"Steps for Determining Correct Load Limit–

1. Locate the statement "The combined weight of occupants and cargo should never exceed XXX kg or XXX lbs." on your vehicle's placard.
2. Determine the combined weight of the driver and passengers that will be riding in your vehicle.
3. Subtract the combined weight of the driver and passengers from XXX kg or XXX lbs.
4. The resulting figure equals the available amount of cargo and luggage load capacity. For example, if the "XXX" amount equals 1400 lbs. and there will be five 150 lb passengers in your vehicle, the amount of available cargo and luggage load capacity is 650 lbs. (1400-750 (5 x 150) = 650 lbs.)
5. Determine the combined weight of luggage and cargo being loaded on the vehicle. That weight may not safely exceed the available cargo and luggage load capacity calculated in Step 4.

6. If your vehicle will be towing a trailer, load from your trailer will be transferred to your vehicle. Consult this manual to determine how this reduces the available cargo and luggage load capacity of your vehicle."

See *Trailer Towing* ⇨ *219* for important information on towing a trailer, towing safety rules, and trailering tips.

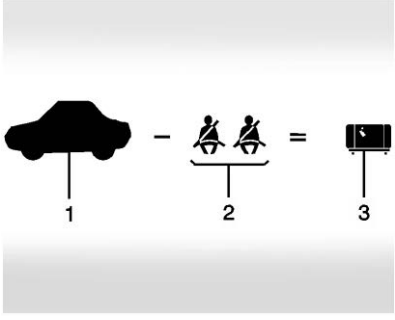

Example 1

1. Vehicle Capacity Weight for Example 1 = (453 kg) (1,000 lb)
2. Subtract Occupant Weight @ 68 kg (150 lb) × 2 = 136 kg (300 lb)
3. Available Occupant and Cargo Weight = 317 kg (700 lb)

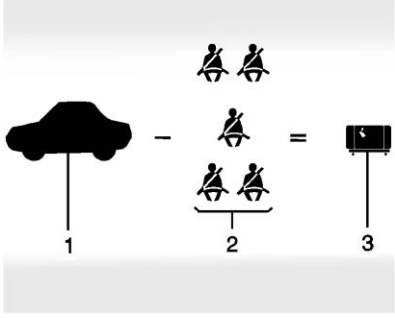

Example 2

1. Vehicle Capacity Weight for Example 2 = 453 kg (1,000 lb)
2. Subtract Occupant Weight @ 68 kg (150 lb) × 5 = 340 kg (750 lb)
3. Available Cargo Weight = 113 kg (250 lb)

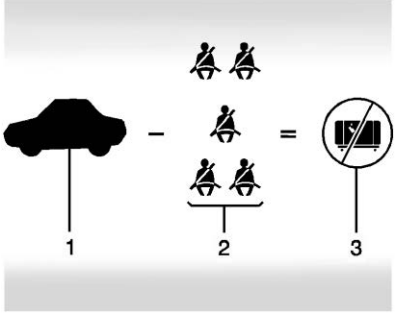

Example 3

1. Vehicle Capacity Weight for Example 3 = 453 kg (1,000 lb)
2. Subtract Occupant Weight @ 91 kg (200 lb) × 5 = 453 kg (1,000 lb)
3. Available Cargo Weight = 0 kg (0 lb)

Refer to the Tire and Loading Information label for specific information about the vehicle's capacity weight and seating positions. The combined weight of the driver, passengers, and cargo should never exceed the vehicle's capacity weight.

Certification/Tire Label

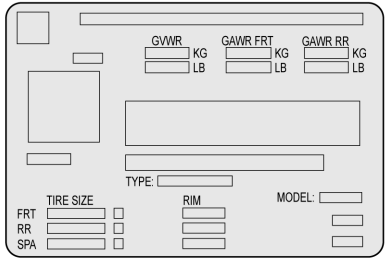

Label Example

A vehicle-specific Certification/Tire label is attached to the B-pillar or on the forward edge of the rear door. The label may show the size of the vehicle's original tires and the inflation pressures needed to obtain the gross weight capacity of the vehicle. This is called Gross Vehicle Weight Rating (GVWR). The GVWR includes the weight of the vehicle, all occupants, fuel, and cargo.

The Certification/Tire label may also show the maximum weights for the front and rear axles, called Gross Axle Weight Rating (GAWR). To find out the actual loads on the front and rear axles, weigh the vehicle at a weigh station. Your dealer can help with this. Be sure to spread the load equally on both sides of the centerline.

⚠ Warning

In the case of a sudden stop or collision, things carried in the bed of your truck could shift forward and come into the passenger area, injuring you and others. If you put things in the bed of your truck, you should make sure they are properly secured.

⚠ Warning

Do not load the vehicle any heavier than the Gross Vehicle Weight Rating (GVWR), or either the maximum front or rear Gross Axle Weight Rating (GAWR). This can cause systems to break and change the way the vehicle handles. This could

(Continued)

Warning (Continued)

cause loss of control and a crash. Overloading can also reduce stopping performance, damage the tires, and shorten the life of the vehicle.

Caution

Overloading the vehicle may cause damage. Repairs would not be covered by the vehicle warranty. Do not overload the vehicle.

Using heavier suspension components to get added durability might not change the weight ratings. Ask your dealer to help load the vehicle the right way.

⚠ Warning

Things you put inside the vehicle can strike and injure people in a sudden stop or turn, or in a crash.

(Continued)

Warning (Continued)

- Put things in the cargo area of the vehicle. Try to spread the weight evenly.
- Never stack heavier things, like suitcases, inside the vehicle so that some of them are above the tops of the seats.
- Do not leave an unsecured child restraint in the vehicle.
- When you carry something inside the vehicle, secure it whenever you can.
- Do not leave a seat folded down unless you need to.

There is also important loading information for off-road driving in this manual. See "Loading the Vehicle for Off-Road Driving" under *Off-Road Driving* ⇨ *172*.

Two-Tiered Loading

Depending on the model of the pickup, an upper load platform can be created by positioning three or four 5 cm (2 in) by 15 cm (6 in) wooden planks across the width of the pickup box. The planks must be inserted in the pickup box depressions.

When using this upper load platform, be sure the load is securely tied down to prevent it from shifting. The load's center of gravity should be positioned in a zone over the rear axle. The zone is located in the area between the front of each wheel well and the rear of each wheel well. The center of gravity height must not extend above the top of the pickup box flareboard.

Any load that extends beyond the vehicle's taillamp area must be properly marked according to local laws and regulations.

Remember not to exceed the Gross Axle Weight Rating (GAWR) of the front or rear axle.

Add-On Equipment

When carrying removable items, a limit on how many people carried inside the vehicle may be necessary. Be sure to weigh the vehicle before buying and installing the new equipment.

Caution

Overloading the vehicle may cause damage. Repairs would not be covered by the vehicle warranty. Do not overload the vehicle.

Remember not to exceed the Gross Axle Weight Rating (GAWR) of the front or rear axle.

* Equipment	Maximum Weight
Ladder Rack and Cargo	340 kg (750 lb)
Cross Toolbox and Cargo	181 kg (400 lb)

* Equipment	Maximum Weight
Side Boxes and Cargo	113 kg per side (250 lb per side)
* The combined weight for all rail-mounted equipment should not exceed 454 kg (1,000 lb).	

Loading Points

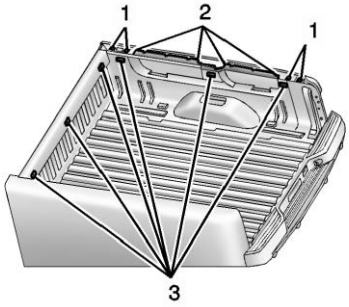

1. Primary Load Points
2. Secondary Load Areas
3. GM Approved Accessory Mounting Points

Structural members (1) and (2) are included in the pickup box design. Additional accessories should use these load points. Depending on the accessory design, use a spacer under the accessory at the load points to remove gap. The holes for GM approved accessories (3) are not intended for aftermarket equipment. See www.gmupfitter.com for additional pickup box load bearing structural information.

Truck-Camper Loading Information

The vehicle was neither designed nor intended to carry a slide-in camper.

Caution

Adding a slide-in camper or similar equipment to the vehicle can damage it, and the repairs would not be covered by the vehicle warranty. Do not install a slide-in camper or similar equipment on the vehicle.

Starting and Operating

New Vehicle Break-In

Caution

The vehicle does not need an elaborate break-in. But it will perform better in the long run if you follow these guidelines:

- Do not drive at any one constant speed, fast or slow, for the first 800 km (500 mi). Do not make full-throttle starts. Avoid downshifting to brake or slow the vehicle.
- Avoid making hard stops for the first 300 km (200 mi) or so. During this time the new brake linings are not yet broken in. Hard stops with new linings can mean premature wear and earlier replacement. Follow this breaking-in guideline every time you get new brake linings.
- Do not tow a trailer during break-in. See *Trailer Towing* ⇨ *219* for the trailer towing capabilities of the vehicle and more information.

Following break-in, engine speed and load can be gradually increased.

On new vehicles, the various mechanical and electrical systems experience a “break-in” period during the first 6,400 km (4,000 miles) of routine driving. As the vehicle is driven, the mechanical systems adjust to provide optimal fuel economy and transmission shift performance.

Electrical systems will adapt and calibrate during the break-in period. A one-time occurrence of clicks and similar vehicle noises is normal during this process.

Normal driving charges the vehicle’s battery to achieve the best operation of the vehicle, including fuel economy.

Ignition Positions

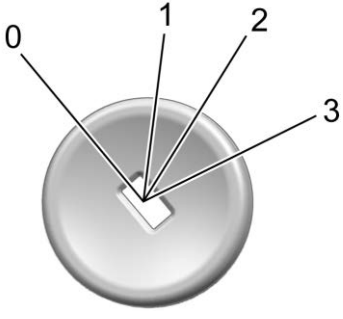

0. Stopping the Engine/LOCK/OFF

1. ACC/ACCESSORY

2. ON/RUN

3. START

The ignition switch has four positions.

To shift out of P (Park), the ignition must be ON/RUN and the brake pedal must be applied.

0 (Stopping the Engine/LOCK/OFF) : This position turns off the vehicle. It also locks the ignition, the transmission, and the steering column, if equipped with a locking steering column.

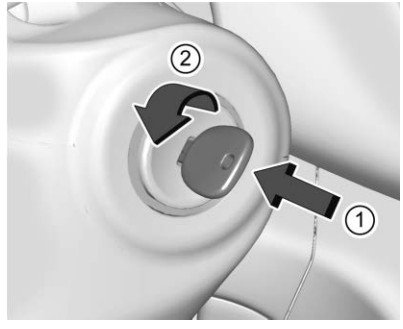

To turn off the vehicle:

1. Make sure that the vehicle is stopped.
2. Shift to P (Park).
3. Continue to hold the brake pedal, then set the parking brake. See *Parking Brake* ⇨ *200*.
4. Push the key all the way in toward the steering column, then turn the key to LOCK/OFF.
5. Remove the key.
6. Release the brake pedal.

See your dealer if the key can be removed in any other position.

Retained Accessory Power (RAP) will remain active. See *Retained Accessory Power (RAP)* ⇨ *187*.

A warning chime will sound when the driver door is opened and the key is in the ignition.

If equipped with a locking steering column, the steering can bind with the front wheels turned off center, which may prevent key rotation out of LOCK/OFF. If this happens, move the steering wheel from right to left while turning the key to ACC/ACCESSORY. If this does not work, then the vehicle needs service.

⚠ Warning

Turning off the vehicle while moving may cause loss of power assist in the brake and steering systems and disable the airbags. While driving, turn off the vehicle only in an emergency.

In an emergency, if the vehicle cannot be pulled over and must be turned off while driving:

1. Push the key all the way in toward the steering column, then turn the key to ACC/ACCESSORY.
2. Brake using firm and steady pressure. Do not pump the brakes repeatedly. This may deplete power assist, requiring increased brake pedal force.
3. Shift the vehicle to N (Neutral). This can be done while the vehicle is moving. Continue braking and steer the vehicle to a safe location.
4. Come to a complete stop.
5. Shift to P (Park).
6. Push the key all the way in toward the steering column (1), then turn the ignition to LOCK/OFF (2).
7. Set the parking brake. See *Parking Brake* ⇨ *200*.
8. Remove the key.
9. Release the brake pedal.

Caution

Use the correct key, make sure it is all the way in — or pushed all the way in toward the steering column when turning off the vehicle — and turn it only with your hand.

1 (ACC/ACCESSORY) : This position allows features such as the infotainment system to operate while the vehicle is off. It also unlocks the steering column, if equipped with a locking steering column. Use this position if the vehicle must be pushed or towed. See *Retained Accessory Power (RAP)* ⇨ *187*.

From ON/RUN, push the key all the way in toward the steering column, then turn the key to ACC/ACCESSORY.

If the key is left in ACC/ACCESSORY with the engine off, the battery could drain and the vehicle may not start.

A warning chime will sound when the driver door is opened and the key is in the ignition.

2 (ON/RUN) : This position can be used to operate the electrical accessories and to display some instrument cluster warning and indicator lights. This position can also be used for service and diagnostics, and to verify the proper operation of the malfunction indicator lamp as may be required for emission inspection purposes. The switch stays in this position when the engine is running. The transmission is also unlocked in this position.

If the key is left in ON/RUN with the engine off, the battery could drain and the vehicle may not start.

3 (START) : This is the position that starts the engine. When the engine starts, release the key. The ignition returns to ON/RUN for driving.

Starting the Engine

If the vehicle has a diesel engine, see the Duramax diesel supplement.

Caution

If you add electrical parts or accessories, you could change the way the engine operates. Any resulting damage would not be covered by the vehicle warranty. See *Add-On Electrical Equipment* ⇨ *230*.

Place the transmission in the proper gear.

Move the shift lever to P (Park) or N (Neutral). The engine will not start in any other position. To restart the engine when the vehicle is already moving, use N (Neutral) only.

Caution

Do not try to shift to P (Park) if the vehicle is moving. If you do, you could damage the transmission. Shift to P (Park) only when the vehicle is stopped.

Starting Procedure

1. With your foot off the accelerator pedal, turn the ignition key to START. When the engine starts, let go of the key. The idle speed will go down as the engine gets warm. Do not race the engine immediately after starting it. Operate the engine and transmission gently to allow the oil to warm up and lubricate all moving parts.

Caution

Cranking the engine for long periods of time, by returning the ignition to the START position immediately after cranking has ended, can overheat and damage the cranking motor, and drain the battery. Wait at least 15 seconds between each try, to let the cranking motor cool down.

2. If the engine does not start after five to 10 seconds, especially in very cold weather (below −18 °C or 0 °F), it could be flooded with too much gasoline. Try pushing the accelerator pedal all the way to the floor and holding it there while holding the key in START for up to 15 seconds. Wait at least 15 seconds between each try, to allow the cranking motor to cool down. When the engine starts, let go of the key and accelerator pedal. If the vehicle starts briefly but then stops again, do the same thing. This clears the extra gasoline from the engine. Do not race the engine immediately after starting it. Operate the engine and transmission gently until the oil warms up and lubricates all moving parts.

Engine Heater

If the vehicle has a diesel engine, see the Duramax diesel supplement.

⚠ Warning

Do not plug in the engine block heater while the vehicle is parked in a garage or under a carport. Property damage or personal injury may result. Always park the vehicle in a clear open area away from buildings or structures.

If equipped, the engine heater can provide easier starting and better fuel economy during engine warm-up in cold weather conditions at or below −18 °C (0 °F). Vehicles with an engine heater should be plugged in at least four hours before starting. An internal thermostat in the plug-end of the cord may exist, which will prevent engine heater operation at temperatures above −18 °C (0 °F).

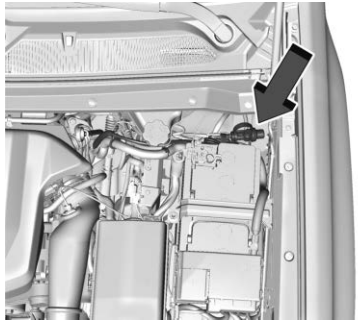

To Use the Engine Heater

1. Turn off the engine.
2. Open the hood and unwrap the electrical cord. Carefully remove the cord.

   Check the heater cord for damage. If it is damaged, do not use it. See your dealer for a replacement. Inspect the cord for damage yearly.
3. Plug the cord into a normal, grounded 110-volt AC outlet.

⚠ Warning

Improper use of the heater cord or an extension cord can damage the cord and may result in overheating and fire.

- Plug the cord into a three-prong electrical utility receptacle that is protected by a ground fault detection function. An ungrounded outlet could cause an electric shock.
- Use a weatherproof, heavy-duty, 15 amp-rated extension cord if needed. Failure to use the recommended extension cord in good operating condition, or using a damaged heater or extension cord, could make it overheat and cause a fire, property damage, electric shock, and injury.
- Do not operate the vehicle with the heater cord permanently attached to the vehicle. Possible heater cord and thermostat damage could occur.
- While in use, do not let the heater cord touch vehicle parts or sharp edges. Never close the hood on the heater cord.

(Continued)

Warning (Continued)

- Before starting the vehicle, unplug the cord, reattach the cover to the plug, and securely fasten the cord. Keep the cord away from any moving parts.

4. Before starting the engine, be sure to unplug and store the cord as it was before to keep it away from moving engine parts. If you do not, it could be damaged.

The length of time the heater should remain plugged in depends on several factors. Ask a dealer in the area where you will be parking the vehicle for the best advice on this.

Retained Accessory Power (RAP)

When the ignition is turned from on to off, the following features (if equipped) will continue to function for up to 10 minutes, or until the driver door is opened. These features will also work when the ignition is in RUN or ACC/ACCESSORY:

- Infotainment System
- Power Windows (during RAP this functionality will be lost when any door is opened)

- Sunroof (during RAP this functionality will be lost when any door is opened)
- Auxiliary Power Outlet
- Audio System
- OnStar System

Shifting Into Park

⚠ Warning

It can be dangerous to get out of the vehicle if the shift lever is not fully in P (Park) with the parking brake firmly set. The vehicle can roll. If you have left the engine running, the vehicle can move suddenly. You or others could be injured. To be sure the vehicle will not move, even when you are on fairly level ground, use the steps that follow. With four-wheel drive, if the transfer case is in N (Neutral), the vehicle will be free to roll, even if the shift lever is in P (Park). Be sure the transfer case is in a drive gear. If towing a trailer, see *Driving Characteristics and Towing Tips* ⇨ *215*.

1. Hold the brake pedal down, then set the parking brake.

   See *Parking Brake* ⇨ *200*.

2. Hold the button on the shift lever and push the lever toward the front of the vehicle into P (Park).
3. Be sure the transfer case (if equipped) is in a drive gear — not in N (Neutral).
4. Push the ignition key in, towards the steering column and then turn the ignition off.
5. Remove the key and take it with you. If you can leave the vehicle with the ignition key in your hand, the vehicle is in P (Park).

Leaving the Vehicle with the Engine Running

⚠ Warning

It can be dangerous to leave the vehicle with the engine running. The vehicle could move suddenly if the shift lever is not fully in P (Park) with the parking brake firmly set.

If you have four-wheel drive and the transfer case is in N (Neutral), the vehicle will be free to roll, even if the shift lever is in P (Park). So be sure the transfer case is in a drive gear – not in N (Neutral).

(Continued)

Warning (Continued)

And, if you leave the vehicle with the engine running, it could overheat and even catch fire. You or others could be injured. Do not leave the vehicle with the engine running unless you have to.

If you have to leave the vehicle with the engine running, be sure the vehicle is in P (Park) and the parking brake is firmly set before you leave it. After you move the shift lever into P (Park), hold the regular brake pedal down. Then, see if you can move the shift lever away from P (Park) without pressing the button on the shift lever. If you can, it means that the shift lever was not fully locked into P (Park).

Torque Lock

If you are parking on a hill and you do not shift the transmission into P (Park) properly, the weight of the vehicle may put too much force on the parking pawl in the transmission. You may find it difficult to pull the shift lever out of P (Park). This is called torque lock. To prevent torque lock, set the parking brake and then shift into P (Park) properly before you leave the driver seat. To find out how, see *Shifting Into Park* ⇨ *188*.

When you are ready to drive, move the shift lever out of P (Park) before you release the parking brake.

If torque lock does occur, you may need to have another vehicle push yours a little uphill to take some of the pressure from the parking pawl in the transmission. You will then be able to pull the shift lever out of P (Park).

Shifting out of Park

This vehicle is equipped with an electronic shift lock release system. The shift lock release is designed to:

- Prevent ignition key removal unless the shift lever is in P (Park).
- Prevent movement of the shift lever out of P (Park), unless the ignition is on and the regular brake pedal is applied.

To shift out of P (Park):

1. Apply the brake pedal.
2. Press the button on the shift lever.
3. Move the shift lever to the desired position.

If you still are unable to shift out of P (Park):

1. Ease the pressure on the shift lever.
2. While holding down the brake pedal and pressing the shift lever button, move the shift lever all the way into P (Park).
3. While holding the shift lever button, move the shift lever to the desired position.

If you are still having a problem shifting, then have the vehicle serviced soon.

Parking over Things That Burn

⚠ Warning

Things that can burn could touch hot exhaust parts under the vehicle and ignite. Do not park over papers, leaves, dry grass, or other things that can burn.

Active Fuel Management

This vehicle's engine may be equipped with Active Fuel Management, which allows the engine to operate on either all of its cylinders, or in reduced cylinder operation mode, depending on the driving conditions. When less power is required, such as cruising at a constant vehicle speed, the system will operate in reduced cylinder operation mode, allowing the vehicle to achieve better fuel economy. When greater power demands are required, such as accelerating from a stop, passing, or merging onto a freeway, the system will maintain full-cylinder operation. If the vehicle has an Active Fuel Management indicator, see Driver Information Center (DIC) for more information on using this display.

Engine Exhaust

⚠ Warning

Engine exhaust contains carbon monoxide (CO), which cannot be seen or smelled. Exposure to CO can cause unconsciousness and even death.

Exhaust may enter the vehicle if:

- The vehicle idles in areas with poor ventilation (parking garages, tunnels, deep snow that may block underbody airflow or tail pipes).
- The exhaust smells or sounds strange or different.
- The exhaust system leaks due to corrosion or damage.

(Continued)

Warning (Continued)

- The vehicle exhaust system has been modified, damaged, or improperly repaired.
- There are holes or openings in the vehicle body from damage or aftermarket modifications that are not completely sealed.

If unusual fumes are detected or if it is suspected that exhaust is coming into the vehicle:

- Drive it only with the windows completely down.
- Have the vehicle repaired immediately.

Never park the vehicle with the engine running in an enclosed area such as a garage or a building that has no fresh air ventilation.

Running the Vehicle While Parked

It is better not to park with the engine running.

If the vehicle is left with the engine running, follow the proper steps to be sure the vehicle will not move. See *Shifting Into Park* ⇨ *188* and *Engine Exhaust* ⇨ *189*.

If parking on a hill and pulling a trailer, see *Driving Characteristics and Towing Tips* ⇨ *215*.

Automatic Transmission

If equipped, there is an electronic shift lever position indicator within the instrument cluster. This display comes on when the ignition key is in ACC/ACCESSORY or ON/RUN.

P : This position locks the drive wheels. Use P (Park) when starting the engine because the vehicle cannot move easily. When parked on a hill, especially when the vehicle has a heavy load, you might notice an increase in the effort to shift out of P (Park). See “Torque Lock” under *Shifting Into Park* ⇨ *188*.

⚠ Warning

It is dangerous to get out of the vehicle if the shift lever is not fully in P (Park) with the parking brake firmly set. The vehicle can roll.

Do not leave the vehicle when the engine is running. If you have left the engine running, the vehicle can move suddenly. You or others could be injured. To be sure the vehicle will not move, even when you are on fairly level ground, always set the parking brake and move the shift lever to P (Park). See *Shifting Into Park* ⇨ *188* and *Driving Characteristics and Towing Tips* ⇨ *215*.

⚠ Warning

If you have four-wheel drive, the vehicle will be free to roll — even if the shift lever is in P (Park) — if the transfer case is in N (Neutral). So, be sure the transfer case is in a drive gear, Two-Wheel Drive High or Four-Wheel Drive High or Four-Wheel Drive Low — not in N (Neutral). See *Shifting Into Park* ⇨ *188*.

R : Use this gear to back up.

Caution

Shifting to R (Reverse) while the vehicle is moving forward could damage the transmission. The repairs would not be covered by the vehicle warranty. Shift to R (Reverse) only after the vehicle is stopped.

To rock the vehicle back and forth to get out of snow, ice, or sand without damaging the transmission, see *If the Vehicle Is Stuck* ⇨ *177*.

N : In this position, the engine does not connect with the wheels. To restart the engine when the vehicle is already moving, use N (Neutral) only.

⚠ Warning

Shifting into a drive gear while the engine is running at high speed is dangerous. Unless your foot is firmly on the brake pedal, the vehicle could move very rapidly. You could lose control and hit people or objects. Do not shift into a drive gear while the engine is running at high speed.

Caution

Shifting out of P (Park) or N (Neutral) with the engine running at high speed may damage the transmission. The repairs would not be covered by the vehicle warranty. Be sure the engine is not running at high speed when shifting the vehicle.

Caution

A transmission hot message may display if the automatic transmission fluid is too hot. Driving under this condition can damage the vehicle. Stop and idle the engine to cool the automatic

(Continued)

Caution (Continued)

transmission fluid. This message clears when the transmission fluid has cooled sufficiently.

D : This position is for normal driving. If more power is needed for passing, press the accelerator pedal down.

D (Drive) can be used when towing a trailer, carrying a heavy load, driving on steep hills, or driving off-road. Shift the transmission to a lower gear range selection if the transmission shifts too often. See *Manual Mode* ⇨ *192*.

Downshifting the transmission in slippery road conditions could result in skidding. See "Skidding" under *Loss of Control* ⇨ *171*.

The vehicle has a shift stabilization feature that adjusts the transmission shifting to the current driving conditions in order to reduce rapid upshifts and downshifts. This shift stabilization feature is designed to determine, before making an upshift, if the engine is able to maintain vehicle speed by analyzing things such as vehicle speed, throttle position, and vehicle load. If the shift stabilization feature determines that a current vehicle speed cannot be maintained,

the transmission does not upshift and instead holds the current gear. In some cases, this could appear to be a delayed shift, however the transmission is operating normally.

The transmission uses adaptive shift controls. The adaptive shift control process continually compares key shift parameters to pre-programmed ideal shifts stored in the transmission's computer. The transmission constantly makes adjustments to improve vehicle performance according to how the vehicle is being used, such as with a heavy load or when the temperature changes. During this adaptive shift control process, shifting might feel different as the transmission determines the best settings.

When temperatures are very cold, the transmission's gear shifting could be delayed providing more stable shifts until the engine warms up. Shifts could be more noticeable with a cold transmission. This difference in shifting is normal.

L : This position allows selection of a range of gears appropriate for current driving conditions. See *Manual Mode* ⇨ *192*.

Caution

Spinning the tires or holding the vehicle in one place on a hill using only the accelerator pedal may damage the transmission. The repair will not be covered by the vehicle warranty. If the vehicle is stuck, do not spin the tires. When stopping on a hill, use the brakes to hold the vehicle in place.

Normal Mode Grade Braking

Normal Mode Grade Braking is enabled when the vehicle is started, but is not enabled in Range Selection Mode. It assists in maintaining desired vehicle speeds when driving on downhill grades by using the engine and transmission to slow the vehicle.

Manual Mode

Range Selection Mode

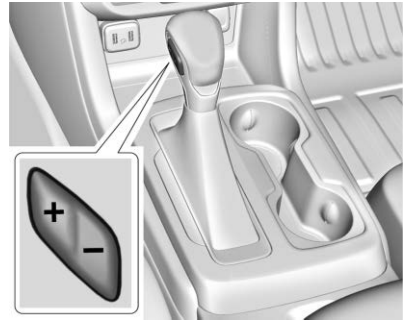

Range Selection Mode helps control the vehicle's transmission and vehicle speed while driving downhill or towing a trailer by letting you select a desired range of gears.

To use this feature:

1. Move the shift lever to L (Manual Mode).
2. Press the plus/minus button on the shift lever to select the desired range of gears for current driving conditions.

When the shift lever is moved from D (Drive) to L (Manual Mode), a number displays next to the L, indicating the current transmission range.

This number is the highest gear that the transmission will command while operating in L (Manual Mode). All gears below that number are available. As driving conditions change, the transmission can automatically shift to lower gears. For example, when L5 is selected, 1 (First) through 5 (Fifth) gears are automatically shifted by the transmission, but 6 (Sixth) cannot be used until the plus/minus button on the shift lever is used to change to the range.

When the shift lever is moved from D (Drive) to L (Manual Mode), a downshift may occur. The gear that the transmission is operating in when the shift lever is moved from D (Drive) to L (Manual Mode) determines if a downshift occurs. See the following chart.

6-Speed Automatic Transmission

Gear before shifting from D (Drive) to L (Manual Mode)	6th	5th	4th	3rd	2nd	1st
Range after shifting from D (Drive) to L (Manual Mode)	L4	L4	L3	L2	L2	L1

8-Speed Automatic Transmission

Gear before shifting from D (Drive) to L (Manual Mode)	8th	7th	6th	5th	4th	3rd	2nd	1st
Range after shifting from D (Drive) to L (Manual Mode) – Tow/Haul not engaged	L6	L6	L5	L4	L3	L3	L2	L1
Range after shifting from D (Drive) to L (Manual Mode) – Tow/Haul engaged	L6	L5	L4	L3	L3	L3	L2	L1

Grade Braking is not available when Range Selection Mode is active. See *Tow/Haul Mode* ⇨ *194*.

While using Range Selection Mode, cruise control and the Tow/Haul Mode can be used.

Caution

Spinning the tires or holding the vehicle in one place on a hill using only the accelerator pedal may damage the transmission. The repair will not be covered by the vehicle warranty. If the vehicle is stuck, do not spin the tires. When stopping on a hill, use the brakes to hold the vehicle in place.

Low Traction Mode

If equipped, Low Traction Mode assists in vehicle acceleration when road conditions are slippery, such as with ice or snow. While the vehicle is at a stop, select L2 using Range Selection Mode. This will limit torque to the wheels and help to prevent the tires from spinning.

Tow/Haul Mode

If equipped, Tow/Haul Mode adjusts the transmission shift pattern to reduce shift cycling. While towing heavy loads, this mode provides increased performance and vehicle control.

Turn the Tow/Haul Mode on and off by pressing the button on the center stack. When the Tow/Haul Mode is enabled, a light on the instrument cluster will come on.

See *Tow/Haul Mode Light* ⇨ *90* and *Hill and Mountain Roads* ⇨ *176*.

Also see "Tow/Haul Mode" under *Towing Equipment* ⇨ *223*.

If the vehicle has a diesel engine, the Tow/Haul button activates the exhaust brake system simultaneously. See "Exhaust Brake" in the Duramax diesel supplement.

Drive Systems

Four-Wheel Drive

If equipped, four-wheel drive engages the front axle for extra traction.

Caution

Do not drive on clean, dry pavement in 4 ↑, or 4 ↓ for an extended period of time. These conditions may cause:

- Overheating.
- Oil leakage.
- Damage to internal and external components of the front axle.
- Premature wear on the vehicle's powertrain.

Driving on clean, dry pavement in 4 ↑ or 4 ↓ may:

- Cause a vibration to be felt in the steering system.
- Cause tires to wear faster.
- Cause additional driveline noise.

⚠ Warning

If equipped with four-wheel drive, the vehicle will be free to roll if the transfer case is in N (Neutral), even when the shift lever is in P (Park). You or someone else could be seriously injured. Be sure the transfer case is in a drive gear — 2↑, 4↑, or 4↓ — or set the parking brake before placing the transfer case in N (Neutral). See *Shifting Into Park* ⇨ *188*.

Caution

Extended high-speed operation in 4 ↓ may damage or shorten the life of the drivetrain.

Engagement noise and bump when shifting between 4 ↓ and 4 ↑ or from N (Neutral), with the engine running, is normal.

Shifting into 4 ↓ will turn Traction Control and StabiliTrak/Electronic Stability Control (ESC) off. See *Traction Control/Electronic Stability Control* ⇨ *201*.

Electronic Transfer Case

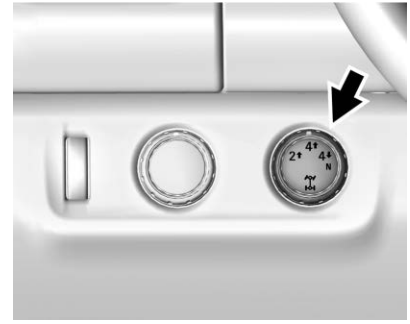

Use the transfer case knob, next to the steering wheel, to shift into and out of four-wheel drive for extra traction.

All of the lights will flash on then off momentarily when the ignition is turned on. The light that remains on will indicate the state of the transfer case.

If the indicator mark on the knob does not match up with the light then that likely means the knob was moved when the ignition was off.

The indicator mark on the knob must line up with the indicator light before a shift can be commanded. To command a shift rotate the transfer case knob to the new desired position. The light will flash meaning that the shift is in progress. When the shift is completed the new position will be illuminated. If the transfer case cannot complete a shift command, it will go back to its last chosen setting.

In extreme cold weather, it may be necessary to slow or stop the vehicle to shift from 2 ↑ to 4 ↑.

Delayed shift from 4 ↑ to 2 ↑ may be experienced due to uneven tire wear, low tire pressure, high vehicle loading, or cold temperatures.

Caution

Shifting the transmission into gear before the requested mode indicator light has stopped flashing could damage the transfer case.

The settings are:

N (Neutral) : Use only when the vehicle needs to be towed. See *Recreational Vehicle Towing* ⇨ *298* or *Towing the Vehicle* ⇨ *297*.

2 ↑ (Two-Wheel Drive High) : Use for driving on most streets and highways. The front axle is not engaged. This setting provides the best fuel economy.

4 ↓ (Four-Wheel Drive Low) : This setting engages the front axle and delivers extra torque. Choose 4 ↓ if driving off-road in deep sand, deep mud, or deep snow, and while climbing or descending steep hills. When engaged, keep vehicle speed below 72 km/h (45 mph).

Shifting into 4 ↓ will turn Traction Control and StabiliTrak/ESC off. See *Traction Control/ Electronic Stability Control* ⇨ *201*.

4 ↑ (Four-Wheel Drive High) : Use when extra traction is needed. The front axle engages and helps when driving on snowy or icy roads, and when off-roading. The vehicle can be shifted from 2 ↑ to 4 ↑ while the vehicle is moving.

Shifting Into 4 ↑

Turn the knob to 4 ↑ at any speed up to 121 km/h (75 mph), except from 4 ↓. The indicator light will flash while shifting and will remain on the selected setting.

Shifting Into 2 ↑

Turn the knob to 2 ↑ at any speed, except when shifting from 4 ↓.

Shifting Into 4 ↓

When 4 ↓ is engaged, vehicle speed should be kept below 72 km/h (45 mph).

1. The ignition must be on and the vehicle must be stopped or moving less than 5 km/h (3 mph) with the transmission in N (Neutral). It is best for the vehicle to be moving 1.6 to 3.2 km/h (1 to 2 mph).
2. Turn the knob to 4 ↓. Wait for the 4 ↓ indicator light to stop flashing before shifting the transmission into gear.

If the transmission is in gear and/or moving more than 5 km/h (3 mph), the 4 ↓ indicator light will flash for 30 seconds, but will not complete the shift. After 30 seconds the transfer case will shift to 4 ↑. Turn the knob to 4 ↑ to see the indicator. With the vehicle moving less than 5 km/h (3 mph), and the transmission in N (Neutral), attempt the shift again.

Shifting Out of 4 ↓

1. To shift out of 4 ↓ the vehicle must be stopped or moving less than 5 km/h (3 mph) with the transmission in N (Neutral) and the ignition on. It is best for the vehicle to be moving 1.6 to 3.2 km/h (1 to 2 mph).
2. Turn the knob to 4 ↑ or 2 ↑. Wait for the 4 ↑ or 2 ↑ indicator light to stop flashing before shifting the transmission into gear.

If the transmission is in gear and/or moving more than 5 km/h (3 mph), the 4 ↑ or 2 ↑ indicator light will flash for 30 seconds, but will not complete the shift. With the vehicle moving less than 5 km/h (3 mph), and the transmission in N (Neutral), attempt the shift again.

Shifting Into N (Neutral)

To shift:

1. Park the vehicle on a level surface.
2. Set the parking brake and press and hold the brake pedal. See *Parking Brake* ⇨ *200*.
3. Start the vehicle or turn the ignition on.
4. Shift the transmission to N (Neutral).

5. Shift the transfer case to 2 ↑.
6. Turn the transfer case knob clockwise to N (Neutral) until it stops and hold it there until the N (Neutral) light starts flashing. This will take at least 10 seconds. Then slowly release the knob to the 4 ↓ position. The N (Neutral) light will come on when the transfer case shift to N (Neutral) is complete.
7. With the engine running, verify that the transfer case is in N (Neutral) by shifting the transmission to R (Reverse), then to D (Drive). There should be no movement of the vehicle while shifting the transmission.
8. Turn the engine off, and the ignition to ACC/ACCESSORY.
9. Place the transmission shift lever in P (Park). See *Recreational Vehicle Towing* ⇨ *298*.
10. Turn the ignition off.

Shifting Out of N (Neutral)

To shift:

1. Set the parking brake and apply the brake pedal.
2. Turn the ignition on with the engine off.
3. Shift the transmission to N (Neutral).
4. Turn the transfer case knob to 2 ↑.

   After the transfer case has shifted out of N (Neutral), the N (Neutral) light will go out.
5. Release the parking brake.

Caution
Shifting the transmission into gear before the requested mode indicator light has stopped flashing could damage the transfer case.

6. Start the engine and shift the transmission to the desired gear.

Automatic Transfer Case

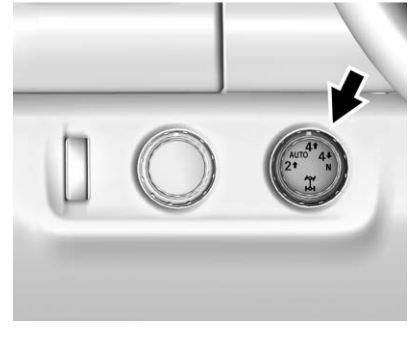

Use the transfer case knob next to the steering wheel to shift into and out of four-wheel drive.

All of the lights will flash on then off momentarily when the ignition is turned on. The light that remains on will indicate the state of the transfer case.

If the indicator mark on the knob does not match up with the light then that likely means the knob was moved when the ignition was off.

The indicator mark on the knob must line up with the indicator light before a shift can be commanded. To command a shift rotate the transfer case knob to the new desired position. The light will flash meaning that the shift is in progress. When the shift is completed the new position will be illuminated. If the transfer case cannot complete a shift command, it will go back to its last chosen setting.

The settings are:

N (Neutral) : Use only when the vehicle needs to be towed. See *Recreational Vehicle Towing* ⇨ *298* or *Towing the Vehicle* ⇨ *297*.

2 ↑ (Two-Wheel Drive High) : Use for driving on most streets and highways. The front axle is not engaged. This setting provides the best fuel economy.

AUTO (Automatic Four-Wheel Drive) : Use when road surface traction conditions are variable. When driving in AUTO, the front axle is engaged, and the vehicle's power is sent to the front and rear wheels automatically based on driving conditions. This setting provides slightly lower fuel economy than 2 ↑.

Do not use AUTO mode, if equipped, to park on a steep grade with poor traction such as ice, snow, mud, or gravel. In AUTO mode only the rear wheels will hold the vehicle from sliding when parked. If parking on a steep grade, use 4 ↑ to keep all four wheels engaged.

4 ↑ (Four-Wheel Drive High) : This setting engages the front axle. Use this position when extra traction is needed, such as when driving on snowy or icy roads, or when off-roading.

4 ↓ (Four-Wheel Drive Low) : This setting engages the front axle and delivers extra torque. Choose 4 ↓ when driving off-road in deep sand, deep mud, or deep snow, and while climbing or descending steep hills.

Shifting into 4 ↓ will turn Traction Control and StabiliTrak/ESC off. See *Traction Control/ Electronic Stability Control* ⇨ *201*.

Shifting Into 4 ↑ or AUTO

Turn the knob to the 4 ↑ or AUTO position at any speed, except from 4 ↓. The indicator light will flash while shifting and will remain on when the shift is completed.

Shifting Into 2 ↑

Turn the knob to 2 ↑ at any speed, except when shifting from 4 ↓. The indicator light will flash while shifting and will remain on when the shift is completed.

Shifting Into 4 ↓

When 4 ↓ is engaged, keep vehicle speed below 72 km/h (45 mph).

To shift into 4 ↓:

1. The ignition must be on and the vehicle must be stopped or moving less than 5 km/h (3 mph) with the transmission in N (Neutral). It is best for the vehicle to be moving 1.6 to 3.2 km/h (1 to 2 mph).
2. Turn the knob to 4 ↓. Wait for the 4 ↓ indicator light to stop flashing before shifting the transmission into gear.

Caution
Shifting the transmission into gear before the requested mode indicator light has stopped flashing could damage the transfer case.

If the transmission is in gear and/or moving more than 5 km/h (3 mph), the 4 ↓ indicator light will flash for 30 seconds, but will not complete the shift. After 30 seconds the transfer case will shift to 4 ↑. Turn the knob to 4 ↑ to display the indicator. With the vehicle moving less than 5 km/h (3 mph), and the transmission in N (Neutral), attempt the shift again.

Shifting Out of 4 ↓

To shift:

1. The vehicle must be stopped or moving less than 5 km/h (3 mph) with the transmission in N (Neutral) and the ignition on. It is best for the vehicle to be moving 1.6 to 3.2 km/h (1 to 2 mph).
2. Turn the knob to 4 ↑, AUTO, or 2 ↑. Wait for the 4 ↑, AUTO, or 2 ↑ indicator light to stop flashing before shifting the transmission into gear.

Caution
Shifting the transmission into gear before the requested mode indicator light has stopped flashing could damage the transfer case.

If the transmission is in gear and/or moving more than 5 km/h (3 mph), the 4 ↑, AUTO, or 2 ↑ indicator light will flash for 30 seconds but will not complete the shift. With the vehicle moving less than 5 km/h (3 mph), and the transmission in N (Neutral), attempt the shift again.

Shifting Into N (Neutral)

To shift:

1. Park the vehicle on a level surface.
2. Set the parking brake and press and hold the brake pedal. See *Parking Brake* ⇨ *200*.
3. Start the vehicle or turn the ignition on.
4. Shift the transmission to N (Neutral).
5. Shift the transfer case to 2 ↑.
6. Turn the transfer case knob clockwise to N (Neutral) until it stops and hold it there until the N (Neutral) light starts flashing. This will take at least 10 seconds. Then slowly release the knob to the 4 ↓ position. The N (Neutral) light will come on when the transfer case shift to N (Neutral) is complete.
7. With the engine running, verify that the transfer case is in N (Neutral) by shifting the transmission to R (Reverse), then shift the transmission to D (Drive). There should be no movement of the vehicle while shifting the transmission.
8. Turn the engine off, and the ignition to ACC/ACCESSORY.
9. Place the transmission shift lever in P (Park). See *Recreational Vehicle Towing* ⇨ *298*.
10. Turn the ignition to off.

Shifting Out of N (Neutral)

To shift:

1. Set the parking brake and apply the brake pedal.
2. Turn the ignition on with the engine off.
3. Shift the transmission to N (Neutral).
4. Turn the transfer case knob to the desired setting.

   After the transfer case has shifted out of N (Neutral), the N (Neutral) light will go out.
5. Release the parking brake.
6. Start the engine and shift the transmission to the desired gear.

Brakes

Antilock Brake System (ABS)

The Antilock Brake System (ABS) helps prevent a braking skid and maintain steering while braking hard.

ABS performs a system check when the vehicle is first driven. A momentary motor or clicking noise may be heard while this test is going on, and the brake pedal may move slightly. This is normal.

If there is a problem with ABS, this warning light stays on. See *Antilock Brake System (ABS) Warning Light* ⇨ *89*.

ABS does not change the time needed to get a foot on the brake pedal and does not always decrease stopping distance. If you get too close to the vehicle ahead, there will not be enough time to apply the brakes if that vehicle suddenly slows or stops. Always leave enough room ahead to stop, even with ABS.

Using ABS

Do not pump the brakes. Just hold the brake pedal down firmly. Hearing or feeling ABS operate is normal.

Braking in Emergencies

ABS allows steering and braking at the same time. In many emergencies, steering can help even more than braking.

Parking Brake

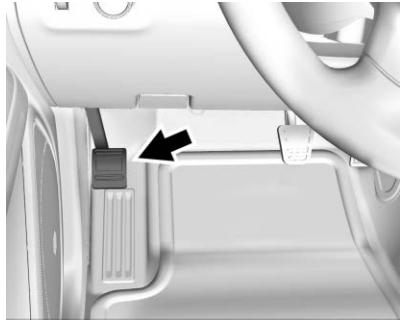

Set the parking brake by holding the regular brake pedal down, then pushing down the parking brake pedal.

If the ignition is on, the brake system warning light will come on. See *Brake System Warning Light* ⇨ *88*.

Caution

Driving with the parking brake on can overheat the brake system and cause premature wear or damage to brake system parts. Make sure that the parking brake is fully released and the brake warning light is off before driving.

To release the parking brake, hold the regular brake pedal down, then push down momentarily on the parking brake pedal until you feel the pedal release. Slowly pull your foot up off the parking brake pedal. If the parking brake is not released when you begin to drive, the brake system warning light will flash and a chime will sound warning you that the parking brake is still on.

If you are towing a trailer and are parking on a hill, see *Driving Characteristics and Towing Tips* ⇨ *215*.

Brake Assist

Brake Assist detects rapid brake pedal applications due to emergency braking situations and provides additional braking to activate the Antilock Brake System (ABS) if the brake pedal is not pushed hard enough

to activate ABS normally. Minor noise, brake pedal pulsation, and/or pedal movement during this time may occur. Continue to apply the brake pedal as the driving situation dictates. Brake Assist disengages when the brake pedal is released.

Hill Start Assist (HSA)

⚠ Warning

Do not rely on the HSA feature. HSA does not replace the need to pay attention and drive safely. You may not hear or feel alerts or warnings provided by this system. Failure to use proper care when driving may result in injury, death, or vehicle damage. See *Defensive Driving* ⇨ *169*.

When the vehicle is stopped on a grade, Hill Start Assist (HSA) temporarily prevents the vehicle from rolling in an unintended direction during the transition from brake pedal release to accelerator pedal apply. The brakes release when the accelerator pedal is applied or automatically release after a few seconds. The brakes may also release under other conditions. Do not rely on HSA to hold the vehicle.

HSA is available when the vehicle is facing uphill in a forward gear, or when facing downhill in R (Reverse). The vehicle must come to a complete stop on a grade for HSA to activate.

Ride Control Systems

Traction Control/Electronic Stability Control

System Operation

The vehicle has a Traction Control System (TCS) and StabiliTrak/Electronic Stability Control (ESC), an electronic stability control system. These systems help limit wheel spin and assist the driver in maintaining control, especially on slippery road conditions.

TCS activates if it senses that any of the drive wheels are spinning or beginning to lose traction. When this happens, TCS applies the brakes to the spinning wheels and reduces engine power to limit wheel spin.

StabiliTrak/ESC activates when the vehicle senses a difference between the intended path and the direction the vehicle is actually traveling. StabiliTrak/ESC selectively applies braking pressure to any one of the vehicle wheel brakes to assist the driver in keeping the vehicle on the intended path.

If cruise control is being used and TCS or StabiliTrak/ESC begins to limit wheel spin, cruise control will disengage. Cruise control may be turned back on when road conditions allow.

Both systems come on automatically when the vehicle is started and begins to move. The systems may be heard or felt while they are operating or while performing diagnostic checks. This is normal and does not mean there is a problem with the vehicle.

It is recommended to leave both systems on for normal driving conditions, but it may be necessary to turn TCS off if the vehicle gets stuck in sand, mud, ice, or snow. See *If the Vehicle Is Stuck* ⇨ *177* and “Turning the Systems Off and On” later in this section.

When the transfer case (if equipped) is in 4 ↓, the stability system is automatically disabled, and OFF comes on in the instrument cluster. Both TCS and StabiliTrak/ESC are automatically disabled.

The indicator light for both systems is in the instrument cluster. This light will:

- Flash when TCS is limiting wheel spin.
- Flash when StabiliTrak/ESC is activated.
- Turn on and stay on when either system is not working.

If either system fails to turn on or to activate, a message displays in the Driver Information Center (DIC), and comes on and stays on to indicate that the system is inactive and is not assisting the driver in maintaining control. The vehicle is safe to drive, but driving should be adjusted accordingly.

If comes on and stays on:

1. Stop the vehicle.
2. Turn the engine off and wait 15 seconds.
3. Start the engine.

Drive the vehicle. If comes on and stays on, the vehicle may need more time to diagnose the problem. If the condition persists, see your dealer.

Turning the Systems Off and On

The button for TCS and StabiliTrak/ESC is on the center stack.

Caution
Do not repeatedly brake or accelerate heavily when TCS is off. The vehicle driveline could be damaged.

To turn off only TCS, press and release . The Traction Off light displays in the instrument cluster. To turn TCS on again, press and release . The Traction Off light in the instrument cluster will turn off.

If TCS is limiting wheel spin when is pressed, the system will not turn off until the wheels stop spinning.

To turn off both TCS and StabiliTrak/ESC, press and hold until the Traction Off light and StabiliTrak/ESC Off light come on and stay on in the instrument cluster. To turn TCS and StabiliTrak/ESC on again, press and release . The Traction Off light and StabiliTrak/ESC Off light in the instrument cluster turn off.

StabiliTrak/ESC will automatically turn on if the vehicle exceeds 56 km/h (35 mph). TCS will remain off until is pressed or until the ignition is turned off and then back on.

Adding accessories can affect the vehicle performance. See *Accessories and Modifications* ⇨ *233*.

Hill Descent Control (HDC)

If equipped, HDC can be used when driving downhill. It sets and maintains vehicle speed while descending a very steep incline in a forward or reverse gear.

The HDC switch is on the center stack, below the climate controls.

Press to enable or disable HDC. Vehicle speed must be below 60 km/h (37 mph).

The HDC light displays on the instrument cluster when enabled.

HDC can maintain vehicle speeds between 4 and 30 km/h (3 and 19 mph) on an incline greater than or equal to a 10% grade. A blinking HDC light indicates that the system is actively applying the brakes to maintain vehicle speed.

When HDC is set, that is the initial set speed. It can be increased or decreased by applying the accelerator or brake pedal. Smaller HDC speed control adjustments are accomplished using the cruise up or down buttons. Each tap of the +RES will increase the set speed by 0.8 km/h (0.5 mph), while each tap of the SET– will decrease the set speed by 0.8 km/h (0.5 mph). This adjusted speed becomes the new set speed.

HDC will remain enabled between 30 and 60 km/h (19 and 37 mph), however vehicle speed cannot be set or maintained in this range. It will automatically disable if the vehicle speed is above 80 km/h (50 mph) or above 60 km/h (37 mph) for at least 30 seconds. must be pressed again to re-enable HDC.

When enabled, if the vehicle is at a speed above 30 km/h (19 mph) and less than 60 km/h (37 mph), a DIC message will display instructing the driver to reduce speed for HDC operation.

Cruise control will not function while HDC is enabled and vehicle speed is below 40 km/h (25 mph).

Limited-Slip Differential

If equipped, the limited-slip differential can give more traction on snow, mud, ice, sand, or gravel. It works like a standard axle most of the time, but when traction is low, this feature allows the drive wheel with the most traction to move the vehicle. For vehicles with the limited-slip differential, driven under severe conditions, the rear axle fluid should be changed. See *Maintenance Schedule* ⇨ *311*.

Cruise Control

With cruise control a speed of about 40 km/h (25 mph) or more can be maintained without keeping your foot on the accelerator. Cruise control does not work at speeds below about 40 km/h (25 mph).

⚠ Warning

Cruise control can be dangerous where you cannot drive safely at a steady speed. Do not use cruise control on winding roads or in heavy traffic.

Cruise control can be dangerous on slippery roads. On such roads, fast changes in tire traction can cause excessive wheel slip, and you could lose control. Do not use cruise control on slippery roads.

If the cruise control is being used and the Traction Control (TCS) system or StabiliTrak/ Electronic Stability Control (ESC) begins to limit wheel spin, the cruise control will automatically disengage. See *Traction Control/Electronic Stability Control* ⇨ *201*. If a collision alert occurs when cruise control is activated, cruise control is disengaged. See *Forward Collision Alert (FCA) System* ⇨ *208*.

When road conditions allow you to safely use it again, cruise control can be turned back on.

If equipped with Hill Descent Control (HDC), cruise control will disengage if HDC is Active.

If the brakes are applied, the cruise control disengages.

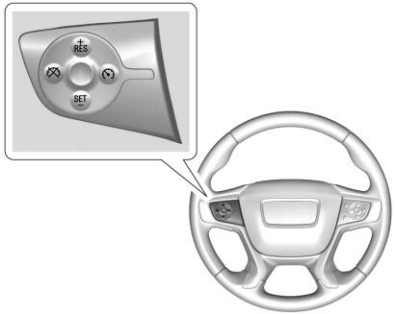

: Press to turn the system on or off. A white indicator comes on in the instrument cluster when cruise control is turned on.

+RES : If there is a set speed in memory, press briefly to resume to that speed or press and hold to accelerate. If cruise control is already active, use to increase vehicle speed.

SET– : Press briefly to set the speed and activate cruise control. If cruise control is already active, use to decrease vehicle speed.

: Press to disengage cruise control without erasing the set speed from memory.

Setting Cruise Control

If is on when not in use, SET– or +RES could get pressed and go into cruise when not desired. Keep off when cruise is not being used.

1. Press to turn the cruise system on.
2. Get up to the desired speed.
3. Press and release SET–.
4. Remove foot from the accelerator.

The cruise control indicator on the instrument cluster turns green after cruise control has been set to the desired speed. See *Instrument Cluster* ⇨ *81*.

Resuming a Set Speed

If the cruise control is set at a desired speed and then the brakes are applied or is pressed, the cruise control is disengaged without erasing the set speed from memory.

Once the vehicle speed reaches about 40 km/h (25 mph) or more, press +RES briefly. The vehicle returns to the previous set speed.

Increasing Speed While Using Cruise Control

If the cruise control system is already activated:

- Press and hold +RES until the desired speed is reached, then release it.
- To increase vehicle speed in small increments, briefly press +RES. For each press, the vehicle goes about 1 km/h (1 mph) faster.

The speedometer reading can be displayed in either English or metric units. See *Driver Information Center (DIC) (Base Level)* ⇨ *93* or *Driver Information Center (DIC) (Uplevel)* ⇨ *96*. The increment value used depends on the units displayed.

Reducing Speed While Using Cruise Control

If the cruise control system is already activated:

- Press and hold SET– until the desired lower speed is reached, then release it.
- To slow down in small increments, briefly press SET– . For each press, the vehicle goes about 1 km/h (1 mph) slower.

The speedometer reading can be displayed in either English or metric units. See *Driver Information Center (DIC) (Base Level)* ⇨ *93* or *Driver Information Center (DIC) (Uplevel)* ⇨ *96*. The increment value used depends on the units displayed.

Passing Another Vehicle While Using Cruise Control

Use the accelerator pedal to increase the vehicle speed. When you take your foot off the pedal, the vehicle will slow down to the previous set cruise speed. While pressing the accelerator pedal or shortly following the release to override cruise control, briefly pressing SET– will result in cruise control set to the current vehicle speed.

Using Cruise Control on Hills

How well the cruise control will work on hills depends on the vehicle speed, load, and the steepness of the hills. When going up steep hills, you might have to step on the accelerator pedal to maintain your speed. When going downhill, you might have to brake or shift to a lower gear to keep your speed down. If the brake pedal is applied, cruise control will disengage.

Ending Cruise Control

There are three ways to end cruise control:

- Step lightly on the brake pedal.
- Press .
- To turn off cruise control, press .

Erasing Speed Memory

The cruise control set speed is erased from memory if is pressed or if the ignition is turned off.

Driver Assistance Systems

This vehicle may have features that work together to help avoid crashes or reduce crash damage while driving, backing, and parking. Read this entire section before using these systems.

⚠ Warning

Do not rely on the Driver Assistance Systems. These systems do not replace the need for paying attention and driving safely. You may not hear or see alerts or warnings provided by these systems.

(Continued)

Warning (Continued)

Failure to use proper care when driving may result in injury, death, or vehicle damage. See *Defensive Driving* ⇨ *169*.

Under many conditions, these systems will not:

- Detect children, pedestrians, bicyclists, or animals.
- Detect vehicles or objects outside the area monitored by the system.
- Work at all driving speeds.
- Warn you or provide you with enough time to avoid a crash.
- Work under poor visibility or bad weather conditions.
- Work if the detection sensor is not cleaned or is covered by ice, snow, mud, or dirt.
- Work if the detection sensor is covered up, such as with a sticker, magnet, or metal plate.
- Work if the area surrounding the detection sensor is damaged or not properly repaired.

(Continued)

Warning (Continued)

Complete attention is always required while driving, and you should be ready to take action and apply the brakes and/or steer the vehicle to avoid crashes.

Audible Alert

Some driver assistance features alert the driver of obstacles by beeping. To change the volume of the warning chime, see "Comfort and Convenience" under *Vehicle Personalization* ⇨ *99*.

Cleaning

Depending on vehicle options, keep these areas of the vehicle clean to ensure the best driver assistance feature performance. Driver Information Center (DIC) messages may display when the systems are unavailable or blocked.

- Front and rear bumpers and the area below the bumpers
- Front grille and headlamps
- Front camera lens in the front grille or near the front emblem
- Front side and rear side panels
- Outside of the windshield in front of the rearview mirror
- Side camera lens on the bottom of the outside mirrors
- Rear side corner bumpers
- Rear Vision Camera above the license plate

Radio Frequency

This vehicle may be equipped with driver assistance systems that operate using radio frequency. See *Radio Frequency Statement* ⇨ *336*.

Assistance Systems for Parking or Backing

If equipped, the Rear Vision Camera (RVC) and Rear Park Assist (RPA) may help the driver park or avoid objects. Always check around the vehicle when parking or backing.

Rear Vision Camera (RVC)

When the vehicle is shifted into R (Reverse), the RVC displays an image of the area behind the vehicle in the infotainment display. The previous screen displays when the vehicle is shifted out of R (Reverse) after a short delay. To return to the previous

screen sooner, press the Home or Back button on the infotainment system, shift into P (Park), or reach a vehicle speed of approximately 12 km/h (8 mph) while in D (Drive).

The RVC is under the tailgate handle. The RVC will not work properly if the tailgate is down.

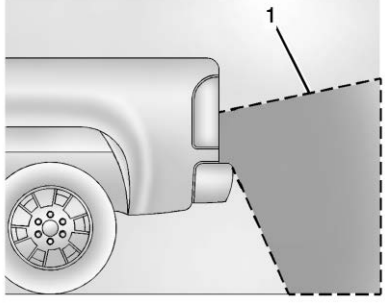

1. View Displayed by the Camera

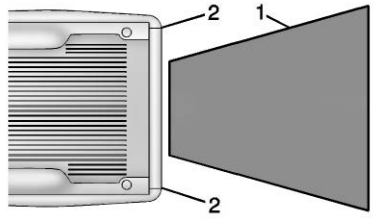

1. View Displayed by the Camera
2. Corners of the Rear Bumper

Displayed images may be farther or closer than they appear. The area displayed is limited and objects that are close to either corner of the bumper or under the bumper do not display.

A warning triangle may appear on the infotainment display to show the RPA or RCTA has detected an object. This triangle changes from amber to red and increases in size the closer the object.

⚠ Warning

The camera(s) do not display children, pedestrians, bicyclists, crossing traffic, animals, or any other object outside of the cameras' field of view, below the

(Continued)

Warning (Continued)

bumper, or under the vehicle. Shown distances may be different from actual distances. Do not drive or park the vehicle using only these camera(s). Always check behind and around the vehicle before driving. Failure to use proper care may result in injury, death, or vehicle damage.

Hitch Guidance

If equipped, this feature displays a single, centered guideline on the camera display to assist with aligning a vehicle's hitch ball with a trailer coupler. Select the trailer guidance line button, then align the trailer guidance line over the trailer coupler. Continuously steer the vehicle to keep the guidance line centered on the coupler when backing. RVC Park Assist overlays will not display when the trailer guidance line is active. Hitch Guidance is only available in Standard View.

To check the trailer when in a forward gear above 12 km/h (8 mph), touch CAMERA on the infotainment display to view the rear

camera. Touch X to exit the view or it will be removed automatically after eight seconds.

⚠ Warning

Use Hitch Guidance only to help back the vehicle to a trailer hitch or, when traveling above 12 km/h (8 mph), to briefly check the status of your trailer. Do not use for any other purpose, such as making lane change decisions. Before making a lane change, always check the mirrors and glance over your shoulder. Improper use could result in serious injury to you or others.

Park Assist

With RPA, as the vehicle backs up at speeds of less than 8 km/h (5 mph), the sensors on the rear bumper may detect objects up to 2.5 m (8 ft) behind the vehicle within a zone 25 cm (10 in) high off the ground and below bumper level. These detection distances may be shorter during warmer or humid weather. Blocked sensors will not detect objects and can also cause false detections. Keep the sensors clean of mud, dirt, snow, ice, and slush; and clean sensors after a car wash in freezing temperatures.

⚠ Warning

The Park Assist system does not detect children, pedestrians, bicyclists, animals, or objects below the bumper or that are too close or too far from the vehicle. It is not available at speeds greater than 8 km/h (5 mph). To prevent injury, death, or vehicle damage, even with Park Assist, always check the area around the vehicle and check all mirrors before backing.

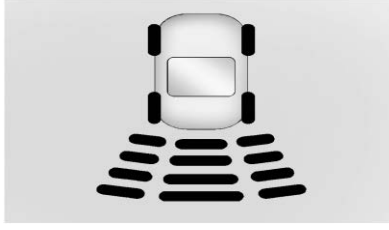

The instrument cluster may have a park assist display with bars that show “distance to object” and object location information for RPA. As the object gets closer, more bars light up and the bars change color from yellow to amber to red.

When an object is first detected in the rear, one beep will be heard from the rear. When an object is very close, <0.6 m (2 ft) in the vehicle rear, continuous beeps will sound from the rear.

Turning the Features On or Off

RPA can be turned on and off. See *Vehicle Personalization* ⇨ *99*.

Turn off RPA when towing a trailer.

Forward Collision Alert (FCA) System

If equipped, the FCA system may help to avoid or reduce the harm caused by front-end crashes. When approaching a vehicle ahead too quickly, FCA provides a red flashing alert on the windshield, and rapidly beeps. FCA also lights an amber visual alert if following another vehicle much too closely.

FCA detects vehicles within a distance of approximately 60 m (197 ft) and operates at speeds above 40 km/h (25 mph).

⚠ Warning

FCA is a warning system and does not apply the brakes. When approaching a slower-moving or stopped vehicle ahead too rapidly, or when following a vehicle too closely, FCA may not provide a warning with enough time to help avoid a crash. It also may not provide any warning at all. FCA does not warn of pedestrians, animals, signs, guardrails, bridges, construction barrels, or other objects. Be ready to take action and apply the brakes. See *Defensive Driving* ⇨ *169*.

FCA can be disabled with either the FCA steering wheel control or, if equipped, through vehicle personalization. See "Collision/Detection Systems" under *Vehicle Personalization* ⇨ *99*.

Detecting the Vehicle Ahead

FCA warnings will not occur unless the FCA system detects a vehicle ahead. When a vehicle is detected, the vehicle ahead indicator will display green. Vehicles may not be detected on curves, highway exit ramps, or hills, due to poor visibility; or if a vehicle ahead is partially blocked by pedestrians or other objects. FCA will not detect another vehicle ahead until it is completely in the driving lane.

⚠ Warning

FCA does not provide a warning to help avoid a crash, unless it detects a vehicle. FCA may not detect a vehicle ahead if the FCA sensor is blocked by dirt, snow, or ice, or if the windshield is damaged. It may also not detect a vehicle on winding or hilly roads, or in conditions that can limit visibility such as fog, rain, or snow, or if the headlamps or windshield are not cleaned or in proper condition. Keep the windshield, headlamps, and FCA sensors clean and in good repair.

Collision Alert

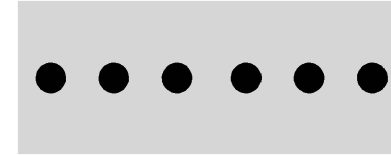

When your vehicle approaches another detected vehicle too rapidly, the red lights will flash on the windshield. Also, eight rapid high-pitched beeps will sound from the front. When this Collision Alert occurs, the brake system may prepare for driver braking to occur more rapidly which can cause a brief, mild deceleration. Continue to apply the brake pedal as needed. Cruise control may be disengaged when the Collision Alert occurs.

Tailgating Alert

The vehicle ahead indicator will display amber when you are following a detected vehicle ahead much too closely.

Selecting the Alert Timing

The Collision Alert control is on the steering wheel. Press to set the FCA timing to Far, Medium, Near, or Off. The first button press shows the current setting on the DIC. Additional button presses will change this setting. The chosen setting will remain until it is changed and will affect the timing of both the Collision Alert and the Tailgating Alert features. The timing of both alerts will vary based on vehicle speed. The faster the vehicle speed, the farther away the alert will occur. Consider traffic and weather conditions when selecting the alert timing. The range of selectable alert timing may not be appropriate for all drivers and driving conditions.

Unnecessary Alerts

FCA may provide unnecessary alerts for turning vehicles, vehicles in other lanes, objects that are not vehicles, or shadows. These alerts are normal operation and the vehicle does not need service.

Cleaning the System

If the FCA system does not seem to operate properly, this may correct the issue:

- Clean the outside of the windshield in front of the rearview mirror.
- Clean the entire front of the vehicle.
- Clean the headlamps.

Automatic Emergency Braking (AEB)

If the vehicle has Forward Collision Alert (FCA), it also has AEB, which includes Intelligent Brake Assist (IBA). When the system detects a vehicle ahead in your path that is traveling in the same direction that you may be about to crash into, it can provide a boost to braking or automatically brake the vehicle. This can help avoid or lessen the severity of crashes when driving in a forward gear. Depending on the situation, the vehicle may automatically brake moderately or hard. This automatic emergency braking can only occur if a vehicle is detected. This is shown by the FCA vehicle ahead indicator being lit. See *Forward Collision Alert (FCA) System* ⇨ *208*.

The system works when driving in a forward gear between 8 km/h (5 mph) and 80 km/h (50 mph).

⚠ Warning

AEB is an emergency crash preparation feature and is not designed to avoid crashes. Do not rely on AEB to brake the vehicle. AEB will not brake outside of its operating speed range and only responds to detected vehicles.

AEB may not:

- Detect a vehicle ahead on winding or hilly roads.
- Detect all vehicles, especially vehicles with a trailer, tractors, muddy vehicles, etc.
- Detect a vehicle when weather limits visibility, such as in fog, rain, or snow.
- Detect a vehicle ahead if it is partially blocked by pedestrians or other objects.

Complete attention is always required while driving, and you should be ready to take action and apply the brakes and/or steer the vehicle to avoid crashes.

AEB may slow the vehicle to a complete stop to try to avoid a potential crash. If this happens, AEB may engage the Electric Parking Brake (EPB) to hold the vehicle at a stop. Release the EPB or firmly press the accelerator pedal.

⚠ Warning

AEB may automatically brake the vehicle suddenly in situations where it is unexpected and undesired. It could respond to a turning vehicle ahead, guardrails, signs, and other non-moving objects. To override AEB, firmly press the accelerator pedal, if it is safe to do so.

Intelligent Brake Assist (IBA)

IBA may activate when the brake pedal is applied quickly by providing a boost to braking based on the speed of approach and distance to a vehicle ahead.

Minor brake pedal pulsations or pedal movement during this time is normal and the brake pedal should continue to be applied as needed. IBA will automatically disengage only when the brake pedal is released.

⚠ Warning

IBA may increase vehicle braking in situations when it may not be necessary. You could block the flow of traffic. If this occurs, take your foot off the brake pedal and then apply the brakes as needed.

AEB and IBA can be disabled through vehicle personalization. See “Collision/Detection Systems” under *Vehicle Personalization* ⇨ *99*.

⚠ Warning

Using AEB or IBA while towing a trailer could cause you to lose control of the vehicle and crash. Turn the system to Alert or Off when towing a trailer.

A system unavailable message may display if:

- The front of the vehicle or windshield is not clean.
- Heavy rain or snow is interfering with object detection.
- There is a problem with the StabiliTrak/ Electronic Stability Control (ESC) system.

The AEB system does not need service.

Lane Departure Warning (LDW)

If equipped, LDW may help avoid crashes due to unintentional lane departures. It may provide an alert if the vehicle is crossing a lane marking without using a turn signal in that direction. LDW uses a camera sensor to detect the lane markings at speeds of 56 km/h (35 mph) or greater. The LDW light will not alert if the turn signal is active in the direction of lane departure, or if LDW detects that you are accelerating, braking or actively steering.

⚠ Warning

The LDW system does not steer the vehicle. The LDW system may not:

- Provide enough time to avoid a crash.
- Detect lane markings under poor weather or visibility conditions. This can occur if the windshield or headlamps are blocked by dirt, snow, or ice; if they are not in proper condition; or if the sun shines directly into the camera.
- Detect road edges.
- Detect lanes on winding or hilly roads.

(Continued)

Warning (Continued)

If LDW only detects lane markings on one side of the road, it will only warn you when departing the lane on the side where it has detected a lane marking. Always keep your attention on the road and maintain proper vehicle position within the lane, or vehicle damage, injury, or death could occur. Always keep the windshield, headlamps, and camera sensors clean and in good repair. Do not use LDW in bad weather conditions.

How the System Works

The LDW camera sensor is on the windshield ahead of the rearview mirror. It is used to detect lane markings.

To turn LDW on and off, press on the center stack. The control indicator will light when LDW is on.

When LDW is on, is green if LDW is available to warn of a lane departure. If the vehicle crosses a detected lane marking without using the turn signal in that direction, changes to amber and flashes. Additionally, there will be three beeps on the right or left, depending on the lane departure direction. LDW will not alert if the turn signal is active in the direction of lane departure, or if LDW detects that you are accelerating, braking or actively steering.

Fuel

Top Tier Fuel

GM recommends the use of TOP TIER Detergent Gasoline to keep the engine clean, reduce engine deposits, and maintain optimal vehicle performance. Look for the TOP TIER Logo or see www.toptiergas.com for a list of TOP TIER Detergent Gasoline marketers and applicable countries.

Recommended Fuel

For diesel engine vehicles, see “Fuel for Diesel Engines” in the Duramax diesel supplement.

Regular unleaded gasoline meeting ASTM specification D4814 with a posted octane rating (R+M)/2 of 87 or greater is recommended. Do not use gasoline with a posted octane rating of less than 87, as this will result in reduced performance and

driveability. If heavy knocking is heard when using gasoline rated at 87 or greater, the engine needs service.

Do not use any fuel labeled E85 or FlexFuel. Do not use gasoline with ethanol levels greater than 15% by volume.

Prohibited Fuels

Caution

Do not use fuels with any of the following conditions; doing so may damage the vehicle and void its warranty:

- For vehicles that are not FlexFuel, fuel labeled greater than 15% ethanol by volume, such as mid-level ethanol blends (16–50% ethanol), E85, or FlexFuel.
- Fuel with any amount of methanol, methylal, ferrocene, and aniline. These fuels can corrode metal fuel system parts or damage plastic and rubber parts.

(Continued)

Caution (Continued)

- Fuel containing metals such as methylcyclopentadienyl manganese tricarbonyl (MMT), which can damage the emissions control system and spark plugs.
- Fuel with a posted octane rating of less than the recommended fuel. Using this fuel will lower fuel economy and performance, and may decrease the life of the emissions catalyst.

Fuels in Foreign Countries

The U.S., Canada, and Mexico post fuel octane ratings in anti-knock index (AKI). For fuel not to use in a foreign country, see *Prohibited Fuels* ⇨ *213*.

Fuel Additives

TOP TIER Detergent Gasoline is highly recommended for use with your vehicle. If your country does not have TOP TIER Detergent Gasoline, add ACDelco Fuel System Treatment Plus-Gasoline to the vehicle's gasoline fuel tank at every oil change or 15 000 km (9,000 mi), whichever occurs first. TOP TIER Detergent Gasoline and ACDelco Fuel System Treatment Plus-Gasoline will help keep your vehicle's engine fuel deposit free and performing optimally.

Filling the Tank

An arrow on the fuel gauge indicates which side of the vehicle the fuel door is on. See *Fuel Gauge* ⇨ *84*.

⚠ Warning

Fuel vapors and fuel fires burn violently and can cause injury or death.

Follow these guidelines to help avoid injuries to you and others:

- Read and follow all the instructions on the fuel pump island.
- Turn off the engine when refueling.
- Keep sparks, flames, and smoking materials away from fuel.
- Do not leave the fuel pump unattended.
- Avoid using electronic devices while refueling.
- Do not re-enter the vehicle while pumping fuel.

(Continued)

Warning (Continued)

- Keep children away from the fuel pump and never let children pump fuel.
- Before touching the fill nozzle, touch a metallic object to discharge static electricity from your body.
- Fuel can spray out if the fill nozzle is inserted too quickly. This spray can happen if the tank is nearly full, and is more likely in hot weather. Insert the fill nozzle slowly and wait for any hiss noise to stop before beginning to flow fuel.

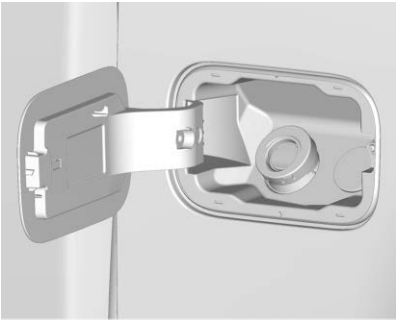

To open the fuel door, push and release the rearward center edge of the door.

The capless refueling system does not have a fuel cap. Fully insert and latch the fill nozzle, then begin fueling.

⚠ Warning

Overfilling the fuel tank by more than three clicks of a standard fill nozzle may cause:

- Vehicle performance issues, including engine stalling and damage to the fuel system.
- Fuel spills.
- Under certain conditions, fuel fires.

Be careful not to spill fuel. Wait five seconds after you have finished pumping before removing the fill nozzle. Clean fuel from painted surfaces as soon as possible. See *Exterior Care* ⇨ *301*. Push the fuel door closed.

⚠ Warning

If a fire starts while you are refueling, do not remove the fill nozzle. Shut off the flow of fuel by shutting off the pump or by notifying the station attendant. Leave the area immediately.

Filling the Tank with a Portable Fuel Container

If the vehicle runs out of fuel and must be filled from a portable fuel container:

1. Locate the capless funnel adapter.
2. Insert and latch the funnel into the capless fuel system.

⚠ Warning

Attempting to refuel from a portable fuel container without using the funnel adapter may cause fuel spillage and

(Continued)

Warning (Continued)

damage the capless fuel system. This could cause a fire. You or others could be badly burned and the vehicle could be damaged.

3. Remove and clean the funnel adapter and return it to the storage location.

Filling a Portable Fuel Container

⚠ Warning

Never fill a portable fuel container while it is in the vehicle. Static electricity discharge from the container can ignite the fuel vapor. You or others could be badly burned and the vehicle could be damaged. To help avoid injury to you and others:

- Dispense fuel only into approved containers.
- Do not fill a container while it is inside a vehicle, in a vehicle's trunk, in a pickup bed, or on any surface other than the ground.

(Continued)

Warning (Continued)

- Bring the fill nozzle in contact with the inside of the fill opening before operating the nozzle. Maintain contact until filling is complete.
- Keep sparks, flames, and smoking materials away from fuel.
- Avoid using electronic devices while pumping fuel.
- When transporting a fuel container or other material that can catch fire in the truck bed, secure the container to prevent spills.

Trailer Towing

General Towing Information

Only use towing equipment that has been designed for the vehicle. Contact your dealer or trailering dealer for assistance with preparing the vehicle to tow a trailer. Read the entire section before towing a trailer.

To tow a disabled vehicle, see *Towing the Vehicle* ⇨ *297*. To tow the vehicle behind another vehicle such as a motor home, see *Recreational Vehicle Towing* ⇨ *298*.

Driving Characteristics and Towing Tips

⚠ Warning

You can lose control when towing a trailer if the correct equipment is not used or the vehicle is not driven properly. For example, if the trailer is too heavy or the trailer brakes are inadequate for the load, the vehicle may not stop as expected. You and others could be seriously injured. The vehicle may also be damaged, and the repairs would not be covered by the vehicle warranty. Pull a trailer only if all the steps in this section have been followed. Ask your dealer for advice and information about towing a trailer with the vehicle.

Driving with a Trailer

Trailering is different than just driving the vehicle by itself. Trailering means changes in handling, acceleration, braking, durability, and fuel economy. Successful, safe trailering takes correct equipment, and it has to be used properly.

The following information has many time-tested, important trailering tips and safety rules. Many of these are important for your safety and that of your passengers. Read this section carefully before pulling a trailer.

When towing a trailer:

- Become familiar with and follow all state and local laws that apply to trailer towing. These requirements vary from state to state.
- State laws may require the use of extended side view mirrors. Even if not required, you should install extended side view mirrors if your visibility is limited or restricted while towing.
- Do not tow a trailer during the first 800 km (500 mi) of vehicle use to prevent damage to the engine, axle, or other parts.
- It is recommended to perform the first oil change before heavy towing.
- During the first 800 km (500 mi) of trailer towing, do not drive over 80 km/h (50 mph) and do not make starts at full throttle.
- Vehicles can tow in D (Drive). Tow/Haul Mode is recommended for heavier trailers. See *Tow/Haul Mode* ⇨ *194*. If the transmission downshifts too often, a lower gear may be selected using Manual Mode. See *Manual Mode* ⇨ *192*.

If equipped, the following driver assistance features should be turned off when towing a trailer:

- Adaptive Cruise Control (ACC)
- Super Cruise Control
- Lane Keep Assist (LKA)
- Park Assist
- Reverse Automatic Braking (RAB)

If equipped, the following driver assistance features should be turned to alert or off when towing a trailer:

- Automatic Emergency Braking (AEB)
- Intelligent Brake Assist (IBA)
- Front Pedestrian Braking (FPB)

If equipped with Lane Change Alert (LCA), the LCA detection zones that extend back from the side of the vehicle do not move further back when a trailer is towed. Use caution while changing lanes when towing a trailer.

If equipped with Rear Cross Traffic Alert (RCTA), use caution while backing up when towing a trailer, as the RCTA detection zones that extend out from the back of the vehicle do not move further back when a trailer is towed.

⚠ Warning

To prevent serious injury or death from carbon monoxide (CO), when towing a trailer:

- Do not drive with the liftgate, trunk/hatch, or rear-most window open.
- Fully open the air outlets on or under the instrument panel.
- Adjust the climate control system to a setting that brings in only outside air. See “Climate Control Systems” in the Index.

For more information about carbon monoxide, see *Engine Exhaust* ⇨ *189*.

Towing a trailer requires experience. The combination of the vehicle and trailer is longer and not as responsive as the vehicle itself. Get used to the handling and braking of the combination by driving on a level road surface before driving on public roads.

The trailer structure, the tires, and the brakes must all be rated to carry the intended cargo. Inadequate trailer equipment can cause the combination to operate in an unexpected or unsafe manner. Before driving, inspect all trailer hitch parts and attachments, safety chains, electrical connectors, lamps, tires, and mirrors. See *Towing Equipment* ⇨ *223*. If the trailer has electric brakes, start the combination moving and then manually apply the trailer brake controller to check the trailer brakes work. During the trip, occasionally check that the cargo and trailer are secure and that the lamps and any trailer brakes are working.

Towing with a Stability Control System

When towing, the stability control system might be heard. The system reacts to vehicle movement caused by the trailer, which mainly occurs during cornering. This is normal when towing heavier trailers.

Following Distance

Stay at least twice as far behind the vehicle ahead as you would when driving without a trailer. This can help to avoid heavy braking and sudden turns.

Passing

More passing distance is needed when towing a trailer. The combination of the vehicle and trailer will not accelerate as quickly and is much longer than the vehicle alone. It is necessary to go much farther beyond the passed vehicle before returning to the lane. Pass on level roadways. Avoid passing on hills if possible.

Backing Up

Hold the bottom of the steering wheel with one hand. To move the trailer to the left, move that hand to the left. To move the trailer to the right, move that hand to the right. Always back up slowly and, if possible, have someone guide you.

Making Turns

Caution
Turn more slowly and make wider arcs when towing a trailer to prevent damage to your vehicle. Making very sharp turns could cause the trailer to contact the vehicle.

Make wider turns than normal when towing, so trailer will not go over soft shoulders, over curbs, or strike road signs, trees, or other objects. Always signal turns well in advance. Do not steer or brake suddenly.

Driving on Grades

Reduce speed and shift to a lower gear before starting down a long or steep downhill grade. If the transmission is not shifted down, the brakes may overheat and result in reduced braking efficiency.

The vehicle can tow in D (Drive). Shift the transmission to a lower gear if the transmission shifts too often under heavy loads and/or hilly conditions.

When towing at higher altitudes, engine coolant will boil at a lower temperature than at lower altitudes. If the engine is turned off immediately after towing at high altitude on steep uphill grades, the vehicle could show signs similar to engine overheating. To avoid this, let the engine run, preferably on level ground, with the transmission in P (Park) for a few minutes before turning the engine off. If the overheat warning comes on, see *Engine Overheating* ⇨ *246*.

Parking on Hills

⚠ Warning

To prevent serious injury or death, always park your vehicle and trailer on a level surface when possible.

When parking your vehicle and your trailer on a hill:

1. Press the brake pedal, but do not shift into P (Park) yet. Turn the wheels into the curb if facing downhill or into traffic if facing uphill.
2. Have someone place chocks under the trailer wheels.
3. When the wheel chocks are in place, gradually release the brake pedal to allow the chocks to absorb the load of the trailer.
4. Reapply the brake pedal. Then apply the parking brake and shift into P (Park).
5. Release the brake pedal.

Leaving After Parking on a Hill

1. Apply and hold the brake pedal.
   - Start the engine.
   - Shift into a gear.
   - Release the parking brake.
2. Let up on the brake pedal.
3. Drive slowly until the trailer is clear of the chocks.
4. Stop and have someone pick up and store the chocks.

Launching and Retrieving a Boat

Backing the Trailer into the Water

⚠ Warning

- Have all passengers get out of the vehicle before backing onto the sloped part of the ramp. Lower the driver and passenger side windows before backing onto the ramp. This will provide a means of escape in the unlikely event the vehicle slides into the water.
- If the boat launch surface is slippery, have the driver remain in the vehicle with the brake pedal applied while the boat is being launched. The boat launch can be especially slippery at low tide when part of the ramp was previously submerged at high tide. Do not back onto the ramp to launch the boat if you are not sure the vehicle can maintain traction.

(Continued)

Warning (Continued)

- Do not move the vehicle if someone is in the path of the trailer. Some parts of the trailer might be underwater and not visible to people who are assisting in launching the boat.

Disconnect the wiring to the trailer before backing the trailer into the water to prevent damage to the electrical circuits on the trailer. Reconnect the wiring to the trailer after removing the trailer from the water. If the trailer has electric brakes that can function when the trailer is submerged, it might help to leave the electrical trailer connector attached to maintain trailer brake functionality while on the boat ramp.

To back the trailer into the water:

1. If equipped, place the vehicle in four-wheel-drive high.
2. Slowly back down the boat ramp until the boat is floating, but no further than necessary.
3. Press and hold the brake pedal, but do not shift into P (Park) yet.
4. Have someone place chocks under the front wheels of the vehicle.

5. Gradually release the brake pedal to allow the chocks to absorb the load of the trailer.
6. Reapply the brake pedal. Then apply the parking brake and shift into P (Park).
7. Release the brake pedal.

Pulling the Trailer from the Water

To pull the trailer of the water:

1. Press and hold the brake pedals.
2. Start the engine and shift into gear.
3. Release the parking brake.
4. Let up on the brake pedal.
5. Drive slowly until the tires are clear of the chocks.
6. Stop and have someone pick up and store the chocks.
7. Slowly pull the trailer from the water.
8. Once the vehicle and trailer have been driven from the sloped part of the boat ramp, the vehicle can be shifted from four-wheel-drive high. Shift into the drive mode that is appropriate for the road conditions.

Caution

If the vehicle tires begin to spin and the vehicle begins to slide toward the water, remove your foot from the accelerator pedal and apply the brake pedal. Seek help to have the vehicle towed up the ramp.

Maintenance when Trailer Towing

The vehicle needs service more often when used to tow trailers. See *Maintenance Schedule* ⇨ *311*. It is especially important to check the automatic transmission fluid, engine oil, axle lubricant, belts, cooling system, and brake system before and during each trip.

Check periodically to see that all nuts and bolts on the trailer hitch are tight.

Engine Cooling When Trailer Towing

The cooling system may temporarily overheat during severe operating conditions. See *Engine Overheating* ⇨ *246*.

Trailer Towing

If equipped with a diesel engine, see the Duramax diesel supplement.

Caution

Towing a trailer improperly can damage the vehicle and result in costly repairs not covered by the vehicle warranty. To tow a trailer correctly, follow the directions in this section and see your dealer for important information about towing a trailer with the vehicle.

Trailering is different than just driving the vehicle by itself. Trailering means changes in handling, acceleration, braking, durability, and fuel economy. Successful, safe trailering takes correct equipment, and it has to be used properly.

The following information has many time-tested, important trailering tips and safety rules. Many of these are important for your safety and that of your passengers. Read this section carefully before pulling a trailer.

Trailer Weight

⚠ Warning

Never exceed the towing capacity for your vehicle.

Safe trailering requires monitoring the weight, speed, altitude, road grades, outside temperature, and how frequently the vehicle is used to tow a trailer.

Trailer Weight Ratings

When towing a trailer, the combined weight of the vehicle, vehicle contents, trailer, and trailer contents must be below all of the maximum weight ratings for the vehicle, including:

- GCWR: Gross Combined Weight Rating
- GVWR: Gross Vehicle Weight Rating
- Maximum Trailer Weight Rating
- GAWR-RR: Gross Axle Weight Rating-Rear
- Maximum Trailer Tongue Weight Rating

See “Weight-Distributing Hitch Adjustment” under *Towing Equipment* ⇨ *223* to determine if equalizer bars are required to obtain the maximum trailer weight rating.

See “Trailer Brakes” under *Towing Equipment* ⇨ *223* to determine if brakes are required based on your trailer's weight.

The only way to be sure the weight is not exceeding any of these ratings is to weigh the tow vehicle and trailer combination, fully loaded for the trip, getting individual weights for each of these items.

⚠ Warning

You and others could be seriously injured or killed if the trailer is too heavy or the trailer brakes are inadequate for the load. The vehicle may be damaged, and the repairs would not be covered by the vehicle warranty.

Only tow a trailer if all the steps in this section have been followed. Ask your dealer for advice and information about towing a trailer.

Gross Combined Weight Rating (GCWR)

GCWR is the total allowable weight of the completely loaded vehicle and trailer including any fuel, passengers, cargo, equipment, and accessories. Do not exceed the GCWR for your vehicle. The GCWR for the vehicle is on the Tow Rating Chart following.

To check that the weight of the vehicle and trailer are within the GCWR for the vehicle, follow these steps:

1. Start with the "curb weight" from the Trailering Information Label.
2. Add the weight of the trailer loaded with cargo and ready for the trip.
3. Add the weight of all passengers.
4. Add the weight of all cargo in the vehicle.
5. Add the weight of hitch hardware such as a draw bar, ball, load equalizer bars, or sway bars.
6. Add the weight of any accessories or aftermarket equipment added to the vehicle.

The resulting weight cannot exceed the GCWR for the vehicle.

The gross combined weight can also be confirmed by weighing the truck and trailer on a public scale. The truck and trailer should be loaded for the trip with passengers and cargo.

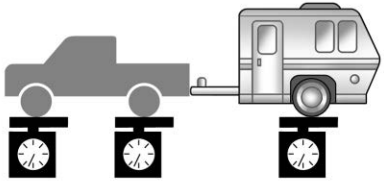

Gross Vehicle Weight Rating (GVWR)

For information about the vehicle's maximum load capacity, see *Vehicle Load Limits* ⇨ *178*. When calculating the GVWR with a trailer attached, the trailer tongue weight must be included as part of the weight the vehicle is carrying.

Maximum Trailer Weight

The maximum trailer weight rating is calculated assuming the tow vehicle has a driver, a front seat passenger, and all required trailering equipment. This value represents the heaviest trailer the vehicle can tow, but it may be necessary to reduce the trailer weight to stay within the GCWR, GVWR, maximum trailer tongue load, or GAWR-RR for the vehicle.

Use the tow rating chart to determine how much the trailer can weigh, based on the vehicle model, powertrain and trailering options.

Weights listed apply for conventional trailers unless otherwise noted.

SAE J2807 Compliant			
Engine	Axle Ratio	Maximum Trailer Weight	GCWR (a)
2.5L L4	4.10	1 587 kg (3,500 lb)	3 856 kg (8,500 lb)
3.6L V6 *	3.42	3 175 kg (7,000 lb)	5 443 kg (12,000 lb)
(a) The Gross Combination Weight Rating (GCWR) is the total allowable weight of the completely loaded vehicle and trailer including any passengers, cargo, equipment, and conversions. The GCWR for the vehicle should not be exceeded. (*) Valid only for vehicles with Z82 trailering package. If the vehicle has a bumper mounted hitch then the maximum trailer weight is limited to 1 587 kg (3,500 lb) and GCWR is limited to 3 856 kg (8,500 lb).			

A step bumper trailer hitch can only support a total trailer weight up to 2,271 kg (5,000 lb). If a trailer hitch ball is added to the step bumper, check the hitch ball rating to be sure it is higher than the total trailer weight.

Maximum Trailer Tongue Weight Rating

The Maximum Trailer Tongue Weight Rating is the allowable trailer tongue weight that the vehicle can support using a conventional trailer hitch. It may be necessary to reduce the overall trailer weight to stay within the maximum trailer tongue weight rating while still maintaining the correct trailer load balance.

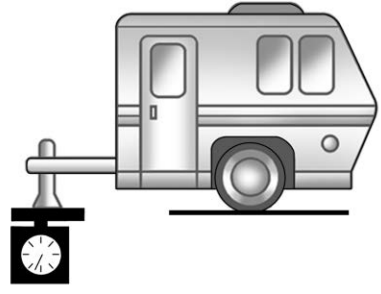

Do not exceed a maximum trailer tongue weight of 349 (770 lb).

The trailer tongue weight contributes to the Gross Vehicle Weight (GVW). GVW includes the curb weight of your vehicle, any passengers, cargo, equipment, and the trailer tongue weight. Vehicle options, passengers, cargo, and equipment reduce the maximum allowable tongue weight the vehicle can carry, which also reduces the maximum allowable trailer weight.

Trailer Load Balance

The correct trailer load balance must be maintained to ensure trailer stability. Incorrect load balance is a leading cause of trailer sway.

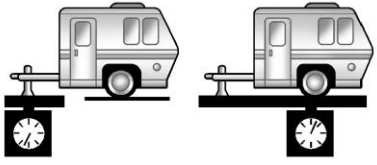

1 2

The trailer tongue weight (1) should be 10–15% of the total loaded trailer weight (2). Some specific trailer types, such as boat trailers, fall outside of this range. Always refer to the trailer owner's manual for the recommended trailer tongue weight for each trailer. Never exceed the maximum loads for the vehicle, hitch and trailer.

After loading the trailer, separately weigh the trailer and then the trailer tongue and calculate the trailer load balance percentage to see if the weights and distribution are appropriate for your vehicle. If the trailer weight is too high, it may be possible to transfer some of the cargo into your vehicle. If the trailer tongue weight is too high or too low, it may be possible to rearrange some of the cargo inside of the trailer.

Do not exceed the maximum allowable tongue weight for your vehicle. Use the shortest hitch extension available to position the hitch ball closer to your vehicle. This will help reduce the effect of the trailer tongue weight on the trailer hitch and the rear axle.

If a cargo carrier is used in the trailer hitch receiver, choose a carrier that positions the load as close to the vehicle as possible. Make sure the total weight, including the carrier, is no more than half of the maximum allowable tongue weight for the vehicle or 227 kg (500 lb), whichever is less.

Rear Gross Axle Weight Rating (GAWR-RR)

The GAWR-RR is the total weight that can be supported by the rear axle of the vehicle. Do not exceed the GAWR-RR for the vehicle, with the tow vehicle and trailer fully loaded for the trip including the weight of the trailer tongue. If using a weight-distributing hitch, do not exceed the GAWR-RR before applying the weight distribution spring bars.

Ask your dealer for trailering information or assistance.

Towing Equipment

Hitches

Always use the correct hitch equipment for your vehicle. Crosswinds, large trucks going by, and rough roads can affect the trailer and the hitch.

Proper hitch equipment for your vehicle helps maintain control of the vehicle-trailer combination. Many trailers can be towed using a weight-carrying hitch which has a coupler latched to the hitch ball, or a tow

eye latched to a pintle hook. Other trailers may require a weight-distributing hitch that uses spring bars to distribute the trailer tongue weight between your vehicle and trailer axles. See “Maximum Trailer Tongue Weight” under *Trailer Towing* ⇨ *219* for weight limits with various hitch types.

Avoid sharp turns when using a step-bumper hitch to prevent damage. Make wider turns to prevent contact between your trailer and your bumper.

Consider using mechanical sway controls with any trailer. Ask a trailering professional about sway controls or refer to the trailer manufacturer's recommendations and instructions.

Weight-Distributing Hitch and Adjustment

A weight-distributing hitch may be useful with some trailers.

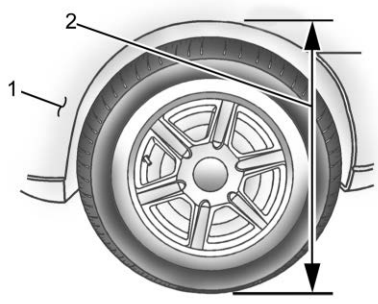

1. Front of Vehicle
2. Body to Ground Distance

When using a weight-distributing hitch, measure the front fender height distance (2) before connecting the trailer. Adjust the spring bars until the front fender height distance (2) is the same height before the trailer was connected. Do not reduce the front fender height below the initial distance (2).

Tires

- Do not tow a trailer while using a compact spare tire on the vehicle.
- Tires must be properly inflated to support loads while towing a trailer. See *Tires* ⇨ *267* for instructions on proper tire inflation.

Safety Chains

Always attach chains between the vehicle and the trailer, and attach the chains to the holes on the trailer hitch platform. Instructions about safety chains may be provided by the hitch manufacturer or by the trailer manufacturer.

Cross the safety chains under the tongue of the trailer to help prevent the tongue from contacting the road if it becomes separated from the hitch. Always leave just enough slack so the combination can turn. Never allow safety chains to drag on the ground.

Trailer Brakes

Loaded trailers over 900 kg (2,000 lb) must be equipped with brake systems and with brakes for each axle. Trailer braking equipment conforming to Canadian Standards Association (CSA) requirement CAN3-D313, or its equivalent, is recommended.

State or local regulations may require trailers to have their own braking system if the loaded weight of the trailer exceeds certain minimums that can vary from state to state. Read and follow the instructions for the trailer brakes so they are installed, adjusted, and maintained properly. Never attempt to tap into your vehicle's hydraulic brake system. If you do, both the vehicle anti-lock brakes and the trailer brakes may not function, which could result in a crash.

Trailer Wiring Harness

For vehicles not equipped with heavy-duty trailering, a harness is secured underneath the left side of the vehicle, next to the spare tire. The harness requires the installation of a trailer connector, which is available through your dealer. The seven-wire harness contains the following trailer circuits:

- Yellow: Left stop/turn signal
- Green: Right stop/turn signal
- Brown: Taillamps/parking lamps
- Black: Ground
- Gray: Back-up lamps
- Orange: Battery feed
- Blue: Trailer brake

To help charge a remote (non-vehicle) battery, press the Tow/Haul Mode button on the center stack. If the trailer is too light for Tow/Haul Mode, turn on the headlamps to help charge the battery.

Trailer Brake Control Wiring Harness

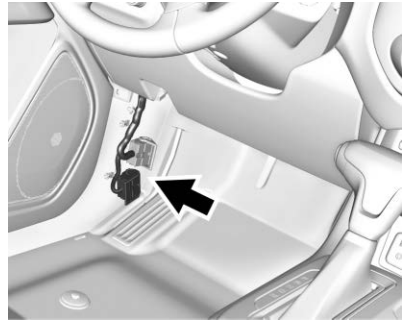

A four-wire harness, without connector, is secured behind the left side kick panel. The harness contains the following circuits:

- Red/Green: Battery feed
- Black: Ground
- White/Blue: Brake signal to controller
- Blue: Trailer Brake power to trailer connector

To remove the left side kick panel, start at the front of the panel pulling toward the rear of the vehicle and lift upward to disengage the integral clips.

Turn Signals When Towing a Trailer

When properly connected, the trailer turn signals will illuminate to indicate the vehicle is turning, changing lanes, or stopping. When towing a trailer, the arrows on the instrument cluster will illuminate even if the trailer is not properly connected or the bulbs are burned out.

Tow/Haul Mode

For instructions on how to enter Tow/Haul Mode, see *Tow/Haul Mode* ⇨ *194*.

Tow/Haul assists when pulling a heavy trailer or a large or heavy load.

Tow/Haul Mode is designed to be most effective when the vehicle and trailer combined weight is at least 75% of the vehicle's Gross Combined Weight Rating (GCWR). See “Weight of the Trailer” under *Trailer Towing* ⇨ *219*.

Tow/Haul Mode is most useful when towing a heavy trailer or carrying a large or heavy load:

- through rolling terrain.

- in stop-and-go traffic.
- in busy parking lots.

Operating the vehicle in Tow/Haul Mode when lightly loaded or not towing will not cause damage; however, it is not recommended and may result in unpleasant engine and transmission driving characteristics and reduced fuel economy.

Integrated Trailer Brake Control System

The vehicle may have an Integrated Trailer Brake Control (ITBC) system for use with electric trailer brakes or most electric over hydraulic trailer brake systems. These instructions apply to both types of electric trailer brakes.

This symbol is on the Trailer Brake Control Panel on vehicles with an ITBC system. The power output to the trailer brakes is proportional to the amount of vehicle braking. This available power output to the trailer brakes can be adjusted to a wide range of trailering situations.

The ITBC system is integrated with the vehicle's brake, antilock brake, and StabiliTrak/Electronic Stability Control (ESC) systems. In trailering conditions that cause the vehicle's antilock brake or StabiliTrak/ESC systems to activate, power sent to the trailer's brakes will be automatically adjusted to minimize trailer wheel lock-up. This does not imply that the trailer has StabiliTrak/ESC.

If the vehicle's brake, anti-lock brake, or StabiliTrak/ESC systems are not functioning properly, the ITBC system may not function fully or at all. Make sure all of these systems are fully operational to allow the ITBC system to function properly.

The ITBC system is powered through the vehicle's electrical system. Turning the ignition off will also turn off the ITBC system. The ITBC system is fully functional only when the ignition is in ON/RUN.

⚠ Warning

Connecting a trailer that has an air brake system may result in reduced or complete loss of trailer braking, including increased stopping distance or trailer instability which could result in serious

(Continued)

Warning (Continued)

injury, death, or property damage. Only use the ITBC system with electric or electric over hydraulic trailer brake systems.

Trailer Brake Control Panel

1. Manual Trailer Brake Apply Lever
2. Integrated Trailer Brake Control (ITBC)
3. Trailer Gain Adjustment Buttons

The ITBC control panel is on the instrument panel to the left of the steering column. The control panel allows adjustment to the amount of output, referred to as Trailer Gain, available to the trailer brakes and

allows manual application of the trailer brakes. Use the ITBC control panel and the DIC trailer brake display page to adjust and display power output to the trailer brakes.

Trailer Brake DIC Display Page

The ITBC display page indicates:

- Trailer Gain setting
- Output to the trailer brakes
- Trailer connection
- System operational status

To display:

- Scroll through the DIC menu pages
- Press a Trailer Gain (+) or (–) button
- Activate the Manual Trailer Brake Apply Lever

TRAILER GAIN: Press a Trailer Gain button to recall the current Trailer Gain setting. Each press and release of the gain buttons will then change the Trailer Gain setting. Press the Trailer Gain (+) or (–) to adjust. Press and hold to continuously adjust the Trailer Gain. To turn the output to the trailer off, adjust the Trailer Gain setting to 0.0. This setting can be adjusted from 0.0 to 10.0 with a trailer connected or disconnected.

TRAILER OUTPUT: This displays anytime a trailer with electric brakes is connected. Output to the trailer brakes is based on the amount of vehicle braking present and relative to the Trailer Gain setting. Output is displayed from 0 to 100% for each gain setting.

The Trailer Output will indicate "- - - - - -" on the Trailer Brake Display Page whenever the following occur:

- No trailer is connected.
- A trailer without electric brakes is connected, no DIC message displays.
- A trailer with electric brakes has become disconnected, a CHECK TRAILER WIRING message displays on the DIC.
- There is a fault present in the wiring to the trailer brakes, a CHECK TRAILER WIRING message displays on the DIC.
- The ITBC system is not working due to a fault, a SERVICE TRAILER BRAKE SYSTEM message displays in the DIC.

Manual Trailer Brake Apply Lever

Slide this lever right to apply the trailer's electric brakes independent of the vehicle's brakes. Use this lever to adjust Trailer Gain to achieve proper power output to the trailer brakes. The trailer's and the vehicle's brake lamps will come on when either vehicle brakes or manual trailer brakes are applied and properly connected.

Trailer Gain Adjustment Procedure

Trailer Gain should be set for a specific trailering condition and it must be readjusted anytime vehicle loading, trailer loading, or road surface conditions change.

⚠ Warning

Trailer brakes that are over-gained or under-gained may not stop the vehicle and the trailer as intended and can result in a crash. Always follow the instructions to set the Trailer Gain for the proper trailer stopping performance.

To adjust Trailer Gain for each towing condition:

1. Drive the vehicle with the trailer attached on a level road surface representative of the towing condition and free of traffic at about 32–40 km/h (20–25 mph) and fully apply the Manual Trailer Brake Apply Lever.

   Adjusting Trailer Gain at speeds lower than 32–40 km/h (20–25 mph) may result in an incorrect gain setting.

2. Adjust the Trailer Gain, using the Trailer Gain (+) or (-) adjustment buttons, to just below the point of trailer wheel lock-up, indicated by trailer wheel squeal or tire smoke when a trailer wheel locks.

   Trailer wheel lock-up may not occur if towing a heavily loaded trailer. Adjust the Trailer Gain to the highest allowable setting for the towing condition.
3. Readjust Trailer Gain anytime vehicle loading, trailer loading, or road surface conditions change or if trailer wheel lock-up is noticed at any time while towing.

Other ITBC-Related DIC Messages

TRAILER CONNECTED: This message will briefly display when a trailer with electric brakes is first connected to the vehicle. This message will automatically turn off in about 10 seconds. This message can be acknowledged before it automatically turns off.

CHECK TRAILER WIRING: This message will display if:

- The ITBC system first determines connection to a trailer with electric brakes and then the trailer harness becomes disconnected from the vehicle.

  If the disconnect occurs while the vehicle is stationary, this message will automatically turn off in about 30 seconds. This message will also turn off if it is acknowledged or if the trailer harness is reconnected.

  If the disconnect occurs while the vehicle is moving, this message will continue until the ignition is turned off. This message will also turn off if it is acknowledged or if the trailer harness is reconnected.
- There is an electrical fault in the wiring to the trailer brakes. This message will continue as long as there is an electrical fault in the trailer wiring. This message will also turn off if it is acknowledged.

To determine whether the electrical fault is on the vehicle side or trailer side of the trailer wiring harness connection:

1. Disconnect the trailer wiring harness from the vehicle.
2. Turn the ignition off.
3. Wait 10 seconds, then turn the ignition back to RUN.
4. If the CHECK TRAILER WIRING message reappears, the electrical fault is on the vehicle side.

If the CHECK TRAILER WIRING message only reappears when connecting the trailer wiring harness to the vehicle, the electrical fault is on the trailer side.

SERVICE TRAILER BRAKE SYSTEM: This message will display when there is a problem with the ITBC system. If this message continues over multiple ignition cycles, have the vehicle serviced.

If either the CHECK TRAILER WIRING or SERVICE TRAILER BRAKE SYSTEM message displays while driving, the ITBC system may not be fully functional or may not function at all. When traffic conditions allow, carefully pull the vehicle over to the side of the road and turn the ignition off. Check the wiring connection to the trailer and turn the ignition back on. If either of these messages continues, either the vehicle or trailer needs service.

A GM dealer may be able to diagnose and repair problems with the trailer. However, any diagnosis and repair of the trailer is not covered under the vehicle warranty. Contact your trailer dealer for assistance with trailer repairs and trailer warranty information.

Trailer Sway Control (TSC)

Vehicles with StabiliTrak/Electronic Stability Control (ESC) have a Trailer Sway Control (TSC) feature. Trailer sway is unintended side-to-side motion of a trailer while towing. If the vehicle is towing a trailer and the TSC detects that sway is increasing, the vehicle brakes are selectively applied at each wheel, to help reduce excessive trailer sway.
If equipped with the Integrated Trailer Brake Control (ITBC) system, and the trailer has an electric brake system, StabiliTrak/ESC may also apply the trailer brakes.

If TSC is enabled, the Traction Control System (TCS)/StabiliTrak/ESC warning light will flash on the instrument cluster. Reduce vehicle speed by gradually removing your foot from the accelerator. If trailer sway continues, StabiliTrak/ESC can reduce engine torque to help slow the vehicle. TSC will not function if StabiliTrak/ESC is turned off. See *Traction Control/Electronic Stability Control* ⇨ *201*.

⚠ Warning

Trailer sway can result in a crash and in serious injury or death, even if the vehicle is equipped with TSC.

If the trailer begins to sway, reduce vehicle speed by gradually removing your foot from the accelerator. Then pull over to check the trailer and vehicle to help correct possible causes, including an improperly or overloaded trailer, unrestrained cargo, improper trailer hitch configuration, or improperly inflated or incorrect vehicle or trailer tires. See *Towing Equipment* ⇨ *223* for trailer ratings and hitch setup recommendations.

Aftermarket Electronic Trailer Sway Control Devices

Some trailers may come equipped with an electronic device designed to reduce or control trailer sway. Aftermarket equipment manufacturers also offer similar devices that connect to the wiring between the trailer and the vehicle. These devices may interfere with the vehicle's trailer brake or other systems, including integrated anti-sway systems, if equipped. Messages related to trailer connections or trailer brakes could appear on the DIC. The effects of these aftermarket devices may have on vehicle handling or trailer brake performance is not known.

⚠ Warning

Use of aftermarket electronic trailer sway control devices could result in reduced trailer brake performance, loss of trailer brakes, or other malfunctions, and result in a crash. You or others could be seriously injured or killed. Before using one of these devices:

(Continued)

Warning (Continued)

- Ask the device or trailer manufacturer if the device has been thoroughly tested for compatibility with the make, model, and year of your vehicle and any optional equipment installed on your vehicle.
- Before driving, check the trailer brakes are working properly, if equipped. Drive the vehicle with the trailer attached on a level road surface that is free of traffic at about 32-40 km/h (20-25 mph) and fully apply the manual trailer brake apply lever. Also, check the trailer brake lamps and other lamps are functioning correctly.
- If the trailer brakes are not operating properly at any time, or if a DIC message indicates problems with the trailer connections or trailer brakes, carefully pull the vehicle over to the side of the road when traffic conditions allow.

Trailer Tires

Special Trailer (ST) tires differ from vehicle tires. Trailer tires are designed with stiff sidewalls to help prevent sway and to support heavy loads. These features can make it difficult to determine if the trailer tire pressures are low only based on a visual inspection.

Always check all trailer tire pressures before each trip when the tires are cool. Low trailer tire pressure is a leading cause of trailer tire blowouts.

Trailer tires deteriorate over time. The trailer tire sidewall will show the week and year the tire was manufactured. Many trailer tire manufacturers recommend replacing tires more than six years old.

Overloading is another leading cause of trailer tire blowouts. Never load your trailer with more weight than the tires are designed to support. The load rating is located on the trailer tire sidewall.

Always know the maximum speed rating for the trailer tires before driving. This may be significantly lower than the vehicle tire speed rating. The speed rating may be on the trailer tire sidewall. If the speed rating is not shown, the default trailer tire speed rating is 105 km/h (65 mph).

Conversions and Add-Ons

Add-On Electrical Equipment

⚠ Warning

The Data Link Connector (DLC) is used for vehicle service and Emission Inspection/ Maintenance testing. See *Malfunction Indicator Lamp (Check Engine Light)* ⇨ *87*. A device connected to the DLC — such as an aftermarket fleet or driver-behavior tracking device — may interfere with vehicle systems. This could affect vehicle operation and cause a crash. Such devices may also access information stored in the vehicle's systems.

Caution

Some electrical equipment can damage the vehicle or cause components to not work and would not be covered by the vehicle warranty. Always check with your dealer before adding electrical equipment.

Add-on equipment can drain the vehicle's 12-volt battery, even if the vehicle is not operating.

The vehicle has an airbag system. Before attempting to add anything electrical to the vehicle, see *Servicing the Airbag-Equipped Vehicle* ⇨ *42* and *Adding Equipment to the Airbag-Equipped Vehicle* ⇨ *43*.

Vehicle Care

General Information
General Information 233
California Perchlorate Materials Requirements 233
Accessories and Modifications 233

Vehicle Checks
Doing Your Own Service Work 233
Hood 234
Engine Compartment Overview 235
Engine Oil 238
Engine Oil Life System 240
Automatic Transmission Fluid 241
Engine Air Cleaner/Filter 241
Cooling System 243
Engine Overheating 246
Engine Fan 247
Washer Fluid 247
Brakes 248
Brake Fluid 248
Battery - North America 249
Four-Wheel Drive 250
Front Axle 250
Rear Axle 251
Starter Switch Check 251
Automatic Transmission Shift Lock Control Function Check 251
Ignition Transmission Lock Check 252
Park Brake and P (Park) Mechanism Check 252
Wiper Blade Replacement 252
Windshield Replacement 253
Gas Strut(s) 253

Headlamp Aiming
Front Headlamp Aiming 254

Bulb Replacement
Bulb Replacement 254
Halogen Bulbs 254
Headlamps, Front Turn Signal, Sidemarker, and Parking Lamps 254
Taillamps, Turn Signal, Stoplamps, and Back-Up Lamps 255
Center High-Mounted Stoplamp (CHMSL) and Cargo Lamp 256

Electrical System
Electrical System Overload 257
Fuses and Circuit Breakers 258
Engine Compartment Fuse Block 259
Instrument Panel Fuse Block 264

Wheels and Tires
Tires 267
All-Season Tires 267
Winter Tires 268
All-Terrain Tires 268
Tire Sidewall Labeling 268
Tire Designations 270
Tire Terminology and Definitions 271
Tire Pressure 273
Tire Pressure Monitor System 274
Tire Pressure Monitor Operation 274
Tire Inspection 277
Tire Rotation 277
When It Is Time for New Tires 278
Buying New Tires 279
Different Size Tires and Wheels 280
Uniform Tire Quality Grading 281
Wheel Alignment and Tire Balance 282
Wheel Replacement 282
Tire Chains 283
If a Tire Goes Flat 283
Tire Changing 285
Compact Spare Tire 293
Full-Size Spare Tire 294

Jump Starting
Jump Starting - North America 294

Towing the Vehicle
Towing the Vehicle 297
Recreational Vehicle Towing 298

Appearance Care
Exterior Care 301
Interior Care 305
Floor Mats 308

General Information

For service and parts needs, visit your dealer. You will receive genuine GM parts and GM-trained and supported service people.

Genuine GM parts have one of these marks:

California Perchlorate Materials Requirements

Certain types of automotive applications, such as airbag initiators, seat belt pretensioners, and lithium batteries contained in electronic keys, may contain perchlorate materials. Perchlorate Material – special handling may apply. See www.dtsc.ca.gov/hazardouswaste/perchlorate.

Accessories and Modifications

Adding non-dealer accessories or making modifications to the vehicle can affect vehicle performance and safety, including such things as airbags, braking, stability, ride and handling, emissions systems, aerodynamics, durability, and electronic systems like antilock brakes, traction control, and stability control. These accessories or modifications could even cause malfunction or damage not covered by the vehicle warranty.

Damage to suspension components caused by modifying vehicle height outside of factory settings will not be covered by the vehicle warranty.

Damage to vehicle components resulting from modifications or the installation or use of non-GM certified parts, including control module or software modifications, is not covered under the terms of the vehicle warranty and may affect remaining warranty coverage for affected parts.

GM Accessories are designed to complement and function with other systems on the vehicle. See your dealer to accessorize the vehicle using genuine GM Accessories installed by a dealer technician.

Also, see *Adding Equipment to the Airbag-Equipped Vehicle* ⇨ *43*.

Vehicle Checks

Doing Your Own Service Work

⚠ Warning

It can be dangerous to work on your vehicle if you do not have the proper knowledge, service manual, tools, or parts. Always follow owner's manual procedures and consult the service manual for your vehicle before doing any service work.

If doing some of your own service work, use the proper service manual. It tells you much more about how to service the vehicle than this manual can. To order the proper service manual, see *Publication Ordering Information* ⇨ *335*.

This vehicle has an airbag system. Before attempting to do your own service work, see *Servicing the Airbag-Equipped Vehicle* ⇨ *42*.

Keep a record with all parts receipts and list the mileage and the date of any service work performed. See *Maintenance Records* ⇨ *323*.

Caution

Even small amounts of contamination can cause damage to vehicle systems. Do not allow contaminants to contact the fluids, reservoir caps, or dipsticks.

Hood

⚠ Warning

Turn the vehicle off before opening the hood. If the engine is running with the hood open, you or others could be injured.

⚠ Warning

Components under the hood can get hot from running the engine. To help avoid the risk of burning unprotected skin, never touch these components until they have cooled, and always use a glove or towel to avoid direct skin contact.

Clear any snow from the hood before opening.

To open the hood:

1. Pull the hood release lever with the symbol. It is on the lower left side of the instrument panel.

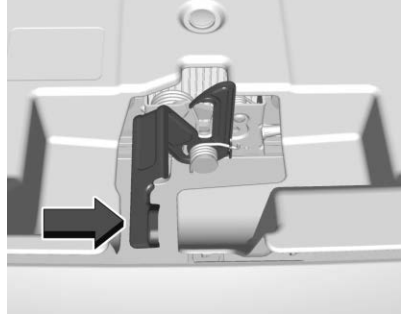

2. Go to the front of the vehicle and locate the secondary release lever under the front center of the hood. Push the secondary hood release lever to the right to release.
3. After you have partially lifted the hood, the gas strut system will automatically lift the hood and hold it in the fully open position.

To close the hood:

1. Before closing the hood, be sure all filler caps are on properly, and all tools are removed.
2. Pull the hood down until the strut system is no longer holding up the hood.
3. Allow the hood to fall. Check to make sure the hood is latched completely. Repeat this process with additional force if necessary.

⚠ Warning

Do not drive the vehicle if the hood is not latched completely. The hood could open fully, block your vision, and cause a crash. You or others could be injured. Always close the hood completely before driving.

Engine Compartment Overview

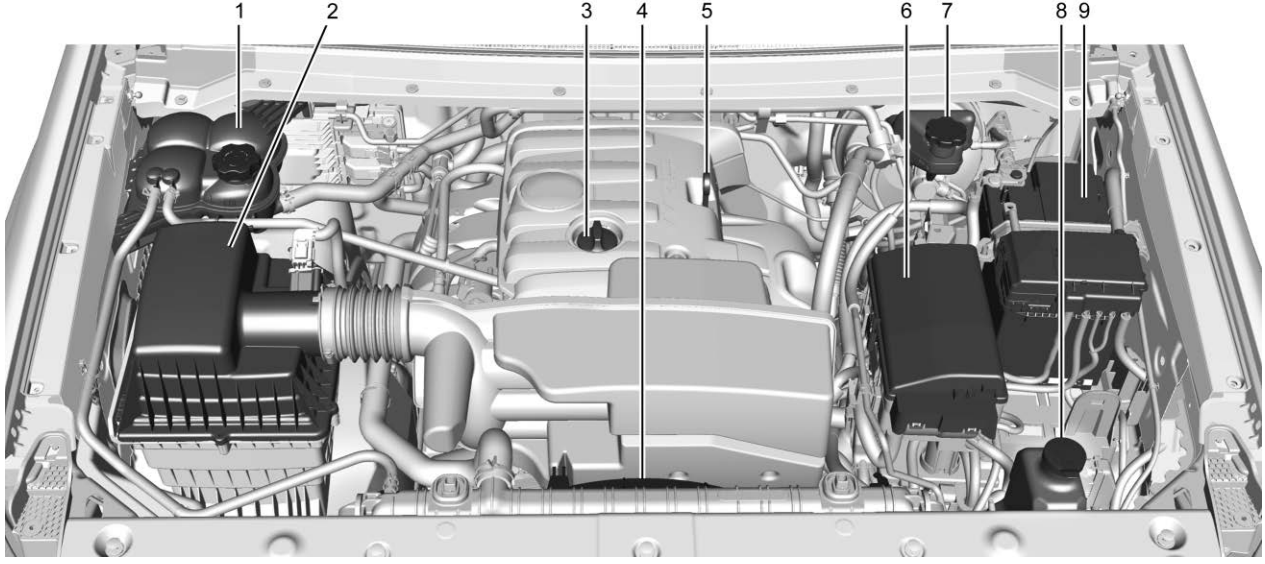

2.5L L4 Engine

1. Coolant Surge Tank and Pressure Cap. See *Cooling System* ⇨ *243*.
2. *Engine Air Cleaner/Filter* ⇨ *241*.
3. Engine Oil Fill Cap. See *Engine Oil* ⇨ *238*.
4. Engine Cooling Fan (Out of View). See *Cooling System* ⇨ *243*.
5. Engine Oil Dipstick. See *Engine Oil* ⇨ *238*.
6. *Engine Compartment Fuse Block* ⇨ *259*.
7. Brake Fluid Reservoir. See *Brake Fluid* ⇨ *248*.
8. Windshield Washer Fluid Reservoir. See *Washer Fluid* ⇨ *247*.
9. *Battery - North America* ⇨ *249*.

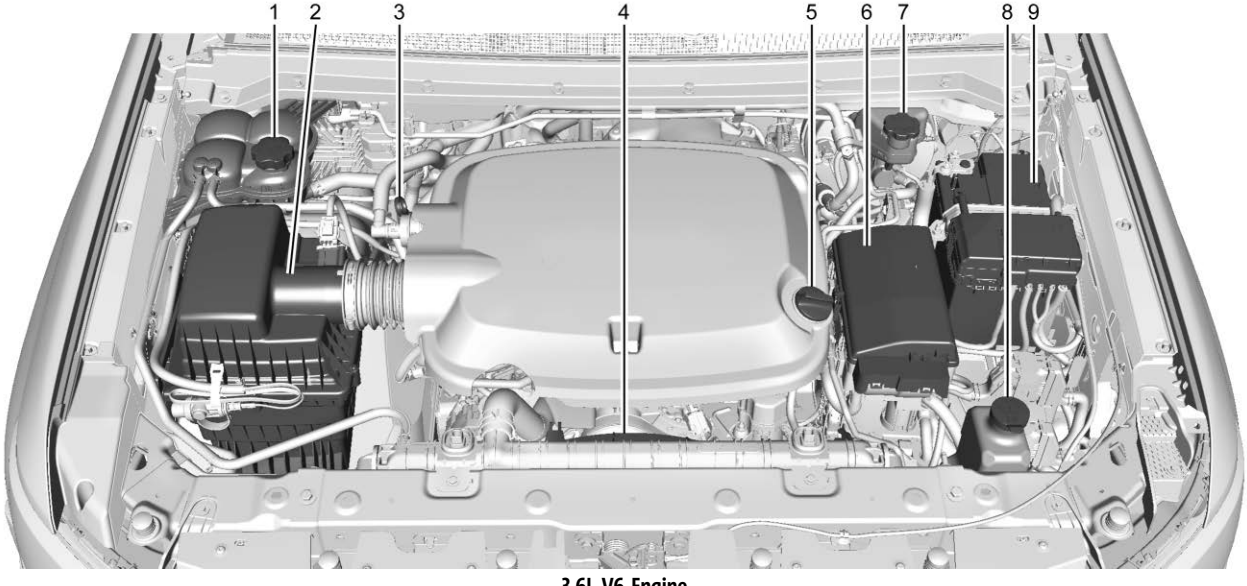

3.6L V6 Engine

1. Coolant Surge Tank and Pressure Cap. See *Cooling System* ⇨ *243*.
2. *Engine Air Cleaner/Filter* ⇨ *241*.
3. Engine Oil Dipstick. See *Engine Oil* ⇨ *238*.
4. Engine Cooling Fan (Out of View). See *Cooling System* ⇨ *243*.
5. Engine Oil Fill Cap. See *Engine Oil* ⇨ *238*.
6. *Engine Compartment Fuse Block* ⇨ *259*.
7. Brake Fluid Reservoir. See *Brake Fluid* ⇨ *248*.
8. Windshield Washer Fluid Reservoir. See *Washer Fluid* ⇨ *247*.
9. *Battery - North America* ⇨ *249*.

If the vehicle has a diesel engine, see the Duramax diesel supplement.

Engine Oil

For diesel engine vehicles, see “Engine Oil” in the Duramax diesel supplement.

To ensure proper engine performance and long life, careful attention must be paid to engine oil. Following these simple, but important steps will help protect your investment:

- Use engine oil approved to the proper specification and of the proper viscosity grade. See “Selecting the Right Engine Oil” in this section.
- Check the engine oil level regularly and maintain the proper oil level. See “Checking Engine Oil” and “When to Add Engine Oil” in this section.
- Change the engine oil at the appropriate time. See *Engine Oil Life System* ⇨ *240*.
- Always dispose of engine oil properly. See “What to Do with Used Oil” in this section.

Checking Engine Oil

Check the engine oil level regularly, every 650 km (400 mi), especially prior to a long trip. The engine oil dipstick handle is a loop. See *Engine Compartment Overview* ⇨ *235* for the location.

⚠ Warning

The engine oil dipstick handle may be hot; it could burn you. Use a towel or glove to touch the dipstick handle.

If a low oil Driver Information Center (DIC) message displays, check the oil level.

Follow these guidelines:

- To get an accurate reading, park the vehicle on level ground. Check the engine oil level after the engine has been off for at least two hours. Checking the engine oil level on steep grades or too soon after engine shutoff can result in incorrect readings. Accuracy improves when checking a cold engine prior to starting. Remove the dipstick and check the level.
- If unable to wait two hours, the engine must be off for at least 15 minutes if the engine is warm, or at least 30 minutes if the engine is not warm. Pull out the dipstick, wipe it with a clean paper towel or cloth, then push it back in all the way. Remove it again, keeping the tip down, and check the level.

When to Add Engine Oil

2.5L L4 Engine

3.6L V6 Engine

If the oil is below the cross-hatched area at the tip of the dipstick and the engine has been off for at least 15 minutes, add 1 L (1 qt) of the recommended oil and then recheck the level. See "Selecting the Right Engine Oil" later in this section for an explanation of what kind of oil to use. For engine oil crankcase capacity, see *Capacities and Specifications* ⇨ *325*.

Caution

Do not add too much oil. Oil levels above or below the acceptable operating range shown on the dipstick are harmful to the engine. If the oil level is above the operating range (i.e., the engine has so much oil that the oil level gets above the cross-hatched area that shows the proper operating range), the engine could be damaged. Drain the excess oil or limit driving of the vehicle, and seek a service professional to remove the excess oil.

See *Engine Compartment Overview* ⇨ *235* for the location of the engine oil fill cap.

Add enough oil to put the level somewhere in the proper operating range. Push the dipstick all the way back in when through.

Selecting the Right Engine Oil

Selecting the right engine oil depends on both the proper oil specification and viscosity grade. See *Recommended Fluids and Lubricants* ⇨ *320*.

Specification

Use full synthetic engine oils that meet the dexos1 specification. Engine oils that have been approved by GM as meeting the dexos1 specification are marked with the dexos1 approved logo. See www.gmdexos.com.

Caution

Failure to use the recommended engine oil or equivalent can result in engine damage not covered by the vehicle warranty.

Viscosity Grade

Use SAE 0W-20 viscosity grade engine oil for the 2.5L L4 engine.

Use SAE 5W-30 viscosity grade engine oil for the 3.6L V6 engine. Cold Temperature Operation: In an area of extreme cold, where the temperature falls below −29 °C (−20 °F), an SAE 0W-30 oil may be used. An

oil of this viscosity grade will provide easier cold starting for the engine at extremely low temperatures.

When selecting an oil of the appropriate viscosity grade, it is recommended to select an oil of the correct specification. See "Specification" earlier in this section.

Engine Oil Additives/Engine Oil Flushes

Do not add anything to the oil. The recommended oils meeting the dexos1 specification are all that is needed for good performance and engine protection.

Engine oil system flushes are not recommended and could cause engine damage not covered by the vehicle warranty.

What to Do with Used Oil

Used engine oil contains certain elements that can be unhealthy for your skin and could even cause cancer. Do not let used oil stay on your skin for very long. Clean your skin and nails with soap and water, or a good hand cleaner. Wash or properly dispose of clothing or rags containing used engine oil. See the manufacturer's warnings about the use and disposal of oil products.

Used oil can be a threat to the environment. If you change your own oil, be sure to drain all the oil from the filter before disposal. Never dispose of oil by putting it in the trash or pouring it on the ground, into sewers, or into streams or bodies of water. Recycle it by taking it to a place that collects used oil.

Engine Oil Life System

When to Change Engine Oil

This vehicle has a computer system that indicates when to change the engine oil and filter. This is based on a combination of factors which include engine revolutions, engine temperature, and miles driven. Based on driving conditions, the mileage at which an oil change is indicated can vary considerably. For the oil life system to work properly, the system must be reset every time the oil is changed.

On some vehicles, when the system has calculated that oil life has been diminished, a CHANGE ENGINE OIL SOON message comes on to indicate that an oil change is necessary. Change the oil as soon as possible within the next 1 000 km (600 mi).

It is possible that, if driving under the best conditions, the oil life system might indicate that an oil change is not necessary for up to a year. The engine oil and filter must be changed at least once a year and, at this time, the system must be reset. For vehicles without the CHANGE ENGINE OIL SOON message, an oil change is needed when the OIL LIFE REMAINING percentage is near 0%. Your dealer has trained service people who will perform this work and reset the system. It is also important to check the oil regularly over the course of an oil drain interval and keep it at the proper level.

If the system is ever reset accidentally, the oil must be changed at 5 000 km (3,000 mi) since the last oil change. Remember to reset the oil life system whenever the oil is changed.

How to Reset the Engine Oil Life System

Reset the system whenever the engine oil is changed so that the system can calculate the next engine oil change. Always reset the engine oil life to 100% after every oil change. It will not reset itself. To reset the engine oil life system:

1. Display OIL LIFE REMAINING on the DIC. See *Driver Information Center (DIC) (Base Level)* ⇨ *93* or *Driver Information Center (DIC) (Uplevel)* ⇨ *96*. If the vehicle does not have DIC buttons, the vehicle must be in P (Park) to access this display.
2. Press and hold ✓ on the DIC, or SET/CLR on the turn signal lever if the vehicle does not have DIC buttons, for several seconds. The oil life will change to 100%.

The oil life system can also be reset as follows:

1. Display OIL LIFE REMAINING on the DIC. See *Driver Information Center (DIC) (Base Level)* ⇨ *93* or *Driver Information Center (DIC) (Uplevel)* ⇨ *96*.
2. Fully press the accelerator pedal slowly three times within five seconds.

   If the display shows 100%, the system is reset.

If the vehicle has a CHANGE ENGINE OIL SOON message and it comes back on when the vehicle is started and/or the OIL LIFE REMAINING is near 0%, the engine oil life system has not been reset. Repeat the procedure.

Automatic Transmission Fluid

How to Check Automatic Transmission Fluid

It is not necessary to check the transmission fluid level. A transmission fluid leak is the only reason for fluid loss. If a leak occurs, take the vehicle to your dealer and have it repaired as soon as possible.

There is a special procedure for checking and changing the transmission fluid. Because this procedure is difficult, this should be done at your dealer. Contact your dealer for additional information.

Caution

Use of the incorrect automatic transmission fluid may damage the vehicle, and the damage may not be covered by the vehicle warranty. Always use the correct automatic transmission fluid. See *Recommended Fluids and Lubricants* ⇨ *320*.

Change the fluid and filter at the intervals listed in *Maintenance Schedule* ⇨ *311*, and be sure to use the fluid listed in *Recommended Fluids and Lubricants* ⇨ *320*.

Engine Air Cleaner/Filter

The engine air cleaner/filter is in the engine compartment on the passenger side of the vehicle. See *Engine Compartment Overview* ⇨ *235*.

When to Inspect/Replace the Engine Air Cleaner/Filter

For intervals on changing and inspecting the engine air cleaner/filter, see *Maintenance Schedule* ⇨ *311*.

How to Inspect/Replace the Engine Air Cleaner/Filter

Do not start the engine or have the engine running with the engine air cleaner/filter housing open. Before removing the engine air cleaner/filter, make sure that the engine air cleaner/filter housing and nearby components are free of dirt and debris. Remove the engine air cleaner/filter. Lightly tap and shake the engine air cleaner/filter (away from the vehicle), to release loose dust and dirt. Inspect the engine air cleaner/filter for damage, and replace if damaged. Do not clean the engine air cleaner/filter or components with water or compressed air.

To inspect or replace the air cleaner/filter:

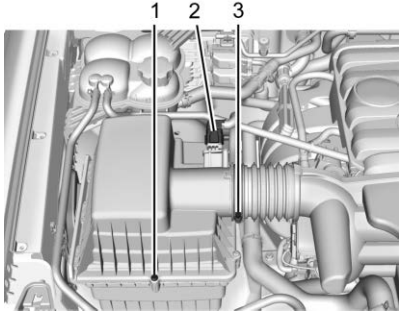

2.5L L4 Gas Engine Shown, 2.8L L4 Diesel Engine Similar

1. Screws
2. Electrical Connector
3. Air Duct Clamp

To inspect or replace the engine air cleaner/filter:

1. Remove the screws (1) on top of the engine air cleaner/filter housing.
2. Disconnect the electrical connector (2).
3. Disconnect the outlet duct by loosening the air duct clamp (3).
4. Lift the filter cover housing away from the engine air cleaner/filter housing.
5. Pull out the filter.

⚠ Warning

If part replacement is necessary, the part must be replaced with one of the same part number or with an equivalent part. Use of a replacement part without the same fit, form, and function may result in personal injury or damage to the vehicle.

6. Inspect or replace the engine air cleaner/filter.
7. Reverse Steps 2–5 to reinstall the filter cover housing.

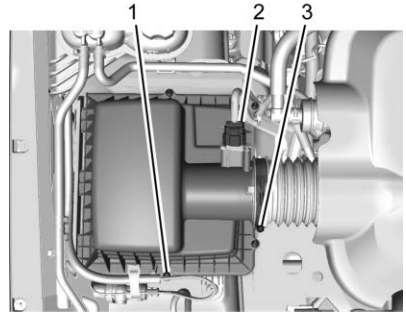

3.6L V6 Engine

1. Screws
2. Electrical Connector
3. Air Duct Clamp

To inspect or replace the engine air cleaner/filter:

1. Remove the screws (1) on top of the engine air cleaner/filter housing.
2. Disconnect the electrical connector (2).
3. Disconnect the outlet duct by loosening the air duct clamp (3).
4. Lift the filter cover housing away from the engine air cleaner/filter housing.
5. Pull out the filter.

6. Inspect or replace the engine air cleaner/filter.
7. Reverse Steps 2–5 to reinstall the filter cover housing.

⚠ Warning

Operating the engine with the air cleaner/filter off can cause you or others to be burned. Use caution when working on the engine. Do not start the engine or drive the vehicle with the air cleaner/filter off, as flames may be present if the engine backfires.

Caution

If the air cleaner/filter is off, dirt can easily get into the engine, which could damage it. Always have the air cleaner/filter in place when driving.

Cooling System

The cooling system allows the engine to maintain the correct working temperature.

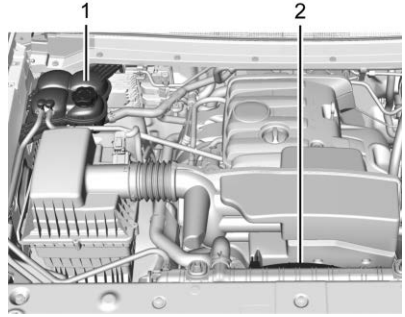

2.5L L4 Gas Engine Shown, 2.8L L4 Diesel Engine Similar

1. Coolant Surge Tank and Pressure Cap
2. Engine Cooling Fan (Out of View)

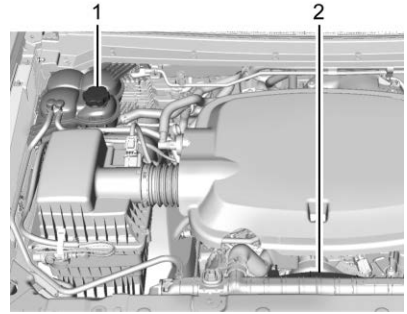

3.6L V6 Engine

1. Coolant Surge Tank and Pressure Cap
2. Engine Cooling Fan (Out of View)

⚠ Warning

An underhood electric fan can start up even when the engine is not running and can cause injury. Keep hands, clothing, and tools away from any underhood electric fan.

⚠ Warning

Do not touch heater or radiator hoses, or other engine parts. They can be very hot and can burn you. Do not run the engine if there is a leak; all coolant could leak out. That could cause an engine fire and can burn you. Fix any leak before driving the vehicle.

Engine Coolant

The cooling system in the vehicle is filled with DEX-COOL engine coolant mixture. See *Recommended Fluids and Lubricants* ⇨ *320* and *Maintenance Schedule* ⇨ *311*.

The following explains the cooling system and how to check and add coolant when it is low. If there is a problem with engine overheating, see *Engine Overheating* ⇨ *246*.

What to Use

⚠ Warning

Plain water, or other liquids such as alcohol, can boil before the proper coolant mixture will. With plain water or

(Continued)

Warning (Continued)

the wrong mixture, the engine could get too hot but there would not be an overheat warning. The engine could catch fire and you or others could be burned.

Use a 50/50 mixture of clean, drinkable water and DEX-COOL coolant. This mixture:

- Gives freezing protection down to −37 °C (−34 °F) outside temperature.
- Gives boiling protection up to 129 °C (265 °F) engine temperature.
- Protects against rust and corrosion.
- Will not damage aluminum parts.
- Helps keep the proper engine temperature.

Caution

Do not use anything other than a mix of DEX-COOL coolant that meets GM Standard GMW3420 and clean, drinkable water. Anything else can cause damage to the engine cooling system and the vehicle, which would not be covered by the vehicle warranty.

Never dispose of engine coolant by putting it in the trash, or by pouring it on the ground, or into sewers, streams or, bodies of water. Have the coolant changed by an authorized service center, familiar with legal requirements regarding used coolant disposal. This will help protect the environment and your health.

Checking Coolant

The vehicle must be on a level surface when checking the coolant level.

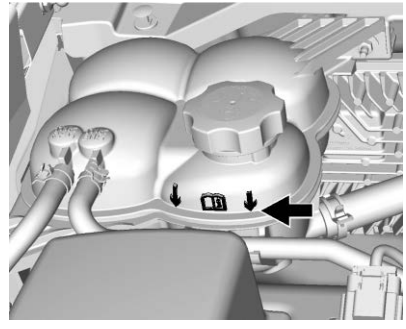

Check to see if coolant is visible in the coolant surge tank. If the coolant inside the coolant surge tank is boiling, do not do anything else until it cools down.

If coolant is visible but the coolant level is not at or above the mark pointed to, add a 50/50 mixture of clean, drinkable water and DEX-COOL coolant.

Be sure the cooling system is cool before this is done.

If no coolant is visible in the coolant surge tank, add coolant as follows:

How to Add Coolant to the Coolant Surge Tank

⚠ Warning

Spilling coolant on hot engine parts can burn you. Coolant contains ethylene glycol and it will burn if the engine parts are hot enough.

⚠ Warning

Plain water, or other liquids such as alcohol, can boil before the proper coolant mixture will. With plain water or the wrong mixture, the engine could get too hot but there would not be an overheat warning. The engine could catch fire and you or others could be burned.

⚠ Warning

Steam and scalding liquids from a hot cooling system are under pressure. Turning the pressure cap, even a little, can cause them to come out at high speed and you could be burned. Never turn the cap when the cooling system, including the pressure cap, is hot. Wait for the cooling system and pressure cap to cool.

Caution

Failure to follow the specific coolant fill procedure could cause the engine to overheat and could cause system damage. If coolant is not visible in the surge tank, contact your dealer.

The coolant surge tank pressure cap can be removed when the cooling system, including the surge tank pressure cap and upper radiator hose, is no longer hot.

1. Turn the pressure cap slowly counterclockwise. If a hiss is heard, wait for that to stop. A hiss means there is still some pressure left.
2. Keep turning the cap and remove it.

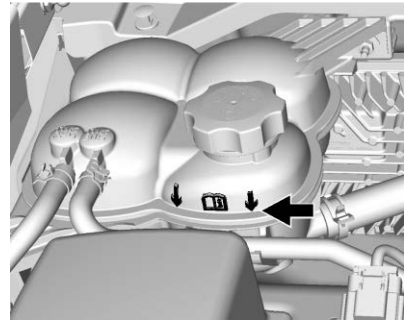

3. Fill the coolant surge tank with the proper mixture to the mark pointed to on the front of the coolant surge tank.

4. With the coolant surge tank cap off, start the engine and let it run until the upper radiator hose starts getting hot. Watch out for the engine cooling fan. By this time, the coolant level inside the coolant surge tank may be lower. If the level is lower, add more of the proper mixture to the coolant surge tank until the level reaches the mark pointed to on the front of the coolant surge tank.
5. Replace the cap tightly.
6. Verify coolant level after the engine is shut off and the coolant is cold.
   If necessary, repeat coolant fill procedure Steps 1–6.

Caution

If the pressure cap is not tightly installed, coolant loss and engine damage may occur. Be sure the cap is properly and tightly secured.

Engine Overheating

The vehicle has an engine coolant temperature gauge on the instrument cluster to warn of engine overheating. See *Engine Coolant Temperature Gauge* ⇨ *85*.

Caution

Do not run the engine if there is a leak in the engine cooling system. This can cause a loss of all coolant and can damage the system and vehicle. Have any leaks fixed right away.

If the decision is made not to lift the hood when this warning appears, get service help right away.

If the decision is made to lift the hood, make sure the vehicle is parked on a level surface.

Then check to see if the engine cooling fan is running. If the engine is overheating, the fan should be running. If it is not, do not continue to run the engine and have the vehicle serviced.

If Steam Is Coming from the Engine Compartment

⚠ Warning

Steam and scalding liquids from a hot cooling system are under pressure. Turning the pressure cap, even a little, can cause them to come out at high

(Continued)

Warning (Continued)

speed and you could be burned. Never turn the cap when the cooling system, including the pressure cap, is hot. Wait for the cooling system and pressure cap to cool.

If No Steam Is Coming from the Engine Compartment

If an engine overheat warning is displayed but no steam can be seen or heard, the problem may not be too serious. Sometimes the engine can get a little too hot when the vehicle:

- Climbs a long hill on a hot day.
- Stops after high-speed driving.
- Idles for long periods in traffic.

If the overheat warning is displayed with no sign of steam:

1. Turn the air conditioning off.
2. Turn the heater on to the highest temperature and to the highest fan speed. Open the windows as necessary.
3. When it is safe to do so, pull off the road, shift to P (Park) or N (Neutral), and let the engine idle.

If the engine coolant temperature gauge is no longer in the overheat zone, the vehicle can be driven. Continue to drive the vehicle slowly for about 10 minutes. Keep a safe distance from the vehicle in front. If the warning does not come back on, continue to drive normally and have the cooling system checked for proper fill and function.

If the warning continues, pull over, stop, and park the vehicle right away.

If there is no sign of steam, idle the engine for three minutes while parked. If the warning is still displayed, turn off the engine until it cools down.

Engine Fan

If the vehicle has a clutched engine cooling fan, when the clutch is engaged, the fan spins faster to provide more air to cool the engine. In most everyday driving conditions, the fan is spinning slower and the clutch is not fully engaged. This improves fuel economy and reduces fan noise. Under heavy vehicle loading, trailer towing, and/or high outside temperatures, the fan speed increases as the clutch more fully engages, so an increase in fan noise may be heard. This is normal and should not be mistaken as the transmission slipping or making extra shifts. It is merely the cooling system functioning properly. The fan will slow down when additional cooling is not required and the clutch disengages.

This fan noise may also be heard when starting the engine. It will go away as the fan clutch partially disengages.

If the vehicle has electric cooling fan(s), the fans may be heard spinning at low speed during most everyday driving. The fans may turn off if no cooling is required. Under heavy vehicle loading, trailer towing, high outside temperatures, or operation of the air conditioning system, the fans may change to high speed and an increase in fan noise may be heard. This is normal and indicates that the cooling system is functioning properly. The fans will change to low speed when additional cooling is no longer required.

The electric engine cooling fans may run after the engine has been turned. off. This is normal and no service is required.

Washer Fluid

What to Use

When windshield washer fluid needs to be added, be sure to read the manufacturer's instructions before use. Use a fluid that has sufficient protection against freezing in an area where the temperature may fall below freezing.

Adding Washer Fluid

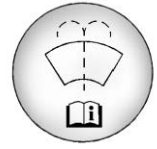

Open the cap with the washer symbol on it. Add washer fluid until the tank is full. See *Engine Compartment Overview* ⇨ *235* for reservoir location.

Caution

- Do not use washer fluid that contains any type of water repellent coating. This can cause the wiper blades to chatter or skip.

(Continued)

Caution (Continued)

- Do not use engine coolant (antifreeze) in the windshield washer. It can damage the windshield washer system and paint.
- Do not mix water with ready-to-use washer fluid. Water can cause the solution to freeze and damage the washer fluid tank and other parts of the washer system.
- When using concentrated washer fluid, follow the manufacturer instructions for adding water.
- Fill the washer fluid tank only three-quarters full when it is very cold. This allows for fluid expansion if freezing occurs, which could damage the tank if it is completely full.

Brakes

Disc brake linings have built-in wear indicators that make a high-pitched warning sound when the brake linings are worn and new linings are needed. The sound can come and go or can be heard all the time when the vehicle is moving, except when applying the brake pedal firmly.

⚠ Warning

The brake wear warning sound means that soon the brakes will not work well. That could lead to a crash. When the brake wear warning sound is heard, have the vehicle serviced.

Caution

Continuing to drive with worn-out brake linings could result in costly brake repairs.

Some driving conditions or climates can cause a brake squeal when the brakes are first applied, clearing up following several applications. This does not mean something is wrong with the brakes.

Properly torqued wheel nuts are necessary to help prevent brake pulsation. When tires are rotated, inspect brake linings for wear and evenly tighten wheel nuts in the proper sequence to torque specifications. See *Capacities and Specifications* ⇨ *325*.

Brake pads should be replaced as complete axle sets.

Brake Pedal Travel

See your dealer if the brake pedal does not return to normal height, or if there is a rapid increase in pedal travel. This could be a sign that brake service may be required.

Replacing Brake System Parts

Always replace brake system parts with new, approved replacement parts. If this is not done, the brakes may not work properly. The braking performance can change in many ways if the wrong brake parts are installed or if parts are improperly installed.

Brake Fluid

The brake master cylinder reservoir is filled with GM approved DOT 4 brake fluid as indicated on the reservoir cap. See *Engine Compartment Overview* ⇨ *235* for the location of the reservoir.

Checking Brake Fluid

With the vehicle in P (Park) on a level surface, the brake fluid level should be between the minimum and maximum marks on the brake fluid reservoir.

There are only two reasons why the brake fluid level in the reservoir may go down:

- Normal brake lining wear. When new linings are installed, the fluid level goes back up.
- A fluid leak in the brake hydraulic system. Have the brake hydraulic system fixed. With a leak, the brakes will not work well.

Always clean the brake fluid reservoir cap and the area around the cap before removing it.

Do not top off the brake fluid. Adding fluid does not correct a leak. If fluid is added when the linings are worn, there will be too much fluid when new brake linings are installed. Add or remove fluid, as necessary, only when work is done on the brake hydraulic system.

⚠ Warning

If too much brake fluid is added, it can spill on the engine and burn, if the engine is hot enough. You or others could be burned, and the vehicle could be damaged. Add brake fluid only when work is done on the brake hydraulic system.

When the brake fluid falls to a low level, the brake warning light comes on. See *Brake System Warning Light* ⇨ *88*.

Brake fluid absorbs water over time which degrades the effectiveness of the brake fluid. Replace brake fluid at the specified intervals to prevent increased stopping distance. See *Maintenance Schedule* ⇨ *311*.

What to Add

Use only GM approved DOT 4 brake fluid from a clean, sealed container. See *Recommended Fluids and Lubricants* ⇨ *320*.

⚠ Warning

The wrong or contaminated brake fluid could result in damage to the brake system. This could result in the loss of braking leading to a possible injury. Always use the proper GM approved brake fluid.

Caution

If brake fluid is spilled on the vehicle's painted surfaces, the paint finish can be damaged. Immediately wash off any painted surface.

Battery - North America

For diesel engine vehicles, see “Battery” in the Duramax diesel supplement.

The original equipment battery is maintenance free. Do not remove the cap and do not add fluid.

Refer to the replacement number shown on the original battery label when a new battery is needed. See *Engine Compartment Overview* ⇨ *235* for battery location.

⚠ Warning

WARNING: Battery posts, terminals and related accessories can expose you to chemicals including lead and lead compounds, which are known to the State of California to cause cancer and birth defects or other reproductive harm. Wash hands after handling. For more information go to www.P65Warnings.ca.gov.

See the warning on the back cover.

Vehicle Storage

⚠ Warning

Batteries have acid that can burn you and gas that can explode. You can be badly hurt if you are not careful. See *Jump Starting - North America* ⇨ *294* for tips on working around a battery without getting hurt.

Infrequent Usage: Remove the black, negative (–) cable from the battery to keep the battery from running down.

Extended Storage: Remove the black, negative (–) cable from the battery or use a battery trickle charger.

Four-Wheel Drive

Transfer Case

When to Check Lubricant

Refer to *Maintenance Schedule* ⇨ *311* to determine when to check the lubricant.

How to Check Lubricant

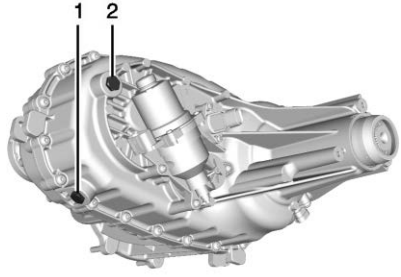

Automatic Transfer Case

1. Drain Plug
2. Fill Plug

To get an accurate reading, the vehicle should be on a level surface.

If the level is below the bottom of the fill plug (2) hole, located on the transfer case, some lubricant will need to be added. Add enough lubricant to raise the level to the bottom of the fill plug (2) hole. Use care not to overtighten the plug.

When to Change Lubricant

Refer to *Maintenance Schedule* ⇨ *311* to determine how often to change the lubricant.

What to Use

Refer to *Recommended Fluids and Lubricants* ⇨ *320* to determine what kind of lubricant to use.

Front Axle

When to Check Lubricant

It is not necessary to regularly check the front axle fluid unless a leak is suspected or an unusual noise is heard. A fluid loss could indicate a problem. Have it inspected and repaired. This service can be complex. See your dealer.

Do not directly power wash the transfer case and/or front/rear axle output seals. High pressure water can overcome the seals and contaminate the fluid. Contaminated fluid will decrease the life of the transfer case and/or drive axles and should be replaced.

Rear Axle

When to Check Lubricant

It is not necessary to regularly check the rear axle fluid unless a leak is suspected or an unusual noise is heard. A fluid loss could indicate a problem. Have it inspected and repaired. This service can be complex. See your dealer.

Do not directly power wash the transfer case and/or front/rear axle output seals. High pressure water can overcome the seals and contaminate the fluid. Contaminated fluid will decrease the life of the transfer case and/or drive axles and should be replaced.

Starter Switch Check

⚠ Warning

When you are doing this inspection, the vehicle could move suddenly. If the vehicle moves, you or others could be injured.

1. Before starting this check, be sure there is enough room around the vehicle.
2. Apply both the parking brake and the regular brake.

   Do not use the accelerator pedal, and be ready to turn off the engine immediately if it starts.
3. Try to start the engine in each gear. The vehicle should start only in P (Park) or N (Neutral). If the vehicle starts in any other position, contact your dealer for service.

Automatic Transmission Shift Lock Control Function Check

⚠ Warning

When you are doing this inspection, the vehicle could move suddenly. If the vehicle moves, you or others could be injured.

1. Before starting this check, be sure there is enough room around the vehicle. It should be parked on a level surface.
2. Apply the parking brake. Be ready to apply the regular brake immediately if the vehicle begins to move.
3. With the engine off, turn the ignition on, but do not start the engine. Without applying the regular brake, try to move the shift lever out of P (Park) with normal effort. If the shift lever moves out of P (Park), contact your dealer for service.

Ignition Transmission Lock Check

While parked, and with the parking brake set, try to turn the ignition off in each shift lever position.

- The ignition should turn to off only when the shift lever is in P (Park).
- The ignition key should come out only when the ignition is off.

Contact your dealer if service is required.

Park Brake and P (Park) Mechanism Check

⚠ Warning

When you are doing this check, the vehicle could begin to move. You or others could be injured and property could be damaged. Make sure there is room in front of the vehicle in case it begins to roll. Be ready to apply the regular brake at once should the vehicle begin to move.

Park on a fairly steep hill, with the vehicle facing downhill. Keeping your foot on the regular brake, set the parking brake.

- To check the parking brake's holding ability: With the engine running and the transmission in N (Neutral), slowly remove foot pressure from the regular brake pedal. Do this until the vehicle is held by the parking brake only.
- To check the P (Park) mechanism's holding ability: With the engine running, shift to P (Park). Then release the parking brake followed by the regular brake.

Contact your dealer if service is required.

Wiper Blade Replacement

Windshield wiper blades should be inspected for wear or cracking.

Replacement blades come in different types and are removed in different ways. For proper windshield wiper blade length and type, see *Maintenance Replacement Parts* ⇨ *321*.

Caution

Allowing the wiper arm to touch the windshield when no wiper blade is installed could damage the windshield. Any damage that occurs would not be

(Continued)

Caution (Continued)

covered by the vehicle warranty. Do not allow the wiper arm to touch the windshield.

To replace the windshield wiper blade:

1. Pull the windshield wiper assembly away from the windshield.

2. Press the release lever in the middle of the wiper blade where the wiper blade attaches.
3. Remove the wiper blade.
4. Reverse Steps 1–3 for wiper blade replacement.

Windshield Replacement

Driver Assistance Systems

If the windshield needs to be replaced and the vehicle is equipped with a front camera sensor for the Driver Assistance Systems, a GM replacement windshield is recommended. The replacement windshield must be installed according to GM specifications for proper alignment. If it is not, these systems may not work properly, they may display messages, or they may not work at all. See your dealer for proper windshield replacement.

Gas Strut(s)

This vehicle is equipped with gas strut(s) to provide assistance in lifting and holding open the hood/trunk/liftgate system in full open position.

⚠ Warning

If the gas struts that hold open the hood, trunk, and/or liftgate fail, you or others could be seriously injured. Take the vehicle to your dealer for service immediately. Visually inspect the gas struts for signs of wear, cracks, or other

(Continued)

Warning (Continued)

damage periodically. Check to make sure the hood/trunk/liftgate is held open with enough force. If struts are failing to hold the hood/trunk/liftgate, do not operate. Have the vehicle serviced.

Caution

Do not apply tape or hang any objects from gas struts. Also do not push down or pull on gas struts. This may cause damage to the vehicle.

See *Maintenance Schedule* ⇨ *311*.

Hood

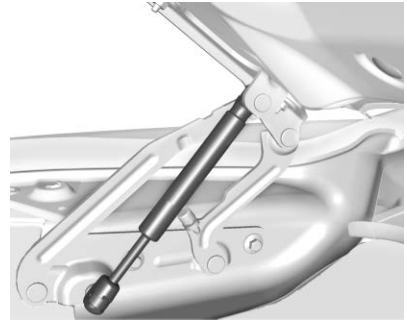

Trunk

Liftgate

Headlamp Aiming

Front Headlamp Aiming

Headlamp aim has been preset and should need no further adjustment.

If the vehicle is damaged in a crash, the headlamp aim may be affected.
If adjustment to the headlamps is necessary, see your dealer.

Bulb Replacement

For the proper type of replacement bulbs, or any bulb changing procedure not listed in this section, contact your dealer.

Caution

Do not replace incandescent bulbs with aftermarket LED replacement bulbs. This can cause damage to the vehicle electrical system.

Halogen Bulbs

⚠ Warning

Halogen bulbs have pressurized gas inside and can burst if you drop or scratch the bulb. You or others could be injured. Be sure to read and follow the instructions on the bulb package.

Headlamps, Front Turn Signal, Sidemarker, and Parking Lamps

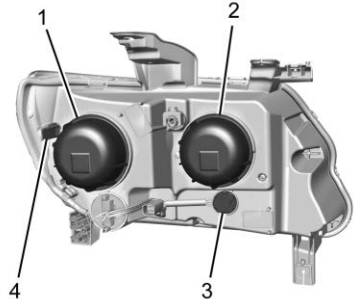

1. Low-Beam Headlamp/DRL
2. High-Beam Headlamp
3. Front Turn Signal/Parking Lamp
4. Sidemarker

See your dealer for passenger side replacement.

Headlamp

1. Open the hood.
2. Remove the headlamp bulb cover by turning it counterclockwise.
3. Turn the bulb socket counterclockwise to remove it from the headlamp assembly and pull it straight out.
4. Unplug the electrical connector from the old bulb by releasing the clip on the bulb socket.
5. Replace the bulb and reverse Steps 1-4 to reinstall.

Turn Signal/Sidemarker/Parking Lamp

1. Open the hood.
2. Turn the bulb socket counterclockwise to remove it from the headlamp assembly and pull it straight out.
3. Remove the bulb by pulling it straight out of the bulb socket.
4. Replace the bulb and reverse Steps 1-3 to reinstall.

Taillamps, Turn Signal, Stoplamps, and Back-Up Lamps

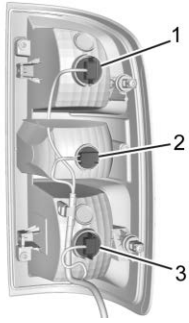

1. Taillamp/Stoplamp/Turn Signal
2. Back-up lamp
3. Taillamp/Stoplamp/Turn Signal/ Sidemarker

1. Open the tailgate.

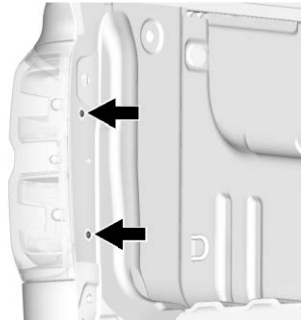

2. Remove the two rear lamp assembly screws.
3. Pull the rear lamp assembly outboard away from the box side until the retainers release. There will be a noise when the retainers release.

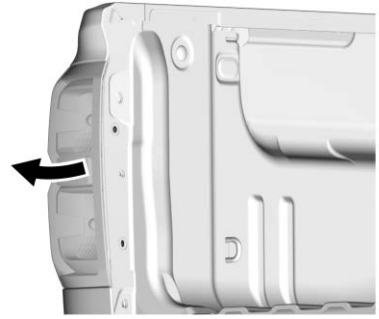

4. Pull the rear lamp assembly straight back to remove it from the vehicle.
5. Turn the bulb socket counterclockwise.
6. Pull the bulb straight out from the socket.
7. Replace the bulb, then insert the bulb socket into the rear lamp assembly and turn clockwise.

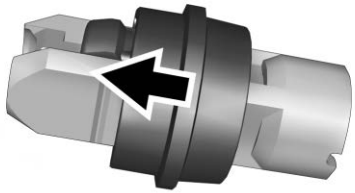

8. Verify the retainer ring is in the proper position. If the retainer ring is out of position, it will not engage. Reset the retainer by pulling it forward with a tool.
9. Push the rear lamp assembly straight in until it is seated against the vehicle.
10. Make sure the rear lamp assembly is flush with the box side.
11. Reinstall the two rear lamp assembly screws.

Center High-Mounted Stoplamp (CHMSL) and Cargo Lamp

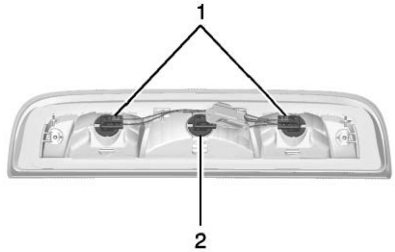

1. Cargo Lamp Bulbs
2. Center High-Mounted Stoplamp (CHMSL) Bulb

To replace one of these bulbs:

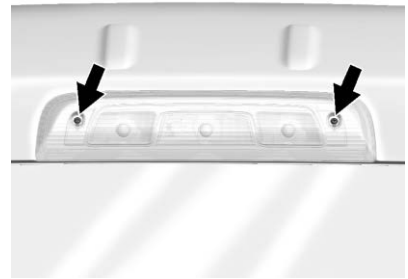

1. Remove the two screws and lift off the lamp assembly.
2. Turn the bulb socket counterclockwise and pull it straight out.
3. Pull the bulb straight out from the socket.
4. Replace the bulb and reverse Steps 1–3 to reinstall.

Electrical System

Electrical System Overload

The vehicle has fuses and circuit breakers to protect against an electrical system overload.

When the current electrical load is too heavy, the circuit breaker opens and closes, protecting the circuit until the current load returns to normal or the problem is fixed. This greatly reduces the chance of circuit overload and fire caused by electrical problems.

Fuses and circuit breakers protect power devices in the vehicle.

If there is a problem on the road and a fuse needs to be replaced, the same amperage fuse can be borrowed. Choose some feature of the vehicle that is not needed to use and replace it as soon as possible.

To check a fuse, look at the band inside the fuse. If the band is broken or melted, replace the fuse. Be sure to replace a bad fuse with a fuse of the identical size and rating.

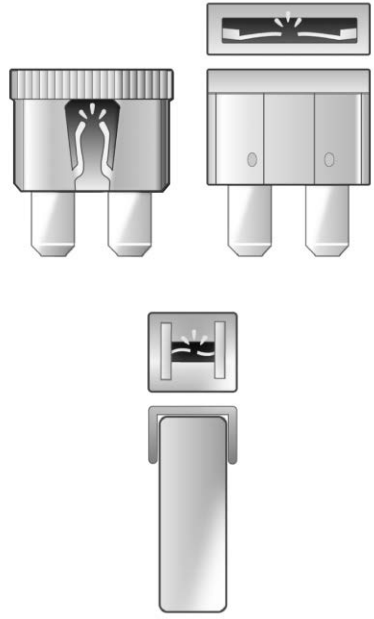

Replacing a Blown Fuse

1. Turn off the vehicle.
2. Locate the fuse puller in the engine compartment fuse block.

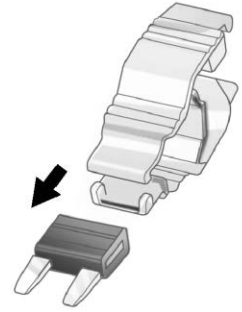

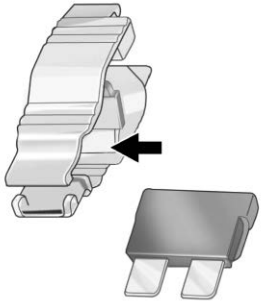

3. Use the fuse puller to remove the fuse from the top or side, as shown above.
4. If the fuse must be replaced immediately, borrow a replacement fuse with the same amperage from the fuse block. Choose a vehicle feature that is not needed to safely operate the vehicle. Repeat Steps 2-3.
5. Insert the replacement fuse into the empty slot of the blown fuse.

At the next opportunity, see your dealer to replace the blown fuse.

Headlamp Wiring

An electrical overload may cause the lamps to go on and off, or in some cases to remain off. Have the headlamp wiring checked right away if the lamps go on and off or remain off.

Windshield Wipers

If the wiper motor overheats due to heavy snow or ice, the windshield wipers will stop until the motor cools and will then restart.

Although the circuit is protected from electrical overload, overload due to heavy snow or ice may cause wiper linkage damage. Always clear ice and heavy snow from the windshield before using the windshield wipers.

If the overload is caused by an electrical problem and not snow or ice, be sure to get it fixed.

Fuses and Circuit Breakers

The wiring circuits in the vehicle are protected from short circuits by a combination of fuses and circuit breakers. This greatly reduces the chance of damage caused by electrical problems.

⚠ Danger

Fuses and circuit breakers are marked with their ampere rating. Do not exceed the specified amperage rating when replacing fuses and circuit breakers. Use of an oversized fuse or circuit breaker can result in a vehicle fire. You and others could be seriously injured or killed.

⚠ Warning

Installation or use of fuses that do not meet GM's original fuse specifications is dangerous. The fuses could fail, and result in a fire. You or others could be injured or killed, and the vehicle could be damaged.

See *Accessories and Modifications* ⇨ *233* and *General Information* ⇨ *233*.

To check or replace a blown fuse, see *Electrical System Overload* ⇨ *257*.

Engine Compartment Fuse Block

If the vehicle has a diesel engine, see the Duramax diesel supplement.

The engine compartment fuse block is in the engine compartment, on the driver side of the vehicle. See *Engine Compartment Overview* ⇨ *235*

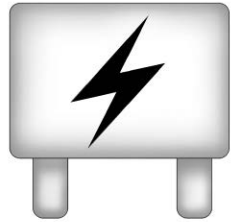

Lift the cover to access the fuse block.

Caution

Spilling liquid on any electrical component on the vehicle may damage it. Always keep the covers on any electrical component.

A fuse puller is available inside this fuse block.

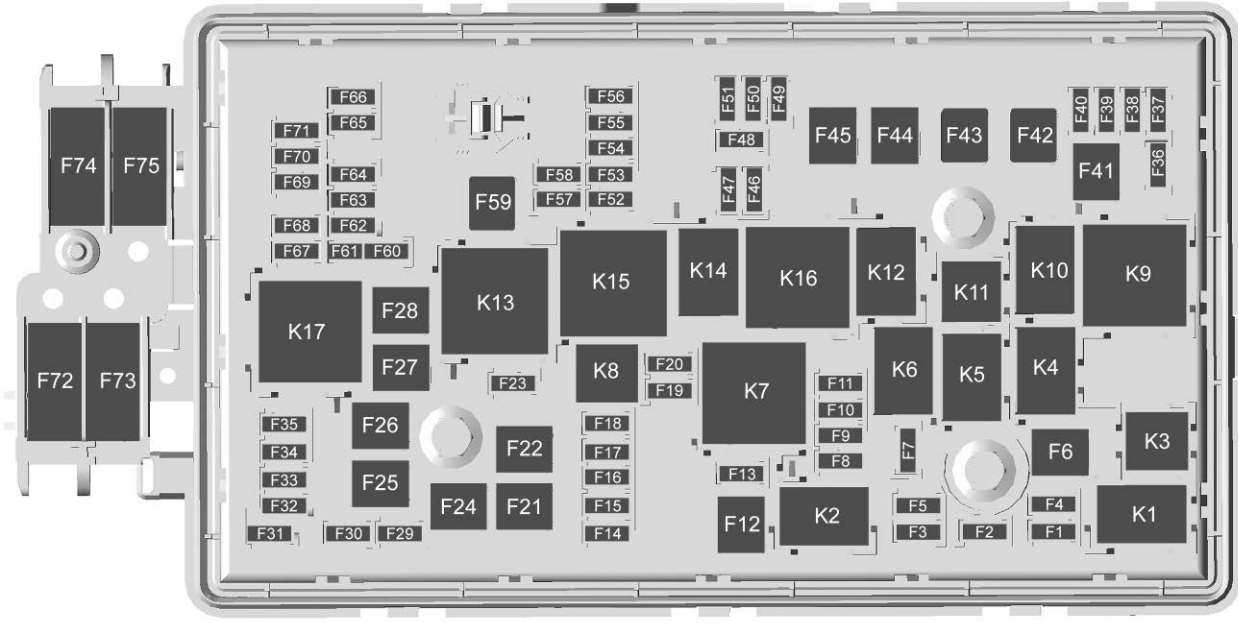
F74
F75
F72
F73
F66
F65
F71
F70
F69
F64
F63
F68
F62
F67
F61
F60
F59
F56
F55
F54
F58
F53
F57
F52
F51
F50
F49
F48
F47
F46
F45
F44
F43
F42
F40
F39
F38
F37
F41
F36
K17
F28
K13
K15
K14
K16
K12
K11
K10
K9
F27
K8
F20
F19
K7
F11
F10
F9
F8
K6
K5
K4
F23
F35
F34
F33
F32
F31
F30
F29
F26
F25
F22
F24
F21
F18
F17
F16
F15
F14
F13
F12
K2
F7
F5
F3
F2
F6
F4
F1
K3
K1

The vehicle may not be equipped with all of the fuses, relays, and features shown.

Fuses	Usage
F1	TCM BATT – Traction Control Module Power
F2	ECM BATT – Engine Control Module Power
F3	A/C CLTCH – Air Conditioning Clutch
F4	–
F5	ECM/ICCM/FPPM RUN/CRANK – Integrated Chassis Control Module Run/Crank – Engine Control Module Run/Crank – Fuel Pump Power Module Run Crank
F6	WIPER – Front Wipers
F7	Cargo Lamp/Bed Lighting
F8	INJ EVEN – Fuel Injectors Even
F9	INJ ODD – Fuel Injectors Odd
F10	ECM IGN – Engine Control Module Ignition
F11	MISC 1 – Oxygen/Mass Air Flow/Humidity/Induction Air Temperature/Throttle Inlet Pressure Sensors
F12	Starter
F13	TCM RUN/CRNK – Traction Control Module Run/Crank
F14	–
F15	–
F16	–
F17	FRT AXLE ACT – Front Axle Actuator
F18	–
F19	AERO SHTR – Aeroshutters
F20	–
F21	FRT BLWR – Front Blower
F22	ABS VLV – Antilock Brake System Valves
F23	–
F24	TRLR – Trailer
F25	TREC – Transfer Case Electronic Control
F26	ABS PUMP – Antilock Brake System Pump
F27	TRLR BRK CNTRL MDL – Trailer Brake Control Module
F28	REAR WNDW DEFOG - Rear Window Defogger
F29	–
F30	HTD SEAT DVR – Driver Heated Seat
F31	–
F32	HTD SEAT PASS – Passenger Heated Seat

Fuses	Usage
F33	BCM 3 – Body Control Module 3 – Right Headlamp Low Beam Supply Voltage, Right Front Turn Signal Lamp Supply Voltage, Left Park Lamp Supply Voltage, Left Rear Park Lamp Supply Voltage
F34	FPPM – Fuel Pump Power Module
F35	ICCM – Integrated Chassis Control Module
F36	CHMSL – Center High Mounted Stoplamp
F37	HI BEAM RT – Right High-beam Headlamp
F38	HI BEAM LT – Left High-beam Headlamp
F39	–
F40	–
F41	–
F42	–
F43	–
F44	–
F45	VAC PUMP – Brake Vacuum Pump
F46	ECM 2 – Engine Control Module 2
F47	MISC 2 – Mid Park Phase Lock/Active Fuel Management/Engine Oil and Canister Purge Solenoid(s)/Oxygen Sensor
F48	Fog lamps
F49	–
F50	TRLR PRK LAMP – Trailer Parking Lamp
F51	Horn
F52	–
F53	–
F54	–
F55	–
F56	WASH PUMP – Washer Pump
F57	–
F58	–
F59	–
F60	MIR DEFOG – Mirror Defogger
F61	–
F62	CNSTR VENT SOL – Canister Vent Solenoid
F63	–
F64	TRLR REV LAMP – Trailer Reverse Lamps
F65	TRLR STOP/TRN LAMP LT – Left Trailer Stoplamp/Turnlamp
F66	TRLR STOP/TRN LAMP RT – Right Trailer Stoplamp/Turnlamp

Fuses	Usage
F67	EPS – Electric Power Steering
F68	–
F69	RVC – Battery Regulated Voltage Control
F70	–
F71	–
F72	–
F73	–
F74	GEN – Generator
F75	–

Relays	Usage
K1	A/C Clutch – Air Conditioning Clutch
K2	STRTR – Starter
K3	–
K4	WPR SPD – Wiper Speed
K5	WPR CNTRL – Wiper Control
K6	Cargo Lamp/Bed Lighting
K7	PWR TRN – Powertrain
K8	–
K9	–
K10	–

Relays	Usage
K11	CHMSL – Center High Mounted Stop Lamp
K12	–
K13	VAC PUMP – Brake Vacuum Pump
K14	TRLR PRK LAMPS – Trailer Park Lamps
K15	RUN/CRNK – Run/Crank
K16	–
K17	REAR WNDW DEFOG – Rear Window/Mirror Defogger

Instrument Panel Fuse Block

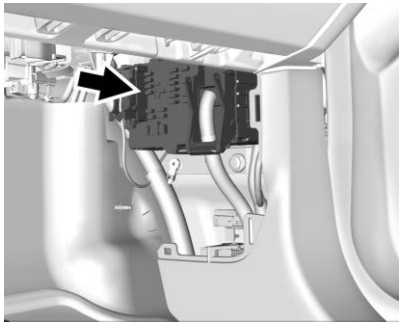

The instrument panel fuse block is behind the passenger side cowl side trim panel. Remove the plastic nut at the front of the cover, then pull the cover away from the trim panel to access the fuse block.

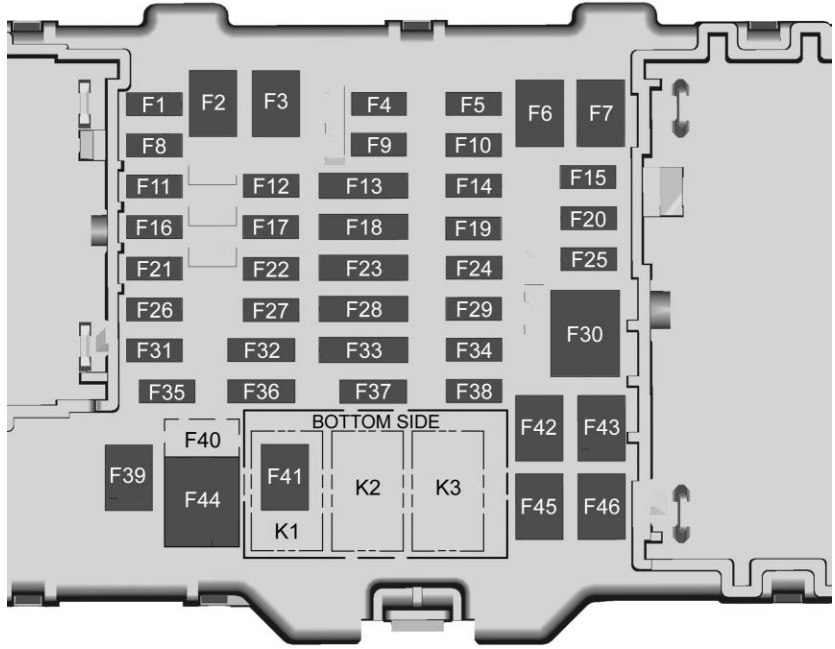

The vehicle may not be equipped with all of the fuses, relays, and features shown.

Fuses	Usage
F1	BCM 1 – Body Control Module 1 – Indicator Dimming Control, Retained Accessory Power (RAP) Relay Coil Control, Rear License Lamp Supply Voltage, Windshield Washer Relay Control, Run/Crank Relay Coil Control, Cruise/Electronic Torque Control/Torque Converter Clutch Brake Signal, Run Ignition 3 Voltage
F2	–
F3	–
F4	STR/WHL/CNTL – Steering Wheel Controls
F5	–
	BCM 2 – Body Control Module 2 – Interior Lamp Control, Accessory Voltage (1), Backup Lamp Relay Control, Park Lock Solenoid Control, Trailer Brake Apply Signal
F6	–
F7	–
F8	MIR WNDW MDL – Mirror Window Module
F9	I/P CLUSTER – Instrument Panel Cluster
F10	–
F11	BCM 8 – Body Control Module 8 – Door Lock Actuator Lock Control 2, Door Lock Control (2), Door Lock Actuator Unlock Control
F12	–
F13	OnStar/HVAC
F14	RDO/INFOTMNT – Radio/Infotainment
F15	BCM 6 – Body Control Module 6 – LED Backlight Dimming Control, Interior Lamps, Lights Exterior Reverse/Backup Lamps Direct Drive, Stop Lamp Relay Coil Supply Voltage
F16	CGM –Communication Gateway Module
F17	BCM 4 – Body Control Module 4 – Left Headlamp Low Beam Supply Voltage, Right Park Lamp Supply Voltage, Left Rear Stop Lamp Supply Voltage, Right Rear Park Lamp Supply Voltage
F18	AIRBAG/SDM/AOS MDL – Airbag/Sensing and Diagnostic Module/Automatic Occupant Sensing Module
F19	–

Fuses	Usage
F20	–
	AMP – Amplifier
F21	–
F22	–
F23	DLC/USB FRT – Data Link Connector/USB Front
F24	HVAC IGN/AUX HTR – HVAC Ignition/Auxiliary Heater
F25	BCM 7 – Body Control Module 7 – Right Rear Stop Lamp Supply Voltage, Left Front Turn Signal Lamp Supply Voltage, Standing Lamp Relay Control
F26	–
F27	–
F28	I/P IGN/AOS DISPLY – Instrument Panel Cluster/ Automatic Occupant Sensing Display
F29	MISC RUN/CRNK – Rear Vision Camera/Transfer Case Control Module (4WD)/Inside Rear View Mirror
F30	–
F31	FRT CAMERA/RPA – Front Camera/Rear Park Assist
F32	SWC BKLT – Steering Wheel Controls Backlighting
F33	HTD STR WHL/CGM_IGN – Heated Steering Wheel/ Communication Gateway Module Ignition
F34	VENT SEAT FRT – Front Vented Seats
F35	PRNDL DISPLY/WCM/USB RR – Park/Reverse/Neutral/ Drive/Low Display/Wireless Charging Module/USB Rear
F36	DLIS – Discrete Logic Ignition Sensor
F37	–
F38	–
F39	APO 2 – Auxiliary Power Outlet 2
F40	–
F41	APO 1/LTR – Auxiliary Power Outlet 1/Cigarrette Lighter
F42	LT PWR WNDW – Left Power Window
F43	DRVR PWR SEAT – Driver Power Seat
F44	APO – Auxiliary Power Outlet
F45	RT PWR WNDW – Right Power Window
F46	PASS PWR SEAT – Passenger Power Seats

Relays	Usage
K1	RAP/ACCY – Retained Accessory Power
K2	Run/Crank
K3	–

Wheels and Tires

Tires

Every new GM vehicle has high-quality tires made by a leading tire manufacturer. See the warranty manual for information regarding the tire warranty and where to get service. For additional information refer to the tire manufacturer.

⚠ Warning

- Poorly maintained and improperly used tires are dangerous.
- Overloading the tires can cause overheating as a result of too much flexing. There could be a blowout and a serious crash. See *Vehicle Load Limits* ⇨ *178*.
- Underinflated tires pose the same danger as overloaded tires. The resulting crash could cause serious injury. Check all tires frequently to

(Continued)

Warning (Continued)

maintain the recommended pressure. Tire pressure should be checked when the tires are cold.

- Overinflated tires are more likely to be cut, punctured, or broken by a sudden impact — such as when hitting a pothole. Keep tires at the recommended pressure.
- Worn or old tires can cause a crash. If the tread is badly worn, replace them.
- Replace any tires that have been damaged by impacts with potholes, curbs, etc.
- Improperly repaired tires can cause a crash. Only your dealer or an authorized tire service center should repair, replace, dismount, and mount the tires.

(Continued)

Warning (Continued)

- Do not spin the tires in excess of 56 km/h (35 mph) on slippery surfaces such as snow, mud, ice, etc. Excessive spinning may cause the tires to explode.

All-Season Tires

This vehicle may come with all-season tires. These tires are designed to provide good overall performance on most road surfaces and weather conditions. Original equipment tires designed to GM's specific tire performance criteria have a TPC specification code molded onto the sidewall. Original equipment all-season tires can be identified by the last two characters of this TPC code, which will be “MS.”

Consider installing winter tires on the vehicle if frequent driving on snow or ice-covered roads is expected. All-season tires provide adequate performance for most winter driving conditions, but they may not offer the same level of traction or performance as winter tires on snow or ice-covered roads. See *Winter Tires* ⇨ *268*.

Winter Tires

This vehicle was not originally equipped with winter tires. Winter tires are designed for increased traction on snow and ice-covered roads. Consider installing winter tires on the vehicle if frequent driving on ice or snow covered roads is expected. See your dealer for details regarding winter tire availability and proper tire selection. Also, see *Buying New Tires* ⇨ *279*.

With winter tires, there may be decreased dry road traction, increased road noise, and shorter tread life. After changing to winter tires, be alert for changes in vehicle handling and braking.

If using winter tires:

- Use tires of the same brand and tread type on all four wheel positions.
- Use only radial ply tires of the same size, load range, and speed rating as the original equipment tires.

Winter tires with the same speed rating as the original equipment tires may not be available for H, V, W, Y, and ZR speed rated tires. If winter tires with a lower speed rating are chosen, never exceed the tire's maximum speed capability.

All-Terrain Tires

This vehicle may have all-terrain or mud-terrain tires. These tires provide good performance on most road surfaces, weather conditions, and for off-road driving. See *Off-Road Driving* ⇨ *172*.

The tread pattern on these tires may wear more unevenly than other tires. Consider rotating the tires more frequently than at 12 000 km (7,500 mi) intervals if irregular wear is noted when the tires are inspected. See *Tire Inspection* ⇨ *277*.

Tire Sidewall Labeling

Useful information about a tire is molded into its sidewall. The examples show a typical passenger vehicle tire and a compact spare tire sidewall.

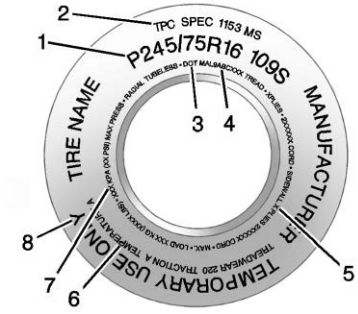

Passenger (P-Metric) Tire Example

(1) Tire Size : The tire size is a combination of letters and numbers used to define a particular tire's width, height, aspect ratio, construction type, and service description. See the “Tire Size” illustration later in this section.

(2) TPC Spec (Tire Performance Criteria Specification) : Original equipment tires designed to GM's specific tire performance criteria have a TPC specification code molded onto the sidewall. GM's TPC specifications meet or exceed all federal safety guidelines.

(3) DOT (Department of Transportation) : The Department of Transportation (DOT) code indicates that the tire is in compliance with the U.S. Department of Transportation Motor Vehicle Safety Standards.

DOT Tire Date of Manufacture : The last four digits of the TIN indicate the tire manufactured date. The first two digits represent the week and the last two digits, the year. For example, the third week of the year 2020 would have a four-digit DOT date of 0320. Week 01 is the first full week (Sunday through Saturday) of each year.

(4) Tire Identification Number (TIN) : The letters and numbers following the DOT (Department of Transportation) code are the Tire Identification Number (TIN). The TIN shows the manufacturer and plant code, tire size, and date the tire was manufactured. The TIN is molded onto both sides of the tire, although only one side may have the date of manufacture.

(5) Tire Ply Material : The type of cord and number of plies in the sidewall and under the tread.

(6) Uniform Tire Quality Grading (UTQG) : Tire manufacturers are required to grade tires based on three performance factors: treadwear, traction, and temperature resistance. For more information see *Uniform Tire Quality Grading* ⇨ *281*.

(7) Maximum Cold Inflation Load Limit : Maximum load that can be carried and the maximum pressure needed to support that load.

(8) Temporary Use Only : Only use a temporary spare tire until the road tire is repaired and replaced. This spare tire should not be driven on over 112 km/h (70 mph), or 88 km/h (55 mph) when pulling a trailer, with the proper inflation pressure. See *Full-Size Spare Tire* ⇨ *294*.

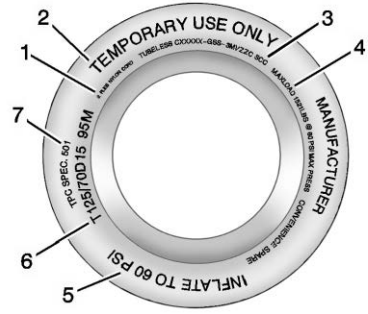

Compact Spare Tire Example

(1) Tire Ply Material : The type of cord and number of plies in the sidewall and under the tread.

(2) Temporary Use Only : The compact spare tire or temporary use tire should not be driven at speeds over 80 km/h (50 mph). The compact spare tire is for emergency use when a regular road tire has lost air and gone flat. If the vehicle has a compact spare tire, see *Compact Spare Tire* ⇨ *293* and *If a Tire Goes Flat* ⇨ *283*.

(3) Tire Identification Number (TIN) : The letters and numbers following the DOT (Department of Transportation) code are the Tire Identification Number (TIN). The TIN shows the manufacturer and plant code, tire size, and date the tire was manufactured. The TIN is molded onto both sides of the tire, although only one side may have the date of manufacture.

(4) Maximum Cold Inflation Load Limit : Maximum load that can be carried and the maximum pressure needed to support that load.

(5) Tire Inflation : The temporary use tire or compact spare tire should be inflated to 420 kPa (60 psi). For more information on tire pressure and inflation see *Tire Pressure* ⇨ *273*.

(6) Tire Size : A combination of letters and numbers define a tire's width, height, aspect ratio, construction type, and service description. The letter T as the first character in the tire size means the tire is for temporary use only.

(7) TPC Spec (Tire Performance Criteria Specification) : Original equipment tires designed to GM's specific tire performance criteria have a TPC specification code molded onto the sidewall. GM's TPC specifications meet or exceed all federal safety guidelines.

Tire Designations

Tire Size

The example shows a typical passenger vehicle tire size.

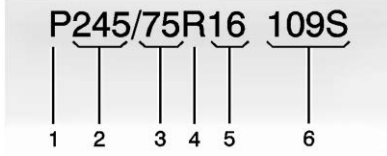

Passenger (P-Metric) Tire

(1) Passenger (P-Metric) Tire : The United States version of a metric tire sizing system. The letter "P" as the first character in the tire size means a passenger vehicle tire engineered to standards set by the U.S. Tire and Rim Association.

(2) Tire Width : The 3-digit number indicates the tire section width in millimeters from sidewall to sidewall.

(3) Aspect Ratio : A 2-digit number that indicates the tire height-to-width measurements. For example, if the tire size aspect ratio is 75, as shown in item (3) of the illustration, it would mean that the tire's sidewall is 75 percent as high as it is wide.

(4) Construction Code : A letter code is used to indicate the type of ply construction in the tire. The letter "R" means radial ply construction; the letter "D" means diagonal or bias ply construction.

(5) Rim Diameter : Diameter of the wheel in inches.

(6) Service Description : These characters represent the load index and speed rating of the tire. The load index represents the load carrying capacity a tire is certified to carry. The speed rating is the maximum speed a tire is certified to carry a load.

Tire Terminology and Definitions

Air Pressure : The amount of air inside the tire pressing outward on each square inch of the tire. Air pressure is expressed in kPa (kilopascal) or psi (pounds per square inch).

Accessory Weight : The combined weight of optional accessories. Some examples of optional accessories are automatic transmission, power windows, power seats, and air conditioning.

Aspect Ratio : The relationship of a tire's height to its width.

Belt : A rubber coated layer of cords between the plies and the tread. Cords may be made from steel or other reinforcing materials.

Bead : The tire bead contains steel wires wrapped by steel cords that hold the tire onto the rim.

Bias Ply Tire : A pneumatic tire in which the plies are laid at alternate angles less than 90 degrees to the centerline of the tread.

Cold Tire Pressure : The amount of air pressure in a tire, measured in kPa (kilopascal) or psi (pounds per square inch) before a tire has built up heat from driving. See *Tire Pressure* ⇨ *273*.

Curb Weight : The weight of a motor vehicle with standard and optional equipment including the maximum capacity of fuel, oil, and coolant, but without passengers and cargo.

DOT Markings : A code molded into the sidewall of a tire signifying that the tire is in compliance with the U.S. Department of Transportation (DOT) Motor Vehicle Safety Standards. The DOT code includes the Tire Identification Number (TIN), an alphanumeric designator which can also identify the tire manufacturer, production plant, brand, and date of production.

GVWR : Gross Vehicle Weight Rating. See *Vehicle Load Limits* ⇨ *178*.

GAWR FRT : Gross Axle Weight Rating for the front axle. See *Vehicle Load Limits* ⇨ *178*.

GAWR RR : Gross Axle Weight Rating for the rear axle. See *Vehicle Load Limits* ⇨ *178*.

Intended Outboard Sidewall : The side of an asymmetrical tire that must always face outward when mounted on a vehicle.

Kilopascal (kPa) : The metric unit for air pressure.

Light Truck (LT-Metric) Tire : A tire used on light duty trucks and some multipurpose passenger vehicles.

Load Index : An assigned number ranging from 1 to 279 that corresponds to the load carrying capacity of a tire.

Maximum Inflation Pressure : The maximum air pressure to which a cold tire can be inflated. The maximum air pressure is molded onto the sidewall.

Maximum Load Rating : The load rating for a tire at the maximum permissible inflation pressure for that tire.

Maximum Loaded Vehicle Weight : The sum of curb weight, accessory weight, vehicle capacity weight, and production options weight.

Normal Occupant Weight : The number of occupants a vehicle is designed to seat multiplied by 68 kg (150 lb). See *Vehicle Load Limits* ⇨ *178*.

Occupant Distribution : Designated seating positions.

Outward Facing Sidewall : The side of an asymmetrical tire that has a particular side that faces outward when mounted on a vehicle. The side of the tire that contains a whitewall, bears white lettering, or bears manufacturer, brand, and/or model name molding that is higher or deeper than the same moldings on the other sidewall of the tire.

Passenger (P-Metric) Tire : A tire used on passenger cars and some light duty trucks and multipurpose vehicles.

Recommended Inflation Pressure : Vehicle manufacturer's recommended tire inflation pressure as shown on the tire placard. See *Tire Pressure* ⇨ *273* and *Vehicle Load Limits* ⇨ *178*.

Radial Ply Tire : A pneumatic tire in which the ply cords that extend to the beads are laid at 90 degrees to the centerline of the tread.

Rim : A metal support for a tire and upon which the tire beads are seated.

Sidewall : The portion of a tire between the tread and the bead.

Speed Rating : An alphanumeric code assigned to a tire indicating the maximum speed at which a tire can operate.

Traction : The friction between the tire and the road surface. The amount of grip provided.

Tread : The portion of a tire that comes into contact with the road.

Treadwear Indicators : Narrow bands, sometimes called wear bars, that show across the tread of a tire when only 1.6 mm (1/16 in) of tread remains. See *When It Is Time for New Tires* ⇨ *278*.

UTQGS (Uniform Tire Quality Grading Standards) : A tire information system that provides consumers with ratings for a tire's traction, temperature, and treadwear. Ratings are determined by tire manufacturers using government testing procedures. The ratings are molded into the sidewall of the tire. See *Uniform Tire Quality Grading* ⇨ *281*.

Vehicle Capacity Weight : The number of designated seating positions multiplied by 68 kg (150 lb) plus the rated cargo load. See *Vehicle Load Limits* ⇨ *178*.

Vehicle Maximum Load on the Tire : Load on an individual tire due to curb weight, accessory weight, occupant weight, and cargo weight.

Vehicle Placard : A label permanently attached to a vehicle showing the vehicle capacity weight and the original

equipment tire size and recommended inflation pressure. See “Tire and Loading Information Label” under *Vehicle Load Limits* ⇨ *178*.

Tire Pressure

Tires need the correct amount of air pressure to operate effectively.

⚠ Warning

Neither tire underinflation nor overinflation is good. Underinflated tires, or tires that do not have enough air, can result in:

- Tire overloading and overheating, which could lead to a blowout.
- Premature or irregular wear.
- Poor handling.
- Reduced fuel economy.

(Continued)

Warning (Continued)

Overinflated tires, or tires that have too much air, can result in:

- Unusual wear.
- Poor handling.
- Rough ride.
- Needless damage from road hazards.

The Tire and Loading Information label on the vehicle indicates the original equipment tires and the correct cold tire inflation pressures. The recommended pressure is the minimum air pressure needed to support the vehicle's maximum load carrying capacity. See *Vehicle Load Limits* ⇨ *178*.

How the vehicle is loaded affects vehicle handling and ride comfort. Never load the vehicle with more weight than it was designed to carry.

When to Check

Check the pressure of the tires once a month or more. Do not forget to check the spare tire, if the vehicle has one. The cold compact spare tire pressure should be at 420 kPa (60psi). See *Compact Spare Tire* ⇨ *293* and *Full-Size Spare Tire* ⇨ *294*.

How to Check

Use a good quality pocket-type gauge to check tire pressure. Proper tire inflation cannot be determined by looking at the tire. Check the tire inflation pressure when the tires are cold, meaning the vehicle has not been driven for at least three hours or no more than 1.6 km (1 mi).

Remove the valve cap from the tire valve stem. Press the tire gauge firmly onto the valve to get a pressure measurement. If the cold tire inflation pressure matches the recommended pressure on the Tire and Loading Information label, no further adjustment is necessary. If the inflation pressure is low, add air until the recommended

pressure is reached. If the inflation pressure is high, press on the metal stem in the center of the tire valve to release air.

Re-check the tire pressure with the tire gauge.

Put the valve caps back on the valve stems to keep out dirt and moisture and prevent leaks. Use only valve caps designed for the vehicle by GM. TPMS sensors could be damaged and would not be covered by the vehicle warranty.

Tire Pressure Monitor System

The Tire Pressure Monitor System (TPMS) uses radio and sensor technology to check tire pressure levels. The TPMS sensors monitor the air pressure in your tires and transmit tire pressure readings to a receiver located in the vehicle.

Each tire, including the spare (if provided), should be checked monthly when cold and inflated to the inflation pressure recommended by the vehicle manufacturer on the vehicle placard or tire inflation pressure label. (If your vehicle has tires of a different size than the size indicated on the vehicle placard or tire inflation pressure label, you should determine the proper tire inflation pressure for those tires.)

As an added safety feature, your vehicle has been equipped with a tire pressure monitoring system (TPMS) that illuminates a low tire pressure telltale when one or more of your tires is significantly under-inflated.

Accordingly, when the low tire pressure telltale illuminates, you should stop and check your tires as soon as possible, and inflate them to the proper pressure. Driving on a significantly under-inflated tire causes the tire to overheat and can lead to tire failure. Under-inflation also reduces fuel efficiency and tire tread life, and may affect the vehicle's handling and stopping ability.

Please note that the TPMS is not a substitute for proper tire maintenance, and it is the driver's responsibility to maintain correct tire pressure, even if under-inflation has not reached the level to trigger illumination of the TPMS low tire pressure telltale.

Your vehicle has also been equipped with a TPMS malfunction indicator to indicate when the system is not operating properly. The TPMS malfunction indicator is combined with the low tire pressure telltale. When the system detects a malfunction, the telltale will flash for approximately one minute and then remain continuously illuminated. This sequence will continue upon subsequent vehicle start-ups as long as the malfunction exists.

When the malfunction indicator is illuminated, the system may not be able to detect or signal low tire pressure as intended. TPMS malfunctions may occur for a variety of reasons, including the installation of replacement or alternate tires or wheels on the vehicle that prevent the TPMS from functioning properly. Always check the TPMS malfunction telltale after replacing one or more tires or wheels on your vehicle to ensure that the replacement or alternate tires and wheels allow the TPMS to continue to function properly.

See *Tire Pressure Monitor Operation* ⇨ *274*.

See *Radio Frequency Statement* ⇨ *336*.

Tire Pressure Monitor Operation

This vehicle may have a Tire Pressure Monitor System (TPMS). The TPMS is designed to warn the driver when a low tire pressure condition exists. TPMS sensors are mounted onto each tire and wheel assembly, excluding the spare tire and

wheel assembly. The TPMS sensors monitor the air pressure in the tires and transmit the tire pressure readings to a receiver located in the vehicle.

When a low tire pressure condition is detected, the TPMS illuminates the low tire pressure warning light located on the instrument cluster. If the warning light comes on, stop as soon as possible and inflate the tires to the recommended pressure shown on the Tire and Loading Information label. See *Vehicle Load Limits* ⇨ *178*.

A message to check the pressure in a specific tire displays in the Driver Information Center (DIC). The low tire pressure warning light and the DIC warning message come on at each ignition cycle until the tires are inflated to the correct inflation pressure. If the vehicle has DIC buttons, tire pressure levels can be viewed.

For additional information and details about the DIC operation and displays, see *Driver Information Center (DIC) (Base Level)* ⇨ *93* or *Driver Information Center (DIC) (Uplevel)* ⇨ *96*.

The low tire pressure warning light may come on in cool weather when the vehicle is first started, and then turn off as the vehicle is driven. This could be an early indicator that the air pressure is getting low and needs to be inflated to the proper pressure.

A Tire and Loading Information label shows the size of the original equipment tires and the correct inflation pressure for the tires when they are cold. See *Vehicle Load Limits* ⇨ *178*, for an example of the Tire and Loading Information label and its location. Also see *Tire Pressure* ⇨ *273*.

The TPMS can warn about a low tire pressure condition but it does not replace normal tire maintenance. See *Tire Inspection* ⇨ *277*, *Tire Rotation* ⇨ *277* and *Tires* ⇨ *267*.

Caution

Tire sealant materials are not all the same. A non-approved tire sealant could damage the TPMS sensors. TPMS sensor

(Continued)

Caution (Continued)

damage caused by using an incorrect tire sealant is not covered by the vehicle warranty. Always use only the GM approved tire sealant available through your dealer or included in the vehicle.

TPMS Malfunction Light and Message

The TPMS will not function properly if one or more of the TPMS sensors are missing or inoperable. When the system detects a malfunction, the low tire pressure warning light flashes for about one minute and then stays on for the remainder of the ignition cycle. A DIC warning message also displays. The malfunction light and DIC warning message come on at each ignition cycle until the problem is corrected. Some of the conditions that can cause these to come on are:

- One of the road tires has been replaced with the spare tire. The spare tire does not have a TPMS sensor. The malfunction light and the DIC message should go off after the road tire is replaced and the sensor matching process is performed successfully. See "TPMS Sensor Matching Process" later in this section.

- The TPMS sensor matching process was not done or not completed successfully after rotating the tires. The malfunction light and the DIC message should go off after successfully completing the sensor matching process. See "TPMS Sensor Matching Process" later in this section.
- One or more TPMS sensors are missing or damaged. The malfunction light and the DIC message should go off when the TPMS sensors are installed and the sensor matching process is performed successfully. See your dealer for service.
- Replacement tires or wheels do not match the original equipment tires or wheels. Tires and wheels other than those recommended could prevent the TPMS from functioning properly. See *Buying New Tires* ⇨ *279*.
- Operating electronic devices or being near facilities using radio wave frequencies similar to the TPMS could cause the TPMS sensors to malfunction.

If the TPMS is not functioning properly, it cannot detect or signal a low tire pressure condition. See your dealer for service if the TPMS malfunction light and DIC message come on and stay on.

Tire Fill Alert (If Equipped)

This feature provides visual and audible alerts outside the vehicle to help when inflating an underinflated tire to the recommended cold tire pressure.

When the low tire pressure warning light comes on:

1. Park the vehicle in a safe, level place.
2. Set the parking brake firmly.
3. Place the vehicle in P (Park).
4. Add air to the tire that is underinflated. The turn signal lamp will flash.

   When the recommended pressure is reached, the horn sounds once and the turn signal lamp will stop flashing and briefly turn solid.

Repeat these steps for all underinflated tires that have illuminated the low tire pressure warning light.

⚠ Warning

Overinflating a tire could cause the tire to rupture and you or others could be injured. Do not exceed the maximum pressure listed on the tire sidewall. See *Tire Sidewall Labeling* ⇨ *268* and *Vehicle Load Limits* ⇨ *178*.

If the tire is overinflated by more than 35 kPa (5 psi), the horn will sound multiple times and the turn signal lamp will continue to flash for several seconds after filling stops. To release and correct the pressure, while the turn signal lamp is still flashing, briefly press the center of the valve stem. When the recommended pressure is reached, the horn sounds once.

If the turn signal lamp does not flash within 15 seconds after starting to inflate the tire, the tire fill alert has not been activated or is not working.

If the hazard warning flashers are on, the tire fill alert visual feedback will not work properly.

The TPMS will not activate the tire fill alert properly under the following conditions:

- There is interference from an external device or transmitter.
- The air pressure from the inflation device is not sufficient to inflate the tire.
- There is a malfunction in the TPMS.
- There is a malfunction in the horn or turn signal lamps.
- The identification code of the TPMS sensor is not registered to the system.
- The battery of the TPMS sensor is low.

If the tire fill alert does not operate due to TPMS interference, move the vehicle about 1 m (3 ft) back or forward and try again. If the tire fill alert feature is not working, use a tire pressure gauge.

TPMS Sensor Matching Process — Auto Learn Function

Each TPMS sensor has a unique identification code. The identification code needs to be matched to a new tire/wheel position after rotating the tires or replacing one or more of the TPMS sensors. When a tire is installed, the vehicle must be stationary for about 20 minutes before the system recalculates. The following relearn process takes up to 10 minutes, driving at a minimum speed of 20 km/h (12 mph).
A dash (-) or pressure value will display in the DIC. See *Driver Information Center (DIC) (Base Level)* ⇨ *93* or *Driver Information Center (DIC) (Uplevel)* ⇨ *96*. A warning message displays in the DIC if a problem occurs during the relearn process.

Tire Inspection

We recommend that the tires, including the spare tire, if the vehicle has one, be inspected for signs of wear or damage at least once a month.

Replace the tire if:

- The indicators at three or more places around the tire can be seen.
- There is cord or fabric showing through the tire's rubber.
- The tread or sidewall is cracked, cut, or snagged deep enough to show cord or fabric.
- The tire has a bump, bulge, or split.
- The tire has a puncture, cut, or other damage that cannot be repaired well because of the size or location of the damage.

Tire Rotation

Tires should be rotated every 12 000 km (7,500 mi). See *Maintenance Schedule* ⇨ *311*.

Tires are rotated to achieve a more uniform wear for all tires. The first rotation is the most important.

Anytime unusual wear is noticed, rotate the tires as soon as possible, check for proper tire inflation pressure, and check for damaged tires or wheels. If the unusual wear continues after the rotation, check the wheel alignment. See *When It Is Time for New Tires* ⇨ *278* and *Wheel Replacement* ⇨ *282*.

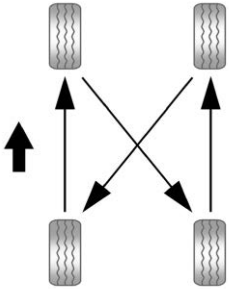

Use this rotation pattern when rotating the tires.

Do not include the spare tire in the tire rotation.

Adjust the front and rear tires to the recommended inflation pressure on the Tire and Loading Information label after the tires have been rotated. See *Tire Pressure* ⇨ *273* and *Vehicle Load Limits* ⇨ *178*.

Reset the Tire Pressure Monitor System. See *Tire Pressure Monitor Operation* ⇨ *274*.

Check that all wheel nuts are properly tightened. See "Wheel Nut Torque" under *Capacities and Specifications* ⇨ *325*.

⚠ Warning

Rust or dirt on a wheel, or on the parts to which it is fastened, can cause wheel nuts to become loose over time. The wheel could come off and cause a crash. When changing a wheel, remove any rust or dirt from places where the wheel attaches to the vehicle. In an emergency, a cloth or paper towel can be used; however, use a scraper or wire brush later to remove all rust or dirt.

Lightly coat the inner diameter of the wheel hub opening with wheel bearing grease after a wheel change or tire rotation to prevent corrosion or rust buildup.

⚠ Warning

Do not apply grease to the wheel mounting surface, wheel conical seats, or the wheel nuts or bolts. Grease applied to these areas could cause a wheel to become loose or come off, resulting in a crash.

When It Is Time for New Tires

Factors, such as maintenance, temperatures, driving speeds, vehicle loading, and road conditions affect the wear rate of the tires.

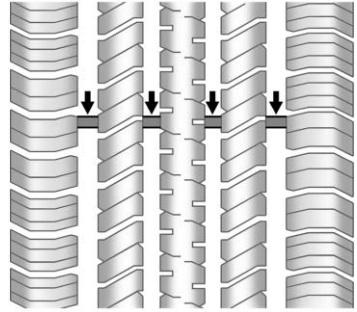

Treadwear indicators are one way to tell when it is time for new tires. Treadwear indicators appear when the tires have only 1.6 mm (1/16 in) or less of tread remaining. See *Tire Inspection* ⇨ *277* and *Tire Rotation* ⇨ *277* for additional information.

The rubber in tires ages over time. This also applies to the spare tire, if the vehicle has one, even if it is never used. Multiple factors including temperatures, loading conditions, and inflation pressure maintenance affect how fast aging takes place. GM recommends that tires, including the spare if equipped, be replaced after six years, regardless of tread wear. To identify the age of a tire, use the tire manufacture date, which is the last four digits of the DOT Tire Identification Number (TIN) molded into one side of the tire sidewall. The last four digits of the TIN indicate the tire manufactured date. The first two digits represent the week and the last two digits, the year. For example, the third week of the year 2020 would have a 4-digit DOT date of 0320. Week 01 is the first full week (Sunday through Saturday) of each year.

Vehicle Storage

Tires age when stored normally mounted on a parked vehicle. Park a vehicle that will be stored for at least a month in a cool, dry, clean area away from direct sunlight to slow aging. This area should be free of grease, gasoline, or other substances that can deteriorate rubber.

Parking for an extended period can cause flat spots on the tires that may result in vibrations while driving. When storing a vehicle for at least a month, remove the tires or raise the vehicle to reduce the weight from the tires.

Buying New Tires

GM has developed and matched specific tires for the vehicle. The original equipment tires installed were designed to meet General Motors Tire Performance Criteria Specification (TPC Spec) system rating. When replacement tires are needed, GM strongly recommends buying tires with the same TPC Spec rating.

GM's exclusive TPC Spec system considers over a dozen critical specifications that impact the overall performance of the vehicle, including brake system performance, ride and handling, traction control, and tire pressure monitoring performance. GM's TPC Spec number is molded onto the tire's sidewall near the tire size. If the tires have an all-season tread design, the TPC Spec number will be followed by MS for mud and snow. See *Tire Sidewall Labeling* ⇨ *268* for additional information.

GM recommends replacing worn tires in complete sets of four. Uniform tread depth on all tires will help to maintain the performance of the vehicle. Braking and handling performance may be adversely affected if all the tires are not replaced at the same time. If proper rotation and maintenance have been done, all four tires should wear out at about the same time. However, if it is necessary to replace only one axle set of worn tires, place the new tires on the rear axle. See *Tire Rotation* ⇨ *277*.

⚠ Warning

Tires could explode during improper service. Attempting to mount or dismount a tire could cause injury or death. Only your dealer or authorized tire service center should mount or dismount the tires.

⚠ Warning

Mixing tires of different sizes (other than those originally installed on the vehicle), brands, tread patterns, or types may cause loss of vehicle control, resulting in a crash or other vehicle damage. Use the correct size, brand, and type of tire on all wheels.

⚠ Warning

Using bias-ply tires on the vehicle may cause the wheel rim flanges to develop cracks after many miles of driving. A tire and/or wheel could fail

(Continued)

Warning (Continued)

suddenly and cause a crash. Use only radial-ply tires with the wheels on the vehicle.

Winter tires with the same speed rating as the original equipment tires may not be available for H, V, W, Y and ZR speed rated tires. Never exceed the winter tires' maximum speed capability when using winter tires with a lower speed rating.

If the vehicle tires must be replaced with a tire that does not have a TPC Spec number, make sure they are the same size, load range, speed rating, and construction (radial) as the original tires.

The Tire and Loading Information label indicates the original equipment tires on the vehicle. See *Vehicle Load Limits* ⇨ *178*.

Different Size Tires and Wheels

If wheels or tires are installed that are a different size than the original equipment wheels and tires, vehicle performance, including its braking, ride and handling characteristics, stability, and resistance to rollover may be affected. If the vehicle has electronic systems such as antilock brakes, rollover airbags, traction control, electronic stability control, or All-Wheel Drive, the performance of these systems can also be affected.

⚠ Warning

If different sized wheels are used, there may not be an acceptable level of performance and safety if tires not recommended for those wheels are selected. This increases the chance of a crash and serious injury. Only use GM specific wheel and tire systems developed for the vehicle, and have them properly installed by a GM certified technician.

See *Buying New Tires* ⇨ *279* and *Accessories and Modifications* ⇨ *233*.

Uniform Tire Quality Grading

The following information relates to the system developed by the United States National Highway Traffic Safety Administration (NHTSA), which grades tires by treadwear, traction, and temperature performance. This applies only to vehicles sold in the United States. The grades are molded on the sidewalls of most passenger car tires. The Uniform Tire Quality Grading (UTQG) system does not apply to deep tread, winter tires, compact spare tires, tires with nominal rim diameters of 10 to 12 inches (25 to 30 cm), or to some limited-production tires.

While the tires available on General Motors passenger cars and light trucks may vary with respect to these grades, they must also conform to federal safety requirements and additional General Motors Tire Performance Criteria (TPC) standards.

Quality grades can be found where applicable on the tire sidewall between tread shoulder and maximum section width. For example:

Treadwear 200 Traction AA Temperature A

All Passenger Car Tires Must Conform to Federal Safety Requirements In Addition To These Grades.

Treadwear

The treadwear grade is a comparative rating based on the wear rate of the tire when tested under controlled conditions on a specified government test course. For example, a tire graded 150 would wear one and one-half (1½) times as well on the government course as a tire graded 100. The relative performance of tires depends upon the actual conditions of their use, however, and may depart significantly from the norm due to variations in driving habits, service practices and differences in road characteristics and climate.

Traction

The traction grades, from highest to lowest, are AA, A, B, and C. Those grades represent the tire's ability to stop on wet pavement as measured under controlled conditions on specified government test surfaces of asphalt and concrete. A tire marked C may have poor traction performance. Warning: The traction grade assigned to this tire is based on straight-ahead braking traction tests, and does not include acceleration, cornering, hydroplaning, or peak traction characteristics.

Temperature

The temperature grades are A (the highest), B, and C, representing the tire's resistance to the generation of heat and its ability to dissipate heat when tested under controlled conditions on a specified indoor laboratory test wheel. Sustained high temperature can cause the material of the tire to degenerate and reduce tire life, and excessive temperature can lead to sudden tire failure. The grade C

corresponds to a level of performance which all passenger car tires must meet under the Federal Motor Safety Standard No. 109. Grades B and A represent higher levels of performance on the laboratory test wheel than the minimum required by law. Warning: The temperature grade for this tire is established for a tire that is properly inflated and not overloaded. Excessive speed, underinflation, or excessive loading, either separately or in combination, can cause heat buildup and possible tire failure.

Wheel Alignment and Tire Balance

The tires and wheels were aligned and balanced at the factory to provide the longest tire life and best overall performance. Adjustments to wheel alignment and tire balancing are not necessary on a regular basis. Consider an alignment check if there is unusual tire wear or the vehicle is significantly pulling to one side or the other. Some slight pull to the left or right, depending on the crown of the road and/or other road surface variations such as troughs or ruts, is normal. If the vehicle is vibrating when driving on a smooth road, the tires and wheels may need to be rebalanced. See your dealer for proper diagnosis.

Wheel Replacement

Replace any wheel that is bent, cracked, or badly rusted or corroded. If wheel nuts keep coming loose, the wheel, wheel bolts, and wheel nuts should be replaced. If the wheel leaks air, replace it. Some aluminum wheels can be repaired. See your dealer if any of these conditions exist.

Your dealer will know the kind of wheel that is needed.

Each new wheel should have the same load-carrying capacity, diameter, width, offset, and be mounted the same way as the one it replaces.

Replace wheels, wheel bolts, wheel nuts, or Tire Pressure Monitor System (TPMS) sensors with new GM original equipment parts.

⚠ Warning

Using the wrong replacement wheels, wheel bolts, or wheel nuts can be dangerous. It could affect the braking and handling of the vehicle. Tires can lose air, and cause loss of control, causing a crash. Always use the correct wheel, wheel bolts, and wheel nuts for replacement.

Caution

The wrong wheel can also cause problems with bearing life, brake cooling, speedometer or odometer calibration, headlamp aim, bumper height, vehicle ground clearance, and tire or tire chain clearance to the body and chassis.

Used Replacement Wheels

⚠ Warning

Replacing a wheel with a used one is dangerous. How it has been used or how far it has been driven may be unknown. It could fail suddenly and cause a crash. When replacing wheels, use a new GM original equipment wheel.

Tire Chains

⚠ Warning

If the vehicle has 255/55R20, 255/65R17 AT, 265/60R18, or 265/65R17 size tires, do not use tire chains. There is not enough clearance. Tire chains used on a vehicle without the proper amount of clearance can cause damage to the brakes, suspension, or other vehicle parts. The area damaged by the tire chains could cause loss of control and a crash.

Use another type of traction device only if its manufacturer recommends it for use on the vehicle and tire size combination and road conditions. Follow that manufacturer's instructions. To avoid vehicle damage, drive slow and readjust or remove the traction device if it contacts the vehicle. Do not spin the wheels.

If traction devices are used, install them on the rear tires.

Caution

If the vehicle has a tire size other than 255/55R20, 255/65R17 AT, 265/60R18, or 265/65R17, use tire chains only where legal and only when necessary. Use chains that are the proper size for the tires. Install them on the tires of the rear axle. Do not use chains on the tires of the front axle. Tighten them as tightly as possible with the ends securely fastened. Drive slowly and follow the chain manufacturer's instructions. If the chains contact the vehicle, stop and retighten them. If the contact continues, slow down until it stops. Driving too fast or spinning the wheels with chains on will damage the vehicle.

If a Tire Goes Flat

It is unusual for a tire to blow out while driving, especially if the tires are maintained properly. If air goes out of a tire, it is much more likely to leak out slowly. But if there ever is a blowout, here are a few tips about what to expect and what to do:

If a front tire fails, the flat tire creates a drag that pulls the vehicle toward that side. Take your foot off the accelerator pedal and grip the steering wheel firmly. Steer to maintain lane position, and then gently brake to a stop, well off the road, if possible.

A rear blowout, particularly on a curve, acts much like a skid and may require the same correction as used in a skid. Stop pressing the accelerator pedal and steer to straighten the vehicle. It may be very bumpy and noisy. Gently brake to a stop, well off the road, if possible.

⚠ Warning

Driving on a flat tire will cause permanent damage to the tire. Re-inflating a tire after it has been driven on while severely underinflated or flat may cause a blowout and a serious crash. Never attempt to re-inflate a tire that has been driven on while severely underinflated or flat. Have your dealer or an authorized tire service center repair or replace the flat tire as soon as possible.

⚠ Warning

Lifting a vehicle and getting under it to do maintenance or repairs is dangerous without the appropriate safety equipment and training. If a jack is provided with the vehicle, it is designed only for changing a flat tire. If it is used for anything else, you or others could be badly injured or killed if the vehicle slips off the jack. If a jack is provided with the vehicle, only use it for changing a flat tire.

If a tire goes flat, avoid further tire and wheel damage by driving slowly to a level place, well off the road, if possible. Turn on the hazard warning flashers. See *Hazard Warning Flashers* ⇨ *104*.

⚠ Warning

Changing a tire can be dangerous. The vehicle can slip off the jack and roll over or fall causing injury or death. Find a level place to change the tire. To help prevent the vehicle from moving:

1. Set the parking brake firmly.
2. Put the shift lever in P (Park).
3. For vehicles with four-wheel drive with an N (Neutral) transfer case position, be sure the transfer case is in a drive gear — not in N (Neutral).
4. Turn off the engine and do not restart while the vehicle is raised.
5. Do not allow passengers to remain in the vehicle.
6. Place wheel blocks, if equipped, on both sides of the tire at the opposite corner of the tire being changed.

When the vehicle has a flat tire (2), use the following example as a guide to assist in the placement of the wheel blocks (1), if equipped.

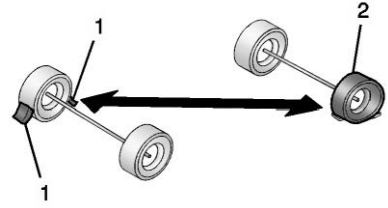

1. Wheel Block (If Equipped)
2. Flat Tire

The following information explains how to use the jack and change a tire.

Tire Changing

Removing the Spare Tire and Tools

Crew Cab

To access and remove the jack and tools:

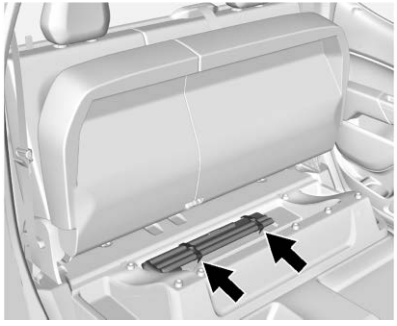

1. Lift the rear seat to access the tool bag.
2. Remove the straps to remove the tool bag.
3. Fold the rear seat to access the jack.

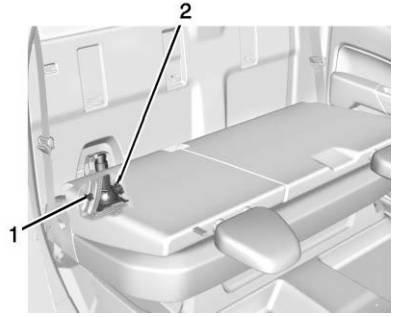

4. Turn the knob on the jack (2) counterclockwise to lower the jack head to release the jack from its holder.
5. Turn the wing nut (1) counterclockwise to remove the jack and wheel blocks.

Extended Cab

1. Jack Cover
2. Tool Bag Cover

To access and remove the jack and tools:

1. Pull the bottom of the jack cover (1) forward to remove it.
2. Pull the lower access pocket forward and then upward to remove the tool bag cover (2).

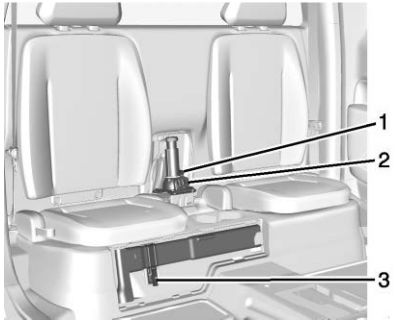

3. Turn the knob on the jack (1) counterclockwise to lower the jack head to release the jack from its holder.
4. Turn the wing nut (2) counterclockwise to remove the jack and wheel blocks.
5. Turn the wing nut (3) counterclockwise to remove the tool bag.

Use the jack handle extensions and the wheel wrench to remove the underbody-mounted spare tire.

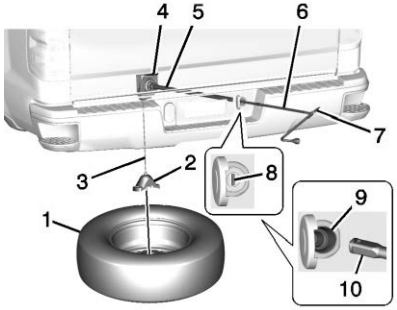

1. Spare Tire (Valve Stem Pointed Down)
2. Tire/Wheel Retainer
3. Hoist Cable
4. Hoist Assembly
5. Hoist Shaft
6. Jack Handle Extensions
7. Wheel Wrench
8. Spare Tire Lock (If Equipped)
9. Hoist Shaft Access Hole
10. Hoist End of Extension Tool

1. Open the spare tire lock cover on the bumper.

   Insert the ignition key, turn, and pull straight out to remove the spare tire lock (8), if equipped.

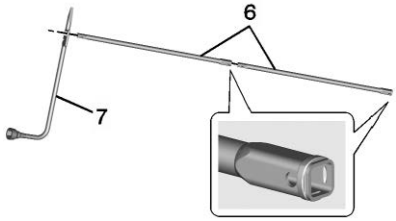

2. Assemble the wheel wrench (7) and the two jack handle extensions (6), as shown.

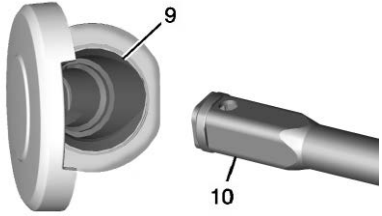

3. Insert the hoist end (open end) (10) of the extension through the hole (9) in the rear bumper.

   Do not use the chiseled end of the wheel wrench.

   Be sure the hoist end of the extension (10) connects to the hoist shaft. The ribbed square end of the extension is used to lower the spare tire.

4. Turn the wheel wrench counterclockwise to lower the spare tire to the ground. Continue to turn the wheel wrench until the spare tire can be pulled out from under the vehicle.
5. Pull the spare tire out from under the vehicle.

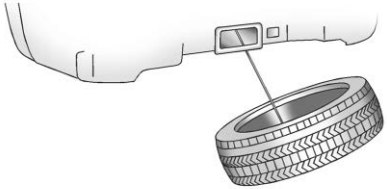

6. Tilt the tire toward the vehicle with some slack in the cable to access the tire/wheel retainer.

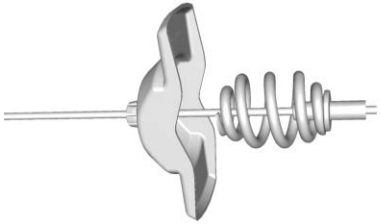

Tilt the retainer and pull it through the center of the wheel along with the cable and spring.

7. Put the spare tire near the flat tire.

Removing the Flat Tire and Installing the Spare Tire

Use the following pictures and instructions to remove the flat tire and raise the vehicle.

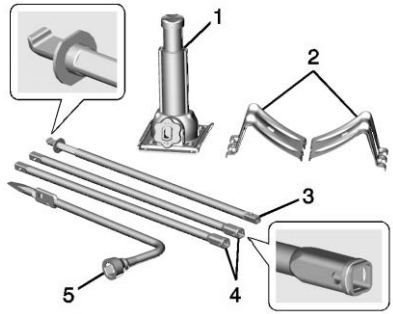

1. Jack
2. Wheel Blocks
3. Jack Handle
4. Jack Handle Extensions
5. Wheel Wrench

1. Do a safety check before proceeding. See *If a Tire Goes Flat* ⇨ *283*.

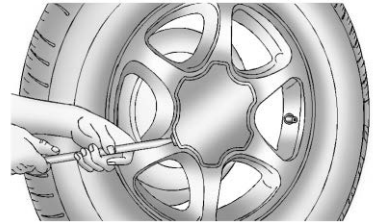

2. If the wheel has a center cap that covers the lug nuts, place the chisel end of the wheel wrench in each of the slots in the cap, and gently pry it out.

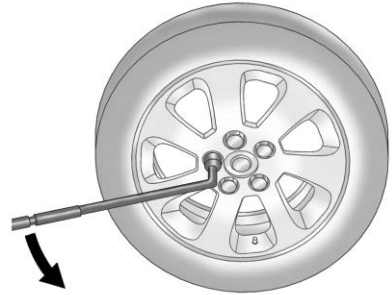

3. Use the wheel wrench and turn it counterclockwise to loosen the wheel nuts. Do not remove the wheel nuts yet.

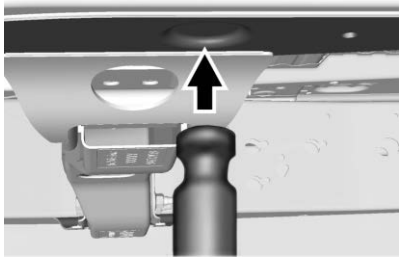

Front Position

4. Position the jack under the vehicle, as shown. If the flat tire is on the front of the vehicle, position the jack on the depression in the vehicle's frame, behind the flat tire.

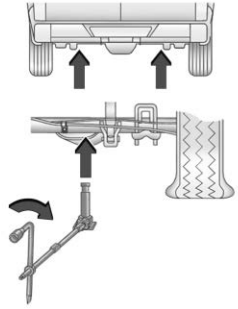

Rear Position

5. If the flat tire is on the rear, position the jack under the rear axle about 5 cm (2 in) inboard of the shock absorber bracket.

   Make sure that the jack head is positioned so that the rear axle is resting securely between the grooves that are on the jack head.

⚠ Warning

Getting under a vehicle when it is lifted on a jack is dangerous. If the vehicle slips off the jack, you could be badly injured or killed. Never get under a vehicle when it is supported only by a jack.

⚠ Warning

Raising the vehicle with the jack improperly positioned can damage the vehicle and even make the vehicle fall. To help avoid personal injury and vehicle damage, be sure to fit the jack lift head into the proper location before raising the vehicle.

⚠ Warning

The jack has a feature to limit its travel to prevent overextension. When the height limit is reached, an increase in resistance if felt when attempting to raise the jack farther. Raising the jack past the height limit can damage the jack pin and cause the jack to lock into an overextended position or not lower fully. Do not attempt to force the jack higher once the height limit is reached.

6. Turn the wheel wrench clockwise to raise the vehicle. Raise the vehicle far enough off the ground so there is enough room for the spare tire to fit under the wheel well.

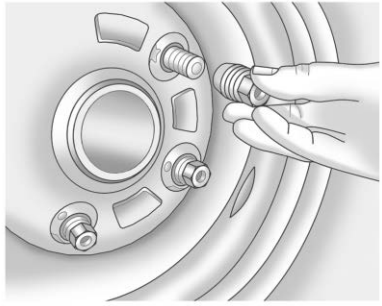

7. Remove all the wheel nuts and take off the flat tire.

⚠ Warning

Rust or dirt on a wheel, or on the parts to which it is fastened, can cause wheel nuts to become loose over time. The wheel could come off and cause a crash. When changing a wheel, remove any rust or dirt from places where the wheel attaches to the vehicle. In an emergency, a cloth or paper towel can be used; however, use a scraper or wire brush later to remove all rust or dirt.

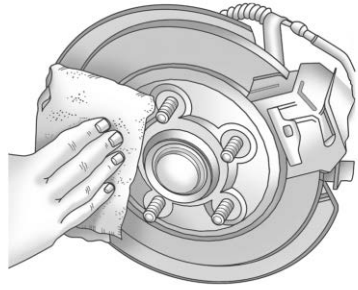

8. Remove any rust or dirt from the wheel bolts, mounting surfaces, and spare wheel.
9. Install the spare tire.

⚠ Warning

Never use oil or grease on bolts or nuts because the nuts might come loose. The vehicle's wheel could fall off, causing a crash.

10. Put the wheel nuts back on with the rounded end of the nuts toward the wheel.
11. Tighten each wheel nut by hand. Then use the wheel wrench to tighten the nuts until the wheel is held against the hub.
12. Turn the wheel wrench counterclockwise to lower the vehicle. Lower the jack completely.

⚠ Warning

If wheel studs are damaged, they can break. If all the studs on a wheel broke, the wheel could come off and cause a crash. If any stud is damaged because of a loose-running wheel, it could be that all of the studs are damaged. To be sure, replace all studs on the wheel. If the stud holes in a wheel have become larger, the wheel could collapse in operation. Replace any wheel if its stud holes have become larger or distorted in any way. Inspect hubs and hub-piloted wheels for damage. Because of loose running wheels, piloting pad damage may occur and require replacement of the entire hub, for proper centering of the wheels. When replacing studs, hubs, wheel nuts or wheels, be sure to use GM original equipment parts.

⚠ Warning

Wheel nuts that are improperly or incorrectly tightened can cause the wheels to become loose or come off. The wheel nuts should be tightened with a torque wrench to the proper torque specification after replacing. Follow the torque specification supplied by the aftermarket manufacturer when using accessory locking wheel nuts. See *Capacities and Specifications* ⇨ *325* for original equipment wheel nut torque specifications.

Caution

Improperly tightened wheel nuts can lead to brake pulsation and rotor damage. To avoid expensive brake repairs, evenly tighten the wheel nuts in the proper sequence and to the proper torque specification. See *Capacities and Specifications* ⇨ *325* for the wheel nut torque specification.

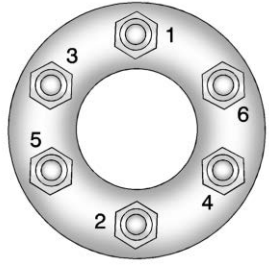

13. Tighten the nuts firmly in a crisscross sequence, as shown, by turning the wheel wrench clockwise.

When reinstalling the regular wheel and tire, also reinstall the center cap. Place the cap on the wheel and push it into place until it seats. The cap may only go on one way. Be sure to line up any tabs on the center cap with corresponding indentations on the wheel.

Storing a Flat or Spare Tire and Tools

⚠ Warning

Storing a jack, a tire, or other equipment in the passenger compartment of the vehicle could cause injury. In a sudden stop or collision, loose equipment could strike someone. Store all these in the proper place.

⚠ Warning

Failure to follow these tire storage instructions carefully could result in personal injury or property damage if the hoist cable fails or if the tire comes loose. Make sure the tire is stored securely before driving.

Caution

Storing an aluminum wheel with a flat tire under your vehicle for an extended period of time or with the valve stem pointing up can damage the wheel. Always stow the wheel with the valve stem pointing down and have the wheel/tire repaired as soon as possible.

Caution

The tire hoist can be damaged if there is no tension on the cable when using it. To have the necessary tension, the spare or road tire and wheel assembly must be installed on the tire hoist to use it.

⚠ Warning

An improperly stored spare tire could come loose and cause a crash. To avoid personal injury or property damage, always store the spare tire when the vehicle is parked on a level surface.

Store the tire under the rear of the vehicle in the spare tire carrier.

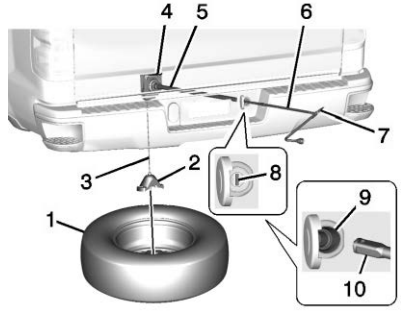

1. Spare Tire (Valve Stem Pointed Down)
2. Tire/Wheel Retainer
3. Hoist Cable
4. Hoist Assembly
5. Hoist Shaft
6. Jack Handle Extensions
7. Wheel Wrench
8. Spare Tire Lock (If Equipped)
9. Hoist Shaft Access Hole
10. Hoist End of Extension Tool

1. Put the tire on the ground at the rear of the vehicle with the valve stem pointed down, and to the rear.
2. Pull the cable and spring through the center of the wheel. Tilt the wheel retainer plate down and through the center of the wheel.

   Make sure the retainer is fully seated across the underside of the wheel.

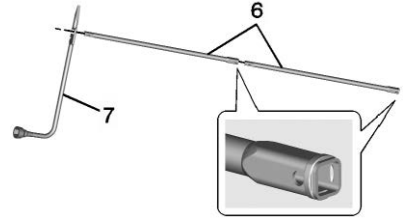

3. Attach the wheel wrench (7) and extensions (6) together, as shown.

Caution

Use of an air wrench or other power tools with the hoist mechanism is not recommended and could damage the system. Use only the tools supplied with the hoist mechanism.

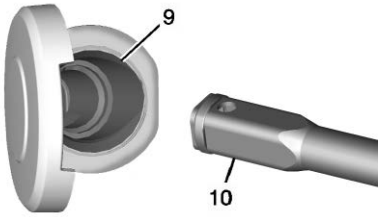

4. Insert the hoist end (10) through the hole (9) in the rear bumper and onto the hoist shaft.

   Do not use the chiseled end of the wheel wrench.

5. Raise the tire part way upward. Make sure the retainer is seated in the wheel opening.
6. Raise the tire fully against the underside of the vehicle by turning the wheel wrench clockwise until you hear two clicks or feel it skip twice. You cannot overtighten the cable.

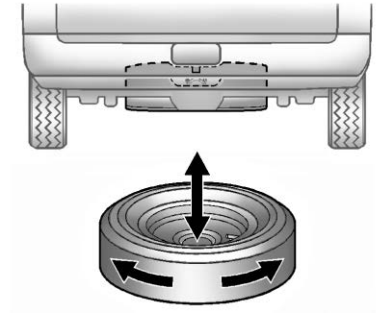

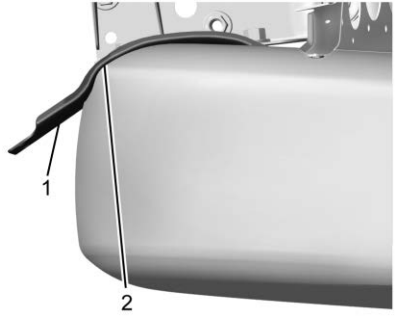

7. Make sure the tire is stored securely and flush in the radius (2) of the spare tire support bracket (1). Push, pull, and then try to turn the tire. If the tire moves, use the wheel wrench to tighten the cable.

   Repeat this tightness check procedure when checking the spare tire pressure according to the scheduled maintenance information or any time the spare tire is handled due to service of other components.

Correctly Stored

Incorrectly Stored

8. Reinstall the spare tire lock, if the vehicle has one.

To store the jack and tools, reverse the steps for removing them.

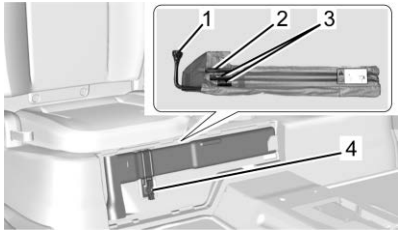

1. Wheel Wrench
2. Jack Handle
3. Jack Handle Extensions
4. Wing Nut

For extended cab models, be sure to replace the wheel wrench (1), jack handle (2), and two jack handle extensions (3) in the bag, as shown, so it can be properly stored in the storage compartment.

Be sure to fully tighten the wing nut (4) so the tool bag cover can be properly and securely closed.

Compact Spare Tire

⚠ Warning

Driving with more than one compact spare tire at a time could result in loss of braking and handling. This could lead to a crash and you or others could be injured. Use only one compact spare tire at a time.

If this vehicle has a compact spare tire, it was fully inflated when new; however, it can lose air over time. Check the inflation pressure regularly. It should be 420 kPa (60 psi).

Stop as soon as possible and check that the spare tire is correctly inflated after being installed on the vehicle. The compact spare tire is designed for temporary use only. The vehicle will perform differently with the spare tire installed and it is recommended that the vehicle speed be limited to 80 km/h (50 mph). To conserve the tread of the spare tire, have the standard tire repaired or replaced as soon as convenient and return the spare tire to the storage area.

When using a compact spare tire, the AWD (if equipped), ABS, and Traction Control systems may engage until the spare tire is recognized by the vehicle, especially on slippery roads. Adjust driving to reduce possible wheel slip.

Caution

When the compact spare is installed, do not take the vehicle through an automatic car wash with guide rails. The compact spare can get caught on the rails which can damage the tire, wheel, and other parts of the vehicle.

Do not use the compact spare on other vehicles.

Do not mix the compact spare tire or wheel with other wheels or tires. They will not fit. Keep the spare tire and its wheel together.

Caution

Tire chains will not fit the compact spare. Using them can damage the vehicle and the chains. Do not use tire chains on the compact spare.

Full-Size Spare Tire

If this vehicle came with a full-size spare tire, it was fully inflated when new, however, it can lose air over time. Check the inflation pressure regularly. See *Tire Pressure* ⇨ *273* and *Vehicle Load Limits* ⇨ *178* for information regarding proper tire inflation and loading the vehicle. For instructions on how to remove, install, or store a spare tire, see *Tire Changing* ⇨ *285*.

If equipped with a temporary use full-size spare tire, it is indicated on the tire sidewall. See *Tire Sidewall Labeling* ⇨ *268*. This spare tire should not be driven on over 112 km/h (70 mph), or 88 km/h (55 mph) when pulling a trailer, at the proper inflation pressure. Repair and replace the road tire as soon as it is convenient, and stow the spare tire for future use.

Caution

If the vehicle has four-wheel drive and a different size spare tire is installed, do not drive in four-wheel drive until the flat tire is repaired and/or replaced. The vehicle could be damaged and the repairs would not be covered by the warranty. Never use four-wheel drive when a different size spare tire is installed on the vehicle.

The vehicle may have a different size spare tire than the road tires originally installed on the vehicle. This spare tire was developed for use on this vehicle, so it is all right to drive on it. If the vehicle has four-wheel drive and a different size spare tire is installed, drive only in two-wheel drive.

After installing the spare tire on the vehicle, stop as soon as possible and check that the spare is correctly inflated. The spare tire is made to perform well at speeds up to 112 km/h (70 MPH) at the recommended inflation pressure, so you can finish your trip.

Have the damaged or flat road tire repaired or replaced and installed back onto the vehicle as soon as possible so the spare tire will be available in case it is needed again. Do not mix tires and wheels of difference sizes, because they will not fit. Keep the spare tire and its wheel together.

If the vehicle has a spare tire that does not match the original road tires and wheels in size and type, do not include the spare in the tire rotation.

Jump Starting

Jump Starting - North America

For more information about the vehicle battery, see *Battery - North America* ⇨ *249*.

If the battery has run down, try to use another vehicle and some jumper cables to start your vehicle. Be sure to use the following steps to do it safely.

⚠ Warning

WARNING: Battery posts, terminals and related accessories can expose you to chemicals including lead and lead compounds, which are known to the

(Continued)

Warning (Continued)

State of California to cause cancer and birth defects or other reproductive harm. Wash hands after handling. For more information go to www.P65Warnings.ca.gov.

See the warning on the back cover.

⚠ Warning

Batteries can hurt you. They can be dangerous because:

- They contain acid that can burn you.
- They contain gas that can explode or ignite.
- They contain enough electricity to burn you.

If you do not follow these steps exactly, some or all of these things can hurt you.

Caution

Ignoring these steps could result in costly damage to the vehicle that would not be covered by the vehicle warranty. Trying

(Continued)

Caution (Continued)

to start the vehicle by pushing or pulling it will not work, and it could damage the vehicle.

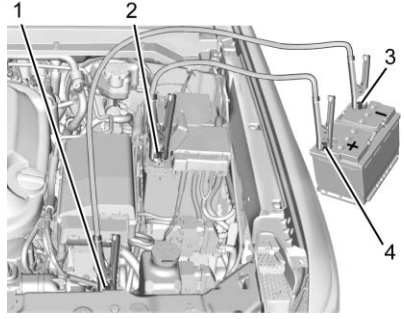

1. Discharged Battery Negative (–) Grounding Point
2. Discharged Battery Positive (+) Terminal
3. Good Battery Negative (–) Terminal
4. Good Battery Positive (+) Terminal

The discharged battery negative (–) grounding point is to the left of the windshield washer fluid reservoir.

The discharged battery positive (+) terminal is located in the engine compartment on the driver side of the vehicle.

The good battery negative (–) terminal and good battery positive (+) terminal are on the battery of the vehicle providing the jump start.

The discharged battery positive (+) terminal is under a trim cover. Pull the small cover (⊕ on top of it) outboard.

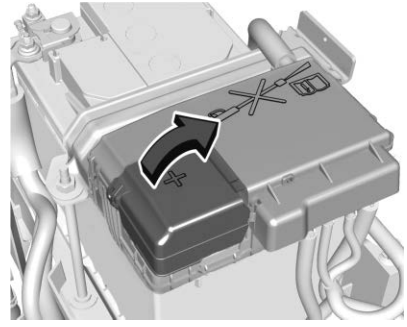

1. Check the other vehicle. It must have a 12-volt battery with a negative ground system.

Caution

If the other vehicle does not have a 12-volt system with a negative ground, both vehicles can be damaged. Only use a vehicle that has a 12-volt system with a negative ground for jump starting.

2. Position the two vehicles so that they are not touching.
3. Set the parking brake firmly and put the shift lever in P (Park) with an automatic transmission, or N (Neutral) with a manual transmission.

Caution

If any accessories are left on or plugged in during the jump starting procedure, they could be damaged. The repairs would not be covered by the vehicle warranty. Whenever possible, turn off or unplug all accessories on either vehicle when jump starting.

4. Turn the ignition off. Turn off all lights and accessories in both vehicles, except the hazard warning flashers if needed.

⚠ Warning

An electric fan can start up even when the engine is not running and can injure you. Keep hands, clothing, and tools away from any underhood electric fan.

⚠ Warning

Using a match near a battery can cause battery gas to explode. People have been hurt doing this, and some have been blinded. Use a flashlight if you need more light.

Battery fluid contains acid that can burn you. Do not get it on you. If you accidentally get it in your eyes or on your skin, flush the place with water and get medical help immediately.

⚠ Warning

Fans or other moving engine parts can injure you badly. Keep your hands away from moving parts once the engine is running.

5. Connect one end of the red positive (+) cable to the discharged battery positive (+) terminal.
6. Connect the other end of the red positive (+) cable to the good battery positive (+) terminal.
7. Connect one end of the black negative (–) cable to the good battery negative (–) terminal.
8. Connect the other end of the black negative (–) cable to the discharged battery negative (–) grounding point.
9. Start the engine in the vehicle with the good battery and run the engine at idle speed for at least four minutes.
10. Try to start the vehicle that had the dead battery. If it will not start after a few tries, it probably needs service.

Caution

If the jumper cables are connected or removed in the wrong order, electrical shorting may occur and damage the vehicle. The repairs would not be covered by the vehicle warranty. Always connect and remove the jumper cables in the correct order, making sure that the cables do not touch each other or other metal.

Jumper Cable Removal

Reverse the sequence exactly when removing the jumper cables.

After starting the disabled vehicle and removing the jumper cables, allow it to idle for several minutes.

Close the small cover (⊕ on top of it). Ensure the locking feature (located inboard) latches completely with the rest of the cover.

Towing the Vehicle

Caution

Incorrectly transporting a disabled vehicle may cause damage to the vehicle. Use proper tire straps to secure the vehicle to the flatbed tow truck. Do not strap or hook to any frame, underbody, or suspension component not specified below. Do not move vehicles with drive axle tires on the ground. Damage is not covered by the vehicle warranty.

Caution

The vehicle may be equipped with an electric parking brake and/or a mechanical transmission range select shifter. In the event of a loss of 12-volt battery power, the electric parking brake cannot be released, and the vehicle cannot be shifted to N (Neutral). Tire skates or dollies must be used under the non-rolling tires to prevent damage while loading/unloading the vehicle. Dragging the vehicle will cause damage not covered by the vehicle warranty.

Caution

The vehicle may be equipped with a tow eye. Improper use of the tow eye may cause damage to the vehicle and is not covered by the vehicle warranty.
If equipped, use the tow eye to load the vehicle onto a flatbed tow truck from a flat road surface, or to move the vehicle a very short distance at a walking pace. The tow eye is not designed for off-road

(Continued)

Caution (Continued)

recovery. The vehicle must be in N (Neutral) with the electric parking brake released when using the tow eye.

Contact a professional towing service if the disabled vehicle must be transported. GM recommends a flatbed tow truck to transport a disabled vehicle. Use ramps to help reduce approach angles, if necessary.

If equipped, a tow eye may be located near the spare tire or emergency jack. Do not use the tow eye to pull the vehicle from the snow, mud, sand, or ditch. Tow eye threads may have right or left-hand threads. Use caution when installing or removing the tow eye.

The vehicle must be in N (Neutral) and the electric parking brake must be released when loading the vehicle onto a flatbed tow truck.

- If the 12-volt battery is dead and/or electric parking brake is not released, the vehicle will not move. Try to jump start the vehicle with a known good 12-volt battery, shift the car into N (Neutral), and release the electric parking brake. Refer to *Jump Starting - North America* ⇨ *294*.

- If unsuccessful, the vehicle will not move. Tire skates or dollies must be used under the non-rolling tires to prevent vehicle damage.

Front Attachment Points

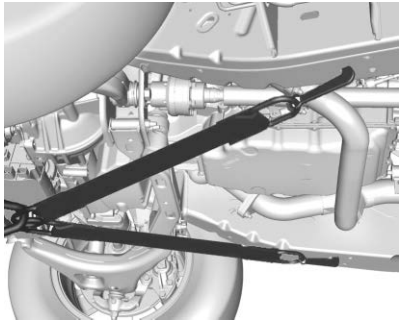

The vehicle is equipped with specific attachment points to be used by the towing provider. These holes may be used to pull the vehicle from a flat road surface onto the flatbed tow truck.

Recreational Vehicle Towing

Recreational vehicle towing means towing the vehicle behind another vehicle, such as a motor home. The two most common types of recreational vehicle towing are dinghy and dolly towing. Dinghy towing is towing the vehicle with all four wheels on the ground. Dolly towing is towing the vehicle with two wheels on the ground and two wheels on a dolly.

Here are some important things to consider before recreational vehicle towing:

- Before towing the vehicle, become familiar with the local laws that apply to recreational vehicle towing. These laws may vary by region.
- What is the towing capacity of the towing vehicle? Be sure to read the tow vehicle manufacturer's recommendations.
- What is the distance that will be traveled? Some vehicles have restrictions on how far and how long they can tow.
- Is the proper towing equipment going to be used? See your dealer or trailering professional for additional advice and equipment recommendations.
- Is the vehicle ready to be towed? Just as preparing the vehicle for a long trip, make sure the vehicle is prepared to be towed.

Follow the tow vehicle manufacturer's instructions.

Caution

Use of a shield mounted in front of the vehicle grille could restrict airflow and cause damage to the transmission. The repairs would not be covered by the vehicle warranty. If using a shield, only use one that attaches to the towing vehicle.

Dinghy Towing

Two-Wheel-Drive Vehicles

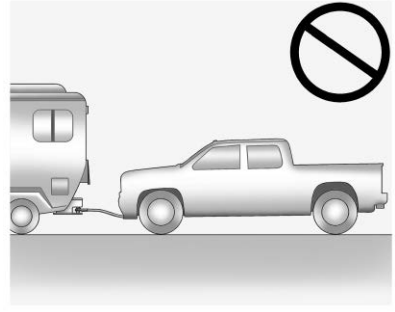

Caution

If the two-wheel-drive vehicle is towed with all four wheels on the ground, the drivetrain components could be damaged. The repairs would not be covered by the vehicle warranty.

Two-wheel-drive vehicles should not be towed with all four wheels on the ground.

Four-Wheel-Drive Vehicles

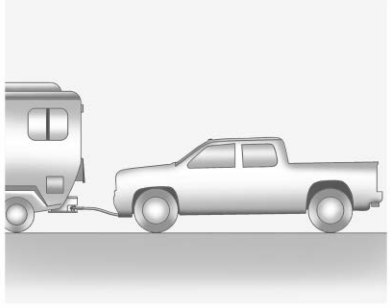

Only dinghy tow four-wheel-drive vehicles that have an N (Neutral) and a Four-Wheel Drive Low (4 (↓) setting.

⚠ Warning

Shifting a four-wheel-drive vehicle's transfer case into N (Neutral) can cause the vehicle to roll even if the transmission is in P (Park). You or others could be injured. Set the parking brake before shifting the transfer case to N (Neutral).

To dinghy tow:

1. Position the vehicle being towed behind the tow vehicle, facing forward and on a level surface.
2. Securely attach the vehicle being towed to the tow vehicle.
3. Apply the parking brake and start the engine.
4. Shift the transfer case to N (Neutral). See "Shifting into N (Neutral)" under *Four-Wheel Drive* ⇨ *194*. Check that the vehicle is in N (Neutral) by shifting the transmission to R (Reverse) and then to D (Drive). There should be no movement of the vehicle while shifting.
5. With the engine off, leave the key in ACC/ACCESSORY to prevent the steering column from locking.

Caution

Failure to disconnect the negative battery cable or to have it contact the terminals can cause damage to the vehicle.

6. Disconnect the negative battery cable at the battery and secure the nut and bolt. Cover the negative battery post with a non-conductive material to prevent any contact with the negative battery terminal.
7. Shift the transmission to P (Park).

Caution

If the steering column is locked, vehicle damage may occur.

Move the steering wheel to make sure the steering column is unlocked.

8. With a foot on the brake pedal, release the parking brake.
9. Keep the ignition key in the towed vehicle in ACC/ACCESSORY to prevent the steering column from locking.

Disconnecting the Towed Vehicle

Before disconnecting the towed vehicle:

1. Park on a level surface.

2. Set the parking brake, then shift the transmission to P (Park), and move the ignition key to OFF.
3. Connect the battery.
4. With your foot off the brake, turn the ignition on with the engine off.
5. Shift the transfer case out of N (Neutral) to Two-Wheel Drive High. See "Shifting out of N (Neutral)" under *Four-Wheel Drive* ⇨ *194*. See your dealer if the transfer case cannot be shifted out of N (Neutral).
6. Start the engine and check that the vehicle is in Two-Wheel Drive High by shifting the transmission to R (Reverse) and then to D (Drive). There should be movement of the vehicle while shifting.
7. Shift the transmission to P (Park) and turn off the ignition.
8. Disconnect the vehicle from the tow vehicle.
9. Release the parking brake.
10. Reset any lost presets.

    The outside temperature display will default to 0 °C (32 °F) but will reset with normal usage.

Dolly Towing

Front Towing (Front Wheels Off the Ground) – Two-Wheel-Drive Vehicles

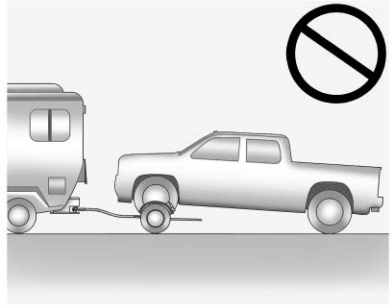

Caution

If a two-wheel-drive vehicle is towed with the rear wheels on the ground, the transmission could be damaged. The repairs would not be covered by the vehicle warranty. Never tow the vehicle with the rear wheels on the ground.

Front Towing (Front Wheels Off the Ground) – Four-Wheel-Drive Vehicles

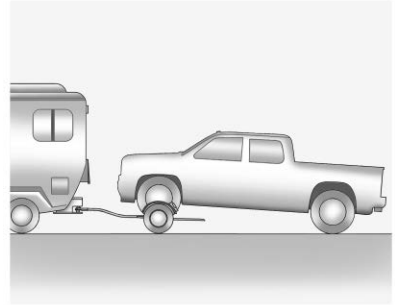

To dolly tow a four-wheel-drive vehicle from the front:

1. Attach the dolly to the tow vehicle following the dolly manufacturer's instructions.
2. Drive the front wheels onto the dolly.
3. Shift the transmission to P (Park).
4. Set the parking brake.

⚠ Warning

Shifting a four-wheel-drive vehicle's transfer case into N (Neutral) can cause the vehicle to roll even if the transmission is in P (Park). You or others could be injured. Set the parking brake before shifting the transfer case to N (Neutral).

5. Use a clamping device designed for towing to ensure that the front wheels are locked into the straight position.
6. Secure the vehicle to the dolly following the manufacturer's instructions.
7. Shift the transfer case to N (Neutral). See "Shifting into N (Neutral)" under *Four-Wheel Drive* ⇨ *194* for the proper procedure.
8. Release the parking brake only after the vehicle being towed is firmly attached to the tow vehicle.
9. Turn the ignition to LOCK/OFF.

Towing the Vehicle from the Rear

⚠ Warning

Never tow the vehicle from the rear. The front wheels cannot be secured in a straight direction, and the tow vehicle could sway out of control, causing a crash. You or others could be injured or killed, and the vehicle could be damaged. Repairs would not be covered by the vehicle warranty.

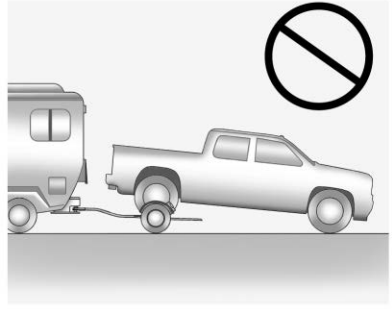

Appearance Care

Exterior Care

Locks

Locks are lubricated at the factory. Use a de-icing agent only when absolutely necessary, and have the locks greased after using. See *Recommended Fluids and Lubricants* ⇨ *320*.

Washing the Vehicle

To preserve the vehicle's finish, wash it often and out of direct sunlight.

Caution

Do not use petroleum-based, acidic, or abrasive cleaning agents as they can damage the vehicle's paint, metal, or plastic parts. If damage occurs, it would not be covered by the vehicle warranty. Approved cleaning products can be obtained from your dealer. Follow all manufacturer directions regarding correct product usage, necessary safety precautions, and appropriate disposal of any vehicle care product.

Caution

Avoid using high-pressure washes closer than 30 cm (12 in) to the surface of the vehicle. Use of power washers exceeding 8 274 kPa (1,200 psi) can result in damage or removal of paint and decals.

If using an automatic car wash, follow with the car wash instructions. The windshield wiper and rear window wiper, if equipped, must be off. Remove any accessories that may be damaged or interfere with the car wash equipment.

Rinse the vehicle well, before washing and after, to remove all cleaning agents completely. If they are allowed to dry on the surface, they could stain.

Dry the finish with a soft, clean chamois or an all-cotton towel to avoid surface scratches and water spotting.

Cleaning Underhood Components

Caution

Do not power wash any component under the hood that has this symbol.

(Continued)

Caution (Continued)

This could cause damage that would not be covered by the vehicle warranty.

Solvents or aggressive cleaners may harm underhood components. The usages of these chemicals should be avoided.

Recommend water only.

A pressure washer may be used, but care must be utilized. The following criteria must be followed:

- Water pressure must be kept below 14,000 KPa (2,000 PSI).
- Water temperature must be below 80 °C (180 °F).
- Spray nozzle with a 40 degree wide angle spray pattern or wider must be used.
- Nozzle must be kept at least 30 cm (1 ft) away from all surfaces.

Finish Care

Application of aftermarket clearcoat sealant/wax materials is not recommended.
If painted surfaces are damaged, see your dealer to have the damage assessed and repaired. Foreign materials such as calcium chloride and other salts, ice melting agents, road oil and tar, tree sap, bird droppings, chemicals from industrial chimneys, etc., can damage the vehicle's finish if they remain on painted surfaces. Wash the vehicle as soon as possible. If necessary, use non-abrasive cleaners that are marked safe for painted surfaces to remove foreign matter.

Occasional hand waxing or mild polishing should be done to remove residue from the paint finish. See your dealer for approved cleaning products.

Do not apply waxes or polishes to uncoated plastic, vinyl, rubber, decals, simulated wood, or flat paint as damage can occur.

Caution

Machine compounding or aggressive polishing on a basecoat/clearcoat paint finish may damage it. Use only non-abrasive waxes and polishes that are made for a basecoat/clearcoat paint finish on the vehicle.

To keep the paint finish looking new, keep the vehicle garaged or covered whenever possible.

Protecting Exterior Bright Metal Moldings

Caution

Failure to clean and protect the bright metal moldings can result in a hazy white finish or pitting. This damage would not be covered by the vehicle warranty.

The bright metal moldings on the vehicle are aluminum, chrome or stainless steel. To prevent damage always follow these cleaning instructions:

- Be sure the molding is cool to the touch before applying any cleaning solution.
- Use only approved cleaning solutions for aluminum, chrome or stainless steel. Some cleaners are highly acidic or contain alkaline substances and can damage the moldings.
- Always dilute a concentrated cleaner according to the manufacturer's instructions.
- Do not use cleaners that are not intended for automotive use.
- Use a nonabrasive wax on the vehicle after washing to protect and extend the molding finish.

Spray-In Bedliner Care

A spray-in bedliner is a permanent coating that bonds to the truck bed and cannot be removed. Promptly rinse the bedliner surface following a chemical spill to avoid permanent damage.

Spray-in bedliners can fade from oxidation, road dirt, heavy-duty hauling, and hard water stains. Clean it periodically by washing off the loose dirt and using a mild detergent. To restore the original appearance, apply the bedliner conditioner available through your dealer.

Caution

Using silicone-based products may damage the bedliner, reduce the slip-resistant texture, and attract dirt.

Cleaning Exterior Lamps/Lenses, Emblems, Decals, and Stripes

Use only lukewarm or cold water, a soft cloth, and a car washing soap to clean exterior lamps, lenses and emblems, decals, and stripes. Follow instructions under "Washing the Vehicle" previously in this section.

Lamp covers are made of plastic, and some have a UV protective coating. Do not clean or wipe them while they are dry.

Do not use any of the following on lamp covers:

- Abrasive or caustic agents.
- Washer fluids and other cleaning agents in higher concentrations than suggested by the manufacturer.
- Solvents, alcohols, fuels, or other harsh cleaners.
- Ice scrapers or other hard items.
- Aftermarket appearance caps or covers while the lamps are illuminated, due to excessive heat generated.

Caution

Failure to clean lamps properly can cause damage to the lamp cover that would not be covered by the vehicle warranty.

Caution

Using wax on low gloss black finish stripes can increase the gloss level and create a non-uniform finish. Clean low gloss stripes with soap and water only.

Air Intakes

Clear debris from the air intakes, between the hood and windshield, when washing the vehicle.

Windshield and Wiper Blades

Clean the outside of the windshield with glass cleaner.

Clean rubber blades using a lint-free cloth or paper towel soaked with windshield washer fluid or a mild detergent. Wash the windshield thoroughly when cleaning the blades. Bugs, road grime, sap, and a buildup of vehicle wash/wax treatments may cause wiper streaking.

Replace the wiper blades if they are worn or damaged. Damage can be caused by extreme dusty conditions, sand, salt, heat, sun, snow, and ice.

Weatherstrips

Apply weatherstrip lubricant on weatherstrips to make them last longer, seal better, and not stick or squeak. Lubricate weatherstrips once a year. Hot, dry climates may require more frequent application. Black marks from rubber material on painted surfaces can be removed by rubbing with a clean cloth. See *Recommended Fluids and Lubricants* ⇨ *320*.

Tires

Use a stiff brush with tire cleaner to clean the tires.

Caution

Using petroleum-based tire dressing products on the vehicle may damage the paint finish and/or tires. When applying a tire dressing, always wipe off any overspray from all painted surfaces on the vehicle.

Wheels and Wheel Trim

Use a soft, clean cloth with mild soap and water to clean the wheels. After rinsing thoroughly with clean water, dry with a soft, clean towel. A wax may then be applied.

Caution

Chrome wheels and chrome wheel trim may be damaged if the vehicle is not washed after driving on roads that have been sprayed with magnesium chloride or

(Continued)

Caution (Continued)

calcium chloride. These are used on roads for conditions such as dust and ice. Always wash the chrome with soap and water after exposure.

Caution

To avoid surface damage on wheels and wheel trim, do not use strong soaps, chemicals, abrasive polishes, cleaners, or brushes. Use only GM approved cleaners. Do not drive the vehicle through an automatic car wash that uses silicon carbide tire/wheel cleaning brushes. Damage could occur and the repairs would not be covered by the vehicle warranty.

Brake System

Visually inspect brake lines and hoses for proper hook-up, binding, leaks, cracks, chafing, etc. Inspect disc brake pads for wear and rotors for surface condition. Inspect drum brake linings/shoes for wear or cracks. Inspect all other brake parts.

Steering, Suspension, and Chassis Components

Visually inspect steering, suspension, and chassis components for damaged, loose, or missing parts or signs of wear at least once a year.

Inspect power steering for proper attachment, connections, binding, leaks, cracks, chafing, etc.

Visually check constant velocity joint boots and axle seals for leaks.

Body Component Lubrication

Lubricate all key lock cylinders, hood hinges, liftgate hinges, steel fuel door hinge, and power assist step hinges, unless the components are plastic. Applying silicone grease on weatherstrips with a clean cloth will make them last longer, seal better, and not stick or squeak

Underbody Maintenance

At least twice a year, spring and fall, use plain water to flush any corrosive materials from the underbody. Take care to thoroughly clean any areas where mud and other debris can collect.

Do not directly power wash the transfer case and/or front/rear axle output seals. High pressure water can overcome the seals and contaminate the fluid. Contaminated fluid will decrease the life of the transfer case and/or axles and should be replaced.

Sheet Metal Damage

If the vehicle is damaged and requires sheet metal repair or replacement, make sure the body repair shop applies anti-corrosion material to parts repaired or replaced to restore corrosion protection.

Original manufacturer replacement parts will provide the corrosion protection while maintaining the vehicle warranty.

Finish Damage

Quickly repair minor chips and scratches with touch-up materials available from your dealer to avoid corrosion. Larger areas of finish damage can be corrected in your dealer's body and paint shop.

Chemical Paint Spotting

Airborne pollutants can fall upon and attack painted vehicle surfaces causing blotchy, ring-shaped discolorations, and small, irregular dark spots etched into the paint surface. Refer to “Finish Care” previously in this section.

Interior Care

To prevent dirt particle abrasions, regularly clean the vehicle's interior. Before using cleaners, read and follow all safety instructions on the label. While cleaning the interior, open the doors and windows to get proper ventilation. Newspapers or dark garments can transfer color to the vehicle’s interior.

Caution

Immediately remove cleaners, hand lotions, sunscreen, and insect repellent from all interior surfaces or permanent damage may result.

Caution

Use cleaners specifically designed for the surfaces being cleaned to prevent permanent damage to the vehicle. Apply all cleaners directly to a cleaning cloth. Do not spray cleaners on any switches or controls.

When using liquid soap cleaners, follow the directions on the specific cleaner or soap solution for dilution instructions.

Caution

To prevent damage:

- Never use a razor or any other sharp object to remove soil from any interior surface
- Never use a brush with stiff bristles.
- Never rub any surface aggressively or with too much pressure.
- Do not get any exposed electrical components wet.
- Do not use laundry detergents or dishwashing soaps with degreasers. Do not use solutions that contain strong or caustic soap.
- Do not heavily saturate the upholstery when cleaning.
- Do not use solvents or cleaners containing solvents.
- Do not use disinfecting wipes that are scented or contain bleach. Do not use wipes or cleaners that show a color

(Continued)

Caution (Continued)

transfer to the wipe or change the appearance of the interior surface when used.

- Do not use scented or gel-type hand sanitizers. If hand sanitizer comes in contact with interior surfaces of the vehicle, blot immediately and clean with a soft cloth dampened with a mild soap and water solution.

Interior Glass

To clean, use a microfiber cloth fabric dampened with water. Wipe droplets left behind with a clean dry cloth. If necessary, use a commercial glass cleaner after cleaning with plain water.

Caution

To prevent scratching, never use abrasive cleaners on automotive glass. Abrasive cleaners or aggressive cleaning may damage the rear window defogger.

Cleaning the windshield with water during the first three to six months of ownership will reduce tendency to fog.

Speaker Covers

Vacuum around a speaker cover gently, so that the speaker will not be damaged. Clean spots with water and mild soap.

Coated Moldings

Coated moldings should be cleaned.

- When lightly soiled, wipe with a sponge or soft, lint-free cloth dampened with water.
- When heavily soiled, use warm soapy water.

Vinyl/Rubber

If equipped with vinyl floor and rubber floor mats, use a soft cloth and/or brush dampened with water to remove dust and loose dirt. For more thorough cleaning, use a mild soap and water solution.

⚠ Warning

Do not use cleaners that contain silicone, wax-based products, or cleaners that increase gloss on vinyl/rubber floor and mats. These cleaners can permanently change the appearance and feel of the vinyl/rubber and can make the floor

(Continued)

Warning (Continued)

slippery. Your foot could slip while operating the vehicle, and you could lose control, resulting in a crash. You or others could be injured.

Fabric/Carpet/Suede

Start by vacuuming the surface using a soft brush attachment. If a rotating vacuum brush attachment is being used, only use it on the floor carpet. Before cleaning, gently remove as much of the soil as possible:

- Gently blot liquids with a paper towel. Continue blotting until no more soil can be removed.
- For solid soils, remove as much as possible prior to vacuuming.

To clean:

1. Saturate a clean, lint-free colorfast cloth with water. Microfiber cloth is recommended to prevent lint transfer to the fabric or carpet.
2. Remove excess moisture by gently wringing until water does not drip from the cleaning cloth.
3. Start on the outside edge of the soil and gently rub toward the center. Fold the cleaning cloth to a clean area frequently to prevent forcing the soil into the fabric.
4. Continue gently rubbing the soiled area until there is no longer any color transfer from the soil to the cleaning cloth.
5. If the soil is not completely removed, use a mild soap solution followed only by plain water.

If the soil is not completely removed, it may be necessary to use a commercial upholstery cleaner or spot lifter. Test a small hidden area for colorfastness before using a commercial upholstery cleaner or spot lifter. If ring formation occurs, clean the entire fabric or carpet.

After cleaning, use a paper towel to blot excess moisture.

Cleaning High Gloss Surfaces and Vehicle Information and Radio Displays

Use a microfiber cloth on high gloss surfaces or vehicle displays. First, use a soft bristle brush to remove dirt that can scratch the surface. Then gently clean by rubbing with a microfiber cloth. Never use window cleaners or solvents. Periodically hand wash the microfiber cloth separately, using mild soap. Do not use bleach or fabric softener. Rinse thoroughly and air dry before next use.

Caution

Do not attach a device with a suction cup to the display. This may cause damage and would not be covered by the vehicle warranty.

Instrument Panel, Leather, Vinyl, Other Plastic Surfaces, Low Gloss Paint Surfaces, and Natural Open Pore Wood Surfaces

Use a soft bristle brush to remove dust from knobs and crevices on the instrument cluster. Use a soft microfiber cloth dampened with water to remove dust and loose dirt. For a more thorough cleaning, use a soft microfiber cloth dampened with a mild soap and water solution.

Caution

Soaking or saturating leather, especially perforated leather, as well as other interior surfaces, may cause permanent damage. Wipe excess moisture from

(Continued)

Caution (Continued)

these surfaces after cleaning and allow them to dry naturally. Never use heat, steam, or spot removers. Do not use liquids that contain alcohol or solvents on leather seats. Do not use cleaners that contain silicone or wax-based products. Cleaners containing these solvents can permanently change the appearance and feel of leather or soft trim, and are not recommended.

Do not use cleaners that increase gloss, especially on the instrument panel. Reflected glare can decrease visibility through the windshield under certain conditions.

Caution

Use of air fresheners may cause permanent damage to plastics and painted surfaces. If an air freshener comes in contact with any plastic or painted surface in the vehicle, blot immediately and clean with a soft cloth dampened with a mild soap solution. Damage caused by air fresheners would not be covered by the vehicle warranty.

Cargo Cover and Convenience Net

If equipped, wash with warm water and mild detergent. Do not use chlorine bleach. Rinse with cold water, and then dry completely.

Care of Seat Belts

Keep belts clean and dry.

⚠ Warning

Do not bleach or dye seat belt webbing. It may severely weaken the webbing. In a crash, they might not be able to provide adequate protection. Clean and rinse seat belt webbing only with mild soap and lukewarm water. Allow the webbing to dry.

Floor Mats

⚠ Warning

If a floor mat is the wrong size or is not properly installed, it can interfere with the pedals. Interference with the pedals can cause unintended acceleration and/or increased stopping distance which can

(Continued)

Warning (Continued)

cause a crash and injury. Make sure the floor mat does not interfere with the pedals.

Use the following guidelines for proper floor mat use:

- The original equipment floor mats are designed for your vehicle. If the floor mats need to be replaced, it is recommended that GM-certified floor mats are purchased. Non-GM floor mats may not fit properly and may interfere with the pedals. Always check that the floor mats do not interfere with the pedals.
- Do not use a floor mat if the vehicle is not equipped with a floor mat retainer on the driver side floor.
- Use the floor mat with the correct side up. Do not turn it over.
- Do not place anything on top of the driver side floor mat.
- Use only a single floor mat on the driver side.
- Do not place one floor mat on top of another.

Removing and Replacing the Floor Mats

Pull up on the rear of the floor mat to unlock each retainer and remove.

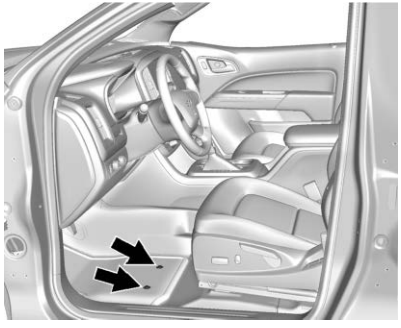

Reinstall by lining up the floor mat retainer openings over the carpet retainers and snapping into position.

Make sure the floor mat is properly secured in place.

Verify the floor mat does not interfere with the pedals.

Cleaning Rubber Floor Mats (All-Weather Mats and Floor Liners)

See “Vinyl/Rubber” under *Interior Care* ⇨ *305* for important cleaning information.

Service and Maintenance

General Information
General Information 310

Maintenance Schedule
Maintenance Schedule 311

Special Application Services
Special Application Services 317

Additional Maintenance and Care
Additional Maintenance and Care 317

Recommended Fluids, Lubricants, and Parts
Recommended Fluids and Lubricants 320
Maintenance Replacement Parts 321

Maintenance Records
Maintenance Records 323

General Information

Your vehicle is an important investment. This section describes the required maintenance for the vehicle. Follow this schedule to help protect against major repair expenses resulting from neglect or inadequate maintenance. It may also help to maintain the value of the vehicle if it is sold. It is the responsibility of the owner to have all required maintenance performed.

Your dealer has trained technicians who can perform required maintenance using genuine replacement parts. They have up-to-date tools and equipment for fast and accurate diagnostics. Many dealers have extended evening and Saturday hours, courtesy transportation, and online scheduling to assist with service needs.

Your dealer recognizes the importance of providing competitively priced maintenance and repair services. With trained technicians, the dealer is the place for routine maintenance such as oil changes and tire rotations and additional maintenance items like tires, brakes, batteries, and wiper blades.

Caution

Damage caused by improper maintenance can lead to costly repairs and may not be covered by the vehicle warranty. Maintenance intervals, checks, inspections, recommended fluids, and lubricants are important to keep the vehicle in good working condition.

Do not have chemical flushes that are not approved by GM performed on the vehicle. The use of flushes, solvents, cleaners, or lubricants that are not approved by GM could damage the vehicle, requiring expensive repairs that are not covered by the vehicle warranty.

The Tire Rotation and Required Services are the responsibility of the vehicle owner. It is recommended to have your dealer perform these services every 12 000 km (7,500 mi). Proper vehicle maintenance helps to keep the vehicle in good working condition, improves fuel economy, and reduces vehicle emissions.

Because of the way people use vehicles, maintenance needs vary. There may need to be more frequent checks and services. The Additional Required Services - Normal are for vehicles that:

- Carry passengers and cargo within recommended limits on the Tire and Loading Information label. See *Vehicle Load Limits* ⇨ *178*.
- Are driven on reasonable road surfaces within legal driving limits.
- Use the recommended fuel. See *Recommended Fuel* ⇨ *212*.

Refer to the information in the Maintenance Schedule Additional Required Services - Normal chart.

The Additional Required Services - Severe are for vehicles that are:

- Mainly driven in heavy city traffic in hot weather.
- Mainly driven in hilly or mountainous terrain.
- Frequently towing a trailer.
- Used for high speed or competitive driving.
- Used for taxi, police, or delivery service.

Refer to the information in the Maintenance Schedule Additional Required Services - Severe chart.

⚠ Warning

Performing maintenance work can be dangerous and can cause serious injury. Perform maintenance work only if the required information, proper tools, and equipment are available. If they are not, see your dealer to have a trained technician do the work. See *Doing Your Own Service Work* ⇨ *233*.

Maintenance Schedule

Owner Checks and Services

Check the engine oil level. See *Engine Oil* ⇨ *238*.

Once a Month

- Check the tire inflation pressures, including the spare. See *Tire Pressure* ⇨ *273*.
- Inspect the tires for wear. See *Tire Inspection* ⇨ *277*.
- Check the windshield washer fluid level. See *Washer Fluid* ⇨ *247*.

Engine Oil Change

When the CHANGE ENGINE OIL SOON message displays, have the engine oil and filter changed within the next 1 000 km (600 mi). If driven under the best conditions, the engine oil life system may not indicate the need for vehicle service for up to a year. The engine oil and filter must be changed at least once a year and the oil life system must be reset. Your trained dealer technician can perform this work. If the engine oil life system is reset accidentally, service the vehicle within 5 000 km (3,000 mi) since the last service. Reset the oil life system when the oil is changed. See *Engine Oil Life System* ⇨ *240*.

Extended Idle Use

When the vehicle is used in a way that requires extended idle time, one hour of use shall be deemed the same as 33 miles. See *Driver Information Center (DIC) (Base Level)* ⇨ *93* or *Driver Information Center (DIC) (Uplevel)* ⇨ *96* for hourmeter.

Passenger Compartment Air Filter

The passenger compartment air filter removes dust, pollen, and other airborne irritants from outside air that is pulled into the vehicle. The filter should be replaced as part of routine scheduled maintenance. Inspect the passenger compartment air filter every 36 000 km (22,500 mi) or two years, whichever comes first. Replace if necessary. More frequent replacement may be needed if the vehicle is driven in areas with heavy traffic, areas with poor air quality, or areas with high dust levels. Replacement may also be needed if there is a reduction in air flow, excessive window fogging, or odors.

Air Conditioning Desiccant (Replace Every Seven Years)

The air conditioning system requires maintenance every seven years. This service requires replacement of the desiccant to help the longevity and efficient operation of the air conditioning system. This service can be complex. See your dealer.

Tire Rotation and Required Services Every 12 000 km (7,500 mi)

Rotate the tires, if recommended for the vehicle, and perform the following services. See *Tire Rotation* ⇨ *277*.

- Check engine oil level and oil life percentage. If needed, change engine oil and filter, and reset oil life system. See *Engine Oil* ⇨ *238* and *Engine Oil Life System* ⇨ *240*.
- Check engine coolant level. See *Cooling System* ⇨ *243*.
- Check windshield washer fluid level. See *Washer Fluid* ⇨ *247*.
- Check tire inflation pressures, including the spare. See *Tire Pressure* ⇨ *273*.
- Inspect tire wear. See *Tire Inspection* ⇨ *277*.
- Visually check for fluid leaks.
- Inspect engine air cleaner filter. See *Engine Air Cleaner/Filter* ⇨ *241*.
- Inspect brake system. See *Exterior Care* ⇨ *301*.
- Visually inspect steering, suspension, and chassis components for damage, including cracks or tears in the rubber boots, loose or missing parts, or signs of wear at least once a year. See *Exterior Care* ⇨ *301*.
- Inspect power steering for proper attachment, connections, binding, leaks, cracks, chafing, etc.
- Visually inspect halfshafts and driveshafts for excessive wear, lubricant leaks, and/or damage including: tube dents or cracks, constant velocity joint or universal joint looseness, cracked or missing boots, loose or missing boot clamps, center bearing excessive looseness, loose or missing fasteners, and axle seal leaks.
- Check restraint system components. See *Safety System Check* ⇨ *33*.
- Visually inspect the fuel system including the evaporative (EVAP) system for damage or leaks. Visually check all fuel pipes, vapor lines, and hoses for proper attachment, connection, routing, and condition.
- Visually inspect exhaust system and nearby heat shields for loose or damaged parts.
- Lubricate body components. See *Exterior Care* ⇨ *301*.
- Check starter switch. See *Starter Switch Check* ⇨ *251*.

- Check automatic transmission shift lock control function. See *Automatic Transmission Shift Lock Control Function Check* ⇨ *251*.
- Check ignition transmission lock. See *Ignition Transmission Lock Check* ⇨ *252*.
- Check parking brake and automatic transmission park mechanism. See *Park Brake and P (Park) Mechanism Check* ⇨ *252*.
- Check accelerator pedal for damage, high effort, or binding. Replace if needed.
- Visually inspect gas strut for signs of wear, cracks, or other damage. Check the hold open ability of the strut. If the hold open is low, service the gas strut. See *Gas Strut(s)* ⇨ *253*.
- Verify spare tire key lock operation and lubricate as needed. See *Tire Changing* ⇨ *285*.
- Visually inspect the spare tire to ensure that it is tightly stowed under the vehicle. Push, pull, and try to turn the tire. If the spare tire moves, tighten as necessary. See *Tire Changing* ⇨ *285*.

Maintenance Schedule Additional Required Services - Normal	12 000 km/7,500 mi	24 000 km/15,000 mi	36 000 km/22,500 mi	48 000 km/30,000 mi	60 000 km/37,500 mi	72 000 km/45,000 mi	84 000 km/52,500 mi	96 000 km/60,000 mi	108 000 km/67,500 mi	120 000 km/75,000 mi	132 000 km/82,500 mi	144 000 km/90,000 mi	156 000 km/97,500 mi	168 000 km/105,000 mi	180 000 km/112,500 mi	192 000 km/120,000 mi	204 000 km/127,500 mi	216 000 km/135,000 mi	228 000 km/142,500 mi	240 000 km/150,000 mi
Rotate tires and perform Required Services. Check engine oil level and oil life percentage. Change engine oil and filter, if needed.	✓	✓	✓	✓	✓	✓	✓	✓	✓	✓	✓	✓	✓	✓	✓	✓	✓	✓	✓	✓
Replace passenger compartment air filter. (1)			✓			✓			✓			✓			✓			✓		
Replace engine air cleaner filter. (2)						✓						✓						✓		
Replace spark plugs. Inspect spark plug wires and/or boots.													✓							
Change transfer case fluid, if equipped with 4WD. (3)													✓							
Drain and fill engine cooling system. (4)																				✓
Visually inspect accessory drive belts. (5)																				✓
Replace brake fluid. (6)																				
Replace windshield wiper blades. (7)		✓		✓		✓		✓		✓		✓		✓		✓		✓		✓
Replace hood gas struts and tailgate dampener. (8)										✓										✓
Replace air conditioning desiccant. (9)																				

Footnotes — Maintenance Schedule Additional Required Services - Normal

(1) Or every two years, whichever comes first. More frequent passenger compartment air filter replacement may be needed if driving in areas with heavy traffic, poor air quality, high dust levels, or environmental allergens. Passenger compartment air filter replacement may also be needed if there is reduced airflow, window fogging, or odors. Your GM dealer can help determine when to replace the filter.

(2) Or every four years, whichever comes first. If driving in dusty conditions, inspect the filter at each oil change or more often as needed. See *Engine Air Cleaner/Filter* ⇨ *241*.

(3) Do not directly power wash the transfer case and/or front/rear axle output seals. High pressure water can overcome the seals and contaminate the transfer case fluid. Contaminated fluid will decrease the life of the transfer case and/or axles and should be replaced.

(4) Or every five years, whichever comes first. See *Cooling System* ⇨ *243*.

(5) Or every 10 years, whichever comes first. Inspect for fraying, excessive cracking, or damage; replace, if needed.

(6) Replace brake fluid every five years. See *Brake Fluid* ⇨ *248*.

(7) Or every 12 months, whichever comes first. See *Wiper Blade Replacement* ⇨ *252*.

(8) Or every 10 years, whichever comes first. See *Gas Strut(s)* ⇨ *253*.

(9) Replace air conditioning desiccant every seven years.

Maintenance Schedule Additional Required Services - Severe	12 000 km/7,500 mi	24 000 km/15,000 mi	36 000 km/22,500 mi	48 000 km/30,000 mi	60 000 km/37,500 mi	72 000 km/45,000 mi	84 000 km/52,500 mi	96 000 km/60,000 mi	108 000 km/67,500 mi	120 000 km/75,000 mi	132 000 km/82,500 mi	144 000 km/90,000 mi	156 000 km/97,500 mi	168 000 km/105,000 mi	180 000 km/112,500 mi	192 000 km/120,000 mi	204 000 km/127,500 mi	216 000 km/135,000 mi	228 000 km/142,500 mi	240 000 km/150,000 mi
Rotate tires and perform Required Services. Check engine oil level and oil life percentage. Change engine oil and filter, if needed.	✓	✓	✓	✓	✓	✓	✓	✓	✓	✓	✓	✓	✓	✓	✓	✓	✓	✓	✓	✓
Replace passenger compartment air filter. (1)			✓			✓			✓			✓			✓			✓		
Replace engine air cleaner filter. (2)						✓						✓						✓		
Replace spark plugs. Inspect spark plug wires and/or boots.													✓							
Change automatic transmission fluid and filter.						✓						✓						✓		
Change transfer case fluid, if equipped with 4WD. (3)						✓						✓						✓		
Drain and fill engine cooling system. (4)																				✓
Visually inspect accessory drive belts. (5)																				✓
Replace brake fluid. (6)																				
Replace windshield wiper blades. (7)		✓		✓		✓		✓		✓		✓		✓		✓		✓		✓
Replace hood gas struts and tailgate dampener. (8)										✓										✓
Replace air conditioning desiccant. (9)																				

Footnotes — Maintenance Schedule Additional Required Services - Severe

(1) Or every two years, whichever comes first. More frequent passenger compartment air filter replacement may be needed if driving in areas with heavy traffic, poor air quality, high dust levels, or environmental allergens. Passenger compartment air filter replacement may also be needed if there is reduced airflow, window fogging, or odors. Your GM dealer can help determine when to replace the filter.

(2) Or every four years, whichever comes first. If driving in dusty conditions, inspect the filter at each oil change or more often as needed. See *Engine Air Cleaner/Filter* ⇨ *241*.

(3) Do not directly power wash the transfer case and/or front/rear axle output seals. High pressure water can overcome the seals and contaminate the transfer case fluid. Contaminated fluid will decrease the life of the transfer case and/or axles and should be replaced.

(4) Or every five years, whichever comes first. See *Cooling System* ⇨ *243*.

(5) Or every 10 years, whichever comes first. Inspect for fraying, excessive cracking, or damage; replace, if needed.

(6) Replace brake fluid every five years. See *Brake Fluid* ⇨ *248*.

(7) Or every 12 months, whichever comes first. See *Wiper Blade Replacement* ⇨ *252*.

(8) Or every 10 years, whichever comes first. See *Gas Strut(s)* ⇨ *253*.

(9) Replace air conditioning desiccant every seven years.

Special Application Services

- Severe Commercial Use Vehicles Only: Lubricate chassis components every oil change.
- Have underbody flushing service performed. See "Underbody Maintenance" in *Exterior Care* ⇨ *301*.

Additional Maintenance and Care

Your vehicle is an important investment and caring for it properly may help to avoid future costly repairs. To maintain vehicle performance, additional maintenance services may be required.

It is recommended that your dealer perform these services — their trained dealer technicians know your vehicle best. Your dealer can also perform a thorough assessment with a multi-point inspection to recommend when your vehicle may need attention.

The following list is intended to explain the services and conditions to look for that may indicate services are required.

Battery

The 12-volt battery supplies power to start the engine and operate any additional electrical accessories.

- To avoid break-down or failure to start the vehicle, maintain a battery with full cranking power.

- Trained dealer technicians have the diagnostic equipment to test the battery and ensure that the connections and cables are corrosion-free.

Belts

- Belts may need replacing if they squeak or show signs of cracking or splitting.
- Trained dealer technicians have access to tools and equipment to inspect the belts and recommend adjustment or replacement when necessary.

Brakes

Brakes stop the vehicle and are crucial to safe driving.

- Signs of brake wear may include chirping, grinding, or squealing noises, or difficulty stopping.
- Trained dealer technicians have access to tools and equipment to inspect the brakes and recommend quality parts engineered for the vehicle.

Fluids

Proper fluid levels and approved fluids protect the vehicle's systems and components. See *Recommended Fluids and Lubricants* ⇨ *320* for GM approved fluids.

- Engine oil and windshield washer fluid levels should be checked at every fuel fill.
- Instrument cluster lights may come on to indicate that fluids may be low and need to be filled.

Hoses

Hoses transport fluids and should be regularly inspected to ensure that there are no cracks or leaks. With a multi-point inspection, your dealer can inspect the hoses and advise if replacement is needed.

Lamps

Properly working headlamps, taillamps, and brake lamps are important to see and be seen on the road.

- Signs that the headlamps need attention include dimming, failure to light, cracking, or damage. The brake lamps need to be checked periodically to ensure that they light when braking.
- With a multi-point inspection, your dealer can check the lamps and note any concerns.

Shocks and Struts

Shocks and struts help aid in control for a smoother ride.

- Signs of wear may include steering wheel vibration, bounce/sway while braking, longer stopping distance, or uneven tire wear.
- As part of the multi-point inspection, trained dealer technicians can visually inspect the shocks and struts for signs of leaking, blown seals, or damage, and can advise when service is needed.

Tires

Tires need to be properly inflated, rotated, and balanced. Maintaining the tires can save money and fuel, and can reduce the risk of tire failure.

- Signs that the tires need to be replaced include three or more visible treadwear indicators; cord or fabric showing through the rubber; cracks or cuts in the tread or sidewall; or a bulge or split in the tire.
- Trained dealer technicians can inspect and recommend the right tires. Your dealer can also provide tire/wheel balancing services to ensure smooth vehicle operation at all speeds. Your dealer sells and services name brand tires.

Vehicle Care

To help keep the vehicle looking like new, vehicle care products are available from your dealer. For information on how to clean and protect the vehicle's interior and exterior, see *Interior Care* ⇨ *305* and *Exterior Care* ⇨ *301*.

Wheel Alignment

Wheel alignment is critical for ensuring that the tires deliver optimal wear and performance.

- Signs that the alignment may need to be adjusted include pulling, improper vehicle handling, or unusual tire wear.
- Your dealer has the required equipment to ensure proper wheel alignment.

Windshield

For safety, appearance, and the best viewing, keep the windshield clean and clear.

- Signs of damage include scratches, cracks, and chips.
- Trained dealer technicians can inspect the windshield and recommend proper replacement if needed.

Wiper Blades

Wiper blades need to be cleaned and kept in good condition to provide a clear view.

- Signs of wear include streaking, skipping across the windshield, and worn or split rubber.
- Trained dealer technicians can check the wiper blades and replace them when needed.

Recommended Fluids, Lubricants, and Parts

Recommended Fluids and Lubricants

This maintenance section applies to vehicles with a gasoline engine. If the vehicle has a diesel engine, see the recommended fluids and lubricants section in the Duramax diesel supplement.

Fluids and lubricants identified below by name or specification, including fluids or lubricants not listed here, can be obtained from your dealer.

Usage	Fluid/Lubricant
Automatic Transmission (6 Speed)	DEXRON-VI Automatic Transmission Fluid.
Automatic Transmission (8 Speed)	DEXRON-HP Automatic Transmission Fluid.
Chassis Lubrication	Lubricant meeting requirements of NLGI #2, Category LB or GC-LB.
Engine Coolant	50/50 mixture of clean, drinkable water and use only DEX-COOL coolant. See *Cooling System* ⇨ *243*.
Engine Oil	Engine oil meeting the dexos1 specification of the proper SAE viscosity grade. ACDelco dexos1 full synthetic is recommended. See *Engine Oil* ⇨ *238*.
Floor Shift Linkage	Lubricant meeting requirements of NLGI #2, Category LB or GC-LB.
Front (If Equipped With Four-Wheel Drive) and Rear Axle	See your dealer.
Hydraulic Brake	DOT 4 Hydraulic Brake Fluid.
Key Lock Cylinders, Hood Hinges, Body Door Hinge Pins, Tailgate Hinge and Linkage, Tailgate Handle Pivot Points, Hinges, Latch Bolt Linkage, and Fuel Door Hinge	Multi-Purpose Lubricant, Superlube. See your dealer.

Usage	Fluid/Lubricant
Transfer Case (If Equipped With Four-Wheel Drive)	DEXRON-VI Automatic Transmission Fluid.
Windshield Washer	Automotive windshield washer fluid that meets regional freeze protection requirements.

Maintenance Replacement Parts

Replacement parts identified below by name, part number, or specification can be obtained from your dealer.

Part	GM Part Number	ACDelco Part Number
Engine Air Cleaner/Filter	94775933	A3195C
Engine Oil Filter		
2.5L L4 Engine	12696048/12706595	PF64
3.6L V6 Engine	55594651	PF2257G
Passenger Compartment Air Filter	23135671	CF196

Part	GM Part Number	ACDelco Part Number
Spark Plugs		
2.5L L4 Engine	12627160	41-115
3.6L V6 Engine	12646780	41-130
Wiper Blades		
Driver Side – 55 cm (21.7 in)	84225697	—
Passenger Side – 45 cm (17.7 in)	84225696	—

Maintenance Records

After the scheduled services are performed, record the date, odometer reading, who performed the service, and the type of services performed in the boxes provided. Retain all maintenance receipts.

Date	Odometer Reading	Serviced By	Services Performed

Technical Data

Vehicle Identification
Vehicle Identification Number (VIN) ... 324
Service Parts Identification 324

Vehicle Data
Capacities and Specifications 325
Engine Drive Belt Routing 327

Vehicle Identification

Vehicle Identification Number (VIN)

This legal identifier is in the front corner of the instrument panel, on the driver side of the vehicle. It can be seen through the windshield from outside. The Vehicle Identification Number (VIN) also appears on the Vehicle Certification label and certificates of title and registration.

Engine Identification

The eighth character in the VIN is the engine code. This code identifies the vehicle's engine, specifications, and replacement parts. See “Engine Specifications” under *Capacities and Specifications* ⇨ *325* for the vehicle's engine code.

Service Parts Identification

There may be a large barcode on the certification label on the center pillar that you can scan for the following information:

- Vehicle Identification Number (VIN)
- Model designation
- Paint information
- Production options

If there is not a large barcode on this label, then you will find this same information on a label inside of the glove box.

Vehicle Data

Capacities and Specifications

The following approximate capacities are given in metric and English conversions. See *Recommended Fluids and Lubricants* ⇨ *320*.

If the vehicle has a diesel engine, see the Duramax diesel supplement.

Application	Capacities	
	Metric	English
Air Conditioning Refrigerant	For the air conditioning system refrigerant type and charge amount, see the refrigerant label under the hood. See your dealer for more information.	
Engine Cooling System*		
2.5L L4 Engine	9.1 L	9.6 qt
3.6L V6 Engine	10.6 L	11.2 qt
Engine Oil with Filter		
2.5L L4 Engine	4.7 L	5.0 qt
3.6L V6 Engine	5.7 L	6.0 qt
Fuel Tank	79.9 L	21.1 gal

Application	Capacities	
	Metric	English
Transfer Case Fluid	1.9 L	2.0 qt
Wheel Nut Torque	190 N•m	140 lb ft
All capacities are approximate. When adding, be sure to fill to the approximate level, as recommended in this manual. Recheck fluid level after filling.		
*Engine cooling system capacity values are based on the entire cooling system and its components.		

Engine Specifications

Engine	VIN Code	Spark Plug Gap
2.5L L4 Engine (LCV)	A	0.95–1.10mm (0.037–0.043 in)
3.6L V6 Engine (LGZ)	N	0.80–0.90mm (0.031–0.035 in)
Spark plug gaps are preset by the manufacturer. Re-gapping the spark plug is not recommended and can damage the spark plug.		

Engine Drive Belt Routing

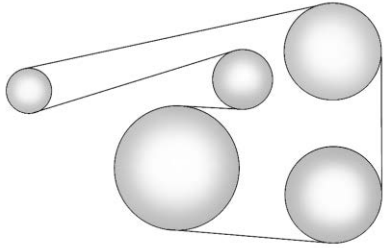

2.5L L4 Engine

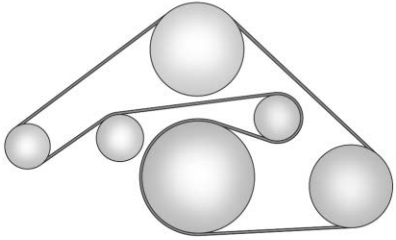

3.6L V6 Engine

If the vehicle has a diesel engine, see the Duramax diesel supplement.

Customer Information

Customer Information
Customer Satisfaction Procedure 328
Customer Assistance Offices 330
Customer Assistance for Text Telephone (TTY) Users 330
Online Owner Center 330
GM Mobility Reimbursement Program 331
Roadside Assistance Program 331
Scheduling Service Appointments 333
Courtesy Transportation Program 333
Collision Damage Repair 334
Publication Ordering Information 335
Radio Frequency Statement 336

Reporting Safety Defects
Reporting Safety Defects to the United States Government 336
Reporting Safety Defects to the Canadian Government 337
Reporting Safety Defects to General Motors 337

Vehicle Data Recording and Privacy
Vehicle Data Recording and Privacy 337
Cybersecurity 338
Event Data Recorders 338
OnStar 339
Infotainment System 339

Customer Information

Customer Satisfaction Procedure

Your satisfaction and goodwill are important to your dealer and to GMC. Normally, any concerns with the sales transaction or the operation of the vehicle will be resolved by your dealer's sales or service departments. Sometimes, however, despite the best intentions of all concerned, misunderstandings can occur. If your concern has not been resolved to your satisfaction, the following steps should be taken:

STEP ONE : Discuss your concern with a member of dealership management. Normally, concerns can be quickly resolved at that level. If the matter has already been reviewed with the sales, service, or parts manager, contact the owner of your dealership or the general manager.

STEP TWO : If after contacting a member of dealership management, it appears your concern cannot be resolved by your dealership without further help, in the U.S., call 1-800-462-8782. In Canada, call General Motors of Canada Customer Care Centre at 1-800-263-3777 (English), or 1-800-263-7854 (French).

We encourage you to call the toll-free number in order to give your inquiry prompt attention. Have the following information available to give the Customer Assistance representative:

- Vehicle Identification Number (VIN). This is available from the vehicle registration or title, or the plate at the top left of the instrument panel and visible through the windshield.
- Dealership name and location.
- Vehicle delivery date and present mileage.

When contacting GMC, remember that your concern will likely be resolved at a dealer's facility. That is why we suggest following Step One first.

STEP THREE — U.S. Owners : Both General Motors and your dealer are committed to making sure you are completely satisfied with your new vehicle. However, if you continue to remain unsatisfied after following the procedure outlined in Steps One and Two, you can file with the Better Business Bureau (BBB) AUTO LINE Program to enforce your rights.

The BBB AUTO LINE Program is an out-of-court program administered by the BBB National Programs, Inc. to settle automotive disputes regarding vehicle repairs or the interpretation of the New Vehicle Limited Warranty. Although you may be required to resort to this informal dispute resolution program prior to filing a court action, use of the program is free of charge and your case will generally be heard within 40 days. If you do not agree with the decision given in your case, you may reject it and proceed with any other venue for relief available to you.

You may contact the BBB AUTO LINE Program using the toll-free telephone number or write them at the following address:

BBB Auto Line a Division of
BBB National Programs, Inc.
1676 International Drive
Suite 550
McLean, VA 22102

Telephone: 1-800-955-5100
https://www.bbb.org/council/programs-services/dispute-handling-and-resolution/bbb-auto-line

This program is available in all 50 states and the District of Columbia. Eligibility is limited by vehicle age, mileage, and other factors.

General Motors reserves the right to change eligibility limitations and/or discontinue its participation in this program.

STEP THREE — Canadian Owners : In the event that you do not feel your concerns have been addressed after following the procedure outlined in Steps One and Two, General Motors of Canada Company wants you to be aware of its participation in a no-charge Mediation/Arbitration Program. General Motors of Canada Company has committed to binding arbitration of owner disputes involving factory-related vehicle service claims. The program provides for the review of the facts involved by an impartial third party arbiter, and may include an informal hearing before the arbiter. The program is designed so that the entire dispute settlement process, from the time you file your complaint to the final decision, should be completed in about 70 days. We believe our impartial program offers advantages over courts in most jurisdictions because it is informal, quick, and free of charge.

For further information concerning eligibility in the Canadian Motor Vehicle Arbitration Plan (CAMVAP), call toll-free 1-800-207-0685,

or call the General Motors Customer Care Centre, 1-800-263-3777 (English), 1-800-263-7854 (French), or write to:

Mediation/Arbitration Program
c/o Customer Care Centre
General Motors of Canada Company
Mail Code: CA1-163-005
1908 Colonel Sam Drive
Oshawa, Ontario L1H 8P7

Your inquiry should be accompanied by the Vehicle Identification Number (VIN).

Customer Assistance Offices

GMC encourages customers to call the toll-free number for assistance. However, if a customer wishes to write or e-mail GMC, the letter should be addressed to:

United States and Puerto Rico

GMC Customer Assistance Center
P.O. Box 33172
Detroit, MI 48232-5172

www.gmc.com

1-800-GMC-8782 (1-800-462-8782)
1-888-889-2438 (For Text Telephone devices (TTYs))
Roadside Assistance: 1-888-881-3302

From U.S. Virgin Islands:

1-800-496-9994

Canada

General Motors of Canada Company
Customer Care Centre, Mail Code: CA1-163-005
1908 Colonel Sam Drive
Oshawa, Ontario L1H 8P7
www.gmc.ca

1-800-263-3777 (English)
1-800-263-7854 (French)
1-800-263-3830 (For Text Telephone Devices (TTYs))
Roadside Assistance: 1-800-268-6800

Overseas

Please contact the local General Motors Business Unit.

Customer Assistance for Text Telephone (TTY) Users

To assist customers who are deaf, hard of hearing, or speech-impaired and who use Text Telephones (TTYs), GMC has TTY equipment available at its Customer Assistance Center. Any TTY user in the U.S. can communicate with GMC by dialing: 1-888-889-2438. TTY users in Canada can dial 1-800-263-3830.

Online Owner Center

The GMC Owner Center (U.S.) my.gmc.com

Learn more about your vehicle features, shop for and manage your connected services and OnStar plans, and access diagnostic information specific to your vehicle.

Membership Benefits

: Download owner's manuals and view vehicle-specific how-to videos.

: View maintenance schedules, alerts, and Vehicle Diagnostic Information. Schedule service appointments.

: View service records from your dealership and add your own.

: Select a dealer and view locations, maps, phone numbers, and hours.

: Track your vehicle's warranty information.

: View active recalls by Vehicle Identification Number (VIN). See *Vehicle Identification Number (VIN)* ⇨ *324*.

: Manage your profile and payment information. View your GM Rewards Card earnings and My GMC Rewards points.

: Chat live with online help representatives.

Visit my.gmc.com and create an account today.

GMC Owner Centre (Canada) mygmccanada.ca

Visit the GMC Owner Centre at mygmccanada.ca (English) or my.gmccanada.ca (French) to access similar benefits to the U.S. site.

GM Mobility Reimbursement Program

GENERAL MOTORS MOBILITY

This program is available to qualified applicants for cost reimbursement, up to certain limits, of eligible aftermarket adaptive equipment required for the vehicle, such as hand controls or a wheelchair/scooter lift for the vehicle.

To learn about the GM Mobility program, see www.gmmobility.com or call the GM Mobility Assistance Center at 1-800-323-9935. Text Telephone (TTY) users, call 1-800-833-9935.

General Motors of Canada also has a Mobility program. See www.gm.ca, or call 1-800-GM-DRIVE (800-463-7483) for details. TTY users call 1-800-263-3830.

Roadside Assistance Program

For U.S.-purchased vehicles, call 1-888-881-3302; (Text Telephone (TTY): 1-888-889-2438).

For Canadian-purchased vehicles, call 1-800-268-6800.

Service is available 24 hours a day, 365 days a year.

Calling for Assistance

When calling Roadside Assistance, have the following information ready:

- Your name, home address, and home telephone number
- Telephone number of your location
- Location of the vehicle
- Model, year, color, and license plate number of the vehicle
- Odometer reading, Vehicle Identification Number (VIN), and delivery date of the vehicle
- Description of the problem

Coverage

Services are provided for the duration of the vehicle's powertrain warranty.

In the U.S., anyone driving the vehicle is covered. In Canada, a person driving the vehicle without permission from the owner is not covered.

Roadside Assistance is not a part of the New Vehicle Limited Warranty. General Motors North America and GMC reserve the right to make any changes or discontinue the Roadside Assistance program at any time without notification.

General Motors North America and GMC reserve the right to limit services or payment to an owner or driver if they decide the claims are made too often, or the same type of claim is made many times.

Services Provided

- **Emergency Fuel Delivery:** Delivery of enough fuel for the vehicle to get to the nearest service station.
- **Lock-Out Service:** Service to unlock the vehicle if you are locked out. A remote unlock may be available if you have OnStar. For security reasons, the driver must present identification before this service is given.
- **Emergency Tow from a Public Road or Highway:** Tow to the nearest GMC dealer for warranty service, or if the vehicle was in a crash and cannot be driven. Assistance is not given when the vehicle is stuck in the sand, mud, or snow.
- **Flat Tire Change:** Service to change a flat tire with the spare tire. The spare tire, if equipped, must be in good condition and properly inflated. It is the owner's responsibility for the repair or replacement of the tire if it is not covered by the warranty.
- **Battery Jump Start:** Service to jump start a dead battery.
- **Trip Interruption Benefits and Assistance:** If your trip is interrupted due to a warranty event, incidental expenses may be reimbursed within the Powertrain warranty period. Items considered are reasonable and customary hotel, meals, rental car, or a vehicle being delivered back to the customer, up to 500 miles.

Services Not Included in Roadside Assistance

- Impound towing caused by violation of any laws
- Legal fines
- Mounting, dismounting, or changing of snow tires, chains, or other traction devices

Service is not provided if a vehicle is in an area that is not accessible to the service vehicle or is not a regularly traveled or maintained public road, which includes ice and winter roads. Off-road use is not covered.

Services Specific to Canadian-Purchased Vehicles

- **Fuel Delivery:** Reimbursement is up to 7 L. Diesel fuel delivery may be restricted. Propane and other fuels are not provided through this service.
- **Lock-Out Service:** Vehicle registration is required.
- **Trip Interruption Benefits and Assistance:** Must be over 150 km from where your trip was started to qualify. Pre-authorization, original detailed receipts, and a copy of the repair orders are required. Once authorization has been received, the Roadside Assistance advisor will help to make arrangements and explain how to receive payment.
- **Alternative Service:** If assistance cannot be provided right away, the Roadside Assistance advisor may give permission to get local emergency road service. You will receive payment, up to $100, after sending the original receipt to Roadside Assistance. Mechanical failures may be covered, however any cost for parts and labor for repairs not covered by the warranty are the owner's responsibility.

Scheduling Service Appointments

When the vehicle requires warranty service, contact your dealer and request an appointment. By scheduling a service appointment and advising the service consultant of your transportation needs, your dealer can help minimize your inconvenience.

If the vehicle cannot be scheduled into the service department immediately, keep driving it until it can be scheduled for service, unless, of course, the problem is safety related. If it is, please call your dealership, let them know this, and ask for instructions.

If your dealer requests you to bring the vehicle for service, you are urged to do so as early in the work day as possible to allow for same-day repair.

Courtesy Transportation Program

To enhance your ownership experience, we and our participating dealers are proud to offer Courtesy Transportation, a customer support program for vehicles with the Bumper-to-Bumper (Base Warranty Coverage period in Canada), Federal Emission, Extended Powertrain or Electric specific warranties in both the U.S. and Canada.

Several Courtesy Transportation options are available to assist in reducing inconvenience when warranty repairs are required.

Courtesy Transportation is not a part of the New Vehicle Limited Warranty. A separate manual entitled “Limited Warranty and Owner Assistance Information” produced for new vehicles provides detailed warranty coverage information.

Transportation Options

Warranty service can generally be completed while you wait. However, if you are unable to do so, your dealer may offer the following transportation options:

Shuttle Service

This includes one-way or round-trip shuttle service within reasonable time and distance parameters of your dealer’s area.

Public Transportation or Fuel Reimbursement

If overnight warranty repairs are needed, and public transportation is used, the expense must be supported by original receipts and within the maximum amount allowed by GM. If U.S. customers arrange their own transportation, limited reimbursement for reasonable fuel expenses may be available. Claim amounts should reflect actual costs and be supported by original receipts. See your dealer for information.

Courtesy Rental Vehicle

For an overnight warranty repair, the dealer may provide an available courtesy rental vehicle or provide for reimbursement of a rental vehicle. Reimbursement is limited and must be supported by original receipts as well as a signed and completed rental agreement and meet state/provincial, local, and rental vehicle provider requirements. Requirements vary and may include minimum age requirements, insurance coverage, credit card, etc. Additional fees such as fuel, rental vehicle insurance, taxes, levies, usage fees, excessive mileage, or rental usage beyond the completion of the repair are also your responsibility.

It may not be possible to provide a like vehicle as a courtesy rental.

Additional Program Information

All program options, such as shuttle service, may not be available at every dealer. Contact your dealer for specific availability.

General Motors reserves the right to unilaterally modify, change, or discontinue Courtesy Transportation at any time and to resolve all questions of claim eligibility pursuant to the terms and conditions described herein at its sole discretion.

Collision Damage Repair

If the vehicle is involved in a collision and it is damaged, have the damage repaired by a qualified technician using the proper equipment and quality replacement parts. Poorly performed collision repairs diminish the vehicle resale value, and safety performance can be compromised in subsequent collisions.

Collision Parts

Genuine GM Collision parts are new parts made with the same materials and construction methods as the parts with which the vehicle was originally built. Genuine GM Collision parts are the best choice to ensure that the vehicle's designed appearance, durability, and safety are preserved. The use of Genuine GM parts can help maintain the GM New Vehicle Limited Warranty.

Recycled original equipment parts may also be used for repair. These parts are typically removed from vehicles that were total losses in prior crashes. In most cases, the parts being recycled are from undamaged sections of the vehicle. A recycled original equipment GM part may be an acceptable choice to maintain the vehicle's originally designed appearance and safety performance; however, the history of these parts is not known. Such parts are not covered by the GM New Vehicle Limited Warranty, and any related failures are not covered by that warranty.

Aftermarket collision parts are also available. These are made by companies other than GM and may not have been tested for the vehicle. As a result, these parts may fit poorly, exhibit premature durability/corrosion problems, and may not perform properly in subsequent collisions. Aftermarket parts are not covered by the GM New Vehicle Limited Warranty, and any vehicle failure related to such parts is not covered by that warranty.

Repair Facility

GM also recommends that you choose a collision repair facility that meets your needs before you ever need collision repairs. Your dealer may have a collision repair center with GM-trained technicians and state-of-the-art equipment, or be able to recommend a collision repair center that has GM-trained technicians and comparable equipment.

Insuring the Vehicle

Protect your investment in the GM vehicle with comprehensive and collision insurance coverage. There are significant differences in the quality of coverage afforded by various insurance policy terms. Many insurance policies provide reduced protection to the GM vehicle by limiting compensation for damage repairs through the use of aftermarket collision parts. Some insurance companies will not specify aftermarket collision parts. When purchasing insurance, we recommend that you ensure that the vehicle will be repaired with GM original equipment collision parts. If such insurance coverage is not available from your current insurance carrier, consider switching to another insurance carrier.

If the vehicle is leased, the leasing company may require you to have insurance that ensures repairs with Genuine GM Original Equipment Manufacturer (OEM) parts or Genuine Manufacturer replacement parts. Read the lease carefully, as you may be charged at the end of the lease for poor quality repairs.

If a Crash Occurs

If there has been an injury, call emergency services for help. Do not leave the scene of a crash until all matters have been taken care of. Move the vehicle only if its position puts you in danger, or you are instructed to move it by a police officer.

Give only the necessary information to police and other parties involved in the crash.

For emergency towing see *Roadside Assistance Program* ⇨ *331*.

Gather the following information:

- Driver name, address, and telephone number
- Driver license number
- Owner name, address, and telephone number
- Vehicle license plate number
- Vehicle make, model, and model year
- Vehicle Identification Number (VIN)
- Insurance company and policy number
- General description of the damage to the other vehicle

Choose a reputable repair facility that uses quality replacement parts. See “Collision Parts” earlier in this section.

If the airbag has inflated, see *What Will You See after an Airbag Inflates?* ⇨ *38*.

Managing the Vehicle Damage Repair Process

In the event that the vehicle requires damage repairs, GM recommends that you take an active role in its repair. If you have a pre-determined repair facility of choice, take the vehicle there, or have it towed there. Specify to the facility that any required replacement collision parts be original equipment parts, either new Genuine GM parts or recycled original GM parts. Remember, recycled parts will not be covered by the GM vehicle warranty.

Insurance pays the bill for the repair, but you must live with the repair. Depending on your policy limits, your insurance company may initially value the repair using aftermarket parts. Discuss this with the repair professional, and insist on Genuine GM parts. Remember, if the vehicle is leased, you may be obligated to have the vehicle repaired with Genuine GM parts, even if your insurance coverage does not pay the full cost.

If another party's insurance company is paying for the repairs, you are not obligated to accept a repair valuation based on that insurance company's collision policy repair limits, as you have no contractual limits with that company. In such cases, you can have control of the repair and parts choices as long as the cost stays within reasonable limits.

Publication Ordering Information

Service Manuals

Service manuals have the diagnosis and repair information on the engine, transmission, axle, suspension, brakes, electrical system, steering system, body, etc.

Customer Literature

Owner's manuals are written specifically for owners and are intended to provide basic operational information about the vehicle. The owner's manual includes the Maintenance Schedule for all models.

Customer literature publications available for purchase include owner's manuals, warranty manuals, and portfolios. Portfolios include an owner's manual, warranty manual, if applicable, and zip lock bag or pouch.

Current and Past Models

Service manuals and customer literature are available for many current and past model year GM vehicles.

To order, call 1-800-551-4123 Monday–Friday, 8:00 a.m.–6:00 p.m. eastern time

For credit card orders only (VISA, MasterCard, or Discover), see Helm, Inc. at: www.helminc.com.

To order by mail, write to:

Helm, Incorporated
Attention: Customer Service
47911 Halyard Drive
Plymouth, MI 48170

Make checks payable in U.S. funds.

Radio Frequency Statement

This vehicle uses license-exempt transmitters / receivers / systems that operate on a radio frequency that complies with Part 15/Part 18 of the Federal Communications Commission (FCC) rules and with Innovation, Science and Economic Development (ISED) Canada's license-exempt RSS(s) / RSP-100 / ICES-GEN.

Operation is subject to the following two conditions:

1. The device may not cause harmful interference.
2. The device must accept any interference received, including interference that may cause undesired operation of the device.

Changes or modifications to any of these systems by other than an authorized service facility could void authorization to use this equipment.

Reporting Safety Defects

Reporting Safety Defects to the United States Government

If you believe that your vehicle has a defect which could cause a crash or could cause injury or death, you should immediately inform the National Highway Traffic Safety Administration (NHTSA) in addition to notifying General Motors.

If NHTSA receives similar complaints, it may open an investigation, and if it finds that a safety defect exists in a group of vehicles, it may order a recall and remedy campaign. However, NHTSA cannot become involved in individual problems between you, your dealer, or General Motors.

To contact NHTSA, you may call the Vehicle Safety Hotline toll-free at 1-888-327-4236 (TTY: 1-800-424-9153); go to *https://www.safercar.gov;* or write to:

Administrator, NHTSA
1200 New Jersey Avenue, S.E.
Washington, D.C. 20590

You can also obtain other information about motor vehicle safety from *https://www.safercar.gov*.

Reporting Safety Defects to the Canadian Government

If you live in Canada, and you believe that the vehicle has a safety defect, notify Transport Canada immediately, and notify General Motors of Canada Company. Call Transport Canada at 1-800-333-0510; go to:

www.tc.gc.ca/recalls (English)

www.tc.gc.ca/rappels (French)

or write to:

Transport Canada
Motor Vehicle Safety Directorate
Defect Investigations and Recalls Division
80 Noel Street
Gatineau, QC J8Z 0A1

Reporting Safety Defects to General Motors

In addition to notifying NHTSA (or Transport Canada) in a situation like this, notify General Motors.

In the U.S., call 1-800-462-8782, or write:

GMC Customer Assistance Center
P.O. Box 33172
Detroit, MI 48232-5172

In Canada, call 1-800-263-3777 (English) or 1-800-263-7854 (French), or write:

General Motors of Canada Company
Customer Care Centre, Mail Code: CA1-163-005
1908 Colonel Sam Drive
Oshawa, Ontario L1H 8P7

In Mexico, call 800-466-0812 or 800-466-0801.

In other Central America and Caribbean Countries, call 52-555-901-2369.

Vehicle Data Recording and Privacy

The vehicle has a number of computers that record information about the vehicle's performance and how it is driven or used. For example, the vehicle uses computer modules to monitor and control engine and transmission performance, to monitor the conditions for airbag deployment and deploy them in a crash, and, if equipped, to provide antilock braking to help the driver control the vehicle. These modules may store data to help the dealer technician service the vehicle or to help GM improve safety or features. Some modules may also store data about how the vehicle is operated, such as rate of fuel consumption or average speed. These modules may retain personal preferences, such as radio presets, seat positions, and temperature settings.

Cybersecurity

GM collects information about the use of your vehicle including operational and safety related information. We collect this information to provide, evaluate, improve, and troubleshoot our products and services and to develop new products and services. The protection of vehicle electronics systems and customer data from unauthorized outside electronic access or control is important to GM. GM maintains appropriate security standards, practices, guidelines and controls aimed at defending the vehicle and the vehicle service ecosystem against unauthorized electronic access, detecting possible malicious activity in related networks, and responding to suspected cybersecurity incidents in a timely, coordinated and effective manner. Security incidents could impact your safety or compromise your private data. To minimize security risks, please do not connect your vehicle electronic systems to unauthorized devices or connect your vehicle to any unknown or untrusted networks (such as Bluetooth, WIFI or similar technology). In the event you suspect any security incident impacting your data or the safe operation of your vehicle, please stop operating your vehicle and contact your dealer.

Event Data Recorders

This vehicle is equipped with an event data recorder (EDR). The main purpose of an EDR is to record, in certain crash or near crash-like situations, such as an air bag deployment or hitting a road obstacle, data that will assist in understanding how a vehicle's systems performed. The EDR is designed to record data related to vehicle dynamics and safety systems for a short period of time, typically 30 seconds or less. The EDR in this vehicle is designed to record such data as:

- How various systems in your vehicle were operating;
- Whether or not the driver and passenger safety belts were buckled/fastened;
- How far (if at all) the driver was depressing the accelerator and/or brake pedal; and,
- How fast the vehicle was traveling.

These data can help provide a better understanding of the circumstances in which crashes and injuries occur.

Note

EDR data are recorded by your vehicle only if a non-trivial crash situation occurs; no data are recorded by the EDR under normal driving conditions and no personal data (e.g., name, gender, age, and crash location) are recorded. However, other parties, such as law enforcement, could combine the EDR data with the type of personally identifying data routinely acquired during a crash investigation.

To read data recorded by an EDR, special equipment is required, and access to the vehicle or the EDR is needed. In addition to the vehicle manufacturer, other parties, such as law enforcement, that have the special equipment, can read the information if they have access to the vehicle or the EDR.

GM will not access these data or share it with others except: with the consent of the vehicle owner or, if the vehicle is leased, with the consent of the lessee; in response to an official request by police or similar government office; as part of GM's defense of litigation through the discovery process; or, as permitted by law. Data that GM collects or receives may also be used for GM research needs or may be made available to others for research purposes, where a need is shown and the data is not tied to a specific vehicle or vehicle owner.

OnStar

If the vehicle is equipped with OnStar and has an active service plan, additional data may be collected and transmitted through the OnStar system. This includes information about the vehicle's operation; collisions involving the vehicle; the use of the vehicle and its features, including infotainment; and the location and approximate GPS speed of the vehicle. Refer to the OnStar Terms and Conditions and Privacy Statement on the OnStar website.

See *OnStar Additional Information* ⇨ *342*.

Infotainment System

If the vehicle is equipped with a navigation system as part of the infotainment system, use of the system may result in the storage of destinations, addresses, telephone numbers, and other trip information. See the infotainment section for information on stored data and for deletion instructions.

OnStar

OnStar Overview
OnStar Overview 340

OnStar Services
Emergency 341
Security 341

OnStar Additional Information
OnStar Additional Information 342

OnStar Overview

Voice Command Button

Blue OnStar Button

Red Emergency Button

This vehicle may be equipped with a comprehensive, in-vehicle system that can connect to an OnStar Advisor for Emergency, Security, Navigation, Connections, and Diagnostics Services. OnStar services may require a paid service plan and data plan. OnStar requires the vehicle battery and electrical system, cellular service, and GPS satellite signals to be available and operating. OnStar acts as a link to existing emergency service providers. OnStar may collect information about you and your vehicle, including location information. See OnStar User Terms, Privacy Statement, and Software Terms for more details including system limitations at www.onstar.com (U.S.) or www.onstar.ca (Canada).

The OnStar system status light is next to the OnStar buttons. If the status light is:

- Solid Green: System is ready.
- Flashing Green: On a call.
- Red: Indicates a problem.
- Off: System is off. Press twice to speak with an OnStar Advisor.

Press or call 1-888-4ONSTAR (1-888-466-7827) to speak to an Advisor.

Functionality of the Voice Command button may vary by vehicle and region.

Press to:

- Open the OnStar app on the infotainment display. If equipped, the infotainment system has OnStar controls in the embedded OnStar app on the Home Page. Most OnStar functions that can be performed with the buttons can be done using the app. To open the app, touch the OnStar icon on the Home Page. App updates require a corresponding service plan. Features vary by region and model. Features are subject to change. For more information, see my.gmc.com/learn or press .

Or

- Give OnStar Turn-by-Turn Navigation voice commands.
- Obtain and customize the Wi-Fi hotspot name or SSID and password, if equipped.

Press On to connect to an Advisor to:

- Verify account information or update contact information.
- Get driving directions.
- Receive a Diagnostic check of the vehicle's key operating systems.
- Receive Roadside Assistance.
- Manage Wi-Fi Settings, if equipped.

Press SOS to get a priority connection to an OnStar Advisor available 24/7 to:

- Get help for an emergency.
- Be a Good Samaritan or respond to an AMBER Alert.
- Get assistance in severe weather or other crisis situations and find evacuation routes.

OnStar Services

Emergency

Emergency Services require an active safety and security plan. With Automatic Crash Response, built-in sensors can automatically alert a specially trained OnStar Advisor who is immediately connected in to the vehicle to help.

Press SOS for a priority connection to an OnStar Advisor who can contact emergency service providers, direct them to your exact location, and relay important information.

With OnStar Crisis Assist, specially trained Advisors are available 24 hours a day, 7 days a week, to provide a central point of contact, assistance, and information during a crisis.

With Roadside Assistance, Advisors can locate a nearby service provider to help with a flat tire, a battery jump, or an empty gas tank.

Security

If equipped, OnStar provides these services:

- With Stolen Vehicle Assistance, OnStar Advisors can use GPS to pinpoint the vehicle and help authorities quickly recover it.
- With Remote Ignition Block, if equipped, OnStar can block the vehicle from being restarted.
- With Stolen Vehicle Slowdown, if equipped, OnStar can work with law enforcement to gradually slow the vehicle down.

Theft Alarm Notification

If equipped, if the doors are locked and the vehicle alarm sounds, a notification by text, e-mail, or phone call will be sent. If the vehicle is stolen, an OnStar Advisor can work with authorities to recover the vehicle.

OnStar Additional Information

In-Vehicle Audio Messages

Audio messages may play important information at the following times:

- Prior to vehicle purchase. Press to set up an account.
- After change in ownership and at 90 days.

Transferring Service

Press to request account transfer eligibility information. The Advisor can cancel or change account information.

Selling/Transferring the Vehicle

Call 1-888-4ONSTAR (1-888-466-7827) immediately to terminate your OnStar or connected services if the vehicle is disposed of, sold, transferred, or if the lease ends.

Reactivation for Subsequent Owners

Press and follow the prompts to speak to an Advisor as soon as possible. The Advisor will update vehicle records and explain OnStar or connected service options.

How OnStar Service Works

Automatic Crash Response, Emergency Services, Crisis Assist, Stolen Vehicle Assistance, Remote Services, and Roadside Assistance are available on most vehicles. Not all OnStar services are available everywhere or on all vehicles. For more information, a full description of OnStar services, system limitations, and OnStar User Terms, Privacy Statement, and Software Terms:

- Call 1-888-4ONSTAR (1-888-466-7827).
- See www.onstar.com (U.S.).
- See www.onstar.ca (Canada).
- Call TTY 1-877-248-2080.
- Press to speak with an Advisor.

OnStar or connected services cannot work unless the vehicle is in a place where OnStar has an agreement with a wireless service provider for service in that area. The wireless service provider must also have coverage, network capacity, reception, and technology compatible with OnStar or connected services. Service involving location information about the vehicle cannot work unless GPS signals are available, unobstructed, and compatible with the OnStar hardware. OnStar or connected services may not work if the OnStar equipment is not properly installed or it has not been properly maintained. If equipment or software is added, connected, or modified, OnStar or connected services may not work. Other problems beyond the control of OnStar — such as hills, tall buildings, tunnels, weather, electrical system design and architecture of the vehicle, damage to the vehicle in a crash, or wireless phone network congestion or jamming — may prevent service.

See *Radio Frequency Statement* ⇨ *336*.

Services for People with Disabilities

Advisors provide services to help with physical disabilities and medical conditions.

Press to help:

- Locate a gas station with an attendant to pump gas.
- Find a hotel, restaurant, etc., that meets accessibility needs.
- Provide directions to the closest hospital or pharmacy in urgent situations.

TTY Users

OnStar has the ability to communicate to deaf, hard-of-hearing, or speech-impaired customers while in the vehicle. The available TTY system can provide in-vehicle access to all OnStar services, except Virtual Advisor and OnStar Turn-by-Turn Navigation.

If equipped, TTY mode can be turned on or off by touching Settings, then Apps, and then Phone. When TTY mode is on, phone calls can be made or received with OnStar using the infotainment display.

OnStar Personal Identification Number (PIN)

A PIN is needed to access some OnStar services. The PIN will need to be changed the first time when speaking with an Advisor. To change the OnStar PIN, contact an OnStar Advisor by pressing or calling 1-888-4ONSTAR.

Warranty

OnStar equipment may be warranted as part of the vehicle warranty.

Languages

The vehicle can be programmed to respond in multiple languages. Press and ask for an Advisor. Advisors are available in English, Spanish, and French. Available languages may vary by country.

Potential Issues

OnStar cannot perform Remote Door Unlock or Stolen Vehicle Assistance after the vehicle has been off continuously for an extended period of time without an ignition cycle. To find out the duration of time that applies for the vehicle, contact an OnStar Advisor by pressing or calling 1-888-4ONSTAR. If the vehicle has not been started for an extended period of time, OnStar can contact Roadside Assistance or a locksmith to help gain access to the vehicle.

Global Positioning System (GPS)

- Obstruction of the GPS can occur in a large city with tall buildings; in parking garages; around airports; in tunnels and underpasses; or in an area with very dense trees. If GPS signals are not available, the OnStar system should still operate to call OnStar. However, OnStar could have difficulty identifying the exact location.
- In emergency situations, OnStar can use the last stored GPS location to send to emergency responders.

A temporary loss of GPS can cause loss of the ability to send a Turn-by-Turn Navigation route. The Advisor may give a verbal route or may ask for a call back after the vehicle is driven into an open area.

Cellular and GPS Antennas

Cellular reception is required for OnStar to send remote signals to the vehicle. Do not place items over or near the antenna to prevent blocking cellular and GPS signal reception.

Unable to Connect to OnStar Message

If there is limited cellular coverage or the cellular network has reached maximum capacity, this message may come on. Press to try the call again or try again after driving a few miles into another cellular area.

Vehicle and Power Issues

OnStar services require a vehicle electrical system, wireless service, and GPS satellite technologies to be available and operating for features to function properly. These systems may not operate if the battery is discharged or disconnected.

Add-on Electrical Equipment

The OnStar system is integrated into the electrical architecture of the vehicle. Do not add any electrical equipment. See *Add-On Electrical Equipment* ⇨ *230*. Added electrical equipment may interfere with the operation of the OnStar system and cause it to not operate.

Vehicle Software Updates

OnStar or GM may remotely deliver software updates or changes to the vehicle without further notice or consent. These updates or changes may enhance or maintain safety, security, or the operation of the vehicle or the vehicle systems. Software updates or changes may affect or erase data or settings that are stored in the vehicle, such as saved navigation destinations or pre-set radio stations. Neither OnStar nor GM is responsible for any affected or erased data or settings. These updates or changes may also collect personal information. Such collection is described in the OnStar privacy statement or separately disclosed at the time of installation. These updates or changes may also cause a system to automatically communicate with GM servers to collect information about vehicle system status, identify whether updates or changes are available, or deliver updates or changes. An active OnStar agreement constitutes consent to these software updates or changes and agreement that either OnStar or GM may remotely deliver them to the vehicle.

Privacy

The complete OnStar Privacy Statement may be found at www.onstar.com (U.S.), or www.onstar.ca (Canada). We recommend that you review it. If you have any questions, call 1-888-4ONSTAR (1-888-466-7827) or press On to speak with an Advisor. Users of wireless communications are cautioned that the privacy of any information sent via wireless cellular communications cannot be assured. Third parties may unlawfully intercept or access transmissions and private communications without consent.

OnStar - Software Acknowledgements

To obtain the source code under GPL, LGPL, MPL, and other open source licenses, that is contained in this product, please visit https://opensource.lge.com. In addition to the source code, all referred license terms, warranty disclaimers, and copyright notices are available for download. This offer is valid for a period of three years after our last shipment of this product. This offer is valid to anyone in receipt of this information.

*Provided through LG Electronics Inc., who is solely responsible for provisions of related OSS compliance.

Connected Services

Connected Services

Navigation 345
Connections 345
Diagnostics 347

Connected Services

Navigation

Navigation requires a specific OnStar or connected service plan.

Press to receive Turn-by-Turn directions or have them sent to the vehicle's navigation screen, if equipped. Select Turn-by-Turn Directions from the Services tab of the OnStar app to call an Advisor or select a recent or favorite destination. Touch the navigation icons to select home, address, or place. A destination transfer from OnStar will show the detail view of the destination when it is transferred from OnStar to the Navigation application. See www.onstar.com for a coverage map. Services vary by model. Map coverage is available in the United States and Canada.

Turn-by-Turn Navigation

1. Press to connect to an Advisor.
2. Request directions to be downloaded to the vehicle.
3. Follow the voice-guided commands.

Using Voice Commands During a Planned Route

Functionality of the Voice Command button, if equipped, may vary by vehicle and region. For some vehicles, press to open the OnStar app on the infotainment display.

Send Destination to Vehicle

Directions can be sent to the vehicle's navigation screen, if equipped.

Press , then ask the Advisor to download directions to the vehicle's navigation system, if equipped. After the call ends, the navigation screen will provide prompts to begin driving directions. Routes that are sent to the navigation screen can only be canceled through the navigation system.

See www.onstar.com (U.S.) or www.onstar.ca (Canada).

Connections

The following services help with staying connected.

For coverage maps, see www.onstar.com (U.S.) or www.onstar.ca (Canada).

Ensuring Security

- Change the default passwords for the Wi-Fi hotspot and myGMC mobile application. Make these passwords different from each other and use a combination of letters and numbers to increase the security.
- Change the default name of the SSID (Service Set Identifier). This is your network's name that is visible to other wireless devices. Choose a unique name and avoid family names or vehicle descriptions.

Wi-Fi Hotspot (If Equipped)

The vehicle may have a built-in Wi-Fi hotspot that provides access to the Internet and web content at 4G LTE speed. Up to seven mobile devices can be connected. A data plan is required. Use the in-vehicle controls only when it is safe to do so.

1. To retrieve Wi-Fi hotspot information, press to open the OnStar app on the infotainment display, then select Wi-Fi Hotspot. On some vehicles, touch Wi-Fi or Wi-Fi Settings on the screen.
2. The Wi-Fi settings will display the Wi-Fi hotspot name (SSID), password, and on some vehicles, the connection type (no Internet connection, 3G, 4G, 4G LTE), and signal quality (poor, good, excellent). The LTE icon shows connection to Wi-Fi. It is possible that the icon may not illuminate even though the vehicle has an active connection.
3. To change the SSID or password, press or call 1-888-4ONSTAR to connect with an Advisor. On some vehicles, the SSID and password can be changed in the Wi-Fi Hotspot menu.

After initial set-up, your vehicle's Wi-Fi hotspot will connect automatically to your mobile devices. Manage data usage by turning Wi-Fi on or off on your mobile device, using the myGMC mobile app, or by contacting an OnStar Advisor. On some vehicles, Wi-Fi can also be managed from the Wi-Fi Hotspot menu.

MyGMC Mobile App (If Available)

Download the myGMC mobile app to compatible Apple and Android smartphones. GMC users can access the following services from a smartphone:

- Remotely start/stop the vehicle, if factory-equipped.
- Lock/unlock doors, if equipped with automatic locks.
- Activate the horn and lamps.
- Check the vehicle's fuel level, oil life, or tire pressure, if factory-equipped with the Tire Pressure Monitor System.
- Send destinations to the vehicle.
- Locate the vehicle on a map (U.S. market only).
- Turn the vehicle's Wi-Fi hotspot on/off, manage settings, and monitor data consumption, if equipped.
- Locate a dealer and schedule service.
- Request Roadside Assistance.
- Set a parking reminder with pin drop, take a photo, make a note, and set a timer.
- Connect with GMC on social media.

Features are subject to change. For myGMC mobile app information and compatibility, see my.gmc.com.

An active OnStar or connected service plan may be required. A compatible device, factory-installed remote start, and power locks are required. Data rates apply. See www.onstar.com for details and system limitations.

Remote Services

Contact an OnStar Advisor to unlock the doors or sound the horn and flash the lamps.

Marketplace

OnStar Advisors can provide offers from restaurants and retailers on your route, help locate hotels, or book a room. These services vary by market.

Diagnostics

By monitoring and reporting on the vehicle's key systems, OnStar Advanced Diagnostics, if equipped, provides a way to keep up on maintenance. Capabilities vary by model. See www.onstar.com for details and system limitations. Features are subject to change. For updates on feature capabilities, see my.gmc.com. Message and data rates may apply.

Index

A

Accessories and Modifications 233
Accessory Power 187
Active Fuel Management 189
Add-On Electrical Equipment 230
Additional Information
  OnStar 342
Additional Maintenance and Care 317
Adjustments
  Lumbar, Front Seats 24
Agreements
  Trademarks and License 154
Air Cleaner/Filter, Engine 241
Air Conditioning 162, 164
Air Filter, Passenger Compartment 167
Air Vents 167
Airbag System
  Check 43
  How Does an Airbag Restrain? 38
  Passenger Sensing System 39
  What Makes an Airbag Inflate? 37
  What Will You See after an Airbag
    Inflates? 38
  When Should an Airbag Inflate? 37
  Where Are the Airbags? 36
Airbags
  Adding Equipment to the Vehicle 43
  Passenger Status Indicator 86
Airbags (cont'd)
  Readiness Light 86
  Servicing Airbag-Equipped Vehicles 42
  System Check 34
Alarm
  Vehicle Security 14
All-Season Tires 267
All-Terrain Tires 268
AM-FM Radio 116
Antenna
  Multi-band 119
Antilock Brake System (ABS) 199
  Warning Light 89
Appearance Care
  Exterior 301
  Interior 305
Apple CarPlay and Android Auto 144
Assistance Program, Roadside 331
Assistance Systems for Parking and
  Backing 206
Audio
  Bluetooth 123
Automatic
  Climate Control System 164
  Door Locks 13
  Emergency Braking (AEB) 210
  Headlamp System 103
  Transmission 190

Automatic (cont'd)
Transmission Fluid 241
Automatic Transmission
Manual Mode 192
Shift Lock Control Function Check 251
Auxiliary Jack 122
Avoiding Untrusted Media Devices 119
Axle, Front 250
Axle, Rear 251

B

Battery
Exterior Lighting Battery Saver 108
Load Management 107
Power Protection 108
Battery - North America 249, 294
Blade Replacement, Wiper 252
Blind Spot Mirrors 17
Bluetooth
Overview 139, 140
Bluetooth Audio 123
Brake
System Warning Light 88
Brakes 248
Antilock 199
Assist 200
Fluid 248
Parking 200
Braking 170
Automatic Emergency (AEB) 210
Break-In, New Vehicle 183
Buckle To Drive 28
Bulb Replacement
Center High-Mounted Stoplamp (CHMSL) and Cargo Lamp 256
Halogen Bulbs 254
Headlamp Aiming 254
Headlamps 254
Headlamps, Front Turn Signal, Sidemarker, and Parking Lamps 254
Taillamps, Turn Signal, Stoplamps, and Back-up Lamps 255
Buying New Tires 279

C

Calibration 78
California
Perchlorate Materials Requirements ... 233
California Proposition
65 Warning .....249, 294, Back Cover
Camera
Rear Vision (RVC) 206
Canadian Vehicle Owners 1
Capacities and Specifications 325
Carbon Monoxide
Engine Exhaust 189
Tailgate 14
Winter Driving 176
Caution, Danger, and Warning 2
Center Console Storage 74
Center High-Mounted Stoplamp (CHMSL) and Cargo Lamp 256
Chains, Tire 283
Charging
Wireless 79
Charging System Light 87
Check
Engine Light (Malfunction Indicator) 87
Ignition Transmission Lock 252
Child Restraints
Infants and Young Children 45
Lower Anchors and Tethers for Children 51
Older Children 44
Securing 64, 69
Systems 47
Circuit Breakers 258
Cleaning
Exterior Care 301
Interior Care 305
Climate Control Systems 162
Air Conditioning 162

Climate Control Systems (cont'd)
Automatic 164
Heating 162
Clock 78
Cluster, Instrument 81
Collision Damage Repair 334
Compact Spare Tire 293
Compartments
Storage 73
Compass 78
Connected Services
Connections 345
Diagnostics 347
Navigation 345
Connections
Connected Services 345
Control
Hill Descent 202
Traction and Electronic Stability 201
Control Light
Hill Descent 90
Control of a Vehicle 170
Controls
Steering Wheel 112
Convex Mirrors 16
Coolant
Engine Temperature Gauge 85
Cooling 162, 164
Cooling System 243
Courtesy Transportation Program 333
Coverage Explanations 134
Cruise Control 203
Light 93
Cupholders 73
Customer Assistance 330
Offices 330
Text Telephone (TTY) Users 330
Customer Information
Publications Ordering Information 335
Customer Satisfaction Procedure 328
Cybersecurity 338

D

Damage Repair, Collision 334
Danger, Warning, and Caution 2
Data Collection
Infotainment System 339
OnStar 339
Data Recorders, Event 338
Database Coverage Explanations 134
Daytime Running Lamps (DRL) 103
Defensive Driving 169
Delayed Locking 12
Destination 127
Diagnostics
Connected Services 347
Differential, Limited-Slip 203
Distracted Driving 169
Dome Lamps 106
Door
Ajar Light 93
Delayed Locking 12
Locks 12
Power Locks 12
Drive Belt Routing, Engine 327
Driver
Teen 151
Driver Assistance Systems 205
Driver Information Center (DIC) 93, 96
Driving
Better Fuel Economy 169
Characteristics and Towing Tips 215
Defensive 169
Hill and Mountain Roads 176
If the Vehicle is Stuck 177
Impaired 170
Loss of Control 171
Off-Road 172
Off-Road Recovery 171
Vehicle Load Limits 178
Wet Roads 175
Winter 176

E
Electrical Equipment, Add-On 230
Electrical System
Engine Compartment Fuse Block 259
Fuses and Circuit Breakers 258
Instrument Panel Fuse Block 264
Overload 257
Emergency
OnStar 341
Engine
Air Cleaner/Filter 241
Check Light (Malfunction Indicator) 87
Compartment Overview 235
Coolant Temperature Gauge 85
Cooling System 243
Drive Belt Routing 327
Exhaust 189
Fan 247
Heater 186
Oil Life System 240
Oil Pressure Light 92
Overheating 246
Power Messages 99
Running While Parked 190
Starting 185
Entry Lighting 107
Equipment, Towing 223
Event Data Recorders 338
Exit Lighting 107
Extender, Seat Belt 33
Exterior Cargo Lamps 105
Exterior Lamp Controls 102
Exterior Lamps Off Reminder 103
Exterior Lighting Battery Saver 108

F
Fan
Engine 247
Filter,
Engine Air Cleaner 241
Flash-to-Pass 103
Flashers, Hazard Warning 104
Flat Tire 283
Changing 285
Floor Mats 308
Fluid
Automatic Transmission 241
Brakes 248
Washer 247
Fog Lamps 105
Folding Mirrors 17
Forward Collision Alert (FCA) System 208
Four-Wheel
Drive 250
Drive Light 89
Drive System 194
Frequency Statement
Radio 336
Front Axle 250
Front Fog Lamp
Light 93
Front Seats
Adjustment 23
Heated and Ventilated 25
Fuel
Additives 213
Economy, Driving for Better 169
Filling a Portable Fuel Container 215
Filling the Tank 213
Foreign Countries 213
Gauge 84
Low Fuel Warning Light 92
Management, Active 189
Prohibited Fuels 213
Recommended 212
Top Tier 212
Full-Size Spare Tire 294
Fuses
Engine Compartment Fuse Block 259
Fuses and Circuit Breakers 258
Instrument Panel Fuse Block 264

G

Gas Strut(s) 253
Gauges
  Engine Coolant Temperature 85
  Fuel 84
  Odometer 84
  Speedometer 84
  Tachometer 84
  Trip Odometer 84
  Warning Lights and Indicators 81
General Information
  Service and Maintenance 310
  Towing 215
  Vehicle Care 233
Global Positioning System (GPS) 133
Glove Box 73
GM Mobility Reimbursement Program 331
Guidance
  Problems with the Route 133

H

Halogen Bulbs 254
Hazard Warning Flashers 104
HD Radio Technology 117
Head Restraints 21
Headlamps
  Aiming 254
  Automatic 103
  Bulb Replacement 254
  Daytime Running Lamps (DRL) 103
  Flash-to-Pass 103
  Headlamps, Front Turn Signal,
    Sidemarker, and Parking Lamps 254
  High-Beam On Light 93
  High/Low Beam Changer 103
  Lamps On Reminder 93
Heated
  Steering Wheel 76
Heated and Ventilated Front Seats 25
Heated Mirrors 17
Heater
  Engine 186
Heating 162, 164
High-Beam On Light 93
Hill and Mountain Roads 176
Hill Descent Control (HDC) 202
Hill Descent Control Light 90
Hill Start Assist (HSA) 201
Hood 234
Horn 77
How to Wear Seat Belts Properly 28
HVAC 162, 164

I

If the System Needs Service 134
Ignition Positions 184
Ignition Transmission Lock Check 252
Immobilizer 15
Indicator
  Vehicle Ahead 90
Infants and Young Children, Restraints 45
Information
  Publication Ordering 335
Infotainment System 339
Instrument Cluster 81
Instrument Panel Overview 4
Interior Rearview Mirrors 18
Introduction 1, 109

J

Jack
  Auxiliary 122
Jump Starting - North America 294

K

Keyless Entry
  Remote (RKE) System 9
Keys 6

L

Labeling, Tire Sidewall 268
Lamps
  Daytime Running (DRL) 103
  Dome 106
  Exterior Cargo 105
  Exterior Controls 102
  Exterior Lamps Off Reminder 103
  Exterior Lighting Battery Saver 108
  Malfunction Indicator (Check Engine) 87
  On Reminder 93
  Reading 106
Lane Departure Warning (LDW) 211
Lane Departure Warning Light 90
Lap-Shoulder Belt 30
LATCH System
  Replacing Parts after a Crash 64
LATCH, Lower Anchors and Tethers for Children 51
Lighting
  Entry 107
  Exit 107
  Illumination Control 106
Lights
  Airbag Readiness 86
  Antilock Brake System (ABS) Warning 89
Lights (cont'd)
  Brake System Warning 88
  Charging System 87
  Check Engine (Malfunction Indicator) 87
  Cruise Control 93
  Door Ajar 93
  Engine Oil Pressure 92
  Flash-to-Pass 103
  Four-Wheel-Drive 89
  Front Fog Lamp 93
  High-Beam On 93
  High/Low Beam Changer 103
  Hill Descent Control 90
  Lane Departure Warning 90
  Low Fuel Warning 92
  Seat Belt Reminders 85
  Security 92
  StabiliTrak OFF 91
  Tire Pressure 91
  Tow/Haul Mode 90
  Traction Control System (TCS)/StabiliTrak 91
  Traction Off 90
Limited-Slip Differential 203
Locks
  Automatic Door 13
  Delayed Locking 12
Locks (cont'd)
  Door 12
  Lockout Protection 13
  Power Door 12
  Safety 13
Loss of Control 171
Low Fuel Warning Light 92
Lower Anchors and Tethers for Children (LATCH System) 51
Lumbar Adjustment 24
  Front Seats 24

M

Maintenance
  Records 323
Maintenance and Care
  Additional 317
Maintenance Schedule 311
  Recommended Fluids and Lubricants 320
Malfunction Indicator Lamp 87
Manual Mirrors 16
Manual Mode 192
Map Data Updates 134
Maps 126
Media
  Avoiding Untrusted Devices 119

Messages
Engine Power 99
Vehicle 98
Vehicle Speed 99
Mirrors
Automatic Dimming Rearview 18
Blind Spot 17
Convex 16
Folding 17
Heated 17
Manual 16
Manual Rearview 18
Power 16
Mirrors, Interior Rearview 18
Monitor System, Tire Pressure 274
Multi-band Antenna 119

N

Navigation
Connected Services 345
Destination 127
Using the System 123
Navigation Symbols 126
New Vehicle Break-In 183

O

Odometer 84
Trip 84
Off-Road 172
Off-Road (cont'd)
Driving 172
Recovery 171
Oil
Engine 238
Engine Oil Life System 240
Pressure Light 92
Older Children, Restraints 44
Online Owner Center 330
OnStar 339
OnStar Additional Information 342
OnStar Emergency 341
OnStar Overview 340
OnStar Security 341
Operation
Fog Lamps 105
Outlets
Power 78
Overheating, Engine 246
Overview 110
Instrument Panel 4

P

Park
Shifting Into 188
Shifting Out of 189
Park Assist 206, 208
Parking
Brake 200
Brake and P (Park) Mechanism
Check 252
Over Things That Burn 189
Parking or Backing
Assistance Systems 206
Passenger Airbag Status Indicator 86
Passenger Compartment Air Filter 167
Passenger Sensing System 39
Perchlorate Materials Requirements,
California 233
Personalization
Vehicle 99
Phone
Apple CarPlay and Android Auto 144
Bluetooth 139, 140
Port
USB 119
Positioning
Vehicle 133
Power
Door Locks 12
Mirrors 16
Outlets 78
Protection, Battery 108
Retained Accessory (RAP) 187
Seat Adjustment 23

Power (cont'd)
Windows 18
Pregnancy, Using Seat Belts 33
Privacy
Vehicle Data Recording 337
Problems with Route Guidance 133
Program
Courtesy Transportation 333
Prohibited Fuels 213
Proposition 65 Warning,
California .....249, 294, Back Cover
Publication Ordering Information 335

R

Radio
HD Radio Technology 117
Radio Data System (RDS) 118
Radio Frequency Statement 336
Radio Reception 119
Radios
AM-FM Radio 116
Satellite.....118
Reading Lamps 106
Rear Axle 251
Rear Seats 25
Rear Vision Camera (RVC) 206
Rear Windows 20
Rearview Mirrors 18
Automatic Dimming 18
Reclining Seatbacks 23
Recognition
Voice 134
Recommended
Fuel..... 212
Recommended Fluids and Lubricants 320
Records
Maintenance 323
Recreational Vehicle Towing 298
Reimbursement Program, GM
Mobility 331
Remote Keyless Entry (RKE) System 8, 9
Remote Vehicle Start 11
Replacement Parts
Airbags 44
Maintenance 321
Replacing Airbag System..... 44
Replacing LATCH System Parts after a
Crash 64
Replacing Seat Belt System Parts after
a Crash 34
Reporting Safety Defects
Canadian Government 337
General Motors 337
U.S. Government..... 336
Restraints
Where to Put 49
Retained Accessory Power (RAP) 187
Ride Control Systems
Enhanced Traction System (ETS) 203
Roads
Driving, Wet 175
Roadside Assistance Program 331
Rotation, Tires 277
Routing, Engine Drive Belt 327
Running the Vehicle While Parked 190

S

Safety Defects Reporting
Canadian Government 337
General Motors 337
U.S. Government..... 336
Safety Locks 13
Safety System Check 33
Satellite Radio 118
Scheduling Appointments 333
Seat Belts.....27
Buckle To Drive 28
Care 34
Extender 33
How to Wear Seat Belts Properly 28
Lap-Shoulder Belt 30
Reminders 85

Seat Belts (cont'd)
Replacing after a Crash 34
Use During Pregnancy 33
Seats
Adjustment, Front 23
Head Restraints 21
Heated and Ventilated Front 25
Lumbar Adjustment, Front 24
Power Adjustment, Front 23
Rear 25
Reclining Seatbacks 23
Underseat Storage 74
Securing Child Restraints 64, 69
Security
Light 92
OnStar 341
Vehicle 14
Vehicle Alarm 14
Service 167
Accessories and Modifications 233
Climate Control System 162
Doing Your Own Work 233
Maintenance Records 323
Maintenance, General Information 310
Parts Identification 324
Scheduling Appointments 333
Services
Special Application 317
Servicing System 134
Servicing the Airbag 42
Settings 144
Shift Lock Control Function Check,
Automatic Transmission 251
Shifting
Into Park 188
Out of Park 189
Signals, Turn and Lane-Change 104
Software Updates 116
Spare Tire
Compact 293
Special Application Services 317
Specifications and Capacities 325
Speedometer 84
StabiliTrak
OFF Light 91
Start Assist, Hill 201
Start Vehicle, Remote 11
Starter Switch Check 251
Starting the Engine 185
Steering 170
Heated Wheel 76
Wheel Adjustment 76
Wheel Controls 76
Steering Wheel Controls 112
Stoplamps and Back-up Lamps
Bulb Replacement 255
Storage Areas
Center Console 74
Glove Box 73
Sunglasses 73
Underseat 74
Storage Compartments 73
Struts
Gas 253
Stuck Vehicle 177
Sun Visors 20
Sunglass Storage 73
Symbols 2
Navigation 126
System
Forward Collision Alert (FCA) 208
Global Positioning 133
Infotainment 339
Systems
Driver Assistance 205

T

Tachometer 84
Tailgate 14
Taillamps
Bulb Replacement 255
Teen Driver 151
Text Telephone (TTY) Users 330
Theft-Deterrent Systems 15

Theft-Deterrent Systems (cont'd)
Immobilizer 15
Time 78
Tires 267
All-Season 267
All-Terrain 268
Buying New Tires 279
Chains 283
Changing 285
Compact Spare 293
Designations 270
Different Size 280
Full-Size Spare 294
If a Tire Goes Flat 283
Inspection 277
Pressure 273
Pressure Light 91
Pressure Monitor Operation 274
Pressure Monitor System 274
Rotation 277
Sidewall Labeling 268
Terminology and Definitions 271
Uniform Tire Quality Grading 281
Wheel Alignment and Tire Balance 282
Wheel Replacement 282
When It Is Time for New Tires 278
Winter 268
Top Tier Fuel 212
Tow/Haul Mode 194
Tow/Haul Mode Light 90
Towing
Driving Characteristics 215
Equipment 223
General Information 215
Recreational Vehicle 298
Trailer 219
Trailer Sway Control (TSC) 229
Vehicle 297
Traction
Control System (TCS)/StabiliTrak Light 91
Limited-Slip Differential 203
Off Light 90
Traction Control/Electronic Stability Control 201
Trademarks and License Agreements 154
Trailer
Sway Control (TSC) 229
Towing 219
Transfer Case
Four-Wheel Drive 194
Transmission
Automatic 190
Fluid, Automatic 241
Transportation Program, Courtesy 333
Transporting Items That Can Catch Fire 14
Trip Odometer 84
Truck-Camper Loading Information 183
Turn and Lane-Change Signals 104
Turn Signal
Bulb Replacement 255

U

Underseat Storage 74
Uniform Tire Quality Grading 281
Updates
Map Data 134
Software 116
USB Port 119
Using the Navigation System 123
Using the System 113
Using This Manual 2

V

Vehicle
Alarm System 14
Canadian Owners 1
Control 170
Identification Number (VIN) 324
Load Limits 178
Messages 98
Personalization 99
Remote Start 11

Vehicle (cont'd)
Security 14
Speed Messages 99
Towing 297
Vehicle Ahead Indicator 90
Vehicle Care
Tire Pressure 273
Vehicle Data Recording and Privacy 337
Vehicle Positioning 133
Ventilation, Air 167
Visors 20
Voice Recognition 134

W

Warning
Brake System Light 88
Caution and Danger 2
Lane Departure (LDW) 211
Warning Lights, Gauges, and
Indicators 81
Warnings
Hazard Flashers 104
Washer Fluid 247
Wheels
Alignment and Tire Balance 282
Different Size 280
Replacement 282
When It Is Time for New Tires 278
Where to Put the Restraint 49
Windows 18
Power 18
Rear 20
Windshield
Replacement 253
Wiper/Washer 77
Winter
Driving 176
Winter Tires 268
Wiper Blade Replacement 252
Wireless Charging 79

WARNING

Operating, servicing and maintaining a passenger vehicle or off-highway motor vehicle can expose you to chemicals including engine exhaust, carbon monoxide, phthalates, and lead, which are known to the State of California to cause cancer and birth defects or other reproductive harm. To minimize exposure, avoid breathing exhaust, do not idle engine except as necessary, service your vehicle in a well-ventilated area and wear gloves or wash your hands frequently when servicing your vehicle. For more information go to www.P65Warnings.ca.gov/passenger-vehicle.

Scan to Access

US

Canada

- Owner and Warranty Manuals
- Connected Services
- myGMC Mobile App
- How To Videos
- Vehicle Diagnostics
- Schedule Maintenance
- Vehicle Features
- Many Additional Resources

United States
Customer Assistance
1-800-462-8782
Roadside Assistance
1-888-881-3302

Canada
Customer Assistance
1-800-263-3777
Roadside Assistance
1-800-268-6800

United States and Canada
Connected Services
1-888-4-ONSTAR

84754497 B