BODY SECTION

This service manual has been prepared to provide SUBARU service personnel with the necessary information and data for the correct maintenance and repair of SUBARU vehicles.
This manual includes the procedures for maintenance, disassembling, reassembling, inspection and adjustment of components and diagnostics for guidance of experienced mechanics.
Please peruse and utilize this manual fully to ensure complete repair work for satisfying our customers by keeping their vehicle in optimum condition. When replacement of parts during repair work is needed, be sure to use SUBARU genuine parts.

All information, illustration and specifications contained in this manual are based on the latest product information available at the time of publication approval.

HVAC SYSTEM (HEATER, VENTILATOR AND A/C)	AC
HVAC SYSTEM (DIAGNOSTICS)	AC(diag)
AIRBAG SYSTEM	AB
AIRBAG SYSTEM (DIAGNOSTICS)	AB(diag)
OCCUPANT DETECTION SYSTEM (DIAGNOSTICS)	OD(diag)
SEAT BELT SYSTEM	SB
LIGHTING SYSTEM	LI
WIPER AND WASHER SYSTEMS	WW
ENTERTAINMENT	ET
COMMUNICATION SYSTEM	COM
GLASS/WINDOWS/MIRRORS	GW
BODY STRUCTURE	BS
INSTRUMENTATION/DRIVER INFO	IDI
SEATS	SE
SECURITY AND LOCKS	SL
SUNROOF/T-TOP/CONVERTIBLE TOP (SUNROOF)	SR
EXTERIOR/INTERIOR TRIM	EI

FUJI HEAVY INDUSTRIES LTD. G2480BE7

GETtheMANUALS.org

BODY SECTION

EXTERIOR BODY PANELS	EB
CRUISE CONTROL SYSTEM	CC
CRUISE CONTROL SYSTEM (DIAGNOSTICS)	CC(diag)
IMMOBILIZER (DIAGNOSTICS)	IM(diag)
LAN SYSTEM (DIAGNOSTICS)	LAN(diag)
BODY CONTROL SYSTEM (DIAGNOSTICS)	BC(diag)

G2480BE7

GETtheMANUALS.org

HVAC SYSTEM (HEATER, VENTILATOR AND A/C)

AC

Page

1. General Description 2
2. Air Conditioning System 19
3. Refrigerant Pressure with Manifold Gauge Set 20
4. Refrigerant Recovery Procedure 24
5. Refrigerant Charging Procedure 25
6. Refrigerant Leak Check 28
7. Relay and Fuse 30
8. Compressor Oil 31
9. Blower Motor Unit Assembly 32
10. Blower Motor 36
11. Power Transistor (Auto A/C Model) 38
12. Blower Resistor (Manual A/C Model) 39
13. Heater Core 41
14. Control Panel 46
15. Control Unit 54
16. Compressor 55
17. Condenser 58
18. Heater and Cooling Unit 62
19. Evaporator 66
20. Expansion Valve 74
21. Hose and Pipe 76
22. Pressure Sensor 77
23. Ambient Sensor (Auto A/C Model) 78
24. Sunload Sensor (Auto A/C Model) 80
25. In-Vehicle Sensor (Auto A/C Model) 82
26. Evaporator Sensor 87
27. FRESH/RECIRC Door Actuator 90
28. Mode Door Actuator 92
29. Air Mix Door Actuator 95
30. Air Vent Grille 99
31. Heater Duct 102
32. Heater Vent Duct 103
33. A/C Filter 104
34. Diagnostics with Phenomenon 106

GETtheMANUALS.org

1. General Description

A: SPECIFICATION

1. HEATER SYSTEM

Item		Specifications	Condition
Heating capacity		4.8 kW (4,127 kcal/h, 16,377 BTU/h) or more	• Air flow control switch: FOOT • Temperature control switch or dial: HI (MAX HOT) • Temperature difference between hot water and inlet air: 65°C (149°F) • Hot water flow rate: 360 ℓ (95.1 US gal, 79.2 Imp gal)/h
Air flow rate		300 m^3 (10,596 cu ft)/h	FOOT mode (FRESH), MAX HOT at 12.5 V
Max air flow rate		495 m^3 (17,483 cu ft)/h	• Temperature control switch or dial: LO (MAX COOL) • Airflow adjustment switch or dial: HI (MAX) Auto A/C model: 6th position Manual A/C model: 4th position • FRESH/RECIRC switch: RECIRC
Heater core size (height × length × width)		264 × 100 × 27 mm (10.4 × 3.94 × 1.06 in)	—
Blower motor	Type	Magnet motor 260 W or less	12 V
	Fan type and size (diameter × width)	Sirocco fan type 150 × 75 mm (5.91 × 2.95 in)	—

GETtheMANUALS.org

2. A/C SYSTEM

Item			Specifications
Type of air conditioner			Reheat air-mix type
Cooling capacity			4.18 kW [at 500 m^3 (17,660 cu ft)/h] (3,594 kcal/h, 14,262 BTU/h)
Refrigerant			HFC-134a (CH_2FCF_3) [0.425±0.025 kg (0.94±0.06 lb)]
Compressor		Type	Swash plate, variable capacity (TSE14C)
		Discharge	140.6 cc (8.58 cu in)/rev
		Max. permissible speed	6,000 rpm
Pulley		Type of belt	V-belt 6 PK
		Pulley dia. (effective dia.)	110 mm (4.33 in)
		Pulley ratio	H4 model: 1.21 H6 model: 1.30
Condenser		Type	Corrugated fin (Sub cool type)
		Core face area	0.186 m^2 (2.002 sq ft)
		Core thickness	16 mm (0.63 in)
		Radiation area	5.49 m^2 (59.09 sq ft)
Receiver drier		Effective inner capacity	190 cm^3 (11.6 cu in)
Expansion valve		Type	Internally equalizing
Evaporator		Type	Double tank
		Dimensions (W × H × T)	293.1 × 171 × 38 mm (11.54 × 6.73 × 1.50 in)
Blower fan		Fan type	Sirocco fan
		Outer diameter × width	150 × 75 mm (5.91 × 2.95 in)
		Power consumption	260 W
Condenser fan (Sub fan)		Motor type	Magnet
		Power consumption	H4 non-turbo model: 90 W H4 turbo model: 120 W H6 model: 200 W
		Fan outer diameter	H4 non-turbo model: 300 mm (11.8 in) H4 turbo model: 318.5 mm (12.5 in) H6 model: 320 mm (12.6 in)
Radiator fan (Main fan)		Motor type	Magnet
		Power consumption	H4 non-turbo model: 90 W H4 turbo model: 120 W H6 model: 200 W
		Fan outer diameter	H4 non-turbo model: 300 mm (11.8 in) H4 turbo model: 318.5 mm (12.5 in) H6 model: 320 mm (12.6 in)
Idle speed	MPFI model	No load	H4 non-turbo model (MT): 650±100 rpm H4 non-turbo model (CVT): 675±100 rpm H4 turbo model: 700±100 rpm H6 model: 700±100 rpm
		A/C ON	H4 model: 700 — 850±100 rpm H6 model: 700 — 910±100 rpm

GETtheMANUALS.org

3. BASIC OPERATION

The cooling system cools down the compartment by using the pipes connecting parts and cycling the evaporable liquid (refrigerant) within the sealed system in a repeated process of “vaporization — liquefaction — re-vaporization”.

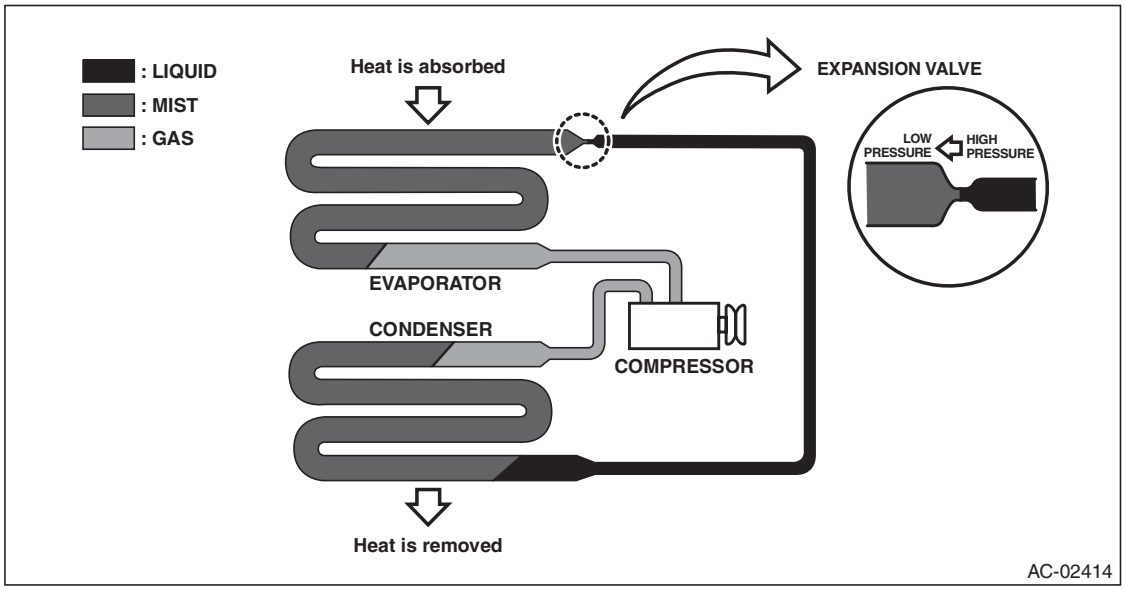

Item	Operation
Compressor	Sucks and pressurizes the low temperature, low pressure refrigerant gas that was vaporized at the evaporator by absorbing heat from the compartment, and sends the high temperature, high pressure refrigerant gas to the condenser.
Condenser	Cools the high temperature, high pressure refrigerant gas sent from the compressor for condense and liquefaction.
Expansion valve	• Sprays the high temperature, high pressure liquid refrigerant from the small hole in order to let the refrigerant expand rapidly to turn it into low temperature, low pressure mist. • The refrigerant amount is adjusted according to the refrigerant vaporization condition in the evaporator.
Evaporator	The evaporator turns into a low temperature condition when the mist refrigerant that was turned into a low temperature, low pressure condition at the expansion valve is vaporized in large quantity in the evaporator. Passing air flow through the low temperature evaporator emits cold air.

GETtheMANUALS.org

B: LOCATION

1. ELECTRICAL PARTS (ACTUATORS AND SENSORS)

- Engine compartment

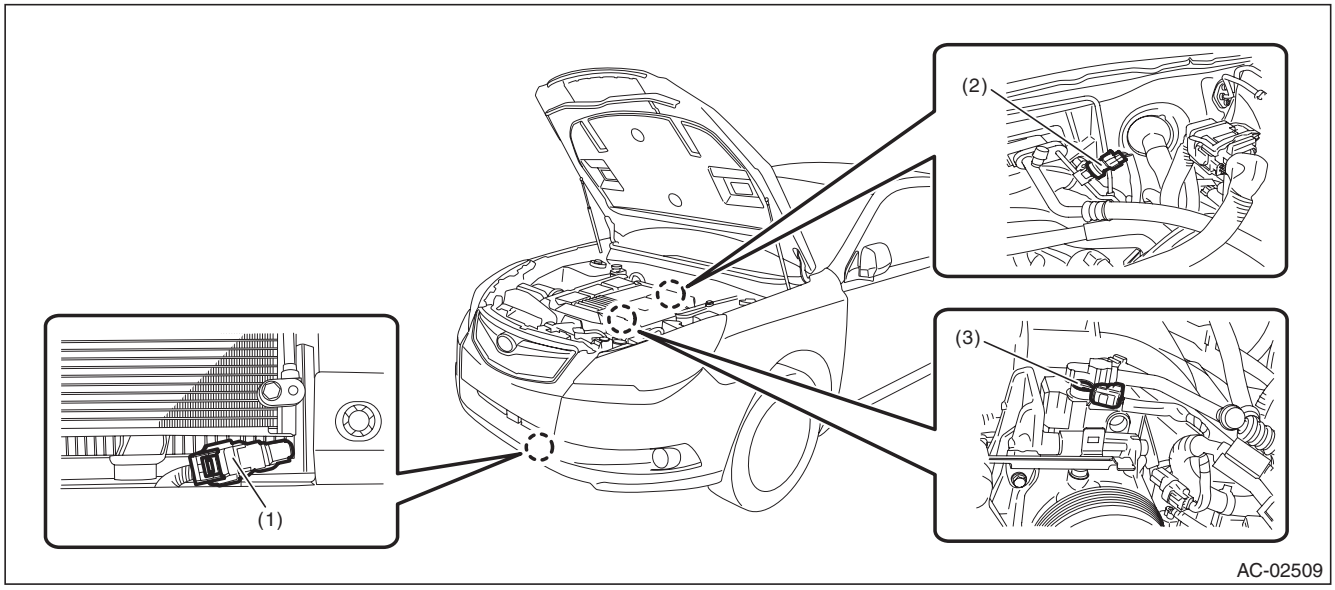

(1) Ambient sensor
(2) Pressure sensor
(3) Flow sensor

- Compartment

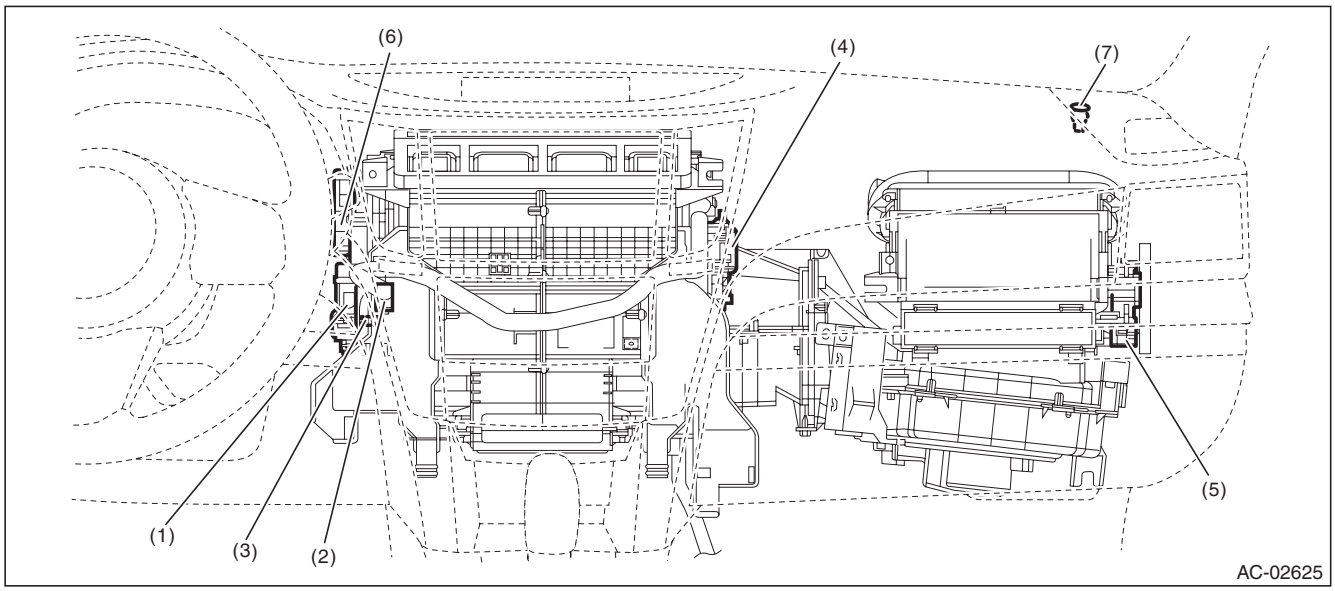

(1) Air mix door actuator (driver's seat)
(2) In-vehicle sensor
(3) Evaporator sensor
(4) Air mix door actuator (passenger's seat)
(5) Intake door actuator
(6) Mode door actuator
(7) Sunload sensor

GETtheMANUALS.org

C: COMPONENT

1. HEATER COOLING UNIT

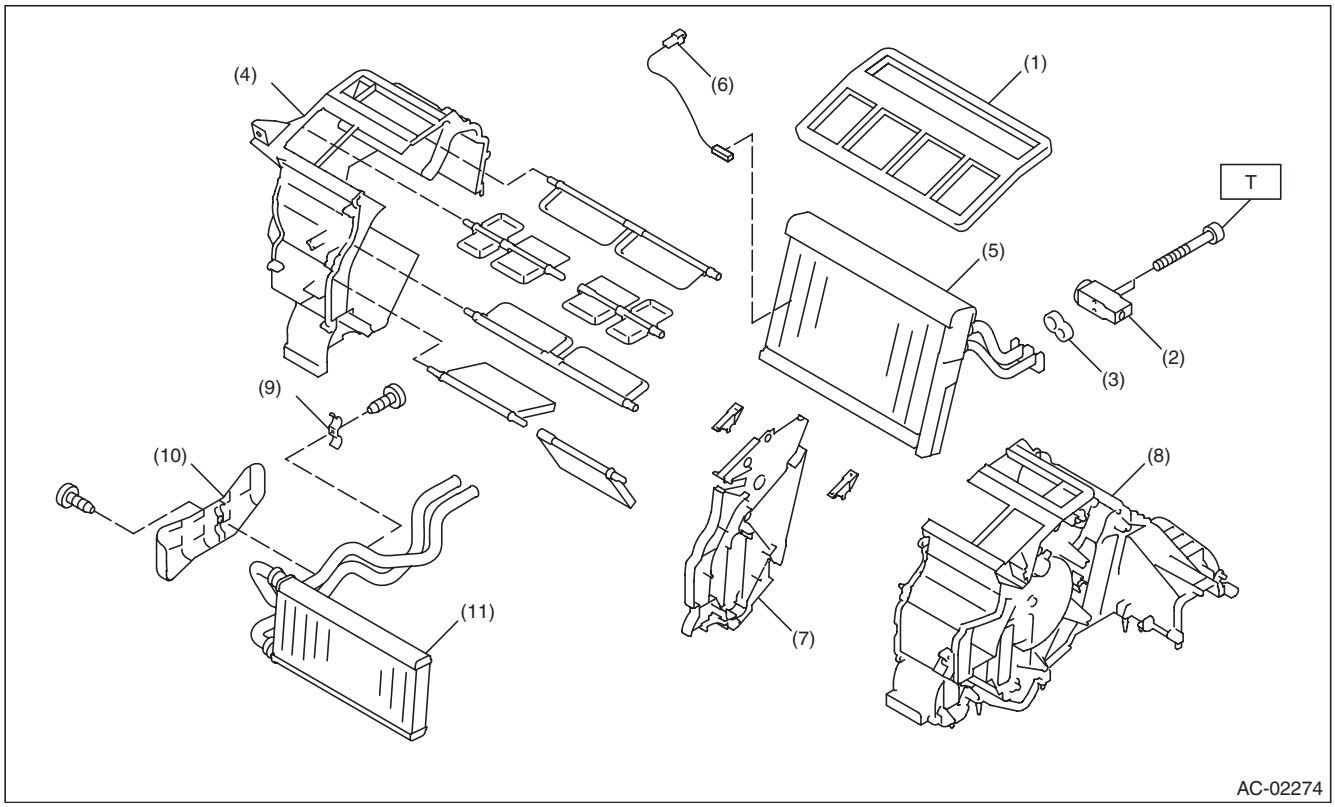

(1) Lining
(2) Expansion valve
(3) Gasket
(4) Heater case LH
(5) Evaporator
(6) Evaporator sensor
(7) Center plate
(8) Heater case RH
(9) Heater pipe clamp
(10) Heater pipe cover
(11) Heater core ASSY

Tightening torque:N·m (kgf-m, ft-lb)
T: 3.5 (0.36, 2.6)

GETtheMANUALS.org

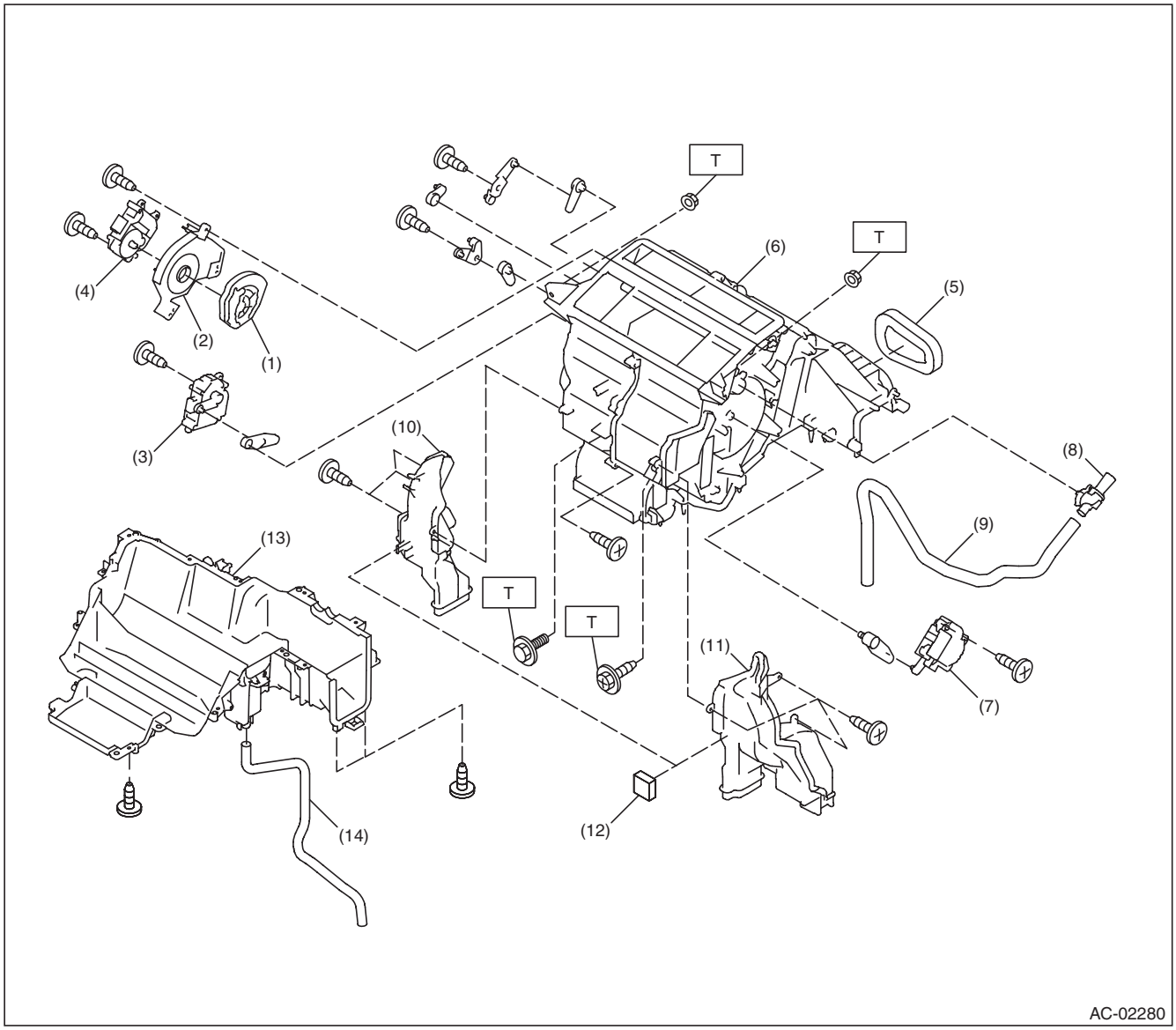

(1) Mode main lever
(2) Cover
(3) Air mix actuator (driver's seat)
(4) Mode actuator
(5) Gasket
(6) Unit ASSY
(7) Air mix actuator (passenger's seat)
(8) Aspirator
(9) Aspirator hose
(10) Foot duct LH
(11) Foot duct RH
(12) Gasket
(13) Heater case lower
(14) Drain hose

Tightening torque:N·m (kgf-m, ft-lb)
T: 7.5 (0.76, 5.5)

GETtheMANUALS.org

2. BLOWER MOTOR UNIT

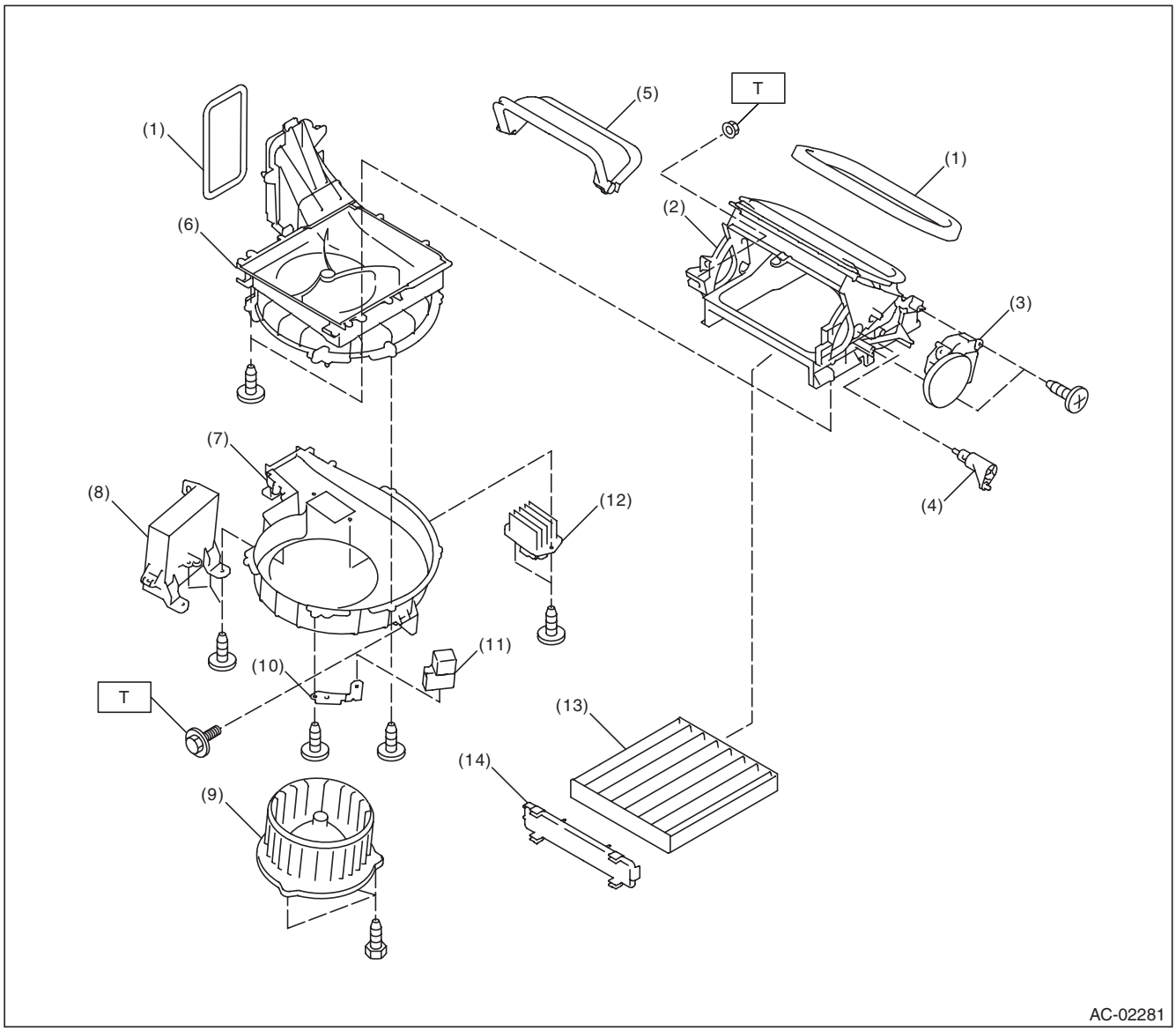

(1) Gasket
(2) Air duct cover ASSY
(3) Intake door actuator
(4) Intake door link
(5) FRESH/RECIRC door
(6) Upper case
(7) Lower case
(8) Control module
(9) Blower motor ASSY
(10) Relay holder bracket
(11) Blower motor relay
(12) Power transistor (auto A/C model) or resistor (manual A/C)
(13) Filter
(14) Filter cover

Tightening torque:N·m (kgf-m, ft-lb)
T: 7.5 (0.76, 5.5)

GETtheMANUALS.org

3. CONTROL MODULE

- AUTO A/C MODEL

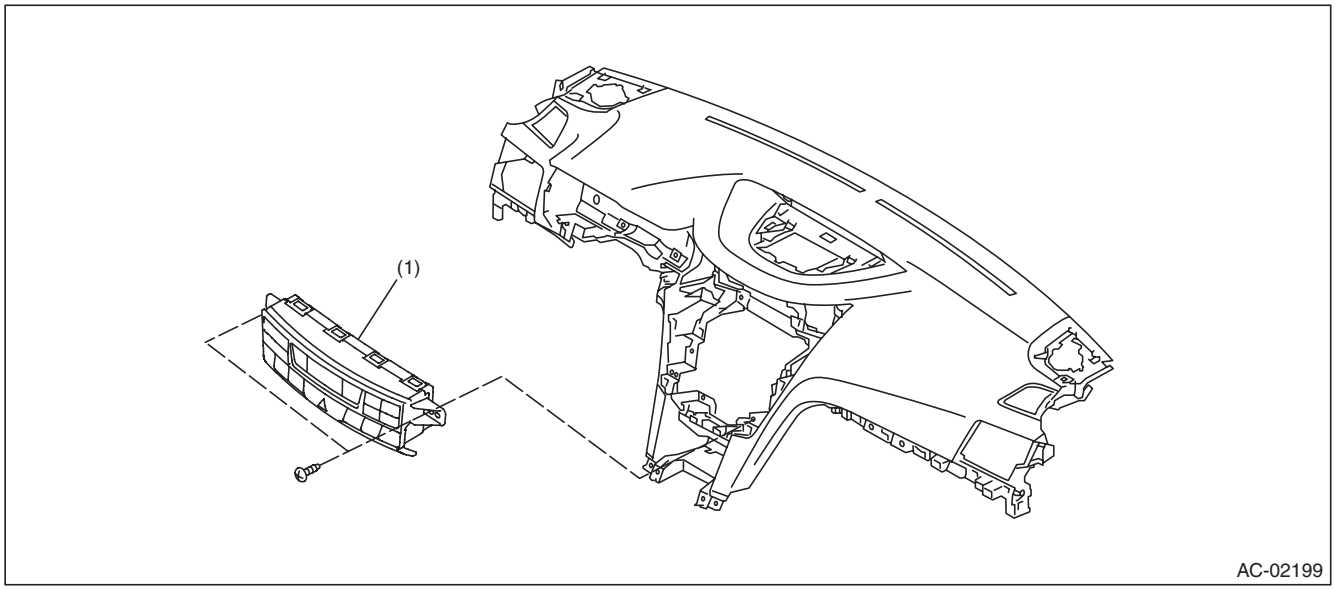

(1) Control module

- MANUAL A/C MODEL

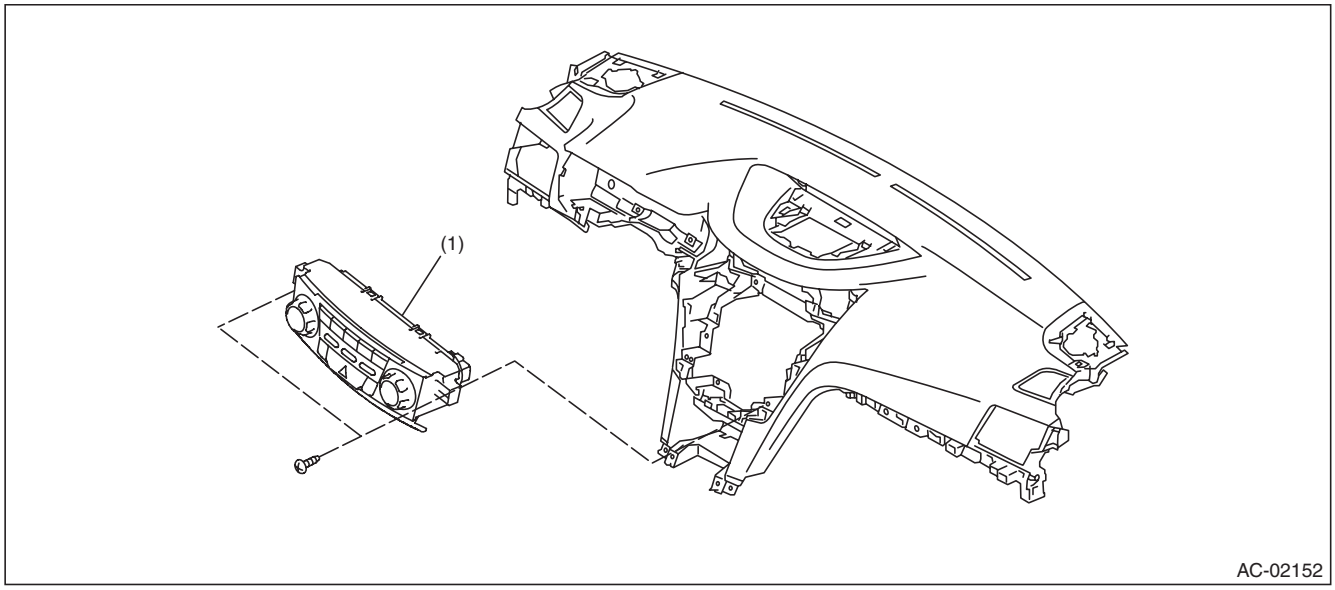

(1) Control module

GETtheMANUALS.org

4. AIR CONDITIONING UNIT

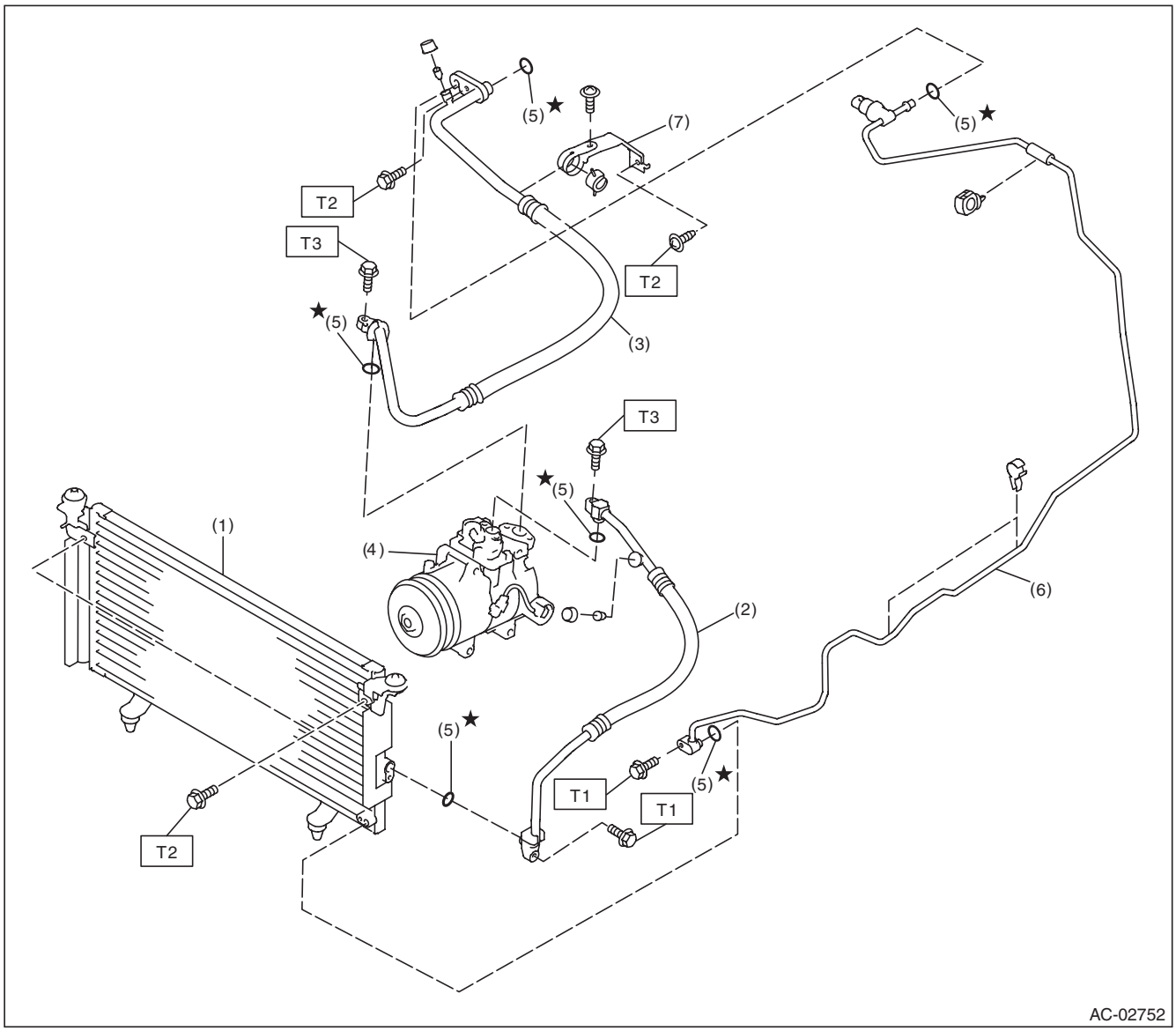

(1)	Condenser	(5)	O-ring
(2)	Hose (high-pressure)	(6)	Pipe
(3)	Hose (low-pressure)	(7)	Bracket
(4)	Compressor		

Tightening torque:N·m (kgf-m, ft-lb)

T1: 5 (0.51, 3.7)
T2: 7.5 (0.76, 5.5)
T3: 10 (1.02, 7.4)

GETtheMANUALS.org

5. COMPRESSOR

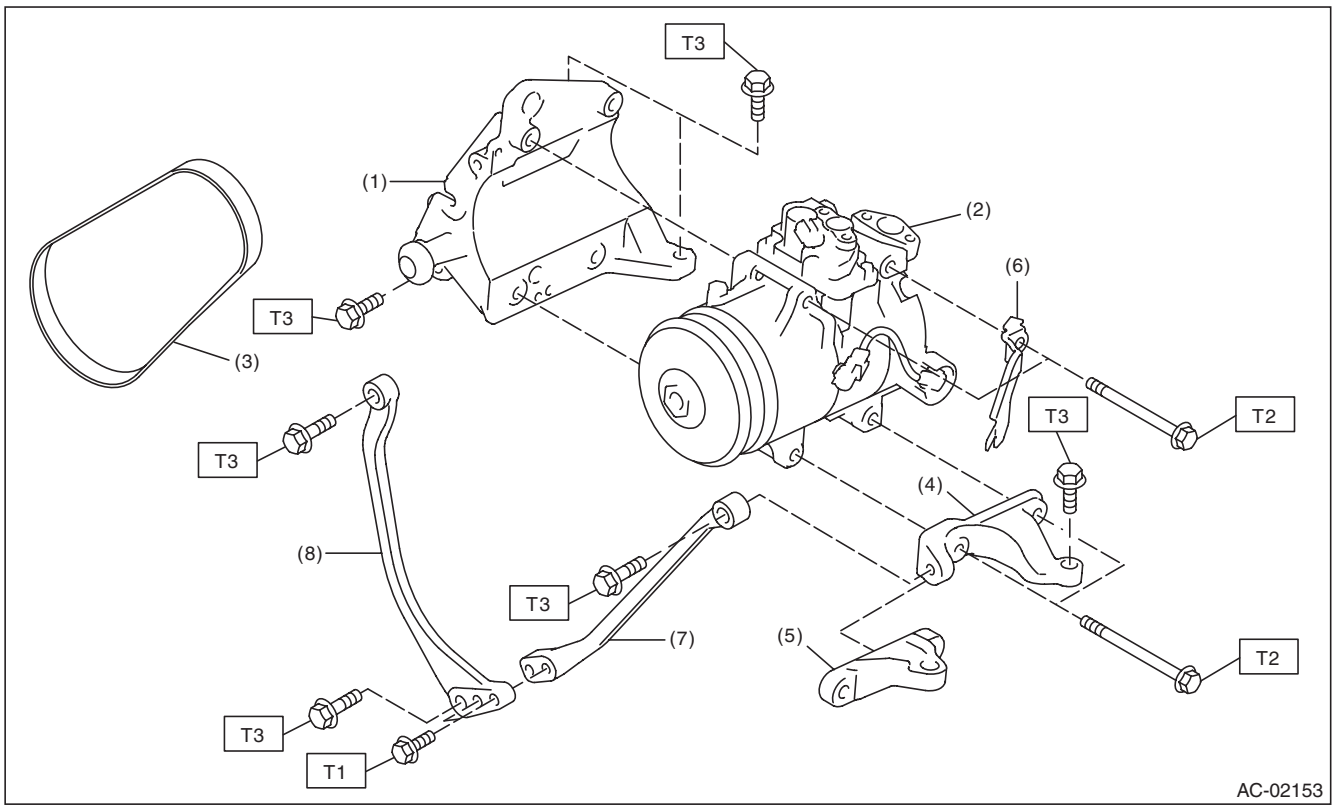

(1)	A/C compressor stay	(5)	Compressor bracket (H6 model)	***Tightening torque:N·m (kgf-m, ft-lb)***
(2)	Compressor	(6)	Connector bracket	***T1: 22 (2.24, 16.2)***
(3)	V-belt (6 PK)	(7)	Stopper rod LH (H4 model)	***T2: 26.5 (2.70, 19.5)***
(4)	Compressor bracket (H4 model)	(8)	Stopper rod RH (H4 model)	***T3: 36 (3.67, 26.6)***

GETtheMANUALS.org

6. HEATER DUCT

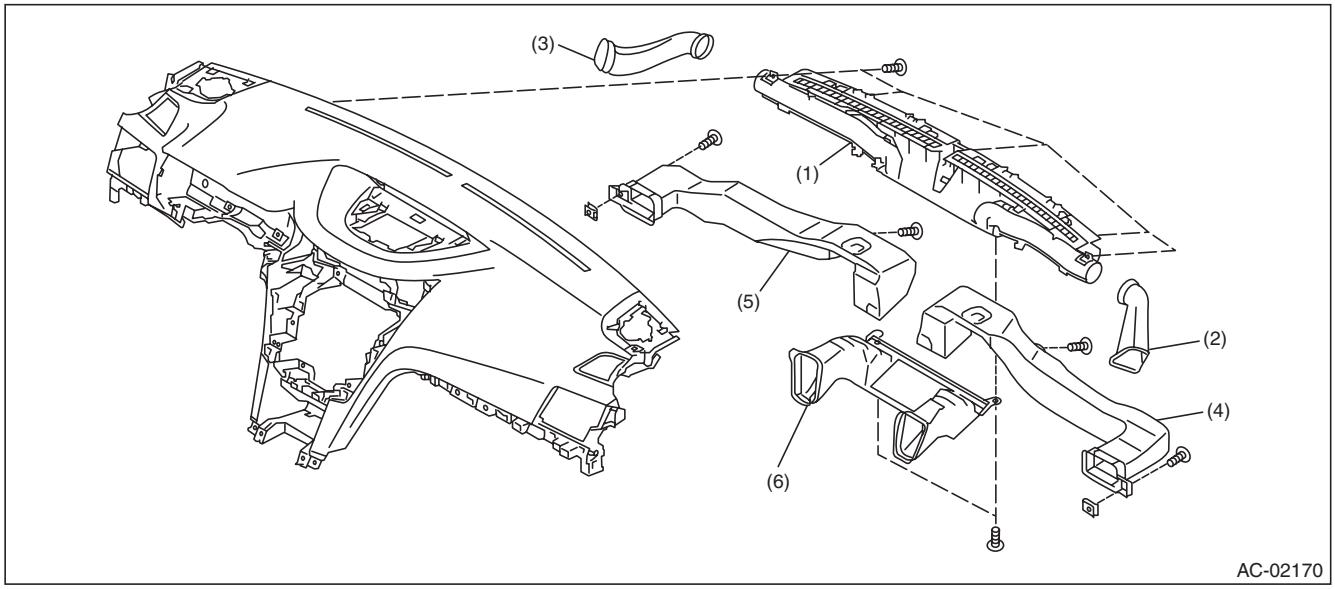

(1)	Defroster nozzle ASSY	(3)	Side defroster duct LH	(5)	Side vent duct LH
(2)	Side defroster duct RH	(4)	Side vent duct RH	(6)	Front vent duct

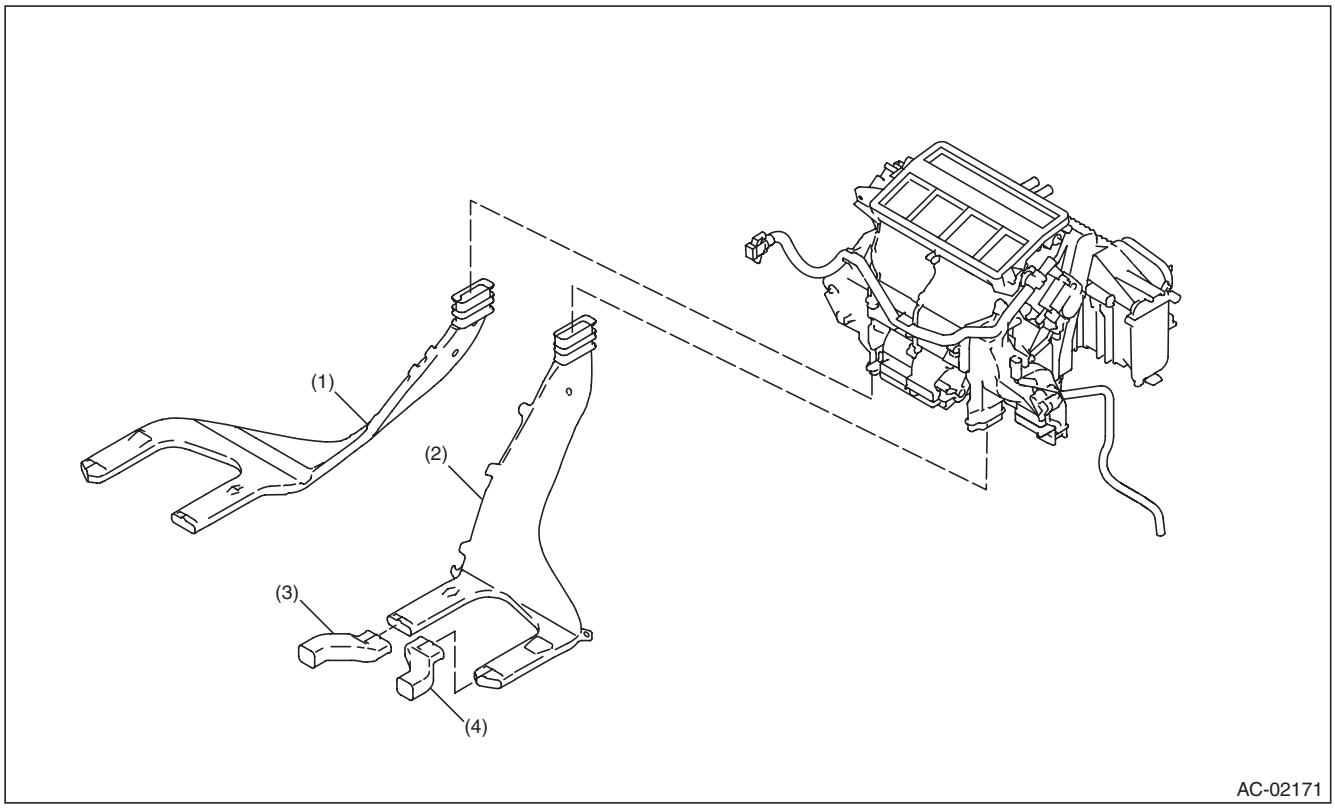

(1)	Rear heater duct LH	(3)	Extension duct LH	(4)	Extension duct RH
(2)	Rear heater duct RH				

GETtheMANUALS.org

D: CAUTION

- Before disassembling or reassembling parts, always disconnect the battery ground cable from battery. When replacing the radio, control module, and other parts provided with memory functions, record the memory contents before disconnecting the battery ground cable. Otherwise, the memory is cleared.
- Reassemble the parts in the reverse order of disassembly procedure unless otherwise indicated.
- Connect the connectors securely during reassembly.
- After reassembly, make sure that the functional parts operate normally.

1. HFC-134A A/C SYSTEM

- The cooling system components for the HFC-134a system such as the refrigerant and compressor oil are different from the conventional CFC-12 system components and they are incompatible with each other.
- Vehicles with the HFC-134a system can be identified by the label (A) attached to the vehicle.

Before maintenance, check which A/C system is installed to the vehicle.

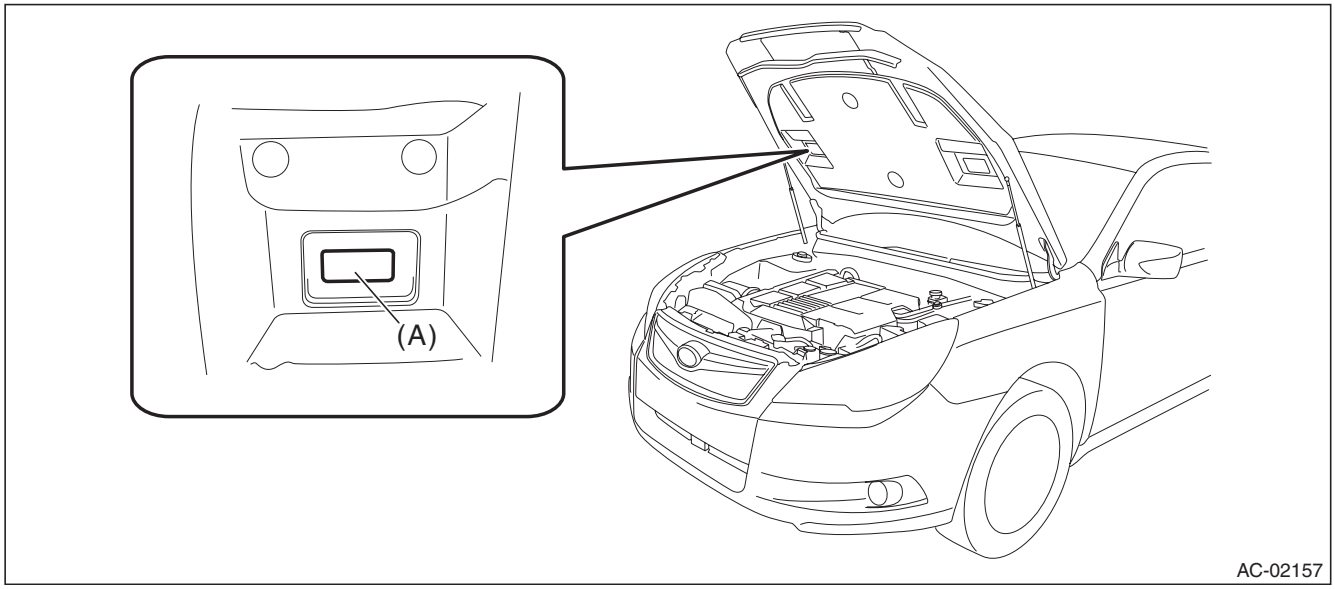

2. COMPRESSOR OIL

- HFC-134a compressor oil has no compatibility with that of CFC-12 system.
- Use only the manufacturer-authorized compressor oil, ND-OIL8, for the HFC-134a system.
- Do not mix multiple compressor oils.

If CFC-12 compressor oil is used in the HFC-134a A/C system, the compressor may become stuck due to poor lubrication, or the refrigerant may leak due to swelling of rubber parts.
On the other hand, if HFC-134a compressor oil is used in a CFC-12 A/C system, the durability of the A/C system will be lowered.

- HFC-134a compressor oil is very hygroscopic. When replacing or installing/removing A/C parts, immediately isolate the oil from atmosphere using a plug or tape. In order to avoid moisture, store the oil in a container with its cap tightly closed.

3. REFRIGERANT

- CFC-12 refrigerant cannot be used in a HFC-134a A/C system. HFC-134a refrigerant, also cannot be used in a CFC-12 A/C system.
- If an incorrect or no refrigerant is used, it will result in poor lubrication and the compressor itself may be damaged.

GETtheMANUALS.org

4. HANDLING OF REFRIGERANT

- The refrigerant boils at approx. –30°C (–22°F). When handling it, be sure to wear protective goggles and protective gloves. Direct contact of the refrigerant with skin may cause frostbite.

If the refrigerant gets into your eye, avoid rubbing your eyes with your hands. Wash your eye with plenty of water, and receive medical treatment from an eye doctor.

- Do not heat a service can. If a service can is directly heated, or put into boiling water, the inside pressure will become extremely high. This may cause the can to explode. If a service can must be warmed up, use warm water of 40°C (104°F) or less.
- Do not drop or impact a service can. (Observe the precautions and operation procedure described on the refrigerant can.)
- When the engine is running, do not open the high-pressure valve of manifold gauge. The high-pressure gas will back-flow resulting in an explosion of the can.
- Provide good ventilation and do not work in a closed area.
- In order to prevent global warming, avoid releasing HFC-134a into the atmosphere. Using a refrigerant recovery system, discharge and recycle the gas.

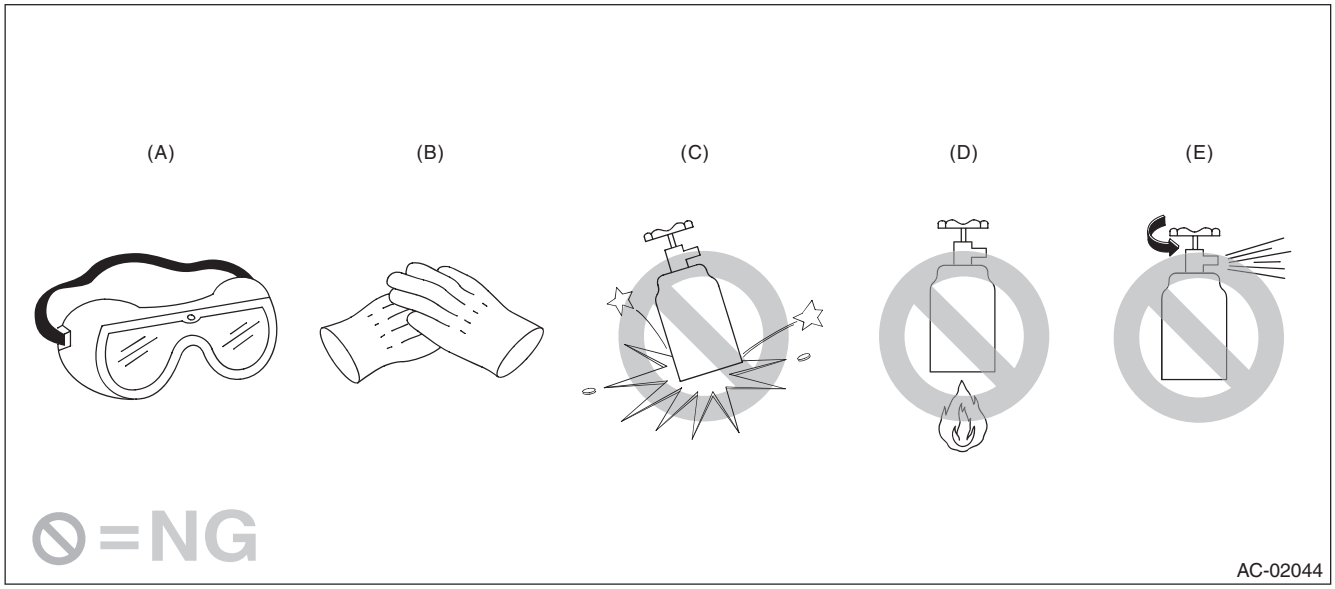

(A) Goggles
(B) Gloves
(C) Do not apply impact.
(D) No direct heat on container
(E) Do not discharge

5. O-RING CONNECTIONS

- Always use a new O-ring.
- In order to keep the O-rings free of lint which will cause a refrigerant gas leak, perform work without using gloves or waste cloths.
- Apply compressor oil to O-rings to avoid sticking, before installation.
- Use a torque wrench to tighten the O-ring fittings. Over-tightening will result in damage of the O-ring and deformation of the pipe end.
- If the work is interrupted before completing pipe connections, recap the pipes, components and fittings with a plug or tape to prevent foreign matter from entering.
- Visually check the surfaces and mating surfaces of O-rings, threads and connecting points. If a failure is found, replace the applicable parts.

GETtheMANUALS.org

- Install the O-rings straight against the pipe groove.

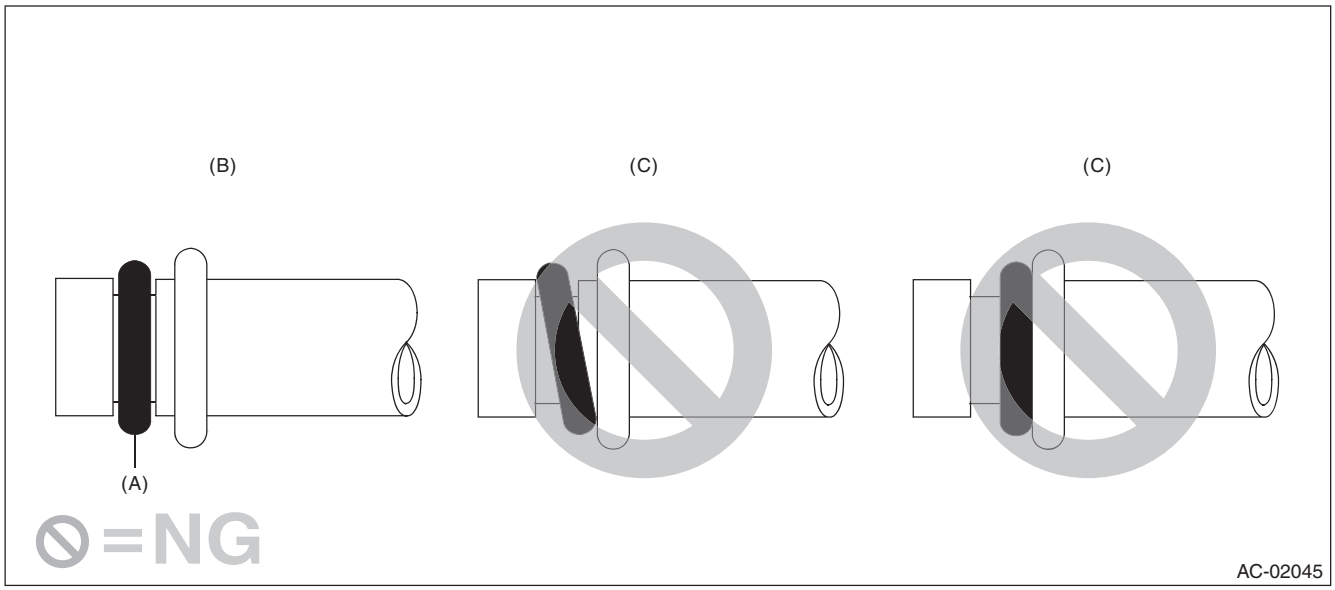

(A) O-ring (B) OK (C) NG

- Use compressor oil specified in the service manual to lubricate the O-rings.

Apply oil to the top and sides of O-rings before installation.
Apply compressor oil to the pipe grooves.

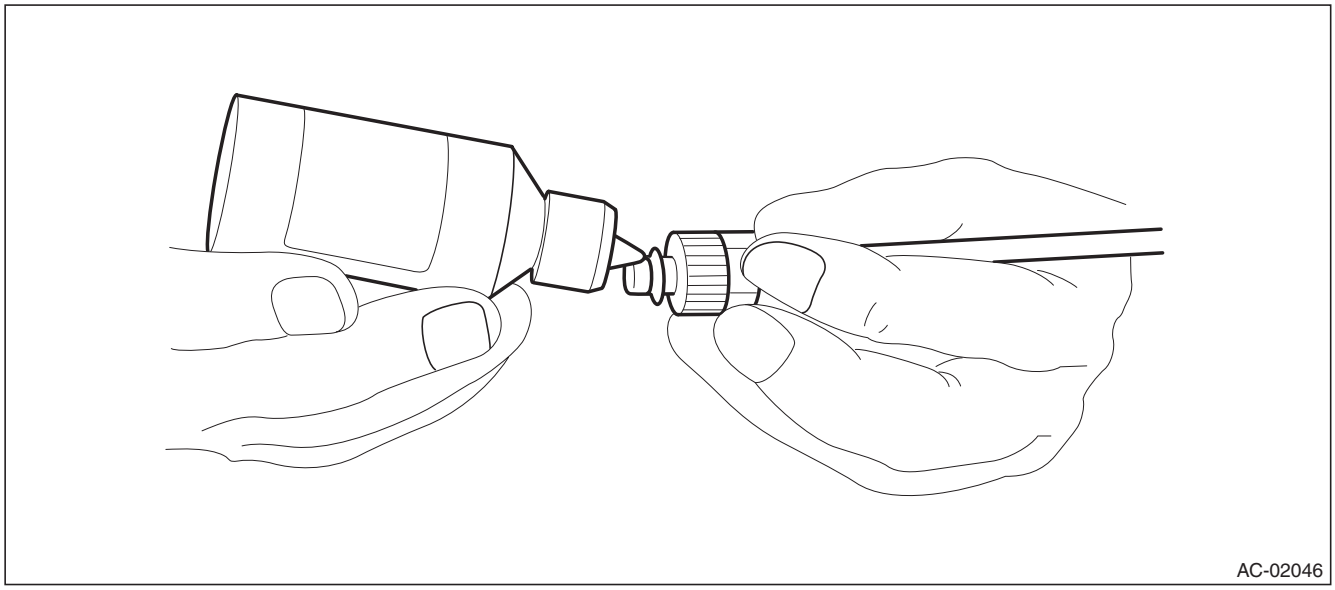

- After tightening, use a clean cloth to remove excess compressor oil from the connections and any oil which may have run on the vehicle body or other parts.
- If any leakage is suspected after tightening, do not tighten the connections further, but disconnect the connections, remove the O-rings, and check the O-rings, threads, and connections.

GETtheMANUALS.org

E: PREPARATION TOOL

1. SPECIAL TOOL

ILLUSTRATION	TOOL NUMBER	DESCRIPTION	REMARKS
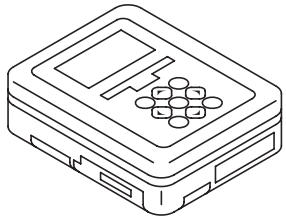 ST1B022XU0	1B022XU0	SUBARU SELECT MONITOR III KIT	Used for troubleshooting the electrical system.

2. GENERAL TOOL

CAUTION:
When working on vehicles with a HFC-134a system, only use HFC-134a specified tools and parts. Do not mix CFC-12 tools and parts. If HFC-134a and CFC-12 refrigerant or compressor oil is mixed, it will result in poor lubrication and the compressor itself may be damaged.
In order to prevent the mixture of HFC-134a and CFC-12 parts and liquid, the type of tool and screw, and the replacement valves used are different. The gas leak detectors for the HFC-134a and CFC-12 systems must also not be interchanged.

	HFC-134a	CFC-12
Tool & screw type	Millimeter size	Inch size
Valve type	Quick joint type	Screw-in type

Illustration	Tools and Equipment
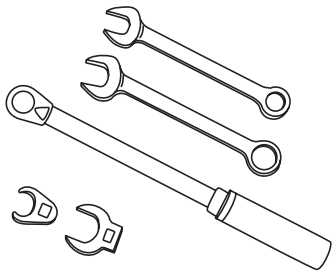 AC-00213	Wrench Various **WRENCHES** will be required to service any A/C system.7 — 40 N·m (0.7 to 4.1 kgf-m, 5 to 30 ft-lb) torque wrench and various crow-foot wrenches will be needed. Open end or flare nut wrenches will be needed to affix the pipe and hose fittings.
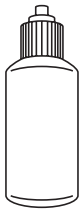 AC-00012	Applicator bottle A small **APPLICATOR BOTTLE** is recommended to apply compressor oil to the various parts. It can be available at a hardware store.

GETtheMANUALS.org

Illustration	Tools and Equipment
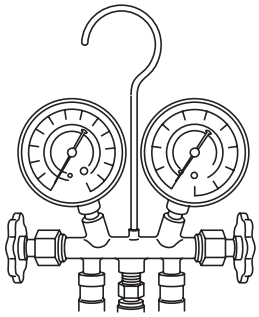 AC-00013	Manifold gauge set A **MANIFOLD GAUGE SET** (with hoses) is available at either a refrigerant supplier or an automotive equipment supplier.
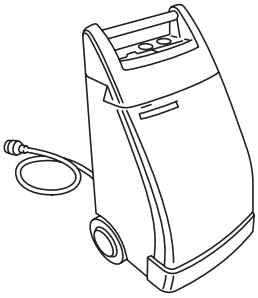 AC-00014	Refrigerant recovery system A **REFRIGERANT RECOVERY SYSTEM** is used for the recovery and recycling of A/C system refrigerant after contaminants and moisture have been removed from the refrigerant.
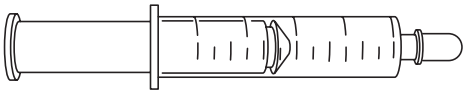 AC-00015	Syringe A graduated plastic **SYRINGE** will be needed to add oil into the system again. A syringe can be available at a pharmacy or drug store.
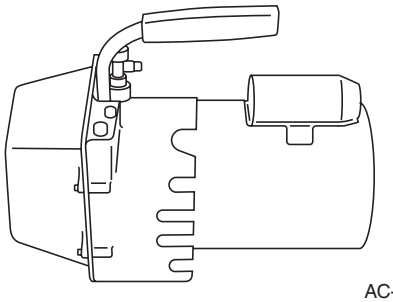 AC-00016	Vacuum pump A **VACUUM PUMP** is necessary (for a good working condition), and may be available at either a refrigerant supplier or an automotive equipment supplier.
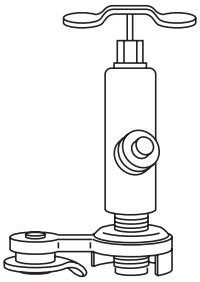 AC-00017	Can tap A **CAN TAP** for the 397 g (14 oz.) can is available at an automotive equipment supplier.

GETtheMANUALS.org

Illustration	Tools and Equipment
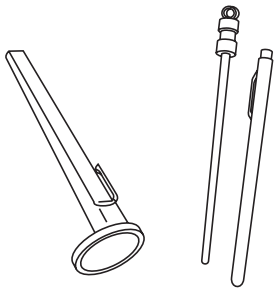 AC-00018	Thermometer A Pocket **THERMOMETER** is available at either a industrial hardware store or a refrigerant supplier.
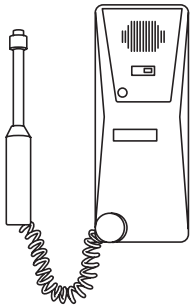 AC-00019	Electronic leak detector An **ELECTRONIC LEAK DETECTOR** can be available at either a specialty tool supplier or an A/C equipment supplier.
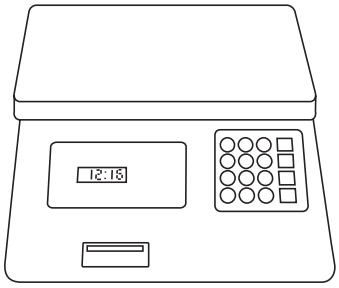 AC-00020	Weight scale A **WEIGHT SCALE** such as an electronic charging scale or a bathroom scale with digital display will be needed, if a 13.6 kg (30 lb) refrigerant container is used.

GETtheMANUALS.org

2. Air Conditioning System

A: WIRING DIAGRAM

Refer to “Air Conditioning System” in the wiring diagram. <Ref. to WI-53, WIRING DIAGRAM, Air Conditioning System.>

B: ELECTRICAL SPECIFICATION

Refer to “Auto A/C Control Module I/O Signal” of “HVAC SYSTEM (DIAGNOSTICS)” section. <Ref. to AC(diag)-6, ELECTRICAL SPECIFICATION, Control Module I/O Signal.>

C: INSPECTION

Refer to “Basic Diagnostic Procedure” of “HVAC SYSTEM (DIAGNOSTICS)” section. <Ref. to AC(diag)-2, Basic Diagnostic Procedure.>

D: NOTE

For procedure of each component in the air conditioning system, refer to the respective section.

- Blower motor unit assembly: <Ref. to AC-32, Blower Motor Unit Assembly.>
- Blower motor: <Ref. to AC-36, Blower Motor.>
- Power transistor (auto A/C model): <Ref. to AC-38, Power Transistor (Auto A/C Model).>
- Blower resistor (manual A/C model): <Ref. to AC-39, Blower Resistor (Manual A/C Model).>
- Control panel: <Ref. to AC-46, Control Panel.>
- Control module: <Ref. to AC-54, Control Unit.>
- Compressor: <Ref. to AC-55, Compressor.>
- Condenser: <Ref. to AC-58, Condenser.>
- Heater and cooling unit: <Ref. to AC-62, Heater and Cooling Unit.>
- Evaporator: <Ref. to AC-66, Evaporator.>
- Expansion valve: <Ref. to AC-74, Expansion Valve.>
- Hose & pipe: <Ref. to AC-76, Hose and Pipe.>
- Ambient sensor (auto A/C model): <Ref. to AC-78, Ambient Sensor (Auto A/C Model).>
- Sunload sensor (auto A/C model): <Ref. to AC-80, Sunload Sensor (Auto A/C Model).>
- In-vehicle sensor (auto A/C model): <Ref. to AC-82, In-Vehicle Sensor (Auto A/C Model).>
- Evaporator sensor: <Ref. to AC-87, Evaporator Sensor.>
- Intake door actuator: <Ref. to AC-90, FRESH/RECIRC Door Actuator.>
- Mode door actuator: <Ref. to AC-92, Mode Door Actuator.>
- Air mix door actuator: <Ref. to AC-95, Air Mix Door Actuator.>

GETtheMANUALS.org

3. Refrigerant Pressure with Manifold Gauge Set

A: PROCEDURE

1. CHECK REFRIGERANT GAS PRESSURE

Preparation tool:
Manifold gauge set
Thermometer

1) Prepare the vehicle.

NOTE:
Check that the ambient temperature is 25 — 40°C (77 — 104°F) and that the humidity is 30% — 80%.
- Place the vehicle in the shade and windless condition, and open the front hood.
- Open the front windows and close all doors.

2) Connect the manifold gauge set, and then check the refrigerant pressure.
   (1) Connect the manifold gauge set, and start the engine.
   (2) Set the vehicle to the following conditions.

Item	Condition
Engine	Warmed up (Engine coolant temperature indicator light: OFF)
Air vent grille	Shutter is fully open.
AC switch	ON
Temperature control switch or dial	LO (MAX COOL)
FRESH/RECIRC switch	RECIRC
Mode change switch	VENT
Fan switch (auto A/C model)	4 — 6 levels
Fan dial (manual A/C model)	3 — 4 levels

   (3) In the condition of step (2), idle the engine for 30 minutes.
   (4) Read the gauge values on both high pressure side and low pressure side for manifold gauge.

3) Measure the air vent grille outlet opening temperature, ambient temperature and humidity.

NOTE:
For outlet opening temperature, measure the average temperature of center grille assembly and side grille assembly.

4) Check that the high and low pressures and outlet opening temperature for ambient temperature and humidity is within the standard value described in the chart below.

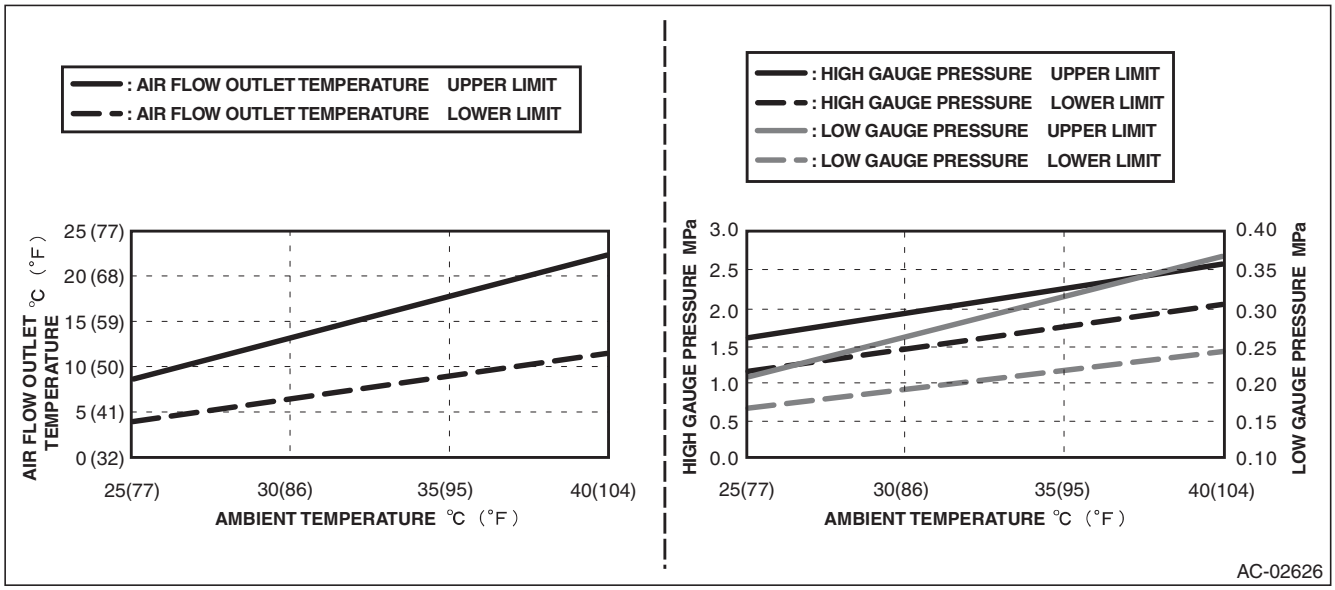

GETtheMANUALS.org

5) Refer to “DIAGNOSIS WITH SYMPTOM” if the inspection result is not within the standard value. <Ref. to AC-21, INSPECTION WITH PRESSURE SYMPTOM, INSPECTION, Refrigerant Pressure with Manifold Gauge Set.>

B: INSPECTION

1. INSPECTION WITH PRESSURE SYMPTOM

Symptoms	Reference
Both high and low pressure sides are low	<Ref. to AC-21, BOTH HIGH AND LOW PRESSURE SIDES ARE LOW, INSPECTION, Refrigerant Pressure with Manifold Gauge Set.>
Both high and low pressure sides are high	<Ref. to AC-21, BOTH HIGH AND LOW PRESSURE SIDES ARE HIGH, INSPECTION, Refrigerant Pressure with Manifold Gauge Set.>
High and low pressure sides are equal, high-pressure side is low	<Ref. to AC-22, HIGH AND LOW PRESSURE SIDES ARE EQUAL, OR HIGH-PRESSURE SIDE IS LOW, INSPECTION, Refrigerant Pressure with Manifold Gauge Set.>
High-pressure side is high	<Ref. to AC-22, HIGH-PRESSURE SIDE IS HIGH, INSPECTION, Refrigerant Pressure with Manifold Gauge Set.>
Low-pressure side is low	<Ref. to AC-23, LOW-PRESSURE SIDE IS LOW, INSPECTION, Refrigerant Pressure with Manifold Gauge Set.>
Low-pressure side is high	<Ref. to AC-23, LOW-PRESSURE SIDE IS HIGH, INSPECTION, Refrigerant Pressure with Manifold Gauge Set.>

2. BOTH HIGH AND LOW PRESSURE SIDES ARE LOW

	Step	Check	Yes	No
1	**CHECK REFRIGERANT LEAKS.** Check the refrigerant for leaks. <Ref. to AC-28, INSPECTION, Refrigerant Leak Check.> NOTE: When high-pressure side is less than 0.69Mpa: Go to step 2.	Are there refrigerant leaks?	Repair the refrigerant leaking points.	Go to step **2**.
2	**FILL PROPER AMOUNT OF REFRIGERANT.** Drain all refrigerant, and refill proper amount of refrigerant. • Recovery: <Ref. to AC-24, PROCEDURE, Refrigerant Recovery Procedure.> • Fill: <Ref. to AC-25, PROCEDURE, Refrigerant Charging Procedure.>	Is refrigerant pressure within the standard value?	Refrigerant pressure is normal.	Perform corresponding “INSPECTION WITH PRESSURE SYMPTOM”.

3. BOTH HIGH AND LOW PRESSURE SIDES ARE HIGH

	Step	Check	Yes	No
1	**FILL PROPER AMOUNT OF REFRIGERANT.** Drain all refrigerant, and refill proper amount of refrigerant. • Recovery: <Ref. to AC-24, PROCEDURE, Refrigerant Recovery Procedure.> • Fill: <Ref. to AC-25, PROCEDURE, Refrigerant Charging Procedure.>	Is refrigerant pressure within the standard value?	Refrigerant pressure is normal.	Perform corresponding “INSPECTION WITH PRESSURE SYMPTOM”.

GETtheMANUALS.org

4. HIGH AND LOW PRESSURE SIDES ARE EQUAL, OR HIGH-PRESSURE SIDE IS LOW

	Step	Check	Yes	No
1	**CHECK REFRIGERANT LEAKS.** Check the refrigerant for leaks. <Ref. to AC-28, INSPECTION, Refrigerant Leak Check.> NOTE: When high-pressure side is less than 0.69Mpa: Go to step 2.	Are there refrigerant leaks?	Repair the refrigerant leaking points.	Go to step **2**.
2	**FILL PROPER AMOUNT OF REFRIGERANT.** Drain all refrigerant, and refill proper amount of refrigerant. • Recovery: <Ref. to AC-24, PROCEDURE, Refrigerant Recovery Procedure.> • Fill: <Ref. to AC-25, PROCEDURE, Refrigerant Charging Procedure.>	Is refrigerant pressure within the standard value?	Refrigerant pressure is normal.	Inspect the compressor. <Ref. to AC(diag)-38, COLD AIR DOES NOT COME OUT EVEN WHEN THE A/C SWITCH IS PRESSED. THE GLASS CANNOT BE DEFOGGED. (COMPRESSOR DOES NOT OPERATE. (VARIABLE)), DIAGNOSTIC PROCEDURE WITH PHENOMENON, Diagnostics with Phenomenon.>

5. HIGH-PRESSURE SIDE IS HIGH

	Step	Check	Yes	No
1	**CHECK CONDENSER.** Check the condenser. <Ref. to AC-61, INSPECTION, Condenser.>	Is condenser OK?	Go to step **2**.	Clean or replace the condenser.
2	**CHECK RADIATOR FAN.** Check the radiator fan system. • H4 non-turbo model: <Ref. to CO(H4SO)-7, Radiator Fan System.> • H4 turbo model: <Ref. to CO(H4DOTC)-7, Radiator Fan System.> • H6 model: <Ref. to CO(H6DO)-8, Radiator Fan System.>	Is radiator fan system normal?	Go to step **3**.	Repair the radiator fan system or replace the faulty parts.
3	**FILL PROPER AMOUNT OF REFRIGERANT.** Drain all refrigerant, and refill proper amount of refrigerant. • Recovery: <Ref. to AC-24, PROCEDURE, Refrigerant Recovery Procedure.> • Fill: <Ref. to AC-25, PROCEDURE, Refrigerant Charging Procedure.>	Is refrigerant pressure within the standard value?	Refrigerant pressure is normal.	Check the high-pressure hose and condenser for kinks or clogging, and replace if defective.

GETtheMANUALS.org

6. LOW-PRESSURE SIDE IS LOW

Step		Check	Yes	No
1	**CHECK REFRIGERANT LEAKS.** Check the refrigerant for leaks. <Ref. to AC-28, INSPECTION, Refrigerant Leak Check.> NOTE: When high-pressure side is less than 0.69Mpa: Go to step 2.	Are there refrigerant leaks?	Repair the refrigerant leaking points.	Go to step **2**.
2	**FILL PROPER AMOUNT OF REFRIGERANT.** Drain all refrigerant, and refill proper amount of refrigerant. • Recovery: <Ref. to AC-24, PROCEDURE, Refrigerant Recovery Procedure.> • Fill: <Ref. to AC-25, PROCEDURE, Refrigerant Charging Procedure.>	Is refrigerant pressure within the standard value?	Refrigerant pressure is normal.	Go to step **3**.
3	**REPLACE EXPANSION VALVE.** Replace the expansion valve. <Ref. to AC-74, REMOVAL, Expansion Valve.>	Is refrigerant pressure within the standard value?	Refrigerant pressure is normal.	Inspect the compressor. <Ref. to AC(diag)-38, COLD AIR DOES NOT COME OUT EVEN WHEN THE A/C SWITCH IS PRESSED. THE GLASS CANNOT BE DEFOGGED. (COMPRESSOR DOES NOT OPERATE. (VARIABLE)), DIAGNOSTIC PROCEDURE WITH PHENOMENON, Diagnostics with Phenomenon.>

7. LOW-PRESSURE SIDE IS HIGH

Step		Check	Yes	No
1	**FILL PROPER AMOUNT OF REFRIGERANT.** Drain all refrigerant, and refill proper amount of refrigerant. • Recovery: <Ref. to AC-24, PROCEDURE, Refrigerant Recovery Procedure.> • Fill: <Ref. to AC-25, PROCEDURE, Refrigerant Charging Procedure.>	Is refrigerant pressure within the standard value?	Refrigerant pressure is normal.	Go to step **2**.
2	**REPLACE EXPANSION VALVE.** Replace the expansion valve. <Ref. to AC-74, REMOVAL, Expansion Valve.>	Is refrigerant pressure within the standard value?	Refrigerant pressure is normal.	Replace the evaporator. <Ref. to AC-66, REMOVAL, Evaporator.>

GETtheMANUALS.org

4. Refrigerant Recovery Procedure

A: PROCEDURE

Preparation tool:
Manifold gauge set
Refrigerant recovery system

CAUTION:
- **During operation, be sure to wear protective goggles and protective gloves.**
- **Connect the refrigerant recovery system with the manifold gauge set to discharge the refrigerant from the A/C system and recycle the gas.**
- **When recycling the discharged refrigerant, keep service cans on hand. Because the recovery rate with the recovery system is approx. 90%, service cans are necessary to charge the refrigerant.**
- **Follow the detailed operation procedure described in the operation manual attached to the refrigerant recovery system.**

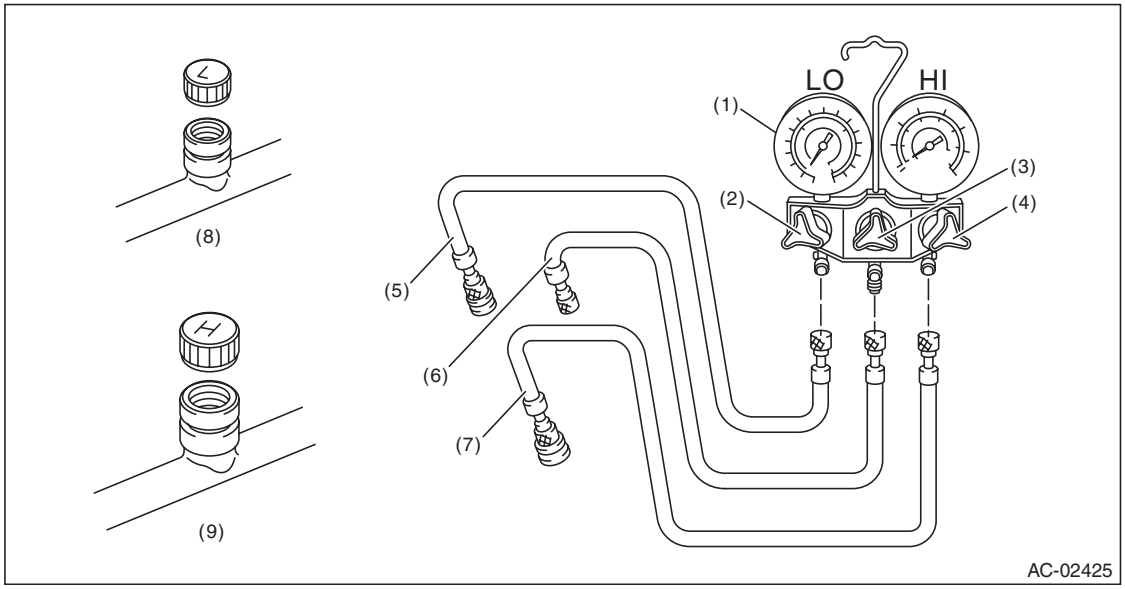

(1)	Manifold gauge	(4)	High pressure valve	(7)	High-pressure hose
(2)	Low pressure valve	(5)	Low-pressure hose	(8)	Low-pressure side service port
(3)	Center valve	(6)	Center manifold hose (vacuum pump and refill)	(9)	High-pressure side service port

1) Perform compressor oil return operation. <Ref. to AC-31, PROCEDURE, Compressor Oil.>
2) Stop the engine.
3) Attach the manifold gauge set.
   (1) Check that all valves are fully closed.
   (2) Install the low/high pressure hoses to the service ports on the low/high pressure sides of the vehicle respectively.

CAUTION:
Confirm that the connections are secure.
   (3) Connect the center hose to the refrigerant recovery system.
4) Follow the operation manual attached to the refrigerant recovery system to collect the refrigerant.

GETtheMANUALS.org

5. Refrigerant Charging Procedure

A: PROCEDURE

Preparation tool:
Manifold gauge set
Vacuum pump
Can tap
Weight scale

CAUTION:
- **While working, be sure to wear protective goggles and protective gloves.**
- **Air in the cycle can cause insufficient air conditioning, and water in the cycle can cause clogging in the cycle (icing) and rust. To remove this air and water content, use a vacuum pump to perform evacuation before filling with refrigerant. By making the inside of the cycle a vacuum, the water content will evaporate even at normal temperatures, and can be removed.**

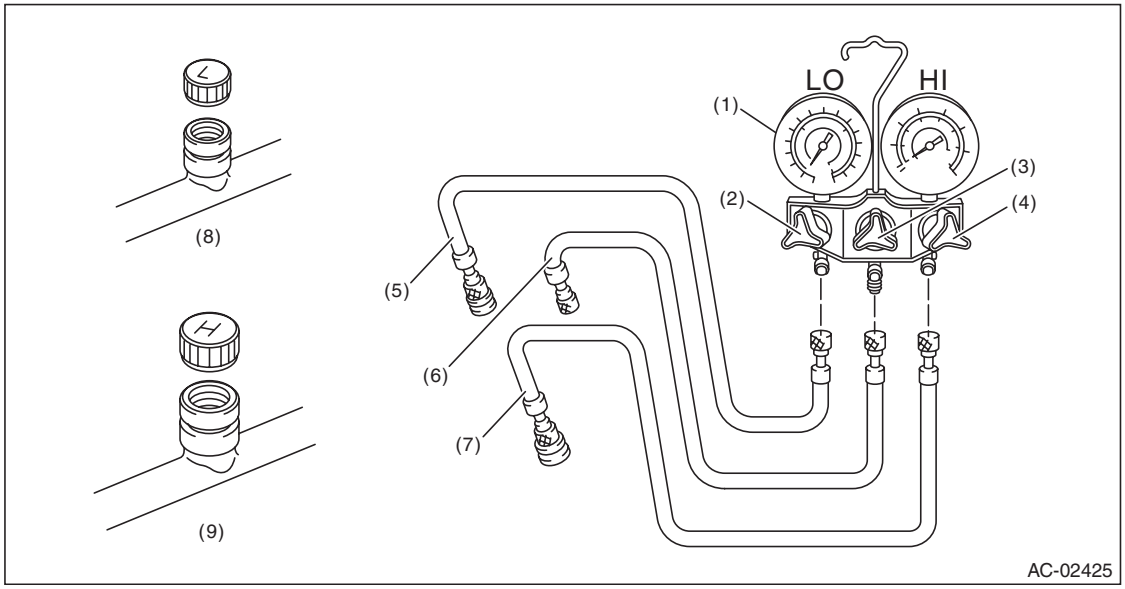

(1)	Manifold gauge	(4)	High pressure valve	(7)	High-pressure hose
(2)	Low pressure valve	(5)	Low-pressure hose	(8)	Low-pressure side service port
(3)	Center valve	(6)	Center manifold hose (vacuum pump and refill)	(9)	High-pressure side service port

1) Attach the manifold gauge set.
   (1) Check that all valves are fully closed.
   (2) Install the low/high pressure hoses to the service ports on the low/high pressure sides of the vehicle respectively.

CAUTION:
Confirm that the connections are secure.
   (3) Connect the center manifold hose of the manifold gauge to the vacuum pump.

2) Perform evacuation.

CAUTION:
Make sure to perform evacuation using a vacuum pump.
   (1) Open the low-pressure valve, high-pressure valve and center valve.
   (2) Operate the vacuum pump.
   (3) Perform evacuation for 5 minutes or more, and when the low pressure gauge needle reaches -0.1 MPa (1.0 kgf/cm^2, 14 psi), close the center manifold hose valve, and stop the vacuum pump.

GETtheMANUALS.org

(4) Leave alone for 5 to 10 minutes after closing the low pressure side and high pressure side valves, and check whether there is any change in the low pressure gauge needle indication. If the needle position changes, this indicates a leak. Check the pipe and hose connections, and repair the location with the problem. In this case, repeat again from step 1).
(5) If there is no leakage, continue evacuation for additional 20 — 30 minutes, close all valves and then stop the vacuum pump.

3) Charge refrigerant.
(1) Follow the can tap operation manual, install to the refrigerant can.
(2) Disconnect the center manifold hose from the vacuum pump, and connect the hose to the tap valve.

NOTE:
When a 13.6 kg (30 lb) refrigerant container (1) is used, measure the amount of refrigerant with a refrigerant charging scale (2), and connect with the center manifold hose.

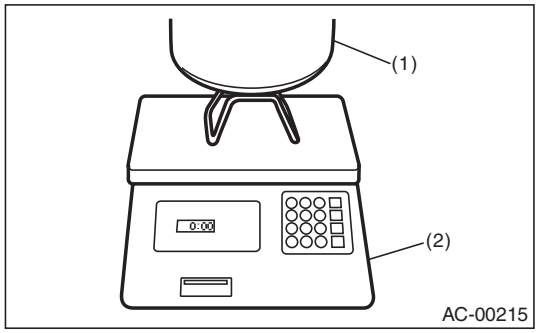

(3) Open the tap valve of HFC-134a supply container (refrigerant can or refrigerant container).
(4) Loosen the center manifold hose connection on the manifold gauge for a few seconds (if there is a purge valve on the manifold gauge, push this instead) to allow the air in the center manifold hose to be bled by the refrigerant pressure.
(5) Open the low-pressure side and high-pressure side valves of the manifold gauge to fill with refrigerant.

NOTE:
If the HFC-134a supply container is empty, close all valves of manifold gauge and tap valve of HFC-134a supply container, and replace the empty container. After replacing with a new HFC-134a supply container, perform air purge, and resume the filling operation.
(6) If the low pressure gauge indicates approximately 0.2 MPa (2.0 kgf/cm^2, 29 psi) or refrigerant filling efficiency drops, close the low-pressure side valve and high-pressure side valve.
(7) Check that the low-pressure side valve and high-pressure side valve are closed, turn off the A/C switch and start the engine.

CAUTION:
When filling with the engine running, do not open the high pressure side valve. Always fill from the low pressure side.
(8) To prevent damage to the compressor, push the A/C switch ON-OFF quickly a few times.
(9) Set the vehicle to the following conditions.

Item	Condition
Engine speed	1,500 rpm
AC switch	ON
Temperature control switch or dial	LO (MAX COOL)
Fan switch or dial	HI (MAX)
FRESH/RECIRC switch	RECIRC
Mode change switch	VENT
WINDOW	Open

(10) Open the low-pressure side valve, check the refrigerant pressure with a manifold gauge and fill with refrigerant up to the specified amount. <Ref. to AC-21, INSPECTION WITH PRESSURE SYMPTOM, INSPECTION, Refrigerant Pressure with Manifold Gauge Set.>

GETtheMANUALS.org

4) Using an electronic leak detector (leak tester), check for refrigerant leaks in the system. <Ref. to AC-28, INSPECTION, Refrigerant Leak Check.>
5) After filling with refrigerant, close all valves and remove the manifold gauge set.
6) Attach cap to the service port of the low-pressure side and high-pressure side.

GETtheMANUALS.org

6. Refrigerant Leak Check

A: INSPECTION

Preparation tool:
Manifold gauge set
Electronic leak detector (leak tester)

1) Attach the manifold gauge set.
   (1) Check that all valves are fully closed.
   (2) Install the low/high pressure hoses to the service ports on the low/high pressure sides of the vehicle respectively.

CAUTION:
Confirm that the connections are secure.

   (3) Start the engine, operate the A/C system for approx. 10 minutes, and check that the high-pressure side indicates 0.69 MPa (7.0 kgf/cm^2, 100 psi) or more.

2) Stop the engine to start the leak test.

Items	Condition	Corrective action
Pipe	Check the connections of pipe and expansion valve.	Check the O-ring at connection and tightening torque. If necessary, replace each part.
	Check the connection between pressure switch or pressure sensor and high-pressure pipe.	Replace the pressure switch or pressure sensor.
	Check the connection between pipe and condenser.	Check the O-ring at connection and tightening torque. If necessary, replace each part.
Condenser	Check the welded part of condenser and core.	Replace the condenser.
Hose (high-pressure)	Check the connection between hose (high-pressure) and compressor.	Check the O-ring at connection and tightening torque. If necessary, replace each part.
	Check the connection between hose (high-pressure) and condenser.	Check the O-ring at connection and tightening torque. If necessary, replace each part.
	Check the rubber part of the flexible hose and pipe seam. **CAUTION:** **Carefully check the external surface of flexible hoses and pipes at approx. 25 mm (0.98 in) per second.**	Replace the hose (high pressure).
	Check the valve and cap in the service port.	Check the rubber seal of the valve and cap. If necessary, replace the hose (high pressure).
Compressor	Check the compressor pulley and vicinity of shaft seal. **CAUTION:** **Some shaft seals will show a slight amount of leakage, about 3 g (0.1 oz) per year. This is not a problem.**	Replace the compressor.
Hose (low-pressure)	Check the connection between hose (low pressure) and expansion valve.	Check the O-ring at connection and tightening torque. If necessary, replace each part.
	Check the connection between hose (low pressure) and compressor.	Check the O-ring at connection and tightening torque. If necessary, replace each part.
	Check the rubber part of the flexible hose and pipe seam. **CAUTION:** **Carefully check the external surface of flexible hoses and pipes at approx. 25 mm (0.98 in) per second.**	Replace the hose (low pressure).
	Check the valve and cap in the service port.	Check the rubber seal of the valve and cap. If necessary, replace the hose (low pressure).

GETtheMANUALS.org

Items	Condition	Corrective action
Evaporator	Remove the drain hose from the heater case, and check the end part for 10 seconds or more.	Replace the evaporator.
	Check the air vent grille. NOTE: Turn the ignition switch to ON, and run the blower at high speed for approx. 1 minute. Stop the blower to check the air vent grille on the instrument panel. While moving the tester closer to the grille, run the blower for 1 or 2 seconds, then stop it. Check the grille at that position for at least 10 seconds.	Replace the evaporator.

GETtheMANUALS.org

7. Relay and Fuse

A: LOCATION

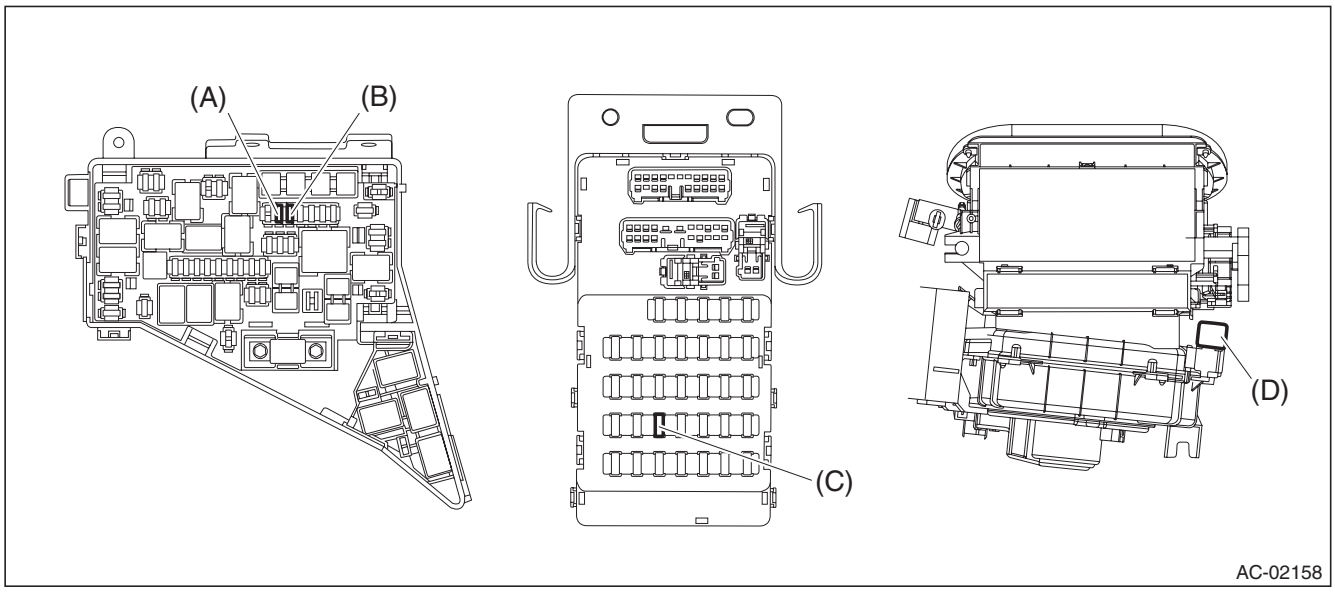

Main fuse box	Fuse 15A	(A)
	Fuse 15A	(B)
Relay & fuse box	Fuse 15A	(C)
Blower motor unit	Blower motor relay	(D)

NOTE:
For other related fuses, refer to the wiring diagram. <Ref. to WI-15, Power Supply Circuit.>

B: INSPECTION

1. CHECK FUSE.

1) Remove the fuse and inspect visually.
2) If the fuse is blown out, replace the fuse.

NOTE:
If the fuse is blown again, check the system wiring harness.

2. CHECK RELAY

1) Measure the resistance between blower motor relay terminals.

Terminal No.	Inspection conditions	Standard	Circuit
1 — 4	Always	1 MΩ or more	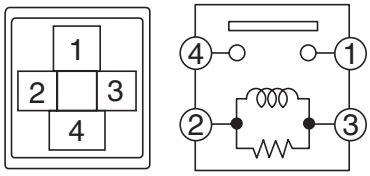
1 — 4	Apply battery voltage between terminals 2 and 3.	Less than 1 Ω	

2) Replace the blower motor relay if the inspection result is not within the standard value.

GETtheMANUALS.org

8. Compressor Oil

A: PROCEDURE

NOTE:
Before making repairs, perform the oil return operation to return the compressor oil in circulation with the refrigerant to the compressor.
1) Increase the engine to 1,500 rpm.
2) Turn the A/C switch to ON.
3) Set the temperature control switch or dial to LO (MAX COOL).
4) Turn the FRESH/RECIRC switch to RECIRC position.
5) Turn the airflow adjustment switch or dial to HI (MAX).
6) Leave in this condition for 10 minutes.

B: REPLACEMENT

NOTE:
- If a component has been replaced, add an appropriate amount of compressor oil (same as the amount of remaining oil in removed component).
- When replacing the compressor, the new compressor will already have the specified amount of oil in it. Install the new compressor so that the amount of oil becomes the same as the amount of remaining oil in the removed compressor.
- Since the hygroscopicity of compressor oil is high, perform this series of works quickly.

GETtheMANUALS.org

9. Blower Motor Unit Assembly

A: REMOVAL

1) Disconnect the ground cable from battery.
2) Using the refrigerant recovery system, discharge refrigerant. <Ref. to AC-24, PROCEDURE, Refrigerant Recovery Procedure.>
3) Drain the coolant from the radiator.
- H4 non-turbo model: <Ref. to CO(H4SO)-14, DRAINING OF ENGINE COOLANT, REPLACEMENT, Engine Coolant.>
- H4 turbo model: <Ref. to CO(H4DOTC)-14, DRAINING OF ENGINE COOLANT, REPLACEMENT, Engine Coolant.>
- H6 model: <Ref. to CO(H6DO)-12, DRAINING OF ENGINE COOLANT, REPLACEMENT, Engine Coolant.>

4) Remove the connector and bolts, and remove the high-pressure hose and AC pipe from the expansion valve.
5) Loosen the heater hose clamps and remove the hoses.

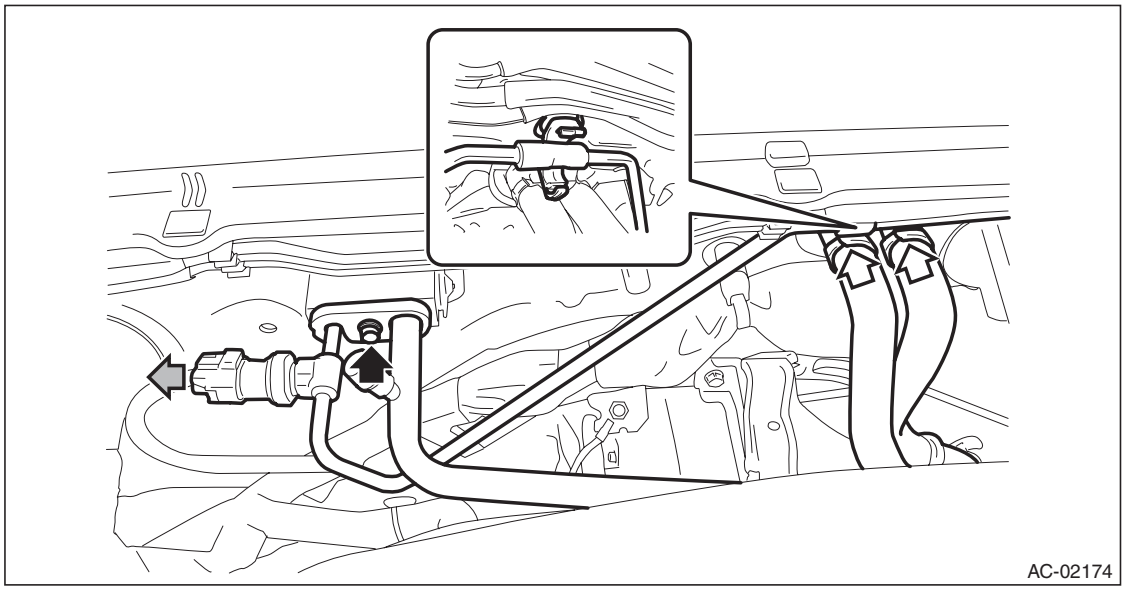

6) Remove the instrument panel assembly. <Ref. to EI-76, REMOVAL, Instrument Panel Assembly.>

GETtheMANUALS.org

7) Remove the engine control module (ECM).
   (1) Release the lock and remove the relay holder.
   (2) Remove the nuts, and remove the engine control module (ECM).

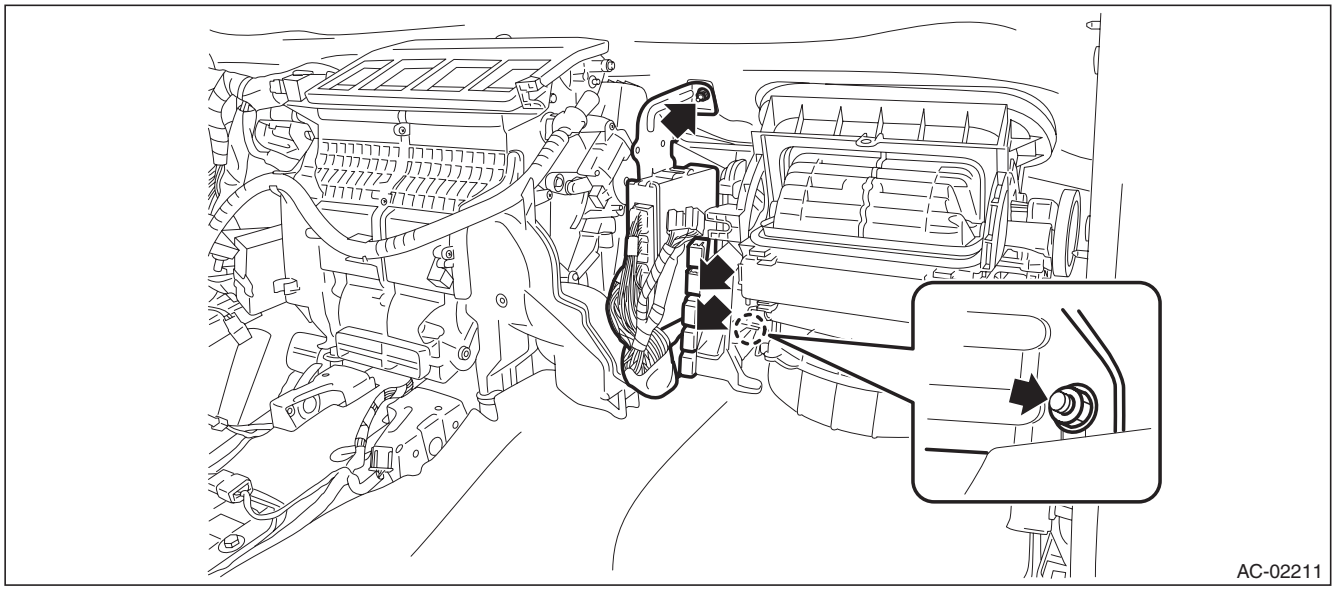

8) Remove the heater and cooling unit.
   (1) Remove the bolt and remove the heater and cooling unit.

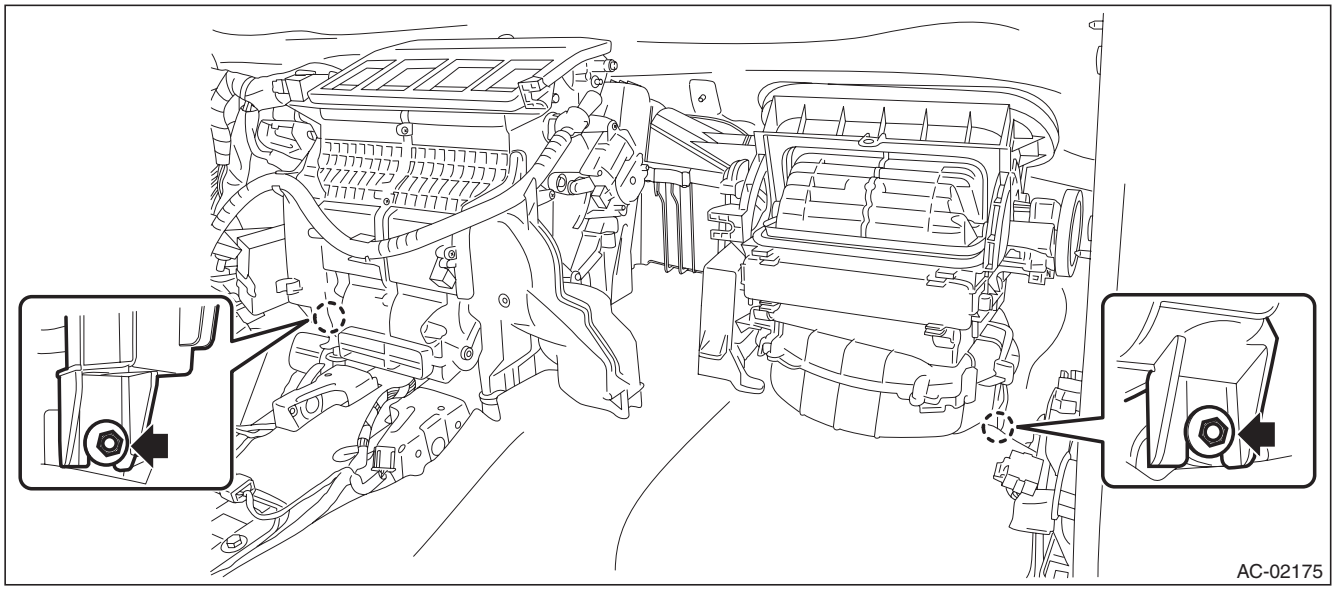

GETtheMANUALS.org

9) Remove the blower motor unit assembly.
   (1) Release the claws and remove the bolts.

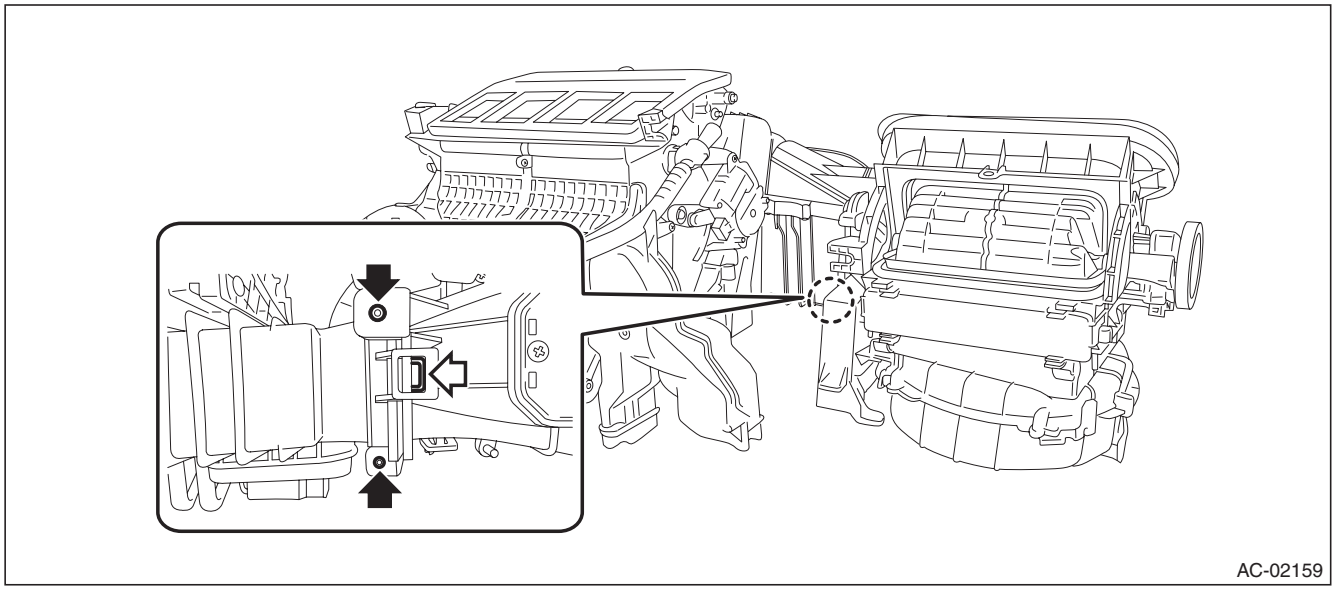

   (2) Remove the blower motor unit assembly as shown in the figure.

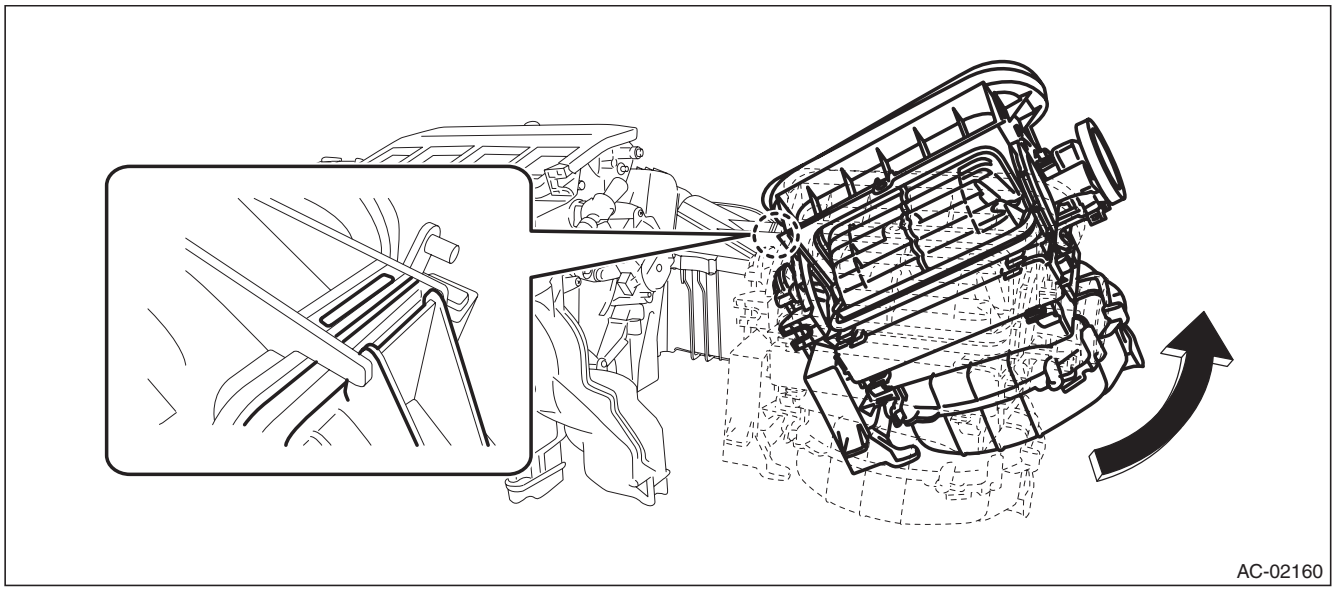

GETtheMANUALS.org

B: INSTALLATION

CAUTION:
- **After installing the compressor, do not start the engine until the A/C system is charged with refrigerant.**
- **If the engine is started with no refrigerant charge, replace the compressor.**
- **Replace O-rings and pipe clamps with new parts and install securely.**

1) Install each part in the reverse order of removal.

NOTE:
Refer to “INSTALLATION” of “Instrument Panel Assembly”. <Ref. to EI-95, INSTALLATION, Instrument Panel Assembly.>

2) Fill engine coolant.
- H4 non-turbo model: <Ref. to CO(H4SO)-14, FILLING OF ENGINE COOLANT, REPLACEMENT, Engine Coolant.>
- H4 turbo model: <Ref. to CO(H4DOTC)-14, FILLING OF ENGINE COOLANT, REPLACEMENT, Engine Coolant.>
- H6 model: <Ref. to CO(H6DO)-12, FILLING OF ENGINE COOLANT, REPLACEMENT, Engine Coolant.>

3) Charge refrigerant. <Ref. to AC-25, PROCEDURE, Refrigerant Charging Procedure.>

Tightening torque:
Heater cooling unit: <Ref. to AC-6, HEATER COOLING UNIT, COMPONENT, General Description.>
Blower motor unit: <Ref. to AC-8, BLOWER MOTOR UNIT, COMPONENT, General Description.>

GETtheMANUALS.org

10. Blower Motor

A: REMOVAL

1) Disconnect the ground cable from battery.
2) Remove the clips, and remove the glove box under cover.

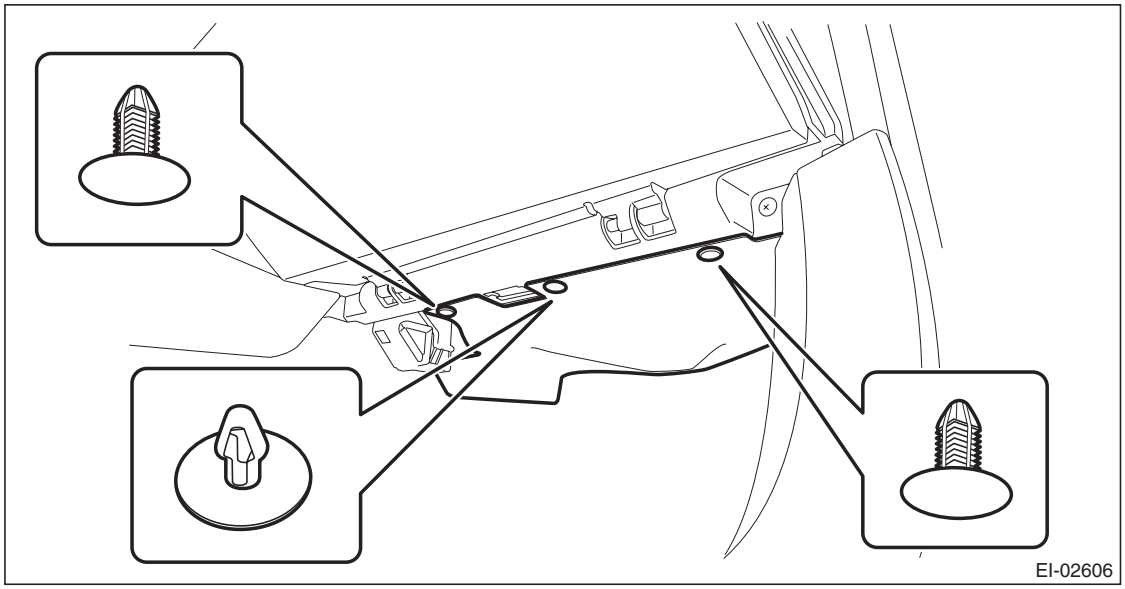

3) Remove the blower motor.
   (1) Disconnect the connector.
   (2) Remove the screw and remove the blower motor.

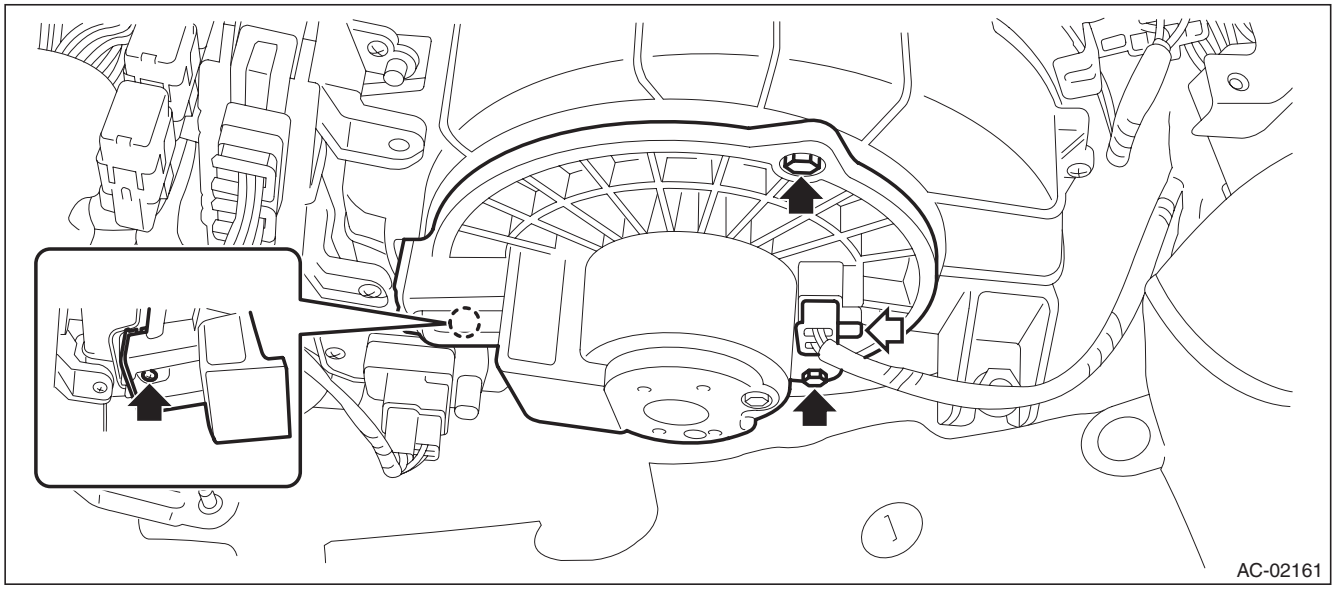

B: INSTALLATION

Install each part in the reverse order of removal.

GETtheMANUALS.org

C: INSPECTION

1) Check the blower motor operation when battery voltage is applied between the terminals of blower motor.

Terminal No.	Inspection conditions	Specification	Connection diagram
2 (+) — 1 (–)	Connect battery to the terminals	Rotation	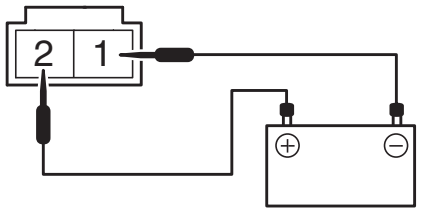

2) If the blower motor does not operate normally, replace the blower motor.

GETtheMANUALS.org

11. Power Transistor (Auto A/C Model)

A: REMOVAL

1) Disconnect the ground cable from battery.
2) Remove the clips, and remove the glove box under cover.

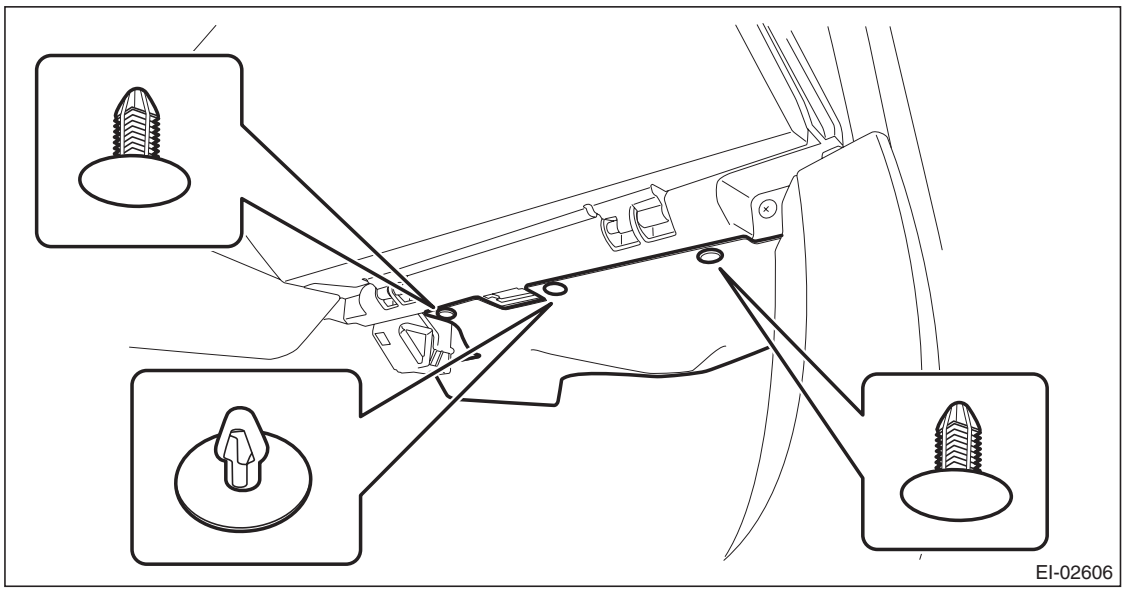

3) Remove the power transistor.
   (1) Disconnect the connector.
   (2) Remove the screws and remove the power transistor.

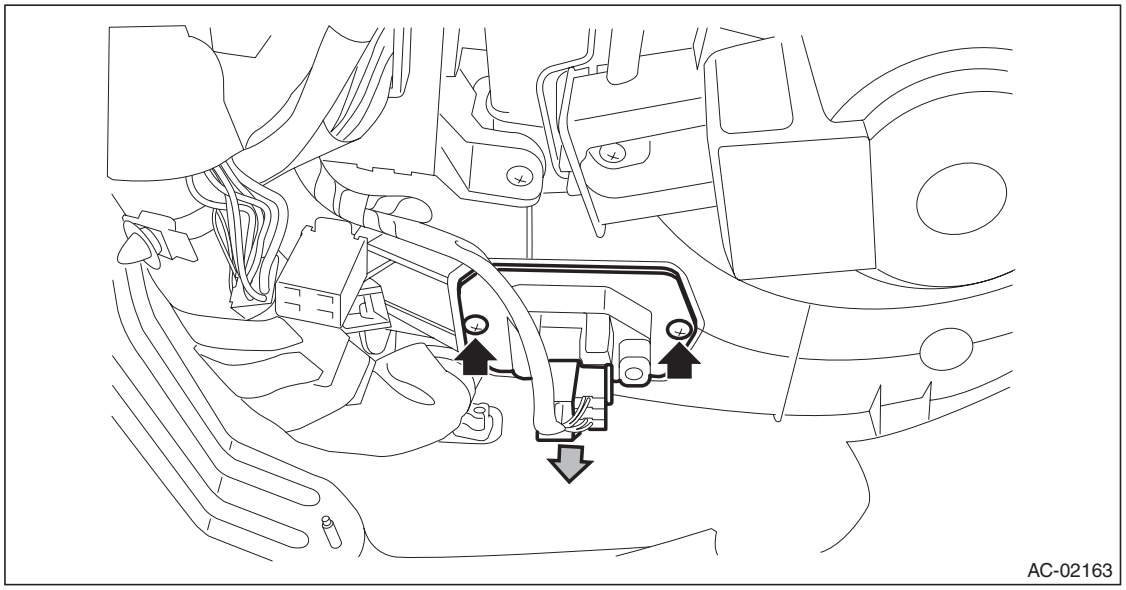

B: INSTALLATION

Install each part in the reverse order of removal.

GETtheMANUALS.org

12. Blower Resistor (Manual A/C Model)

A: REMOVAL

1) Disconnect the ground cable from battery.
2) Remove the clips, and remove the glove box under cover.

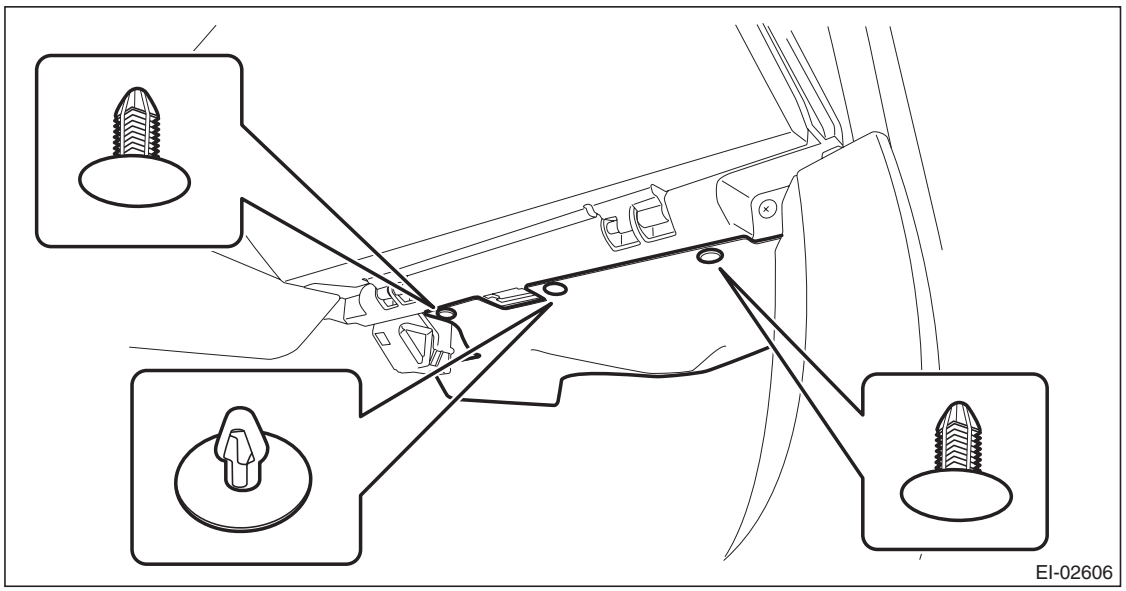

3) Remove the blower resistor.
   (1) Disconnect the connector.
   (2) Remove the screw and remove the blower resistor.

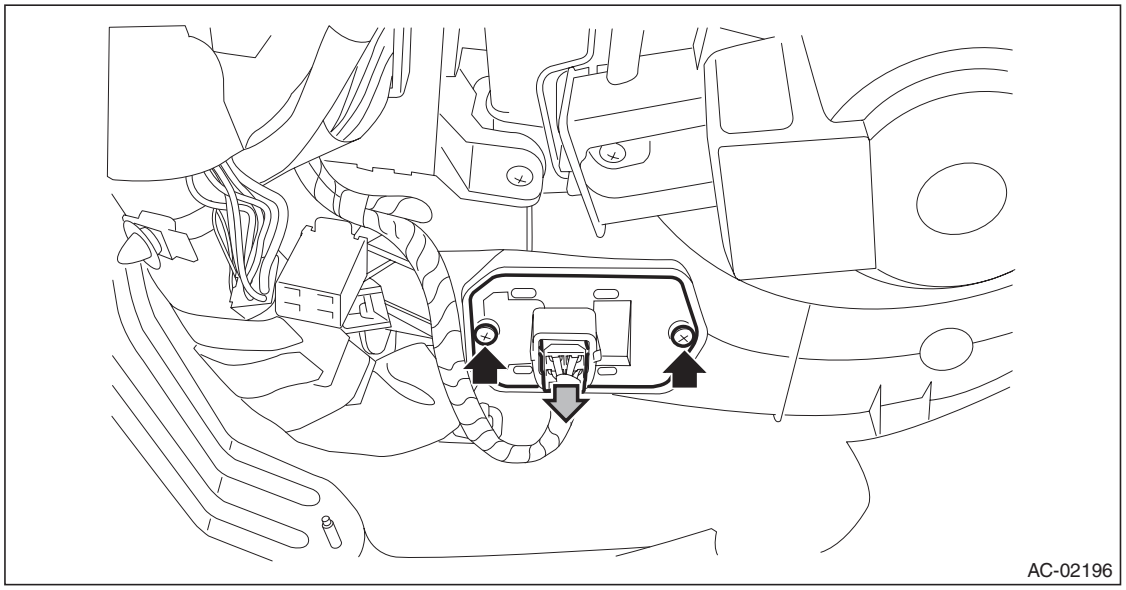

B: INSTALLATION

Install each part in the reverse order of removal.

GETtheMANUALS.org

C: INSPECTION

1) Disconnect the blower resistor connector.
2) Check the resistance between blower resistor terminals.

Preparation tool: Circuit tester

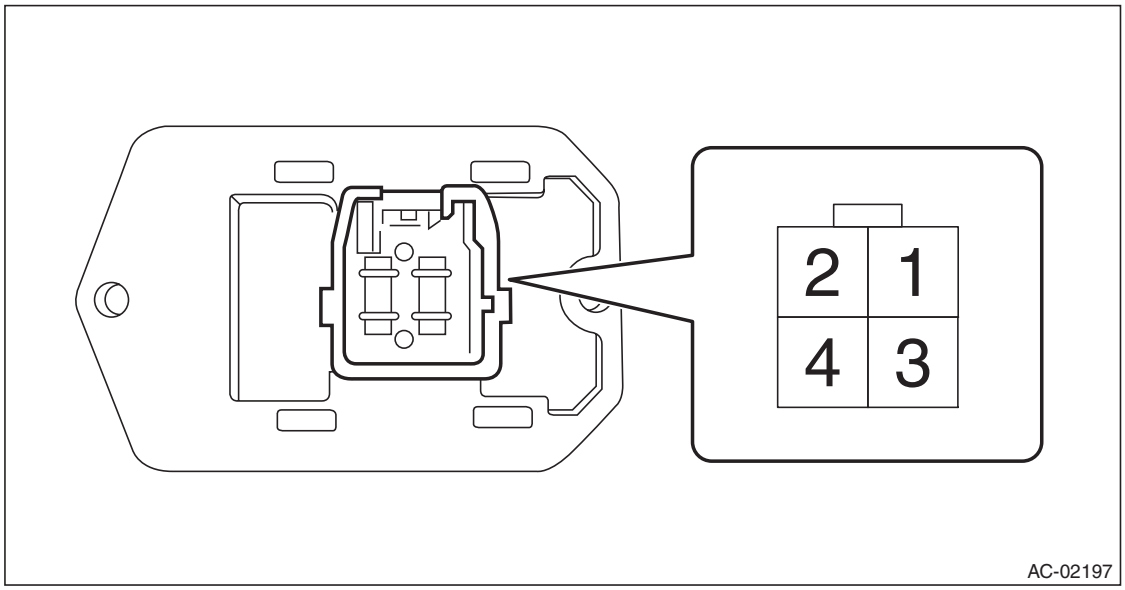

Terminal No.	Standard
4 — 2	Approx. 0.44 Ω
4 — 3	Approx. 1.12 Ω
4 — 1	Approx. 2.92 Ω

3) Replace the blower resistor if the inspection result is not within the standard value.

GETtheMANUALS.org

13. Heater Core

A: REMOVAL

1) Disconnect the ground cable from battery.
2) Using the refrigerant recovery system, discharge refrigerant. <Ref. to AC-24, PROCEDURE, Refrigerant Recovery Procedure.>
3) Drain the coolant from the radiator.
- H4 non-turbo model: <Ref. to CO(H4SO)-14, DRAINING OF ENGINE COOLANT, REPLACEMENT, Engine Coolant.>
- H4 turbo model: <Ref. to CO(H4DOTC)-14, DRAINING OF ENGINE COOLANT, REPLACEMENT, Engine Coolant.>
- H6 model: <Ref. to CO(H6DO)-12, DRAINING OF ENGINE COOLANT, REPLACEMENT, Engine Coolant.>

4) Remove the connector and bolts, and remove the high-pressure hose and AC pipe from the expansion valve.
5) Loosen the heater hose clamps and remove the hoses.

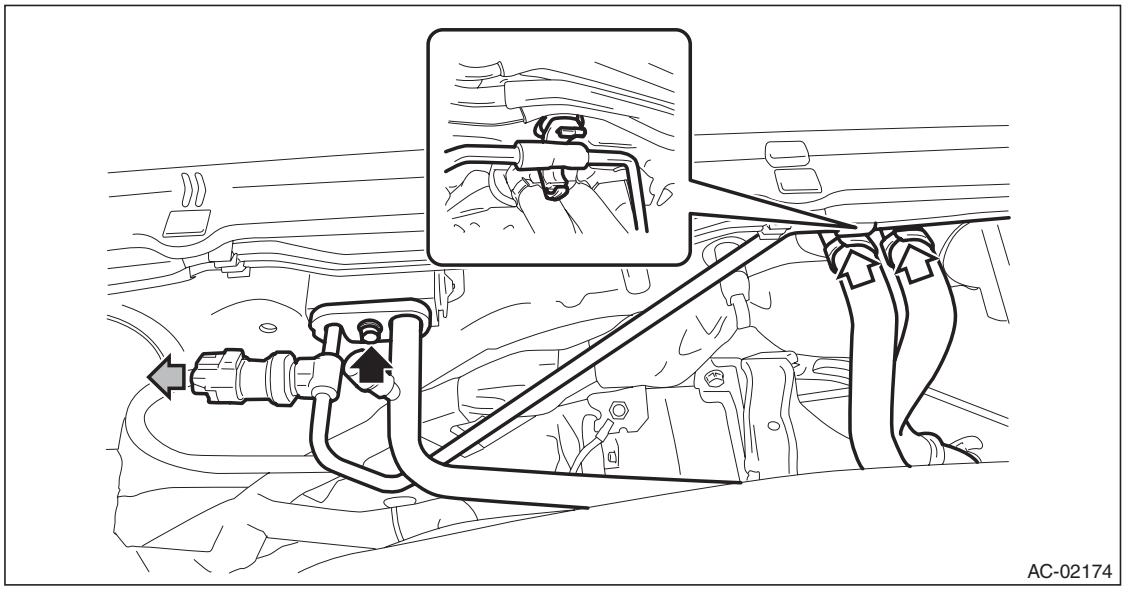

6) Remove the instrument panel assembly. <Ref. to EI-76, REMOVAL, Instrument Panel Assembly.>

GETtheMANUALS.org

7) Remove the engine control module (ECM).
   (1) Release the lock and remove the relay holder.
   (2) Remove the nuts, and remove the engine control module (ECM).

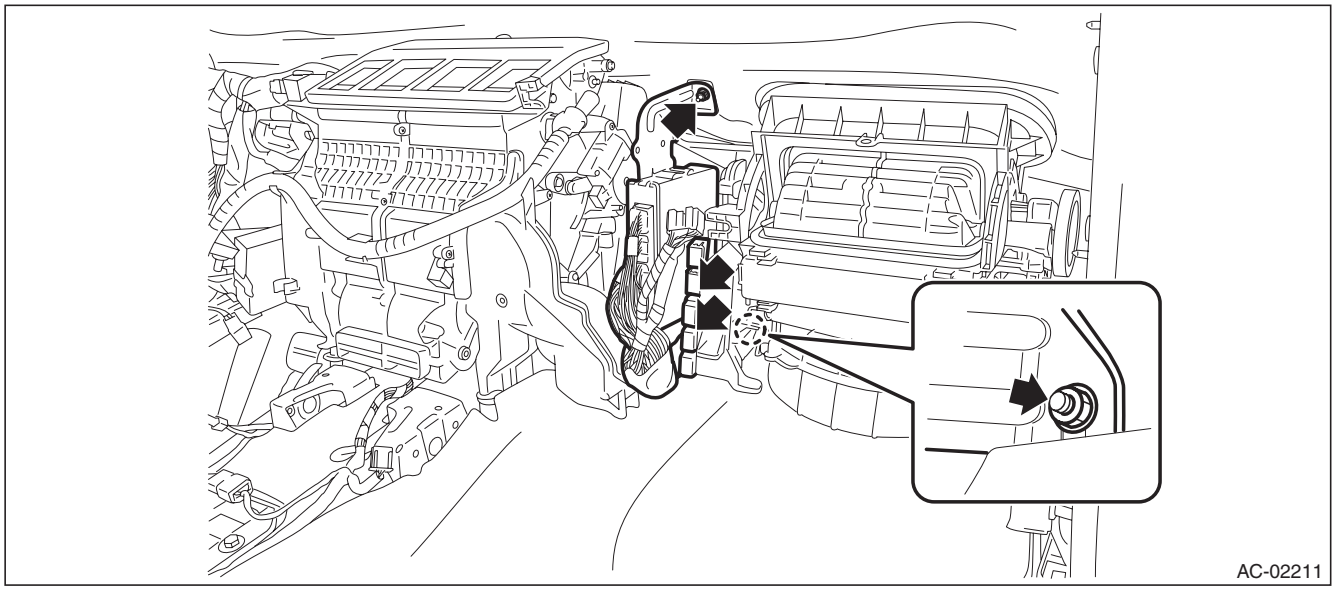

8) Remove the heater and cooling unit.
   (1) Remove the bolt and remove the heater and cooling unit.

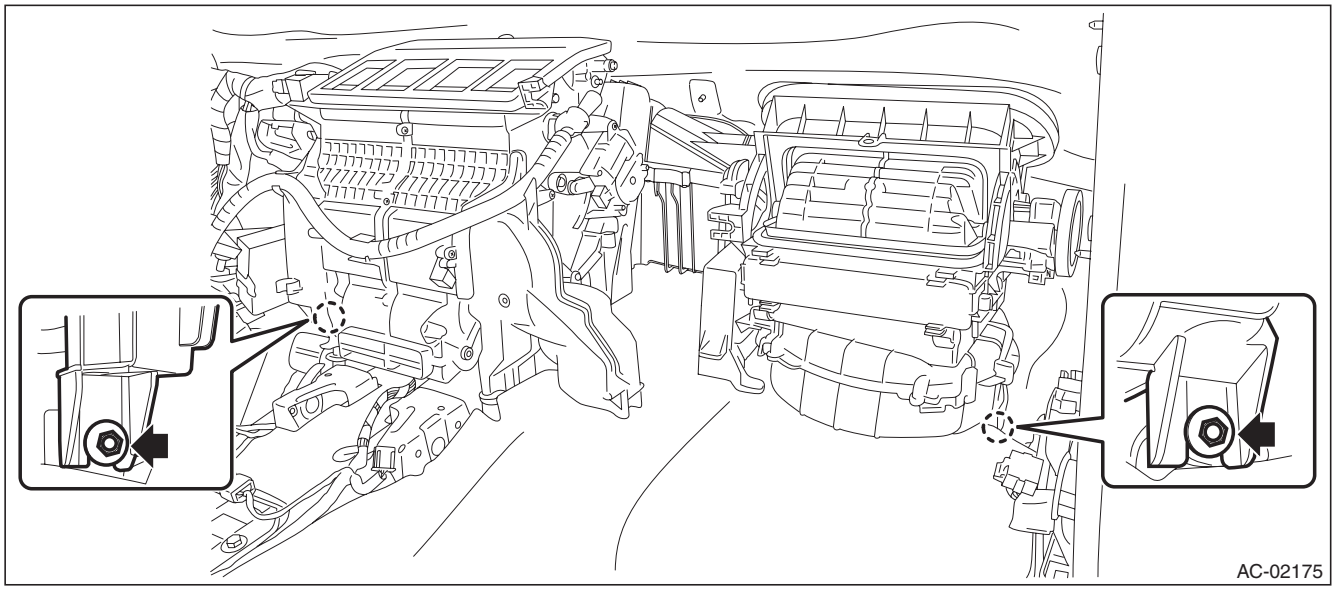

GETtheMANUALS.org

9) Disconnect the claws and then remove the aspirator hose.

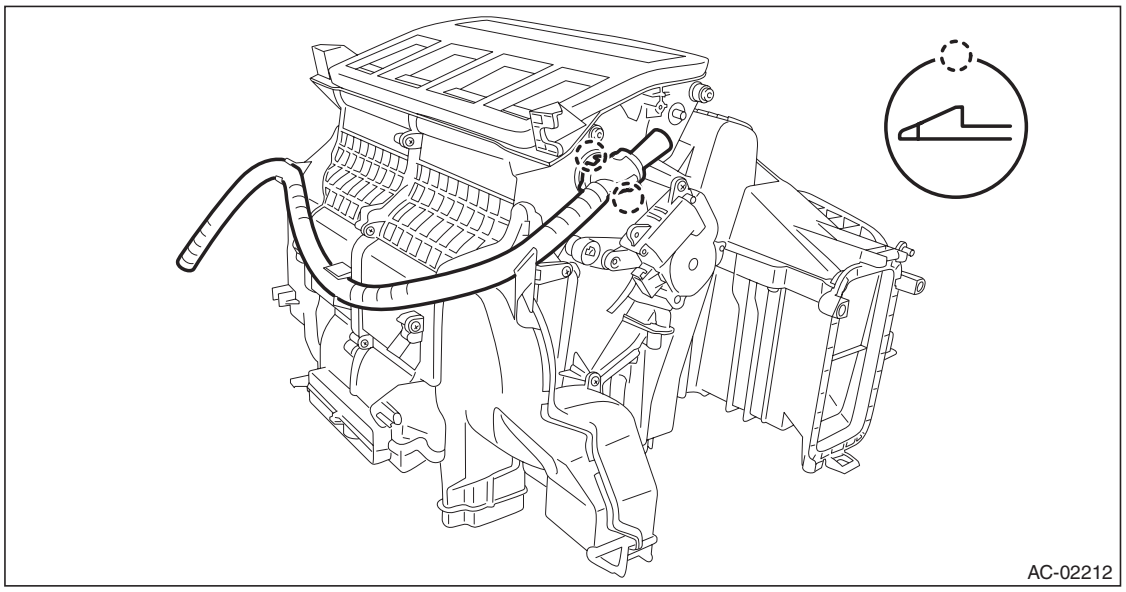

10) Remove the screws and remove the foot duct (LH).

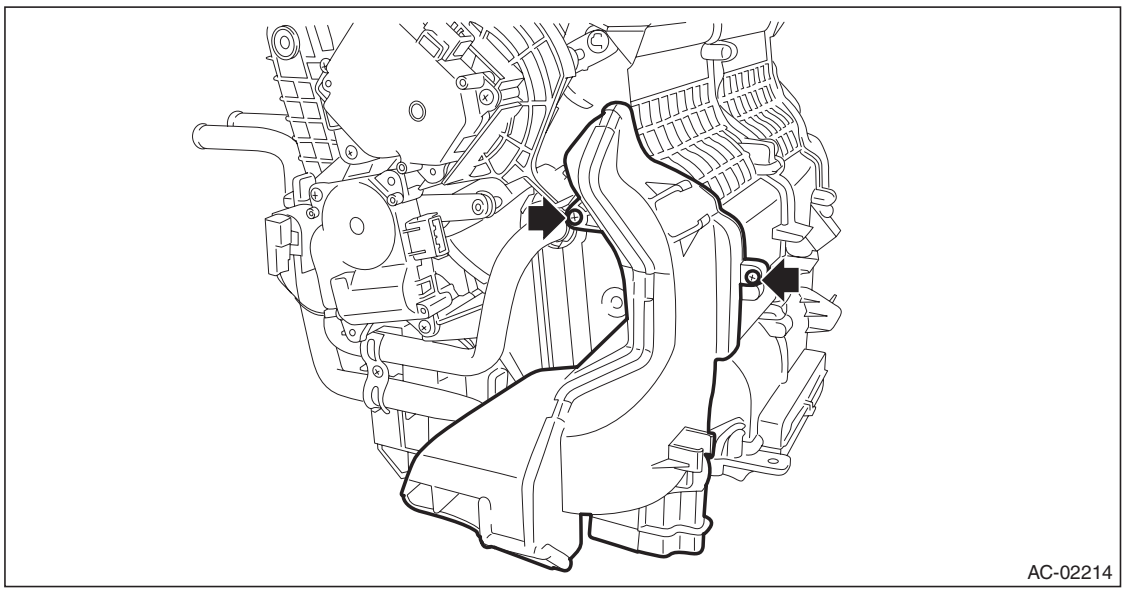

GETtheMANUALS.org

11) Remove the heater core.
(1) Remove the screw and remove the heater pipe clamp.

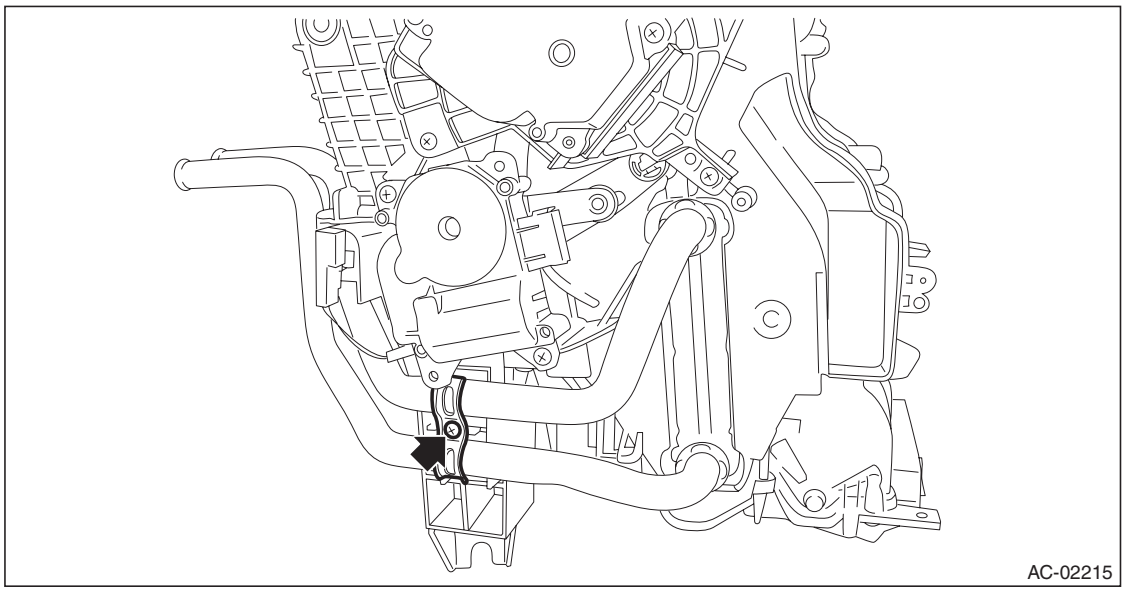

(2) Pull out the heater core from the heater and cooling unit assembly.

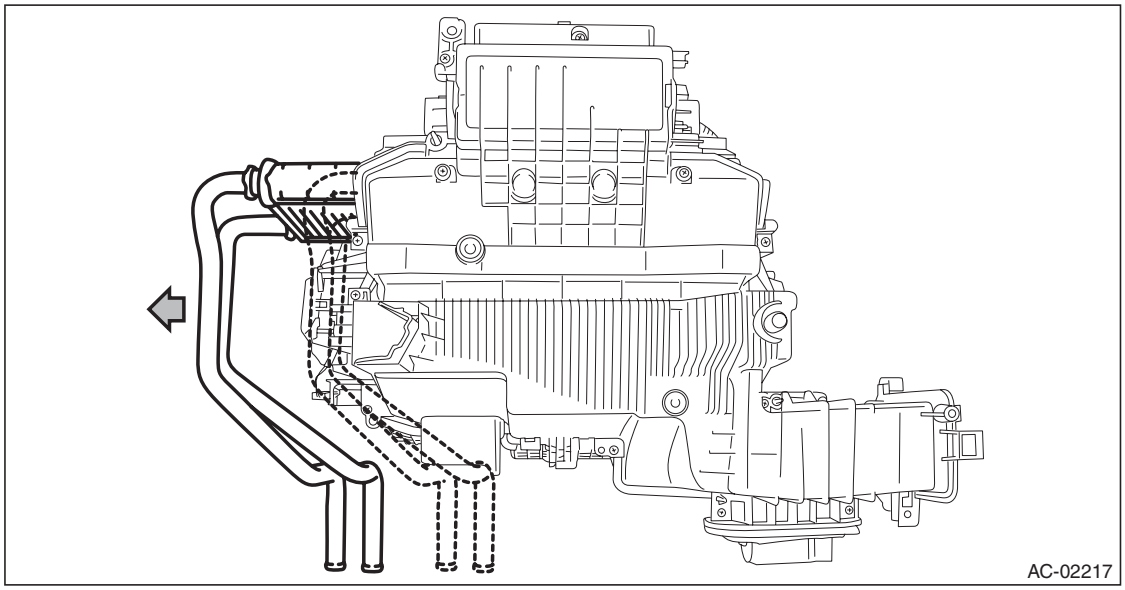

GETtheMANUALS.org

B: INSTALLATION

CAUTION:
- **Do not start the engine before charging refrigerant.**
- **If the engine is started with no refrigerant charge, replace the compressor.**
- **Replace O-rings and pipe clamps with new parts and install securely.**

1) Install each part in the reverse order of removal.

NOTE:
Refer to “INSTALLATION” of “Instrument Panel Assembly”. <Ref. to EI-95, INSTALLATION, Instrument Panel Assembly.>

2) Fill engine coolant.
- H4 non-turbo model: <Ref. to CO(H4SO)-14, FILLING OF ENGINE COOLANT, REPLACEMENT, Engine Coolant.>
- H4 turbo model: <Ref. to CO(H4DOTC)-14, FILLING OF ENGINE COOLANT, REPLACEMENT, Engine Coolant.>
- H6 model: <Ref. to CO(H6DO)-12, FILLING OF ENGINE COOLANT, REPLACEMENT, Engine Coolant.>

3) Charge refrigerant. <Ref. to AC-25, PROCEDURE, Refrigerant Charging Procedure.>

Tightening torque:
Heater cooling unit: <Ref. to AC-6, HEATER COOLING UNIT, COMPONENT, General Description.>
Blower motor unit: <Ref. to AC-8, BLOWER MOTOR UNIT, COMPONENT, General Description.>

GETtheMANUALS.org

14. Control Panel

A: REMOVAL

1. AUTO A/C MODEL

1) Disconnect the ground cable from battery.
2) Remove the center panel assembly.

CAUTION:
Do not put your finger on the fin of the air vent grille. Doing so may damage the fin.

(1) Attach the protective tape (a) to the meter visor.

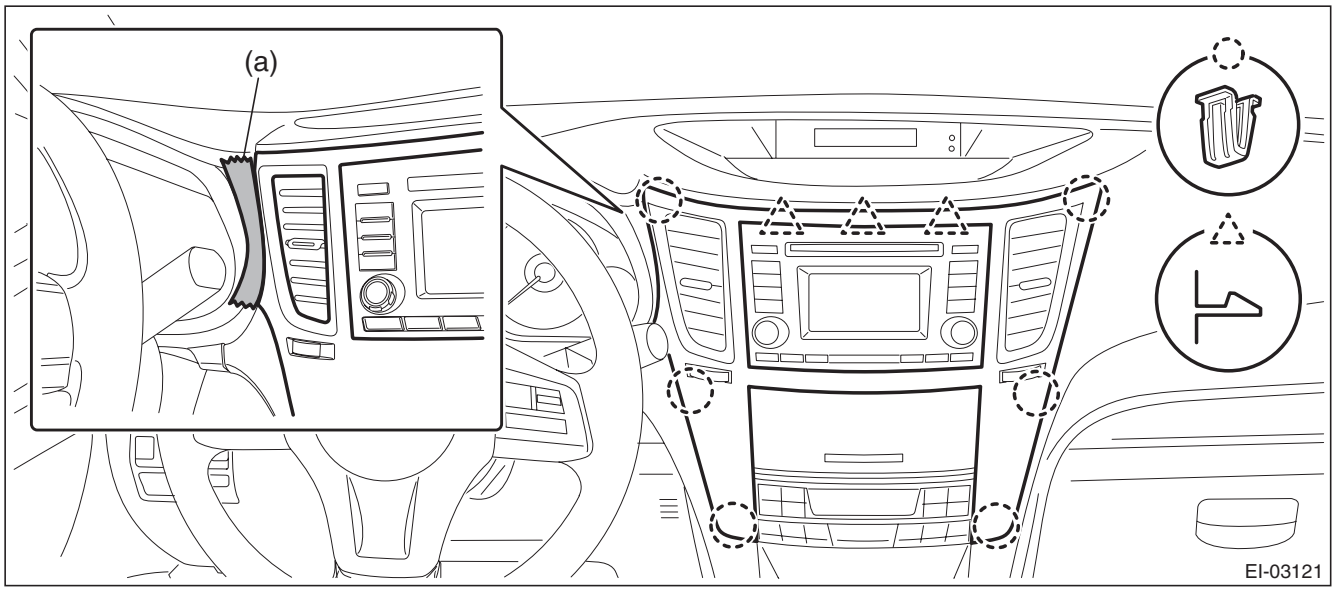

(2) Insert a finger into the air vent grille and release the left and right clips at the top of the center panel. (A), (B)
(3) Insert a finger into the air vent grille and release the left and right clips at the center of the center panel. (C), (D)

GETtheMANUALS.org

(4) Release the clips at the bottom of the center panel and remove the center panel assembly.

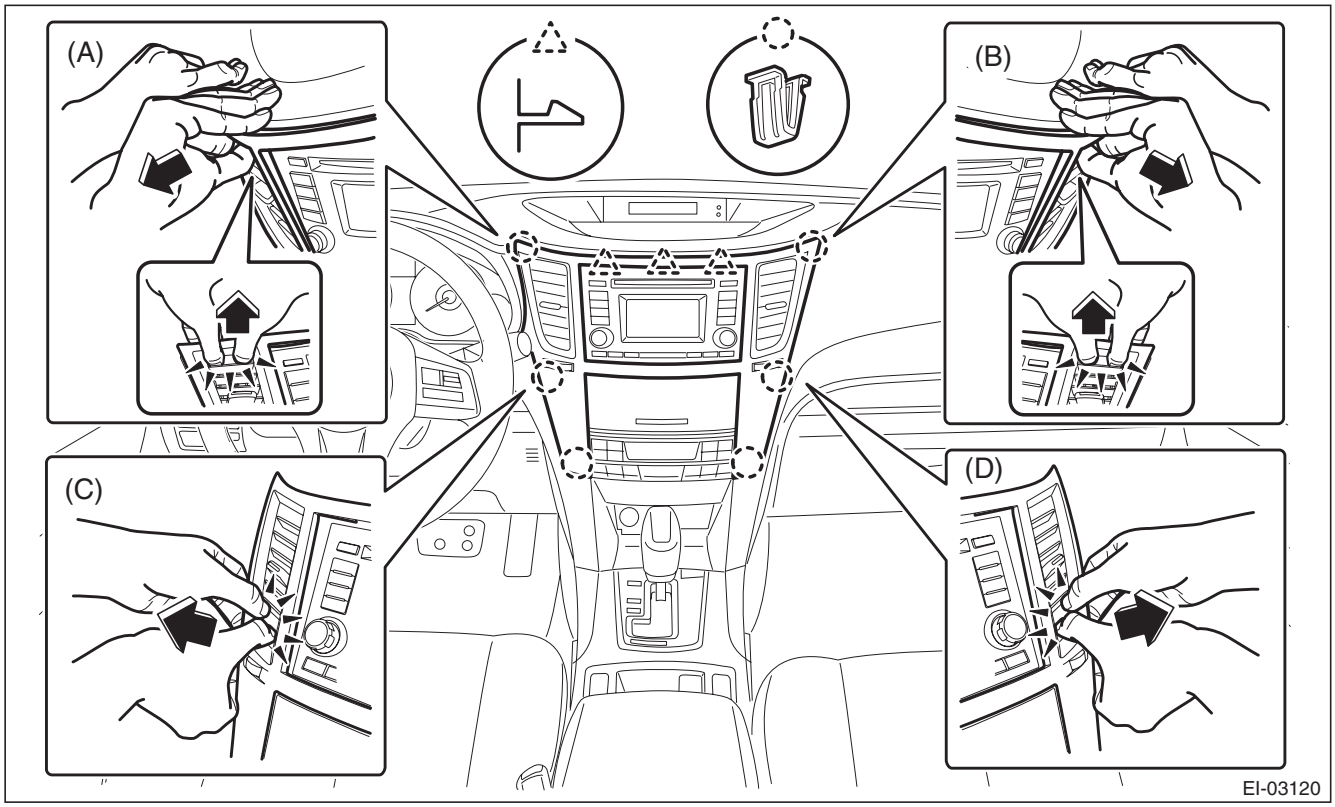

3) Remove the audio assembly.
(1) Remove the left and right screws, and partially pull the audio out from center console.
(2) Disconnect the connectors, and remove the audio assembly.

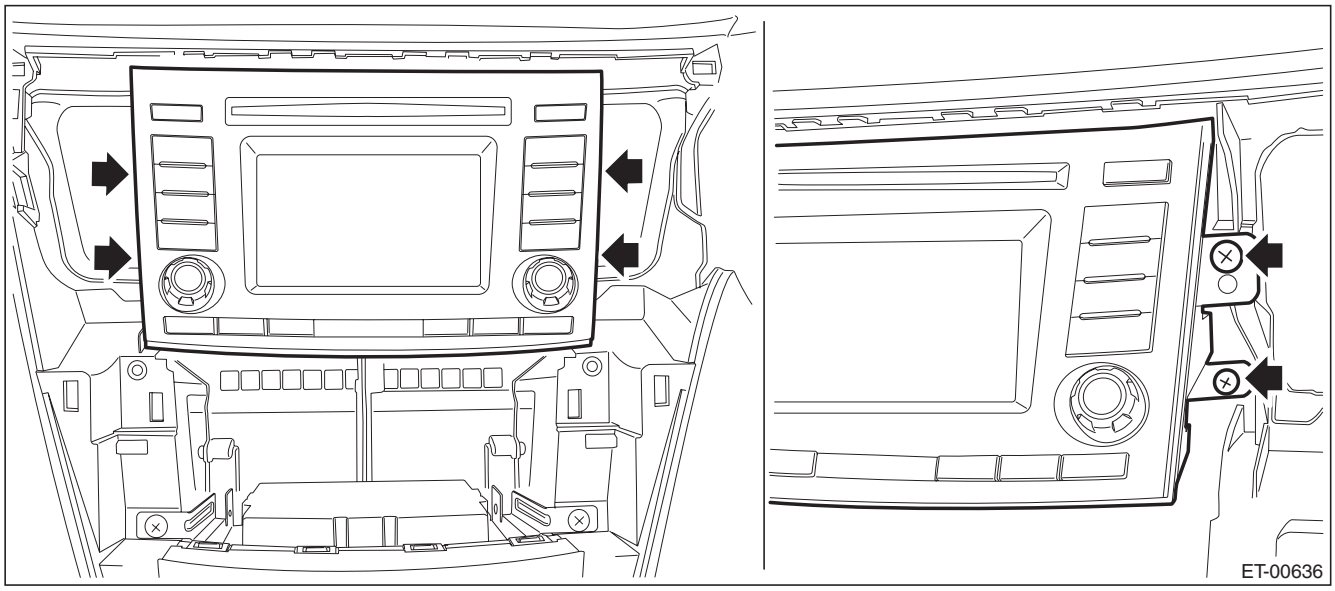

GETtheMANUALS.org

4) Remove the navigation assembly. (model with navigation)
   (1) Remove the left and right screws.
   (2) Disconnect the connectors, and remove the navigation assembly.

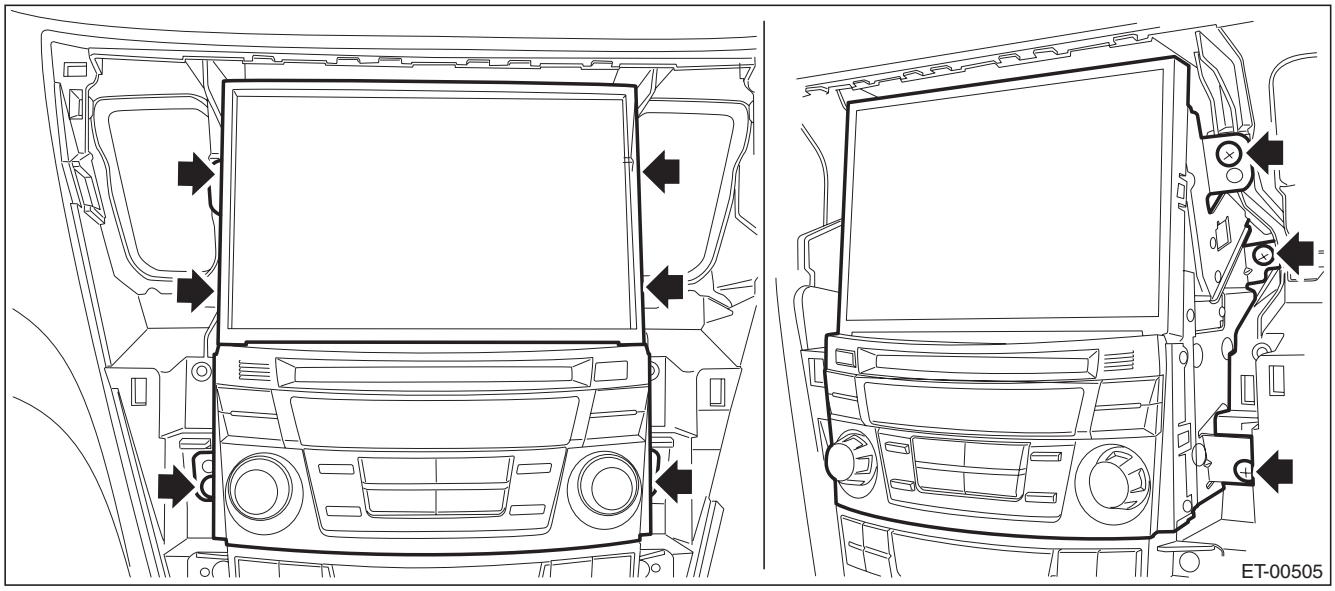

5) Remove the control panel.
   (1) Remove the screws and release the clip.

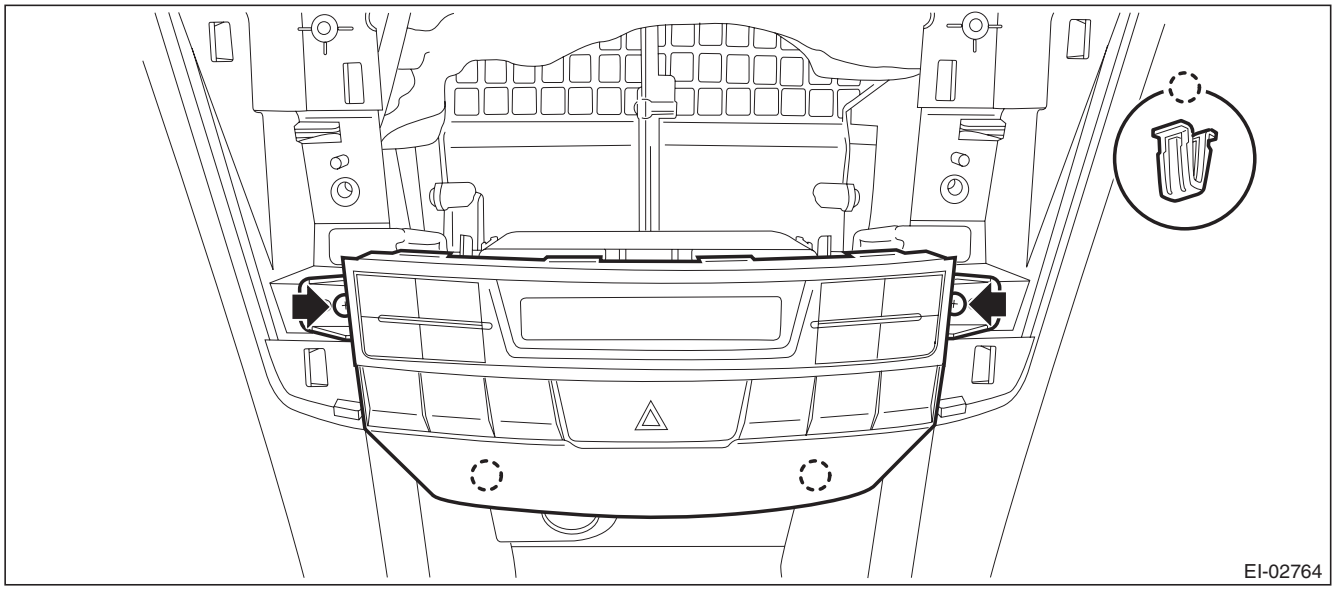

GETtheMANUALS.org

(2) Pull forward the control module and disconnect the connector.

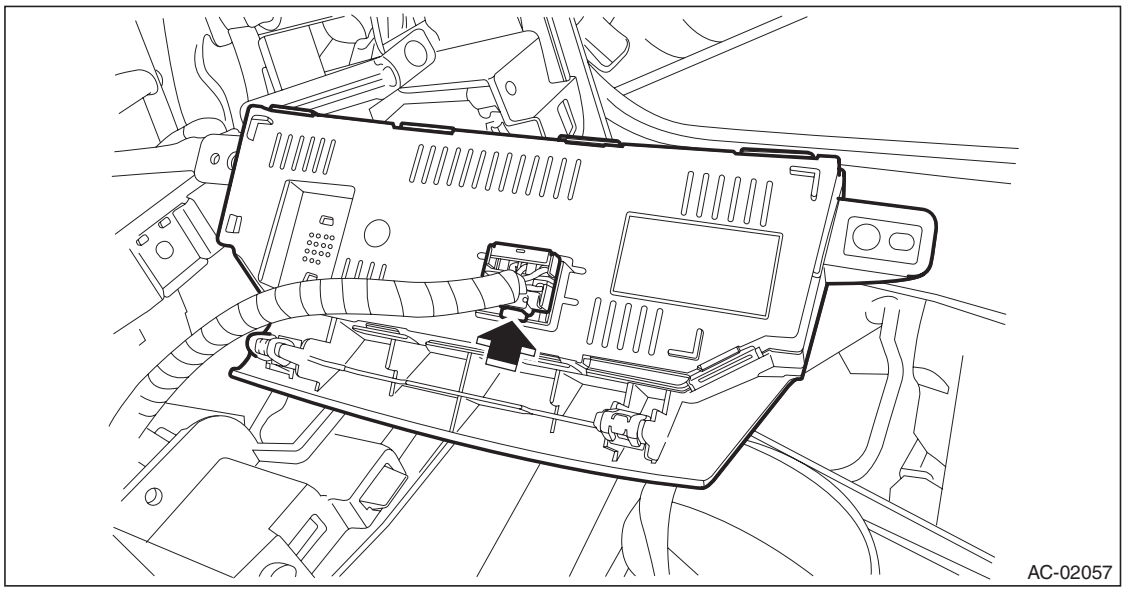

2. MANUAL A/C MODEL

1) Disconnect the ground cable from battery.
2) Remove the center panel assembly.

CAUTION:
Do not put your finger on the fin of the air vent grille. Doing so may damage the fin.

(1) Attach the protective tape (a) to the meter visor.

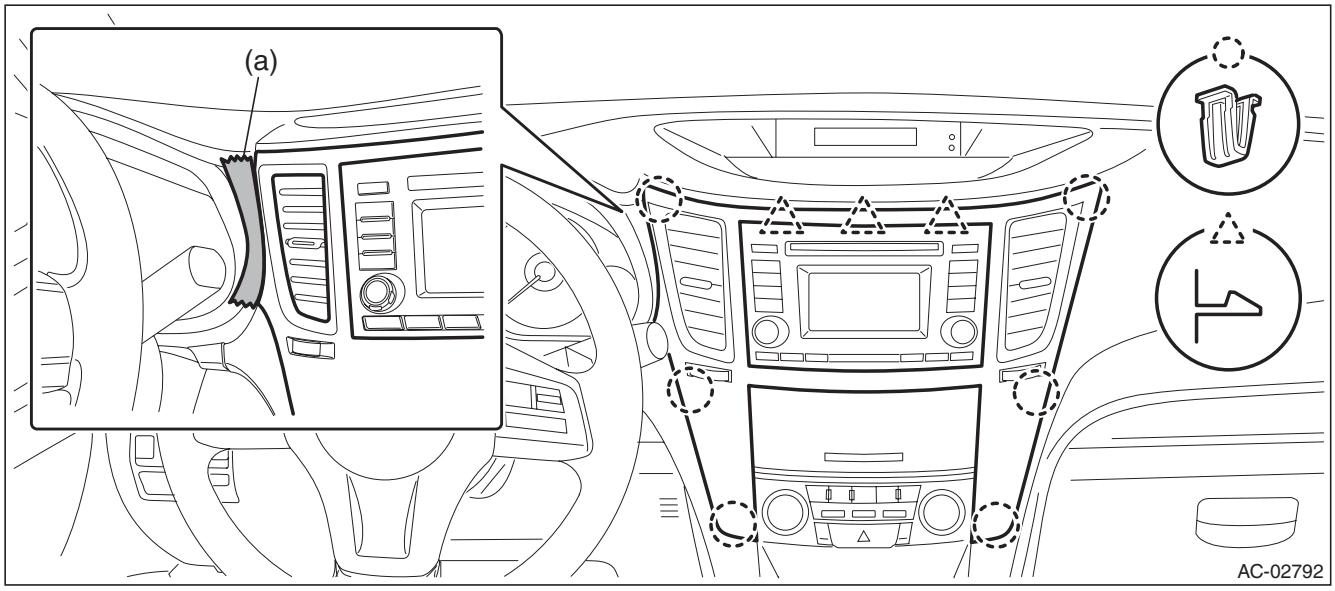

(2) Insert a finger into the air vent grille and release the left and right clips at the top of the center panel. (A), (B)
(3) Insert a finger into the air vent grille and release the left and right clips at the center of the center panel. (C), (D)

GETtheMANUALS.org

(4) Release the clips at the bottom of the center panel and remove the center panel assembly.

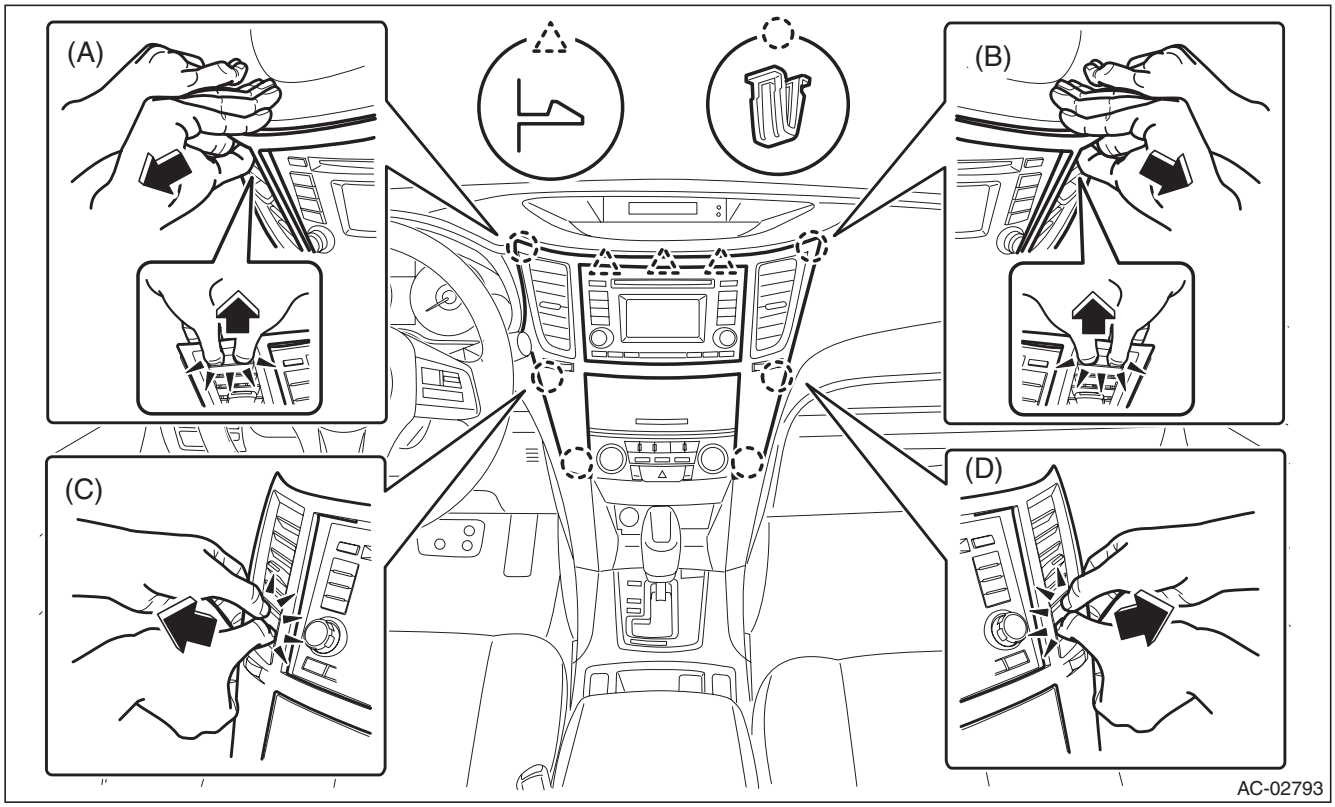

3) Remove the audio assembly.
(1) Remove the left and right screws, and partially pull the audio out from center console.
(2) Disconnect the connectors, and remove the audio assembly.

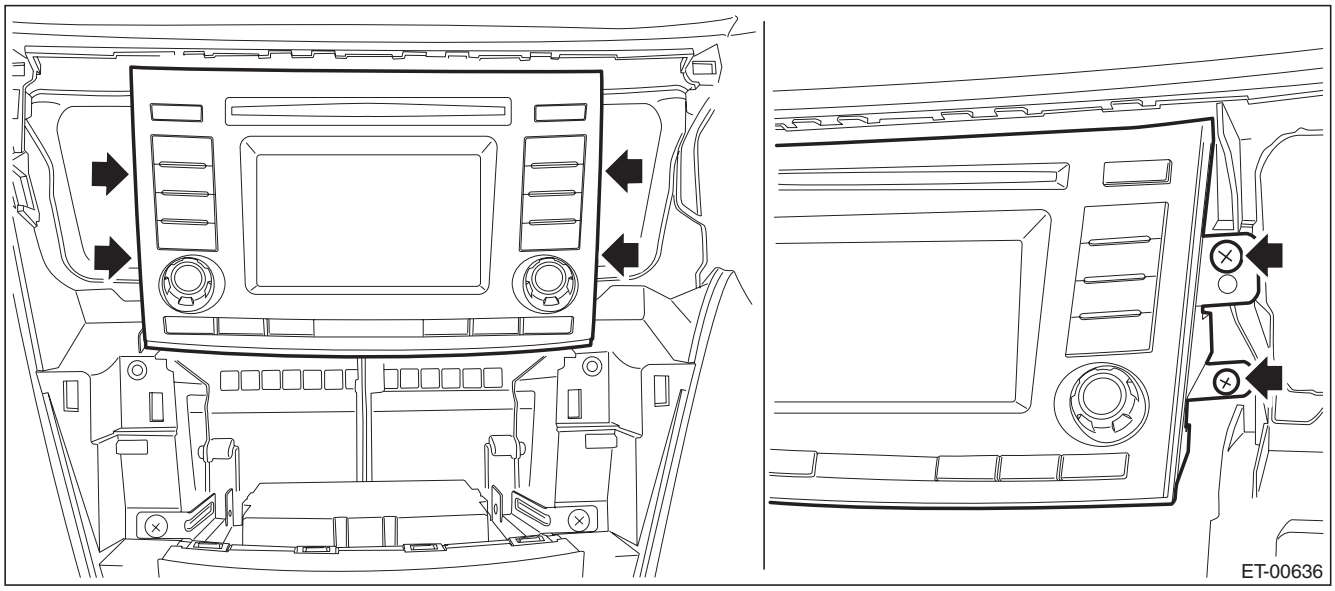

GETtheMANUALS.org

4) Remove the navigation assembly. (model with navigation)
   (1) Remove the left and right screws.
   (2) Disconnect the connectors, and remove the navigation assembly.

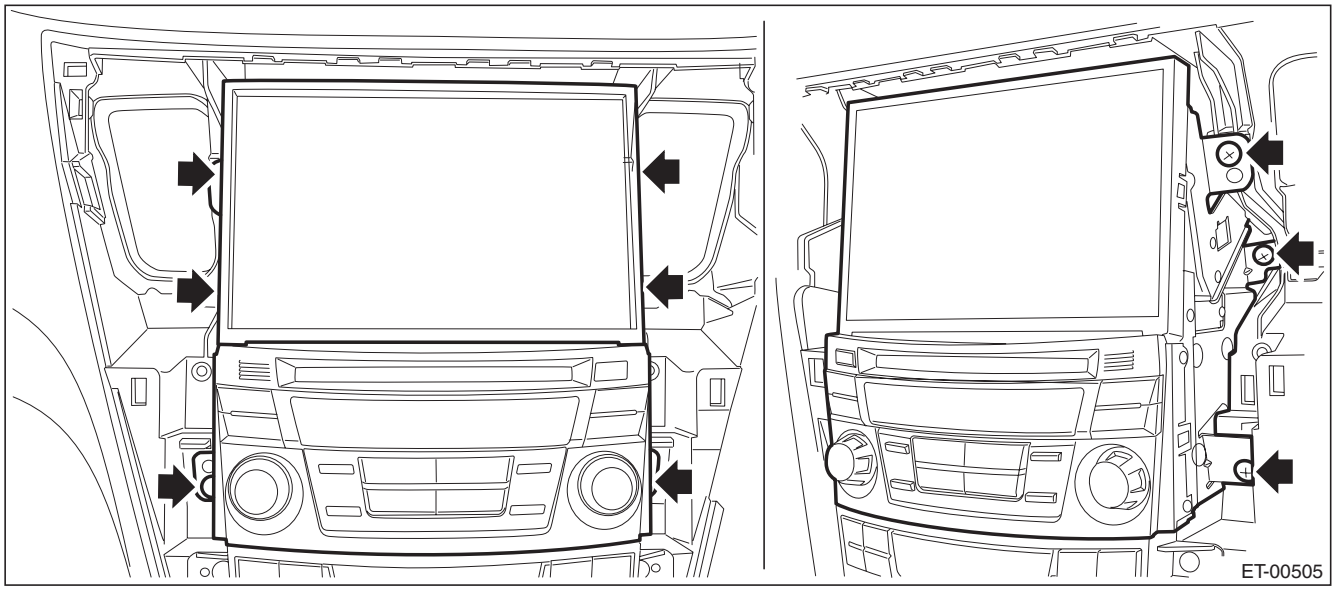

5) Remove the control panel.
   (1) Remove the screws and release the clip.

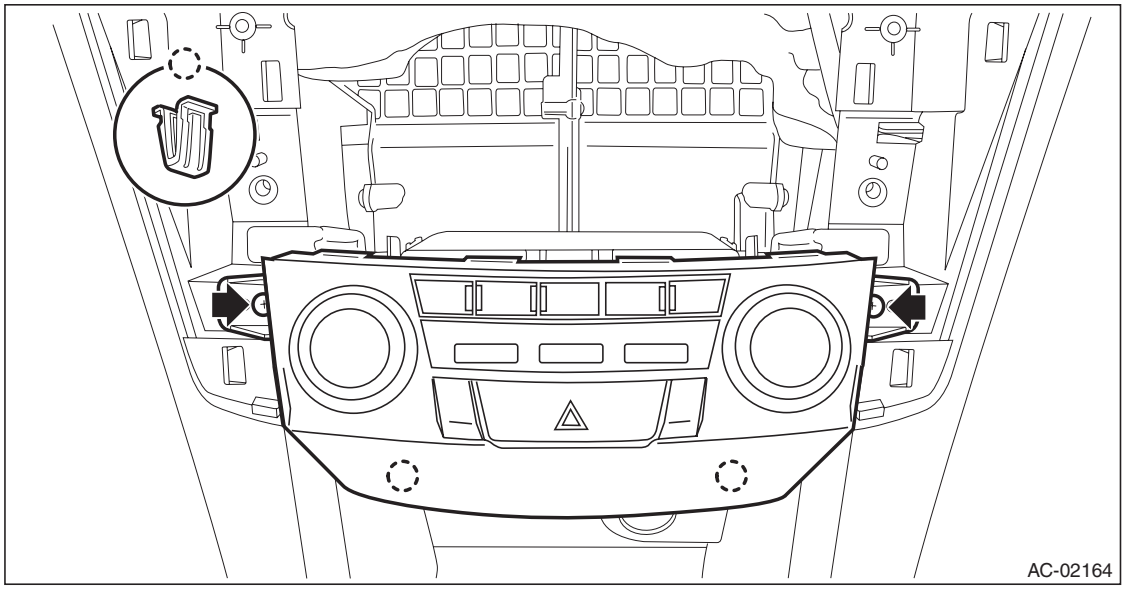

GETtheMANUALS.org

(2) Pull the control panel and disconnect the connector.

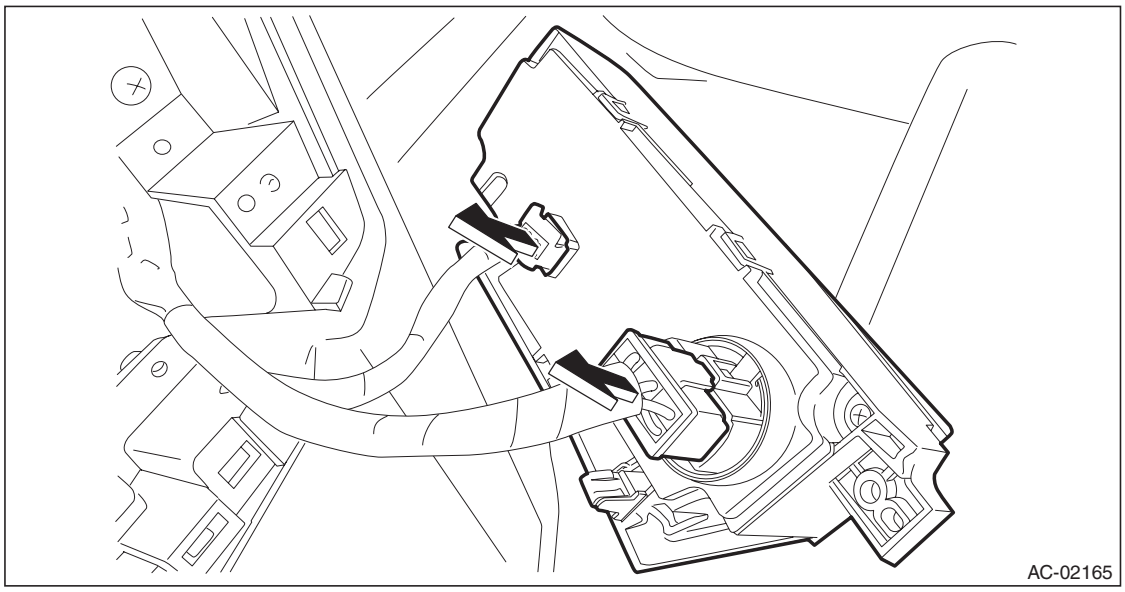

B: INSTALLATION

Install each part in the reverse order of removal.

C: INSPECTION

1. CHECK ILLUMINATION

1) Check the illumination operation when battery voltage is applied between the terminals of control panel.

- Auto A/C model

Terminal No.	Inspection conditions	Specification	Connection diagram
3 (+) — 9 (–)	Connect battery to the terminals	Light ON	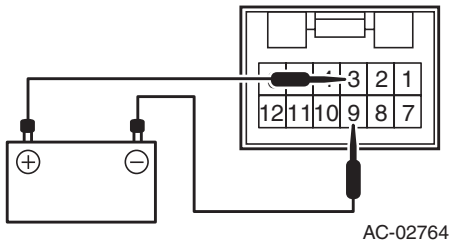

- Manual A/C model

Terminal No.	Inspection conditions	Specification	Connection diagram
2 (+) — 10 (–)	Connect battery to the terminals	Light ON	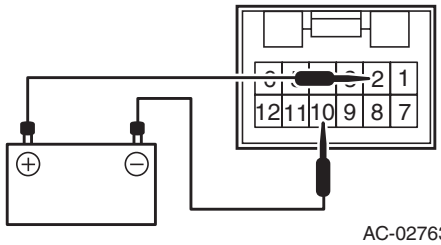

2) If the illumination does not operate normally, replace the control panel.

GETtheMANUALS.org

2. BLOWER SWITCH (MANUAL A/C MODEL)

Preparation tool: Circuit tester

1) Check the resistance between terminals of the control panel.

Terminal No.	Inspection conditions	Standard	Connection diagram
—	OFF	—	—
1 — 2, 4	1 (LO)	Less than 1 Ω	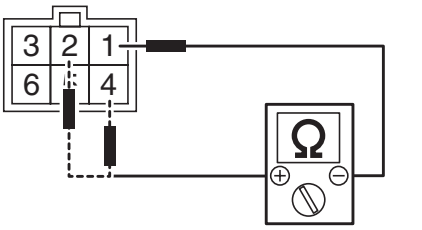
1 — 3, 4	2 (M1)	Less than 1 Ω	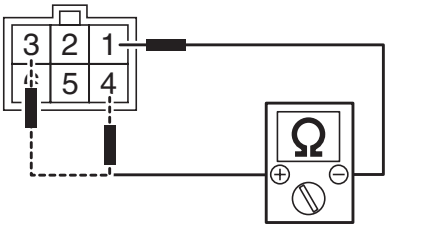
1 — 4, 6	3 (M2)	Less than 1 Ω	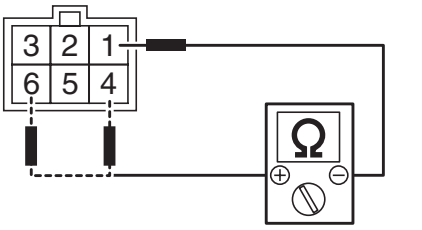
1 — 4, 5	4 (HI)	Less than 1 Ω	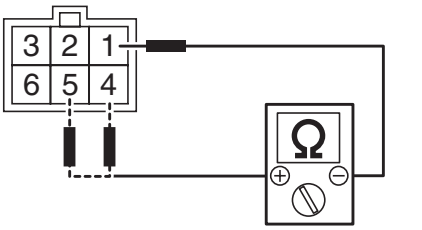

2) Replace the control panel if the inspection result is not within the standard value.

GETtheMANUALS.org

15.Control Unit

A: REMOVAL

1) Disconnect the ground cable from battery.
2) Remove the glove box. <Ref. to EI-66, REMOVAL, Glove Box.>
3) Remove the control module.
   (1) Release the lock and remove the relay bracket.

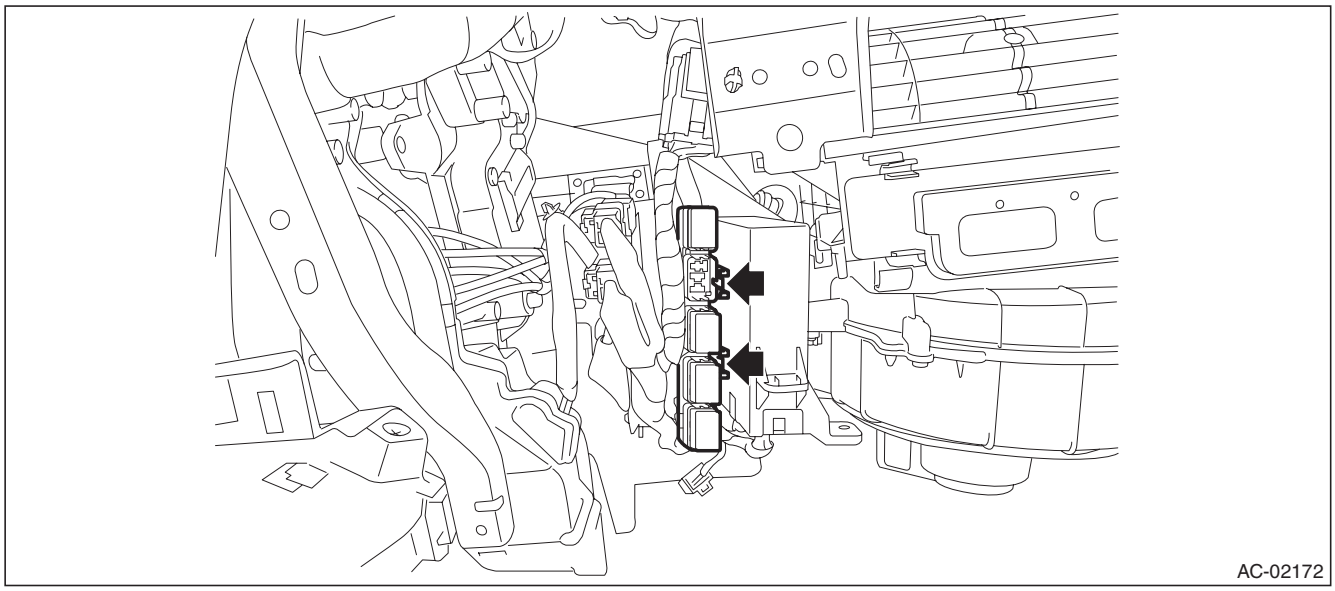

   (2) Disconnect the connector.
   (3) Remove the screws, and remove the control module.

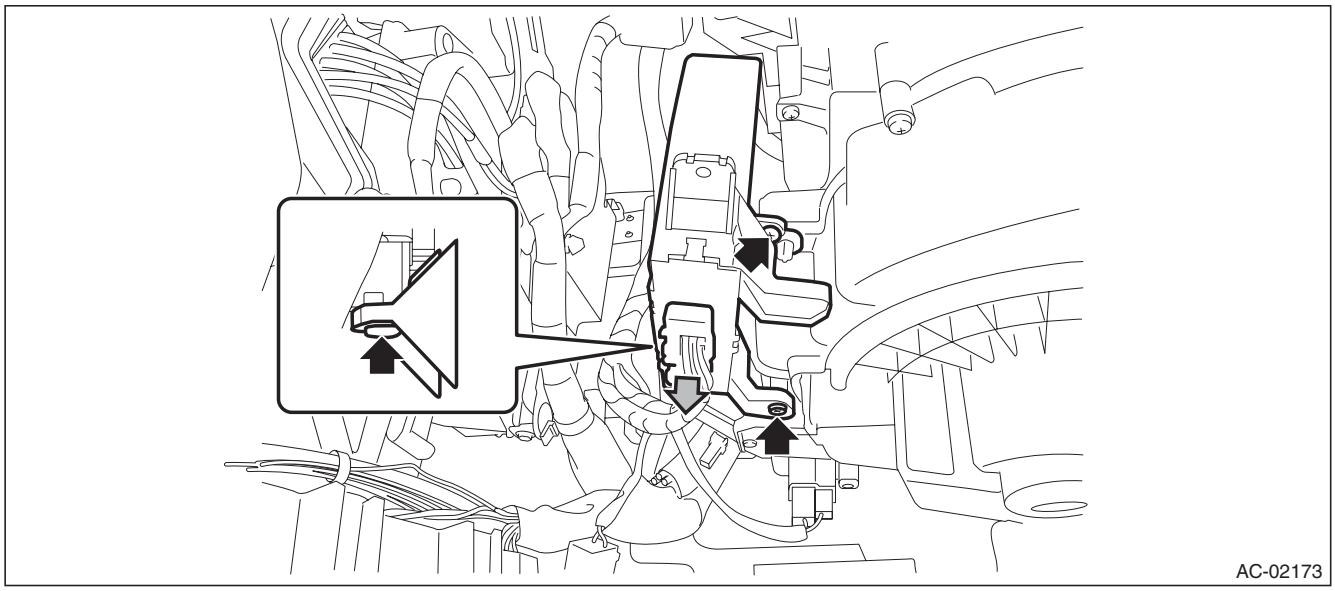

B: INSTALLATION

Install each part in the reverse order of removal.

GETtheMANUALS.org

16. Compressor

A: REMOVAL

1) Perform compressor oil return operation. <Ref. to AC-31, PROCEDURE, Compressor Oil.>
2) Turn the A/C switch to OFF and stop the engine.
3) Using the refrigerant recovery system, discharge refrigerant. <Ref. to AC-24, PROCEDURE, Refrigerant Recovery Procedure.>
4) Disconnect the ground cable from battery.
5) Remove the V-belts.
- H4 non-turbo model: <Ref. to ME(H4SO)-43, REMOVAL, V-belt.>
- H4 turbo model: <Ref. to ME(H4DOTC)-42, REMOVAL, V-belt.>
- H6 model: <Ref. to ME(H6DO)-51, REMOVAL, V-belt.>

6) Move the alternator harness to the right.
   (1) Remove the nuts and connector.
   (2) Release the lock and move the alternator harness to the right.

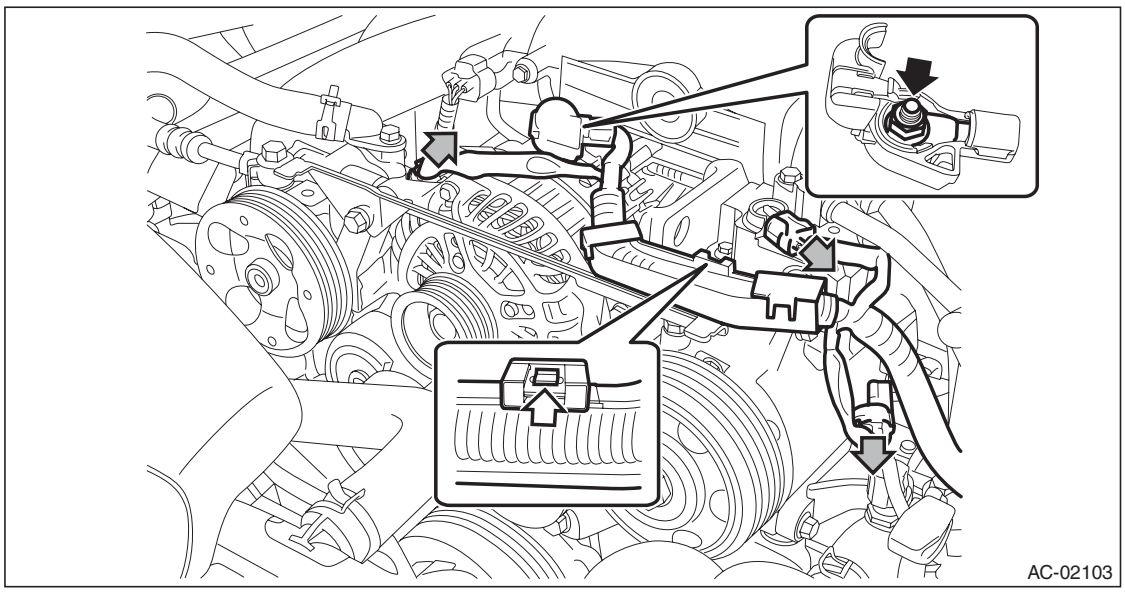

7) Remove the bolts and then remove the collector cover bracket.

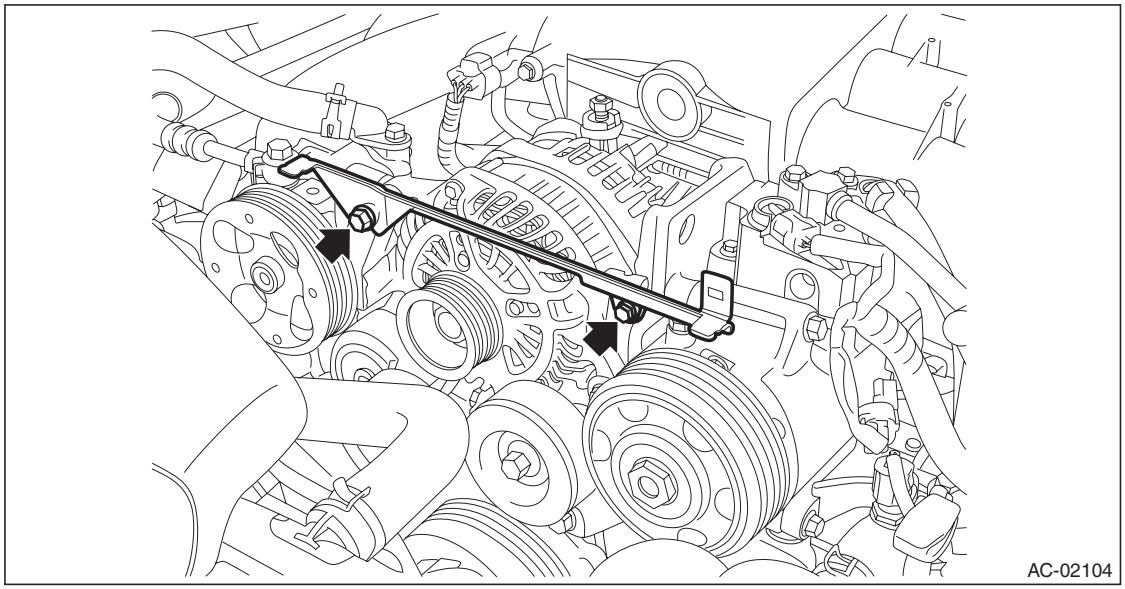

GETtheMANUALS.org

8) Remove the bolt and remove the low-pressure hose and high-pressure hose.

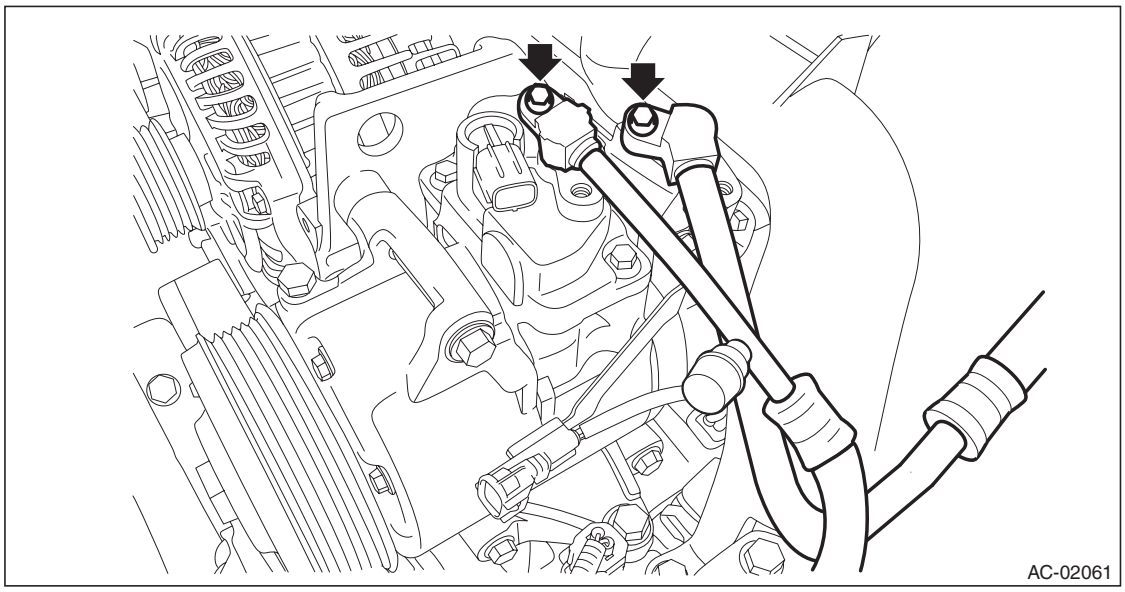

9) Remove the compressor.
   (1) Disconnect the water temperature sensor connector.
   (2) Remove the bolts and remove the compressor.

NOTE:
- Since the compressor cannot be removed by itself, remove it with the loosened bolts inserted in the bracket.
- Be careful not to damage the pulley and sensor.

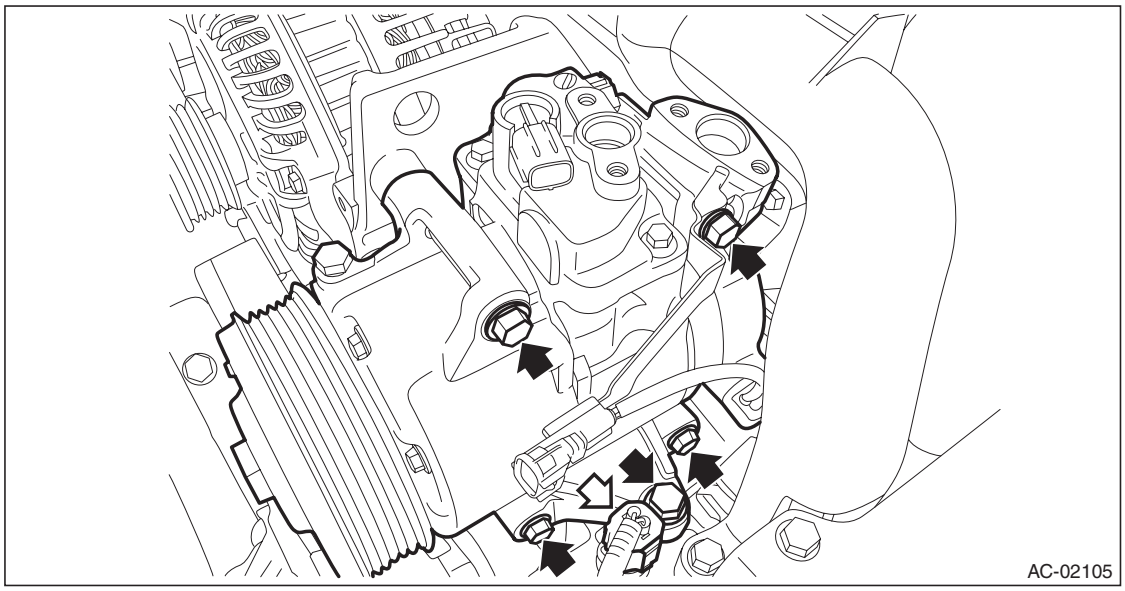

GETtheMANUALS.org

B: INSTALLATION

CAUTION:
- **Replace the O-rings on low/high pressure hoses with new parts, and apply compressor oil.**
- **If the compressor is replaced, adjust the amount of the compressor oil. <Ref. to AC-31, PROCEDURE, Compressor Oil.>**
- **After installing the compressor, do not start the engine until the A/C system is charged with refrigerant.**
- **If the engine is started with no refrigerant charge, replace the compressor.**

1) Install each part in the reverse order of removal.
2) Charge refrigerant. <Ref. to AC-25, PROCEDURE, Refrigerant Charging Procedure.>
3) After installing the compressor, perform a break-in operation according to the following steps.

NOTE:
Do not increase the engine speed to and above 4,000 rpm unless the break-in operation finishes.

(1) Check that all connectors are locked securely.
(2) Reset the control module. (Disconnect and then connect the connector)
(3) Attach a delivery (test) mode fuse to the main fuse box.
(4) Set the airflow adjustment dial to MAX (4th position). (manual A/C model)
(5) Connect the Subaru Select Monitor, select {Variable compressor break-in drive} mode and display the current data {Variable compressor break-in drive finish status} by following the procedure.
(6) Start and idle the engine at or below 1,800 rpm. (The compressor operation is automatically changed to the break-in operation mode.)
(7) When {Variable compressor break-in drive finish status} changes from “incomplete” to “Finished”, stop the engine.

CAUTION:
If the engine may have been started with no refrigerant charge, check for any diagnosis code (DTC) using Subaru Select Monitor. If the code B1644 (Refrigerant not sealed drive error) is output, replace the compressor.

(8) Remove the delivery (test) mode fuse from the main fuse box.
(9) The break-in operation finishes.

Tightening torque:
Air conditioning unit: <Ref. to AC-10, AIR CONDITIONING UNIT, COMPONENT, General Description.>
Compressor: <Ref. to AC-11, COMPRESSOR, COMPONENT, General Description.>

GETtheMANUALS.org

17.Condenser

A: REMOVAL

1) Using the refrigerant recovery system, drain the refrigerant. <Ref. to AC-24, PROCEDURE, Refrigerant Recovery Procedure.>
2) Remove the clips and remove the air intake duct.

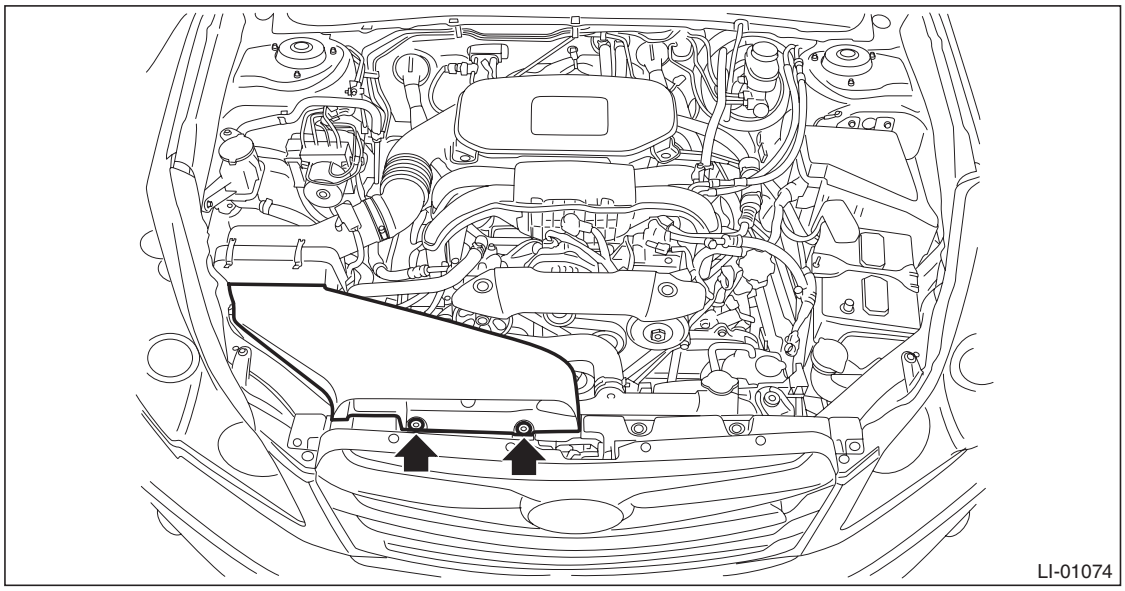

3) Remove the clips and remove the grille bracket.

NOTE:
To prevent damage to the grille bracket, make sure to remove all clips.

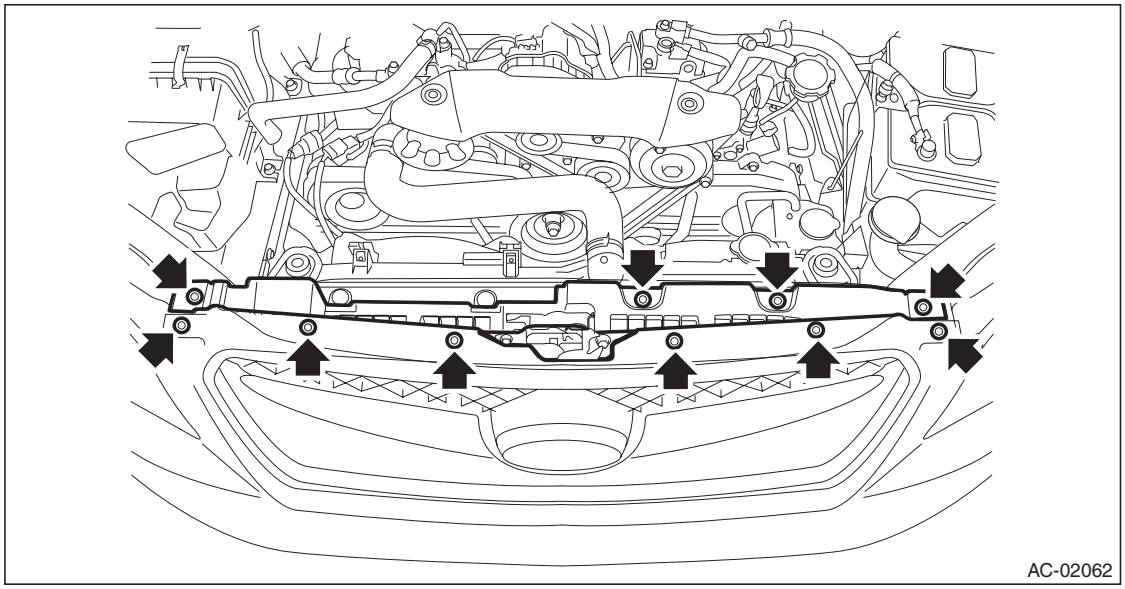

GETtheMANUALS.org

4) Remove the bolts and disconnect the high pressure hose and A/C pipe from the condenser.

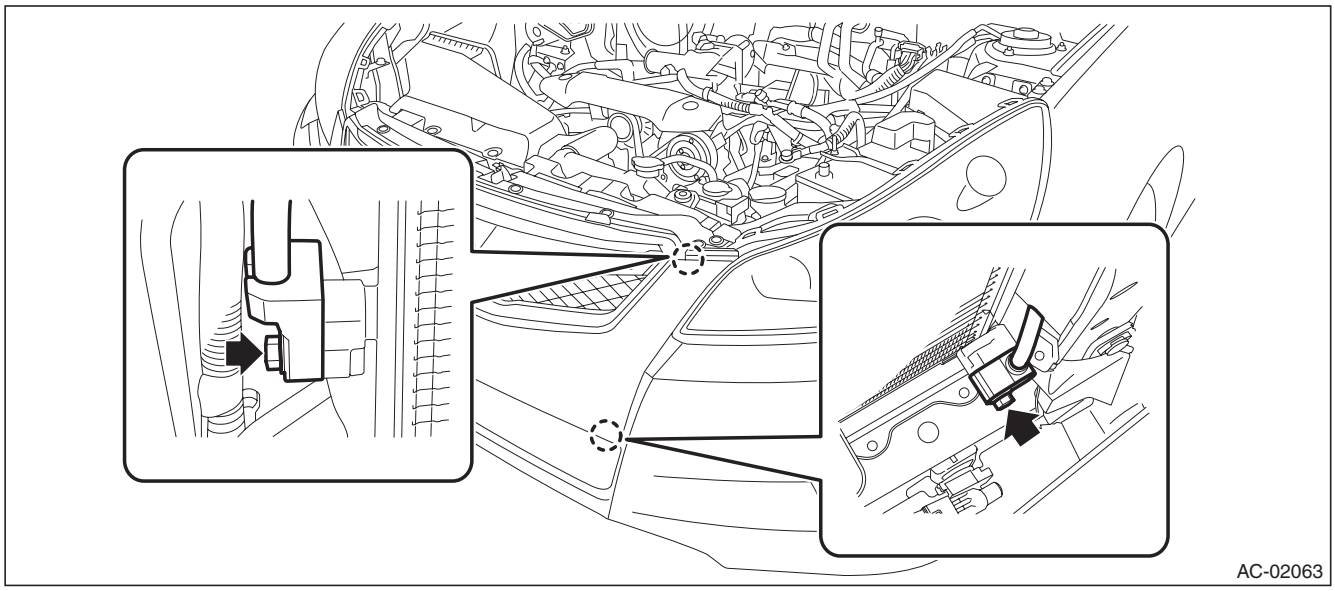

5) Remove the bolts and remove the radiator upper bracket.

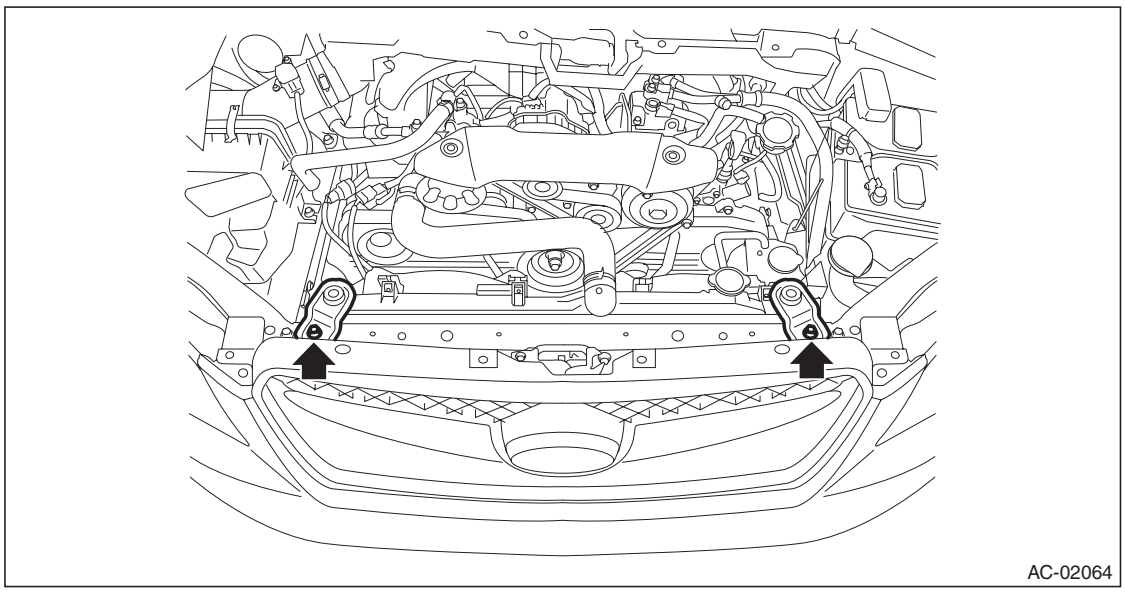

GETtheMANUALS.org

6) Remove the condenser.
   (1) Remove the bolt.

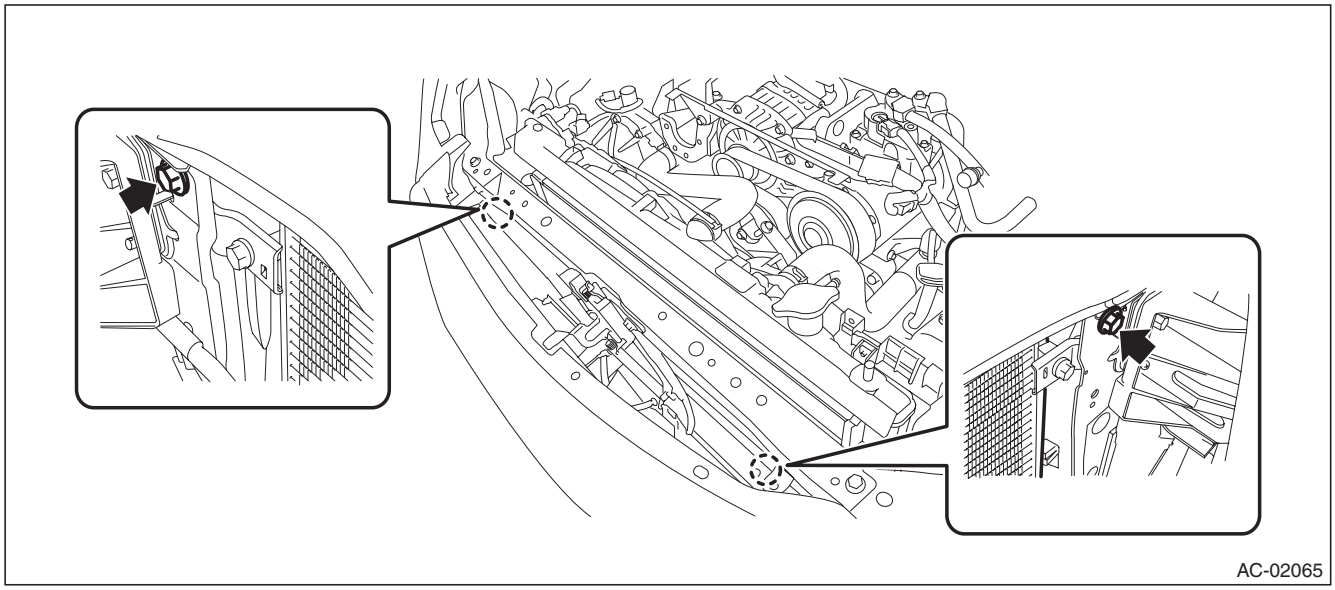

   (2) By lifting the condenser, pull it out through the space between the radiator and the radiator panel.

CAUTION:
Be careful not to damage the condenser fins. If a damaged fin is found, repair it using a thin screwdriver.

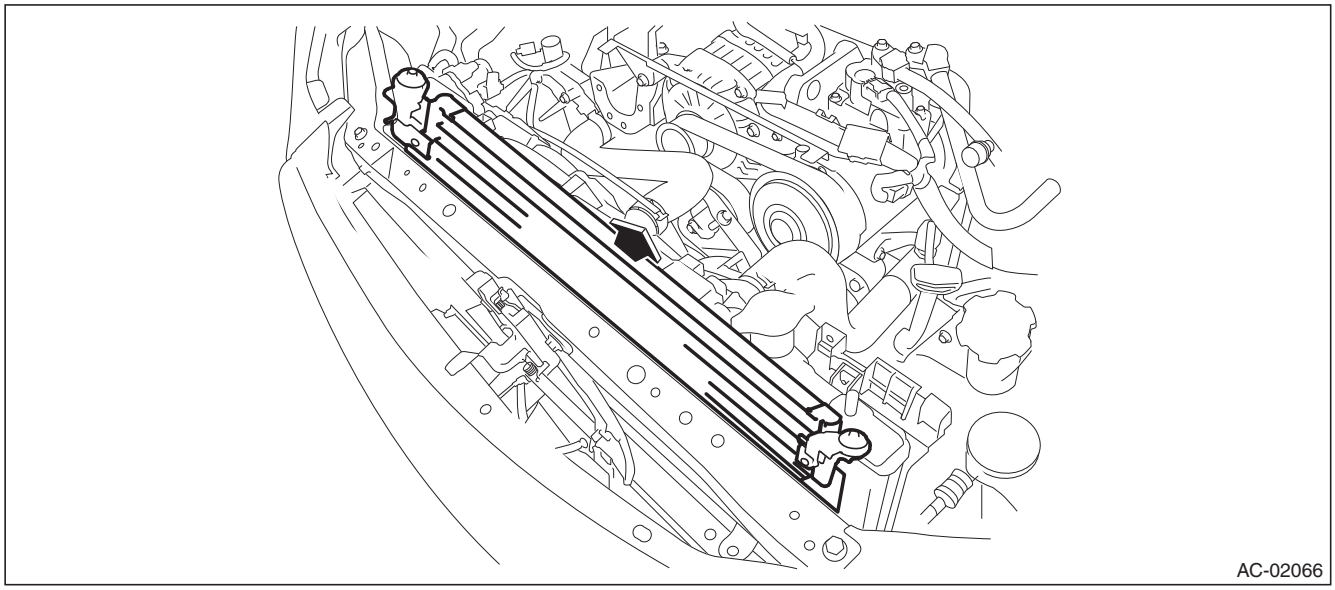

GETtheMANUALS.org

B: INSTALLATION

CAUTION:
- **Do not start the engine before charging refrigerant.**
- **If the engine is started with no refrigerant charge, replace the compressor.**
- **If the condenser has been replaced, add an appropriate amount of compressor oil to the compressor. <Ref. to AC-31, REPLACEMENT, Compressor Oil.>**
- **Replace the O-rings with new parts, and then apply compressor oil.**
- **Confirm that lower guide (A) of condenser fits into holes on radiator panel.**

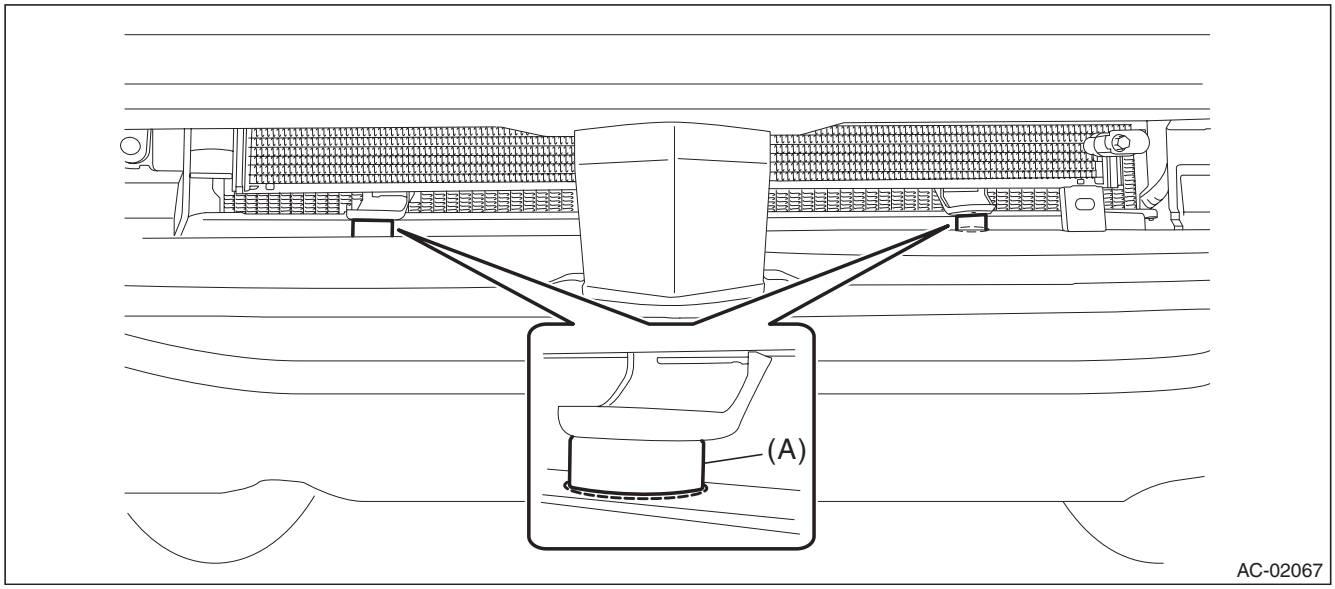

1) Install each part in the reverse order of removal.
2) Charge refrigerant. <Ref. to AC-25, PROCEDURE, Refrigerant Charging Procedure.>

Tightening torque:
Air conditioning unit: <Ref. to AC-10, AIR CONDITIONING UNIT, COMPONENT, General Description.>
Radiator bracket: <Ref. to CO(H4DOTC)-4, RADIATOR AND RADIATOR FAN, COMPONENT, General Description.>

C: INSPECTION

1) Check to see that the condenser fins are not clogged with debris or insects. Blow with compressed air or flush fins with water as needed.
2) If any oil leak is found from the condenser, replace the condenser.

GETtheMANUALS.org

18.Heater and Cooling Unit

A: REMOVAL

1) Disconnect the ground cable from battery.
2) Using the refrigerant recovery system, discharge refrigerant. <Ref. to AC-24, PROCEDURE, Refrigerant Recovery Procedure.>
3) Drain the coolant from the radiator.
- H4 non-turbo model: <Ref. to CO(H4SO)-14, DRAINING OF ENGINE COOLANT, REPLACEMENT, Engine Coolant.>
- H4 turbo model: <Ref. to CO(H4DOTC)-14, DRAINING OF ENGINE COOLANT, REPLACEMENT, Engine Coolant.>
- H6 model: <Ref. to CO(H6DO)-12, DRAINING OF ENGINE COOLANT, REPLACEMENT, Engine Coolant.>

4) Remove the connector and bolts, and remove the high-pressure hose and AC pipe from the expansion valve.
5) Loosen the heater hose clamps and remove the hoses.

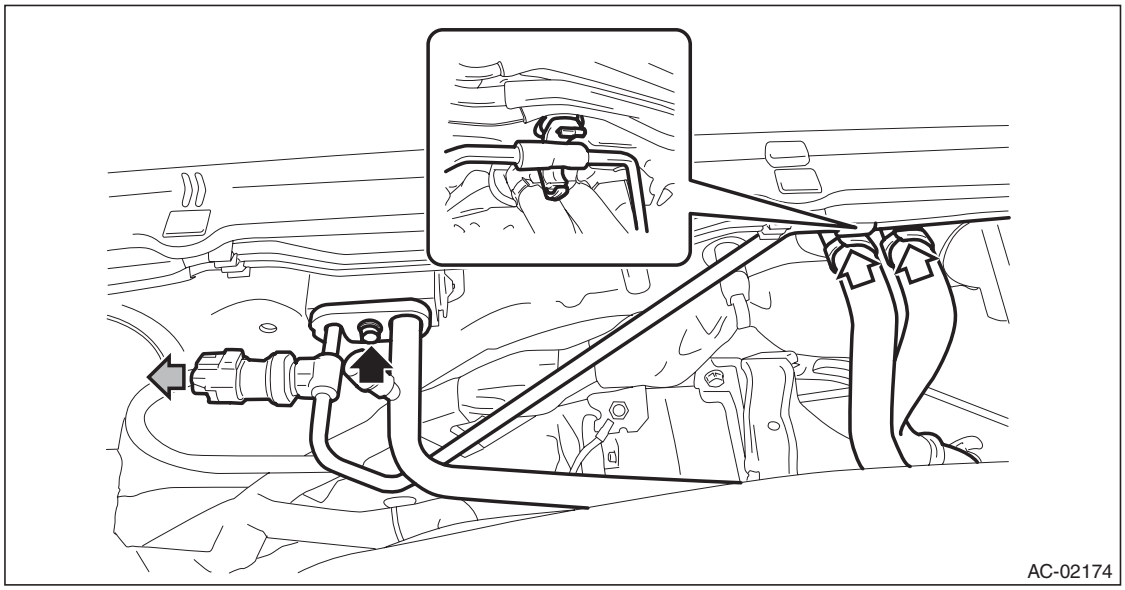

6) Remove the instrument panel assembly. <Ref. to EI-76, REMOVAL, Instrument Panel Assembly.>

GETtheMANUALS.org

7) Remove the engine control module (ECM).
   (1) Release the lock and remove the relay holder.
   (2) Remove the nuts, and remove the engine control module (ECM).

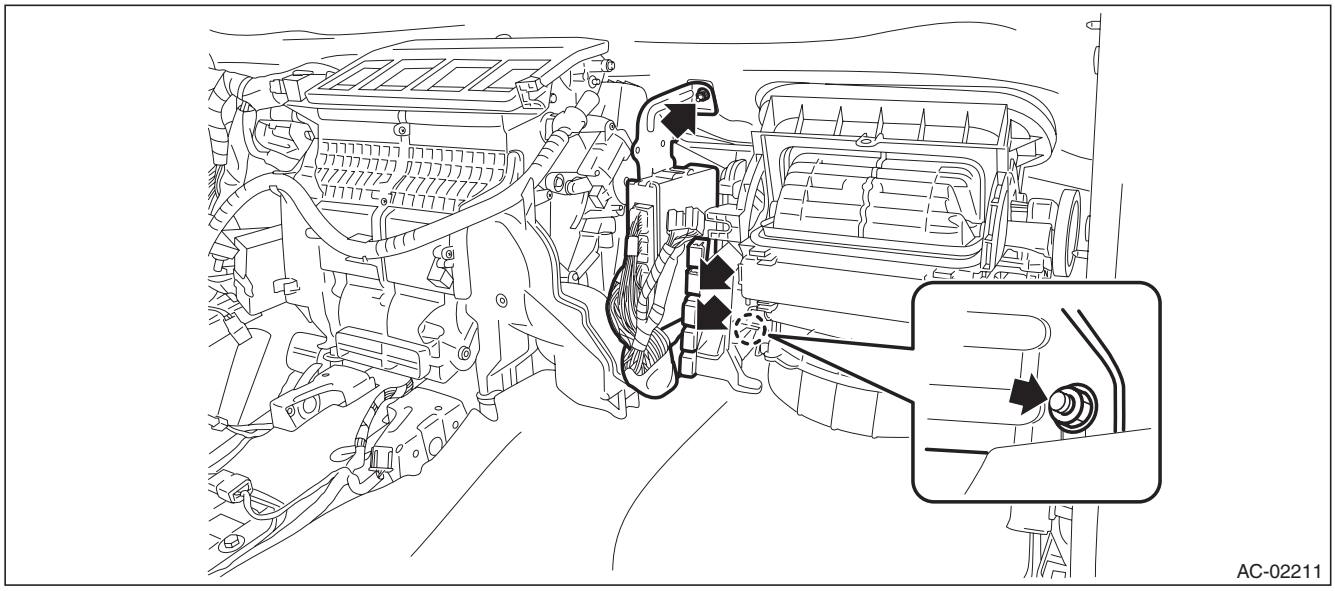

8) Remove the heater and cooling unit.
   (1) Remove the bolt and remove the heater and cooling unit.

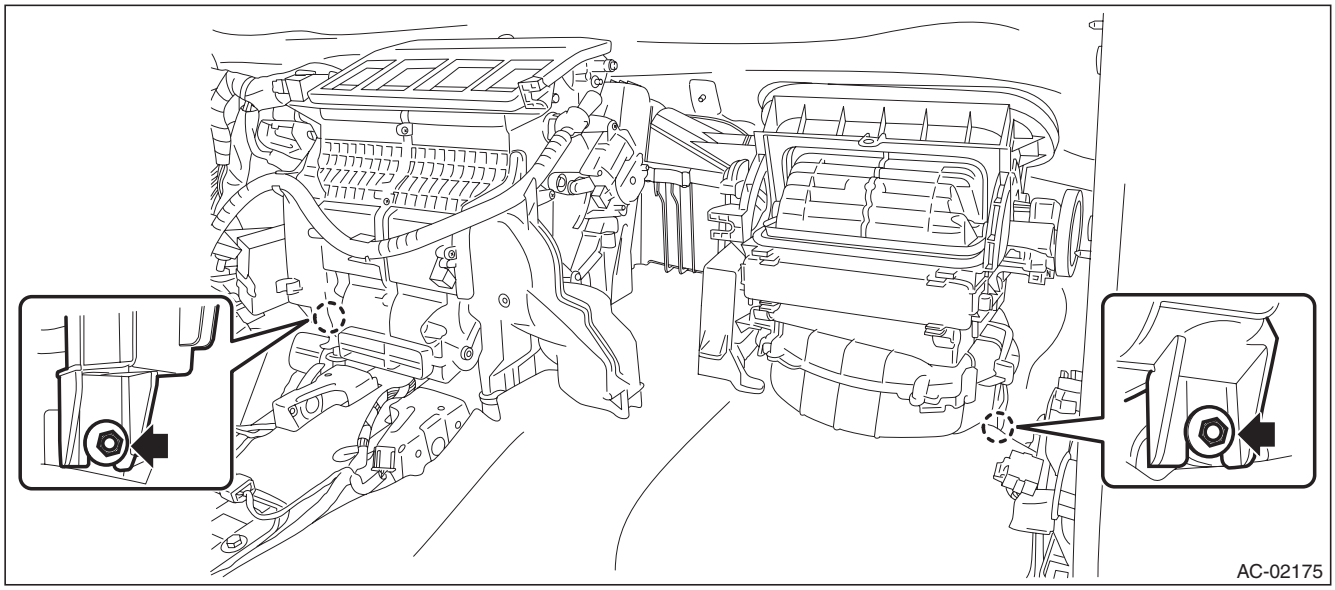

GETtheMANUALS.org

9) Remove the blower motor unit assembly.
   (1) Release the claws and remove the bolts.

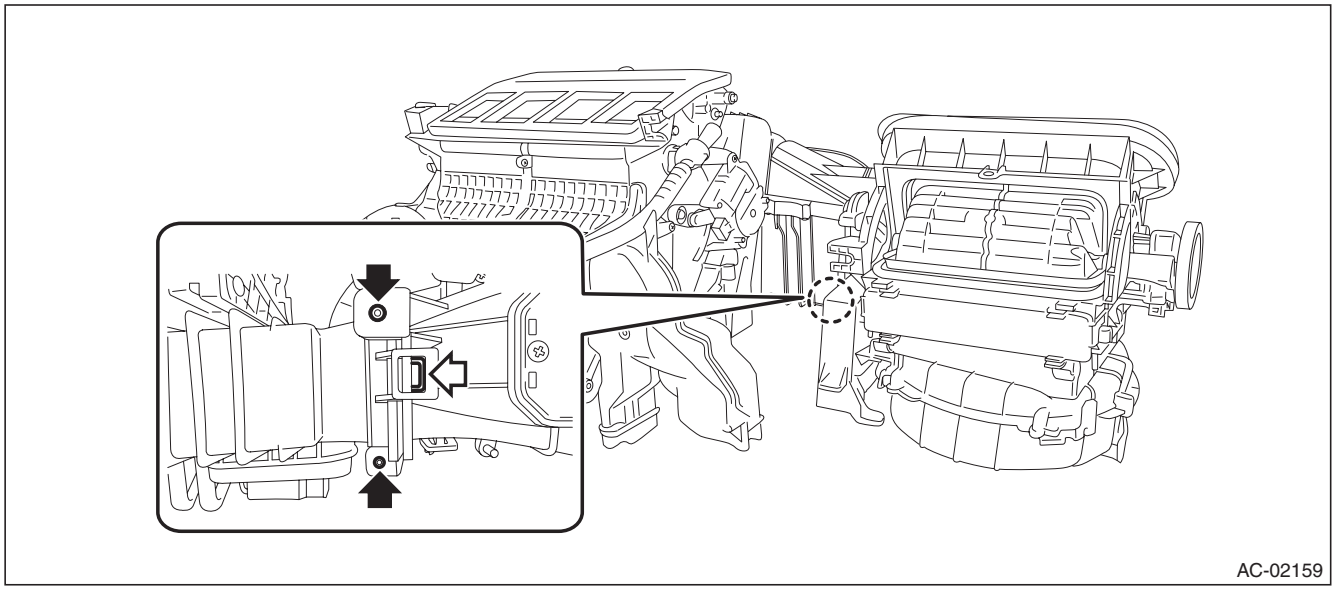

   (2) Remove the blower motor unit assembly as shown in the figure.

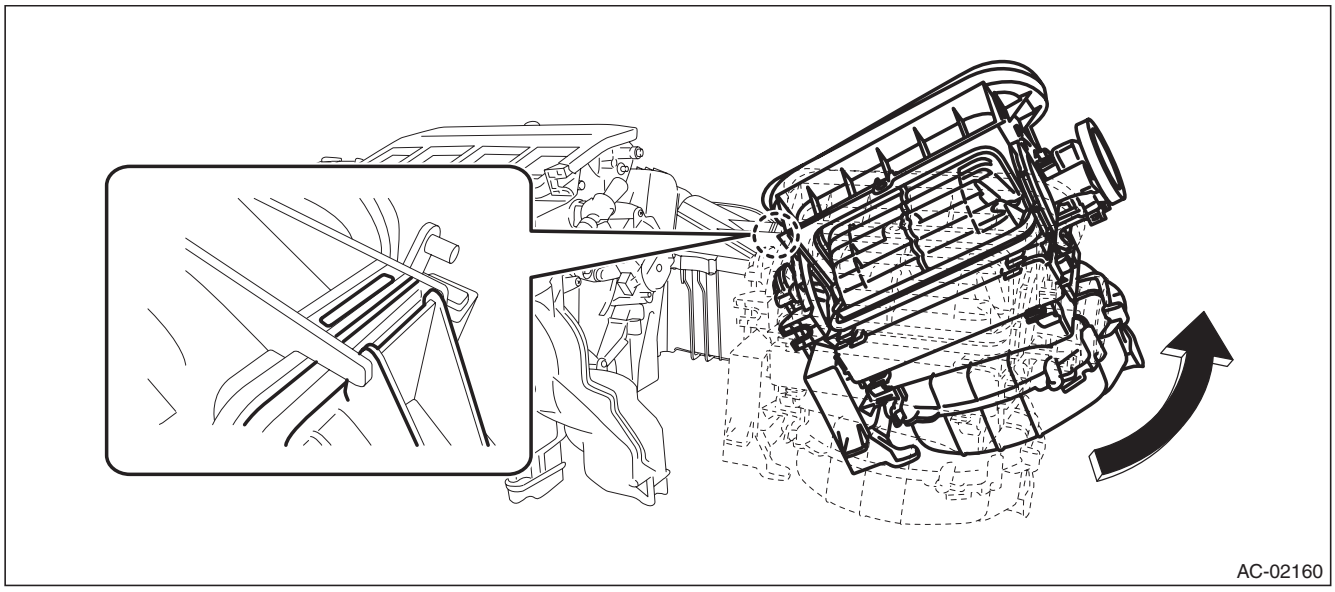

GETtheMANUALS.org

B: INSTALLATION

CAUTION:
- **Do not start the engine before charging refrigerant.**
- **If the engine is started with no refrigerant charge, replace the compressor.**
- **Replace O-rings and pipe clamps with new parts and install securely.**

1) Install each part in the reverse order of removal.

NOTE:
Refer to “INSTALLATION” of “Instrument Panel Assembly”. <Ref. to EI-95, INSTALLATION, Instrument Panel Assembly.>

2) Fill engine coolant.
- H4 non-turbo model: <Ref. to CO(H4SO)-14, FILLING OF ENGINE COOLANT, REPLACEMENT, Engine Coolant.>
- H4 turbo model: <Ref. to CO(H4DOTC)-14, FILLING OF ENGINE COOLANT, REPLACEMENT, Engine Coolant.>
- H6 model: <Ref. to CO(H6DO)-12, FILLING OF ENGINE COOLANT, REPLACEMENT, Engine Coolant.>

3) Charge refrigerant. <Ref. to AC-25, PROCEDURE, Refrigerant Charging Procedure.>

Tightening torque:
Heater cooling unit: <Ref. to AC-6, HEATER COOLING UNIT, COMPONENT, General Description.>
Blower motor unit: <Ref. to AC-8, BLOWER MOTOR UNIT, COMPONENT, General Description.>

GETtheMANUALS.org

19. Evaporator

A: REMOVAL

1) Disconnect the ground cable from battery.
2) Using the refrigerant recovery system, discharge refrigerant. <Ref. to AC-24, PROCEDURE, Refrigerant Recovery Procedure.>
3) Drain the coolant from the radiator.
- H4 non-turbo model: <Ref. to CO(H4SO)-14, DRAINING OF ENGINE COOLANT, REPLACEMENT, Engine Coolant.>
- H4 turbo model: <Ref. to CO(H4DOTC)-14, DRAINING OF ENGINE COOLANT, REPLACEMENT, Engine Coolant.>
- H6 model: <Ref. to CO(H6DO)-12, DRAINING OF ENGINE COOLANT, REPLACEMENT, Engine Coolant.>

4) Remove the connector and bolts, and remove the high-pressure hose and AC pipe from the expansion valve.
5) Loosen the heater hose clamps and remove the hoses.

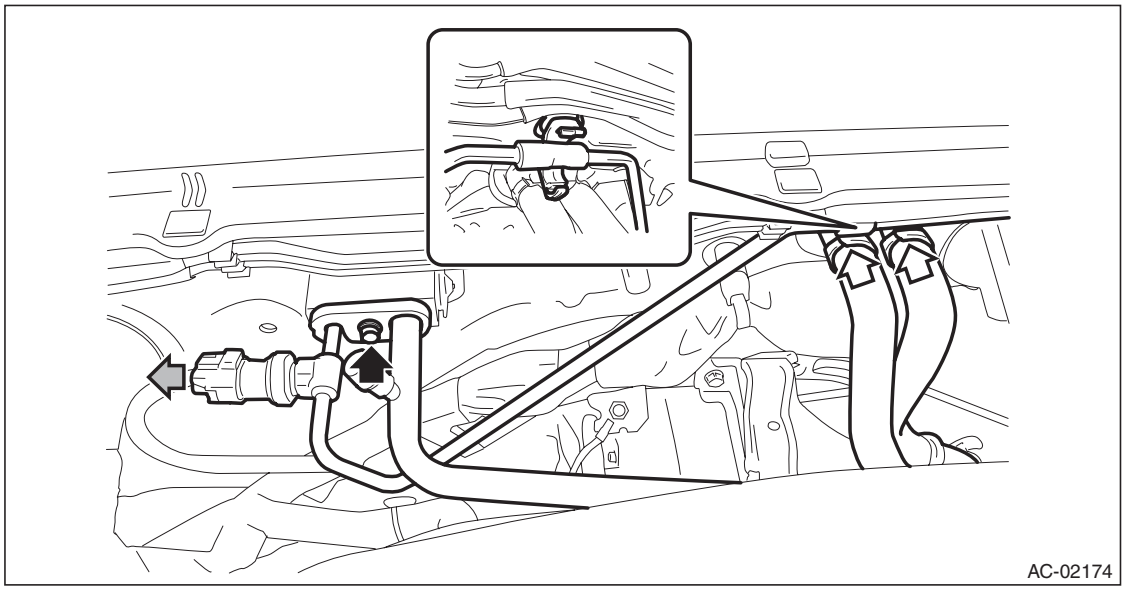

6) Remove the instrument panel assembly. <Ref. to EI-76, REMOVAL, Instrument Panel Assembly.>

GETtheMANUALS.org

7) Remove the engine control module (ECM).
   (1) Release the lock and remove the relay holder.
   (2) Remove the nuts, and remove the engine control module (ECM).

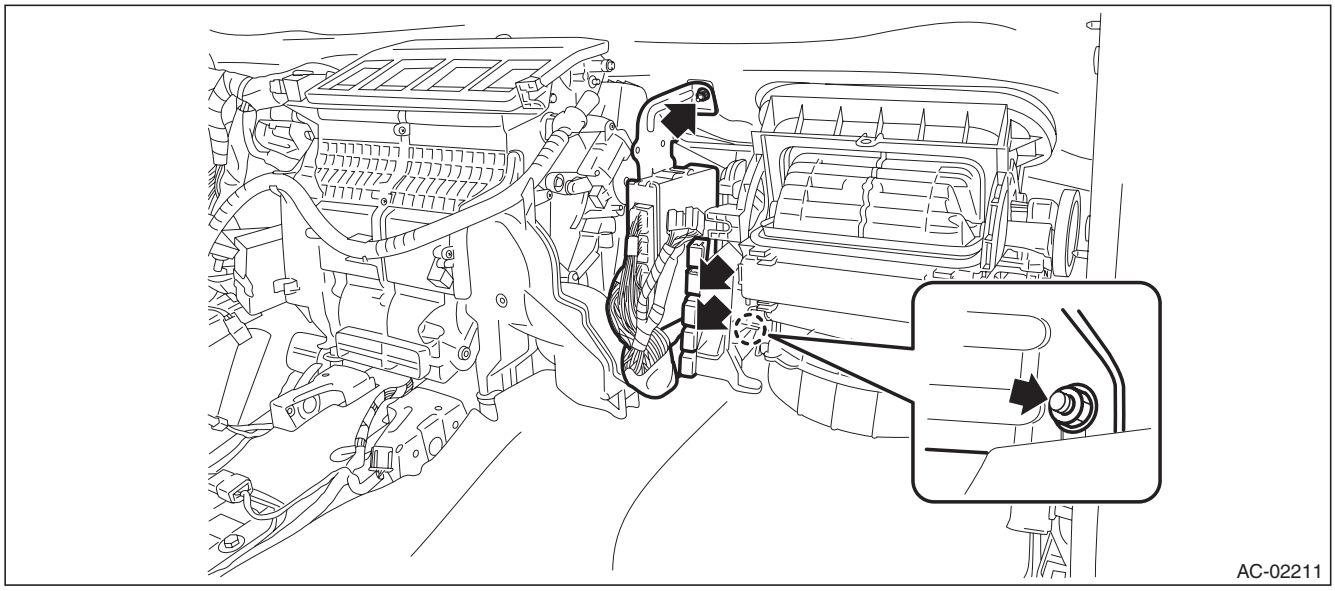

8) Remove the heater and cooling unit.
   (1) Remove the bolt and remove the heater and cooling unit.

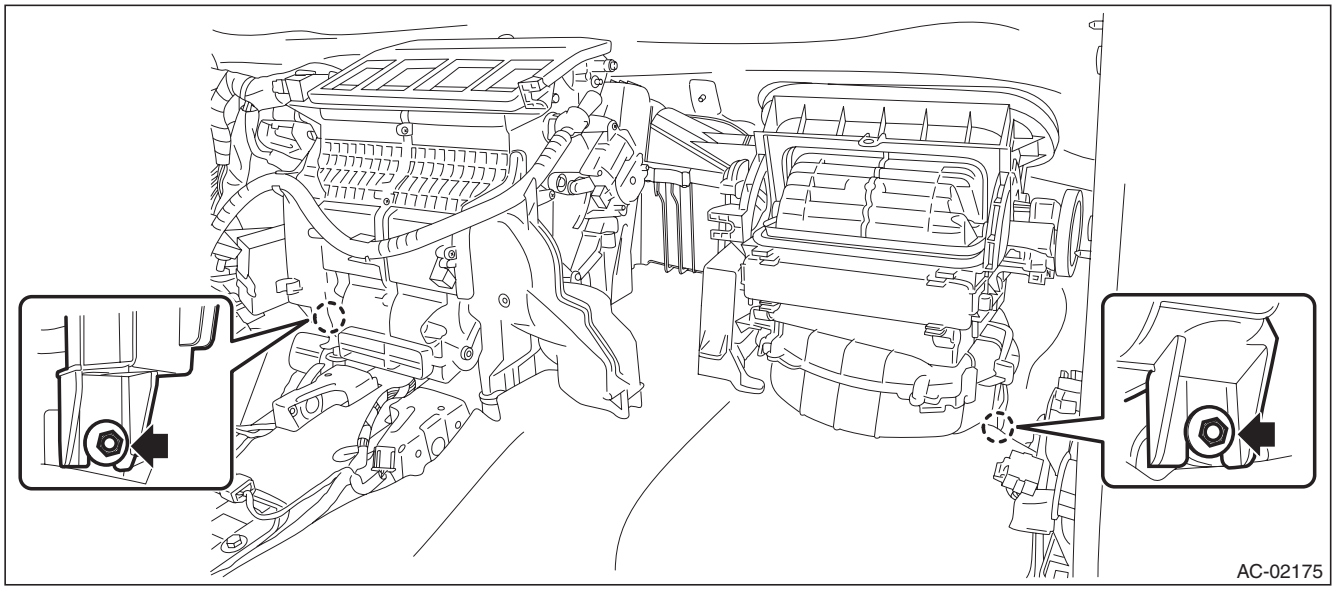

GETtheMANUALS.org

9) Remove the blower motor unit assembly.
   (1) Release the claws and remove the bolts.

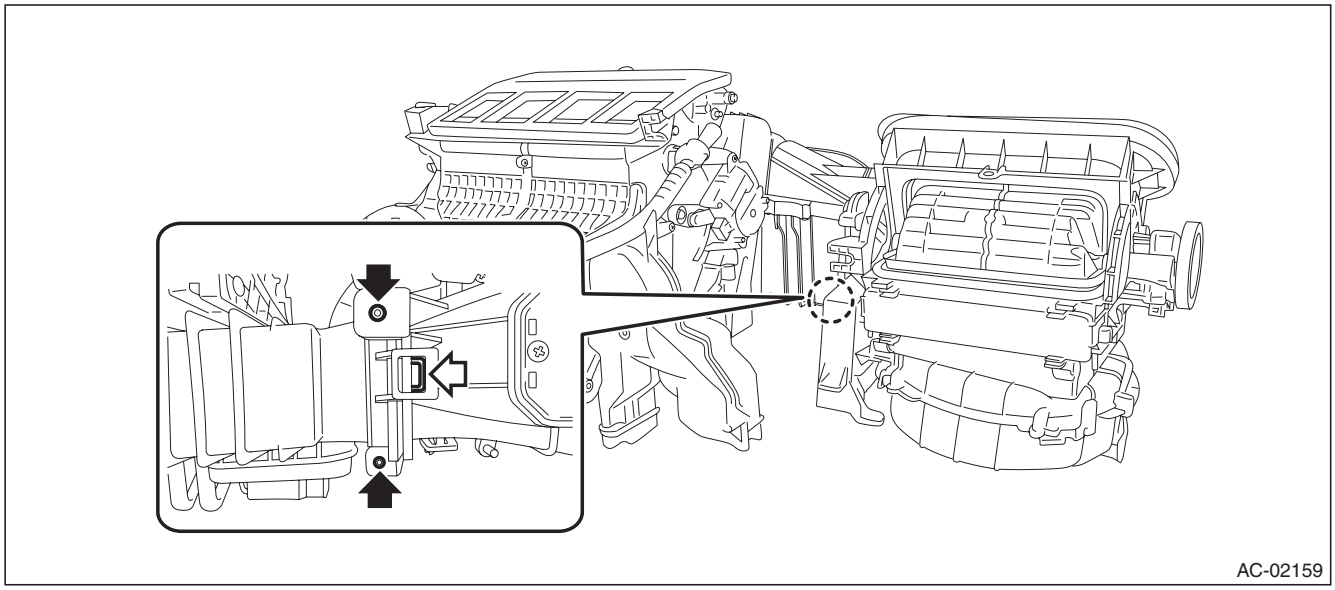

   (2) Remove the blower motor unit assembly as shown in the figure.

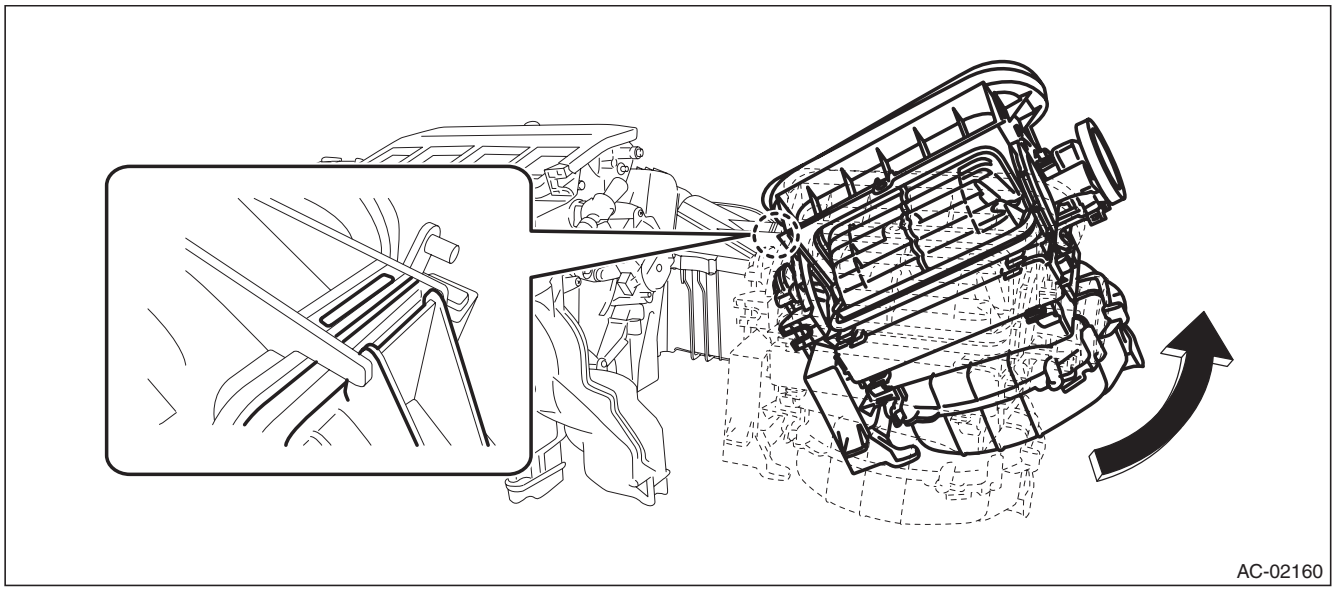

GETtheMANUALS.org

10) Disconnect the claws and then remove the aspirator hose.

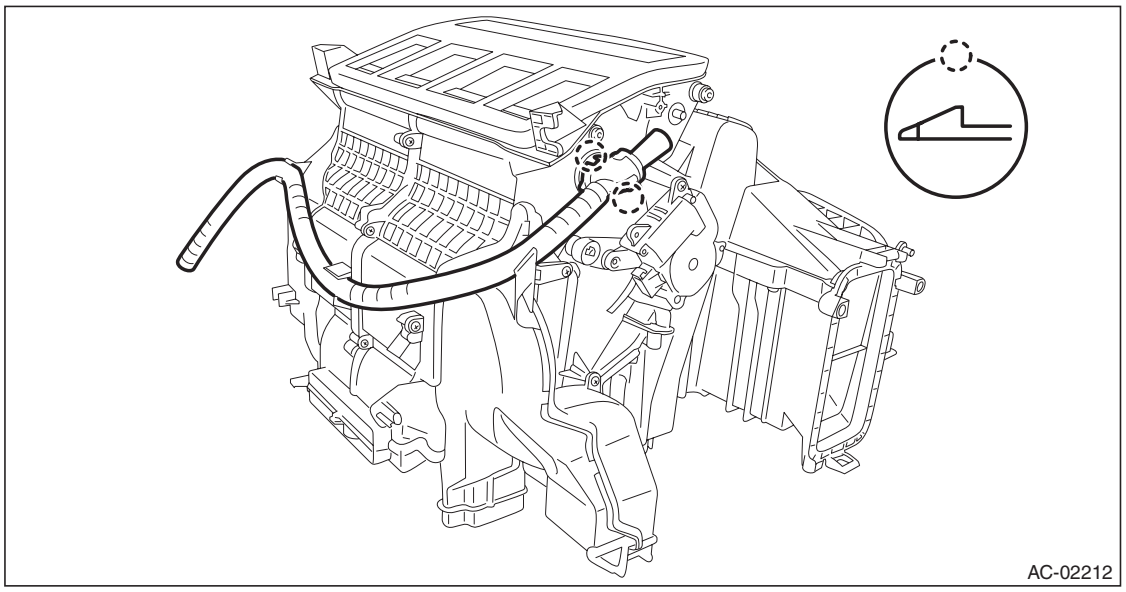

11) Remove the screw, and then remove the foot duct (RH).

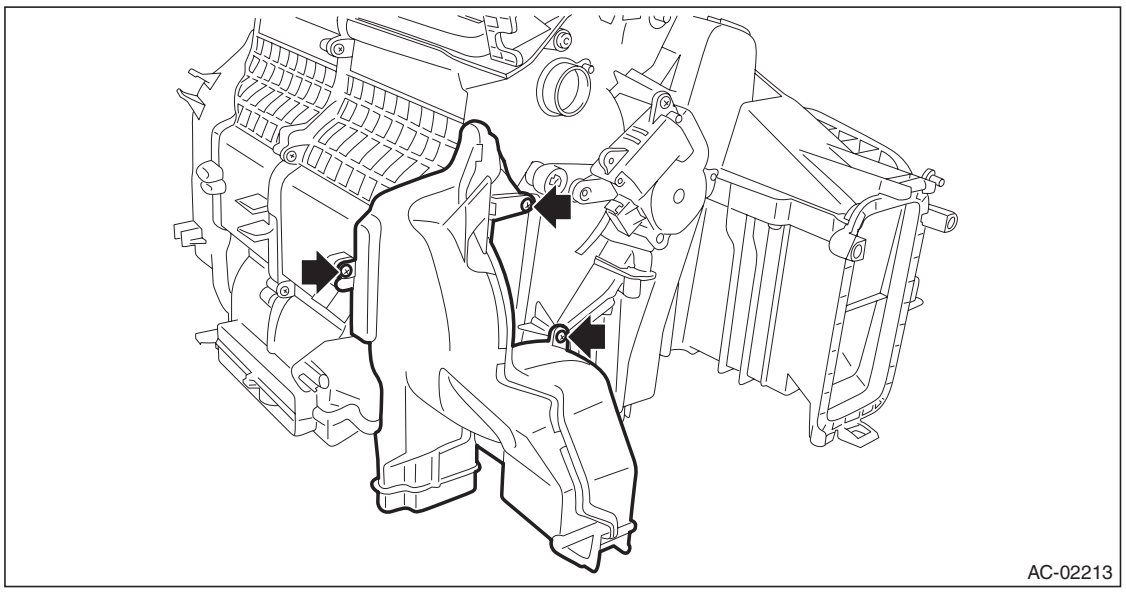

GETtheMANUALS.org

12) Remove the screws and remove the foot duct (LH).

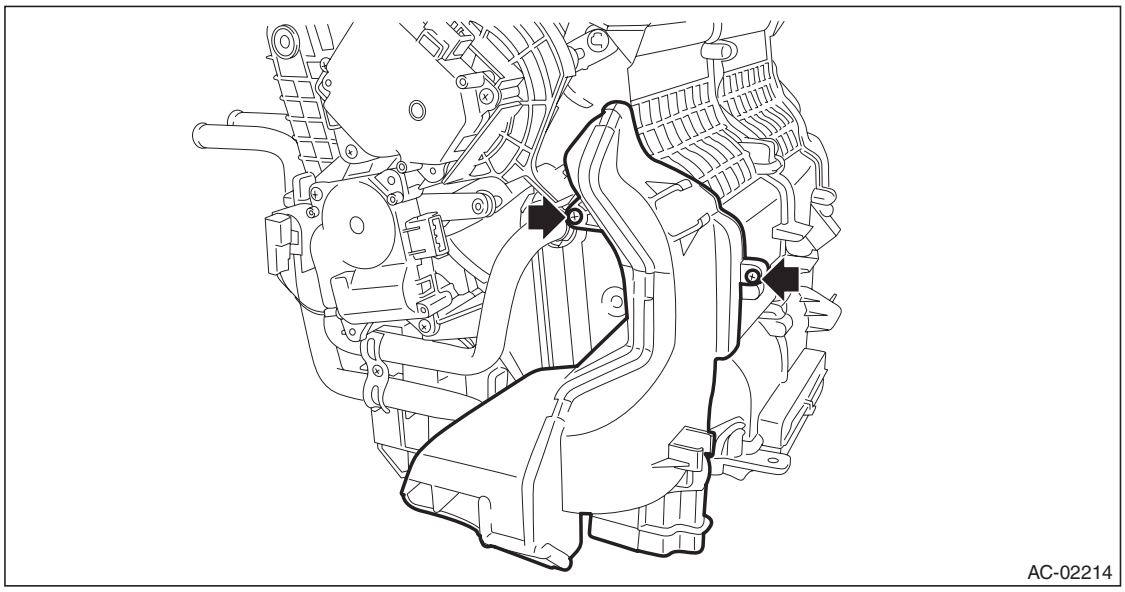

13) Pull out the heater core.
(1) Remove the screw and remove the heater pipe clamp.

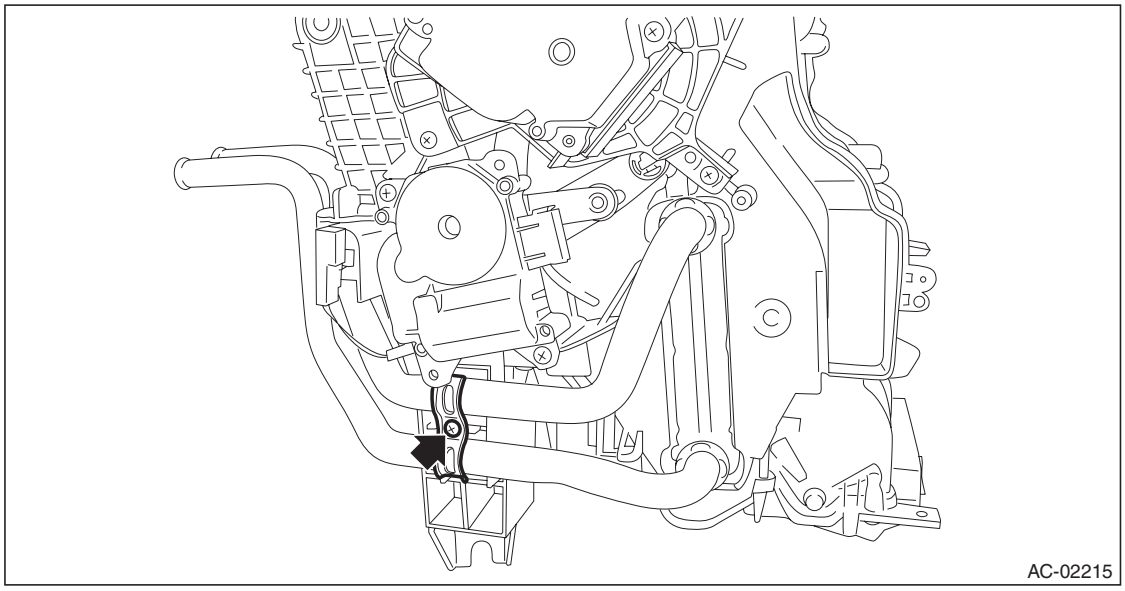

GETtheMANUALS.org

(2) Pull out the heater core from the heater and cooling unit assembly.

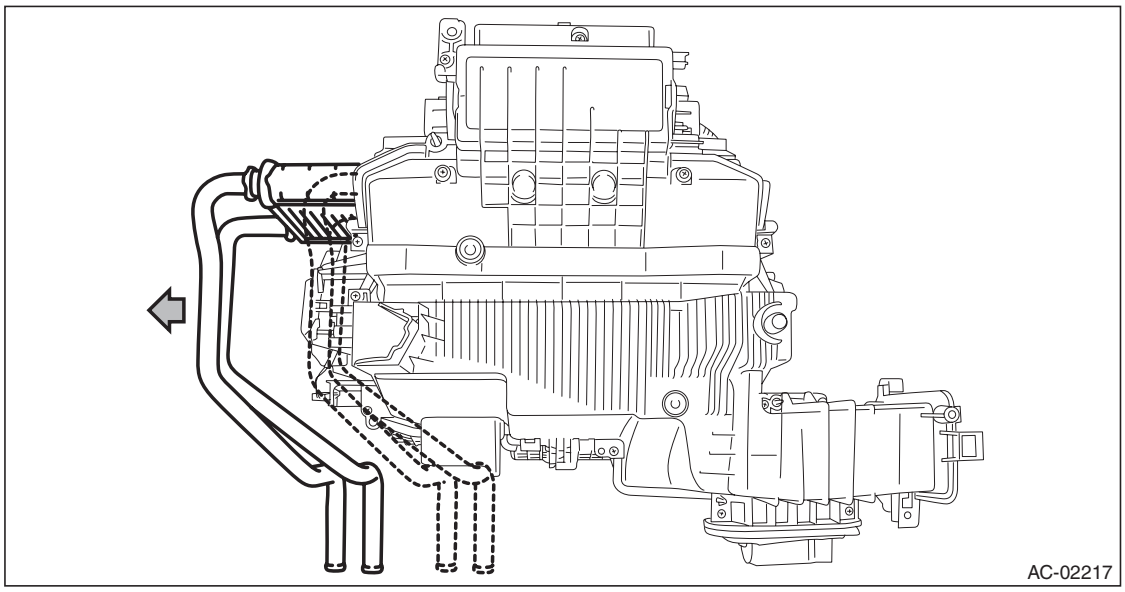

14) Remove the heater case lower.
(1) Remove the clip, and remove the evaporator connector.
(2) Remove the gasket.
(3) Remove the screw and lock, then remove the heater case lower.

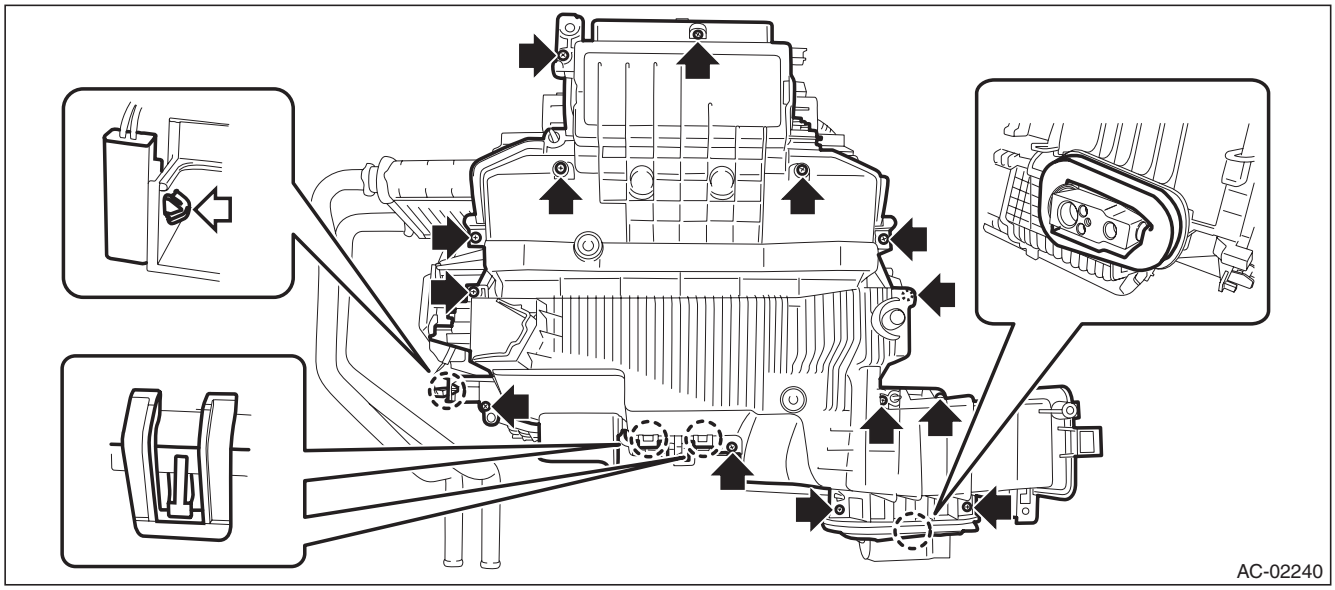

GETtheMANUALS.org

15) Remove the evaporator.

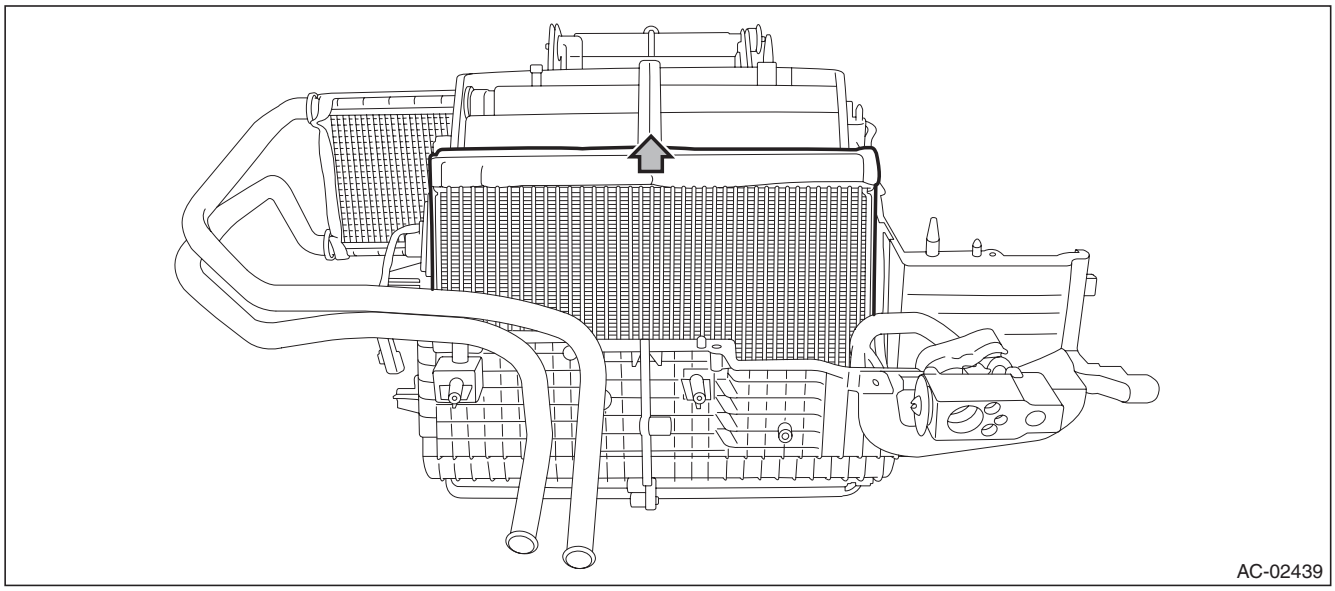

16) Remove the bolt and detach the expansion valve from the evaporator. <Ref. to AC-74, REMOVAL, Expansion Valve.>
17) Remove the evaporator sensor from the evaporator.

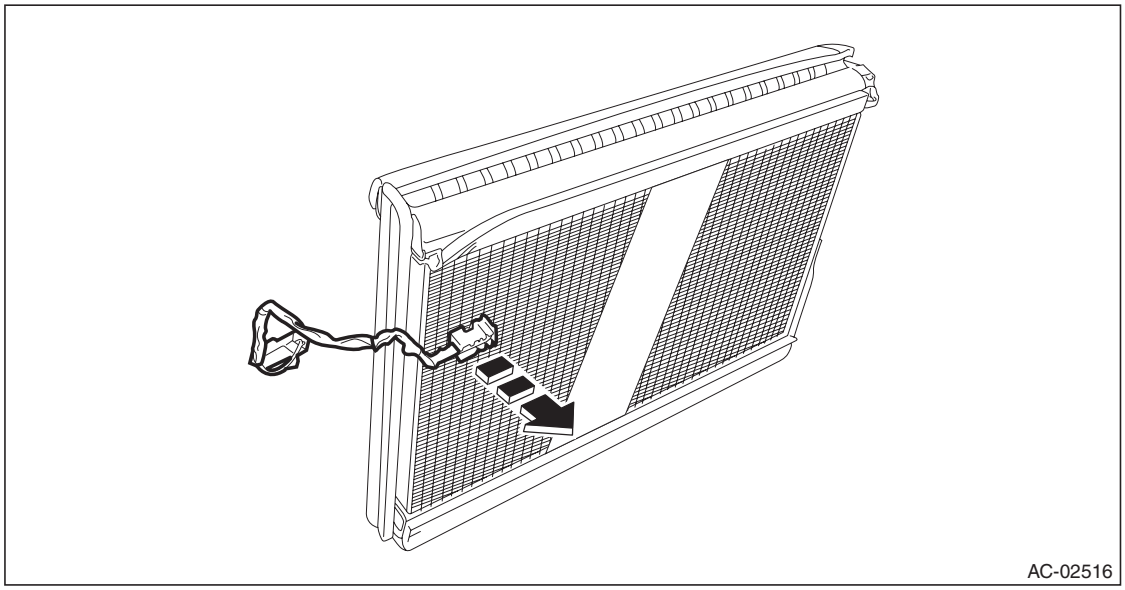

GETtheMANUALS.org

B: INSTALLATION

CAUTION:
- **Do not start the engine before charging refrigerant.**
- **If the engine is started with no refrigerant charge, replace the compressor.**
- **If the evaporator has been replaced, add an appropriate amount of compressor oil to the evaporator. <Ref. to AC-31, REPLACEMENT, Compressor Oil.>**
- **When the evaporator has been replaced, always replace the expansion valve gasket with a new one and apply the compressor oil on it.**
- **Make sure that the water seal gasket on the cover attachment area is securely attached.**
- **Replace the O-rings with new parts, and then apply compressor oil.**
- **Install the evaporator sensor at the position shown in the figure below.**

1) Install the evaporator sensor to the specified location. <Ref. to AC-87, INSTALLATION, Evaporator Sensor.>
2) Install each part in the reverse order of removal.

NOTE:
Refer to “INSTALLATION” of “Instrument Panel Assembly”. <Ref. to EI-95, INSTALLATION, Instrument Panel Assembly.>
3) Fill engine coolant.
- H4 non-turbo model: <Ref. to CO(H4SO)-14, FILLING OF ENGINE COOLANT, REPLACEMENT, Engine Coolant.>
- H4 turbo model: <Ref. to CO(H4DOTC)-14, FILLING OF ENGINE COOLANT, REPLACEMENT, Engine Coolant.>
- H6 model: <Ref. to CO(H6DO)-12, FILLING OF ENGINE COOLANT, REPLACEMENT, Engine Coolant.>

4) Charge refrigerant. <Ref. to AC-25, PROCEDURE, Refrigerant Charging Procedure.>

Tightening torque:
Heater cooling unit: <Ref. to AC-6, HEATER COOLING UNIT, COMPONENT, General Description.>
Blower motor unit: <Ref. to AC-8, BLOWER MOTOR UNIT, COMPONENT, General Description.>

C: INSPECTION

1) Check the evaporator fin for dust. Blow with compressed air or flush fins with water as needed.
2) If any oil leak is found from the evaporator, replace the evaporator.

GETtheMANUALS.org

20. Expansion Valve

A: REMOVAL

1) Disconnect the ground cable from battery.
2) Using the refrigerant recovery system, discharge refrigerant. <Ref. to AC-24, PROCEDURE, Refrigerant Recovery Procedure.>
3) Remove the connector and bolts, and remove the high-pressure hose and AC pipe from the expansion valve.

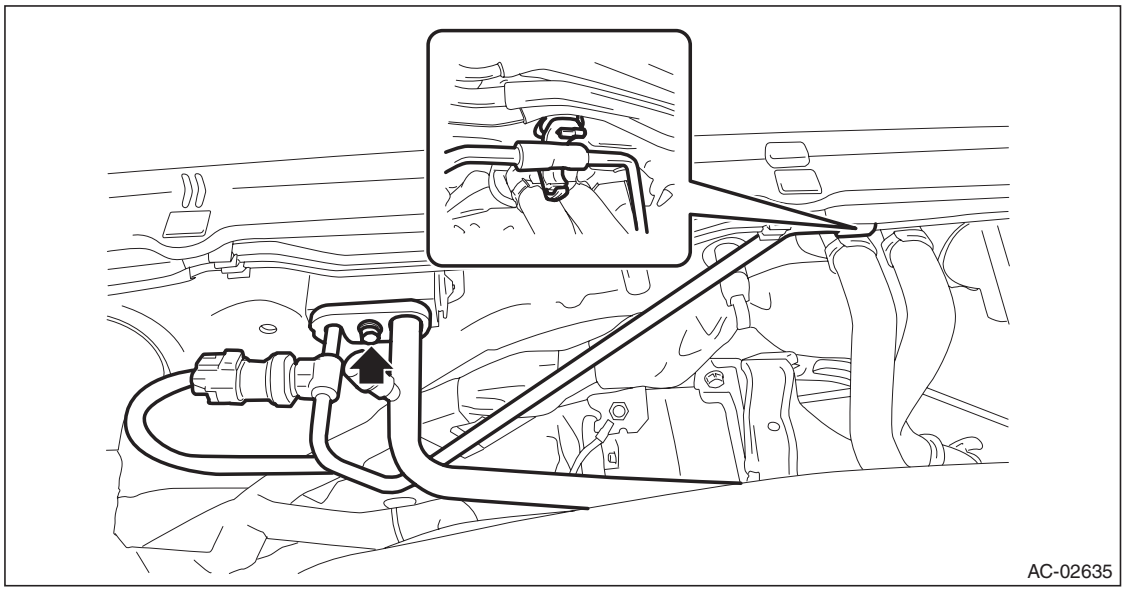

4) Remove the bolts, then remove the expansion valve.

Preparation tool: Hexagon wrench (4 mm)

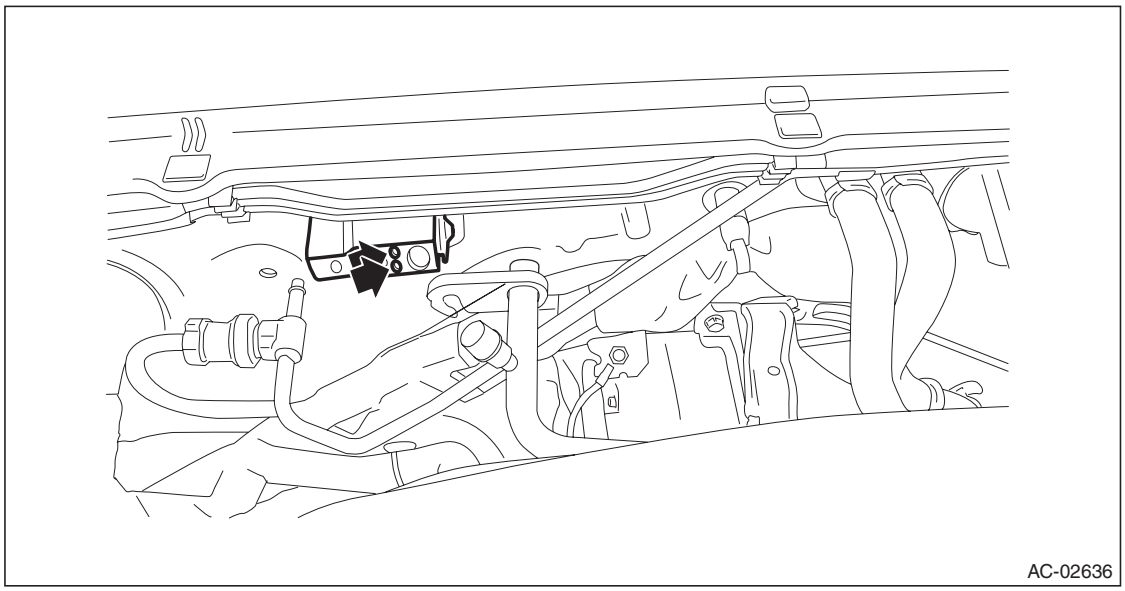

GETtheMANUALS.org

B: INSTALLATION

CAUTION:
- **Do not start the engine before charging refrigerant.**
- **If the engine is started with no refrigerant charge, replace the compressor.**
- **Replace the gasket and O-rings with new parts, and then apply compressor oil.**

1) Install each part in the reverse order of removal.
2) Charge refrigerant. <Ref. to AC-25, PROCEDURE, Refrigerant Charging Procedure.>

Tightening torque:

Air conditioning unit: <Ref. to AC-10, AIR CONDITIONING UNIT, COMPONENT, General Description.>

GETtheMANUALS.org

21.Hose and Pipe

A: REMOVAL

CAUTION:
- **When disconnecting hoses, do not apply excessive force.**
- **Seal the disconnected hose with a plug or vinyl tape to prevent foreign matter from entering.**

1) Disconnect the ground cable from battery.
2) Using the refrigerant recovery system, discharge refrigerant. <Ref. to AC-24, PROCEDURE, Refrigerant Recovery Procedure.>
3) Remove the bolts and screws and detach the hoses and pipes.

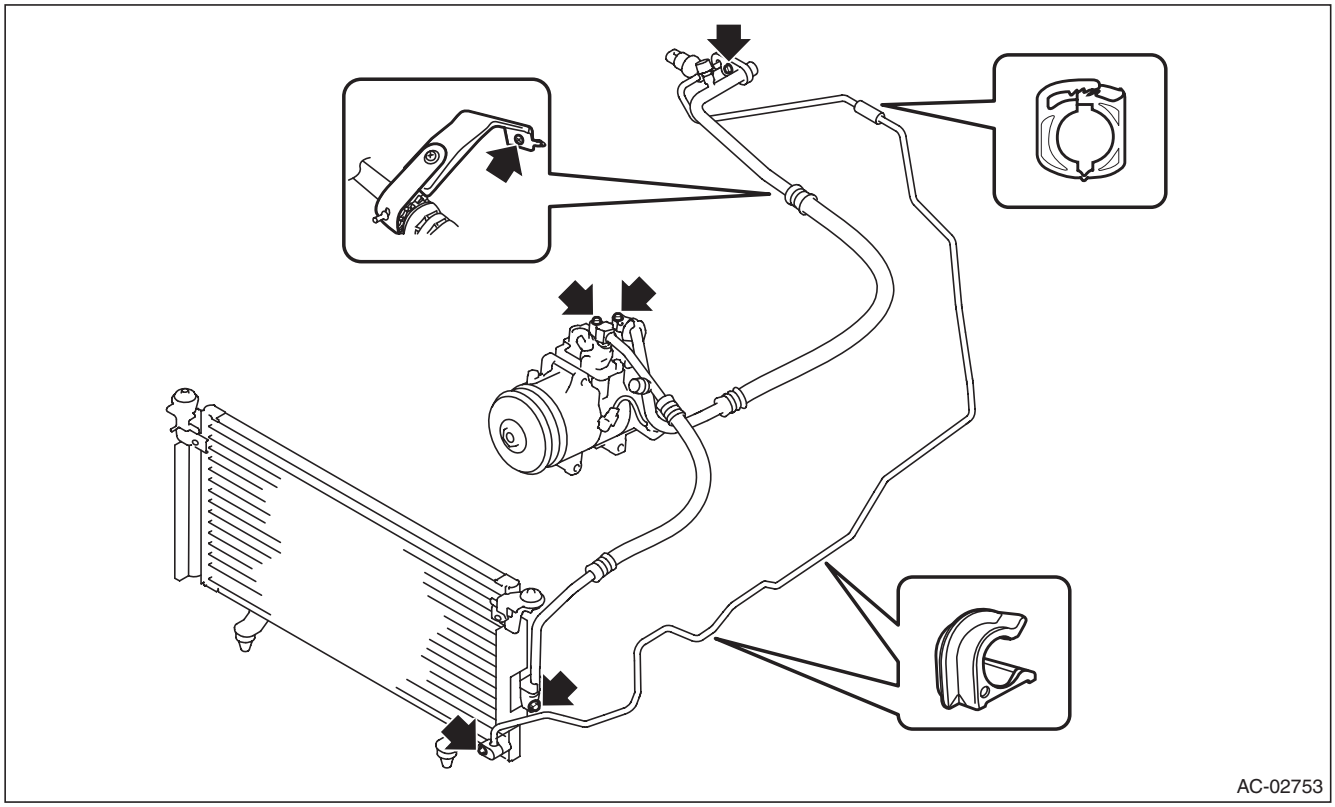

B: INSTALLATION

CAUTION:
- **Do not start the engine before charging refrigerant.**
- **If the engine is started with no refrigerant charge, replace the compressor.**
- **Replace the O-rings with new parts, and then apply compressor oil.**
- **When connecting hoses, do not apply an excessive force to them. After installing, check that no torsion or excessive tension applied to the hoses.**

1) Install each part in the reverse order of removal.
2) Charge refrigerant. <Ref. to AC-25, PROCEDURE, Refrigerant Charging Procedure.>

Tightening torque:
Refer to "COMPONENT" of "General Description". <Ref. to AC-10, AIR CONDITIONING UNIT, COMPONENT, General Description.>

C: INSPECTION

1) Check the hoses for cracks, damage and expansion. Replace the hose if faulty.
2) Check the pipes for crack or damage. Replace the pipe if faulty.

GETtheMANUALS.org

22. Pressure Sensor

A: INSPECTION

1) Perform a diagnosis code (DTC) check by connecting the Subaru Select Monitor.
2) If any diagnosis code (DTC) is displayed, refer to “List of Diagnostic Trouble Code (DTC)” in “HVAC SYSTEM (DIAGNOSTICS)” section. <Ref. to AC(diag)-53, LIST, List of Diagnostic Trouble Code (DTC).>

GETtheMANUALS.org

23. Ambient Sensor (Auto A/C Model)

A: REMOVAL

1) Disconnect the ground cable from battery.
2) Remove the clips and remove the grille bracket. (Sedan model)

NOTE:
To prevent damage to the grille bracket, make sure to remove all clips.

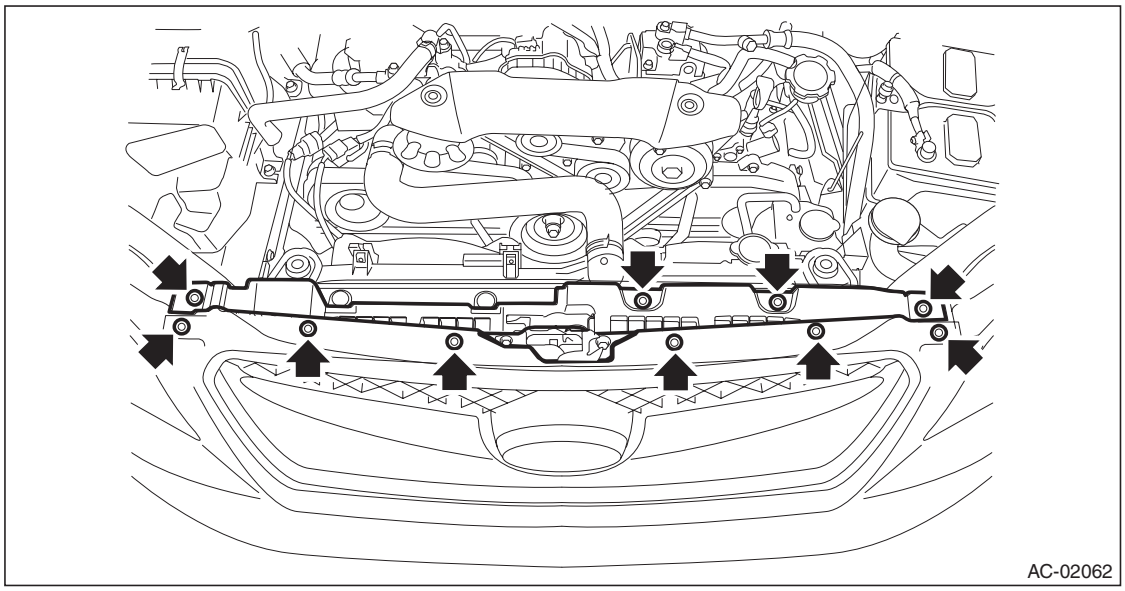

3) Remove the ambient sensor.
   (1) Disconnect the connector.
   (2) Remove the ambient sensor from the radiator lower panel.

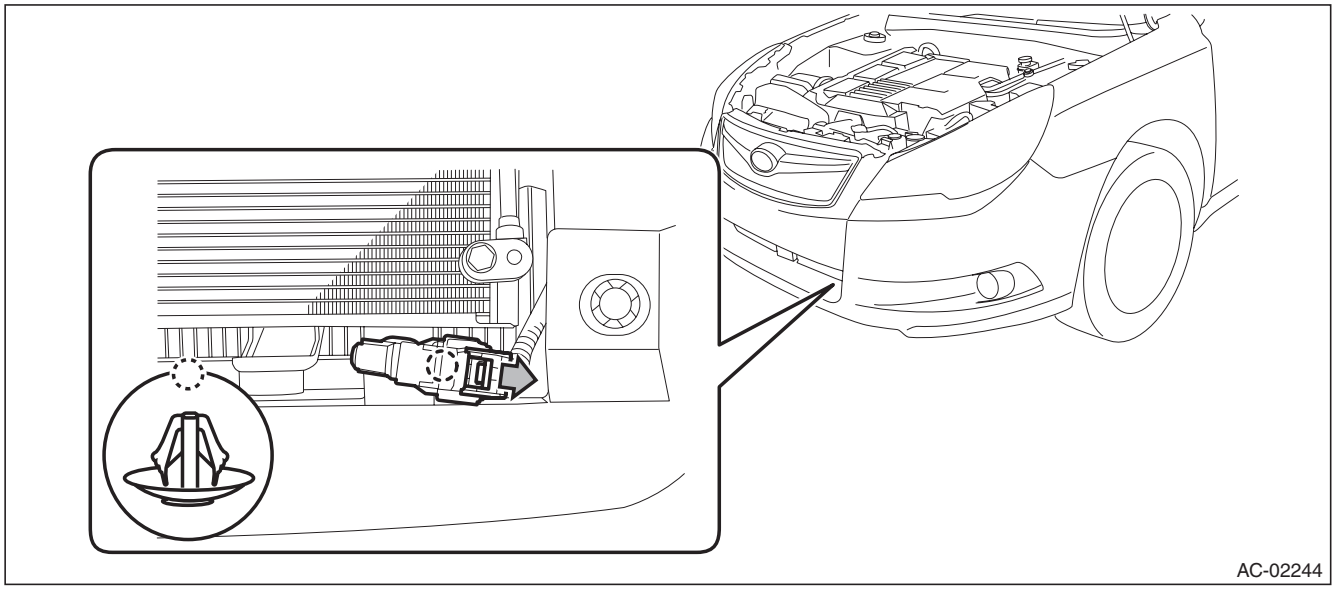

B: INSTALLATION

Install each part in the reverse order of removal.

GETtheMANUALS.org

C: INSPECTION

Preparation tool: Circuit tester

1) Visually check the ambient sensor for dirt or damage, and clean or replace as necessary.
2) Check the resistance between ambient sensor terminals.

CAUTION:
During inspection, be careful not to touch the sensor end in order to avoid misjudgment due to body temperature.

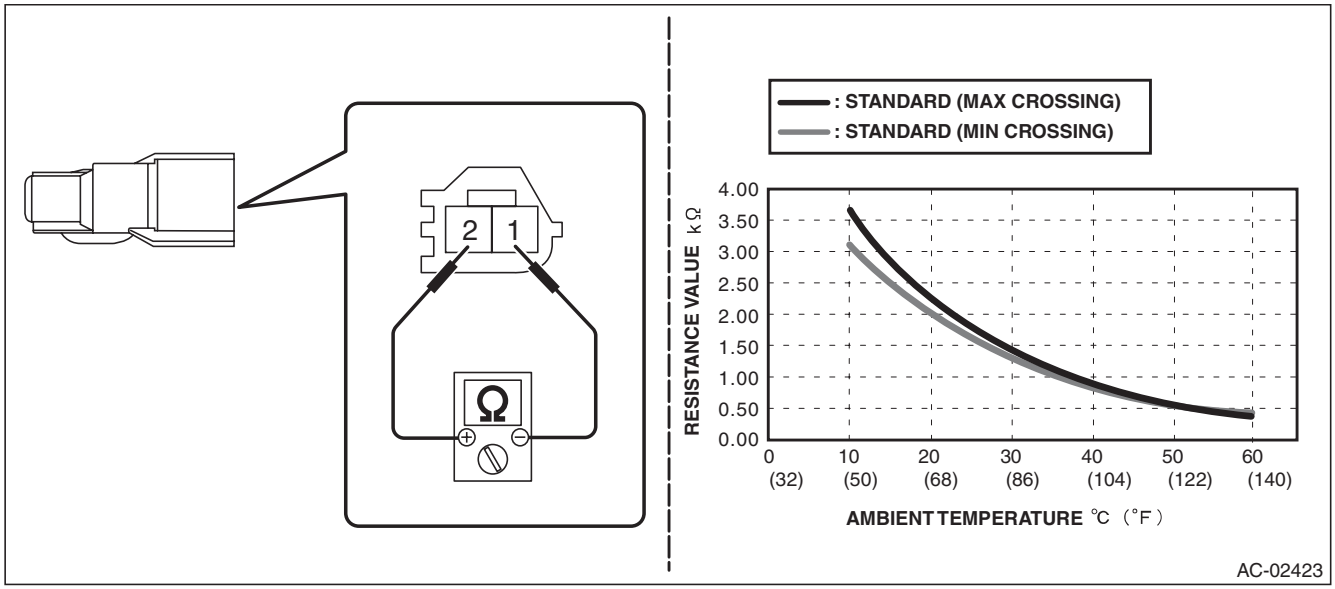

Terminal No.	Inspection conditions	Standard
1 — 2	10°C	3.12 — 3.70 kΩ
	15°C	2.49 — 2.88 kΩ
	20°C	2.00 — 2.26 kΩ
	25°C	1.62 — 1.79 kΩ
	30°C	1.32 — 1.42 kΩ
	35°C	1.08 — 1.14 kΩ
	40°C	0.89 — 0.92 kΩ
	45°C	0.74 — 0.75 kΩ
	50°C	0.62 — 0.62 kΩ
	55°C	0.52 — 0.51 kΩ
	60°C	0.44 — 0.42 kΩ

3) Replace the ambient sensor if the inspection result is not within the standard value.

GETtheMANUALS.org

24.Sunload Sensor (Auto A/C Model)

A: REMOVAL

NOTE:
The sunload sensor is integrated with the light control sensor.
1) Disconnect the ground cable from battery.
2) Remove the sunload sensor.

CAUTION:
Be careful not to damage the sensors and interior trims when removing.

(1) Release the claws and clips, then detach the side speaker cover (RH).

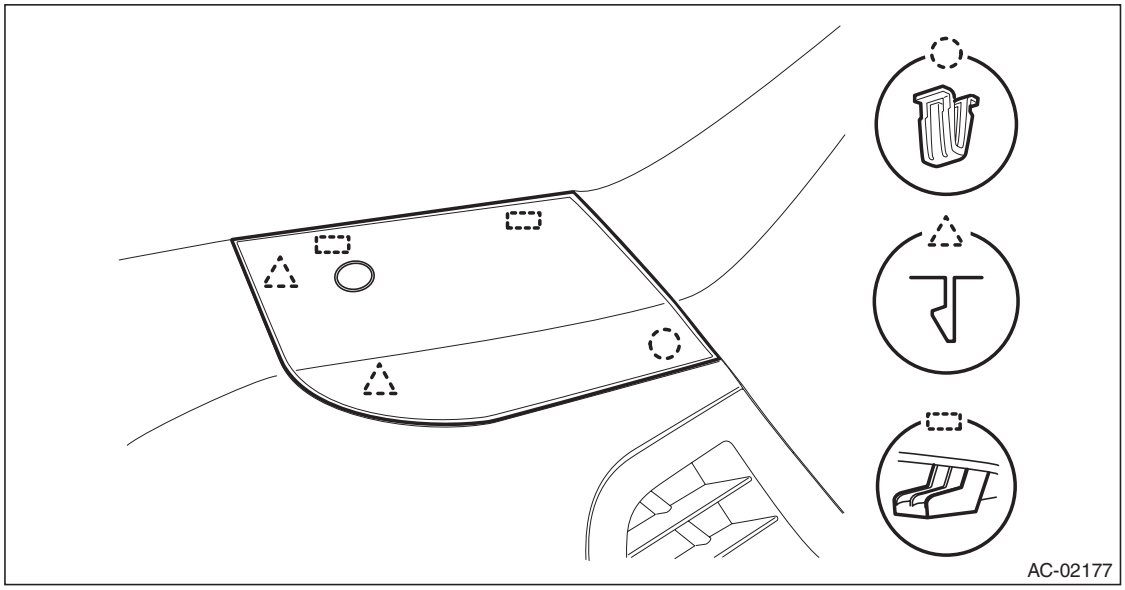

(2) Push out the sunload sensor by pressing the left and right claws.
(3) Disconnect the connector and remove the sunload sensor.

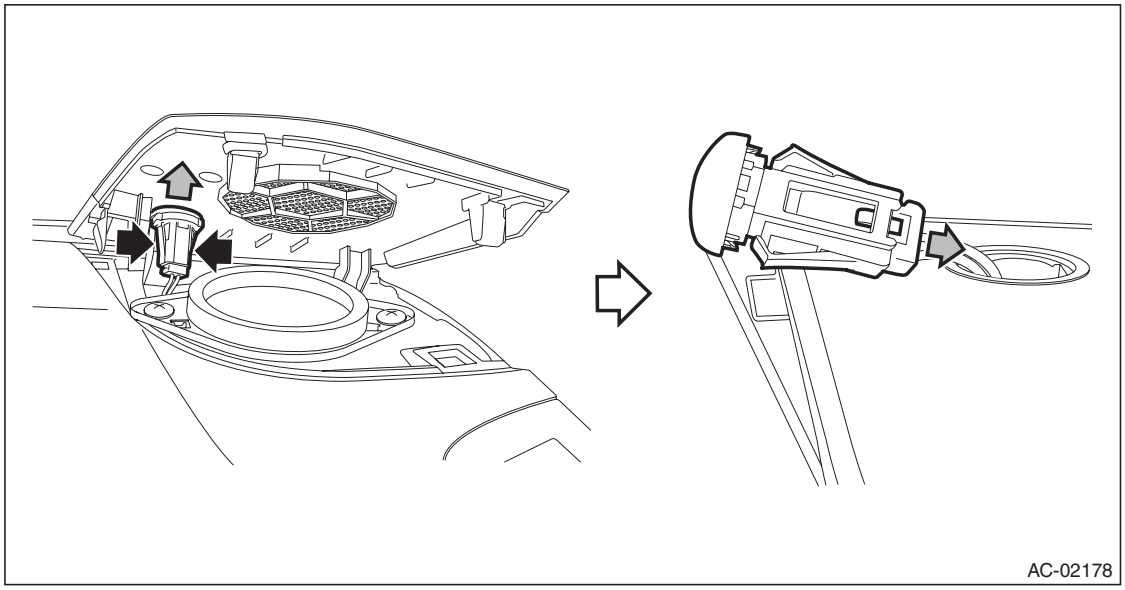

B: INSTALLATION

Install each part in the reverse order of removal.

GETtheMANUALS.org

C: INSPECTION

Preparation tool: Subaru Select Monitor III KIT

1) Check if there is anything that affects sensing, around the sunload sensor.
   (1) Is there anything placed on the sunload sensor that disturbs sensing?
   (2) Is there anything on the windshield glass, such as sticker and film, that disturbs sensing?
   - **No** → Go to step 2).
   - **Yes** → Remove everything that affects sensing.
2) Check the sunload sensor using the Subaru Select Monitor.
   (1) Prepare the Subaru Select Monitor kit.
   (2) Run the “PC application for Subaru Select Monitor”.
   (3) On «Main Menu» display, select {Each System Check}.
   (4) On «System Selection Menu» display, select {Air Condition System}.
   (5) On «Air Conditioning Diagnosis» display, select {Current Data Display & Save}.
   (6) Select {Quantity of Sunload} with UP/DOWN key and set with the [OK] key.
   (7) Cover the sunload sensor with cloth and the like to avoid direct light. Does {Quantity of Sunload} indicate 0 W/m^2?
   - **Yes** → Go to step 3).
   - **No** → Replace the sunload sensor.
3) From step 2), expose the sunload sensor to light.
   (1) Place intense light such as incandescent light at 30 cm or less from the sunload sensor.
   (2) Does the {Quantity of Sunload} indicate 2000 W/m^2 or less?

CAUTION:
The value changes depending on the angle of light.
- **Yes** → The sunload sensor is normal.
- **No** → Replace the sunload sensor.

GETtheMANUALS.org

25.In-Vehicle Sensor (Auto A/C Model)

A: REMOVAL

CAUTION:
Be careful not to damage the sensors and interior trims when removing.

1) Disconnect the ground cable from battery.
2) Remove the clips, and remove the instrument panel side cover LH.

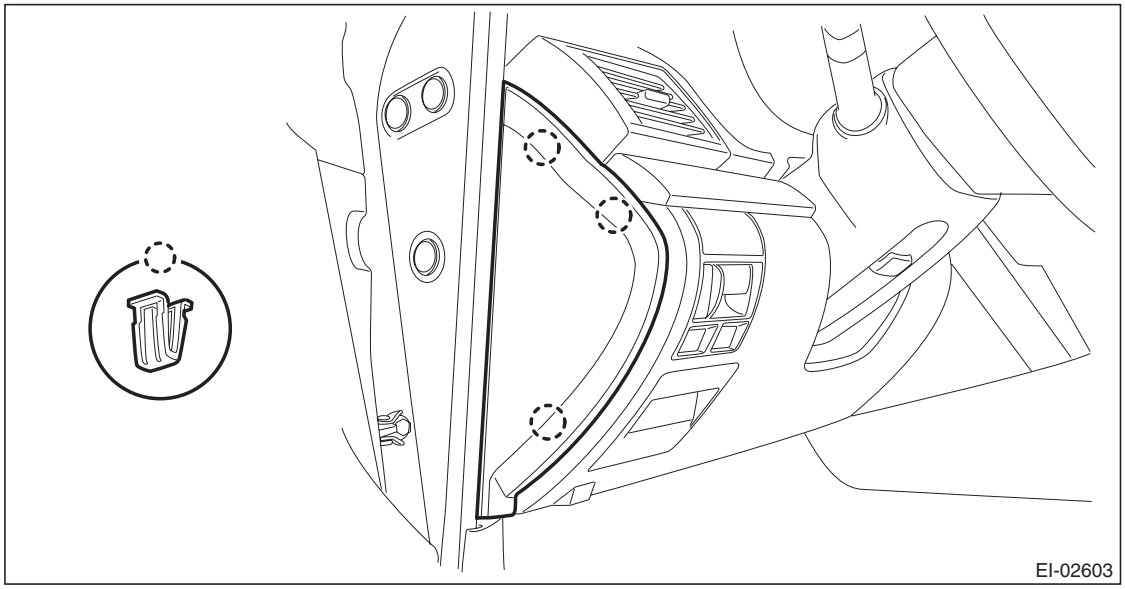

3) Remove the instrument panel lower cover.
   (1) Remove the clip.
   (2) Remove the data link connector, and remove the instrument panel lower cover under.

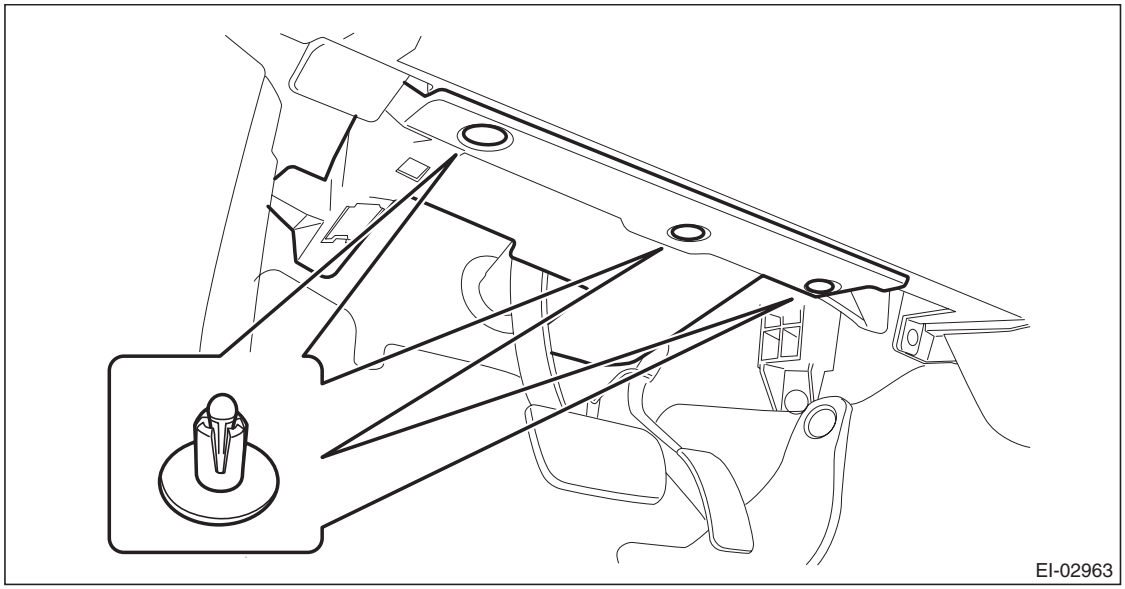

GETtheMANUALS.org

(3) Remove the screws and clips and release the claws, and remove the instrument panel lower cover while disconnecting the harness connectors.

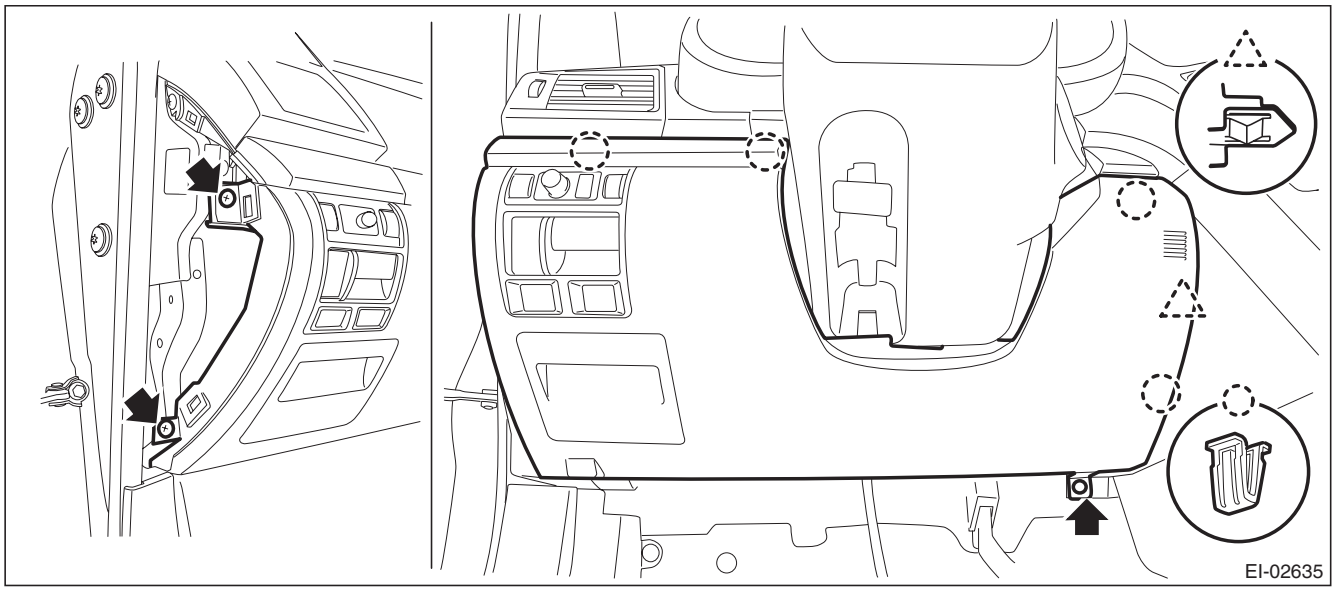

4) Remove the screw and remove the in-vehicle sensor from the instrument lower cover.

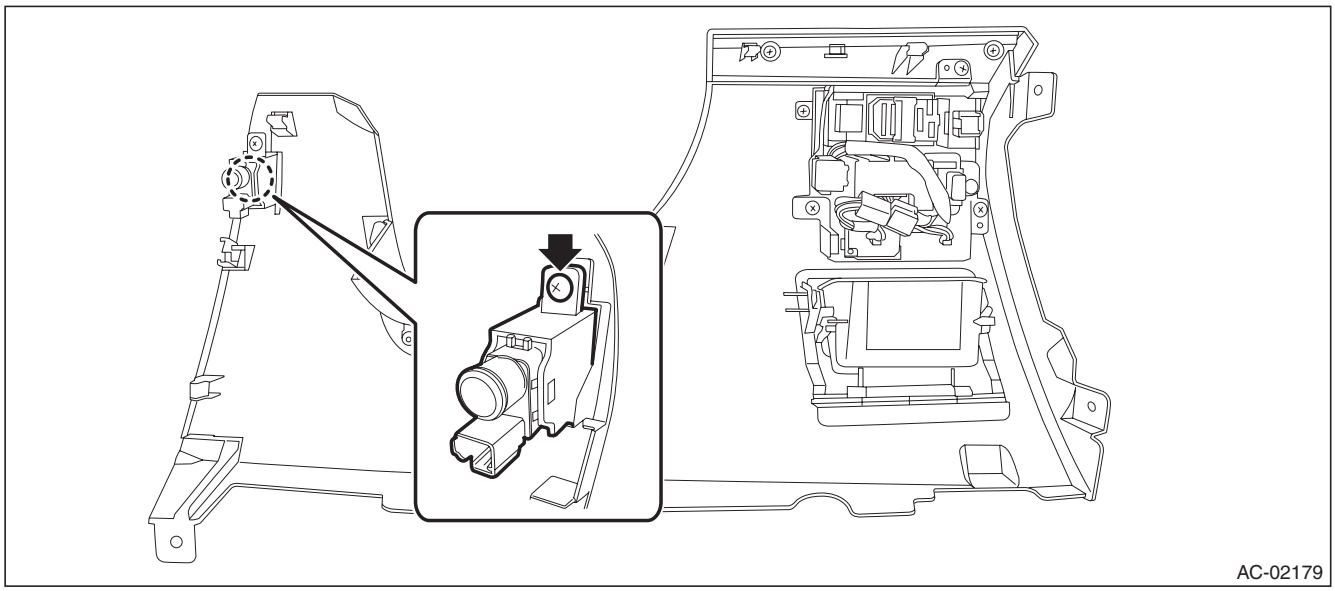

B: INSTALLATION

Install each part in the reverse order of removal.

GETtheMANUALS.org

C: INSPECTION

Preparation tool: Circuit tester

1) Set the vehicle to the following conditions.

Item	Condition
Ignition switch	ON
AC switch	ON
Temperature control switch	HI (MAX HOT)
Mode change switch	DEF
Fan switch or dial	HI (MAX)

2) Check the suction port (A) for in-vehicle sensor provided on the instrument panel lower cover.

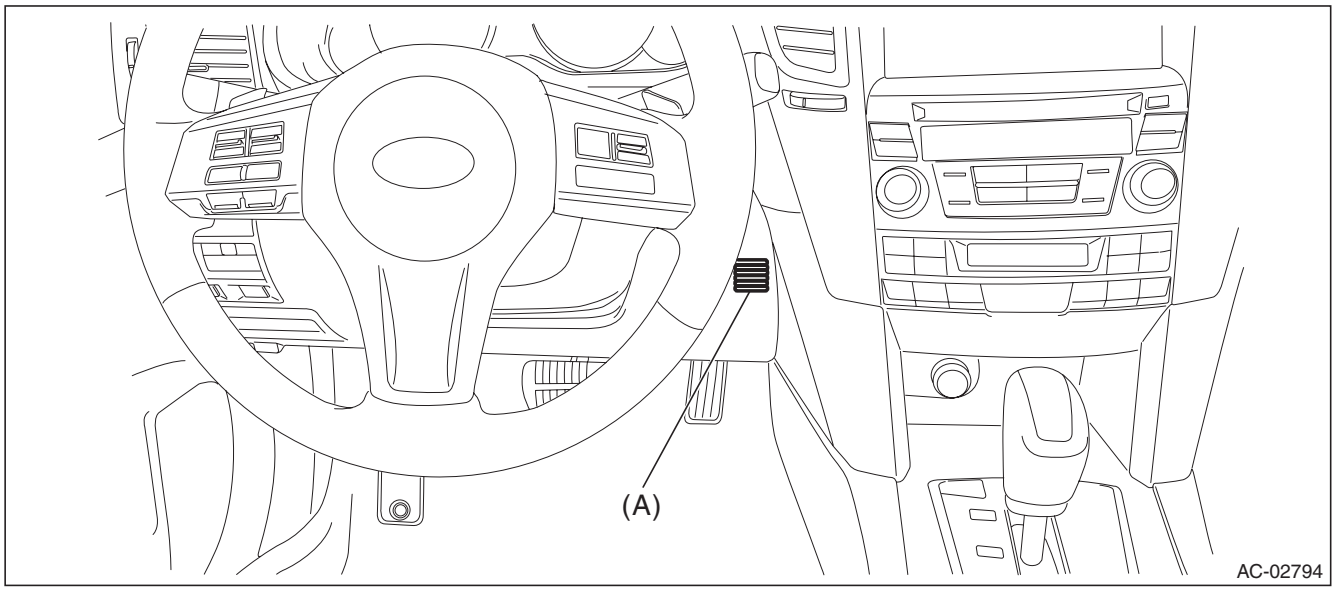

(1) Put a strip of paper close to the front side of the suction port (A).
(2) Can you see the paper moving towards the port and the air being sucked into the port?

CAUTION:
Be careful not to let the paper get sucked into the port.

- **Yes** → Go to step 5).
- **No** → Go to step 3).

GETtheMANUALS.org

3) Remove the instrument panel lower cover, and check the aspirator hose (A).

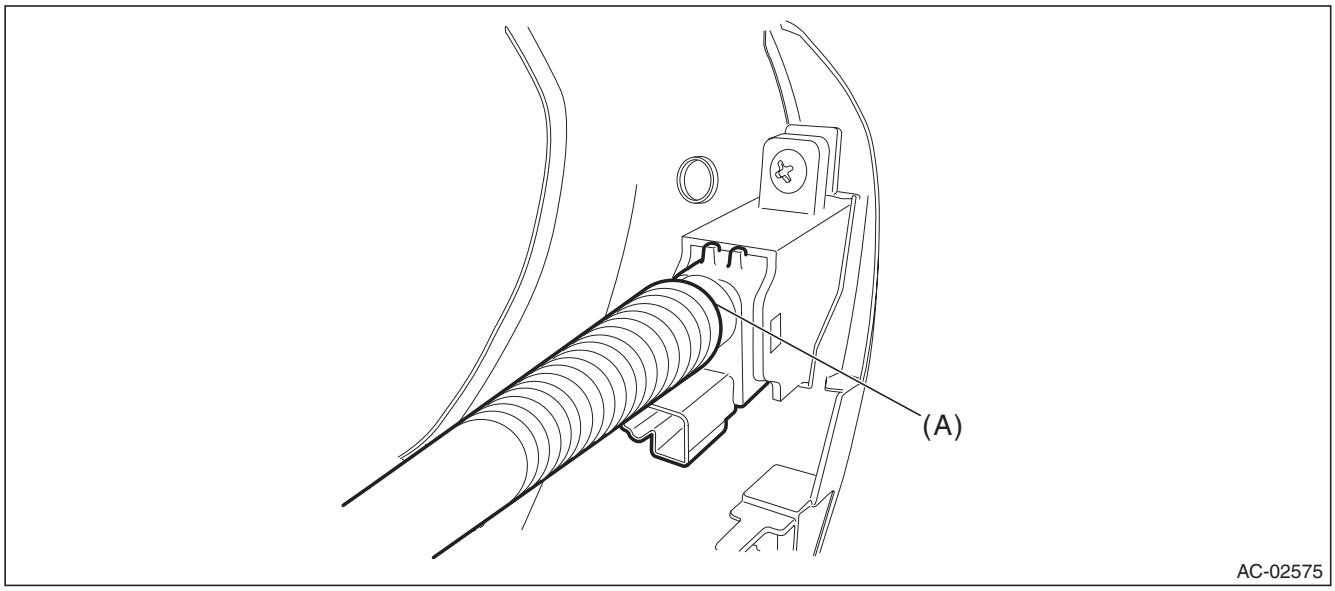

(1) Is the aspirator hose on both sides of case and sensor disconnected?
(2) Are there any kinks or cracks on the aspirator hose?
- **No** → Go to step 4).
- **Yes** → Repair or replace the aspirator hose if necessary.

4) Check if there is anything that affects sensing, around the in-vehicle sensor.
(1) Is the in-vehicle sensor hole plugged?
(2) Is there any heat-producing part (audio or navigation system, etc.) around in-vehicle sensor?
- **No** → Go to step 5).
- **Yes** → Remove everything that affects sensing.

GETtheMANUALS.org

5) Perform the inspection of in-vehicle sensor unit.
   (1) Disconnect the in-vehicle sensor connector.
   (2) Is the resistance between terminals of in-vehicle sensor within standard value?

CAUTION:
During inspection, be careful not to touch the sensor end in order to avoid misjudgment due to body temperature.

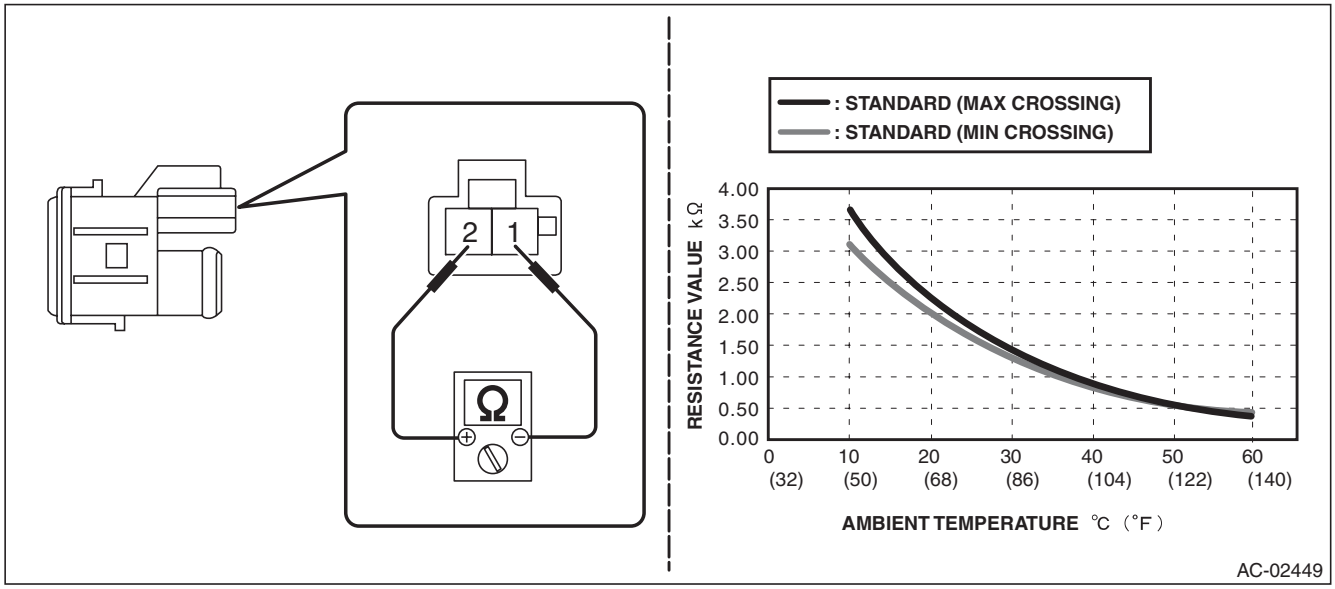

Terminal No.	Inspection conditions	Standard
1 — 2	10°C	3.12 — 3.70 kΩ
	15°C	2.49 — 2.88 kΩ
	20°C	2.00 — 2.26 kΩ
	25°C	1.62 — 1.79 kΩ
	30°C	1.32 — 1.42 kΩ
	35°C	1.08 — 1.14 kΩ
	40°C	0.89 — 0.92 kΩ
	45°C	0.74 — 0.75 kΩ
	50°C	0.62 — 0.62 kΩ
	55°C	0.52 — 0.51 kΩ
	60°C	0.44 — 0.42 kΩ

- **Yes** → The in-vehicle sensor is normal.
- **No** → Replace the in-vehicle sensor.

GETtheMANUALS.org

26. Evaporator Sensor

A: REMOVAL

1) Remove the evaporator. <Ref. to AC-66, REMOVAL, Evaporator.>
2) Remove the evaporator sensor from the evaporator.

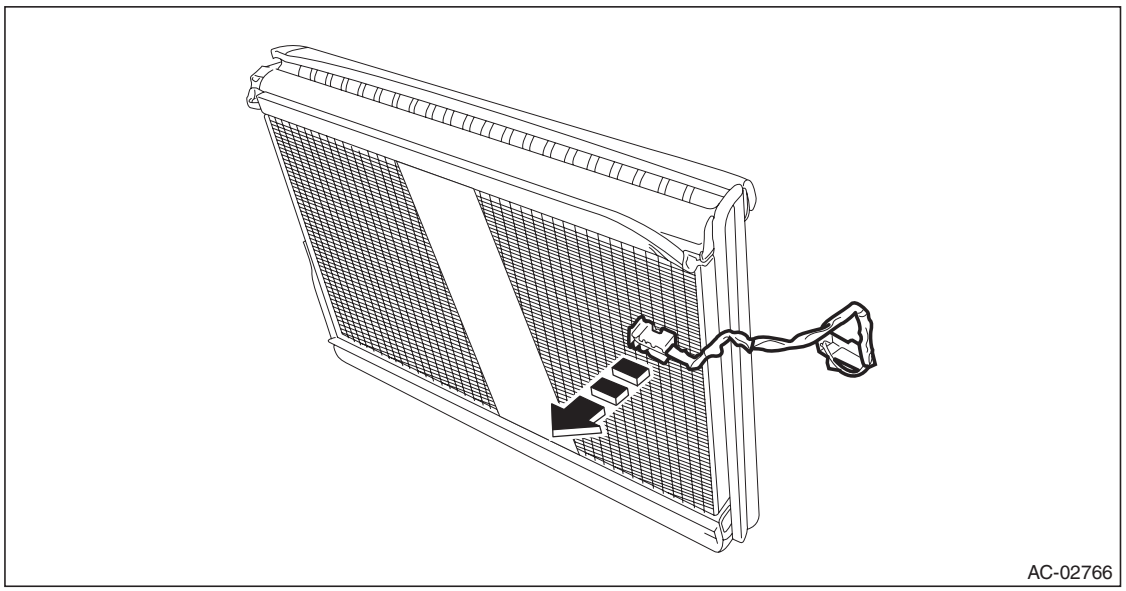

B: INSTALLATION

CAUTION:
- **Do not start the engine before charging refrigerant.**
- **If the engine is started with no refrigerant charge, replace the compressor.**
- **Make sure that the water seal gasket on the cover attachment area is securely attached.**
- **Replace the O-rings with new parts, and then apply compressor oil.**

1) Install the evaporator sensor at the position shown in the figure below.

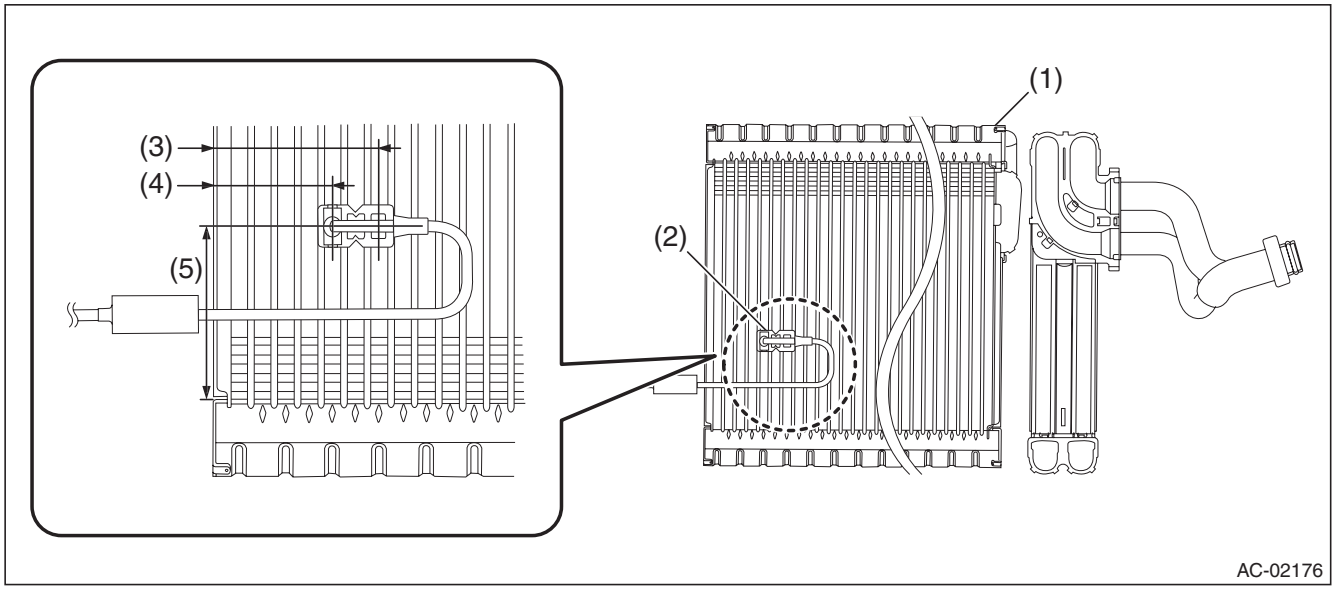

(1)	Evaporator	(3)	47.7 mm (1.88 in)	(5)	50 mm (1.97 in)
(2)	Evaporator sensor	(4)	34.3 mm (1.35 in)		

GETtheMANUALS.org

2) Install each part in the reverse order of removal.

NOTE:
Refer to “INSTALLATION” of “Instrument Panel Assembly”. <Ref. to EI-95, INSTALLATION, Instrument Panel Assembly.>

3) Fill engine coolant.
- H4 non-turbo model: <Ref. to CO(H4SO)-14, FILLING OF ENGINE COOLANT, REPLACEMENT, Engine Coolant.>
- H4 turbo model: <Ref. to CO(H4DOTC)-14, FILLING OF ENGINE COOLANT, REPLACEMENT, Engine Coolant.>
- H6 model: <Ref. to CO(H6DO)-12, FILLING OF ENGINE COOLANT, REPLACEMENT, Engine Coolant.>

4) Charge refrigerant. <Ref. to AC-25, PROCEDURE, Refrigerant Charging Procedure.>

Tightening torque:
Heater cooling unit: <Ref. to AC-6, HEATER COOLING UNIT, COMPONENT, General Description.>
Blower motor unit: <Ref. to AC-8, BLOWER MOTOR UNIT, COMPONENT, General Description.>

C: INSPECTION

Preparation tool:
Subaru Select Monitor III KIT
Circuit tester
Thermometer

1) Prepare the vehicle.

NOTE:
Check that the ambient temperature is 25 — 40°C (77 — 104°F) and that the humidity is 30% — 80%.
- Place the vehicle in the workshop or in the shade and windless condition.
- Open all windows.

2) Set the vehicle to the following conditions.

Item	Condition
Engine	Idling
Air vent grille	Shutter is fully open.
AC switch	OFF
Temperature control switch or dial	LO (MAX COOL)
FRESH/RECIRC switch	CIRC
Mode change switch	VENT
Fan switch (auto A/C model)	4 — 6 levels
Fan dial (manual A/C model)	3 — 4 levels

3) Using the Subaru Select Monitor, check the evaporator sensor.
(1) Prepare the Subaru Select Monitor kit.
(2) Run the “PC application for Subaru Select Monitor”.
(3) On «Main Menu» display, select {Each System Check}.
(4) On «System Selection Menu» display, select {Air Condition System}.
(5) On «Air Conditioning Diagnosis» display, select {Current Data Display & Save}.
(6) Select {Evaporator Temperature} with UP/DOWN key and set with the [OK] key.
(7) Idle the engine for 15 minutes, and then compare the outlet opening temperature with {Evaporator Temperature Target}.

NOTE:
For outlet opening temperature, measure the average temperature of center grille assembly and side grille assembly.

(8) Is the difference between outlet opening temperature and {Evaporator Temperature Target} by 3°C (5.4°F) or more?
- **Yes** → Go to step 4).
- **No** → Evaporator sensor is normal.

GETtheMANUALS.org

4) Perform the inspection of evaporator sensor unit.
   (1) Disconnect the evaporator sensor connector.
   (2) Is the resistance between terminals of evaporator sensor within standard value?

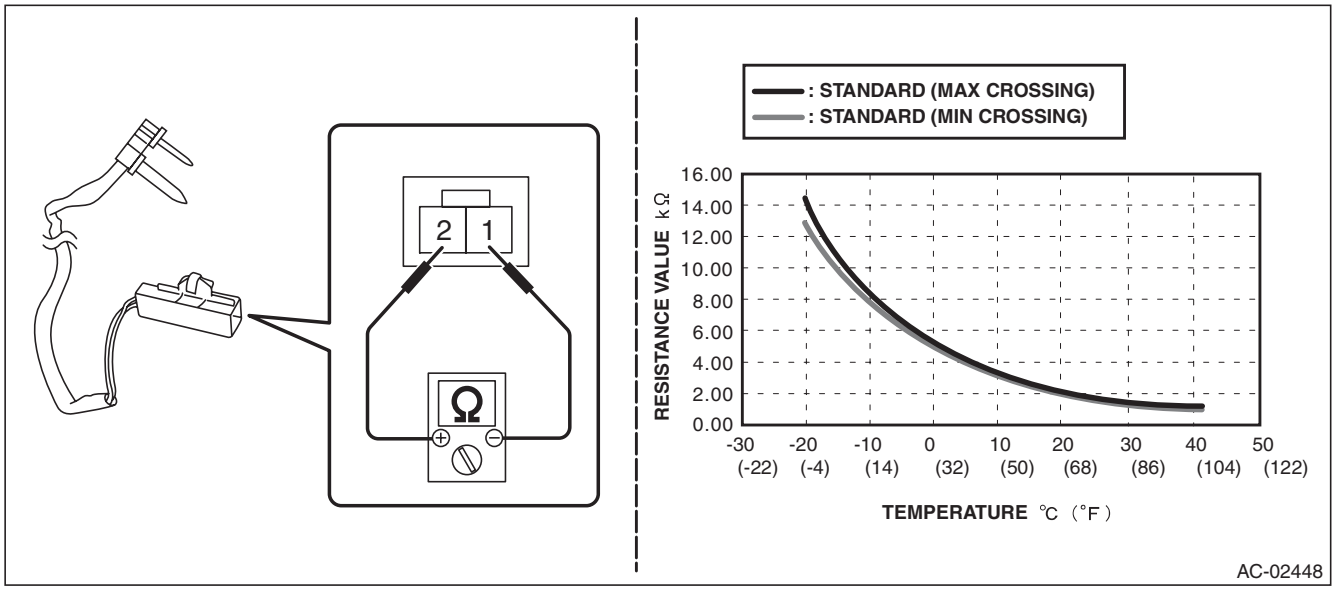

Terminal No.	Inspection conditions	Standard
1 — 2	-20°C	13.584 — 14.541 kΩ
	-15°C	10.34 — 10.946 kΩ
	-10°C	7.938 — 8.313 kΩ
	-5°C	6.143 — 6.366 kΩ
	0°C	4.79 — 4.914 kΩ
	5°C	3.718 — 3.829 kΩ
	10°C	2.889 — 3.031 kΩ
	15°C	2.247 — 2.435 kΩ
	20°C	1.785 — 1.952 kΩ
	25°C	1.427 — 1.574 kΩ
	30°C	1.149 — 1.278 kΩ
	35°C	0.931 — 1.044 kΩ
	40°C	0.759 — 0.858 kΩ

- **Yes** → Evaporator sensor is normal.
- **No** → Replace the evaporator sensor.

GETtheMANUALS.org

27. FRESH/RECIRC Door Actuator

A: REMOVAL

1) Set the intake door actuator to RECIRC position.
   (1) Turn the ignition switch to ON.
   (2) Operate the control panel and switch to RECIRC mode.
   (3) In the condition of step (2), turn the ignition switch to OFF.
2) Remove the instrument panel assembly. <Ref. to EI-76, REMOVAL, Instrument Panel Assembly.>
3) Remove the screw, and remove the intake door actuator.

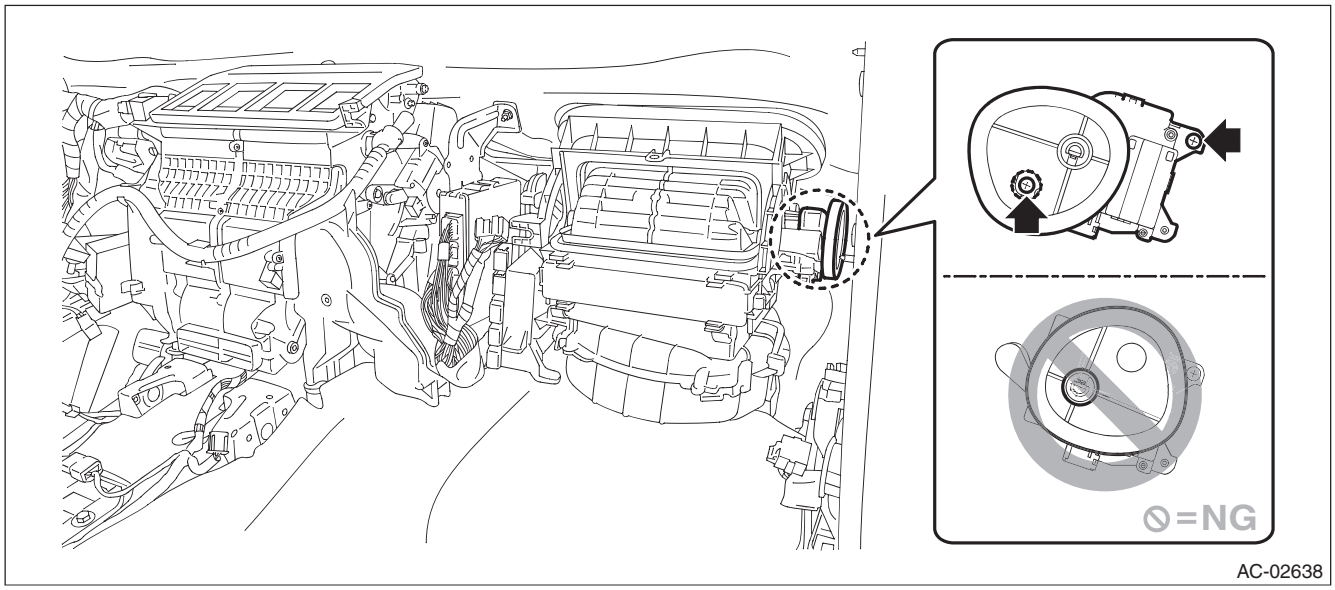

B: INSTALLATION

Install each part in the reverse order of removal.

NOTE:
Refer to “INSTALLATION” of “Instrument Panel Assembly”. <Ref. to EI-95, INSTALLATION, Instrument Panel Assembly.>

GETtheMANUALS.org

C: INSPECTION

1. ACTUATOR LINK

1) Visually check the operating range of the link, and remove the foreign matter if any.
2) Operate the FRESH/RECIRC switch, and check that the link operates normally.
3) If the actuator does not operate normally, check the intake door actuator unit.

2. CHECK ACTUATOR OPERATION

1) Check the actuator operation when battery voltage is applied between the terminals of intake door actuator.

CAUTION:
Disconnect the battery immediately after the actuator stops operation. Otherwise, the motor may be damaged.

Terminal No.	Inspection conditions	Operating position	Connection diagram
7 (+) — 1 (–)	Connect battery to the terminals	FRESH	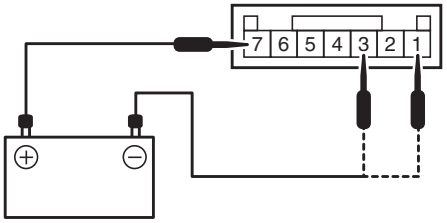
7 (+) — 3 (–)		RECIRC	

2) If the actuator does not operate normally, replace the intake door actuator.

GETtheMANUALS.org

28. Mode Door Actuator

A: REMOVAL

1) Remove the instrument panel lower cover. <Ref. to EI-64, REMOVAL, Instrument Panel Lower Cover.>
2) Remove the bolt and detach the knee protector.

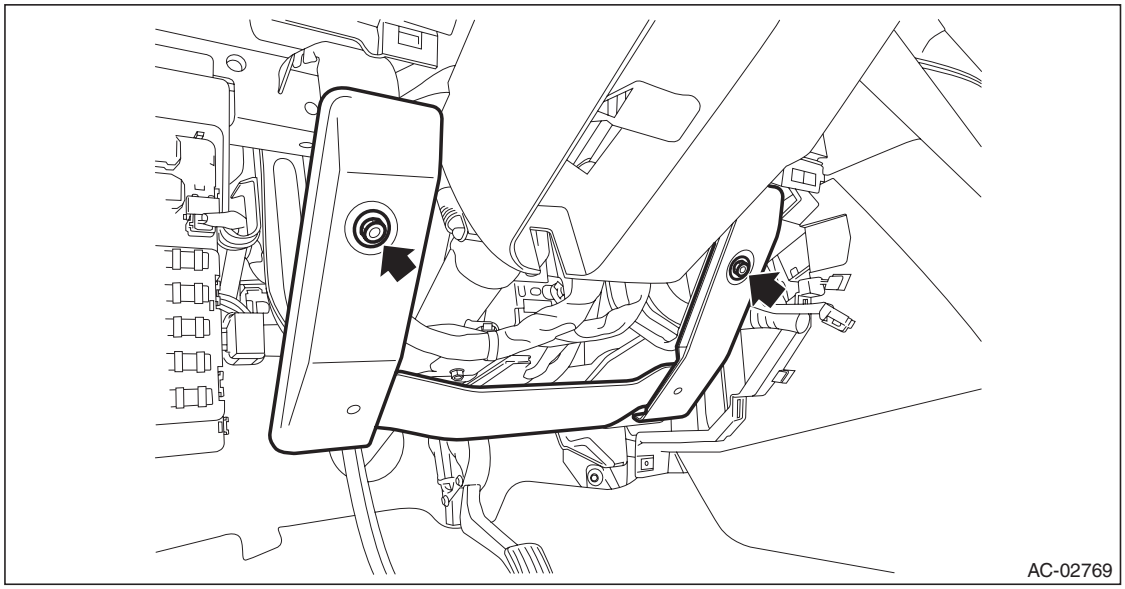

3) Remove the body integrated unit.

CAUTION:
Be careful to keep water and other foreign materials away from body integrated unit.

(1) Remove the harness clip and connector.
(2) Remove the bolts, and remove the body integrated unit.

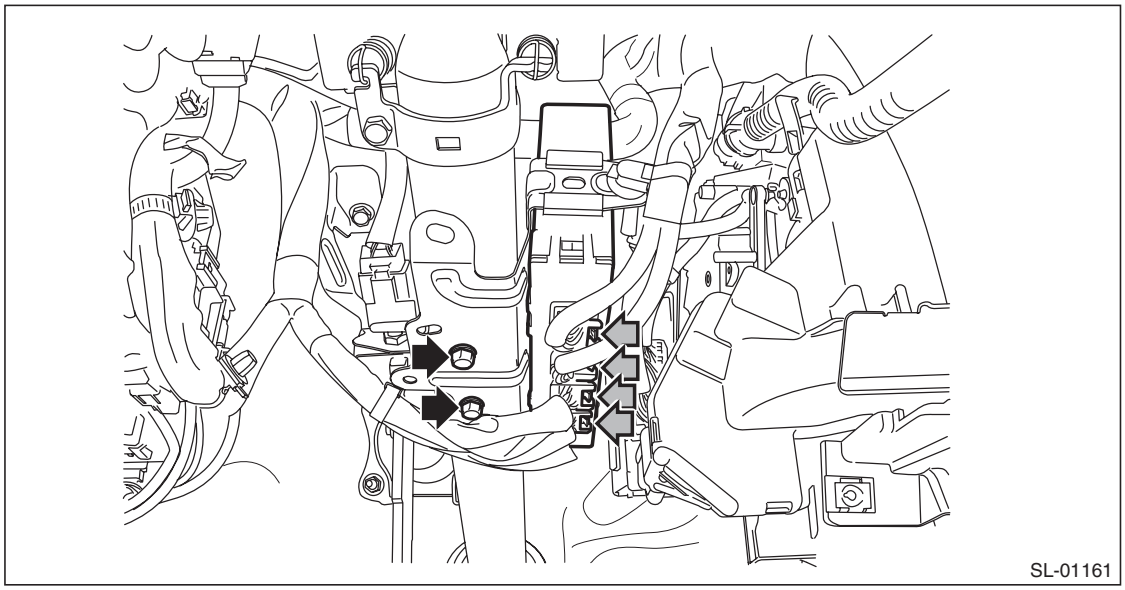

GETtheMANUALS.org

4) Remove the mode door actuator.
   (1) Disconnect the connector.
   (2) Remove the screws, and remove the mode door actuator.

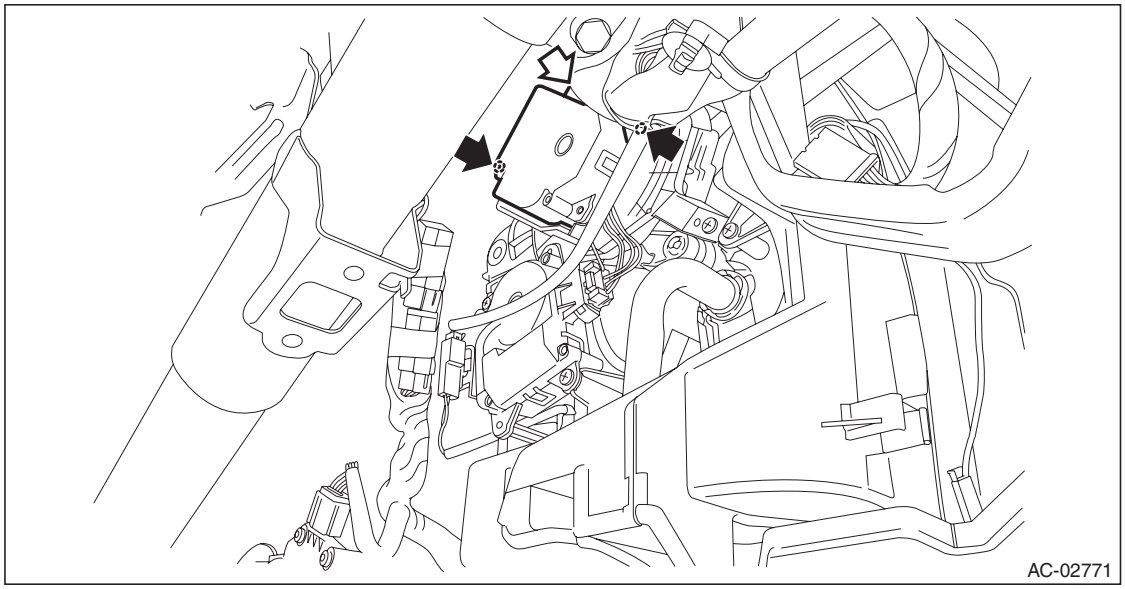

B: INSTALLATION

Install each part in the reverse order of removal.

C: INSPECTION

1. ACTUATOR LINK

1) Visually check the operating range of the link, and remove the foreign matter if any.
2) Operate the mode change switch, and check that the link operates normally.
3) If the actuator does not operate normally, check the mode door actuator unit.

GETtheMANUALS.org

2. CHECK ACTUATOR OPERATION

Preparation tool: Circuit tester

1) Check the actuator operation when battery voltage is applied between the terminals of mode door actuator.

CAUTION:
Disconnect the battery immediately after the actuator stops operation. Otherwise, the motor may be damaged.

Terminal No.	Inspection conditions	Operating position	Connection diagram
4 (+) — 5 (–)	Connect battery to the terminals	FACE	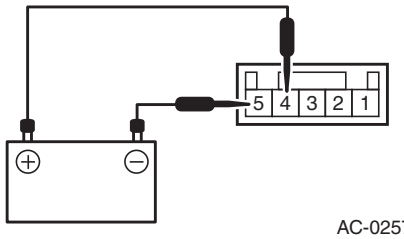 AC-02579
5 (+) — 4 (–)		DEF	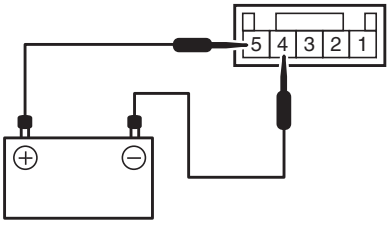 AC-02580

2) Check the resistance between terminals of the mode door actuator.

Terminal No.	Inspection conditions	Standard	Connection diagram
1 — 2	Always	4.2 — 7.8 Ω	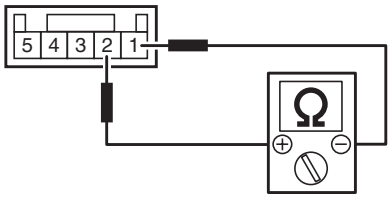 AC-02581

3) Connect the mode door actuator connector, turn the ignition switch to ON and check the voltage between terminals of the mode door actuator.

Terminal No.	Inspection conditions	Standard	Connection diagram
3 (+) — 2 (–)	FACE	Approx. 4.0 V	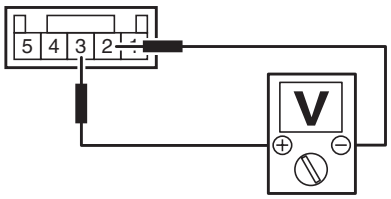 AC-02582
	DEF	Approx. 1.0 V	

4) Replace the mode door actuator if it is found defective.

GETtheMANUALS.org

29. Air Mix Door Actuator

A: REMOVAL

1. DRIVER'S SEAT

1) Remove the instrument panel lower cover. <Ref. to EI-64, REMOVAL, Instrument Panel Lower Cover.>
2) Remove the bolts, and remove the knee guard panel.

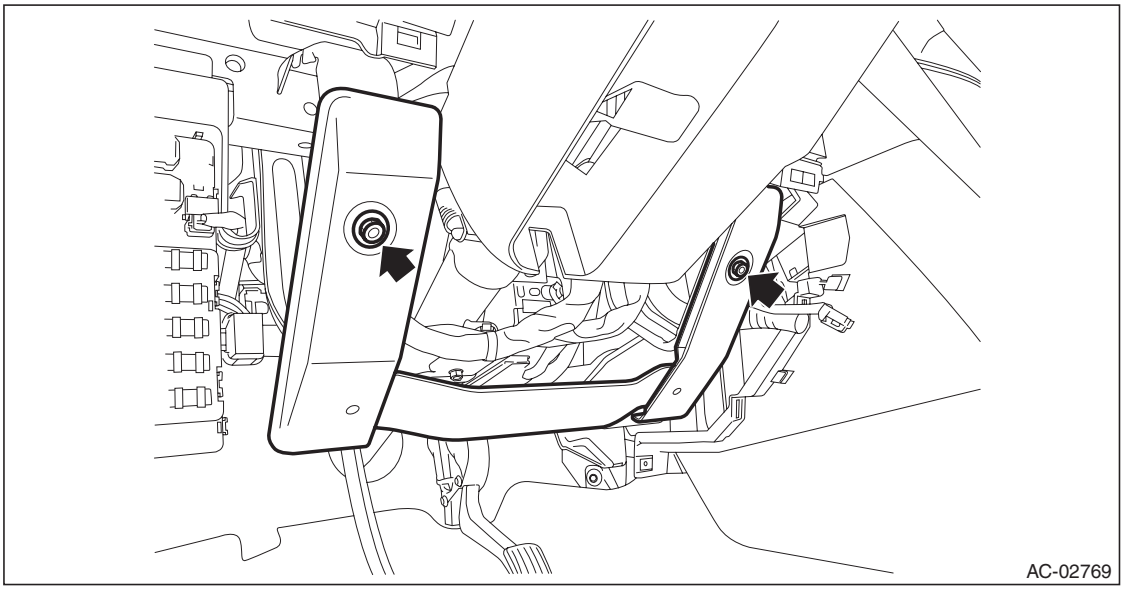

3) Remove the body integrated unit.

CAUTION:
Be careful to keep water and other foreign materials away from body integrated unit.

(1) Remove the harness clip and connector.
(2) Remove the bolts, and remove the body integrated unit.

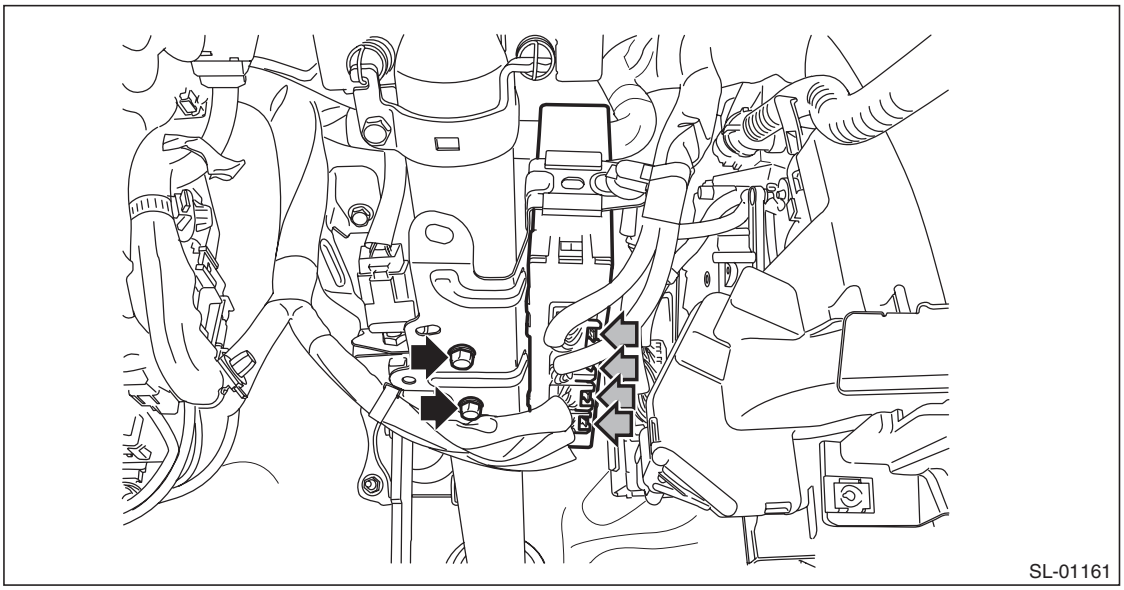

GETtheMANUALS.org

4) Remove the air mix door actuator.
   (1) Disconnect the connector.
   (2) Remove the screw, and remove the air mix door actuator.

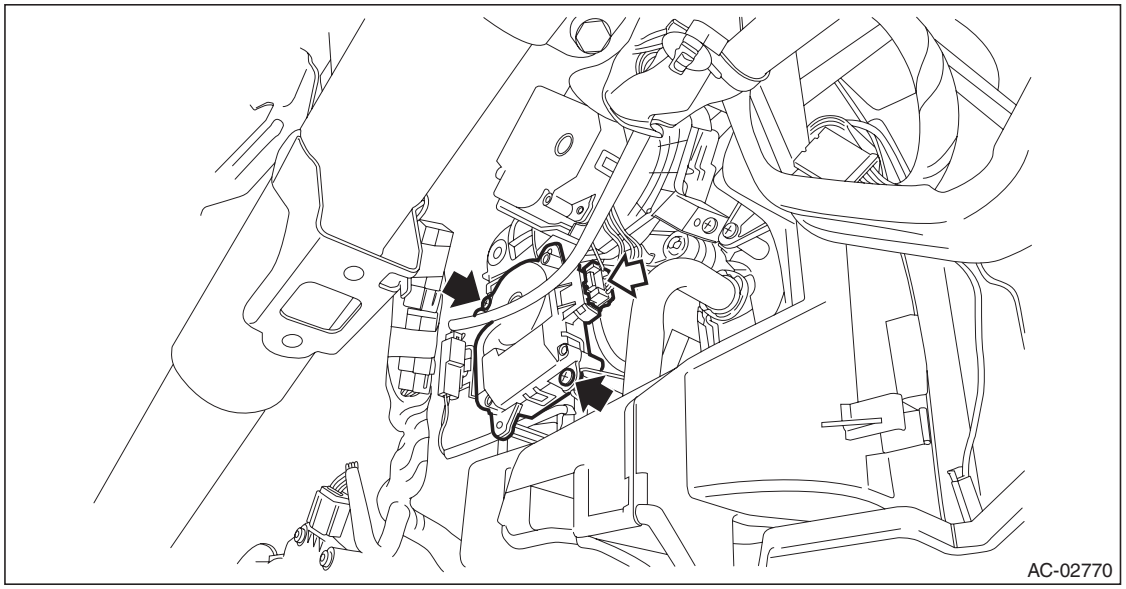

2. PASSENGER'S SEAT

1) Remove the glove box. <Ref. to EI-66, REMOVAL, Glove Box.>
2) Remove the nuts, and remove the engine control module (ECM).

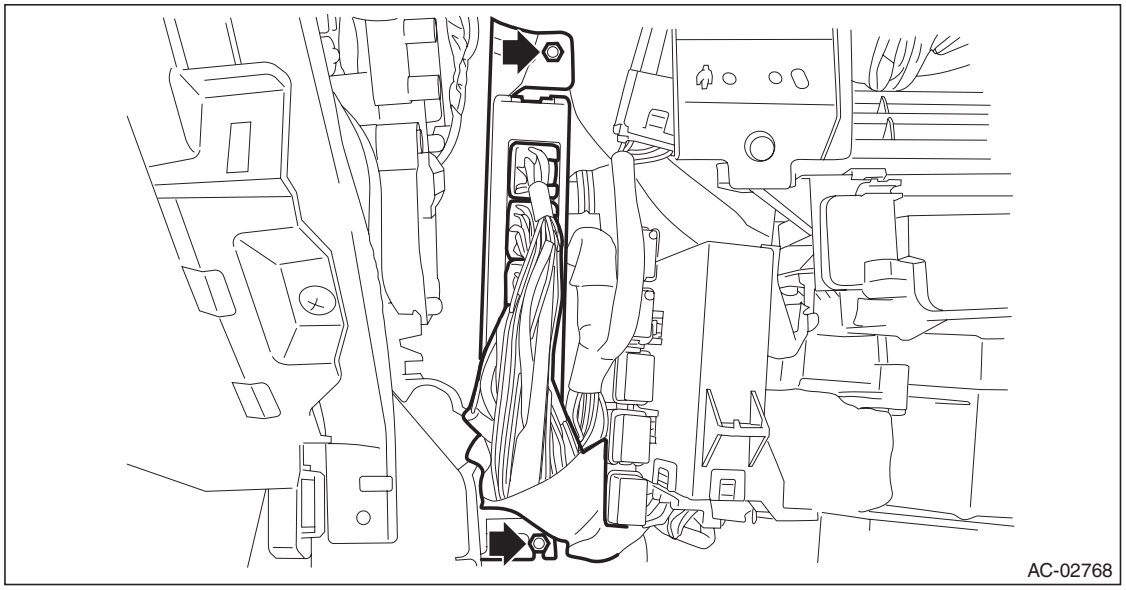

GETtheMANUALS.org

3) Remove the air mix door actuator.
   (1) Disconnect the connector.
   (2) Remove the screw, and remove the air mix door actuator.

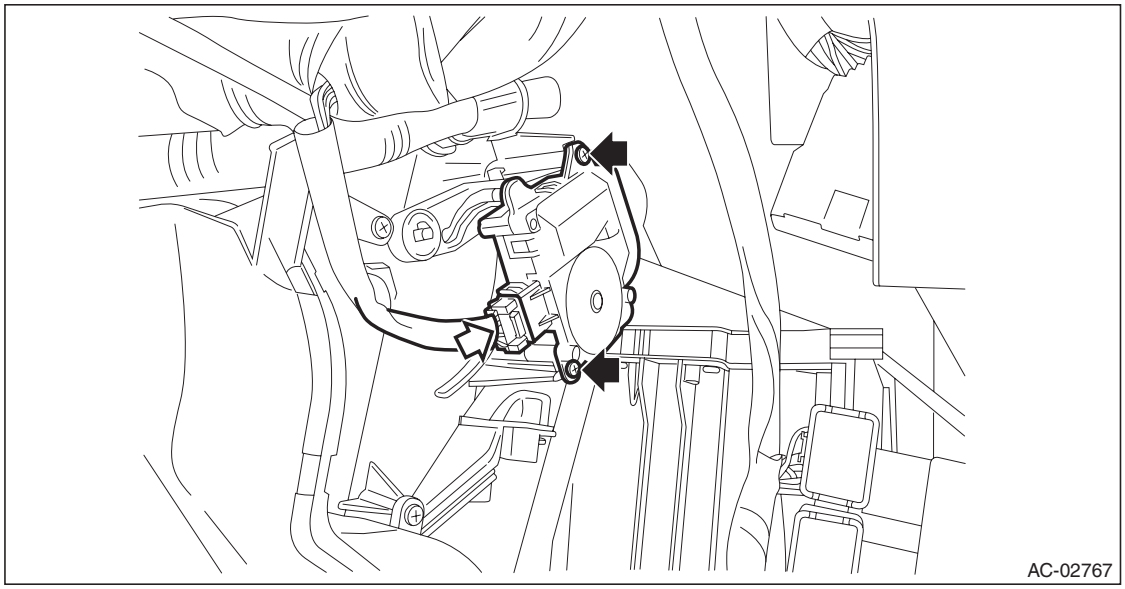

B: INSTALLATION

Install each part in the reverse order of removal.

C: INSPECTION

1. ACTUATOR LINK

1) Visually check the operating range of the link, and remove the foreign matter if any.
2) Operate the temperature control switch, and check that the link operates normally.
3) If the actuator does not operate normally, check the air mix door actuator unit.

2. CHECK ACTUATOR OPERATION

Preparation tool: Circuit tester

1) Check the actuator operation when battery voltage is applied between the terminals of air mix door actuator.

CAUTION:
Disconnect the battery immediately after the actuator stops operation. Otherwise, the motor may be damaged.

Terminal No.	Inspection conditions	Operating position	Connection diagram
6 (+) — 7 (–)	Connect battery to the terminals	•Driver's seat: COOL •Passenger's seat: HOT	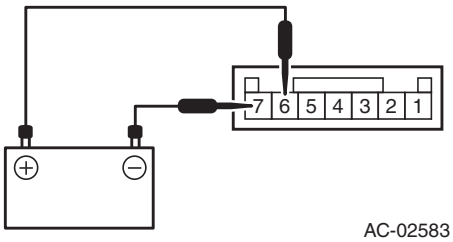
7 (+) — 6 (–)		•Driver's seat: HOT •Passenger's seat: COOL	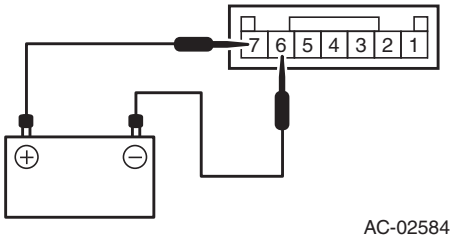

GETtheMANUALS.org

2) Check the resistance between terminals of the air mix door actuator.

Terminal No.	Inspection conditions	Standard	Connection diagram
1 — 3	Always	4.2 — 7.8 Ω	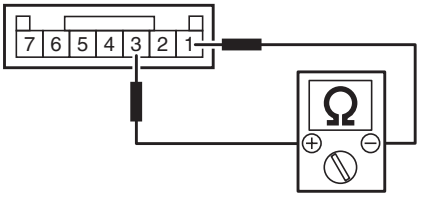 AC-02585

3) Connect the air mix door actuator connector, turn the ignition switch to ON and check the voltage between terminals of the air mix door actuator.

- Driver's seat

Terminal No.	Inspection conditions	Standard	Connection diagram
5 (+) — 3 (–)	HOT	Approx. 1.0 V	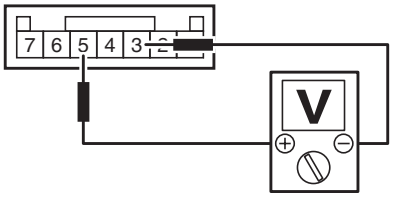 AC-02587
	COOL	Approx. 4.0 V	

- Passenger's seat

Terminal No.	Inspection conditions	Standard	Connection diagram
5 (+) — 1 (–)	HOT	Approx. 1.0 V	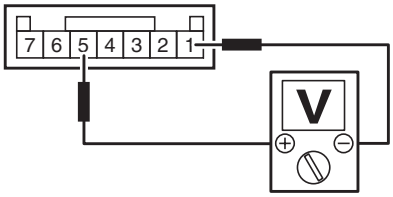 AC-02586
	COOL	Approx. 4.0 V	

4) Replace the air mix door actuator if it is found defective.

GETtheMANUALS.org

30. Air Vent Grille

A: REMOVAL

1. CENTER GRILLE ASSEMBLY

1) Remove the center panel assembly.

CAUTION:
Do not put your finger on the fin of the air vent grille. Doing so may damage the fin.

(1) Attach the protective tape (a) to the meter visor.

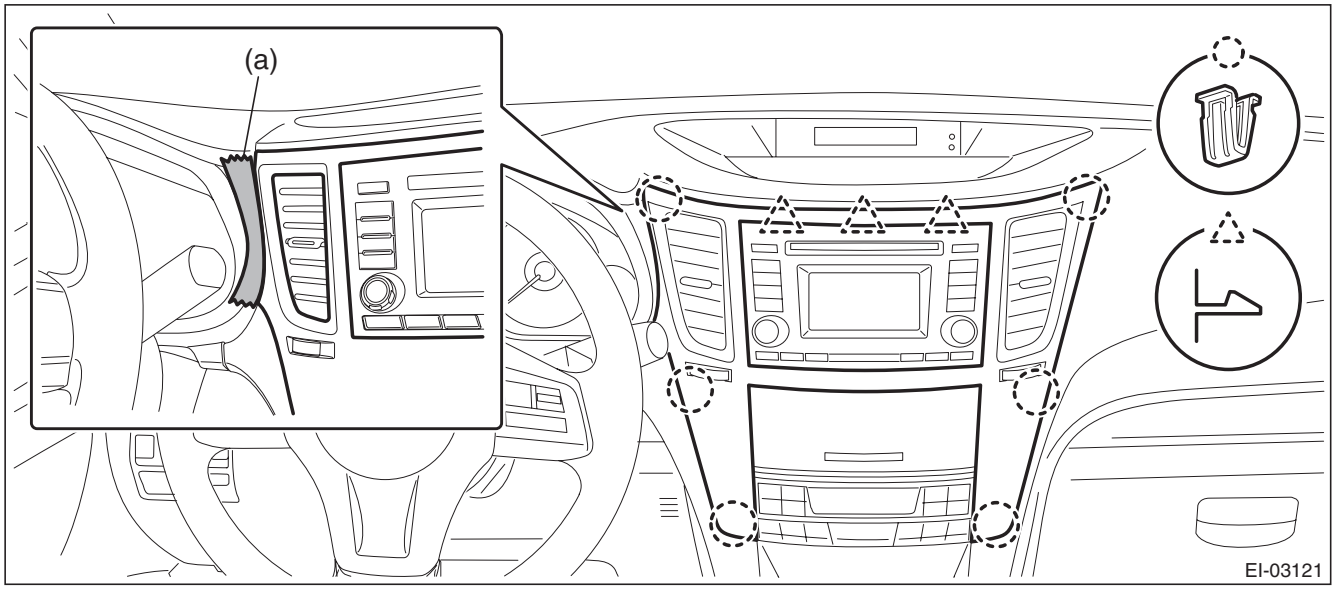

(2) Insert a finger into the air vent grille and release the left and right clips at the top of the center panel. (A), (B)

(3) Insert a finger into the air vent grille and release the left and right clips at the center of the center panel. (C), (D)

GETtheMANUALS.org

(4) Release the clips at the bottom of the center panel and remove the center panel assembly.

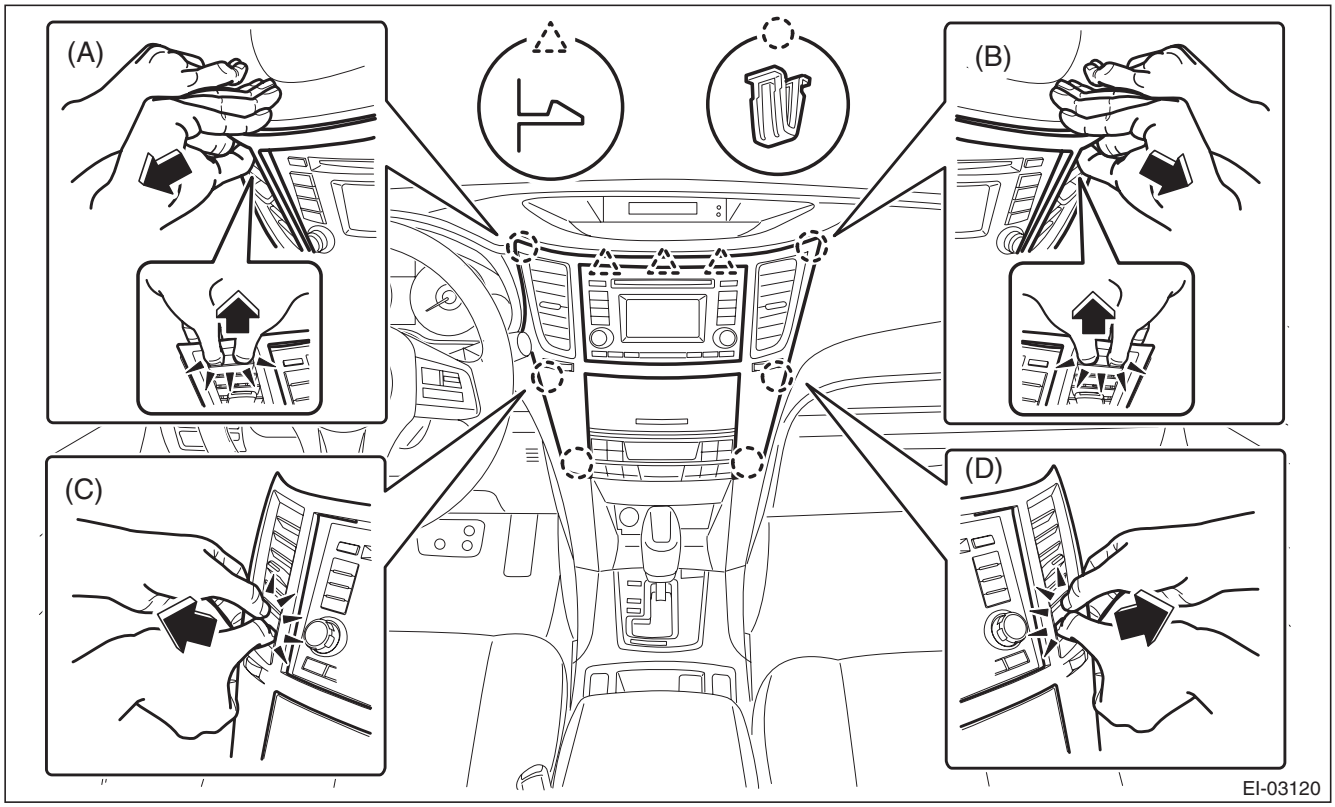

2) Release the claws, and then remove the center grille assembly.

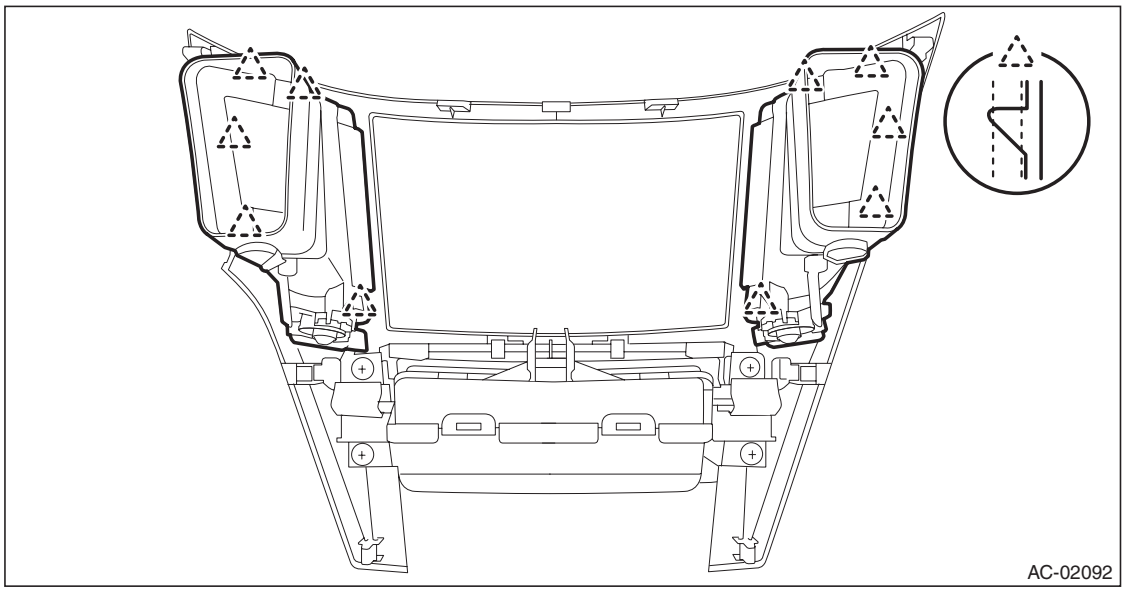

GETtheMANUALS.org

2. SIDE GRILLE ASSEMBLY RH

1) Remove the instrument panel lower cover. <Ref. to EI-64, REMOVAL, Instrument Panel Lower Cover.>
2) Remove the side vent grille assembly RH.
   (1) Remove the screws.
   (2) Release the claws and clips, then detach the side grille assembly RH.

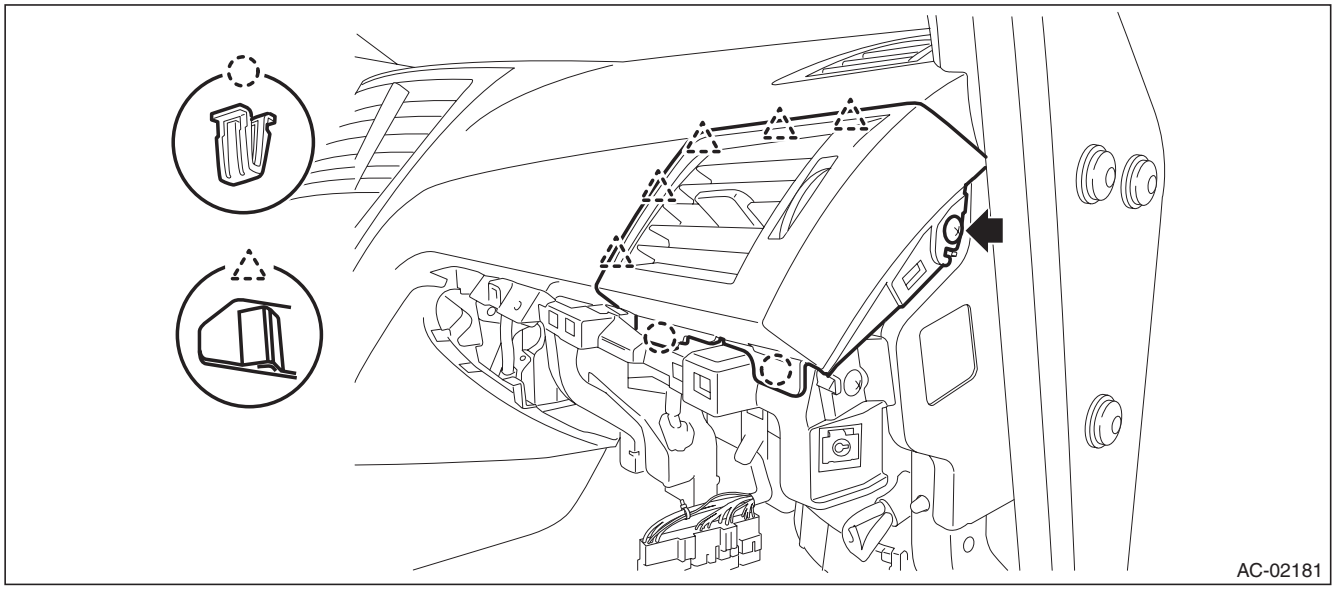

3. SIDE GRILLE ASSEMBLY LH

1) Remove the glove box. <Ref. to EI-66, REMOVAL, Glove Box.>
2) Remove the side vent grille assembly LH.
   (1) Remove the screws.
   (2) Release the claws and clips, then detach the side grille assembly LH.

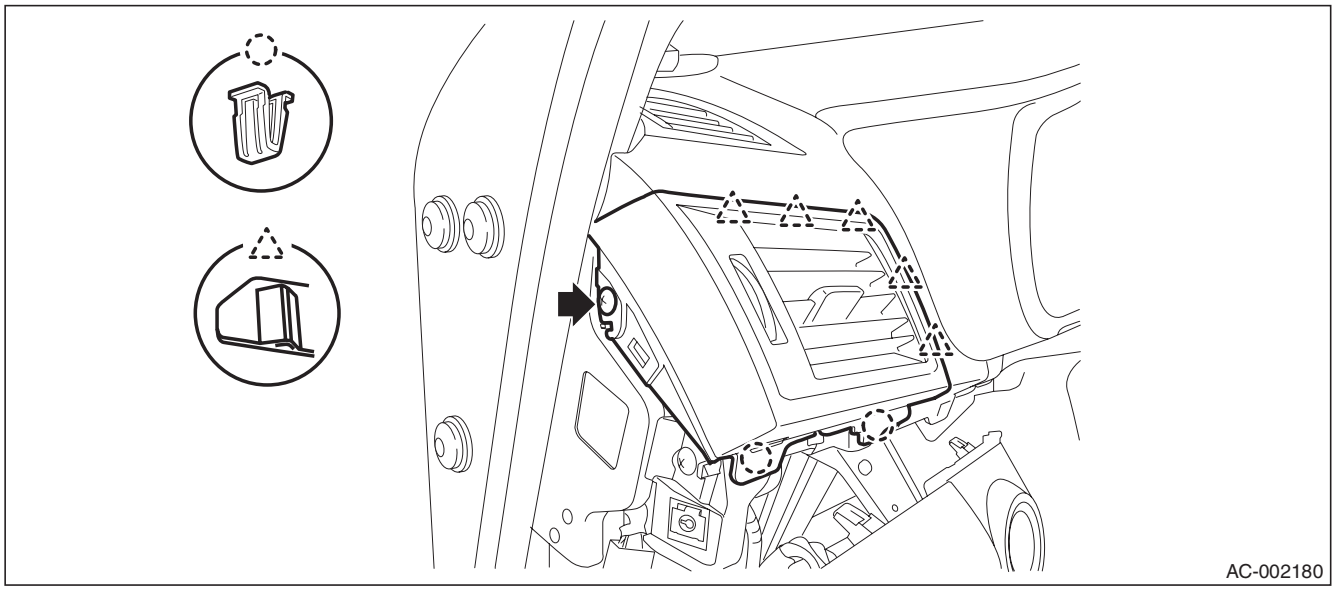

B: INSTALLATION

Install each part in the reverse order of removal.

C: INSPECTION

1) Check that the direction and amount of air can be adjusted smoothly. Replace the air vent grille if faulty.
2) Check that the adjustment can be maintained in each position. Replace the air vent grille if faulty.

GETtheMANUALS.org

31.Heater Duct

A: REMOVAL

1) Remove the front seats. <Ref. to SE-10, REMOVAL, Front Seat.>
2) Remove the instrument panel face assembly. <Ref. to EI-76, REMOVAL, Instrument Panel Assembly.>
3) Remove the rear heater duct.
   (1) Pull off the floor carpet to disengage the rear heater duct slide lock.
   (2) Release the claws, and then remove the rear heater duct LH and RH.

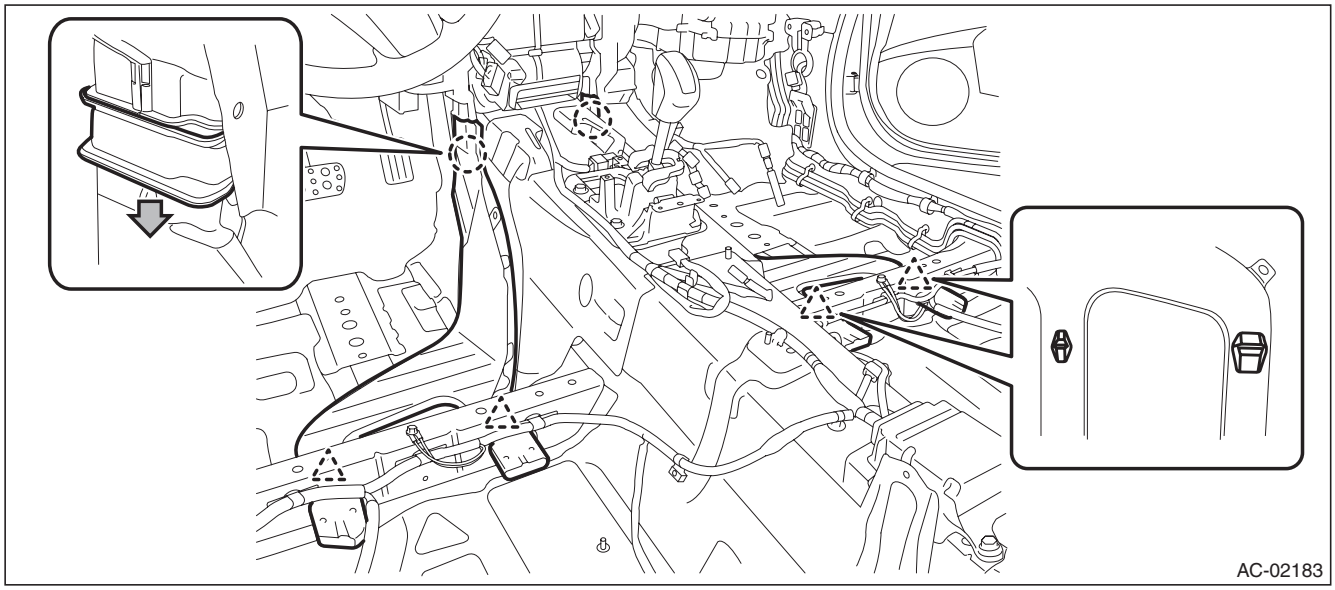

B: INSTALLATION

Install each part in the reverse order of removal.

C: INSPECTION

1) Check installation condition of duct. Connect the duct properly if defective.
2) Check that no foreign matter is mixed in the duct. Remove the foreign matter if any.

GETtheMANUALS.org

32. Heater Vent Duct

A: REMOVAL

1) Remove the instrument panel face assembly. <Ref. to EI-76, REMOVAL, Instrument Panel Assembly.>
2) Remove the heater vent duct.
   (1) Remove the screws, and then remove the front vent duct.

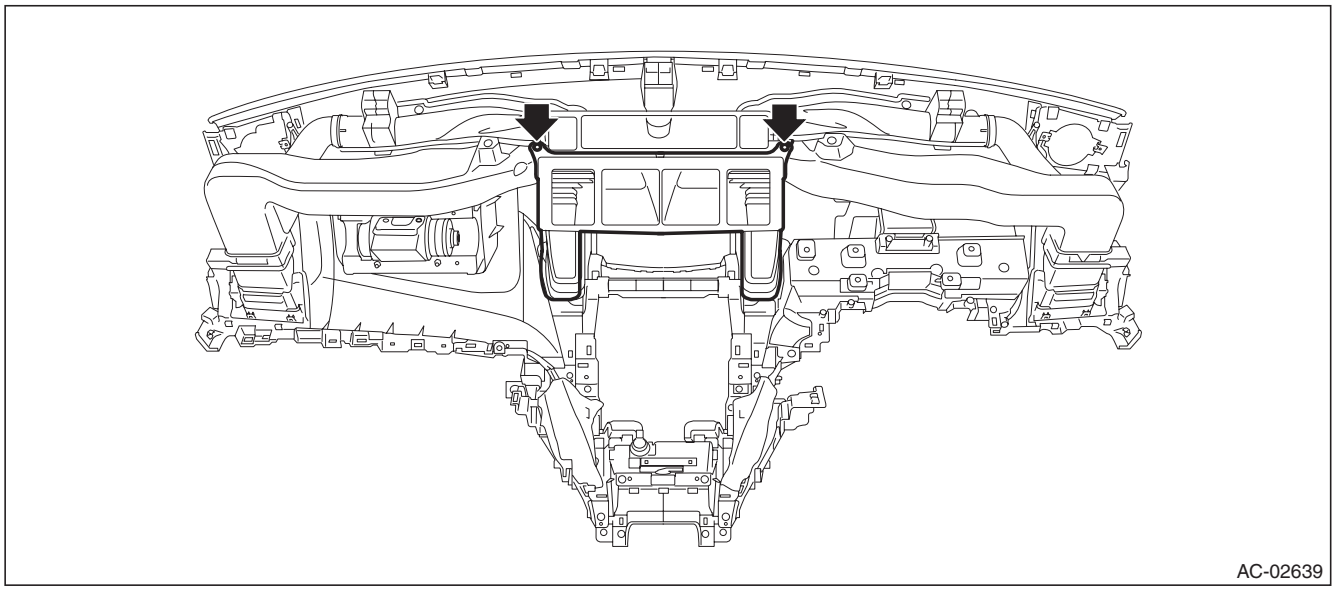

   (2) Release the claws and remove the screws, then detach the side vent duct LH and RH.

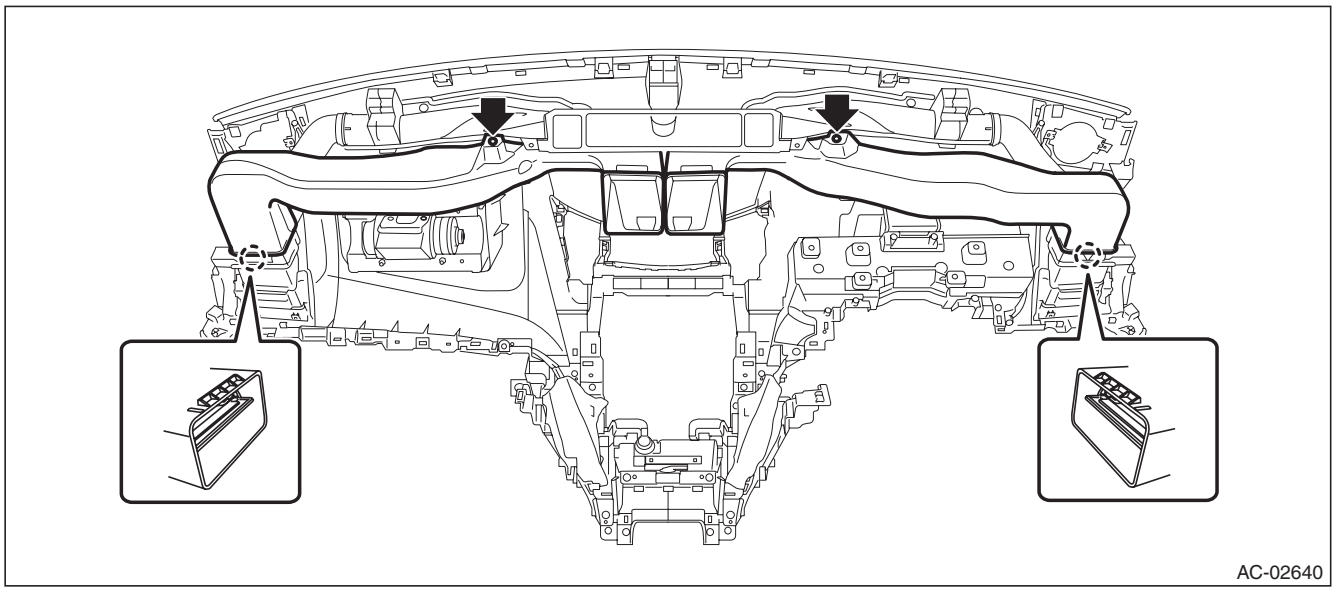

B: INSTALLATION

Install each part in the reverse order of removal.

C: INSPECTION

1) Check installation condition of duct. Connect the duct properly if defective.
2) Check that no foreign matter is mixed in the duct. Remove the foreign matter if any.

GETtheMANUALS.org

33. A/C Filter

A: REPLACEMENT

1) Remove the glove box lid assembly.
   (1) Remove the glove box damper.
   (2) Release the stoppers and remove the glove box lid assembly by pulling it toward you.

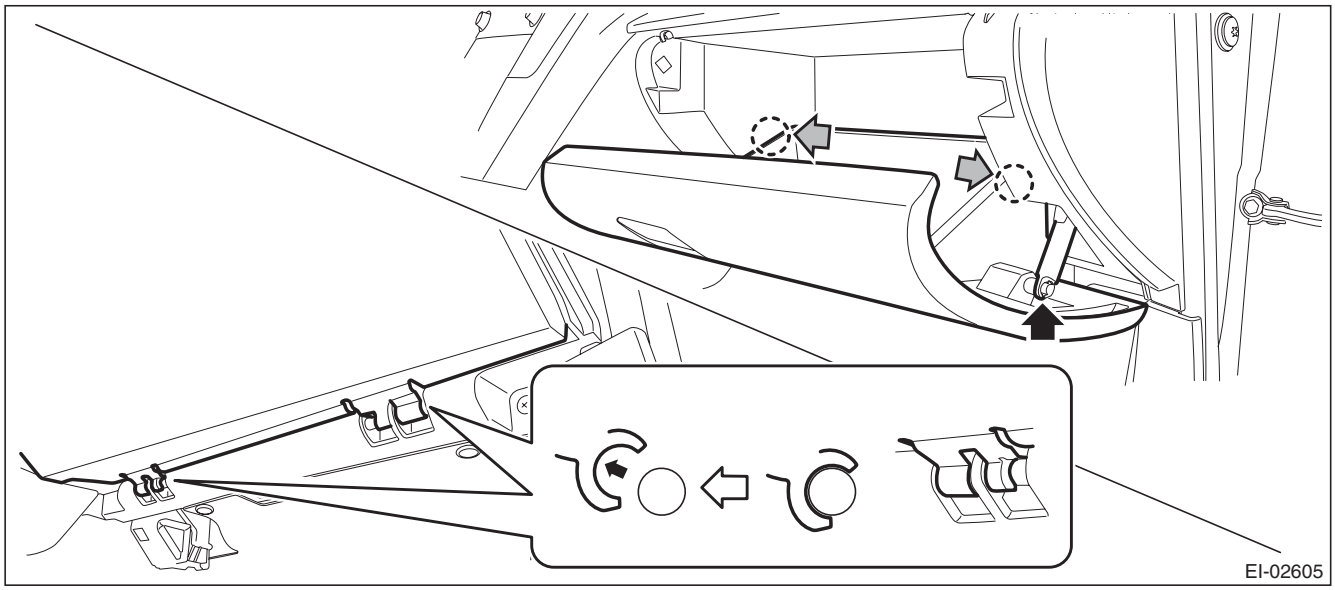

2) Remove the A/C filter.
   (1) Release the lock and remove the A/C filter cover.

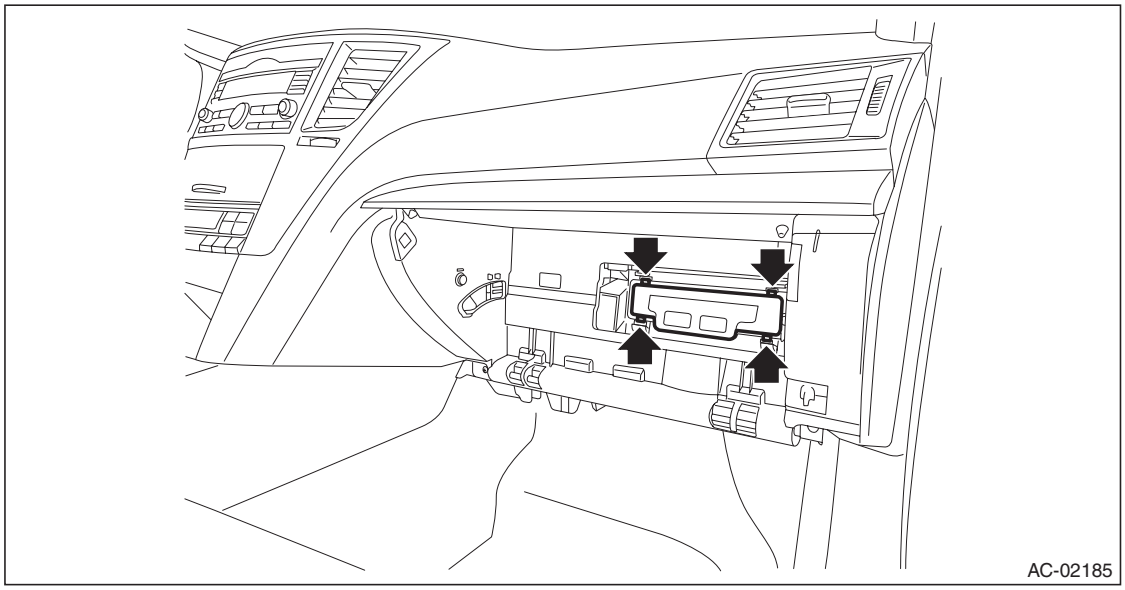

GETtheMANUALS.org

(2) Remove the A/C filter.

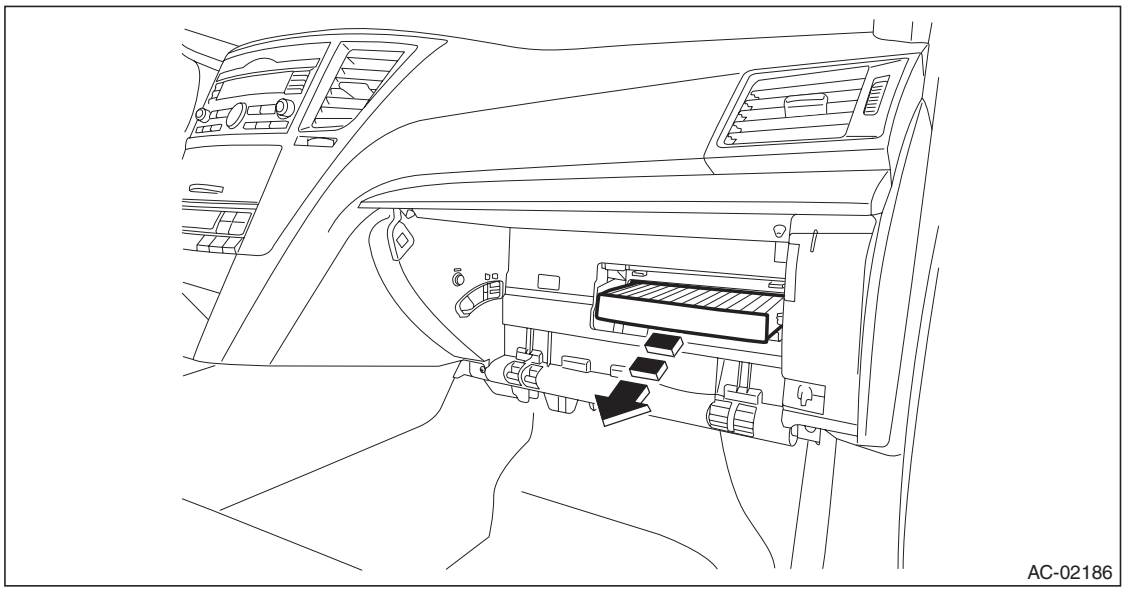

3) Install each part in the reverse order of removal.

B: INSPECTION

Check the A/C filter for dust or dirt, and clean or replace as necessary.

GETtheMANUALS.org

34. Diagnostics with Phenomenon

A: INSPECTION

Refer to “Diagnostics with Phenomenon” of “HVAC SYSTEM (DIAGNOSTICS)” section. <Ref. to AC(diag)-13, Diagnostics with Phenomenon.>

GETtheMANUALS.org

HVAC SYSTEM (DIAGNOSTICS)

AC(diag)

Page

1. Basic Diagnostic Procedure 2
2. General Description 3
3. Electrical Component Location 4
4. Control Module I/O Signal 6
5. Diagnostic Chart for Self-Diagnosis 8
6. Diagnostics with Phenomenon 13
7. Diagnostic Procedure for Sensors 44
8. Subaru Select Monitor 46
9. Read Diagnostic Trouble Code (DTC) 47
10. Clear Memory Mode 48
11. Read Current Data 49
12. Diagnostic Procedure for Subaru Select Monitor Communication 51
13. List of Diagnostic Trouble Code (DTC) 53
14. Diagnostic Procedure with Diagnostic Trouble Code (DTC) 55

GETtheMANUALS.org

1. Basic Diagnostic Procedure

A: PROCEDURE

NOTE:
When the sunload sensor check is performed indoors or in the shade, it could be diagnosed as sensor having an open circuit. Always perform the inspection in direct sunlight.

Step		Check	Yes	No
1	**START INSPECTIONS.** 1) Prepare the tools. <Ref. to AC-16, PREPARATION TOOL, General Description.> 2) Perform the pre-inspection. <Ref. to AC(diag)-3, INSPECTION, General Description.>	Is any malfunction found in pre-inspection?	Fix the malfunction found in pre-inspection, and go to the next inspection step. Go to step **2**.	Go to step **2**.
2	**PREPARE SUBARU SELECT MONITOR.** Prepare the Subaru Select Monitor.	Is the Subaru Select Monitor ready?	Go to step **3**.	Go to step **4**.
3	**CHECK DTC.** 1) Under the failure condition, leave the vehicle for one minute or more. 2) Read the DTC using Subaru Select Monitor. NOTE: • If the communication function of the Subaru Select Monitor cannot be executed properly, check the communication circuit. <Ref. to AC(diag)-51, COMMUNICATION FOR INITIALIZING IMPOSSIBLE, Diagnostic Procedure for Subaru Select Monitor Communication.> • Record the freeze frame data recorded together with the DTC.	Is DTC displayed?	<Ref. to AC(diag)-53, LIST, List of Diagnostic Trouble Code (DTC).>	Refer to Diagnostics with Phenomenon. <Ref. to AC(diag)-13, INSPECTION, Diagnostics with Phenomenon.>
4	**A/C CONTROL PANEL SELF-DIAGNOSIS.** 1) Under the failure condition, leave the vehicle for one minute or more. 2) Perform the self-diagnosis of A/C control panel. <Ref. to AC(diag)-8, OPERATION, Diagnostic Chart for Self-Diagnosis.>	Are other codes except “20” displayed?	<Ref. to AC(diag)-10, SENSOR CHECK TABLE, OPERATION, Diagnostic Chart for Self-Diagnosis.>	Refer to Diagnostics with Phenomenon. <Ref. to AC(diag)-13, INSPECTION, Diagnostics with Phenomenon.>

GETthemMANUALS.org

2. General Description

A: CAUTION

1) Never connect the battery in reverse polarity.
- Doing so may immediately damage the A/C CM.

2) Do not disconnect the battery terminals while the engine is running.
- A large counter electromotive force will be generated in the generator, and this voltage may damage electronic parts such as A/C CM etc.

3) Before disconnecting the connectors of sensors and the A/C CM, be sure to turn off the ignition switch.
- A/C CM may be damaged.

4) Every A/C-related part is a precision part. Do not drop them.
5) Airbag system wiring harness is routed near the A/C control panel and junction box.

CAUTION:
- **Do not use electrical test equipment on the airbag system wiring harness and connector.**
- **Be careful not to damage the airbag system wiring harness when servicing the A/C control panel and junction box.**

B: INSPECTION

Before performing the diagnosis, check the following items which may cause problems in the A/C system.

1. BATTERY

Check the battery. <Ref. to SC(H4SO)-28, INSPECTION, Battery.>

NOTE:
If the battery voltage does not reach the specified value, recharge or replace the battery.

C: PREPARATION TOOL

1. SPECIAL TOOL

ILLUSTRATION	TOOL NUMBER	DESCRIPTION	REMARKS
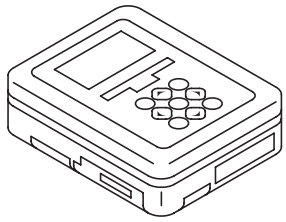 ST1B022XU0	1B022XU0	SUBARU SELECT MONITOR III KIT	Used for troubleshooting the electrical system.

2. GENERAL TOOL

TOOL NAME	REMARKS
Circuit tester	Used for measuring resistance, voltage and current.

GETthemANDALS.org

3. Electrical Component Location

A: LOCATION

1. ENGINE COMPARTMENT

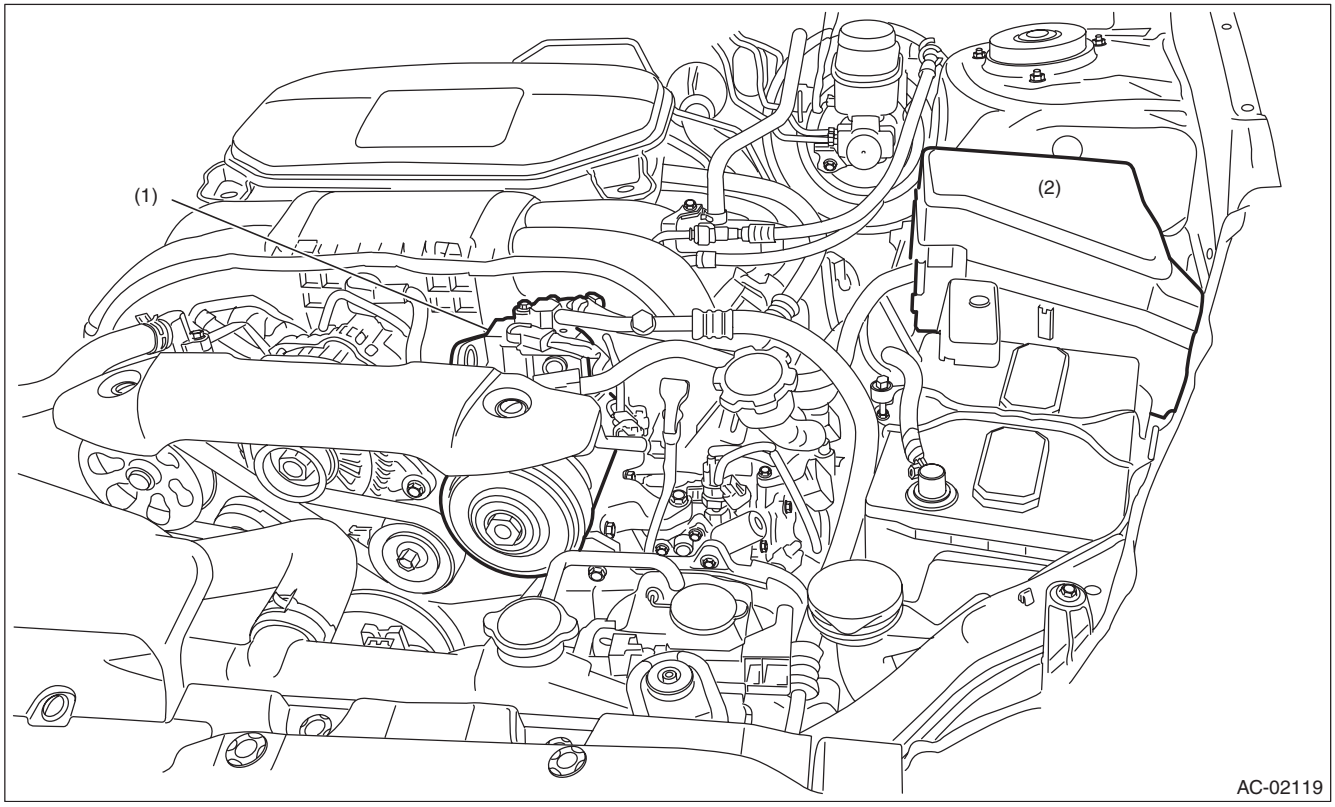

(1) A/C compressor
(2) A/C relay
(3) Pressure sensor
(4) Ambient sensor

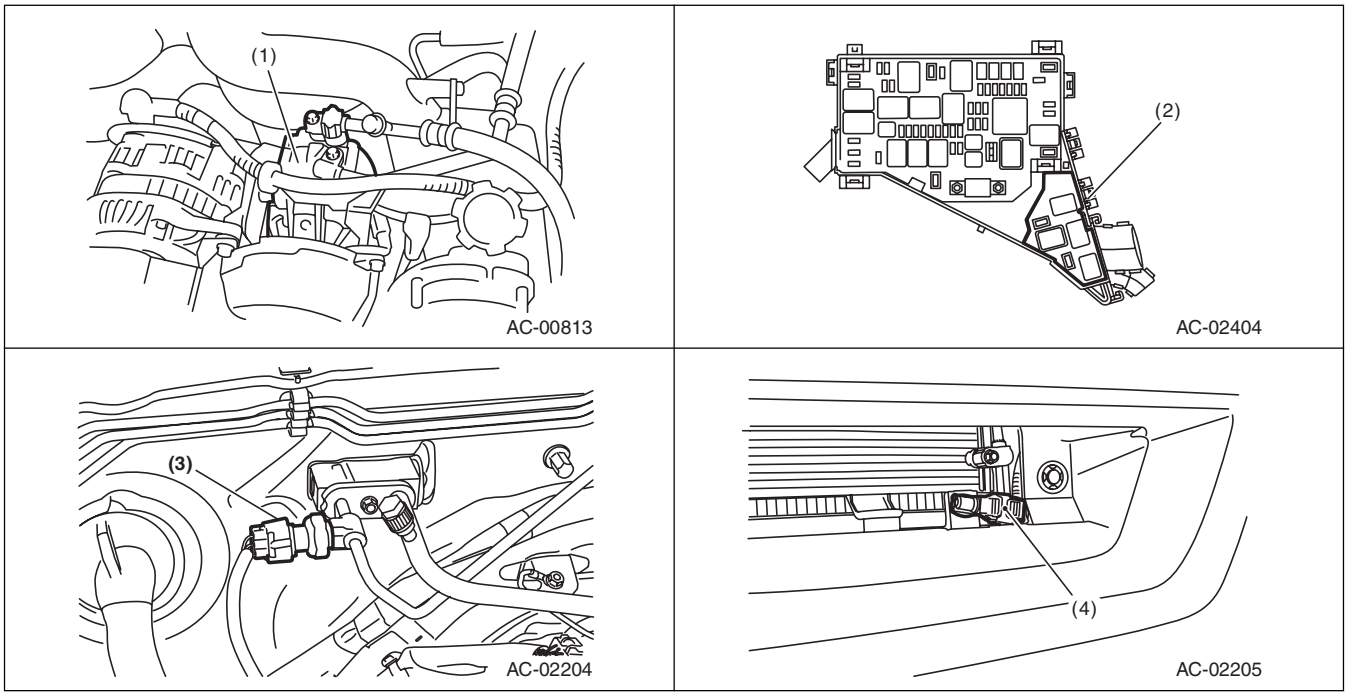

GETthemANUALS.org

2. COMPARTMENT

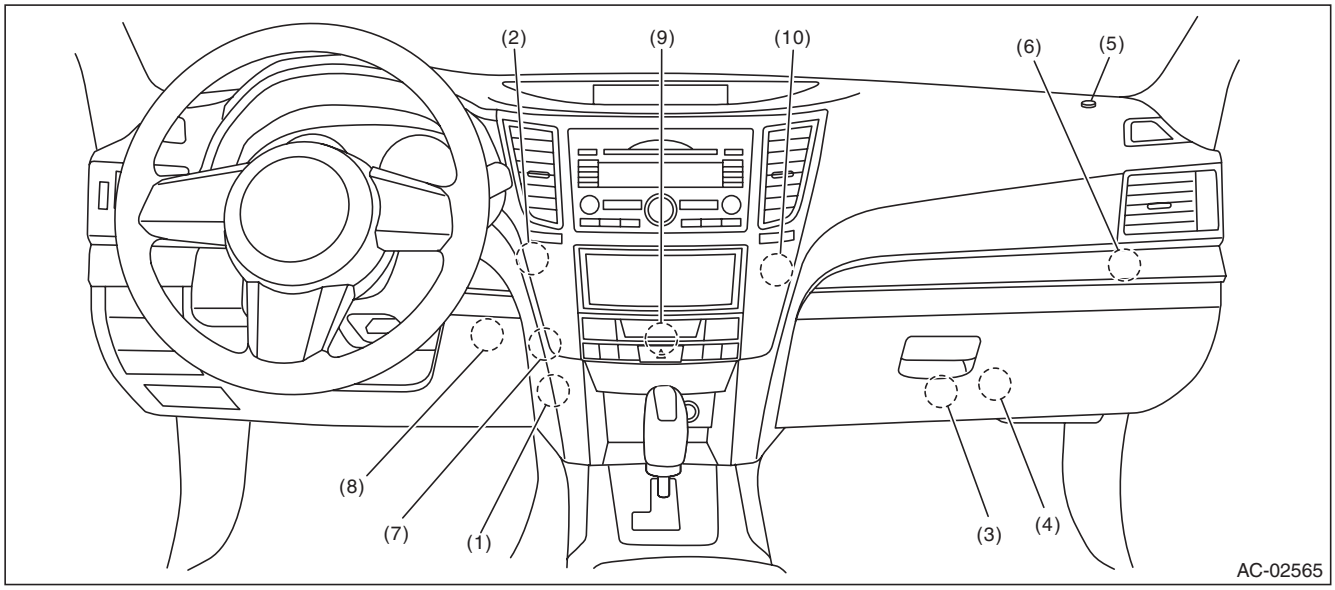

(1)	Evaporator sensor	(5)	Sunload sensor	(9)	A/C control panel
(2)	Air mix door actuator*1 or air mix door actuator (driver's seat)*2	(6)	Intake door actuator	(10)	Air mix door actuator (passenger's seat)*2
(3)	A/C CM	(7)	Mode door actuator		
(4)	Blower motor	(8)	In-vehicle sensor		

*1: Manual A/C
*2: Auto A/C

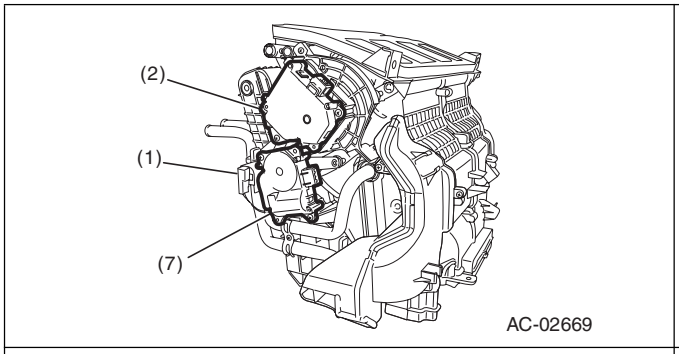

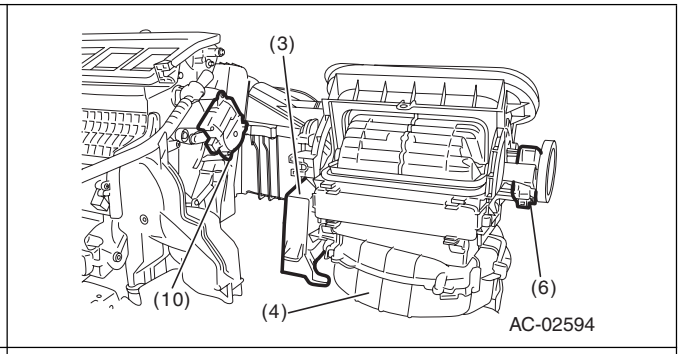

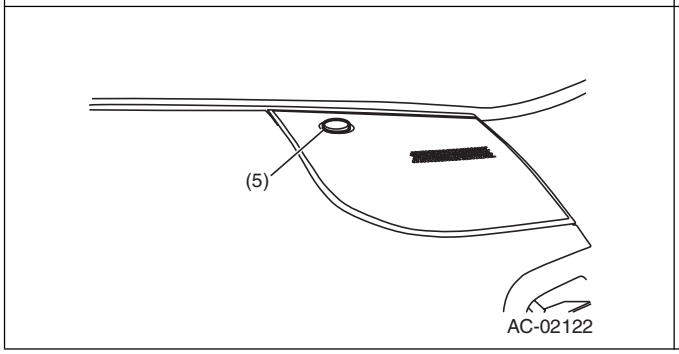

SUBARU.

GETthemANUALS.org

4. Control Module I/O Signal

A: ELECTRICAL SPECIFICATION

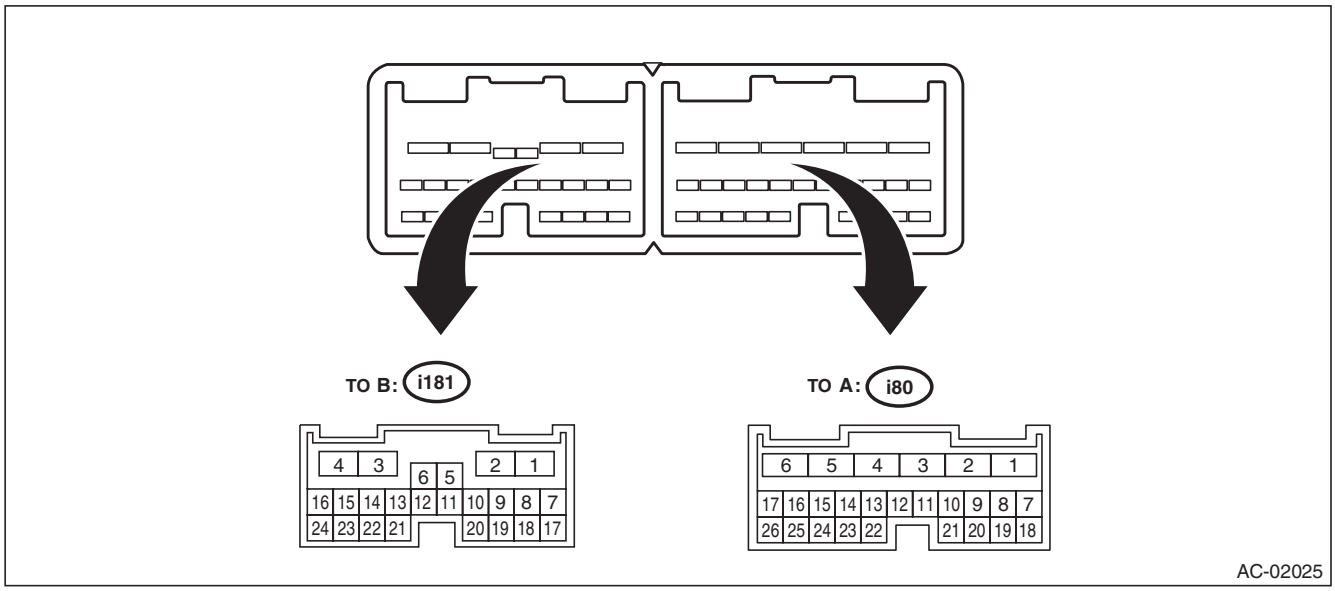

Terminal No.	Description	Measuring condition	Standard
A1	Battery power supply	Always	Battery voltage
A2	Ignition power supply	Ignition switch: ON	Battery voltage
A3	ACC power supply	Ignition switch: ACC	Battery voltage
A4	CAN communication (Hi)	Digital signal; can not be measured	*1
A5	CAN communication (Lo)	Digital signal; can not be measured	*1
A6	Ground	Always	0V
A7	A/C control panel communication	Digital signal; can not be measured	*1
A11	In-vehicle sensor	Ignition switch: ON	25°C: Approx. 1.5 V 40°C: Approx. 1.0 V
A13	Flow sensor	Ignition switch: ON	0.3 — 4.7 V
A14	Air mix door position signal*2 or air mix door (driver's seat) position signal*3	Ignition switch: ON, Air mix door: maximum cool position	4 V
		Ignition switch: ON, Air mix door: maximum hot position	1 V
A16	Each potentiometer and sensor power supply	Ignition switch: ON	5 V
A18	A/C control panel communication	Digital signal; can not be measured	*1
A21	After-evaporator sensor signal	Ignition switch: ON, fluctuates depending on temperature after the evaporator.	1 — 4.5 V
A22	Pressure sensor	Ignition switch: ON	0.5 — 4.9 V
A24	Sunload sensor (with automatic light)*3	Ignition switch: ON (0V: No sunload)	0 — 4.9 V
A25	Air mix door actuator (passenger's seat) position signal*3	Ignition switch: ON, Air mix door: maximum cool position	4 V
		Ignition switch: ON, Air mix door: maximum hot position	1 V
A26	Mode door actuator position signal	Ignition switch: ON, Mode door: FACE position	4 V
		Ignition switch: ON, Mode door: DEF position	1 V
B1	Sensor GND	Always	Less than 0.5 V
B2	Variable compressor solenoid valve	Ignition switch: ON, Blower switch: ON, A/C switch: ON	2 — 12 V
B3	Intake door actuator drive signal (FRESH)	Intake door actuator operating on the FRESH side	0.7 V or less

GETtheMANUALS.org

Terminal No.	Description	Measuring condition	Standard
B4	Air mix door actuator (passenger's seat) drive signal (HOT)*3	Turning towards HOT side: B4 is 12 V, B16 is GND	While operating: 12 V While not operating: 0 V
B16	Air mix door actuator (passenger's seat) drive signal (COOL)*3	Turning towards COOL side: B16 is 12 V, B4 is GND	
B6	Intake door actuator drive signal (RECIRC)	Intake door actuator operating on the RECIRC side	0.7 V or less
B8	Blower motor voltage feedback*3	Ignition switch: ON, Blower switch: ON	0.45 — 10 V
B9	Blower motor control signal*3	Ignition switch: ON, Blower switch: ON	9.05 V
B11	Mode servo drive signal (FACE)	When turning towards FACE side: B11 is 12 V, B13 is GND	While operating: 12 V While not operating: 0 V
B13	Mode servo drive signal (DEF)	When turning towards DEF side: B13 is 12 V, B11 is GND	
B20	Heater main relay drive signal*3	Ignition switch: ON, Blower switch: ON	0.7 V or less
B21	Air mix door actuator drive signal (COOL)*2 or air mix door actuator (driver's seat) drive signal (COOL)*3	Turning towards COOL side: B21 is 12 V, B22 is GND	While operating: 12 V While not operating: 0 V
B22	Air mix door actuator drive signal (HOT)*2 or air mix door actuator (driver's seat) drive signal (HOT)*3	Turning towards HOT side: B22 is 12 V, B21 is GND	

*1: Battery voltage cannot be measured because of digital signal.
*2: Manual A/C
*3: Auto A/C

B: WIRING DIAGRAM

<Ref. to WI-53, WIRING DIAGRAM, Air Conditioning System.>

GETtheMANUALS.org

5. Diagnostic Chart for Self-Diagnosis

A: OPERATION

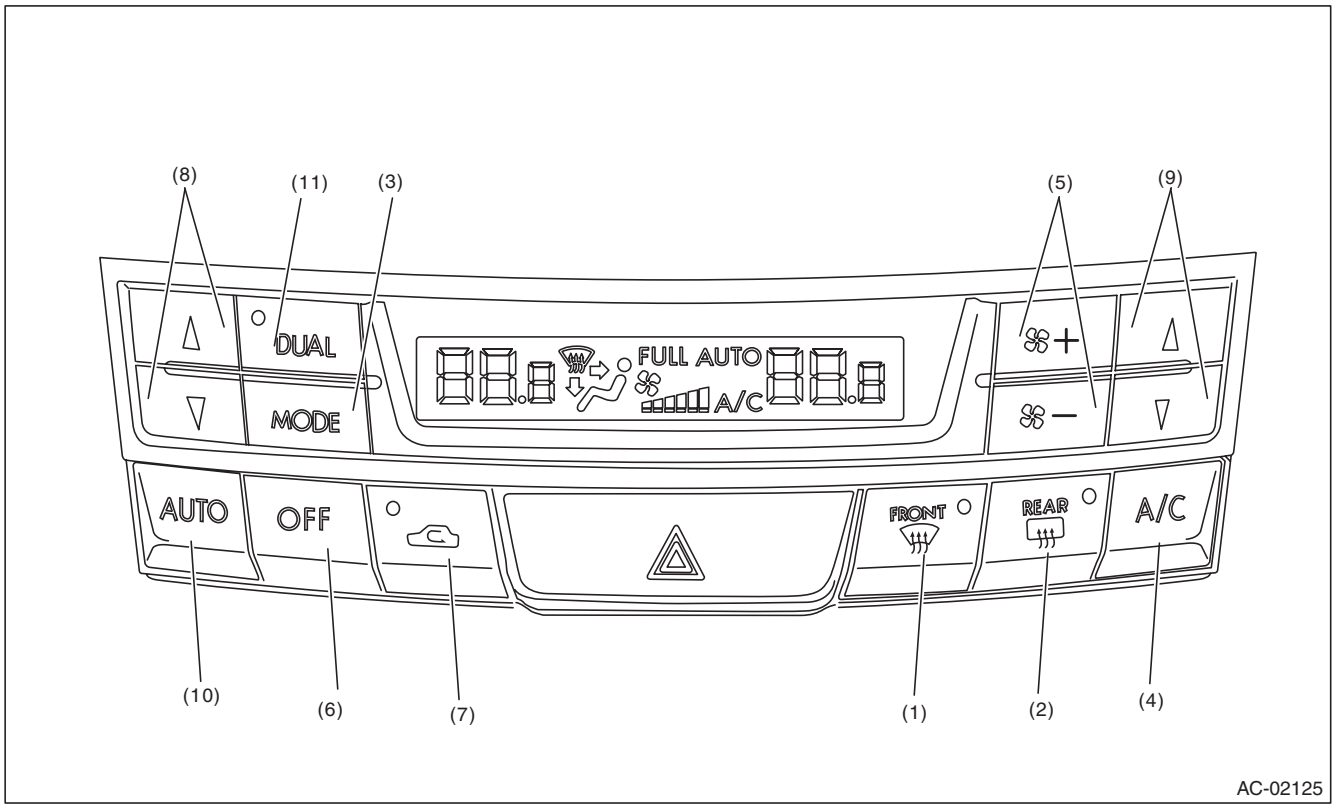

(1)	Defroster switch	(5)	FAN switch	(9)	Temperature control switch (for passenger's seat)
(2)	Rear window defogger switch	(6)	OFF switch	(10)	AUTO switch
(3)	Mode change switch	(7)	FRESH/RECIRC switch	(11)	DUAL switch
(4)	A/C switch	(8)	Temperature control switch (for driver's seat)		

GETthemANUALS.org

1. A/C CONTROL SYSTEM SELF-DIAGNOSIS

	Step	Check	Yes	No
1	**SET SELF-DIAGNOSIS MODE BY OPERATING A/C CONTROL PANEL.** 1) Turn the ignition switch to OFF. 2) Start the engine while holding down the AUTO switch and FRESH/RECIRC switch. NOTE: Self-diagnosis can also be performed with ignition switch ON, but start the engine because observing the compressor operation is difficult. 3) All the indicators blink four times.	Does the self-diagnosis function operate and do all the indicators flash four times?	Go to step **2**.	<Ref. to AC(diag)-12, DIAGNOSTIC PROCEDURE WHEN SELF DIAGNOSIS USING A/C CONTROL PANEL DOES NOT OPERATE, OPERATION, Diagnostic Chart for Self-Diagnosis.>
2	**CHECK EACH SENSOR AND POTENTIOMETER.** 1) After the indicators stop blinking, automatically change to the Inspection Mode of sensor and potentiometer. NOTE: Display items can be changed each time the A/C switch is pressed. (Step Operation) 2) Read the code appeared on the display. When no open circuit or short-circuit is found in each sensor and potentiometer, code “20” is displayed on the screen. When open circuit or short-circuit is found in each sensor and potentiometer, codes except “20” are displayed on the screen. NOTE: It takes one minute or more to complete all diagnostic steps after the engine has started.	Are other codes except “20” displayed?	Repair the defective circuit. <Ref. to AC(diag)-10, SENSOR CHECK TABLE, OPERATION, Diagnostic Chart for Self-Diagnosis.>	Go to step **3**.
3	**CHECK EACH ACTUATOR, BLOWER FAN AND COMPRESSOR.** 1) After completing each sensor and potentiometer inspection, change to the Inspection Mode of actuator, blower fan and compressor by pressing the defroster switch. 2) Each mode will change and operate automatically every four seconds. NOTE: Operation mode items can be changed each time the A/C switch is pressed. (Step Operation) 3) Check the operation of actuator, blower fan and compressor in each mode according to the operating mode table. <Ref. to AC(diag)-12, OPERATING MODE TABLE, OPERATION, Diagnostic Chart for Self-Diagnosis.>	Do the actuator, blower fan and compressor operate as described in the operating mode table?	A/C control system is normal. Press the OFF switch and complete the self-diagnosis function.	Repair each defective part.

GETthemMANUALS.org

2. SENSOR CHECK TABLE

NOTE:
- When the sunload sensor check is performed indoors or in the shade, it could be diagnosed as having an open circuit. Always check the sunload sensor with the sun shining on it.
- When currently malfunctioning, AUTO flashes on display.
- Past malfunction can be cleared by disconnecting the battery ground cable.

Display screen	Sensor	Trouble contents	Note
21	Open circuit in in-vehicle sensor	In-vehicle sensor circuit is open.	<Ref. to AC(diag)-56, DTC B1602 IN-VEHICLE SENSOR OPEN, Diagnostic Procedure with Diagnostic Trouble Code (DTC).>
–21	Short-circuit in in-vehicle sensor	In-vehicle sensor circuit is shorted.	<Ref. to AC(diag)-55, DTC B1601 IN-VEHICLE SENSOR SHORT, Diagnostic Procedure with Diagnostic Trouble Code (DTC).>
22	Ambient sensor trouble or communication failure	Sensor trouble or communication failure	<Ref. to AC(diag)-44, AMBIENT SENSOR, Diagnostic Procedure for Sensors.>
23	Open circuit in evaporator sensor	Post evaporator sensor circuit is open.	<Ref. to AC(diag)-58, DTC B1604 EVAPORATOR SENSOR OPEN, Diagnostic Procedure with Diagnostic Trouble Code (DTC).>
–23	Short-circuit in evaporator sensor	Post evaporator sensor circuit is shorted.	<Ref. to AC(diag)-57, DTC B1603 EVAPORATOR SENSOR SHORT, Diagnostic Procedure with Diagnostic Trouble Code (DTC).>
24	Engine coolant temperature sensor trouble or communication failure	Sensor trouble or communication failure	—
25	Open circuit in sunload sensor	Sunload sensor circuit is open.*1	<Ref. to AC(diag)-63, DTC B1608 SUNLOAD SENSOR OPEN, Diagnostic Procedure with Diagnostic Trouble Code (DTC).>
–25	Short-circuit in sunload sensor	Sunload sensor circuit is shorted.	<Ref. to AC(diag)-62, DTC B1607 SUNLOAD SENSOR SHORT, Diagnostic Procedure with Diagnostic Trouble Code (DTC).>
26	Open circuit in air mix door actuator — potentiometer (driver's)	Air mix door actuator potentiometer circuit is open.	<Ref. to AC(diag)-65, DTC B1610 AIRMIX DOOR ACTUATOR POTENTIOMETER CIRCUIT OPEN (DRIVER'S), Diagnostic Procedure with Diagnostic Trouble Code (DTC).>
–26	Open circuit in air mix door actuator — potentiometer (passenger's)	Air mix door actuator potentiometer circuit is open.	<Ref. to AC(diag)-70, DTC B1613 AIRMIX DOOR ACTUATOR POTENTIOMETER CIRCUIT OPEN (PASSENGER'S), Diagnostic Procedure with Diagnostic Trouble Code (DTC).>
27	Short-circuit in air mix door actuator — potentiometer (driver's)	Air mix door actuator potentiometer circuit is shorted.	<Ref. to AC(diag)-67, DTC B1611 AIRMIX DOOR ACTUATOR POTENTIOMETER CIRCUIT SHORT (DRIVER'S), Diagnostic Procedure with Diagnostic Trouble Code (DTC).>

GETtheMANUALS.org

Display screen	Sensor	Trouble contents	Note
–27	Short-circuit in air mix door actuator — potentiometer (passenger's)	Air mix door actuator potentiometer circuit is shorted.	<Ref. to AC(diag)-72, DTC B1614 AIRMIX DOOR ACTUATOR POTENTIOMETER CIRCUIT SHORT (PASSENGER'S), Diagnostic Procedure with Diagnostic Trouble Code (DTC).>
28	Open circuit in mode door actuator — potentiometer	Mode door actuator potentiometer circuit is open.	<Ref. to AC(diag)-76, DTC B1620 MODE DOOR ACTUATOR POTENTIOMETER CIRCUIT OPEN, Diagnostic Procedure with Diagnostic Trouble Code (DTC).>
29	Short-circuit in mode door actuator — potentiometer	Mode door actuator potentiometer circuit is shorted.	<Ref. to AC(diag)-77, DTC B1621 MODE DOOR ACTUATOR POTENTIOMETER CIRCUIT SHORT, Diagnostic Procedure with Diagnostic Trouble Code (DTC).>
42	Open circuit in refrigerant pressure sensor	Pressure sensor circuit is open.*1	<Ref. to AC(diag)-59, DTC B1605 REFRIGERANT FLOW SENSOR CIRCUIT OPEN, Diagnostic Procedure with Diagnostic Trouble Code (DTC).>
–42	Short-circuit in refrigerant pressure sensor	Pressure sensor circuit is shorted.*1	<Ref. to AC(diag)-61, DTC B1606 REFRIGERANT FLOW SENSOR CIRCUIT SHORT, Diagnostic Procedure with Diagnostic Trouble Code (DTC).>
43	Open circuit in refrigerant flow sensor	Refrigerant flow circuit is open.*1	<Ref. to AC(diag)-85, DTC B1642 REFRIGERANT FLOW SENSOR CIRCUIT OPEN, Diagnostic Procedure with Diagnostic Trouble Code (DTC).>
–43	Short-circuit in refrigerant flow sensor	Refrigerant flow sensor circuit is shorted.*1	<Ref. to AC(diag)-84, DTC B1641 REFRIGERANT FLOW SENSOR CIRCUIT SHORT, Diagnostic Procedure with Diagnostic Trouble Code (DTC).>
44	Refrigerant flow sensor circuit failure	Malfunction occurs in refrigerant flow sensor.	—
45	Open circuit in sunload sensor (auto light control)	Sunload sensor circuit is open.	<Ref. to AC(diag)-63, DTC B1608 SUNLOAD SENSOR OPEN, Diagnostic Procedure with Diagnostic Trouble Code (DTC).>
-45	Short-circuit in sunload sensor (auto light control)	Sunload sensor circuit is shorted.*1	<Ref. to AC(diag)-62, DTC B1607 SUNLOAD SENSOR SHORT, Diagnostic Procedure with Diagnostic Trouble Code (DTC).>
46	Variable flow change solenoid duty circuit failure	Variable flow change solenoid duty circuit is open or shorted.*1	<Ref. to AC(diag)-87, DTC B1643 VARIABLE FLOW CHANGE SOLENOID DUTY CIRCUIT ABNORMAL, Diagnostic Procedure with Diagnostic Trouble Code (DTC).>
47	Air mix door actuator — lock (driver's)	Air mix door actuator does not operate due to being stuck or other reasons.	<Ref. to AC(diag)-68, DTC B1612 AIRMIX DOOR ACTUATOR LOCK (DRIVER'S), Diagnostic Procedure with Diagnostic Trouble Code (DTC).>

GETtheMANUALS.org

Display screen	Sensor	Trouble contents	Note
48	Air mix door actuator — lock (passenger's)	Air mix door actuator does not operate due to being stuck or other reasons.	<Ref. to AC(diag)-74, DTC B1615 AIRMIX DOOR ACTUATOR LOCK (PASSENGER'S), Diagnostic Procedure with Diagnostic Trouble Code (DTC).>
49	Mode door actuator — lock	Mode door actuator does not operate due to being stuck or other reasons.	<Ref. to AC(diag)-78, DTC B1622 MODE DOOR ACTUATOR LOCK, Diagnostic Procedure with Diagnostic Trouble Code (DTC).>
53	Heater control panel communication failure	Communication with heater control panel is impossible.*1	<Ref. to AC(diag)-80, DTC U0028 HEATER CONTROL PANEL COMMUNICATION ERROR, Diagnostic Procedure with Diagnostic Trouble Code (DTC).>
54	CAN communication bus off	Bus off*1:	<Ref. to AC(diag)-83, DTC U0001 CAN COMMUNICATION BUS OFF, Diagnostic Procedure with Diagnostic Trouble Code (DTC).>
55	CAN communication error	Communication error*1	<Ref. to AC(diag)-83, DTC U0002 CAN COMMUNICATION ERROR, Diagnostic Procedure with Diagnostic Trouble Code (DTC).>
20 blinking	When all conditions are normal		—

*1: Displays current malfunction only.

3. OPERATING MODE TABLE

Display screen	Blower fan	Mode door	FRESH/RECIRC door	A/C compressor	Air mix door
31	LO	FACE	FRESH	OFF	Maximum cool
32	LO	FACE	RECIRC	ON	Maximum cool
33	M1	FACE	RECIRC	ON	Maximum cool
34	M1	B/L	FRESH	ON	50%
35	M1	FOOT	FRESH	ON	50%
36	M3	FOOT	FRESH	ON	Maximum hot
37	M3	F/D	FRESH	ON	Maximum hot
38	HI	DEF	FRESH	ON	Maximum hot

4. DIAGNOSTIC PROCEDURE WHEN SELF DIAGNOSIS USING A/C CONTROL PANEL DOES NOT OPERATE

NOTE:
For diagnostic procedure, refer to "Nothing is displayed on the screen or indicators do not illuminate." in Diagnostics with Phenomenon. <Ref. to AC(diag)-14, NOTHING IS DISPLAYED ON THE SCREEN OR INDICATORS DO NOT ILLUMINATE., DIAGNOSTIC PROCEDURE WITH PHENOMENON, Diagnostics with Phenomenon.>

GETtheMANUALS.org

6. Diagnostics with Phenomenon

A: INSPECTION

1. Perform diagnosis according to the diagnosis procedure for the corresponding symptom listed in the symptom table.
2. If there are multiple symptoms, perform the diagnosis in the order of symptom number (1 → 2 →... → 13).

1. SYMPTOM TABLE

Symptoms		Diagnosis procedure
1	Nothing is displayed on the screen or indicators do not illuminate.	<Ref. to AC(diag)-14, NOTHING IS DISPLAYED ON THE SCREEN OR INDICATORS DO NOT ILLUMINATE., DIAGNOSTIC PROCEDURE WITH PHENOMENON, Diagnostics with Phenomenon.>
2	Air conditioner does not stop even when the OFF switch is pressed. (vehicles with fully automatic air conditioner)	<Ref. to AC(diag)-17, AIR CONDITIONER DOES NOT STOP EVEN WHEN THE OFF SWITCH IS PRESSED. (VEHICLES WITH FULLY AUTOMATIC AIR CONDITIONER), DIAGNOSTIC PROCEDURE WITH PHENOMENON, Diagnostics with Phenomenon.>
3	The windshield glass is not cleared even when the DEF switch is pressed. (vehicles with fully automatic air conditioner)	<Ref. to AC(diag)-18, THE WINDSHIELD GLASS IS NOT CLEARED EVEN WHEN THE DEF SWITCH IS PRESSED. (VEHICLES WITH FULLY AUTOMATIC AIR CONDITIONER), DIAGNOSTIC PROCEDURE WITH PHENOMENON, Diagnostics with Phenomenon.>
4	Cold air not emitted.	<Ref. to AC(diag)-19, COLD AIR NOT EMITTED, DIAGNOSTIC PROCEDURE WITH PHENOMENON, Diagnostics with Phenomenon.>
5	Warm air not emitted.	<Ref. to AC(diag)-22, WARM AIR NOT EMITTED, DIAGNOSTIC PROCEDURE WITH PHENOMENON, Diagnostics with Phenomenon.>
6	Compartment temperature is excessively lower than setting temperature.	<Ref. to AC(diag)-24, COMPARTMENT TEMPERATURE IS EXCESSIVELY LOWER THAN SETTING TEMPERATURE, DIAGNOSTIC PROCEDURE WITH PHENOMENON, Diagnostics with Phenomenon.>
7	Compartment temperature is excessively higher than setting temperature.	<Ref. to AC(diag)-27, COMPARTMENT TEMPERATURE IS EXCESSIVELY HIGHER THAN SETTING TEMPERATURE, DIAGNOSTIC PROCEDURE WITH PHENOMENON, Diagnostics with Phenomenon.>
8	Air does not come out, or airflow capacity is insufficient. (Blower motor does not rotate.)	<Ref. to AC(diag)-30, AIR DOES NOT COME OUT, OR AIRFLOW CAPACITY IS INSUFFICIENT, DIAGNOSTIC PROCEDURE WITH PHENOMENON, Diagnostics with Phenomenon.>
9	Air goes out of control. (Blower motor rotates at high speed.)	<Ref. to AC(diag)-35, AIR GOES OUT OF CONTROL, DIAGNOSTIC PROCEDURE WITH PHENOMENON, Diagnostics with Phenomenon.>
10	Cold air does not come out even when the A/C switch is pressed. The glass cannot be defogged. (Compressor does not operate. (variable))	<Ref. to AC(diag)-38, COLD AIR DOES NOT COME OUT EVEN WHEN THE A/C SWITCH IS PRESSED. THE GLASS CANNOT BE DEFOGGED. (COMPRESSOR DOES NOT OPERATE. (VARIABLE)), DIAGNOSTIC PROCEDURE WITH PHENOMENON, Diagnostics with Phenomenon.>
11	Unable to switch suction vents.	<Ref. to AC(diag)-40, UNABLE TO SWITCH SUCTION VENTS, DIAGNOSTIC PROCEDURE WITH PHENOMENON, Diagnostics with Phenomenon.>
12	Unable to switch blow vents.	<Ref. to AC(diag)-42, UNABLE TO SWITCH VENTS, DIAGNOSTIC PROCEDURE WITH PHENOMENON, Diagnostics with Phenomenon.>
13	Illumination does not come on, or cannot dim.	<Ref. to AC(diag)-43, ILLUMINATION DOES NOT COME ON OR CANNOT DIM, DIAGNOSTIC PROCEDURE WITH PHENOMENON, Diagnostics with Phenomenon.>

GETtheMANUALS.org

B: DIAGNOSTIC PROCEDURE WITH PHENOMENON

1. NOTHING IS DISPLAYED ON THE SCREEN OR INDICATORS DO NOT ILLUMINATE.

TROUBLE SYMPTOM:

- When the AUTO button is pressed with IGN ON, nothing is displayed on the screen or indicators do not illuminate.
- Self diagnosis using A/C control panel does not operate.

Trouble causes:

- Control module power supply circuit failure
- A/C control panel power supply failure
- UART communication failure

WIRING DIAGRAM:

- Auto A/C

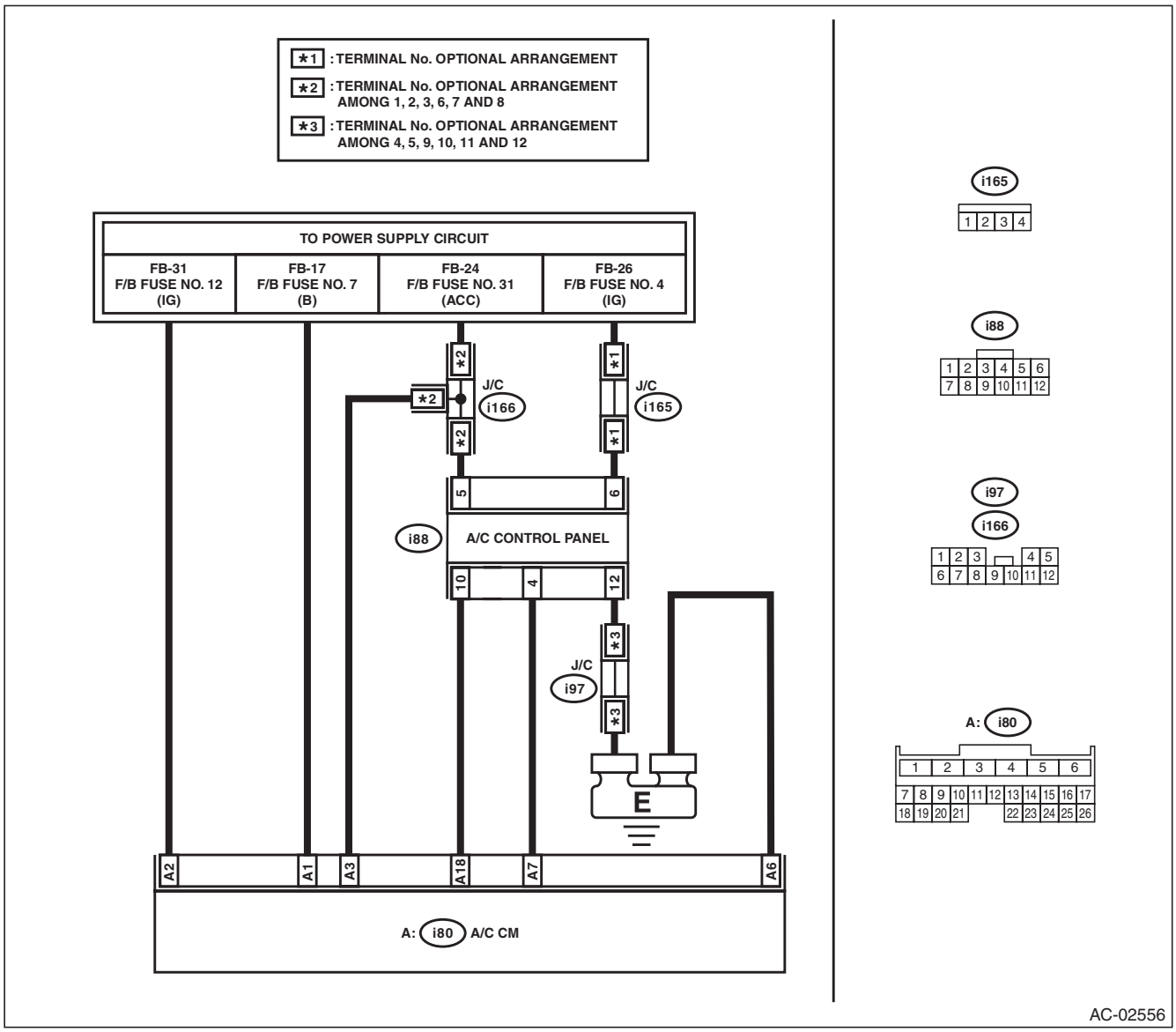

GETtheMANUALS.org

- Manual A/C

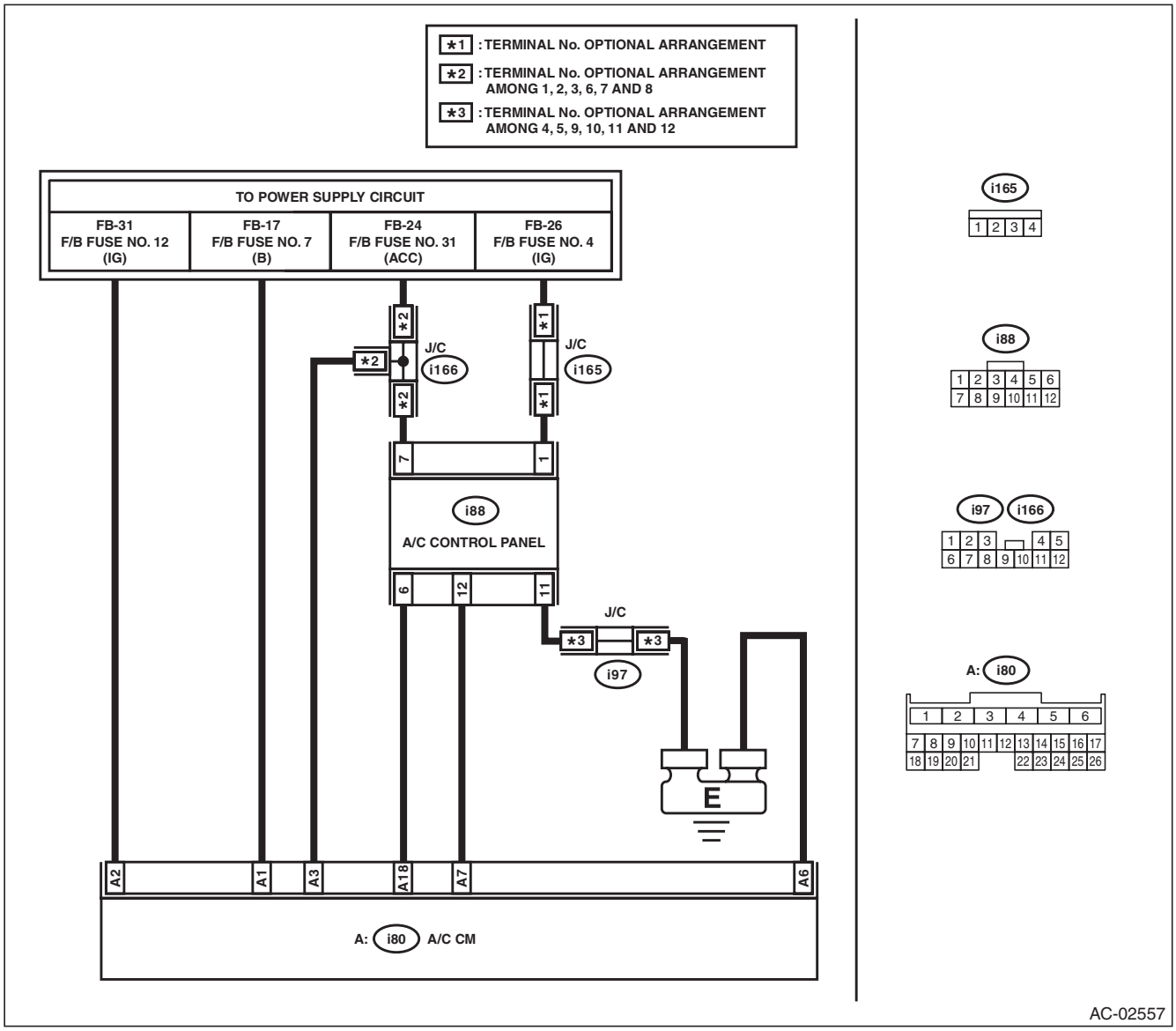

Step		Check	Yes	No
1	**CHECK FUSE.** 1) Turn the ignition switch to OFF. 2) Remove fuse No. 4, 31, 7 and 12 from the fuse & relay box. 3) Check the condition of fuse.	Is the fuse blown out?	Replace the fuse.	Go to step **2**.
2	**CHECK CONNECTOR.** Check the connectors (i166), (i165), (i88), (i97) and (i80) for poor contact.	Is there poor contact of connector?	Repair the connector.	Go to step **3**.

GETtheMANUALS.org

	Step	Check	Yes	No
3	**CHECK A/C CONTROL PANEL POWER CIRCUIT.** 1) Remove the A/C control panel. 2) Disconnect the A/C control panel connector. 3) Measure the voltage between A/C control panel connector terminal and chassis ground after turning the ignition switch to ON. ***Connector & terminal*** ***Auto A/C*** ***(i88) No. 5 (+) — Chassis ground (–):*** ***(i88) No. 6 (+) — Chassis ground (–):*** ***Manual A/C*** ***(i88) No. 1 (+) — Chassis ground (–):*** ***(i88) No. 7 (+) — Chassis ground (–):***	Is the voltage 10 V or more?	Go to step **4**.	Check for open or short circuit in the harness between A/C control panel and fuse.
4	**CHECK A/C CONTROL PANEL GROUND CIRCUIT.** Measure the resistance of harness between A/C control panel and chassis ground after turning the ignition switch to OFF. ***Connector & terminal*** ***Auto A/C*** ***(i88) No. 12 — Chassis ground:*** ***Manual A/C*** ***(i88) No. 11 — Chassis ground:***	Is the resistance less than 10 Ω?	Go to step **5**.	Repair the harness for ground line.
5	**CHECK A/C CM POWER SUPPLY CIRCUIT.** 1) Install the A/C control panel. 2) Disconnect the A/C CM connector. 3) Measure the voltage between A/C CM connector terminal and chassis ground after turning the ignition switch to ON. ***Connector & terminal*** ***(i80) No. 1 (+) — Chassis ground (–):*** ***(i80) No. 2 (+) — Chassis ground (–):*** ***(i80) No. 3 (+) — Chassis ground (–):***	Is the voltage 10 V or more?	Go to step **6**.	Check for open or short circuit in the harness between A/C CM and fuse.
6	**CHECK A/C CM GROUND CIRCUIT.** Measure the resistance of harness between A/C CM and chassis ground. ***Connector & terminal*** ***(i80) No. 6 — Chassis ground:***	Is the resistance less than 5 Ω?	Go to step **7**.	Repair the harness for ground line.
7	**CHECK COMMUNICATION CIRCUIT.** Measure the resistance of harness between A/C control panel and air conditioner control module. ***Connector & terminal*** ***Auto A/C*** ***(i88) No. 10 — (i80) No. 18:*** ***(i88) No. 4 — (i80) No. 7:*** ***Manual A/C*** ***(i88) No. 6 — (i80) No. 18:*** ***(i88) No. 12 — (i80) No. 7:***	Is there continuity?	Go to step **8**.	Repair the harness.
8	**CHECK COMMUNICATION CIRCUIT HARNESS.** Measure the resistance between communication circuit harness and chassis ground. ***Connector & terminal*** ***(i80) No. 18 — Chassis ground:*** ***(i80) No. 7 — Chassis ground:***	Is there continuity?	Repair or replace the short circuit of the harness.	Go to step **9**.

GETtheMANUALS.org

Step		Check	Yes	No
9	**CHECK HARNESS.** Using a tester, check continuity between terminals. ***Connector & terminal*** ***(i80) No. 18 — No. 7:***	Is there continuity?	Repair or replace the short circuit of the harness.	Go to step **10**.
10	**CHECK A/C CONTROL PANEL.** 1) Turn the ignition switch to OFF. 2) Replace the A/C control panel with a properly functioning part.	Does the A/C control panel operate normally?	Since the A/C control panel has an internal error, replace A/C control panel with a new one. <Ref. to AC-46, REMOVAL, Control Panel.>	Since the A/C CM has an internal error, replace A/C CM with a new one. <Ref. to AC-54, REMOVAL, Control Unit.>

2. AIR CONDITIONER DOES NOT STOP EVEN WHEN THE OFF SWITCH IS PRESSED. (VEHICLES WITH FULLY AUTOMATIC AIR CONDITIONER)

TROUBLE SYMPTOM:

Even when the OFF switch is pressed, the blower fan does not turn off, the inlet opening remains in FRESH mode, and the compressor does not turn off.

Trouble causes:

- UART communication failure
- A/C control panel failure
- Blower motor failure
- Intake door actuator failure
- Compressor failure

Step		Check	Yes	No
1	**CHECK A/C CONTROL PANEL.** 1) Turn the ignition switch to ON. 2) Press the OFF switch of the A/C control panel. 3) Using Subaru Select Monitor, check the following data in “Read Current Data”. • Blower Fan Level • Variable Flow Change Solenoid Duty (vehicles with variable air conditioner) • Fresh/Recircle Air Door Actuator Position Target	Does “Blower Fan Level” indicate 0, “Variable Flow Change Solenoid Duty” indicate 0% and “Fresh/Recircle Air Door Actuator Position Target” indicate 100% respectively?	Go to step **2**.	Replace the A/C control panel. <Ref. to AC-46, REMOVAL, Control Panel.>
2	**CHECK BLOWER MOTOR.** With the OFF switch pressed, check the blower motor operation.	Is the blower motor stopped?	Go to step **3**.	<Ref. to AC(diag)-35, AIR GOES OUT OF CONTROL, DIAGNOSTIC PROCEDURE WITH PHENOMENON, Diagnostics with Phenomenon.>
3	**CHECK INTAKE DOOR ACTUATOR.** With the OFF switch pressed, check the FRESH/RECIRC door operation.	Does the FRESH/RECIRC door set to FRESH?	Go to step **4**.	<Ref. to AC(diag)-40, UNABLE TO SWITCH SUCTION VENTS, DIAGNOSTIC PROCEDURE WITH PHENOMENON, Diagnostics with Phenomenon.>

GETtheMANUALS.org

Step		Check	Yes	No
4	**CHECK COMPRESSOR.** With the OFF switch pressed, check the compressor operation.	Is the compressor stopped?	System is normal.	<Ref. to AC(diag)-38, COLD AIR DOES NOT COME OUT EVEN WHEN THE A/C SWITCH IS PRESSED. THE GLASS CANNOT BE DEFOGGED. (COMPRESSOR DOES NOT OPERATE. (VARIABLE)), DIAGNOSTIC PROCEDURE WITH PHENOMENON, Diagnostics with Phenomenon.>

3. THE WINDSHIELD GLASS IS NOT CLEARED EVEN WHEN THE DEF SWITCH IS PRESSED. (VEHICLES WITH FULLY AUTOMATIC AIR CONDITIONER)

TROUBLE SYMPTOM:

Even when the DEF switch is pressed, the defroster indicator does not illuminate, the outlet opening is not set to DEF, the compressor does not turn on and the outlet opening is not set to FRESH.

Trouble causes:

- UART communication failure
- A/C control panel failure
- Mode door actuator failure
- Compressor failure
- Intake door actuator failure

Step		Check	Yes	No
1	**CHECK A/C CONTROL PANEL.** 1) Turn the ignition switch to ON. 2) Press the DEF switch of the A/C control panel. 3) Using Subaru Select Monitor, check the following data in “Read Current Data”. • Mode Door Actuator Position Target • Variable Flow Change Solenoid Duty (vehicles with variable air conditioner) • Fresh/Recircle Air Door Actuator Position Target	Does “Mode Door Actuator Position Target” indicate 100%, “Variable Flow Change Solenoid Duty” indicate 0% or more and “Fresh/Recircle Air Door Actuator Position Target” indicate 100% respectively?	Go to step **2**.	Replace the A/C control panel. <Ref. to AC-46, REMOVAL, Control Panel.>
2	**CHECK MODE DOOR ACTUATOR.** With the DEF switch ON, check the mode door operation.	Does the air come out from the DEF outlet opening?	Go to step **3**.	<Ref. to AC(diag)-42, UNABLE TO SWITCH VENTS, DIAGNOSTIC PROCEDURE WITH PHENOMENON, Diagnostics with Phenomenon.>

GETtheMANUALS.org

Step		Check	Yes	No
3	**CHECK INTAKE DOOR ACTUATOR.** With the DEF switch ON, check the FRESH/RECIRC door operation.	Does the FRESH/RECIRC door operate normally?	Go to step **4**.	<Ref. to AC(diag)-40, UNABLE TO SWITCH SUCTION VENTS, DIAGNOSTIC PROCEDURE WITH PHENOMENON, Diagnostics with Phenomenon.>
4	**CHECK COMPRESSOR.** With the DEF switch ON, check the compressor operation.	Does the compressor operate?	System is normal.	<Ref. to AC(diag)-38, COLD AIR DOES NOT COME OUT EVEN WHEN THE A/C SWITCH IS PRESSED. THE GLASS CANNOT BE DEFOGGED. (COMPRESSOR DOES NOT OPERATE. (VARIABLE)), DIAGNOSTIC PROCEDURE WITH PHENOMENON, Diagnostics with Phenomenon.>

4. COLD AIR NOT EMITTED

TROUBLE SYMPTOM:

Cold air not emitted.

Trouble causes:

- Airflow capacity failure
- Refrigerant pressure failure
- Air mix actuator (driver's) failure
- Air mix actuator (passenger's) failure (with left/right independent air conditioner only)
- Intake door actuator failure
- Evaporator sensor failure (vehicles with automatic air conditioner only)
- In-vehicle sensor failure (vehicles with automatic air conditioner only)
- Ambient sensor failure (vehicles with automatic air conditioner only)
- Sunload sensor failure (vehicles with automatic air conditioner only)

Step		Check	Yes	No
1	**CHECK MAX COOL.** Set the A/C control panel switch as described below. Temperature control switch: MAX COOL FRESH/RECIRC switch: RECIRC Mode switch: VENT A/C switch: ON	Does no cold air come out?	Go to step **2**.	Go to step **4**.
2	**CHECK AIRFLOW CAPACITY.** Check the airflow capacity. <Ref. to AC(diag)-30, AIR DOES NOT COME OUT, OR AIRFLOW CAPACITY IS INSUFFICIENT, DIAGNOSTIC PROCEDURE WITH PHENOMENON, Diagnostics with Phenomenon.>	Is the airflow capacity normal?	Go to step **3**.	Perform repair according to inspection procedure.

GETtheMANUALS.org

Step		Check	Yes	No
3	**CHECK AMOUNT OF REFRIGERANT PRESSURE.** Check the refrigerant pressure. <Ref. to AC-20, CHECK REFRIGERANT GAS PRESSURE, PROCEDURE, Refrigerant Pressure with Manifold Gauge Set.>	Is the refrigerant pressure normal?	For vehicles with automatic air conditioner Go to step **4**. For vehicles with manual air conditioner Go to step **6**.	Perform repair according to refrigerant pressure inspection.
4	**CHECK A/C CONTROL PANEL (VEHICLES WITH AUTOMATIC AIR CONDITIONER).** 1) Continue clicking the temperature control switch ▽ (driver's) and (passenger's). 2) Using Subaru Select Monitor, display the following data in "Read Current Data". • Heater Control Panel Setting Value (Driver's) • Heater Control Panel Setting Value (Passenger's)	Do "Heater Control Panel Setting Value (Driver's)" and "Heater Control Panel Setting Value (Passenger's)" indicate "60"?	Go to step **5**.	Replace the A/C control panel. <Ref. to AC-46, REMOVAL, Control Panel.>
5	**CHECK A/C CONTROL PANEL (VEHICLES WITH AUTOMATIC AIR CONDITIONER).** 1) Continue clicking the temperature control switch △ (driver's). 2) Using Subaru Select Monitor, display the following data in "Read Current Data". • Heater Control Panel Setting Value (Driver's) • Heater Control Panel Setting Value (Passenger's)	Do "Heater Control Panel Setting Value (Driver's)" and "Heater Control Panel Setting Value (Passenger's)" indicate "90"?	Go to step **8**.	Replace the A/C control panel. <Ref. to AC-46, REMOVAL, Control Panel.>
6	**CHECK A/C CONTROL PANEL (VEHICLES WITH MANUAL AIR CONDITIONER).** 1) Set the temperature control switch dial to MAX COOL. 2) Using Subaru Select Monitor, display the following data in "Read Current Data". • Target air mix door actuator position (driver's side)	Does "Target air mix door actuator position (driver's side)" indicate "0%"?	Go to step **7**.	Replace the A/C control panel. <Ref. to AC-46, REMOVAL, Control Panel.>
7	**CHECK A/C CONTROL PANEL (VEHICLES WITH MANUAL AIR CONDITIONER).** 1) Set the temperature control switch dial to MAX HOT. 2) Using Subaru Select Monitor, display the following data in "Read Current Data". • Target air mix door actuator position (driver's side)	Does "Target air mix door actuator position (driver's side)" indicate "100%"?	Go to step **8**.	Replace the A/C control panel. <Ref. to AC-46, REMOVAL, Control Panel.>
8	**CHECK DTC.** 1) Turn the ignition switch to ON. 2) Set the temperature control switch to MAX COOL, and wait for 16 seconds or more. (For vehicles with left/right independent air conditioner, perform setting on both sides.) 3) Read the DTC using Subaru Select Monitor.	Are DTCs B1610, B1611, B1612, B1613, B1614 and B1615 displayed?	Perform the diagnosis according to DTC.	Go to step **9**.
9	**CHECK DTC.** 1) Turn the ignition switch to ON. 2) Set the temperature control switch to MAX HOT, and wait for 16 seconds or more. (For vehicles with left/right independent air conditioner, perform setting on both sides.) 3) Read the DTC using Subaru Select Monitor.	Are DTCs B1610, B1611, B1612, B1613, B1614 and B1615 displayed?	Perform the diagnosis according to DTC.	Go to step **10**.

GETthemANUALS.org

Step		Check	Yes	No
10	**CHECK INTAKE DOOR ACTUATOR.** Visually check the intake door actuator operation.	Is the intake door actuator normal?	Go to step **11**.	Check the intake door actuator. <Ref. to AC(diag)-40, UNABLE TO SWITCH SUCTION VENTS, DIAGNOSTIC PROCEDURE WITH PHENOMENON, Diagnostics with Phenomenon.>
11	**CHECK EVAPORATOR SENSOR UNIT (VEHICLES WITH AUTOMATIC AIR CONDITIONER ONLY).** Perform the inspection of evaporator sensor unit. <Ref. to AC-88, INSPECTION, Evaporator Sensor.>	Is the evaporator sensor normal?	Go to step **12**.	Replace the evaporator sensor. <Ref. to AC-87, REMOVAL, Evaporator Sensor.>
12	**CHECK IN-VEHICLE SENSOR UNIT (VEHICLES WITH AUTOMATIC AIR CONDITIONER ONLY).** Check in-vehicle sensor. <Ref. to AC-84, INSPECTION, In-Vehicle Sensor (Auto A/C Model).>	Is the in-vehicle sensor normal?	Go to step **13**.	Replace the in-vehicle sensor. <Ref. to AC-82, REMOVAL, In-Vehicle Sensor (Auto A/C Model).>
13	**CHECK AMBIENT SENSOR (VEHICLES WITH AUTOMATIC AIR CONDITIONER ONLY).** 1) Turn the ignition switch to ON. 2) Using Subaru Select Monitor, check “Heater Water Temperature” in “Read Current Data”, and check that the temperature indicates 50°C (122°F) or less. NOTE: • Do not start engine. • If the temperature is more than 50°C (122°F), turn the ignition switch to OFF, and wait until the water temperature decreases. 3) Using Subaru Select Monitor, check “Ambient Air Temperature” in “Read Current Data”. 4) Using a thermometer, check the temperature at the installation area of the ambient sensor.	Are the data value and the one measured with a thermometer the same?	Go to step **15**.	Go to step **14**.
14	**CHECK AMBIENT SENSOR CIRCUIT (VEHICLES WITH AUTOMATIC AIR CONDITIONER ONLY).** Check ambient sensor circuit. <Ref. to AC(diag)-44, AMBIENT SENSOR, Diagnostic Procedure for Sensors.>	Is the ambient sensor circuit normal?	Go to step **15**.	Repair the faulty circuit.
15	**CHECK SUNLOAD SENSOR UNIT (VEHICLES WITH AUTOMATIC AIR CONDITIONER ONLY).** Check the sunload sensor unit. <Ref. to AC-81, INSPECTION, Sunload Sensor (Auto A/C Model).>	Is the sunload sensor normal?	System is normal.	Replace the sunload sensor. <Ref. to AC-80, REMOVAL, Sunload Sensor (Auto A/C Model).>

GETtheMANUALS.org

5. WARM AIR NOT EMITTED

TROUBLE SYMPTOM:
Warm air not emitted.
Trouble causes:
- Airflow capacity failure
- Coolant failure
- UART communication failure
- A/C control panel failure
- Air mix actuator (driver's) failure
- Air mix actuator (passenger's) failure (with left/right independent air conditioner only)
- Intake door actuator failure
- Evaporator sensor failure (vehicles with automatic air conditioner only)
- In-vehicle sensor failure (vehicles with automatic air conditioner only)
- Ambient sensor failure (vehicles with automatic air conditioner only)
- Sunload sensor failure (vehicles with automatic air conditioner only)

	Step	Check	Yes	No
1	**CHECK MAX HOT.** Set the A/C control panel switch as described below. Temperature control switch: MAX HOT FRESH/RECIRC switch: FRESH Mode switch: HEAT A/C switch: OFF	Does no warm air come out?	Go to step **2**.	Go to step **4**.
2	**CHECK AIRFLOW CAPACITY.** Check the airflow capacity. <Ref. to AC(diag)-30, AIR DOES NOT COME OUT, OR AIRFLOW CAPACITY IS INSUFFICIENT, DIAGNOSTIC PROCEDURE WITH PHENOMENON, Diagnostics with Phenomenon.>	Is the airflow capacity normal?	Go to step **3**.	Perform repair according to inspection procedure.
3	**CHECK ENGINE COOLANT.** Check engine coolant amount.	Is the engine coolant amount normal?	For vehicles with automatic air conditioner Go to step **4**. For vehicles with manual air conditioner Go to step **6**.	Fill engine coolant. If there is coolant leakage, repair the leaks according to Engine Cooling System Trouble in General. <Ref. to CO(H4DOTC)-30, Engine Cooling System Trouble in General.> <Ref. to CO(H6DO)-27, Engine Cooling System Trouble in General.> <Ref. to CO(H4SO)-27, Engine Cooling System Trouble in General.>
4	**CHECK A/C CONTROL PANEL (VEHICLES WITH AUTOMATIC AIR CONDITIONER).** 1) Continue clicking the temperature control switch ▽ (driver's) and (passenger's). 2) Using Subaru Select Monitor, display the following data in "Read Current Data". • Heater Control Panel Setting Value (Driver's) • Heater Control Panel Setting Value (Passenger's)	Do "Heater Control Panel Setting Value (Driver's)" and "Heater Control Panel Setting Value (Passenger's)" indicate "60"?	Go to step **5**.	Replace the A/C control panel. <Ref. to AC-46, REMOVAL, Control Panel.>

GETthemANUALS.org

Step		Check	Yes	No
5	**CHECK A/C CONTROL PANEL (VEHICLES WITH AUTOMATIC AIR CONDITIONER).** 1) Continue clicking the temperature control switch △ (driver's). 2) Using Subaru Select Monitor, display the following data in "Read Current Data". • Heater Control Panel Setting Value (Driver's) • Heater Control Panel Setting Value (Passenger's)	Do "Heater Control Panel Setting Value (Driver's)" and "Heater Control Panel Setting Value (Passenger's)" indicate "90"?	Go to step **8**.	Replace the A/C control panel. <Ref. to AC-46, REMOVAL, Control Panel.>
6	**CHECK A/C CONTROL PANEL (VEHICLES WITH MANUAL AIR CONDITIONER).** 1) Set the temperature control switch dial to MAX COOL. 2) Using Subaru Select Monitor, display the following data in "Read Current Data". • Target air mix door actuator position (driver's side)	Does "Target air mix door actuator position (driver's side)" indicate "0%"?	Go to step **7**.	Replace the A/C control panel. <Ref. to AC-46, REMOVAL, Control Panel.>
7	**CHECK A/C CONTROL PANEL (VEHICLES WITH MANUAL AIR CONDITIONER).** 1) Set the temperature control switch dial to MAX HOT. 2) Using Subaru Select Monitor, display the following data in "Read Current Data". • Target air mix door actuator position (driver's side)	Does "Target air mix door actuator position (driver's side)" indicate "100%"?	Go to step **8**.	Replace the A/C control panel. <Ref. to AC-46, REMOVAL, Control Panel.>
8	**CHECK DTC.** 1) Turn the ignition switch to ON. 2) Set the temperature control switch to MAX COOL, and wait for 16 seconds or more. (For vehicles with left/right independent air conditioner, perform setting on both sides.) 3) Read the DTC using Subaru Select Monitor.	Are DTCs B1610, B1611, B1612, B1613, B1614 and B1615 displayed?	Perform the diagnosis according to DTC.	Go to step **9**.
9	**CHECK DTC.** 1) Turn the ignition switch to ON. 2) Set the temperature control switch to MAX HOT, and wait for 16 seconds or more. (For vehicles with left/right independent air conditioner, perform setting on both sides.) 3) Read the DTC using Subaru Select Monitor.	Are DTCs B1610, B1611, B1612, B1613, B1614 and B1615 displayed?	Perform the diagnosis according to DTC.	Go to step **10**.
10	**CHECK INTAKE DOOR ACTUATOR.** Visually check the intake door actuator operation.	Is the intake door actuator normal?	Go to step **11**.	Check the intake door actuator. <Ref. to AC(diag)-40, UNABLE TO SWITCH SUCTION VENTS, DIAGNOSTIC PROCEDURE WITH PHENOMENON, Diagnostics with Phenomenon.>
11	**CHECK EVAPORATOR SENSOR UNIT (VEHICLES WITH AUTOMATIC AIR CONDITIONER ONLY).** Perform the inspection of evaporator sensor unit. <Ref. to AC-88, INSPECTION, Evaporator Sensor.>	Is the evaporator sensor normal?	Go to step **12**.	Replace the evaporator sensor. <Ref. to AC-87, REMOVAL, Evaporator Sensor.>

GETtheMANUALS.org

Step		Check	Yes	No
12	**CHECK IN-VEHICLE SENSOR UNIT (VEHICLES WITH AUTOMATIC AIR CONDITIONER ONLY).** Check in-vehicle sensor circuit. <Ref. to AC-84, INSPECTION, In-Vehicle Sensor (Auto A/C Model).>	Is the in-vehicle sensor circuit normal?	Go to step **13**.	Replace the in-vehicle sensor. <Ref. to AC-82, REMOVAL, In-Vehicle Sensor (Auto A/C Model).>
13	**CHECK AMBIENT SENSOR (VEHICLES WITH AUTOMATIC AIR CONDITIONER ONLY).** 1) Turn the ignition switch to ON. 2) Using Subaru Select Monitor, check "Heater Water Temperature" in "Read Current Data", and check that the temperature indicates 50°C (122°F) or less. NOTE: • Do not start engine. • If the temperature is more than 50°C (122°F), turn the ignition switch to OFF, and wait until the water temperature decreases. 3) Using Subaru Select Monitor, check "Ambient Air Temperature" in "Read Current Data". 4) Using a thermometer, check the temperature at the installation area of the ambient sensor.	Are the data value and the one measured with a thermometer the same?	Go to step **15**.	Go to step **14**.
14	**CHECK AMBIENT SENSOR CIRCUIT (VEHICLES WITH AUTOMATIC AIR CONDITIONER ONLY).** Check ambient sensor circuit. <Ref. to AC(diag)-44, AMBIENT SENSOR, Diagnostic Procedure for Sensors.>	Is the ambient sensor circuit normal?	Go to step **15**.	Repair the faulty circuit.
15	**CHECK SUNLOAD SENSOR UNIT (VEHICLES WITH AUTOMATIC AIR CONDITIONER ONLY).** Check the sunload sensor unit. <Ref. to AC-81, INSPECTION, Sunload Sensor (Auto A/C Model).>	Is the sunload sensor normal?	System is normal.	Replace the sunload sensor. <Ref. to AC-80, REMOVAL, Sunload Sensor (Auto A/C Model).>

6. COMPARTMENT TEMPERATURE IS EXCESSIVELY LOWER THAN SETTING TEMPERATURE

TROUBLE SYMPTOM:

Compartment temperature is excessively lower than setting temperature.

Trouble causes:

- Large airflow capacity
- Refrigerant pressure failure
- UART communication failure
- A/C control panel failure
- Air mix actuator (driver's) failure
- Air mix actuator (passenger's) failure (with left/right independent air conditioner only)
- Evaporator sensor failure (vehicles with automatic air conditioner only)
- In-vehicle sensor failure (vehicles with automatic air conditioner only)
- Ambient sensor failure (vehicles with automatic air conditioner only)
- Sunload sensor failure (vehicles with automatic air conditioner only)

GETtheMANUALS.org

	Step	Check	Yes	No
1	**CHECK AIRFLOW CAPACITY.** Check the airflow capacity. <Ref. to AC(diag)-35, AIR GOES OUT OF CONTROL, DIAGNOSTIC PROCEDURE WITH PHENOMENON, Diagnostics with Phenomenon.>	Is the airflow capacity normal?	Go to step **2**.	Perform repair according to inspection procedure.
2	**CHECK AMOUNT OF REFRIGERANT PRESSURE.** Check the refrigerant pressure. <Ref. to AC-20, CHECK REFRIGERANT GAS PRESSURE, PROCEDURE, Refrigerant Pressure with Manifold Gauge Set.>	Is the refrigerant pressure normal?	For vehicles with automatic air conditioner Go to step **3**. For vehicles with manual air conditioner Go to step **5**.	Perform repair according to refrigerant pressure inspection.
3	**CHECK A/C CONTROL PANEL (VEHICLES WITH AUTOMATIC AIR CONDITIONER).** 1) Continue clicking the temperature control switch ▽ (driver's) and (passenger's). 2) Using Subaru Select Monitor, display the following data in "Read Current Data". • Heater Control Panel Setting Value (Driver's) • Heater Control Panel Setting Value (Passenger's)	Do "Heater Control Panel Setting Value (Driver's)" and "Heater Control Panel Setting Value (Passenger's)" indicate "60"?	Go to step **4**.	Replace the A/C control panel. <Ref. to AC-46, REMOVAL, Control Panel.>
4	**CHECK A/C CONTROL PANEL (VEHICLES WITH AUTOMATIC AIR CONDITIONER).** 1) Continue clicking the temperature control switch △ (driver's). 2) Using Subaru Select Monitor, display the following data in "Read Current Data". • Heater Control Panel Setting Value (Driver's) • Heater Control Panel Setting Value (Passenger's)	Do "Heater Control Panel Setting Value (Driver's)" and "Heater Control Panel Setting Value (Passenger's)" indicate "90"?	Go to step **5**.	Replace the A/C control panel. <Ref. to AC-46, REMOVAL, Control Panel.>
5	**CHECK A/C CONTROL PANEL (VEHICLES WITH MANUAL AIR CONDITIONER).** 1) Set the temperature control switch dial to MAX COOL. 2) Using Subaru Select Monitor, display the following data in "Read Current Data". • Target air mix door actuator position (driver's side)	Does "Target air mix door actuator position (driver's side)" indicate "0%"?	Go to step **6**.	Replace the A/C control panel. <Ref. to AC-46, REMOVAL, Control Panel.>
6	**CHECK A/C CONTROL PANEL (VEHICLES WITH MANUAL AIR CONDITIONER).** 1) Set the temperature control switch dial to MAX HOT. 2) Using Subaru Select Monitor, display the following data in "Read Current Data". • Target air mix door actuator position (driver's side)	Does "Target air mix door actuator position (driver's side)" indicate "100%"?	Go to step **7**.	Replace the A/C control panel. <Ref. to AC-46, REMOVAL, Control Panel.>
7	**CHECK DTC.** 1) Turn the ignition switch to ON. 2) Set the temperature control switch to MAX COOL, and wait for 16 seconds or more. (For vehicles with left/right independent air conditioner, perform setting on both sides.) 3) Read the DTC using Subaru Select Monitor.	Are DTCs B1610, B1611, B1612, B1613, B1614 and B1615 displayed?	Perform the diagnosis according to DTC.	Go to step **8**.

GETtheMANUALS.org

Step		Check	Yes	No
8	**CHECK DTC.** 1) Turn the ignition switch to ON. 2) Set the temperature control switch to MAX HOT, and wait for 16 seconds or more. (For vehicles with left/right independent air conditioner, perform setting on both sides.) 3) Read the DTC using Subaru Select Monitor.	Are DTCs B1610, B1611, B1612, B1613, B1614 and B1615 displayed?	Perform the diagnosis according to DTC.	Go to step **9**.
9	**CHECK EVAPORATOR SENSOR UNIT (VEHICLES WITH AUTOMATIC AIR CONDITIONER ONLY).** Perform the inspection of evaporator sensor unit. <Ref. to AC-88, INSPECTION, Evaporator Sensor.>	Is the evaporator sensor normal?	Go to step **10**.	Replace the evaporator sensor. <Ref. to AC-87, REMOVAL, Evaporator Sensor.>
10	**CHECK IN-VEHICLE SENSOR UNIT (VEHICLES WITH AUTOMATIC AIR CONDITIONER ONLY).** Check in-vehicle sensor circuit. <Ref. to AC-84, INSPECTION, In-Vehicle Sensor (Auto A/C Model).>	Is the in-vehicle sensor circuit normal?	Go to step **11**.	Replace the in-vehicle sensor. <Ref. to AC-82, REMOVAL, In-Vehicle Sensor (Auto A/C Model).>
11	**CHECK AMBIENT SENSOR (VEHICLES WITH AUTOMATIC AIR CONDITIONER ONLY).** 1) Turn the ignition switch to ON. 2) Using Subaru Select Monitor, check “Heater Water Temperature” in “Read Current Data”, and check that the temperature indicates 50°C (122°F) or less. NOTE: • Do not start engine. • If the temperature is more than 50°C (122°F), turn the ignition switch to OFF, and wait until the water temperature decreases. 3) Using Subaru Select Monitor, check “Ambient Air Temperature” in “Read Current Data”. 4) Using a thermometer, check the temperature at the installation area of the ambient sensor.	Are the data value and the one measured with a thermometer the same?	Go to step **13**.	Go to step **12**.
12	**CHECK AMBIENT SENSOR CIRCUIT (VEHICLES WITH AUTOMATIC AIR CONDITIONER ONLY).** Check ambient sensor circuit. <Ref. to AC(diag)-44, AMBIENT SENSOR, Diagnostic Procedure for Sensors.>	Is the ambient sensor circuit normal?	Go to step **13**.	Repair the faulty circuit.
13	**CHECK SUNLOAD SENSOR UNIT (VEHICLES WITH AUTOMATIC AIR CONDITIONER ONLY).** Check the sunload sensor unit. <Ref. to AC-81, INSPECTION, Sunload Sensor (Auto A/C Model).>	Is the sunload sensor normal?	System is normal.	Replace the sunload sensor. <Ref. to AC-80, REMOVAL, Sunload Sensor (Auto A/C Model).>

GETtheMANUALS.org

7. COMPARTMENT TEMPERATURE IS EXCESSIVELY HIGHER THAN SETTING TEMPERATURE

TROUBLE SYMPTOM:
Compartment temperature is excessively higher than setting temperature.
Trouble causes:
- Large airflow capacity
- UART communication failure
- A/C control panel failure
- Air mix actuator (driver's) failure
- Air mix actuator (passenger's) failure (with left/right independent air conditioner only)
- Intake door actuator failure
- Evaporator sensor failure (vehicles with automatic air conditioner only)
- In-vehicle sensor failure (vehicles with automatic air conditioner only)
- Ambient sensor failure (vehicles with automatic air conditioner only)
- Sunload sensor failure (vehicles with automatic air conditioner only)

	Step	Check	Yes	No
1	**CHECK AIRFLOW CAPACITY.** Check the airflow capacity. <Ref. to AC(diag)-35, AIR GOES OUT OF CONTROL, DIAGNOSTIC PROCEDURE WITH PHENOMENON, Diagnostics with Phenomenon.>	Is the airflow capacity normal?	For vehicles with automatic air conditioner Go to step **2**. For vehicles with manual air conditioner Go to step **4**.	Perform repair according to inspection procedure.
2	**CHECK A/C CONTROL PANEL (VEHICLES WITH AUTOMATIC AIR CONDITIONER).** 1) Continue clicking the temperature control switch ▽ (driver's) and (passenger's). 2) Using Subaru Select Monitor, display the following data in "Read Current Data". • Heater Control Panel Setting Value (Driver's) • Heater Control Panel Setting Value (Passenger's)	Do "Heater Control Panel Setting Value (Driver's)" and "Heater Control Panel Setting Value (Passenger's)" indicate "60"?	Go to step **3**.	Replace the A/C control panel. <Ref. to AC-46, REMOVAL, Control Panel.>
3	**CHECK A/C CONTROL PANEL (VEHICLES WITH AUTOMATIC AIR CONDITIONER).** 1) Continue clicking the temperature control switch △ (driver's). 2) Using Subaru Select Monitor, display the following data in "Read Current Data". • Heater Control Panel Setting Value (Driver's) • Heater Control Panel Setting Value (Passenger's)	Do "Heater Control Panel Setting Value (Driver's)" and "Heater Control Panel Setting Value (Passenger's)" indicate "90"?	Go to step **4**.	Replace the A/C control panel. <Ref. to AC-46, REMOVAL, Control Panel.>
4	**CHECK A/C CONTROL PANEL (VEHICLES WITH MANUAL AIR CONDITIONER).** 1) Set the temperature control switch dial to MAX COOL. 2) Using Subaru Select Monitor, display the following data in "Read Current Data". • Target air mix door actuator position (driver's side)	Does "Target air mix door actuator position (driver's side)" indicate "0%"?	Go to step **5**.	Replace the A/C control panel. <Ref. to AC-46, REMOVAL, Control Panel.>
5	**CHECK A/C CONTROL PANEL (VEHICLES WITH MANUAL AIR CONDITIONER).** 1) Set the temperature control switch dial to MAX HOT. 2) Using Subaru Select Monitor, display the following data in "Read Current Data". • Target air mix door actuator position (driver's side)	Does "Target air mix door actuator position (driver's side)" indicate "100%"?	Go to step **6**.	Replace the A/C control panel. <Ref. to AC-46, REMOVAL, Control Panel.>

GETtheMANUALS.org

	Step	Check	Yes	No
6	**CHECK DTC.** 1) Turn the ignition switch to ON. 2) Set the temperature control switch to MAX COOL, and wait for 16 seconds or more. (For vehicles with left/right independent air conditioner, perform setting on both sides.) 3) Read the DTC using Subaru Select Monitor.	Are DTCs B1610, B1611, B1612, B1613, B1614 and B1615 displayed?	Perform the diagnosis according to DTC.	Go to step **7**.
7	**CHECK DTC.** 1) Turn the ignition switch to ON. 2) Set the temperature control switch to MAX HOT, and wait for 16 seconds or more. (For vehicles with left/right independent air conditioner, perform setting on both sides.) 3) Read the DTC using Subaru Select Monitor.	Are DTCs B1610, B1611, B1612, B1613, B1614 and B1615 displayed?	Perform the diagnosis according to DTC.	Go to step **8**.
8	**CHECK INTAKE DOOR ACTUATOR.** Visually check the intake door actuator operation.	Is the intake door actuator normal?	Go to step **9**.	Check the intake door actuator. <Ref. to AC(diag)-40, UNABLE TO SWITCH SUCTION VENTS, DIAGNOSTIC PROCEDURE WITH PHENOMENON, Diagnostics with Phenomenon.>
9	**CHECK EVAPORATOR SENSOR UNIT (VEHICLES WITH AUTOMATIC AIR CONDITIONER ONLY).** Perform the inspection of evaporator sensor unit. <Ref. to AC-88, INSPECTION, Evaporator Sensor.>	Is the evaporator sensor normal?	Go to step **10**.	Replace the evaporator sensor. <Ref. to AC-87, REMOVAL, Evaporator Sensor.>
10	**CHECK IN-VEHICLE SENSOR UNIT (VEHICLES WITH AUTOMATIC AIR CONDITIONER ONLY).** Check in-vehicle sensor circuit. <Ref. to AC-84, INSPECTION, In-Vehicle Sensor (Auto A/C Model).>	Is the in-vehicle sensor circuit normal?	Go to step **11**.	Replace the in-vehicle sensor. <Ref. to AC-82, REMOVAL, In-Vehicle Sensor (Auto A/C Model).>
11	**CHECK AMBIENT SENSOR (VEHICLES WITH AUTOMATIC AIR CONDITIONER ONLY).** 1) Turn the ignition switch to ON. 2) Using Subaru Select Monitor, check “Heater Water Temperature” in “Read Current Data”, and check that the temperature indicates 50°C (122°F) or less. NOTE: • Do not start engine. • If the temperature is more than 50°C (122°F), turn the ignition switch to OFF, and wait until the water temperature decreases. 3) Using Subaru Select Monitor, check “Ambient Air Temperature” in “Read Current Data”. 4) Using a thermometer, check the temperature at the installation area of the ambient sensor.	Are the data value and the one measured with a thermometer the same?	Go to step **13**.	Go to step **12**.

GETtheMANUALS.org

Step		Check	Yes	No
12	**CHECK AMBIENT SENSOR CIRCUIT (VEHICLES WITH AUTOMATIC AIR CONDITIONER ONLY).** Check the ambient sensor circuit. <Ref. to AC(diag)-44, AMBIENT SENSOR, Diagnostic Procedure for Sensors.>	Is the ambient sensor circuit normal?	Go to step **13**.	Repair the faulty circuit.
13	**CHECK SUNLOAD SENSOR UNIT (VEHICLES WITH AUTOMATIC AIR CONDITIONER ONLY).** Check the sunload sensor unit. <Ref. to AC-81, INSPECTION, Sunload Sensor (Auto A/C Model).>	Is the sunload sensor normal?	System is normal.	Replace the sunload sensor. <Ref. to AC-80, REMOVAL, Sunload Sensor (Auto A/C Model).>

GETtheMANUALS.org

8. AIR DOES NOT COME OUT, OR AIRFLOW CAPACITY IS INSUFFICIENT

TROUBLE SYMPTOM:

- Airflow capacity is insufficient.
- No air comes out even when the fan switch or fan dial is operated.
- There is a fan speed at which no air comes out.

Trouble causes:

- Airflow capacity failure
- UART communication failure
- A/C control panel failure
- Blower motor failure

Auto A/C

WIRING DIAGRAM:

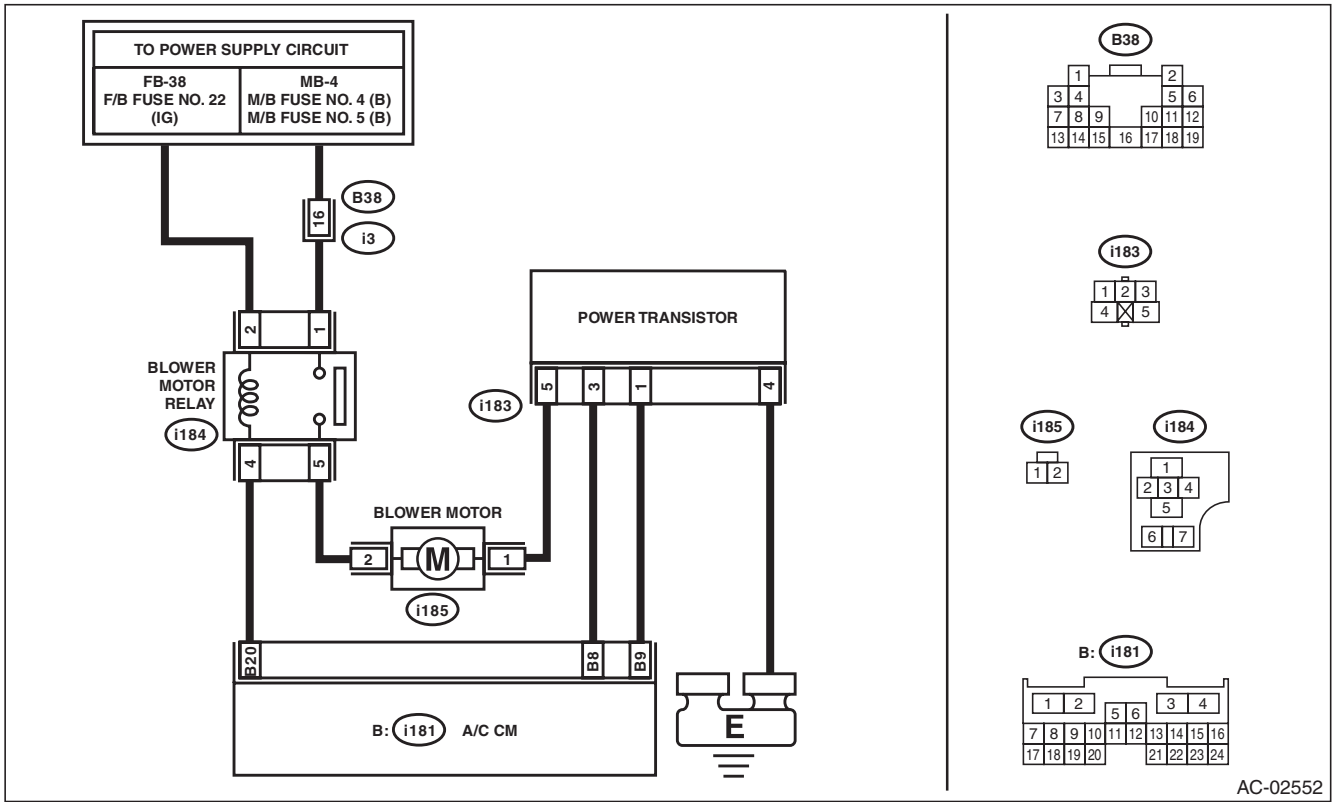

Step		Check	Yes	No
1	**CHECK BLOWER OPERATION.** 1) Using Subaru Select Monitor, display the following data in “Read Current Data”. • Air mix door actuator position (driver’s side) • Air mix door actuator position (passenger’s side) (with left/right independent air conditioner) • Blower Fan Level 2) Set the temperature control switch to MAX COOL, and increase or decrease the A/C control panel fan switch. (For vehicles with left/right independent air conditioner, perform setting on both sides.)	Do “Air mix door actuator position (driver’s side)” and “Air mix door actuator position (passenger’s side)” (with left/right independent air conditioner) indicate “0%”? Does “Blower Fan Level” increase or decrease in accordance with the fan switch operation?	Go to step **2**.	Go to step **5**.

GETthemANUALS.org

Step		Check	Yes	No
2	**CHECK AIRFLOW CAPACITY.** Set the temperature control switch to LO (For vehicles with left/right independent air conditioner, perform setting on both seats.), and set the fan switch of the A/C control panel to MAX and set the FRESH/RECIRC switch to RECIRC.	Is the airflow capacity insufficient for the same model?	Go to step **3**.	System is normal.
3	**CHECK A/C FILTER.** Check the A/C filter. <Ref. to AC-105, INSPECTION, A/C Filter.>	Is the A/C filter normal?	Go to step **4**.	Clean or replace the A/C filter.
4	**CHECK EACH DUCT.** Check each duct joint for disconnection or clogging. <Ref. to AC-101, INSPECTION, Air Vent Grille.> <Ref. to AC-102, INSPECTION, Heater Duct.> <Ref. to AC-103, INSPECTION, Heater Vent Duct.>	Is each duct normal?	Go to step **5**.	Repair the faulty duct.
5	**CHECK A/C CONTROL PANEL.** 1) Turn the ignition switch to ON. 2) Set the fan switch to maximum position. 3) Using the Subaru Select Monitor, check "Blower Fan Level" of the current data from the A/C diagnosis.	Does "Blower Fan Level" indicate "31"?	Go to step **6**.	Replace the A/C control panel. <Ref. to AC-46, REMOVAL, Control Panel.>
6	**CHECK A/C CONTROL PANEL.** 1) Set the fan switch to minimum position. 2) Using the Subaru Select Monitor, check "Blower Fan Level" of the current data from the A/C diagnosis.	Does "Blower Fan Level" indicate "1"?	Go to step **7**.	Replace the A/C control panel. <Ref. to AC-46, REMOVAL, Control Panel.>
7	**CHECK CONNECTOR.** Check the connectors (i80) and (i181) for poor contact.	Is there poor contact of connector?	Repair the connector.	Go to step **8**.
8	**CHECK FUSE.** 1) Remove fuse No. 22 and 7 from fuse & relay box, and fuse No. 4 and 5 from the main fuse box. 2) Check the condition of fuse.	Is the fuse blown out?	Replace the fuse.	Go to step **9**.
9	**CHECK BLOWER MOTOR RELAY ON SIGNAL.** 1) Stop the engine. 2) Turn the fan switch to OFF. 3) Turn the ignition switch to ON. 4) Using a tester, measure the voltage between the A/C CM connector (i181) and chassis ground. ***Connector & terminal*** ***(i181) No. 20 (+) — Chassis ground (–):***	Is the voltage 10 V or more?	Go to step **10**.	• Check for an open or short circuit in the harness between the F/B fuse No. 22 and ECM. • Check the blower relay connector and relay unit. <Ref. to AC-30, CHECK RELAY, INSPECTION, Relay and Fuse.>
10	**CHECK BLOWER MOTOR RELAY ON SIGNAL.** 1) Start the engine. 2) Turn the fan switch to ON. 3) Using a tester, measure the voltage between the A/C CM connector (i181) and chassis ground. ***Connector & terminal*** ***(i181) No. 20 (+) — Chassis ground (–):***	Is the voltage 0 V?	Go to step **11**.	Replace the A/C CM. <Ref. to AC-54, REMOVAL, Control Unit.>

GETtheMANUALS.org

Step		Check	Yes	No
11	**CHECK BLOWER MOTOR POWER SUPPLY CIRCUIT.** 1) Turn the ignition switch to ON. 2) Turn the fan switch to ON. 3) Use a tester, measure the voltage between the blower motor connector (i185) and chassis ground. ***Connector & terminal*** ***(i185) No. 2 (+) — Chassis ground (–):***	Is the voltage 10 V or more?	Go to step **12**.	• Check for an open in the blower motor power supply line harness and for disconnection of the connectors (B38) and (i3). • Check the blower relay connector and relay unit. <Ref. to AC-30, CHECK RELAY, INSPECTION, Relay and Fuse.>
12	**CHECK BLOWER MOTOR UNIT.** Check the blower motor. <Ref. to AC-37, INSPECTION, Blower Motor.>	Is the blower motor OK?	Go to step **13**.	Replace the blower motor. <Ref. to AC-36, REMOVAL, Blower Motor.>
13	**CHECK HARNESS.** 1) Disconnect the power transistor and A/C CM connector. 2) Using a tester, measure the resistance between harness terminals. ***Connector & terminal*** ***(i185) No. 1 — (i183) No. 5:*** ***(i183) No. 3 — (i181) No. 8:*** ***(i183) No. 1 — (i181) No. 9:*** ***(i183) No. 4 — Chassis ground:***	Is the resistance less than 1 Ω?	Go to step **14**.	Repair or replace the open circuit of harness.
14	**CHECK HARNESS.** Use a tester to measure the resistance of harness between the power transistor connector (i183) and chassis ground. ***Connector & terminal*** ***(i183) No. 1 — Chassis ground:*** ***(i183) No. 3 — Chassis ground:***	Is the resistance less than 1 Ω?	Repair or replace the short circuit of the harness.	Go to step **15**.
15	**CHECK POWER TRANSISTOR.** Replace the power transistor with a properly functioning part.	Does the blower motor rotate?	Replace the power transistor. <Ref. to AC-38, REMOVAL, Power Transistor (Auto A/C Model).>	Replace the A/C CM<Ref. to AC-54, REMOVAL, Control Unit.>

GETtheMANUALS.org

Manual A/C

WIRING DIAGRAM:

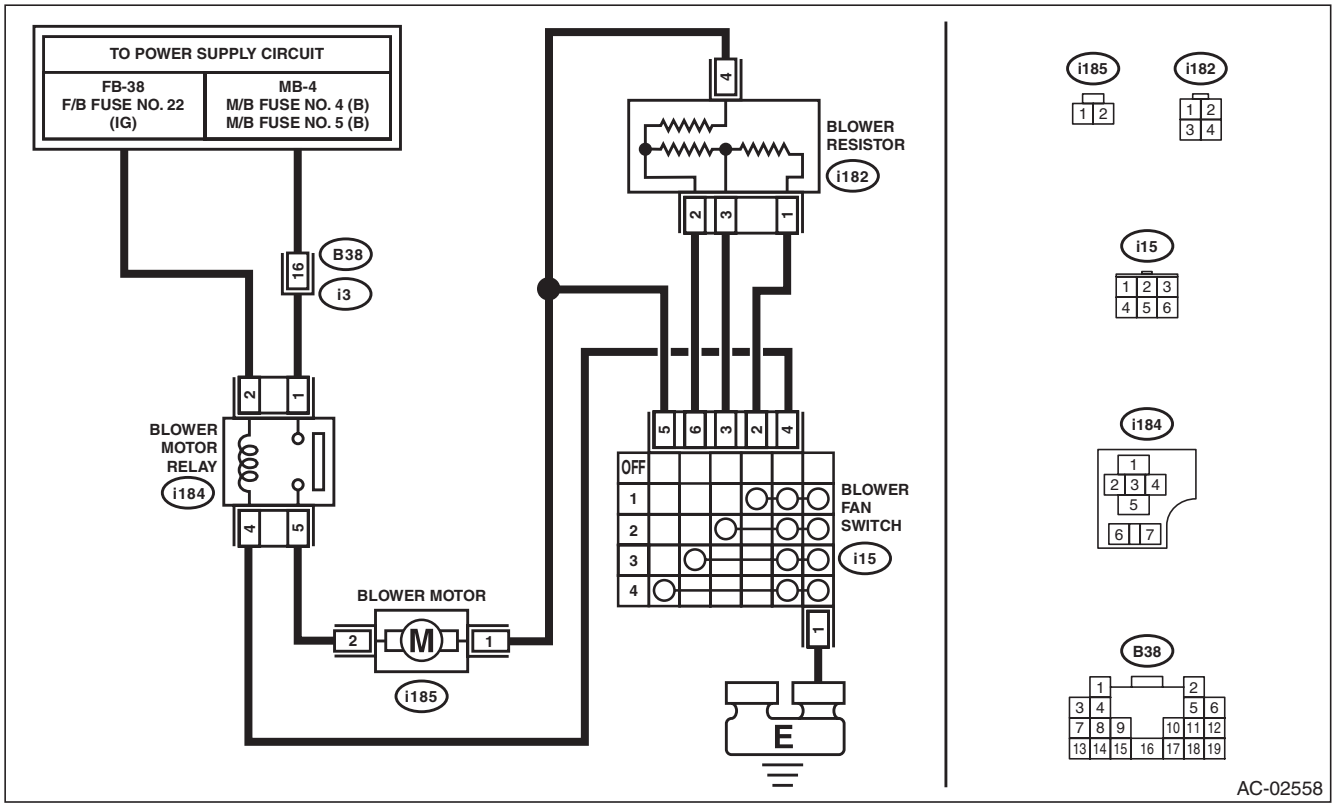

Step		Check	Yes	No
1	**CHECK BLOWER OPERATION.** Set the temperature control dial to MAX COOL, and increase or decrease the fan dial.	Does the airflow capacity increase or decrease in accordance with the dial operation?	Go to step **2**.	Go to step **5**.
2	**CHECK AIRFLOW CAPACITY.** Set the temperature control switch to MAX COOL, set the fan switch to MAX and set the FRESH/RECIRC switch to RECIRC.	Is the airflow capacity insufficient for the same model?	Go to step **3**.	System is normal.
3	**CHECK A/C FILTER.** Check the A/C filter. <Ref. to AC-105, INSPECTION, A/C Filter.>	Is the A/C filter normal?	Go to step **4**.	Clean or replace the A/C filter.
4	**CHECK EACH DUCT.** Check each duct joint for disconnection or clogging. <Ref. to AC-101, INSPECTION, Air Vent Grille.> <Ref. to AC-102, INSPECTION, Heater Duct.> <Ref. to AC-103, INSPECTION, Heater Vent Duct.>	Is each duct normal?	Go to step **5**.	Repair the faulty duct.
5	**CHECK CONNECTOR.** Check the connectors (i184), (i185), (i182), (i15) and (B38) for poor contact.	Is there poor contact of connector?	Repair the connector.	Go to step **6**.
6	**CHECK FUSE.** 1) Remove the fuse No. 22 of the fuse & relay box and the fuses No. 4 and No. 5 of the main fuse box. 2) Check the condition of fuse.	Is the fuse blown out?	Replace the fuse.	Go to step **7**.

GETthemANUALS.org

Step		Check	Yes	No
7	**CHECK BLOWER MOTOR RELAY ON SIGNAL.** 1) Stop the engine. 2) Turn the fan switch to OFF. 3) Turn the ignition switch to ON. 4) Use a tester to measure the voltage between the blower fan switch and chassis ground. ***Connector & terminal*** ***(i15) No. 4 (+) — Chassis ground (–):***	Is the voltage 10 V or more?	Go to step **8**.	• Check for an open or short circuit between the F/B fuse No. 22 and blower fan switch. • Check the blower relay connector and relay unit.
8	**CHECK BLOWER MOTOR RELAY ON SIGNAL.** 1) Start the engine. 2) Turn the fan switch to OFF. 3) Turn the ignition switch to ON. 4) Use a tester to measure the voltage between the blower fan switch and chassis ground. ***Connector & terminal*** ***(i15) No. 4 (+) — Chassis ground (–):***	Is the voltage 0 V?	Go to step **9**.	Replace the A/C control panel. <Ref. to AC-49, MANUAL A/C MODEL, REMOVAL, Control Panel.>
9	**CHECK BLOWER MOTOR POWER SUPPLY.** 1) Turn the ignition switch to ON. 2) Turn the blower switch to ON. 3) Use a tester to measure the voltage between the blower motor connector and chassis ground. ***Connector & terminal*** ***(i185) No. 2 (+) — Chassis ground (–):***	Is the voltage 10 V or more?	Go to step **10**.	• Check for an open in the blower motor power supply harness, and check the connectors (B38) and (i3). • Check the blower relay connector and relay unit.
10	**CHECK BLOWER MOTOR.** Check the blower motor. <Ref. to AC-37, INSPECTION, Blower Motor.>	Is the blower motor OK?	Go to step **11**.	Replace the blower motor. <Ref. to AC-36, REMOVAL, Blower Motor.>
11	**CHECK HARNESS.** 1) Disconnect the connector from blower motor, blower resistor and blower fan switch. 2) Use a tester to measure the resistance of the harness between terminals. ***Connector & terminal*** ***(i185) No. 1 — (i182) No. 4:*** ***(i185) No. 1 — (i15) No. 4:*** ***(i182) No. 1 — (i15) No. 2:*** ***(i182) No. 2 — (i15) No. 6:*** ***(i182) No. 1 — (i15) No. 3:***	Is the resistance less than 1 Ω?	Go to step **12**.	Repair or replace the open circuit of harness.
12	**CHECK BLOWER RESISTOR.** Check the blower resistor. <Ref. to AC-40, INSPECTION, Blower Resistor (Manual A/C Model).>	Is the blower resistor OK?	Replace the A/C control panel. <Ref. to AC-49, MANUAL A/C MODEL, REMOVAL, Control Panel.>	Replace the blower resistor. <Ref. to AC-39, REMOVAL, Blower Resistor (Manual A/C Model).>

GETtheMANUALS.org

9. AIR GOES OUT OF CONTROL

TROUBLE SYMPTOM:

- The blower rotates even though the blower switch is not turned on.
- The blower motor continues to rotate at high speed. (Not adjustable.)

Trouble causes:

- Airflow capacity failure
- UART communication failure
- A/C control panel failure
- Blower motor failure

Auto A/C

WIRING DIAGRAM:

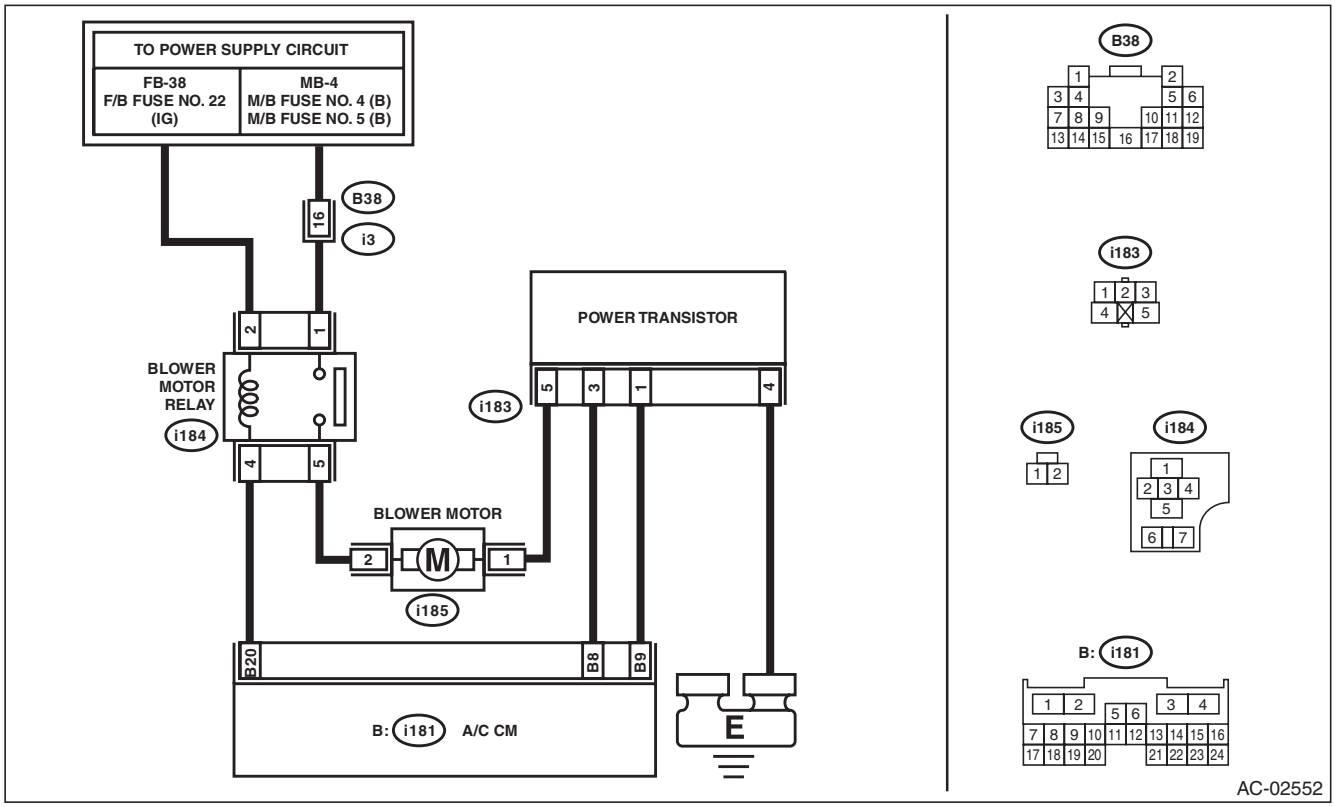

Step		Check	Yes	No
1	**CHECK A/C CONTROL PANEL.** 1) Turn the ignition switch to ON. 2) Set the fan switch to maximum position. 3) Using the Subaru Select Monitor, check "Blower Fan Level" of the current data from the A/C diagnosis.	Does "Blower Fan Level" indicate "31"?	Go to step **2**.	Replace the A/C control panel. <Ref. to AC-46, REMOVAL, Control Panel.>
2	**CHECK A/C CONTROL PANEL.** 1) Set the fan switch to minimum position. 2) Using the Subaru Select Monitor, check "Blower Fan Level" of the current data from the A/C diagnosis.	Does "Blower Fan Level" indicate "1"?	Go to step **3**.	Replace the A/C control panel. <Ref. to AC-46, REMOVAL, Control Panel.>

GETthemANUALS.org

Step		Check	Yes	No
3	**CHECK HARNESS.** 1) Turn the ignition switch to OFF. 2) Disconnect the power transistor connector. 3) Use a tester to measure the resistance between the power transistor connector and chassis ground. ***Connector & terminal*** ***(i183) No. 5 — Chassis ground:***	Is the resistance less than 1 Ω?	Repair or replace the short circuit portion of the harness (i183) No. 5 — (i185) No. 1 between blower motor and power transistor.	Go to step **4**.
4	**CHECK HARNESS.** 1) Remove the A/C CM. 2) Turn the ignition switch to ON. 3) Use a tester to measure the resistance between the power transistor connector and chassis ground. ***Connector & terminal*** ***(i183) No. 1 — Chassis ground:***	Is the resistance less than 1 Ω?	Repair or replace the short circuit portion of the harness (i183) No. 1 — (i181) No. 9 between A/C CM and power transistor.	Go to step **5**.
5	**CHECK HARNESS.** 1) Connect the disconnected connectors. 2) Turn the ignition switch to ON. 3) Use a tester to measure the voltage between the power transistor connector and chassis ground. ***Connector & terminal*** ***(i183) No. 1 (+) — Chassis ground (–):***	Is the voltage approx. 10 V when the fan switch is set to 1st, and approx. 1 V when set to 6th?	Replace the power transistor. <Ref. to AC-38, REMOVAL, Power Transistor (Auto A/C Model).>	Go to step **6**.
6	**CHECK A/C CM.** 1) Turn the fan switch to OFF. 2) Disconnect the power transistor connector. 3) Use a tester to measure the resistance between the power transistor connector and chassis ground. ***Connector & terminal*** ***(i183) No. 1 — Chassis ground:***	When the fan switch is OFF and other than OFF, does the resistance change?	Replace the power transistor. <Ref. to AC-38, REMOVAL, Power Transistor (Auto A/C Model).>	Replace the A/C CM. <Ref. to AC-54, REMOVAL, Control Unit.>

GETtheMANUALS.org

Manual A/C

WIRING DIAGRAM:

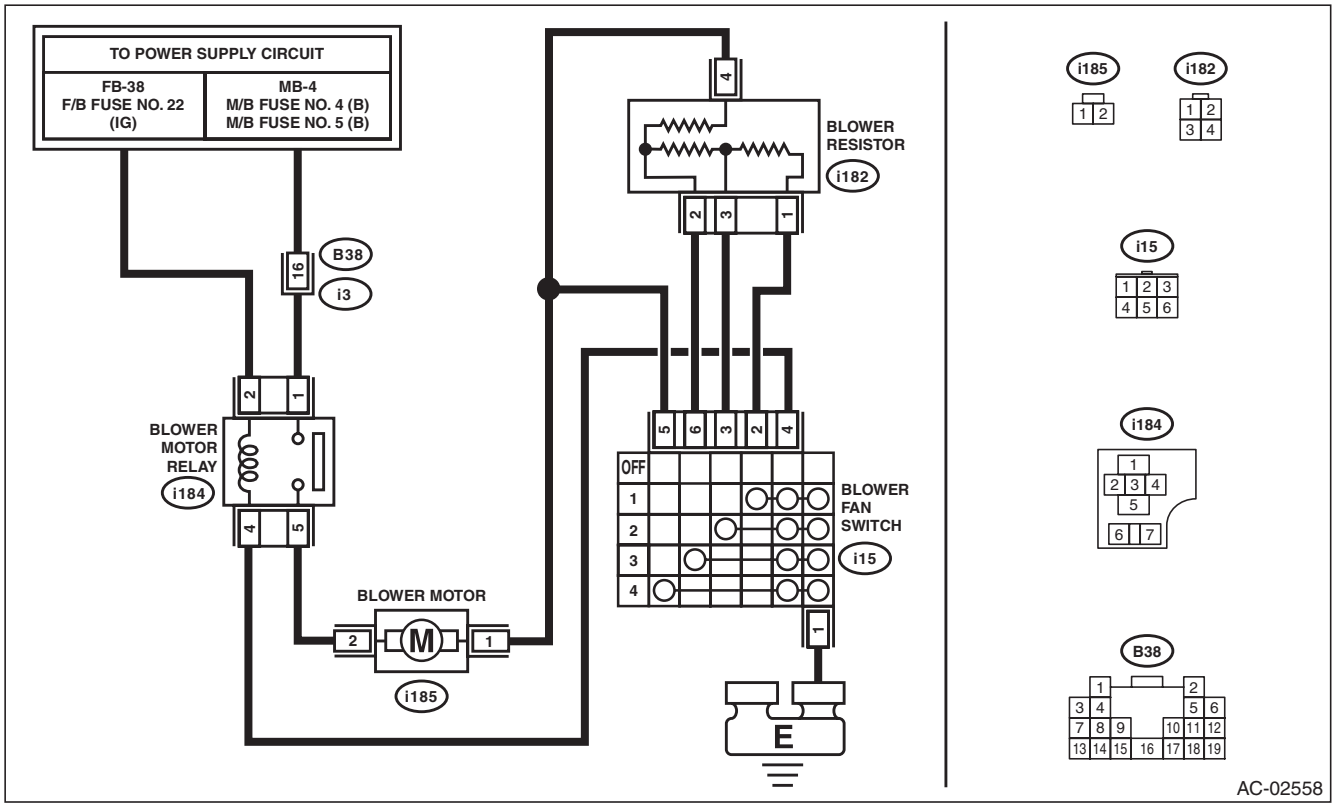

Step		Check	Yes	No
1	**CHECK BLOWER MOTOR CIRCUIT.** 1) Turn the ignition switch to OFF. 2) Disconnect the blower fan switch connector and blower resistor connector. 3) Use a tester to measure the resistance between each terminal and chassis ground. ***Connector & terminal*** ***(i182) No. 4 — Chassis ground:*** ***(i15) No. 5 — Chassis ground:*** ***(i15) No. 6 — Chassis ground:*** ***(i15) No. 3 — Chassis ground:*** ***(i15) No. 2 — Chassis ground:***	Is the resistance less than 1 Ω?	Repair or replace the short circuit of the harness.	Go to step **2**.
2	**CHECK BLOWER RESISTOR.** Check the blower resistor. <Ref. to AC-40, INSPECTION, Blower Resistor (Manual A/C Model).>	Is the blower resistor OK?	Replace the A/C control panel. <Ref. to AC-49, MANUAL A/C MODEL, REMOVAL, Control Panel.>	Replace the blower resistor. <Ref. to AC-39, REMOVAL, Blower Resistor (Manual A/C Model).>

GETthemANUALS.org

10.COLD AIR DOES NOT COME OUT EVEN WHEN THE A/C SWITCH IS PRESSED. THE GLASS CANNOT BE DEFOGGED. (COMPRESSOR DOES NOT OPERATE. (VARIABLE))

TROUBLE SYMPTOM:

Compressor does not operate even when the A/C switch is turned on and the fan switch is set to LO — HI.

Trouble causes:

Compressor failure

WIRING DIAGRAM:

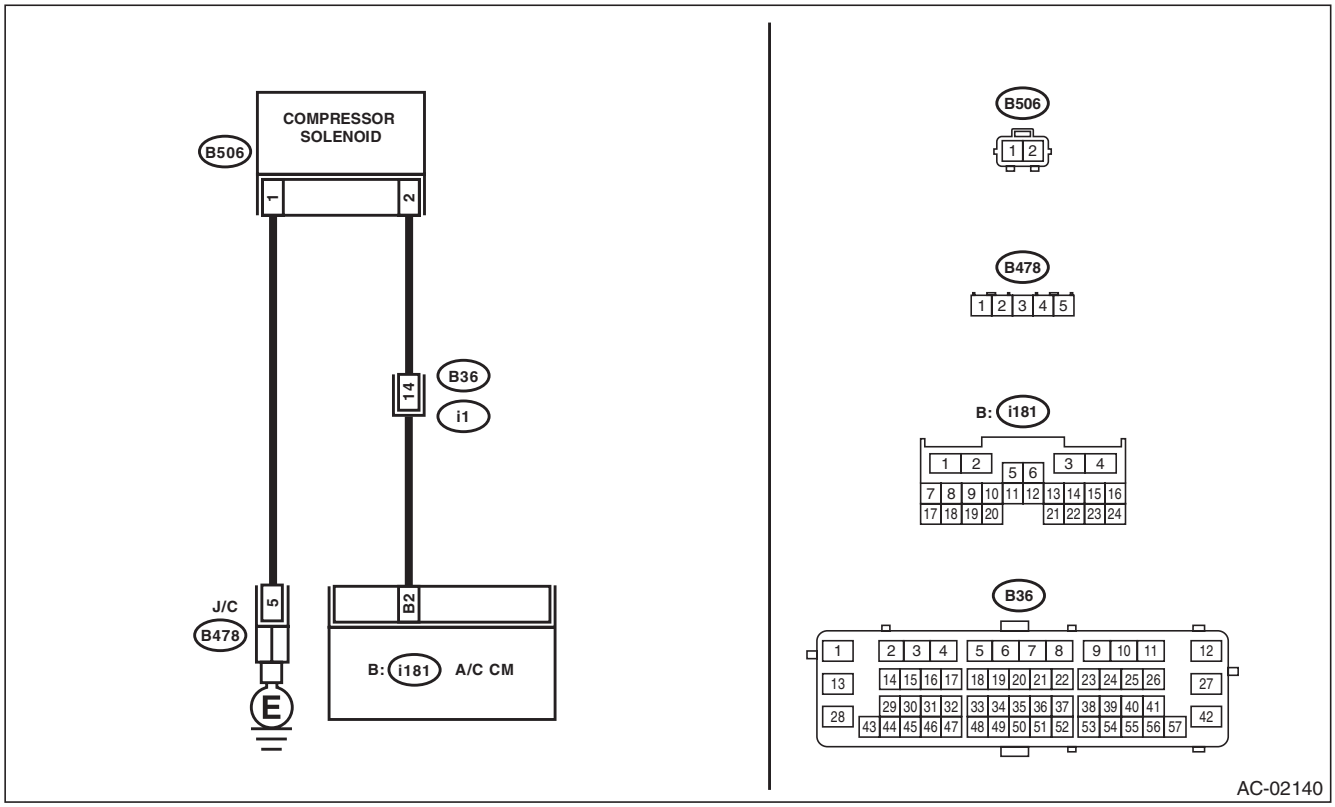

Step		Check	Yes	No
1	**CHECK A/C CONTROL PANEL.** 1) Leave the vehicle under the condition at ambient temperature of 15°C (59°F) or more. 2) Turn the ignition switch to ON. 3) Set the fan switch to maximum position. 4) Press the A/C switch.	Is “A/C” displayed on the A/C control panel? Or does the A/C switch indicator illuminate?	Go to step **2**.	Replace the A/C control panel. <Ref. to AC-46, REMOVAL, Control Panel.>
2	**CHECK VARIABLE FLOW CHANGE SOLENOID DUTY VALUE.** Using the Subaru Select Monitor, check “Variable Flow Change Solenoid Duty” of the current data from the A/C diagnosis.	Does the data indicate the value greater than zero?	Go to step **7**.	Go to step **3**.
3	**CHECK EVAPORATOR SENSOR.** Using the Subaru Select Monitor, check “Evaporator Temp.” of the current data from the A/C diagnosis.	Does the data indicate -0.5 degree or more?	Go to step **5**.	Go to step **4**.
4	**CHECK EVAPORATOR SENSOR.** Check the evaporator sensor. <Ref. to AC-88, INSPECTION, Evaporator Sensor.>	Is the sensor normal?	Go to step **5**.	Replace the evaporator sensor.
5	**CHECK REFRIGERANT PRESSURE SENSOR.** Using the Subaru Select Monitor, check “Refrigerant Pressure” of the current data from the A/C diagnosis.	Does the data indicate 0.21 Mpa — 3.03 Mpa?	Go to step **7**.	Go to step **6**.

GETtheMANUALS.org

Step		Check	Yes	No
6	**CHECK AMOUNT OF REFRIGERANT PRESSURE.** Check the refrigerant pressure. <Ref. to AC-20, CHECK REFRIGERANT GAS PRESSURE, PROCEDURE, Refrigerant Pressure with Manifold Gauge Set.>	Is the refrigerant pressure normal?	Go to step **7**.	Perform repair according to refrigerant pressure inspection.
7	**CHECK FLOW SENSOR CIRCUIT.** 1) Turn the ignition switch to ON. 2) Wait at least 1 seconds. 3) Read the DTC using Subaru Select Monitor.	Are B1641 and B1642 displayed?	Perform the diagnosis according to DTC.	Go to step **8**.
8	**CHECK VARIABLE SOLENOID CIRCUIT.** 1) Start the engine. 2) Turn the A/C switch to ON. 3) Set the fan switch to maximum position. 4) Set the temperature control switch to LO, and wait for 30 seconds or more. 5) Read the DTC using Subaru Select Monitor.	Is B1643 displayed?	Perform the diagnosis according to DTC.	Replace the compressor. <Ref. to AC-55, REMOVAL, Compressor.>

GETtheMANUALS.org

11.UNABLE TO SWITCH SUCTION VENTS

TROUBLE SYMPTOM:

Even when the FRESH/RECIRC switch is pressed, the inlet opening does not switch to RECIRC → FRESH or FRESH → RECIRC.

Trouble causes:

Intake door actuator failure

WIRING DIAGRAM:

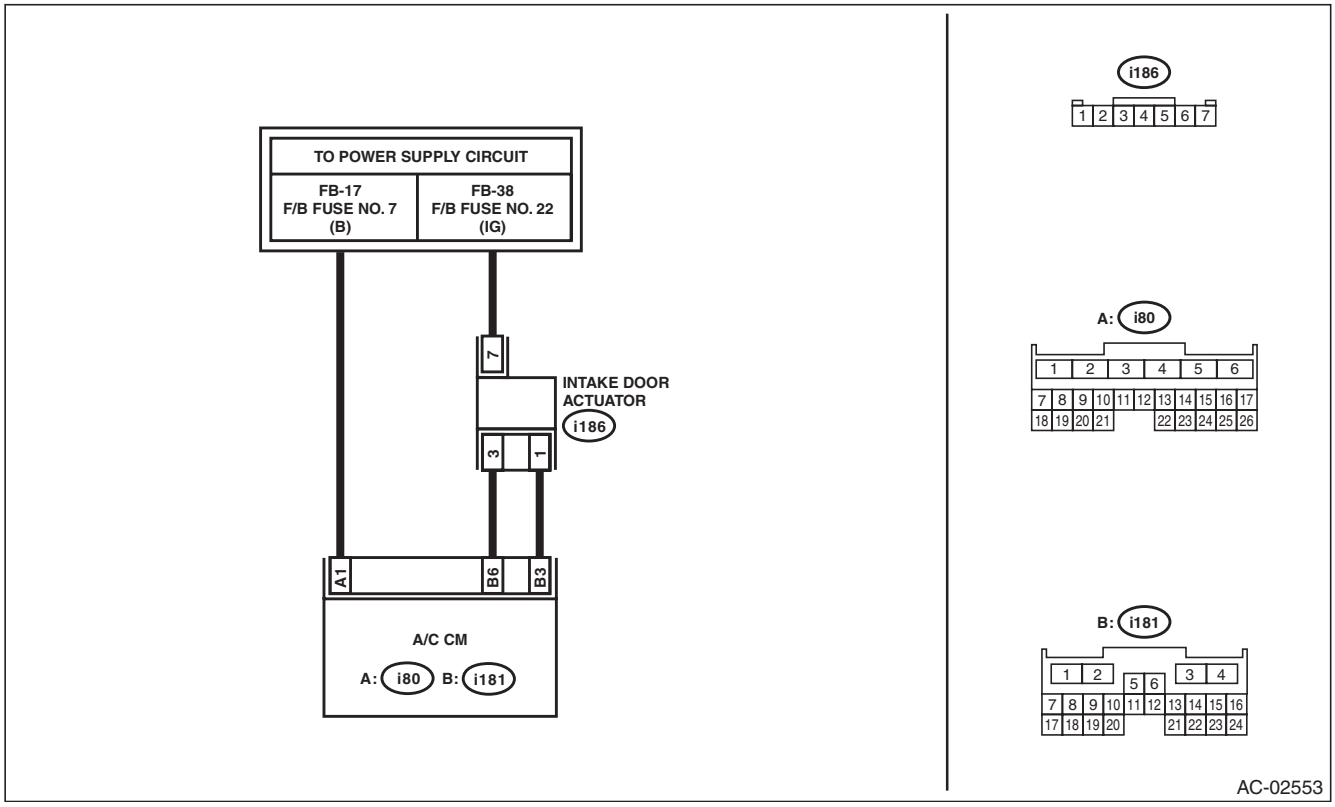

Step		Check	Yes	No
1	**VISUALLY CHECK FRESH/RECIRC DOOR OPERATION.** 1) Remove the glove box. <Ref. to EI-66, REMOVAL, Glove Box.> 2) Operate the FRESH/RECIRC switch, and visually check the intake door operation.	Does the intake door operate normally? Are the intake door and intake door case sealed tightly without gap?	System is normal.	Go to step **2**.
2	**CHECK A/C CONTROL PANEL.** 1) Turn the ignition switch to ON. 2) Using the Subaru Select Monitor, check "Fresh/Recircle Air Door Actuator Position Target" of the current data from the A/C diagnosis. 3) Operate the FRESH/RECIRC switch.	Does "Fresh/Recircle Air Door Actuator Position Target" indicate 0 ←→ 100?	Go to step **3**.	Replace the A/C control panel. <Ref. to AC-46, REMOVAL, Control Panel.>
3	**CHECK CONNECTOR.** Check the connecting condition of connectors (i186), (i181) and (i80).	Is there poor contact?	Repair the connector.	Go to step **4**.
4	**CHECK FUSE.** 1) Remove the fuse No. 7 and No. 22 from fuse & relay box. 2) Check the fuse.	Is the fuse OK?	Go to step **5**.	Replace the fuse.

GETthemANUALS.org

	Step	Check	Yes	No
5	**CHECK POWER SUPPLY FOR INTAKE DOOR ACTUATOR.** 1) Turn the ignition switch to OFF. 2) Disconnect the intake door actuator connector (i186). 3) Turn the ignition switch to ON. 4) Measure the voltage between intake door actuator connector (i186) and chassis ground. ***Connector & terminal*** ***(i186) No. 7 (+) — Chassis ground (–):***	Is the voltage 10 V or more?	Go to step **6**.	Check for open or short circuit in the harness between intake door actuator and fuse.
6	**CHECK HARNESS BETWEEN A/C CM AND INTAKE DOOR ACTUATOR.** 1) Turn the ignition switch to OFF. 2) Disconnect the A/C CM connector (i181). 3) Measure the resistance between intake door actuator connector (i186) and A/C CM connector (i181). ***Connector & terminal*** ***(i186) No. 1 — (i181) No. 3:*** ***(i186) No. 3 — (i181) No. 6:***	Is the resistance less than 10 Ω?	Go to step **7**.	Repair the open circuit of harness between A/C CM and intake door actuator.
7	**CHECK OPERATION OF INTAKE DOOR ACTUATOR.** 1) Connect the intake door actuator connector (i186). 2) Ground the A/C CM connector (i181) with a suitable wire. 3) Turn the ignition switch to ON, and check the operation of intake door actuator. ***Connector & terminal*** ***(i181) No. 3 — Chassis ground:***	Does the actuator move to the FRESH side?	Go to step **8**.	Replace the intake door actuator. <Ref. to AC-90, REMOVAL, FRESH/RECIRC Door Actuator.>
8	**CHECK OPERATION OF INTAKE DOOR ACTUATOR.** 1) Turn the ignition switch to OFF. 2) Ground the A/C CM connector (i181) with a suitable wire. 3) Turn the ignition switch to ON, and check the operation of intake door actuator. ***Connector & terminal:*** ***(i181) No. 6 — Chassis ground:***	Does the actuator move to the RECIRC side?	Replace the A/C CM. <Ref. to AC-54, REMOVAL, Control Unit.>	Replace the intake door actuator. <Ref. to AC-90, REMOVAL, FRESH/RECIRC Door Actuator.>

GETtheMANUALS.org

12.UNABLE TO SWITCH VENTS

TROUBLE SYMPTOM:

Unable to switch blow vents.

- Auto dual

Even when the mode switch is operated, outlet opening does not switch to FACE → B/L → FOOT → F/D.

- Manual A/C

Selected mode does not work even when each mode switch is operated.

Trouble causes:

Mode door actuator failure

	Step	Check	Yes	No
1	**CHECK A/C CONTROL PANEL.** 1) Turn the ignition switch to ON. 2) Using the Subaru Select Monitor, check "Mode Door Actuator Position Target" of the current data from the A/C diagnosis. 3) Operate the mode change switch.	Does the value for "Mode Door Actuator Position Target" change?	Go to step **2**.	Replace the A/C control panel. <Ref. to AC-46, REMOVAL, Control Panel.>
2	**CHECK DTC.** 1) Set the mode change switch to DEF, and wait for 16 seconds or more. 2) Read the DTC using Subaru Select Monitor.	Are B1620, B1621 and B1622 displayed?	Perform the diagnosis according to DTC.	Go to step **3**.
3	**CHECK DTC.** 1) Set the mode change switch to VENT, and wait for 16 seconds or more. 2) Using the Subaru Select Monitor, read DTC of A/C CM.	Are B1620, B1621 and B1622 displayed?	Perform the diagnosis according to DTC.	System is normal.

GETtheMANUALS.org

13.ILLUMINATION DOES NOT COME ON OR CANNOT DIM

TROUBLE SYMPTOM:

Even when the lighting switch is operated, the illumination does not come on. Even when the illumination control is operated, the illumination does not dim.

TROUBLE SYMPTOM:

Open circuit in illumination circuit

WIRING DIAGRAM:

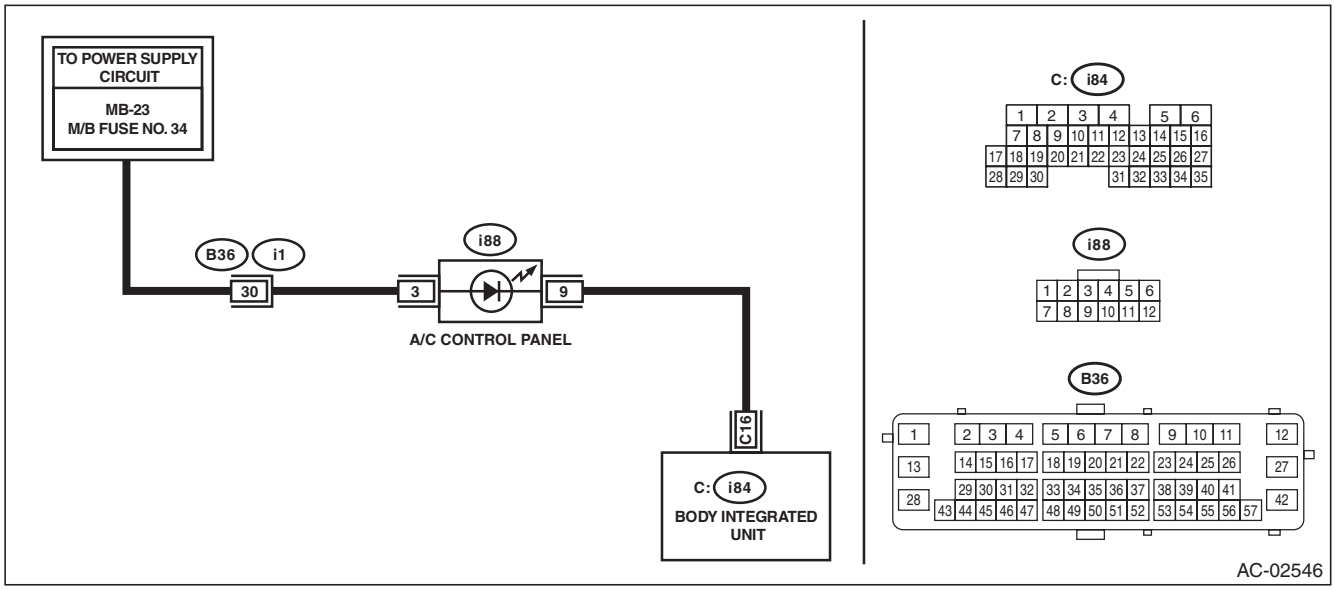

Step		Check	Yes	No
1	**CHECK CONNECTOR.** Check the connectors (i88), (i84) and (B36) for poor contact.	Is there poor contact?	Repair the connector.	Go to step **2**.
2	**CHECK HARNESS.** 1) Turn the ignition switch to ON. 2) Using a tester, measure the voltage between the A/C control panel connector (i88) and chassis ground. ***Connector & terminal*** ***(i88) No. 3 (+) — Chassis ground (–):***	Is the voltage 10 V or more?	Go to step **3**.	Repair or replace the open circuit of harness.
3	**CHECK HARNESS.** 1) Turn the ignition switch to OFF. 2) Measure the resistance between A/C control panel connector (i88) and body integrated unit connector (i84). ***Connector & terminal*** ***(i88) No. 9 — (i84) No. 16:***	Is the resistance less than 10 Ω?	Go to step **4**.	Repair or replace the open circuit of harness.
4	**CHECK A/C CONTROL PANEL UNIT.** Check the A/C control panel. <Ref. to AC-52, INSPECTION, Control Panel.>	Is A/C control panel OK?	A/C control panel illumination circuit is normal.	Replace the A/C control panel. <Ref. to AC-46, REMOVAL, Control Panel.>

GETthemANUALS.org

7. Diagnostic Procedure for Sensors

A: AMBIENT SENSOR

TROUBLE SYMPTOM:

- Ambient temperature is falsely recognized as 15.2°C, and the compartment temperature is adjusted.
- DTC“22” Faulty ambient sensor, or communication failure is detected.

Trouble causes:

- Ambient sensor failure
- Ambient sensor circuit failure
- CAN communication circuit failure

WIRING DIAGRAM:

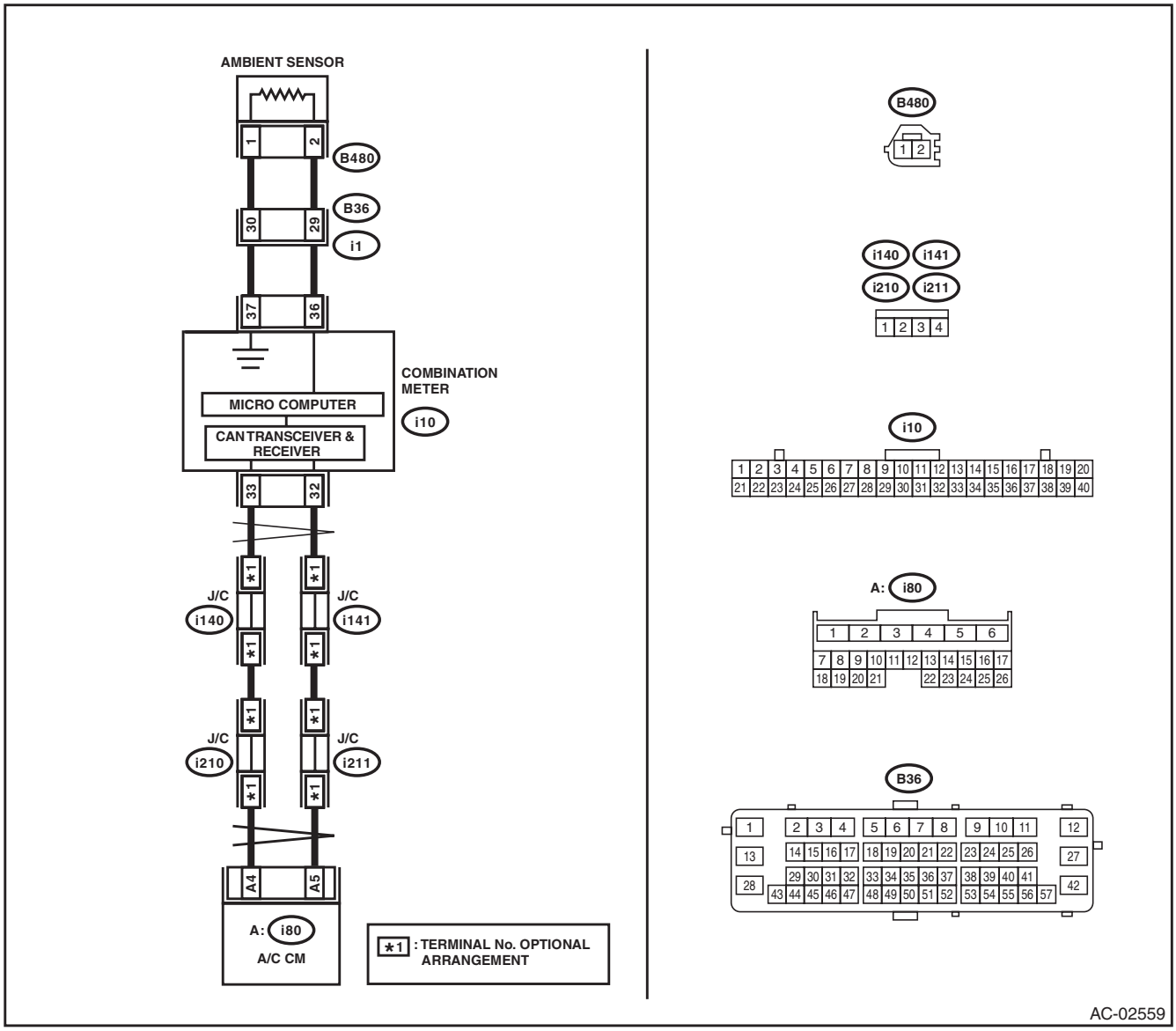

Step		Check	Yes	No
1	**CHECK FOR POOR CONTACT.** Check the A/C CM connector (i80) for poor contact.	Is there poor contact of connector?	Repair the connector.	Go to step **2**.

GETtheMANUALS.org

	Step	Check	Yes	No
2	**CHECK DTC.** 1) Connect the disconnected connectors. 2) Turn the ignition switch to ON. 3) Read the DTC of the CAN system using the Subaru Select Monitor.	Is DTC displayed?	Perform the diagnosis according to the DTC. <Ref. to LAN(diag)-32, List of Diagnostic Trouble Code (DTC).>	Go to step **3**.
3	**CHECK CAN COMMUNICATION CIRCUIT.** Check the CAN communication circuit. <Ref. to LAN(diag)-12, CAN Communication Circuit Check.>	Is the CAN communication circuit normal?	Go to step **4**.	Repair the CAN communication circuit. <Ref. to LAN(diag)-4, LAN SYSTEM, CAUTION, General Description.>
4	**CHECK INPUT SIGNAL FOR AMBIENT SENSOR.** 1) Turn the ignition switch to ON. 2) Measure the voltage between terminals of ambient sensor connector (F138). Disconnect the connector. ***Connector & terminal*** ***(B480) No. 2 (+) — No. 1 (–):***	Is the voltage approx. 5 V?	Go to step **5**.	Check the ambient sensor. <Ref. to AC-79, INSPECTION, Ambient Sensor (Auto A/C Model).>
5	**CHECK COMBINATION METER OUTPUT SIGNAL.** 1) Turn the ignition switch to OFF. 2) Pull out the combination meter. 3) Disconnect the ambient sensor connector (F138). 4) Turn the ignition switch to ON. 5) Measure the voltage between terminals of combination meter connector (i10). ***Connector & terminal*** ***(i10) No. 36 (+) — No. 37 (–):***	Is the voltage approx. 5 V?	Go to step **6**.	Check the combination meter. <Ref. to IDI-5, Combination Meter System.>
6	**CHECK HARNESS CONNECTOR BETWEEN COMBINATION METER AND AMBIENT SENSOR.** 1) Turn the ignition switch to OFF. 2) Disconnect the combination meter connector (i10). 3) Measure the resistance of harness between combination meter connector (i10) and ambient sensor connector (B480). ***Connector & terminal*** ***(B480) No. 2 — (i10) No. 36:*** ***(B480) No. 1 — (i10) No. 37:***	Is the resistance less than 1 Ω?	Ambient sensor circuit is normal.	Repair the open circuit of the harness between the combination meter and ambient sensor.

GETtheMANUALS.org

8. Subaru Select Monitor

A: OPERATION

For details of basic operations, refer to “PC application help for Subaru Select Monitor”.

NOTE:
When initialization communication using Select Monitor is impossible, perform diagnosis according to “Diagnostic Procedure Used When Abnormal Communication with Subaru Select Monitor Occurs”.

GETtheMANUALS.org

9. Read Diagnostic Trouble Code (DTC)

A: OPERATION

For details concerning the operation procedure, refer to “PC application help for Subaru Select Monitor”.

GETtheMANUALS.org

10. Clear Memory Mode

A: OPERATION

For details concerning the operation procedure, refer to “PC application help for Subaru Select Monitor”.

GETtheMANUALS.org

11.Read Current Data

A: OPERATION

For details concerning the operation procedure, refer to “PC application help for Subaru Select Monitor”.

B: LIST

Items to be displayed	Unit of measure	Remarks	Note
Engine Speed	rpm	Data value received by CAN	—
Heater Control Panel Setting Value (Driver’s)	LO: 18°C (64°F) HI: 32°C (90°F)	Control panel display value	Auto A/C
Heater Control Panel Setting Value (Passenger’s)	LO: 18°C (64°F) HI: 32°C (90°F)	Control panel display value	Auto A/C
Blower outlet Door Request Temperature	°C (°F)	A/C CM internal setting value	Auto A/C
Blower outlet request temperature (Driver’s)	°C (°F)	A/C CM internal setting value	Auto A/C
Blower outlet request temperature (Passenger’s)	°C (°F)	A/C CM internal setting value	Auto A/C
Blower Fan Operating Condition	MANU/AUTO	A/C CM input value	Auto A/C
A/C Operating Condition	MANU/AUTO	A/C CM input value	Auto A/C
Fresh/Recircle Air Operating Condition	MANU/AUTO	A/C CM input value	Auto A/C
Mode Operating Condition	MANU/AUTO	A/C CM input value	Auto A/C
Rear Defogger	ON/OFF	A/C CM input value	—
In-vehicle Sensor Temperature	°C (°F)	A/C CM input value	Auto A/C
Evaporator Temperature	°C (°F)	A/C CM input value	—
Quantity of Sunload	W/m^2	A/C CM input value	Auto A/C
Refrigerant Pressure	MPa	A/C CM input value	—
Refrigerant Flow	kg/h	A/C CM input value	—
Air mix door actuator position (driver’s side)	%	A/C CM input value	—
Air mix door actuator position (passenger’s side)	%	A/C CM input value	Auto A/C
Fresh/Recircle Air Door Actuator Position	%	A/C CM input value	—
Mode Door Actuator Position	%	A/C CM input value	—
Heater Water Temperature	°C (°F)	Data value received by CAN	—
Ambient Air Temperature	°C (°F)	Data value received by CAN	—
Vehicle Speed	km/h	Data value received by CAN	—
Accel. Opening Angle	%	Data value received by CAN	—
Target air mix door actuator position (driver’s side)	%	A/C CM input value	—
Target air mix door actuator position (passenger’s side)	%	A/C CM input value	Auto A/C
Fresh/Recircle Air Door Actuator Position Target	%	A/C CM input value	—
Mode Door Actuator Position Target	%	A/C CM input value	—
Blower Fan Level	Level	A/C CM output value	Auto A/C
Variable Flow Change Solenoid Duty	%	A/C CM output value	—
Evaporator Temperature Target	°C (°F)	A/C CM input value	—
Variable Load Compressor Torque Value	Nm	A/C CM input value	—
Request idle engine speed	rpm	A/C CM output value	—

GETtheMANUALS.org

Items to be displayed	Unit of measure	Remarks	Note
Request engine speed	0: Without Request 1: Cooler H 2: Heater H 3: Cooler L 4: Heater L	A/C CM output value	—
Discharge pressure	MPa	A/C CM input value	—
Intake pressure	MPa	A/C CM input value	—
Cooler request distinction	Without Request/With Request	A/C CM output value	—
Heater request distinction	Without Request/With Request	A/C CM output value	—

NOTE:
For detailed operation procedures, refer to “PC application help for Subaru Select Monitor”.

GETtheMANUALS.org

12. Diagnostic Procedure for Subaru Select Monitor Communication

A: COMMUNICATION FOR INITIALIZING IMPOSSIBLE

DIAGNOSIS:

Defective CAN communication circuit

TROUBLE SYMPTOM:

- LAN system is abnormal.
- Communication failure between Subaru Select Monitor and A/C CM

WIRING DIAGRAM:

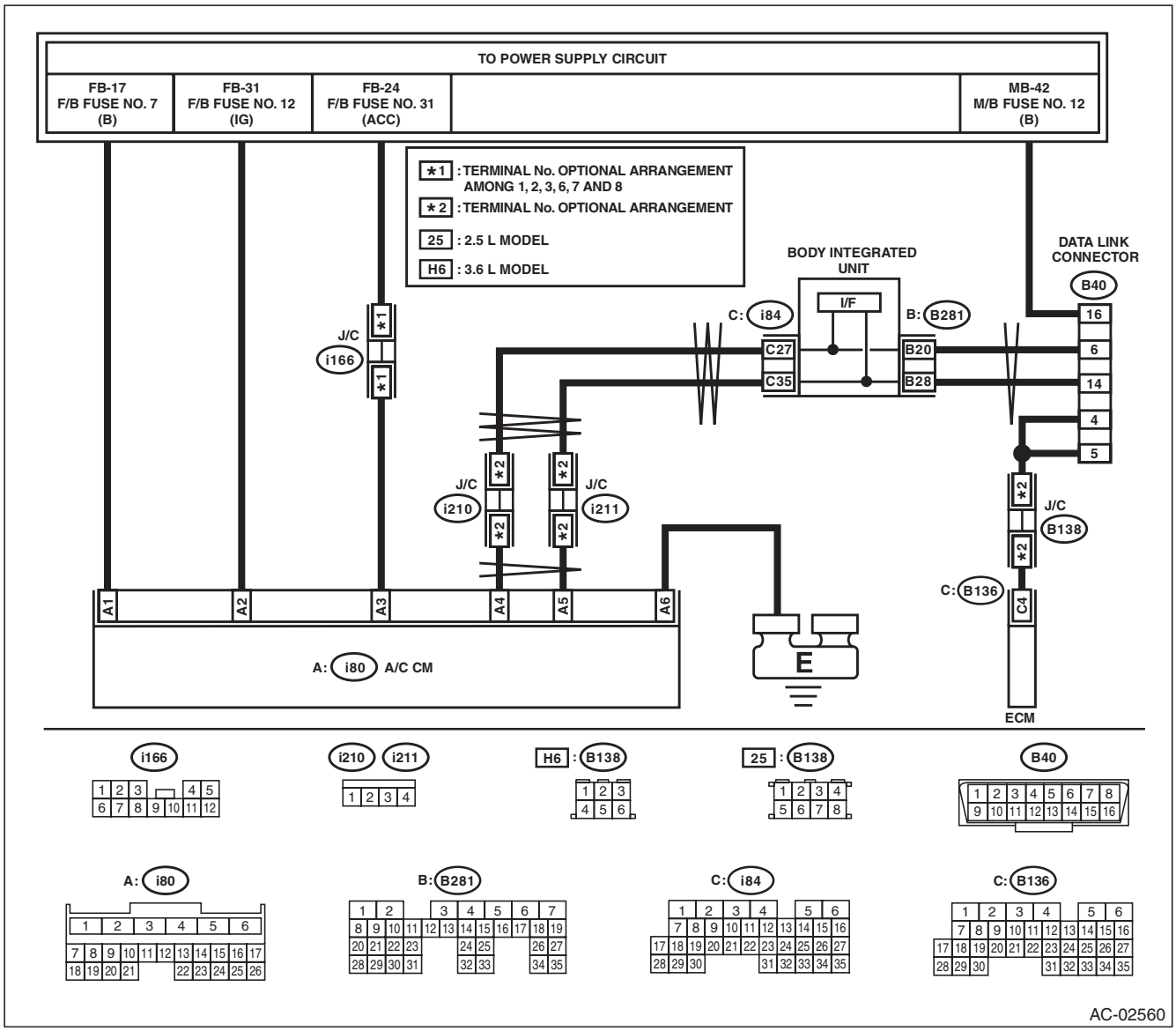

Step		Check	Yes	No
1	**CHECK POWER SUPPLY CIRCUIT.** Connect SDI (Subaru Diagnosis Interface) to the data link connector.	Is SDI powered on?	Go to step **4**.	Go to step **2**.

GETthemANUALS.org

	Step	Check	Yes	No
2	**CHECK POWER SUPPLY CIRCUIT.** Measure the voltage between data link connector and chassis ground. ***Connector & terminal*** ***(B40) No. 16 (+) — Chassis ground (–):***	Is the voltage 10 V or more?	Go to step **3**.	Repair the power supply circuit. NOTE: In this case, repair the following item: • Open or ground short circuit of harness between battery and data link connector • Blown out of fuse (M/B No. 12)
3	**CHECK HARNESS BETWEEN DATA LINK CONNECTOR AND CHASSIS GROUND.** 1) Turn the ignition switch to OFF. 2) Measure the resistance of harness between data link connector and chassis ground. ***Connector & terminal*** ***(B40) No. 4 — Chassis ground:*** ***(B40) No. 5 — Chassis ground:***	Is the resistance less than 5 Ω?	Repair the poor contact of data link connector.	Repair the harness and connector.
4	**CHECK SUBARU SELECT MONITOR.** 1) Connect the Subaru Select Monitor to a normal vehicle. 2) Start the engine and perform communication between the Subaru Select Monitor and vehicle.	Is communication possible?	Go to step **5**.	Use another Subaru Select Monitor because the CAN communication circuit of the Subaru Select Monitor is faulty.
5	**CHECK CAN COMMUNICATION CIRCUIT.** Check the CAN communication circuit. <Ref. to LAN(diag)-12, CAN Communication Circuit Check.>	Is the CAN communication circuit normal?	Go to step **6**.	Repair the CAN communication circuit.
6	**CHECK CONNECTOR.** Check the power supply circuit connectors (i166) and (i80) for poor contact.	Is there poor contact of connector?	Repair the connector.	Go to step **7**.
7	**CHECK FUSE.** 1) Turn the ignition switch to OFF. 2) Remove the fuses No. 7, No. 12 and No. 31 from main fuse box. 3) Check the fuse.	Is the fuse blown out?	Replace the fuse.	Go to step **8**.
8	**CHECK A/C CM POWER SUPPLY CIRCUIT.** 1) Install the A/C control panel. 2) Disconnect the A/C CM connector. 3) Measure the voltage between A/C CM connector terminal and chassis ground after turning the ignition switch to ON. ***Connector & terminal*** ***(i80) No. 1 (+) — Chassis ground (–):*** ***(i80) No. 2 (+) — Chassis ground (–):*** ***(i80) No. 3 (+) — Chassis ground (–):***	Is the voltage 10 V or more?	Go to step **9**.	Check for open or short circuit in the harness between A/C CM and fuse.
9	**CHECK A/C CM GROUND CIRCUIT.** Measure the resistance of harness between A/C CM and chassis ground. ***Connector & terminal*** ***(i80) No. 6 — Chassis ground:***	Is the resistance less than 5 Ω?	Check the connection between the data link connector and Subaru Select Monitor.	Repair the harness for ground line.

GETtheMANUALS.org

13. List of Diagnostic Trouble Code (DTC)

A: LIST

NOTE:
When the sunload sensor check is performed indoors or in the shade, it could be diagnosed as having an open circuit. Always check the sunload sensor in direct sunlight.

DTC	Item	Content of diagnosis	Note
B1601	In-Vehicle Sensor Short	In-vehicle air temperature sensor circuit is shorted.	<Ref. to AC(diag)-55, DTC B1601 IN-VEHICLE SENSOR SHORT, Diagnostic Procedure with Diagnostic Trouble Code (DTC).>
B1602	In-Vehicle Sensor Open	In-vehicle air temperature sensor circuit is open.	<Ref. to AC(diag)-56, DTC B1602 IN-VEHICLE SENSOR OPEN, Diagnostic Procedure with Diagnostic Trouble Code (DTC).>
B1603	Evaporator Sensor Short	Post evaporator sensor circuit is shorted.	<Ref. to AC(diag)-57, DTC B1603 EVAPORATOR SENSOR SHORT, Diagnostic Procedure with Diagnostic Trouble Code (DTC).>
B1604	Evaporator Sensor Open	Post evaporator sensor circuit is open.	<Ref. to AC(diag)-58, DTC B1604 EVAPORATOR SENSOR OPEN, Diagnostic Procedure with Diagnostic Trouble Code (DTC).>
B1605	Refrigerant Flow Sensor Circuit Open	Pressure sensor circuit is open.	*2 <Ref. to AC(diag)-59, DTC B1605 REFRIGERANT FLOW SENSOR CIRCUIT OPEN, Diagnostic Procedure with Diagnostic Trouble Code (DTC).>
B1606	Refrigerant Flow Sensor Circuit Short	Pressure sensor circuit is shorted.	*2 <Ref. to AC(diag)-61, DTC B1606 REFRIGERANT FLOW SENSOR CIRCUIT SHORT, Diagnostic Procedure with Diagnostic Trouble Code (DTC).>
B1607	Sunload Sensor Short	Sunload sensor circuit is shorted.	*1 <Ref. to AC(diag)-62, DTC B1607 SUNLOAD SENSOR SHORT, Diagnostic Procedure with Diagnostic Trouble Code (DTC).>
B1608	Sunload Sensor Open	Sunload sensor circuit is open.	*1, *2 <Ref. to AC(diag)-63, DTC B1608 SUNLOAD SENSOR OPEN, Diagnostic Procedure with Diagnostic Trouble Code (DTC).>
B1610	Airmix Door Actuator Potentiometer Circuit Open (Driver's)	Airmix door actuator potentiometer circuit is open.	<Ref. to AC(diag)-65, DTC B1610 AIRMIX DOOR ACTUATOR POTENTIOMETER CIRCUIT OPEN (DRIVER'S), Diagnostic Procedure with Diagnostic Trouble Code (DTC).>
B1611	Airmix Door Actuator Potentiometer Circuit Short (Driver's)	Airmix door actuator potentiometer circuit is shorted.	<Ref. to AC(diag)-67, DTC B1611 AIRMIX DOOR ACTUATOR POTENTIOMETER CIRCUIT SHORT (DRIVER'S), Diagnostic Procedure with Diagnostic Trouble Code (DTC).>
B1612	Airmix Door Actuator Lock (Driver's)	Mode door actuator is locked.	<Ref. to AC(diag)-68, DTC B1612 AIRMIX DOOR ACTUATOR LOCK (DRIVER'S), Diagnostic Procedure with Diagnostic Trouble Code (DTC).>
B1613	Airmix Door Actuator Potentiometer Circuit Open (Passenger's)	Airmix door actuator potentiometer circuit is open.	<Ref. to AC(diag)-70, DTC B1613 AIRMIX DOOR ACTUATOR POTENTIOMETER CIRCUIT OPEN (PASSENGER'S), Diagnostic Procedure with Diagnostic Trouble Code (DTC).>
B1614	Airmix Door Actuator Potentiometer Circuit Short (Passenger's)	Airmix door actuator potentiometer circuit is shorted.	<Ref. to AC(diag)-72, DTC B1614 AIRMIX DOOR ACTUATOR POTENTIOMETER CIRCUIT SHORT (PASSENGER'S), Diagnostic Procedure with Diagnostic Trouble Code (DTC).>
B1615	Airmix Door Actuator Lock (Passenger's)	Mode door actuator is locked.	<Ref. to AC(diag)-74, DTC B1615 AIRMIX DOOR ACTUATOR LOCK (PASSENGER'S), Diagnostic Procedure with Diagnostic Trouble Code (DTC).>
B1620	Mode Door Actuator Potentiometer Circuit Open	Mode door actuator potentiometer circuit is open.	<Ref. to AC(diag)-76, DTC B1620 MODE DOOR ACTUATOR POTENTIOMETER CIRCUIT OPEN, Diagnostic Procedure with Diagnostic Trouble Code (DTC).>

GETtheMANUALS.org

List of Diagnostic Trouble Code (DTC)

DTC	Item	Content of diagnosis	Note
B1621	Mode Door Actuator Potentiometer Circuit Short	Mode door actuator potentiometer circuit is shorted.	<Ref. to AC(diag)-77, DTC B1621 MODE DOOR ACTUATOR POTENTIOMETER CIRCUIT SHORT, Diagnostic Procedure with Diagnostic Trouble Code (DTC).>
B1622	Mode Door Actuator Lock	Mode door actuator is locked.	<Ref. to AC(diag)-78, DTC B1622 MODE DOOR ACTUATOR LOCK, Diagnostic Procedure with Diagnostic Trouble Code (DTC).>
U0001	CAN Communication Bus Off	CAN communication bus off	*2 <Ref. to AC(diag)-83, DTC U0001 CAN COMMUNICATION BUS OFF, Diagnostic Procedure with Diagnostic Trouble Code (DTC).>
U0002	CAN Communication Error	CAN communication error	*2 <Ref. to AC(diag)-83, DTC U0002 CAN COMMUNICATION ERROR, Diagnostic Procedure with Diagnostic Trouble Code (DTC).>
U0028	Heater Control Panel Communication Error	Communication with heater control panel is faulty.	*2 <Ref. to AC(diag)-80, DTC U0028 HEATER CONTROL PANEL COMMUNICATION ERROR, Diagnostic Procedure with Diagnostic Trouble Code (DTC).>
B1641	Refrigerant Flow Sensor Circuit Short	Refrigerant flow sensor circuit is shorted.	*2 <Ref. to AC(diag)-84, DTC B1641 REFRIGERANT FLOW SENSOR CIRCUIT SHORT, Diagnostic Procedure with Diagnostic Trouble Code (DTC).>
B1642	Refrigerant Flow Sensor Circuit Open	Refrigerant flow sensor circuit is open.	*2 <Ref. to AC(diag)-85, DTC B1642 REFRIGERANT FLOW SENSOR CIRCUIT OPEN, Diagnostic Procedure with Diagnostic Trouble Code (DTC).>
B1643	Variable Flow Change Solenoid Duty Circuit Abnormal	Variable flow change solenoid duty circuit is open or shorted.	*2 <Ref. to AC(diag)-87, DTC B1643 VARIABLE FLOW CHANGE SOLENOID DUTY CIRCUIT ABNORMAL, Diagnostic Procedure with Diagnostic Trouble Code (DTC).>
B1644	Refrigerant Not Sealed Drive Error	Compressor is rotated before filling refrigerant.	Displays when delivery mode only. <Ref. to AC(diag)-89, DTC B1644 REFRIGERANT NOT SEALED DRIVE ERROR, Diagnostic Procedure with Diagnostic Trouble Code (DTC).>

NOTE:
*1: When the sunload sensor inspection is performed indoors or in the shade, it may be diagnosed as having an open circuit due to an insufficient light volume. In this case, check the sunload sensor at a location exposed to direct sunlight.
*2: Displays current malfunction only.

GETtheMANUALS.org

14. Diagnostic Procedure with Diagnostic Trouble Code (DTC)

A: DTC B1601 IN-VEHICLE SENSOR SHORT

DTC DETECTING CONDITION:
In-vehicle sensor circuit is shorted.
TROUBLE SYMPTOM:
- In-vehicle air temperature is falsely recognized as 25°C (77°F), and the compartment temperature is adjusted.
- DTC “B1601” Short-circuit in in-vehicle sensor was detected.
- DTC “-21” Short-circuit in in-vehicle sensor was detected.

WIRING DIAGRAM:

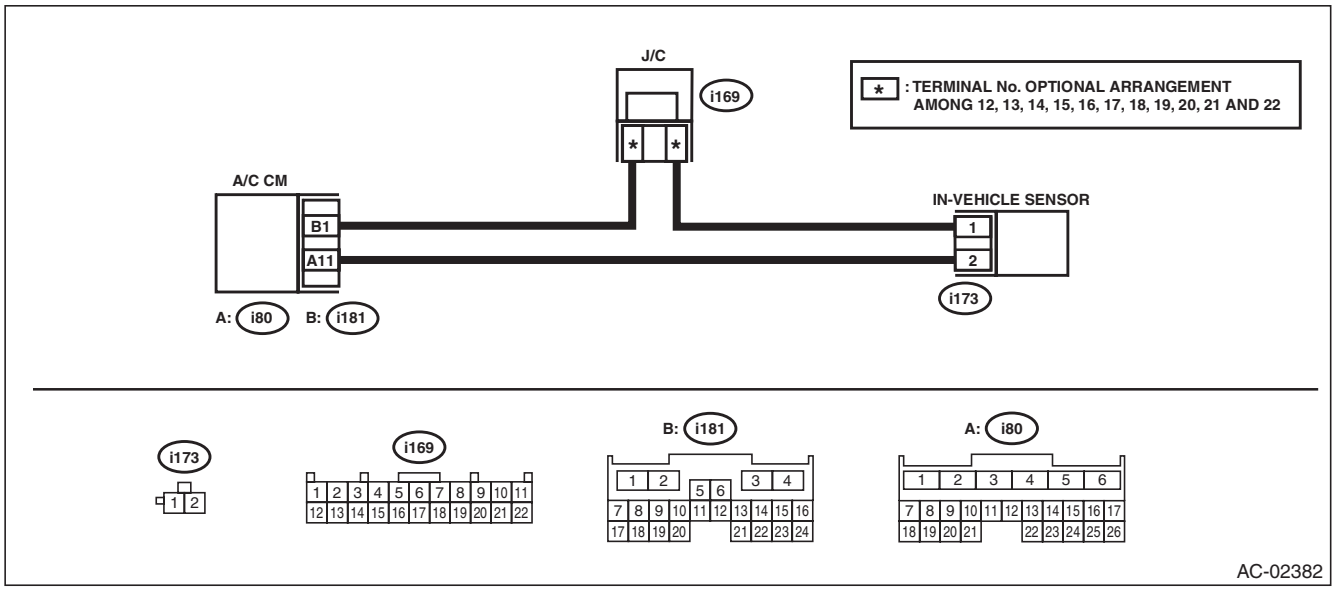

Step		Check	Yes	No
1	**CHECK CONNECTOR.** 1) Check the condition of connector connection. 2) Read the DTC using Subaru Select Monitor.	Is B1601 displayed?	Go to step **2**.	Check the connection of the in-vehicle sensor circuit.
2	**CHECK IN-VEHICLE SENSOR.** 1) Disconnect the in-vehicle sensor. <Ref. to AC-82, REMOVAL, In-Vehicle Sensor (Auto A/C Model).> 2) Read the DTC of the A/C ECM using the Subaru Select Monitor.	Is B1602 displayed?	Replace the in-vehicle sensor. <Ref. to AC-82, REMOVAL, In-Vehicle Sensor (Auto A/C Model).>	Go to step **3**.
3	**CHECK HARNESS.** 1) Turn the ignition switch to ON. 2) Using the tester, measure the voltage between terminals. ***Connector & terminal*** ***(i173) No. 2 (+) — No. 1 (–):***	Is the voltage 4.5 — 5.0 V?	Check the connection of the in-vehicle sensor circuit.	Go to step **4**.
4	**CHECK HARNESS.** 1) Disconnect the connector from A/C CM. 2) Using a tester, check continuity between terminals. ***Connector & terminal*** ***(i173) No. 1 — No. 2:***	Is there continuity?	Repair or replace the short circuit of the harness.	Replace the A/C CM. <Ref. to AC-54, REMOVAL, Control Unit.>

GETthemANUALS.org

B: DTC B1602 IN-VEHICLE SENSOR OPEN

DTC DETECTING CONDITION:

In-vehicle sensor circuit is open.

TROUBLE SYMPTOM:

- In-vehicle air temperature is falsely recognized as 25°C (77°F), and the compartment temperature is adjusted.
- DTC “B1602” Open circuit in in-vehicle sensor was detected.
- DTC “21” Open circuit in in-vehicle sensor was detected.

WIRING DIAGRAM:

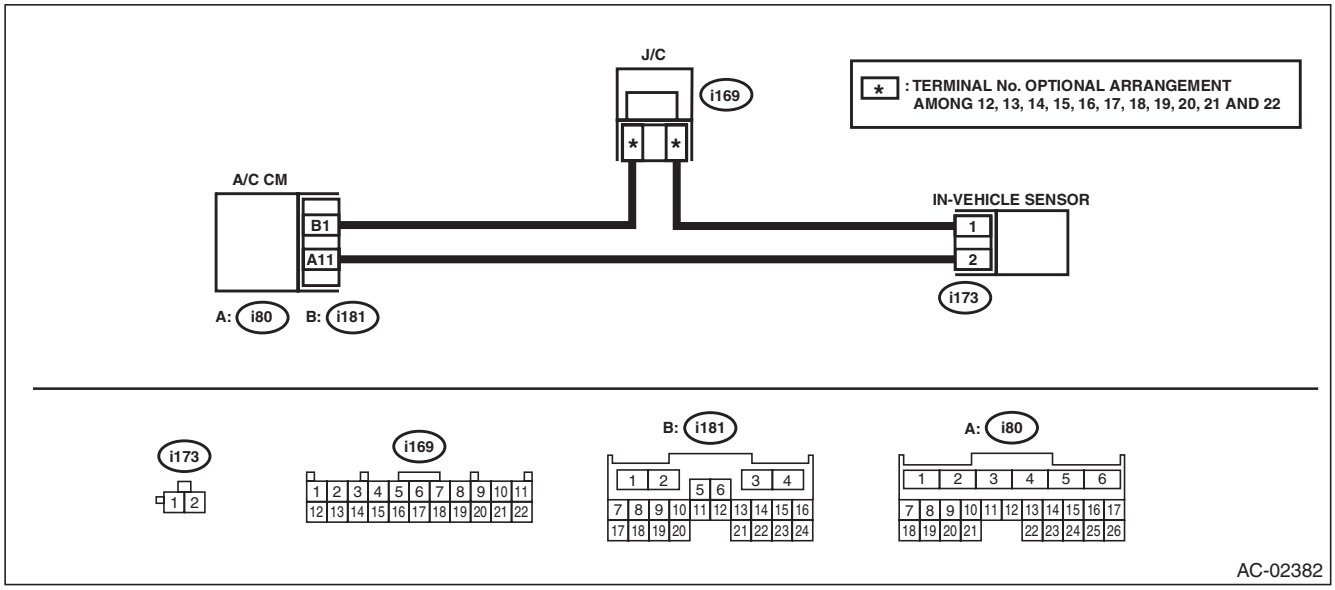

Step		Check	Yes	No
1	**CHECK CONNECTOR.** 1) Check the condition of connector connection. 2) Read the DTC using Subaru Select Monitor.	Is B1602 displayed?	Go to step **2**.	Check the connection of the in-vehicle sensor circuit.
2	**CHECK IN-VEHICLE SENSOR.** 1) Disconnect the in-vehicle sensor. 2) Short the connector i173. 3) Read the DTC of the A/C ECM using the Subaru Select Monitor.	Is B1601 displayed?	Replace the in-vehicle sensor. <Ref. to AC-82, REMOVAL, In-Vehicle Sensor (Auto A/C Model).>	Go to step **3**.
3	**CHECK HARNESS.** 1) Turn the ignition switch to ON. 2) Using the tester, measure the voltage between terminals. ***Connector & terminal*** ***(i173) No. 2 (+) — No. 1 (–):***	Is the voltage 4.5 — 5.0 V?	Go to step **4**.	Repair or replace the open circuit of harness.
4	**CHECK HARNESS.** 1) Disconnect the connector from A/C CM. 2) Using a tester, check continuity between terminals. ***Connector & terminal*** ***(i173) No. 1 — (i181) No. 1:*** ***(i173) No. 2 — (i80) No. 11:***	Is there continuity?	Replace the A/C CM. <Ref. to AC-54, REMOVAL, Control Unit.>	Repair or replace the open circuit of harness.

GETthemANUALS.org

C: DTC B1603 EVAPORATOR SENSOR SHORT

DTC DETECTING CONDITION:

Evaporator sensor circuit is shorted.

TROUBLE SYMPTOM:

- Compressor does not operate. (Variable compressor)
- Evaporator temperature is falsely recognized as high, and the compartment temperature is adjusted.
- DTC “B1603” Short-circuit in evaporator sensor was detected.
- DTC “-23” Short-circuit in evaporator sensor was detected.

WIRING DIAGRAM:

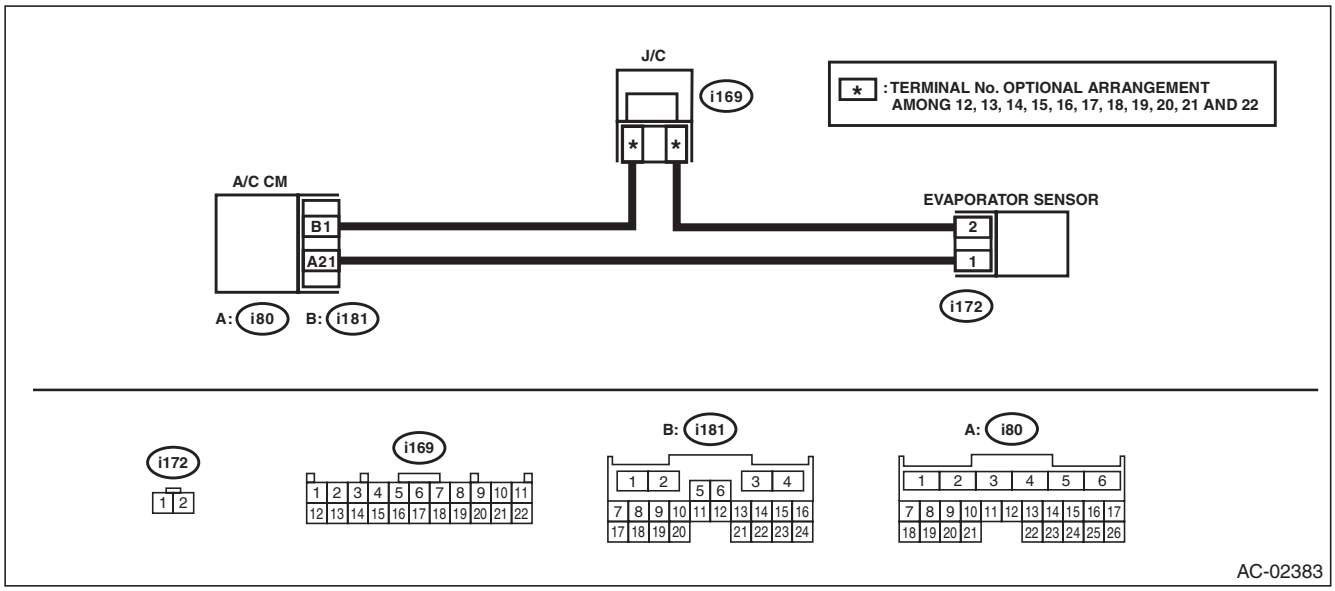

Step		Check	Yes	No
1	**CHECK CONNECTOR.** 1) Check the condition of connector connection. 2) Read the DTC using Subaru Select Monitor.	Is B1603 displayed?	Go to step **2**.	Check the connection of the evaporator sensor circuit.
2	**CHECK EVAPORATOR SENSOR.** 1) Disconnect the evaporator sensor. 2) Read the DTC of the A/C ECM using the Subaru Select Monitor.	Is B1604 displayed?	Replace the evaporator sensor. <Ref. to AC-66, REMOVAL, Evaporator.>	Go to step **3**.
3	**CHECK HARNESS.** 1) Turn the ignition switch to ON. 2) Using the tester, measure the voltage between terminals. ***Connector & terminal*** ***(i172) No. 1 (+) — No. 2 (–):***	Is the voltage 4.5 — 5.0 V?	Check the connection of the evaporator sensor circuit.	Go to step **4**.
4	**CHECK HARNESS.** 1) Disconnect the connector from A/C CM. 2) Using a tester, check continuity between terminals. ***Connector & terminal*** ***(i172) No. 1 — No. 2:***	Is there continuity?	Repair or replace the short circuit of the harness.	Replace the A/C CM. <Ref. to AC-54, REMOVAL, Control Unit.>

GETthemANUALS.org

D: DTC B1604 EVAPORATOR SENSOR OPEN

DTC DETECTING CONDITION:

Evaporator sensor circuit is open.

TROUBLE SYMPTOM:

- Compressor does not operate.
- Evaporator temperature is falsely recognized as low, and the compartment temperature is adjusted.
- DTC “B1604” Open circuit in evaporator sensor was detected.
- DTC “23” Open circuit in evaporator sensor was detected.

WIRING DIAGRAM:

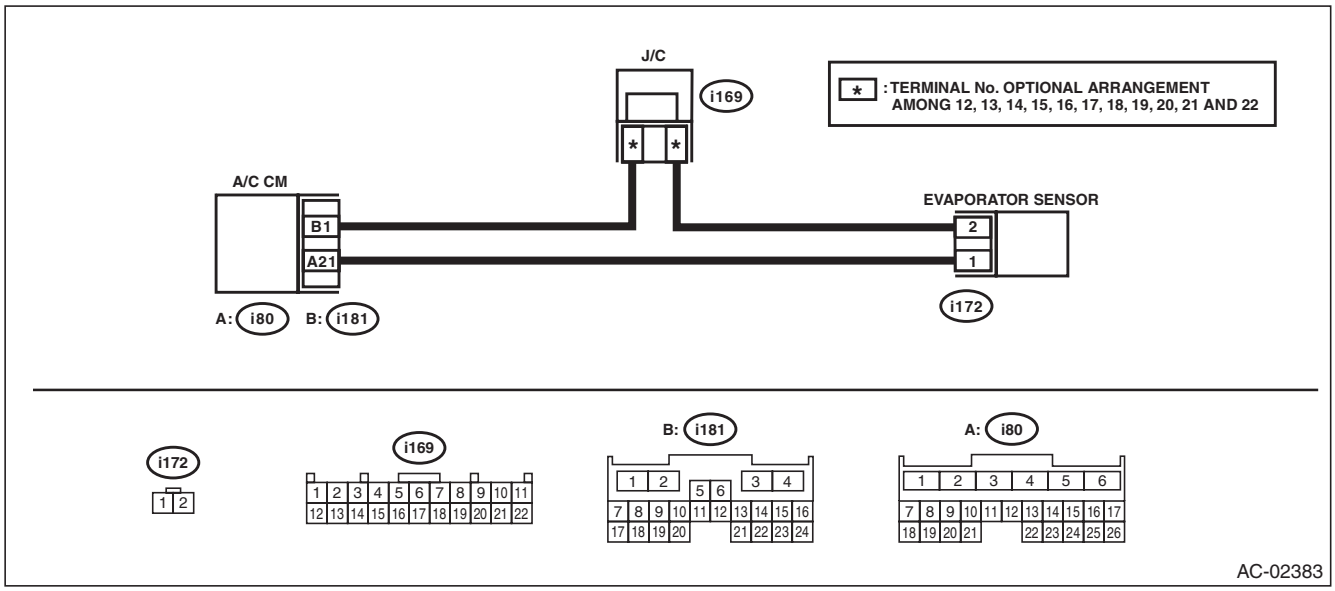

Step		Check	Yes	No
1	**CHECK CONNECTOR.** 1) Check the condition of connector connection. 2) Read the DTC using Subaru Select Monitor.	Is B1604 displayed?	Go to step **2**.	Check the connection of the evaporator sensor circuit.
2	**CHECK EVAPORATOR SENSOR.** 1) Disconnect the evaporator sensor. 2) Short the i172 connector. 3) Read the DTC of the A/C ECM using the Subaru Select Monitor.	Is B1603 displayed?	Replace the evaporator sensor. <Ref. to AC-66, REMOVAL, Evaporator.>	Go to step **3**.
3	**CHECK HARNESS.** 1) Turn the ignition switch to ON. 2) Using the tester, measure the voltage between terminals. ***Connector & terminal*** ***(i172) No. 1 (+) — No. 2 (–):***	Is the voltage 4.5 — 5.0 V?	Go to step **4**.	Repair or replace the open circuit of harness.
4	**CHECK HARNESS.** 1) Disconnect the connector from A/C CM. 2) Using a tester, check continuity between terminals. ***Connector & terminal*** ***(i172) No. 1 — (i80) No. 21:*** ***(i172) No. 2 — (i181) No. 1:***	Is there continuity?	Replace the A/C CM. <Ref. to AC-54, REMOVAL, Control Unit.>	Repair or replace the open circuit of harness.

GETtheMANUALS.org

E: DTC B1605 REFRIGERANT FLOW SENSOR CIRCUIT OPEN

DTC DETECTING CONDITION:

Refrigerant pressure sensor circuit is open.

TROUBLE SYMPTOM:

- Compressor does not operate. (Variable compressor)
- DTC “B1605” Open circuit in refrigerant pressure sensor was detected.
- DTC “42” Open circuit in refrigerant pressure sensor was detected.

WIRING DIAGRAM:

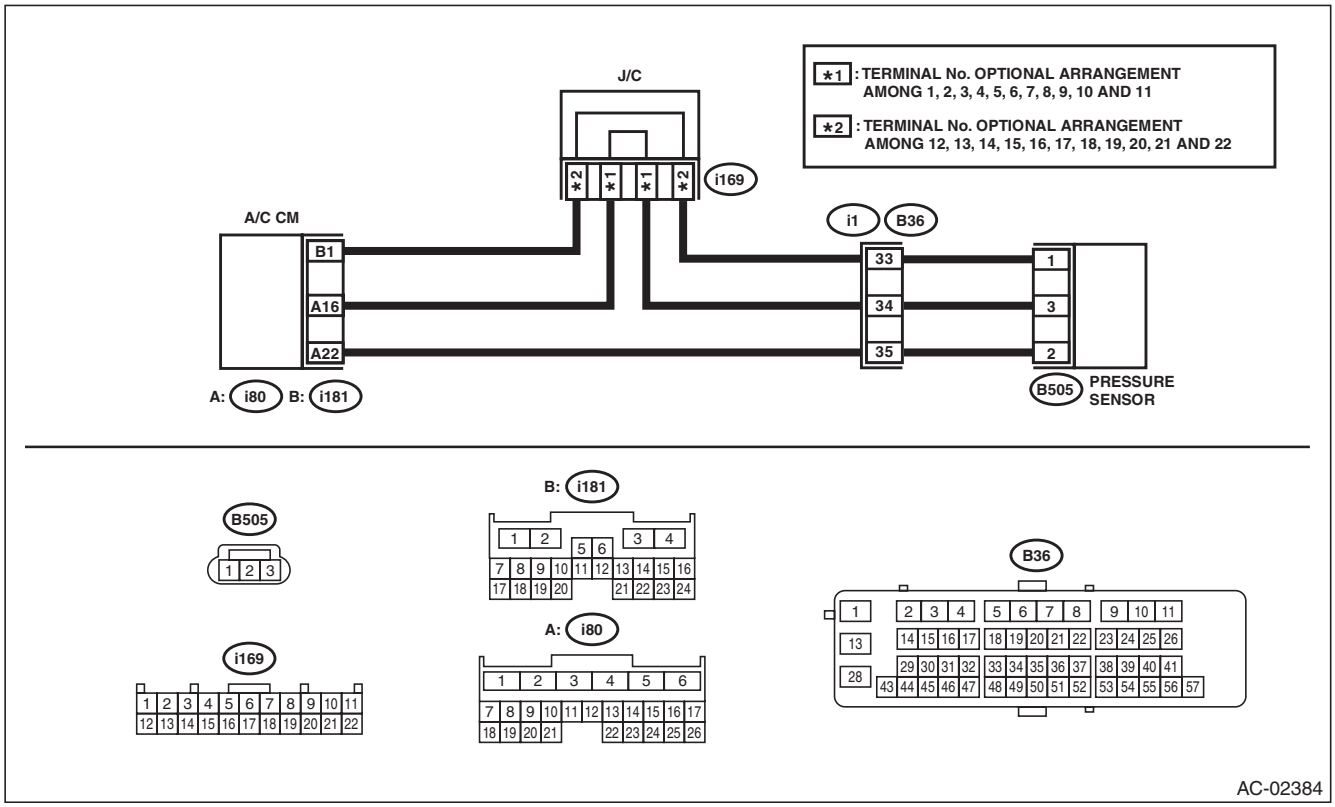

Step		Check	Yes	No
1	**CHECK CONNECTOR.** 1) Check the condition of connector connection. 2) Read the DTC using Subaru Select Monitor.	Is B1605 displayed?	Go to step **2**.	Check the connection of the refrigerant pressure sensor circuit.
2	**CHECK PRESSURE SENSOR.** 1) Disconnect the pressure sensor. 2) Short No. 1 and No. 2 of B505 connector. 3) Read the DTC of the A/C ECM using the Subaru Select Monitor.	Is B1606 displayed?	Replace the refrigerant pressure sensor. <Ref. to AC-76, REMOVAL, Hose and Pipe.>	Go to step **3**.
3	**CHECK HARNESS.** 1) Turn the ignition switch to ON. 2) Using the tester, measure the voltage between terminals. ***Connector & terminal*** ***(B505) No. 3 (+) — No. 1 (–):***	Is the voltage 4.5 — 5.0 V?	Go to step **4**.	Repair or replace the open circuit of harness.

GETtheMANUALS.org

Step		Check	Yes	No
4	**CHECK HARNESS.** 1) Disconnect the connector from A/C CM. 2) Using a tester, check continuity between terminals. ***Connector & terminal*** ***(B505) No. 1 — (i181) No. 1:*** ***(B505) No. 2 — (i80) No. 22:*** ***(B505) No. 3 — (i80) No. 16:***	Is there continuity?	Replace the A/C CM. <Ref. to AC-54, REMOVAL, Control Unit.>	Repair or replace the open circuit of harness.

GETtheMANUALS.org

F: DTC B1606 REFRIGERANT FLOW SENSOR CIRCUIT SHORT

DTC DETECTING CONDITION:

Refrigerant pressure sensor circuit is shorted.

TROUBLE SYMPTOM:

- Compressor does not operate. (Variable compressor)
- DTC “B1606” Short-circuit in refrigerant pressure sensor was detected.
- DTC “-42” Short-circuit in refrigerant pressure sensor was detected.

WIRING DIAGRAM:

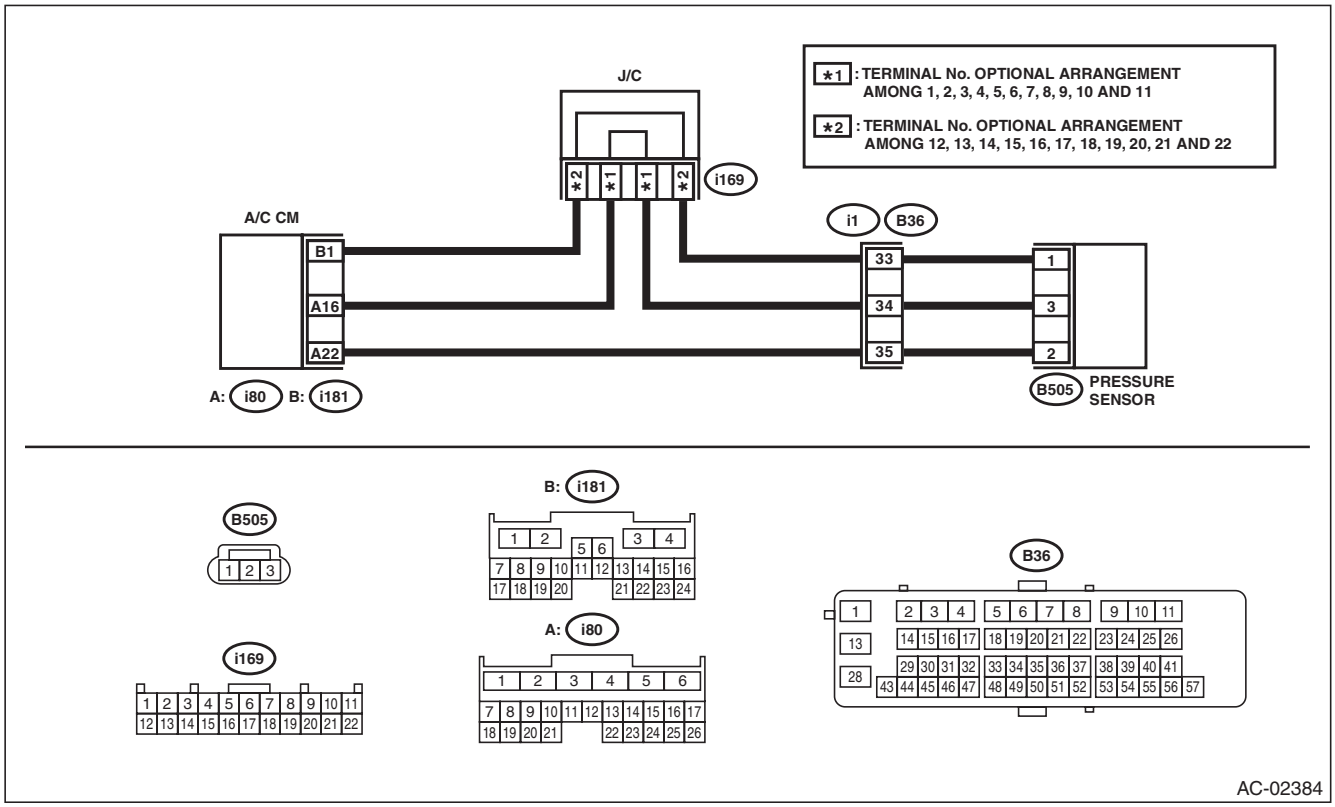

Step		Check	Yes	No
1	**CHECK CONNECTOR.** 1) Check the condition of connector connection. 2) Read the DTC using Subaru Select Monitor.	Is B1606 displayed?	Go to step **2**.	Check the connection of the refrigerant pressure sensor circuit.
2	**CHECK REFRIGERANT PRESSURE SENSOR.** 1) Disconnect the refrigerant pressure sensor. 2) Read the DTC of the A/C ECM using the Subaru Select Monitor.	Is B1605 displayed?	Replace the refrigerant pressure sensor. <Ref. to AC-76, REMOVAL, Hose and Pipe.>	Go to step **3**.
3	**CHECK HARNESS.** 1) Disconnect the connector from A/C CM. 2) Using a tester, check continuity between terminals. ***Connector & terminal*** ***(B505) No. 1 — No. 2:*** ***(B505) No. 2 — Chassis ground:***	Is there continuity?	Repair or replace the short circuit of the harness.	Replace the A/C CM. <Ref. to AC-54, REMOVAL, Control Unit.>

GETthemANUALS.org

G: DTC B1607 SUNLOAD SENSOR SHORT

DTC DETECTING CONDITION:

Sunload sensor circuit is shorted.

TROUBLE SYMPTOM:

- Operation is performed as no sunload.
- DTC “B1607” Short-circuit in sunload sensor was detected.
- DTC “-25” Short-circuit in sunload sensor was detected.
- DTC “-45” Short-circuit in sunload sensor (auto light control) was detected.

WIRING DIAGRAM:

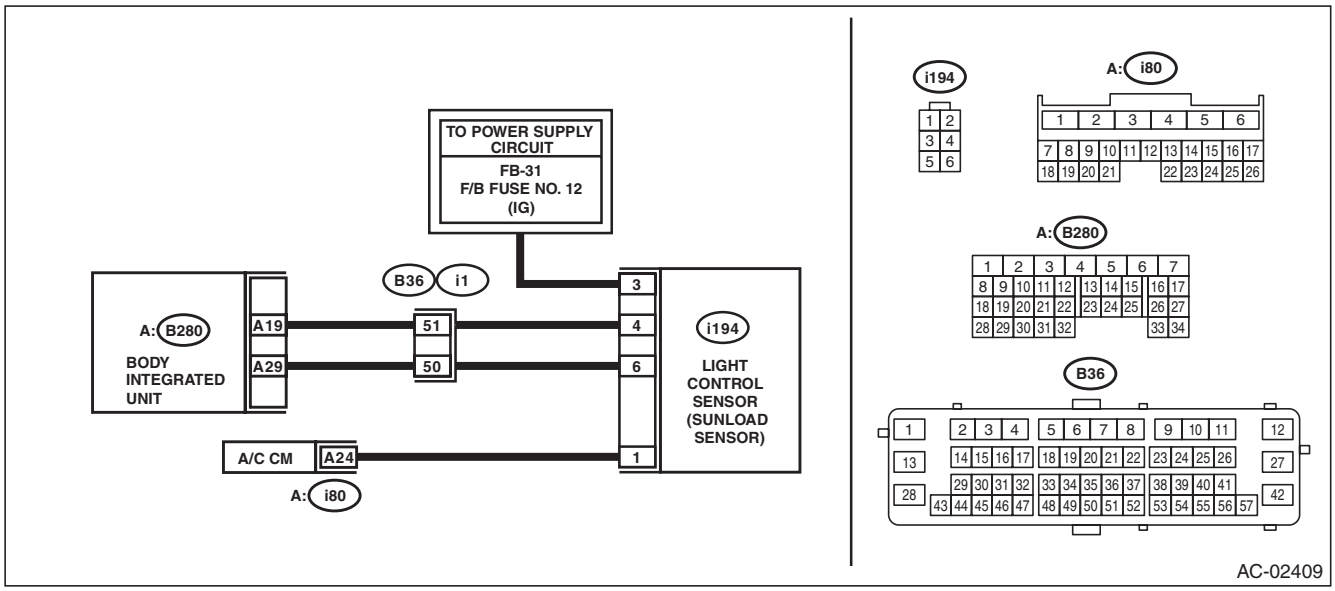

Step		Check	Yes	No
1	**CHECK CONNECTOR.** 1) Check the condition of connector connection. 2) Read the DTC using Subaru Select Monitor.	Is B1607 displayed?	Go to step **2**.	Check the connection of the sunload sensor circuit.
2	**CHECK SUNLOAD SENSOR.** 1) Disconnect the sunload sensor. 2) Read the DTC of the A/C ECM using the Subaru Select Monitor.	Is B1608 displayed?	Replace the sunload sensor. <Ref. to AC-80, REMOVAL, Sunload Sensor (Auto A/C Model).>	Go to step **3**.
3	**CHECK HARNESS.** 1) Turn the ignition switch to ON. 2) Using the tester, measure the voltage between terminals. ***Connector & terminal*** ***(i194) No. 3 (+) — No. 1 (–):***	Is the voltage 10 V or more?	Check the connection of the sunload sensor circuit.	Go to step **4**.
4	**CHECK HARNESS.** 1) Disconnect the connector from A/C CM. 2) Using a tester, check continuity between terminals. ***Connector & terminal*** ***(i194) No. 3 — 1:***	Is there continuity?	Repair or replace the short circuit of the harness.	Replace the A/C CM. <Ref. to AC-54, REMOVAL, Control Unit.>

GETtheMANUALS.org

H: DTC B1608 SUNLOAD SENSOR OPEN

DTC DETECTING CONDITION:

Sunload sensor circuit is open. (Displayed for current malfunction)

NOTE:

When the sunload sensor check is performed indoors or in the shade, it could be diagnosed as having an open circuit. Always check the sunload sensor in direct sunlight.

TROUBLE SYMPTOM:

- Operation is performed as no sunload.
- DTC “B1608” Open circuit in sunload sensor was detected.
- DTC “25” Open circuit in sunload sensor was detected.
- DTC “45” Open circuit in sunload sensor (auto light control) was detected.

WIRING DIAGRAM:

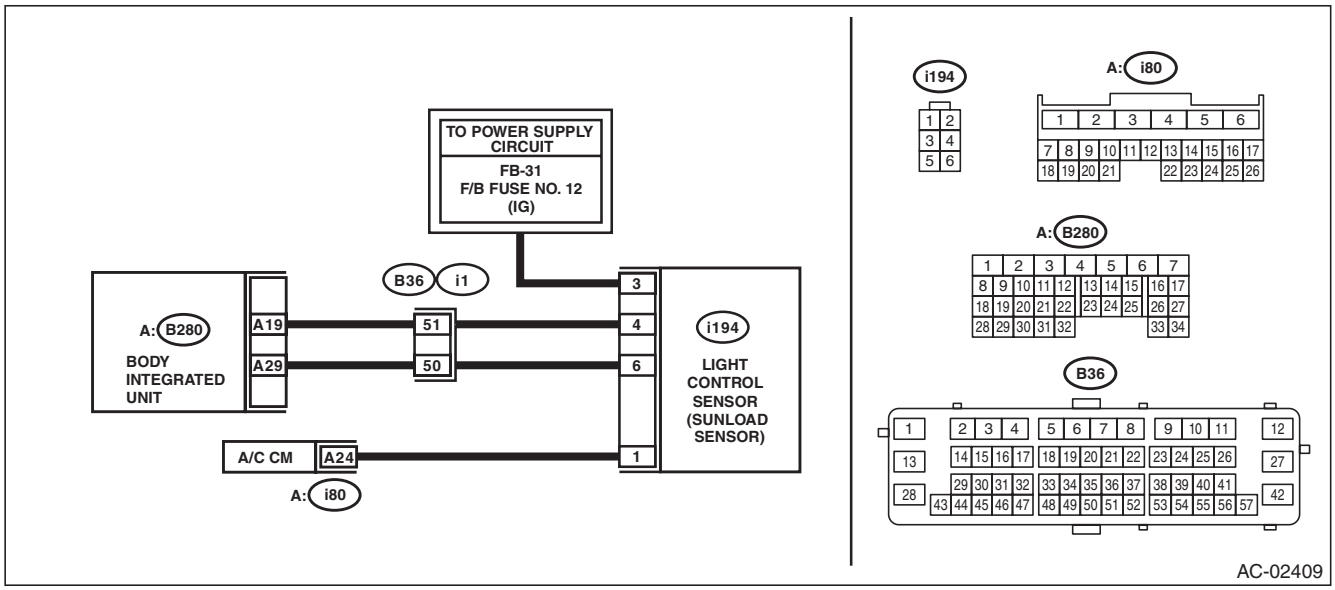

Step		Check	Yes	No
1	**CHECK CONNECTOR.** Read the DTC of the A/C CM using the Subaru Select Monitor.	Is B1608 displayed?	Go to step **2**.	Check the connection of the sunload sensor circuit.
2	**CHECK HARNESS.** 1) Disconnect the sunload sensor. 2) Using a tester, check continuity between terminals. ***Connector & terminal*** ***(i194) No. 6 — Chassis ground:***	Is there continuity?	Go to step **3**.	Repair or replace the open circuit of harness.
3	**CHECK HARNESS.** 1) Turn the ignition switch to ON. 2) Using the tester, measure the voltage between terminals. ***Connector & terminal*** ***(i194) No. 3 (+) — No. 6 (–):***	Is the voltage 10.0 — 14.0 V?	Go to step **4**.	Repair or replace the open circuit of harness.

GETtheMANUALS.org

	Step	Check	Yes	No
4	**CHECK SUNLOAD SENSOR.** 1) Connect the sunload sensor. 2) Turn the ignition switch to ON. 3) Using the tester, measure the voltage between terminals. **CAUTION:** **Because the sensor may not respond if the light intensity is weak, use the incandescent light for check and bring it in 30 cm or less from the sensor to measure the voltage.** ***Connector & terminal*** ***(i194) No. 1 (+) — No. 6 (–):***	When the sunlight does not directly shine on (sensor covered with cloth): 0.8 V or less, and when the incandescent light for check is close to the sensor: 0.8 — 4.3 V±0.3 V (depending on light intensity)	Go to step **5**.	Replace the sunload sensor. <Ref. to AC-80, REMOVAL, Sunload Sensor (Auto A/C Model).>
5	**CHECK HARNESS.** 1) Disconnect the sunload sensor. 2) Disconnect the connector from A/C CM. 3) Using a tester, check continuity between terminals. ***Connector & terminal*** ***(i194) No. 1 — (i80) No. 24:***	Is there continuity?	Go to step **6**.	Repair or replace the open circuit of harness.
6	**CHECK HARNESS.** 1) Using a tester, check continuity between terminals. ***Connector & terminal*** ***(i194) No. 3 — (B280) No. 9:***	Is there continuity?	Repair or replace the open circuit of harness.	Replace the A/C CM. <Ref. to AC-54, REMOVAL, Control Unit.>

GETtheMANUALS.org

I: DTC B1610 AIRMIX DOOR ACTUATOR POTENTIOMETER CIRCUIT OPEN (DRIVER'S)

DTC DETECTING CONDITION:

Air mix door actuator potentiometer circuit is open.

TROUBLE SYMPTOM:

- Temperature cannot be adjusted.
- Temperature of the driver's side cannot be adjusted for model with left/right independent air conditioner.
- DTC "B1610" Open circuit in air mix door actuator — potentiometer (driver's) was detected.
- DTC "26" Open circuit in air mix door actuator — potentiometer (driver's) was detected.

WIRING DIAGRAM:

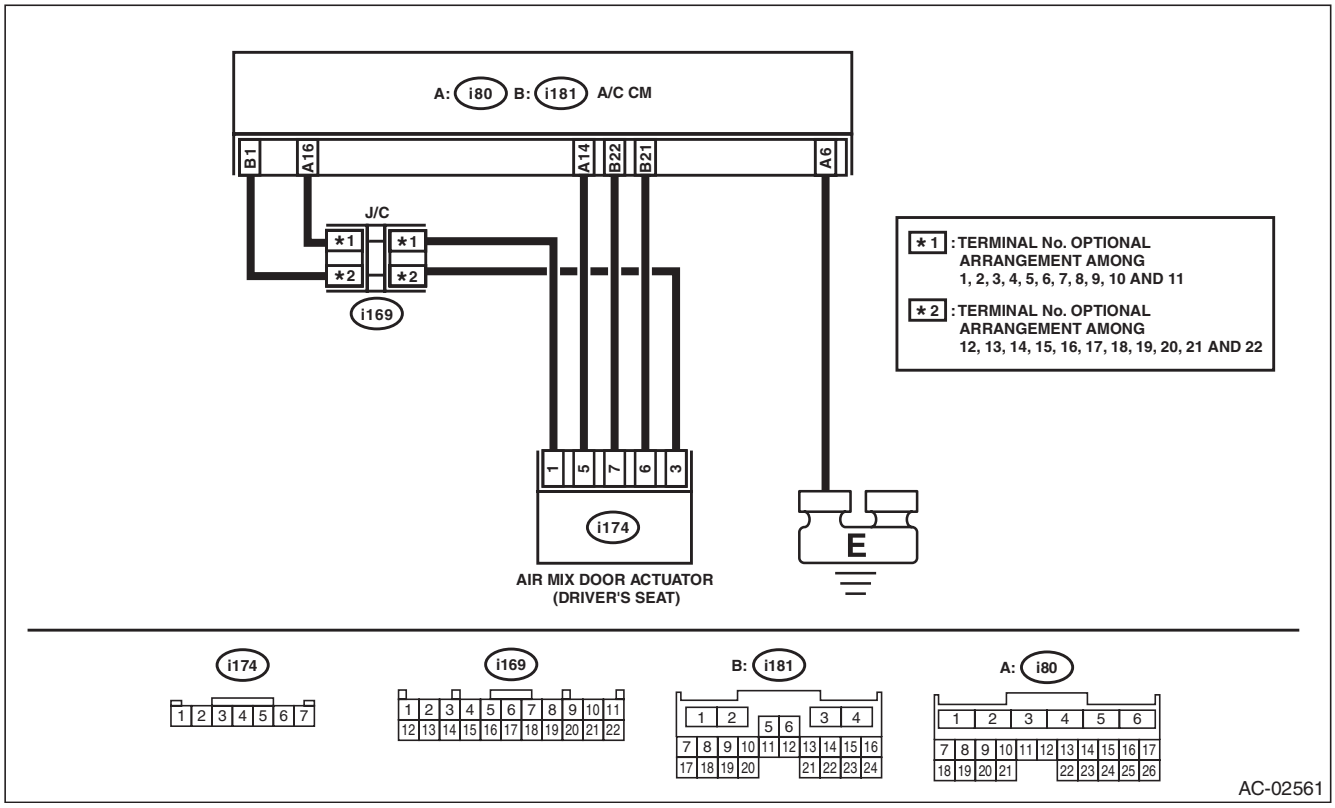

Step		Check	Yes	No
1	**CHECK CONNECTOR.** 1) Check the condition of connector connection. 2) Read the DTC using Subaru Select Monitor.	Is B1610 displayed?	Go to step **2**.	Repair the poor connection of the connector.
2	**CHECK ACTUATOR.** 1) Disconnect the air mix door actuator (driver's). 2) Short No. 3 and No. 5 of i174 connector. 3) Read the DTC using Subaru Select Monitor.	Is B1611 displayed?	Replace the air mix door actuator (driver's). <Ref. to AC-95, REMOVAL, Air Mix Door Actuator.>	Go to step **3**.
3	**CHECK HARNESS.** 1) Turn the ignition switch to ON. 2) Using the tester, measure the voltage between terminals. ***Connector & terminal*** ***(i174) No. 1 (+) — No. 3 (–):***	Is the voltage 4.5 — 5.0 V?	Go to step **4**.	Repair or replace the open circuit of harness.

GETthemANUALS.org

Step		Check	Yes	No
4	**CHECK HARNESS.** 1) Disconnect the connector from A/C CM. 2) Using a tester, check continuity between terminals. ***Connector & terminal*** ***(i174) No. 1 — (i80) No. 16:*** ***(i174) No. 3 — (i80) No. 1:*** ***(i174) No. 5 — (i80) No. 14:***	Is there continuity?	Replace the A/C CM. <Ref. to AC-54, REMOVAL, Control Unit.>	Repair or replace the open circuit of harness.

GETtheMANUALS.org

J: DTC B1611 AIRMIX DOOR ACTUATOR POTENTIOMETER CIRCUIT SHORT (DRIVER'S)

DTC DETECTING CONDITION:

Air mix door actuator potentiometer circuit is shorted.

TROUBLE SYMPTOM:

- Temperature cannot be adjusted.
- Temperature of the driver's side cannot be adjusted for model with left/right independent air conditioner.
- DTC "B1611" Short circuit in air mix door actuator — potentiometer (driver's) was detected.
- "27" Short circuit in air mix door actuator — potentiometer (driver's) was detected.

WIRING DIAGRAM:

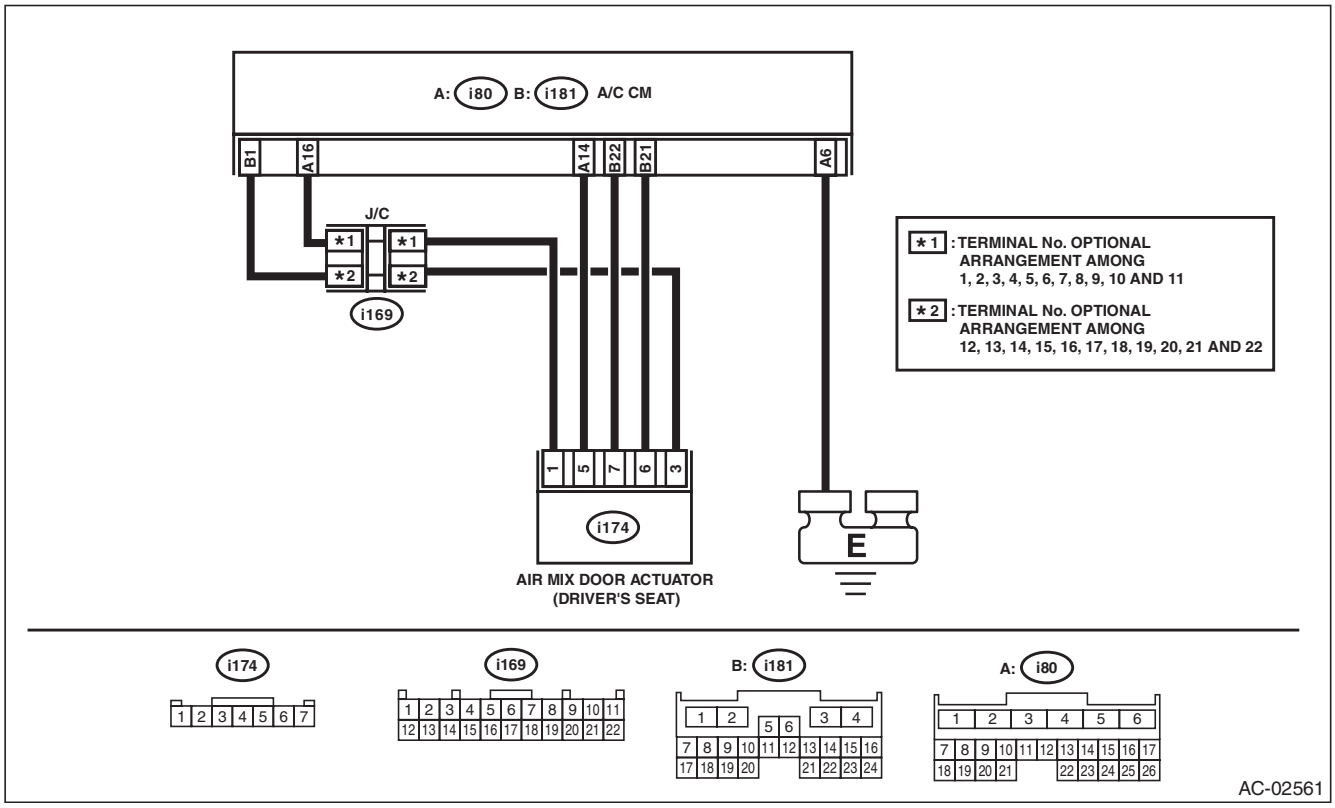

Step		Check	Yes	No
1	**CHECK CONNECTOR.** 1) Check the condition of connector connection. 2) Read the DTC using Subaru Select Monitor.	Is B1611 displayed?	Go to step **2**.	Repair the poor contact of connector.
2	**CHECK ACTUATOR.** 1) Disconnect the air mix door actuator (driver's). 2) Read the DTC using Subaru Select Monitor.	Is B1610 displayed?	Replace the air mix door actuator (driver's). <Ref. to AC-95, REMOVAL, Air Mix Door Actuator.>	Go to step **3**.
3	**CHECK HARNESS.** 1) Disconnect the connector from A/C CM. 2) Using a tester, check continuity between terminals. ***Connector & terminal*** ***(i174) No. 3 — (i174) No. 5:*** ***(i174) No. 5 — Chassis ground:***	Is there continuity?	Repair or replace the short circuit of the harness.	Replace the A/C CM. <Ref. to AC-54, REMOVAL, Control Unit.>

GETthemANUALS.org

K: DTC B1612 AIRMIX DOOR ACTUATOR LOCK (DRIVER'S)

DTC DETECTING CONDITION:

- Driver's air mix door actuator is locked.
- The potentiometer value of the actuator does not change.

TROUBLE SYMPTOM:

Temperature of the driver's side cannot be adjusted for model with left/right independent air conditioner.

WIRING DIAGRAM:

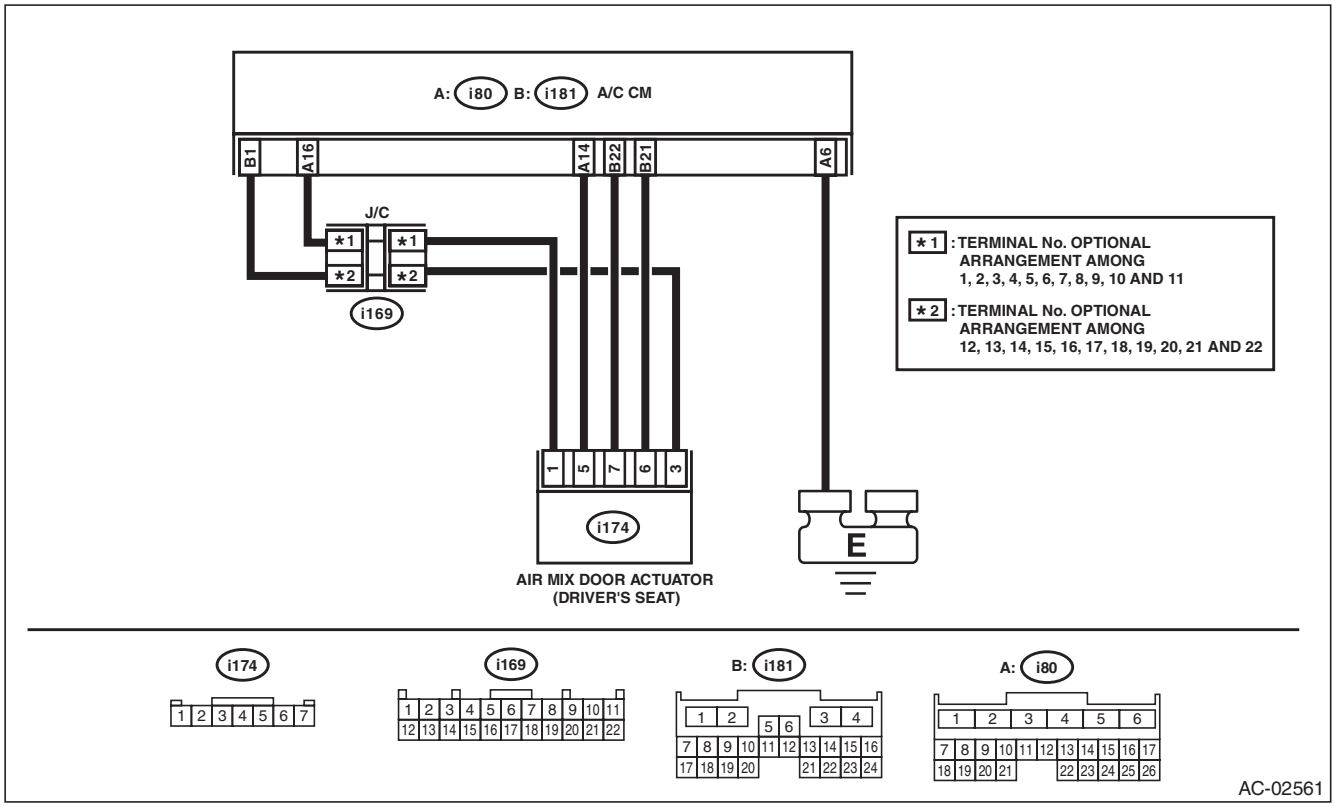

Step		Check	Yes	No
1	**CHECK CONNECTOR.** 1) Check the condition of connector connection. 2) Read the DTC using Subaru Select Monitor.	Is B1612 displayed?	Go to step **2**.	Repair the poor contact of connector.
2	**CHECK CURRENT DATA.** Using the Subaru Select Monitor, change the setting of "Airmix Dr Act Trgt Open Angle (Driver's)" from the A/C diagnosis and perform the active test.	Did the actuator move to the specified target opening angle?	Air mix door actuator circuit is normal.	Go to step **3**.
3	**CHECK HARNESS.** 1) Turn the ignition switch to ON. 2) Using the tester, measure the voltage between terminals. ***Connector & terminal*** ***(i174) No. 1 (+) — No. 3 (–):***	Is the voltage 4.5 — 5.0 V?	Go to step **4**.	Repair or replace the open, short circuit of the harness.

GETtheMANUALS.org

Step		Check	Yes	No
4	**CHECK HARNESS.** 1) Disconnect the connector from A/C CM. 2) Using a tester, check continuity between terminals. ***Connector & terminal*** ***(i174) No. 5 — (i80) No. 14:*** ***(i174) No. 1 — (i80) No. 16:*** ***(i174) No. 3 — (i181) No. 1:*** ***(i174) No. 6 — (i181) No. 21:*** ***(i174) No. 7 — (i181) No. 22:***	Is there continuity?	Go to step **5**.	Repair or replace the open circuit of harness.
5	**CHECK AIR MIX DOOR ACTUATOR.** Check the air mix door actuator parts. <Ref. to AC-97, INSPECTION, Air Mix Door Actuator.>	Is air mix door actuator normal?	Replace the A/C CM. <Ref. to AC-54, REMOVAL, Control Unit.>	Replace the air mix door actuator. <Ref. to AC-95, REMOVAL, Air Mix Door Actuator.>

GETtheMANUALS.org

L: DTC B1613 AIRMIX DOOR ACTUATOR POTENTIOMETER CIRCUIT OPEN (PASSENGER'S)

DTC DETECTING CONDITION:

Air mix door actuator potentiometer circuit is open.

TROUBLE SYMPTOM:

- Temperature of the passenger's side cannot be adjusted for model with left/right independent air conditioner.
- DTC "B1613" Open circuit in air mix door actuator — potentiometer (passenger's) was detected.
- DTC "-26" Open circuit in air mix door actuator — potentiometer (passenger's) was detected.

WIRING DIAGRAM:

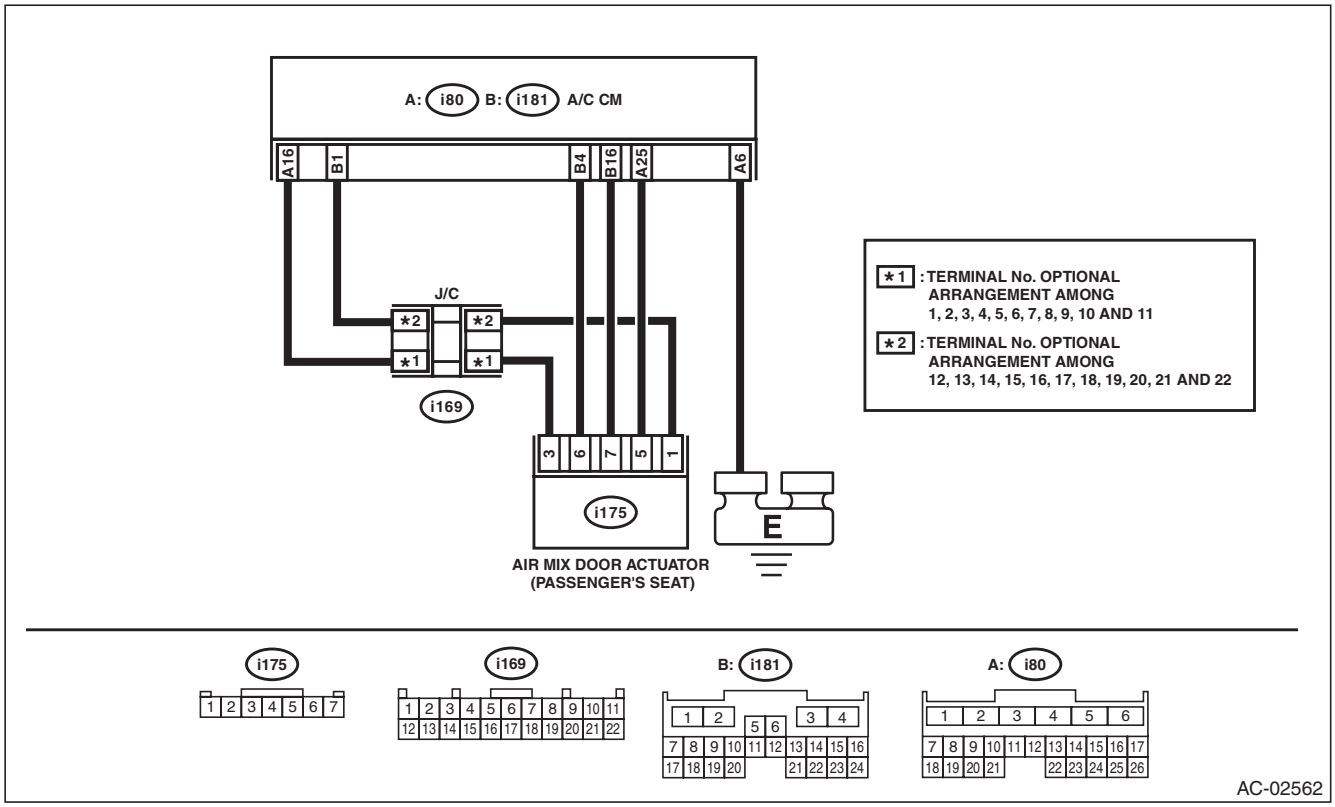

Step		Check	Yes	No
1	**CHECK CONNECTOR.** 1) Check the condition of connector connection. 2) Read the DTC using Subaru Select Monitor.	Is B1613 displayed?	Go to step **2**.	Repair the poor contact of connector.
2	**CHECK ACTUATOR.** 1) Disconnect the air mix door actuator (passenger's). 2) Short No. 1 and No. 5 of connector i175. 3) Read the DTC using Subaru Select Monitor.	Is B1614 displayed?	Replace the air mix door actuator (passenger's). <Ref. to AC-95, REMOVAL, Air Mix Door Actuator.>	Go to step **3**.
3	**CHECK HARNESS.** 1) Turn the ignition switch to ON. 2) Using the tester, measure the voltage between terminals. ***Connector & terminal*** ***(i175) No. 3 (+) — No. 1 (–):***	Is the voltage 4.5 — 5.0 V?	Go to step **4**.	Repair or replace the open circuit of harness.

GETthemANUALS.org

Step		Check	Yes	No
4	**CHECK HARNESS.** 1) Disconnect the connector from A/C CM. 2) Using the tester, measure the voltage between terminals. ***Connector & terminal*** ***(i175) No. 1 — (i181) No. 1:*** ***(i175) No. 3 — (i80) No. 16:*** ***(i175) No. 5 — (i80) No. 25:***	Is there continuity?	Replace the A/C CM. <Ref. to AC-54, REMOVAL, Control Unit.>	Repair or replace the open circuit of harness.

GETtheMANUALS.org

M: DTC B1614 AIRMIX DOOR ACTUATOR POTENTIOMETER CIRCUIT SHORT (PASSENGER'S)

DTC DETECTING CONDITION:

Air mix door actuator potentiometer circuit is shorted.

TROUBLE SYMPTOM:

- Temperature of the passenger's side cannot be adjusted for model with left/right independent air conditioner.
- DTC "B1614" Short circuit in air mix door actuator — potentiometer (passenger's) was detected.
- DTC "-27" Short circuit in air mix door actuator — potentiometer (passenger's) was detected.

WIRING DIAGRAM:

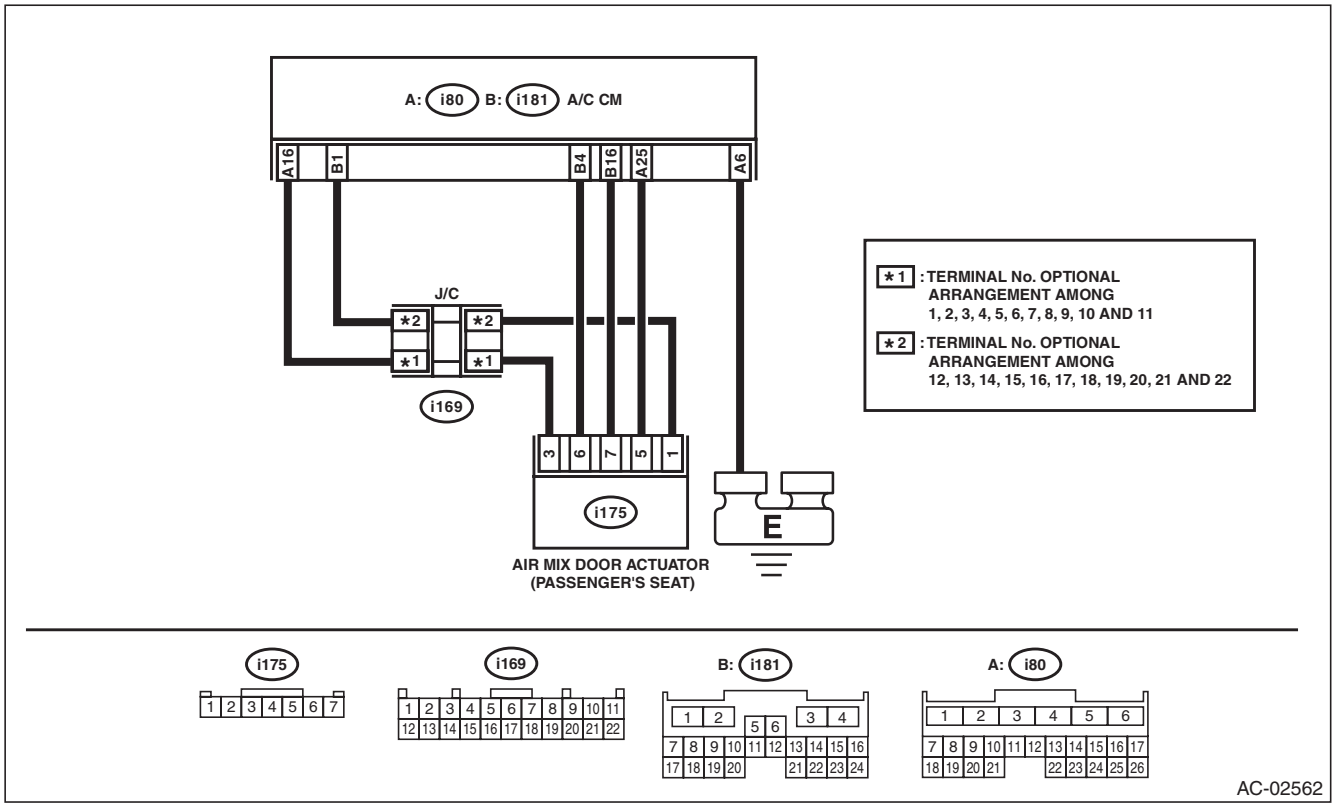

Step		Check	Yes	No
1	**CHECK CONNECTOR.** 1) Check the condition of connector connection. 2) Read the DTC using Subaru Select Monitor.	Is B1614 displayed?	Go to step **2**.	Repair the poor contact of connector.
2	**CHECK ACTUATOR.** 1) Disconnect the air mix door actuator (passenger's). 2) Read the DTC of the A/C ECM using the Subaru Select Monitor.	Is B1613 displayed?	Replace the air mix door actuator (passenger's). <Ref. to AC-95, REMOVAL, Air Mix Door Actuator.>	Go to step **3**.
3	**CHECK HARNESS.** 1) Turn the ignition switch to ON. 2) Using the tester, measure the voltage between terminals. ***Connector & terminal*** ***(i175) No. 3 (+) — No. 1 (–):***	Is the voltage 4.5 — 5.0 V?	Go to step **4**.	Repair or replace the open circuit of harness.

GETtheMANUALS.org

Step		Check	Yes	No
4	**CHECK HARNESS.** 1) Disconnect the connector from A/C CM. 2) Using a tester, check continuity between terminals. ***Connector & terminal*** ***(i175) No. 1 — No. 5:*** ***(i175) No. 5 — Chassis ground:***	Is there continuity?	Repair or replace the short circuit of the harness.	Replace the A/C CM. <Ref. to AC-54, REMOVAL, Control Unit.>

GETtheMANUALS.org

N: DTC B1615 AIRMIX DOOR ACTUATOR LOCK (PASSENGER'S)

DTC DETECTING CONDITION:

Passenger's air mix door actuator is locked.

TROUBLE SYMPTOM:

- Temperature of the passenger's side cannot be adjusted for model with left/right independent air conditioner.
- DTC "B1615" Air mix door actuator — lock (passenger's) was detected.
- DTC "48" Air mix door actuator — lock (passenger's) was detected.

WIRING DIAGRAM:

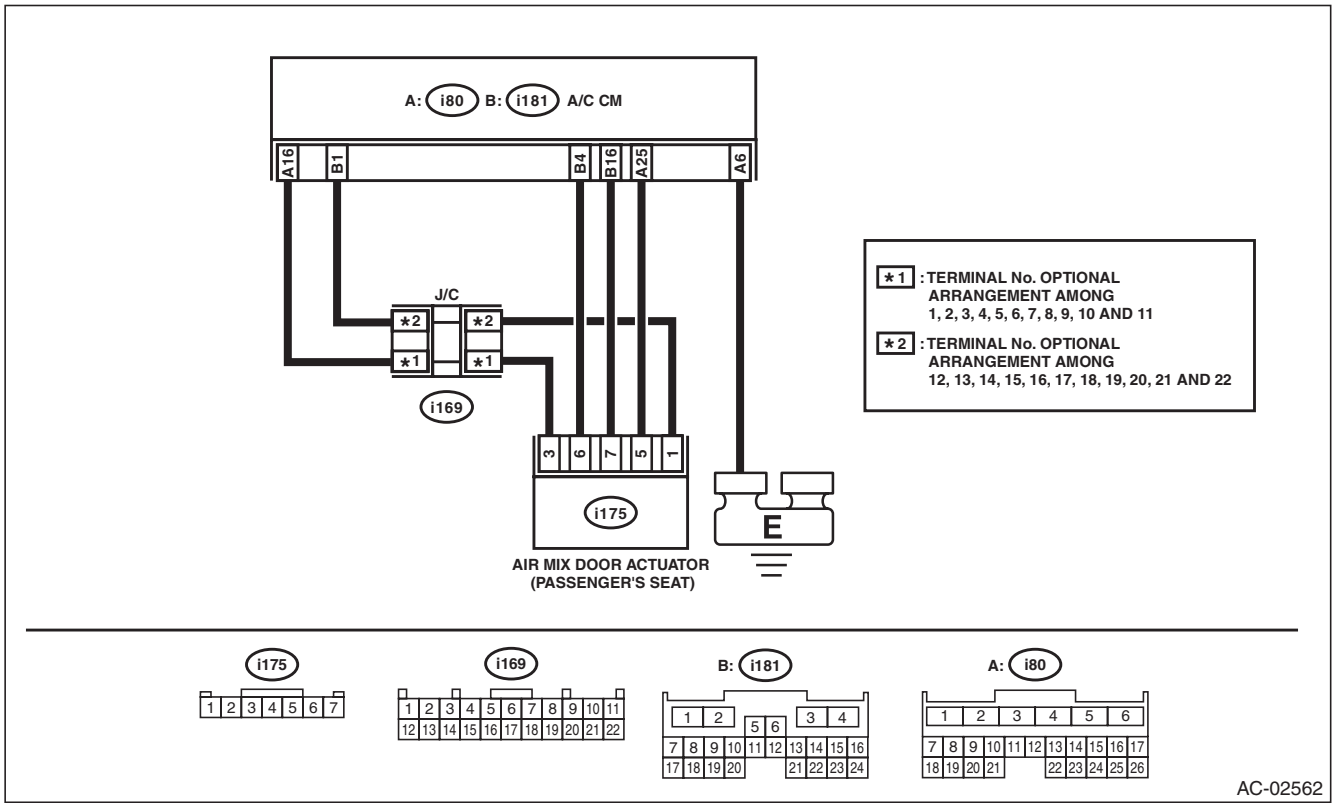

Step		Check	Yes	No
1	**CHECK CONNECTOR.** 1) Check the condition of connector connection. 2) Read the DTC using Subaru Select Monitor.	Is B1615 displayed?	Go to step **2**.	Repair the poor contact of connector.
2	**CHECK CURRENT DATA.** Using the Subaru Select Monitor, change the setting of "Airmix Dr Act Trgt Open Angle (Pas's)" from the A/C diagnosis and perform the active test.	Did the actuator move to the specified target opening angle?	Air mix door actuator circuit is normal.	Go to step **3**.
3	**CHECK HARNESS.** 1) Turn the ignition switch to ON. 2) Using the tester, measure the voltage between terminals. ***Connector & terminal*** ***(i175) No. 3 (+) — No. 1 (–):***	Is the voltage 4.5 — 5.0 V?	Go to step **4**.	Repair or replace the open, short circuit of the harness.

GETtheMANUALS.org

Step		Check	Yes	No
4	**CHECK HARNESS.** 1) Disconnect the connector from A/C CM. 2) Using a tester, check continuity between terminals. ***Connector & terminal*** ***(i175) No. 5 — (i80) No. 25:*** ***(i175) No. 3 — (i80) No. 16:*** ***(i175) No. 1 — (i181) No. 1:*** ***(i175) No. 7 — (i181) No. 16:*** ***(i175) No. 6 — (i181) No. 4:***	Is there continuity?	Go to step **5**.	Repair or replace the open circuit of harness.
5	**CHECK AIR MIX DOOR ACTUATOR.** Check the air mix door actuator parts. <Ref. to AC-97, INSPECTION, Air Mix Door Actuator.>	Is air mix door actuator normal?	Replace the A/C CM. <Ref. to AC-54, REMOVAL, Control Unit.>	Replace the air mix door actuator. <Ref. to AC-95, REMOVAL, Air Mix Door Actuator.>

GETtheMANUALS.org

O: DTC B1620 MODE DOOR ACTUATOR POTENTIOMETER CIRCUIT OPEN

DTC DETECTING CONDITION:

Mode door actuator potentiometer circuit is open.

TROUBLE SYMPTOM:

- Vent does not change.
- DTC “B1620” Open circuit in mode door actuator potentiometer was detected.
- DTC “28” Open circuit in mode door actuator potentiometer was detected.

WIRING DIAGRAM:

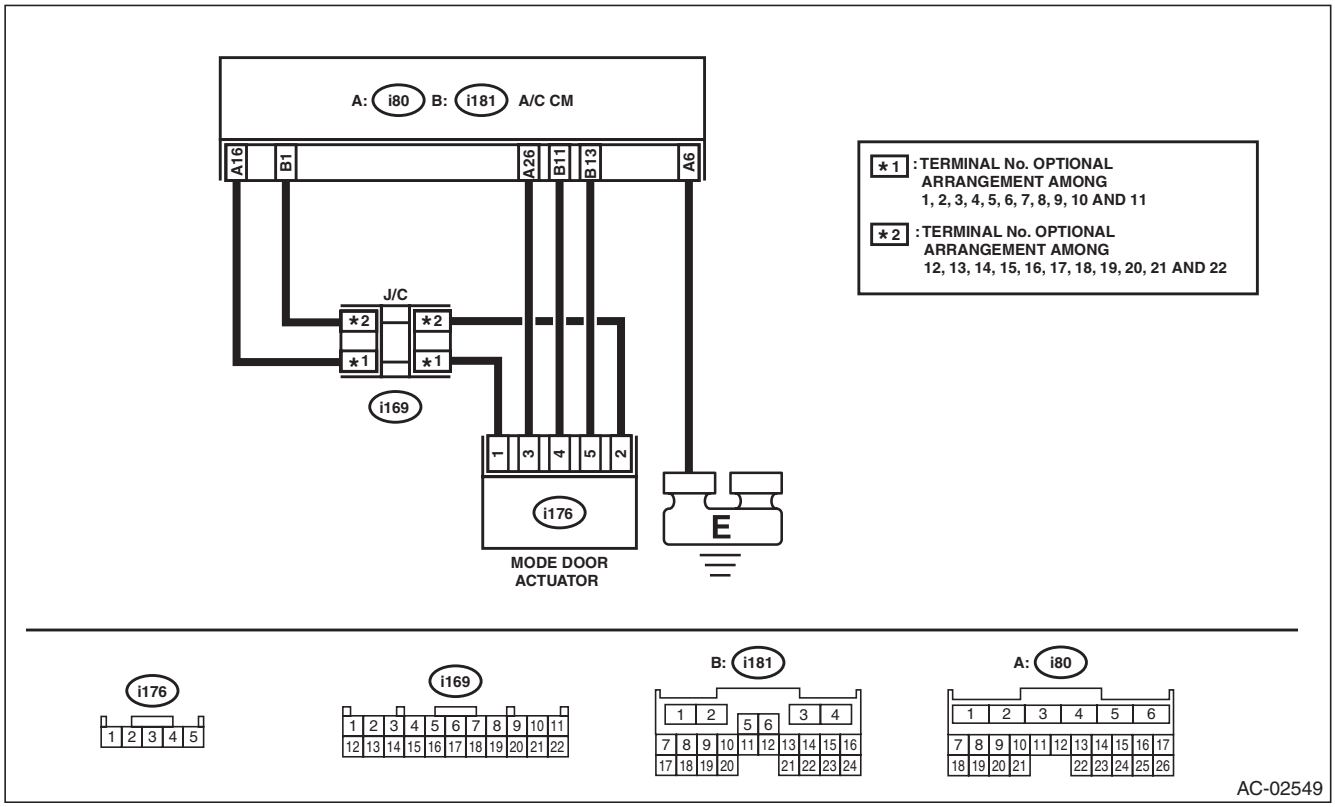

Step		Check	Yes	No
1	**CHECK CONNECTOR.** 1) Check the condition of connector connection. 2) Read the DTC using Subaru Select Monitor.	Is B1620 displayed?	Go to step **2**.	Repair the poor contact of connector.
2	**CHECK ACTUATOR.** 1) Disconnect the mode door actuator. 2) Short No. 2 and No. 3 of (i176) connector. 3) Read the DTC using Subaru Select Monitor.	Is B1621 displayed?	Replace the mode door actuator. <Ref. to AC-92, REMOVAL, Mode Door Actuator.>	Go to step **3**.
3	**CHECK HARNESS.** 1) Turn the ignition switch to ON. 2) Using the tester, measure the voltage between terminals. ***Connector & terminal*** ***(i176) No. 1 (+) — No. 2 (–):***	Is the voltage 4.5 — 5.0 V?	Go to step **4**.	Repair the open circuit of harness.
4	**CHECK HARNESS.** Using a tester, check continuity between terminals. ***Connector & terminal*** ***(i176) No. 1 — (i80) No. 16:*** ***(i176) No. 2 — (i181) No. 1:*** ***(i176) No. 3 — (i80) No. 26:***	Is there continuity?	Replace the A/C CM. <Ref. to AC-54, REMOVAL, Control Unit.>	Repair or replace the open circuit of harness.

GETtheMANUALS.org

P: DTC B1621 MODE DOOR ACTUATOR POTENTIOMETER CIRCUIT SHORT

DTC DETECTING CONDITION:

Mode door actuator potentiometer circuit is shorted.

TROUBLE SYMPTOM:

- Vent does not change.
- DTC “B1621” Short circuit in mode door actuator potentiometer was detected.
- DTC “29” Short circuit in mode door actuator potentiometer was detected.

WIRING DIAGRAM:

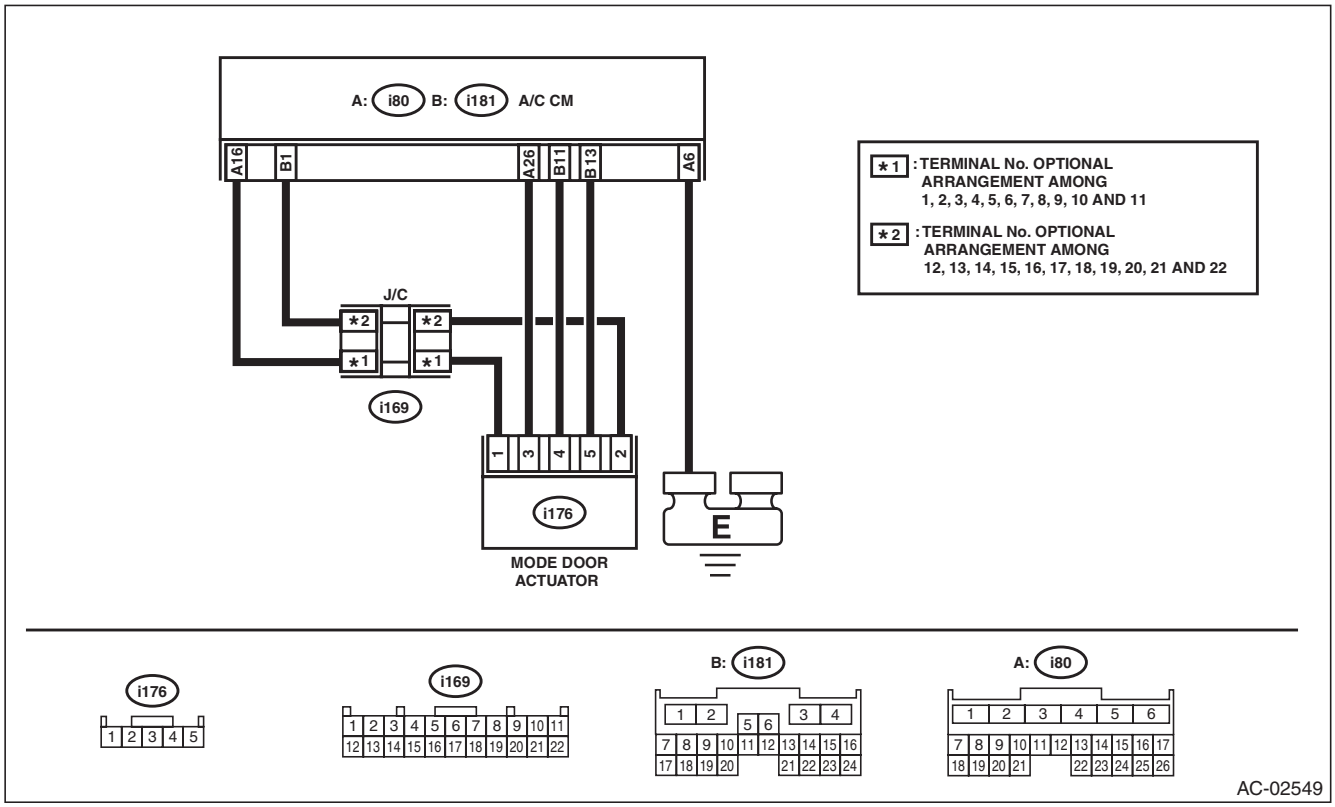

	Step	Check	Yes	No
1	**CHECK CONNECTOR.** 1) Check the condition of connector connection. 2) Read the DTC using Subaru Select Monitor.	Is B1621 displayed?	Go to step **2**.	Repair the poor contact of connector.
2	**CHECK ACTUATOR.** 1) Disconnect the mode door actuator. 2) Read the DTC using Subaru Select Monitor.	Is B1620 displayed?	Replace the mode door actuator. <Ref. to AC-92, REMOVAL, Mode Door Actuator.>	Go to step **3**.
3	**CHECK HARNESS.** Using a tester, check continuity between terminals. ***Connector & terminal*** ***(i176) No. 2 — No. 3:*** ***(i176) No. 3 — Chassis ground:***	Is there continuity?	Repair or replace the short circuit of the harness.	Replace the A/C CM. <Ref. to AC-54, REMOVAL, Control Unit.>

GETthemANUALS.org

Q: DTC B1622 MODE DOOR ACTUATOR LOCK

DTC DETECTING CONDITION:

Mode door actuator locked.

TROUBLE SYMPTOM:

- DTC “B1622” Mode door actuator lock was detected.
- DTC “49” Mode door actuator lock was detected.

WIRING DIAGRAM:

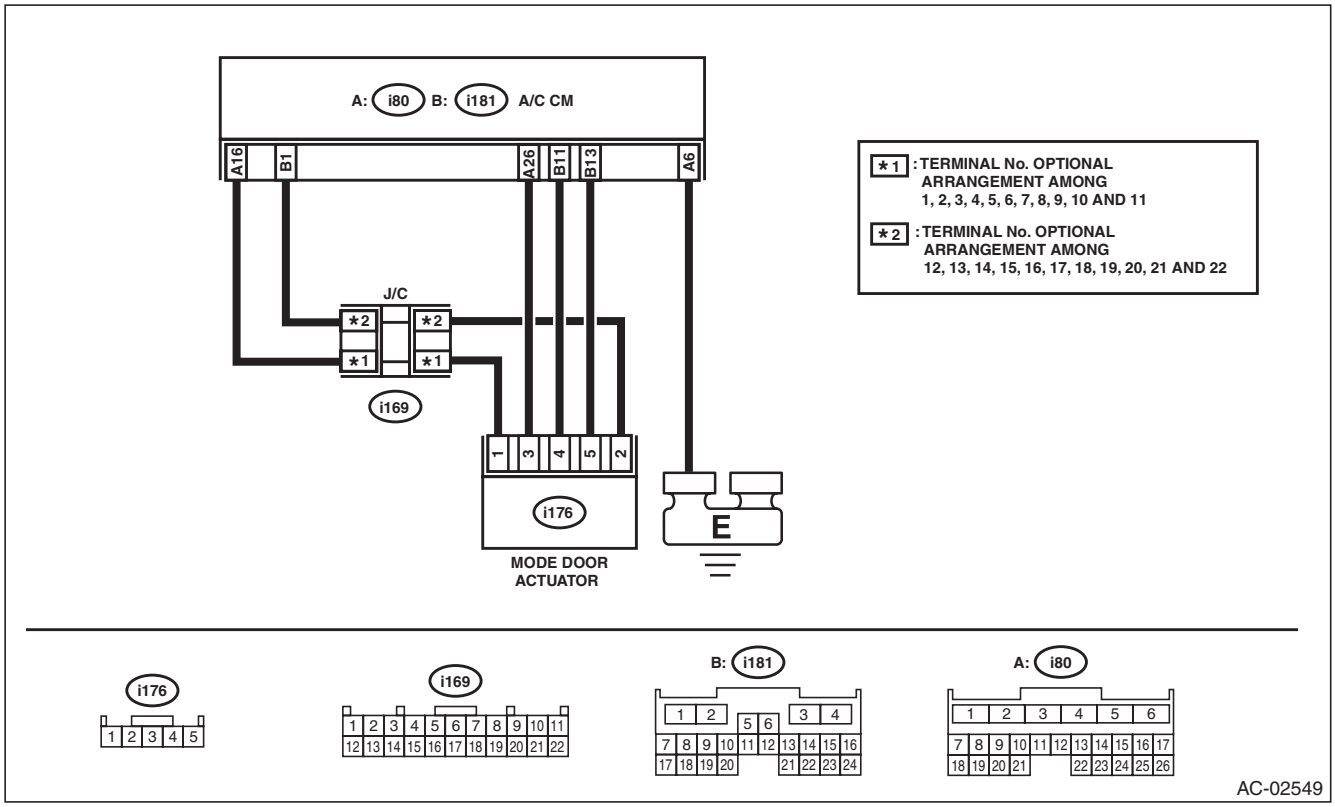

Step		Check	Yes	No
1	**CHECK CONNECTOR.** 1) Check the condition of connector connection. 2) Read the DTC using Subaru Select Monitor.	Is B1622 displayed?	Go to step **2**.	Repair the poor contact of connector.
2	**CHECK CURRENT DATA.** Using the Subaru Select Monitor, change the setting of “Mode Door Actuator Position Target” from the A/C diagnosis and perform the active test.	Did the actuator move to the specified target opening angle?	Mode door actuator circuit is normal.	Go to step **3**.
3	**CHECK HARNESS.** 1) Turn the ignition switch to ON. 2) Using the tester, measure the voltage between terminals. ***Connector & terminal*** ***(i176) No. 1 (+) — No. 2 (–):***	Is the voltage 4.5 — 5.0 V?	Go to step **4**.	Repair or replace the open, short circuit of the harness.

GETtheMANUALS.org

Step		Check	Yes	No
4	**CHECK HARNESS.** 1) Disconnect the connector from A/C CM. 2) Using a tester, check continuity between terminals. ***Connector & terminal*** ***(i176) No. 3 — (i80) No. 26:*** ***(i176) No. 1 — (i80) No. 16:*** ***(i176) No. 2 — (i181) No. 1:*** ***(i176) No. 4 — (i181) No. 11:*** ***(i176) No. 5 — (i181) No. 13:***	Is there continuity?	Go to step **5**.	Repair or replace the open circuit of harness.
5	**CHECK MODE DOOR ACTUATOR.** Check the mode door actuator parts. <Ref. to AC-93, INSPECTION, Mode Door Actuator.>	Is the mode door actuator OK?	Replace the A/C CM. <Ref. to AC-54, REMOVAL, Control Unit.>	Replace the mode door actuator. <Ref. to AC-92, REMOVAL, Mode Door Actuator.>

GETtheMANUALS.org

R: DTC U0028 HEATER CONTROL PANEL COMMUNICATION ERROR

DTC DETECTING CONDITION:

UART communication failure

TROUBLE SYMPTOM:

- Unable to operate A/C.
- DTC “U0028” Heater control panel communication failure was detected.
- DTC “53” Heater control panel communication failure was detected.

WIRING DIAGRAM:

- Auto A/C

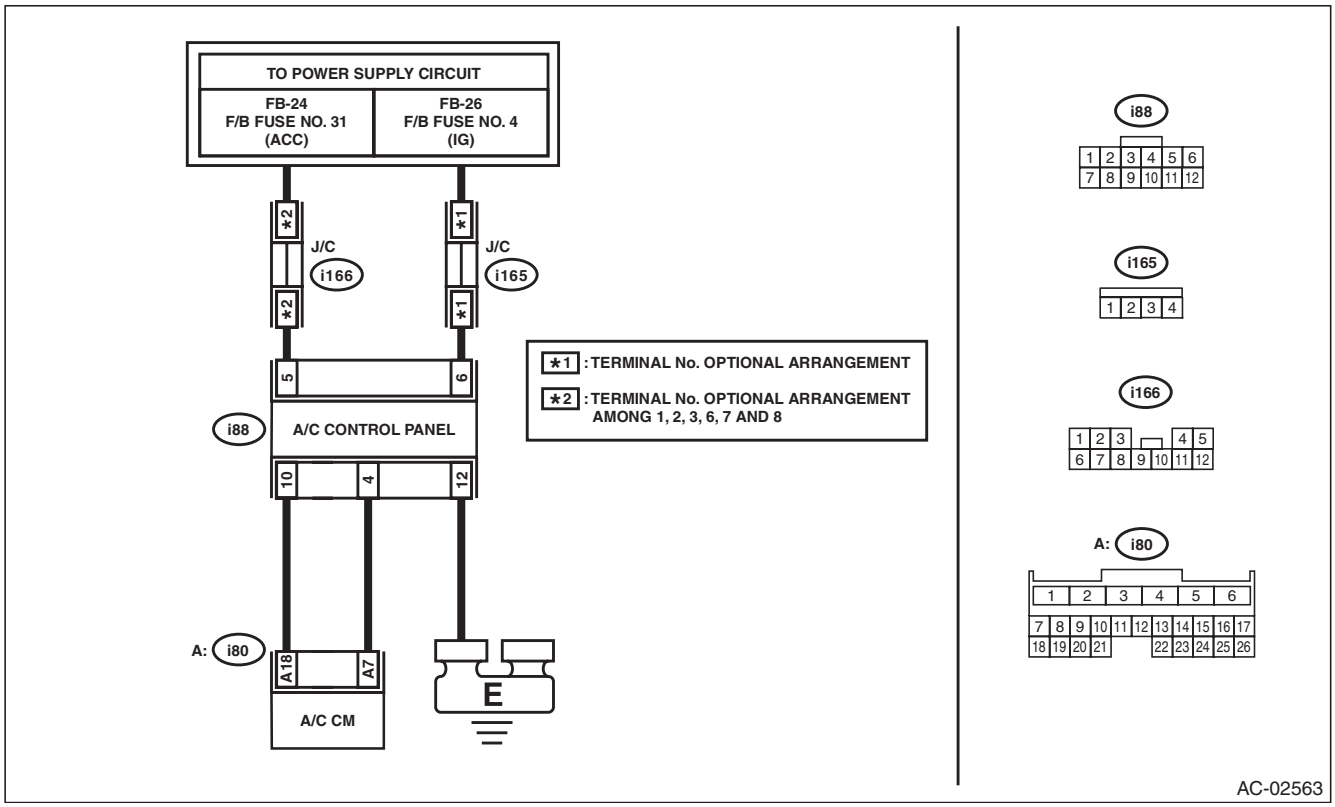

GETthemANUALS.org

- Manual A/C

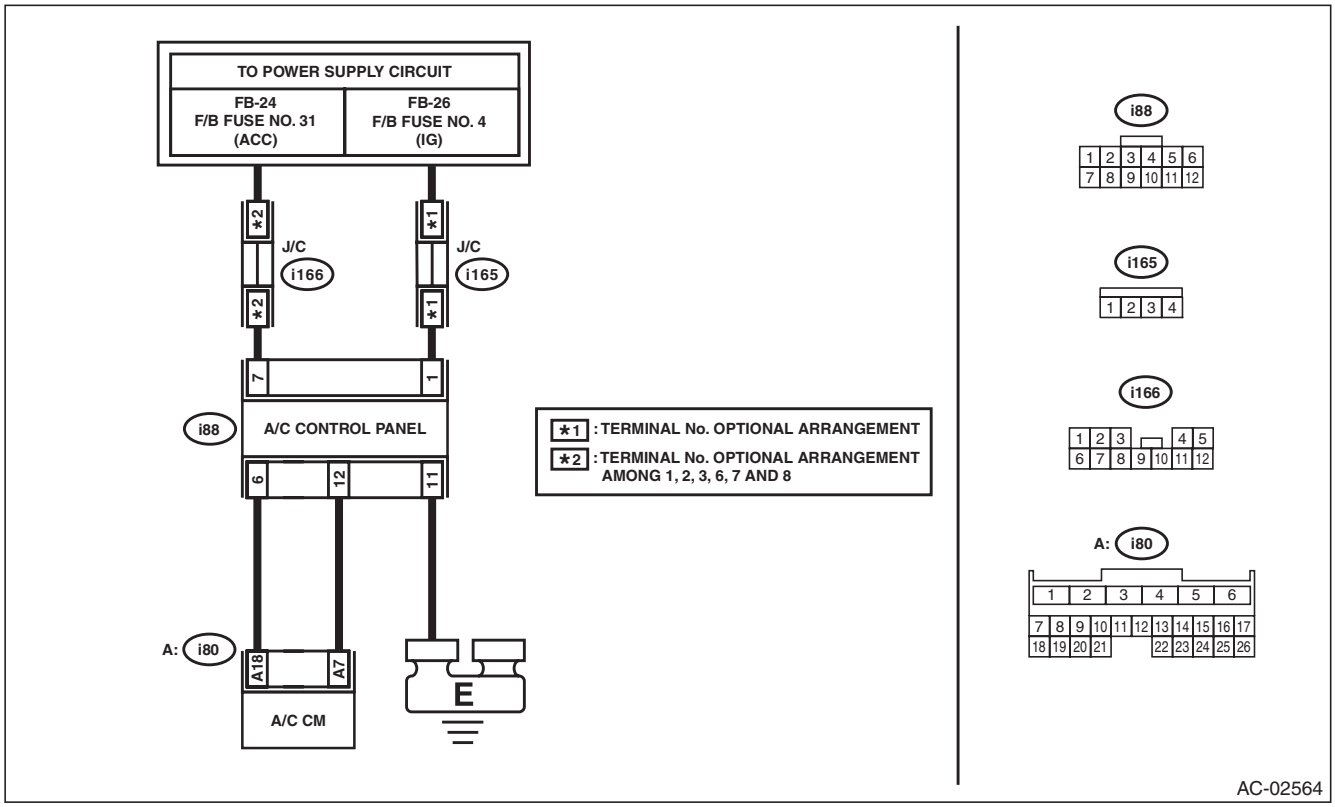

Step		Check	Yes	No
1	**CHECK CONNECTOR.** Check the power supply circuit connectors for poor contact.	Is there poor contact?	Repair the connector.	Go to step **2**.
2	**CHECK FUSE.** 1) Turn the ignition switch to OFF. 2) Remove the fuse No. 4 and No. 31 from the main fuse box or fuse & relay box. 3) Check the condition of fuse.	Is the fuse blown out?	Replace the fuse.	Go to step **3**.
3	**CHECK A/C CONTROL PANEL POWER CIRCUIT.** 1) Remove the A/C control panel. 2) Disconnect the A/C control panel connector. 3) Measure the voltage between A/C control panel connector terminal and chassis ground after turning the ignition switch to ON. ***Connector & terminal*** ***Auto A/C*** ***(i88) No. 5 (+) — Chassis ground (–):*** ***(i88) No. 6 (+) — Chassis ground (–):*** ***Manual A/C*** ***(i88) No. 1 (+) — Chassis ground (–):*** ***(i88) No. 7 (+) — Chassis ground (–):***	Is the voltage 10 V or more?	Go to step **4**.	Check for open or short circuit in the harness between A/C control panel and fuse.

GETtheMANUALS.org

	Step	Check	Yes	No
4	**CHECK A/C CONTROL PANEL GROUND CIRCUIT.** Measure the resistance of harness between A/C control panel and chassis ground after turning the ignition switch to OFF. ***Connector & terminal*** ***Auto A/C*** ***(i88) No. 12 — Chassis ground:*** ***Manual A/C*** ***(i88) No. 11 — Chassis ground:***	Is the resistance less than 10 Ω?	Go to step **5**.	Repair the harness for ground line.
5	**CHECK COMMUNICATION CIRCUIT HARNESS.** 1) Disconnect the connector from A/C control panel and A/C CM. 2) Using a tester, check for continuity between the harness terminals. ***Connector & terminal*** ***Auto A/C*** ***(i80) No. 18 — (i88) No. 10:*** ***(i80) No. 7 — (i88) No. 4:*** ***Manual A/C*** ***(i80) No. 18 — (i88) No. 6:*** ***(i80) No. 7 — (i88) No. 12:***	Is there continuity?	Go to step **6**.	Repair or replace the open circuit of harness.
6	**CHECK HARNESS.** Using a tester, check continuity between terminals. ***Connector & terminal*** ***(i80) No. 18 — No. 7:*** ***(i80) No. 18 — Chassis ground:*** ***(i80) No. 7 — Chassis ground:***	Is there continuity?	Repair or replace the short circuit of the harness.	Replace the A/C control panel. <Ref. to AC-46, REMOVAL, Control Panel.>

GETtheMANUALS.org

S: DTC U0001 CAN COMMUNICATION BUS OFF

DTC DETECTING CONDITION:

- Data to be received via CAN communication do not arrive.
- A/C cooperation control does not operate.

TROUBLE SYMPTOM:

A/C does not operate fully automatically.

Step		Check	Yes	No
1	**CHECK DTC.** Read the DTC of the CAN system using the Subaru Select Monitor.	Is a DTC of the CAN system detected?	Perform the diagnosis according to DTC.	Go to step **2**.
2	**CHECK A/C CM.** 1) Replace with a normally operating A/C CM. 2) Read the DTC using Subaru Select Monitor.	Is U0001 detected?	Go to step **3**.	Replace the A/C CM. <Ref. to AC-54, REMOVAL, Control Unit.>
3	**CHECK CAN COMMUNICATION CIRCUIT.** Check the CAN communication circuit. <Ref. to LAN(diag)-14, LIST, CAN Communication Circuit Check.>	Is the CAN communication circuit normal?	It is possible that temporary poor communication occurs. Clear the memory.	Repair or replace the CAN communication circuit.

T: DTC U0002 CAN COMMUNICATION ERROR

DTC DETECTING CONDITION:

- Data to be received via CAN communication do not arrive.
- A/C cooperation control does not operate.

TROUBLE SYMPTOM:

A/C does not operate fully automatically.

Step		Check	Yes	No
1	**CHECK CURRENT DATA.** Read the DTC of the CAN system using the Subaru Select Monitor.	Is a DTC of the CAN system detected?	Perform the diagnosis according to DTC.	Go to step **2**.
2	**CHECK A/C CM.** 1) Replace with a normally operating A/C CM. 2) Read the DTC using Subaru Select Monitor.	Is U0002 detected?	Go to step **3**.	Replace the A/C CM. <Ref. to AC-54, REMOVAL, Control Unit.>
3	**CHECK CAN COMMUNICATION CIRCUIT.** Check the CAN communication circuit. <Ref. to LAN(diag)-14, LIST, CAN Communication Circuit Check.>	Is the CAN communication circuit normal?	It is possible that temporary poor communication occurs. Clear the memory.	Repair or replace the CAN communication circuit.

GETtheMANUALS.org

U: DTC B1641 REFRIGERANT FLOW SENSOR CIRCUIT SHORT

DTC DETECTING CONDITION:

- The voltage of the sensor signal line decreased to 0.3 V or less.
- Short-circuit in flow sensor circuit

TROUBLE SYMPTOM:

- A/C does not function because refrigerant flow amount cannot be measured.
- DTC “B1641” Short-circuit in refrigerant flow sensor was detected.
- DTC “-43” Short-circuit in refrigerant flow sensor was detected.

WIRING DIAGRAM:

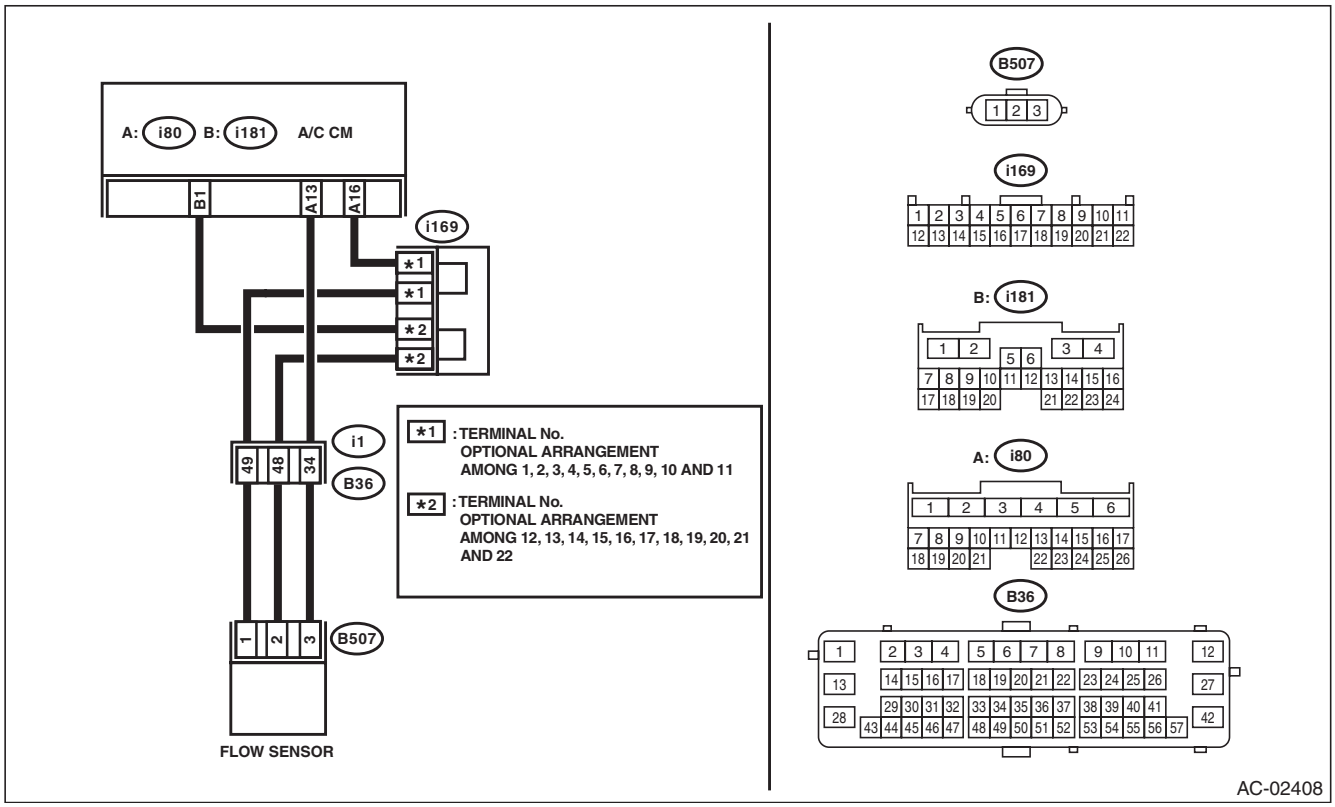

Step		Check	Yes	No
1	**CHECK CONNECTOR.** 1) Check the connecting condition of connector. 2) Read the DTC using Subaru Select Monitor.	Is B1641 displayed?	Go to step **2**.	Repair the poor connection of the connector.
2	**CHECK FLOW SENSOR.** 1) Disconnect the refrigerant flow sensor connector. 2) Read the DTC using Subaru Select Monitor.	Is B1642 displayed?	Replace the compressor. <Ref. to AC-55, REMOVAL, Compressor.>	Go to step **3**.
3	**CHECK HARNESS.** 1) Disconnect the A/C CM connector. 2) Using a tester, check continuity between terminals. ***Connector & terminal*** ***(B507) No. 2 — (B507) No. 3:*** ***(B507) No. 3 — Chassis ground:***	Is there continuity?	Repair or replace the short circuit of the harness.	Replace the A/C CM. <Ref. to AC-54, REMOVAL, Control Unit.>

GETthemANUALS.org

V: DTC B1642 REFRIGERANT FLOW SENSOR CIRCUIT OPEN

DTC DETECTING CONDITION:

- The voltage of the sensor signal line increased to 4.7 V or more.
- Short-circuit in flow sensor circuit

TROUBLE SYMPTOM:

- A/C does not function because refrigerant flow amount cannot be measured.
- DTC “B1642” Open circuit in refrigerant flow sensor was detected.
- DTC “43” Open circuit in refrigerant flow sensor was detected.

WIRING DIAGRAM:

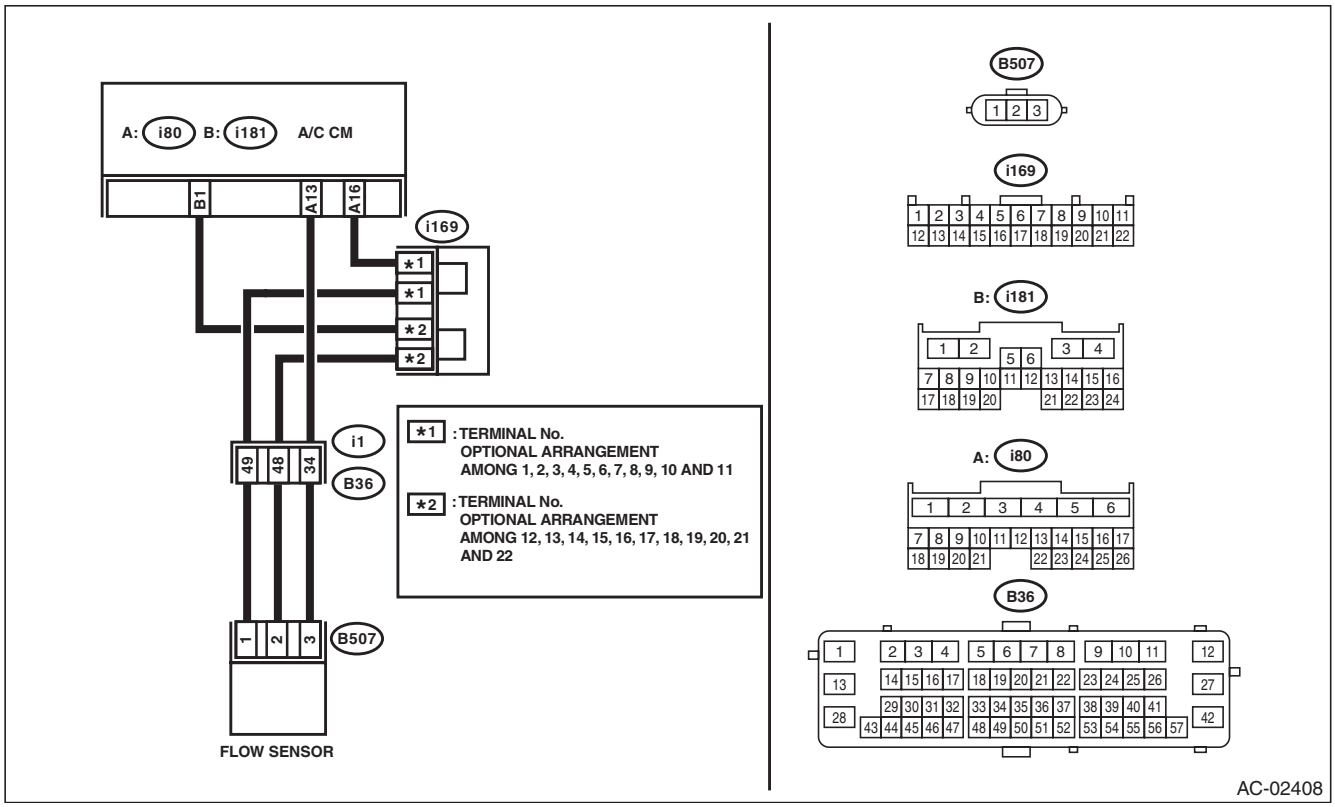

	Step	Check	Yes	No
1	**CHECK CONNECTOR.** 1) Check the connecting condition of connector. 2) Read the DTC using Subaru Select Monitor.	Is B1642 displayed?	Go to step **2**.	Repair the poor connection of the connector.
2	**CHECK FLOW SENSOR.** 1) Disconnect the flow sensor connector. 2) Short No. 2 and No. 3 of the flow sensor connector (B507). 3) Read the DTC using Subaru Select Monitor.	Is B1641 displayed?	Replace the compressor. <Ref. to AC-55, REMOVAL, Compressor.>	Go to step **3**.
3	**CHECK HARNESS.** 1) Turn the ignition switch to ON. 2) Using the tester, measure the voltage between terminals. ***Connector & terminal*** ***(B507) No. 1 (+) — No. 2 (–):***	Is the voltage 4.5 — 5.0 V?	Go to step **4**.	Repair or replace the open circuit of harness.

GETthemANUALS.org

Step		Check	Yes	No
4	**CHECK HARNESS.** 1) Disconnect the A/C CM connector. 2) Using a tester, check continuity between terminals. ***Connector & terminal*** ***(B507) No. 3 — (i80) No. 13:*** ***(B507) No. 2 — (i181) No. 1:*** ***(B507) No. 1 — (i80) No. 16:***	Is there continuity?	Replace the A/C CM. <Ref. to AC-54, REMOVAL, Control Unit.>	Repair or replace the open circuit of harness.

GETtheMANUALS.org

W: DTC B1643 VARIABLE FLOW CHANGE SOLENOID DUTY CIRCUIT ABNORMAL

DTC DETECTING CONDITION:

Open or short circuit in variable solenoid valve

TROUBLE SYMPTOM:

- Refrigerant pressure cannot be changed.
- DTC “B1643” Variable flow change solenoid duty circuit failure was detected.
- DTC “46” Variable flow change solenoid duty circuit failure was detected.

WIRING DIAGRAM:

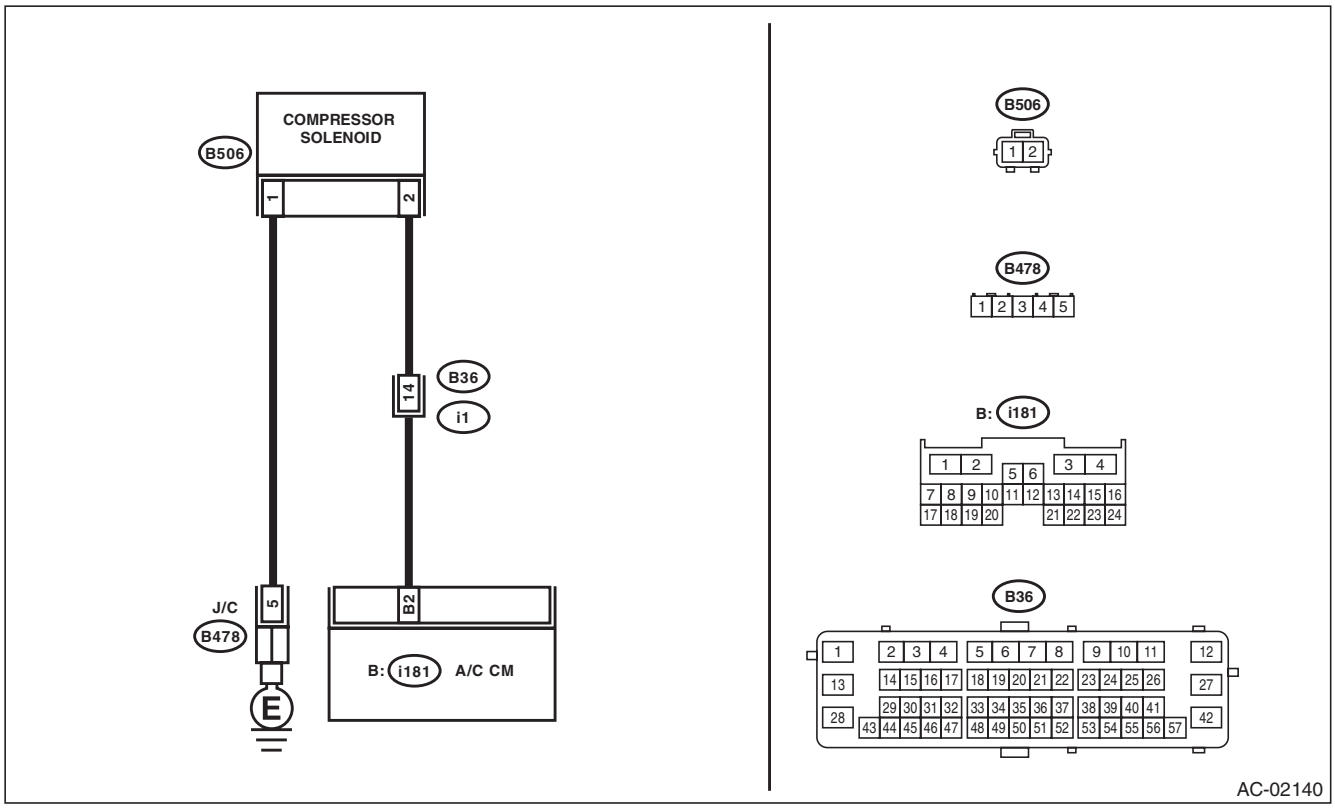

Step		Check	Yes	No
1	**CHECK CONNECTOR.** Check the connecting condition of connectors (B506), (B36), (i181) and (B479).	Is there poor contact?	Repair the poor contact of connector.	Go to step **2**.
2	**ACTIVE TEST.** 1) Attach the manifold gauge. 2) Using the Subaru Select Monitor, change the setting of “Variable Solenoid Output Duty” from the A/C diagnosis and perform the active test.	Did the actuator operate to the specified target, and the pressure change?	Variable flow change solenoid circuit is normal.	Go to step **3**.
3	**CHECK VARIABLE FLOW CHANGE SOLENOID.** 1) Disconnect the variable flow change solenoid connector. 2) Using a tester, measure the resistance between terminals of the solenoid. ***Connector & terminal*** ***(B506) No. 1 — No. 2:***	Is the resistance 10 — 12 Ω?	Go to step **4**.	Replace the compressor. <Ref. to AC-55, REMOVAL, Compressor.>

GETthemANUALS.org

Step		Check	Yes	No
4	**CHECK HARNESS.** 1) Disconnect the A/C CM connector. 2) Using a tester, check for continuity between the harness terminals. ***Connector & terminal*** ***(B506) No. 2 — (i181) No. 2:*** ***(B506) No. 1 — Chassis ground:***	Is there continuity?	Go to step **5**.	Repair or replace the open circuit of harness.
5	**CHECK HARNESS.** Using a tester, check for continuity between the harness terminals. ***Connector & terminal*** ***(B506) No. 2 — Chassis ground:*** ***(B506) No. 1 — (B506) No. 2:***	Is there continuity?	Repair or replace the short circuit of the harness.	Replace the A/C CM. <Ref. to AC-54, REMOVAL, Control Unit.>

GETtheMANUALS.org

X: DTC B1644 REFRIGERANT NOT SEALED DRIVE ERROR

DTC DETECTING CONDITION:

- Compressor was operated while refrigerant was low.
- Compressor was operated while refrigerant pressure was extremely low.
- Judgment is made only when the delivery mode fuse is installed.

TROUBLE SYMPTOM:

A/C does not operate.

WIRING DIAGRAM:

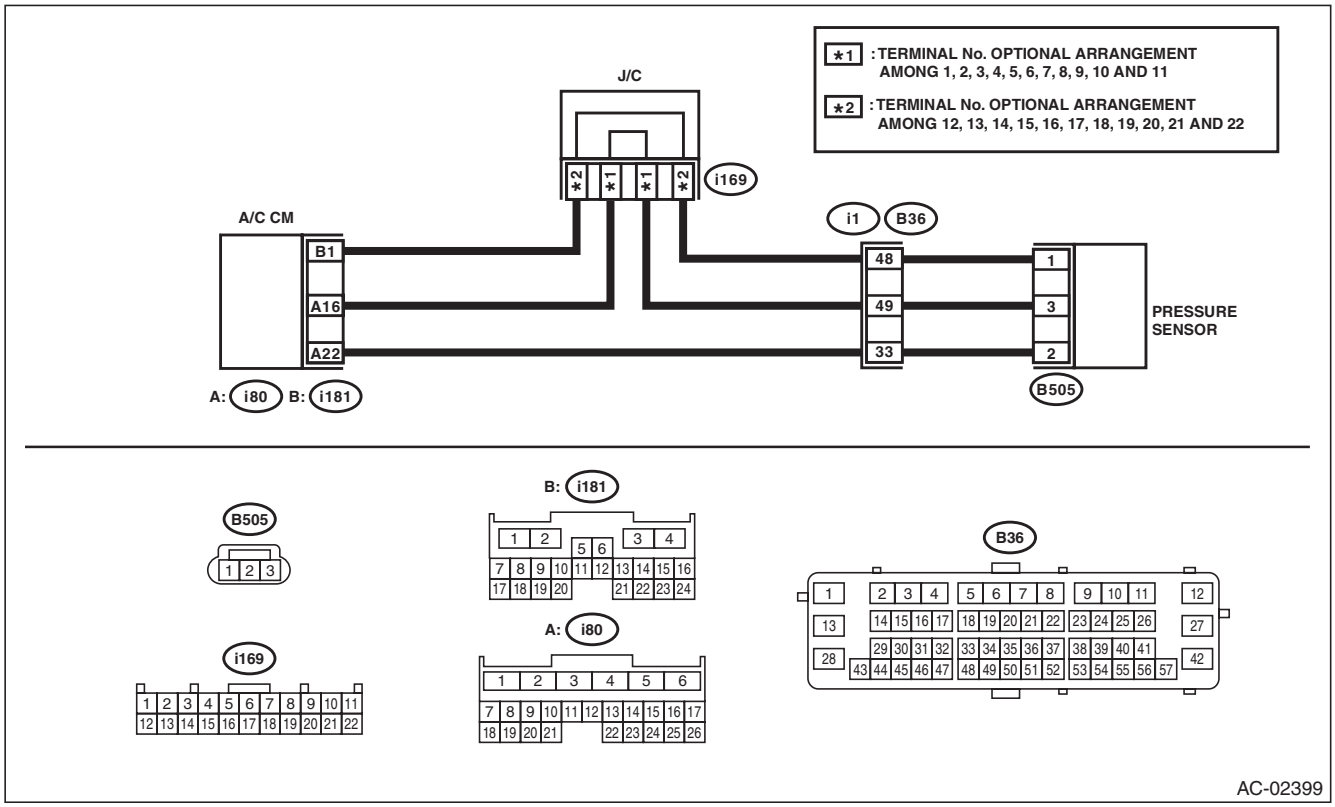

Step		Check	Yes	No
1	**CHECK AMOUNT OF REFRIGERANT.** Check the refrigerant pressure and filling amount. <Ref. to AC-20, PROCEDURE, Refrigerant Pressure with Manifold Gauge Set.>	Is the filling amount a standard value?	Check the refrigerant pressure sensor or refrigerant flow sensor for defect.	Replace the compressor. <Ref. to AC-55, REMOVAL, Compressor.>

GETtheMANUALS.org

GETtheMANUALS.org

AIRBAG SYSTEM

AB

		Page
1.	General Description	2
2.	Airbag Connector	18
3.	Inspection Locations after a Collision	29
4.	Driver's Airbag Module	35
5.	Passenger's Airbag Module	37
6.	Side Airbag Module	55
7.	Curtain Airbag Module	65
8.	Airbag Control Module	68
9.	Front Sub Sensor	71
10.	Front Door Impact Sensor	78
11.	Side Airbag Sensor	81
12.	Curtain Airbag Sensor	87
13.	Roll Connector	96

GETtheMANUALS.org

1. General Description

A: COMPONENT

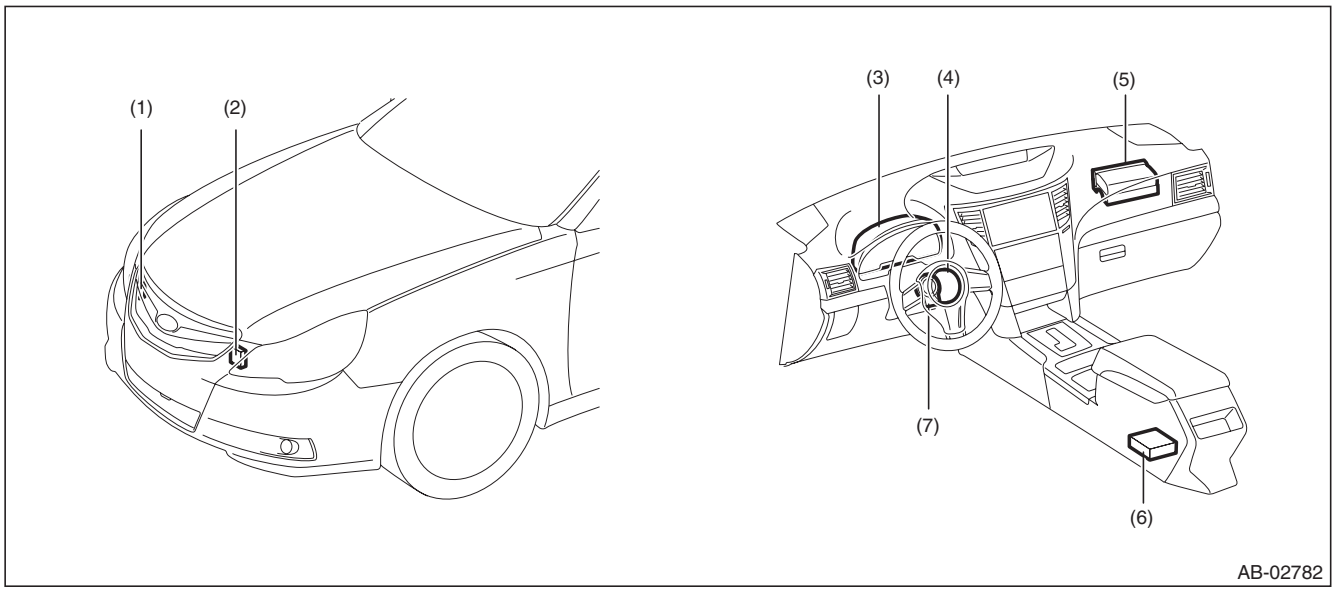

(1) Front sub sensor RH
(2) Front sub sensor LH
(3) Airbag warning light (in combination meter)
(4) Airbag module ASSY (driver)
(5) Airbag module ASSY (passenger)
(6) Airbag control module
(7) Steering roll connector

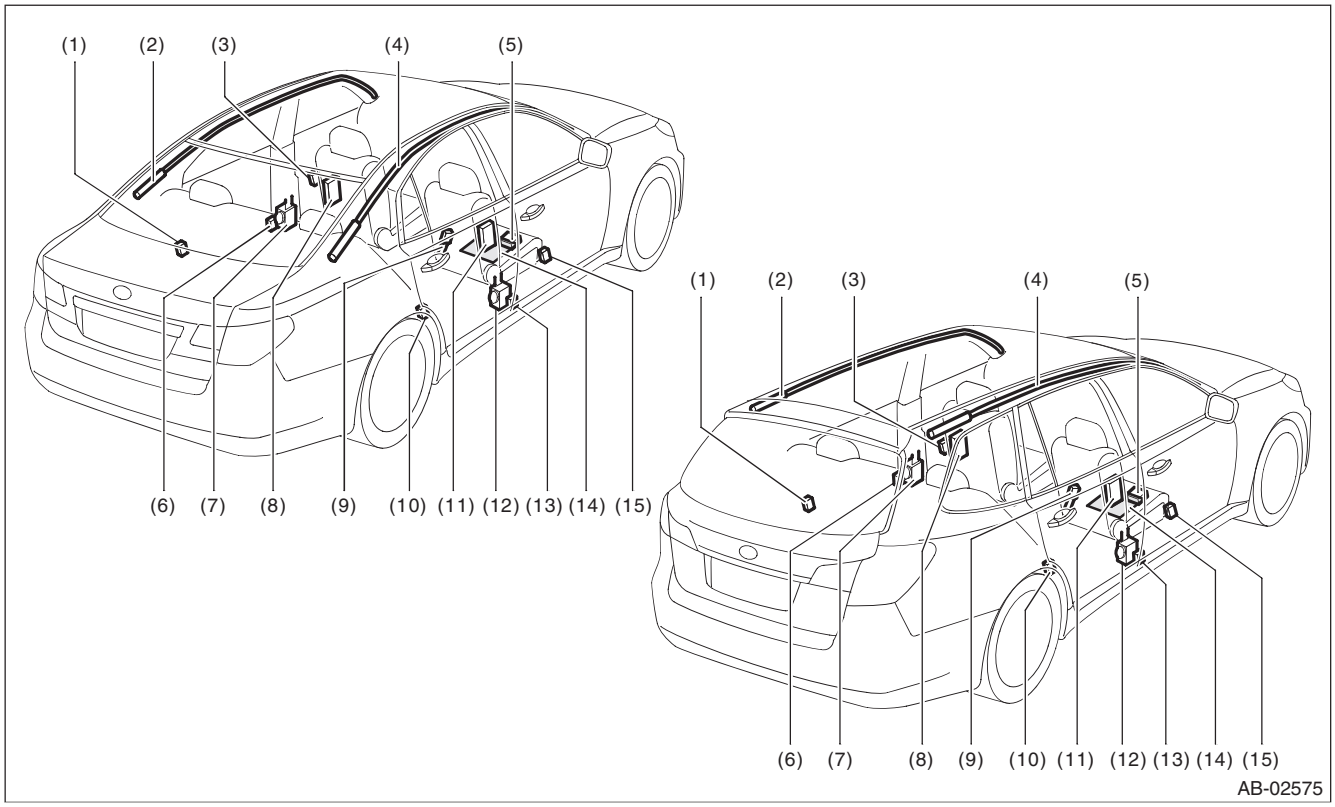

GETtheMANUALS.org

(1) Curtain airbag sensor LH
(2) Curtain airbag module LH
(3) Front door impact sensor LH
(4) Curtain airbag module RH
(5) Occupant detection control module
(6) Side airbag sensor LH
(7) Seat belt pretensioner LH
(8) Side airbag module LH
(9) Buckle switch RH
(10) Curtain airbag sensor RH
(11) Side airbag module RH
(12) Seat belt pretensioner RH
(13) Side airbag sensor RH
(14) Occupant detection sensor
(15) Front door impact sensor RH

1. DRIVER'S AIRBAG MODULE

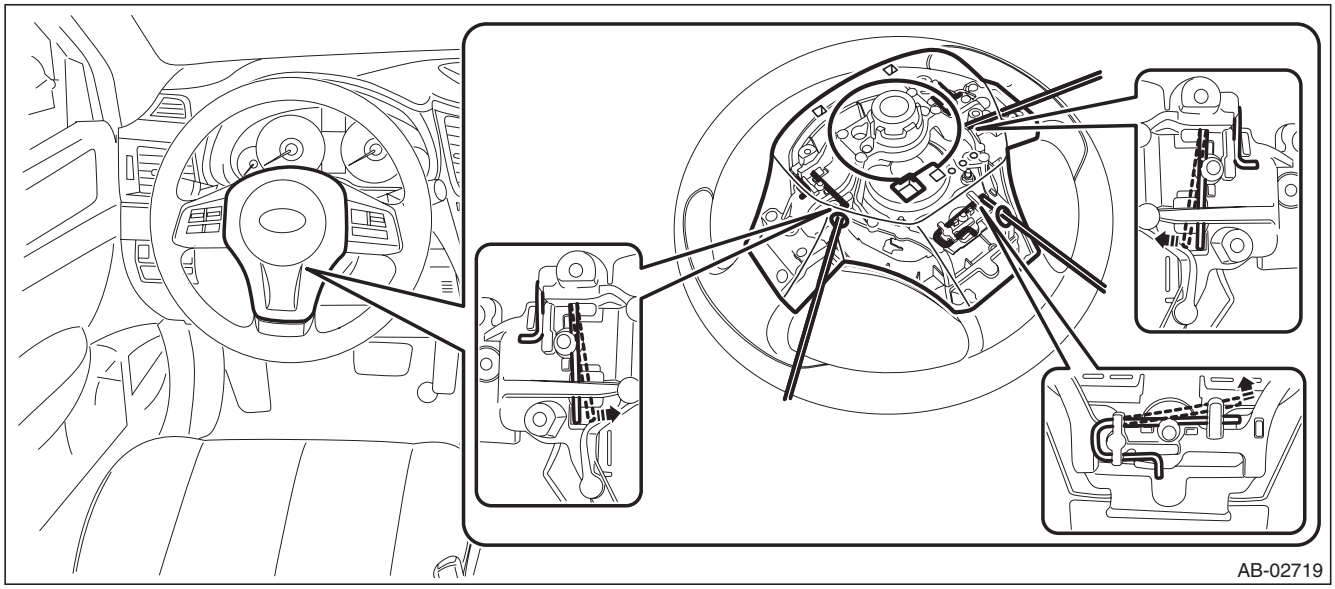

2. PASSENGER'S AIRBAG MODULE

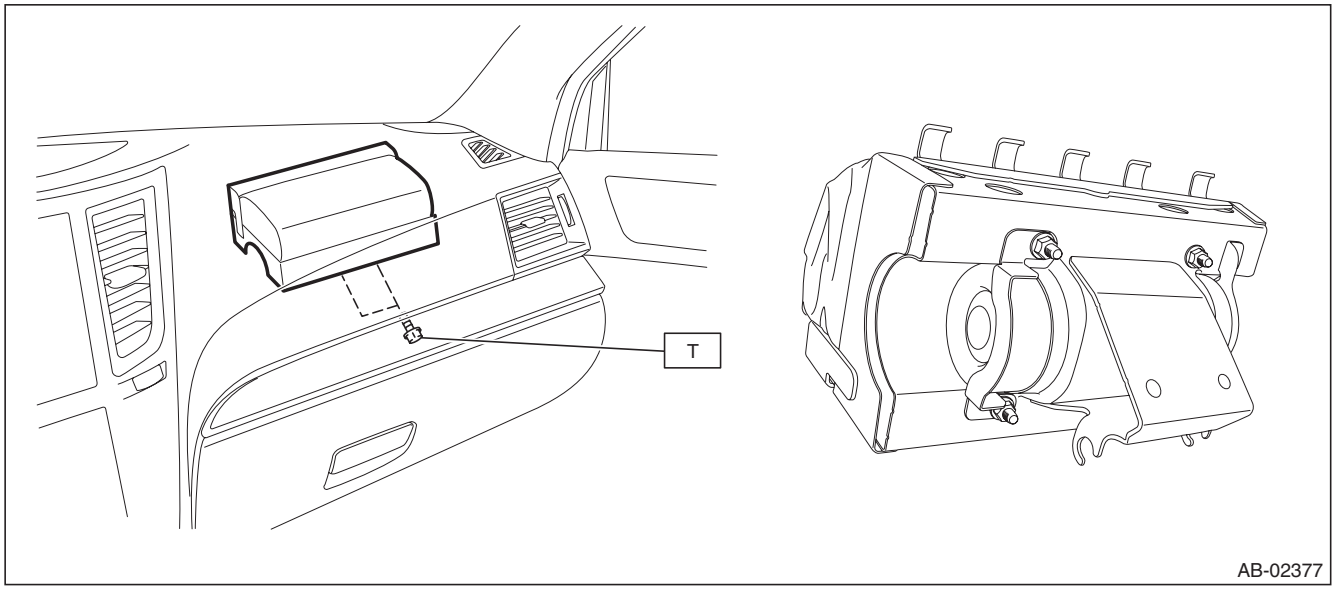

Tightening torque:
7.5 N·m (0.76 kgf-m, 5.5 ft-lb)

GETtheMANUALS.org

3. SIDE AIRBAG MODULE

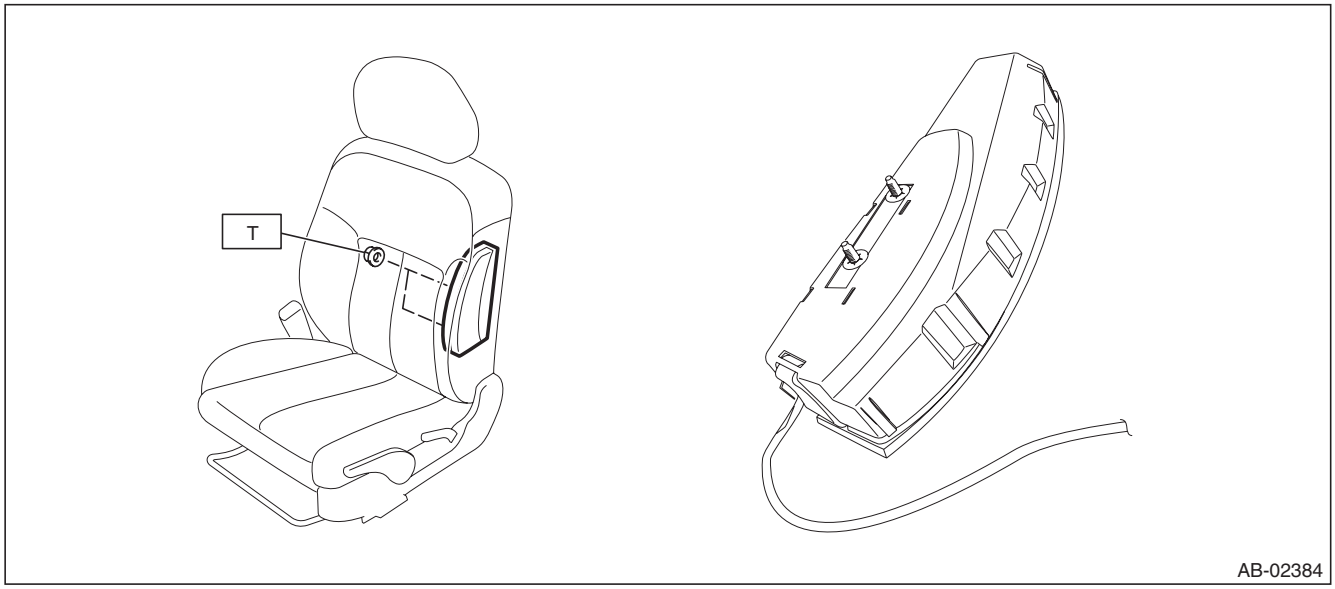

Tightening torque:
6 N·m (0.61 kgf-m, 4.4 ft-lb)

4. CURTAIN AIRBAG MODULE

- Sedan model

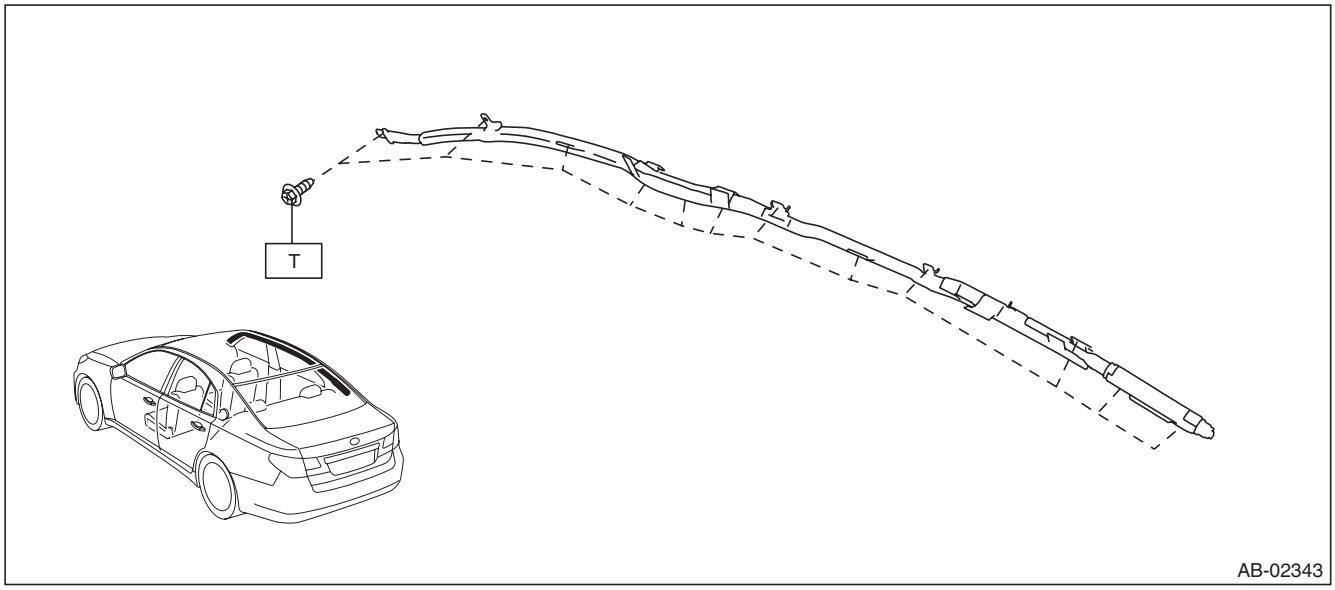

GETtheMANUALS.org

- OUTBACK model

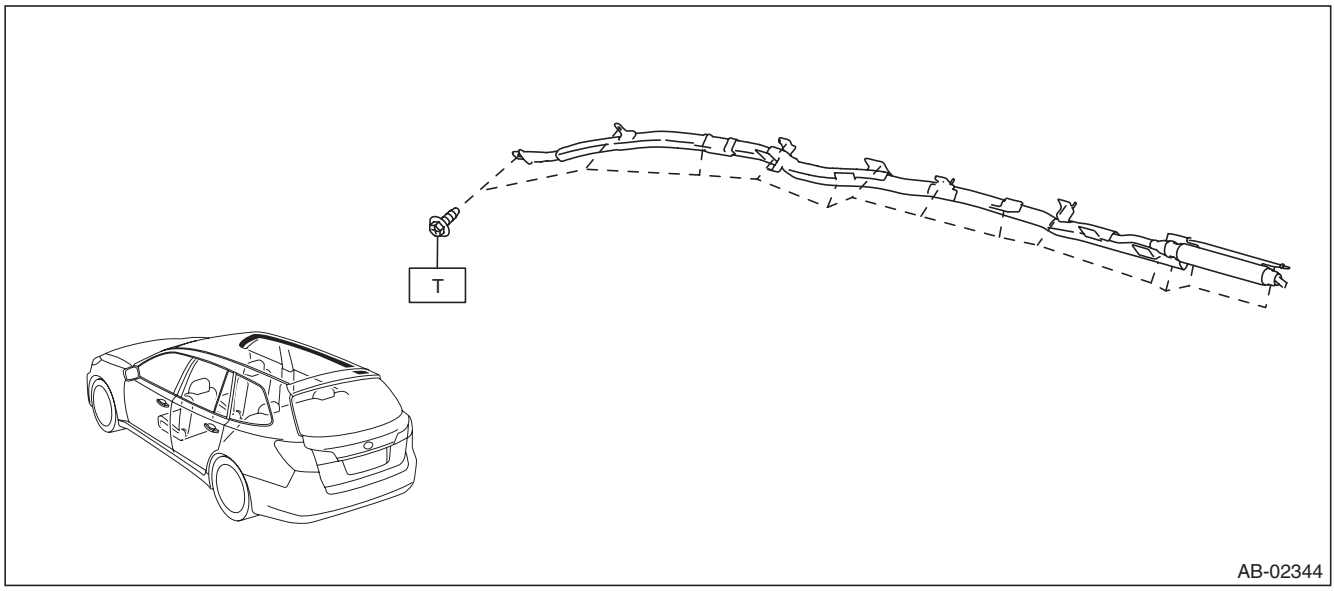

Tightening torque:
7.5 N·m (0.76 kgf-m, 5.5 ft-lb)

5. AIRBAG CONTROL MODULE

CAUTION:
Do not reuse mounting bolts and nuts.

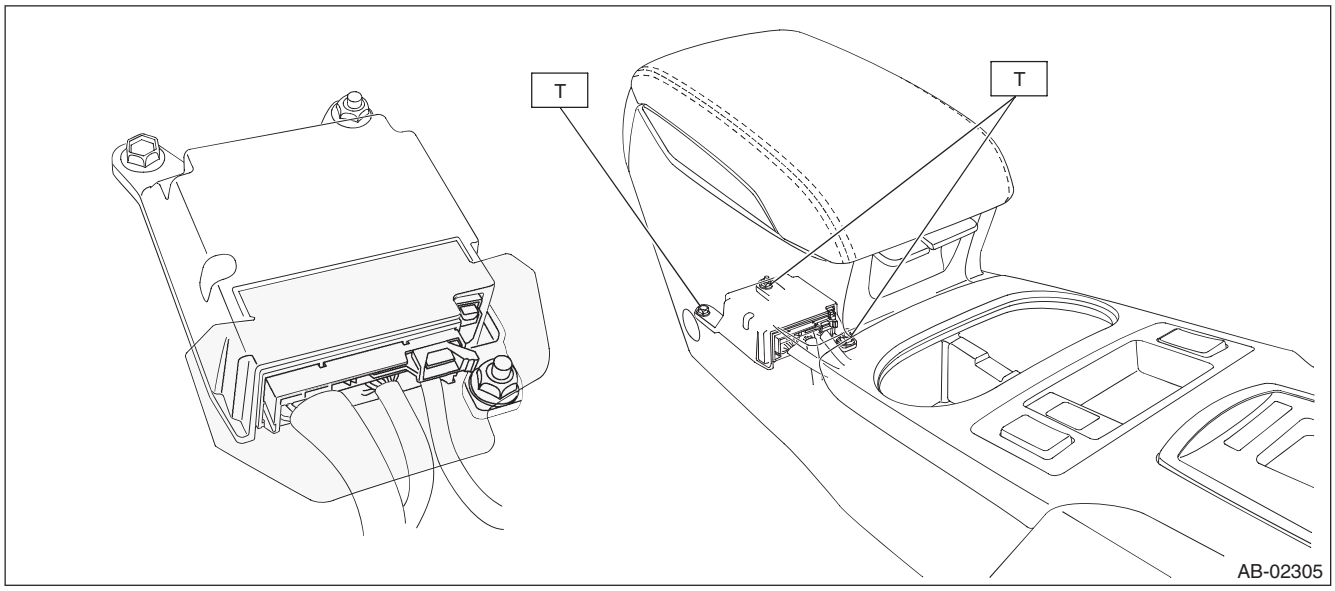

Tightening torque:
25 N·m (2.55 kgf-m, 18.4 ft-lb)

GETtheMANUALS.org

6. FRONT SUB SENSOR

CAUTION:
Do not reuse mounting bolts and nuts.

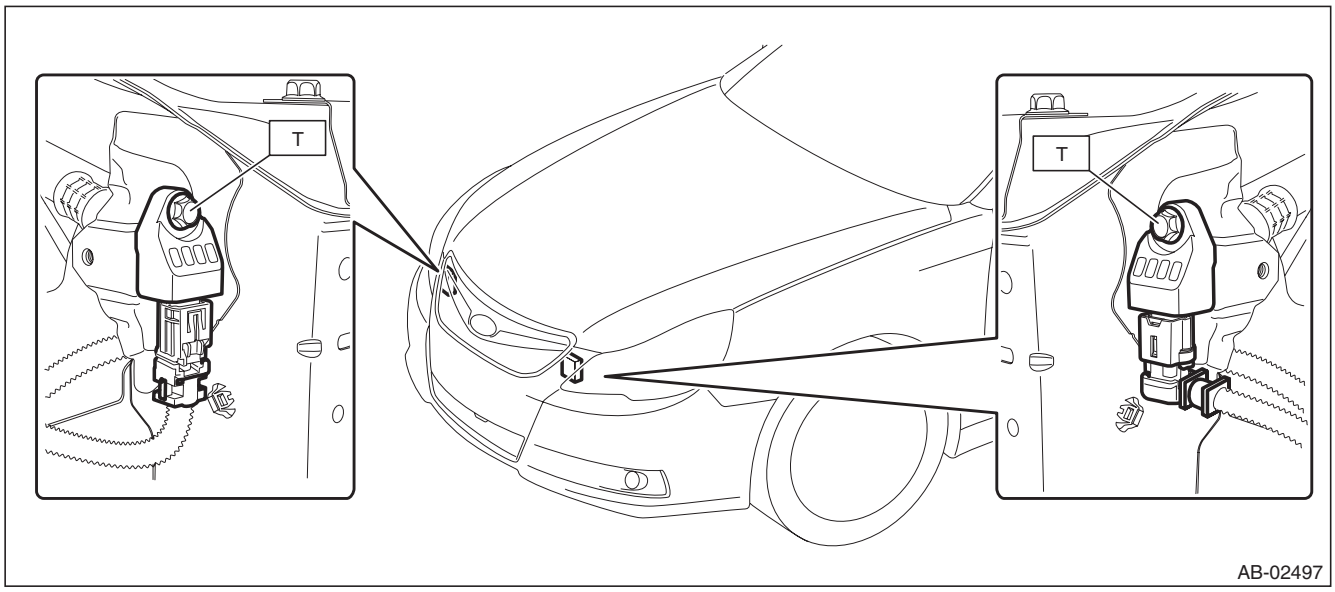

Tightening torque:
13 N·m (1.33 kgf-m, 9.6 ft-lb)

7. FRONT DOOR IMPACT SENSOR

CAUTION:
Do not reuse mounting bolts and nuts.

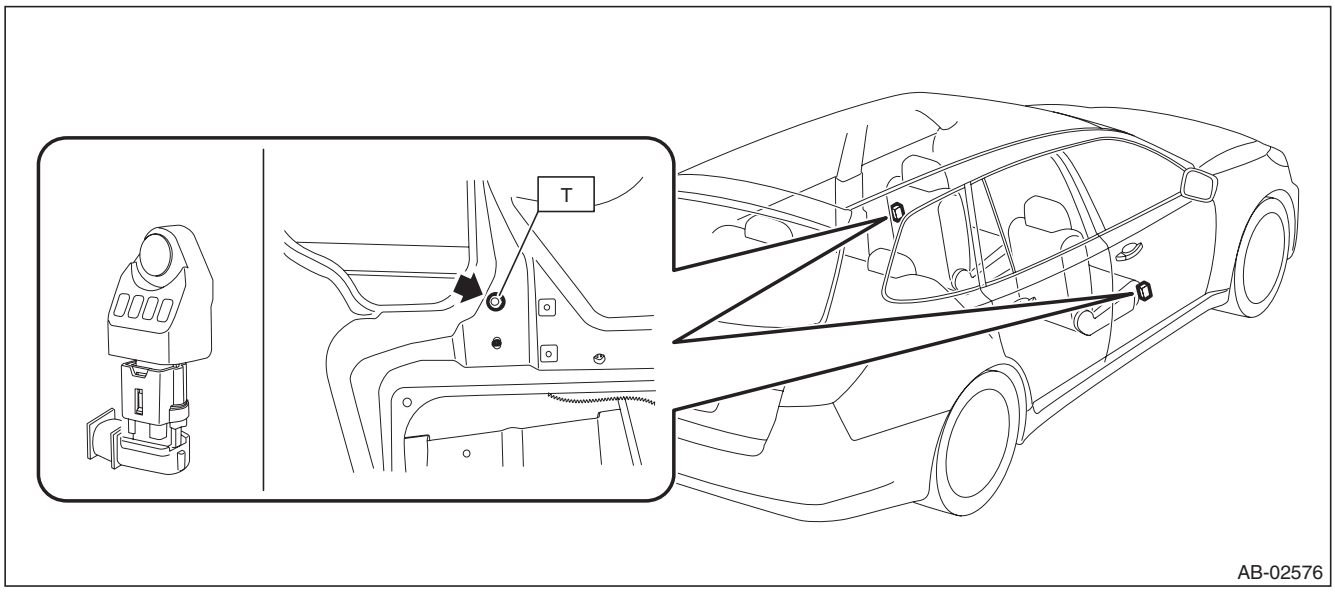

Tightening torque:
7.5 N·m (0.76 kgf-m, 5.5 ft-lb)

GETtheMANUALS.org

8. SIDE AIRBAG SENSOR

CAUTION:
Do not reuse mounting bolts and nuts.

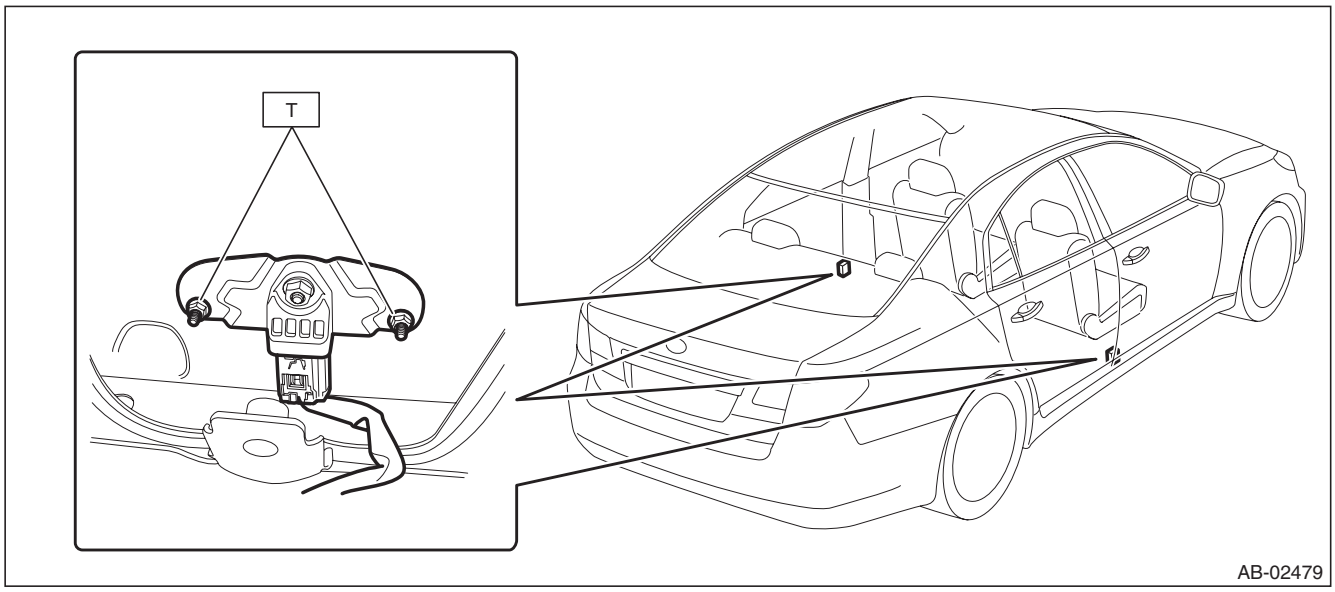

Tightening torque:
7.5 N·m (0.76 kgf-m, 5.5 ft-lb)

9. CURTAIN AIRBAG SENSOR

CAUTION:
Do not reuse mounting bolts and nuts.

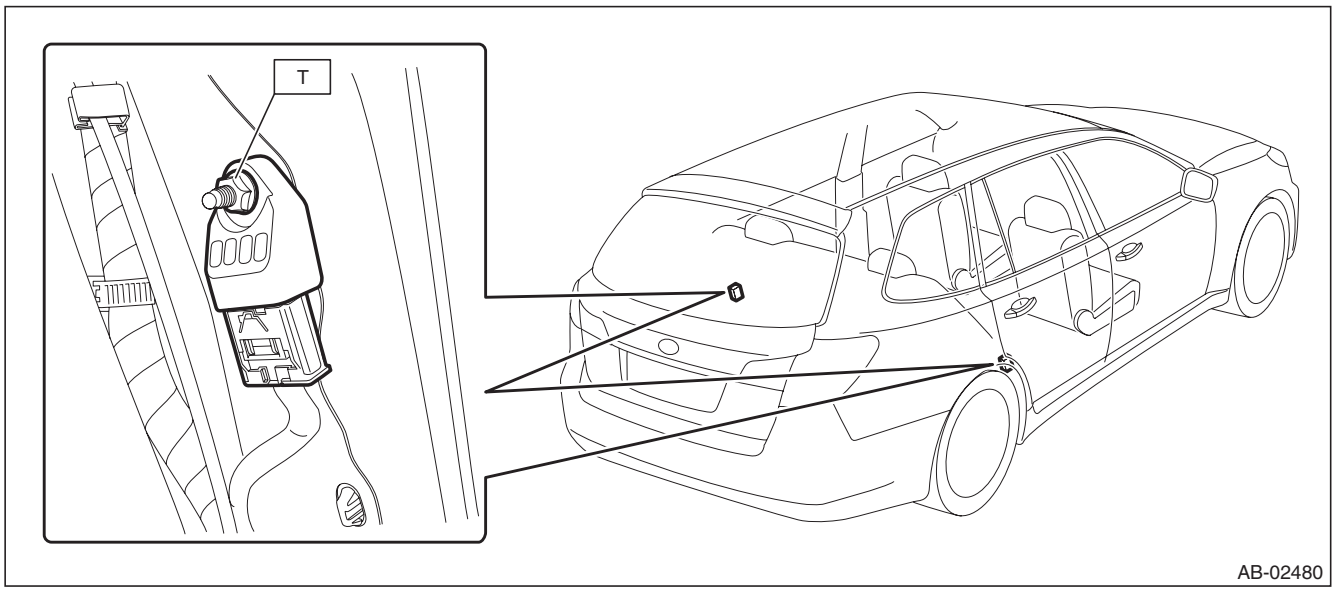

Tightening torque:
7.5 N·m (0.76 kgf-m, 5.5 ft-lb)

GETtheMANUALS.org

10.STEERING ROLL CONNECTOR

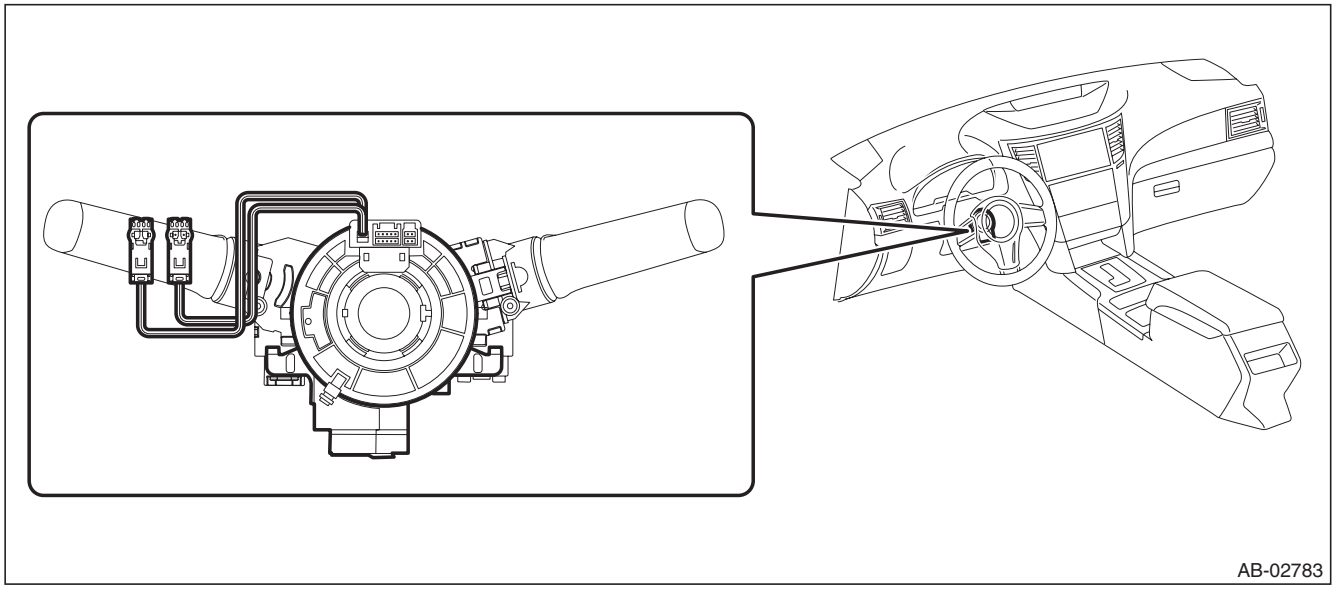

GETtheMANUALS.org

B: CAUTION

1. BEFORE STARTING ALL WORKS

• The airbag system is fitted with a backup power supply. After disconnecting the battery ground cable, the airbag may operate if you do not wait for 60 seconds or more before starting the service of airbag system.

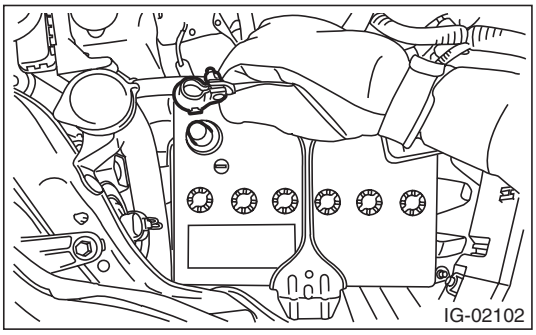

• When servicing a vehicle, be sure to turn the ignition switch to OFF, disconnect the ground cable from battery, and wait for 60 seconds or more before starting work.
• Once the airbag warning light lights up, immediately inspect or repair the vehicle. Otherwise, the airbag system may malfunction.
• Do not allow water or oil to come in contact with the connector terminals. Also, do not touch the connector terminals directly.

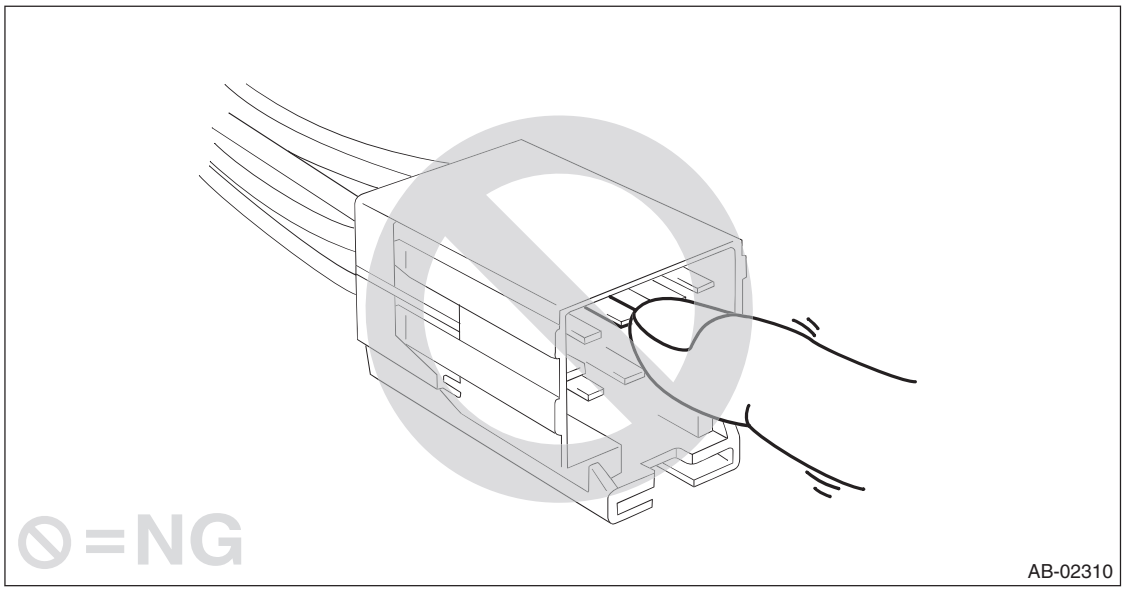

GETtheMANUALS.org

- If damage, open circuit or rust is found on airbag system wiring harness, do not repair the harness. Always replace the faulty harness with a new genuine part.

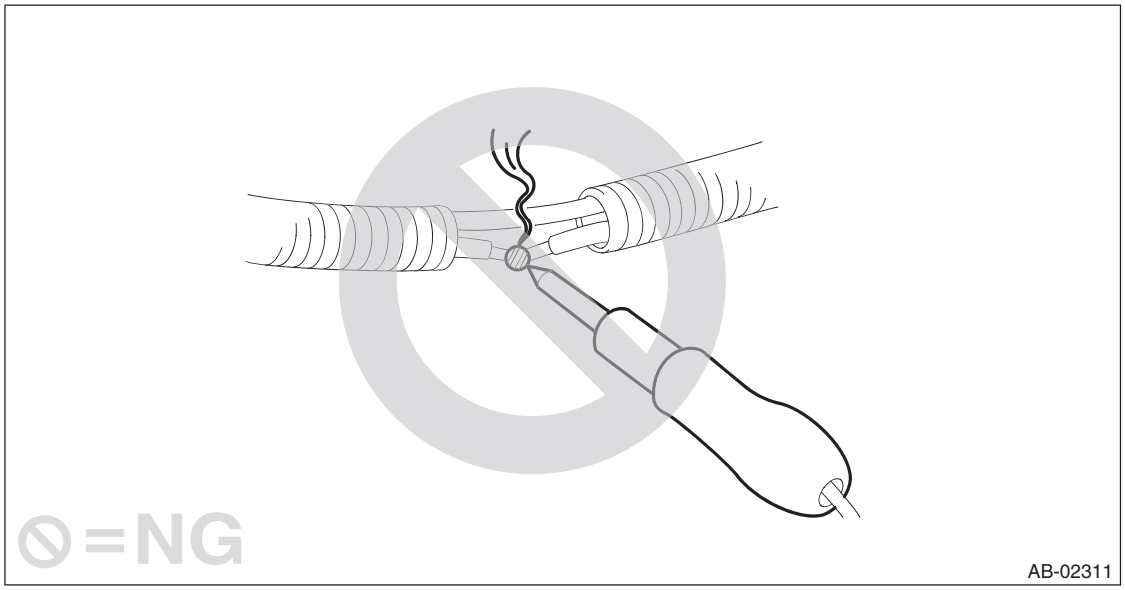

- When painting or performing sheet metal work on the front part of the vehicle, including the front wheel apron, front fender and radiator panel side, remove the front sub sensors and wiring harness of airbag system.
- When painting or performing sheet metal work on the side of the vehicle, including the side sill, center pillar and front and rear doors, remove the side airbag sensors, curtain airbag sensor, and wiring harness of the airbag system.

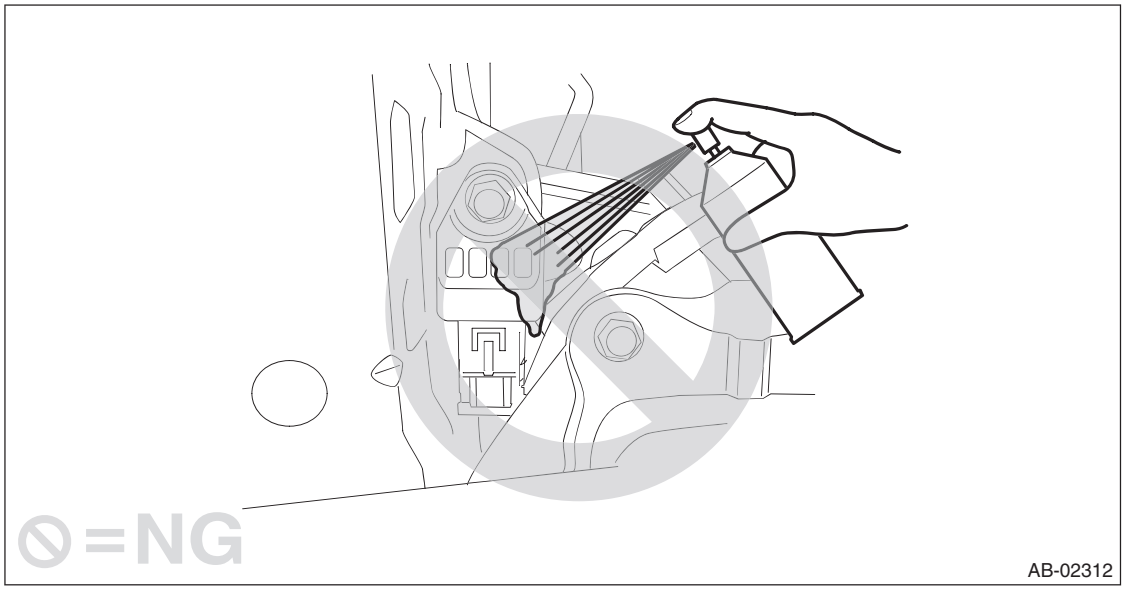

- When installing steering wheel and steering roll connector, be sure to adjust the steering roll connector.

GETtheMANUALS.org

2. BEFORE STARTING PARTS REPLACEMENT

• If airbag sensors, airbag module, airbag control module, pretensioners, or harnesses are deformed or damaged, replace with new parts.

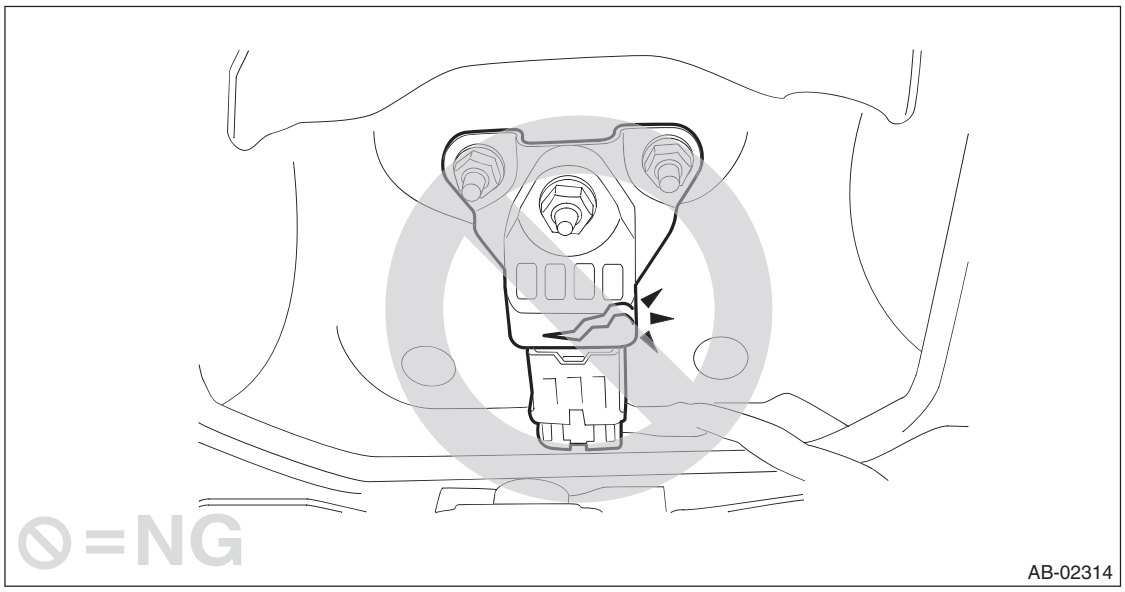

• Install the wiring harness securely with the specified clips to avoid interference or tangled with other parts.

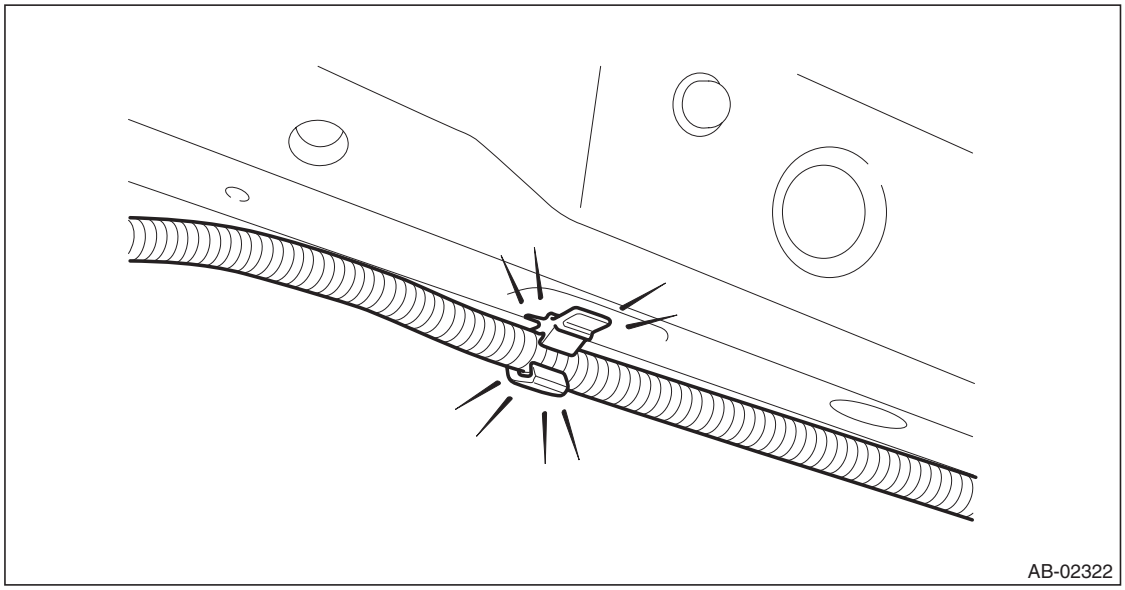

• Do not use the airbag or pretensioner parts from other vehicles. Always replace the defective parts with new parts.
• Never reuse any activated airbag module and pretensioner.
• Do not discard undeployed airbag or pretensioner.
• When airbag control module, front sub sensor, side airbag sensor and curtain airbag sensor are removed, do not reuse the bolts and nuts of them. Always use new bolts and nuts for them.
• When installing steering wheel and steering roll connector, be sure to adjust the steering roll connector.

GETtheMANUALS.org

- After removal of each parts for airbag system, keep them with the pad facing upward on a dry, clean and flat surface without heat, light sources, moisture and dust.

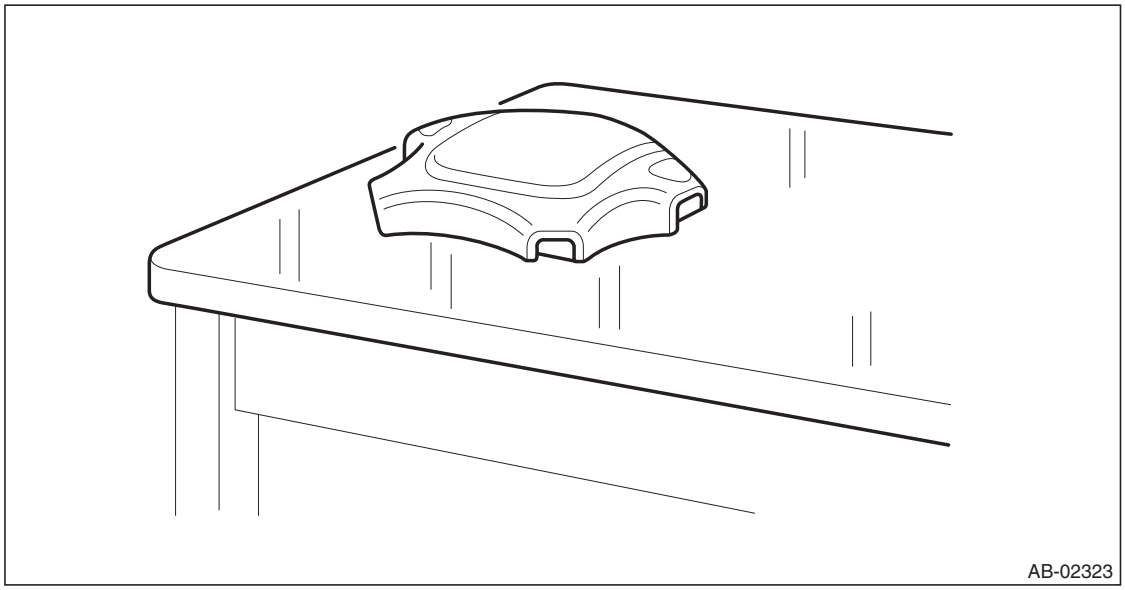

- Do not drop any airbag component, store them under high temperature of 85°C (185°F) or more, or let water, oil or grease get on them; the internal parts may be damaged or the reliability may be greatly lowered.

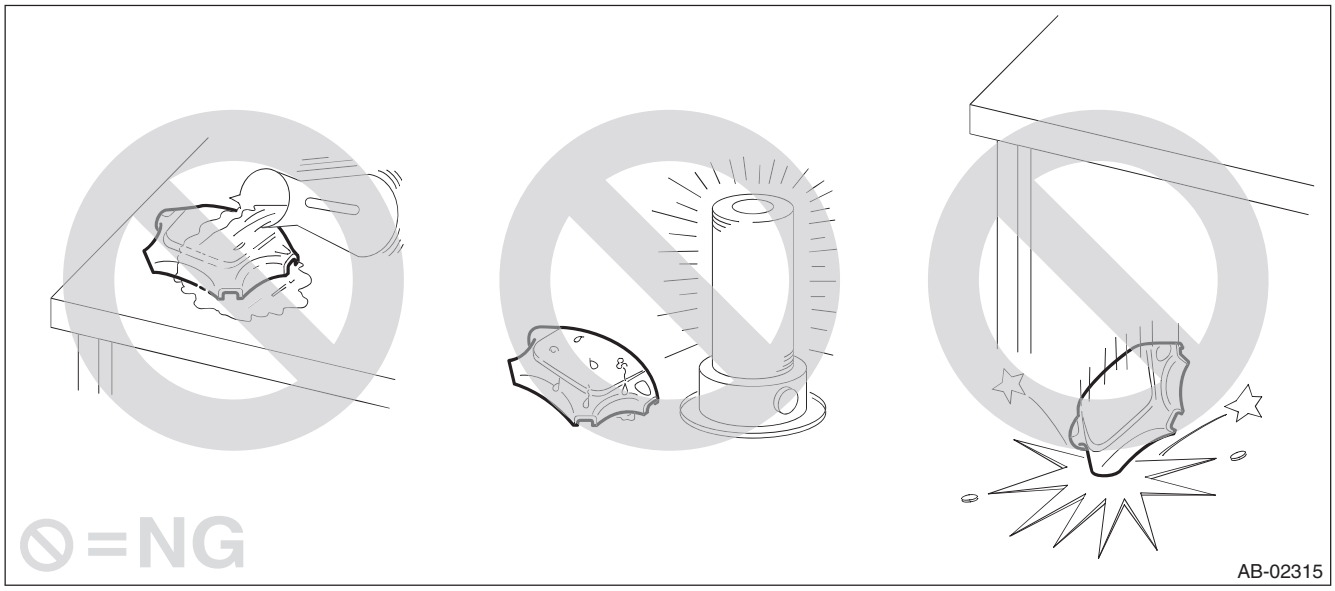

- When storing a removed airbag module, do not place it with the pad side of airbag facing downward. Do not place any objects on the airbag module. Do not pile up the airbag module. If the pad of the airbag module is in contact with other objects, it may cause a serious accident if the airbag accidentally operates.

GETtheMANUALS.org

- Driver's airbag module

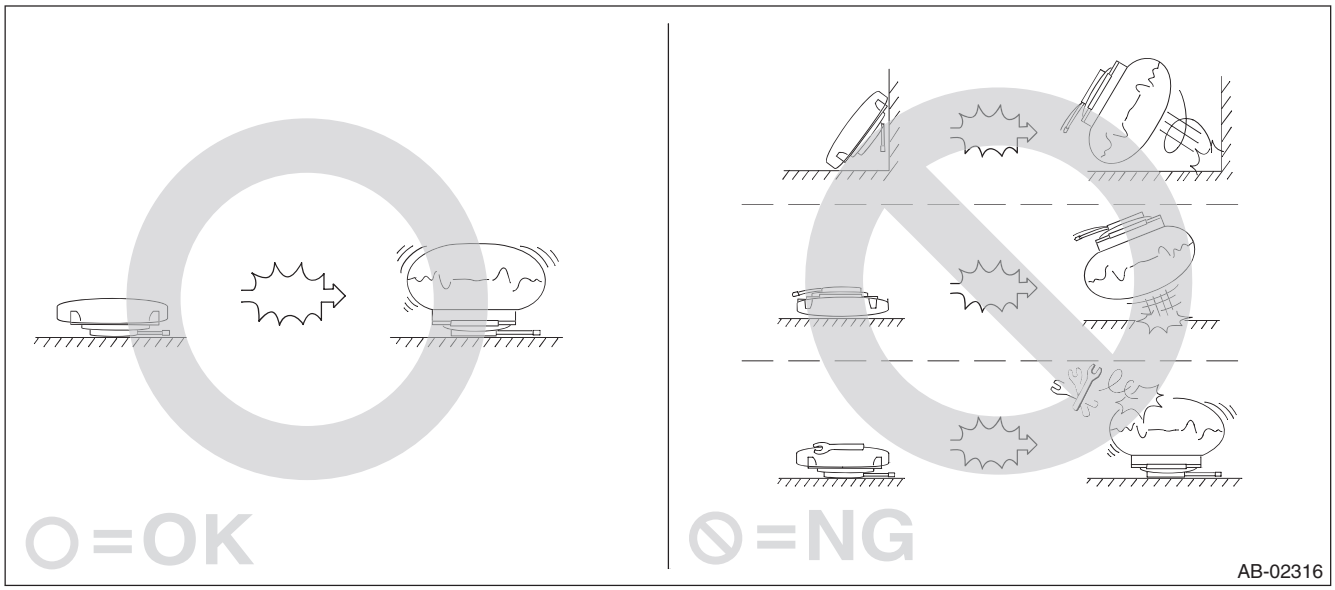

- Passenger's airbag module & side airbag module

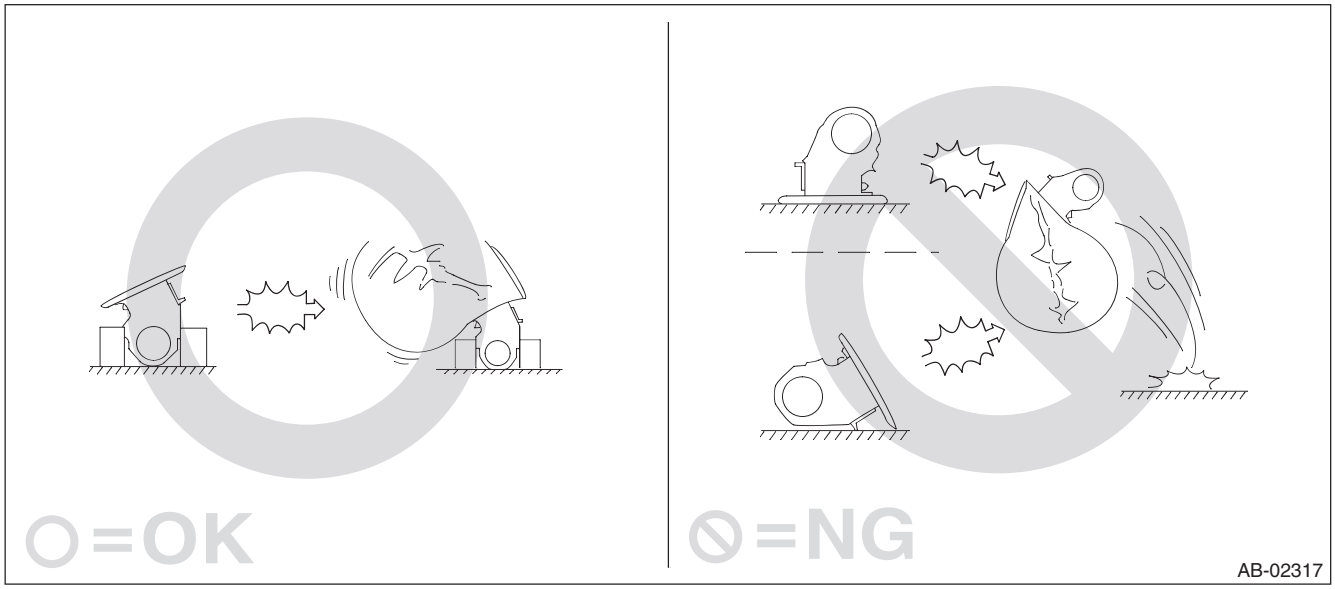

GETtheMANUALS.org

- Do not disassemble driver's airbag module, passenger's airbag module, side or curtain airbag modules, or pretensioner.

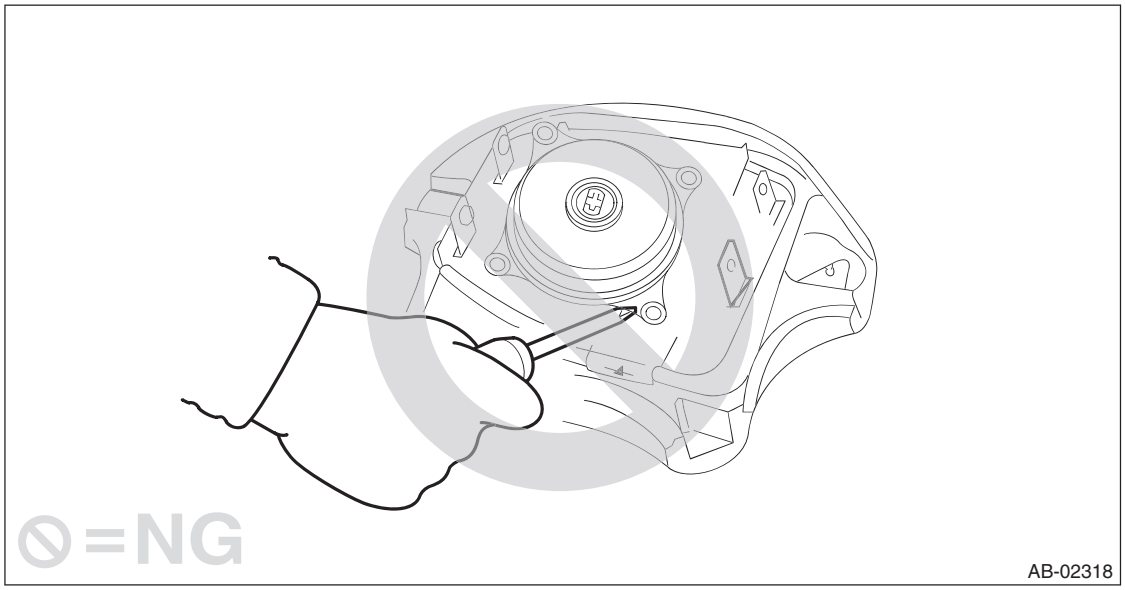

- The removed front seat with airbag module must be kept at least 200 mm (8 in) away from walls and other objects.

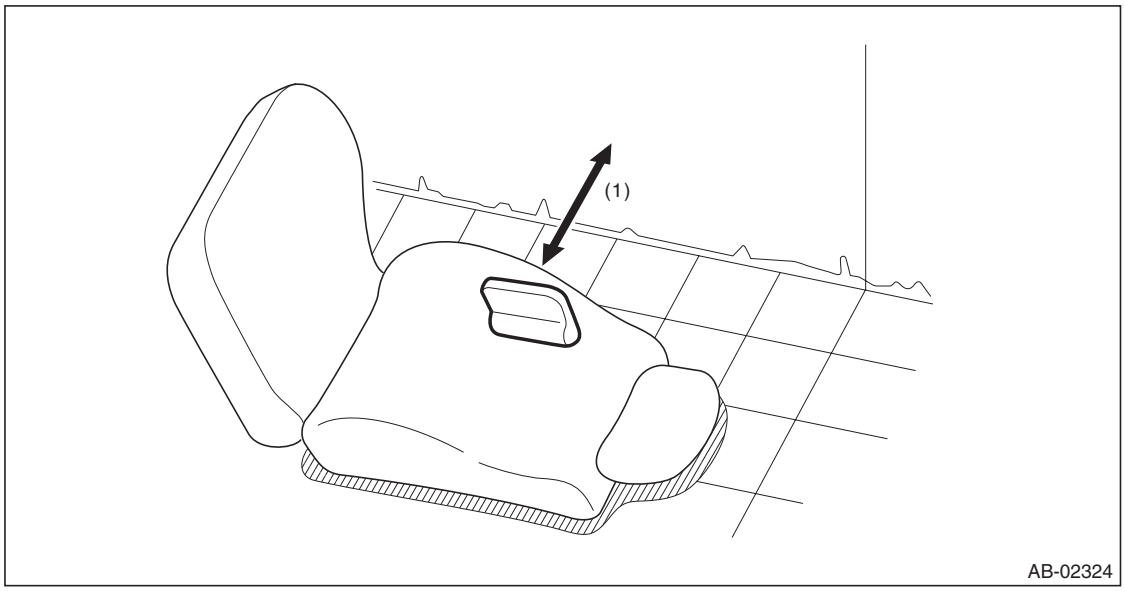

(1) 200 mm (8 in) or more

GETtheMANUALS.org

3. BEFORE STARTING TROUBLESHOOTING

- Even if any part is to be replaced as the result of diagnosis, do not use airbag parts or pretensioner parts from other vehicles. Always replace the defective parts with new parts.
- When checking the airbag system, be sure to use a digital circuit tester. Use of an analog circuit tester may cause the airbag to activate erroneously due to a minimal current inside tester.

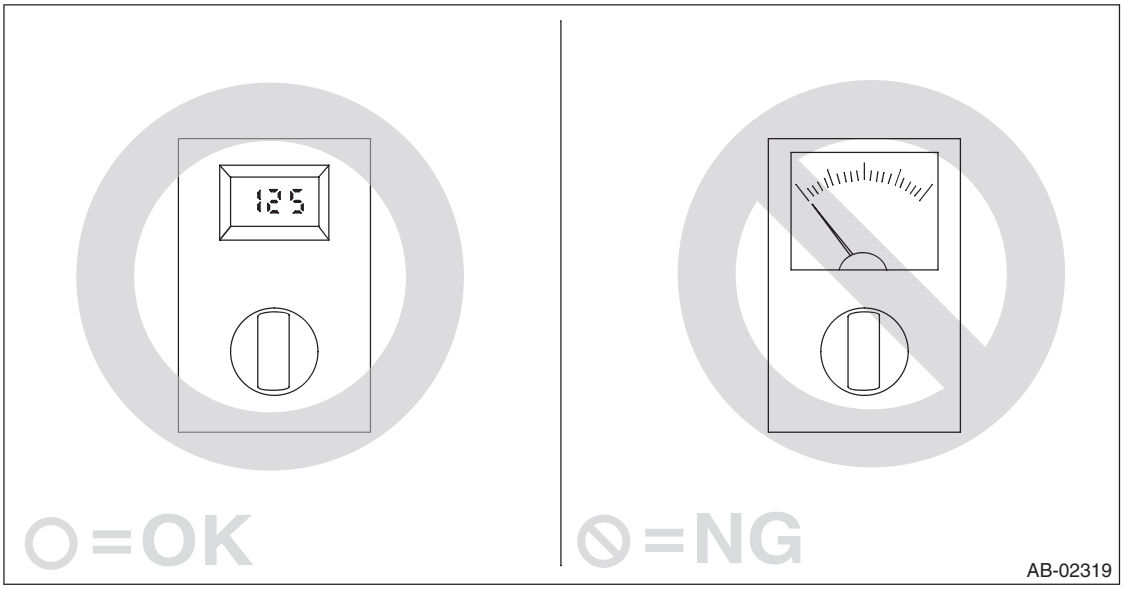

- Do not allow water or oil to come in contact with the connector terminals. Also, do not touch the connector terminals directly.

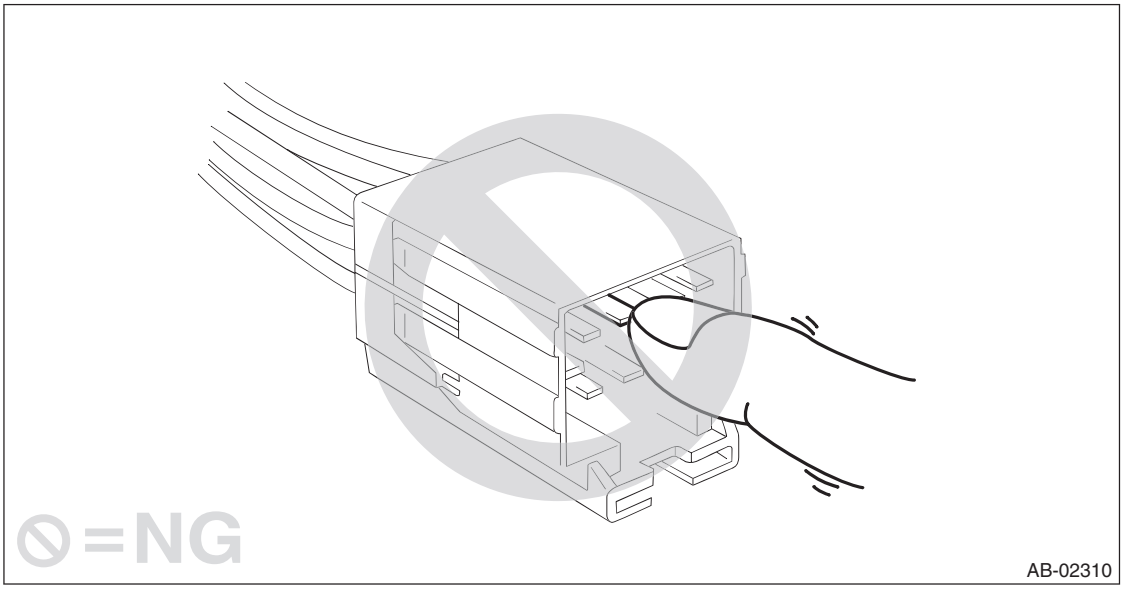

GETtheMANUALS.org

- When checking, use a test harness (1). Damage to connector terminal cause malfunction. Do not directly apply the tester probe to connector terminal of airbag.

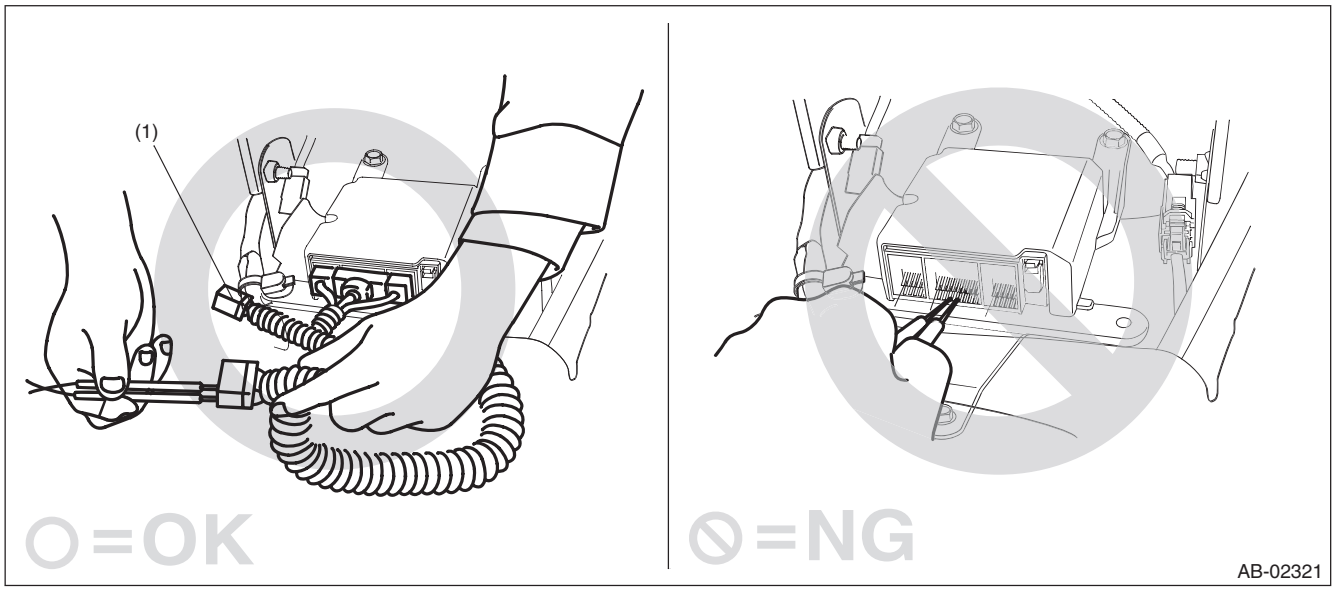

- Do not check continuity of the airbag modules for driver's side, passenger's side and curtain, or the pre-tensioner.

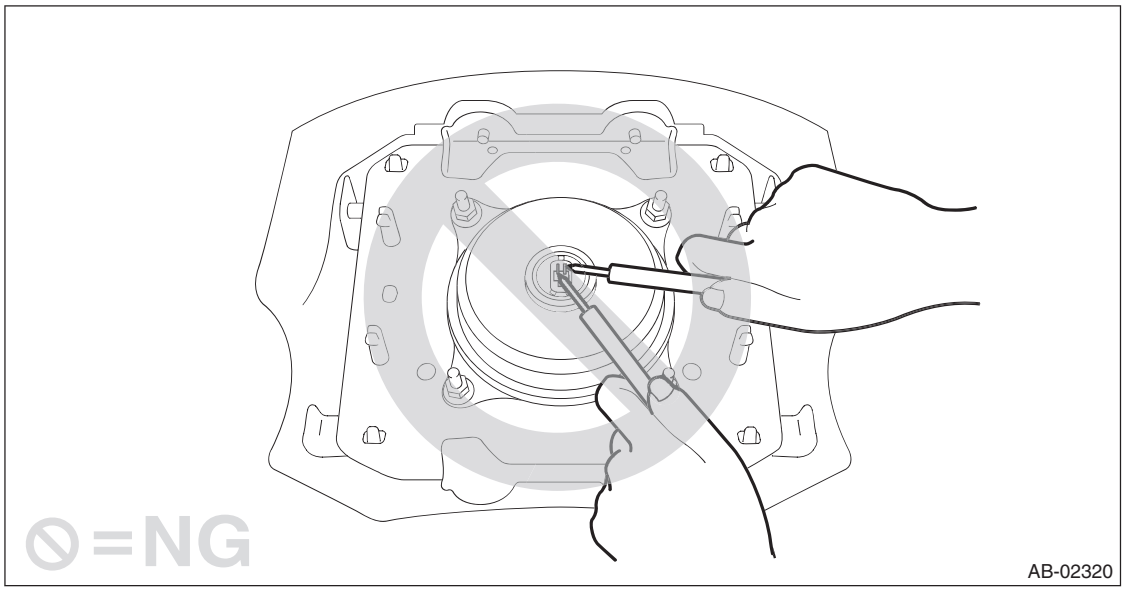

GETtheMANUALS.org

- If damage, open circuit or rust is found on airbag system wiring harness, do not repair the harness. Always replace the faulty harness with a new genuine part.

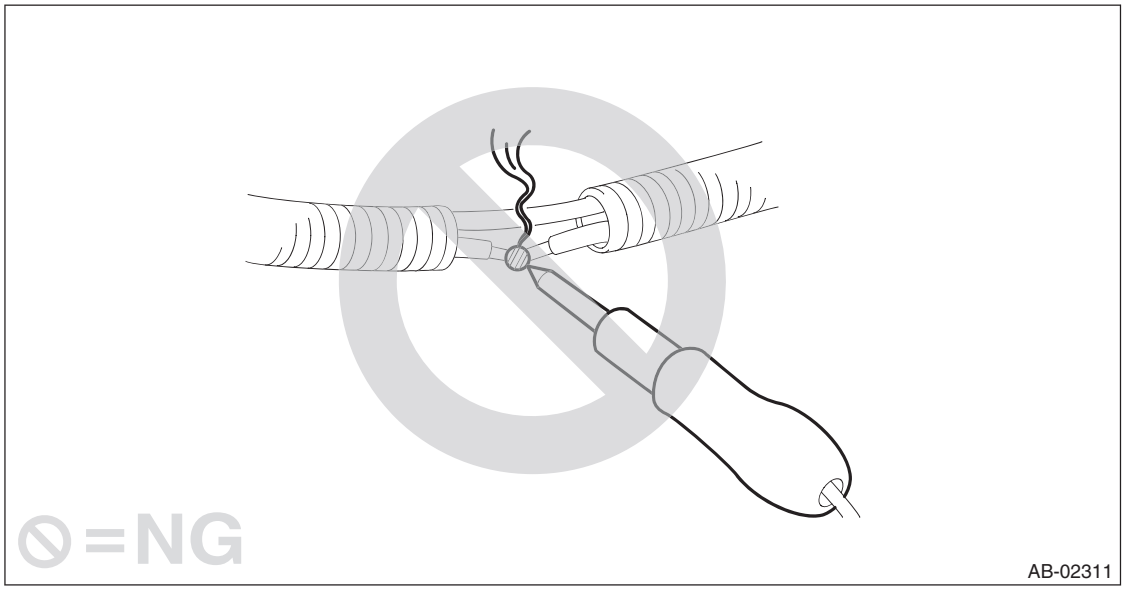

C: PREPARATION TOOL

1. SPECIAL TOOL

ILLUSTRATION	TOOL NUMBER	DESCRIPTION	REMARKS
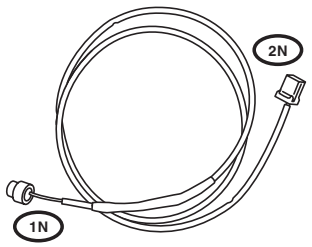 ST98299SA000	98299SA000	TEST HARNESS N	Used for unit inspection of steering roll connector.
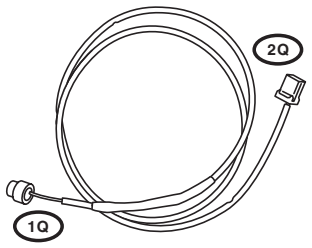 ST98299SA040	98299SA040	TEST HARNESS Q	Used for unit inspection of steering roll connector.

2. GENERAL TOOL

TOOL NAME	REMARKS
Steering wheel puller	Used for removing the steering wheel.

GETtheMANUALS.org

2. Airbag Connector

A: PROCEDURE

1. POWER SUPPLY

1) How to disconnect:

CAUTION:
When pulling the slide lock or disconnecting connector, be sure to hold the connector, not the harness.

(1) Push the lock (A).
(2) While holding down the lock (A), disconnect the connector.

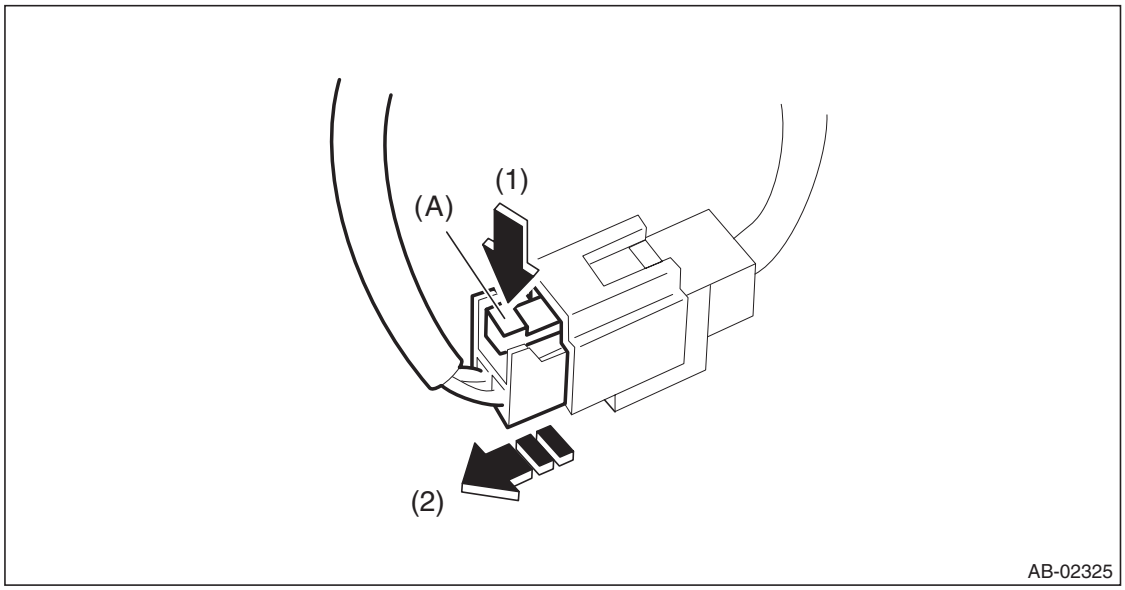

2) How to connect:

CAUTION:
Be sure to insert the connector in until it is locked. Then pull it gently to make sure that it is locked.
Holding the connector, push it in securely until a clicking sound is heard.

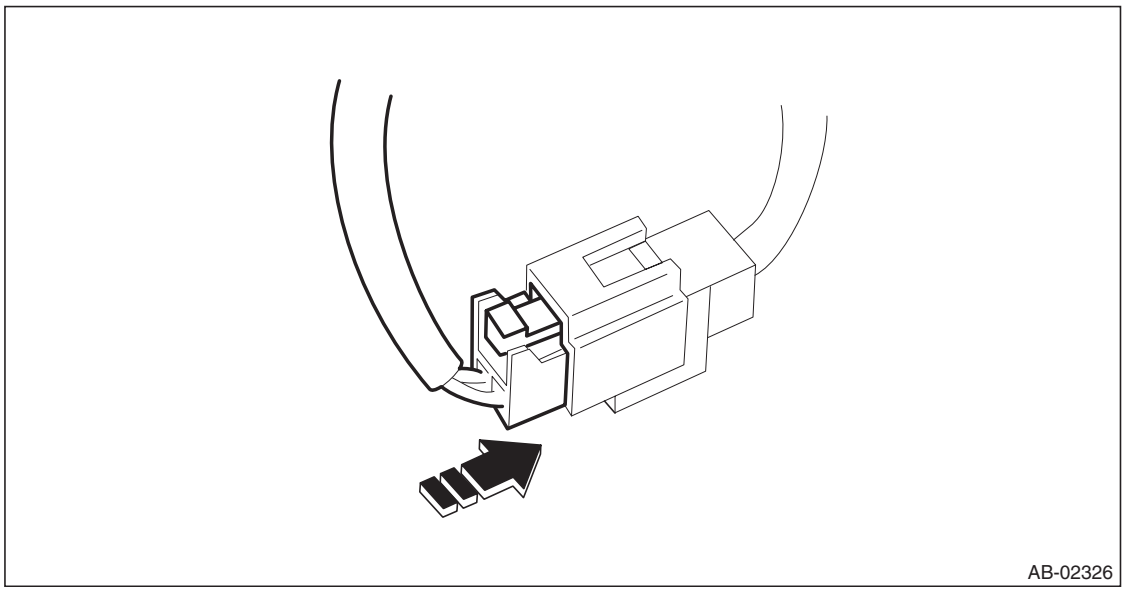

GETtheMANUALS.org

2. AIRBAG CONTROL MODULE

1) How to disconnect:
   (1) Push the lock lever plate (A).
   (2) While holding down the lock lever plate (A), pull the lever toward you.

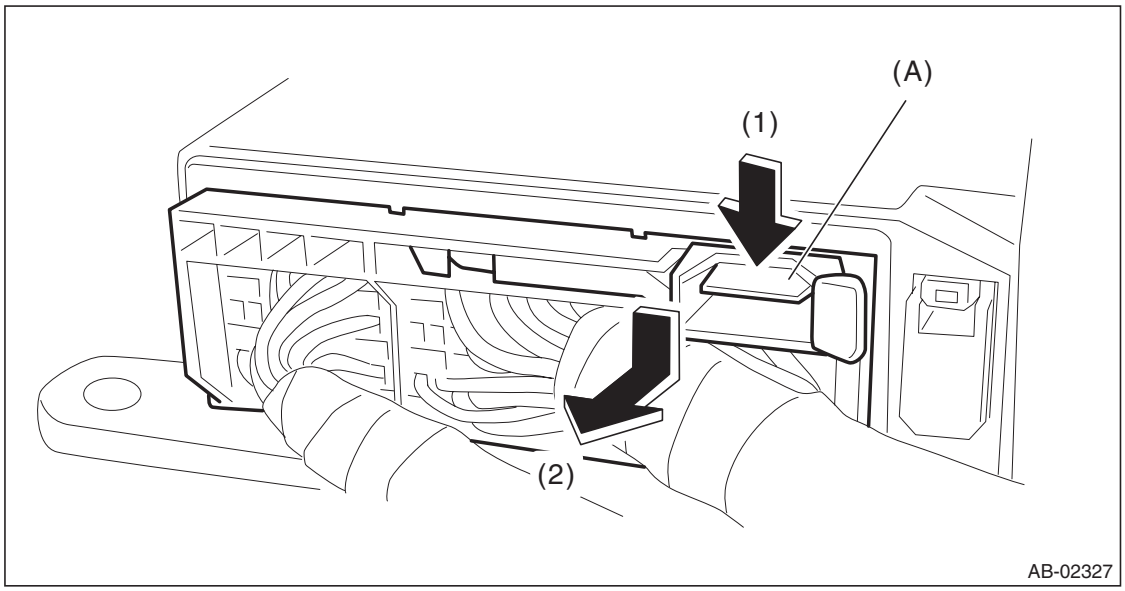

2) How to connect:

CAUTION:
Be sure to insert the connector in until it is locked. Then pull it gently to make sure that it is locked.
Insert the connector and push the lock lever in securely.

3. DRIVER'S AIRBAG MODULE (ROLL CONNECTOR)

1) How to disconnect:

CAUTION:
When pulling the slide lock or disconnecting connector, be sure to hold the connector, not the harness.
   (1) Push the slide lock (A) in the direction of arrow.
   (2) With the slide lock pushed, disconnect the connector.

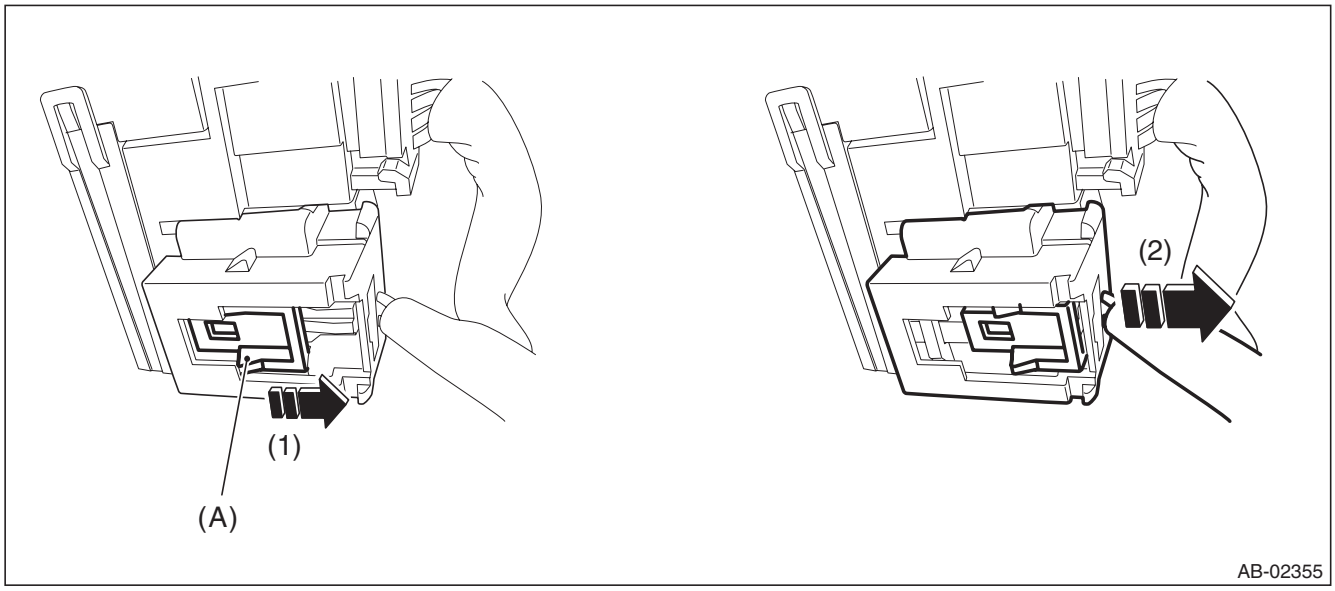

GETtheMANUALS.org

2) How to connect:

CAUTION:
Be sure to insert the connector in until it is locked. Then pull it gently to make sure that it is locked.
Holding the connector, push it in securely until a clicking sound is heard.

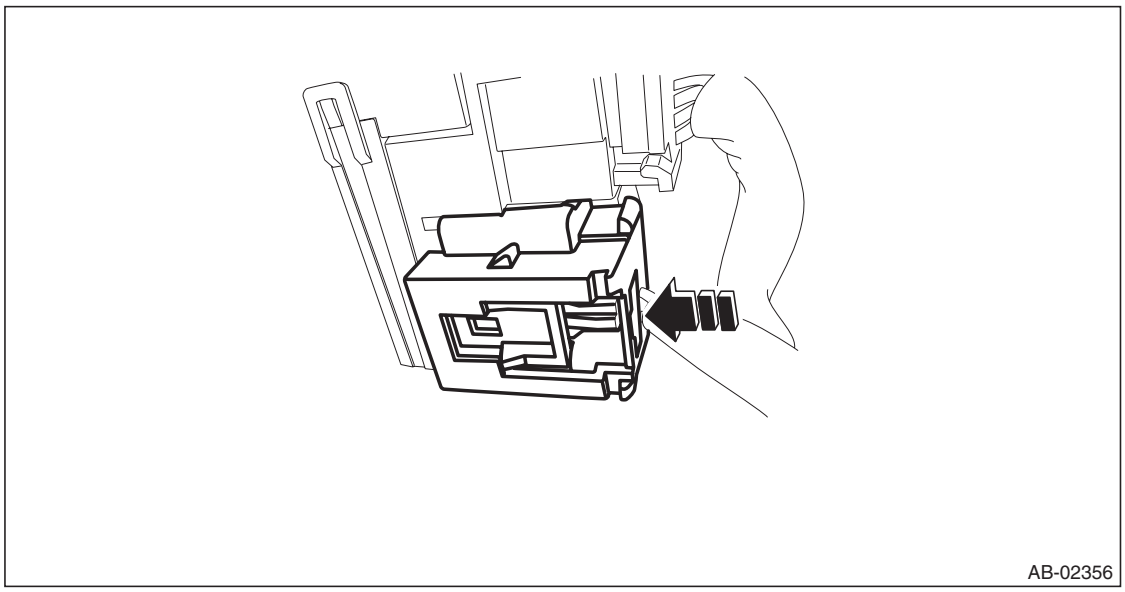

4. PASSENGER'S AIRBAG MODULE

1) How to disconnect:

CAUTION:
When pulling the slide lock or disconnecting connector, be sure to hold the connector, not the harness.

(1) Push the slide lock (A) in the direction of arrow.
(2) With the slide lock pushed, disconnect the connector.

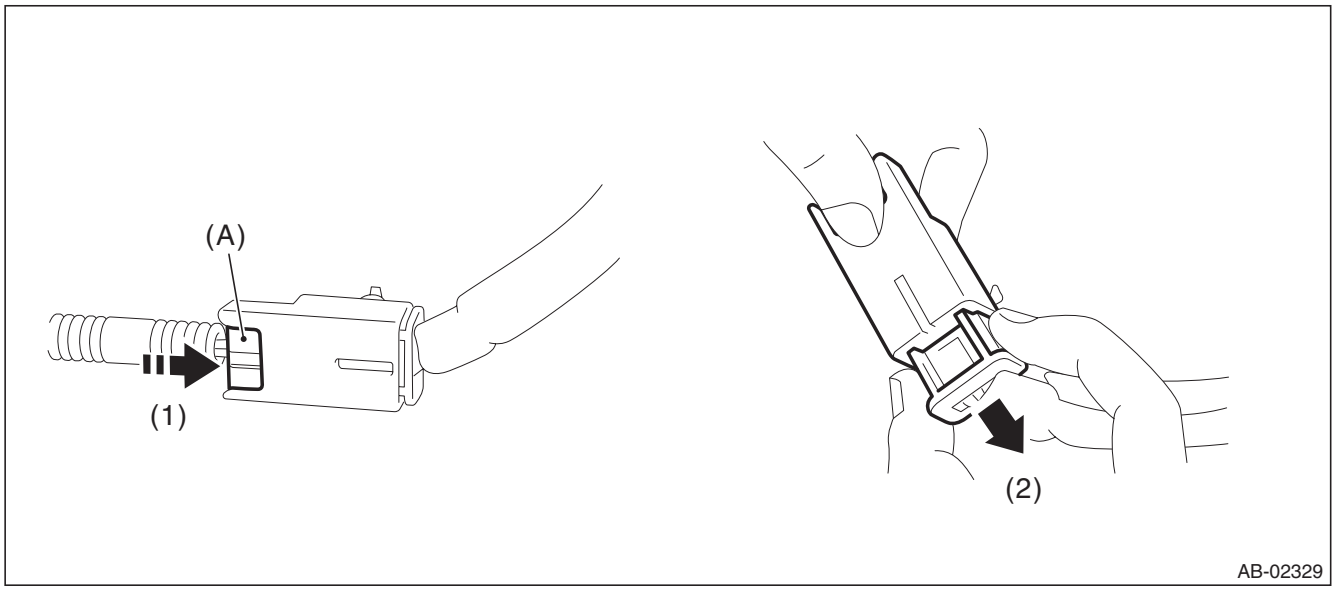

GETtheMANUALS.org

2) How to connect:

CAUTION:
Be sure to insert the connector in until it is locked. Then pull it gently to make sure that it is locked.
Holding the connector, push it in securely until a clicking sound is heard.

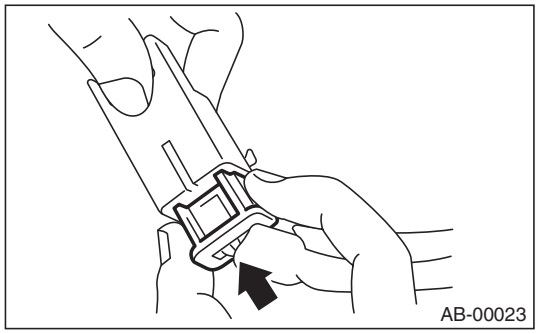

5. DRIVER'S AIRBAG MODULE, CURTAIN AIRBAG MODULE & PRETENSIONER

1) How to disconnect:
   (1) Using a flat tip screwdriver, pry the push lock upward to unlock.
   (2) Pull the connector to disconnect from the driver's airbag module assembly or the retractor assembly.

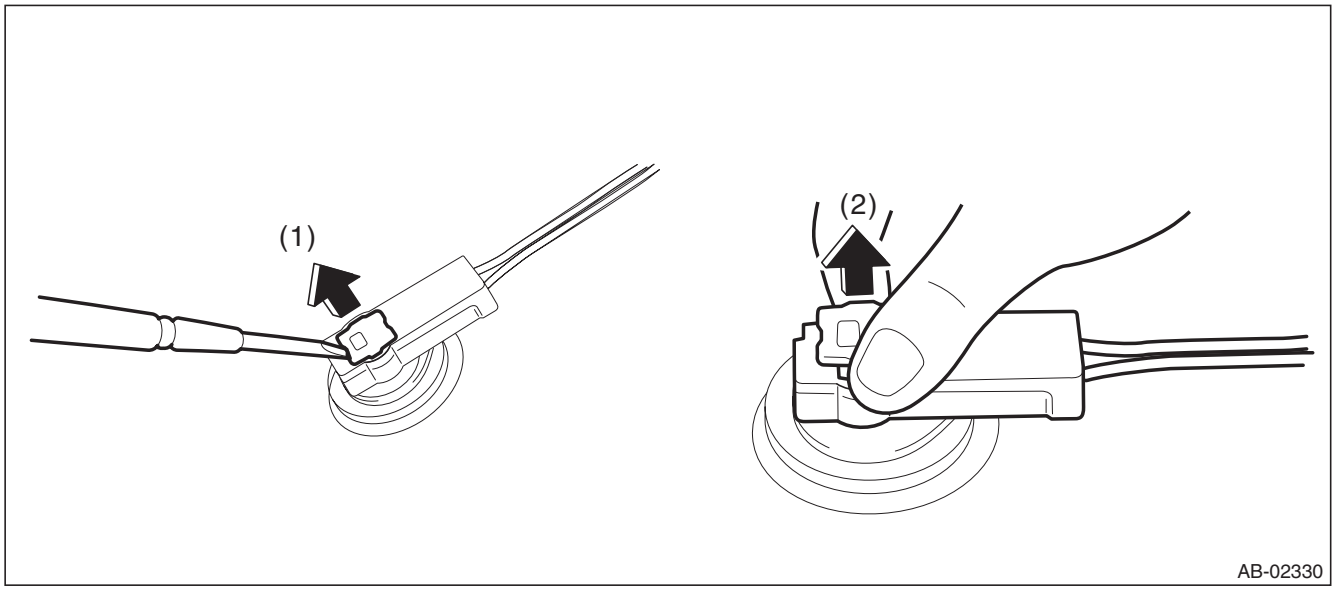

GETtheMANUALS.org

2) How to connect:

CAUTION:
- **Be sure to insert the connector in until it is locked.**
- **Be sure to push the push lock in securely. Then pull it gently to make sure that it is locked.**

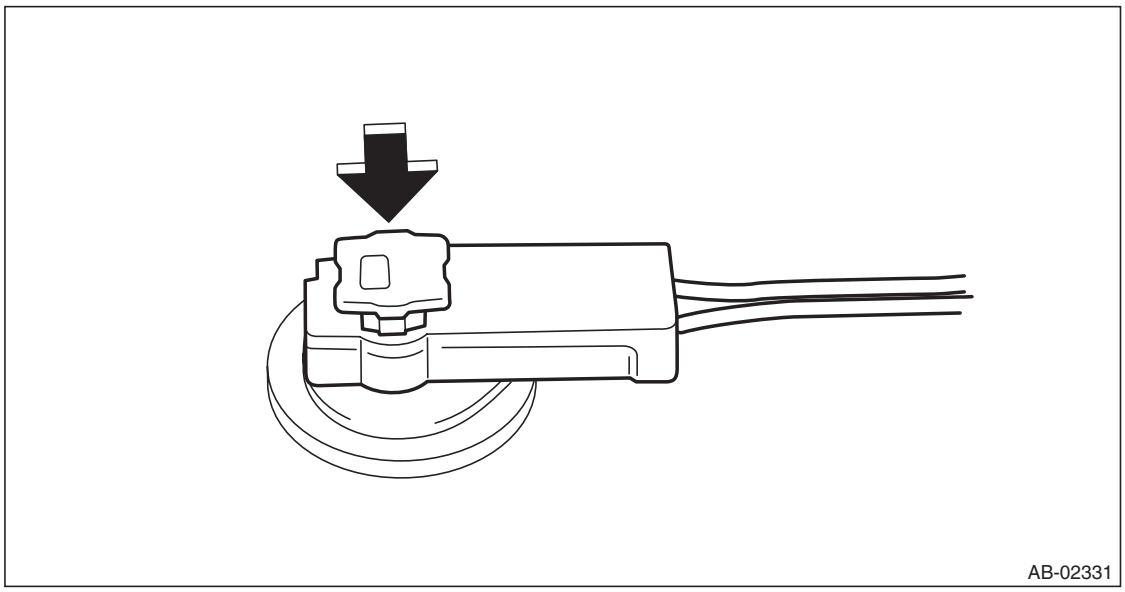

Connect the connector in the reverse order of disconnecting. At this time, be sure to insert it until a clicking sound is heard.

6. FRONT SUB SENSOR RH

1) How to disconnect:

CAUTION:
When pulling the slide lock or disconnecting connector, be sure to hold the connector, not the harness.

(1) Push the lock arm.
(2) Holding outer part, pull it one step in the direction of arrow.

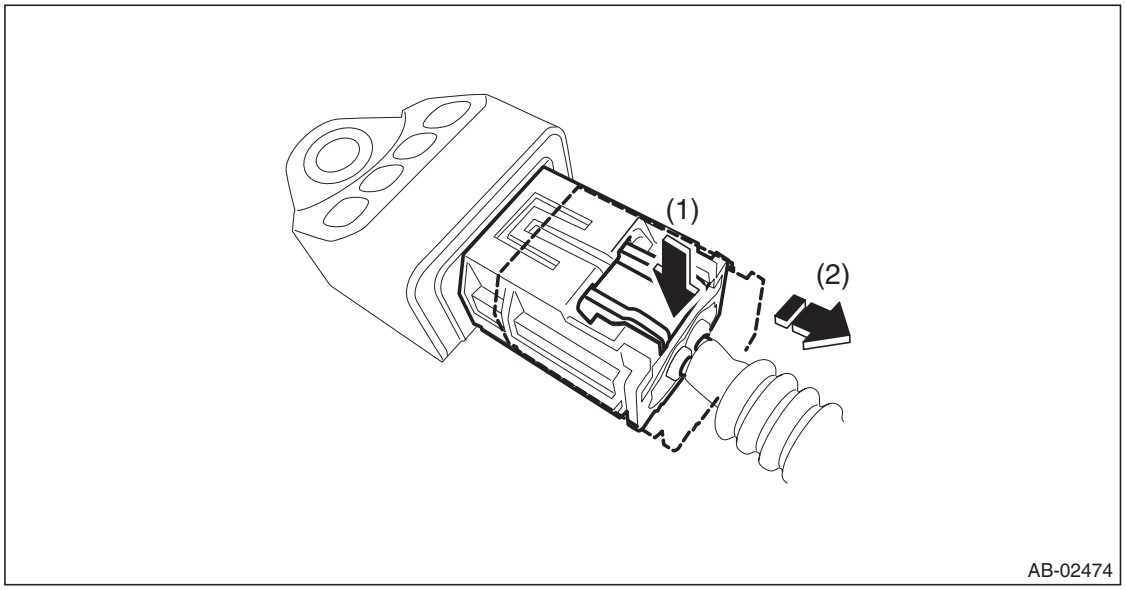

(3) Push the lock arm again.

GETtheMANUALS.org

(4) Holding outer part, pull it in the direction of arrow to disconnect the connector.

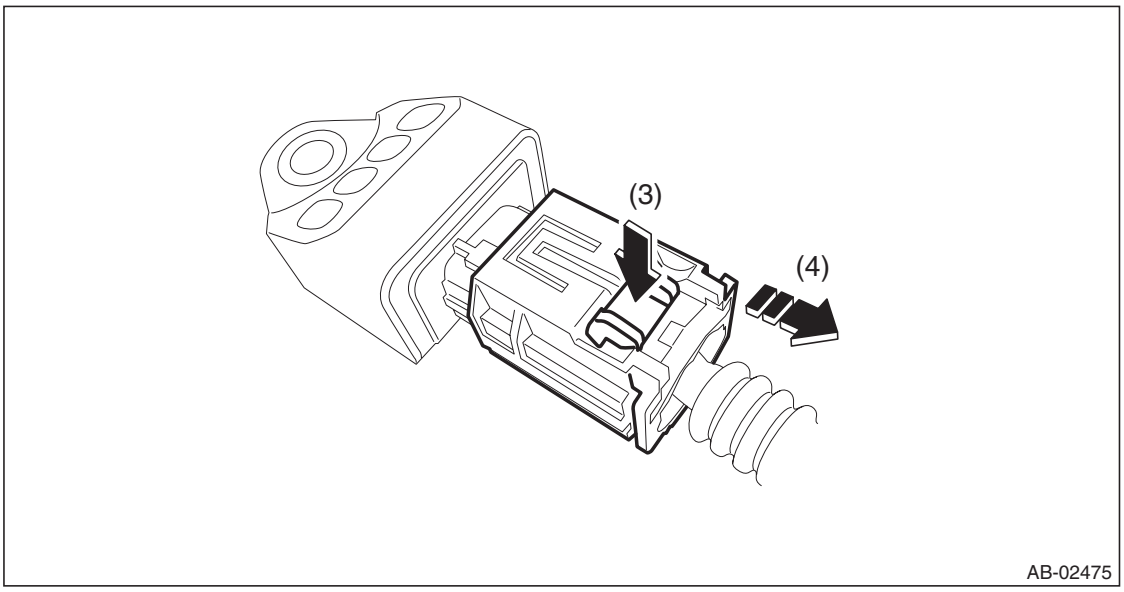

2) How to connect:

CAUTION:
Be sure to insert the connector in until it is locked. Then pull it gently to make sure that it is locked.
Holding the connector, push it in securely until a clicking sound is heard.

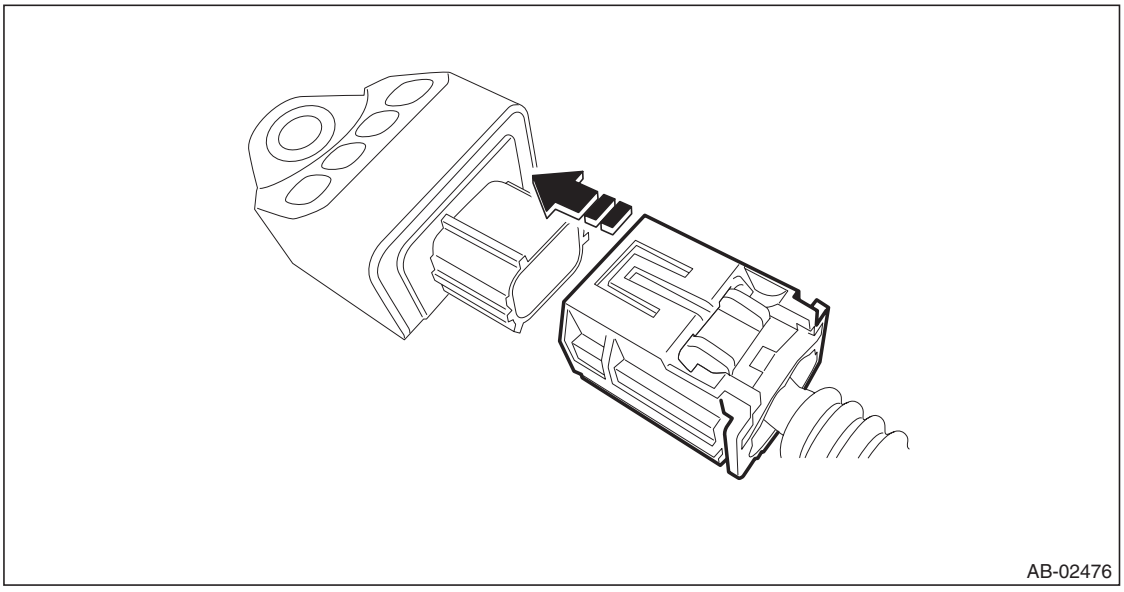

GETtheMANUALS.org

7. FRONT SUB SENSOR LH AND FRONT DOOR IMPACT SENSOR

1) How to disconnect:

CAUTION:
When pulling the slide lock or disconnecting connector, be sure to hold the connector, not the harness.

Holding outer part (A), pull it in the direction of arrow.

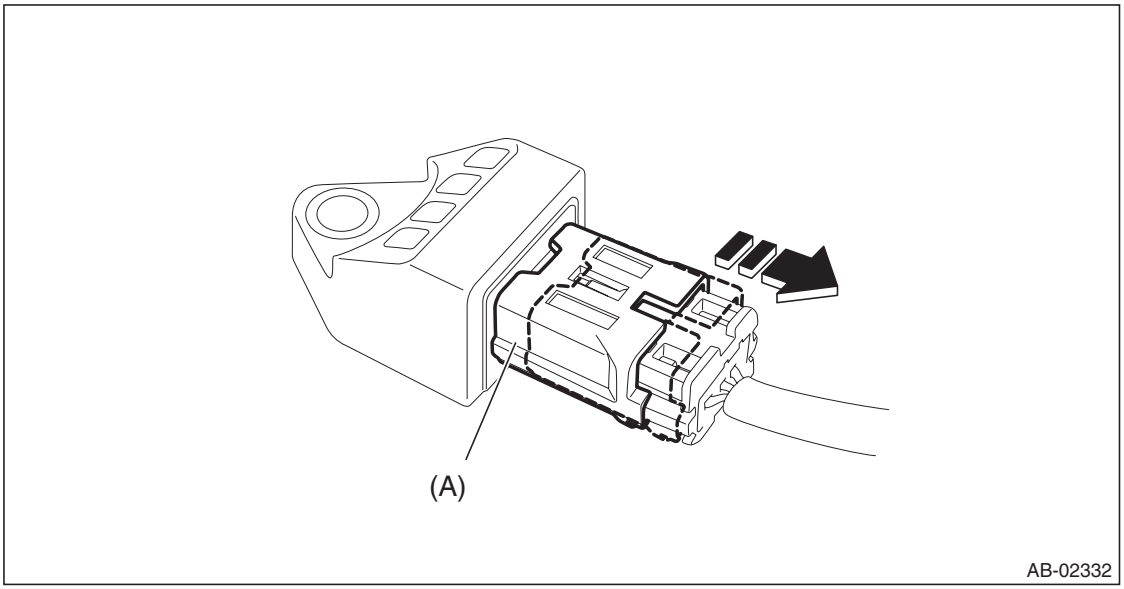

2) How to connect:

CAUTION:
- **Do not touch the outer side section or else the outer side (A) will move back.**
- **Be sure to insert the connector in until it is locked. Then pull it gently to make sure that it is locked.**

Holding the connector, push it in securely until a clicking sound is heard.

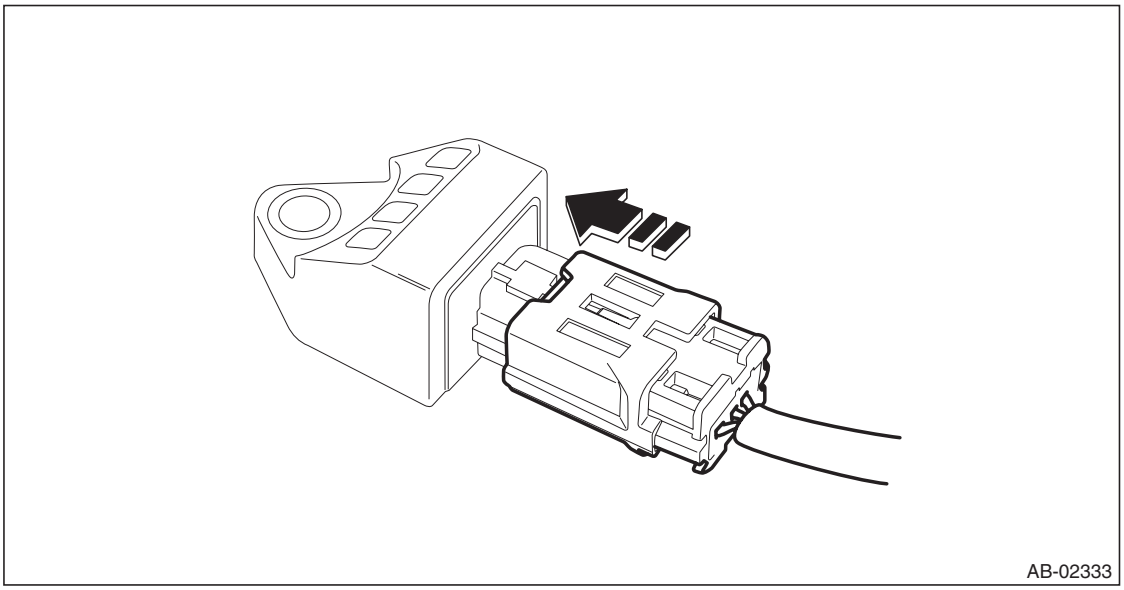

GETtheMANUALS.org

8. SIDE AIRBAG SENSOR AND CURTAIN AIRBAG SENSOR

1) How to disconnect:

CAUTION:
When pulling the slide lock or disconnecting connector, be sure to hold the connector, not the harness.

(1) Push the lock arm.
(2) Holding outer part, pull it one step in the direction of arrow.

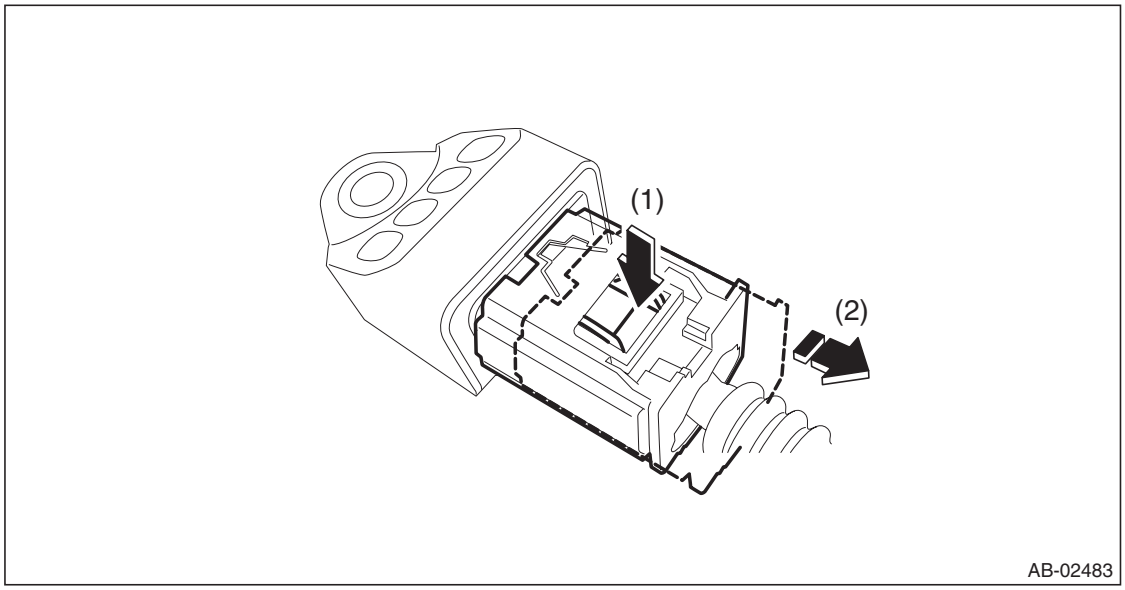

(3) Push the lock arm again.
(4) Holding outer part, pull it in the direction of arrow to disconnect the connector.

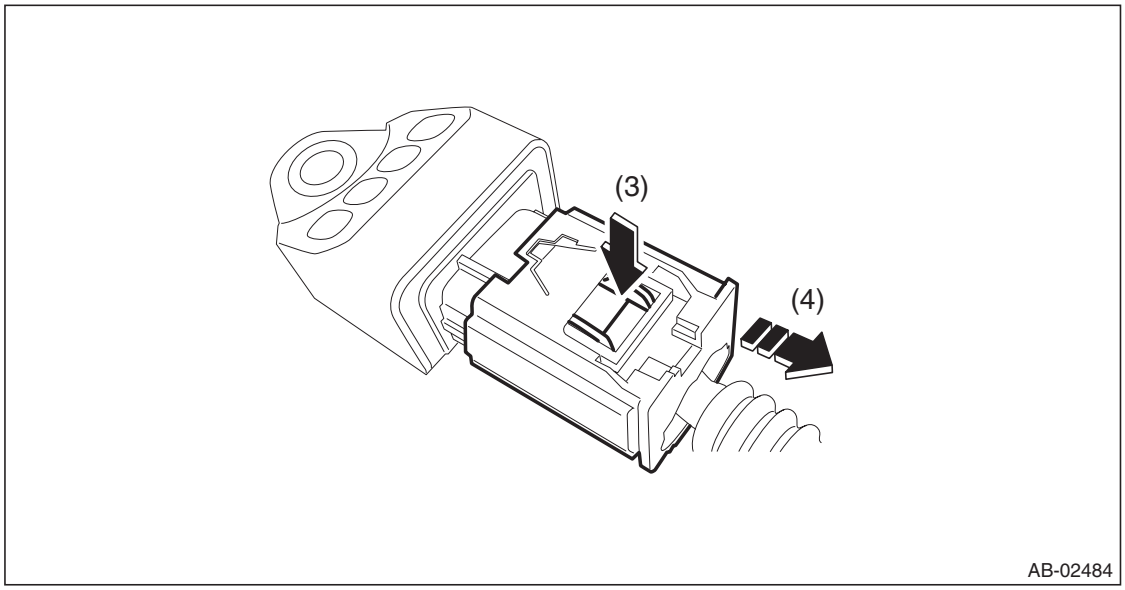

GETtheMANUALS.org

2) How to connect:

CAUTION:
Be sure to insert the connector in until it is locked. Then pull it gently to make sure that it is locked.
Holding the connector, push it in securely until a clicking sound is heard.

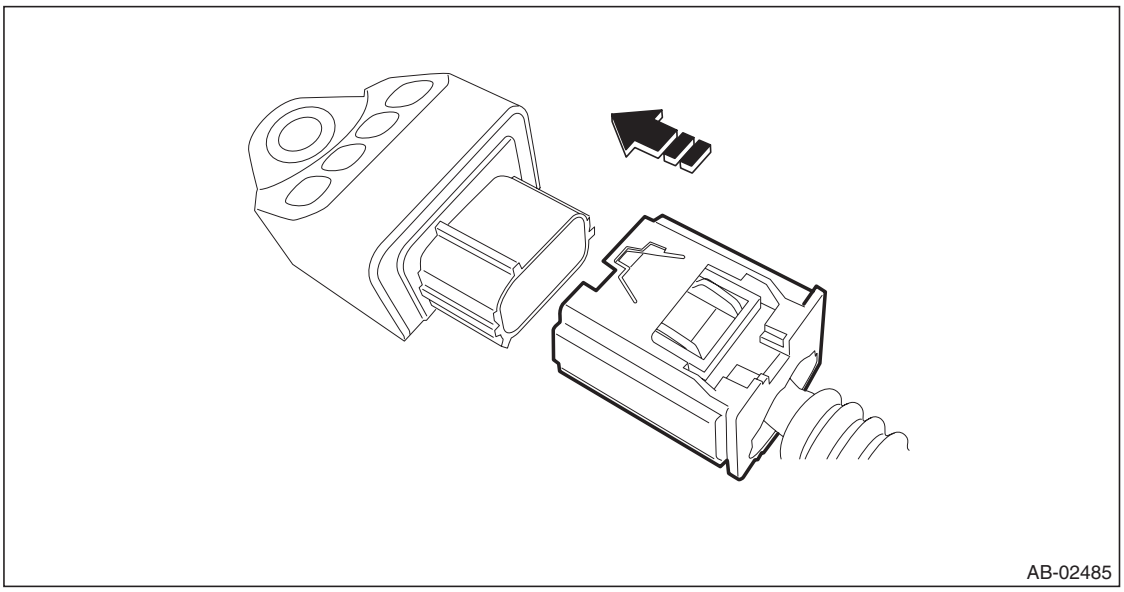

9. SIDE AIRBAG MODULE

1) How to disconnect:

CAUTION:
When pulling the slide lock or disconnecting connector, be sure to hold the connector, not the harness.

(1) Move the slide lock (A) in the direction of arrow and hold it.
(2) While holding the slide lock (A) in place, pull the connector (B) to the direction of arrow.

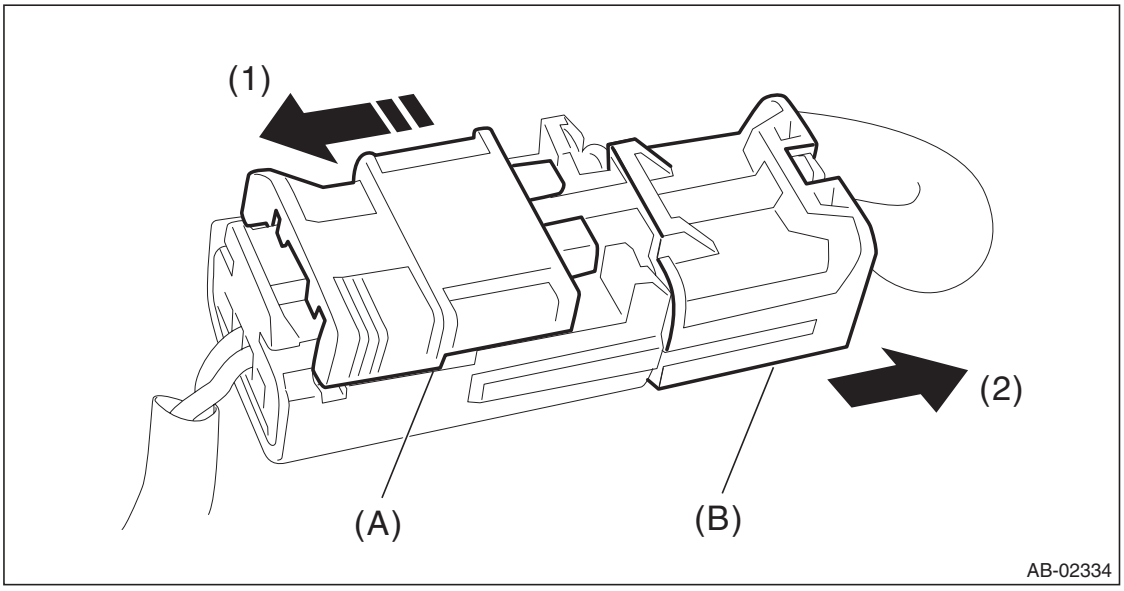

GETtheMANUALS.org

2) How to connect:

CAUTION:
Be sure to insert the connector in until it is locked. Then pull it gently to make sure that it is locked.
Holding the connector, push it in securely until a clicking sound is heard.

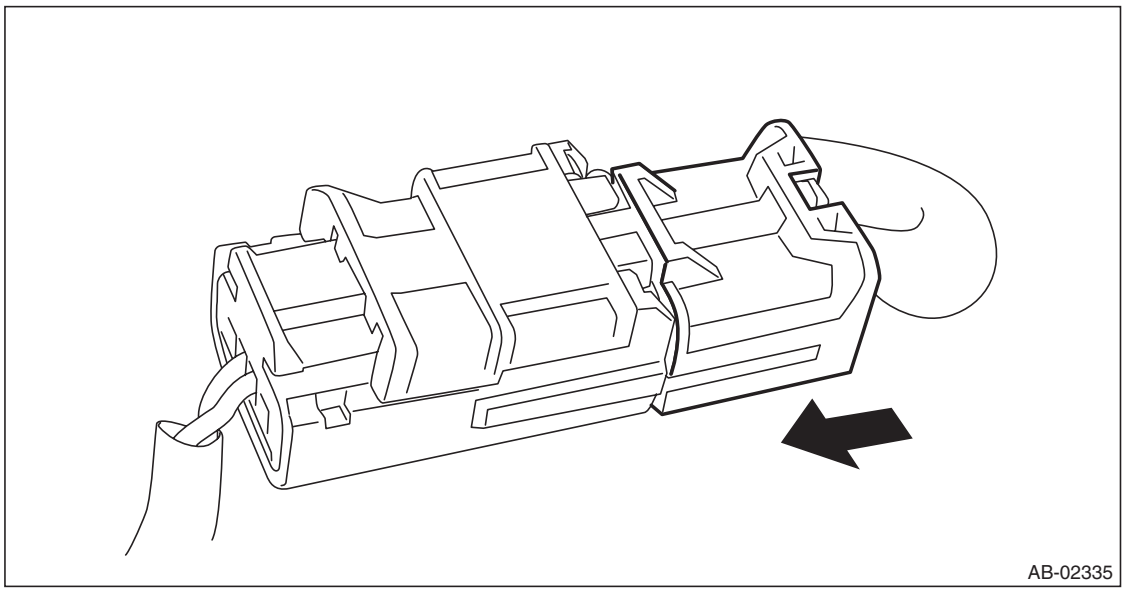

10.BUCKLE SWITCH RH

1) How to disconnect:

CAUTION:
When pulling the slide lock or disconnecting connector, be sure to hold the connector, not the harness.

(1) Move the slide lock (A) in the direction of arrow and hold it.
(2) While holding the slide lock (A) in place, pull the connector (B) to the direction of arrow.

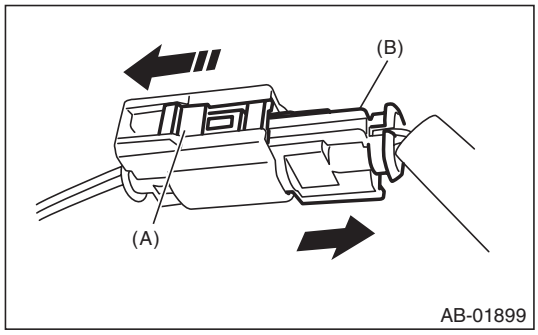

GETtheMANUALS.org

2) How to connect:

CAUTION:
Be sure to insert the connector in until it is locked. Then pull it gently to make sure that it is locked.
Holding the connector, push it in securely until a clicking sound is heard.

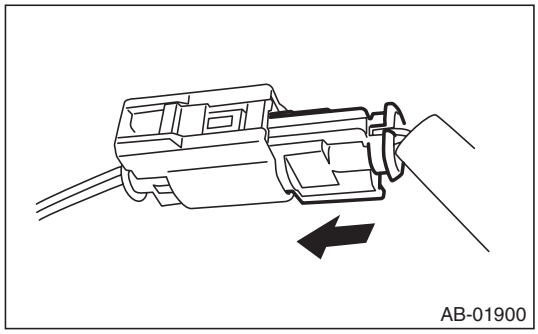

11.OCCUPANT DETECTION SYSTEM (BETWEEN AIRBAG REAR HARNESS AND SEAT HARNESS)

Refer to “Occupant Detection System”. <Ref. to OD(diag)-8, OCCUPANT DETECTION SYSTEM (BETWEEN AIRBAG REAR HARNESS AND SEAT HARNESS), PROCEDURE, Airbag Connector.>

GETtheMANUALS.org

3. Inspection Locations after a Collision

A: REPLACEMENT

Replace the following parts if the airbag has been activated.

1. FRONT COLLISION

1) Driver's airbag module
2) Passenger's airbag module
3) Driver's seat belt (pretensioner)
4) Passenger's seat belt (pretensioner)
5) Airbag control module
6) Front sub sensor (right and left)
7) Roll connector
8) Passenger's side seat cushion pad and frame assembly
9) Instrument panel (for integrating with passenger's airbag module)

2. SIDE COLLISION

1) Airbag control module
2) Side airbag module (operating side)
3) Side airbag sensor (operating side)
4) Front door impact sensor (operating side)
5) Curtain airbag module (operating side)
6) Curtain airbag sensor (operating side)

3. INSPECTION OF OTHER PARTS

Check for the following parts, and replace the damaged parts with new parts.
1) Steering wheel and steering shaft
Check the steering shaft for mounting conditions and deflection of front and rear, upward and downward directions, and deflection of front and rear direction with tilt lever released. (After a collision, absorbing part of steering shaft may have been operated.)
2) Check the direct type connector of driver's airbag module, curtain airbag module, and pretensioner for damage, and also check each harness for pinching and connector damage. Replace the main harness as an assembly if damage is found.
3) Check the seat cushion, backrest, seat rail and headrest for installing condition and play.
4) If any break or fray is found in the backrest cover of the driver's seat or passenger's seat, replace the backrest cover with a new part because the side airbag system may not operate normally if no care is made.
5) For the passenger's seat, replace the seat cushion pad frame assembly with a new part if the seat cushion frame assembly is deformed or cracked.
6) If there are tears or loosening in the passenger side seat cushion cover, it may interfere with the proper operation of the occupant detection system. Replace with a new cushion cover.
7) Be sure to perform the system calibration for the occupant detection system after removing or replacing the passenger seat cushion cover. If system adjustment is not performed, the occupant detection system may not function properly. <Ref. to OD(diag)-15, OPERATION, System Calibration (Rezeroing).>
8) Use the Subaru Select Monitor to check the front right seat belt buckle switch is operating normally.

B: INSPECTION

If the vehicle is involved in a collision, even if it is a slight collision, be sure to check the following systems.

1. DRIVER'S AIRBAG MODULE

1) Frontal collision (driver's airbag module activated)
1. Replace the following parts with new ones.
   - Airbag control module
   - Driver's airbag module ASSY
   - Passenger's airbag module assembly
   - Seat belt pretensioner assembly (left and right)
   - Front sub sensor (right and left)
   - Sensor cover plate (left and right)
   - Steering shaft assembly

GETtheMANUALS.org

2. Visually inspect the following items and replace any damaged part with a new one.
   - Steering wheel assembly
   - Steering support beam assembly
   - Instrument panel harness and connector on body side

2) Frontal collision (driver's airbag module not activated)
Visually inspect the following items and replace any damaged or cracked part with a new one.
Specially inspect the damage of airbag module body, mounting bracket and harness connector.
- Driver's airbag module assembly
- Passenger's airbag module assembly
- Seat belt pretensioner assembly (left and right)
- Front sub sensor (right and left)
- Sensor cover plate (left and right)
- Instrument panel assembly (because it is integrated with passenger's airbag module)

3) No frontal collision
Visually inspect the airbag modules for damage or contamination and replace any faulty part with a new one.

2. KNEE AIRBAG MODULE

1) Frontal collision (knee airbag module activated)
1. Replace the following parts with new ones.
   - Airbag control module
   - Driver's airbag module
   - Knee airbag module
   - Passenger's airbag module
   - Seat belt pretensioner (right and left)
   - Front sub sensor (right and left)
   - Steering shaft assembly
2. Visually inspect the following items and replace any damaged part with a new one.
   - Steering wheel assembly
   - Steering support beam
   - Instrument panel harness and connector on body side

2) Frontal collision (driver's airbag module not activated)
Visually inspect the following items and replace any damaged or cracked part with a new one.
Specially inspect the damage of airbag module body, mounting bracket and harness connector.
- Driver's airbag module assembly
- Knee airbag module assembly
- Passenger's airbag module ASSY
- Seat belt pretensioner assembly (left and right)
- Front sub sensor (right and left)
- Instrument panel assembly (because it is integrated with passenger's airbag module)

3) No frontal collision
Visually inspect the airbag modules for damage or contamination and replace any faulty part with a new one.

3. PASSENGER'S AIRBAG MODULE

1) Frontal collision (passenger's airbag module activated)
1. Replace the following parts with new ones.
   - Airbag control module
   - Driver's airbag module assembly
   - Passenger's airbag module assembly
   - Seat belt pretensioner assembly (left and right)
   - Front sub sensor (right and left)
   - Sensor cover plate (left and right)
   - Instrument panel assembly (because it is integrated with passenger's airbag module)
2. Visually inspect the following items and replace any damaged part with a new one.
   - Steering support beam assembly
   - Instrument panel harness and connector on body side

GETtheMANUALS.org

2) Frontal collision (passenger's airbag module not activated)
Visually inspect the following items and replace any damaged or cracked part with a new one.
Specially inspect the damage of airbag module body, mounting bracket and harness connector.
- Driver's airbag module assembly
- Passenger's airbag module assembly
- Seat belt pretensioner assembly (left and right)
- Front sub sensor (right and left)
- Sensor cover plate (left and right)
- Instrument panel assembly (because it is integrated with passenger's airbag module)

3) No frontal collision
Visually inspect the airbag modules for damage or contamination and replace any faulty part with a new one.

4. SIDE AIRBAG MODULE

1) Side impact (side airbag activated)
1. Replace the following parts with new ones.
   - Airbag control module
   - Front door impact sensor
   - Side airbag module assembly
   - Side airbag sensor
   - Curtain airbag module assembly
   - Curtain airbag sensor
   - Backrest pad assembly
   - Backrest frame assembly
   - Backrest cover assembly
2. Visually inspect the following items and replace any damaged part with a new one.
   - Headrest assembly
   - Headrest lock bushing
   - Outer slide rail
   - Inner slide rail
   - Seat hinge cover
   - Seat lifter lever
   - Reclining lever
   - Side airbag harness and connector on body side

2) Side impact (side airbag not activated)
Visually inspect the following items and replace any damaged or cracked part with a new one.
Specially inspect the damage of airbag module body, mounting bracket and harness connector.
- Backrest pad assembly
- Backrest frame assembly
- Backrest cover assembly
- Front door impact sensor
- Side airbag module assembly
- Side airbag sensor
- Curtain airbag module assembly
- Curtain airbag sensor

3) No side impact
Visually inspect the airbag modules for contamination and replace any faulty part with a new one.

5. CURTAIN AIRBAG MODULE

1) Side impact (curtain airbag activated)
1. Replace the following parts with new ones.
   - Airbag control module
   - Curtain airbag module assembly
   - Front door impact sensor
   - Side airbag sensor
   - Curtain airbag sensor

GETtheMANUALS.org

- Roof trim
- Each pillar trim
- Airbag bracket (models with sunroof)

2. Visually inspect the following items and replace any damaged part with a new one.
   - Assist grip
   - Assist grip bracket
   - Curtain airbag harness and connector on body side.

2) Side impact (side airbag not activated)
Visually inspect the following items and replace any damaged or cracked part with a new one.
Specially inspect the damage of airbag module body, mounting bracket and harness connector.

- Roof trim
- Each pillar trim
- Curtain airbag module assembly
- Front door impact sensor
- Side airbag sensor
- Curtain airbag sensor

3) No side impact
Visually inspect the airbag covers for damage or contamination and replace any faulty part with a new one.

6. AIRBAG CONTROL MODULE

Check for the following, and replace the damaged parts with new parts.

- Control module is cracked or deformed.
- Mounting bracket is cracked or deformed.
- Connector is scratched, cracked or deformed.
- Driver's airbag has been activated.
- Passenger's airbag has been activated.
- Side airbag has been activated.
- Curtain airbag has been activated.
- Seat belt pretensioner has been activated.

7. FRONT SUB SENSOR

If the section of vehicle as shown in the figure is damaged, check the following items and replace the damaged parts with new parts.

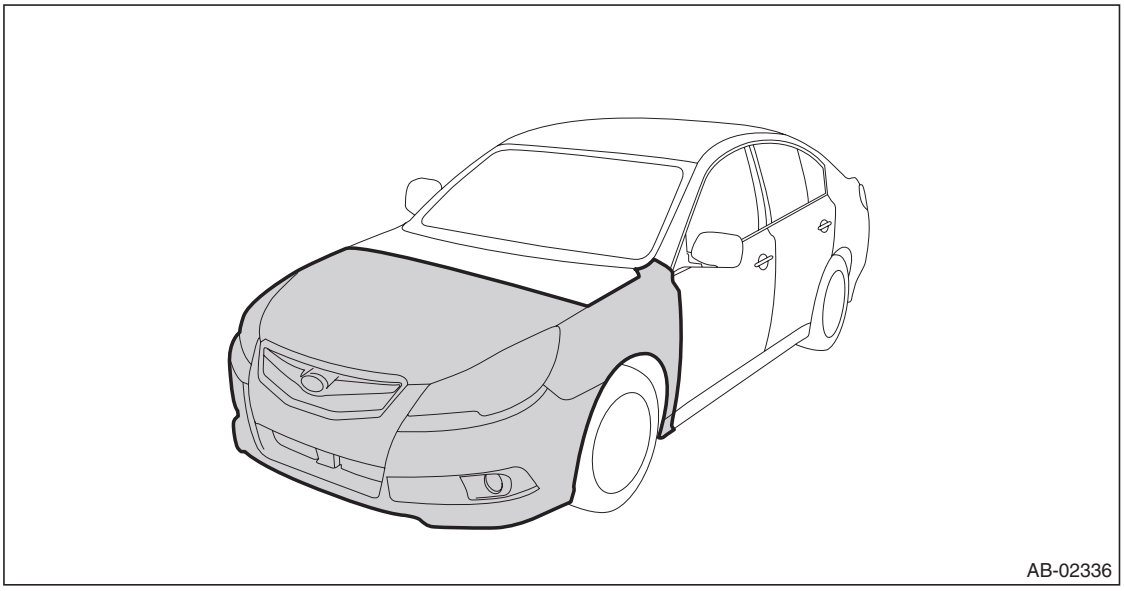

- Front sub sensor is cracked or deformed.
- Connector is scratched, cracked or deformed.
- Airbag has been activated.

GETtheMANUALS.org

8. FRONT DOOR IMPACT SENSOR, SIDE AIRBAG SENSOR AND CURTAIN AIRBAG SENSOR

If the section of vehicle as shown in the figure is damaged, check the following items and replace the damaged parts with new parts.

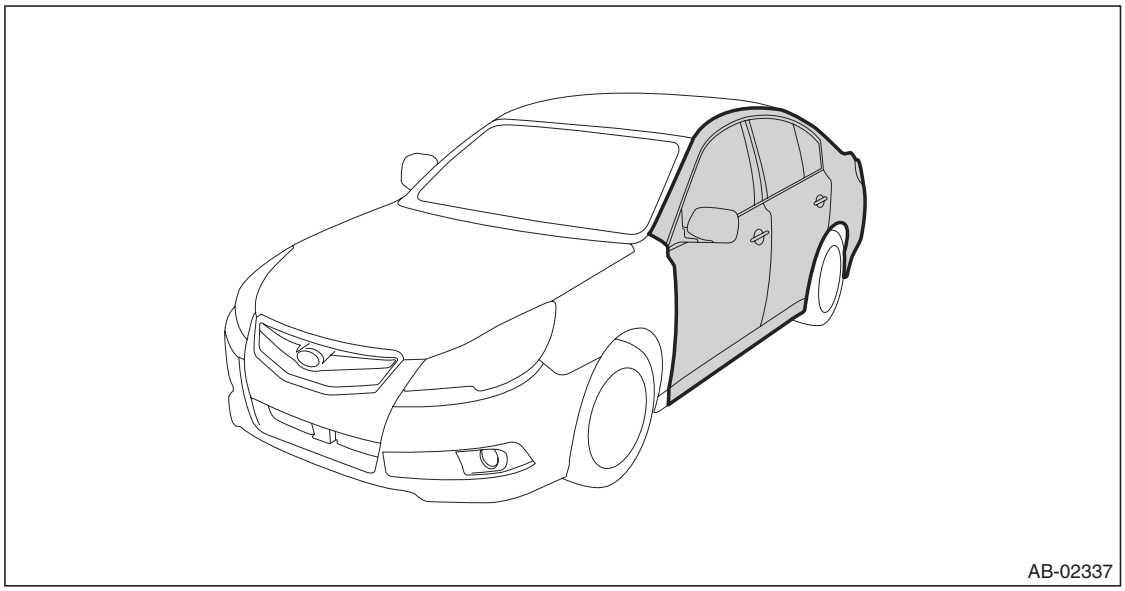

- Front door impact sensor, side airbag sensor and curtain airbag sensor are cracked or deformed.
- Mounting bracket is cracked or deformed.
- Connector is scratched, cracked or deformed.
- Front door impact sensor, side airbag or curtain airbag has been activated. (operating side)

9. ROLL CONNECTOR

Check the following items and replace any damaged, cracked, or deformed parts with new parts.
- Combination switch
- Steering roll connector

10.STEERING SHAFT AND STEERING WHEEL

Check the following items, and if there is anything out of standard value, it is considered to be damaged. If so, replace it with a new part.
- Measure the whole length of the steering column.

Standard: Overall length L

Tilt and telescopic column (measure while minimized)
$816.9^{+1.5}_{-1.5}$ mm ($32.16^{+0.059}_{-0.059}$ in)

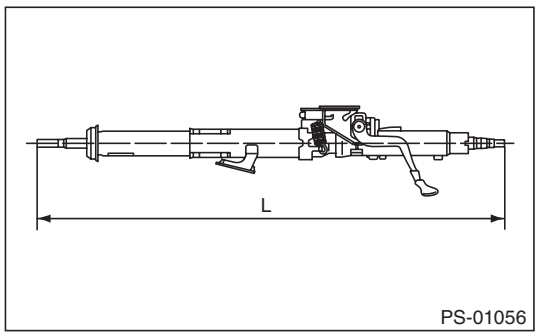

GETtheMANUALS.org

- Check the steering wheel deflection in axial and vertical directions.

Specification:
Axial deflection A (deflection of steering wheel)
Less than 6 mm (0.24 in)
Vertical deflection L (runout of steering wheel)
Less than 17 mm (0.68 in)

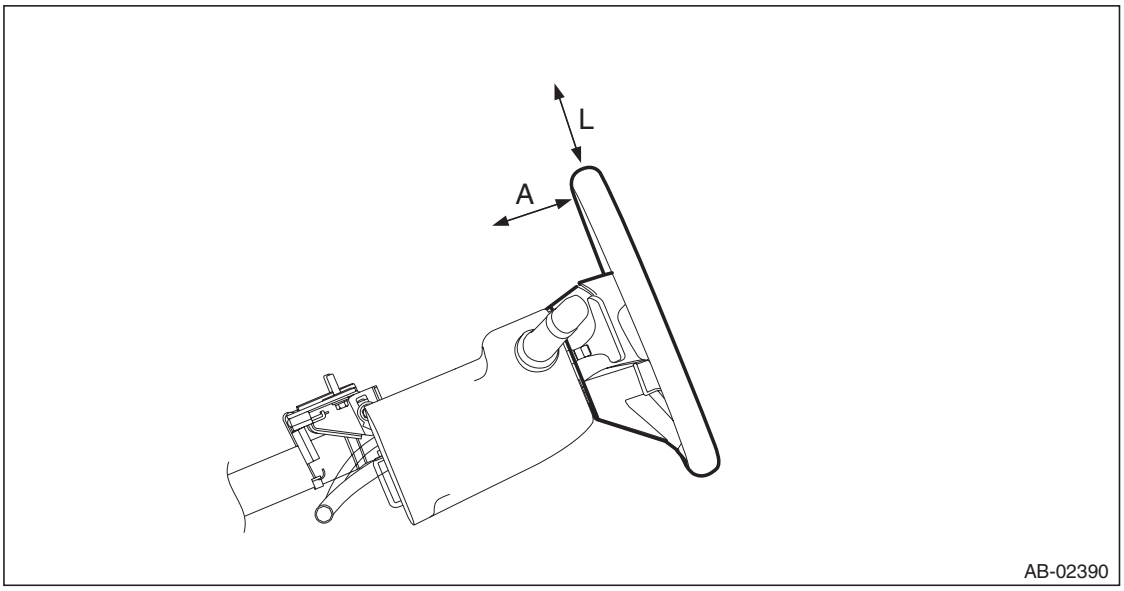

11.PASSENGER'S SEAT

1) Check for the following, and replace the damaged parts with new parts.
- Seat belt buckle body or bracket is scratched, cracked or deformed.
- Backrest frame for crack or deformation
- Headrest for deformation or play
- If the seat cushion cover and seat backrest cover is scratched or coming loose, replace with a new cover and readjust the system. <Ref. to OD(diag)-15, OPERATION, System Calibration (Rezeroing).>

CAUTION:
If any of the following applies, replace the seat cushion pad and frame assembly. Do not disassemble.
- **Cracks or deformation found in the seat cushion frame or seat cushion pad.**
- **Scratches, cracks, or deformation found on the occupant detection system sensor mat or occupant detection control module, or attachment brackets of the control module.**
- **Harness and/or connector is cracked, deformed or open. Harness wire is exposed.**

2) After checking the installing condition of passenger's seat, perform the system adjustment of occupant detection system. <Ref. to OD(diag)-15, OPERATION, System Calibration (Rezeroing).>

GETtheMANUALS.org

4. Driver's Airbag Module

A: REMOVAL

CAUTION:
Refer to "CAUTION" of "General Description" before handling the airbag module. <Ref. to AB-9, CAUTION, General Description.>

1) Position the front wheels straight ahead. (After moving a vehicle 5 m (16 ft) or more with front wheels positioned straight ahead, make sure that the vehicle moves straight ahead.)
2) Turn the ignition switch to OFF.
3) Disconnect the ground cable from battery and wait for at least 60 seconds before starting work.
4) Remove the driver's airbag module assembly.
   (1) Using a hexagon wrench etc. wrapped by protective tape, insert the snap pins and release the locks (3 locations).

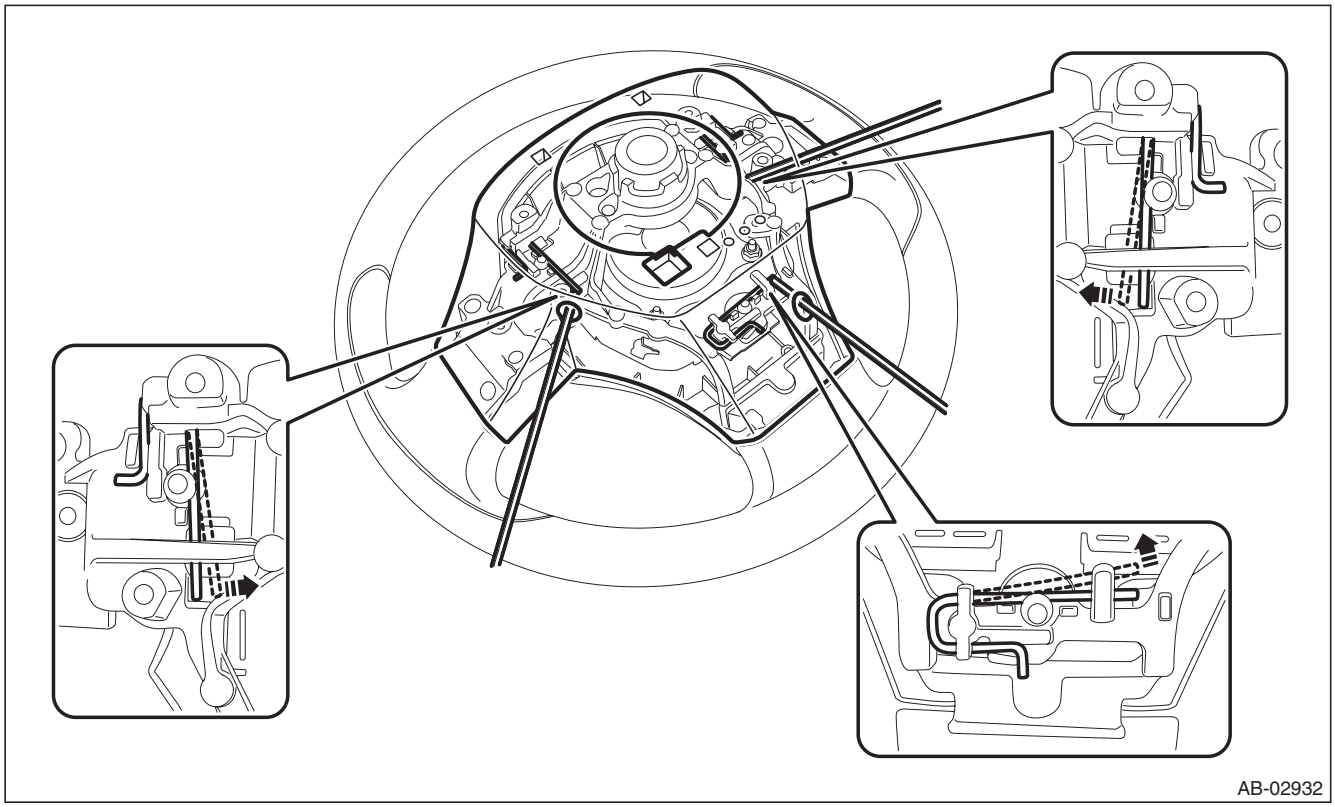

GETtheMANUALS.org

(2) Disconnect the horn harness and airbag connector and remove the airbag module assembly. <Ref. to AB-21, DRIVER'S AIRBAG MODULE, CURTAIN AIRBAG MODULE & PRETENSIONER, PROCEDURE, Airbag Connector.>

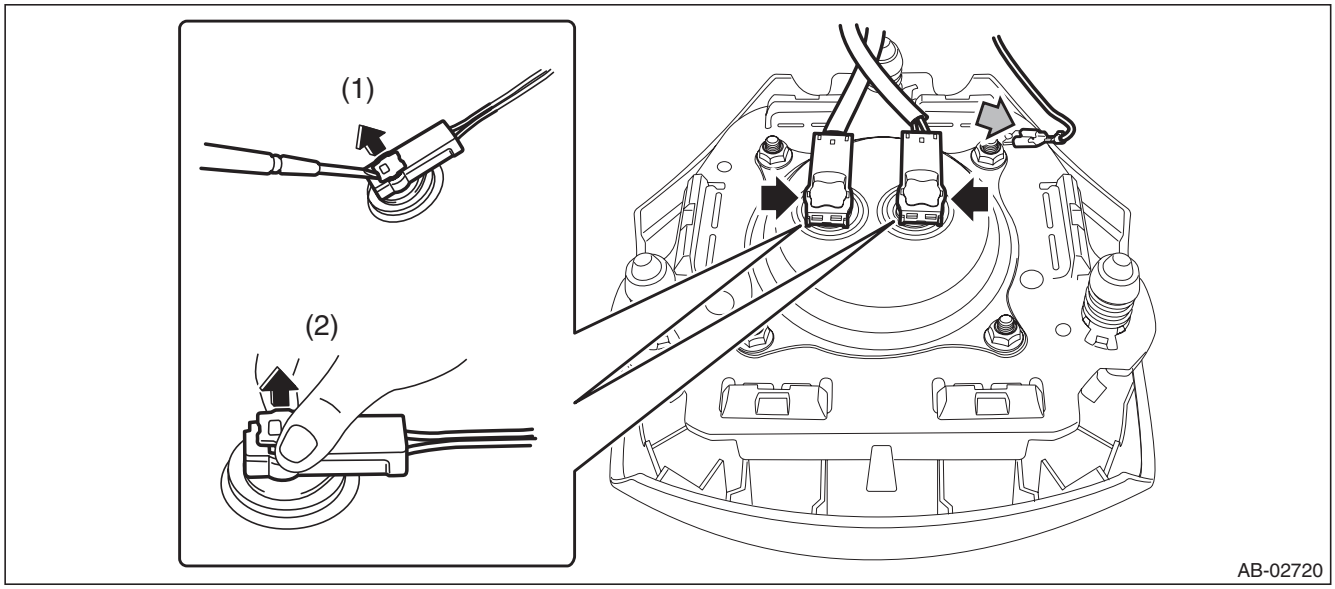

B: INSTALLATION

CAUTION:

- **Refer to "CAUTION" of "General Description" before handling the airbag module. <Ref. to AB-9, CAUTION, General Description.>**
- **Do not allow harness and connectors to interfere or get tangled up with other parts.**

1) Before installation, inspect the following items and replace any faulty part with a new one.
- Airbag module is cracked or deformed.
- Harness and/or connector is cracked, deformed or open.
- Harness wire is exposed.
- The steering wheel is in the way, making it difficult to install the airbag module.
- The clearance between the driver's airbag module and steering wheel is not constant.

2) Install each part in the reverse order of removal.

GETtheMANUALS.org

5. Passenger's Airbag Module

A: REMOVAL

CAUTION:
Refer to "CAUTION" of "General Description" before handling the airbag module. <Ref. to AB-9, CAUTION, General Description.>
1) Turn the ignition switch to OFF.
2) Disconnect the ground cable from battery and wait for at least 60 seconds before starting work.
3) Remove the console front cover assembly.
- MT model
  1. Remove the shift knob.
  2. Release the clips and claws, then pull up the console front cover assembly.

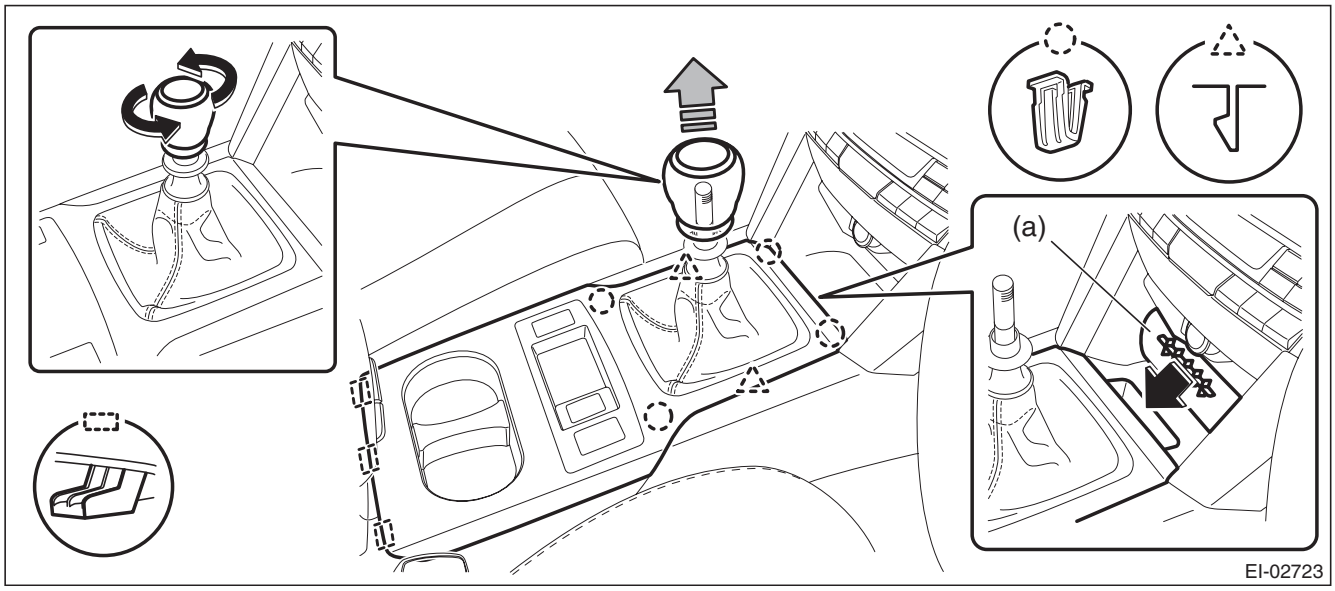

NOTE:
Turn over the front center pocket mat (a) and pull up the console front cover from the slit.
  3. Disconnect the harness connector and remove the console front cover assembly.

GETtheMANUALS.org

- AT model
  1. Remove the select lever knob.
     a. Lower the cover grip AT.
     b. Remove the clamp grip pin, then remove the select lever knob.
  2. Release the clips and claws, then pull up the console front cover assembly.

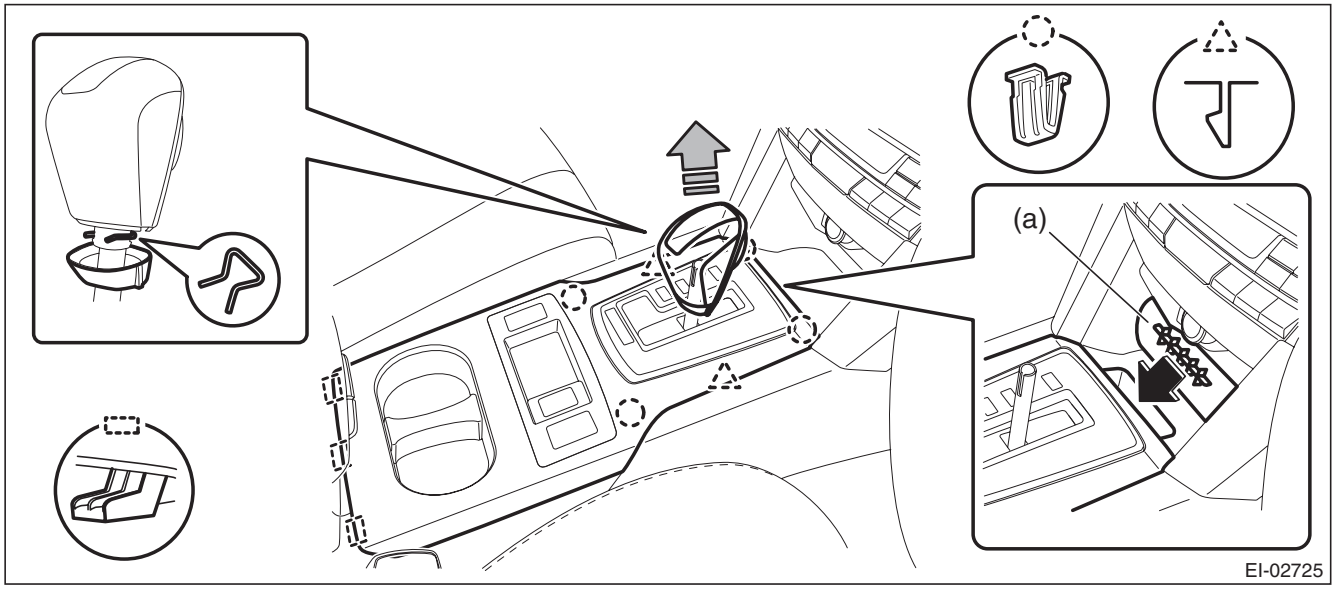

NOTE:
Turn over the front center pocket mat (a) and pull up the console front cover from the slit.

3. Disconnect the harness connector and remove the console front cover assembly.

4) Remove the left and right console front side cover assembly.
   (1) Remove the screws and release the clips (A) to (D) in order.
   (2) Remove the console front side cover assembly by pulling it up.

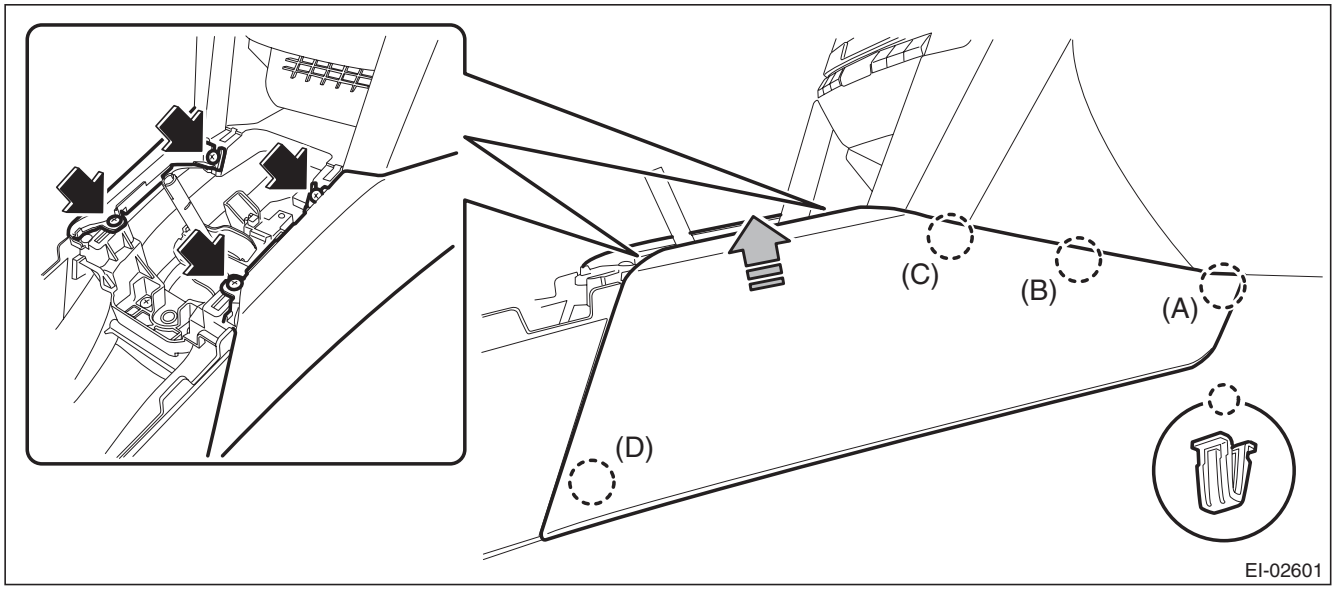

GETtheMANUALS.org

5) Remove the console box assembly.
(1) Move the seat forward, and remove the bolts after detaching the left and right caps.

NOTE:
For a model with power seat, connect the battery ground cable and move the seat. Then, disconnect the battery ground cable again and wait for 60 seconds at least before restarting the work.

(2) Remove the screws, disconnect the harness connector and remove the console box assembly.

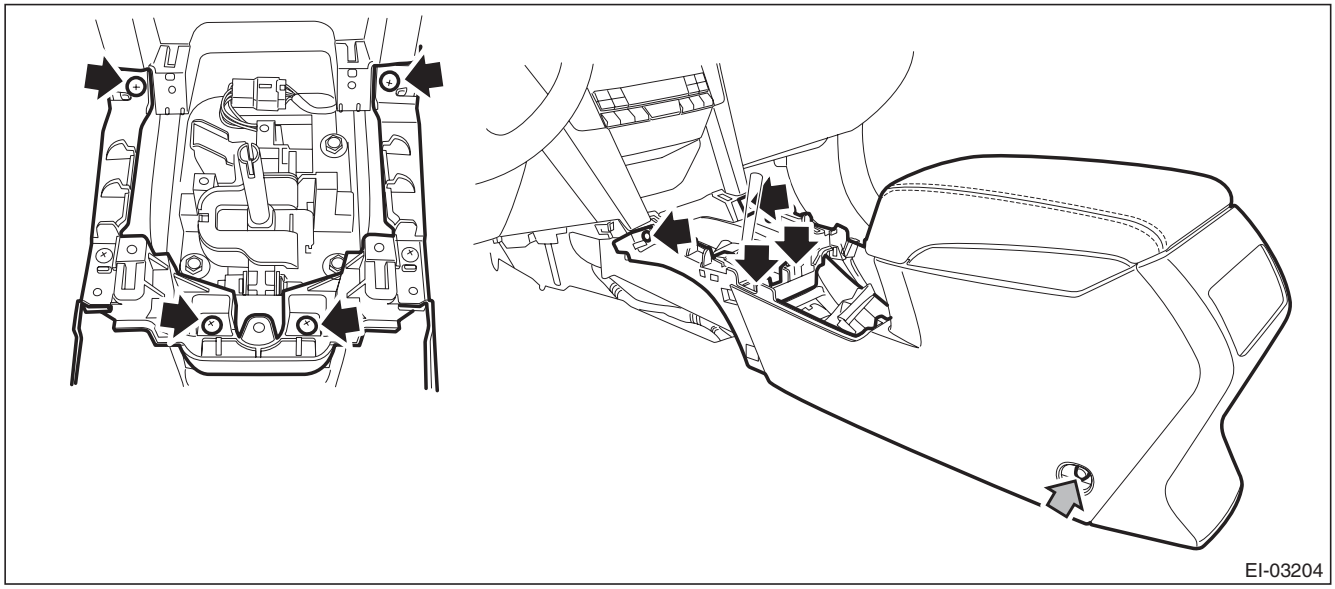

6) Remove the instrument panel lower cover.
(1) Remove the clips, and remove the instrument panel side cover LH.

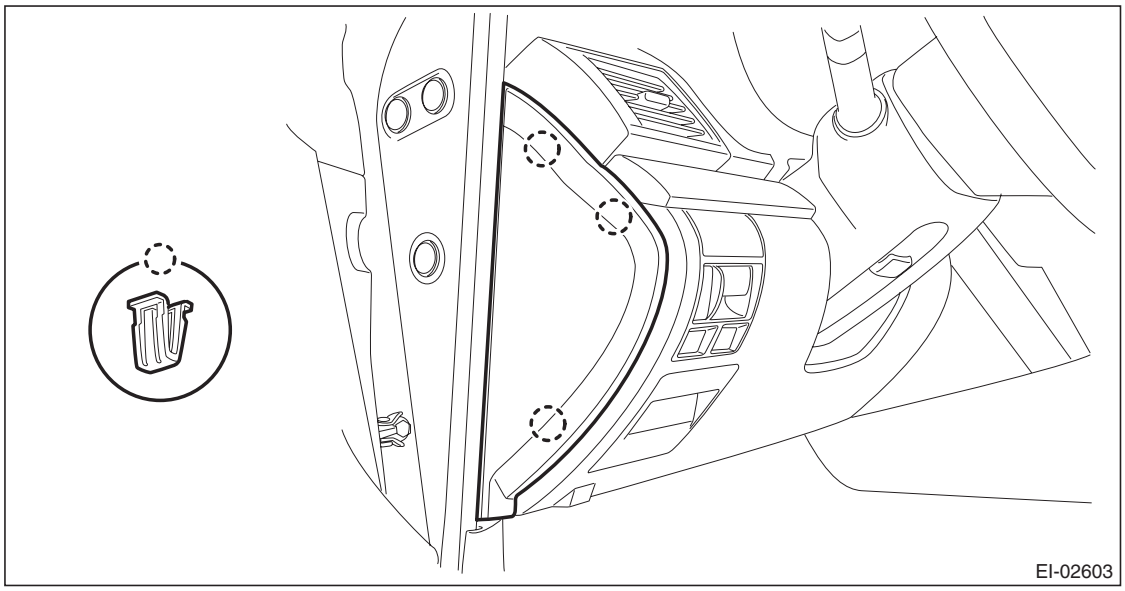

GETtheMANUALS.org

(2) Remove the clips and data link connector, and remove the instrument panel lower cover under.

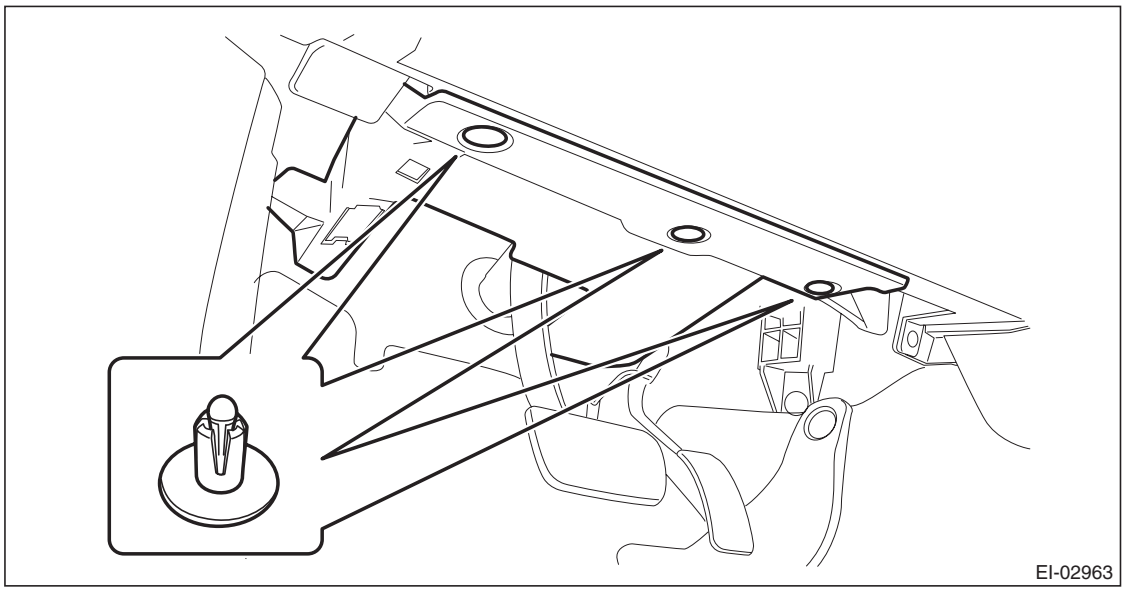

(3) Remove the screws and clips and release the claws, and remove the instrument panel lower cover while disconnecting the harness connectors.

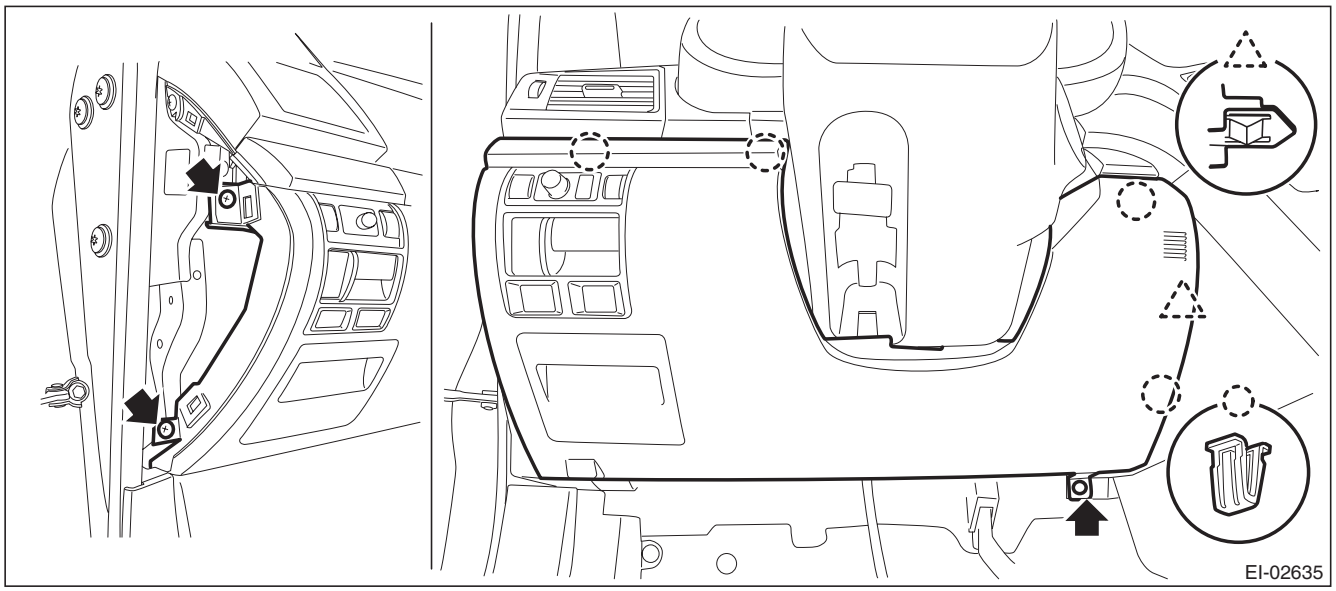

GETtheMANUALS.org

7) Remove the center panel assembly.

CAUTION:
Do not put your finger on the fin of the air vent grille. Doing so may damage the fin.

(1) Attach the protective tape (a) to the meter visor.

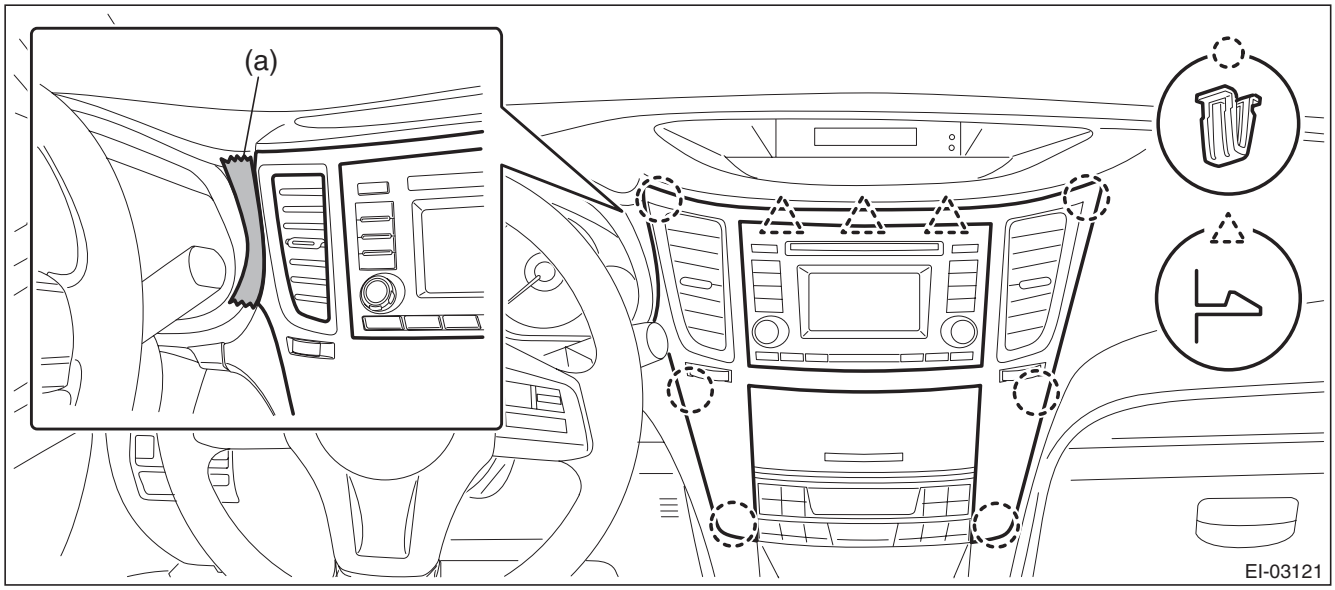

(2) Insert a finger into the air vent grille and release the left and right clips at the top of the center panel. (A), (B)

(3) Insert a finger into the air vent grille and release the left and right clips at the center of the center panel. (C), (D)

(4) Release the clips at the bottom of the center panel and remove the center panel assembly.

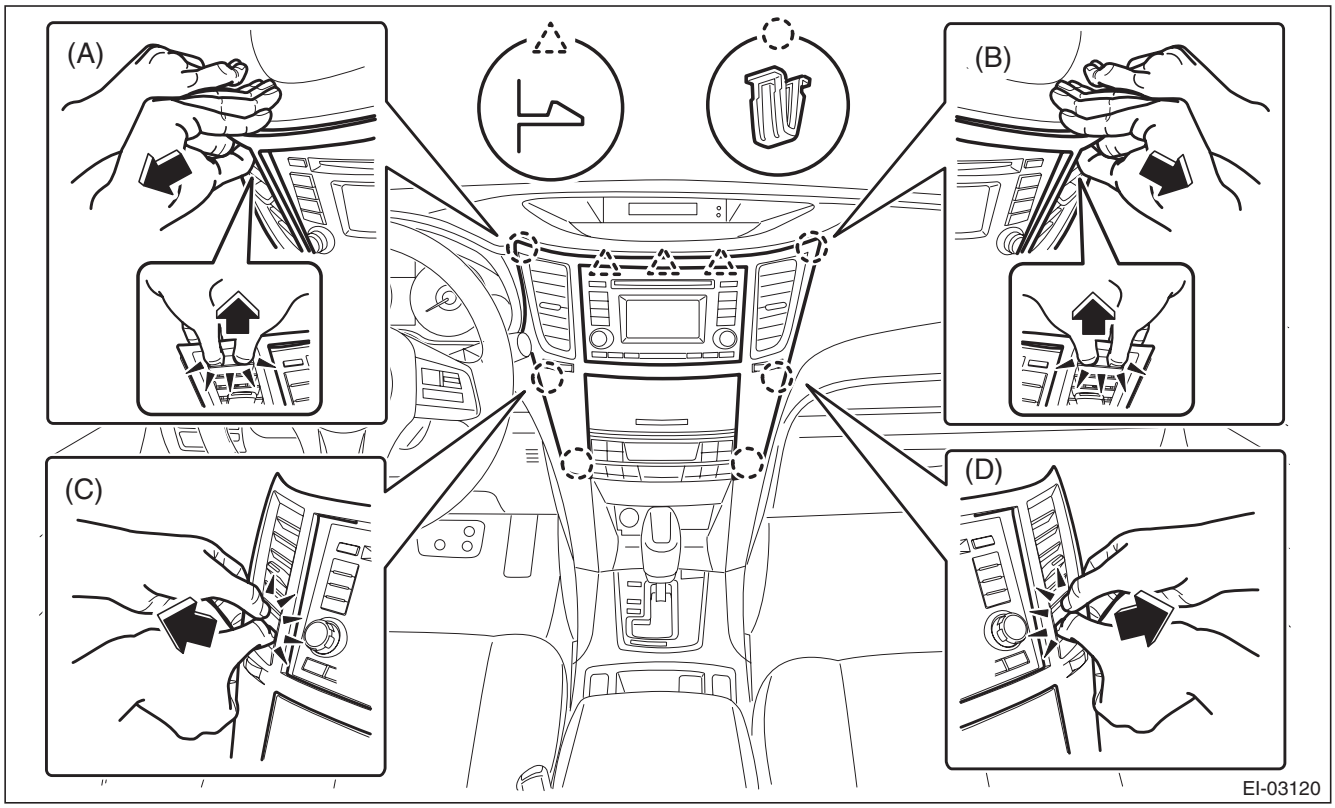

GETtheMANUALS.org

8) Remove the combination meter assembly.

CAUTION:
- **Be careful not to damage the meter or instrument panel.**
- **Pay particular attention to avoid damaging the meter glass.**

(1) Remove the screws and release the claws, then detach the starter cover assembly.

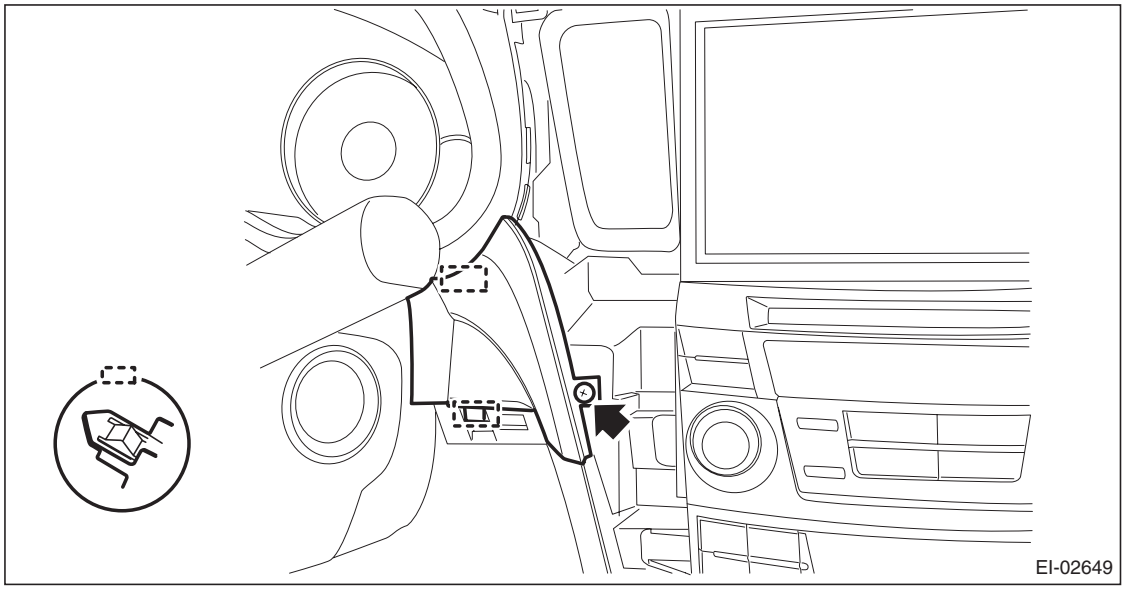

(2) Release the lock, tilt the steering column to the lowest end and fully extend the column by the telescopic system.

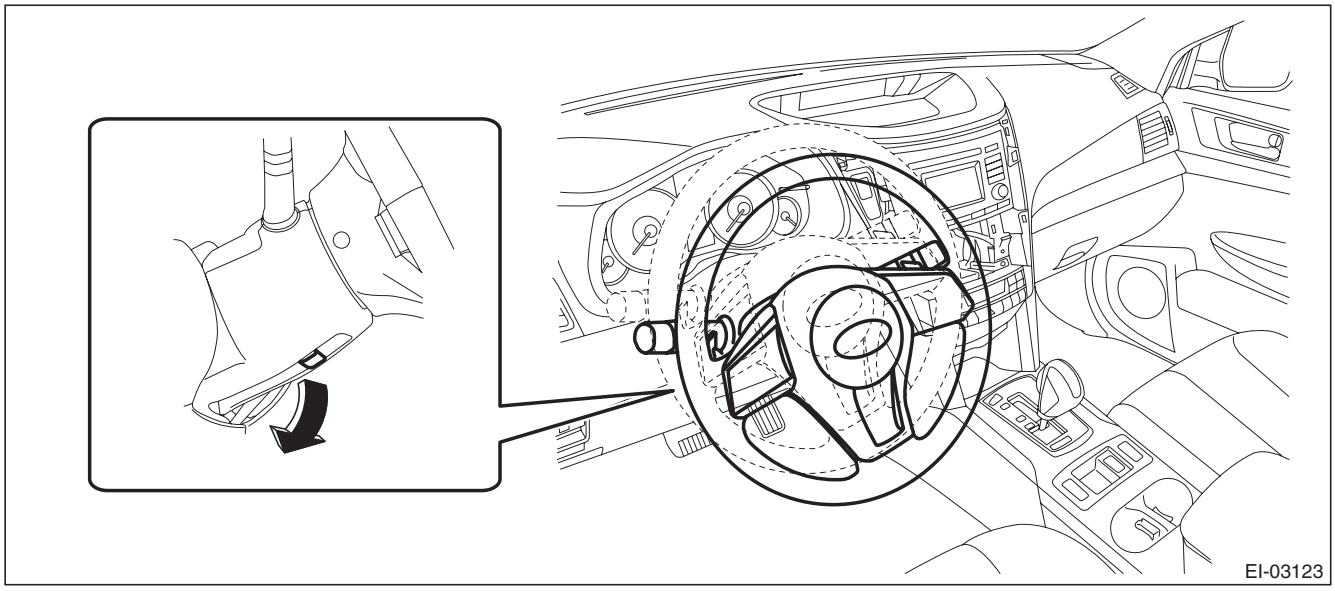

GETtheMANUALS.org

(3) Release the screws and clips, then detach the meter visor assembly.

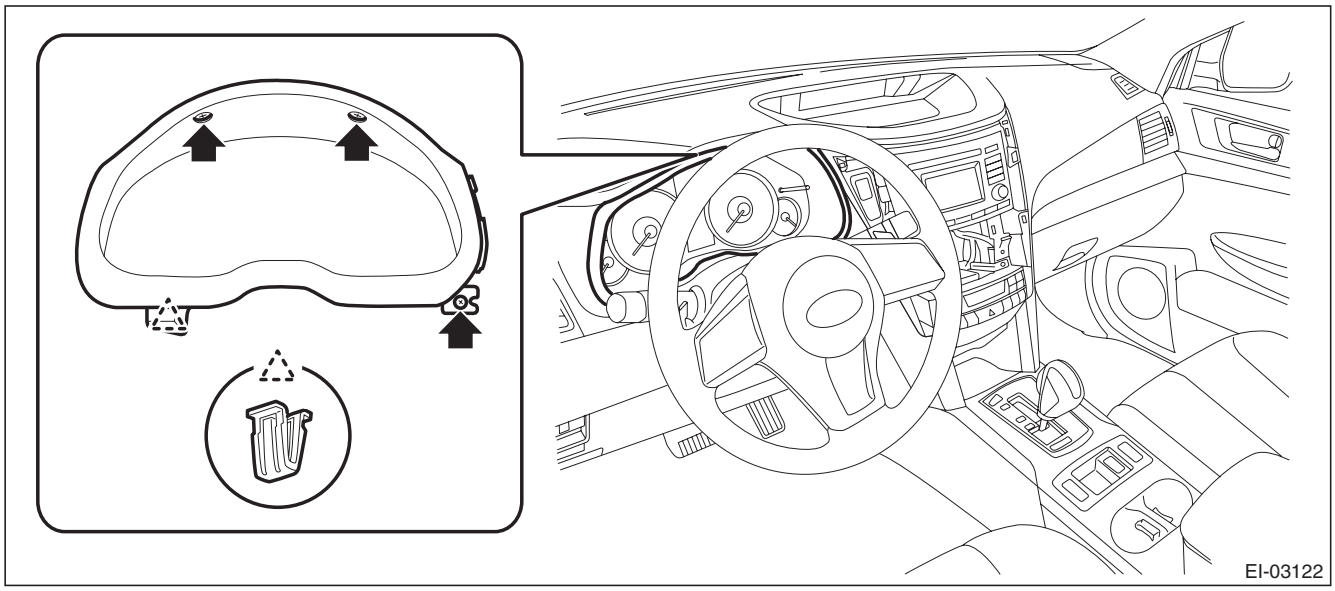

(4) Remove the screws and pull the steering COMPL upper cover toward you.

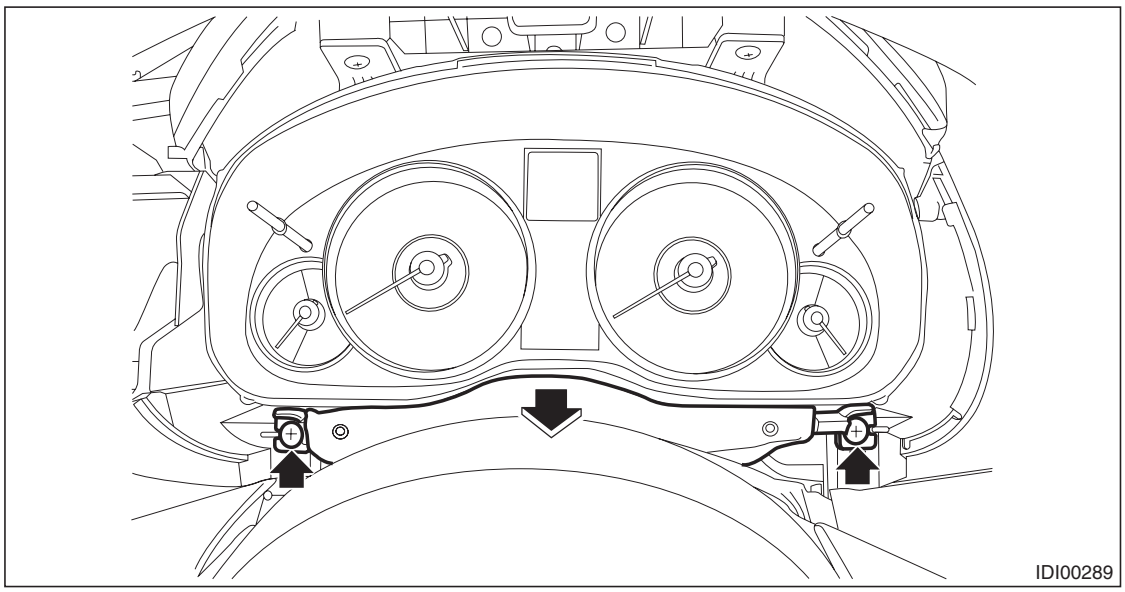

GETtheMANUALS.org

(5) Remove the screws and pull out the combination meter toward you to disconnect the connectors.

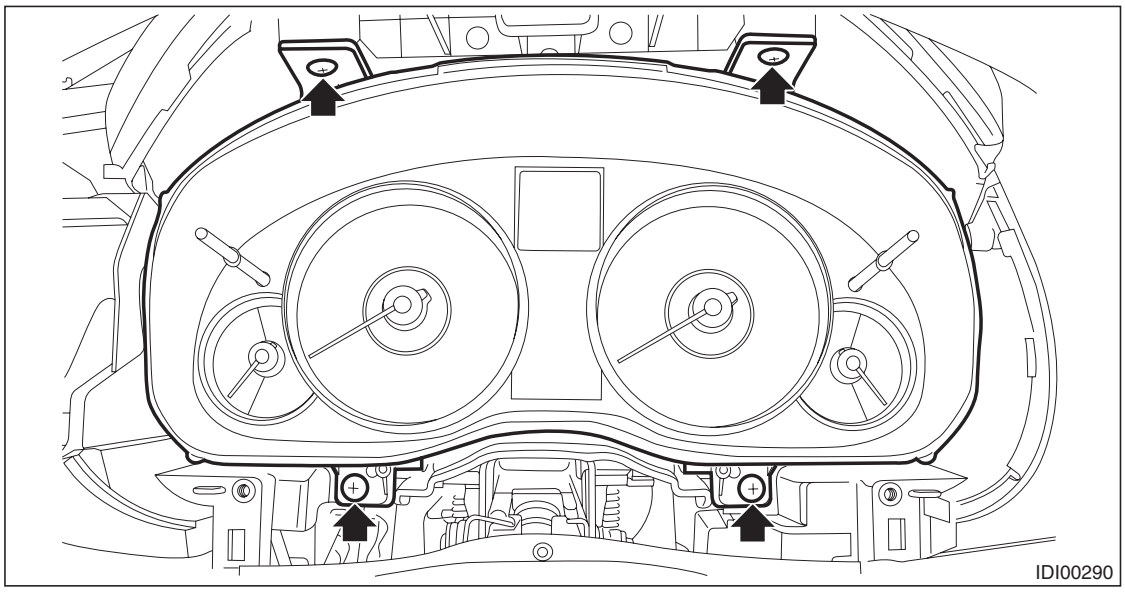

(6) Remove the combination meter assembly as shown in the figure.

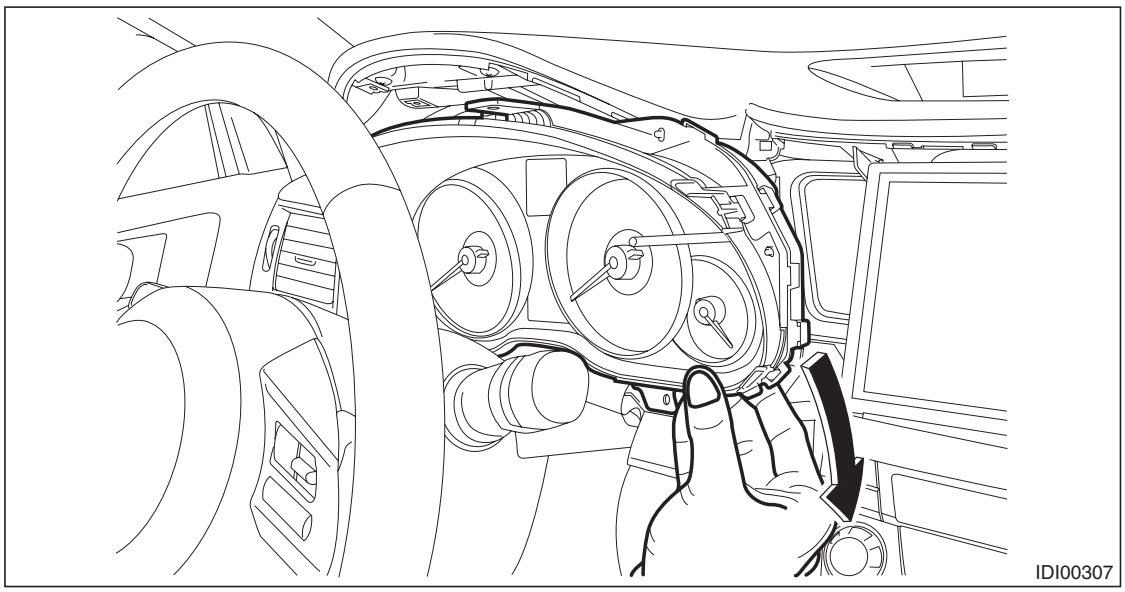

GETtheMANUALS.org

9) Remove the audio assembly.
   (1) Remove the left and right screws, and partially pull the audio out from center console.
   (2) Disconnect the connectors, and remove the audio assembly.

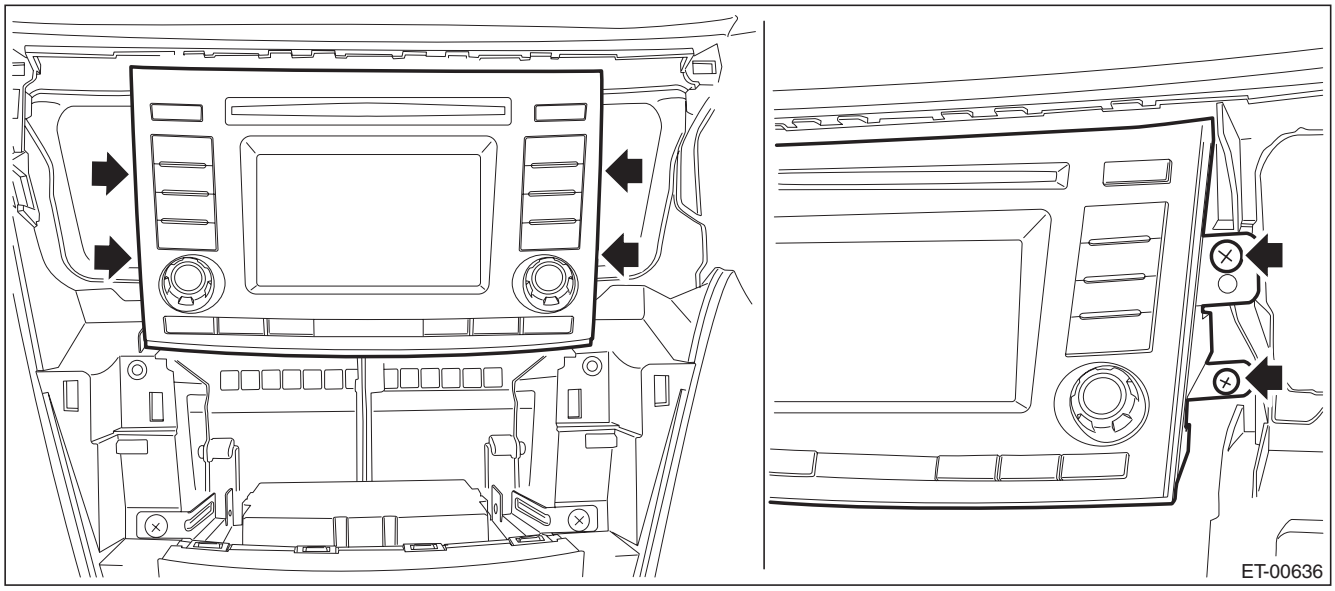

10) Remove the navigation assembly. (model with navigation)
   (1) Remove the left and right screws.
   (2) Disconnect the connectors, and remove the navigation assembly.

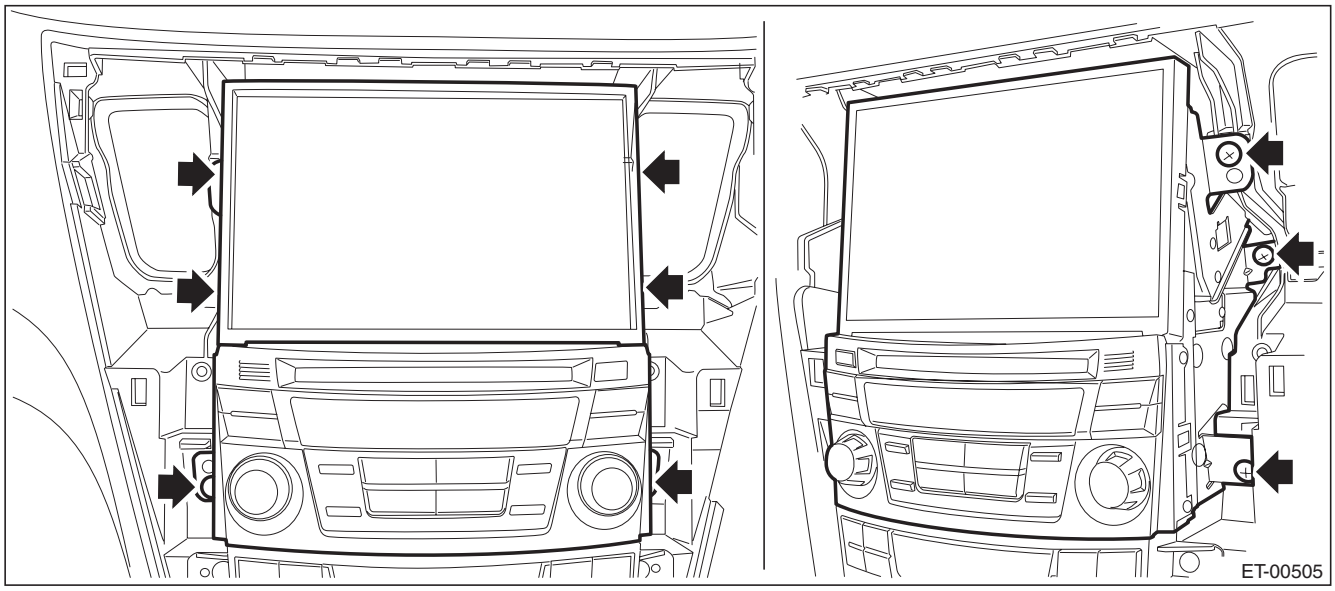

GETtheMANUALS.org

11) Remove the control panel assembly.
(1) Remove the screws, and pull out the control panel assembly toward you.
(2) Disconnect the connector, and remove the control panel assembly.

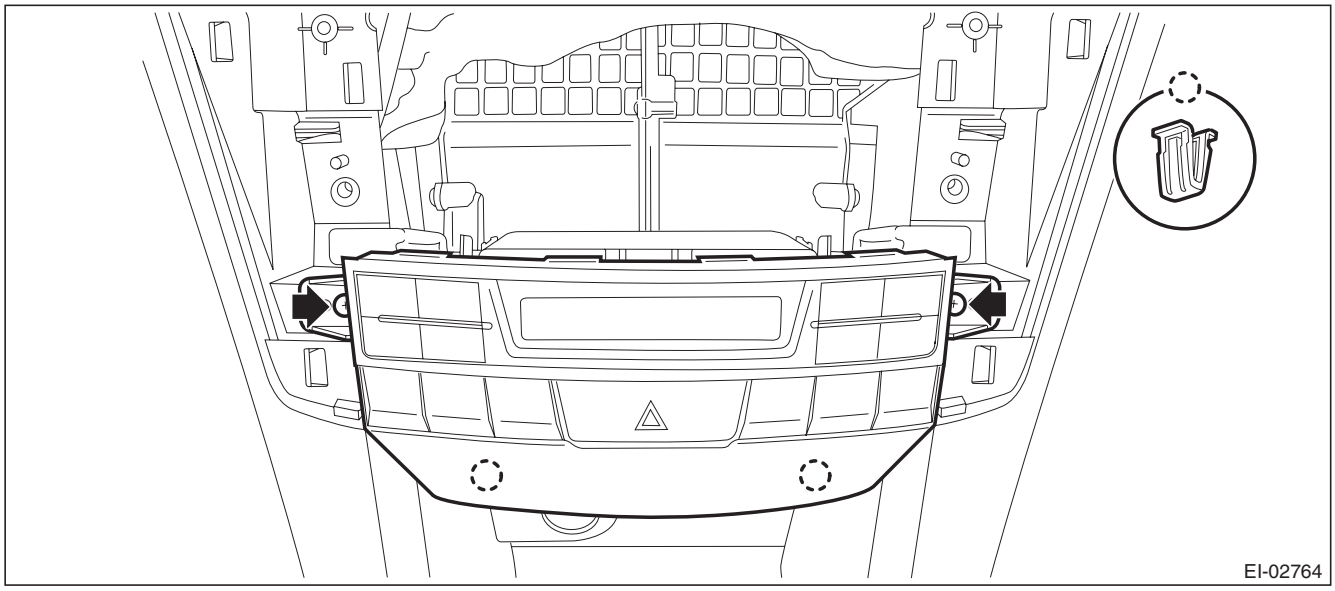

12) Remove the multi display assembly.

CAUTION:
Be careful not to damage the multi display or instrument panel.
(1) Detach the center speaker cover by releasing the claws and hooks.

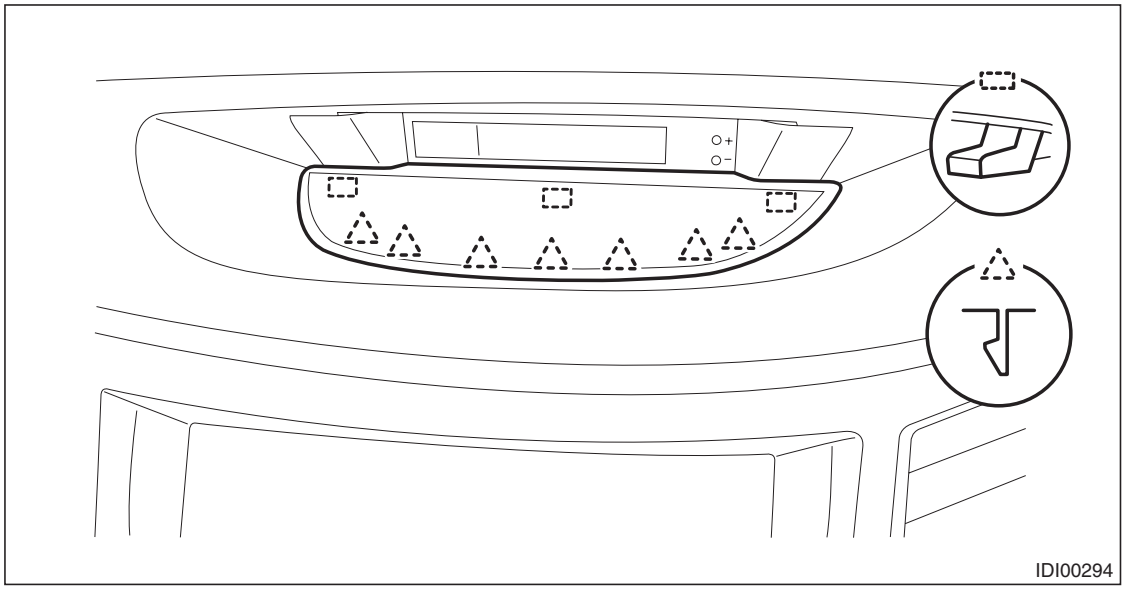

NOTE:
An easy way of removal is to first remove the audio assembly or navigation assembly and push up the cover from the backside.
(2) Release the clips and claws, detach the multi display panel LWR.

GETtheMANUALS.org

(3) Remove the screws and pull out the multi display toward you to disconnect the connectors.

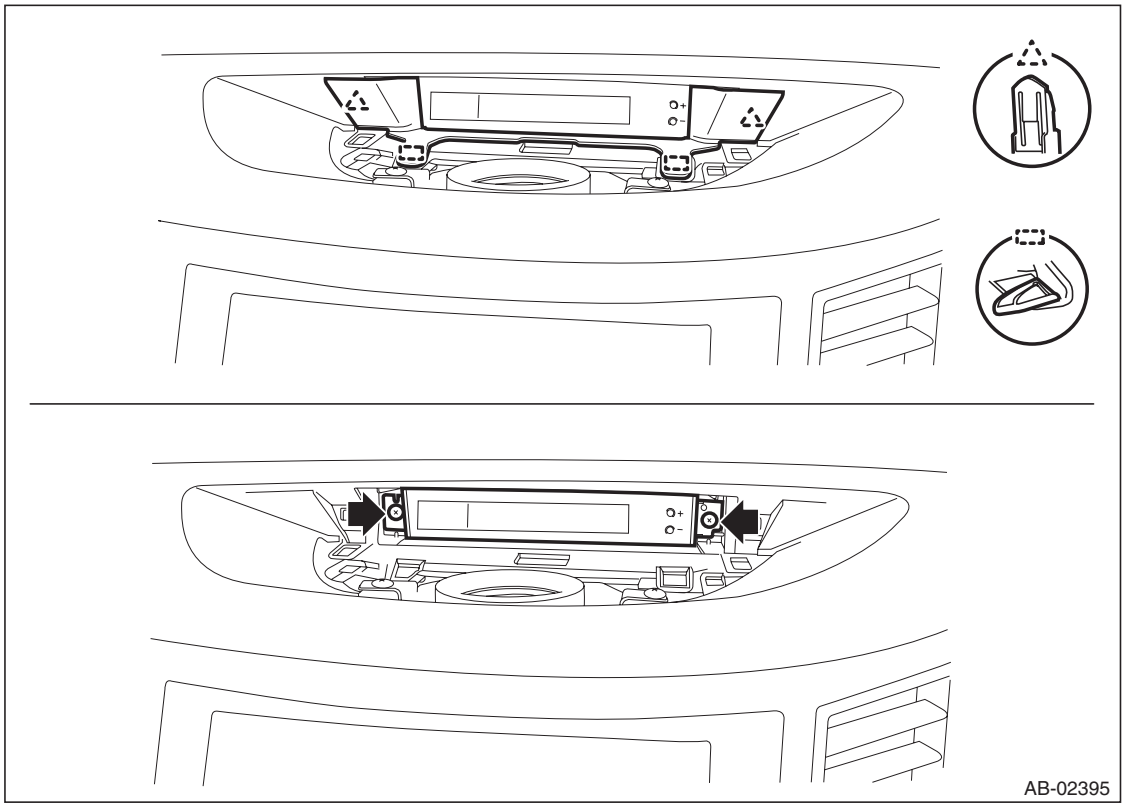

13) Remove the left and right front side speaker assembly. (Models with front side speaker)

(1) Release the clips and claws, then detach the side speaker cover.

CAUTION:
To remove the cover, use a plastic clip remover or equivalent tool.

(2) Remove the screws.

Preparation tool: Stubby screwdriver

(3) Disconnect the connector and remove the front side speaker assembly.

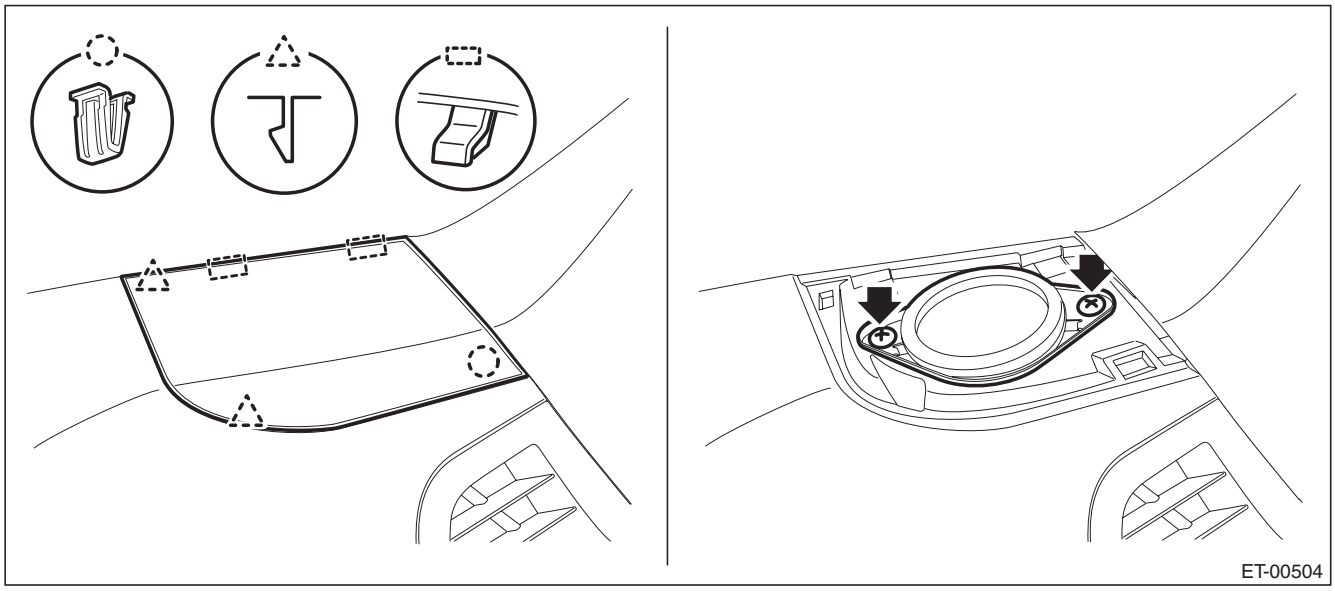

NOTE:
On the passenger's side, also disconnect the sunload sensor connector.

GETtheMANUALS.org

14) Remove the left and right front pillar trims.
   (1) Pull the upper part of the front pillar trim towards the center of the vehicle.
   (2) Insert long-nose pliers into the top part of the trim, grip the clip with the pliers and twist 90° in that position.

CAUTION:
Be careful not to damage the pillar trim surface and curtain airbag module when inserting the pliers.
   (3) Holding the clip twisted as in the previous step, remove the front pillar trim from the clip.
   (4) Remove the clip and the front pillar trim.

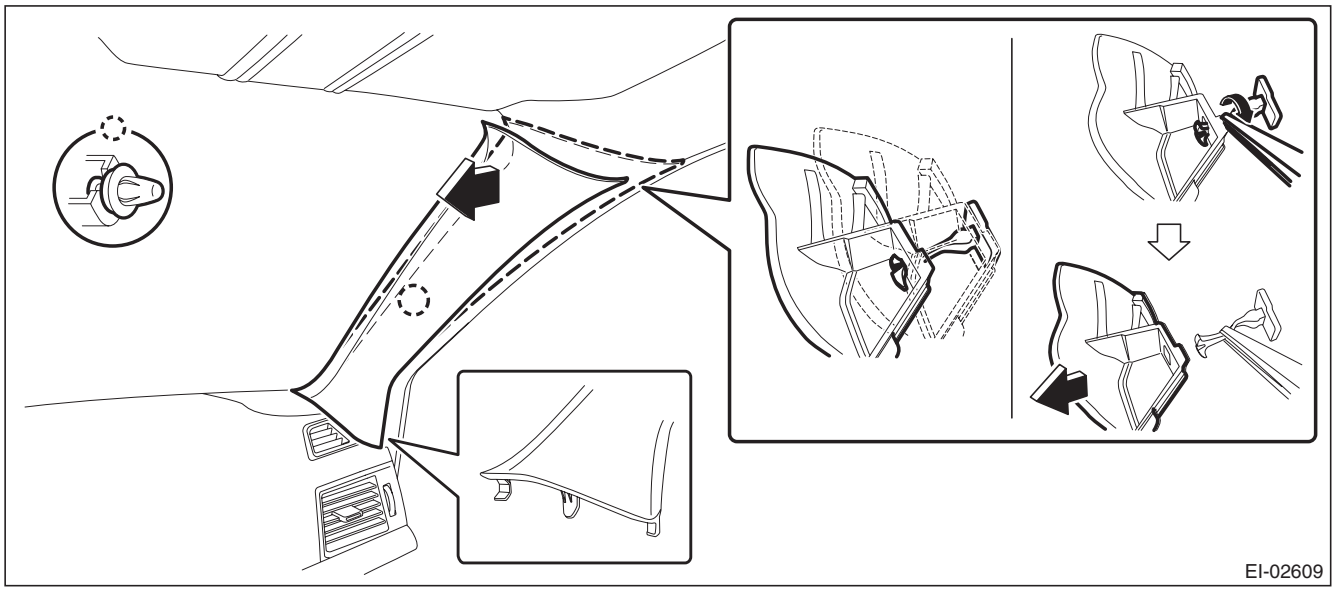

15) Remove the glove box lid assembly.
   (1) Remove the glove box damper.
   (2) Release the stoppers and remove the glove box lid assembly by pulling it toward you.

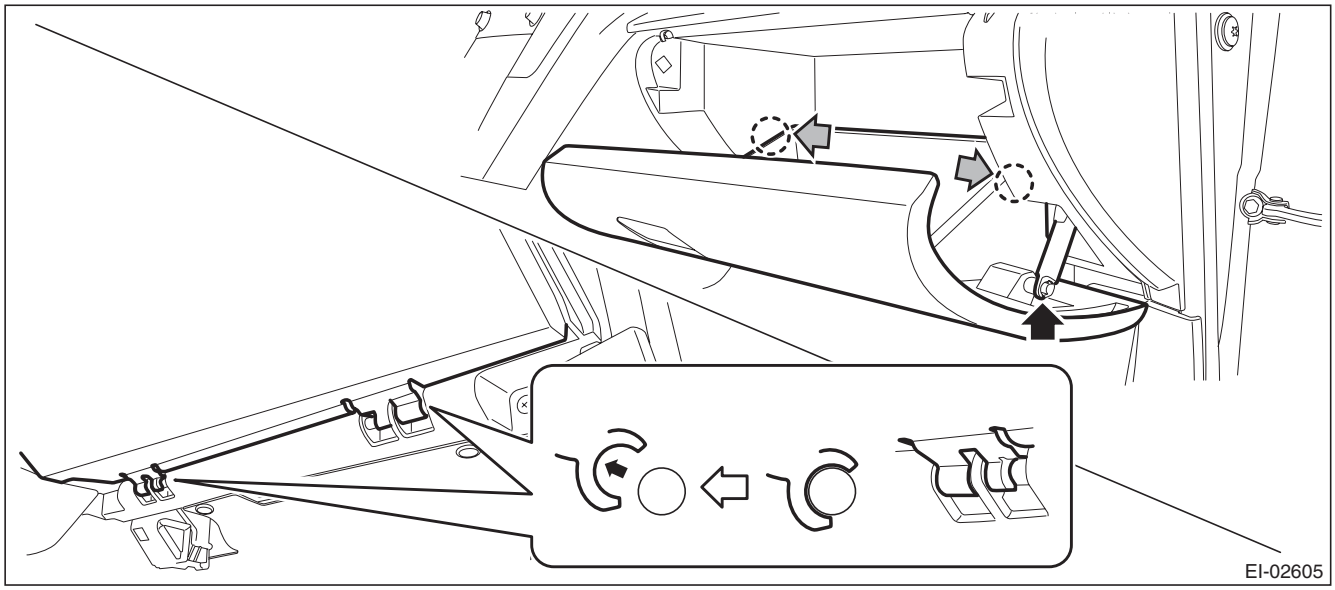

GETtheMANUALS.org

16) Remove the glove box back panel.
(1) Release the clips, and remove the instrument panel side cover RH.

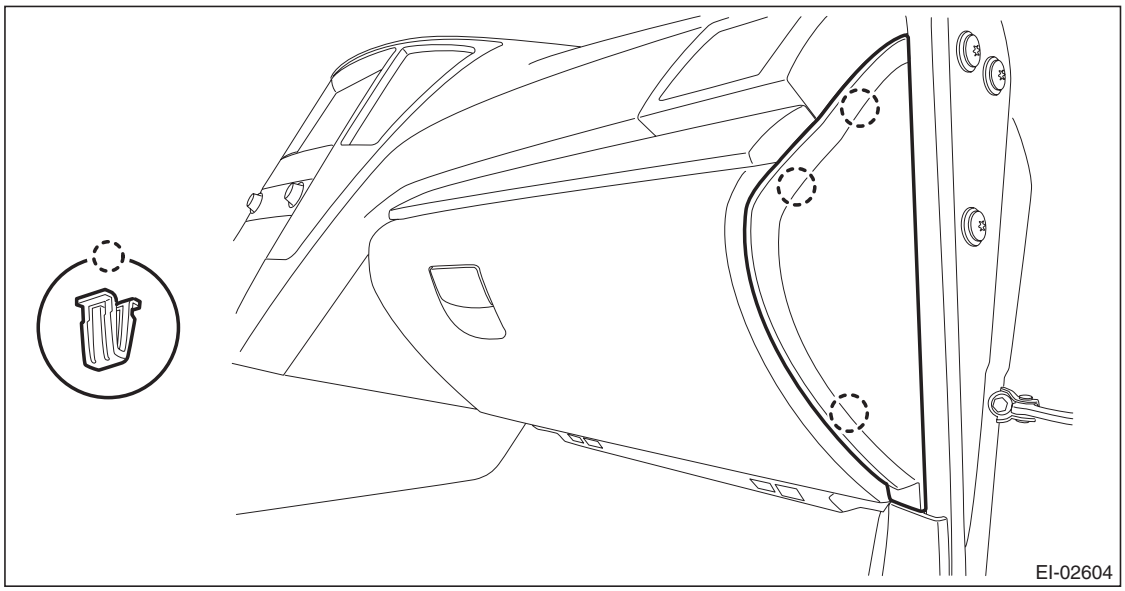

(2) Release the clips, and remove the glove box under cover.

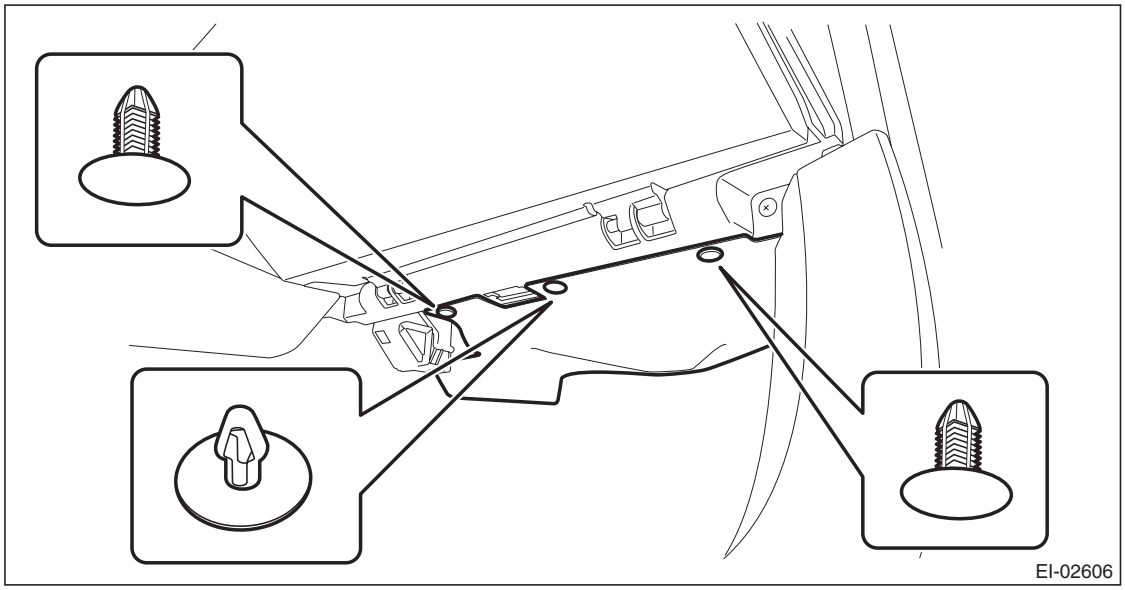

GETtheMANUALS.org

(3) Release the clips and claws, and remove the ornament panel assembly P.

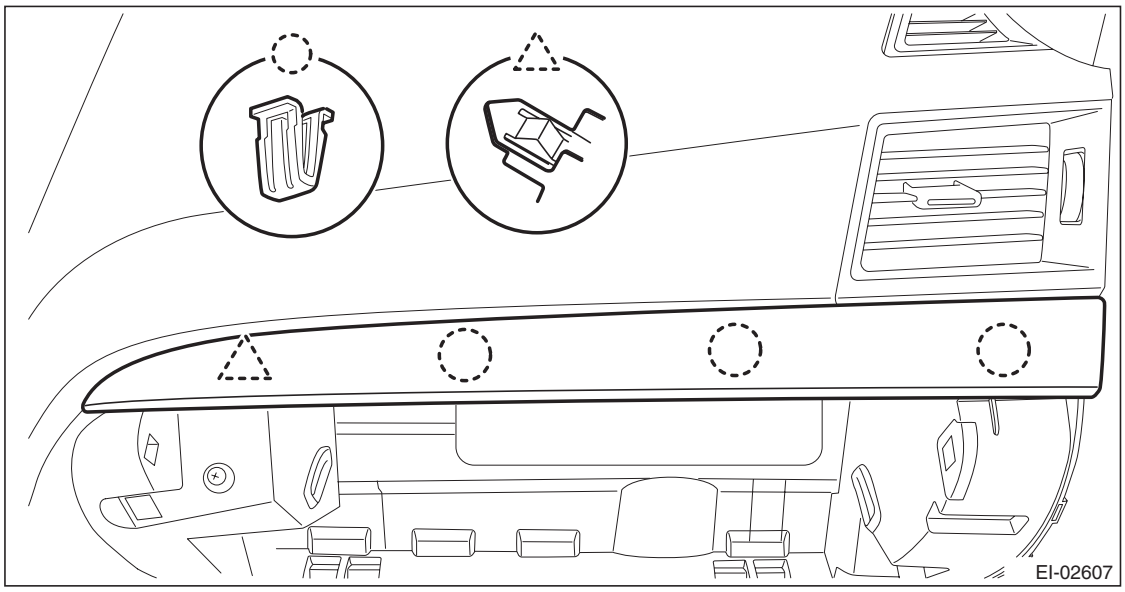

(4) Remove the screws and release the claws, then detach the glove box back panel.

CAUTION:
Pay attention to the glove box light LED harness.

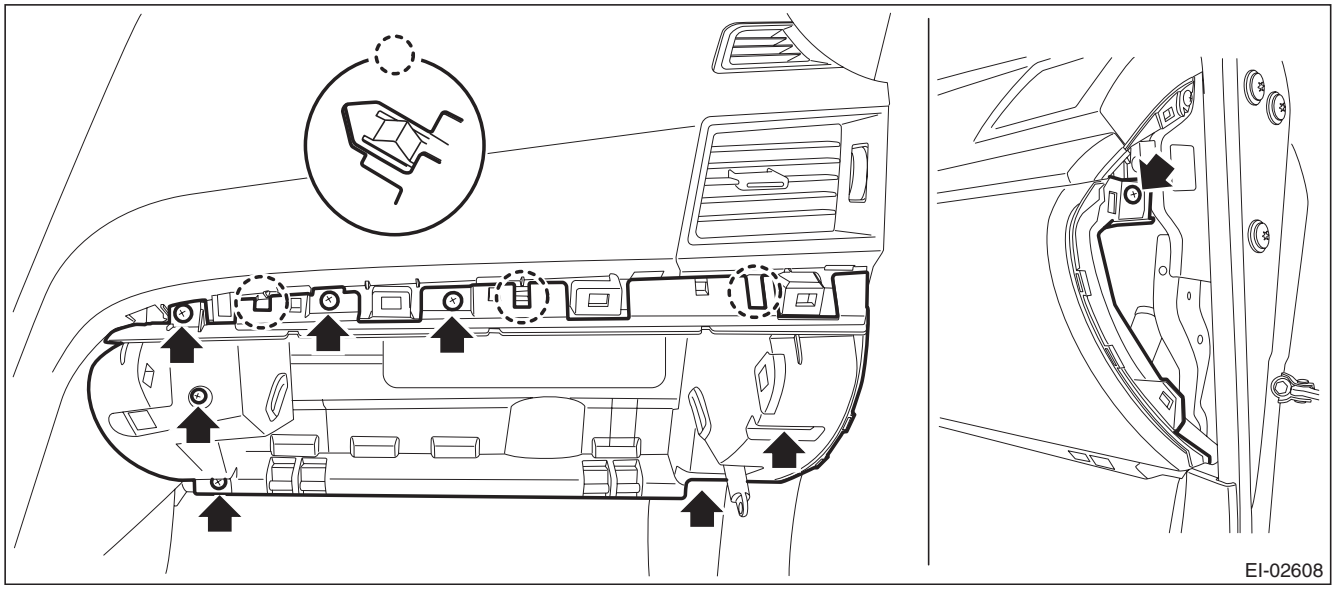

(5) Disconnect the glove box light LED connector.

GETtheMANUALS.org

17) Disconnect the connector from the passenger's airbag module assembly and remove the bolt.
(1) Release the connector and harness clamps and disconnect the airbag connector.

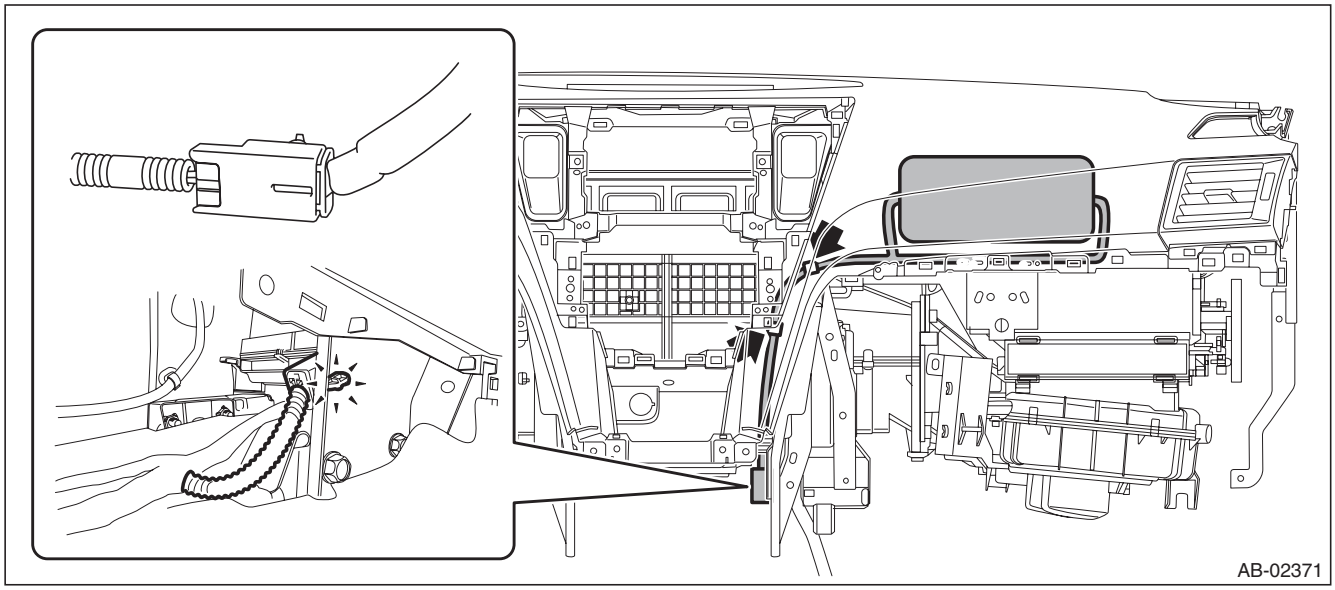

(2) Remove passenger's airbag module assembly bolts.

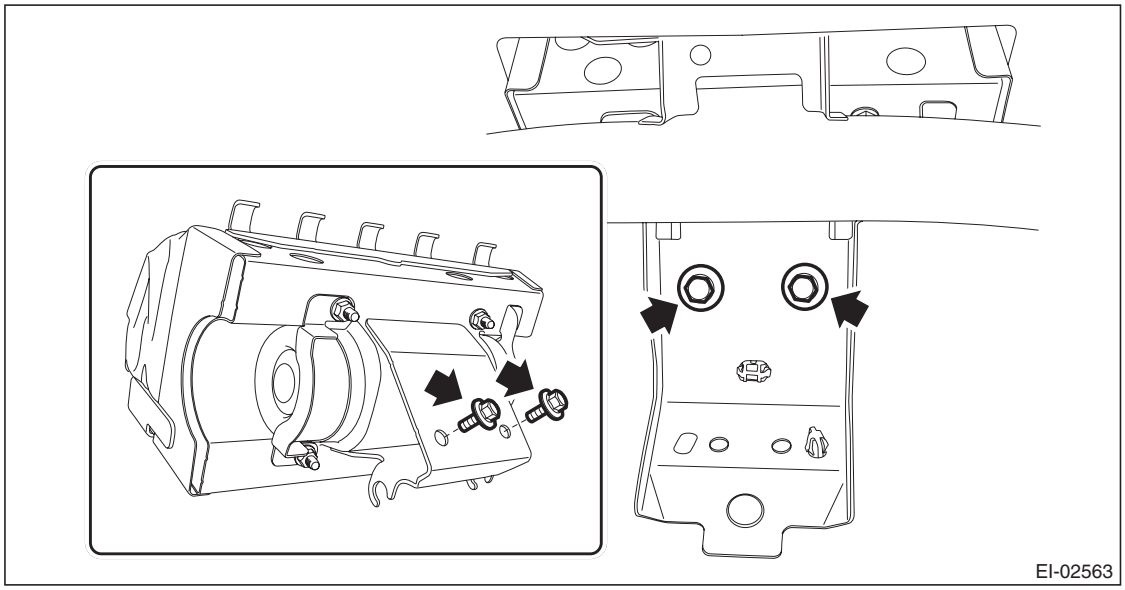

18) Remove the steering shaft assembly. <Ref. to PS-26, REMOVAL, Steering Column.>

GETtheMANUALS.org

19) Remove the instrument panel assembly.
(1) Remove the screws. (A), (B), (C), (D), (E), (F), (G), (H), (I)

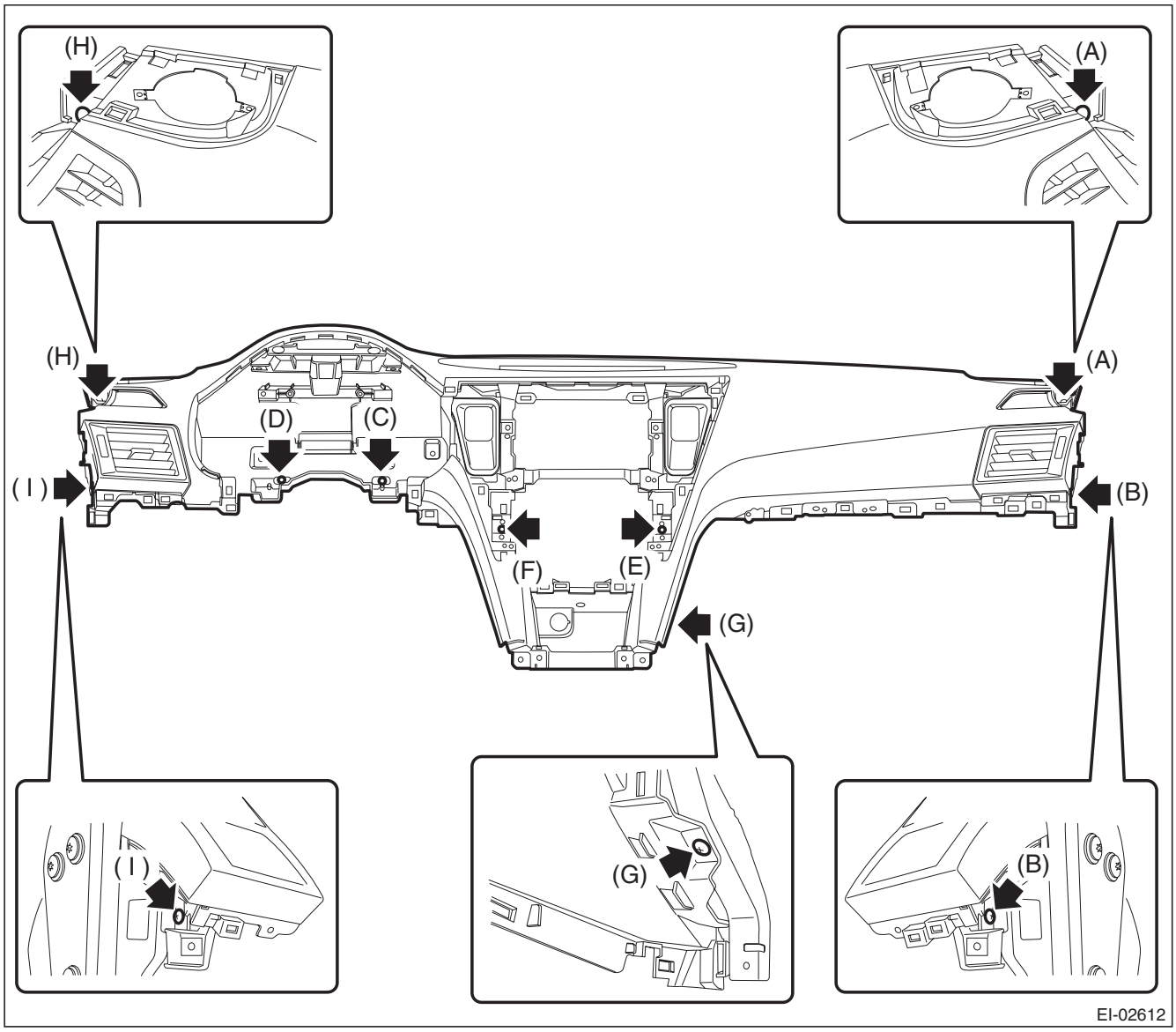

GETtheMANUALS.org

(2) Pull out the instrument panel assembly toward you and release the clamps of the left and right front side speakers.

Preparation tool: Stubby screwdriver

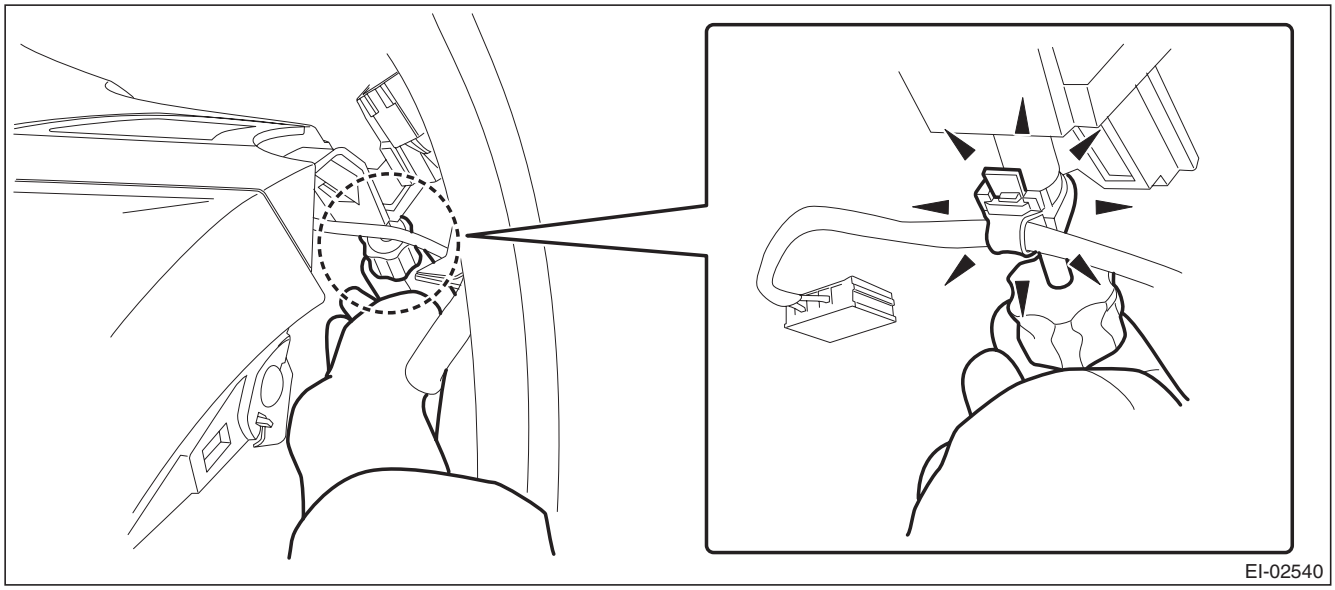

(3) After checking that all harness clamps and connectors are released and disconnected, remove the instrument panel assembly.

CAUTION:
Be careful not to damage the instrument panel surface and interior trims.

20) Remove the heater vent duct.
(1) Remove the screws, and remove the center vent duct.
(2) Release the claws and remove the screws, then detach the side vent duct RH.

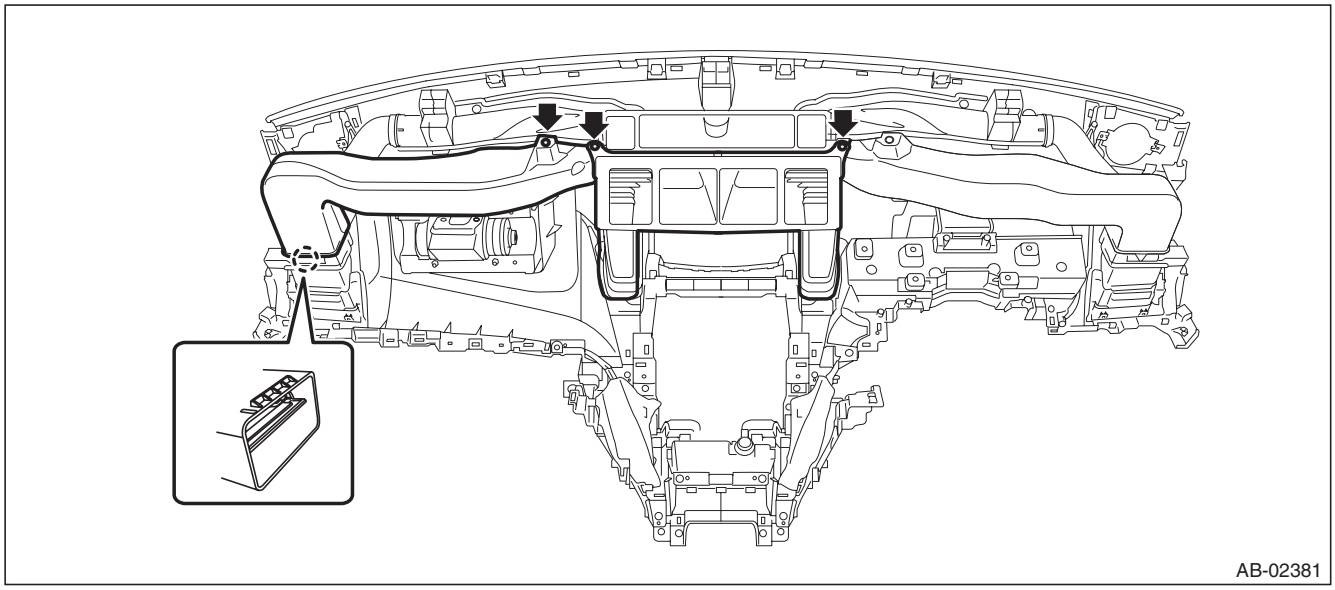

GETtheMANUALS.org

21) Remove the claws, and remove the passenger's airbag module.

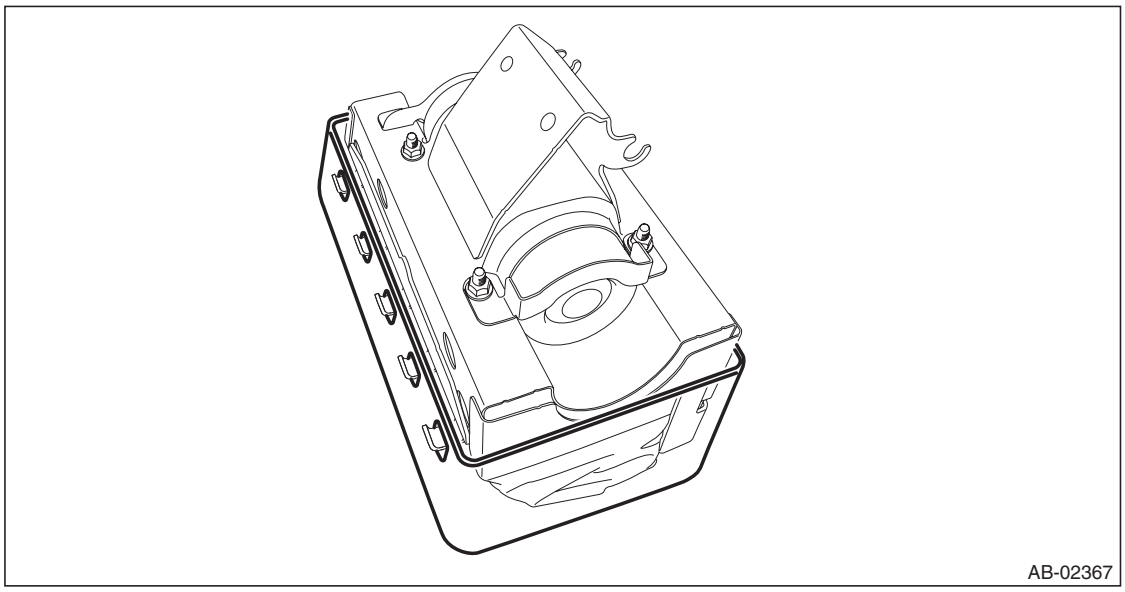

22) For handling of the removed airbag module, refer to "CAUTION". <Ref. to AB-9, CAUTION, General Description.>

B: INSTALLATION

CAUTION:
- **Refer to "CAUTION" of "General Description" before handling the airbag module. <Ref. to AB-9, CAUTION, General Description.>**
- **Do not allow harness and connectors to interfere or get tangled up with other parts.**
- **Do not reuse the clips in the upper section of the front pillar trim. Always replace them with new ones.**

Once removed from the pillar trim, the clip retention power deteriorates and the front pillar trim may come off.

1) Before installation, inspect the following items and replace any faulty part with a new one.
- Passenger's airbag lid (instrument panel surface) is cracked or deformed.
- Airbag module is cracked or deformed.
- Harness and/or connector is cracked, deformed or open.
- Harness wire is exposed.
- Mounting bracket is cracked or deformed.

2) Install each part in the reverse order of removal.

Tightening torque:
Passenger's airbag module: 7.5 N·m (0.76 kgf-m, 5.5 ft-lb)
Console box: 6.5 N·m (0.66 kgf-m, 4.8 ft-lb)

GETtheMANUALS.org

6. Side Airbag Module

A: REMOVAL

CAUTION:
Refer to "CAUTION" of "General Description" before handling the airbag module. <Ref. to AB-9, CAUTION, General Description.>

NOTE:
Remove the passenger's side by referring to driver's side.
1) Remove the headrest.

NOTE:
For models with headrest monitor, remove the headrest in the following procedures.
1. Fold the backrest all the way backward, and then remove the headrest.
2. Place the headrest on the seating face.
3. Return the backrest to the original position.

2) Disconnect the ground cable from battery and wait for at least 60 seconds before starting work.

NOTE:
For the power seat, remove the slide rail installing bolt before removing the battery ground.
3) Remove the front seats.
(1) Remove the slide rail installing bolt.
a) Tilt the backrest forward and move the seat to the front most position.
b) Remove the rear bolt cover (A) and remove the two bolts.
c) Move the seat to the rearmost position.
d) Remove the front bolt cover (B) and remove the two bolts.

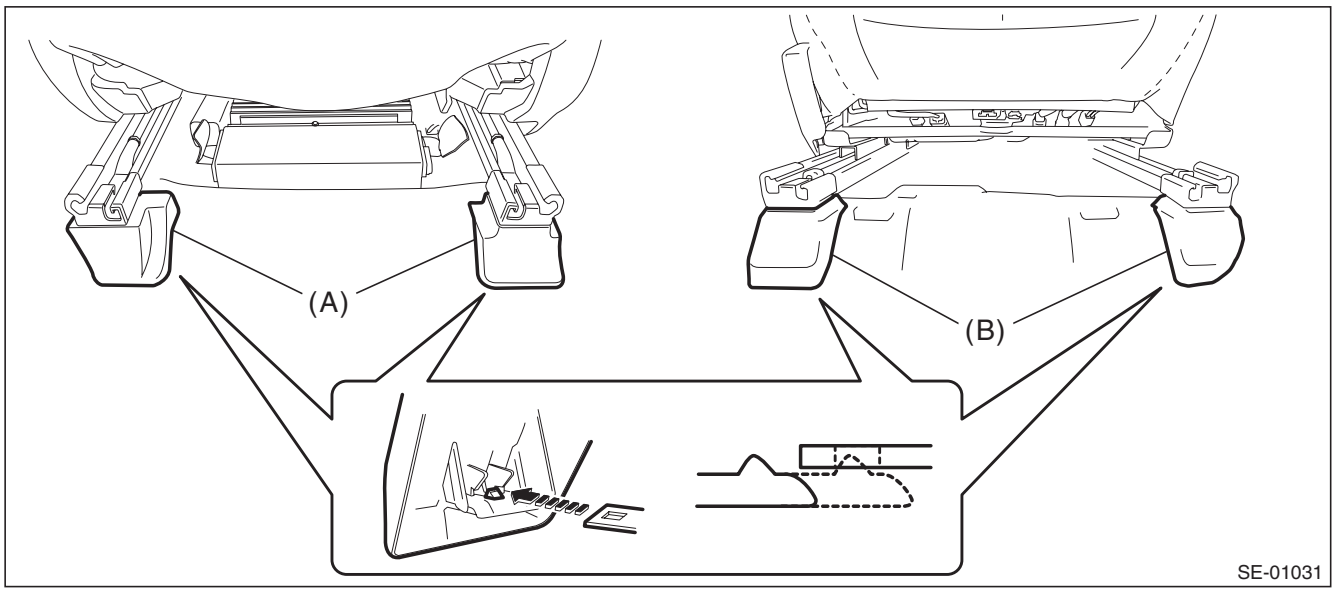

(2) Disconnect the connector under the seat.

CAUTION:
Disconnect the ground cable from battery, and wait 60 seconds before disconnecting the connector.
- Seat belt warning light connector (driver's seat)
- Occupant detection system harness connector (passenger's seat)
- Side airbag connector
- Seat heater connector (model with seat heater)
- Power seat connector (model with power seats)
- Headrest monitor connector (model with headrest monitor)

GETtheMANUALS.org

(3) Take out the front seat from the vehicle.

CAUTION:
Be careful not to damage the body.

4) Remove the seat lifter lever. (Manual seat)
(1) Using a flat tip screwdriver, remove the seat lifter lever cover (a).
(2) Remove the screw and remove the seat lifter lever.

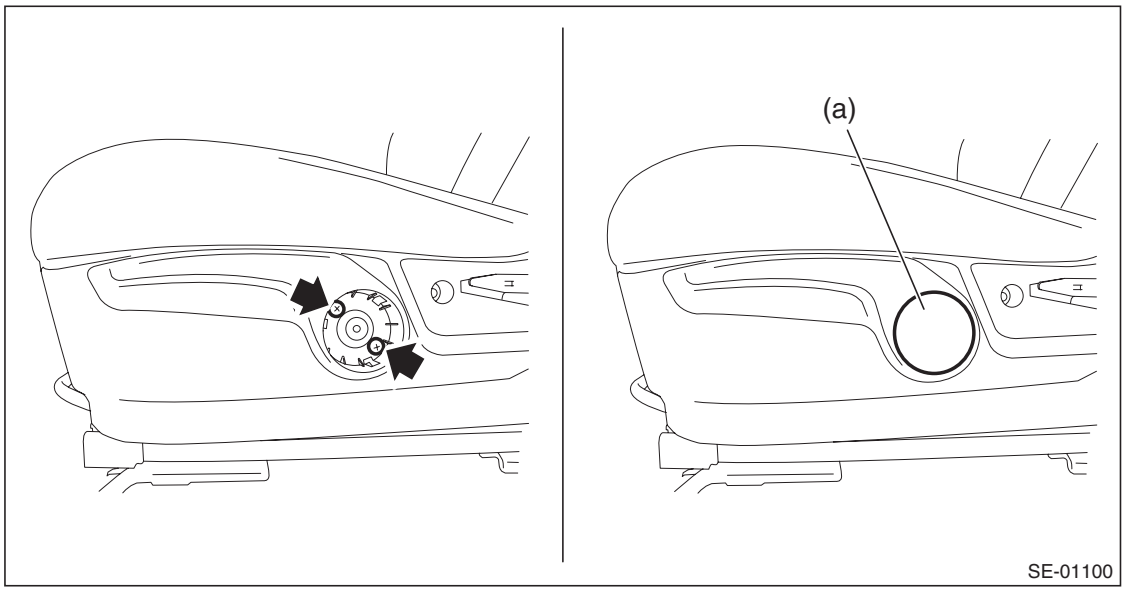

5) Remove the reclining lever cover. (Manual seat)
(1) Pull up the reclining lever and release the claws on the back.
(2) Pull out the reclining lever cover.

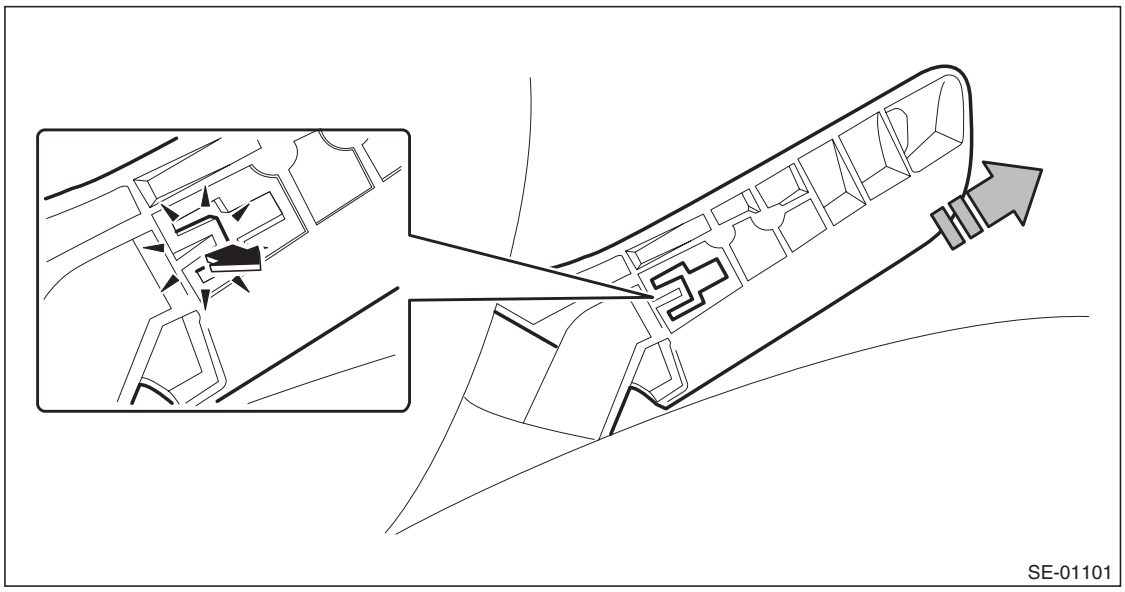

GETtheMANUALS.org

6) Remove the seat side cover OUT.

- MANUAL SEAT
  1. Remove the screws.
  2. Release the claw in the upper section of the seat side cover.
  3. Release the claw in the rear section of the seat side cover.
  4. Release the claw in the front section of the seat side cover, then remove the seat side cover OUT.

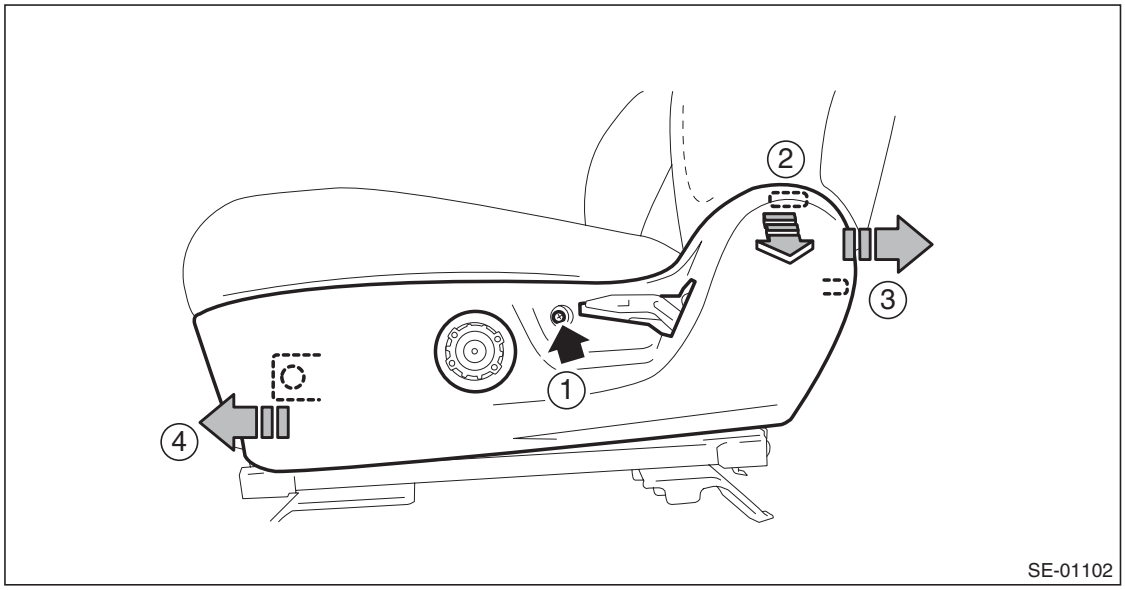

- POWER SEAT
  1. Release the claw in the rear section of the seat side cover.
  2. Release the claw in the upper section of the seat side cover.
  3. Remove the clip and release the claw in the front section of the seat side cover
  4. Disconnect the power seat switch connector and remove the seat side cover OUT.

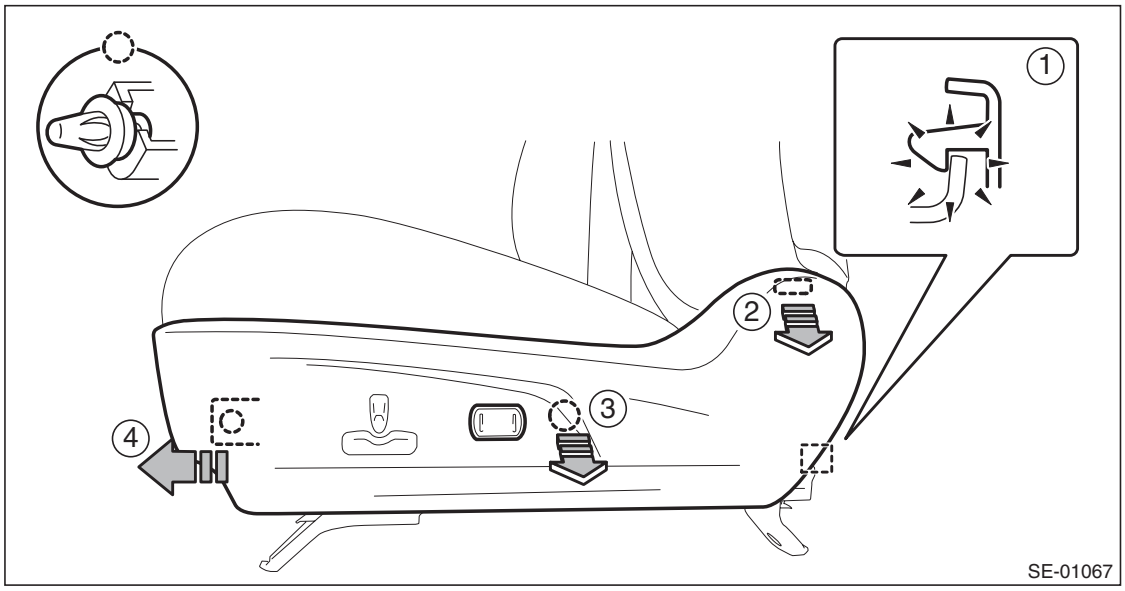

GETtheMANUALS.org

7) Remove the inner seat belt assembly.
   (1) Remove the nut and remove the inner seat belt assembly.
   (2) Remove the clip for the inner seat belt harness located under the seat cushion.

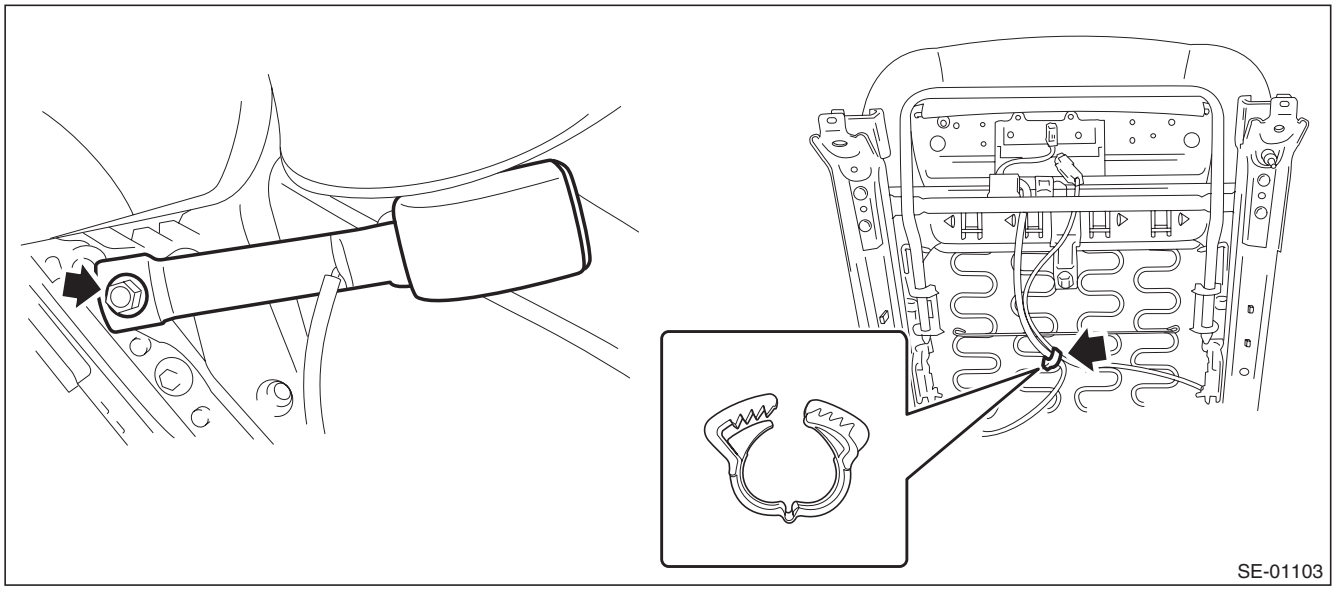

8) Remove the seat side cover IN.
- MANUAL SEAT
  1. Remove the screws.
  2. Release the claw in the upper section of the seat side cover.
  3. Release the claw in the rear section of the seat side cover, then remove the seat side cover IN.

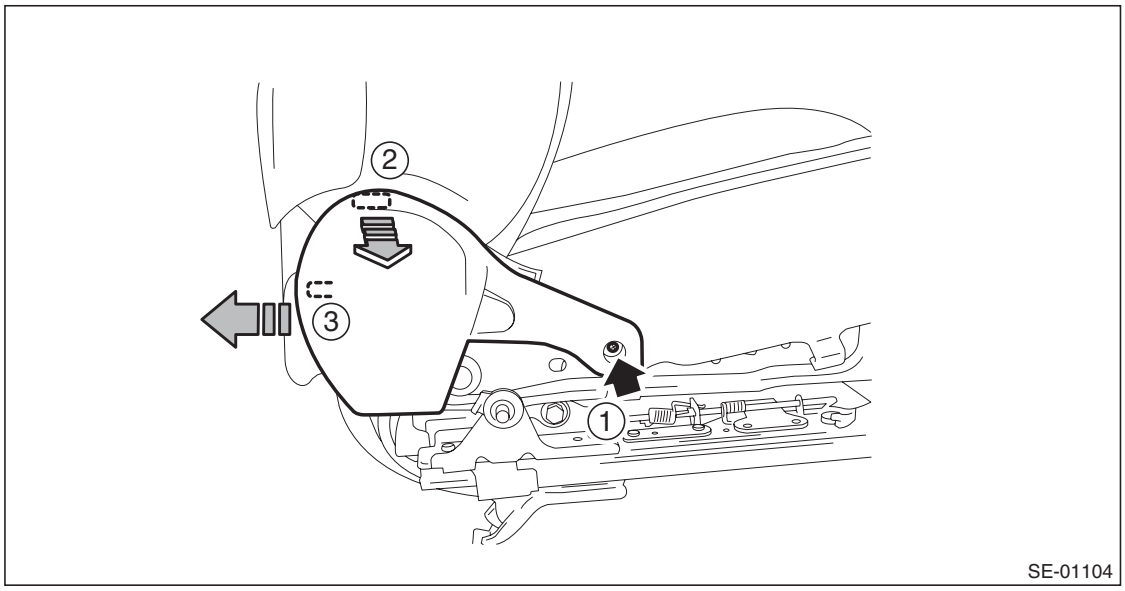

GETtheMANUALS.org

- POWER SEAT
  1. Remove the screws.
  2. Release the claw in the rear section of the seat side cover.
  3. Release the claw in the upper section of the seat side cover, then remove the seat side cover IN.

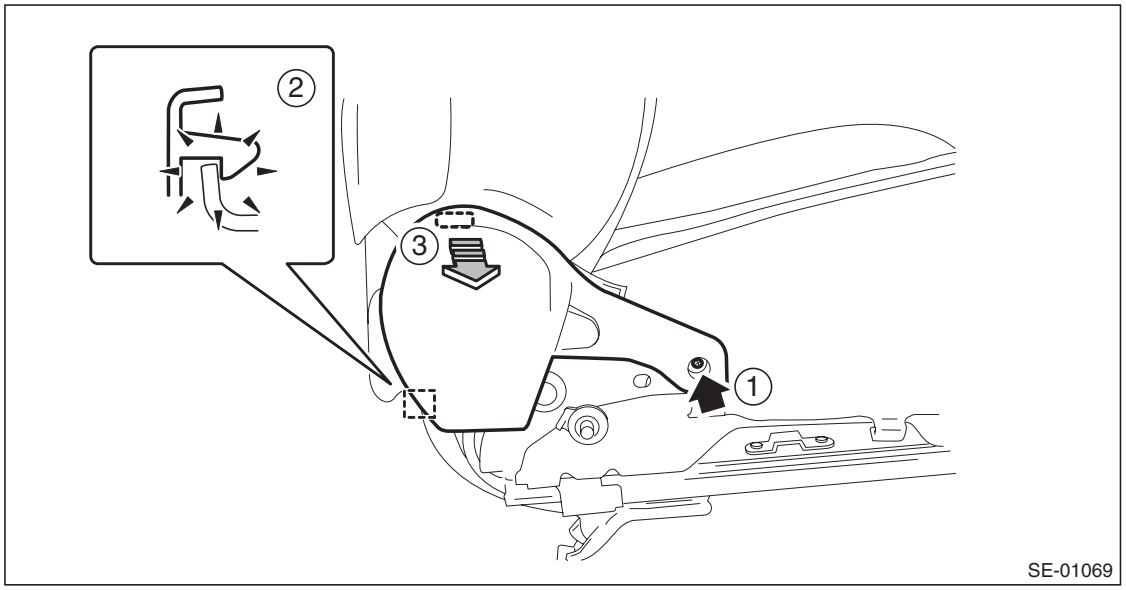

9) Separate the backrest assembly and the seat cushion assembly.
   (1) Remove the clip for the side airbag harness located under the seat cushion.
   (2) Remove the bolts from reclining hinge of both sides.
   (3) While taking care not to damage the airbag harness, separate the backrest assembly and the seat cushion assembly.
   - MANUAL SEAT

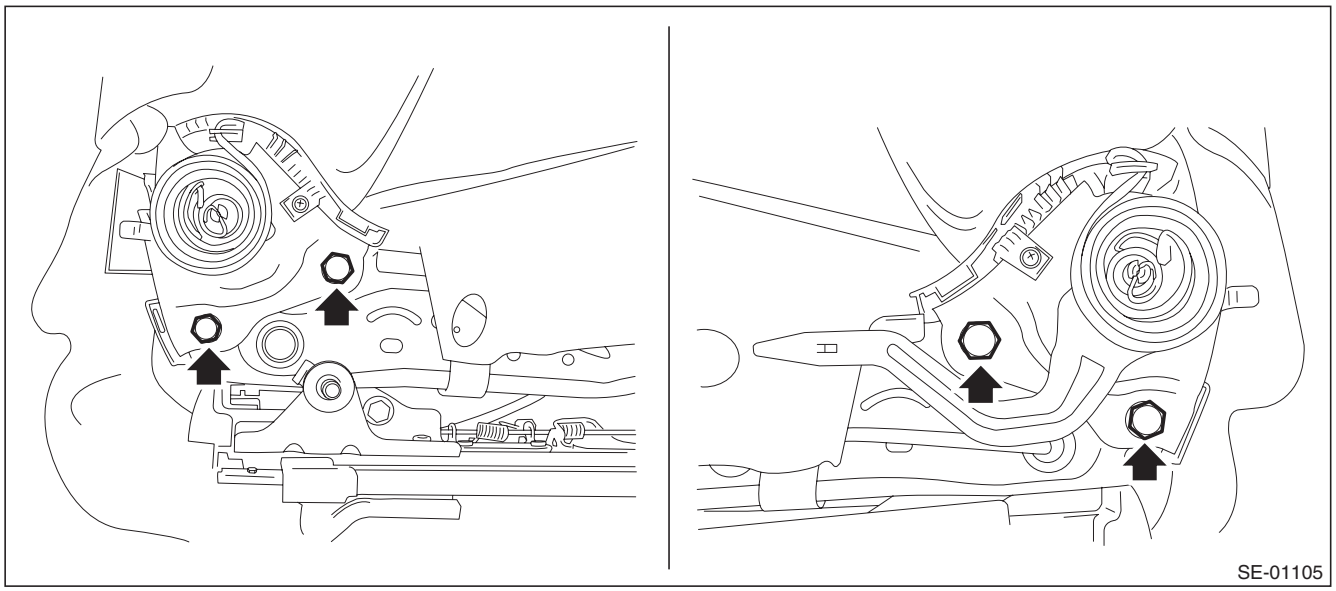

GETtheMANUALS.org

- POWER SEAT

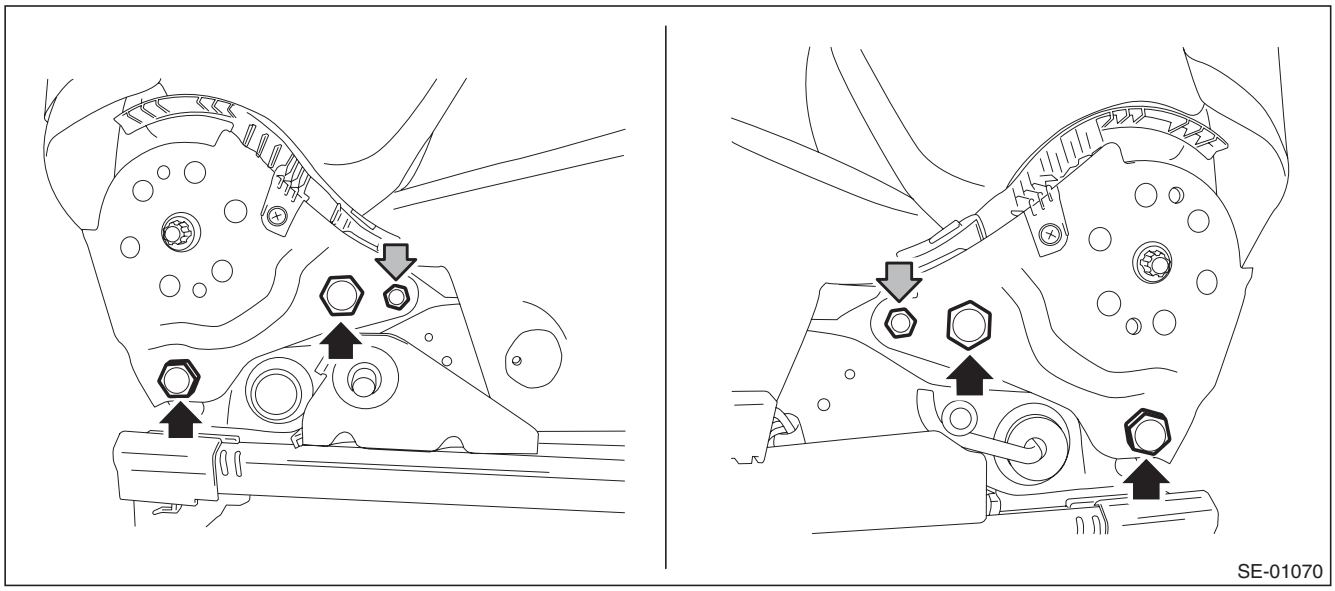

10) Remove the backrest back cover.
    (1) Remove the screws.
    (2) Release the hooks by pulling down the back cover and remove the backrest back cover.

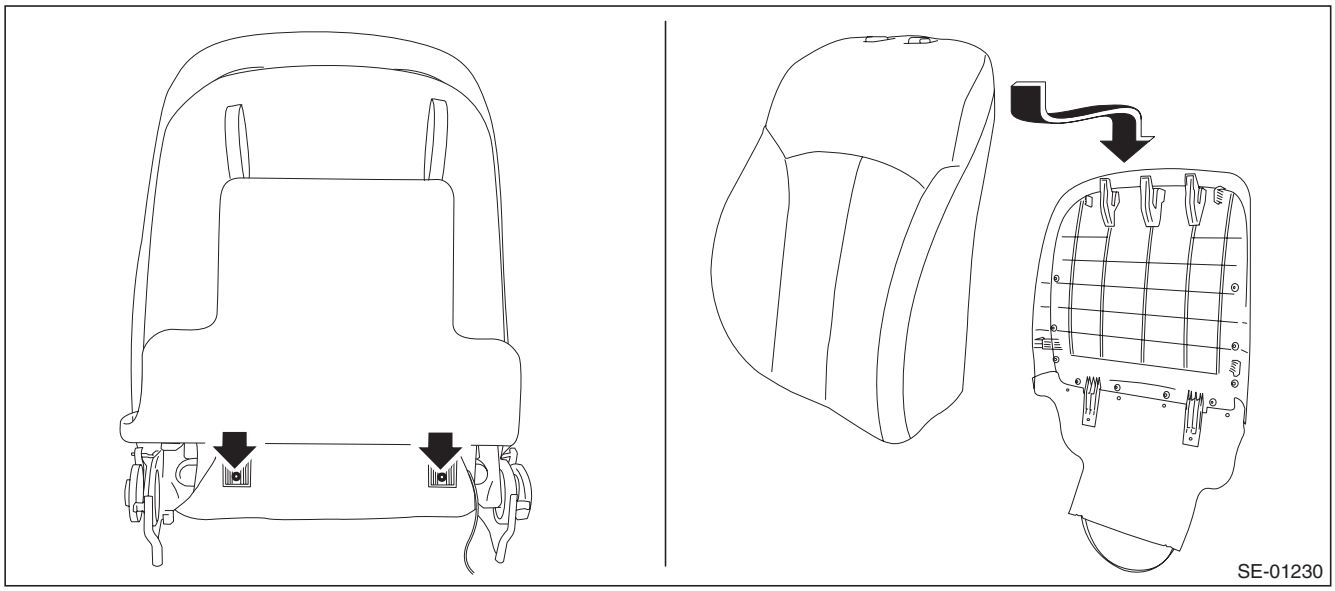

GETtheMANUALS.org

11) Remove the side airbag module assembly.

CAUTION:
- **Be careful not to tear the vinyl inside the seat when removing the hog rings. If torn, replace with a new part.**
- **Do not open the (plastic) protective cover of the airbag. If any damage is present in the protective cover (such as airbag module cloth coming out), replace the side airbag module assembly with a new one.**

(1) Remove the hooks and hog rings.

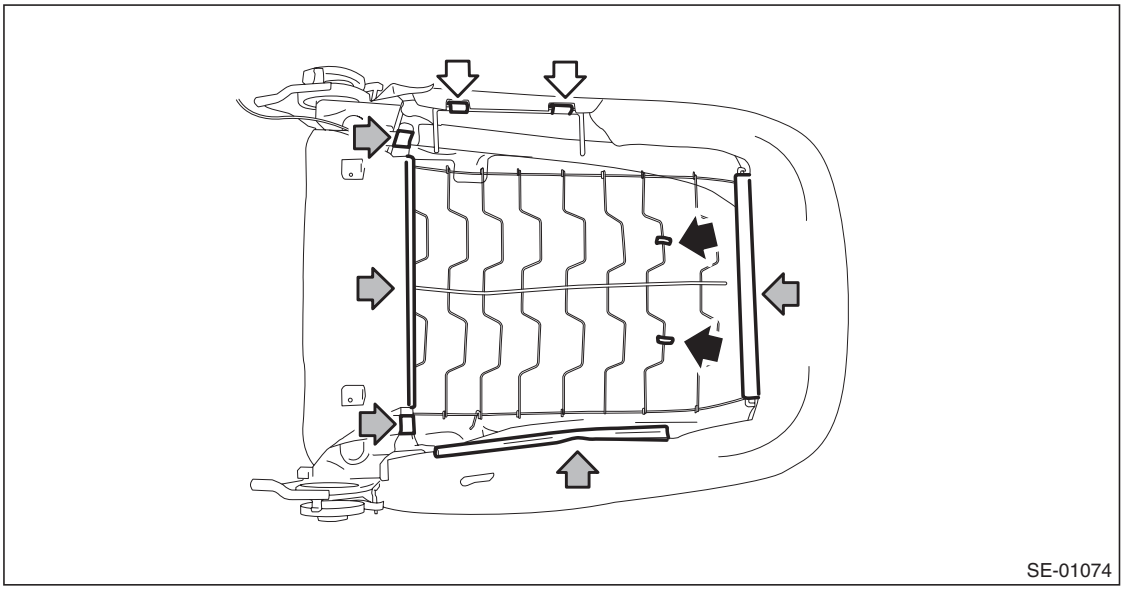

(2) Remove the backrest pad & cover from backrest assembly.
(3) Remove the mounting nuts of the side airbag module.

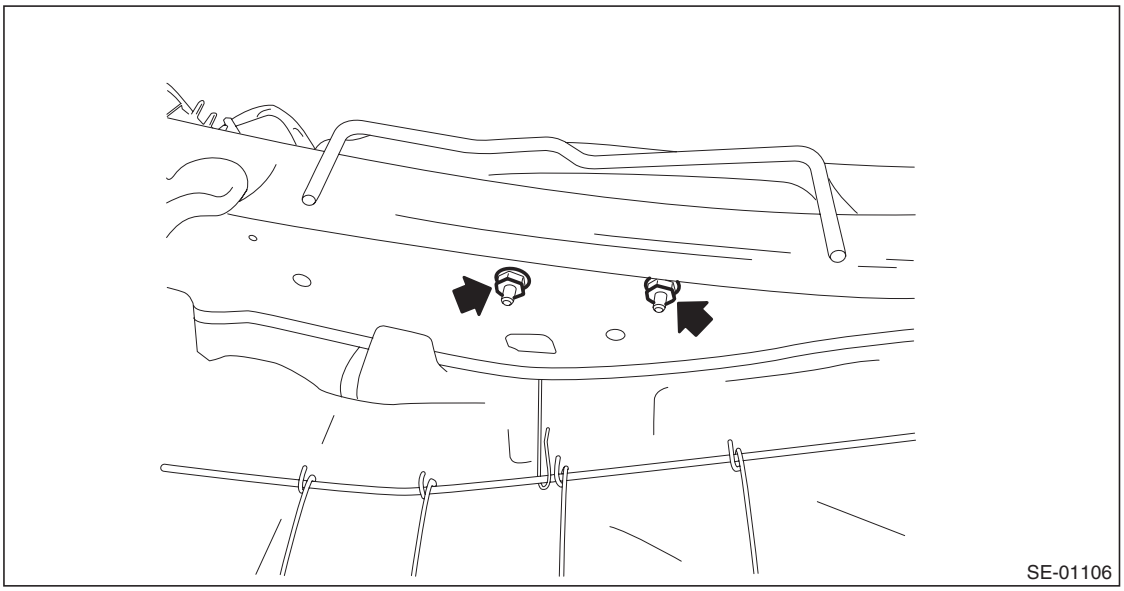

(4) Remove the side airbag harness from backrest frame assembly.
(5) While taking care not to damage the airbag (plastic) protective cover, remove the side airbag module assembly.

GETtheMANUALS.org

B: INSTALLATION

CAUTION:
- **Refer to "CAUTION" of "General Description" before handling the airbag module. <Ref. to AB-9, CAUTION, General Description.>**
- **Be sure to perform the system calibration for occupant detection system after passenger's seat installation. <Ref. to OD(diag)-15, OPERATION, System Calibration (Rezeroing).>**
- **Make sure that the side airbag module assembly is installed as shown in the figure.**

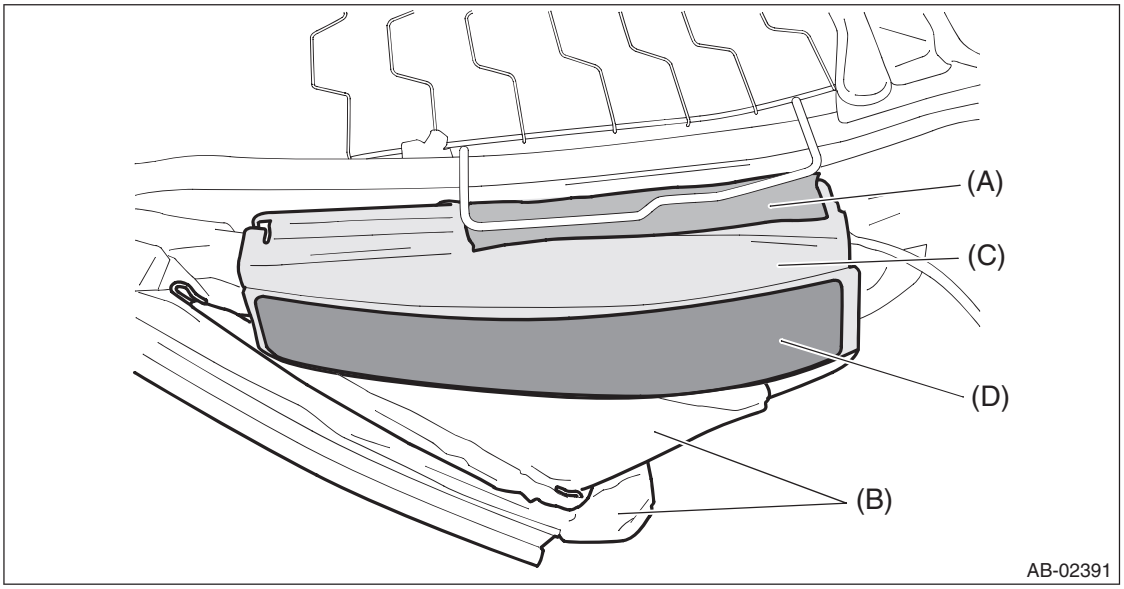

(A) Side airbag guide cloth
(B) Backrest cover
(C) Side airbag module ASSY
(D) Side airbag tape

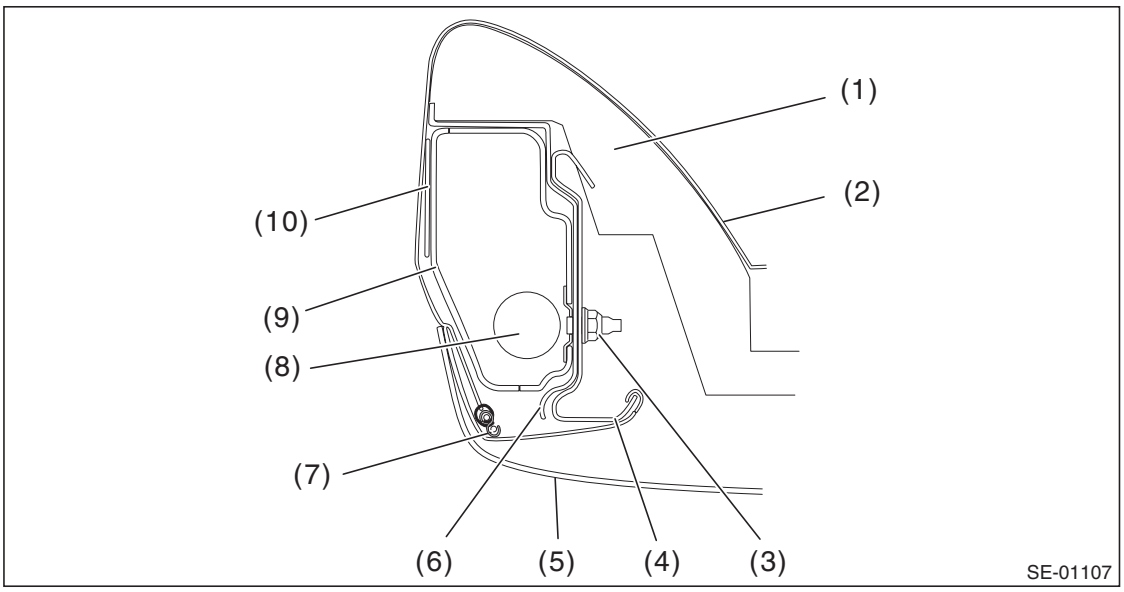

(1) Backrest pad
(2) Backrest cover
(3) Nut
(4) Backrest frame
(5) Backrest back cover
(6) Side airbag guide cloth
(7) S hook
(8) Side airbag module inflator
(9) Side airbag module case
(10) Side airbag tape

GETtheMANUALS.org

- **When replacing the side airbag assembly with new one, be sure to attach the side airbag tape.**
- **Be careful not to stain or damage the backrest cover during assembly.**
- **Do not reuse hog rings and S hooks.**
- **Secure the hog ring using hog ring pliers.**
- **Install the hog rings to the specified points securely and make sure that no wrinkle or twisting on backrest cover.**

1) Before installation, inspect the following items and replace any faulty part with a new one.
- Make sure that there is no foreign matter on side airbag module.
- Front seat, airbag module and mounting bracket are damaged or deformed.
- Harness and/or connector is cracked, deformed or open.
- Harness wire is exposed.

2) Install the side airbag module to the backrest frame assembly.

Tightening torque:
6 N·m (0.61 kgf-m, 4.4 ft-lb)

3) Install the side airbag harness to backrest frame assembly.
4) Install the backrest cover.
5) Secure the backrest hinge.

- MANUAL SEAT

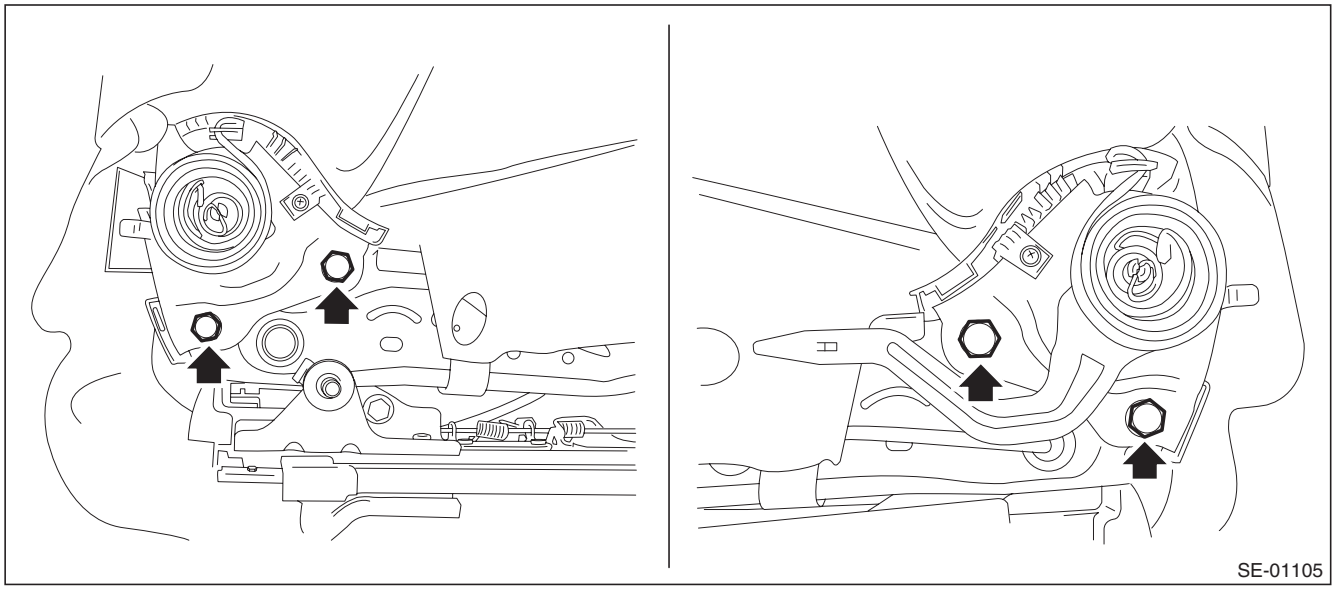

- POWER SEAT

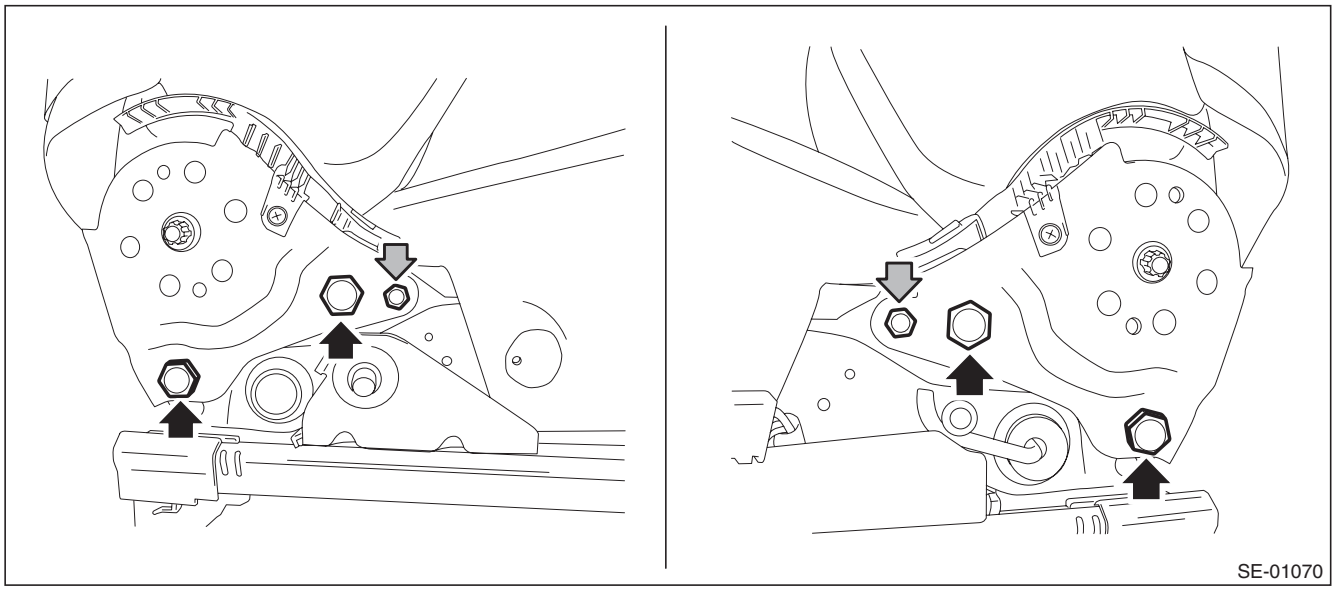

GETtheMANUALS.org

Tightening torque:
Refer to "COMPONENT" of "General Description". <Ref. to SE-2, FRONT SEAT, COMPONENT, General Description.>

6) Install the side airbag harness to the back of the seat cushion assembly using a cable clip.

CAUTION:
After restoring the seat, operate the reclining and sliding mechanisms to check that the side airbag harness is not caught.

7) Install the front seat to the body.

CAUTION:
- **The seat mounting bolts differ between the front mounting points and the rear mounting points. Make sure that you are using correct bolts at correct positions.**
- **Tighten the slide rail installing bolt gradually in several steps to the specified torque in the order as shown in the figure.**

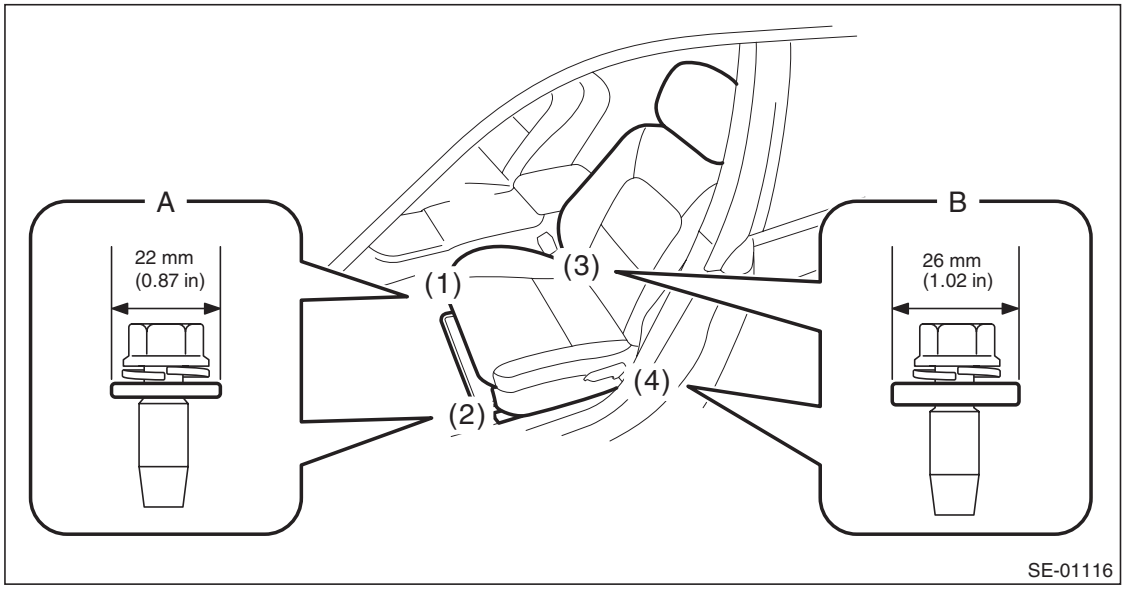

- **Front (bolt A): Washer diameter 22 mm (0.87 in)**
- **Rear (bolt B): Washer diameter 26 mm (1.02 in)**

Tightening torque:
Front seat assembly: 53 N·m (5.4 kgf-m, 39.1 ft-lb)

GETtheMANUALS.org

7. Curtain Airbag Module

A: REMOVAL

1. SEDAN MODEL

CAUTION:
Refer to “CAUTION” of “General Description” before handling the airbag module. <Ref. to AB-9, CAUTION, General Description.>
1) Turn the ignition switch to OFF.
2) Disconnect the ground cable from battery and wait for at least 60 seconds before starting work.
3) Remove the roof trim. <Ref. to EI-131, SEDAN MODEL, REMOVAL, Roof Trim.>
4) Remove the curtain airbag module assembly.

CAUTION:
- **Be careful not to damage the curtain airbag module during removal.**
- **Never open the curtain airbag module before activation. Never reuse the deployed curtain airbag module.**
- **Remove the modules in order starting from the vehicle front.**

(1) Remove all bolts and clips, and remove the curtain airbag module assembly.

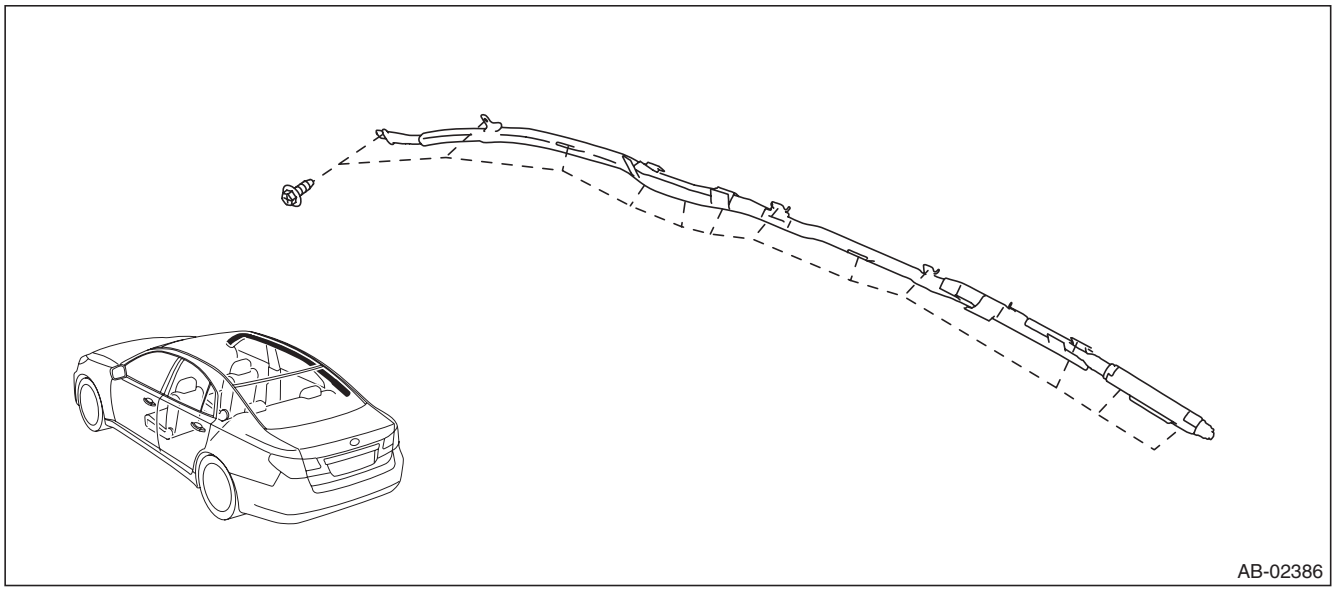

GETtheMANUALS.org

(2) Disconnect the curtain airbag module connector.

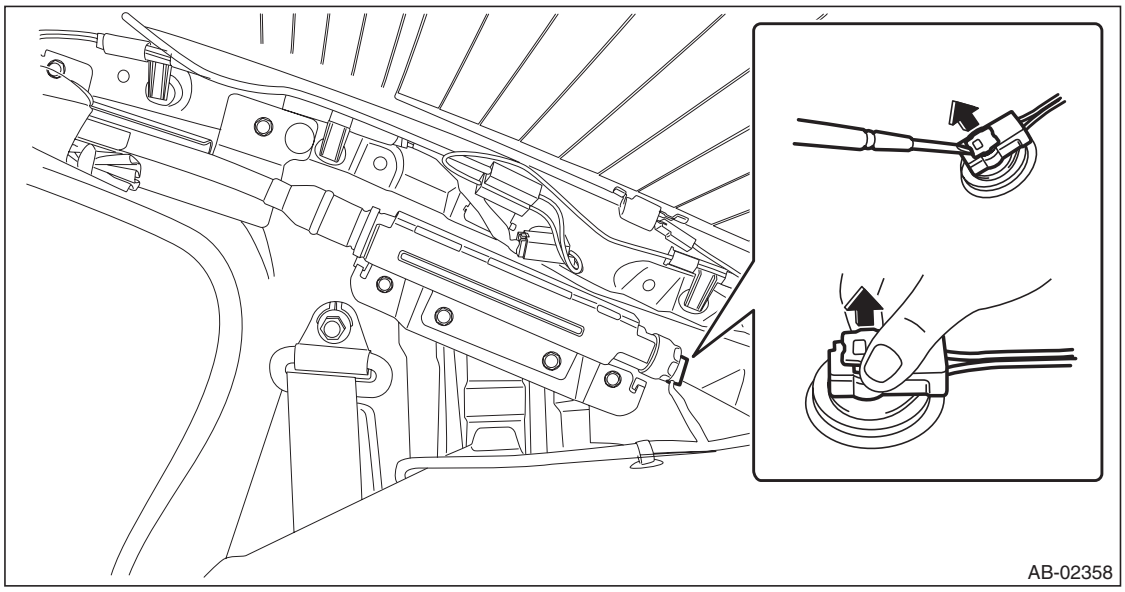

2. OUTBACK MODEL

CAUTION:
Refer to "CAUTION" of "General Description" before handling the airbag module. <Ref. to AB-9, CAUTION, General Description.>

1) Turn the ignition switch to OFF.
2) Disconnect the ground cable from battery and wait for at least 60 seconds before starting work.
3) Remove the roof trim. <Ref. to EI-145, OUTBACK MODEL, REMOVAL, Roof Trim.>
4) Remove the curtain airbag module assembly.

CAUTION:
- **Be careful not to damage the curtain airbag module during removal.**
- **Never open the curtain airbag module before activation. Never reuse the deployed curtain airbag module.**
- **Remove the modules in order starting from the vehicle front.**

(1) Remove all bolts and clips, and remove the curtain airbag module assembly.

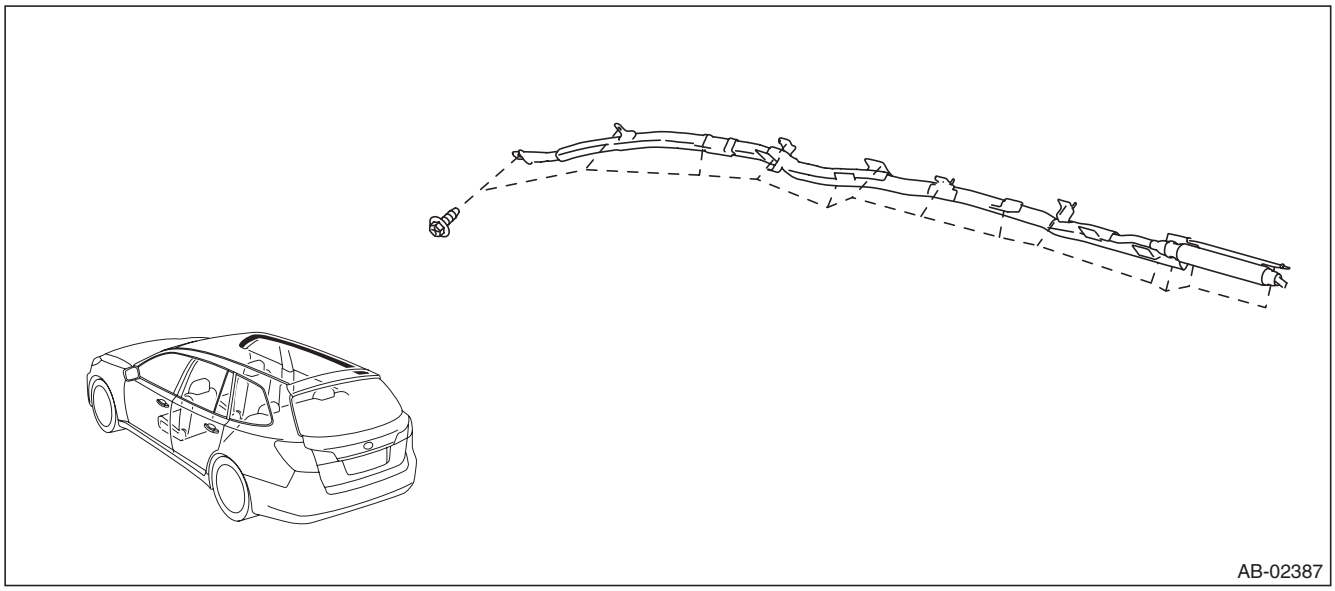

GETtheMANUALS.org

(2) Disconnect the curtain airbag module connector.

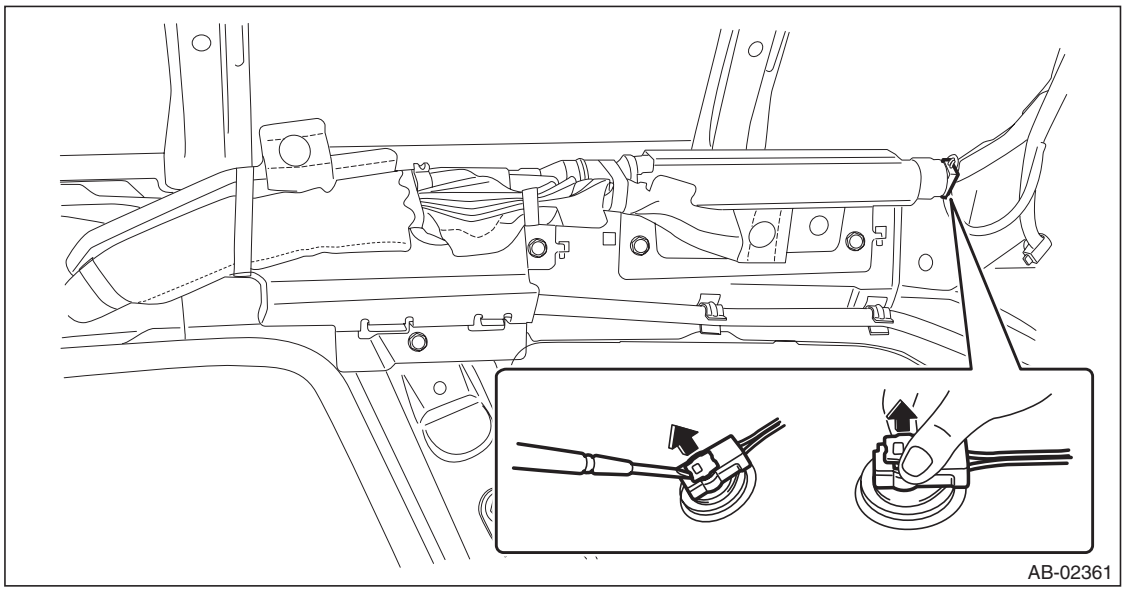

B: INSTALLATION

CAUTION:
- **Refer to "CAUTION" of "General Description" before handling the airbag module. <Ref. to AB-9, CAUTION, General Description.>**
- **When installing the curtain airbag module, install a specified part at specified place.**
- **Be careful not to damage the curtain airbag module during removal.**
- **Never open the curtain airbag module before activation. Never reuse the deployed curtain airbag module.**
- **Make sure that there are no foreign matter on airbag module.**

1) Before installation, inspect the following items and replace any faulty part with a new one.
- Airbag cover is scratched or torn.
- Harness and/or connector is cracked, deformed or open.
- Harness wire is exposed.
- Mounting bracket and securing clip are cracked or deformed.

2) Install each part in the reverse order of removal.

Tightening torque:
7.5 N·m (0.76 kgf-m, 5.5 ft-lb)

GETtheMANUALS.org

8. Airbag Control Module

A: REMOVAL

CAUTION:
- **Do not disassemble the airbag control module.**
- **If the airbag control module is deformed or if the damage from water is suspected, replace the airbag control module with a new part.**
- **Do not drop the airbag control module.**
- **After removal, keep the airbag control module on a dry, clean surface away from moisture, heat and dust.**

1) Turn the ignition switch to OFF.

CAUTION:
Disconnect the ground cable from battery and wait for at least 60 seconds before starting work.

NOTE:
For a model with power seat, remove the console box assembly before disconnecting the battery ground cable.

2) Remove the console front cover assembly.
- MT model
  1. Remove the shift knob.
  2. Release the clips and claws, then pull up the console front cover assembly.

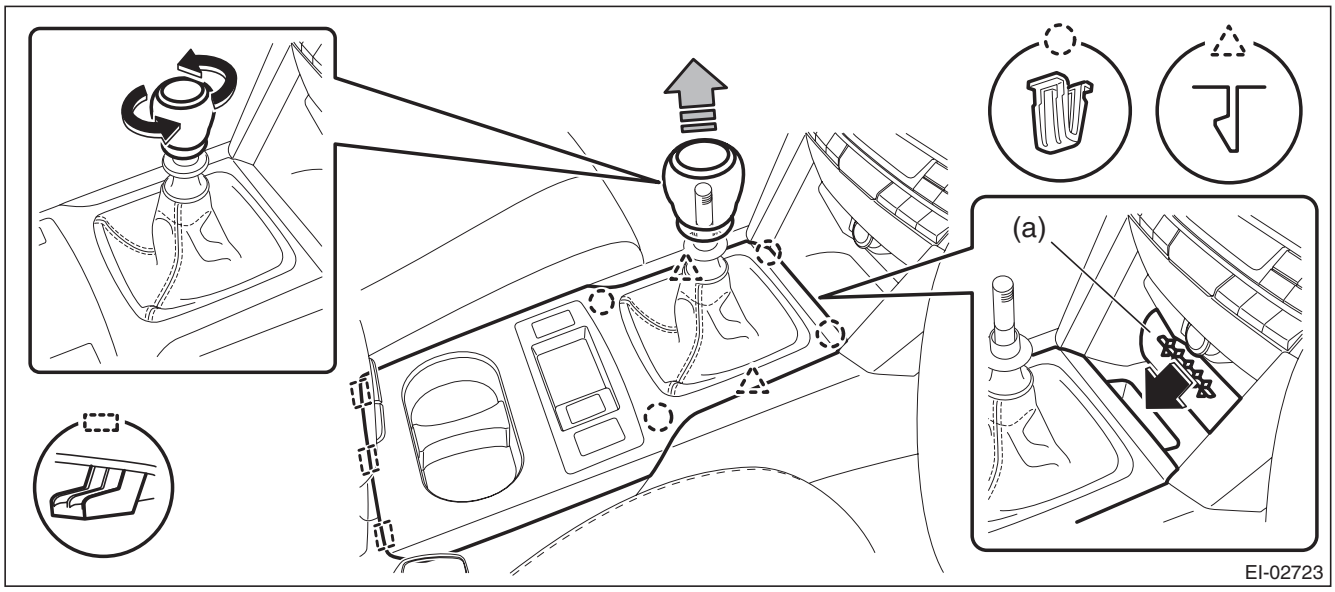

NOTE:
Turn over the front center pocket mat (a) and pull up the console front cover from the slit.

3. Disconnect the harness connector and remove the console front cover assembly.

GETtheMANUALS.org

- AT model
  1. Remove the select lever knob.
     a. Lower the cover grip AT.
     b. Remove the clamp grip pin, then remove the select lever knob.
  2. Release the clips and claws, then pull up the console front cover assembly.

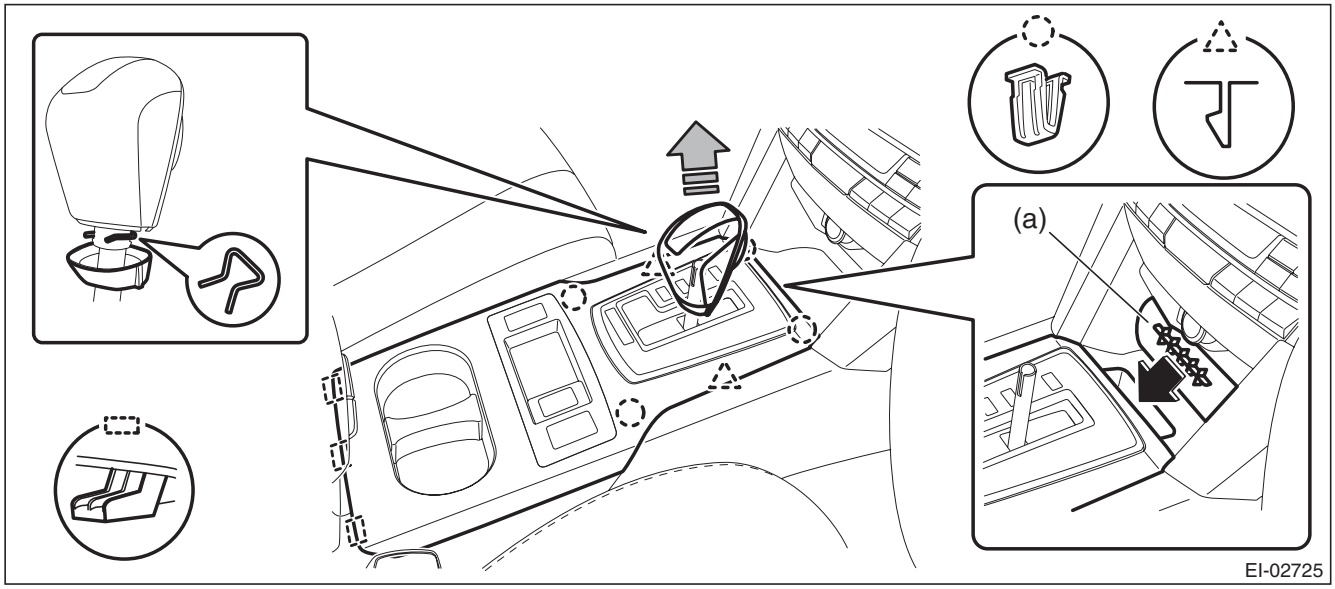

NOTE:
Turn over the front center pocket mat (a) and pull up the console front cover from the slit.

  3. Disconnect the harness connector and remove the console front cover assembly.

3) Remove the left and right console front side cover assembly.
   (1) Remove the screws and release the clips (A) to (D) in order.
   (2) Remove the console front side cover assembly by pulling it up.

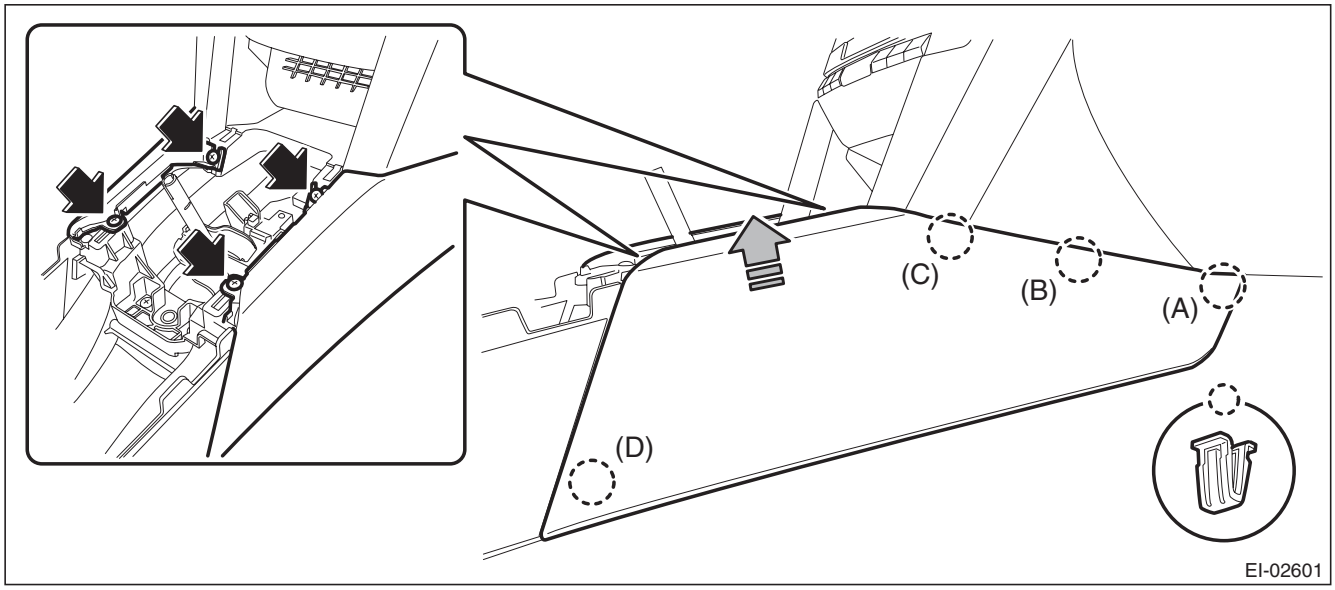

4) Remove the console box assembly.
   (1) Move the seat forward, and remove the bolts after detaching the left and right caps.

NOTE:
For a model with power seat, connect the battery ground cable and move the seat. Then, disconnect the battery ground cable again and wait for 60 seconds at least before restarting the work.

GETtheMANUALS.org

(2) Remove the screws, disconnect the harness connector and remove the console box assembly.

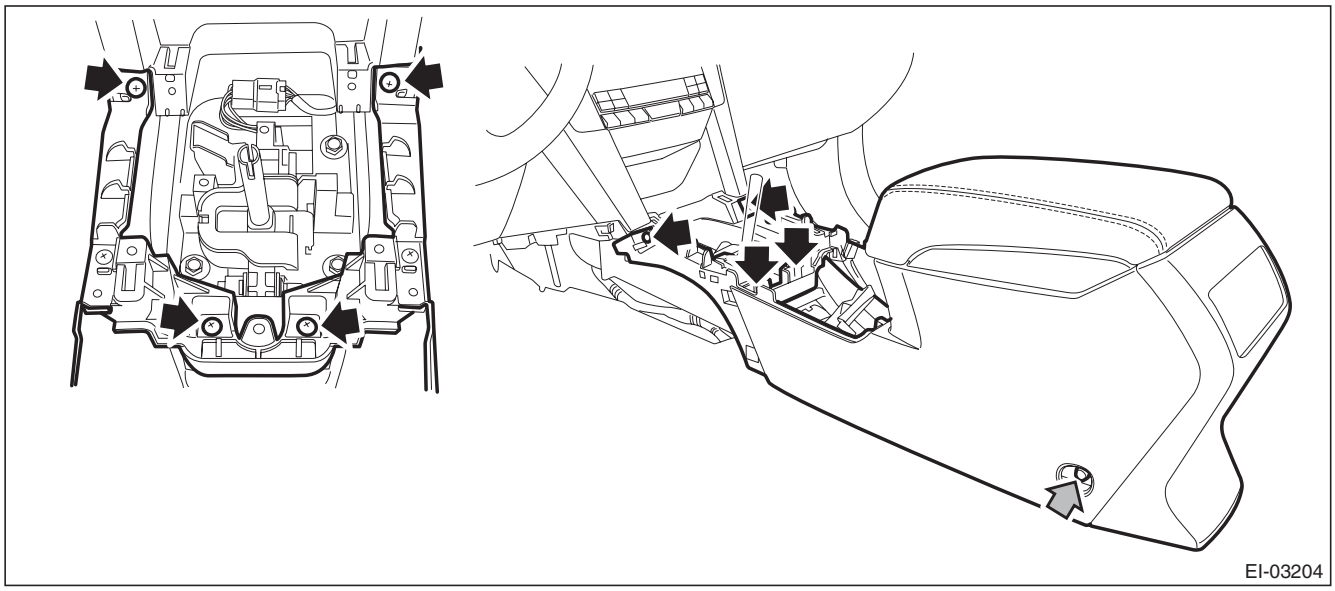

5) Remove the airbag control module.
(1) Disconnect the connector from airbag control module.
(2) Remove the bolt and nuts and remove the airbag control module.

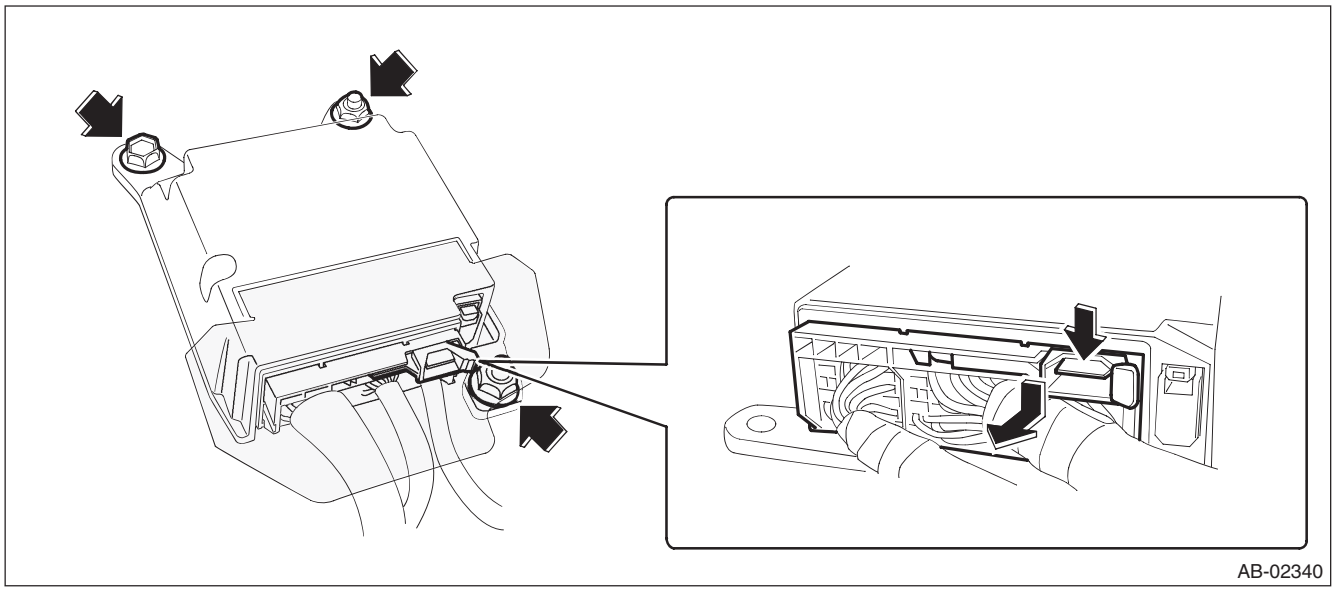

B: INSTALLATION

CAUTION:
Do not reuse the bolt and nut.
Always use new bolts and nuts for them.

1) Before installation, inspect the following items and replace any faulty part with a new one.
- Control module is deformed.
- Control module connector is damaged.
- Control module mounting bracket is damaged.

2) Install each part in the reverse order of removal.

Tightening torque:
Airbag control module: 25 N·m (2.55 kgf-m, 18.4 ft-lb)
Console box assembly: 6.5 N·m (0.66 kgf-m, 4.8 ft-lb)

GETtheMANUALS.org

9. Front Sub Sensor

A: REMOVAL

1) Disconnect the ground cable from battery and wait for at least 60 seconds before starting work.
2) Remove the front bumper face assembly.
   (1) Remove the clips, turn over the front mud guard, and disconnect the fog light connector. (Model with fog light)

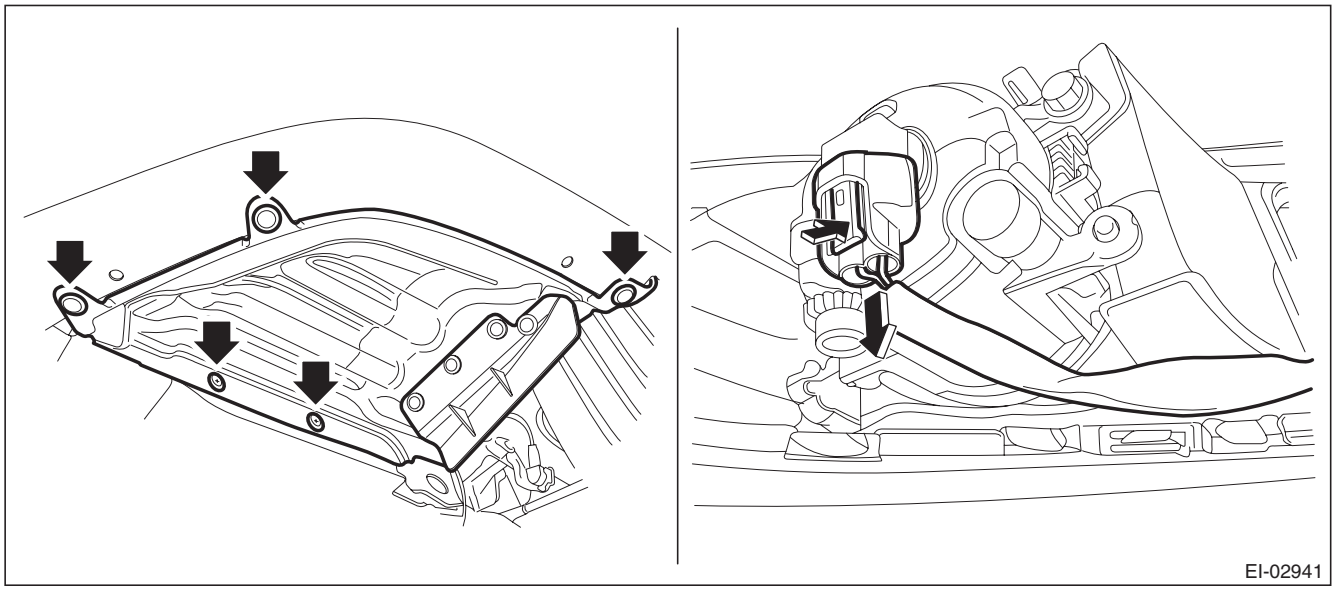

   (2) Remove the clips at the upper side of the bumper.
   (3) Remove the clips from the fender.

GETtheMANUALS.org

(4) Remove the clips at the lower side of bumper.

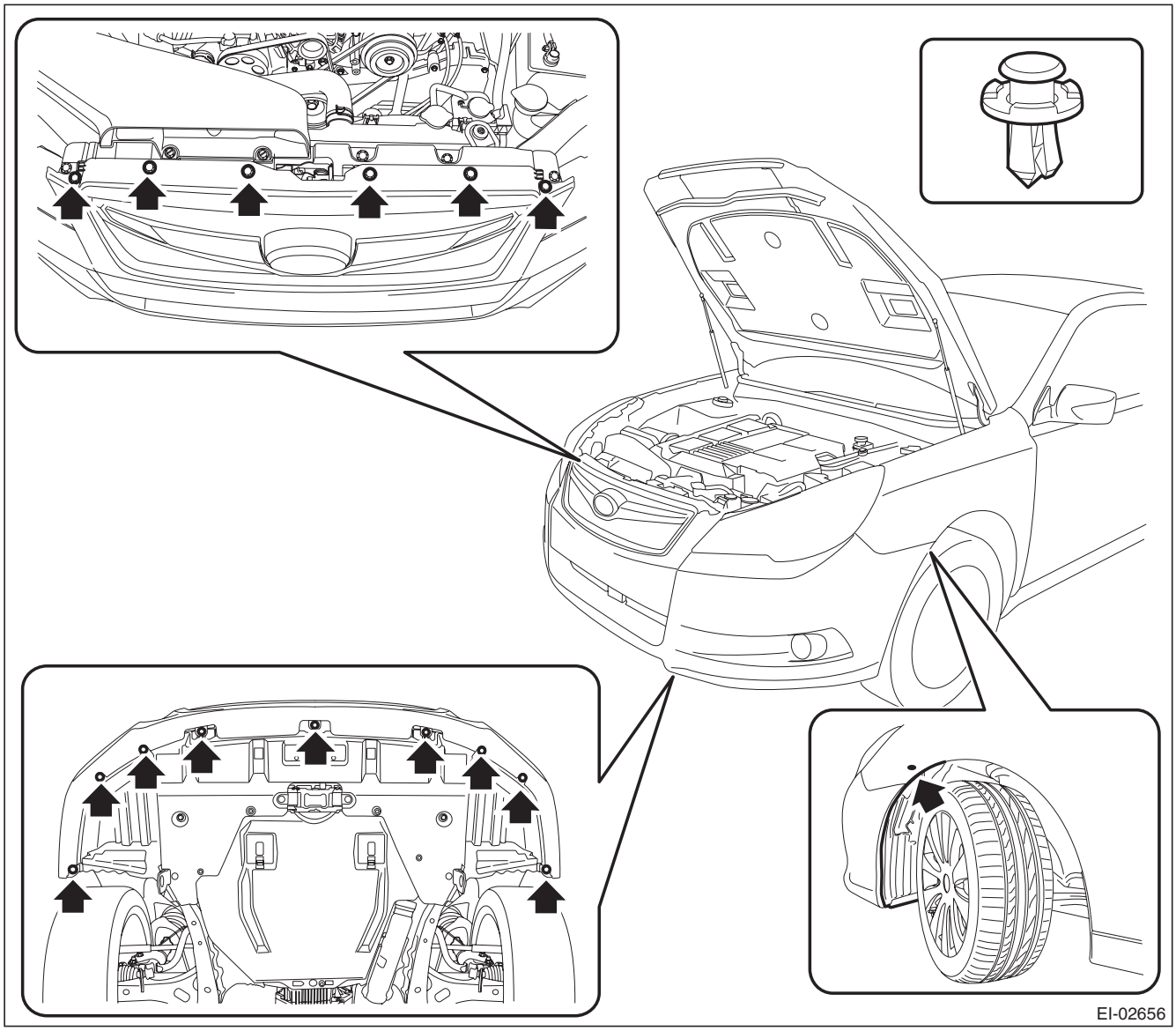

GETtheMANUALS.org

(5) Detach the flange section on the bumper face side from the bracket side front UPR.

CAUTION:
Do not pull forcibly. It may damage the flange sections of the bumper face.

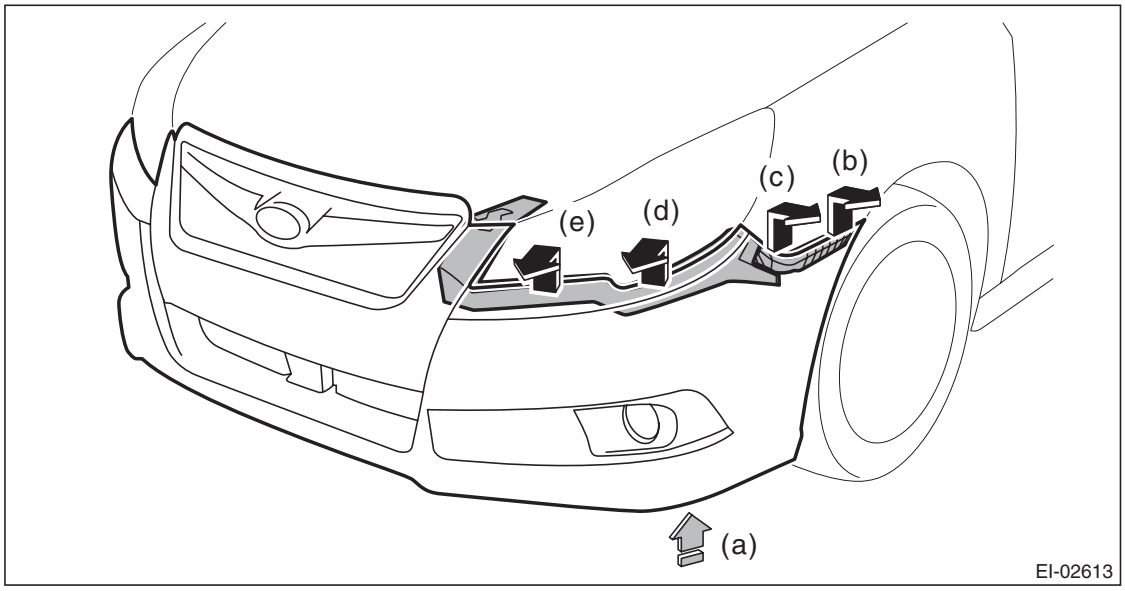

NOTE:
Pushing up the lower side (a) of the fog light, remove from (b) to (e).
Detach the opposite side in the same manner.

3) Remove the headlight assembly.
   (1) Remove the fender cover assembly UPR.
      a) Remove the clip.
      b) Release the claws of the fender cover assembly UPR by pulling it forward and remove the fender cover.

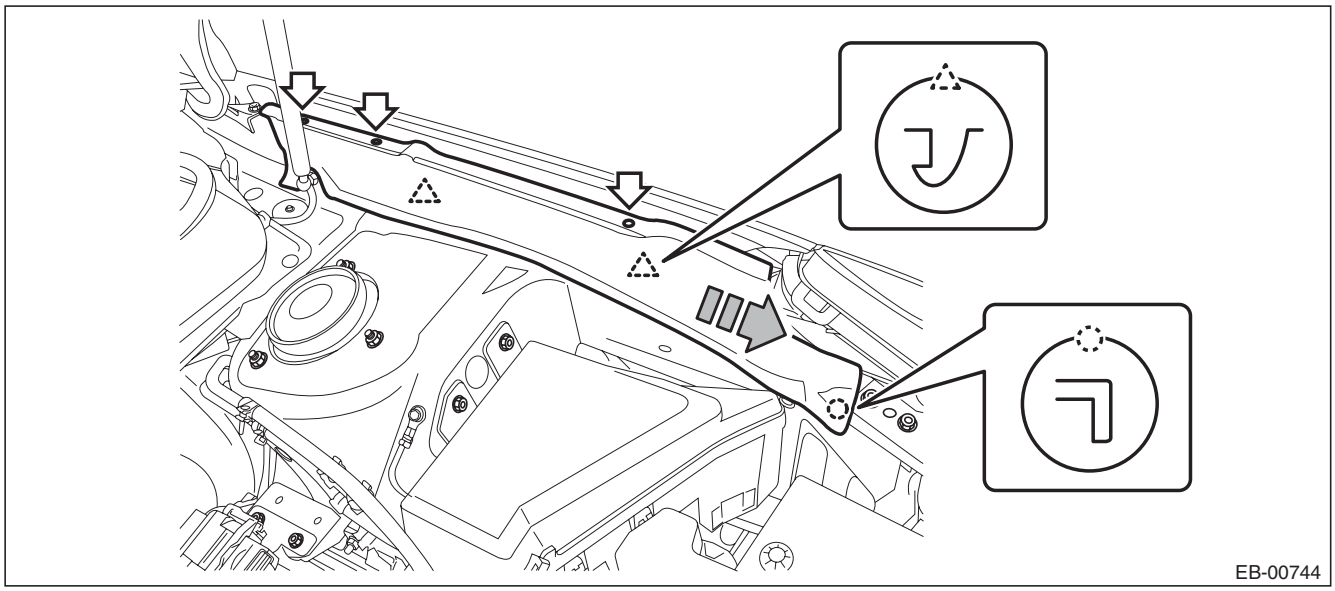

GETtheMANUALS.org

(2) Remove the headlight assembly.

NOTE:
When removing the RH headlight, remove the air intake duct.

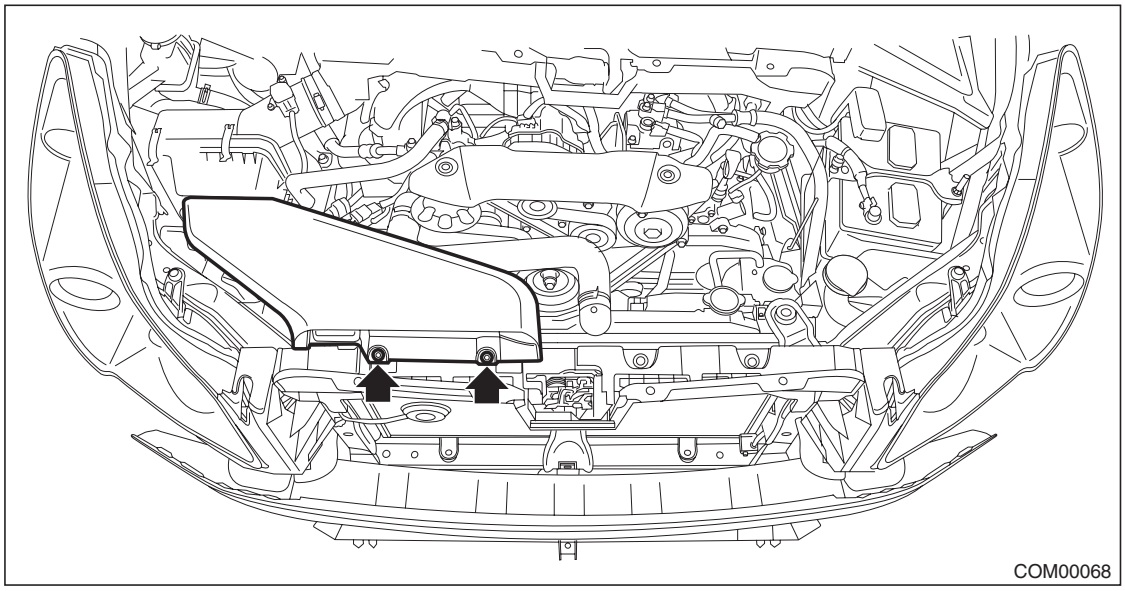

a) Remove the bolts and clips, and pull out the headlight assembly to the front of the vehicle.

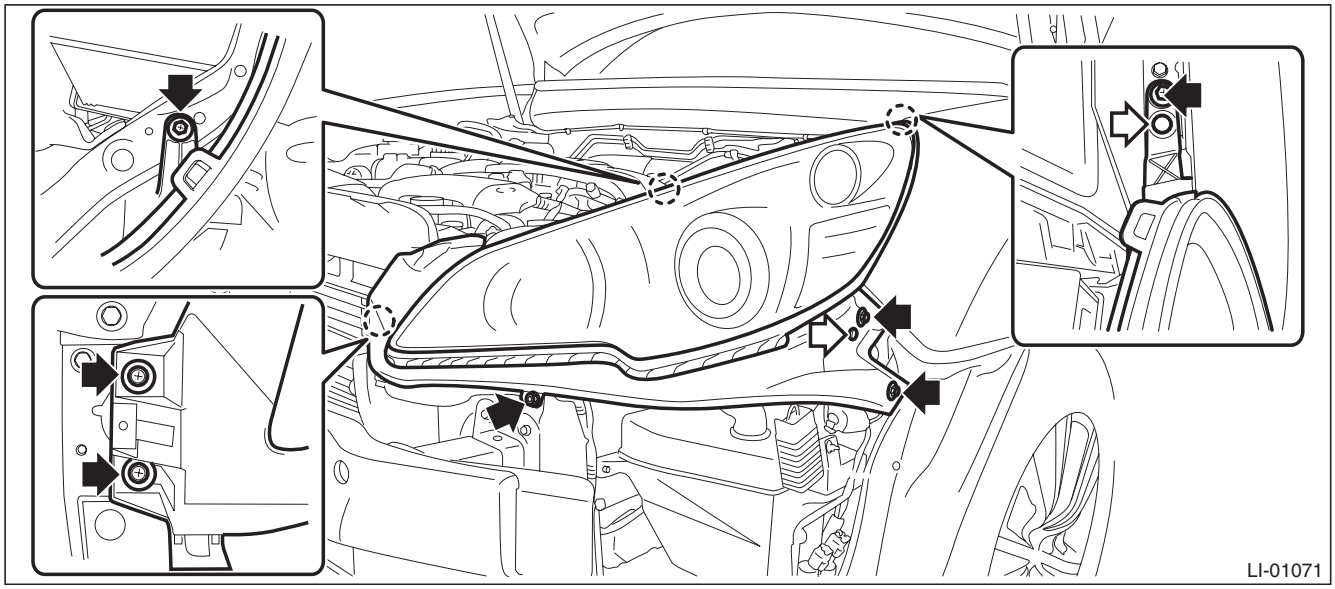

GETtheMANUALS.org

b) Disconnect the connector and remove the headlight assembly.

- RH headlight connector

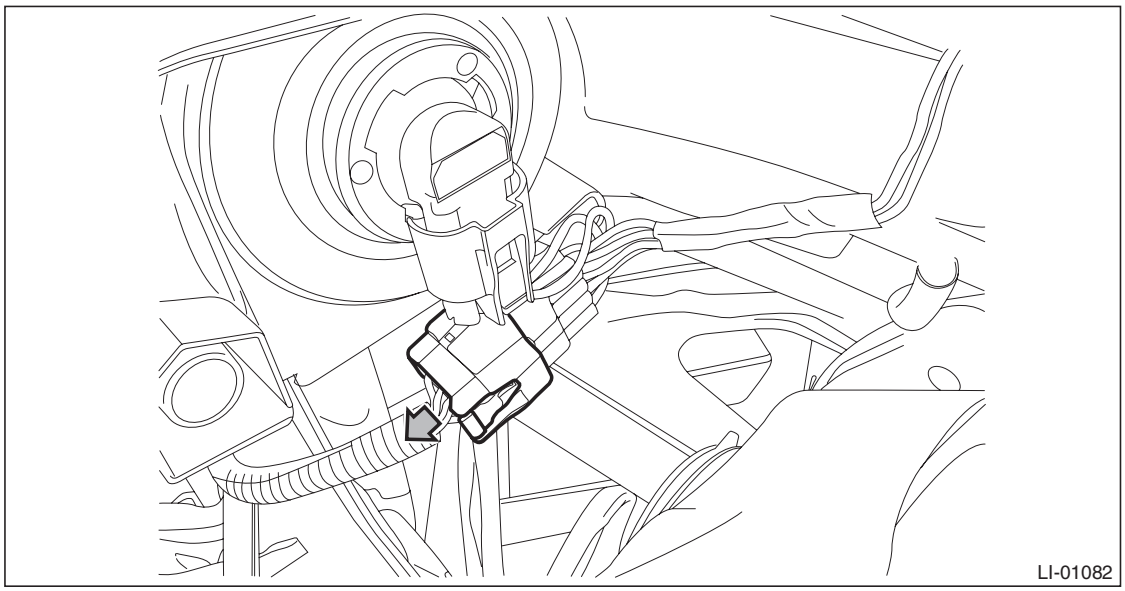

- LH headlight connector

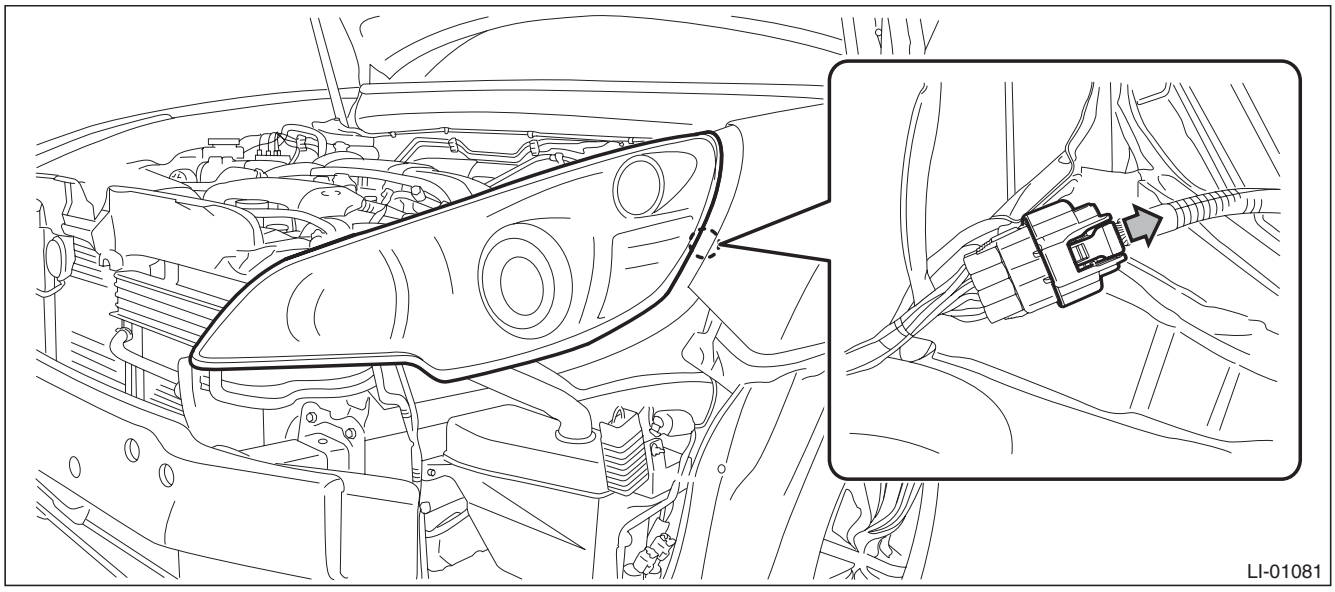

GETtheMANUALS.org

4) Remove the front sub sensor assembly.
(1) Remove the bolt, and remove the sensor cover plate.

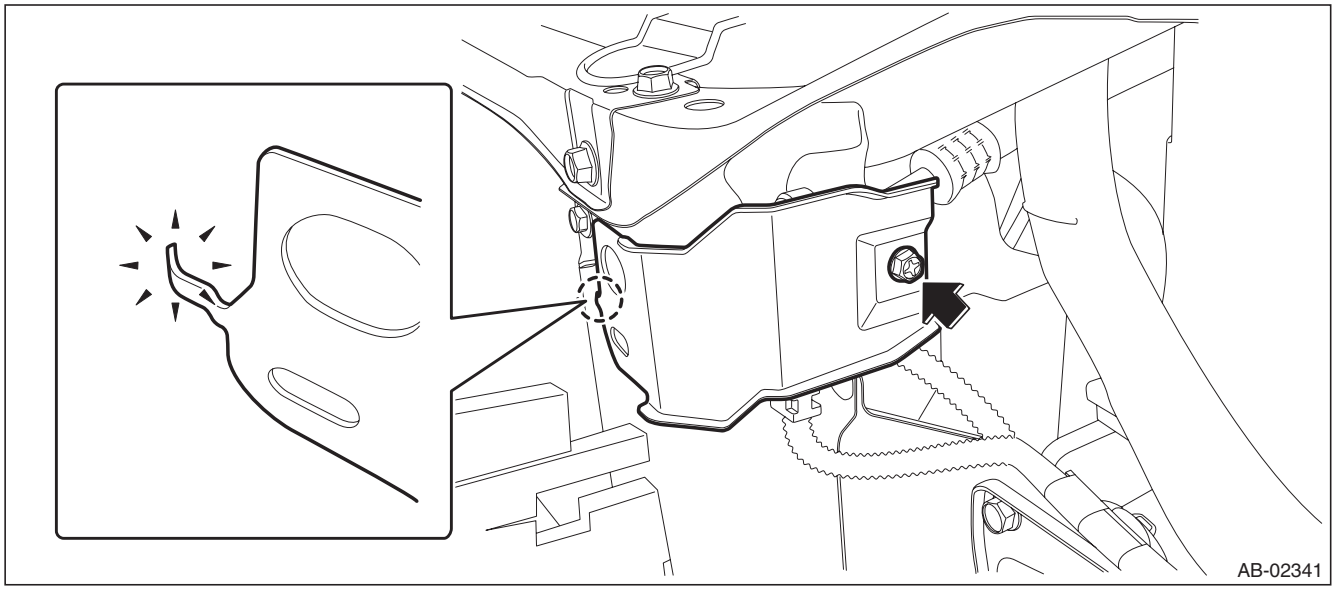

(2) Remove the front sub sensor by removing the bolt and disconnect the connector.
- LH side

Holding outer part of the slide lock, pull it in the direction of arrow.
- RH side
  1. Push the lock arm.
  2. Holding outer part, pull it one step in the direction of arrow.
  3. Push the lock arm again.
  4. Holding outer part, pull it in the direction of arrow to disconnect the connector.

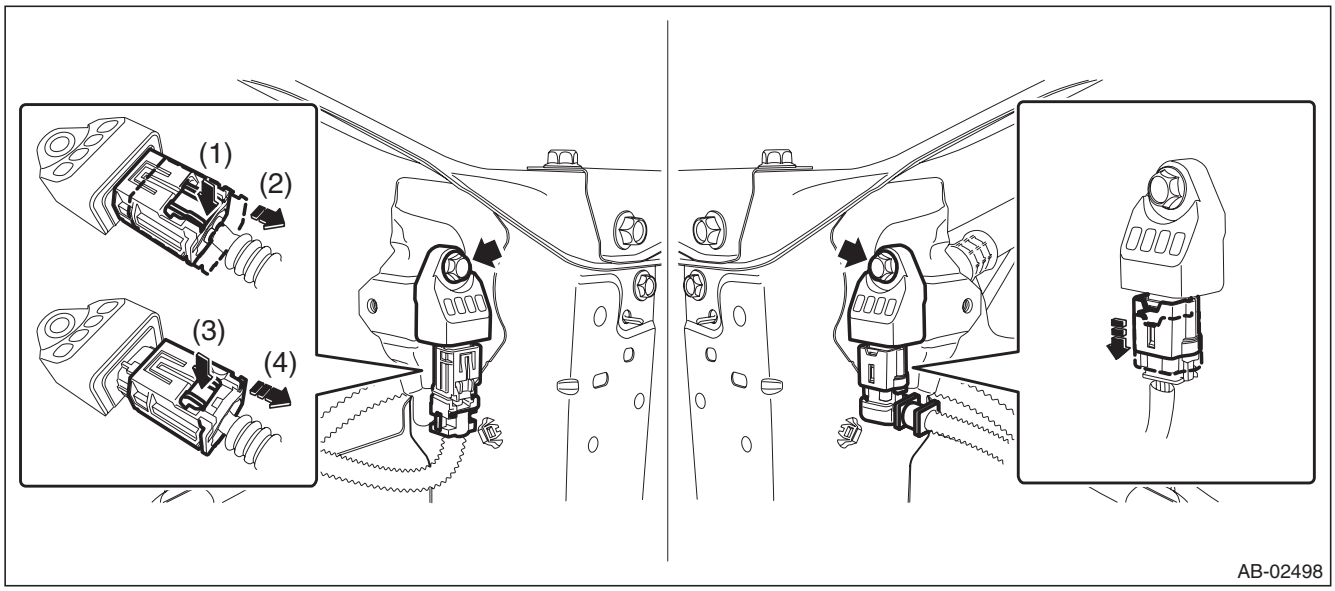

GETtheMANUALS.org

B: INSTALLATION

CAUTION:
- **If the airbag has been activated, replace the front sub sensor assembly with a new part.**
- **Do not reuse the bolt and nut.**

Always replace with the specified new bolts and nuts.
- **When installing the sensor, insert the set pin on the backside of the sensor into the hole on the body side securely.**
- **After the installation of headlight assembly, be sure to perform headlight beam adjustment.**

1) Before installation, inspect the following items and replace any faulty part with a new part.
- Front sub sensor damage
- Connector damage
- Sensor cover plate deformation or damage

2) Install each part in the reverse order of removal.

CAUTION:
Install the bumper face so that the under cover front end (b) comes inside the front bumper face (a).

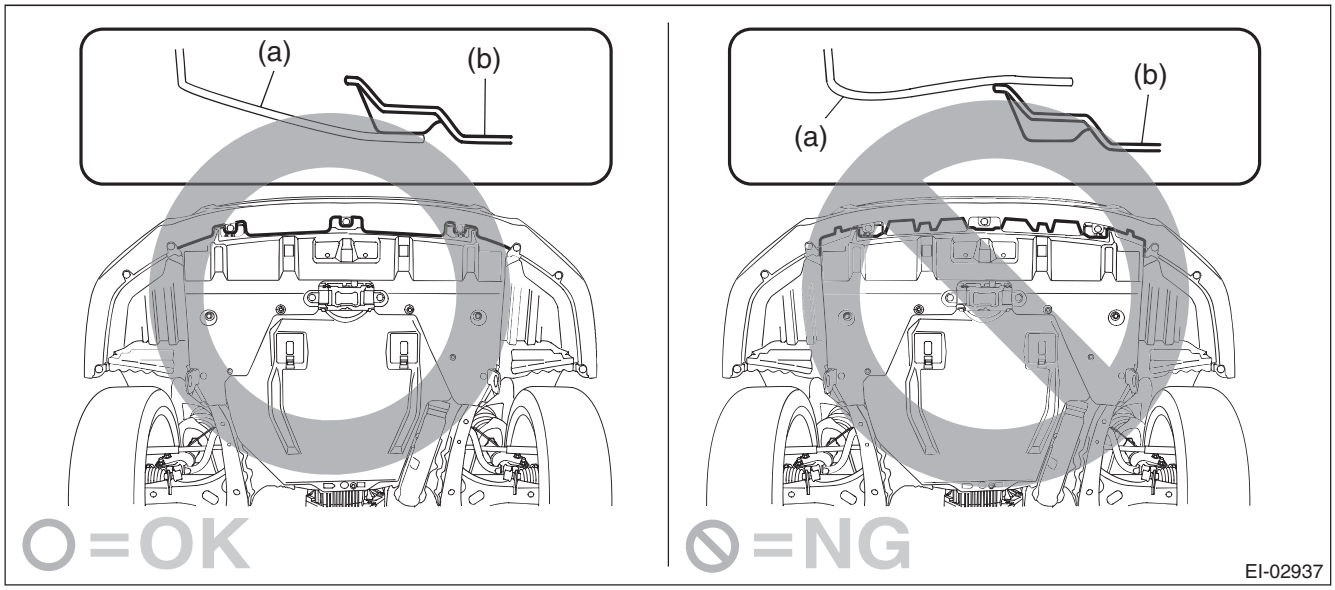

Tightening torque:
Front sub sensor: 13 N·m (1.33 kgf-m, 9.6 ft-lb)
Headlight assembly: 7.5 N·m (0.76 kgf-m, 5.5 ft-lb)

3) Adjust the fog light beam. (Model with fog light) <Ref. to LI-41, FOG LIGHT AIMING, ADJUSTMENT, Front Fog Light Assembly.>

GETtheMANUALS.org

10. Front Door Impact Sensor

A: REMOVAL

1) Operate the power window switch to close the front door glass.
2) Turn the ignition switch to OFF.
3) Disconnect the ground cable from battery and wait for at least 60 seconds before starting work.
4) Remove the gusset cover.
   (1) Attach the protective tape (a) to the door trim.
   (2) Release the clips and claws, then detach the gusset cover.

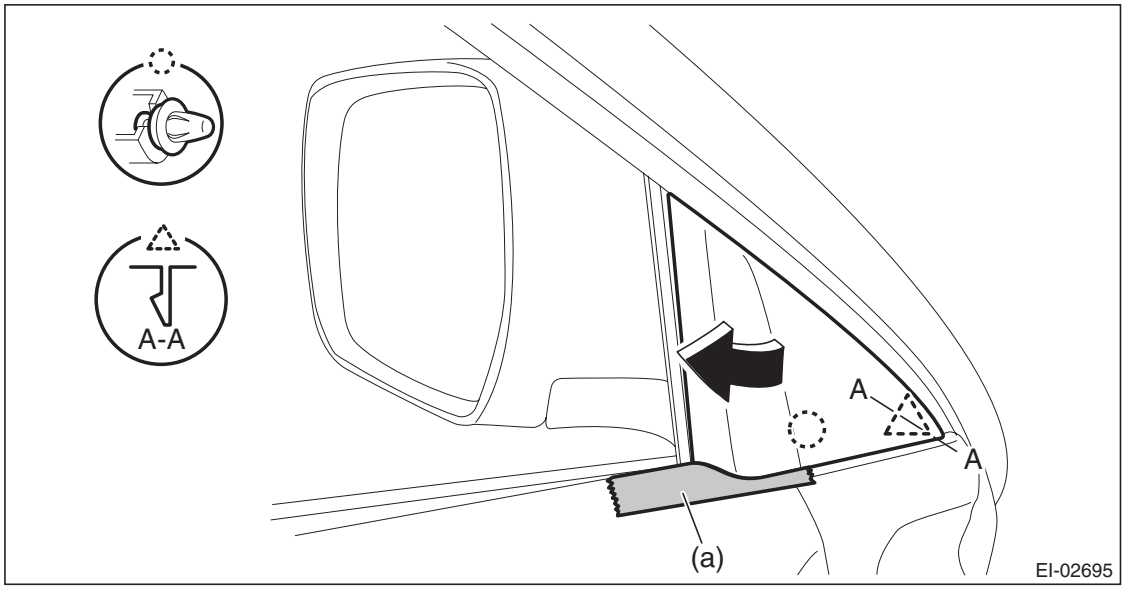

5) Remove the door trim assembly.
   (1) Open the cover and remove the screw.
   (2) Remove the clips in the order of (A) to (J) and remove the door trim assembly from the door panel.

CAUTION:
When removing the door trim, be sure to remove the clips in the correct order. Forcibly removing clips may damage the door panel assembly.

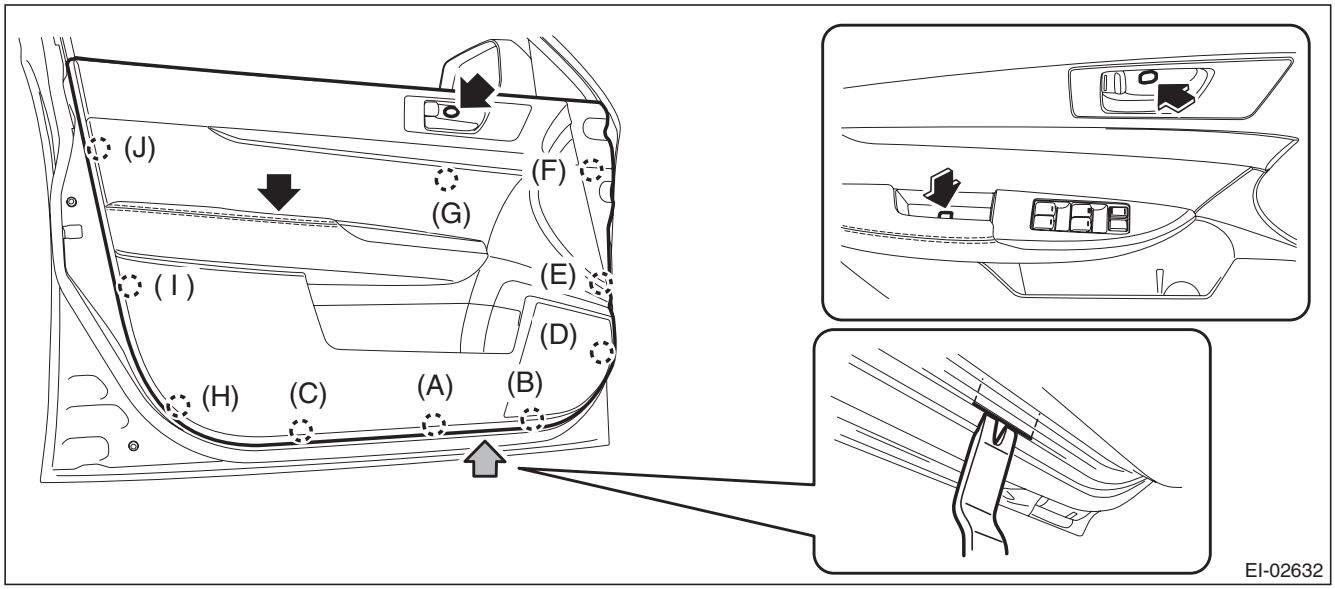

NOTE:
Insert a plastic clip remover into the slit at the bottom of the door trim, to lift the door trim.

GETtheMANUALS.org

(3) Remove the cables (a) and (b) from the cable holder of inner remote.

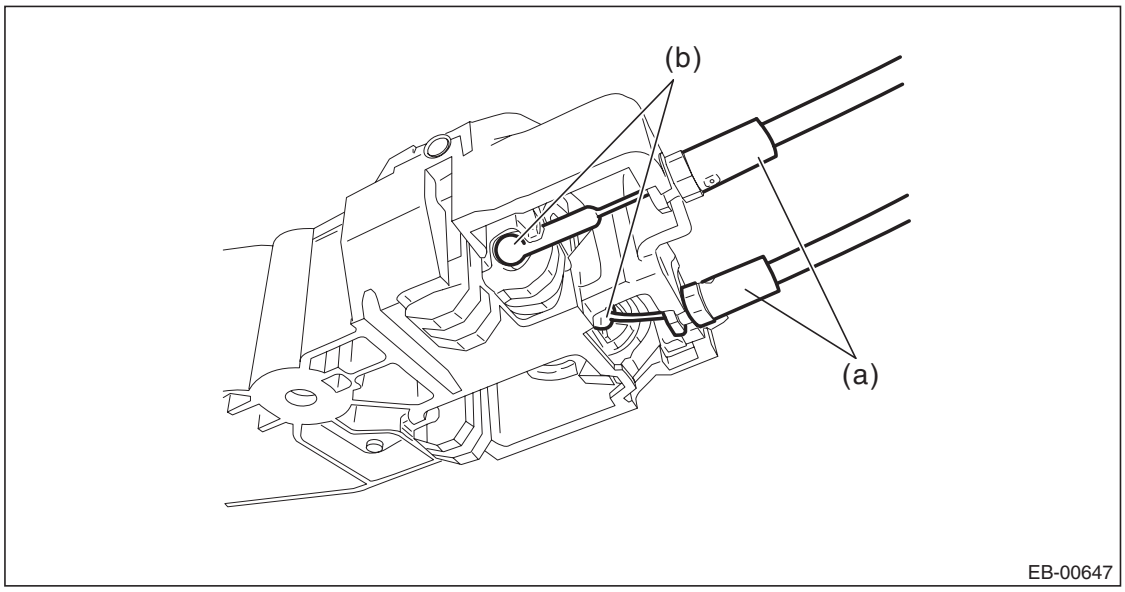

(4) Disconnect the harness connector and remove the door trim assembly.

6) Remove the sealing cover.

CAUTION:

- **Carefully remove the butyl tape. Excessive force will easily break the cover.**
- **If the sealing cover gets broken, replace it with a new part.**

(1) Remove the screw to remove the door trim bracket.

(2) Carefully remove the butyl tape to remove the sealing cover.

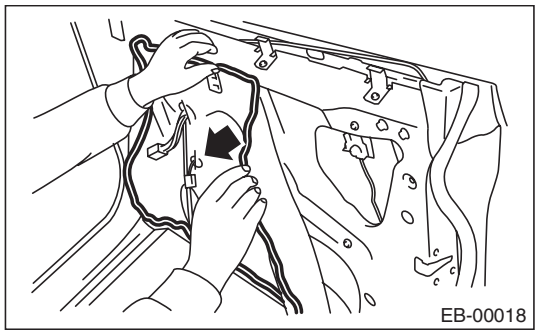

GETtheMANUALS.org

7) Remove the front door impact sensor.
   (1) Remove the front door inner pad (a).
   (2) Remove the nut, and then remove the center assembly.
   (3) Pull outer part of slide lock in the direction of arrow to disconnect the connector, and remove the front door impact sensor.

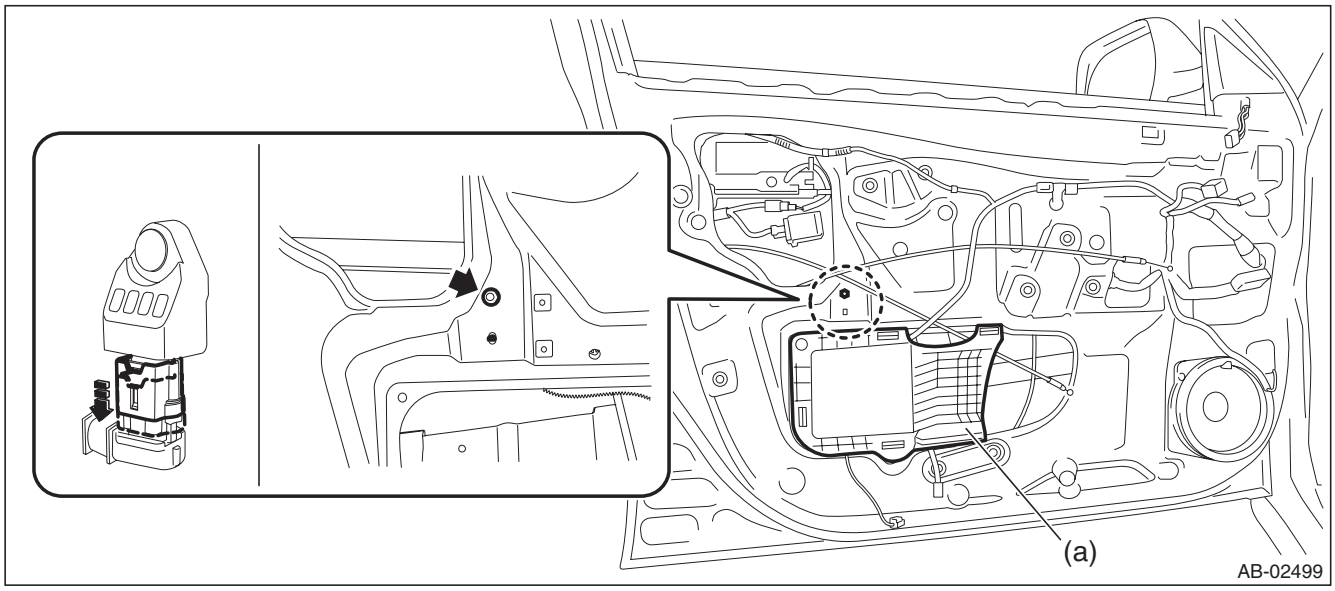

B: INSTALLATION

CAUTION:
Do not reuse the bolt and nut.
Always replace with the specified new bolts and nuts.

1) Before installation, inspect the following items and replace any faulty part with a new part.
- The front door impact sensor or connector is damaged.
- Front door inner panel area is deformed.
- Side airbag has been activated.

Tightening torque:
Front door impact sensor: 7.5 N·m (0.76 kgf-m, 5.5 ft-lb)

2) Install each part in the reverse order of removal.

GETtheMANUALS.org

11.Side Airbag Sensor

A: REMOVAL

1) Move the seat all the way forward, from which the airbag sensor is to be removed.

NOTE:
To remove the seat belt retractor assembly.
2) Turn the ignition switch to OFF.
3) Disconnect the ground cable from battery and wait for at least 60 seconds before starting work.
4) Release the claws, and then remove the side sill cover-front INN. (On the side where airbag sensor is removed)

CAUTION:
Do not pull with excessive force. Doing so may damage the claws of the side sill cover INN.

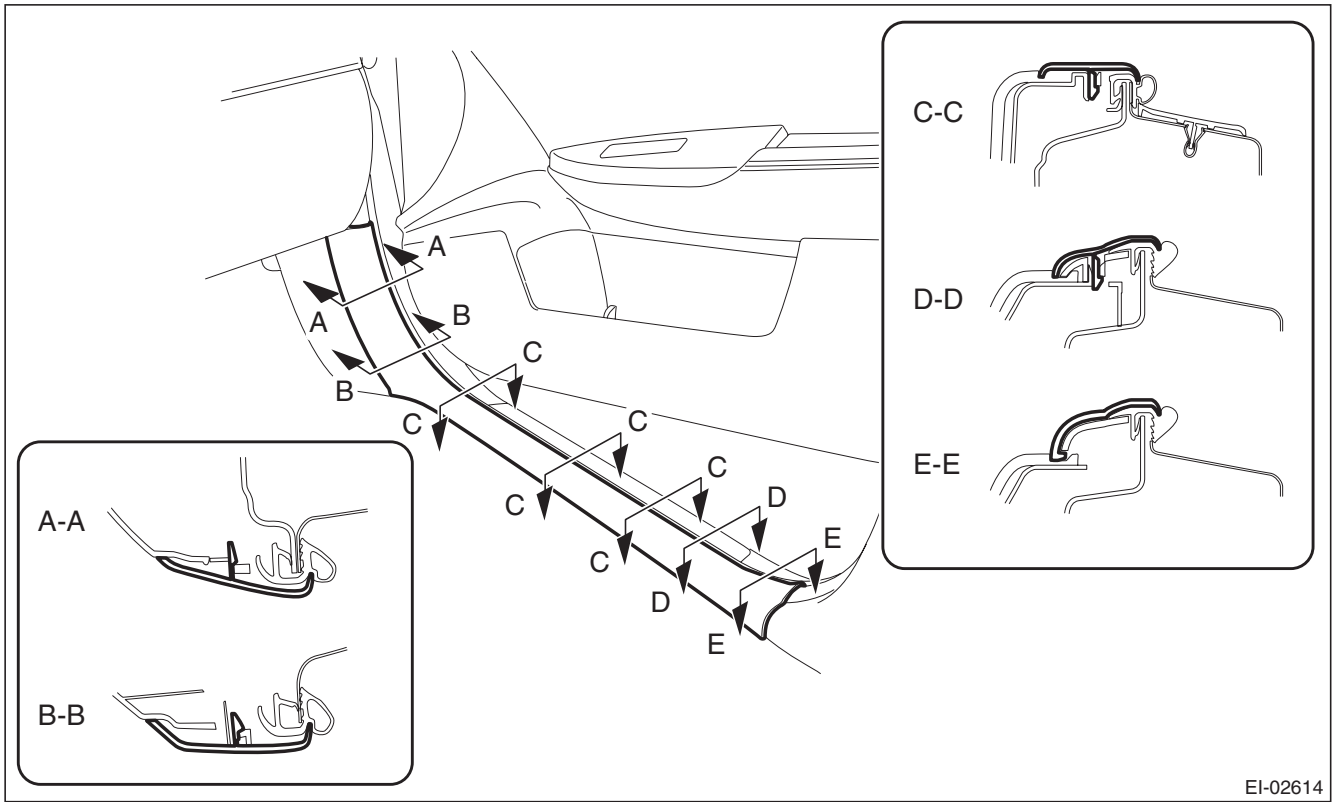

NOTE:
To release the claws of the side sill cover INN, the following steps are recommended.
1. Take out the weather strip from under the side sill cover INN.
2. Turn over the floor mat and release the claw (C-C) by accessing from behind the side sill cover INN.

GETtheMANUALS.org

5) Remove the rear seat cushion assembly.
   (1) Pull up the seat cushion and release the hook.

CAUTION:
If the hook is disconnected from the vehicle body, replace the hook with the new part to prevent the decline of the fixed force of the seat.

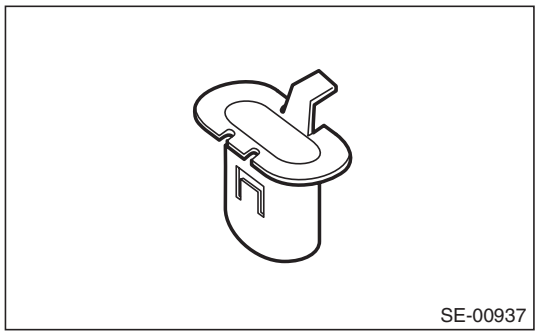

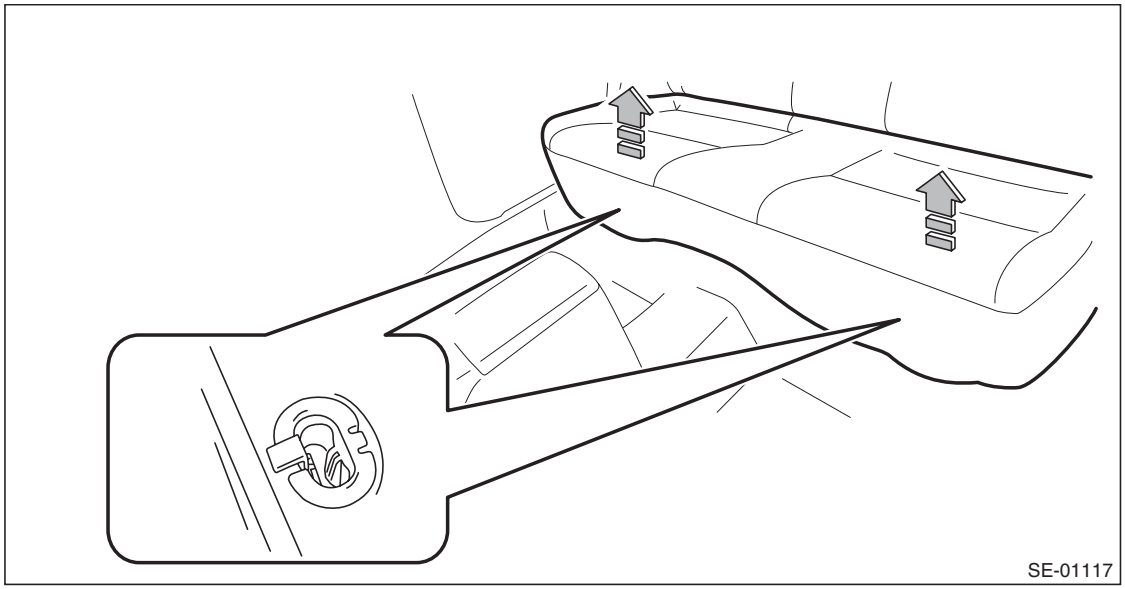

(2) Remove the hook (A) by pushing it back while lifting the front side of the seat cushion, and remove the seat cushion assembly.

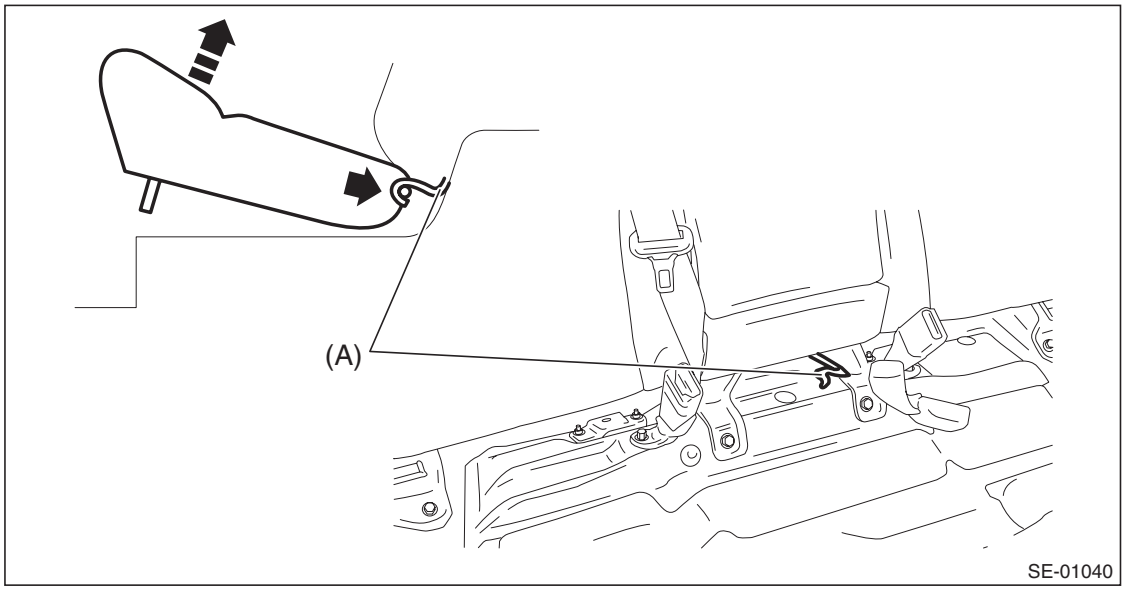

GETtheMANUALS.org

6) Release the clips and claws, and then remove the side sill cover - rear INN. (On the side where airbag sensor is removed)

CAUTION:
Do not pull with excessive force. Doing so may damage the claws of the side sill cover INN.

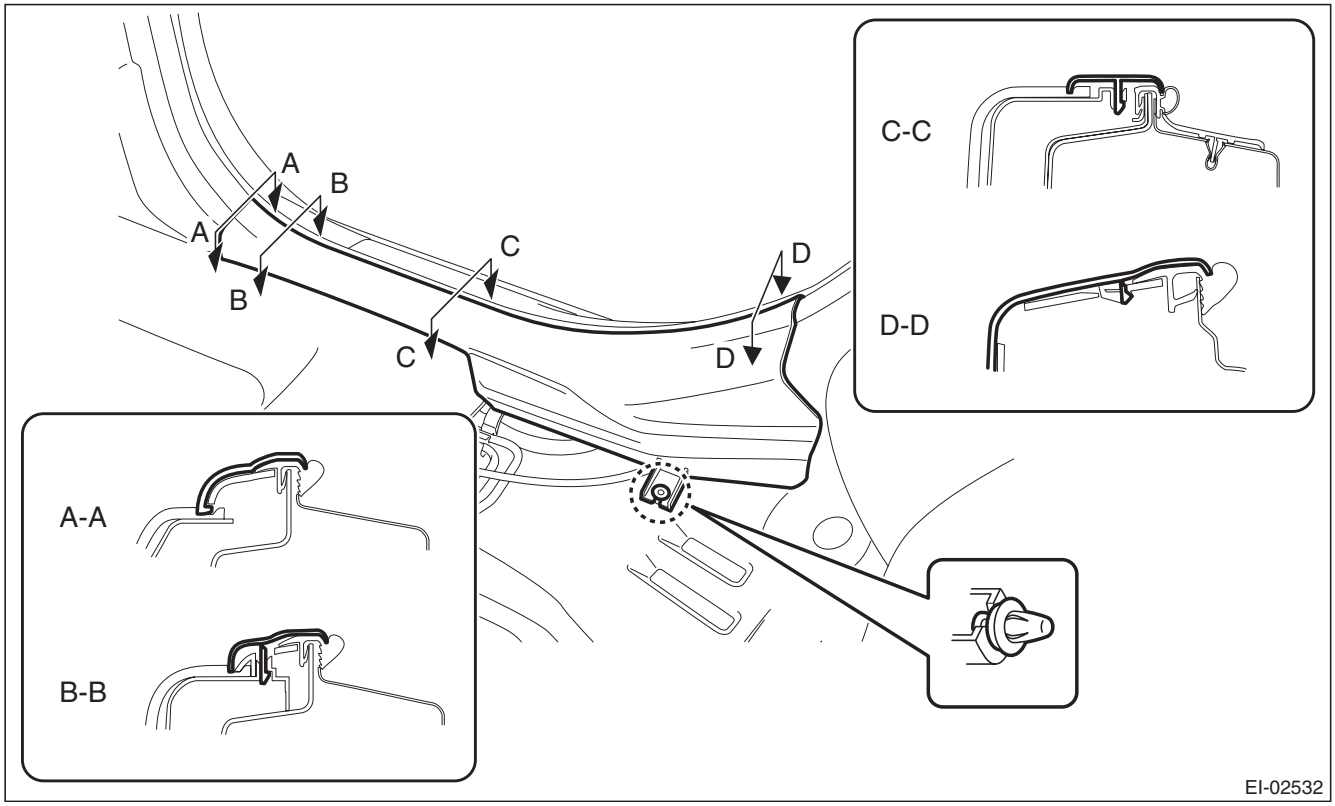

NOTE:
To release the claws of the side sill cover INN, the following steps are recommended.
1. Take out the weather strip from under the side sill cover INN.
2. Turn over the floor mat and release the claw (C-C and D-D) by accessing from behind the side sill cover INN.

GETtheMANUALS.org

7) Remove the center pillar trim LWR. (On the side where airbag sensor is removed)
   (1) Release the clip by pulling the center pillar trim LWR toward you.
   (2) Expand the claws of center pillar trim LWR outward and remove it from the center pillar trim UPR.

CAUTION:
Do not expand the center pillar trim LWR excessively. Doing so may damage the trim.

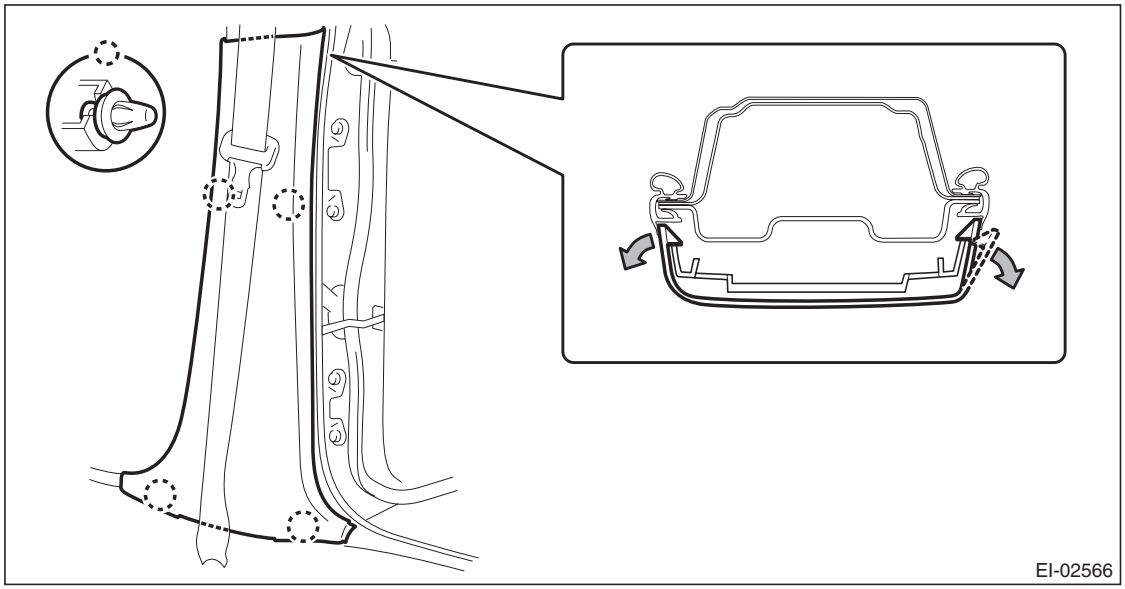

NOTE:
First release the claw located to the rear of the vehicle.

8) Remove the seat belt retractor. (On the side where airbag sensor is removed)
   (1) Turn over the floor mat to disconnect the belt tension sensor connector.
   (2) Remove the bolt to remove the seat belt retractor.

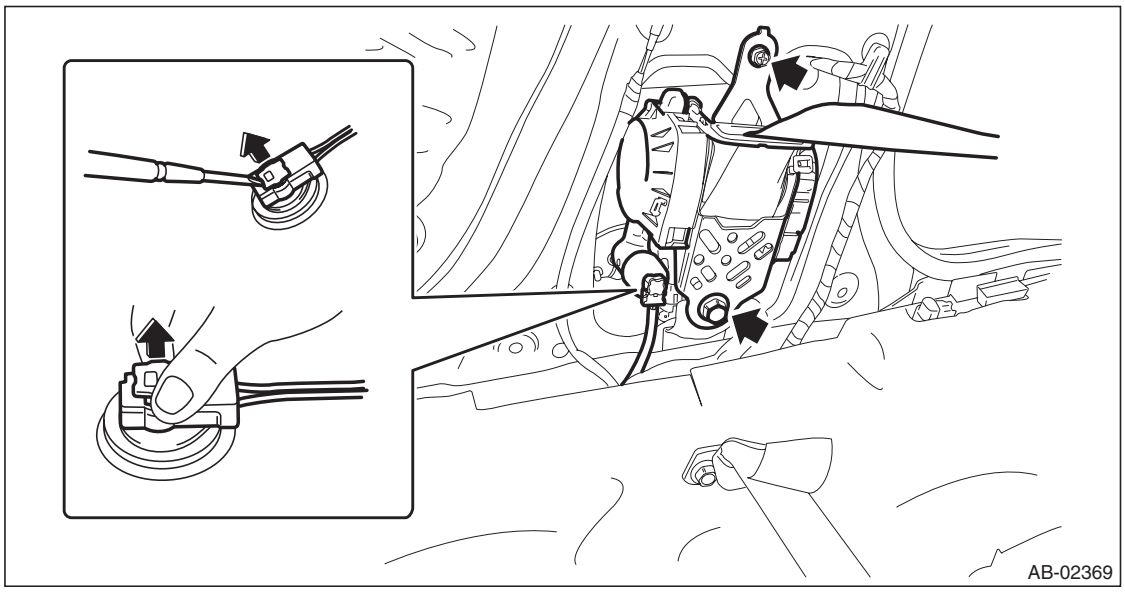

GETtheMANUALS.org

9) Remove the nuts and then remove the side airbag sensor assembly.

CAUTION:
- **Do not separate the side airbag sensor and bracket. It cause the airbag system malfunction.**
- **If the sensor is removed from the bracket, be sure to replace with a new part.**
  (1) Push the lock arm.
  (2) Holding outer part, pull it one step in the direction of arrow.
  (3) Push the lock arm again.
  (4) Holding outer part, pull it in the direction of arrow to disconnect the connector.

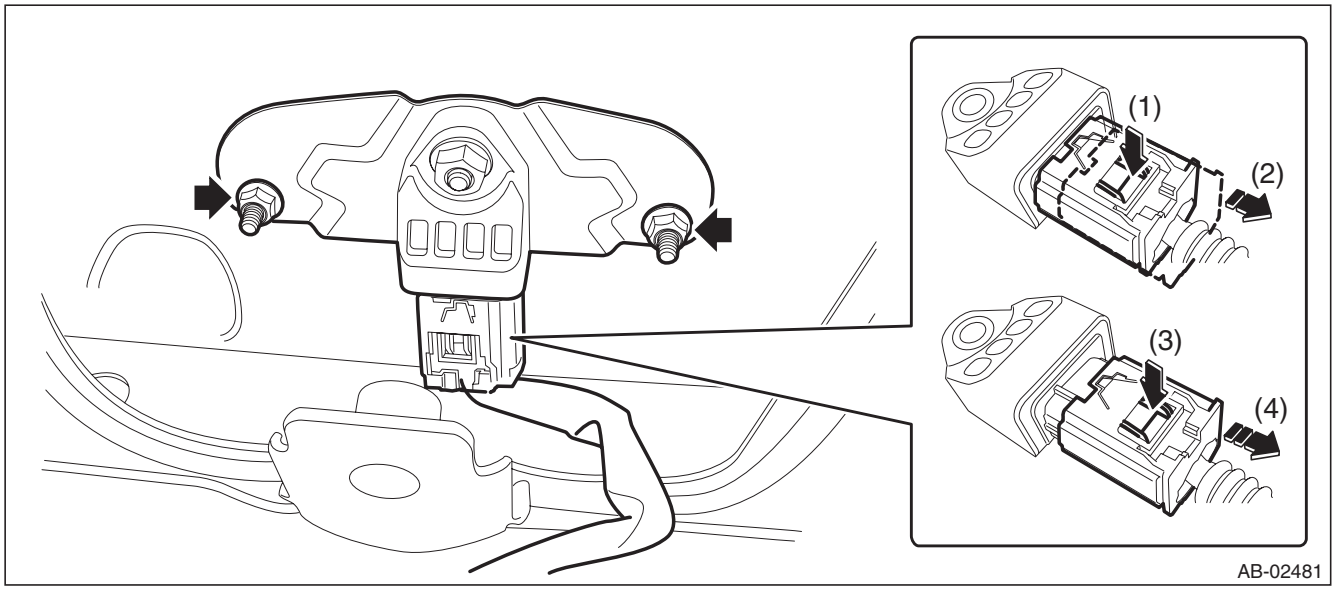

B: INSTALLATION

CAUTION:
Do not reuse the bolt and nut.
Always replace with the specified new bolts and nuts.

1) Before installation, inspect the following items and replace any faulty part with a new part.
- The side airbag sensor, sensor bracket, or connector are damaged.
- Side airbag has been activated.

Tightening torque:
Side airbag sensor: 7.5 N·m (0.76 kgf-m, 5.5 ft-lb)

2) Install each part in the reverse order of removal.

CAUTION:
If the hook is disconnected from the vehicle body, replace the hook with the new part to prevent the decline of the fixed force of the seat.

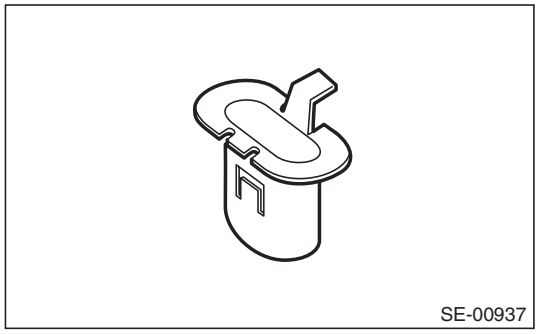

GETtheMANUALS.org

NOTE:
Assemble the center pillar trim LWR to the center pillar trim UPR securely.

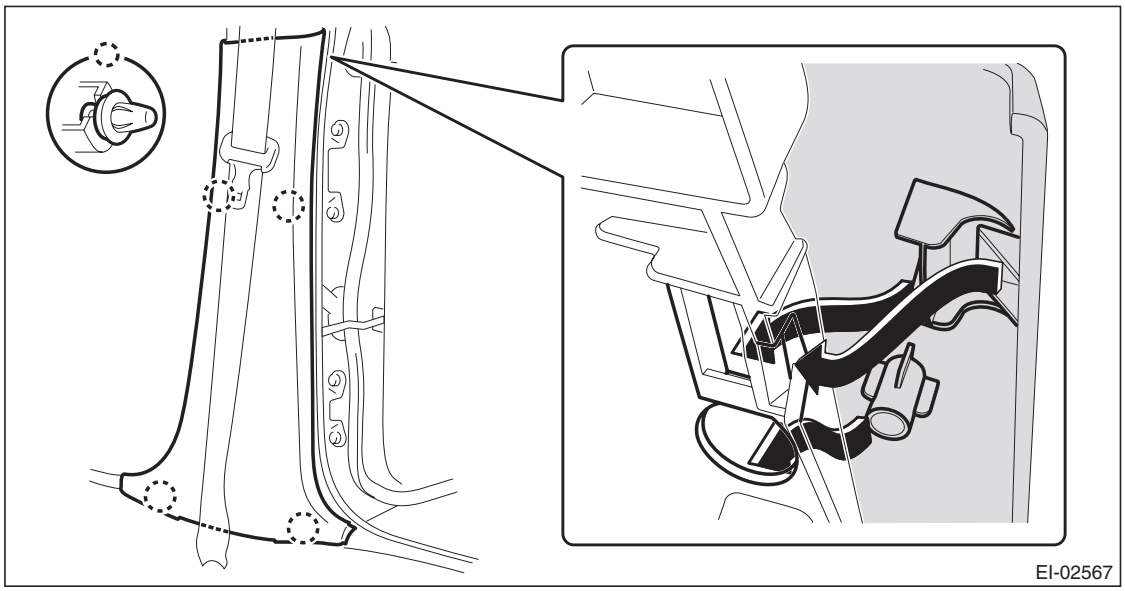

Tightening torque:
Front seat belt: <Ref. to SB-2, FRONT SEAT BELT, COMPONENT, General Description.>

GETtheMANUALS.org

12. Curtain Airbag Sensor

A: REMOVAL

1. SEDAN MODEL

1) Disconnect the ground cable from battery and wait for at least 60 seconds before starting work.

CAUTION:
The airbag system is fitted with a backup power supply. After disconnecting the battery ground cable, the airbag may operate if you do not wait for 60 seconds before starting the service of airbag system.

2) Remove the rear seat cushion assembly.
   (1) Pull up the seat cushion and release the hook.

CAUTION:
If the hook is disconnected from the vehicle body, replace the hook with the new part to prevent the decline of the fixed force of the seat.

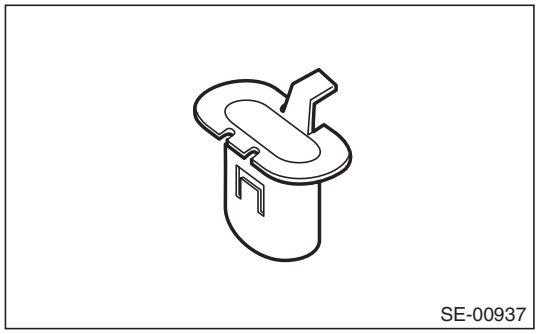

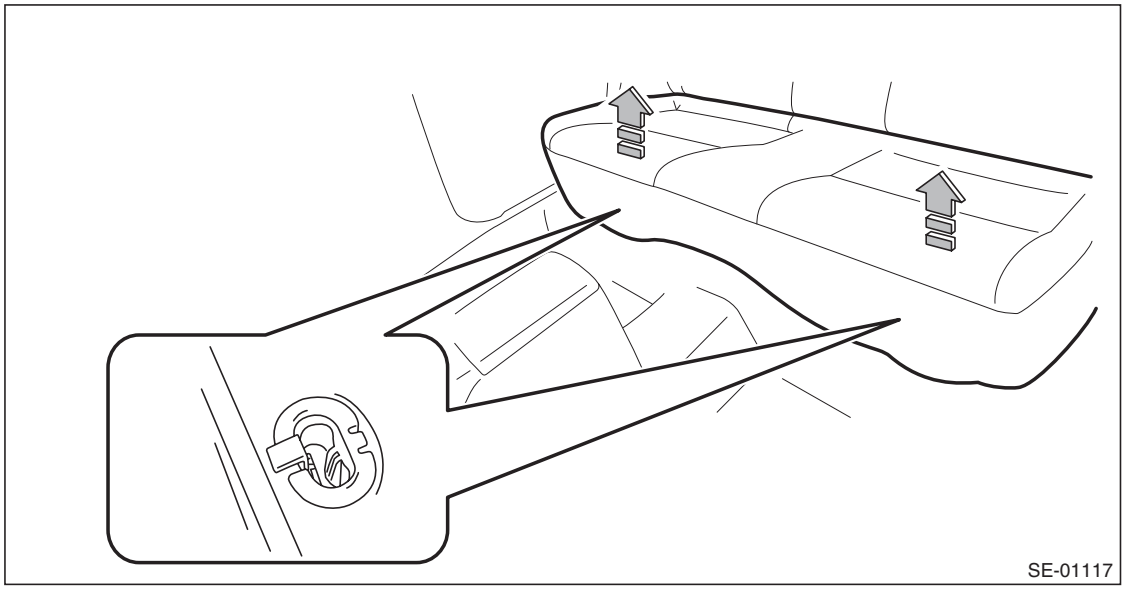

GETtheMANUALS.org

(2) Remove the hook (A) by pushing it back while lifting the front side of the seat cushion, and remove the seat cushion assembly.

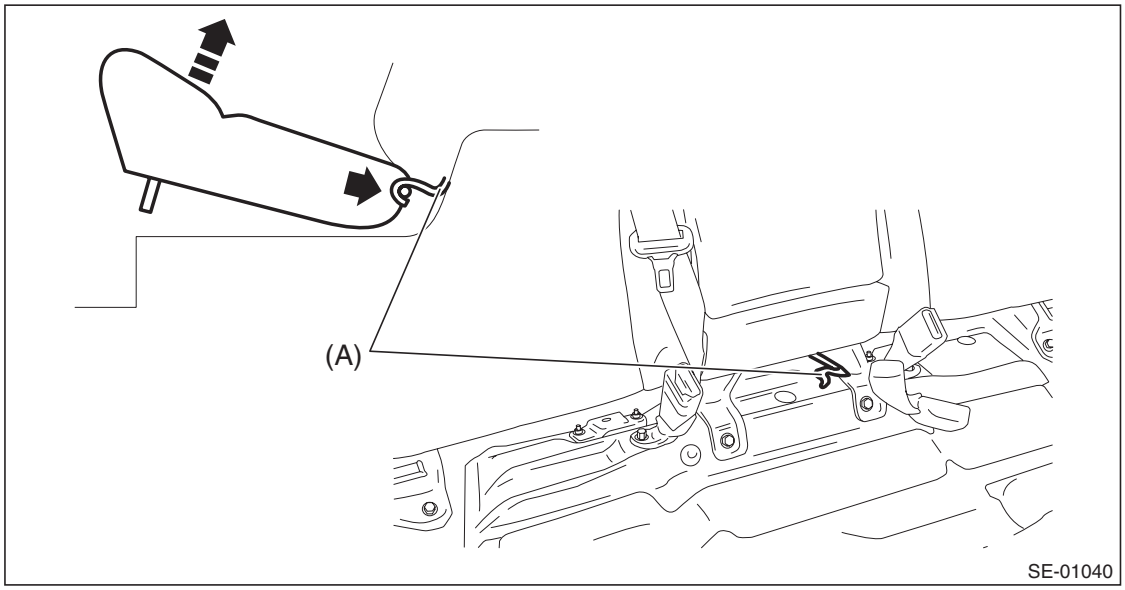

3) Release the clips and claws, and then remove the side sill cover - rear INN. (On the side where airbag sensor is removed)

CAUTION:
Do not pull with excessive force. Doing so may damage the claws of the side sill cover INN.

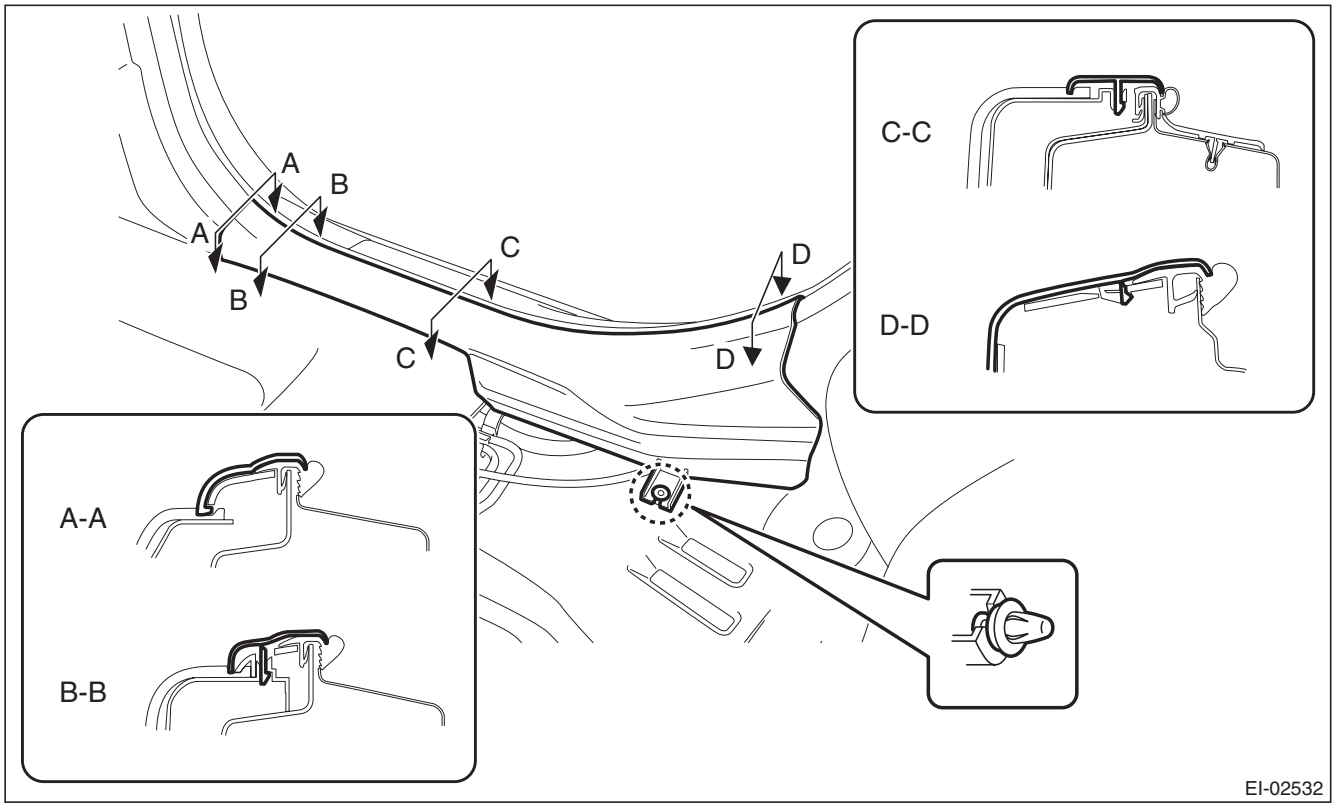

NOTE:
To release the claws of the side sill cover INN, the following steps are recommended.
1. Take out the weather strip from under the side sill cover INN.
2. Turn over the floor mat and release the claw (C-C and D-D) by accessing from behind the side sill cover INN.

GETtheMANUALS.org

4) Remove the rear quarter trim LWR. (On the side where airbag sensor is removed)
(1) Remove the backrest side pad.
a) Remove the screws.

Preparation tool: Stubby screwdriver

b) Turn over the bottom end of the backrest side pad in the forward direction so that the claws are released.
c) Remove the backrest side pad by pulling it up.

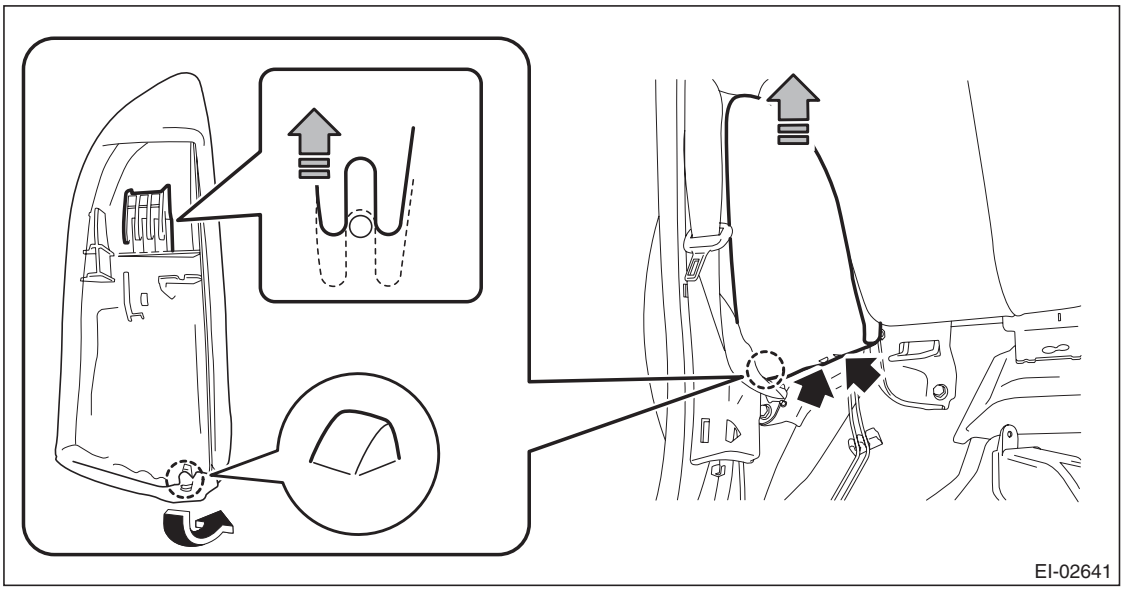

(2) Pull the release lever in the trunk room, and then tilt the backrest forward.

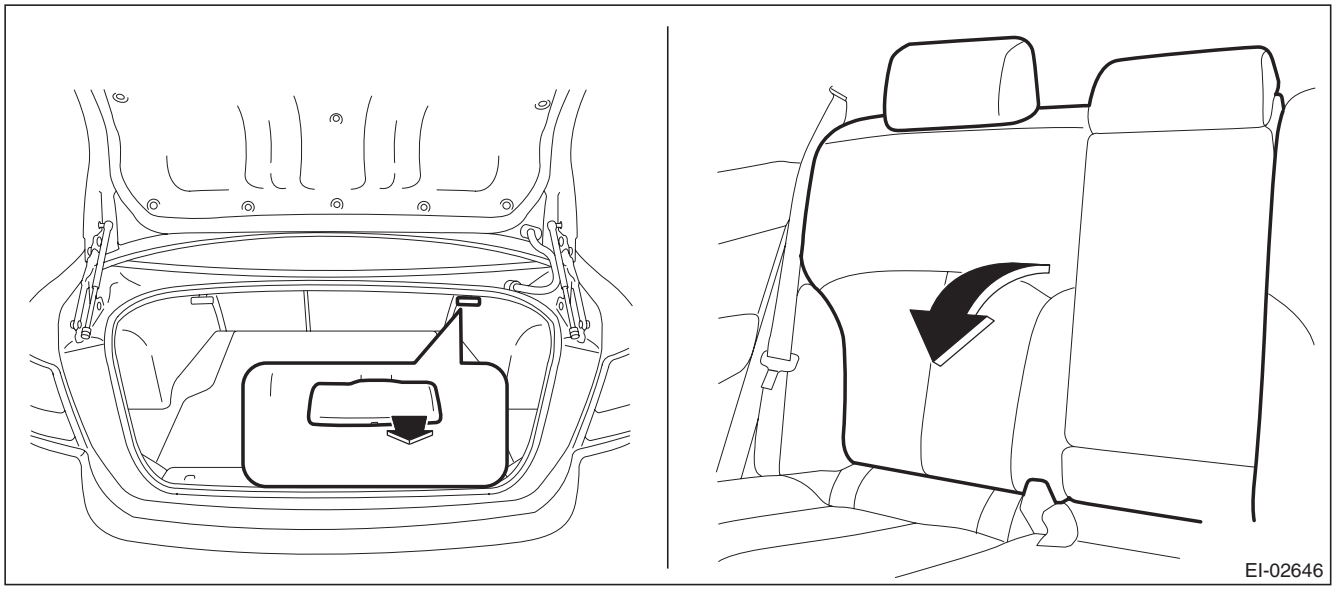

(3) Release the clips of the trunk trim panel assembly - side.

GETtheMANUALS.org

(4) Remove the clips, and remove the rear quarter trim LWR.

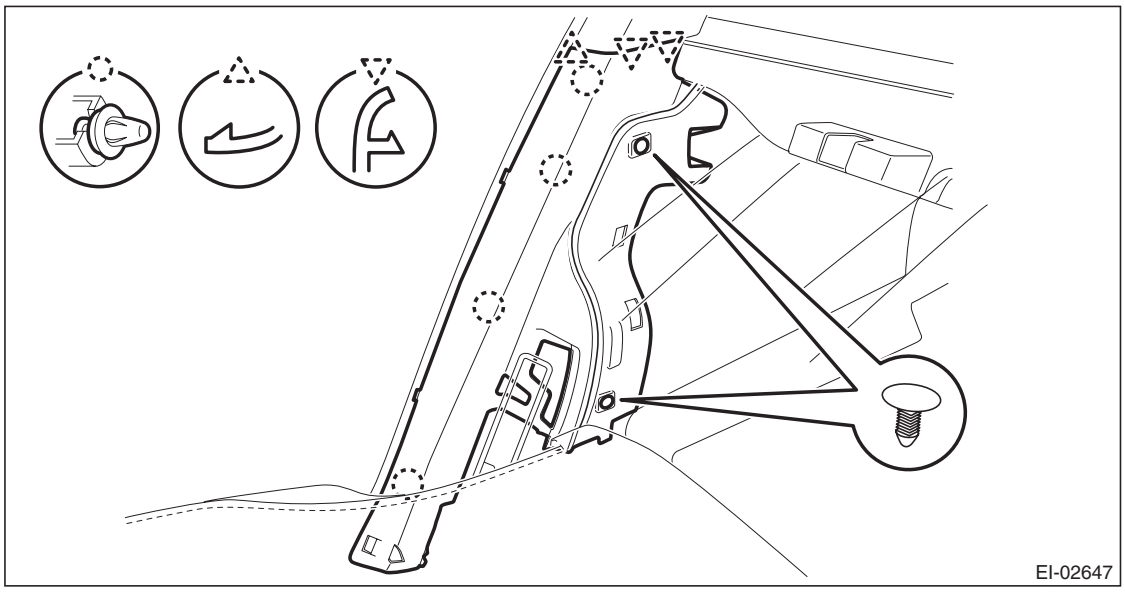

5) Remove the nut and then remove the curtain airbag sensor assembly.
   (1) Push the lock arm.
   (2) Holding outer part, pull it one step in the direction of arrow.
   (3) Push the lock arm again.
   (4) Holding outer part, pull it in the direction of arrow to disconnect the connector.

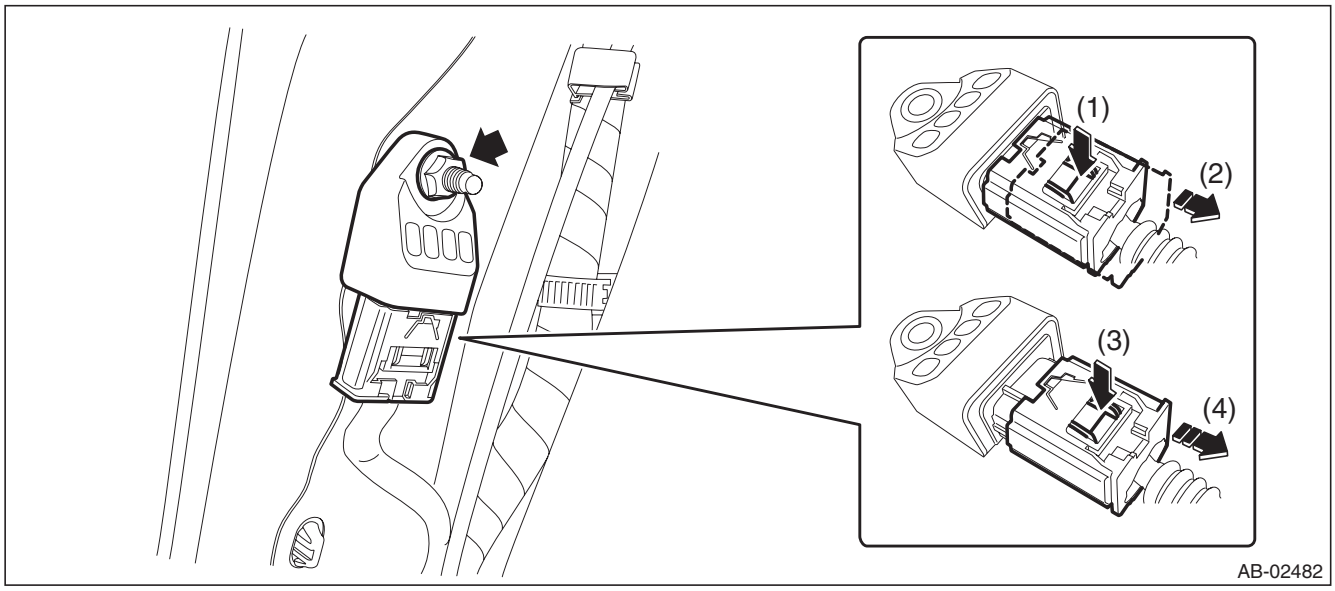

2. OUTBACK MODEL

1) Disconnect the ground cable from battery and wait for at least 60 seconds before starting work.

CAUTION:
The airbag system is fitted with a backup power supply. After disconnecting the battery ground cable, the airbag may operate if you do not wait for 60 seconds before starting the service of airbag system.

GETtheMANUALS.org

2) Remove the rear seat cushion assembly.
   (1) Pull up the seat cushion and release the hook.

CAUTION:
If the hook is disconnected from the vehicle body, replace the hook with the new part to prevent the decline of the fixed force of the seat.

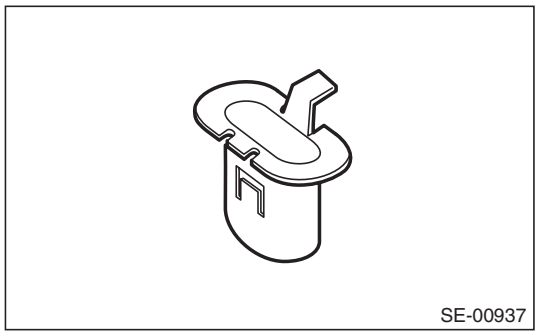

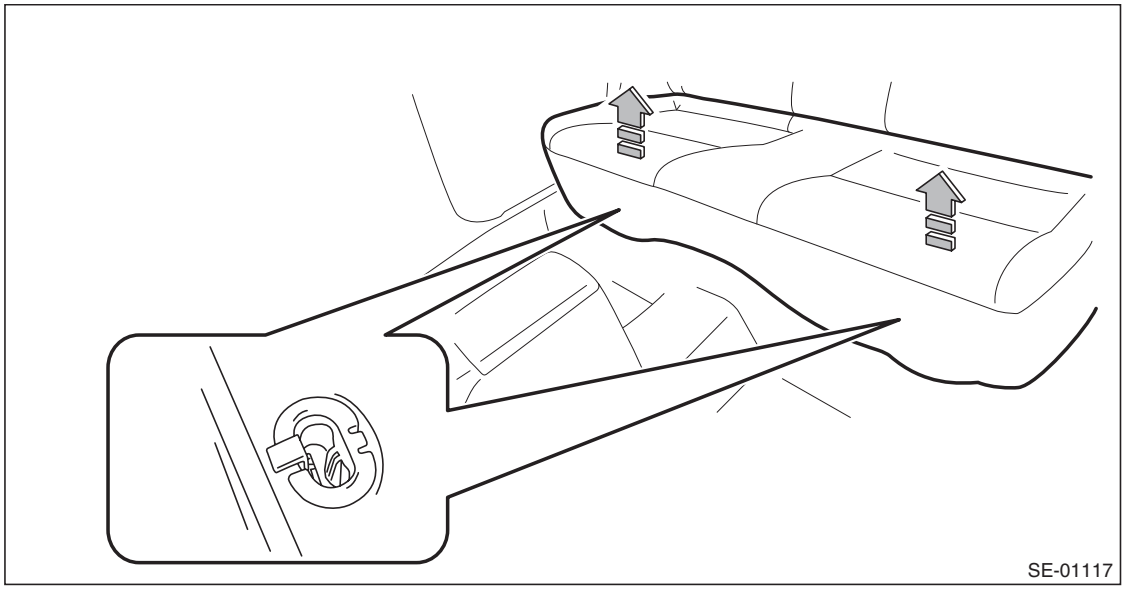

(2) Remove the hook (A) by pushing it back while lifting the front side of the seat cushion, and remove the seat cushion assembly.

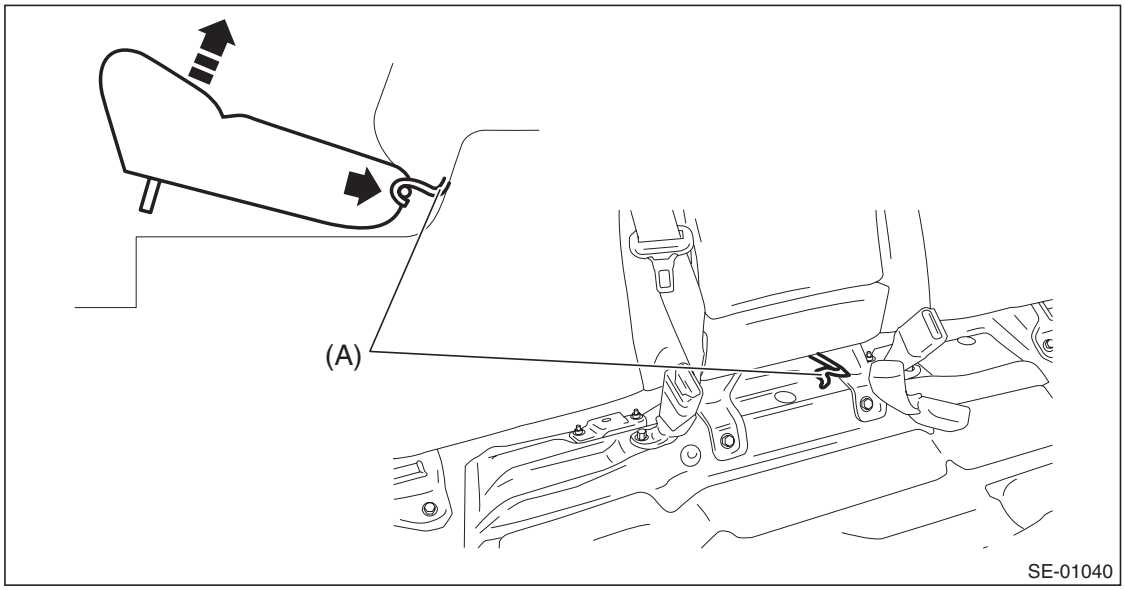

GETtheMANUALS.org

3) Release the clips and claws, and then remove the side sill cover - rear INN. (On the side where airbag sensor is removed)

CAUTION:
Do not pull with excessive force. Doing so may damage the claws of the side sill cover INN.

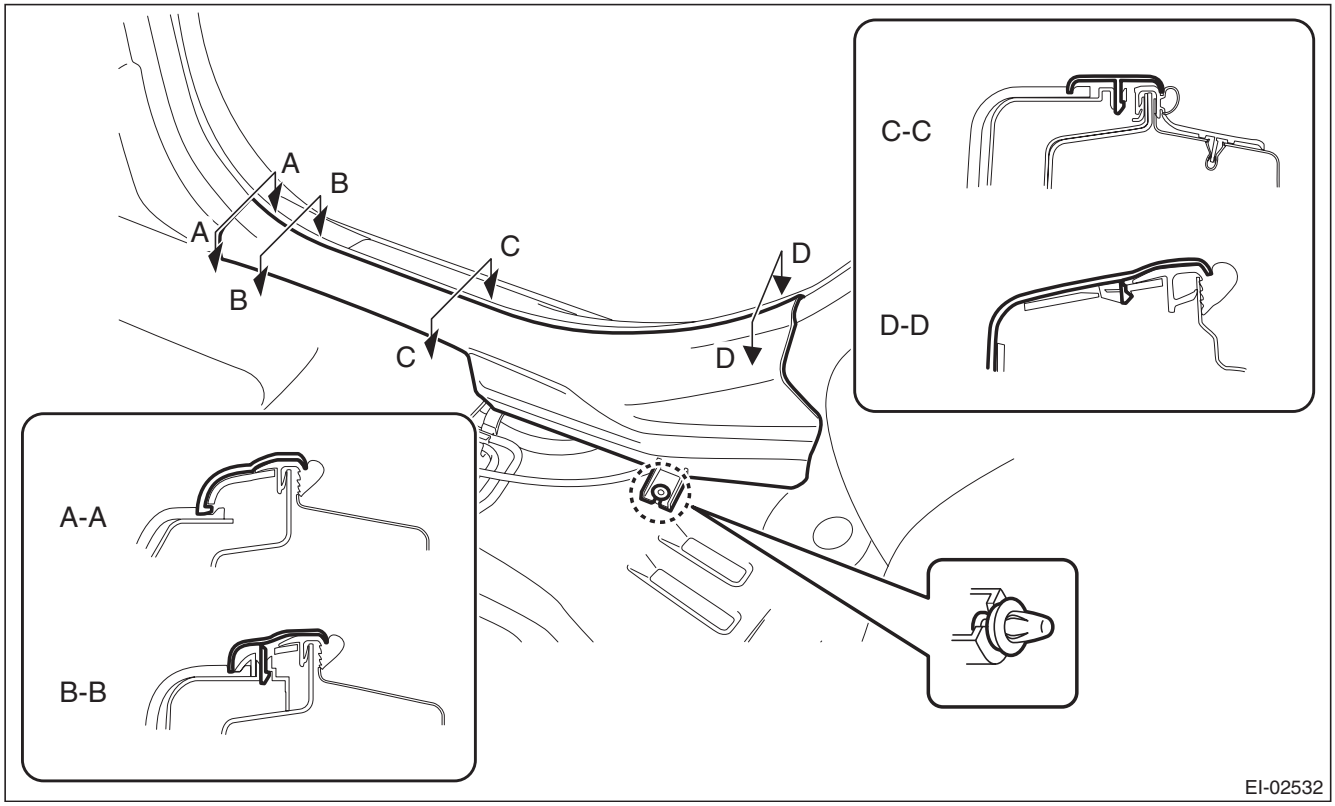

NOTE:
To release the claws of the side sill cover INN, the following steps are recommended.
1. Take out the weather strip from under the side sill cover INN.
2. Turn over the floor mat and release the claw (C-C and D-D) by accessing from behind the side sill cover INN.

4) Tilt the backrest forward, and then turn over the backrest backside mat.

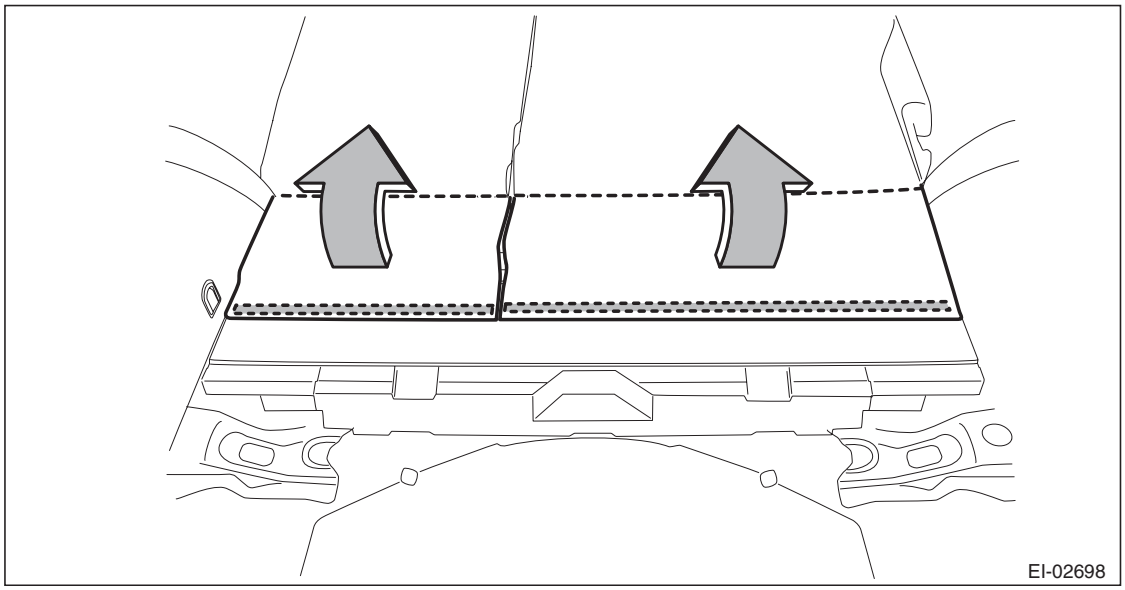

GETtheMANUALS.org

5) Remove the backrest side pad assembly. (On the side where airbag sensor is removed)
   (1) Disconnect the backrest cable and reclining lever cable.
   (2) Remove the screws and remove the reclining lever assembly by pulling it downward.

Preparation tool: Stubby screwdriver

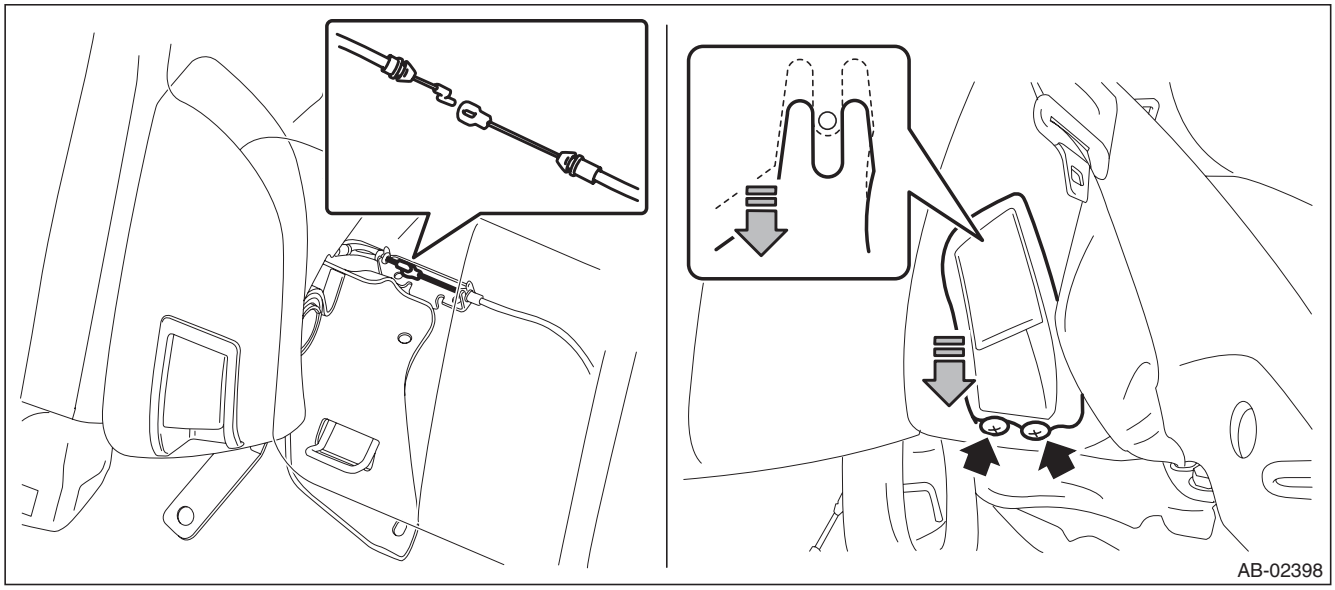

   (3) Turn over the bottom end of the backrest side pad in the forward direction so that the claws are released.
   (4) Remove the backrest side pad by pulling it up.

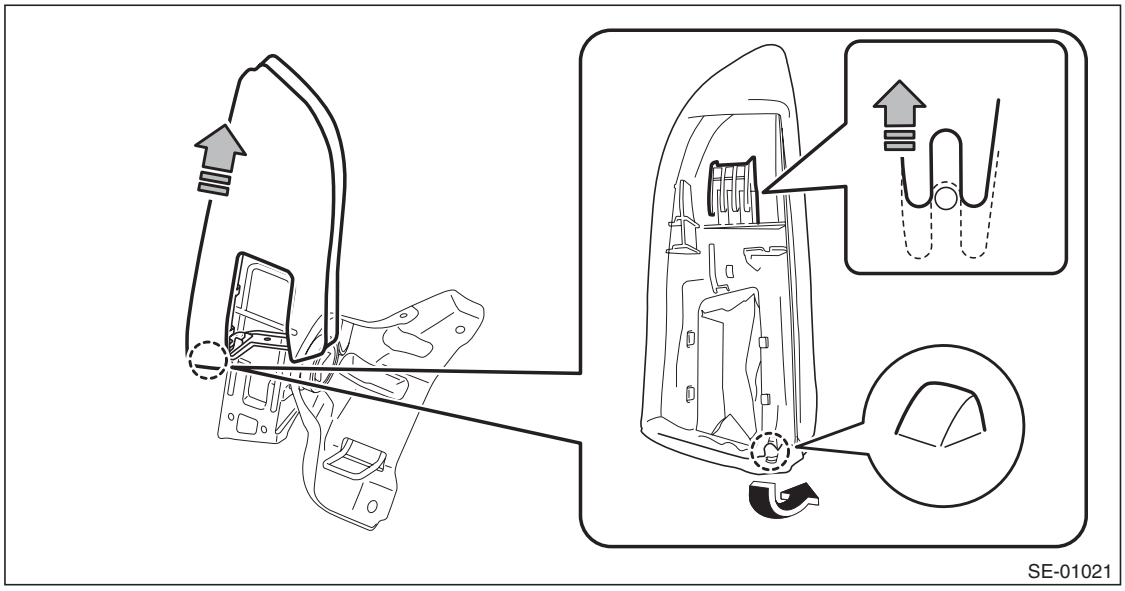

GETtheMANUALS.org

6) Remove the clips, and remove the luggage floor box and rear floor edge cover.

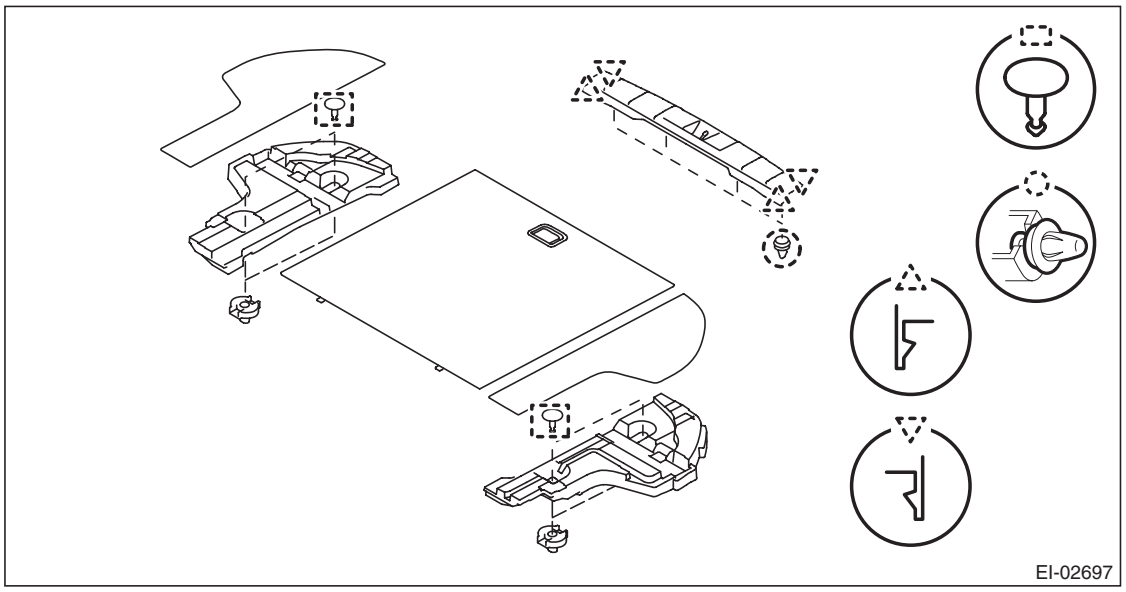

7) Remove the rear quarter trim LWR. (On the side where airbag sensor is removed)
   (1) Remove the caps, screws, and bolts. (A), (C)
   (2) Take out the hook and remove the screw inside. (B)
   (3) Remove the clips, and remove the rear quarter trim LWR.

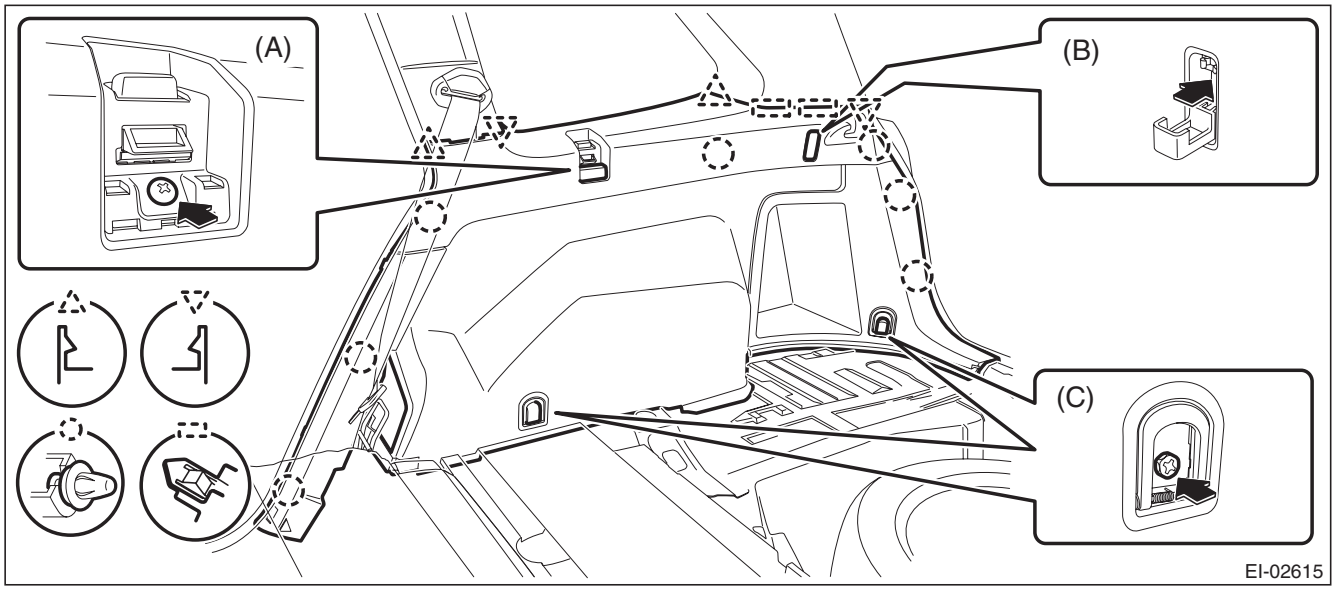

GETtheMANUALS.org

8) Remove the nut and then remove the curtain airbag sensor assembly.
   (1) Push the lock arm.
   (2) Holding outer part, pull it one step in the direction of arrow.
   (3) Push the lock arm again.
   (4) Holding outer part, pull it in the direction of arrow to disconnect the connector.

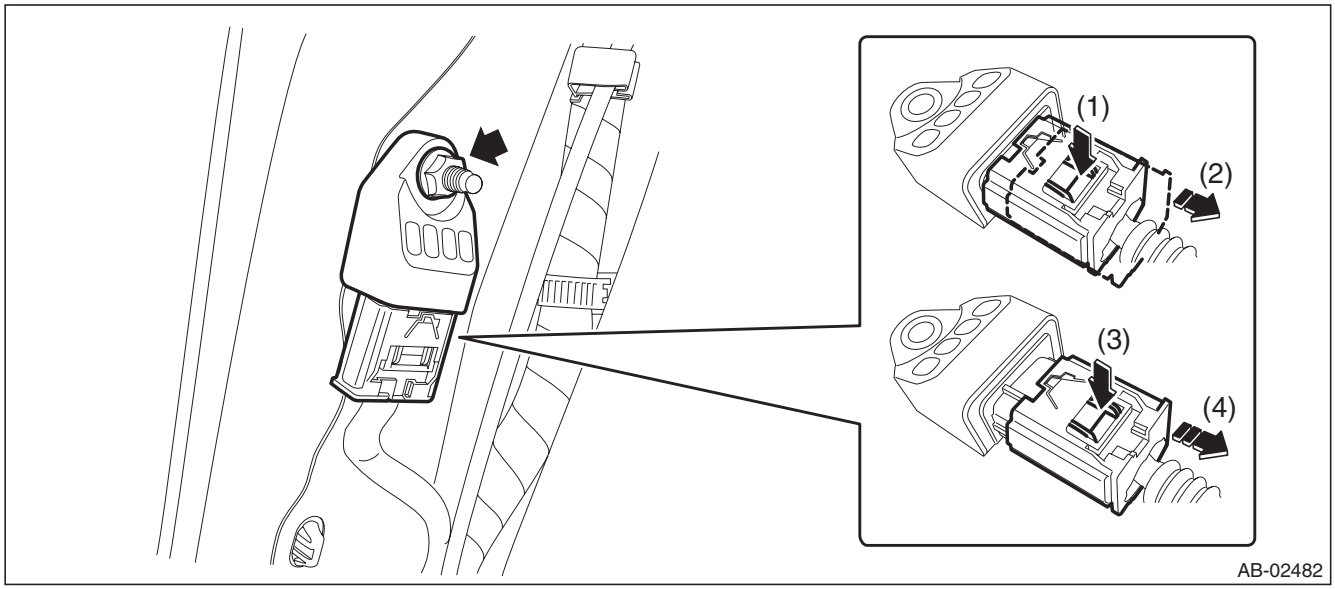

B: INSTALLATION

CAUTION:
- **Do not reuse the bolt and nut.**

Always replace with the specified new bolts and nuts.
- **When installing the sensor, insert the set pin on the backside of the sensor into the hole on the body side securely.**

1) Before installation, inspect the following items and replace any faulty part with a new one.
- Curtain airbag sensor or connector is damaged.
- Curtain airbag has been activated.

2) Install each part in the reverse order of removal.

CAUTION:
If the hook is disconnected from the vehicle body, replace the hook with the new part to prevent the decline of the fixed force of the seat.

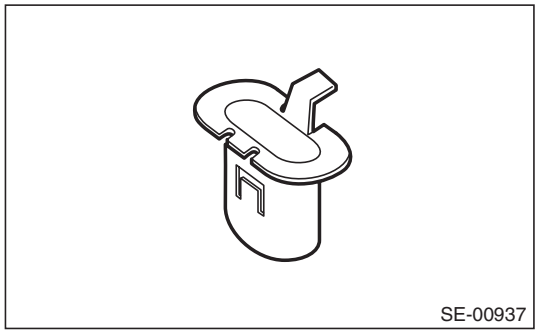

Tightening torque:
Curtain airbag sensor: 7.5 N·m (0.76 kgf-m, 5.5 ft-lb)

GETtheMANUALS.org

13. Roll Connector

A: REMOVAL

1) Position the front wheels straight ahead. (After moving a vehicle 5 m (16 ft) or more with front wheels positioned straight ahead, make sure that the vehicle moves straight ahead.)
2) Turn the ignition switch to OFF.
3) Disconnect the ground cable from battery and wait for at least 60 seconds before starting work.
4) Remove the driver's airbag module assembly.
   (1) Using a hexagon wrench etc. wrapped by protective tape, insert the snap pins and release the locks (3 locations).

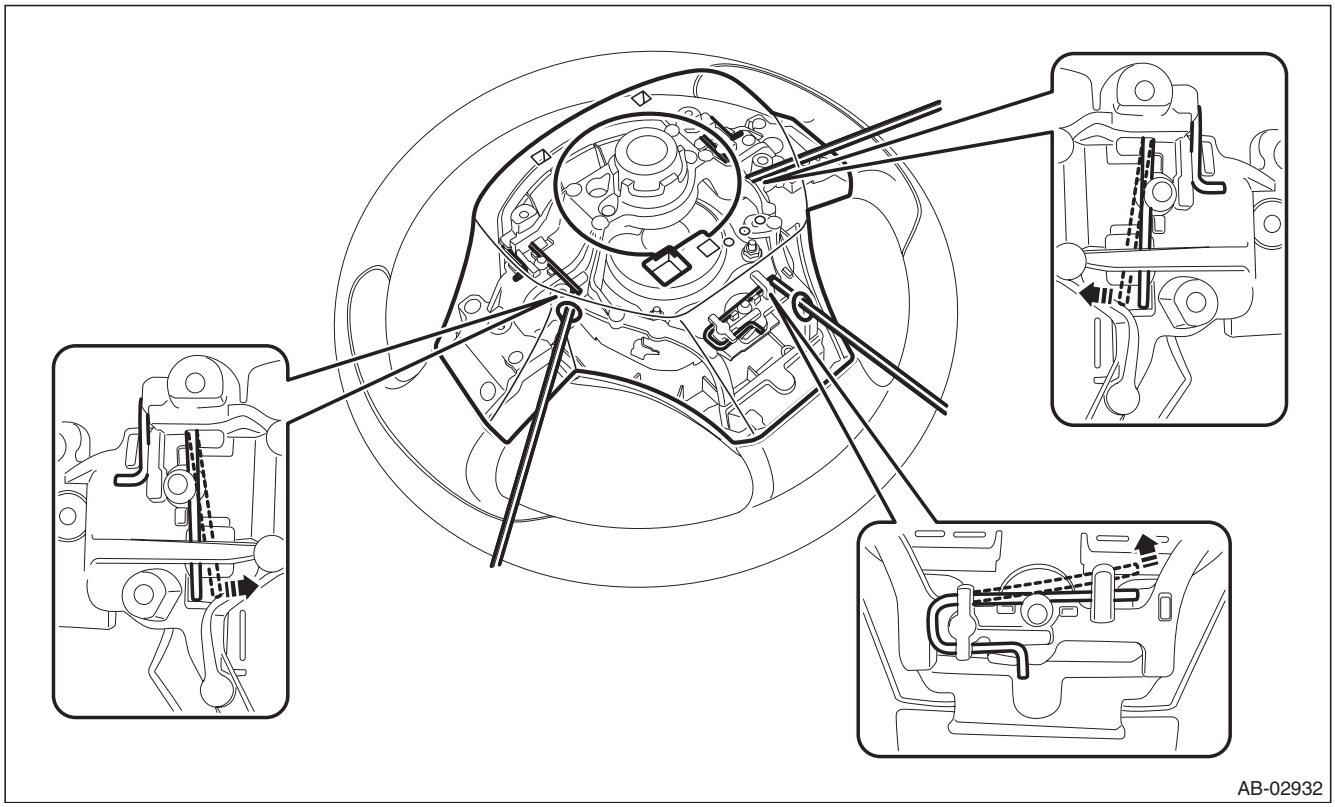

GETtheMANUALS.org

(2) Disconnect the horn harness and airbag connector and remove the airbag module assembly. <Ref. to AB-21, DRIVER'S AIRBAG MODULE, CURTAIN AIRBAG MODULE & PRETENSIONER, PROCEDURE, Airbag Connector.>

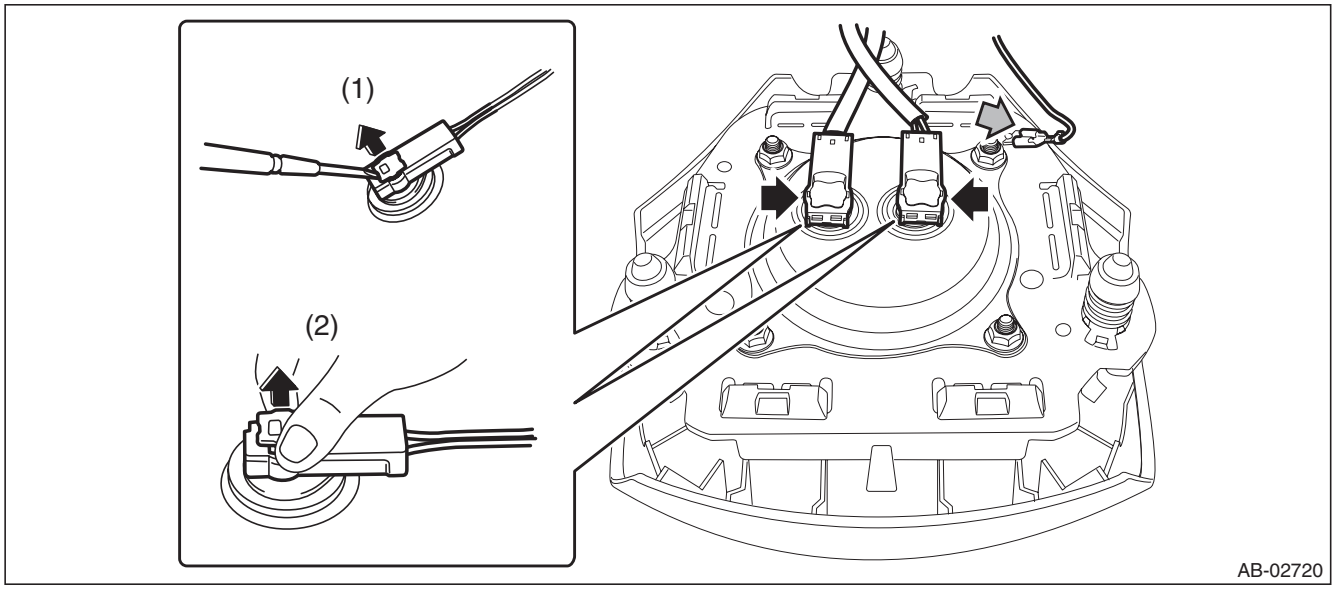

5) Remove the steering wheel.

CAUTION:

- **Always use the steering wheel puller for removal to avoid deforming the steering wheel.**
- **If the steering wheel has been removed, make sure that the roll connector is not turned from the original position.**

(1) Disconnect the connector and remove the nut.
(2) Put alignment marks and remove the steering wheel.

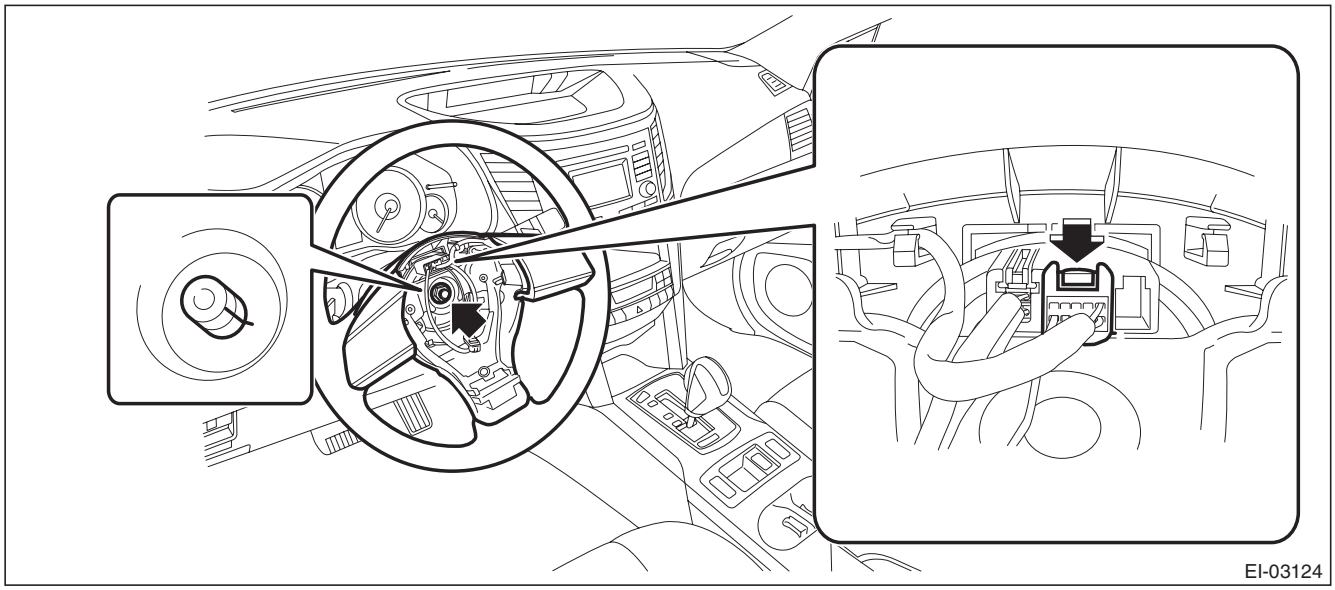

GETtheMANUALS.org

6) Remove the steering column cover.
   (1) Lower the lever of the steering column.
   (2) Release the claws and remove the screws, then detach the steering column lower cover.

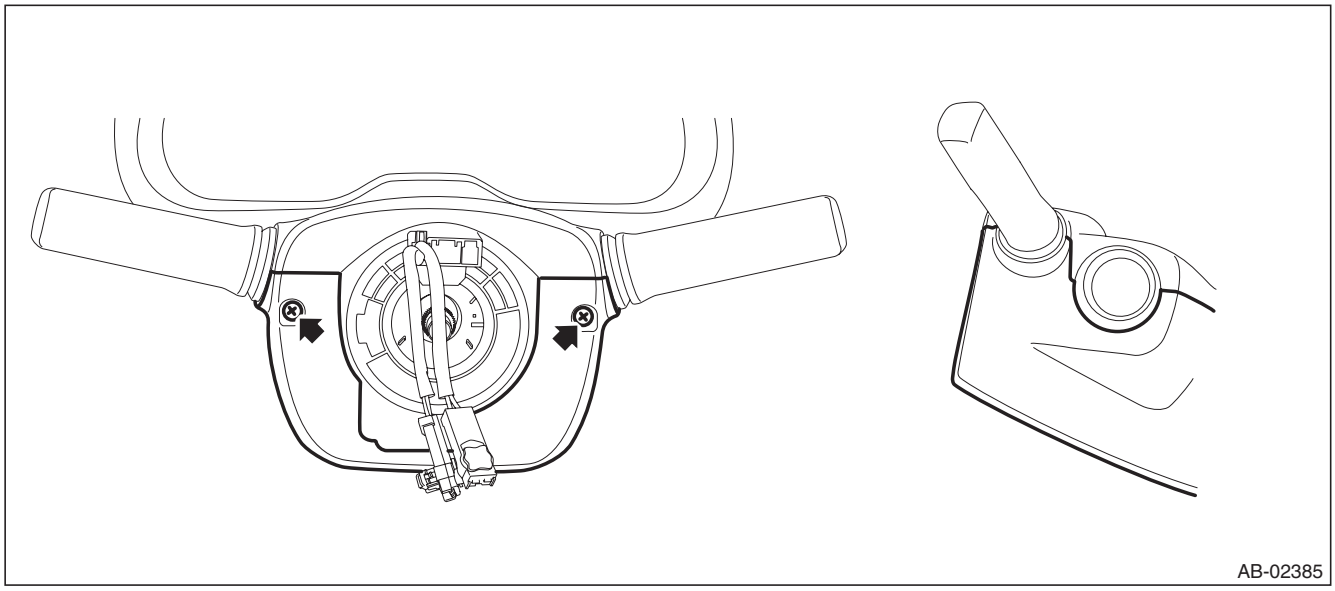

   (3) Separate the steering column upper cover and steering upper cover, and remove the steering column upper cover.

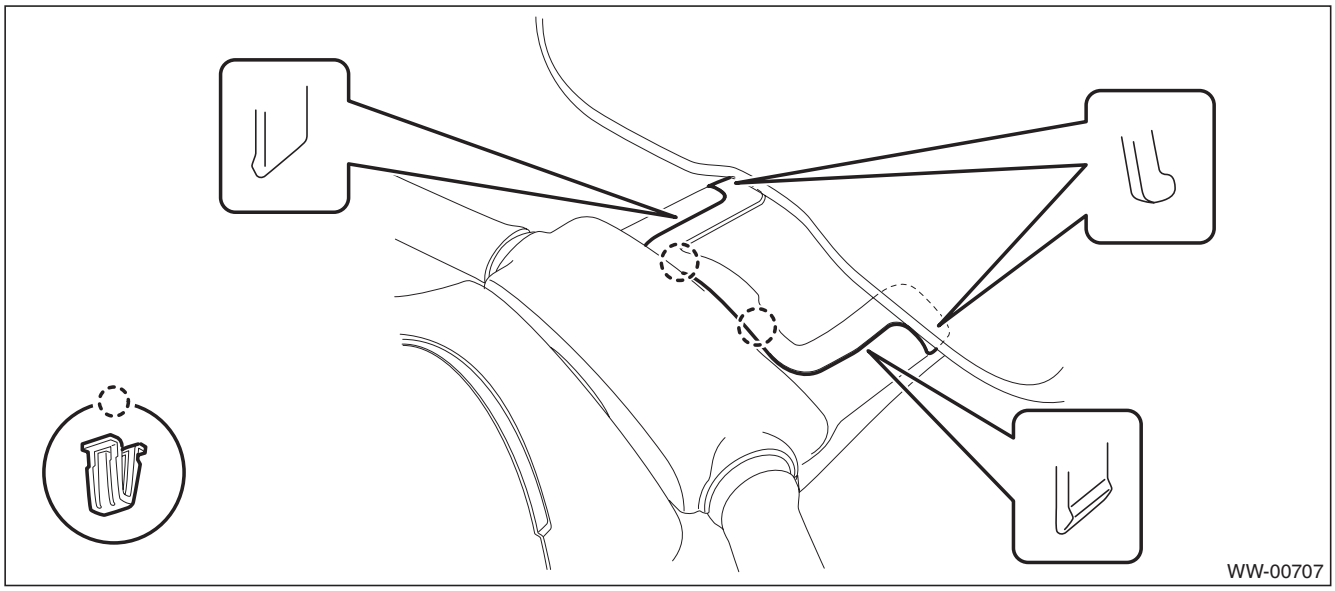

GETtheMANUALS.org

7) Remove the roll connector.

CAUTION:
Make sure that the roll connector is not turned from the original position.

(1) Disconnect the connector under the roll connector.
(2) Release the claws and remove the roll connector.

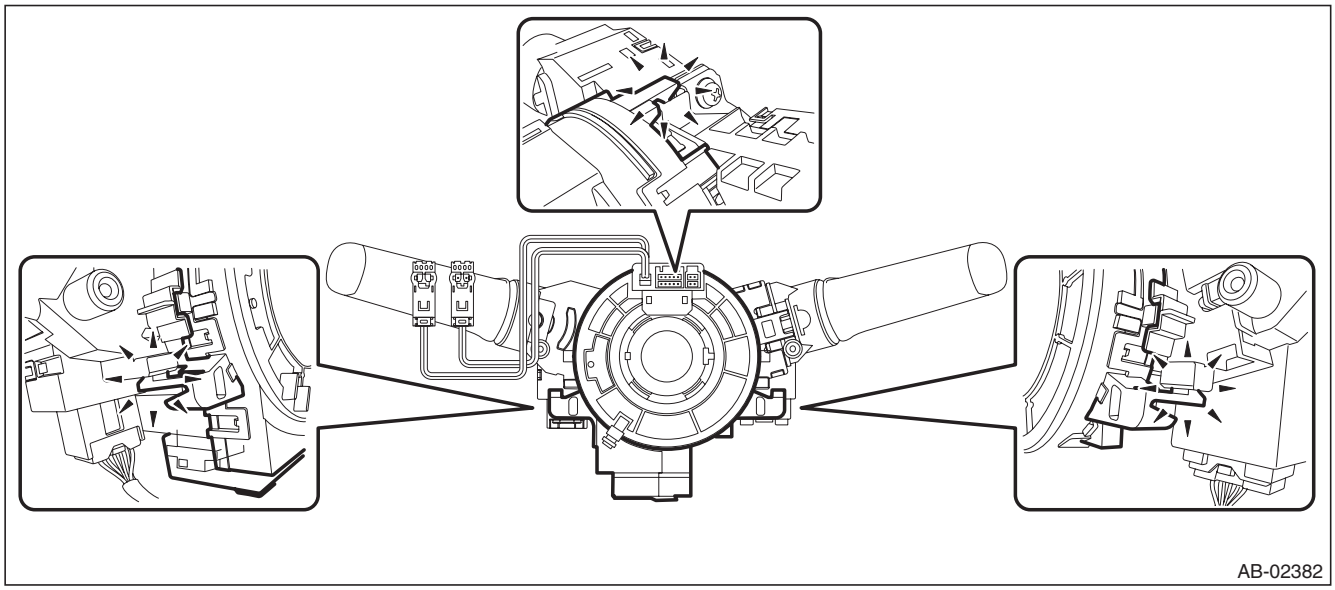

B: INSTALLATION

1) Before attaching a new roll connector, apply a thin coat of grease contained in the connector onto the areas shown by the arrows.

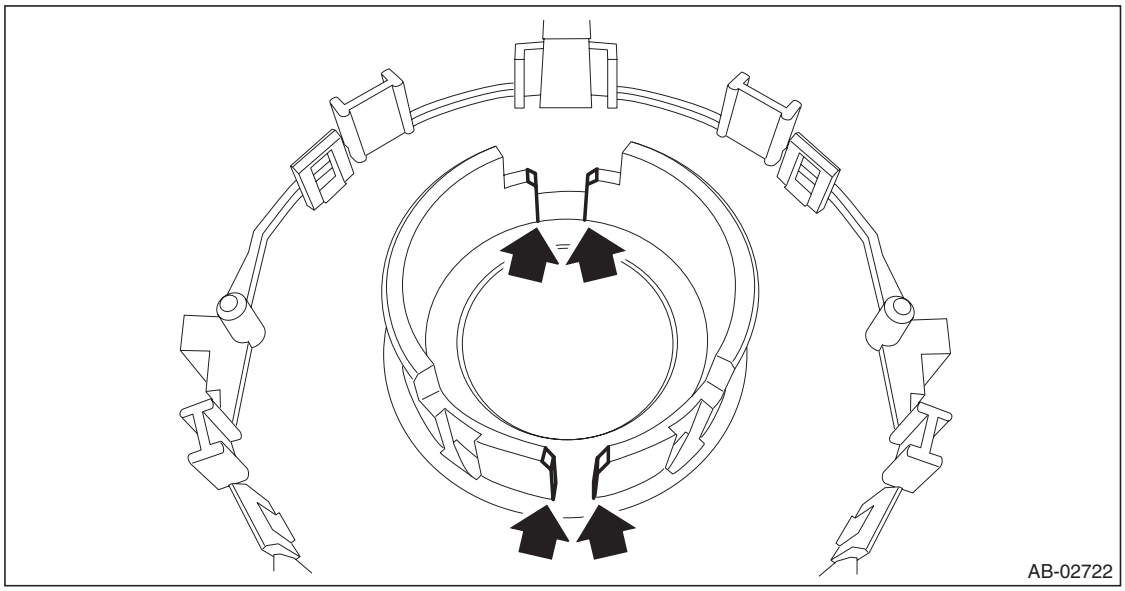

2) Install each part in the reverse order of removal.
3) Before installing steering wheel, be sure to adjust the direction of roll connector with steering. <Ref. to AB-101, ADJUSTMENT, Roll Connector.>

Tightening torque:
Steering wheel: 39 N·m (3.98 kgf-m, 28.8 ft-lb)

Clearance:
Between column cover and steering wheel: 2 — 4 mm (0.08 — 0.16 in)

GETtheMANUALS.org

C: INSPECTION

1. VISUAL INSPECTION

Check for the following, and replace the damaged parts with new parts.
- Combination switch is cracked or deformed.
- Roll connector is cracked or deformed.

2. UNIT INSPECTION OF ROLL CONNECTOR

CAUTION:
- **Do not rotate the roll connector to more than the specified number of turns. Otherwise, the roll connector internal wire may be broken.**
- **When determining the end stop, rotate the connector slowly without applying excessive force. Applying excessive force at the end stop may break the internal wire.**

1) Adjust the roll connector. <Ref. to AB-101, ADJUSTMENT, Roll Connector.>
2) Set the roll connector to the central position.
3) Connect the test harness to the connector E and connector F.

Preparation tool: Test harness N (98299SA000), Test harness Q (98299SA040)
- Connector E - Test harness N (1N)
- Connector F - Test harness Q (1Q)

4) With the following conditions, check the resistance between the test harness connector terminals.
- Perform the check with the roll connector centered (front wheels direct straightforward).
- Rotate the roll connector counterclockwise from the center (front wheels direct straightforward) to an end stop. Then, perform the check while rotating it clockwise to approximately 4.5 turns.

Preparation tool: Circuit tester

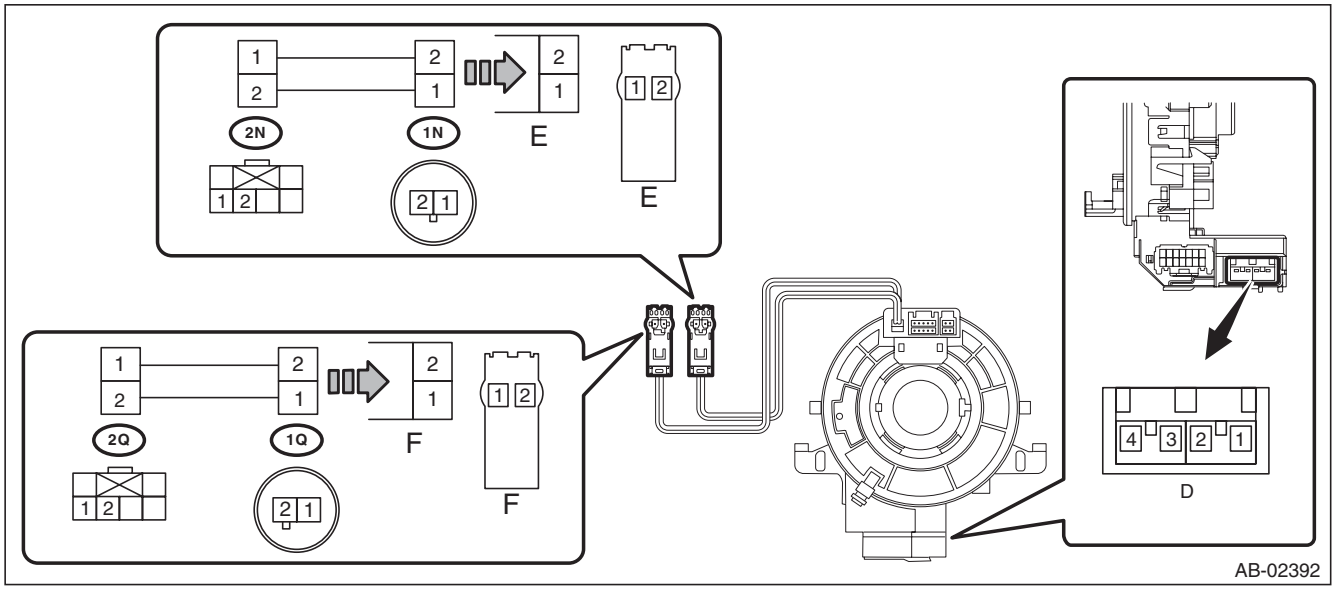

Terminal No.	Inspection conditions	Standard
(2N) No. 1 — (2N) No. 2	Always	Less than 1 Ω
(2Q) No. 1 — (2Q) No. 2	Always	Less than 1 Ω

NOTE:
The connector D is designed to short the terminals D1/D2 and D3/D4 when disconnected.
5) Replace the roll connector with a new part if the inspection result is not within the standard value.

GETtheMANUALS.org

D: ADJUSTMENT

CAUTION:

- **Do not rotate the roll connector to more than the specified number of turns. Otherwise, the roll connector internal wire may be broken.**
- **When determining the end stop, rotate the connector slowly without applying excessive force. Applying excessive force at the end stop may break the internal wire.**

1) Check that front wheels are positioned in straight ahead direction.
2) Rotate the roll connector counterclockwise until it stops.
3) Rotate the roll connector clockwise approx. 3 turns until "▲" marks are aligned.

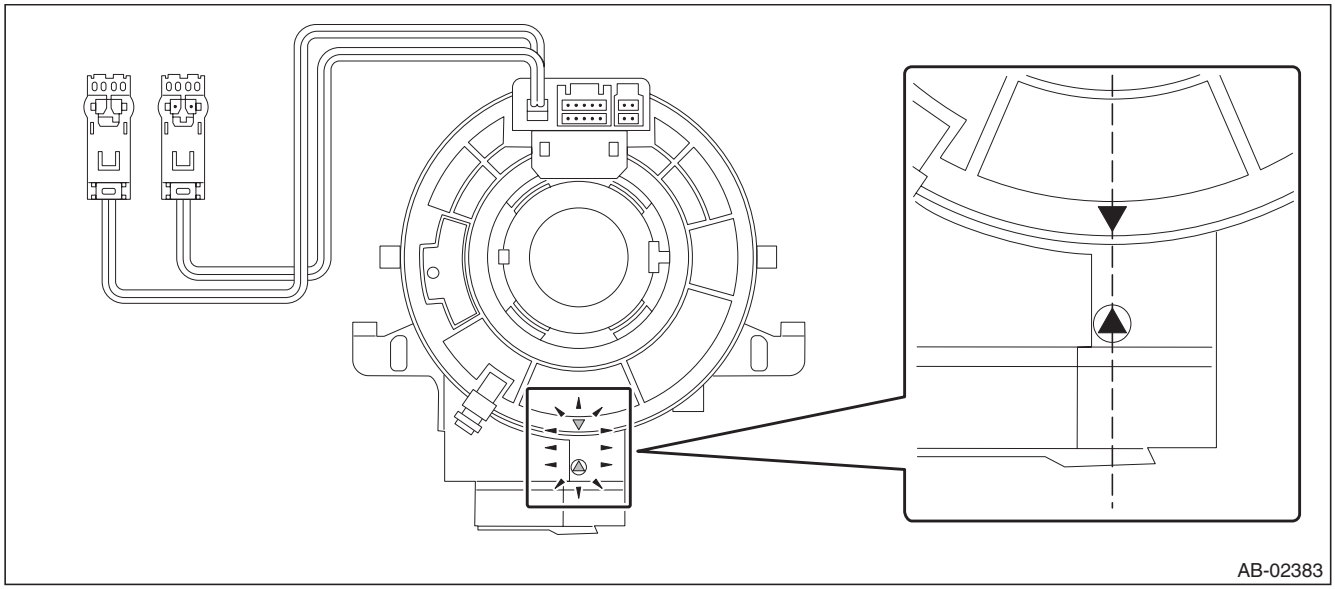

GETtheMANUALS.org

GETtheMANUALS.org

AIRBAG SYSTEM (DIAGNOSTICS)

AB(diag)

		Page
1.	Basic Diagnostic Procedure	2
2.	Check List for Interview	3
3.	Identification	4
4.	General Description	5
5.	Electrical Component Location	19
6.	Airbag Connector	23
7.	Airbag Control Module I/O Signal	24
8.	Subaru Select Monitor	28
9.	Read Diagnostic Trouble Code (DTC)	32
10.	Inspection Mode	33
11.	Clear Memory Mode	34
12.	Display of Status Information	35
13.	Airbag Warning Light Illumination Pattern	36
14.	Airbag Warning Light Failure	37
15.	List of Diagnostic Trouble Code (DTC)	41
16.	Diagnostic Chart with Trouble Code	49

GETtheMANUALS.org

1. Basic Diagnostic Procedure

A: PROCEDURE

Step		Check	Yes	No
1	**CHECK WARNING LIGHT.** Check whether the airbag warning light in the combination meter is lit.	Does the airbag warning light illuminate?	Go to step **2**.	Perform the diagnosis according to phenomenon of the problem.
2	**READ DTC.** 1) Turn the ignition switch to OFF. 2) Connect the Subaru Select Monitor to data link connector. 3) Turn the ignition switch to ON and run the Subaru Select Monitor. 4) Read the DTC. <Ref. to AB(diag)-32, OPERATION, Read Diagnostic Trouble Code (DTC).> NOTE: If the communication function of the Subaru Select Monitor cannot be executed properly, check the communication circuit. <Ref. to AB(diag)-29, COMMUNICATION FOR INITIALIZING IMPOSSIBLE, INSPECTION, Subaru Select Monitor.> 5) Record all DTCs and freeze frame data.	Is DTC displayed?	Go to step **3**.	Go to “Airbag Warning Light Failure” <Ref. to AB(diag)-37, Airbag Warning Light Failure.>.
3	**PERFORM DIAGNOSIS.** 1) Verify the identification of the vehicle. <Ref. to AB(diag)-4, Identification.> 2) Determine the possible cause from “List of Diagnostic Trouble Code (DTC)” <Ref. to AB(diag)-41, List of Diagnostic Trouble Code (DTC).>. 3) Inspect the DTC using “List of Diagnostic Trouble Code (DTC)”. 4) Repair the trouble cause. 5) Perform the Clear Memory Mode. <Ref. to AB(diag)-34, Clear Memory Mode.> 6) Perform the Inspection Mode. <Ref. to AB(diag)-33, Inspection Mode.> 7) Read any other DTCs displayed.	Is DTC displayed?	Perform the procedure 1) to 5) in step 3.	Finish the diagnosis.

GETthemMANUALS.org

2. Check List for Interview

A: CHECK

Customer's Name		Inspector's Name	
Date Vehicle Brought in	/ /	Registration No.	
Odometer Reading	km miles	V.I.N.	
Date Problem Occurred	/ /	Registration Year	/ /
Weather	❑ Fine ❑ Cloudy ❑ Rainy ❑ Snowy ❑ Others:		
Temperature	°C (°F)		
Road Condition	❑ Flat road ❑ Uphill ❑ Downhill ❑ Gravel road ❑ Others:		

Vehicle Operation	❑ Starting
	❑ Idling
	❑ Driving
	  ❑ Constant speed
	  ❑ Accelerating
	  ❑ Decelerating
	  ❑ Turning
	  ❑ Others:		

Details of Problem			
Airbag Warning Light Operation	❑ Normal (After turning the ignition switch to ON, lit for approximately 6 seconds and goes off.) ❑ Remains ON ❑ Remains OFF		
DTC output	❑ OK code ❑ DTC: (Code:)		

GETthenMANUALS.org

3. Identification

A: PROCEDURE

Identify the vehicle using the chassis number, part number of the airbag control module or Subaru Select Monitor.

NOTE:
Proper identification is necessary to ensure proper diagnosis. Components are not interchangeable between Airbag system Type A and Airbag System Type B.

1. IDENTIFICATION METHOD USING CHASSIS NUMBER

Type A	OUTBACK model	Chassis number: From #200013
	Sedan model	Chassis number: From #002017
Type B	OUTBACK model	Chassis number: Before #200012
	Sedan model	Chassis number: Before #002016

2. IDENTIFICATION METHOD USING PART NUMBER OF AIRBAG CONTROL MODULE

Type A	OUTBACK model	98221AJ25A
	Sedan model	98221AJ24A
Type B	OUTBACK model	98221AJ09A
	Sedan model	98221AJ08A

3. IDENTIFICATION METHOD USING SUBARU SELECT MONITOR

1) Connect the Subaru Select Monitor, and display the main menu screen.
2) On the main menu screen, select “Each System Check”.
3) Check and identify the description of the airbag system displayed on the system selection menu.

Type A	Airbag system
Type B	Airbag system B

GETthemANUALS.org

4. General Description

A: CAUTION

Refer to “CAUTION” in “General Description” in Airbag System. <Ref. to AB-9, CAUTION, General Description.>

B: INSPECTION

Measure the battery voltage and check electrolyte.

Standard voltage: 12 V

Specific gravity: 1.260 or more

C: PREPARATION TOOL

CAUTION:
To measure the voltage and resistance of airbag system component, be sure to use the specified test harness.

1. SPECIAL TOOL

- Subaru Select Monitor

ILLUSTRATION	TOOL NUMBER	DESCRIPTION	REMARKS
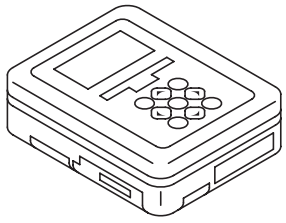 ST1B022XU0	1B022XU0	SUBARU SELECT MONITOR III KIT	Used for troubleshooting the electrical system.

GETthemANUALS.org

- TEST HARNESS H

ILLUSTRATION	TOOL NUMBER	DESCRIPTION	REMARKS
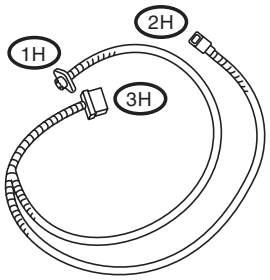 ST98299FA030	98299FA030	TEST HARNESS H	Used when measuring voltage and resistance of front sub sensor and front door impact sensor.

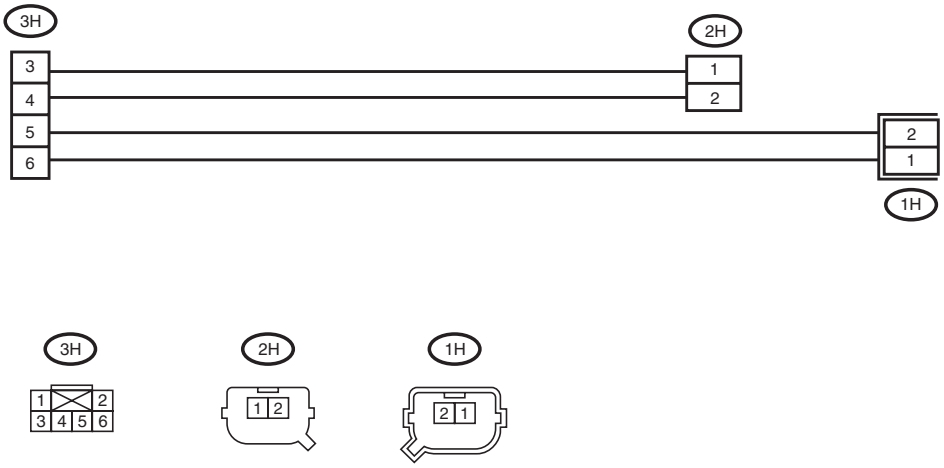

AB-00720

GETthemANUALS.org

- TEST HARNESS N

ILLUSTRATION	TOOL NUMBER	DESCRIPTION	REMARKS
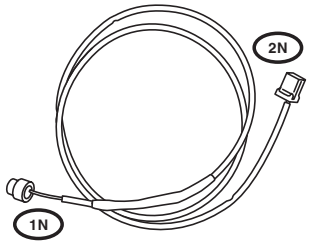 ST98299SA000	98299SA000	TEST HARNESS N	Used when measuring voltage and resistance of driver's airbag module, seat belt pretensioner and curtain airbag module.

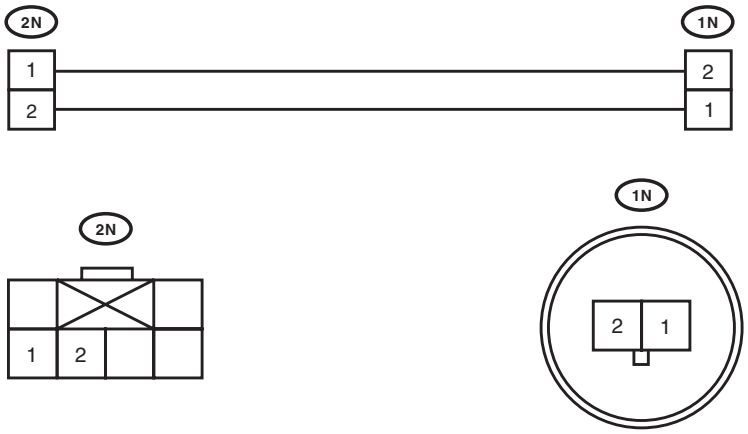

AB-00928

GETthemANDALS.org

- TEST HARNESS P

ILLUSTRATION	TOOL NUMBER	DESCRIPTION	REMARKS
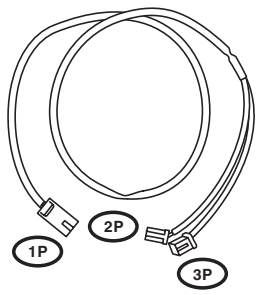 ST98299SA020	98299SA020	TEST HARNESS P	Used when measuring voltage and resistance of passenger's airbag module harness.

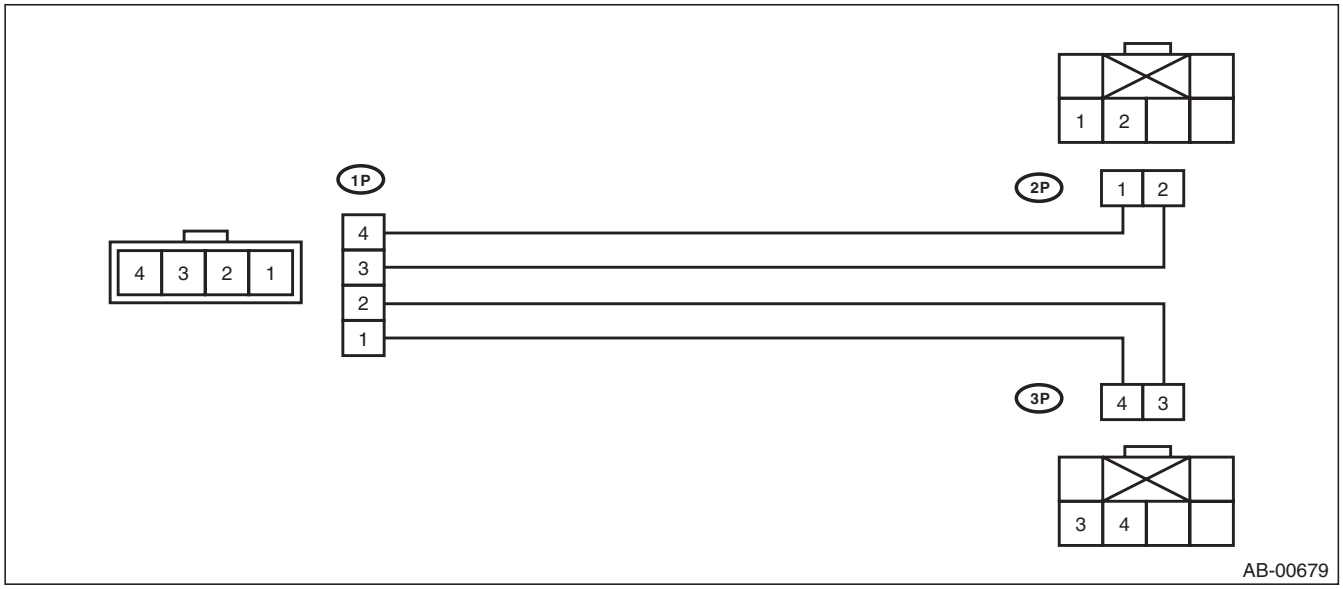

GETtheMANUALS.org

- TEST HARNESS Q

ILLUSTRATION	TOOL NUMBER	DESCRIPTION	REMARKS
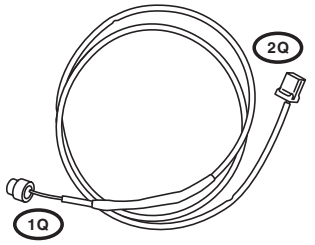 ST98299SA040	98299SA040	TEST HARNESS Q	Used when measuring voltage and resistance of driver's airbag module.

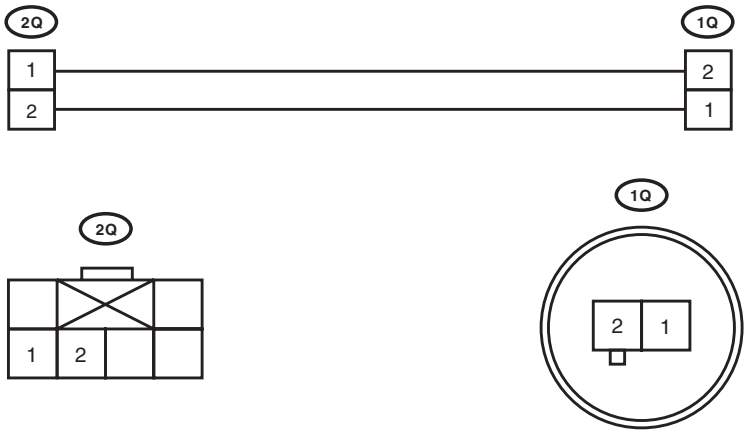

AB-00929

GETthemANUALS.org

- TEST HARNESS AG

ILLUSTRATION	TOOL NUMBER	DESCRIPTION	REMARKS
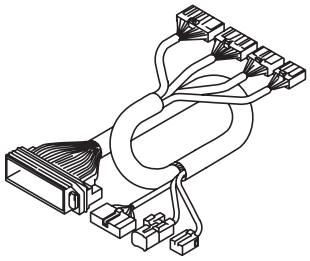 ST98299AG070	98299AG070	TEST HARNESS AG	Used when measuring voltage and resistance of airbag control module.

GETtheMANUALS.org

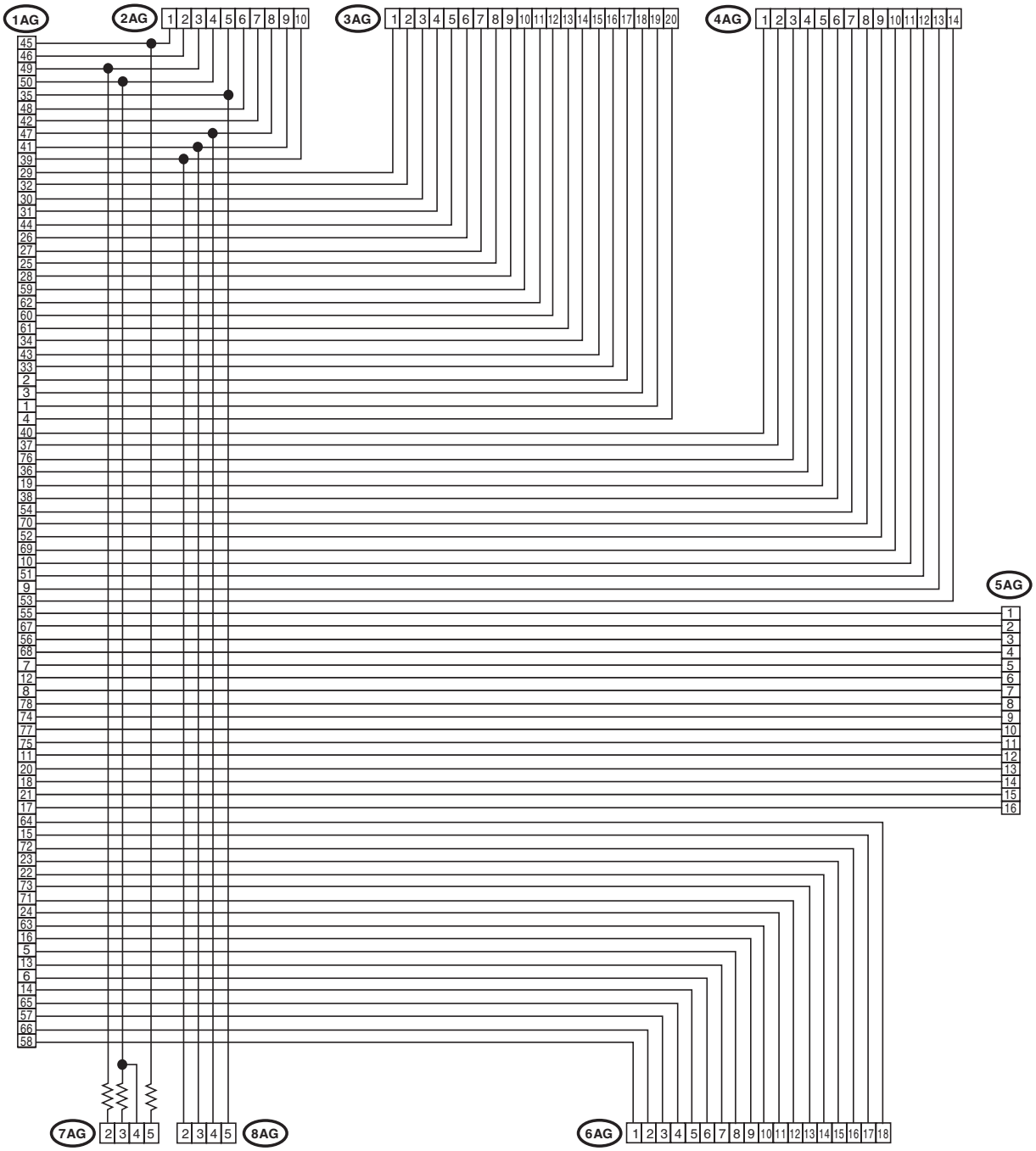

AB-01902

GETtheMANUALS.org

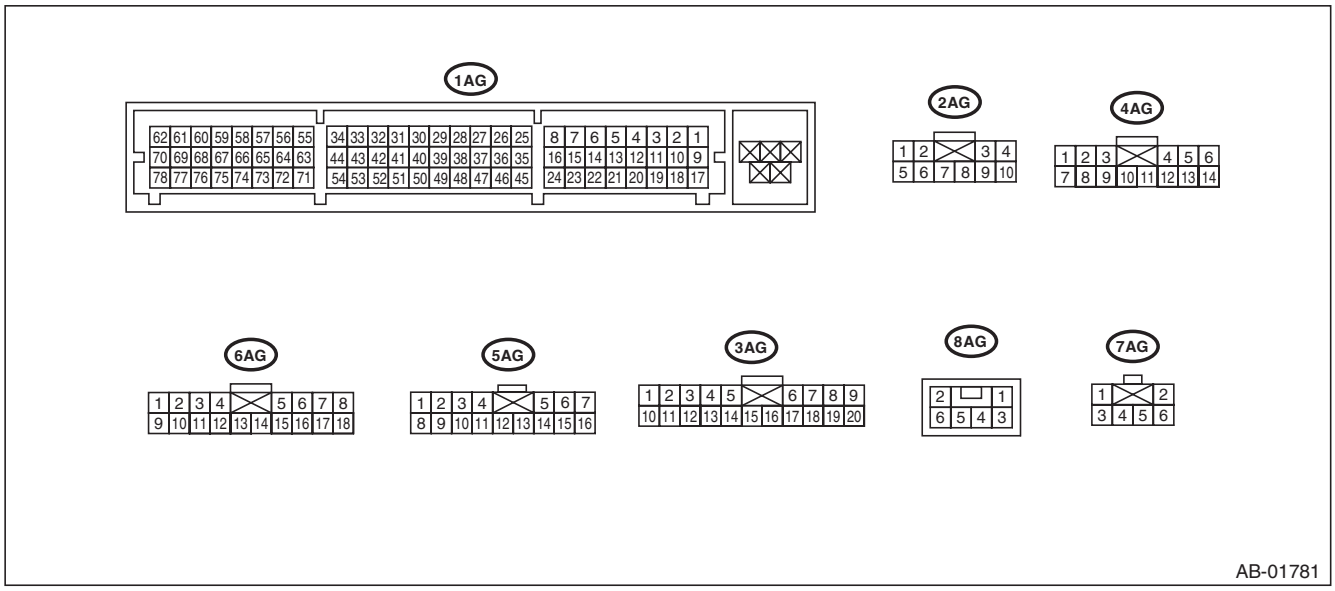

GETtheMANUALS.org

- TEST HARNESS AH

ILLUSTRATION	TOOL NUMBER	DESCRIPTION	REMARKS
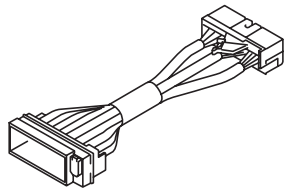 ST98299AG080	98299AG080	TEST HARNESS AH	Used together with test harness AG when measuring voltage and resistance of the airbag control module.

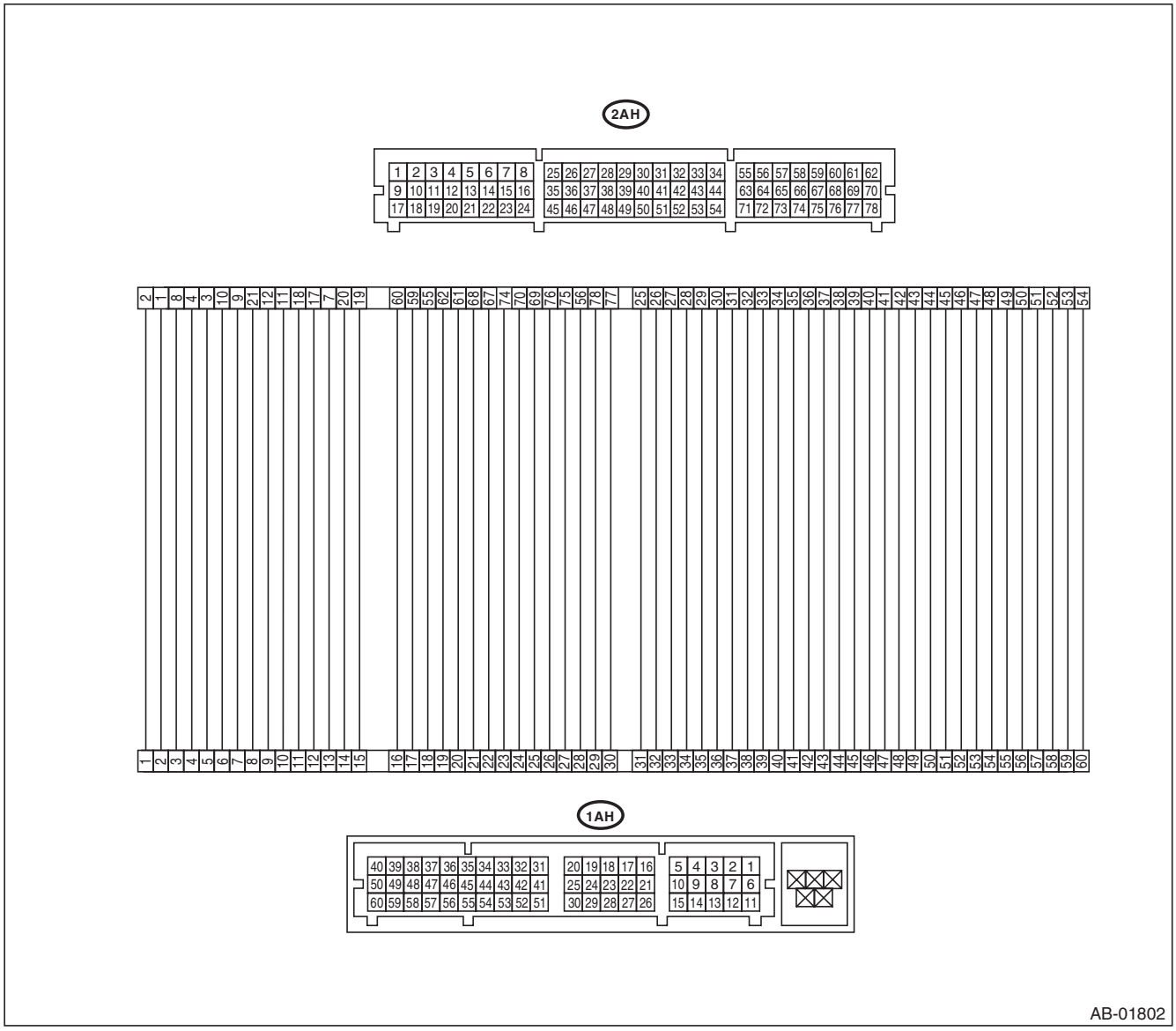

GETtheMANUALS.org

- TEST HARNESS V

ILLUSTRATION	TOOL NUMBER	DESCRIPTION	REMARKS
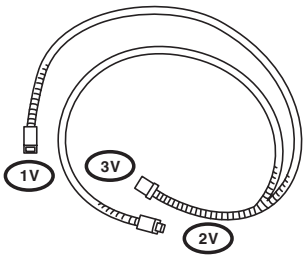 ST98299AG010	98299AG010	TEST HARNESS V	Used when measuring voltage and resistance of side airbag sensor and curtain airbag sensor.

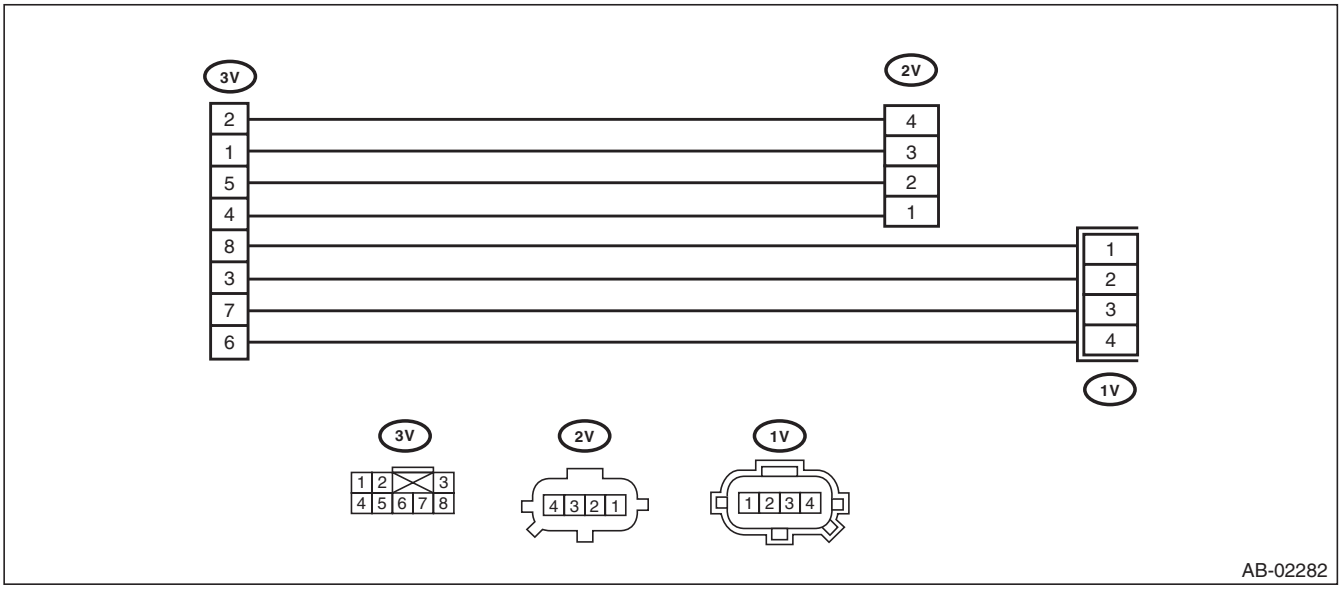

GETtheMANUALS.org

- AIRBAG RESISTOR

ILLUSTRATION	TOOL NUMBER	DESCRIPTION	REMARKS
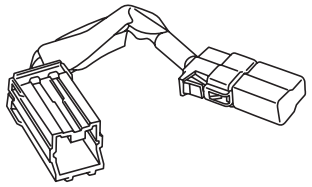 ST98299PA040	98299PA040	AIRBAG RESISTOR	Used in replacement of airbag module for which resistance value is same as airbag module. Two STs are required for diagnosis of two-stage inflator type airbag module.

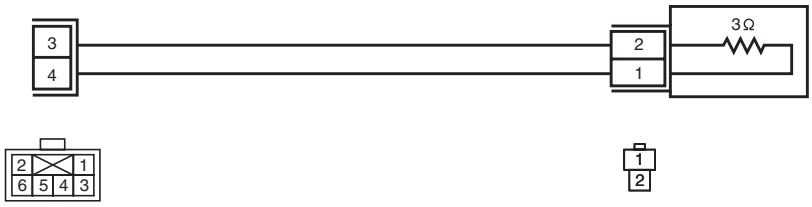

AB-00433

GETtheMANUALS.org

- TEST HARNESS AJ

ILLUSTRATION	TOOL NUMBER	DESCRIPTION	REMARKS
ST98299FG000	98299FG000	TEST HARNESS AJ	Used when measuring power supply and resistance of side airbag harness.

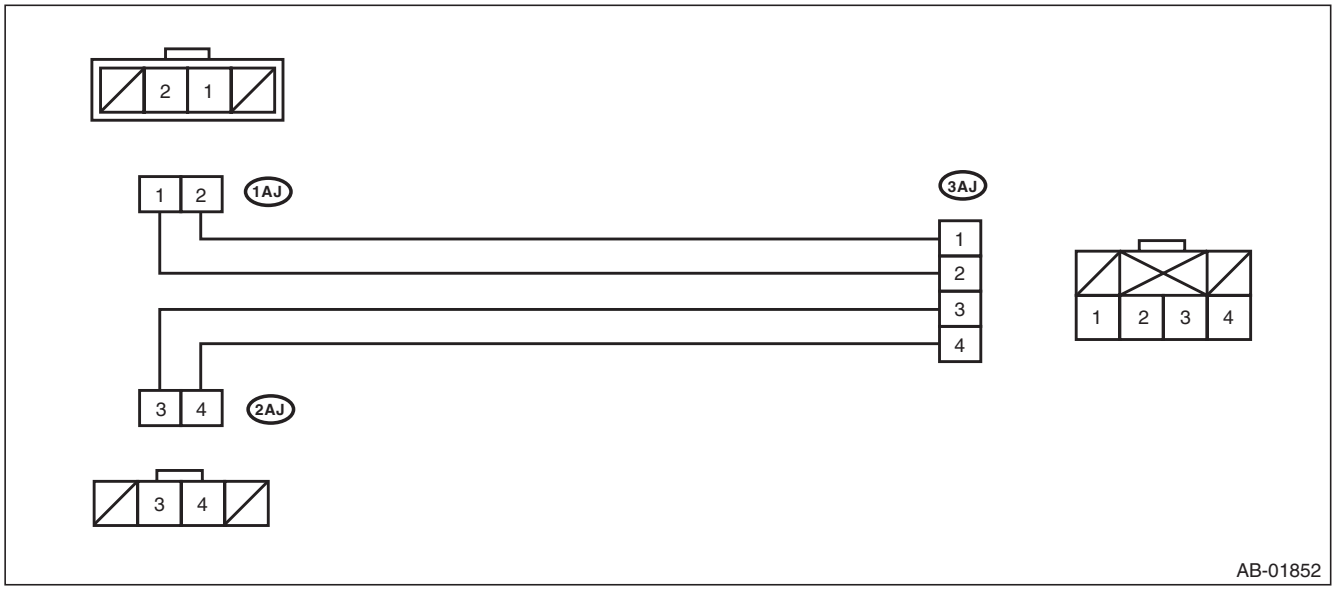

GETtheMANUALS.org

- TEST HARNESS AI

ILLUSTRATION	TOOL NUMBER	DESCRIPTION	REMARKS
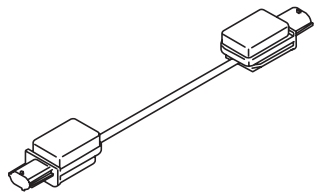 ST98299AG090	98299AG090	TEST HARNESS AI	• Used for diagnoses of side airbag sensor and curtain airbag sensor. • Used together with test harness V.

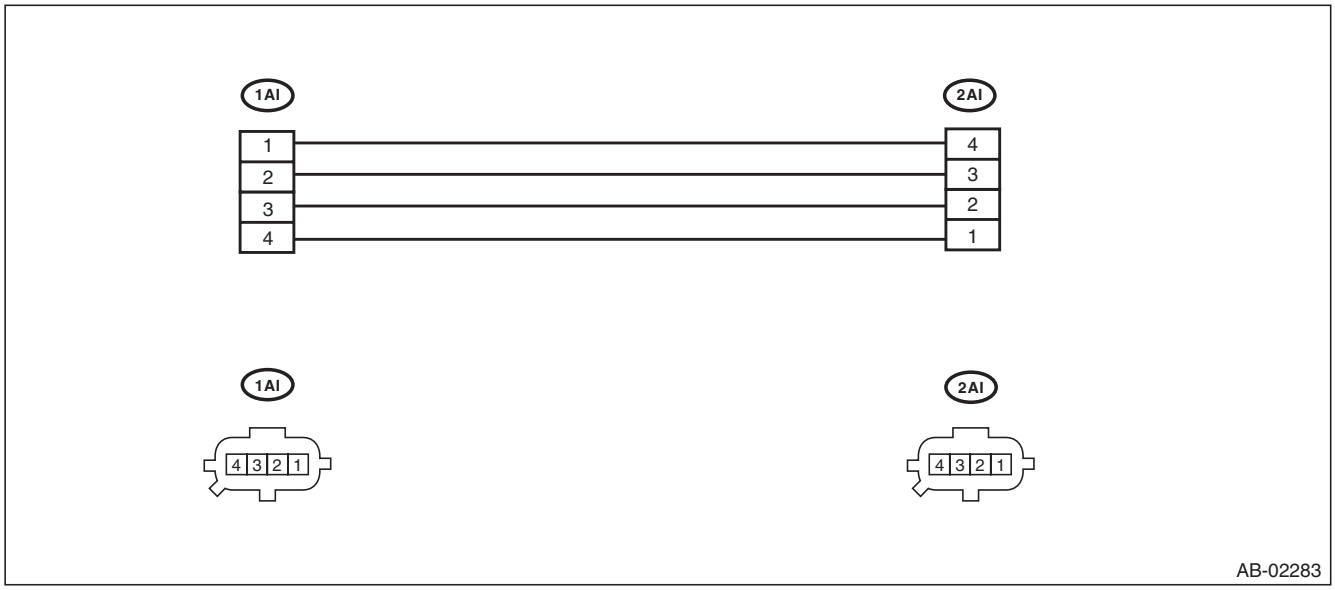

GETtheMANUALS.org

- TEST HARNESS AD

ILLUSTRATION	TOOL NUMBER	DESCRIPTION	REMARKS
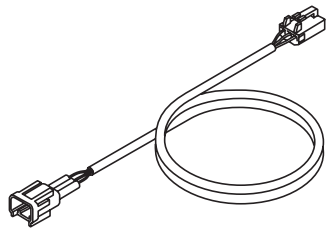 ST98299XA020	98299XA020	TEST HARNESS AD	Used when measuring voltage and resistance of occupant detection system.

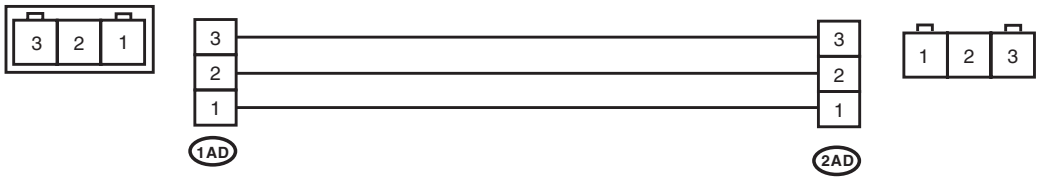

OD-00028

2. GENERAL TOOL

TOOL NAME	REMARKS
Circuit tester	Used for measuring resistance, voltage and current.
Oscilloscope	Used for measuring the sensor.

GETtheMANUALS.org

5. Electrical Component Location

A: LOCATION

- Type A

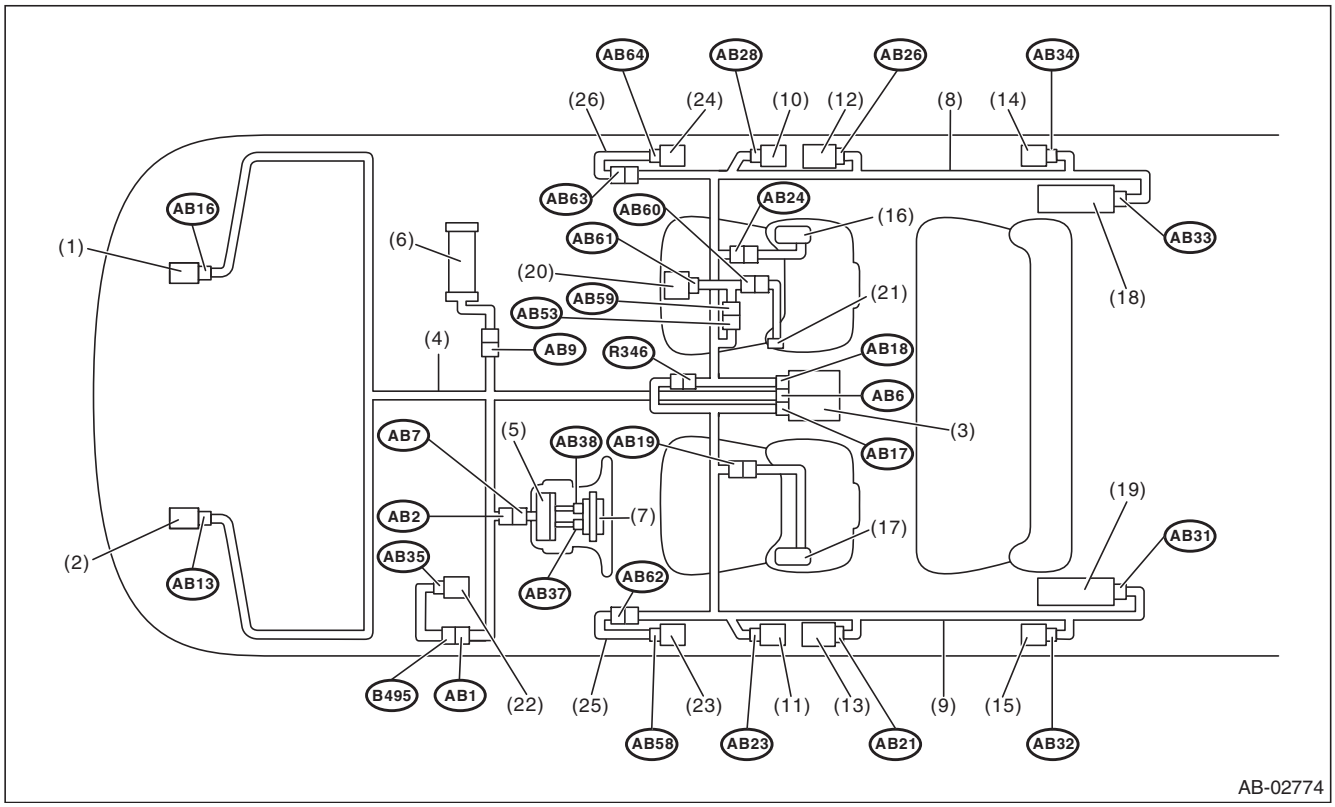

GETtheMANUALS.org

- Type B (OUTBACK model)

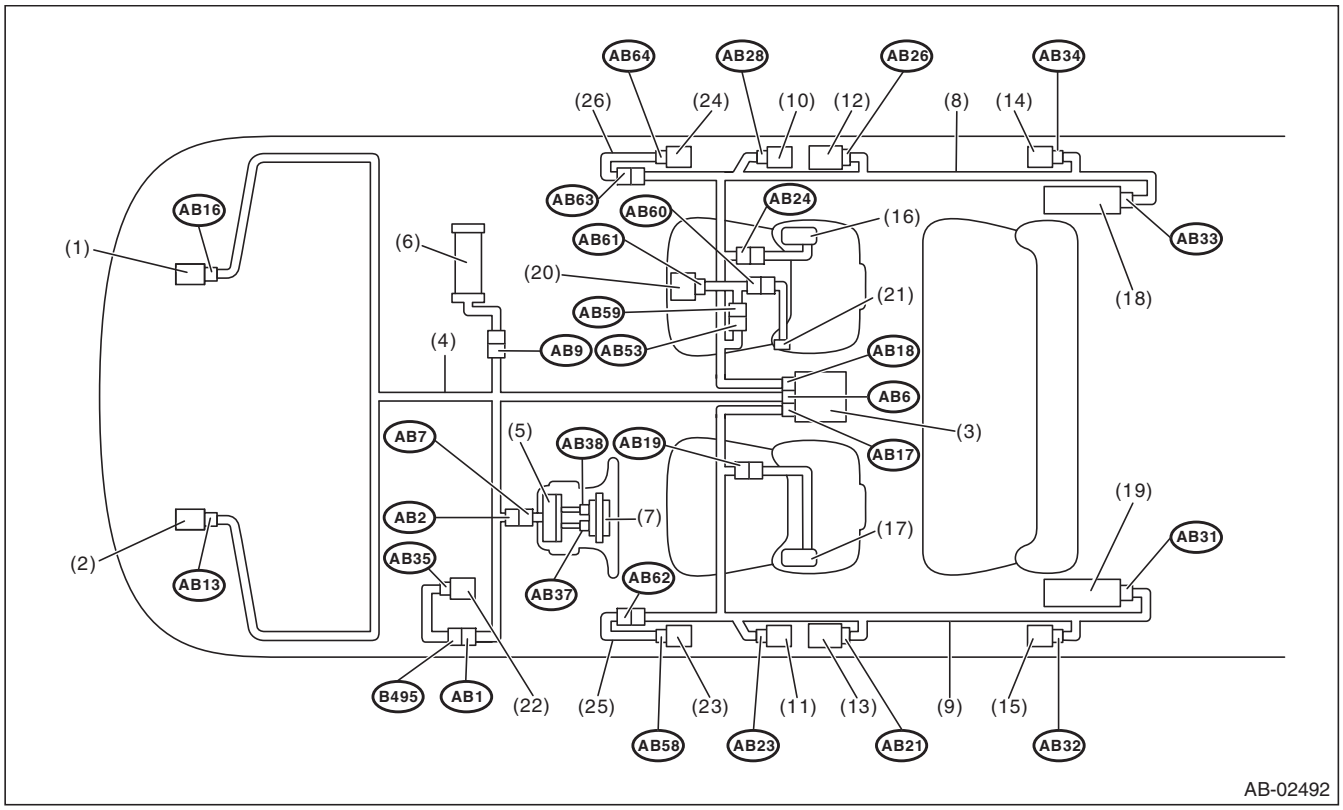

GETtheMANUALS.org

- Type B (Sedan model)

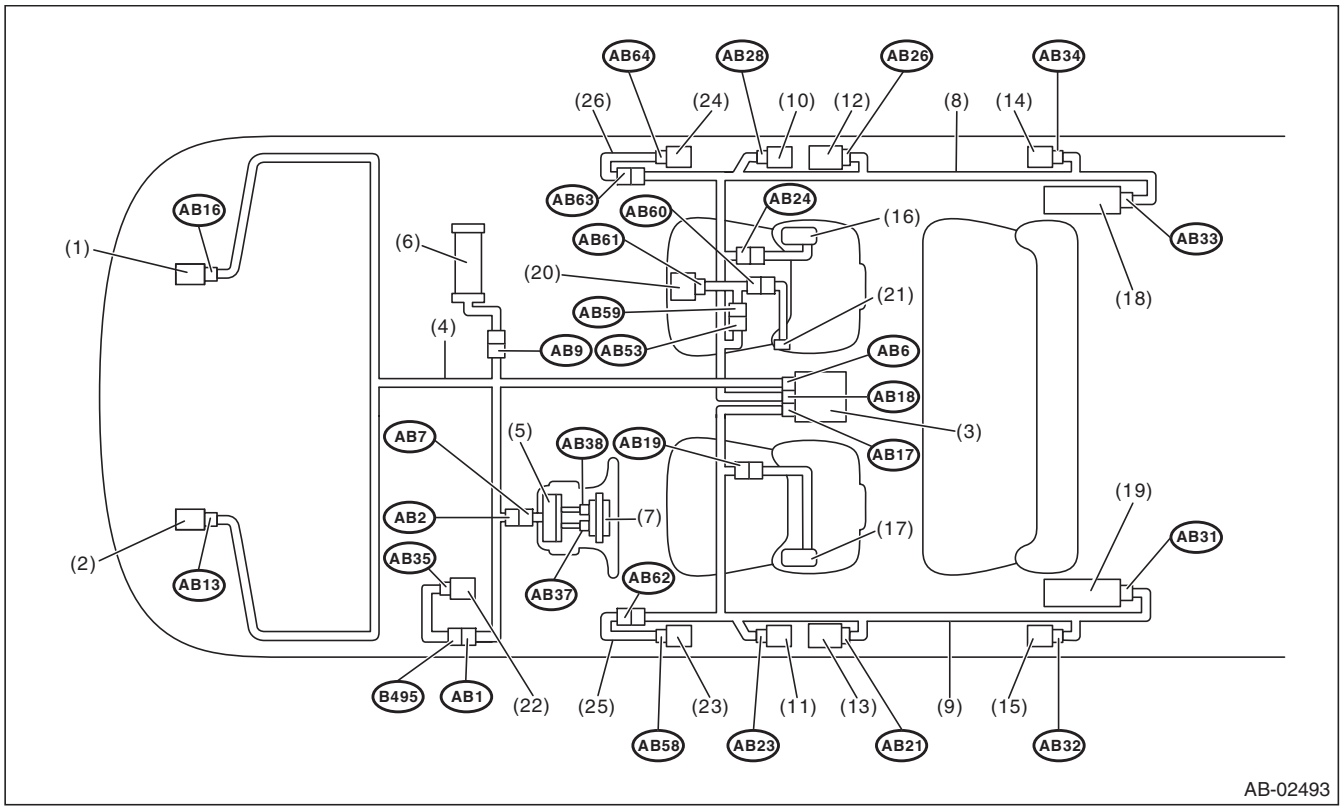

(1)	Front sub sensor (RH)	(10)	Side airbag sensor (RH)	(19)	Curtain airbag inflator (LH)
(2)	Front sub sensor (LH)	(11)	Side airbag sensor (LH)	(20)	Occupant detection control module
(3)	Airbag control module	(12)	Seat belt pretensioner (RH)	(21)	Buckle switch (RH)
(4)	Airbag main harness	(13)	Seat belt pretensioner (LH)	(22)	Fuse box
(5)	Roll connector	(14)	Curtain airbag sensor (RH)	(23)	Front door impact sensor (LH)
(6)	Passenger's airbag inflator	(15)	Curtain airbag sensor (LH)	(24)	Front door impact sensor (RH)
(7)	Driver's airbag inflator	(16)	Side airbag inflator (RH)	(25)	Door harness (LH)
(8)	Airbag rear harness (RH)	(17)	Side airbag inflator (LH)	(26)	Door harness (RH)
(9)	Airbag rear harness (LH)	(18)	Curtain airbag inflator (RH)		

GETtheMANUALS.org

Connector No.	(AB1)	(AB2)	(AB6)	(AB7)	(AB9)	(AB13)	(AB16)	(AB17)	(AB18)	(AB19)	(AB21)	(AB23)
Pin	10	4	30	4	4	2	2	15 or 24	15 or 24	4	2	4
Color	Gray	Yellow	Yellow	Yellow	Yellow	Yellow	Yellow	Yellow	Yellow	Yellow	Black	Yellow
Male/Female	Female	Female	Female	Male	Female	Female	Female	Female	Female	Female	Female	Female
Connector No.	(AB24)	(AB26)	(AB28)	(AB31)	(AB32)	(AB33)	(AB34)	(AB35)	(AB37)	(AB38)	(AB53)	(AB58)
Pin	4	2	4	2	4	2	4	2	2	2	3	2
Color	Yellow	Black	Yellow	Black	Yellow	Black	Yellow	★	Orange	Black	Brown	Yellow
Male/Female	Female	Female	Female	Female	Female	Female	Female	Female	Female	Female	Female	Female
Connector No.	(AB59)	(AB60)	(AB61)	(AB62)	(AB63)	(AB64)	(R346)					
Pin	3	2	10	2	2	2	6					
Color	Brown	Yellow	Black	Yellow	Yellow	Yellow	★					
Male/Female	Male	Male	Female	Female	Female	Female	Female					
★: White or natural color												

GETtheMANUALS.org

6. Airbag Connector

A: PROCEDURE

For operation procedures, refer to “Airbag Connector” of Airbag System. <Ref. to AB-18, Airbag Connector.>

GETtheMANUALS.org

7. Airbag Control Module I/O Signal

A: ELECTRICAL SPECIFICATION

- Type A

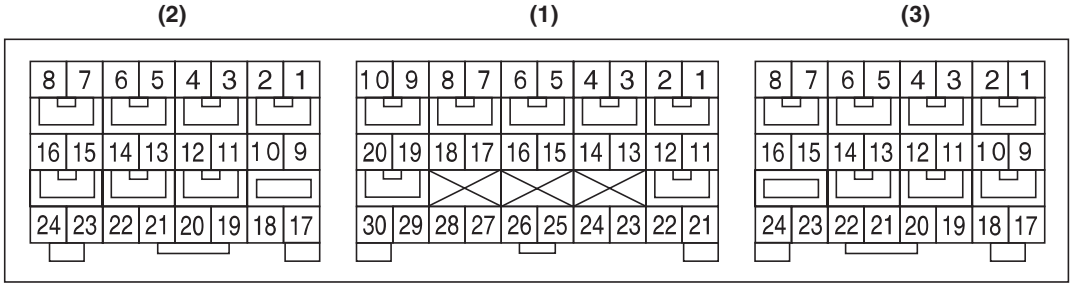

AB-01873

- Terminal numbers in airbag control module connector are shown in the figure.
- The airbag warning light illuminates when the connector is removed from the airbag control module.

Item		Control module terminal No.
Data link connector		(1) — 16
Combination meter		(1) — 11
Ignition power supply	Dedicated fuse	(1) — 21
Passenger's airbag module level one	+	(1) — 4
	–	(1) — 3
Passenger's airbag module level two	+	(1) — 1
	–	(1) — 2
Driver's airbag module level one	+	(1) — 5
	–	(1) — 6
Driver's airbag module level two	+	(1) — 8
	–	(1) — 7
Front sub sensor LH	+	(1) — 30
	–	(1) — 28
Front sub sensor RH	+	(1) — 29
	–	(1) — 27
Ground line (GND)		(1) — 25
		(1) — 26
Passenger's airbag ON indicator		(1) — 23
Passenger's airbag OFF indicator		(1) — 17
Passenger's seat belt warning		(1) — 15
Side airbag sensor LH Curtain airbag sensor LH Front door impact sensor LH	+	(3) — 17
	–	(3) — 18
Side airbag module LH	+	(3) — 8
	–	(3) — 7
Curtain airbag module LH	+	(3) — 5
	–	(3) — 6

GETtheMANUALS.org

Item		Control module terminal No.
Seat belt pretensioner LH	+	(3) — 4
	–	(3) — 3
Side airbag sensor RH Curtain airbag sensor RH Front door impact sensor RH	+	(2) — 24
	–	(2) — 23
Seat belt pretensioner RH	+	(2) — 5
	–	(2) — 6
Side airbag module RH	+	(2) — 1
	–	(2) — 2
Curtain airbag module RH	+	(2) — 4
	–	(2) — 3
Occupant detection control module	+	(3) — 16
	–	(3) — 24

- Type B (OUTBACK model)

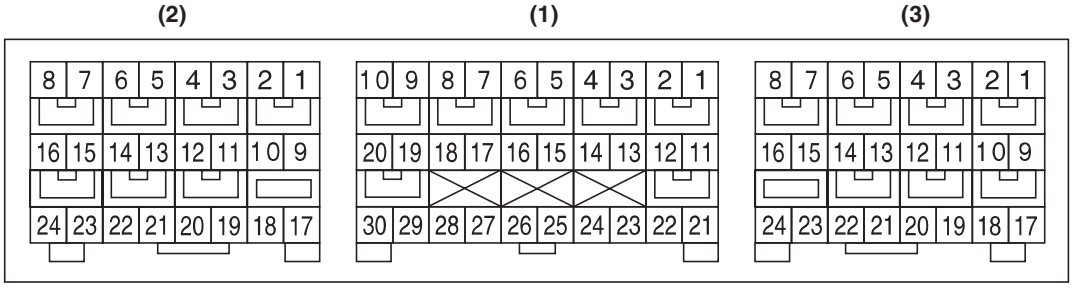

AB-01873

- Terminal numbers in airbag control module connector are shown in the figure.
- The airbag warning light illuminates when the connector is removed from the airbag control module.

Item		Control module terminal No.
Data link connector		(1) — 16
Combination meter		(1) — 11
Ignition power supply	Dedicated fuse	(1) — 21
Passenger's airbag module level one	+	(1) — 4
	–	(1) — 3
Passenger's airbag module level two	+	(1) — 1
	–	(1) — 2
Driver's airbag module level one	+	(1) — 5
	–	(1) — 6
Driver's airbag module level two	+	(1) — 8
	–	(1) — 7
Front sub sensor LH	+	(1) — 30
	–	(1) — 28
Front sub sensor RH	+	(1) — 29
	–	(1) — 27

GETtheMANUALS.org

Airbag Control Module I/O Signal

Item		Control module terminal No.
Ground line (GND)		(1) — 25
		(1) — 26
Passenger's airbag ON indicator		(1) — 23
Passenger's airbag OFF indicator		(1) — 17
Passenger's seat belt warning		(1) — 15
Side airbag sensor LH Curtain airbag sensor LH Front door impact sensor LH	+	(3) — 17
	–	(3) — 18
Side airbag module LH	+	(3) — 8
	–	(3) — 7
Curtain airbag module LH	+	(3) — 5
	–	(3) — 6
Seat belt pretensioner LH	+	(3) — 4
	–	(3) — 3
Side airbag sensor RH Curtain airbag sensor RH Front door impact sensor RH	+	(2) — 24
	–	(2) — 23
Seat belt pretensioner RH	+	(2) — 5
	–	(2) — 6
Side airbag module RH	+	(2) — 1
	–	(2) — 2
Curtain airbag module RH	+	(2) — 4
	–	(2) — 3
Occupant detection control module	+	(2) — 9
	–	(2) — 17

- Type B (Sedan model)

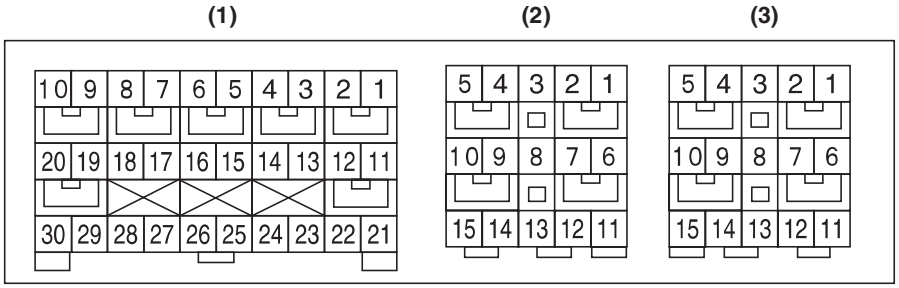

AB-01874

- Terminal numbers in airbag control module connector are shown in the figure.
- The airbag warning light illuminates when the connector is removed from the airbag control module.

Item		Control module terminal No.
Data link connector		(1) — 16
Combination meter		(1) — 11
Ignition power supply	Dedicated fuse	(1) — 21

GETtheMANUALS.org

Item		Control module terminal No.
Passenger's airbag module level one	+	(1) — 4
	–	(1) — 3
Passenger's airbag module level two	+	(1) — 1
	–	(1) — 2
Driver's airbag module level one	+	(1) — 5
	–	(1) — 6
Driver's airbag module level two	+	(1) — 8
	–	(1) — 7
Front sub sensor LH	+	(1) — 30
	–	(1) — 28
Front sub sensor RH	+	(1) — 29
	–	(1) — 27
Ground line (GND)		(1) — 25
		(1) — 26
Passenger's airbag ON indicator		(1) — 23
Passenger's airbag OFF indicator		(1) — 17
Passenger's seat belt warning		(1) — 15
Seat belt pretensioner LH	+	(3) — 4
	–	(3) — 5
Side airbag sensor LH Curtain airbag sensor LH Front door impact sensor LH	+	(3) — 8
	–	(3) — 11
Side airbag module LH	+	(3) — 7
	–	(3) — 6
Curtain airbag module LH	+	(3) — 9
	–	(3) — 10
Seat belt pretensioner RH	+	(2) — 2
	–	(2) — 1
Side airbag sensor RH Curtain airbag sensor RH Front door impact sensor RH	+	(2) — 8
	–	(2) — 15
Side airbag module RH	+	(2) — 9
	–	(2) — 10
Curtain airbag module RH	+	(2) — 7
	–	(2) — 6
Occupant detection control module	+	(2) — 14
	–	(2) — 13

B: WIRING DIAGRAM

Refer to the WI section wiring diagram. <Ref. to WI-45, WIRING DIAGRAM, Airbag System.>

GETtheMANUALS.org

8. Subaru Select Monitor

A: OPERATION

For operation procedures, refer to the “PC application help for Subaru Select Monitor”.

GETtheMANUALS.org

B: INSPECTION

1. COMMUNICATION FOR INITIALIZING IMPOSSIBLE

DTC DETECTING CONDITION:
Defective harness connector
TROUBLE SYMPTOM:
Communication is impossible between the airbag control module and the Subaru Select Monitor.

CAUTION:
Before performing diagnosis, refer to "CAUTION" in "General Description". <Ref. to AB(diag)-5, CAUTION, General Description.>
WIRING DIAGRAM:

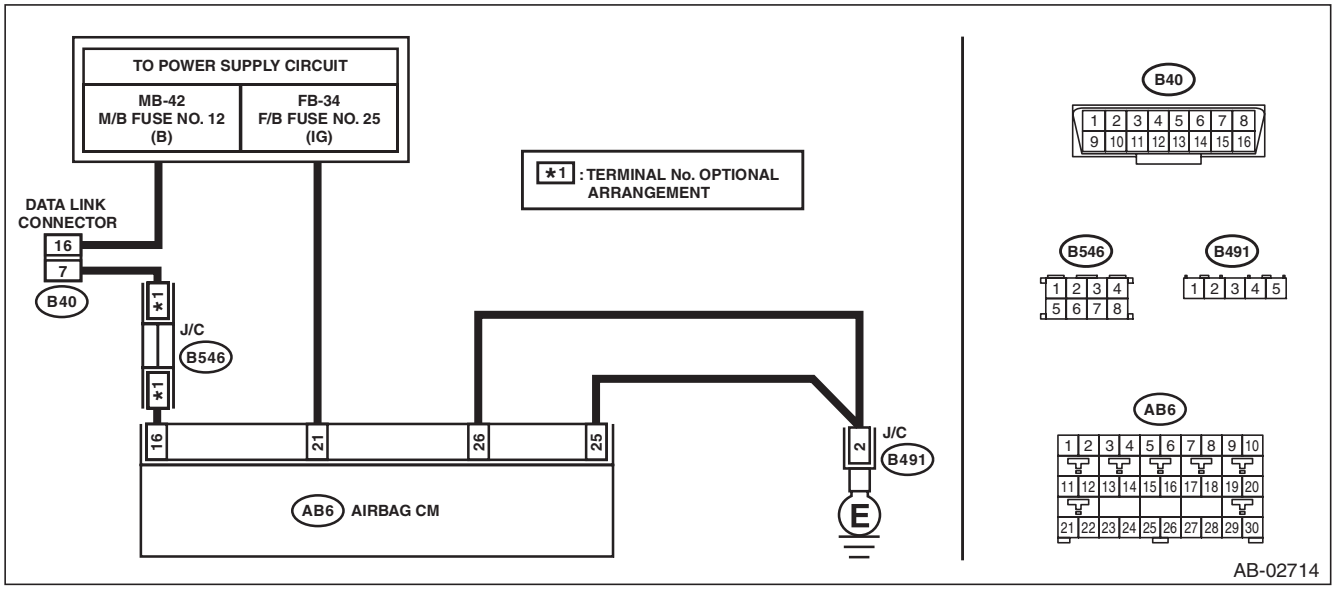

Step		Check	Yes	No
1	**CHECK IGNITION SWITCH.**	Is the ignition switch ON?	Go to step **2**.	Turn the ignition switch to ON, and select the airbag mode using the Subaru Select Monitor.
2	**CHECK BATTERY.** 1) Turn the ignition switch to OFF. 2) Measure the battery voltage.	Is the voltage 11 V or more?	Go to step **3**.	Charge or replace the battery.
3	**CHECK BATTERY TERMINAL.**	Is there poor contact at battery terminal?	Repair or tighten the battery terminal.	Go to step **4**.
4	**CHECK SUBARU SELECT MONITOR COMMUNICATION.** 1) Turn the ignition switch to ON. 2) Using the Subaru Select Monitor, check whether communication to other systems can be executed normally.	Is the system name displayed on Subaru Select Monitor?	Go to step **11**.	Go to step **5**.
5	**CHECK SUBARU SELECT MONITOR.**	Is Subaru Select Monitor powered on?	Go to step **7**.	Go to step **6**.
6	**CHECK FUSE.** Remove fuse No. 12 from the fuse & relay box, and perform visual inspection.	Is the fuse OK?	Repair the harness between the battery and the data link connector.	Replace the fuse. If the fuse is blown out again, check the power supply circuit.

GETtheMANUALS.org

	Step	Check	Yes	No
7	**CHECK AIRBAG CONTROL MODULE CONNECTOR.** 1) Turn the ignition switch to OFF, disconnect the battery ground cable, and wait for 60 seconds or more. 2) Confirm that the connectors of airbag control module (AB6, AB17, AB18) are securely connected.	Is the connector of the airbag control module securely connected?	Go to step **8**.	Connect the connector of the airbag control module.
8	**CHECK SUBARU SELECT MONITOR COMMUNICATION.** 1) Disconnect the airbag control module connector. 2) Connect the battery ground terminal. 3) Turn the ignition switch to ON. 4) Check whether communication to other systems can be executed normally.	Is the system name displayed on Subaru Select Monitor?	Replace the airbag control module. <Ref. to AB-68, Airbag Control Module.>	Go to step **9**.
9	**CHECK HARNESS CONNECTOR BETWEEN EACH CONTROL MODULE AND DATA LINK CONNECTOR.** 1) Turn the ignition switch to OFF. 2) Disconnect the airbag control module, VDCCM&H/U, body integrated unit, impact sensor, TPMS CM, power steering CM, ECM and TCM. 3) Measure the resistance between data link connector and chassis ground. ***Connector & terminal*** ***(B40) No. 7 — Chassis ground:***	Is the resistance 1 MΩ or more?	Go to step **10**.	Repair the harness and connector between each control module and data link connector. (Replace the entire harness if repair is necessary for airbag harness.)
10	**CHECK OUTPUT SIGNAL TO THE AIRBAG CONTROL MODULE.** 1) Turn the ignition switch to ON in the condition of step 9. 2) Measure the voltage between data link connector and chassis ground. ***Connector & terminal*** ***(B40) No. 7 (+) — Chassis ground (–):***	Is the voltage less than 1 V?	Repair each control module.	Repair the harness and connector between each control module and data link connector. (Replace the entire harness if repair is necessary for airbag harness.)
11	**CHECK FUSE.** Remove fuse No. 25 from the fuse & relay box, and perform visual inspection.	Is the fuse OK?	Go to step **12**.	Replace the fuse. If the fuse is blown out again, check the power supply circuit.
12	**CHECK AIRBAG CONTROL MODULE CONNECTOR.** 1) Turn the ignition switch to OFF, disconnect the battery ground cable, and wait for 60 seconds or more. 2) Confirm that the connectors of airbag control module (AB6, AB17, AB18) are securely connected.	Is the connector of the airbag control module securely connected?	Go to step **13**.	Connect the connector of the airbag control module.

GETtheMANUALS.org

	Step	Check	Yes	No
13	**CHECK THE HARNESS BETWEEN THE AIRBAG CONTROL MODULE AND DATA LINK CONNECTOR.** 1) Disconnect the connectors (AB6, AB17, AB18) from airbag control module. 2) Connect the connector (1AG) in the test harness AG to the connectors (AB6, AB17, AB18). NOTE: For type B (sedan models), connect test harness AH between the connectors (AB6, AB17, AB18) and (1AG). 3) Measure the resistance between connector (4AG) in the test harness AG and the data link connector. ***Connector & terminal*** ***(4AG) No. 1 — (B40) No. 7:***	Is the resistance less than 10 Ω?	Go to step **14**.	Repair the harness between the airbag control module and the data link connector. Or replace the airbag main harness along with the bulkhead harness.
14	**CHECK POWER SUPPLY CIRCUIT.** 1) Turn the ignition switch to ON. 2) Measure the voltage between connector (2AG) in the test harness AG and chassis ground. ***Connector & terminal*** ***(2AG) No. 1 (+) — Chassis ground (–):***	Is the voltage 10 V or more?	Go to step **15**.	Repair the harness between the airbag control module and the battery. Or replace the airbag main harness along with the bulkhead harness.
15	**CHECK BETWEEN AIRBAG CONTROL MODULE AND CHASSIS GROUND.** 1) Turn the ignition switch to OFF. 2) Measure the resistance between connector (2AG) in the test harness AG and chassis ground. ***Connector & terminal*** ***(2AG) No. 4 — Chassis ground:*** ***(2AG) No. 3 — Chassis ground:***	Is the resistance less than 10 Ω?	Go to step **16**.	Repair the harness between the airbag control module and the chassis ground. Or replace the airbag main harness along with the bulkhead harness.
16	**CHECK POOR CONTACT OF CONNECTOR.**	Is there poor contact of the control module power supply, ground circuit and data link connector?	Repair the connector. (Replace the harness instead of repairing the airbag system connector.)	Replace the airbag control module. <Ref. to AB-68, REMOVAL, Airbag Control Module.>

GETtheMANUALS.org

9. Read Diagnostic Trouble Code (DTC)

A: OPERATION

For operation procedures, refer to the “PC application help for Subaru Select Monitor”.

NOTE:
For details concerning DTCs, refer to List of Diagnostic Trouble Codes (DTC). <Ref. to AB(diag)-41, List of Diagnostic Trouble Code (DTC).>

GETtheMANUALS.org

10.Inspection Mode

A: PROCEDURE

Recreate the circumstance by referring to the conditions described in the checklist.

GETtheMANUALS.org

11.Clear Memory Mode

A: OPERATION

For operation procedures, refer to the “PC application help for Subaru Select Monitor”.

NOTE:
Clear the DTC stored in the airbag control module after repairing the airbag system.

GETtheMANUALS.org

12. Display of Status Information

A: OPERATION

Check the operating condition of each sensor in the event of malfunction in the seat belt buckle switch, or when the seat belt buckle switch has been replaced.
1) On «Main Menu» display, select {Each System Check}.
2) On «System Selection Menu» display, select {Airbag System}.
3) On «Airbag System» display, select {Status Data}.
The following table is for support data.

Item	Display
Seat position sensor LH	—*2
Seat position sensor RH	—*2
Seat belt buckle switch LH	—*6
Seat belt buckle switch RH	Latched*3 / Not Latched*4 / Others*5 / Initial setting*1 /—*6
Passenger's airbag control status	ON*7 / OFF*8 / Initial setting*1

*1: Displayed when it is initial.
*2: Seat position sensor not supported
*3: Seat belt fastened
*4: Seat belt not fastened
*5: Displayed when data other than belt fastened or not fastened, such as breakdowns is input.
*6: Seat belt buckle switch not supported
*7: Passenger's airbag operating state
*8: Passenger's airbag non-operating state

NOTE:
For detailed operation procedures, refer to "PC application help for Subaru Select Monitor".

GETtheMANUALS.org

13. Airbag Warning Light Illumination Pattern

A: INSPECTION

Turn the ignition switch to ON, and confirm that the airbag warning light remains on for approx. 6 seconds then turns off afterwards.

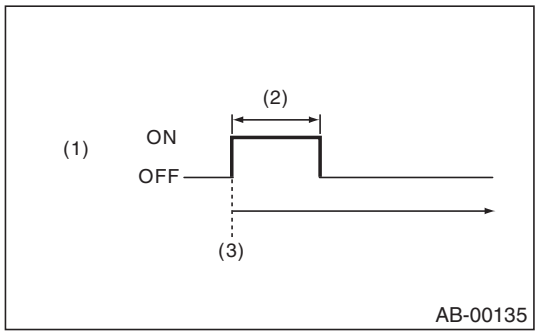

(1) Airbag warning light
(2) Approx. 6 sec.
(3) Ignition switch ON

GETtheMANUALS.org

14. Airbag Warning Light Failure

A: AIRBAG WARNING LIGHT REMAINS ON

DETECTING CONDITION:

- Airbag warning light is faulty.
- Airbag control module to airbag warning light circuit is shorted or open.
- Grounding circuit is faulty.
- Airbag control module is faulty.
- Connector connection is improper.
- Connections of (AB6, AB17, AB18) to airbag control module are improper.

CAUTION:

Before performing diagnosis, refer to "CAUTION" in "General Description". <Ref. to AB(diag)-5, CAUTION, General Description.>

WIRING DIAGRAM:

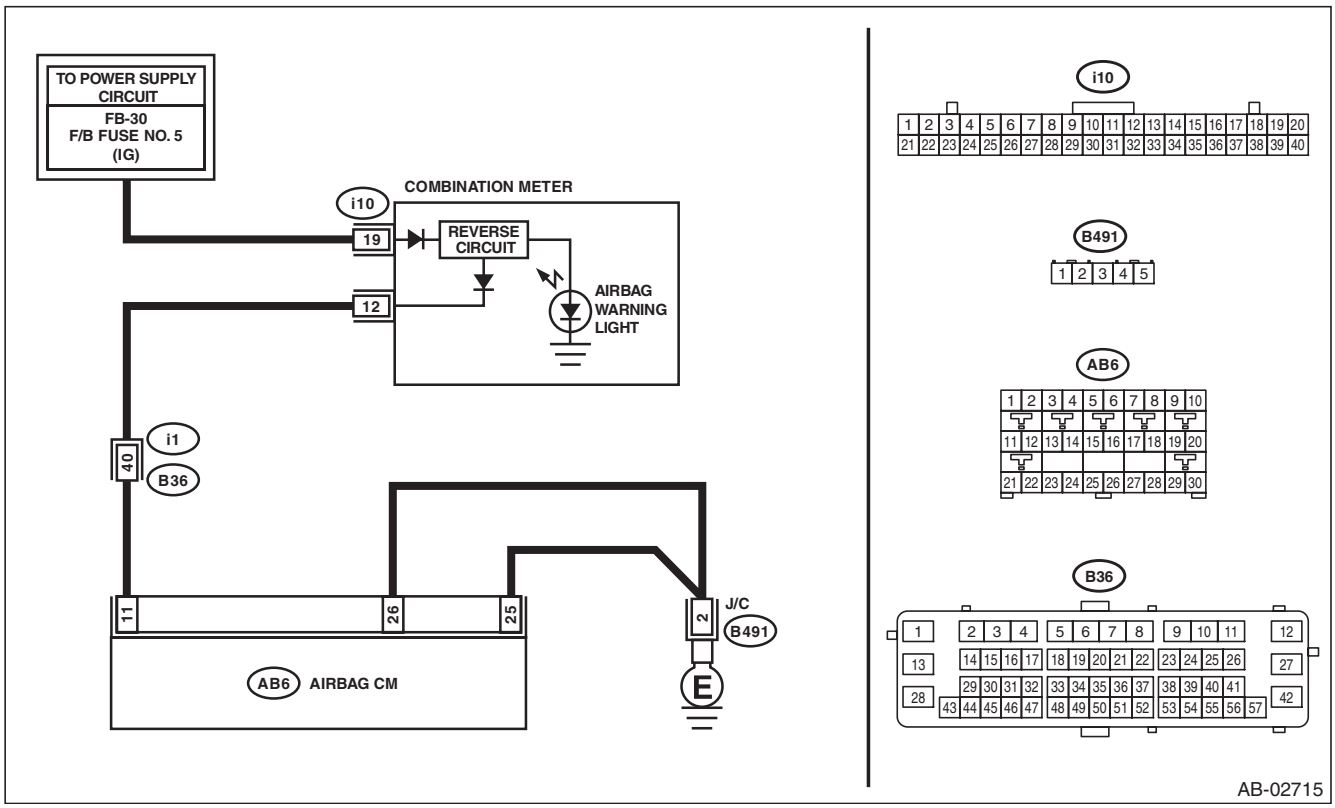

Step		Check	Yes	No
1	**READ DTC.** Read the DTC. <Ref. to AB(diag)-32, Read Diagnostic Trouble Code (DTC).>	Is DTC displayed?	Perform the diagnosis according to DTC.	Go to step **2**.
2	**CHECK FOR POOR CONTACT.** 1) Turn the ignition switch to OFF, disconnect the battery ground cable, and wait for 60 seconds or more. 2) Check that the airbag control module and the connectors (AB6, AB17, AB18) are securely connected.	Are there poor contact of connectors (AB6, AB17, AB18)?	If the faulty connector contact remains, replace the airbag main harness along with body harness or replace the airbag control module. <Ref. to AB-68, Airbag Control Module.>	Go to step **3**.

GETtheMANUALS.org

Airbag Warning Light Failure

	Step	Check	Yes	No
3	**CHECK AIRBAG MAIN HARNESS.** 1) Remove the instrument panel lower cover and column cover, and disconnect the connectors (AB7) and (AB2). 2) Remove the console front panel and disconnect the connector (AB9). 3) Disconnect the connectors (AB6, AB17, AB18) from the airbag control module, and connect the connector (1AG) in the test harness AG. NOTE: For type B (sedan models), connect test harness AH between the connectors (AB6, AB17, AB18) and (1AG). 4) Connect the battery ground terminal and turn the ignition switch to ON. 5) Connect the connectors (7AG) and (8AG) in the test harness AG. NOTE: After the fault has been cleared, disconnect the connectors (7AG) and (8AG).	Does the airbag warning light go off?	Go to step **4**.	Go to step **5**.
4	**CHECK GROUND CIRCUIT.** Measure the resistance between connector (2AG) in the test harness AG and chassis ground. ***Connector & terminal*** ***(2AG) No. 4 — Chassis ground:*** ***(2AG) No. 3 — Chassis ground:***	Is the resistance less than 10 Ω?	Replace the airbag control module. <Ref. to AB-68, Airbag Control Module.>	Repair the chassis ground circuit.
5	**CHECK AIRBAG MAIN HARNESS AND BULKHEAD HARNESS.** 1) Disconnect the connectors (7AG) and (8AG). 2) Remove the combination meter. 3) Measure the resistance between the combination meter connector and test harness AG connector (2AG). ***Connector & terminal*** ***(2AG) No. 5 — (i10) No. 12:***	Is the resistance less than 10 Ω?	Check the combination meter.	Go to step **6**.
6	**CHECK POOR CONTACT OF CONNECTOR.** 1) Turn the ignition switch to OFF, disconnect the battery ground terminal, and wait 60 seconds or more. 2) Confirm that there is a firm contact between connectors (AB1) and (B495).	Is there poor contact of connector?	Repair the bulkhead harness or replace the airbag main harness along with bulkhead harness.	Go to step **7**.
7	**CHECK AIRBAG MAIN HARNESS.** Check the airbag main harness for defect.	Is there any defect in the airbag main harness?	Replace the airbag main harness along with bulkhead harness.	Repair the bulkhead harness.

GETtheMANUALS.org

B: AIRBAG WARNING LIGHT REMAINS OFF

DETECTING CONDITION:

- Fuse No. 5 (in fuse & relay box) is blown out.
- Body harness circuit is open.
- Airbag warning light is faulty.
- Airbag main harness is faulty.
- Airbag control module is faulty.

CAUTION:

Before performing diagnosis, refer to "CAUTION" in "General Description". <Ref. to AB(diag)-5, CAUTION, General Description.>

WIRING DIAGRAM:

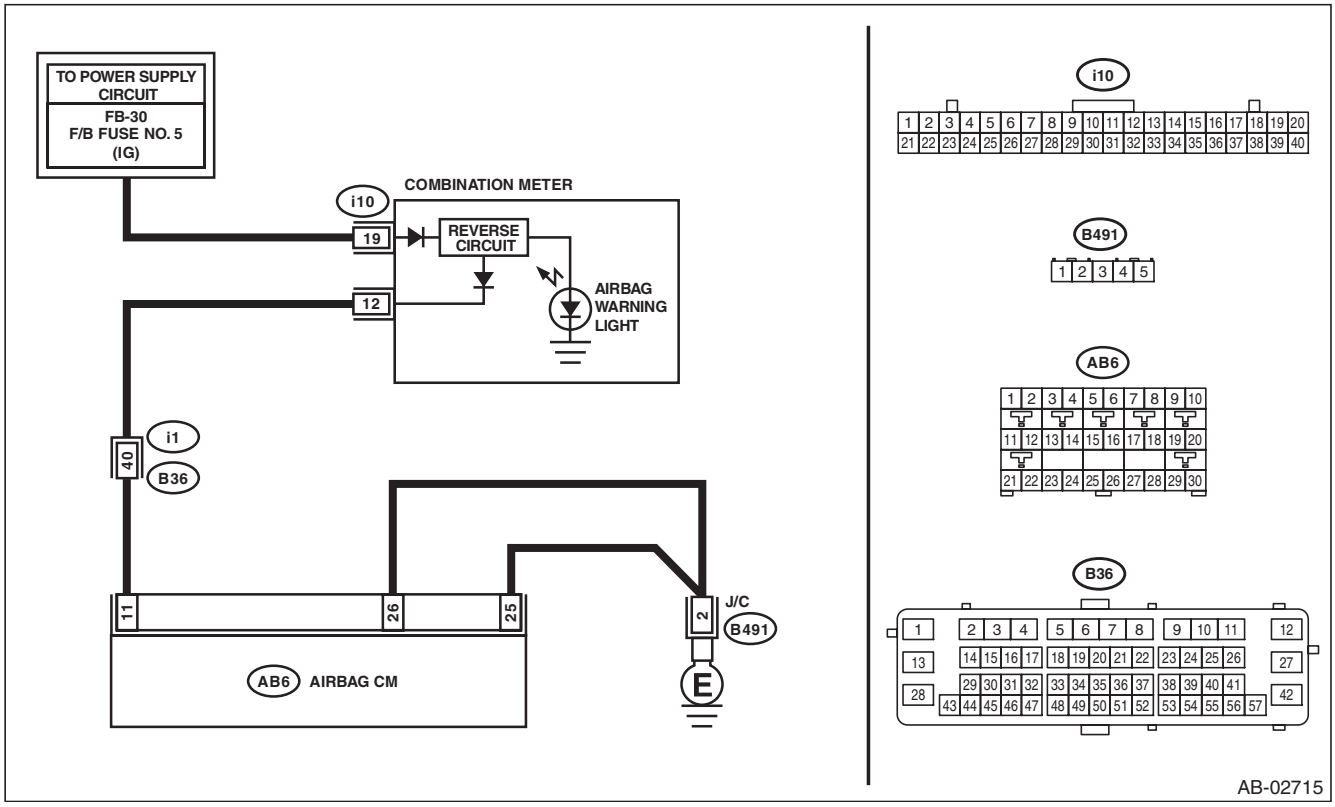

Step		Check	Yes	No
1	**CHECK COMBINATION METER.** Turn the ignition switch to ON, and confirm that warning lights of combination meter illuminate.	Do warning lights except for airbag illuminate?	Go to step **2**.	Check the combination meter.
2	**CHECK DTC.** Read the DTC. <Ref. to AB(diag)-32, Read Diagnostic Trouble Code (DTC).>	Is DTC displayed?	Perform the diagnosis according to DTC.	Go to step **3**.
3	**CHECK FUSE.** Remove fuse No. 5 from the fuse & relay box, and perform visual inspection.	Is the fuse OK?	Go to step **4**.	Replace the fuse. If the fuse is blown out again, go to step 4.
4	**CHECK AIRBAG WARNING LIGHT CIRCUIT (IN COMBINATION METER).** 1) Turn the ignition switch to OFF, disconnect the battery ground cable, and wait for 60 seconds or more. 2) Disconnect the connectors (i1) and (B36). 3) Connect the battery ground terminal and turn the ignition switch to ON.	Does airbag warning light illuminate?	Go to step **5**.	Check the combination meter and instrument panel harness.

GETtheMANUALS.org

Step		Check	Yes	No
5	**CHECK AIRBAG MAIN HARNESS.** 1) Turn the ignition switch to OFF, disconnect the battery ground cable, and wait for 60 seconds or more. 2) Connect the connectors (i1) and (B36). 3) Disconnect the connectors (AB6, AB17, AB18) from airbag control module. 4) Connect the battery ground terminal and turn the ignition switch to ON.	Does airbag warning light illuminate?	Replace the airbag control module. <Ref. to AB-68, Airbag Control Module.>	Replace the airbag main harness along with bulkhead harness.

GETtheMANUALS.org

15. List of Diagnostic Trouble Code (DTC)

A: LIST

DTC	Item	Content of diagnosis	Reference
11	Driver's Airbag failure	A type • Airbag main harness circuit is open, shorted or shorted to ground. • Airbag module harness (Driver's side) circuit is open, shorted or shorted to ground. • Roll connector circuit is open, shorted or shorted to ground. • Airbag control module is faulty. • Driver's airbag module is faulty. B type • Airbag main harness circuit is shorted to ground. • Airbag module harness (driver's side) circuit is shorted to ground. • Roll connector circuit is shorted to ground. • Driver's airbag module is faulty. • Airbag control module is faulty.	<Ref. to AB(diag)-49, DTC 11 DRIVER'S AIRBAG FAILURE, Diagnostic Chart with Trouble Code.>
12	Passenger's Airbag failure	A type • Airbag main harness circuit is open, shorted or shorted to ground. • Airbag module harness (passenger's side) circuit is open, shorted or shorted to ground. • Airbag control module is faulty. • Passenger's airbag module is faulty. B type • Airbag main harness circuit is shorted to ground. • Airbag module harness (passenger's side) circuit is shorted to ground. • Passenger's airbag module is faulty. • Airbag control module is faulty.	<Ref. to AB(diag)-54, DTC 12 PASSENGER'S AIRBAG FAILURE, Diagnostic Chart with Trouble Code.>
15	Driver's Airbag failure	• Airbag main harness circuit is shorted to power supply. • Airbag module harness circuit (driver's side) is shorted to power supply. • Roll connector circuit is shorted to power supply. • Driver's airbag module is faulty. • Airbag control module is faulty.	<Ref. to AB(diag)-58, DTC 15 DRIVER'S AIRBAG FAILURE, Diagnostic Chart with Trouble Code.>
16	Passenger's Airbag failure	• Airbag main harness circuit is shorted to power supply. • Airbag module harness (passenger's side) circuit is shorted to power supply. • Passenger's airbag module is faulty. • Airbag control module is faulty.	<Ref. to AB(diag)-60, DTC 16 PASSENGER'S AIRBAG FAILURE, Diagnostic Chart with Trouble Code.>
1A	Driver's Airbag failure	• Airbag main harness circuit is shorted. • Airbag module harness (driver's side) circuit is shorted. • Roll connector circuit is shorted. • Driver's airbag module is faulty. • Airbag control module is faulty.	<Ref. to AB(diag)-62, DTC 1A DRIVER'S AIRBAG FAILURE, Diagnostic Chart with Trouble Code.>
1B	Passenger's Airbag failure	• Airbag main harness circuit is shorted. • Airbag module harness circuit (passenger's side) is shorted. • Passenger's airbag module is faulty. • Airbag control module is faulty.	<Ref. to AB(diag)-64, DTC 1B PASSENGER'S AIRBAG FAILURE, Diagnostic Chart with Trouble Code.>

GETtheMANUALS.org

List of Diagnostic Trouble Code (DTC)

DTC	Item	Content of diagnosis	Reference
1D	Driver's Airbag failure	• Airbag main harness circuit is open. • Airbag module harness circuit (driver's side) is open. • Roll connector circuit is open. • Driver's airbag module is faulty. • Airbag control module is faulty.	<Ref. to AB(diag)-66, DTC 1D DRIVER'S AIRBAG FAILURE, Diagnostic Chart with Trouble Code.>
1E	Passenger's Airbag failure	• Airbag main harness circuit is open. • Airbag module harness circuit (passenger's side) is open. • Passenger's airbag module is faulty. • Airbag control module is faulty.	<Ref. to AB(diag)-68, DTC 1E PASSENGER'S AIRBAG FAILURE, Diagnostic Chart with Trouble Code.>
21	Airbag ECU failure	Airbag control module is faulty.	<Ref. to AB(diag)-69, DTC 21 AIRBAG ECM FAILURE, Diagnostic Chart with Trouble Code.>
22	Front Airbag: Firing output	Front airbag module and seat belt pretensioner (LH/RH) are inflated.	<Ref. to AB(diag)-70, DTC 22 FRONT AIRBAG FIRING OUTPUT, Diagnostic Chart with Trouble Code.>
26	Passenger's Airbag indicator failure	• Passenger's airbag indicator is faulty. • Airbag control module is faulty. • Airbag main harness circuit is open, shorted or shorted to ground. • Body harness circuit is open.	<Ref. to AB(diag)-71, DTC 26 PASSENGER'S AIRBAG INDICATOR FAILURE, Diagnostic Chart with Trouble Code.>
27	ODS Communication error	• Occupant detection control module communication is faulty. • Airbag rear harness circuit is open, shorted, shorted to ground or shorted to power supply. • Occupant detection harness is faulty. • Airbag control module is faulty. • Occupant detection system is faulty.	<Ref. to AB(diag)-73, DTC 27 ODS COMMUNICATION ERROR, Diagnostic Chart with Trouble Code.>
29	ODS failure	• Occupant detection sensor is faulty. • Occupant detection control module is faulty. • Occupant detection harness is faulty. • Fuse is blown.	<Ref. to OD(diag)-21, DTC 29 ODS FAILURE, Diagnostic Procedure with Diagnostic Trouble Code (DTC).>
2A	ODS Calibration error	• Occupant detection control module is faulty. • Calibration of occupant detection control module is initial setting or faulty.	<Ref. to AB(diag)-78, DTC 2A ODS CALIBRATION ERROR, Diagnostic Chart with Trouble Code.>
2B	ODS System wrong parts	• Specification of occupant detection control module is improper. • Occupant detection control module is faulty.	<Ref. to AB(diag)-78, DTC 2B ODS SYSTEM WRONG PARTS, Diagnostic Chart with Trouble Code.>
2D	Airbag warning light circuit failure	• Airbag warning light is faulty. • Open or short circuit in harness between airbag control module and airbag warning light. • Poor contact of airbag main harness and instrument panel harness. • Ground circuit is faulty. • Airbag control module is faulty.	<Ref. to AB(diag)-78, DTC 2D AIRBAG WARNING INDICATOR FAILURE, Diagnostic Chart with Trouble Code.>
33	FrontSubSensor RH failure	Front sub sensor (RH) is faulty.	<Ref. to AB(diag)-78, DTC 33 FRONT SUB SENSOR RH FAILURE, Diagnostic Chart with Trouble Code.>
34	FrontSubSensor LH failure	Front sub sensor (LH) is faulty.	<Ref. to AB(diag)-78, DTC 34 FRONT SUB SENSOR LH FAILURE, Diagnostic Chart with Trouble Code.>
37	Buckle Switch RH failure	• Passenger's buckle switch circuit is open, shorted or shorted to ground. • Occupant detection system is faulty. • Occupant detection harness is faulty.	<Ref. to OD(diag)-23, DTC 37 BUCKLE SWITCH RH FAILURE, Diagnostic Procedure with Diagnostic Trouble Code (DTC).>

GETtheMANUALS.org

DTC	Item	Content of diagnosis	Reference
39	Seatbelt Warning failure	• Airbag control module is faulty. • Body integrated unit is faulty. • Harness circuits between body integrated unit and airbag control module are open, shorted or shorted to ground.	<Ref. to AB(diag)-79, DTC 39 SEAT BELT WARNING FAILURE, Diagnostic Chart with Trouble Code.>
3A	Front Sub Sensor RH false installation	• Front sensor (RH) is misinstalled. • Airbag control module is faulty.	<Ref. to AB(diag)-80, DTC 3A FRONT SUB SENSOR RH FALSE INSTALLATION, Diagnostic Chart with Trouble Code.>
3B	Front Sub Sensor LH false installation	• Front sensor (LH) is misinstalled. • Airbag control module is faulty.	<Ref. to AB(diag)-80, DTC 3B FRONT SUB SENSOR LH FALSE INSTALLATION, Diagnostic Chart with Trouble Code.>
41	Side Airbag RH failure	A type • Side airbag harness (RH) circuit is faulty. • Side airbag module (RH) is faulty. • Airbag control module is faulty. B type • Side airbag harness (RH) circuit is shorted to ground. • Side airbag module (RH) is faulty. • Airbag control module is faulty.	<Ref. to AB(diag)-81, DTC 41 SIDE AIRBAG RH FAILURE, Diagnostic Chart with Trouble Code.>
42	Side Airbag LH failure	A type • Side airbag harness (LH) circuit is faulty. • Side airbag module (LH) is faulty. • Airbag control module is faulty. B type • Side airbag harness (LH) circuit is shorted to ground. • Side airbag module (LH) is faulty. • Airbag control module is faulty.	<Ref. to AB(diag)-85, DTC 42 SIDE AIRBAG LH FAILURE, Diagnostic Chart with Trouble Code.>
45	Side Airbag RH failure	• Side airbag harness (RH) circuit is shorted to power supply. • Side airbag module (RH) is faulty. • Airbag control module is faulty.	<Ref. to AB(diag)-89, DTC 45 SIDE AIRBAG RH FAILURE, Diagnostic Chart with Trouble Code.>
46	Side Airbag LH failure	• Side airbag harness (LH) circuit is shorted to power supply. • Side airbag module (LH) is faulty. • Airbag control module is faulty.	<Ref. to AB(diag)-91, DTC 46 SIDE AIRBAG LH FAILURE, Diagnostic Chart with Trouble Code.>
4A	Side Airbag RH failure	• Side airbag harness (RH) circuit is shorted. • Side airbag module (RH) is faulty. • Airbag control module is faulty.	<Ref. to AB(diag)-93, DTC 4A SIDE AIRBAG RH FAILURE, Diagnostic Chart with Trouble Code.>
4B	Side Airbag LH failure	• Side airbag harness (LH) circuit is shorted. • Side airbag module (LH) is faulty. • Airbag control module is faulty.	<Ref. to AB(diag)-95, DTC 4B SIDE AIRBAG LH FAILURE, Diagnostic Chart with Trouble Code.>
4D	Side Airbag RH failure	• Side airbag harness (RH) circuit is open. • Side airbag module (RH) is faulty. • Airbag control module is faulty.	<Ref. to AB(diag)-97, DTC 4D SIDE AIRBAG RH FAILURE, Diagnostic Chart with Trouble Code.>
4E	Side Airbag LH failure	• Side airbag harness (LH) circuit is open. • Side airbag module (LH) is faulty. • Airbag control module is faulty.	<Ref. to AB(diag)-99, DTC 4E SIDE AIRBAG LH FAILURE, Diagnostic Chart with Trouble Code.>
53	Side Airbag Sensor RH failure	Side airbag sensor (RH) is faulty.	<Ref. to AB(diag)-101, DTC 53 SIDE AIRBAG SENSOR RH FAILURE, Diagnostic Chart with Trouble Code.>
54	Side Airbag Sensor LH failure	Side airbag sensor (LH) is faulty.	<Ref. to AB(diag)-101, DTC 54 SIDE AIRBAG SENSOR LH FAILURE, Diagnostic Chart with Trouble Code.>
55	Side/Curtain Airbag: Firing output	• Side airbag module and curtain airbag module are deployed. • Curtain airbag module is deployed.	<Ref. to AB(diag)-101, DTC 55 SIDE CURTAIN AIRBAG FIRING OUTPUT, Diagnostic Chart with Trouble Code.>

GETtheMANUALS.org

DTC	Item	Content of diagnosis	Reference
58	Curtain Airbag Sensor RH failure	Curtain airbag sensor (RH) is faulty.	<Ref. to AB(diag)-101, DTC 58 CURTAIN AIRBAG SENSOR RH FAILURE, Diagnostic Chart with Trouble Code.>
59	Curtain Airbag Sensor LH failure	Curtain airbag sensor (LH) is faulty.	<Ref. to AB(diag)-101, DTC 59 CURTAIN AIRBAG SENSOR LH FAILURE, Diagnostic Chart with Trouble Code.>
5A	Side Airbag Sensor RH false installation	• Side airbag sensor (RH) is misinstalled. • Airbag control module is faulty.	<Ref. to AB(diag)-102, DTC 5A SIDE AIRBAG SENSOR RH FALSE INSTALLATION, Diagnostic Chart with Trouble Code.>
5B	Side Airbag Sensor LH false installation	• Side airbag sensor (LH) is misinstalled. • Airbag control module is faulty.	<Ref. to AB(diag)-102, DTC 5B SIDE AIRBAG SENSOR LH FALSE INSTALLATION, Diagnostic Chart with Trouble Code.>
5C	Curtain Airbag Sensor RH false installation	• Curtain airbag sensor (RH) is misinstalled. • Airbag control module is faulty.	<Ref. to AB(diag)-102, DTC 5C CURTAIN AIRBAG SENSOR RH FALSE INSTALLATION, Diagnostic Chart with Trouble Code.>
5D	Curtain Airbag Sensor LH false installation	• Curtain airbag sensor (LH) is misinstalled. • Airbag control module is faulty.	<Ref. to AB(diag)-102, DTC 5D CURTAIN AIRBAG SENSOR LH FALSE INSTALLATION, Diagnostic Chart with Trouble Code.>
61	Belt Pretensioner RH failure	A type • Seat belt pretensioner (RH) circuit is open, shorted or shorted to ground. • Airbag control module is faulty. • Pretensioner is faulty. • Pretensioner harness is faulty. B type • Seat belt pretensioner (RH) circuit is shorted to ground. • Pretensioner (RH) is faulty. • Pretensioner harness is shorted to ground. • Airbag control module is faulty.	<Ref. to AB(diag)-103, DTC 61 BELT PRETENSIONER RH FAILURE, Diagnostic Chart with Trouble Code.>
62	Belt Pretensioner LH failure	A type • Seat belt pretensioner (LH) circuit is open, shorted or shorted to ground. • Airbag control module is faulty. • Pretensioner is faulty. • Pretensioner harness is faulty. B type • Seat belt pretensioner (LH) circuit is shorted to ground. • Pretensioner (LH) is faulty. • Pretensioner harness is shorted to ground. • Airbag control module is faulty.	<Ref. to AB(diag)-107, DTC 62 BELT PRETENSIONER LH FAILURE, Diagnostic Chart with Trouble Code.>
65	Belt Pretensioner RH failure	• Seat belt pretensioner (RH) circuit is shorted to power supply. • Pretensioner (RH) is faulty. • Pretensioner harness is shorted to power supply. • Airbag control module is faulty.	<Ref. to AB(diag)-111, DTC 65 BELT PRETENSIONER RH FAILURE, Diagnostic Chart with Trouble Code.>
66	Belt Pretensioner LH failure	• Seat belt pretensioner (LH) circuit is shorted to power supply. • Pretensioner (LH) is faulty. • Pretensioner harness is shorted to power supply. • Airbag control module is faulty.	<Ref. to AB(diag)-113, DTC 66 BELT PRETENSIONER LH FAILURE, Diagnostic Chart with Trouble Code.>

GETtheMANUALS.org

DTC	Item	Content of diagnosis	Reference
6A	Belt Pretensioner RH failure	• Seat belt pretensioner (RH) circuit is shorted. • Pretensioner (RH) is faulty. • Pretensioner harness is shorted. • Airbag control module is faulty.	<Ref. to AB(diag)-115, DTC 6A BELT PRETENSIONER RH FAILURE, Diagnostic Chart with Trouble Code.>
6B	Belt Pretensioner LH failure	• Seat belt pretensioner (LH) circuit is shorted. • Pretensioner (LH) is faulty. • Pretensioner harness is shorted. • Airbag control module is faulty.	<Ref. to AB(diag)-117, DTC 6B BELT PRETENSIONER LH FAILURE, Diagnostic Chart with Trouble Code.>
6D	Belt Pretensioner RH failure	• Seat belt pretensioner (RH) circuit is open. • Pretensioner (RH) is faulty. • Pretensioner harness is open. • Airbag control module is faulty.	<Ref. to AB(diag)-119, DTC 6D BELT PRETENSIONER RH FAILURE, Diagnostic Chart with Trouble Code.>
6E	Belt Pretensioner LH failure	• Seat belt pretensioner (LH) circuit is open. • Pretensioner (LH) is faulty. • Pretensioner harness is open. • Airbag control module is faulty.	<Ref. to AB(diag)-121, DTC 6E BELT PRETENSIONER LH FAILURE, Diagnostic Chart with Trouble Code.>
71	Driver's Airbag failure	A type • Airbag main harness circuit is open, shorted or shorted to ground. • Airbag module harness (Driver's side) circuit is open, shorted or shorted to ground. • Roll connector circuit is open, shorted or shorted to ground. • Airbag control module is faulty. • Driver's airbag module is faulty. B type • Airbag main harness circuit is shorted to ground. • Airbag module harness (driver's side) circuit is shorted to ground. • Roll connector circuit is shorted to ground. • Driver's airbag module is faulty. • Airbag control module is faulty.	<Ref. to AB(diag)-123, DTC 71 DRIVER'S AIRBAG FAILURE, Diagnostic Chart with Trouble Code.>
72	Passenger's Airbag failure	A type • Airbag main harness circuit is open, shorted or shorted to ground. • Airbag module harness (passenger's side) circuit is open, shorted or shorted to ground. • Airbag control module is faulty. • Passenger's airbag module is faulty. B type • Airbag main harness circuit is shorted to ground. • Airbag module harness (passenger's side) circuit is shorted to ground. • Passenger's airbag module is faulty. • Airbag control module is faulty.	<Ref. to AB(diag)-128, DTC 72 PASSENGER'S AIRBAG FAILURE, Diagnostic Chart with Trouble Code.>
75	Driver's Airbag failure	• Airbag main harness circuit is shorted to power supply. • Airbag module harness circuit (driver's side) is shorted to power supply. • Roll connector circuit is shorted to power supply. • Driver's airbag module is faulty. • Airbag control module is faulty.	<Ref. to AB(diag)-132, DTC 75 DRIVER'S AIRBAG FAILURE, Diagnostic Chart with Trouble Code.>

GETtheMANUALS.org

DTC	Item	Content of diagnosis	Reference
76	Passenger's Airbag failure	• Airbag main harness circuit is shorted to power supply. • Airbag module harness (passenger's side) circuit is shorted to power supply. • Passenger's airbag module is faulty. • Airbag control module is faulty.	<Ref. to AB(diag)-134, DTC 76 PASSENGER'S AIRBAG FAILURE, Diagnostic Chart with Trouble Code.>
7A	Driver's Airbag failure	• Airbag main harness circuit is shorted. • Airbag module harness (driver's side) circuit is shorted. • Roll connector circuit is shorted to power supply. • Driver's airbag module is faulty. • Airbag control module is faulty.	<Ref. to AB(diag)-136, DTC 7A DRIVER'S AIRBAG FAILURE, Diagnostic Chart with Trouble Code.>
7B	Passenger's Airbag failure	• Airbag main harness circuit is shorted. • Airbag module harness circuit (passenger's side) is shorted. • Passenger's airbag module is faulty. • Airbag control module is faulty.	<Ref. to AB(diag)-138, DTC 7B PASSENGER'S AIRBAG FAILURE, Diagnostic Chart with Trouble Code.>
7D	Driver's Airbag failure	• Airbag main harness circuit is open. • Airbag module harness circuit (driver's side) is open. • Roll connector circuit is open. • Driver's airbag module is faulty. • Airbag control module is faulty.	<Ref. to AB(diag)-140, DTC 7D DRIVER'S AIRBAG FAILURE, Diagnostic Chart with Trouble Code.>
7E	Passenger's Airbag failure	• Airbag main harness circuit is open. • Airbag module harness circuit (passenger's side) is open. • Passenger's airbag module is faulty. • Airbag control module is faulty.	<Ref. to AB(diag)-142, DTC 7E PASSENGER'S AIRBAG FAILURE, Diagnostic Chart with Trouble Code.>
91	Curtain Airbag RH failure	A type • Curtain airbag harness (RH) circuit is faulty. • Curtain airbag module (RH) is faulty. • Airbag control module is faulty. B type • Curtain airbag harness (RH) circuit is shorted to ground. • Curtain airbag module (RH) is faulty. • Airbag control module is faulty.	<Ref. to AB(diag)-144, DTC 91 CURTAIN AIRBAG MODULE RH FAILURE, Diagnostic Chart with Trouble Code.>
92	Curtain Airbag LH failure	A type • Curtain airbag harness (LH) circuit is faulty. • Curtain airbag module (LH) is faulty. • Airbag control module is faulty. B type • Curtain airbag harness (LH) circuit is shorted to ground. • Curtain airbag module (LH) is faulty. • Airbag control module is faulty.	<Ref. to AB(diag)-148, DTC 92 CURTAIN AIRBAG MODULE LH FAILURE, Diagnostic Chart with Trouble Code.>
95	Curtain Airbag RH failure	• Curtain airbag harness (RH) is shorted to power supply. • Curtain airbag module (RH) is faulty. • Airbag control module is faulty.	<Ref. to AB(diag)-152, DTC 95 CURTAIN AIRBAG MODULE RH FAILURE, Diagnostic Chart with Trouble Code.>
96	Curtain Airbag LH failure	• Curtain airbag harness (LH) is shorted to power supply. • Curtain airbag module (LH) is faulty. • Airbag control module is faulty.	<Ref. to AB(diag)-154, DTC 96 CURTAIN AIRBAG MODULE LH FAILURE, Diagnostic Chart with Trouble Code.>
9A	Curtain Airbag RH failure	• Curtain airbag harness (RH) circuit is shorted. • Curtain airbag module (RH) is faulty. • Airbag control module is faulty.	<Ref. to AB(diag)-156, DTC 9A CURTAIN AIRBAG MODULE RH FAILURE, Diagnostic Chart with Trouble Code.>

GETtheMANUALS.org

DTC	Item	Content of diagnosis	Reference
9B	Curtain Airbag LH failure	• Curtain airbag harness (LH) circuit is shorted. • Curtain airbag module (LH) is faulty. • Airbag control module is faulty.	<Ref. to AB(diag)-158, DTC 9B CURTAIN AIRBAG MODULE LH FAILURE, Diagnostic Chart with Trouble Code.>
9D	Curtain Airbag RH failure	• Curtain airbag harness (RH) circuit is open. • Curtain airbag module (RH) is faulty. • Airbag control module is faulty.	<Ref. to AB(diag)-160, DTC 9D CURTAIN AIRBAG MODULE RH FAILURE, Diagnostic Chart with Trouble Code.>
9E	Curtain Airbag LH failure	• Curtain airbag harness (LH) circuit is open. • Curtain airbag module (LH) is faulty. • Airbag control module is faulty.	<Ref. to AB(diag)-162, DTC 9E CURTAIN AIRBAG MODULE LH FAILURE, Diagnostic Chart with Trouble Code.>
A1	Front sensor Bus communication error	• Open or short circuit in harness between airbag control module and front sub sensor. • Front sub sensor is faulty. • Airbag control module is faulty.	<Ref. to AB(diag)-164, DTC A1 FRONT SENSOR BUS COMMUNICATION ERROR, Diagnostic Chart with Trouble Code.>
A2 A3	Door sensor Bus RH communication error	• Open or short circuit in harness between curtain airbag sensor and front door impact sensor. • Front door impact sensor (RH) is faulty. • Curtain airbag sensor (RH) is faulty. • Airbag control module is faulty.	<Ref. to AB(diag)-166, DTC A2 DOOR SENSOR BUS RH COMMUNICATION ERROR, Diagnostic Chart with Trouble Code.> <Ref. to AB(diag)-167, DTC A3 DOOR SENSOR BUS RH COMMUNICATION ERROR, Diagnostic Chart with Trouble Code.>
A4 A5	Door sensor Bus LH communication error	• Open or short circuit in harness between curtain airbag sensor and front door impact sensor. • Front door impact sensor (LH) is faulty. • Curtain airbag sensor (LH) is faulty. • Airbag control module is faulty.	<Ref. to AB(diag)-169, DTC A4 DOOR SENSOR BUS LH COMMUNICATION ERROR, Diagnostic Chart with Trouble Code.> <Ref. to AB(diag)-170, DTC A5 DOOR SENSOR BUS LH COMMUNICATION ERROR, Diagnostic Chart with Trouble Code.>
AA	Door sensor RH failure	Front door impact sensor (RH) is faulty.	<Ref. to AB(diag)-173, DTC AA DOOR SENSOR RH FAILURE, Diagnostic Chart with Trouble Code.>
AB	Door sensor LH failure	Front door impact sensor (LH) is faulty.	<Ref. to AB(diag)-173, DTC AB DOOR SENSOR LH FAILURE, Diagnostic Chart with Trouble Code.>
AC	Door sensor RH false installation	• Front door impact sensor (RH) is misinstalled. • Airbag control module is faulty.	<Ref. to AB(diag)-173, DTC AC DOOR SENSOR RH FALSE INSTALLATION, Diagnostic Chart with Trouble Code.>
AD	Door sensor LH failure	• Front door impact sensor (LH) is misinstalled. • Airbag control module is faulty.	<Ref. to AB(diag)-173, DTC AD DOOR SENSOR LH FALSE INSTALLATION, Diagnostic Chart with Trouble Code.>
BB	Roll Over : Firing output	Curtain airbag module (LH/RH) and seat belt pretensioner (LH/RH) are deployed.	<Ref. to AB(diag)-173, DTC BB ROLL OVER: FIRING OUTPUT, Diagnostic Chart with Trouble Code.>
E2 E3 E4	Front Sensor Bus RH Communication error	• Open or short circuit in harness (RH) between airbag control module and front sub sensor. • Front sub sensor (RH) is faulty. • Airbag control module is faulty.	<Ref. to AB(diag)-173, DTC E2 FRONT SENSOR BUS RH COMMUNICATION ERROR, Diagnostic Chart with Trouble Code.> <Ref. to AB(diag)-174, DTC E3 FRONT SENSOR BUS RH COMMUNICATION ERROR, Diagnostic Chart with Trouble Code.> <Ref. to AB(diag)-175, DTC E4 FRONT SENSOR BUS RH COMMUNICATION ERROR, Diagnostic Chart with Trouble Code.>

GETtheMANUALS.org

DTC	Item	Content of diagnosis	Reference
E6 E7 E8	Front Sensor Bus LH Communication error	• Open or short circuit in harness (LH) between airbag control module and front sub sensor. • Front sub sensor (LH) is faulty. • Airbag control module is faulty.	<Ref. to AB(diag)-177, DTC E6 FRONT SENSOR BUS LH COMMUNICATION ERROR, Diagnostic Chart with Trouble Code.> <Ref. to AB(diag)-178, DTC E7 FRONT SENSOR BUS LH COMMUNICATION ERROR, Diagnostic Chart with Trouble Code.> <Ref. to AB(diag)-181, DTC E8 FRONT SENSOR BUS LH COMMUNICATION ERROR, Diagnostic Chart with Trouble Code.>
E9 EA	Side Sensor Bus RH Communication error	• Open or short circuit in harness (RH) between airbag control module and front door impact sensor. • Side airbag sensor (RH) is faulty. • Curtain airbag sensor (RH) is faulty. • Front door impact sensor (RH) is faulty. • Airbag control module is faulty.	<Ref. to AB(diag)-183, DTC E9 SIDE SENSOR BUS RH COMMUNICATION ERROR, Diagnostic Chart with Trouble Code.> <Ref. to AB(diag)-188, DTC EA SIDE SENSOR BUS RH COMMUNICATION ERROR, Diagnostic Chart with Trouble Code.>
EB EC	Side Sensor Bus RH Communication error	• Open or short circuit in harness (RH) between airbag control module and side airbag sensor. • Side airbag sensor (RH) is faulty. • Airbag control module is faulty.	<Ref. to AB(diag)-188, DTC EB SIDE SENSOR BUS RH COMMUNICATION ERROR, Diagnostic Chart with Trouble Code.> <Ref. to AB(diag)-189, DTC EC SIDE SENSOR BUS RH COMMUNICATION ERROR, Diagnostic Chart with Trouble Code.>
ED EE	Side Sensor Bus RH Communication error	• Open or short circuit in harness (RH) between airbag control module and curtain airbag sensor. • Side airbag sensor (RH) is faulty. • Curtain airbag sensor (RH) is faulty. • Airbag control module is faulty.	<Ref. to AB(diag)-191, DTC ED SIDE SENSOR BUS RH COMMUNICATION ERROR, Diagnostic Chart with Trouble Code.> <Ref. to AB(diag)-192, DTC EE SIDE SENSOR BUS RH COMMUNICATION ERROR, Diagnostic Chart with Trouble Code.>
F1 F2	Side Sensor Bus LH Communication error	• Open or short circuit in harness (LH) between airbag control module and front door impact sensor. • Side airbag sensor (LH) is faulty. • Curtain airbag sensor (LH) is faulty. • Front door impact sensor (LH) is faulty. • Airbag control module is faulty.	<Ref. to AB(diag)-195, DTC F1 SIDE SENSOR BUS LH COMMUNICATION ERROR, Diagnostic Chart with Trouble Code.> <Ref. to AB(diag)-200, DTC F2 SIDE SENSOR BUS LH COMMUNICATION ERROR, Diagnostic Chart with Trouble Code.>
F3 F4	Side Sensor Bus LH Communication error	• Open or short circuit in harness (LH) between airbag control module and side airbag sensor. • Side airbag sensor (LH) is faulty. • Airbag control module is faulty.	<Ref. to AB(diag)-200, DTC F3 SIDE SENSOR BUS LH COMMUNICATION ERROR, Diagnostic Chart with Trouble Code.> <Ref. to AB(diag)-201, DTC F4 SIDE SENSOR BUS LH COMMUNICATION ERROR, Diagnostic Chart with Trouble Code.>
F5 F6	Side Sensor Bus LH Communication error	• Open or short circuit in harness (LH) between airbag control module and curtain airbag sensor. • Side airbag sensor (LH) is faulty. • Curtain airbag sensor (LH) is faulty. • Airbag control module is faulty.	<Ref. to AB(diag)-203, DTC F5 SIDE SENSOR BUS LH COMMUNICATION ERROR, Diagnostic Chart with Trouble Code.> <Ref. to AB(diag)-204, DTC F6 SIDE SENSOR BUS LH COMMUNICATION ERROR, Diagnostic Chart with Trouble Code.>

GETtheMANUALS.org

16. Diagnostic Chart with Trouble Code

A: DTC 11 DRIVER'S AIRBAG FAILURE

NOTE:
Be sure to properly identify the Airbag system type prior to performing any diagnostics.

1. TYPE A

DTC DETECTING CONDITION:
- Airbag main harness circuit is open, shorted or shorted to ground.
- Airbag module harness (Driver's side) circuit is open, shorted or shorted to ground.
- Roll connector circuit is open, shorted or shorted to ground.
- Airbag control module is faulty.
- Driver's airbag module is faulty.

CAUTION:
Before performing diagnosis, refer to "CAUTION" in "General Description". <Ref. to AB(diag)-5, CAUTION, General Description.>

NOTE:
Prior to starting work, prepare two AIRBAG RESISTORs (98299PA040).
WIRING DIAGRAM:

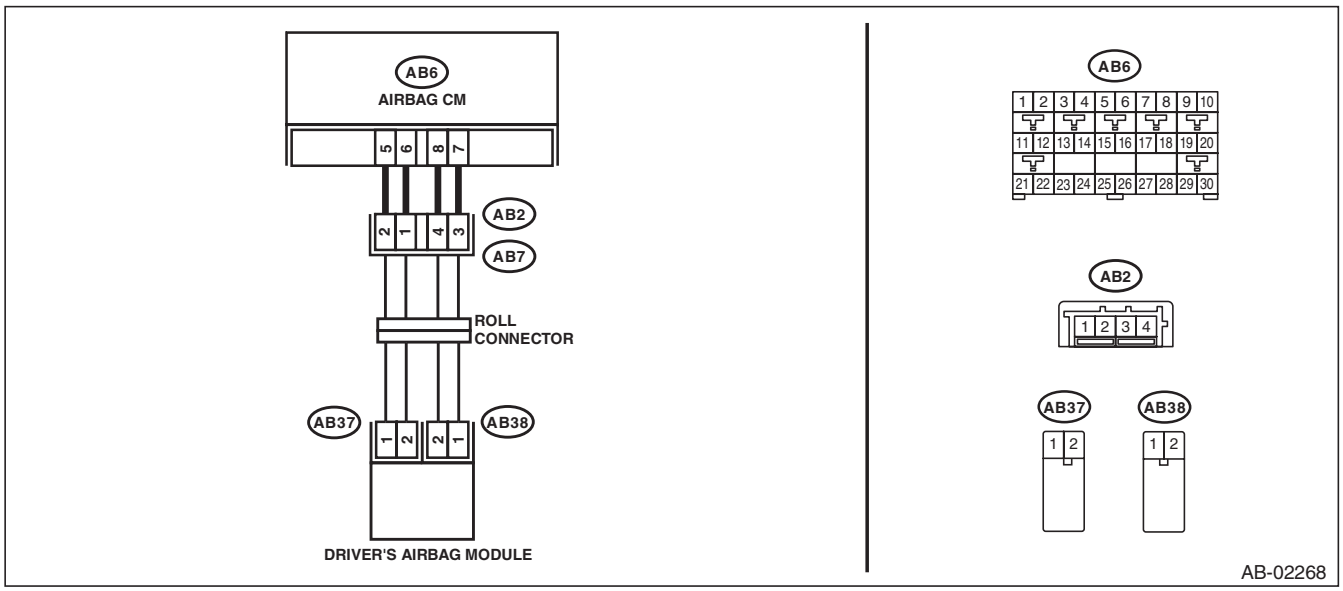

Step		Check	Yes	No
1	**CHECK POOR CONTACT OF CONNECTORS.** Check for poor contact of the connectors between the airbag control module and the driver's airbag module.	Is there poor contact?	Replace the airbag harness.	Go to step **2**.

GETtheMANUALS.org

	Step	Check	Yes	No
2	**CHECK DRIVER'S AIRBAG MODULE.** 1) Turn the ignition switch to OFF, disconnect the battery ground cable, and wait for 60 seconds or more. 2) Remove the driver's airbag module. 3) Connect the connector (1N) in the test harness N to the connector (AB38). 4) Connect the airbag resistor to the connector (2N) of test harness N. 5) Connect the connector (1Q) in the test harness Q to connector (AB37). 6) Connect the airbag resistor to the connector (2Q) in the test harness Q. 7) Connect the battery ground terminal and turn the ignition switch to ON.	Does the airbag warning light illuminate for six seconds and go off?	Replace the driver's airbag module. <Ref. to AB-35, Driver's Airbag Module.>	Go to step **3**.
3	**CHECK ROLL CONNECTOR AND AIRBAG MAIN HARNESS (DRIVER'S AIRBAG HARNESS).** 1) Turn the ignition switch to OFF, disconnect the battery ground cable, and wait for 60 seconds or more. 2) Remove the console front panel and disconnect the connector (AB9). 3) Disconnect the airbag resistor from the connector (2N) in test harness N. 4) Disconnect the airbag resistor from the connector (2Q) of test harness Q. 5) Disconnect the connectors (AB6, AB17, AB18) from airbag control module. 6) Measure the resistance between connector (2Q) terminals in test harness Q. ***Connector & terminal*** ***(2Q) No. 1 — (2Q) No. 2:***	Is the resistance less than 10 Ω?	Go to step **5**.	Go to step **4**.
4	**CHECK ROLL CONNECTOR.** 1) Remove the instrument panel lower cover and column cover, and disconnect the connector (AB7) from (AB2). 2) Measure the resistance between connector (2Q) terminals in test harness Q. ***Connector & terminal*** ***(2Q) No. 1 — (2Q) No. 2:***	Is the resistance less than 10 Ω?	Replace the airbag main harness along with body harness.	Replace the roll connector. <Ref. to AB-96, Roll Connector.>
5	**CHECK ROLL CONNECTOR AND AIRBAG MAIN HARNESS (DRIVER'S AIRBAG HARNESS).** 1) Remove the instrument panel lower cover and column cover, and disconnect the connector (AB7) from (AB2). 2) Measure the resistance between connector (2Q) in the test harness Q and chassis ground. ***Connector & terminal*** ***(2Q) No. 1 — Chassis ground:*** ***(2Q) No. 2 — Chassis ground:***	Is the resistance 1 MΩ or more?	Go to step **8**.	Go to step **6**.

GETtheMANUALS.org

	Step	Check	Yes	No
6	**CHECK ROLL CONNECTOR.** 1) Remove the instrument panel lower cover and column cover, and disconnect the connector (AB7) from (AB2). 2) Measure the resistance between connector (2Q) in the test harness Q and chassis ground. ***Connector & terminal*** ***(2Q) No. 1 — Chassis ground:*** ***(2Q) No. 2 — Chassis ground:***	Is the resistance 1 MΩ or more?	Go to step **7**.	Replace the roll connector. <Ref. to AB-96, Roll Connector.>
7	**CHECK AIRBAG MAIN HARNESS (DRIVER'S AIRBAG HARNESS).** 1) Connect the test harness AG connector (1AG) to the connectors (AB6, AB17, AB18). 2) Measure the resistance between connector (3AG) in the test harness AG and chassis ground. ***Connector & terminal*** ***(3AG) No. 1 — Chassis ground:*** ***(3AG) No. 3 — Chassis ground:***	Is the resistance 1 MΩ or more?	Go to step **10**.	Replace the airbag main harness along with body harness.
8	**CHECK ROLL CONNECTOR AND AIRBAG MAIN HARNESS (DRIVER'S AIRBAG HARNESS).** 1) Connect the test harness AG connector (1AG) to the connectors (AB6, AB17, AB18). 2) Measure the resistance between connector (2Q) terminals in test harness Q. ***Connector & terminal*** ***(2Q) No. 1 — (2Q) No. 2:***	Is the resistance 1 MΩ or more?	Go to step **10**.	Go to step **9**.
9	**CHECK ROLL CONNECTOR AND AIRBAG MAIN HARNESS (DRIVER'S AIRBAG HARNESS).** 1) Remove the instrument panel lower cover and column cover, and disconnect the connector (AB7) from (AB2). 2) Measure the resistance between connector (3AG) terminals in test harness AG. ***Connector & terminal*** ***(3AG) No. 1 — (3AG) No. 3:***	Is the resistance 1 MΩ or more?	Replace the roll connector. <Ref. to AB-96, Roll Connector.>	Replace the airbag main harness along with body harness.
10	**CHECK AIRBAG CONTROL MODULE.** 1) Connect all connectors. 2) Clear the memory. 3) Perform the Inspection Mode. 4) Read the DTC.	Is the same DTC displayed?	Replace the airbag control module. <Ref. to AB-68, Airbag Control Module.>	Go to step **11**.
11	**CHECK FOR ANY OTHER DTC ON DISPLAY.**	Is any other DTC displayed?	Check DTC using "List of Diagnostic Trouble Code (DTC)". <Ref. to AB(diag)-41, List of Diagnostic Trouble Code (DTC).>	Finish the diagnosis.

GETtheMANUALS.org

2. TYPE B

DTC DETECTING CONDITION:

- Airbag main harness circuit is shorted to ground.
- Airbag module harness (driver's side) circuit is shorted to ground.
- Roll connector circuit is shorted to ground.
- Driver's airbag module is faulty.
- Airbag control module is faulty.

CAUTION:

Before performing diagnosis, refer to "CAUTION" in "General Description". <Ref. to AB(diag)-5, CAUTION, General Description.>

NOTE:
Prior to starting work, prepare two AIRBAG RESISTORs (98299PA040).

WIRING DIAGRAM:

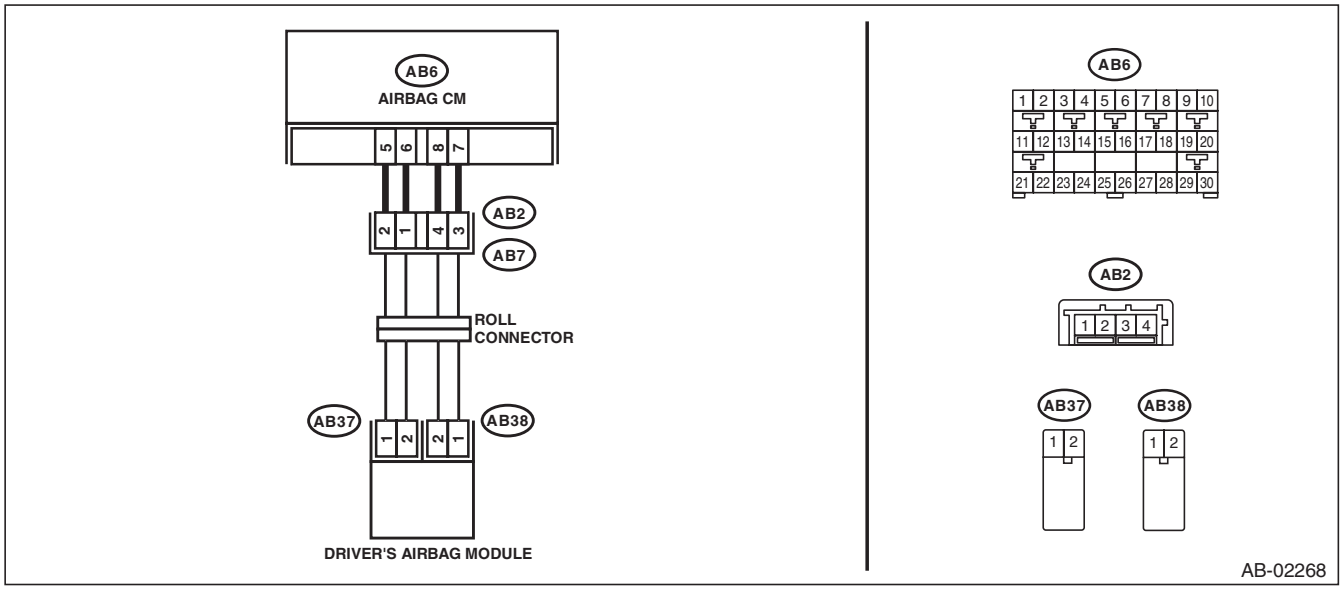

Step		Check	Yes	No
1	**CHECK POOR CONTACT OF CONNECTORS.** Check for poor contact of the connectors between the airbag control module and the driver's airbag module.	Is there poor contact?	Replace the airbag harness.	Go to step **2**.
2	**CHECK DRIVER'S AIRBAG MODULE.** 1) Turn the ignition switch to OFF, disconnect the battery ground cable, and wait for 60 seconds or more. 2) Remove the driver's airbag module. 3) Connect the connector (1N) in the test harness N to the connector (AB38). 4) Connect the airbag resistor to the connector (2N) of test harness N. 5) Connect the connector (1Q) in the test harness Q to connector (AB37). 6) Connect the airbag resistor to the connector (2Q) in the test harness Q. 7) Connect the battery ground terminal and turn the ignition switch to ON.	Does the airbag warning light illuminate for six seconds and go off?	Replace the driver's airbag module. <Ref. to AB-35, Driver's Airbag Module.>	Go to step **3**.

GETtheMANUALS.org

	Step	Check	Yes	No
3	**CHECK ROLL CONNECTOR.** 1) Turn the ignition switch to OFF, disconnect the battery ground cable, and wait for 60 seconds or more. 2) Remove the instrument panel lower cover and column cover, and disconnect the connector (AB7) from (AB2). 3) Disconnect the airbag resistor from the connector (2N) in test harness N and from the connector (2Q) in test harness Q. 4) Measure the resistance between connector (2Q) in the test harness Q and chassis ground. ***Connector & terminal*** ***(2Q) No. 1 — Chassis ground:*** ***(2Q) No. 2 — Chassis ground:***	Is the resistance 1 MΩ or more?	Go to step **4**.	Replace the roll connector. <Ref. to AB-96, Roll Connector.>
4	**CHECK AIRBAG MAIN HARNESS (DRIVER'S AIRBAG HARNESS).** 1) Disconnect the test harness N from connector (AB38). 2) Disconnect the test harness Q from connector (AB37). 3) Remove the console front panel and disconnect the connector (AB9). 4) Disconnect the connectors (AB6, AB17, AB18) from the airbag control module, and connect the connector (1AG) in the test harness AG. NOTE: For sedan models, connect test harness AH between the connectors (AB6, AB17, AB18) and (1AG). 5) Measure the resistance between connector (3AG) in the test harness AG and chassis ground. ***Connector & terminal*** ***(3AG) No. 1 — Chassis ground:*** ***(3AG) No. 3 — Chassis ground:***	Is the resistance 1 MΩ or more?	Go to step **5**.	Replace the airbag main harness along with body harness.
5	**CHECK AIRBAG CONTROL MODULE.** 1) Connect all connectors. 2) Clear the memory. 3) Perform the Inspection Mode. 4) Read the DTC.	Is the same DTC displayed?	Replace the airbag control module. <Ref. to AB-68, Airbag Control Module.>	Go to step **6**.
6	**CHECK FOR ANY OTHER DTC ON DISPLAY.**	Is any other DTC displayed?	Check DTC using "List of Diagnostic Trouble Code (DTC)". <Ref. to AB(diag)-41, List of Diagnostic Trouble Code (DTC).>	Finish the diagnosis.

GETtheMANUALS.org

B: DTC 12 PASSENGER'S AIRBAG FAILURE

NOTE:
Be sure to properly identify the Airbag system type prior to performing any diagnostics.

1. TYPE A

DTC DETECTING CONDITION:
- Airbag main harness circuit is open, shorted or shorted to ground.
- Airbag module harness (Passenger's side) circuit is open, shorted or shorted to ground.
- Passenger's airbag module is faulty.
- Airbag control module is faulty.

CAUTION:
Before performing diagnosis, refer to "CAUTION" in "General Description". <Ref. to AB(diag)-5, CAUTION, General Description.>

NOTE:
Prior to starting work, prepare two AIRBAG RESISTORs (98299PA040).
WIRING DIAGRAM:

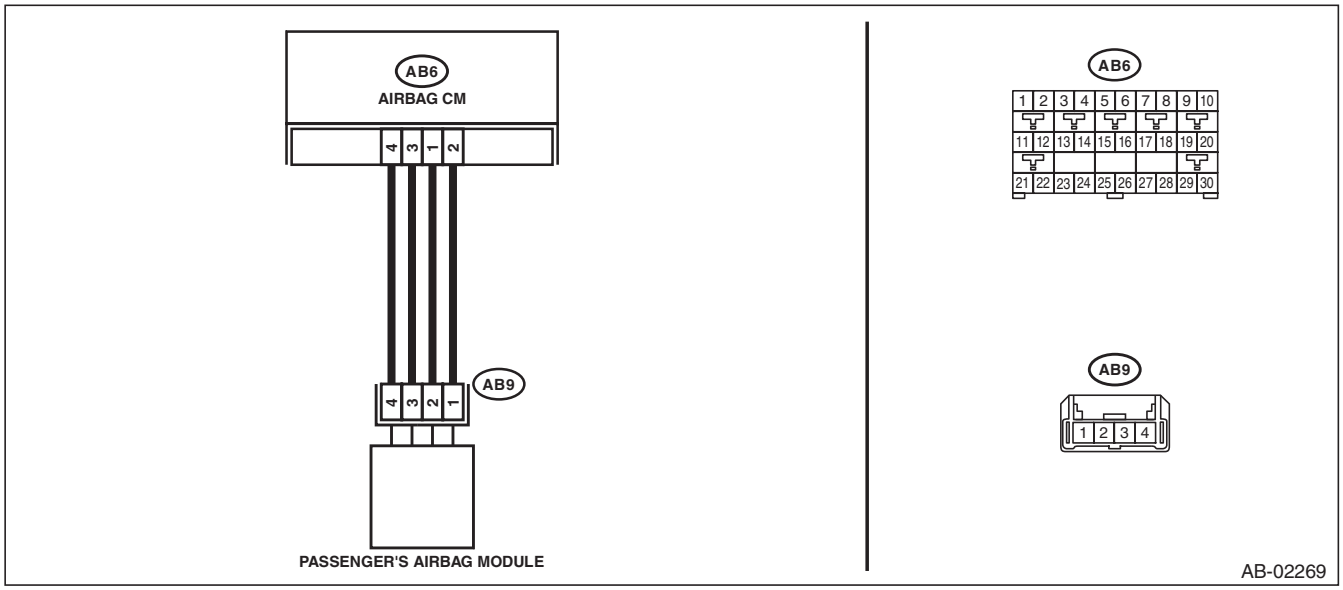

	Step	Check	Yes	No
1	**CHECK POOR CONTACT OF CONNECTORS.** Check for poor contact of the connectors between the airbag control module and the passenger's airbag module.	Is there poor contact?	Replace the airbag harness.	Go to step **2**.
2	**CHECK PASSENGER'S AIRBAG MODULE.** 1) Turn the ignition switch to OFF, disconnect the battery ground cable, and wait for 60 seconds or more. 2) Remove the console front panel and disconnect the connectors (AB10) from (AB9). 3) Connect the connector (1P) in the test harness P to connector (AB9). 4) Connect the airbag resistor to the connectors (2P) and (3P) of test harness P. 5) Connect the battery ground terminal and turn the ignition switch to ON.	Does the airbag warning light illuminate for six seconds and go off?	Replace the passenger's airbag module. <Ref. to AB-37, Passenger's Airbag Module.>	Go to step **3**.

GETtheMANUALS.org

	Step	Check	Yes	No
3	**CHECK AIRBAG MAIN HARNESS (PASSENGER'S AIRBAG HARNESS).** 1) Turn the ignition switch to OFF, disconnect the battery ground cable, and wait for 60 seconds or more. 2) Disconnect the airbag resistor from the connectors (2P) and (3P) of test harness P. 3) Remove the instrument panel lower cover and disconnect the connector (AB7) from (AB2). 4) Disconnect the connectors (AB6, AB17, AB18) from the airbag control module, and connect the connector (1AG) in the test harness AG. 5) Measure the resistance between connectors (3AG) in the test harness AG, and between connector (3AG) and chassis ground. ***Connector & terminal*** ***(3AG) No. 9 — (3AG) No. 7:*** ***(3AG) No. 9 — Chassis ground:*** ***(3AG) No. 7 — Chassis ground:***	Is the resistance 1 MΩ or more?	Go to step **4**.	Replace the airbag main harness along with body harness.
4	**CHECK AIRBAG MAIN HARNESS (PASSENGER'S AIRBAG HARNESS).** Measure the resistance between connector (3AG) of test harness AG and connector (2P) of test harness P. ***Connector & terminal*** ***(3AG) No. 9 — (2P) No. 1:*** ***(3AG) No. 7 — (2P) No. 2:***	Is the resistance less than 10 Ω?	Go to step **5**.	Replace the airbag main harness along with body harness.
5	**CHECK AIRBAG CONTROL MODULE.** 1) Connect all connectors. 2) Clear the memory. 3) Perform the Inspection Mode. 4) Read the DTC.	Is the same DTC displayed?	Replace the airbag control module. <Ref. to AB-68, Airbag Control Module.>	Go to step **6**.
6	**CHECK FOR ANY OTHER DTC ON DISPLAY.**	Is any other DTC displayed?	Check DTC using "List of Diagnostic Trouble Code (DTC)". <Ref. to AB(diag)-41, List of Diagnostic Trouble Code (DTC).>	Finish the diagnosis.

GETtheMANUALS.org

2. TYPE B

DTC DETECTING CONDITION:

- Airbag main harness circuit is shorted to ground.
- Airbag module harness (passenger's side) circuit is shorted to ground.
- Passenger's airbag module is faulty.
- Airbag control module is faulty.

CAUTION:

Before performing diagnosis, refer to "CAUTION" in "General Description". <Ref. to AB(diag)-5, CAUTION, General Description.>

NOTE:

Prior to starting work, prepare two AIRBAG RESISTORs (98299PA040).

WIRING DIAGRAM:

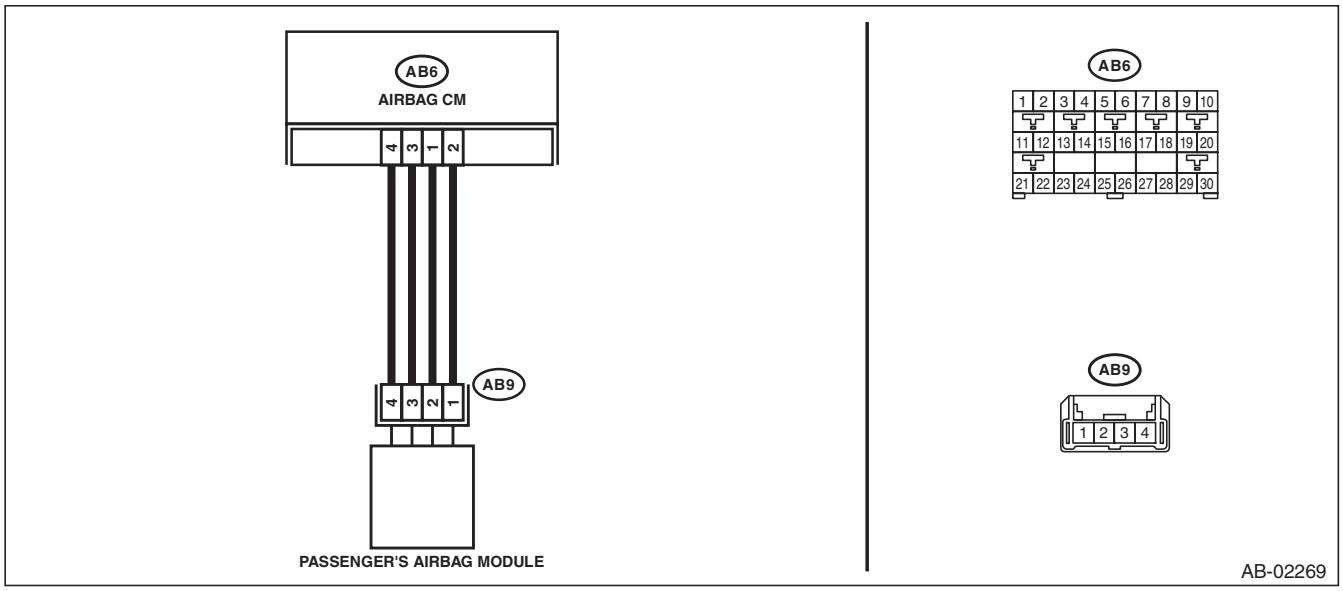

	Step	Check	Yes	No
1	**CHECK POOR CONTACT OF CONNECTORS.** Check for poor contact of the connectors between the airbag control module and the passenger's airbag module.	Is there poor contact?	Replace the airbag harness.	Go to step **2**.
2	**CHECK PASSENGER'S AIRBAG MODULE.** 1) Turn the ignition switch to OFF, disconnect the battery ground cable, and wait for 60 seconds or more. 2) Remove the console front panel and disconnect (AB9). 3) Connect the connector (1P) in the test harness P to connector (AB9). 4) Connect the airbag resistor to the connectors (2P) and (3P) of test harness P. 5) Connect the battery ground terminal and turn the ignition switch to ON.	Does the airbag warning light illuminate for six seconds and go off?	Replace the passenger's airbag module. <Ref. to AB-37, Passenger's Airbag Module.>	Go to step **3**.

GETtheMANUALS.org

	Step	Check	Yes	No
3	**CHECK AIRBAG MAIN HARNESS (PASSENGER'S AIRBAG HARNESS).** 1) Turn the ignition switch to OFF, disconnect the battery ground cable, and wait for 60 seconds or more. 2) Disconnect the airbag resistor from the connectors (2P) and (3P) of test harness P. 3) Remove the instrument panel lower cover and column cover, and disconnect the connector (AB7) from (AB2). 4) Disconnect the connectors (AB6, AB17, AB18) from the airbag control module, and connect the connector (1AG) in the test harness AG. NOTE: For sedan models, connect test harness AH between the connectors (AB6, AB17, AB18) and (1AG). 5) Measure the resistance between connector (3AG) in the test harness AG and chassis ground. ***Connector & terminal*** ***(3AG) No. 9 — Chassis ground:*** ***(3AG) No. 7 — Chassis ground:***	Is the resistance 1 MΩ or more?	Go to step **4**.	Replace the airbag main harness along with body harness.
4	**CHECK AIRBAG CONTROL MODULE.** 1) Connect all connectors. 2) Clear the memory. 3) Perform the Inspection Mode. 4) Read the DTC.	Is the same DTC displayed?	Replace the airbag control module. <Ref. to AB-68, Airbag Control Module.>	Go to step **5**.
5	**CHECK FOR ANY OTHER DTC ON DISPLAY.**	Is any other DTC displayed?	Check DTC using "List of Diagnostic Trouble Code (DTC)". <Ref. to AB(diag)-41, List of Diagnostic Trouble Code (DTC).>	Finish the diagnosis.

GETtheMANUALS.org

C: DTC 15 DRIVER'S AIRBAG FAILURE

DTC DETECTING CONDITION:

- Airbag main harness circuit is shorted to power supply.
- Airbag module harness (driver's side) circuit is shorted to power supply.
- Roll connector circuit is shorted to power supply.
- Driver's airbag module is faulty.
- Airbag control module is faulty.

CAUTION:

Before performing diagnosis, refer to "CAUTION" in "General Description". <Ref. to AB(diag)-5, CAUTION, General Description.>

NOTE:

Prior to starting work, prepare two AIRBAG RESISTORs (98299PA040).

WIRING DIAGRAM:

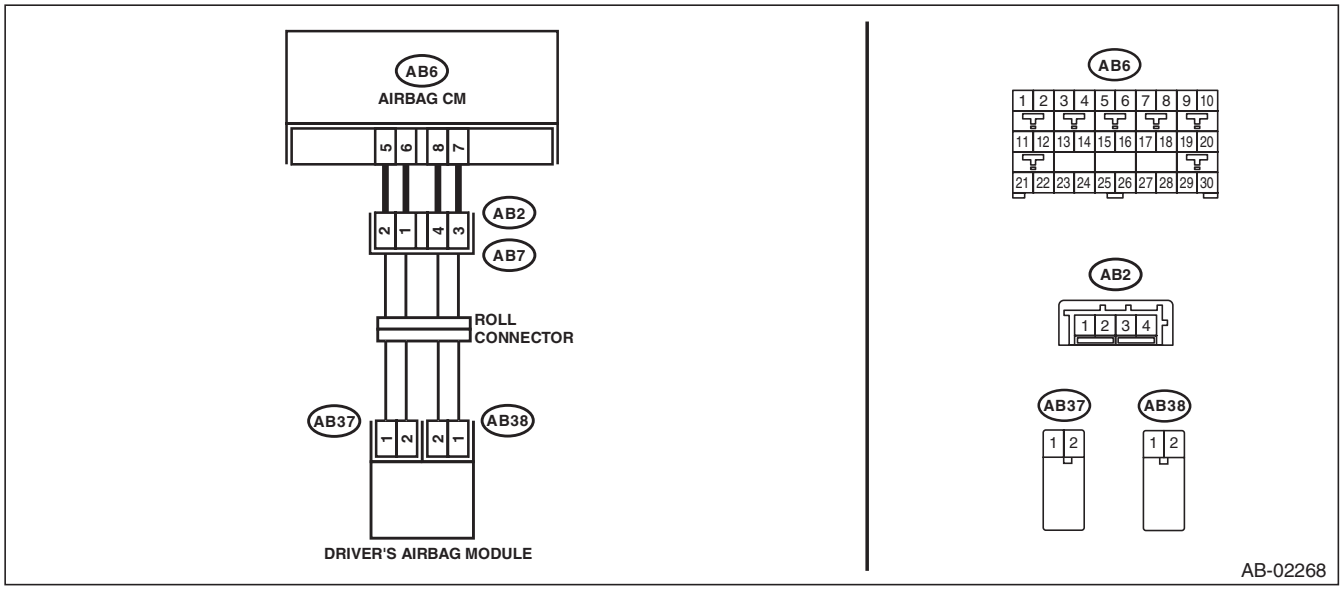

	Step	Check	Yes	No
1	**CHECK POOR CONTACT OF CONNECTORS.** Check for poor contact of the connectors between the airbag control module and the driver's airbag module.	Is there poor contact?	Replace the airbag harness.	Go to step **2**.
2	**CHECK DRIVER'S AIRBAG MODULE.** 1) Turn the ignition switch to OFF, disconnect the battery ground cable, and wait for 60 seconds or more. 2) Remove the driver's airbag module. 3) Connect the connector (1N) in the test harness N to the connector (AB38). 4) Connect the airbag resistor to the connector (2N) of test harness N. 5) Connect the connector (1Q) in the test harness Q to connector (AB37). 6) Connect the airbag resistor to the connector (2Q) in the test harness Q. 7) Connect the battery ground terminal and turn the ignition switch to ON.	Does the airbag warning light illuminate for six seconds and go off?	Replace the driver's airbag module. <Ref. to AB-35, Driver's Airbag Module.>	Go to step **3**.

GETtheMANUALS.org

	Step	Check	Yes	No
3	**CHECK ROLL CONNECTOR.** 1) Turn the ignition switch to OFF, disconnect the battery ground cable, and wait for 60 seconds or more. 2) Remove the instrument panel lower cover and column cover, and disconnect the connector (AB7) from (AB2). 3) Disconnect the airbag resistor from the connector (2N) in test harness N and from the connector (2Q) in test harness Q. 4) Measure the voltage between connector (2Q) in the test harness Q and chassis ground. ***Connector & terminal*** ***(2Q) No. 1 (+) — Chassis ground (–):*** ***(2Q) No. 2 (+) — Chassis ground (–):***	Is the voltage less than 1 V?	Go to step **4**.	Replace the roll connector. <Ref. to AB-96, Roll Connector.>
4	**CHECK AIRBAG MAIN HARNESS (DRIVER'S AIRBAG HARNESS).** 1) Disconnect the test harness N from connector (AB38). 2) Disconnect the test harness Q from connector (AB37). 3) Remove the console front panel and disconnect the connector (AB9). 4) Disconnect the connectors (AB6, AB17, AB18) from the airbag control module, and connect the connector (1AG) in the test harness AG. NOTE: For type B (sedan models), connect test harness AH between the connectors (AB6, AB17, AB18) and (1AG). 5) Connect the battery ground terminal and turn the ignition switch to ON. 6) Measure the voltage between connector (3AG) in the test harness AG and chassis ground. ***Connector & terminal*** ***(3AG) No. 1 (+) — Chassis ground (–):*** ***(3AG) No. 3 (+) — Chassis ground (–):***	Is the voltage less than 1 V?	Go to step **5**.	Replace the airbag main harness along with body harness.
5	**CHECK AIRBAG CONTROL MODULE.** 1) Connect all connectors. 2) Clear the memory. 3) Perform the Inspection Mode. 4) Read the DTC.	Is the same DTC displayed?	Replace the airbag control module. <Ref. to AB-68, Airbag Control Module.>	Go to step **6**.
6	**CHECK FOR ANY OTHER DTC ON DISPLAY.**	Is any other DTC displayed?	Check DTC using "List of Diagnostic Trouble Code (DTC)". <Ref. to AB(diag)-41, List of Diagnostic Trouble Code (DTC).>	Finish the diagnosis.

GETtheMANUALS.org

D: DTC 16 PASSENGER'S AIRBAG FAILURE

DTC DETECTING CONDITION:

- Airbag main harness circuit is shorted to power supply.
- Airbag module harness (passenger's side) circuit is shorted to power supply.
- Passenger's airbag module is faulty.
- Airbag control module is faulty.

CAUTION:

Before performing diagnosis, refer to "CAUTION" in "General Description". <Ref. to AB(diag)-5, CAUTION, General Description.>

NOTE:
Prior to starting work, prepare two AIRBAG RESISTORs (98299PA040).

WIRING DIAGRAM:

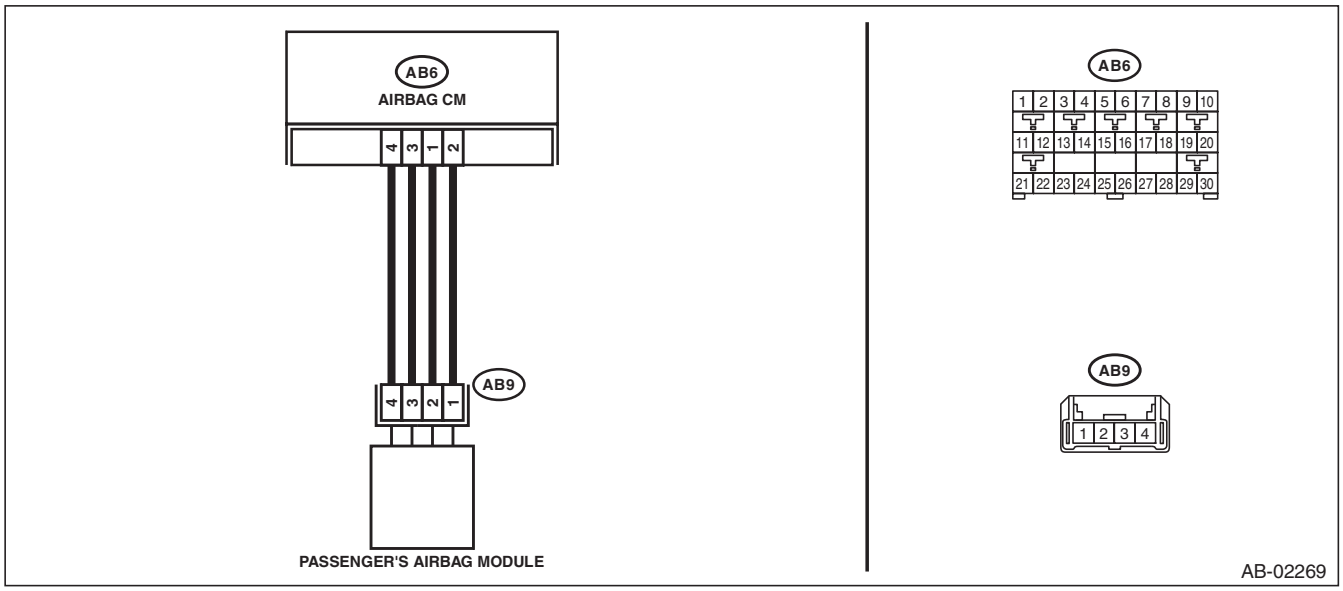

Step		Check	Yes	No
1	**CHECK POOR CONTACT OF CONNECTORS.** Check for poor contact of the connectors between the airbag control module and the passenger's airbag module.	Is there poor contact?	Replace the airbag harness along with chassis harness.	Go to step **2**.
2	**CHECK PASSENGER'S AIRBAG MODULE.** 1) Turn the ignition switch to OFF, disconnect the battery ground cable, and wait for 60 seconds or more. 2) Remove the console front panel and disconnect the connector (AB9). 3) Connect the connector (1P) in the test harness P to connector (AB9). 4) Connect the airbag resistor to the connectors (2P) and (3P) of test harness P. 5) Connect the battery ground terminal and turn the ignition switch to ON.	Does the airbag warning light illuminate for six seconds and go off?	Replace the passenger's airbag module. <Ref. to AB-37, Passenger's Airbag Module.>	Go to step **3**.

GETtheMANUALS.org

	Step	Check	Yes	No
3	**CHECK AIRBAG MAIN HARNESS (PASSENGER'S AIRBAG HARNESS).** 1) Turn the ignition switch to OFF, disconnect the battery ground cable, and wait for 60 seconds or more. 2) Disconnect the airbag resistor from the connectors (2P) and (3P) of test harness P. 3) Remove the instrument panel lower cover and column cover, and disconnect the connector (AB7) from (AB2). 4) Disconnect the connectors (AB6, AB17, AB18) from the airbag control module, and connect the connector (1AG) in the test harness AG. NOTE: For type B (sedan models), connect test harness AH between the connectors (AB6, AB17, AB18) and (1AG). 5) Connect the battery ground terminal and turn the ignition switch to ON. 6) Measure the voltage between connector (3AG) in the test harness AG and chassis ground. ***Connector & terminal*** ***(3AG) No. 9 (+) — Chassis ground (–):*** ***(3AG) No. 7 (+) — Chassis ground (–):***	Is the voltage less than 1 V?	Go to step **4**.	Replace the airbag main harness along with body harness.
4	**CHECK AIRBAG CONTROL MODULE.** 1) Connect all connectors. 2) Clear the memory. 3) Perform the Inspection Mode. 4) Read the DTC.	Is the same DTC displayed?	Replace the airbag control module. <Ref. to AB-68, Airbag Control Module.>	Go to step **5**.
5	**CHECK FOR ANY OTHER DTC ON DISPLAY.**	Is any other DTC displayed?	Check DTC using "List of Diagnostic Trouble Code (DTC)". <Ref. to AB(diag)-41, List of Diagnostic Trouble Code (DTC).>	Finish the diagnosis.

GETtheMANUALS.org

E: DTC 1A DRIVER'S AIRBAG FAILURE

DTC DETECTING CONDITION:

- Airbag main harness circuit is shorted.
- Airbag module harness (driver's side) circuit is shorted.
- Roll connector circuit is shorted.
- Driver's airbag module is faulty.
- Airbag control module is faulty.

CAUTION:

Before performing diagnosis, refer to "CAUTION" in "General Description". <Ref. to AB(diag)-5, CAUTION, General Description.>

NOTE:

Prior to starting work, prepare two AIRBAG RESISTORs (98299PA040).

WIRING DIAGRAM:

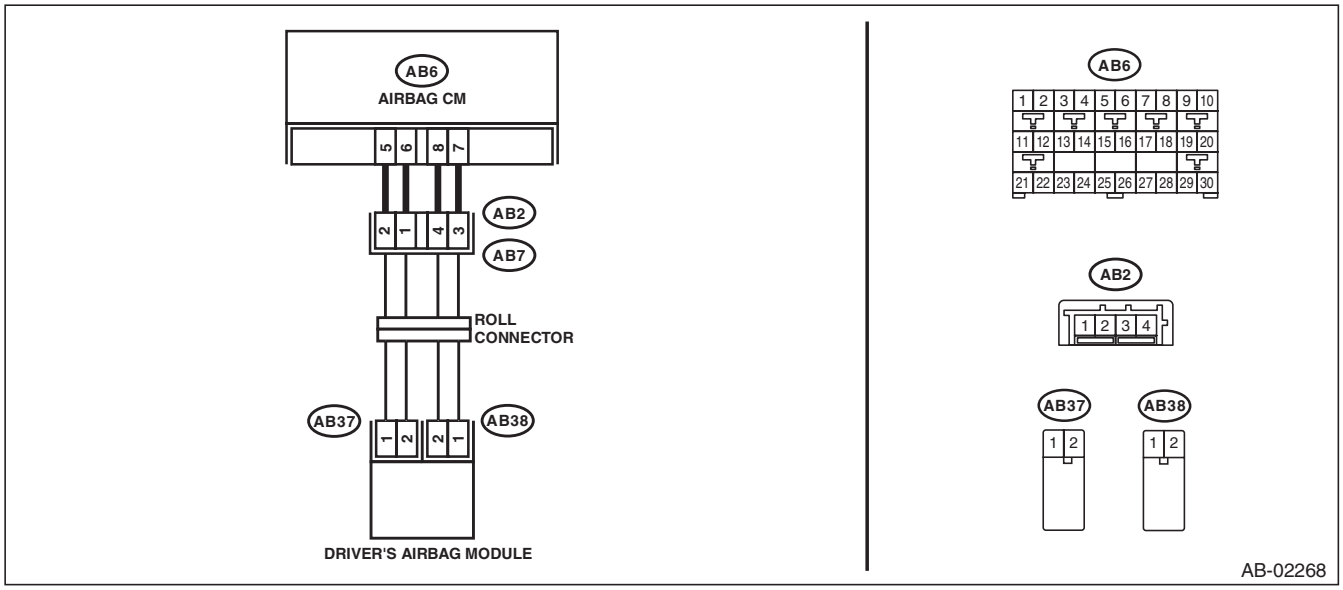

Step		Check	Yes	No
1	**CHECK POOR CONTACT OF CONNECTORS.** Check for poor contact of the connectors between the airbag control module and the driver's airbag module.	Is there poor contact?	Replace the airbag harness.	Go to step **2**.
2	**CHECK DRIVER'S AIRBAG MODULE.** 1) Turn the ignition switch to OFF, disconnect the battery ground cable, and wait for 60 seconds or more. 2) Remove the driver's airbag module. 3) Connect the connector (1N) in the test harness N to the connector (AB38). 4) Connect the airbag resistor to the connector (2N) of test harness N. 5) Connect the connector (1Q) in the test harness Q to connector (AB37). 6) Connect the airbag resistor to the connector (2Q) in the test harness Q. 7) Connect the battery ground terminal and turn the ignition switch to ON.	Does the airbag warning light illuminate for six seconds and go off?	Replace the driver's airbag module. <Ref. to AB-35, Driver's Airbag Module.>	Go to step **3**.

GETtheMANUALS.org

	Step	Check	Yes	No
3	**CHECK ROLL CONNECTOR AND AIRBAG MAIN HARNESS (DRIVER'S AIRBAG HARNESS).** 1) Turn the ignition switch to OFF, disconnect the battery ground cable, and wait for 60 seconds or more. 2) Remove the console front panel and disconnect the connector (AB9). 3) Disconnect the airbag resistor from the connector (2N) in test harness N and from the connector (2Q) in test harness Q. 4) Disconnect the connectors (AB6, AB17, AB18) from the airbag control module, and connect the connector (1AG) in the test harness AG. NOTE: For sedan models, connect test harness AH between the connectors (AB6, AB17, AB18) and (1AG). 5) Measure the resistance between connector (2Q) terminals in test harness Q. ***Connector & terminal*** ***(2Q) No. 1 — (2Q) No. 2:***	Is the resistance 1 MΩ or more?	Go to step **5**.	Go to step **4**.
4	**CHECK AIRBAG MAIN HARNESS (DRIVER'S AIRBAG HARNESS).** 1) Remove the instrument panel lower cover and column cover, and disconnect the connector (AB7) from (AB2). 2) Measure the resistance between connector (3AG) terminals in test harness AG. ***Connector & terminal*** ***(3AG) No. 1 — (3AG) No. 3:***	Is the resistance 1 MΩ or more?	Replace the roll connector. <Ref. to AB-96, Roll Connector.>	Replace the airbag main harness along with body harness.
5	**CHECK AIRBAG CONTROL MODULE.** 1) Connect all connectors. 2) Clear the memory. 3) Perform the Inspection Mode. 4) Read the DTC.	Is the same DTC displayed?	Replace the airbag control module. <Ref. to AB-68, Airbag Control Module.>	Go to step **6**.
6	**CHECK FOR ANY OTHER DTC ON DISPLAY.**	Is any other DTC displayed?	Check DTC using "List of Diagnostic Trouble Code (DTC)". <Ref. to AB(diag)-41, List of Diagnostic Trouble Code (DTC).>	Finish the diagnosis.

GETtheMANUALS.org

F: DTC 1B PASSENGER'S AIRBAG FAILURE

DTC DETECTING CONDITION:

- Airbag main harness circuit is shorted.
- Airbag module harness circuit (passenger's side) is shorted.
- Roll connector circuit is shorted.
- Passenger's airbag module is faulty.
- Airbag control module is faulty.

CAUTION:

Before performing diagnosis, refer to "CAUTION" in "General Description". <Ref. to AB(diag)-5, CAUTION, General Description.>

NOTE:

Prior to starting work, prepare two AIRBAG RESISTORs (98299PA040).

WIRING DIAGRAM:

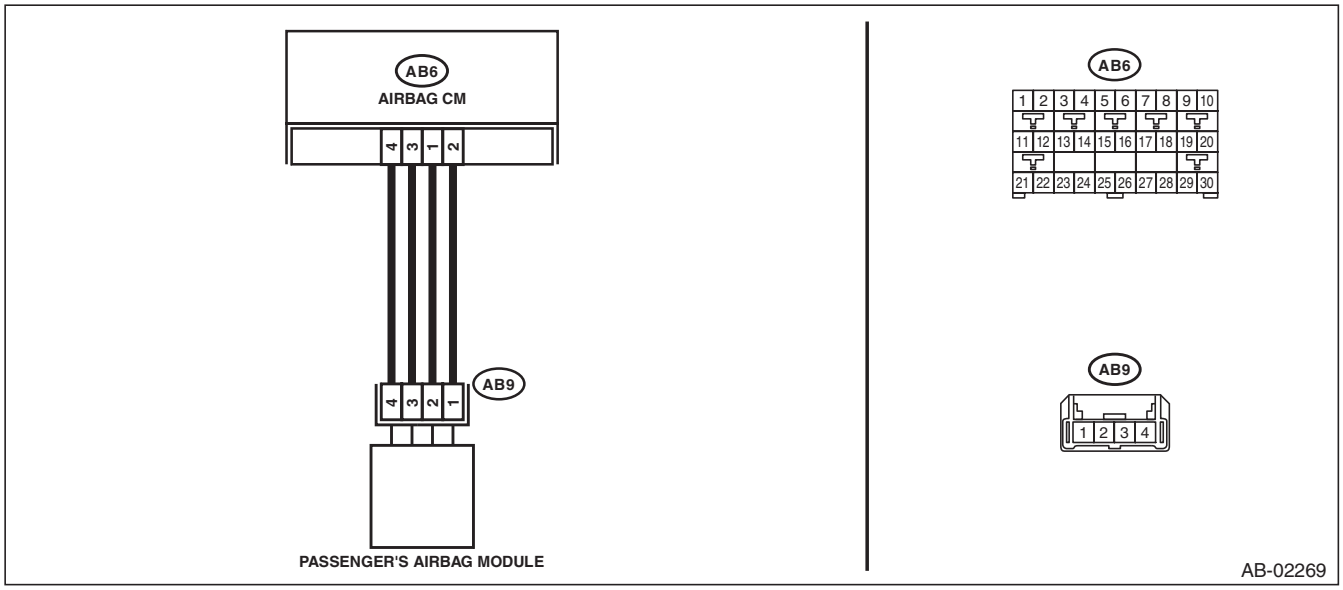

Step		Check	Yes	No
1	**CHECK POOR CONTACT OF CONNECTORS.** Check for poor contact of the connectors between the airbag control module and the passenger's airbag module.	Is there poor contact?	Replace the airbag harness.	Go to step **2**.
2	**CHECK PASSENGER'S AIRBAG MODULE.** 1) Turn the ignition switch to OFF, disconnect the battery ground cable, and wait for 60 seconds or more. 2) Remove the console front panel and disconnect the connector (AB9). 3) Connect the connector (1P) in the test harness P to connector (AB9). 4) Connect the airbag resistor to the connectors (2P) and (3P) of test harness P. 5) Connect the battery ground terminal and turn the ignition switch to ON.	Does the airbag warning light illuminate for six seconds and go off?	Replace the passenger's airbag module. <Ref. to AB-37, Passenger's Airbag Module.>	Go to step **3**.

GETtheMANUALS.org

	Step	Check	Yes	No
3	**CHECK AIRBAG MAIN HARNESS (PASSENGER'S AIRBAG HARNESS).** 1) Turn the ignition switch to OFF, disconnect the battery ground cable, and wait for 60 seconds or more. 2) Disconnect the airbag resistor from the connectors (2P) and (3P) of test harness P. 3) Remove the instrument panel lower cover and column cover, and disconnect the connector (AB7) from (AB2). 4) Disconnect the connectors (AB6, AB17, AB18) from the airbag control module, and connect the connector (1AG) in the test harness AG. NOTE: For sedan models, connect test harness AH between the connectors (AB6, AB17, AB18) and (1AG). 5) Measure the resistance between connector (3AG) terminals in test harness AG. ***Connector & terminal*** ***(3AG) No. 7 — (3AG) No. 9:***	Is the resistance 1 MΩ or more?	Go to step **4**.	Replace the airbag main harness along with body harness.
4	**CHECK AIRBAG CONTROL MODULE.** 1) Connect all connectors. 2) Clear the memory. 3) Perform the Inspection Mode. 4) Read the DTC.	Is the same DTC displayed?	Replace the airbag control module. <Ref. to AB-68, Airbag Control Module.>	Go to step **5**.
5	**CHECK FOR ANY OTHER DTC ON DISPLAY.**	Is any other DTC displayed?	Check DTC using "List of Diagnostic Trouble Code (DTC)". <Ref. to AB(diag)-41, List of Diagnostic Trouble Code (DTC).>	Finish the diagnosis.

GETtheMANUALS.org

G: DTC 1D DRIVER'S AIRBAG FAILURE

DTC DETECTING CONDITION:

- Airbag main harness circuit is open.
- Airbag module harness (driver's side) circuit is open.
- Roll connector is open.
- Driver's airbag module is faulty.
- Airbag control module is faulty.

CAUTION:

Before performing diagnosis, refer to "CAUTION" in "General Description". <Ref. to AB(diag)-5, CAUTION, General Description.>

NOTE:

Prior to starting work, prepare two AIRBAG RESISTORs (98299PA040).

WIRING DIAGRAM:

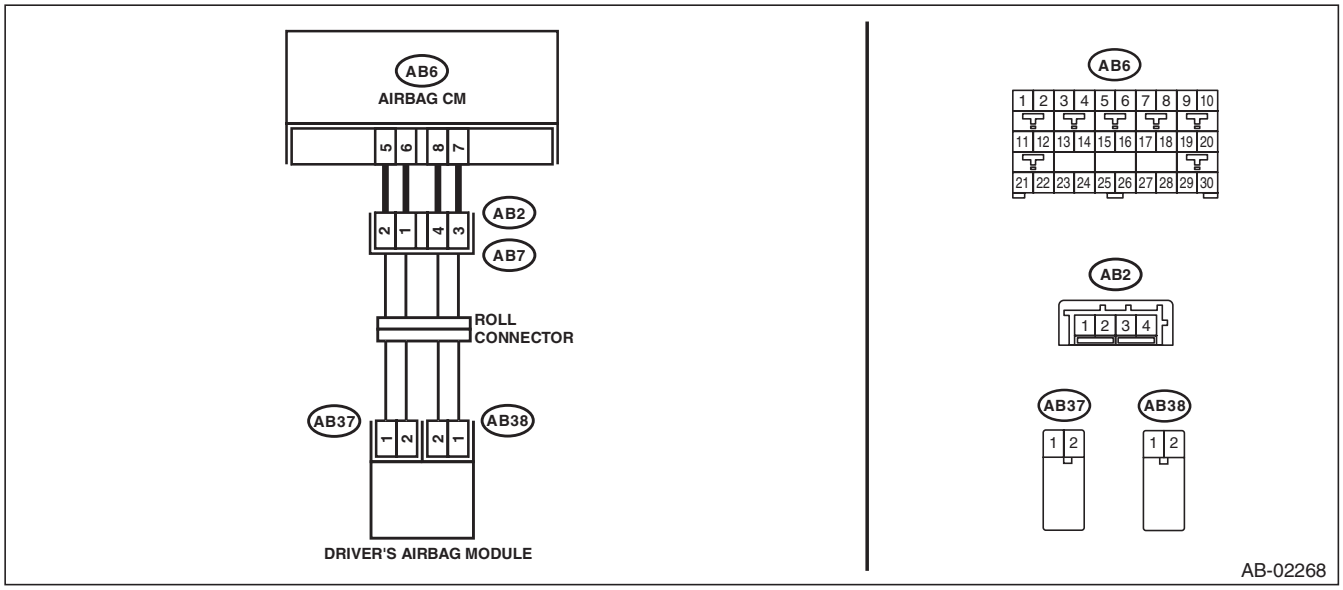

Step		Check	Yes	No
1	**CHECK POOR CONTACT OF CONNECTORS.** Check for poor contact of the connectors between the airbag control module and the driver's airbag module.	Is there poor contact?	Replace the airbag harness.	Go to step **2**.
2	**CHECK DRIVER'S AIRBAG MODULE.** 1) Turn the ignition switch to OFF, disconnect the battery ground cable, and wait for 60 seconds or more. 2) Remove the driver's airbag module. 3) Connect the connector (1N) in the test harness N to the connector (AB38). 4) Connect the airbag resistor to the connector (2N) of test harness N. 5) Connect the connector (1Q) in the test harness Q to connector (AB37). 6) Connect the airbag resistor to the connector (2Q) in the test harness Q. 7) Connect the battery ground terminal and turn the ignition switch to ON.	Does the airbag warning light illuminate for six seconds and go off?	Replace the driver's airbag module. <Ref. to AB-35, Driver's Airbag Module.>	Go to step **3**.

GETtheMANUALS.org

	Step	Check	Yes	No
3	**CHECK ROLL CONNECTOR AND AIRBAG MAIN HARNESS (DRIVER'S AIRBAG HARNESS).** 1) Turn the ignition switch to OFF, disconnect the battery ground cable, and wait for 60 seconds or more. 2) Remove the console front panel and disconnect the connector (AB9). 3) Disconnect the airbag resistor from the connector (2N) in test harness N. 4) Disconnect the airbag resistor from the connector (2Q) of test harness Q. 5) Disconnect the connectors (AB6, AB17, AB18) from airbag control module. 6) Measure the resistance between connector (2Q) terminals in test harness Q. ***Connector & terminal*** ***(2Q) No. 1 — (2Q) No. 2:***	Is the resistance less than 10 Ω?	Go to step **5**.	Go to step **4**.
4	**CHECK ROLL CONNECTOR.** 1) Remove the instrument panel lower cover and column cover, and disconnect the connector (AB7) from (AB2). 2) Measure the resistance between connector (2Q) terminals in test harness Q. ***Connector & terminal*** ***(2Q) No. 1 — (2Q) No. 2:***	Is the resistance less than 10 Ω?	Replace the airbag main harness along with body harness.	Replace the roll connector. <Ref. to AB-96, Roll Connector.>
5	**CHECK AIRBAG CONTROL MODULE.** 1) Connect all connectors. 2) Clear the memory. 3) Perform the Inspection Mode. 4) Read the DTC.	Is the same DTC displayed?	Replace the airbag control module. <Ref. to AB-68, Airbag Control Module.>	Go to step **6**.
6	**CHECK FOR ANY OTHER DTC ON DISPLAY.**	Is any other DTC displayed?	Check DTC using "List of Diagnostic Trouble Code (DTC)". <Ref. to AB(diag)-41, List of Diagnostic Trouble Code (DTC).>	Finish the diagnosis.

GETtheMANUALS.org

H: DTC 1E PASSENGER'S AIRBAG FAILURE

DTC DETECTING CONDITION:

- Airbag main harness circuit is open.
- Airbag module harness (passenger's side) circuit is open.
- Roll connector circuit is shorted.
- Passenger's airbag module is faulty.
- Airbag control module is faulty.

CAUTION:
Before performing diagnosis, refer to "CAUTION" in "General Description". <Ref. to AB(diag)-5, CAUTION, General Description.>

NOTE:
Prior to starting work, prepare two AIRBAG RESISTORs (98299PA040).

WIRING DIAGRAM:

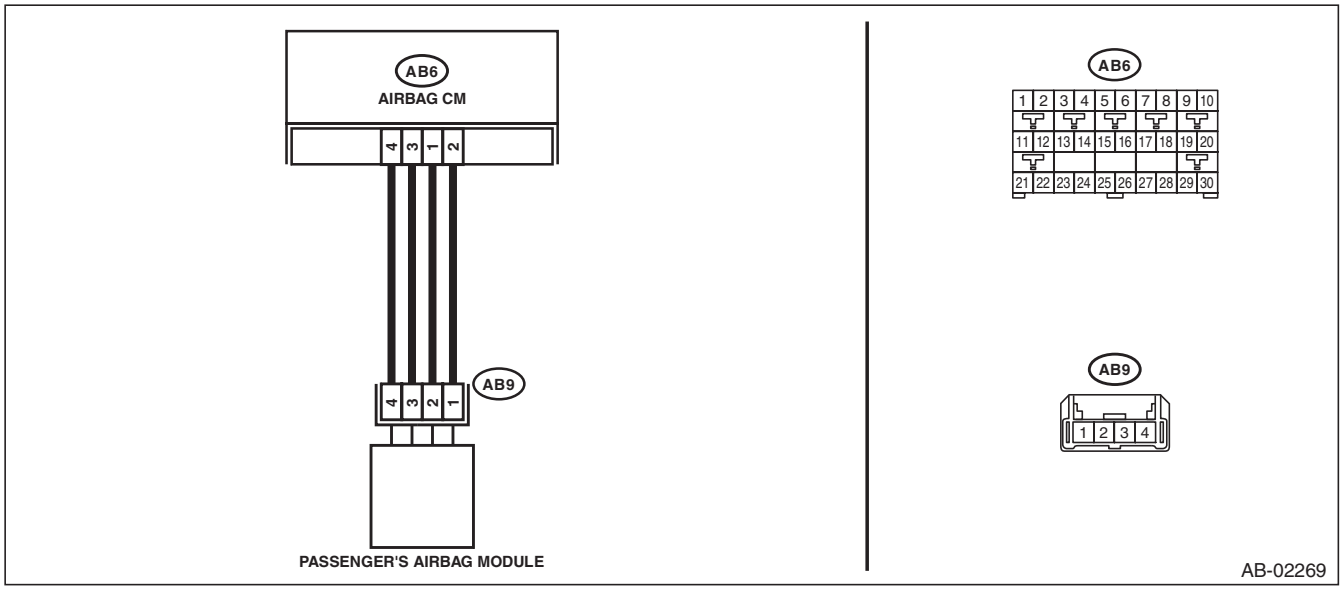

Step		Check	Yes	No
1	**CHECK POOR CONTACT OF CONNECTORS.** Check for poor contact of the connectors between the airbag control module and the passenger's airbag module.	Is there poor contact?	Replace the airbag harness.	Go to step **2**.
2	**CHECK PASSENGER'S AIRBAG MODULE.** 1) Turn the ignition switch to OFF, disconnect the battery ground cable, and wait for 60 seconds or more. 2) Remove the console front panel and disconnect the connector (AB9). 3) Connect the connector (1P) in the test harness P to connector (AB9). 4) Connect the airbag resistor to the connectors (2P) and (3P) of test harness P. 5) Connect the battery ground terminal and turn the ignition switch to ON.	Does the airbag warning light illuminate for six seconds and go off?	Replace the passenger's airbag module. <Ref. to AB-37, Passenger's Airbag Module.>	Go to step **3**.

GETtheMANUALS.org

	Step	Check	Yes	No
3	**CHECK AIRBAG MAIN HARNESS (PASSENGER'S AIRBAG HARNESS).** 1) Turn the ignition switch to OFF, disconnect the battery ground cable, and wait for 60 seconds or more. 2) Disconnect the airbag resistor from the connectors (2P) and (3P) of test harness P. 3) Remove the instrument panel lower cover and column cover, and disconnect the connector (AB7) from (AB2). 4) Disconnect the connectors (AB6, AB17, AB18) from the airbag control module, and connect the connector (1AG) in the test harness AG. NOTE: For sedan models, connect test harness AH between the connectors (AB6, AB17, AB18) and (1AG). 5) Measure the resistance between connector (3AG) of test harness AG and connector (2P) of test harness P. ***Connector & terminal*** ***(3AG) No. 9 — (2P) No. 1:*** ***(3AG) No. 7 — (2P) No. 2:***	Is the resistance less than 10 Ω?	Go to step **4**.	Replace the airbag main harness along with body harness.
4	**CHECK AIRBAG CONTROL MODULE.** 1) Connect all connectors. 2) Clear the memory. 3) Perform the Inspection Mode. 4) Read the DTC.	Is the same DTC displayed?	Replace the airbag control module. <Ref. to AB-68, Airbag Control Module.>	Go to step **5**.
5	**CHECK FOR ANY OTHER DTC ON DISPLAY.**	Is any other DTC displayed?	Check DTC using "List of Diagnostic Trouble Code (DTC)". <Ref. to AB(diag)-41, List of Diagnostic Trouble Code (DTC).>	Finish the diagnosis.

I: DTC 21 AIRBAG ECM FAILURE

DTC DETECTING CONDITION:

Airbag control module is faulty.

CAUTION:

Before performing diagnosis, refer to "CAUTION" in "General Description". <Ref. to AB(diag)-5, CAUTION, General Description.>

	Step	Check	Yes	No
1	**CHECK IF DTC 21 IS INDICATED.** Read the DTC. <Ref. to AB(diag)-32, Read Diagnostic Trouble Code (DTC).>	Does the Subaru Select Monitor display DTC21?	Replace the airbag control module. <Ref. to AB-68, Airbag Control Module.>	Perform the Clear Memory Mode. <Ref. to AB(diag)-34, Clear Memory Mode.>

GETtheMANUALS.org

J: DTC 22 FRONT AIRBAG FIRING OUTPUT

DTC DETECTING CONDITION:

This DTC is indicated when the front airbag module and the pretensioner are deployed.
Once this DTC is displayed, the memory cannot be cleared. Therefore replace the following parts.

- Airbag control module <Ref. to AB-68, Airbag Control Module.>
- Driver's airbag module <Ref. to AB-35, Driver's Airbag Module.>
- Passenger's airbag module <Ref. to AB-37, Passenger's Airbag Module.>
- Front sub sensor of both sides. <Ref. to AB-71, Front Sub Sensor.>
- Front outer seat belt with pretensioner of both sides. <Ref. to SB-17, Front Seat Belt.>
- Steering roll connector <Ref. to AB-96, Roll Connector.>
- Occupant detection system (passenger's seat cushion & frame assembly) <Ref. to SE-27, PASSENGER'S SEAT, DISASSEMBLY, Front Seat.>

GETtheMANUALS.org

K: DTC 26 PASSENGER'S AIRBAG INDICATOR FAILURE

DTC DETECTING CONDITION:

- Passenger's airbag indicator is faulty.
- Airbag control module is faulty.
- Airbag main harness circuit is open or shorted.
- Body harness circuit is open.

CAUTION:

Before performing diagnosis, refer to "CAUTION" in "General Description". <Ref. to AB(diag)-5, CAUTION, General Description.>

WIRING DIAGRAM:

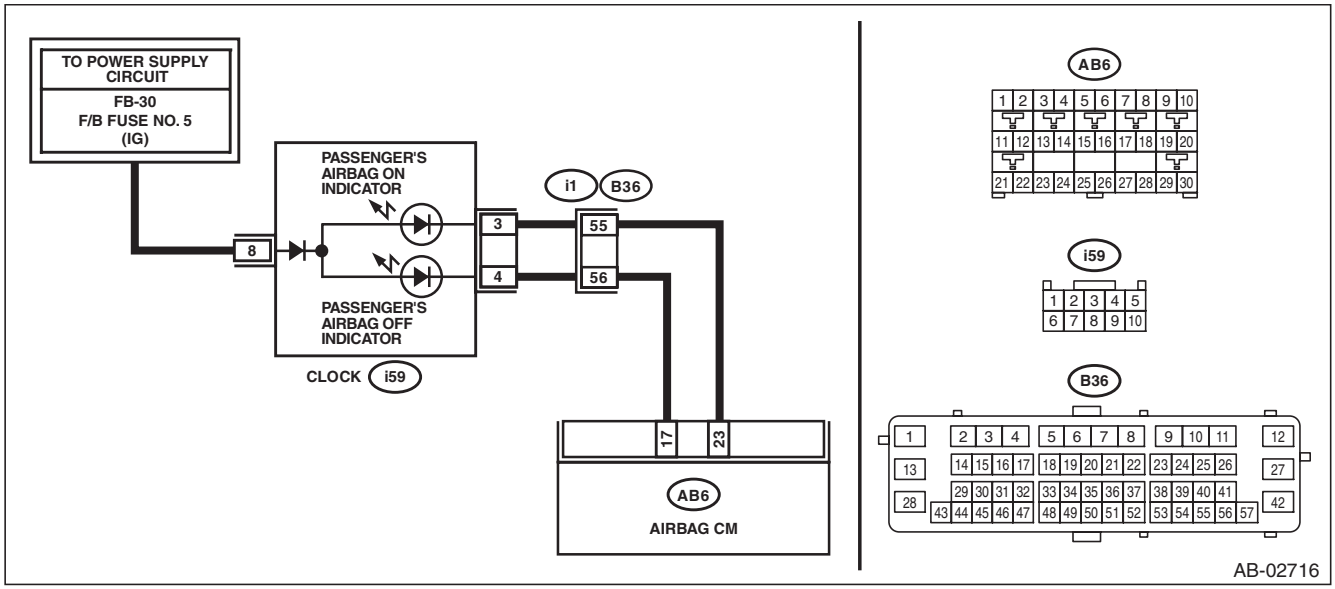

Step		Check	Yes	No
1	**CHECK FOR POOR CONTACT.** 1) Turn the ignition switch to OFF, disconnect the battery ground cable, and wait for 60 seconds or more. 2) Check that the connector between the airbag control module and the clock is securely connected.	Is there poor contact of any connector?	Replace the airbag harness connector.	Go to step **2**.
2	**CHECK AIRBAG MAIN HARNESS.** 1) Disconnect the connectors (AB6, AB17, AB18) from airbag control module. 2) Connect the battery ground terminal and turn the ignition switch to ON. NOTE: Neither of ON/OFF illuminates when it is normal.	Does the passenger's airbag indicator illuminate?	Go to step **3**.	Go to step **4**.

GETtheMANUALS.org

	Step	Check	Yes	No
3	**CHECK AIRBAG MAIN HARNESS.** 1) Turn the ignition switch to OFF. 2) Remove the clock, and disconnect the connector (i59). 3) Connect the connector (1AG) in the test harness AG to the connectors (AB6, AB17, AB18). NOTE: For type B (sedan models), connect test harness AH between the connectors (AB6, AB17, AB18) and (1AG). 4) Measure the resistance between connector (2AG) in the test harness AG and chassis ground, and between connector (2AG) terminals. ***Connector & terminal*** ***(2AG) No. 9 — (2AG) No. 8:*** ***(2AG) No. 9 — Chassis ground:*** ***(2AG) No. 8 — Chassis ground:***	Is the resistance 1 MΩ or more?	Replace the clock.	Repair the bulkhead harness. Or replace the airbag main harness along with body harness.
4	**CHECK AIRBAG HARNESS.** 1) Connect the connectors (7AG) and (8AG) in the test harness AG. 2) Connect the battery ground terminal and turn the ignition switch to ON.	Does the passenger's airbag indicator illuminate?	Replace the airbag control module. <Ref. to AB-68, Airbag Control Module.>	Go to step **5**.
5	**CHECK AIRBAG HARNESS.** 1) Turn the ignition switch to OFF. 2) Disconnect the connectors (7AG) and (8AG) in the test harness AG. 3) Measure the resistance between connector (2AG) in the test harness AG and connector (i59). ***Connector & terminal*** ***(2AG) No. 9 — (i59) No. 4:*** ***(2AG) No. 8 — (i59) No. 3:***	Is the resistance less than 10 Ω?	Go to step **6**.	Repair the bulkhead harness. Or replace the airbag main harness along with body harness.
6	**CHECK BODY HARNESS.** 1) Turn the ignition switch to ON. 2) Measure the voltage between connector (i59) and chassis ground. ***Connector & terminal*** ***(i59) No. 8 — Chassis ground:***	Is the voltage 10 V or more?	Replace the clock.	Check the power supply circuit of the clock.

GETtheMANUALS.org

L: DTC 27 ODS COMMUNICATION ERROR

NOTE:
Be sure to properly identify the Airbag system type prior to performing any diagnostics.

DTC DETECTING CONDITION:

- Communication to the occupant detection control module is faulty.
- Airbag rear harness circuit is open, shorted, shorted to ground or shorted to power supply.
- Occupant detection harness (seat harness) is faulty.
- Occupant detection system is faulty.
- Airbag control module is faulty.

CAUTION:

Before performing diagnosis, refer to "CAUTION" in "General Description". <Ref. to AB(diag)-5, CAUTION, General Description.>

WIRING DIAGRAM:

- Type A

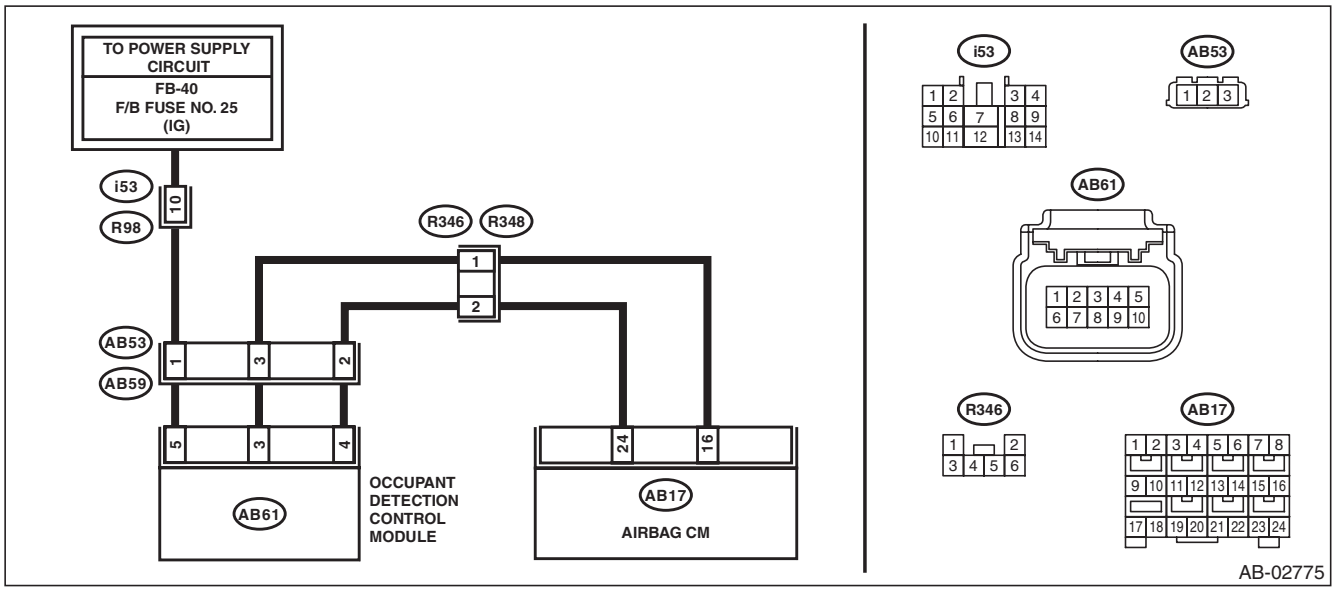

Step		Check	Yes	No
1	**CHECK POOR CONTACT OF CONNECTORS.** Check for poor contact of the connectors between the airbag control module and the occupant detection control module.	Is there poor contact?	Reconnect the connector. If defective is not improved, replace the airbag rear harness along with the body harness or the occupant detection harness (seat harness).	Go to step **2**.

GETtheMANUALS.org

	Step	Check	Yes	No
2	**CHECK AIRBAG HARNESS.** 1) Turn the ignition switch to OFF, disconnect the battery ground cable, and wait for 60 seconds or more. 2) Disconnect the connectors (AB6, AB17, AB18) from airbag control module. 3) Disconnect the connectors (AB59) and (AB53) under the passenger's seat. 4) Connect the connector (1AG) in the test harness AG to the connectors (AB6, AB17, AB18). 5) Connect the connector (1AD) in the test harness AD to the connector (AB53). 6) Measure the resistance between connector (6AG) or (5AG) in the test harness AG and connector (2AD) in the test harness AD. ***Connector & terminal*** ***(6AG) No. 9 — (2AD) No. 3:*** ***(6AG) No. 11 — (2AD) No. 2:***	Is the resistance less than 10 Ω?	Go to step **5**.	Go to step **3**.
3	**CHECK AIRBAG HARNESS.** 1) Disconnect the connectors (R346) and (R348). 2) Measure the resistance between connector (R348) and connector (6AG) in the test harness AG. ***Connector & terminal*** ***(R348) No. 1 — (6AG) No. 9:*** ***(R348) No. 2 — (6AG) No. 11:***	Is the resistance less than 10 Ω?	Replace the airbag rear harness RH.	Go to step **4**.
4	**CHECK AIRBAG HARNESS.** Measure the resistance between connector (R346) and connector (2AD) in the test harness AD. ***Connector & terminal*** ***(R346) No. 1 — (2AD) No. 3:*** ***(R346) No. 2 — (2AD) No. 2:***	Is the resistance less than 10 Ω?	Replace the airbag rear harness LH.	Check for poor contact of connectors (R346) and (R348).
5	**CHECK AIRBAG HARNESS.** Measure the resistance between connector (2AD) in the test harness AD and chassis ground, and between connector (2AD) terminals. ***Connector & terminal*** ***(2AD) No. 2 — Chassis ground:*** ***(2AD) No. 3 — Chassis ground:*** ***(2AD) No. 2 — (2AD) No. 3:***	Is the resistance 1 MΩ or more?	Go to step **7**.	Go to step **6**.
6	**CHECK AIRBAG HARNESS.** 1) Disconnect the connectors (R346) and (R348). 2) Measure the resistance between connector (6AG) in the test harness AG and chassis ground. ***Connector & terminal*** ***(6AG) No. 9 — Chassis ground:*** ***(6AG) No. 11 — Chassis ground:*** ***(6AG) No. 9 — (6AG) No. 11:***	Is the resistance 1 MΩ or more?	Replace the airbag rear harness RH.	Replace the airbag rear harness LH.

GETtheMANUALS.org

Step		Check	Yes	No
7	**CHECK AIRBAG HARNESS.** 1) Turn the ignition switch to ON. 2) Measure the voltage between connector (2AD) in the test harness AD and chassis ground. ***Connector & terminal*** ***(2AD) No. 1 — chassis ground:***	Is the voltage 9 V or more?	Replace the occupant detection harness (seat harness). If defective is not improved, replace the occupant detection system (seat cushion & frame assembly), and then the airbag control module in this order.	Check the battery voltage and fuse. If there is no fault, replace the airbag rear harness along with body harness or replace the body harness.

GETtheMANUALS.org

- Type B

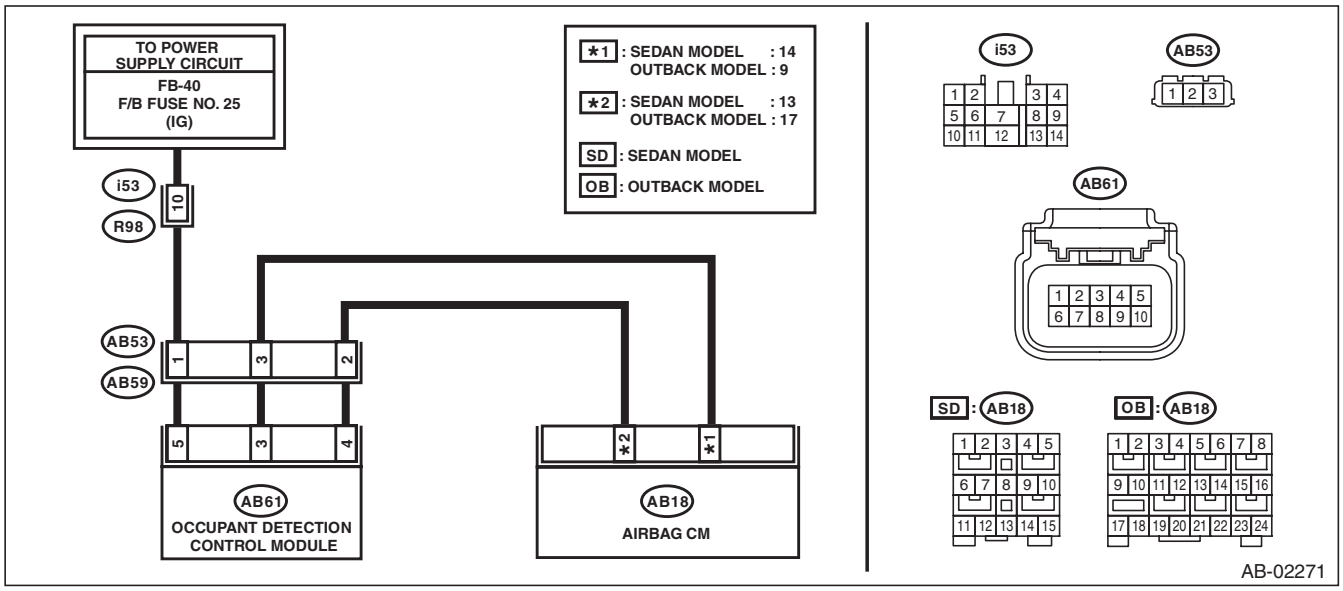

Step		Check	Yes	No
1	**CHECK POOR CONTACT OF CONNECTORS.** Check for poor contact of the connectors between the airbag control module and the occupant detection control module.	Is there poor contact?	Reconnect the connector. If defective is not improved, replace the airbag rear harness along with the body harness or the occupant detection harness (seat harness).	Go to step **2**.
2	**CHECK AIRBAG HARNESS.** 1) Turn the ignition switch to OFF, disconnect the battery ground cable, and wait for 60 seconds or more. 2) Disconnect the connectors (AB6, AB17, AB18) from airbag control module. 3) Disconnect the connectors (AB59) and (AB53) under the passenger's seat. 4) Connect the connector (1AG) in the test harness AG to the connectors (AB6, AB17, AB18). NOTE: For sedan models, connect test harness AH between the connectors (AB6, AB17, AB18) and (1AG). 5) Connect the connector (1AD) in the test harness AD to the connector (AB53). 6) Measure the resistance between connector (6AG) or (5AG) in the test harness AG and connector (2AD) in the test harness AD. ***Connector & terminal*** ***Sedan model*** ***(5AG) No. 3 — (2AD) No. 2:*** ***(5AG) No. 8 — (2AD) No. 3:*** ***OUTBACK model*** ***(6AG) No. 10 — (2AD) No. 3:*** ***(6AG) No. 12 — (2AD) No. 2:***	Is the resistance less than 10 Ω?	Go to step **3**.	Replace the airbag rear harness along with body harness.

GETtheMANUALS.org

Step		Check	Yes	No
3	**CHECK AIRBAG HARNESS.** Measure the resistance between connector (2AD) in the test harness AD and chassis ground, and between connector (2AD) terminals. ***Connector & terminal*** ***(2AD) No. 2 — Chassis ground:*** ***(2AD) No. 3 — Chassis ground:*** ***(2AD) No. 2 — (2AD) No. 3:***	Is the resistance 1 MΩ or more?	Go to step **4**.	Replace the airbag rear harness along with body harness.
4	**CHECK AIRBAG HARNESS.** 1) Turn the ignition switch to ON. 2) Measure the voltage between connector (2AD) in the test harness AD and chassis ground. ***Connector & terminal*** ***(2AD) No. 1 — chassis ground:***	Is the voltage 9 V or more?	Replace the occupant detection harness (seat harness). If defective is not improved, replace the occupant detection system (seat cushion & frame assembly), and then the airbag control module in this order.	Check the battery voltage and fuse. If there is no fault, replace the airbag rear harness along with body harness or replace the body harness.

GETtheMANUALS.org

M: DTC 29 ODS FAILURE

NOTE:
Refer to “Occupant Detection System” for details on DTC 29. <Ref. to OD(diag)-21, DTC 29 ODS FAILURE, Diagnostic Procedure with Diagnostic Trouble Code (DTC).>

N: DTC 2A ODS CALIBRATION ERROR

NOTE:
Refer to “Occupant Detection System” for details on DTC 2A. <Ref. to OD(diag)-22, DTC 2A ODS CALIBRATION ERROR, Diagnostic Procedure with Diagnostic Trouble Code (DTC).>

O: DTC 2B ODS SYSTEM WRONG PARTS

NOTE:
Refer to “Occupant Detection System” for details on DTC 2B. <Ref. to OD(diag)-22, DTC 2B ODS SYSTEM WRONG PARTS, Diagnostic Procedure with Diagnostic Trouble Code (DTC).>

P: DTC 2D AIRBAG WARNING INDICATOR FAILURE

DTC DETECTING CONDITION:
- Airbag warning light is faulty.
- Harness between airbag control module and airbag warning light is shorted or open.
- Connection of airbag main harness and instrument panel harness is improper.
- Grounding circuit is faulty.
- Airbag control module is faulty.

NOTE:
For the diagnostic procedure, refer to “Airbag Warning Light Failure”. <Ref. to AB(diag)-37, Airbag Warning Light Failure.>

Q: DTC 33 FRONT SUB SENSOR RH FAILURE

DTC DETECTING CONDITION:
Front sub sensor (RH) is faulty.
If DTC 33 is displayed, the circuit within the front sub sensor (RH) is faulty.
Replace the front sub sensor (RH). <Ref. to AB-71, Front Sub Sensor.>

R: DTC 34 FRONT SUB SENSOR LH FAILURE

DTC DETECTING CONDITION:
Front sub sensor (LH) is faulty.
If DTC 34 is displayed, the circuit within the front sub sensor (LH) is faulty.
Replace the front sub sensor (LH). <Ref. to AB-71, Front Sub Sensor.>

S: DTC 37 BUCKLE SWITCH RH FAILURE

NOTE:
Refer to “Occupant Detection System” for details on DTC 37. <Ref. to OD(diag)-23, DTC 37 BUCKLE SWITCH RH FAILURE, Diagnostic Procedure with Diagnostic Trouble Code (DTC).>

GETtheMANUALS.org

T: DTC 39 SEAT BELT WARNING FAILURE

DTC DETECTING CONDITION:

- Airbag control module is faulty.
- Body integrated unit is faulty.
- Harness circuits between body integrated unit and airbag control module are open, shorted or shorted to ground.

CAUTION:

Before performing diagnosis, refer to "CAUTION" in "General Description". <Ref. to AB(diag)-5, CAUTION, General Description.>

WIRING DIAGRAM:

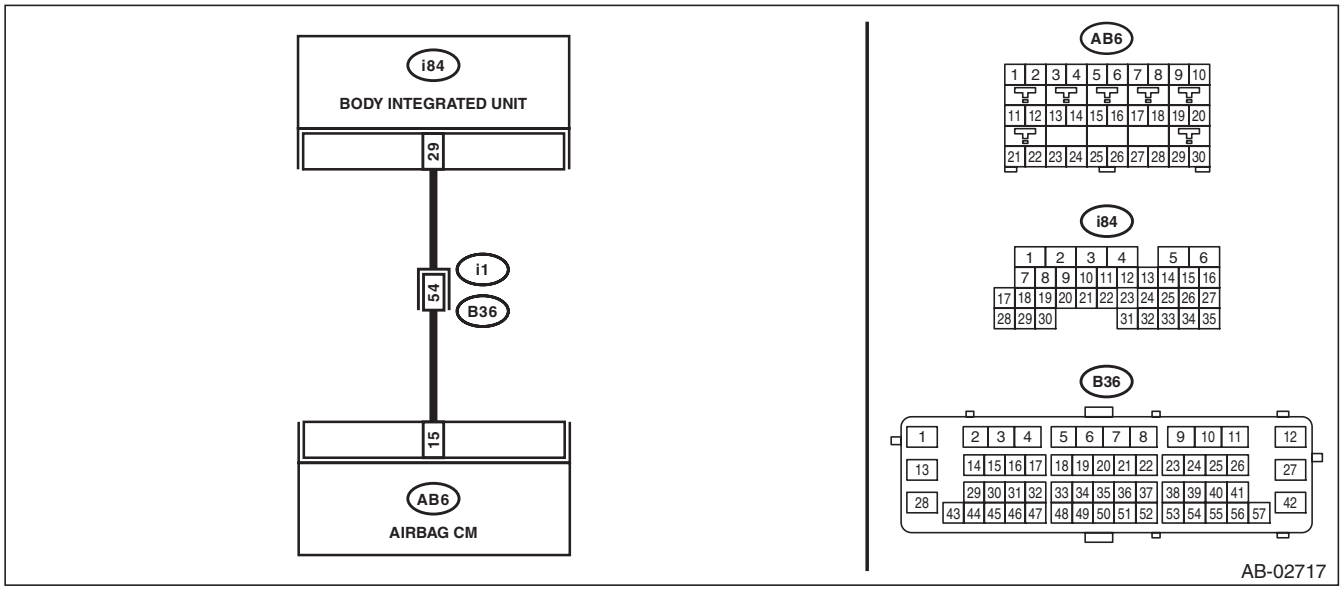

Step		Check	Yes	No
1	**CHECK AIRBAG HARNESS.** 1) Turn the ignition switch to OFF, disconnect the battery ground cable, and wait for 60 seconds or more. 2) Disconnect the connectors (AB6, AB17, AB18) from airbag control module. 3) Connect the battery ground terminal and turn the ignition switch to ON.	Does the passenger's seat belt warning light blink for 6 seconds and go off?	Go to step **3**.	Go to step **2**.
2	**CHECK AIRBAG HARNESS.** 1) Turn the ignition switch to OFF. 2) Connect the connector (1AG) in the test harness AG to the connectors (AB6, AB17, AB18). NOTE: For type B (sedan models), connect test harness AH between the connectors (AB6, AB17, AB18) and (1AG). 3) Measure the resistance between connector (2AG) in the test harness AG and chassis ground. ***Connector & terminal*** ***(2AG) No. 10 — Chassis ground:***	Is the resistance 1 MΩ or more?	Replace the body integrated unit.	Repair the bulkhead harness and instrument panel harness. Or replace the airbag main harness along with body harness.

GETtheMANUALS.org

	Step	Check	Yes	No
3	**CHECK AIRBAG HARNESS.** 1) Turn the ignition switch to OFF. 2) Connect the connector (1AG) in the test harness AG to the connectors (AB6, AB17, AB18). NOTE: For type B (sedan models), connect test harness AH between the connectors (AB6, AB17, AB18) and (1AG). 3) Connect the connectors (7AG) and (8AG) in the test harness AG. 4) Turn the ignition switch to ON.	Does the passenger's seat belt warning light blink for 6 seconds, then repeatedly light and go off?	Replace the airbag control module. <Ref. to AB-68, Airbag Control Module.>	Go to step **4**.
4	**CHECK AIRBAG HARNESS.** 1) Turn the ignition switch to OFF. 2) Disconnect the connectors (7AG) and (8AG) in the test harness AG. 3) Measure the resistance between connector (2AG) in the test harness AG and connector (i84). ***Connector & terminal*** ***(2AG) No. 10 — (i84) No. 29:***	Is the resistance less than 10 Ω?	Replace the body integrated unit.	Repair the bulkhead harness and instrument panel harness. Or replace the airbag main harness along with body harness.

U: DTC 3A FRONT SUB SENSOR RH FALSE INSTALLATION

DTC DETECTING CONDITION:

Front sub sensor (RH) is misinstalled.

	Step	Check	Yes	No
1	**REPLACE FRONT SUB SENSOR.** 1) Turn the ignition switch to OFF, disconnect the battery ground cable, and wait for 60 seconds or more. 2) Replace the front sub sensor (RH) with a genuine sensor. <Ref. to AB-71, REMOVAL, Front Sub Sensor.>	Does the warning light go off?	Finish the diagnosis.	Replace the airbag control module. <Ref. to AB-68, REMOVAL, Airbag Control Module.>

V: DTC 3B FRONT SUB SENSOR LH FALSE INSTALLATION

DTC DETECTING CONDITION:

Front sub sensor (LH) is misinstalled.

	Step	Check	Yes	No
1	**REPLACE FRONT SUB SENSOR.** 1) Turn the ignition switch to OFF, disconnect the battery ground cable, and wait for 60 seconds or more. 2) Replace the front sub sensor (LH) with a genuine sensor. <Ref. to AB-71, REMOVAL, Front Sub Sensor.>	Does the warning light go off?	Finish the diagnosis.	Replace the airbag control module. <Ref. to AB-68, REMOVAL, Airbag Control Module.>

GETtheMANUALS.org

W: DTC 41 SIDE AIRBAG RH FAILURE

NOTE:
Be sure to properly identify the Airbag system type prior to performing any diagnostics.

1. TYPE A

DTC DETECTING CONDITION:
- Side airbag harness (RH) is faulty.
- Side airbag module (RH) is faulty.
- Airbag control module is faulty.

CAUTION:
Before performing diagnosis, refer to "CAUTION" in "General Description". <Ref. to AB(diag)-5, CAUTION, General Description.>
WIRING DIAGRAM:

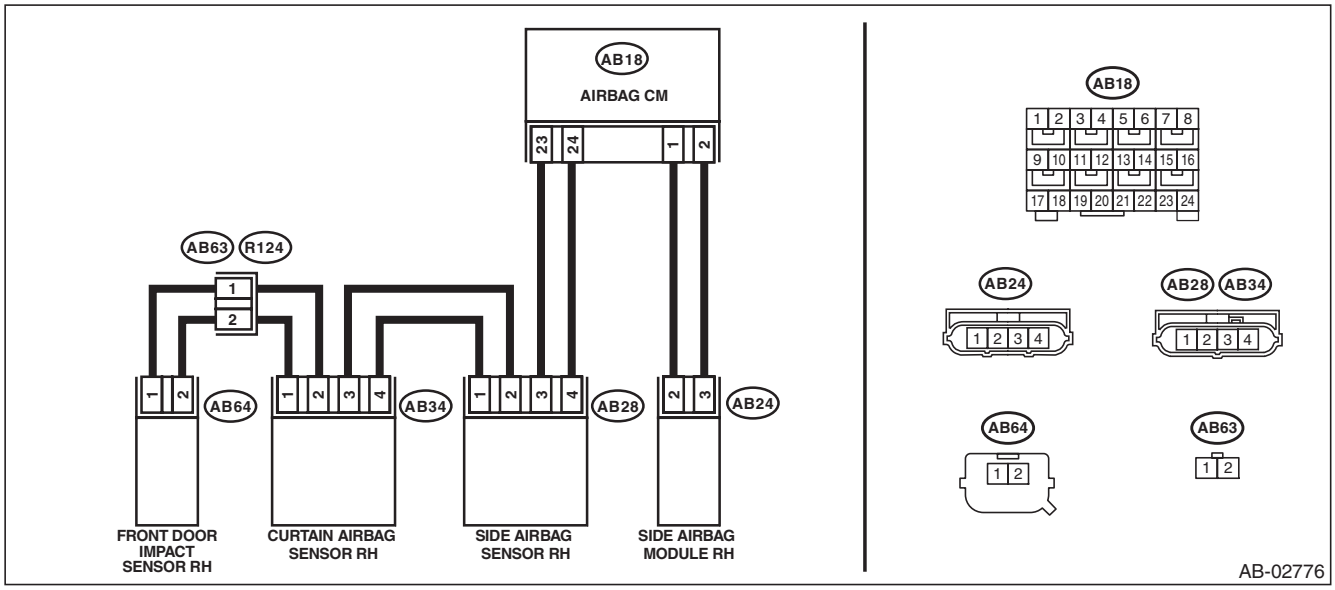

Step		Check	Yes	No
1	**CHECK POOR CONTACT OF CONNECTORS.** Check for poor contact of the connectors between the airbag control module, side airbag module RH and the side airbag sensor RH.	Is there poor contact?	Replace the airbag rear harness along with body harness.	Go to step **2**.
2	**CHECK SIDE AIRBAG MODULE.** 1) Turn the ignition switch to OFF, disconnect the battery ground cable, and wait for 60 seconds or more. 2) Disconnect the connectors (AB25) and (AB24), and connect the test harness AJ connector (1AJ) to connector (AB24). 3) Connect the airbag resistor to the test harness AJ connector (3AJ). 4) Connect the battery ground terminal and turn the ignition switch to ON.	Does the airbag warning light illuminate for six seconds and go off?	Replace the side airbag module (RH). <Ref. to AB-55, REMOVAL, Side Airbag Module.>	Go to step **3**.

GETthemANUALS.org

Step		Check	Yes	No
3	**CHECK AIRBAG REAR HARNESS (SIDE AIRBAG MODULE HARNESS RH).** 1) Turn the ignition switch to OFF, disconnect the battery ground cable, and wait for 60 seconds or more. 2) Disconnect the connector (AB26) from seat belt pretensioner (RH). 3) Disconnect the connector (AB33) from curtain airbag module (RH). 4) Disconnect the airbag resistor from test harness AJ. 5) Disconnect the connectors (AB6, AB17, AB18) from airbag control module. 6) Connect the connector (1AG) in the test harness AG to the connectors (AB6, AB17, AB18). 7) Measure the resistance between connector (3AJ) terminals in the test harness AJ, and between connector (3AJ) and chassis ground. ***Connector & terminal*** ***(3AJ) No. 1 — (3AJ) No. 2:*** ***(3AJ) No. 1 — Chassis ground:*** ***(3AJ) No. 2 — Chassis ground:***	Is the resistance 1 MΩ or more?	Go to step **4**.	Replace the airbag rear harness along with body harness.
4	**CHECK AIRBAG REAR HARNESS (SIDE AIRBAG MODULE HARNESS RH).** Measure the resistance between the test harness AJ connector (3AJ) and the test harness AG connector (5AG). ***Connector & terminal*** ***(5AG) No. 1 — (3AJ) No. 2:*** ***(5AG) No. 3 — (3AJ) No. 1:***	Is the resistance less than 10 Ω?	Go to step **5**.	Replace the airbag rear harness along with body harness.
5	**CHECK AIRBAG CONTROL MODULE.** 1) Connect all connectors. 2) Clear the memory. 3) Perform the Inspection Mode. 4) Read the DTC.	Is the same DTC displayed?	Replace the airbag control module. <Ref. to AB-68, Airbag Control Module.>	Go to step **6**.
6	**CHECK FOR ANY OTHER DTC ON DISPLAY.**	Is any other DTC displayed?	Check DTC using “List of Diagnostic Trouble Code (DTC)”. <Ref. to AB(diag)-41, List of Diagnostic Trouble Code (DTC).>	Finish the diagnosis.

GETtheMANUALS.org

2. TYPE B

DTC DETECTING CONDITION:

- Side airbag harness (RH) circuit is shorted to ground.
- Side airbag module (RH) is faulty.
- Airbag control module is faulty.

CAUTION:

Before performing diagnosis, refer to "CAUTION" in "General Description". <Ref. to AB(diag)-5, CAUTION, General Description.>

WIRING DIAGRAM:

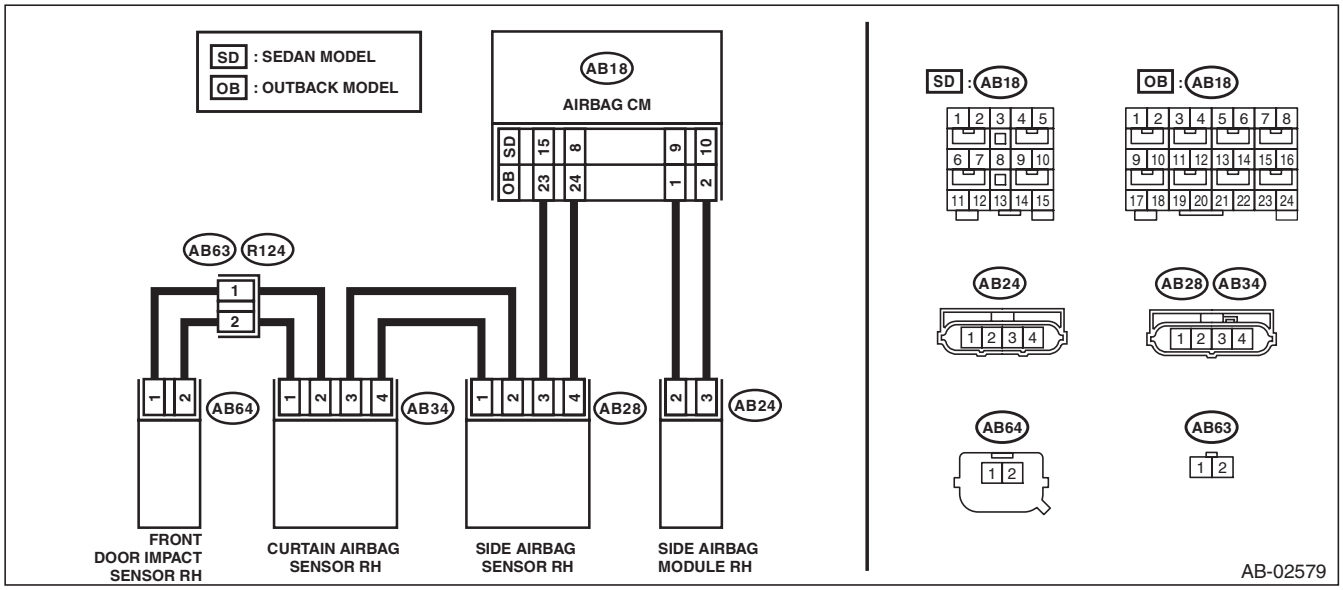

Step		Check	Yes	No
1	**CHECK POOR CONTACT OF CONNECTORS.** Check for poor contact of the connectors between the airbag control module, side airbag module RH and the side airbag sensor RH.	Is there poor contact?	Replace the airbag rear harness along with body harness.	Go to step **2**.
2	**CHECK SIDE AIRBAG MODULE.** 1) Turn the ignition switch to OFF, disconnect the battery ground cable, and wait for 60 seconds or more. 2) Disconnect the connector (AB24) from the side airbag module (RH), and connect the connector (1AJ) in the test harness AJ to connector (AB24). 3) Connect the airbag resistor to the test harness AJ connector (3AJ). 4) Connect the battery ground terminal and turn the ignition switch to ON.	Does the airbag warning light illuminate for six seconds and go off?	Replace the side airbag module (RH). <Ref. to AB-55, REMOVAL, Side Airbag Module.>	Go to step **3**.

GETtheMANUALS.org

	Step	Check	Yes	No
3	**CHECK AIRBAG REAR HARNESS (SIDE AIRBAG MODULE HARNESS RH).** 1) Turn the ignition switch to OFF, disconnect the battery ground cable, and wait for 60 seconds or more. 2) Disconnect the connector (AB26) from seat belt pretensioner (RH). 3) Disconnect the connector (AB33) from curtain airbag module (RH). 4) Disconnect the airbag resistor from test harness AJ. 5) Disconnect the connectors (AB6, AB17, AB18) from airbag control module. 6) Connect the connector (1AG) in the test harness AG to the connectors (AB6, AB17, AB18). NOTE: For sedan models, connect test harness AH between the connectors (AB6, AB17, AB18) and (1AG). 7) Measure the resistance between connector (3AJ) in the test harness AJ and chassis ground. ***Connector & terminal*** ***(3AJ) No. 1 — Chassis ground:*** ***(3AJ) No. 2 — Chassis ground:***	Is the resistance 1 MΩ or more?	Go to step **4**.	Replace the airbag rear harness along with body harness.
4	**CHECK AIRBAG CONTROL MODULE.** 1) Connect all connectors. 2) Clear the memory. 3) Perform the Inspection Mode. 4) Read the DTC.	Is the same DTC displayed?	Replace the airbag control module. <Ref. to AB-68, Airbag Control Module.>	Go to step **5**.
5	**CHECK FOR ANY OTHER DTC ON DISPLAY.**	Is any other DTC displayed?	Check DTC using “List of Diagnostic Trouble Code (DTC)”. <Ref. to AB(diag)-41, List of Diagnostic Trouble Code (DTC).>	Finish the diagnosis.

GETtheMANUALS.org

X: DTC 42 SIDE AIRBAG LH FAILURE

NOTE:
Be sure to properly identify the Airbag system type prior to performing any diagnostics.

1. TYPE A

DTC DETECTING CONDITION:
- Side airbag harness (LH) is faulty.
- Side airbag module (LH) is faulty.
- Airbag control module is faulty.

CAUTION:
Before performing diagnosis, refer to "CAUTION" in "General Description". <Ref. to AB(diag)-5, CAUTION, General Description.>
WIRING DIAGRAM:

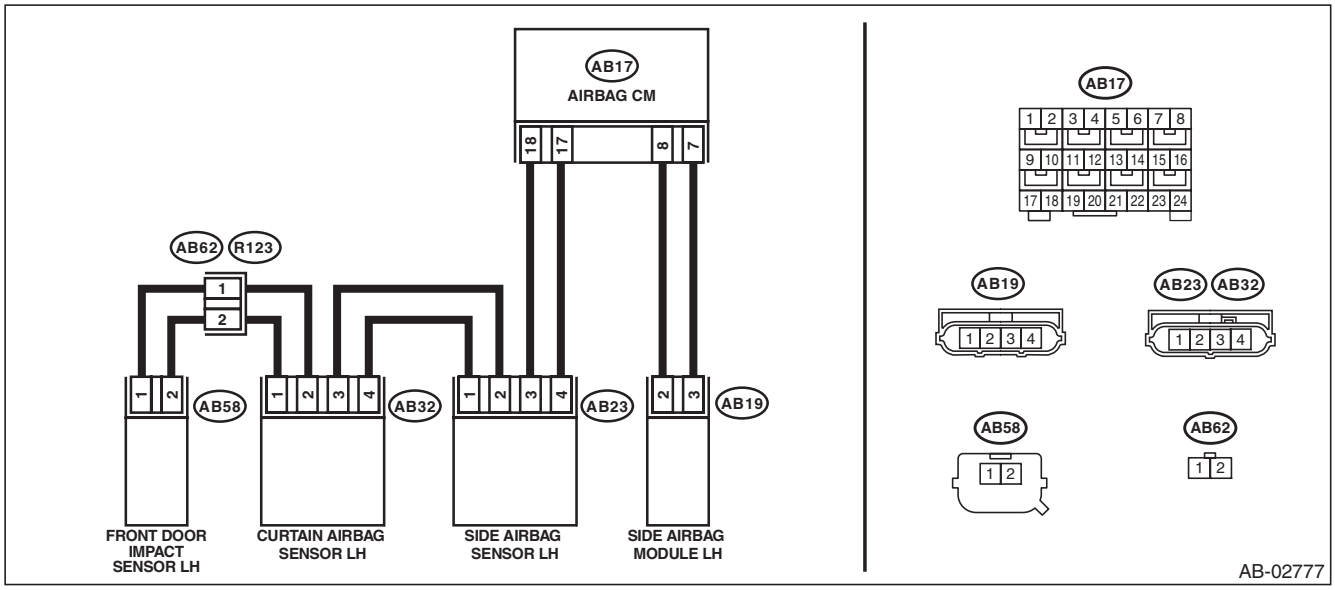

Step		Check	Yes	No
1	**CHECK POOR CONTACT OF CONNECTORS.** Check for poor contact of the connectors between the airbag control module, side airbag module LH and the side airbag sensor LH.	Is there poor contact?	Replace the airbag rear harness along with body harness.	Go to step **2**.
2	**CHECK SIDE AIRBAG MODULE.** 1) Turn the ignition switch to OFF, disconnect the battery ground cable, and wait for 60 seconds or more. 2) Disconnect the connectors (AB20) and (AB19), and connect the test harness AJ connector (1AJ) to the connector (AB19). 3) Connect the airbag resistor to the test harness AJ connector (3AJ). 4) Connect the battery ground terminal and turn the ignition switch to ON.	Does the airbag warning light illuminate for six seconds and go off?	Replace the side airbag module (LH). <Ref. to AB-55, REMOVAL, Side Airbag Module.>	Go to step **3**.

GETthemANUALS.org

	Step	Check	Yes	No
3	**CHECK AIRBAG REAR HARNESS (SIDE AIRBAG MODULE HARNESS LH).** 1) Turn the ignition switch to OFF, disconnect the battery ground cable, and wait for 60 seconds or more. 2) Disconnect the connector (AB21) from seat belt pretensioner (LH). 3) Disconnect the connector (AB31) from curtain airbag module (LH). 4) Disconnect the airbag resistor from test harness. 5) Disconnect the connectors (AB6, AB17, AB18) from airbag control module. 6) Connect the connector (1AG) in the test harness AG to the connectors (AB6, AB17, AB18). 7) Measure the resistance between connector (3AJ) terminals in the test harness AJ, and between connector (3AJ) and chassis ground. ***Connector & terminal*** ***(3AJ) No. 1 — (3AJ) No. 2:*** ***(3AJ) No. 1 — Chassis ground:*** ***(3AJ) No. 2 — Chassis ground:***	Is the resistance 1 MΩ or more?	Go to step **4**.	Replace the airbag rear harness along with body harness.
4	**CHECK AIRBAG REAR HARNESS (SIDE AIRBAG MODULE HARNESS LH).** Measure the resistance between the test harness AJ connector (3AJ) and the test harness AG connector (5AG). ***Connector & terminal*** ***(5AG) No. 5 — (3AJ) No. 1:*** ***(5AG) No. 7 — (3AJ) No. 2:***	Is the resistance less than 10 Ω?	Go to step **5**.	Replace the airbag rear harness along with body harness.
5	**CHECK AIRBAG CONTROL MODULE.** 1) Connect all connectors. 2) Clear the memory. 3) Perform the Inspection Mode. 4) Read the DTC.	Is the same DTC displayed?	Replace the airbag control module. <Ref. to AB-68, Airbag Control Module.>	Go to step **6**.
6	**CHECK FOR ANY OTHER DTC ON DISPLAY.**	Is any other DTC displayed?	Check DTC using "List of Diagnostic Trouble Code (DTC)". <Ref. to AB(diag)-41, List of Diagnostic Trouble Code (DTC).>	Finish the diagnosis.

GETtheMANUALS.org

2. TYPE B

DTC DETECTING CONDITION:

- Side airbag harness (LH) circuit is shorted to ground.
- Side airbag module (LH) is faulty.
- Airbag control module is faulty.

CAUTION:

Before performing diagnosis, refer to "CAUTION" in "General Description". <Ref. to AB(diag)-5, CAUTION, General Description.>

WIRING DIAGRAM:

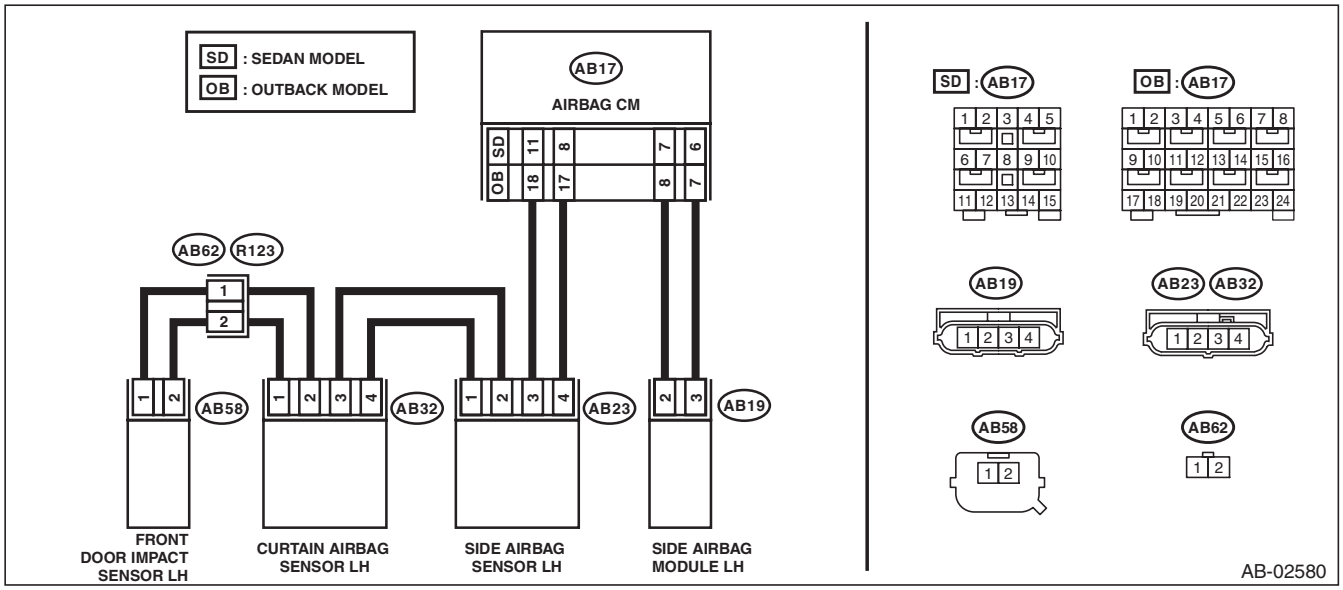

Step		Check	Yes	No
1	**CHECK POOR CONTACT OF CONNECTORS.** Check for poor contact of the connectors between the airbag control module, side airbag module LH and the side airbag sensor LH.	Is there poor contact?	Replace the airbag rear harness along with body harness.	Go to step **2**.
2	**CHECK SIDE AIRBAG MODULE.** 1) Turn the ignition switch to OFF, disconnect the battery ground cable, and wait for 60 seconds or more. 2) Disconnect the connector (AB19) from the side airbag module (LH), and connect the connector (1AJ) in test harness AJ to the connector (AB19). 3) Connect the airbag resistor to the test harness AJ connector (3AJ). 4) Connect the battery ground terminal and turn the ignition switch to ON.	Does the airbag warning light illuminate for six seconds and go off?	Replace the side airbag module (LH). <Ref. to AB-55, REMOVAL, Side Airbag Module.>	Go to step **3**.

GETtheMANUALS.org

	Step	Check	Yes	No
3	**CHECK AIRBAG REAR HARNESS (SIDE AIRBAG MODULE HARNESS LH).** 1) Turn the ignition switch to OFF, disconnect the battery ground cable, and wait for 60 seconds or more. 2) Disconnect the connector (AB21) from seat belt pretensioner (LH). 3) Disconnect the connector (AB31) from curtain airbag module (LH). 4) Disconnect the airbag resistor from test harness AJ. 5) Disconnect the connectors (AB6, AB17, AB18) from airbag control module. 6) Connect the connector (1AG) in the test harness AG to the connectors (AB6, AB17, AB18). NOTE: For sedan models, connect test harness AH between the connectors (AB6, AB17, AB18) and (1AG). 7) Measure the resistance between connector (3AJ) in the test harness AJ and chassis ground. ***Connector & terminal*** ***(3AJ) No. 1 — Chassis ground:*** ***(3AJ) No. 2 — Chassis ground:***	Is the resistance 1 MΩ or more?	Go to step **4**.	Replace the airbag rear harness along with body harness.
4	**CHECK AIRBAG CONTROL MODULE.** 1) Connect all connectors. 2) Clear the memory. 3) Perform the Inspection Mode. 4) Read the DTC.	Is the same DTC displayed?	Replace the airbag control module. <Ref. to AB-68, Airbag Control Module.>	Go to step **5**.
5	**CHECK FOR ANY OTHER DTC ON DISPLAY.**	Is any other DTC displayed?	Check DTC using "List of Diagnostic Trouble Code (DTC)". <Ref. to AB(diag)-41, List of Diagnostic Trouble Code (DTC).>	Finish the diagnosis.

GETtheMANUALS.org

Y: DTC 45 SIDE AIRBAG RH FAILURE

DTC DETECTING CONDITION:

- Side airbag harness (RH) circuit is shorted to power supply.
- Airbag control module is faulty.

CAUTION:

Before performing diagnosis, refer to "CAUTION" in "General Description". <Ref. to AB(diag)-5, CAUTION, General Description.>

WIRING DIAGRAM:

- Type A

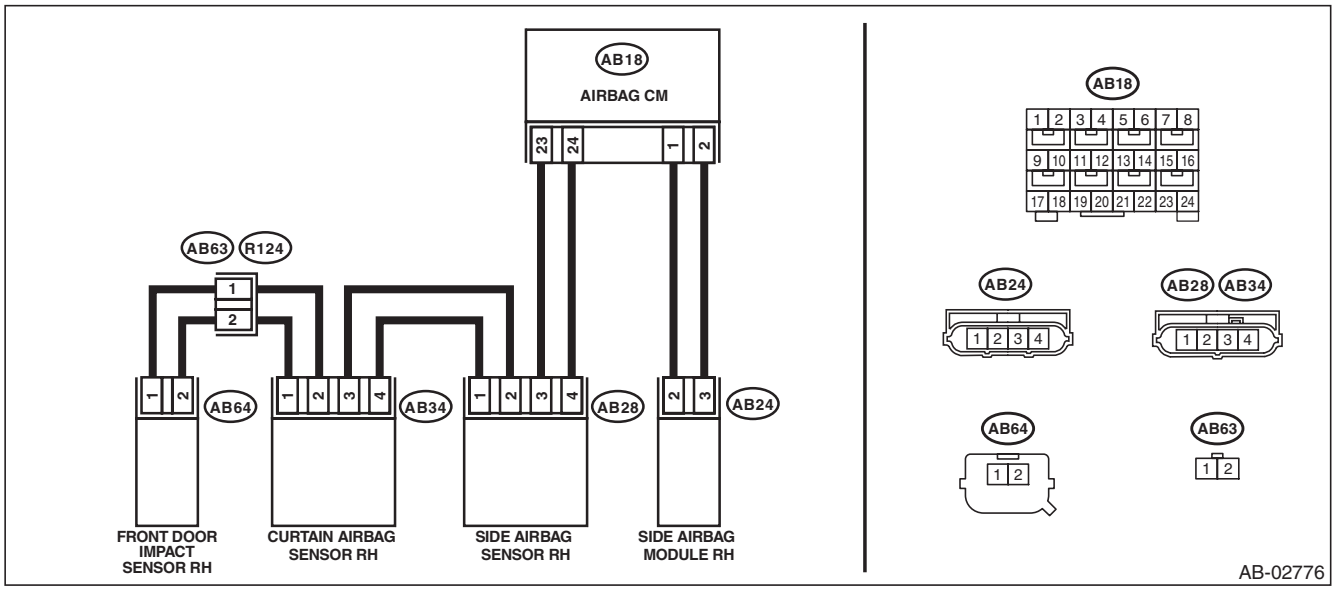

- Type B

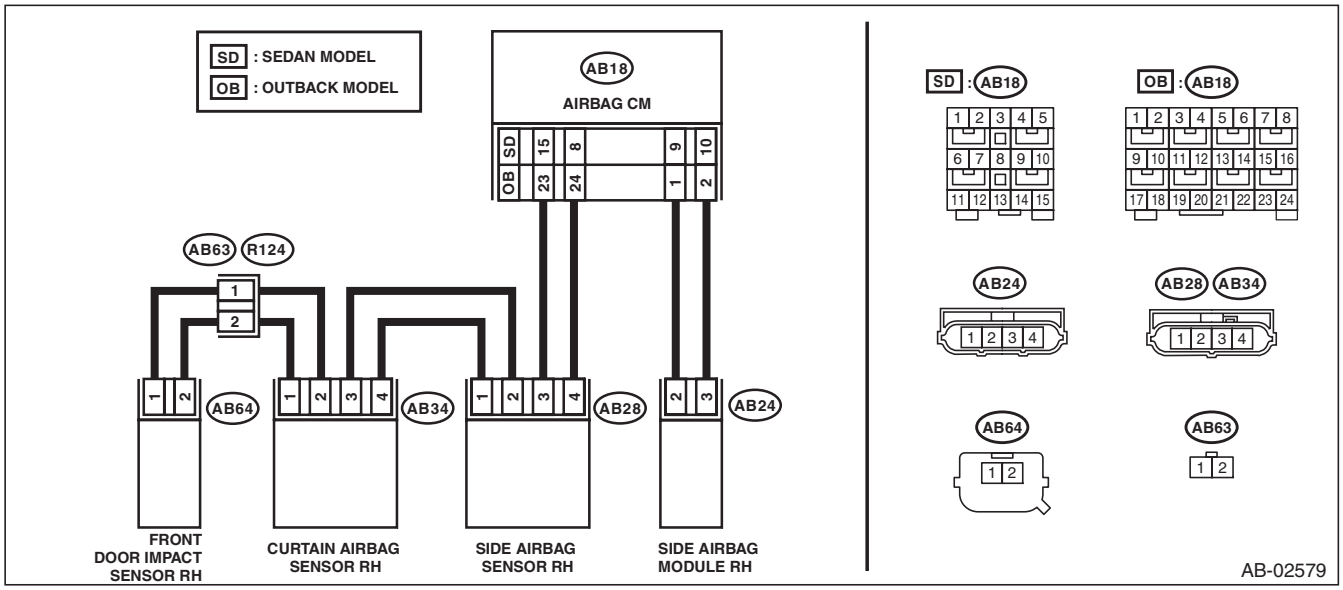

Step		Check	Yes	No
1	**CHECK POOR CONTACT OF CONNECTORS.** Check for poor contact of the connectors between the airbag control module, side airbag module RH and the side airbag sensor RH.	Is there poor contact?	Replace the airbag rear harness along with body harness.	Go to step **2**.

GETtheMANUALS.org

	Step	Check	Yes	No
2	**CHECK SIDE AIRBAG MODULE.** 1) Turn the ignition switch to OFF, disconnect the battery ground cable, and wait for 60 seconds or more. 2) Disconnect the connector (AB24) from the side airbag module (RH), and connect the connector (1AJ) in the test harness AJ to connector (AB24). 3) Connect the airbag resistor to the test harness AJ connector (3AJ). 4) Connect the battery ground terminal and turn the ignition switch to ON.	Does the airbag warning light illuminate for six seconds and go off?	Replace the side airbag module (RH). <Ref. to AB-55, REMOVAL, Side Airbag Module.>	Go to step **3**.
3	**CHECK AIRBAG REAR HARNESS (SIDE AIRBAG MODULE HARNESS RH).** 1) Turn the ignition switch to OFF, disconnect the battery ground cable, and wait for 60 seconds or more. 2) Disconnect the connector (AB26) from seat belt pretensioner (RH). 3) Disconnect the connector (AB33) from curtain airbag module (RH). 4) Disconnect the airbag resistor from test harness AJ. 5) Disconnect the connectors (AB6, AB17, AB18) from airbag control module. 6) Connect the connector (1AG) in the test harness AG to the connectors (AB6, AB17, AB18). NOTE: For type B (sedan models), connect test harness AH between the connectors (AB6, AB17, AB18) and (1AG). 7) Connect the battery ground terminal and turn the ignition switch to ON. 8) Measure the voltage between connector (3AJ) in the test harness AJ and chassis ground. ***Connector & terminal*** ***(3AJ) No. 1 (+) — Chassis ground (–):*** ***(3AJ) No. 2 (+) — Chassis ground (–):***	Is the voltage less than 1 V?	Go to step **4**.	Replace the airbag rear harness along with body harness.
4	**CHECK AIRBAG CONTROL MODULE.** 1) Connect all connectors. 2) Clear the memory. 3) Perform the Inspection Mode. 4) Read the DTC.	Is the same DTC displayed?	Replace the airbag control module. <Ref. to AB-68, Airbag Control Module.>	Go to step **5**.
5	**CHECK FOR ANY OTHER DTC ON DISPLAY.**	Is any other DTC displayed?	Check DTC using "List of Diagnostic Trouble Code (DTC)". <Ref. to AB(diag)-41, List of Diagnostic Trouble Code (DTC).>	Finish the diagnosis.

GETtheMANUALS.org

Z: DTC 46 SIDE AIRBAG LH FAILURE

DTC DETECTING CONDITION:

- Side airbag harness (LH) circuit is shorted to power supply.
- Airbag control module is faulty.

CAUTION:

Before performing diagnosis, refer to "CAUTION" in "General Description". <Ref. to AB(diag)-5, CAUTION, General Description.>

WIRING DIAGRAM:

- Type A

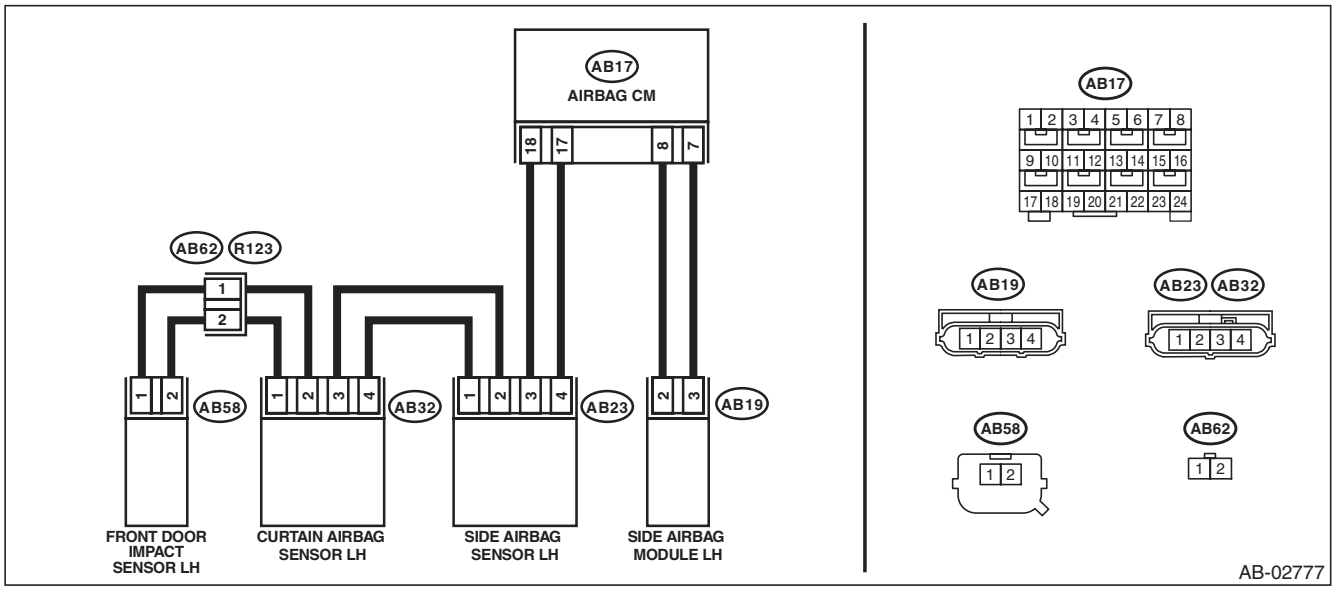

- Type B

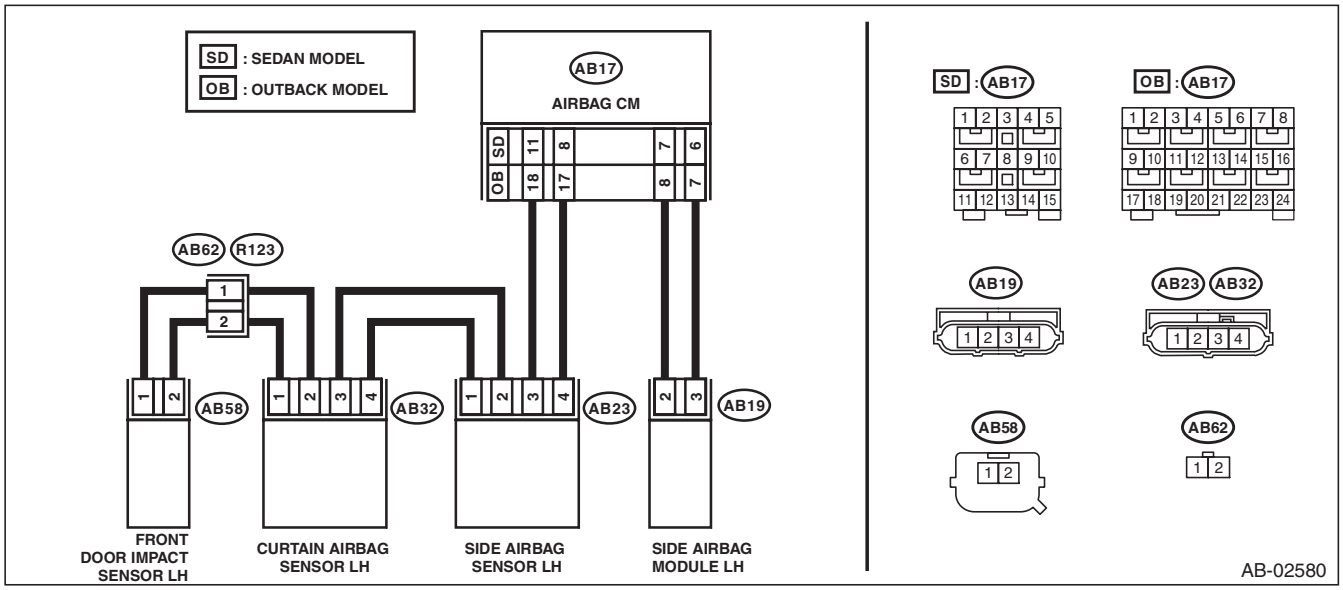

Step		Check	Yes	No
1	**CHECK POOR CONTACT OF CONNECTORS.** Check for poor contact of the connectors between the airbag control module, side airbag module LH and the side airbag sensor LH.	Is there poor contact?	Replace the airbag rear harness along with body harness.	Go to step **2**.

GETtheMANUALS.org

	Step	Check	Yes	No
2	**CHECK SIDE AIRBAG MODULE.** 1) Turn the ignition switch to OFF, disconnect the battery ground cable, and wait for 60 seconds or more. 2) Disconnect the connector (AB19) from the side airbag module (LH), and connect the connector (1AJ) in test harness AJ to the connector (AB19). 3) Connect the airbag resistor to the test harness AJ connector (3AJ). 4) Connect the battery ground terminal and turn the ignition switch to ON.	Does the airbag warning light illuminate for six seconds and go off?	Replace the side airbag module (LH). <Ref. to AB-55, REMOVAL, Side Airbag Module.>	Go to step **3**.
3	**CHECK AIRBAG REAR HARNESS (SIDE AIRBAG MODULE HARNESS LH).** 1) Turn the ignition switch to OFF, disconnect the battery ground cable, and wait for 60 seconds or more. 2) Disconnect the connector (AB21) from seat belt pretensioner (LH). 3) Disconnect the connector (AB31) from curtain airbag module (LH). 4) Disconnect the airbag resistor from test harness AJ. 5) Disconnect the connectors (AB6, AB17, AB18) from airbag control module. 6) Connect the connector (1AG) in the test harness AG to the connectors (AB6, AB17, AB18). NOTE: For type B (sedan models), connect test harness AH between the connectors (AB6, AB17, AB18) and (1AG). 7) Connect the battery ground terminal and turn the ignition switch to ON. 8) Measure the voltage between connector (3AJ) in the test harness AJ and chassis ground. ***Connector & terminal*** ***(3AJ) No. 1 (+) — Chassis ground (–):*** ***(3AJ) No. 2 (+) — Chassis ground (–):***	Is the voltage less than 1 V?	Go to step **4**.	Replace the airbag rear harness along with body harness.
4	**CHECK AIRBAG CONTROL MODULE.** 1) Connect all connectors. 2) Clear the memory. 3) Perform the Inspection Mode. 4) Read the DTC.	Is the same DTC displayed?	Replace the airbag control module. <Ref. to AB-68, Airbag Control Module.>	Go to step **5**.
5	**CHECK FOR ANY OTHER DTC ON DISPLAY.**	Is any other DTC displayed?	Check DTC using "List of Diagnostic Trouble Code (DTC)". <Ref. to AB(diag)-41, List of Diagnostic Trouble Code (DTC).>	Finish the diagnosis.

GETtheMANUALS.org

AA:DTC 4A SIDE AIRBAG RH FAILURE

DTC DETECTING CONDITION:

- Side airbag harness (RH) circuit is shorted.
- Side airbag module is faulty.
- Airbag control module is faulty.

CAUTION:

Before performing diagnosis, refer to "CAUTION" in "General Description". <Ref. to AB(diag)-5, CAUTION, General Description.>

WIRING DIAGRAM:

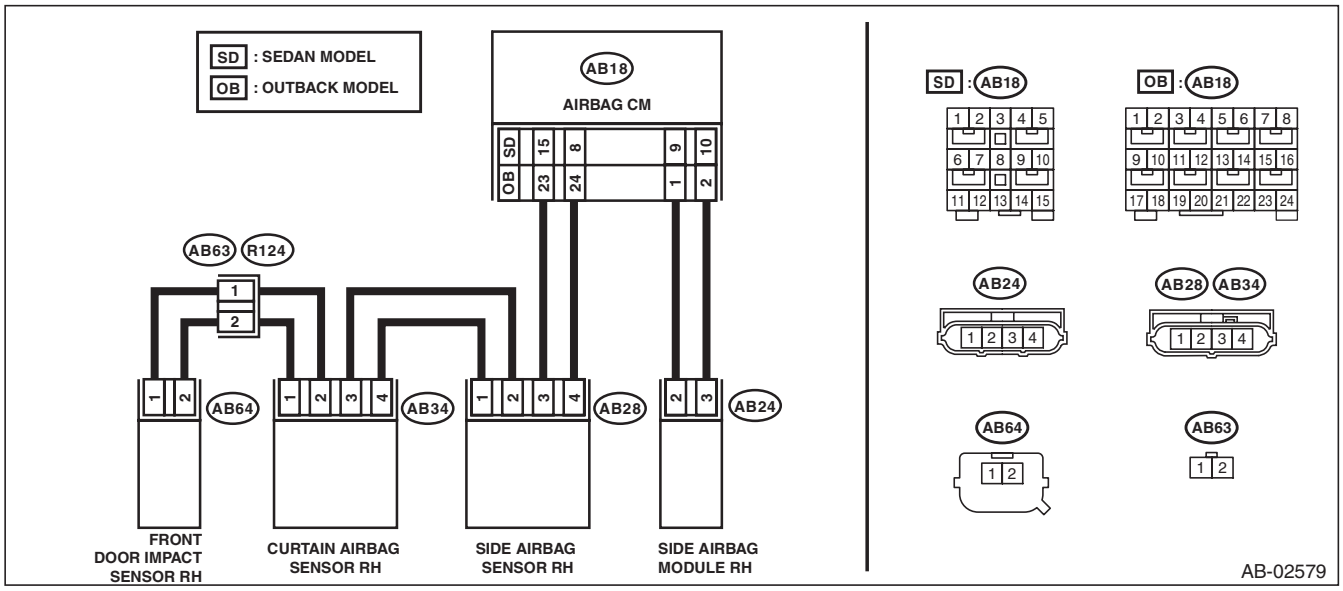

Step		Check	Yes	No
1	**CHECK POOR CONTACT OF CONNECTORS.** Check for poor contact of the connectors between the airbag control module, side airbag module RH and the side airbag sensor RH.	Is there poor contact?	Replace the airbag rear harness along with body harness.	Go to step **2**.
2	**CHECK SIDE AIRBAG MODULE.** 1) Turn the ignition switch to OFF, disconnect the battery ground cable, and wait for 60 seconds or more. 2) Disconnect the connector (AB24) from the side airbag module (RH), and connect the connector (1AJ) in the test harness AJ to connector (AB24). 3) Connect the airbag resistor to the test harness AJ connector (3AJ). 4) Connect the battery ground terminal and turn the ignition switch to ON.	Does the airbag warning light illuminate for six seconds and go off?	Replace the side airbag module (RH). <Ref. to AB-55, REMOVAL, Side Airbag Module.>	Go to step **3**.

GETtheMANUALS.org

	Step	Check	Yes	No
3	**CHECK AIRBAG REAR HARNESS (SIDE AIRBAG MODULE HARNESS RH).** 1) Turn the ignition switch to OFF, disconnect the battery ground cable, and wait for 60 seconds or more. 2) Disconnect the connector (AB26) from seat belt pretensioner (RH). 3) Disconnect the connector (AB33) from curtain airbag module (RH). 4) Disconnect the airbag resistor from test harness AJ. 5) Disconnect the connectors (AB6, AB17, AB18) from airbag control module. 6) Connect the connector (1AG) in the test harness AG to the connectors (AB6, AB17, AB18). NOTE: For sedan models, connect test harness AH between the connectors (AB6, AB17, AB18) and (1AG). 7) Measure the resistance between connector (3AJ) terminals in test harness AJ. ***Connector & terminal*** ***(3AJ) No. 1 — (3AJ) No. 2:***	Is the resistance 1 MΩ or more?	Go to step **4**.	Replace the airbag rear harness along with body harness.
4	**CHECK AIRBAG CONTROL MODULE.** 1) Connect all connectors. 2) Clear the memory. 3) Perform the Inspection Mode. 4) Read the DTC.	Is the same DTC displayed?	Replace the airbag control module. <Ref. to AB-68, Airbag Control Module.>	Go to step **5**.
5	**CHECK FOR ANY OTHER DTC ON DISPLAY.**	Is any other DTC displayed?	Check DTC using "List of Diagnostic Trouble Code (DTC)". <Ref. to AB(diag)-41, List of Diagnostic Trouble Code (DTC).>	Finish the diagnosis.

GETtheMANUALS.org

AB:DTC 4B SIDE AIRBAG LH FAILURE

DTC DETECTING CONDITION:

- Side airbag harness (LH) circuit is shorted.
- Side airbag module (LH) is faulty.
- Airbag control module is faulty.

CAUTION:

Before performing diagnosis, refer to "CAUTION" in "General Description". <Ref. to AB(diag)-5, CAUTION, General Description.>

WIRING DIAGRAM:

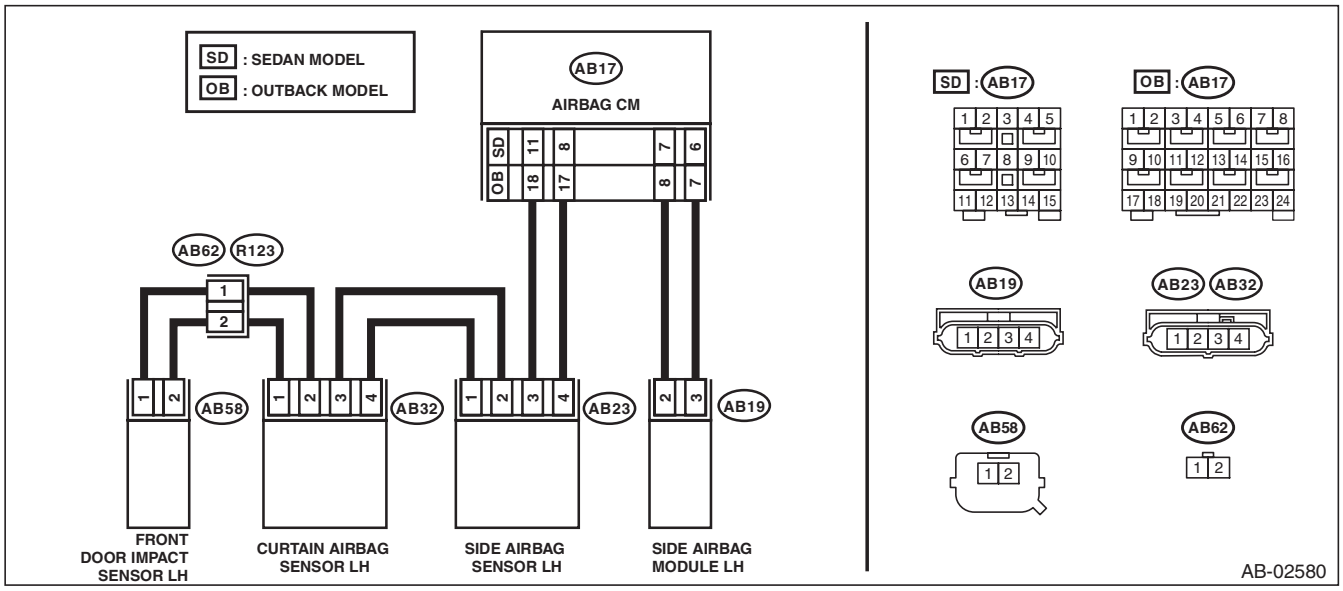

Step		Check	Yes	No
1	**CHECK POOR CONTACT OF CONNECTORS.** Check for poor contact of the connectors between the airbag control module, side airbag module LH and the side airbag sensor LH.	Is there poor contact?	Replace the airbag rear harness along with body harness.	Go to step **2**.
2	**CHECK SIDE AIRBAG MODULE.** 1) Turn the ignition switch to OFF, disconnect the battery ground cable, and wait for 60 seconds or more. 2) Disconnect the connector (AB19) from the side airbag module (LH), and connect the connector (1AJ) in test harness AJ to the connector (AB19). 3) Connect the airbag resistor to the test harness AJ connector (3AJ). 4) Connect the battery ground terminal and turn the ignition switch to ON.	Does the airbag warning light illuminate for six seconds and go off?	Replace the side airbag module (LH). <Ref. to AB-55, REMOVAL, Side Airbag Module.>	Go to step **3**.

GETtheMANUALS.org

	Step	Check	Yes	No
3	**CHECK AIRBAG REAR HARNESS (SIDE AIRBAG MODULE HARNESS LH).** 1) Turn the ignition switch to OFF, disconnect the battery ground cable, and wait for 60 seconds or more. 2) Disconnect the connector (AB21) from seat belt pretensioner (LH). 3) Disconnect the connector (AB31) from curtain airbag module (LH). 4) Disconnect the airbag resistor from test harness AJ. 5) Disconnect the connectors (AB6, AB17, AB18) from airbag control module. 6) Connect the connector (1AG) in the test harness AG to the connectors (AB6, AB17, AB18). NOTE: For sedan models, connect test harness AH between the connectors (AB6, AB17, AB18) and (1AG). 7) Measure the resistance between connector (3AJ) terminals in test harness AJ. ***Connector & terminal*** ***(3AJ) No. 1 — (3AJ) No. 2:***	Is the resistance 1 MΩ or more?	Go to step **4**.	Replace the airbag rear harness along with body harness.
4	**CHECK AIRBAG CONTROL MODULE.** 1) Connect all connectors. 2) Clear the memory. 3) Perform the Inspection Mode. 4) Read the DTC.	Is the same DTC displayed?	Replace the airbag control module. <Ref. to AB-68, Airbag Control Module.>	Go to step **5**.
5	**CHECK FOR ANY OTHER DTC ON DISPLAY.**	Is any other DTC displayed?	Check DTC using “List of Diagnostic Trouble Code (DTC)”. <Ref. to AB(diag)-41, List of Diagnostic Trouble Code (DTC).>	Finish the diagnosis.

GETtheMANUALS.org

AC:DTC 4D SIDE AIRBAG RH FAILURE

DTC DETECTING CONDITION:

- Side airbag harness (RH) circuit is open.
- Side airbag module is faulty.
- Airbag control module is faulty.

CAUTION:

Before performing diagnosis, refer to "CAUTION" in "General Description". <Ref. to AB(diag)-5, CAUTION, General Description.>

WIRING DIAGRAM:

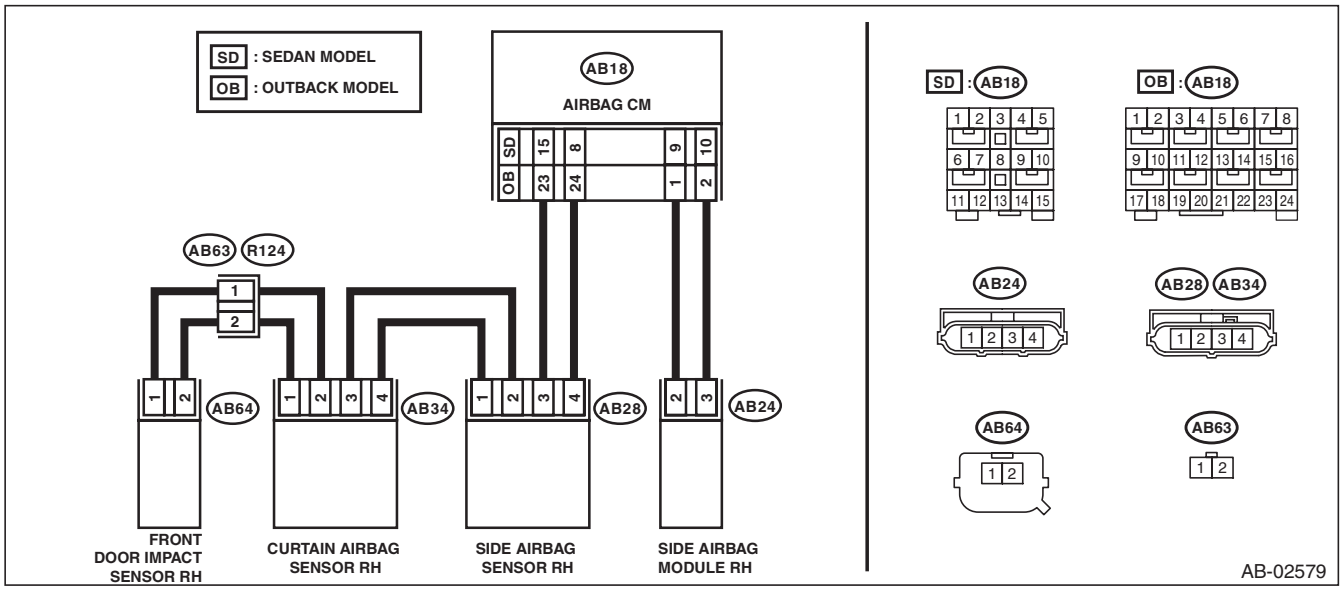

Step		Check	Yes	No
1	**CHECK POOR CONTACT OF CONNECTORS.** Check for poor contact of the connectors between the airbag control module, side airbag module RH and the side airbag sensor RH.	Is there poor contact?	Replace the airbag rear harness along with body harness.	Go to step **2**.
2	**CHECK SIDE AIRBAG MODULE.** 1) Turn the ignition switch to OFF, disconnect the battery ground cable, and wait for 60 seconds or more. 2) Disconnect the connector (AB24) from the side airbag module (RH), and connect the connector (1AJ) in the test harness AJ to connector (AB24). 3) Connect the airbag resistor to the test harness AJ connector (3AJ). 4) Connect the battery ground terminal and turn the ignition switch to ON.	Does the airbag warning light illuminate for six seconds and go off?	Replace the side airbag module (RH). <Ref. to AB-55, REMOVAL, Side Airbag Module.>	Go to step **3**.

GETtheMANUALS.org

	Step	Check	Yes	No
3	**CHECK AIRBAG REAR HARNESS (SIDE AIRBAG MODULE HARNESS RH).** 1) Turn the ignition switch to OFF, disconnect the battery ground cable, and wait for 60 seconds or more. 2) Disconnect the connector (AB26) from seat belt pretensioner (RH). 3) Disconnect the connector (AB33) from curtain airbag module (RH). 4) Disconnect the airbag resistor from test harness AJ. 5) Disconnect the connectors (AB6, AB17, AB18) from airbag control module. 6) Connect the connector (1AG) in the test harness AG to the connectors (AB6, AB17, AB18). NOTE: For sedan models, connect test harness AH between the connectors (AB6, AB17, AB18) and (1AG). 7) Measure the resistance between connector (4AG) or (5AG) in the test harness AG and connector (3AJ) in the test harness AJ. ***Connector & terminal*** ***Sedan model*** ***(4AG) No. 8 — (3AJ) No. 2:*** ***(4AG) No. 10 — (3AJ) No. 1:*** ***OUTBACK model*** ***(5AG) No. 1 — (3AJ) No. 2:*** ***(5AG) No. 3 — (3AJ) No. 1:***	Is the resistance less than 10 Ω?	Go to step **4**.	Replace the airbag rear harness along with body harness.
4	**CHECK AIRBAG CONTROL MODULE.** 1) Connect all connectors. 2) Clear the memory. 3) Perform the Inspection Mode. 4) Read the DTC.	Is the same DTC displayed?	Replace the airbag control module. <Ref. to AB-68, Airbag Control Module.>	Go to step **5**.
5	**CHECK FOR ANY OTHER DTC ON DISPLAY.**	Is any other DTC displayed?	Check DTC using “List of Diagnostic Trouble Code (DTC)”. <Ref. to AB(diag)-41, List of Diagnostic Trouble Code (DTC).>	Finish the diagnosis.

GETtheMANUALS.org

AD:DTC 4E SIDE AIRBAG LH FAILURE

DTC DETECTING CONDITION:

- Side airbag harness (LH) circuit is open.
- Side airbag module (LH) is faulty.
- Airbag control module is faulty.

CAUTION:

Before performing diagnosis, refer to "CAUTION" in "General Description". <Ref. to AB(diag)-5, CAUTION, General Description.>

WIRING DIAGRAM:

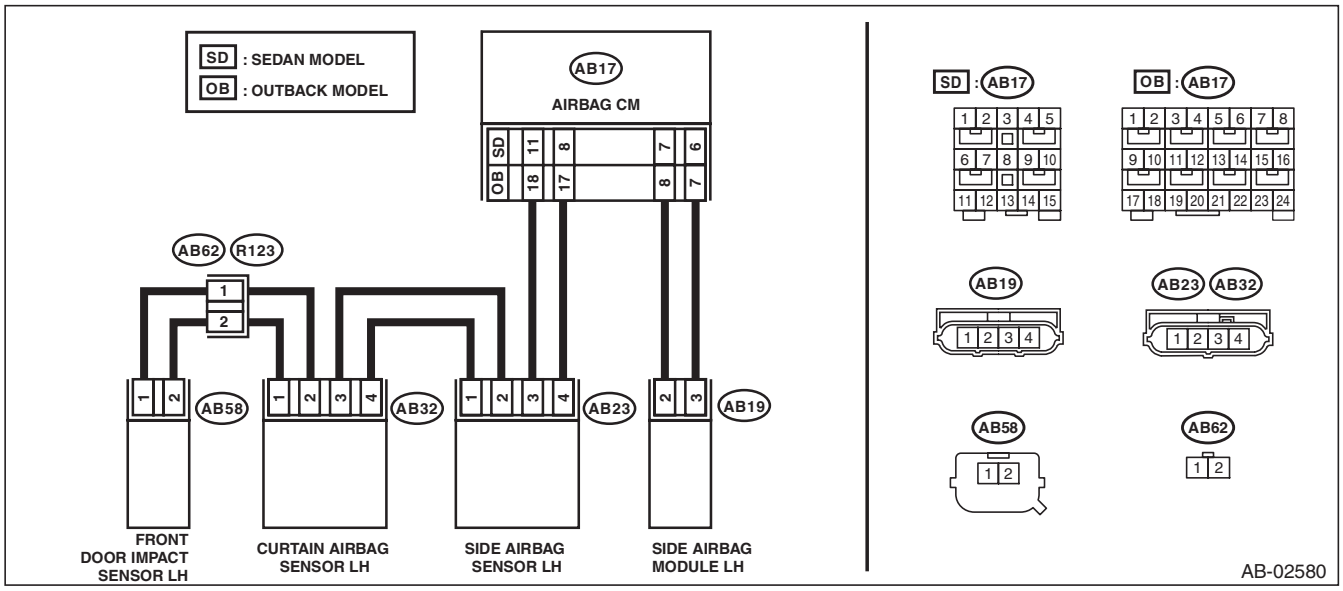

Step		Check	Yes	No
1	**CHECK POOR CONTACT OF CONNECTORS.** Check for poor contact of the connectors between the airbag control module, side airbag module LH and the side airbag sensor LH.	Is there poor contact?	Replace the airbag rear harness along with body harness.	Go to step **2**.
2	**CHECK SIDE AIRBAG MODULE.** 1) Turn the ignition switch to OFF, disconnect the battery ground cable, and wait for 60 seconds or more. 2) Disconnect the connector (AB19) from the side airbag module (LH), and connect the connector (1AJ) in test harness AJ to the connector (AB19). 3) Connect the airbag resistor to the test harness AJ connector (3AJ). 4) Connect the battery ground terminal and turn the ignition switch to ON.	Does the airbag warning light illuminate for six seconds and go off?	Replace the side airbag module (LH). <Ref. to AB-55, REMOVAL, Side Airbag Module.>	Go to step **3**.

GETtheMANUALS.org

	Step	Check	Yes	No
3	**CHECK AIRBAG REAR HARNESS (SIDE AIRBAG MODULE HARNESS LH).** 1) Turn the ignition switch to OFF, disconnect the battery ground cable, and wait for 60 seconds or more. 2) Disconnect the connector (AB21) from seat belt pretensioner (LH). 3) Disconnect the connector (AB31) from curtain airbag module (LH). 4) Disconnect the airbag resistor from test harness AJ. 5) Disconnect the connectors (AB6, AB17, AB18) from airbag control module. 6) Connect the connector (1AG) in the test harness AG to the connectors (AB6, AB17, AB18). NOTE: For sedan models, connect test harness AH between the connectors (AB6, AB17, AB18) and (1AG). 7) Measure the resistance between connector (4AG) or (5AG) in the test harness AG and connector (3AJ) in the test harness AJ. ***Connector & terminal*** ***Sedan model*** ***(4AG) No. 11 — (3AJ) No. 1:*** ***(4AG) No. 13 — (3AJ) No. 2:*** ***OUTBACK model*** ***(5AG) No. 5 — (3AJ) No. 1:*** ***(5AG) No. 7 — (3AJ) No. 2:***	Is the resistance less than 10 Ω?	Go to step **4**.	Replace the airbag rear harness along with body harness.
4	**CHECK AIRBAG CONTROL MODULE.** 1) Connect all connectors. 2) Clear the memory. 3) Perform the Inspection Mode. 4) Read the DTC.	Is the same DTC displayed?	Replace the airbag control module. <Ref. to AB-68, Airbag Control Module.>	Go to step **5**.
5	**CHECK FOR ANY OTHER DTC ON DISPLAY.**	Is any other DTC displayed?	Check DTC using “List of Diagnostic Trouble Code (DTC)”. <Ref. to AB(diag)-41, List of Diagnostic Trouble Code (DTC).>	Finish the diagnosis.

GETthemANUALS.org

AE:DTC 53 SIDE AIRBAG SENSOR RH FAILURE

DTC DETECTING CONDITION:

Side airbag sensor (RH) is faulty.
When DTC 53 is displayed, the circuit within the side airbag sensor (RH) is faulty.
Replace the side airbag sensor (RH). <Ref. to AB-81, Side Airbag Sensor.>

AF:DTC 54 SIDE AIRBAG SENSOR LH FAILURE

DTC DETECTING CONDITION:

Side airbag sensor (LH) is faulty.
When DTC 54 is displayed, the circuit within the side airbag sensor (LH) is faulty.
Replace the side airbag sensor (LH). <Ref. to AB-81, Side Airbag Sensor.>

AG:DTC 55 SIDE CURTAIN AIRBAG FIRING OUTPUT

This DTC is displayed when the side airbag module and curtain airbag module are deployed.
Once this DTC is displayed, the memory cannot be cleared. Replace the following parts.

- Airbag control module <Ref. to AB-68, Airbag Control Module.>
- Side airbag module <Ref. to AB-55, Side Airbag Module.>
- Side airbag sensor <Ref. to AB-81, Side Airbag Sensor.>
- Curtain airbag module <Ref. to AB-65, Curtain Airbag Module.>
- Curtain airbag sensor <Ref. to AB-87, Curtain Airbag Sensor.>
- Front door impact sensor <Ref. to AB-78, Front Door Impact Sensor.>

AH:DTC 58 CURTAIN AIRBAG SENSOR RH FAILURE

DTC DETECTING CONDITION:

Curtain airbag sensor (RH) is faulty.
If DTC 58 is displayed, the circuit within the curtain airbag sensor (RH) is faulty.
Replace the curtain airbag sensor (RH). <Ref. to AB-87, Curtain Airbag Sensor.>

AI: DTC 59 CURTAIN AIRBAG SENSOR LH FAILURE

DTC DETECTING CONDITION:

Curtain airbag sensor (LH) is faulty.
If DTC 59 is displayed, the circuit within the curtain airbag sensor (LH) is faulty.
Replace the curtain airbag sensor (LH). <Ref. to AB-87, Curtain Airbag Sensor.>

GETtheMANUALS.org

AJ:DTC 5A SIDE AIRBAG SENSOR RH FALSE INSTALLATION

DTC DETECTING CONDITION:

Side A/B sensor RH is misinstalled.

Step		Check	Yes	No
1	**REPLACE SIDE AIRBAG SENSOR (RH).** 1) Turn the ignition switch to OFF, disconnect the battery ground cable, and wait for 60 seconds or more. 2) Replace the side A/B sensor (RH) with a genuine sensor. <Ref. to AB-81, REMOVAL, Side Airbag Sensor.>	Does the warning light go off?	Finish the diagnosis.	Replace the airbag control module. <Ref. to AB-68, REMOVAL, Airbag Control Module.>

AK:DTC 5B SIDE AIRBAG SENSOR LH FALSE INSTALLATION

DTC DETECTING CONDITION:

Side A/B sensor LH is misinstalled.

Step		Check	Yes	No
1	**REPLACE SIDE AIRBAG SENSOR (LH).** 1) Turn the ignition switch to OFF, disconnect the battery ground cable, and wait for 60 seconds or more. 2) Replace the side A/B sensor (LH) with a genuine sensor. <Ref. to AB-81, REMOVAL, Side Airbag Sensor.>	Does the warning light go off?	Finish the diagnosis.	Replace the airbag control module. <Ref. to AB-68, REMOVAL, Airbag Control Module.>

AL:DTC 5C CURTAIN AIRBAG SENSOR RH FALSE INSTALLATION

DTC DETECTING CONDITION:

Curtain side airbag sensor RH is misinstalled.

Step		Check	Yes	No
1	**REPLACE CURTAIN AIRBAG SENSOR (RH).** 1) Turn the ignition switch to OFF, disconnect the battery ground cable, and wait for 60 seconds or more. 2) Replace the curtain A/B sensor (RH) with a genuine sensor. <Ref. to AB-87, REMOVAL, Curtain Airbag Sensor.>	Does the warning light go off?	Finish the diagnosis.	Replace the airbag control module. <Ref. to AB-68, REMOVAL, Airbag Control Module.>

AM:DTC 5D CURTAIN AIRBAG SENSOR LH FALSE INSTALLATION

DTC DETECTING CONDITION:

Curtain side airbag sensor LH is misinstalled.

Step		Check	Yes	No
1	**REPLACE CURTAIN AIRBAG SENSOR (LH).** 1) Turn the ignition switch to OFF, disconnect the battery ground cable, and wait for 60 seconds or more. 2) Replace the curtain A/B sensor (LH) with a genuine sensor. <Ref. to AB-87, REMOVAL, Curtain Airbag Sensor.>	Does the warning light go off?	Finish the diagnosis.	Replace the airbag control module. <Ref. to AB-68, REMOVAL, Airbag Control Module.>

GETtheMANUALS.org

AN:DTC 61 BELT PRETENSIONER RH FAILURE

NOTE:
Be sure to properly identify the Airbag system type prior to performing any diagnostics.

1. TYPE A

DTC DETECTING CONDITION:
- Seat belt pretensioner (RH) circuit is open, shorted or shorted to ground.
- Airbag control module is faulty.
- Pretensioner is faulty.
- Pretensioner harness is faulty.

CAUTION:
Before performing diagnosis, refer to “CAUTION” in “General Description”. <Ref. to AB(diag)-5, CAUTION, General Description.>
WIRING DIAGRAM:

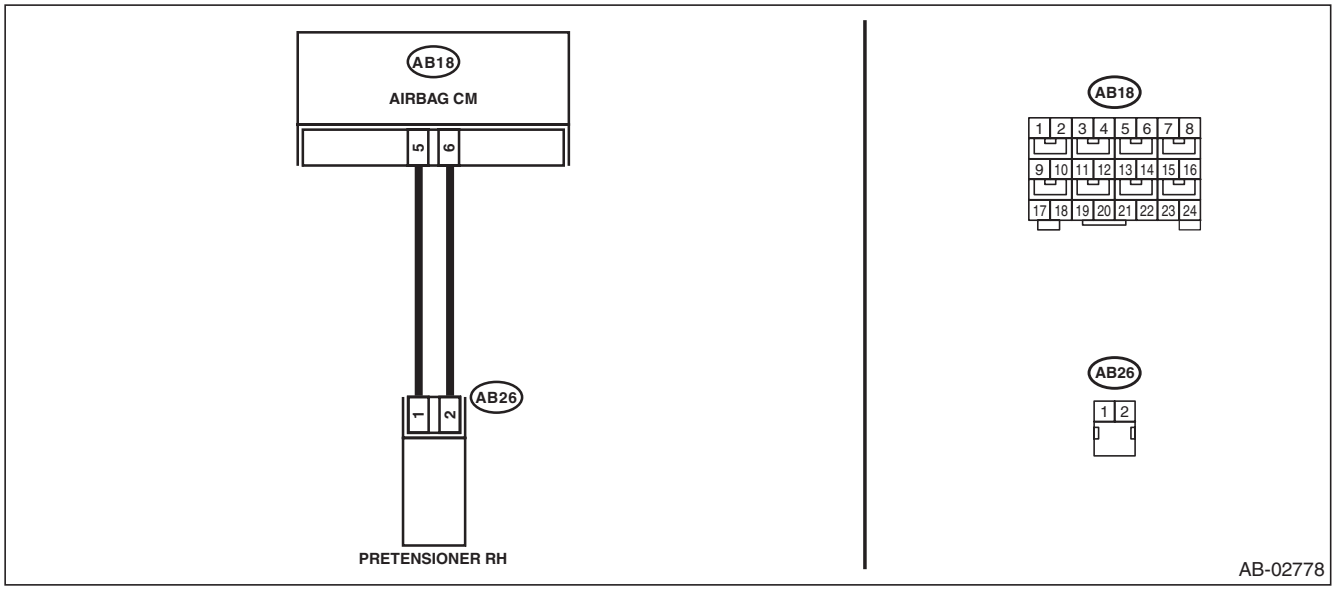

Step		Check	Yes	No
1	**CHECK POOR CONTACT OF CONNECTORS.** Check for poor contact of the connectors between the airbag control module and the seat belt pretensioner RH.	Is there poor contact?	Replace the airbag rear harness along with body harness.	Go to step **2**.
2	**CHECK SEAT BELT PRETENSIONER.** 1) Turn the ignition switch to OFF, disconnect the battery ground cable, and wait for 60 seconds or more. 2) Disconnect the connector (AB26) from seat belt pretensioner (RH). 3) Connect the connector (1N) in the test harness N to the connector (AB26). 4) Connect the airbag resistor to the connector (2N) of test harness N. 5) Connect the battery ground terminal and turn the ignition switch to ON.	Does the airbag warning light illuminate for six seconds and go off?	Replace the seat belt pretensioner (RH). <Ref. to SB-17, Front Seat Belt.>	Go to step **3**.

GETthemMANUALS.org

	Step	Check	Yes	No
3	**CHECK AIRBAG REAR HARNESS (PRE-TENSIONER HARNESS RH).** 1) Turn the ignition switch to OFF, disconnect the battery ground cable, and wait for 60 seconds or more. 2) Disconnect the airbag resistor from test harness. 3) Disconnect connector (AB24) from side airbag module (RH). 4) Disconnect the connector (AB33) from curtain airbag module (RH). 5) Disconnect the connectors (AB6, AB17, AB18) from airbag control module. 6) Connect the connector (1AG) in the test harness AG to the connectors (AB6, AB17, AB18). 7) Measure the resistance between connectors (3AG) in the test harness AG, and between connector (3AG) and chassis ground. ***Connector & terminal*** ***(3AG) No. 10 — (3AG) No. 12:*** ***(3AG) No. 10 — Chassis ground:*** ***(3AG) No. 12 — Chassis ground:***	Is the resistance 1 MΩ or more?	Go to step **4**.	Replace the airbag rear harness along with body harness.
4	**CHECK AIRBAG REAR HARNESS (PRE-TENSIONER HARNESS RH).** Measure the resistance between connector (3AG) in the test harness AG and connector (2N) in the test harness N. ***Connector & terminal*** ***(3AG) No. 10 — (2N) No. 2:*** ***(3AG) No. 12 — (2N) No. 1:***	Is the resistance less than 10 Ω?	Go to step **5**.	Replace the airbag rear harness along with body harness.
5	**CHECK AIRBAG CONTROL MODULE.** 1) Connect all connectors. 2) Clear the memory. 3) Perform the Inspection Mode. 4) Read the DTC.	Is the same DTC displayed?	Replace the airbag control module. <Ref. to AB-68, Airbag Control Module.>	Go to step **6**.
6	**CHECK FOR ANY OTHER DTC ON DISPLAY.**	Is any other DTC displayed?	Check DTC using "List of Diagnostic Trouble Code (DTC)". <Ref. to AB(diag)-41, List of Diagnostic Trouble Code (DTC).>	Finish the diagnosis.

GETtheMANUALS.org

2. TYPE B

DTC DETECTING CONDITION:

- Seat belt pretensioner (RH) circuit is shorted to ground.
- Pretensioner (RH) is faulty.
- Pretensioner harness is faulty.
- Airbag control module is faulty.

CAUTION:

Before performing diagnosis, refer to "CAUTION" in "General Description". <Ref. to AB(diag)-5, CAUTION, General Description.>

WIRING DIAGRAM:

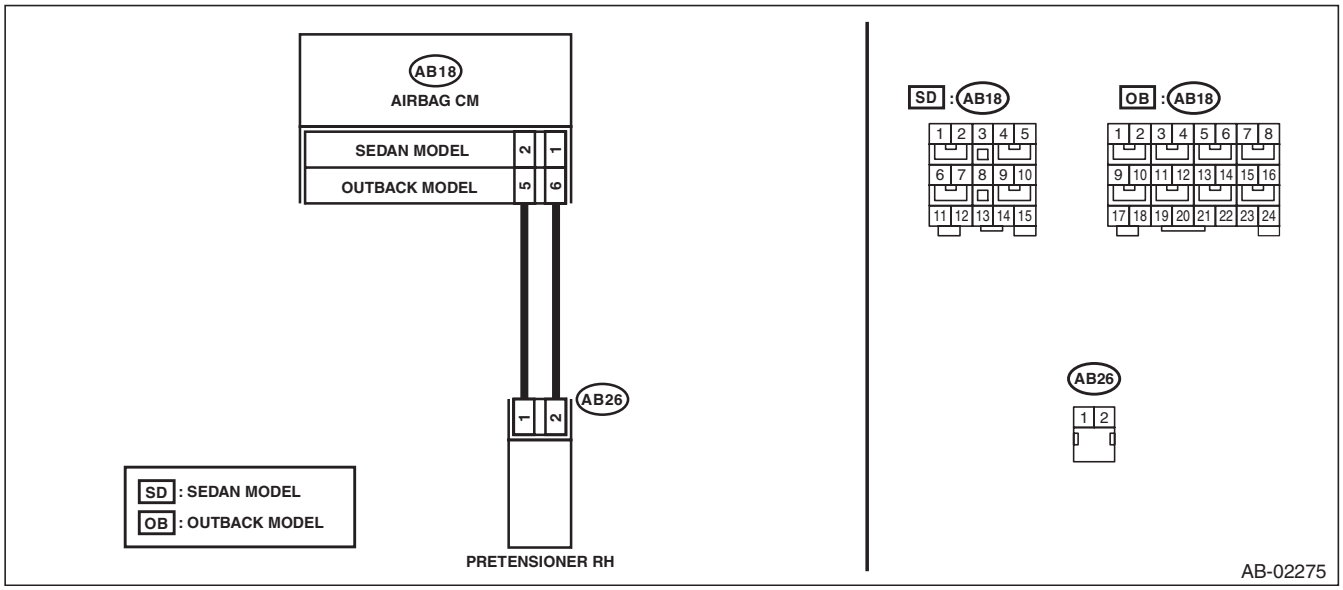

Step		Check	Yes	No
1	**CHECK POOR CONTACT OF CONNECTORS.** Check for poor contact of the connectors between the airbag control module and the seat belt pretensioner RH.	Is there poor contact?	Replace the airbag rear harness along with body harness.	Go to step **2**.
2	**CHECK SEAT BELT PRETENSIONER.** 1) Turn the ignition switch to OFF, disconnect the battery ground cable, and wait for 60 seconds or more. 2) Disconnect the connector (AB26) from seat belt pretensioner (RH). 3) Connect the connector (1N) in the test harness N to the connector (AB26). 4) Connect the airbag resistor to the connector (2N) of test harness N. 5) Connect the battery ground terminal and turn the ignition switch to ON.	Does the airbag warning light illuminate for six seconds and go off?	Replace the seat belt pretensioner (RH). <Ref. to SB-17, Front Seat Belt.>	Go to step **3**.

GETtheMANUALS.org

	Step	Check	Yes	No
3	**CHECK AIRBAG REAR HARNESS (PRE-TENSIONER HARNESS RH).** 1) Turn the ignition switch to OFF, disconnect the battery ground cable, and wait for 60 seconds or more. 2) Disconnect the airbag resistor from test harness N. 3) Disconnect connector (AB24) from side airbag module (RH). 4) Disconnect the connector (AB33) from curtain airbag module (RH). 5) Disconnect the connectors (AB6, AB17, AB18) from airbag control module. 6) Connect the connector (1AG) in the test harness AG to the connectors (AB6, AB17, AB18). NOTE: For sedan models, connect test harness AH between the connectors (AB6, AB17, AB18) and (1AG). 7) Measure the resistance between connector (3AG) in the test harness AG and chassis ground. ***Connector & terminal*** ***(3AG) No. 10 — Chassis ground:*** ***(3AG) No. 12 — Chassis ground:***	Is the resistance 1 MΩ or more?	Go to step **4**.	Replace the airbag rear harness along with body harness.
4	**CHECK AIRBAG CONTROL MODULE.** 1) Connect all connectors. 2) Clear the memory. 3) Perform the Inspection Mode. 4) Read the DTC.	Is the same DTC displayed?	Replace the airbag control module. <Ref. to AB-68, Airbag Control Module.>	Go to step **5**.
5	**CHECK FOR ANY OTHER DTC ON DISPLAY.**	Is any other DTC displayed?	Check DTC using "List of Diagnostic Trouble Code (DTC)". <Ref. to AB(diag)-41, List of Diagnostic Trouble Code (DTC).>	Finish the diagnosis.

GETthemANUALS.org

AO:DTC 62 BELT PRETENSIONER LH FAILURE

NOTE:
Be sure to properly identify the Airbag system type prior to performing any diagnostics.

1. TYPE A

DTC DETECTING CONDITION:
- Seat belt pretensioner (LH) circuit is open, shorted or shorted to ground.
- Airbag control module is faulty.
- Pretensioner is faulty.
- Pretensioner harness is faulty.

CAUTION:
Before performing diagnosis, refer to “CAUTION” in “General Description”. <Ref. to AB(diag)-5, CAUTION, General Description.>
WIRING DIAGRAM:

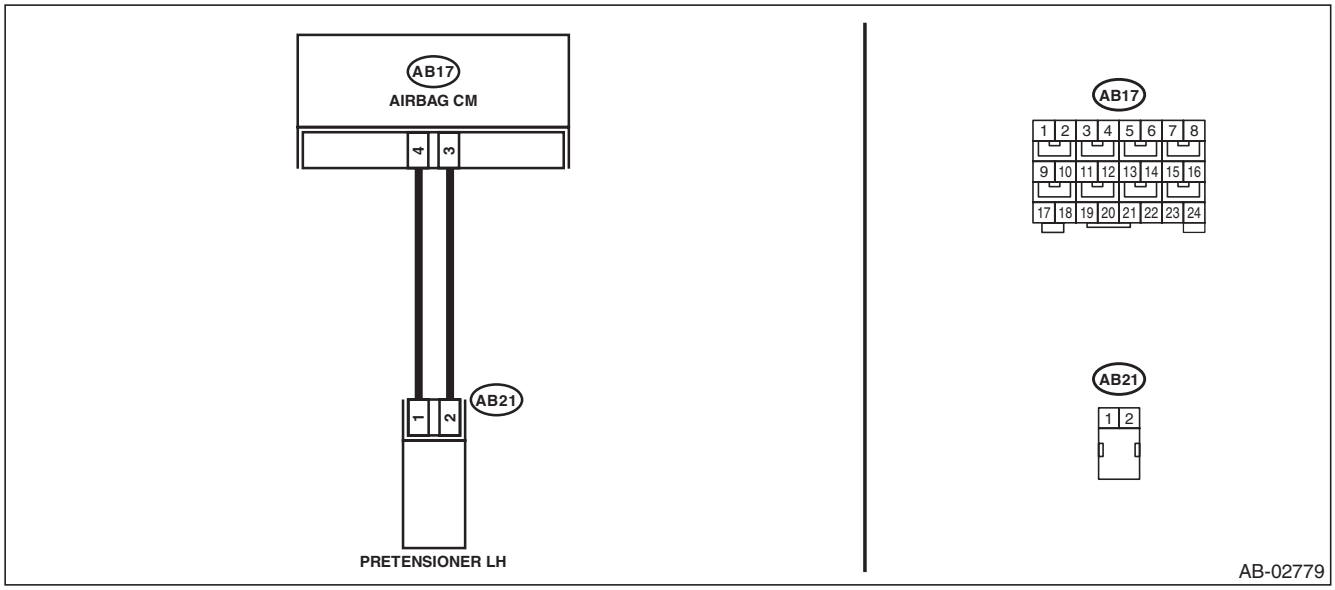

Step		Check	Yes	No
1	**CHECK POOR CONTACT OF CONNECTORS.** Check for poor contact of the connectors between the airbag control module and the seat belt pretensioner LH.	Is there poor contact?	Replace the airbag rear harness along with body harness.	Go to step **2**.
2	**CHECK SEAT BELT PRETENSIONER.** 1) Turn the ignition switch to OFF, disconnect the battery ground cable, and wait for 60 seconds or more. 2) Disconnect the connector (AB21) from seat belt pretensioner (LH). 3) Connect the connector (1N) in the test harness N to the connector (AB21). 4) Connect the airbag resistor to the connector (2N) of test harness N. 5) Connect the battery ground terminal and turn the ignition switch to ON.	Does the airbag warning light illuminate for six seconds and go off?	Replace the seat belt pretensioner (LH). <Ref. to SB-17, Front Seat Belt.>	Go to step **3**.

GETtheMANUALS.org

Step		Check	Yes	No
3	**CHECK AIRBAG REAR HARNESS (PRE-TENSIONER HARNESS LH).** 1) Turn the ignition switch to OFF, disconnect the battery ground cable, and wait for 60 seconds or more. 2) Disconnect the airbag resistor from test harness. 3) Disconnect connector (AB19) from side airbag module (LH). 4) Disconnect the connector (AB31) from curtain airbag module (LH). 5) Disconnect the connectors (AB6, AB17, AB18) from airbag control module. 6) Connect the connector (1AG) in the test harness AG to the connectors (AB6, AB17, AB18). 7) Measure the resistance between connectors (3AG) in the test harness AG, and between connector (3AG) and chassis ground. ***Connector & terminal*** ***(3AG) No. 18 — (3AG) No. 20:*** ***(3AG) No. 18 — Chassis ground:*** ***(3AG) No. 20 — Chassis ground:***	Is the resistance 1 MΩ or more?	Go to step **4**.	Replace the airbag rear harness along with body harness.
4	**CHECK AIRBAG REAR HARNESS (PRE-TENSIONER HARNESS LH).** Measure the resistance between connector (3AG) in the test harness AG and connector (2N) in the test harness N. ***Connector & terminal*** ***(3AG) No. 18 — (2N) No. 1:*** ***(3AG) No. 20 — (2N) No. 2:***	Is the resistance less than 10 Ω?	Go to step **5**.	Replace the airbag rear harness along with body harness.
5	**CHECK AIRBAG CONTROL MODULE.** 1) Connect all connectors. 2) Clear the memory. 3) Perform the Inspection Mode. 4) Read the DTC.	Is the same DTC displayed?	Replace the airbag control module. <Ref. to AB-68, Airbag Control Module.>	Go to step **6**.
6	**CHECK FOR ANY OTHER DTC ON DISPLAY.**	Is any other DTC displayed?	Check DTC using "List of Diagnostic Trouble Code (DTC)". <Ref. to AB(diag)-41, List of Diagnostic Trouble Code (DTC).>	Finish the diagnosis.

GETtheMANUALS.org

2. TYPE B

DTC DETECTING CONDITION:

- Seat belt pretensioner (LH) circuit is shorted to ground.
- Pretensioner (LH) is faulty.
- Pretensioner harness is faulty.
- Airbag control module is faulty.

CAUTION:

Before performing diagnosis, refer to "CAUTION" in "General Description". <Ref. to AB(diag)-5, CAUTION, General Description.>

WIRING DIAGRAM:

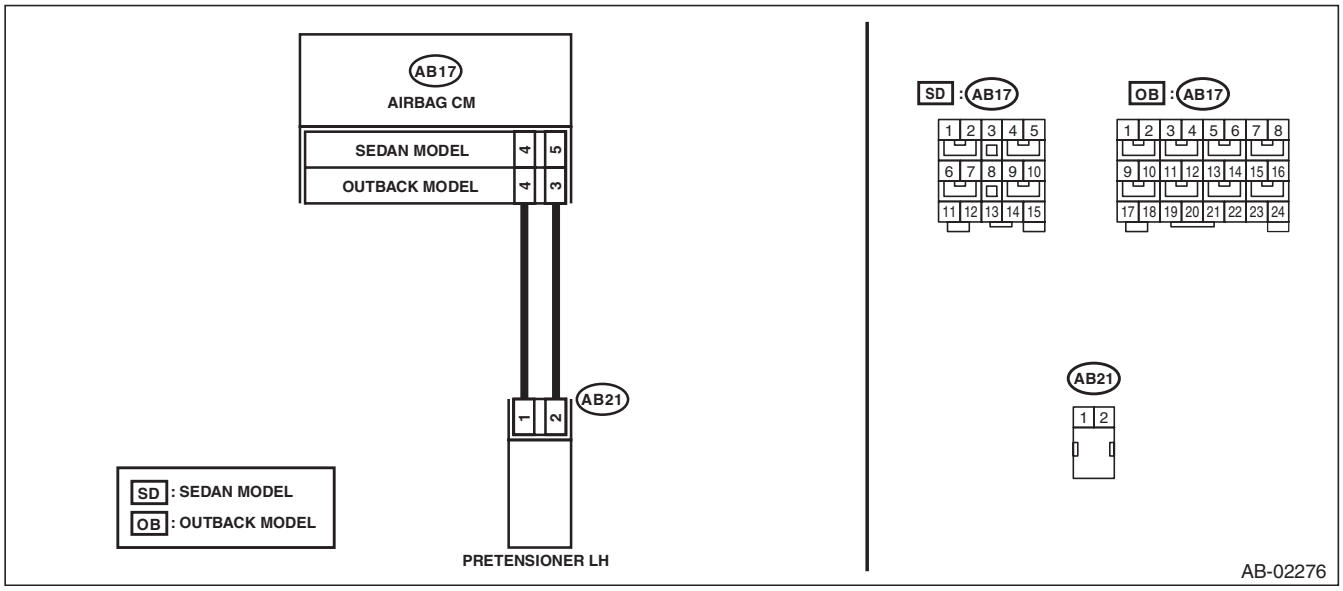

	Step	Check	Yes	No
1	**CHECK POOR CONTACT OF CONNECTORS.** Check for poor contact of the connectors between the airbag control module and the seat belt pretensioner LH.	Is there poor contact?	Replace the airbag rear harness along with body harness.	Go to step **2**.
2	**CHECK SEAT BELT PRETENSIONER.** 1) Turn the ignition switch to OFF, disconnect the battery ground cable, and wait for 60 seconds or more. 2) Disconnect the connector (AB21) from seat belt pretensioner (LH). 3) Connect the connector (1N) in the test harness N to the connector (AB21). 4) Connect the airbag resistor to the connector (2N) of test harness N. 5) Connect the battery ground terminal and turn the ignition switch to ON.	Does the airbag warning light illuminate for six seconds and go off?	Replace the seat belt pretensioner (LH). <Ref. to SB-17, Front Seat Belt.>	Go to step **3**.

GETthemMANUALS.org

	Step	Check	Yes	No
3	**CHECK AIRBAG REAR HARNESS (PRE-TENSIONER HARNESS LH).** 1) Turn the ignition switch to OFF, disconnect the battery ground cable, and wait for 60 seconds or more. 2) Disconnect the airbag resistor from test harness N. 3) Disconnect connector (AB19) from side airbag module (LH). 4) Disconnect the connector (AB31) from curtain airbag module (LH). 5) Disconnect the connectors (AB6, AB17, AB18) from airbag control module. 6) Connect the connector (1AG) in the test harness AG to the connectors (AB6, AB17, AB18). NOTE: For sedan models, connect test harness AH between the connectors (AB6, AB17, AB18) and (1AG). 7) Measure the resistance between connector (3AG) in the test harness AG and chassis ground. ***Connector & terminal*** ***(3AG) No. 18 — Chassis ground:*** ***(3AG) No. 20 — Chassis ground:***	Is the resistance 1 MΩ or more?	Go to step **4**.	Replace the airbag rear harness along with body harness.
4	**CHECK AIRBAG CONTROL MODULE.** 1) Connect all connectors. 2) Clear the memory. 3) Perform the Inspection Mode. 4) Read the DTC.	Is the same DTC displayed?	Replace the airbag control module. <Ref. to AB-68, Airbag Control Module.>	Go to step **5**.
5	**CHECK FOR ANY OTHER DTC ON DISPLAY.**	Is any other DTC displayed?	Check DTC using "List of Diagnostic Trouble Code (DTC)". <Ref. to AB(diag)-41, List of Diagnostic Trouble Code (DTC).>	Finish the diagnosis.

GETthemANUALS.org

AP:DTC 65 BELT PRETENSIONER RH FAILURE

DTC DETECTING CONDITION:

- Seat belt pretensioner (RH) circuit is shorted to power supply.
- Pretensioner (RH) is faulty.
- Pretensioner harness is faulty.
- Airbag control module is faulty.

CAUTION:

Before performing diagnosis, refer to “CAUTION” in “General Description”. <Ref. to AB(diag)-5, CAUTION, General Description.>

WIRING DIAGRAM:

- Type A

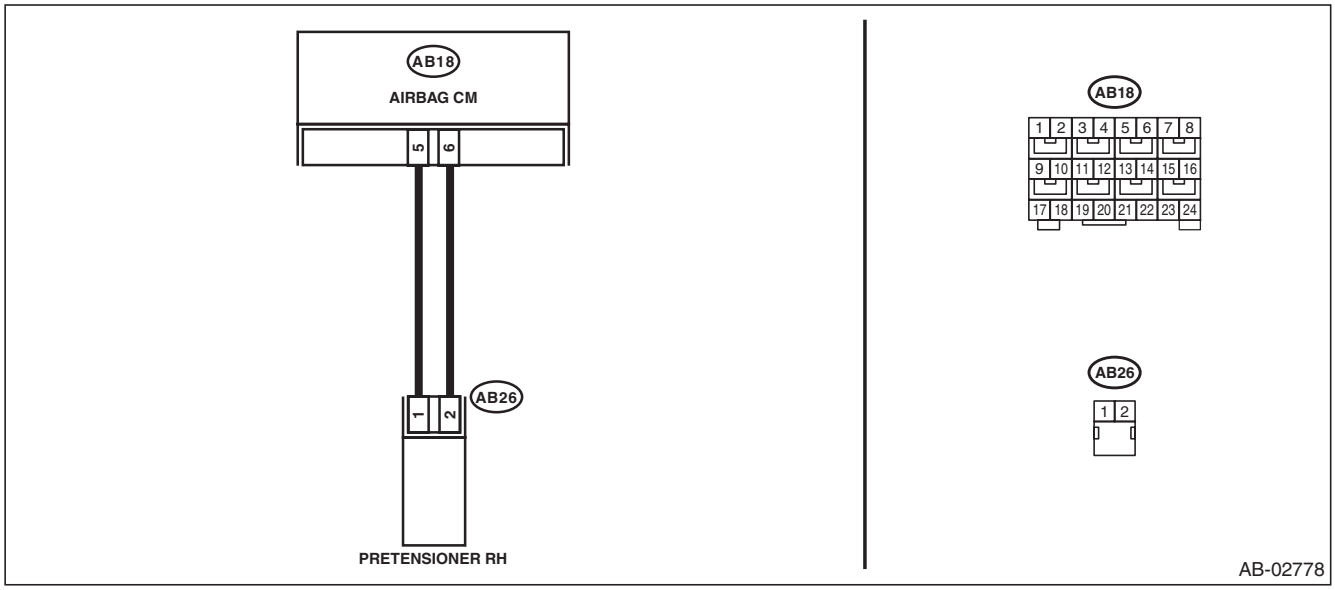

- Type B

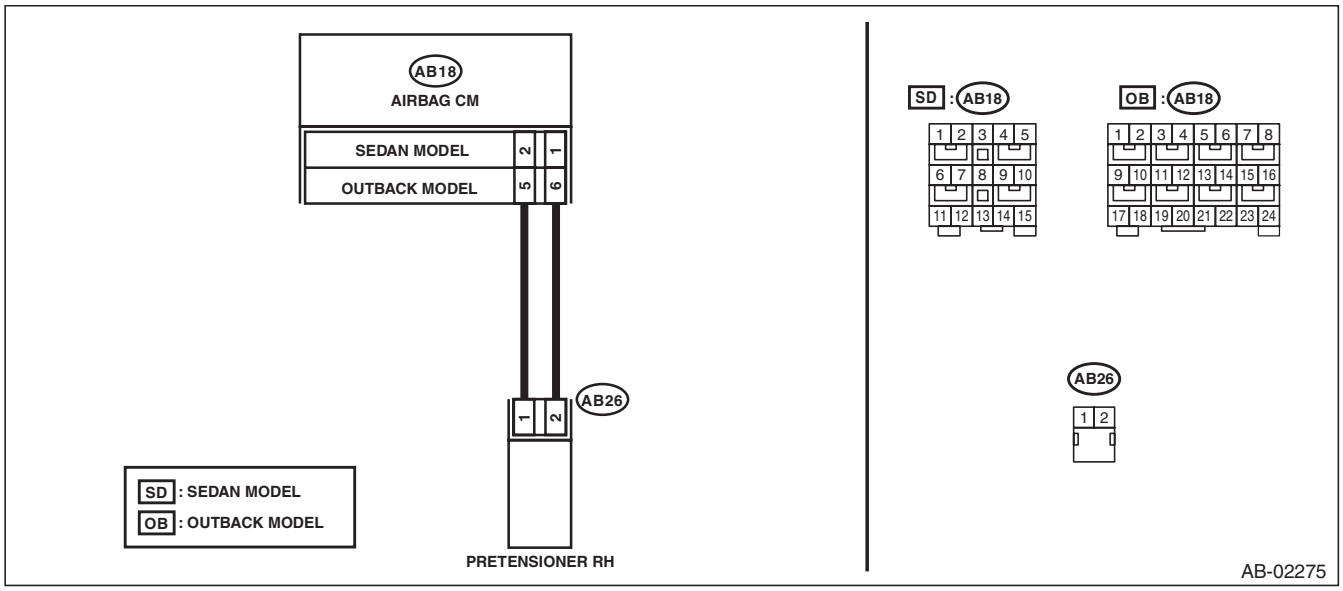

GETtheMANUALS.org

Diagnostic Chart with Trouble Code

	Step	Check	Yes	No
1	**CHECK POOR CONTACT OF CONNECTORS.** Check for poor contact of the connectors between the airbag control module and the seat belt pretensioner RH.	Is there poor contact?	Replace the airbag rear harness along with body harness.	Go to step **2**.
2	**CHECK SEAT BELT PRETENSIONER.** 1) Turn the ignition switch to OFF, disconnect the battery ground cable, and wait for 60 seconds or more. 2) Disconnect the connector (AB26) from seat belt pretensioner (RH). 3) Connect the connector (1N) in the test harness N to the connector (AB26). 4) Connect the airbag resistor to the connector (2N) of test harness N. 5) Connect the battery ground terminal and turn the ignition switch to ON.	Does the airbag warning light illuminate for six seconds and go off?	Replace the seat belt pretensioner (RH). <Ref. to SB-17, Front Seat Belt.>	Go to step **3**.
3	**CHECK AIRBAG REAR HARNESS (PRETENSIONER HARNESS RH).** 1) Turn the ignition switch to OFF, disconnect the battery ground cable, and wait for 60 seconds or more. 2) Disconnect the airbag resistor from test harness N. 3) Disconnect connector (AB24) from side airbag module (RH). 4) Disconnect the connector (AB33) from curtain airbag module (RH). 5) Disconnect the connectors (AB6, AB17, AB18) from airbag control module. 6) Connect the connector (1AG) in the test harness AG to the connectors (AB6, AB17, AB18). NOTE: For type B (sedan models), connect test harness AH between the connectors (AB6, AB17, AB18) and (1AG). 7) Connect the battery ground terminal and turn the ignition switch to ON. 8) Measure the voltage between connector (3AG) in the test harness AG and chassis ground. ***Connector & terminal*** ***(3AG) No. 10 (+) — Chassis ground (–):*** ***(3AG) No. 12 (+) — Chassis ground (–):***	Is the voltage less than 1 V?	Go to step **4**.	Replace the airbag rear harness along with body harness.
4	**CHECK AIRBAG CONTROL MODULE.** 1) Connect all connectors. 2) Clear the memory. 3) Perform the Inspection Mode. 4) Read the DTC.	Is the same DTC displayed?	Replace the airbag control module. <Ref. to AB-68, Airbag Control Module.>	Go to step **5**.
5	**CHECK FOR ANY OTHER DTC ON DISPLAY.**	Is any other DTC displayed?	Check DTC using "List of Diagnostic Trouble Code (DTC)". <Ref. to AB(diag)-41, List of Diagnostic Trouble Code (DTC).>	Finish the diagnosis.

GETtheMANUALS.org

AQ:DTC 66 BELT PRETENSIONER LH FAILURE

DTC DETECTING CONDITION:

- Seat belt pretensioner (LH) circuit is shorted to power supply.
- Pretensioner (LH) is faulty.
- Pretensioner harness is faulty.
- Airbag control module is faulty.

CAUTION:

Before performing diagnosis, refer to “CAUTION” in “General Description”. <Ref. to AB(diag)-5, CAUTION, General Description.>

WIRING DIAGRAM:

- Type A

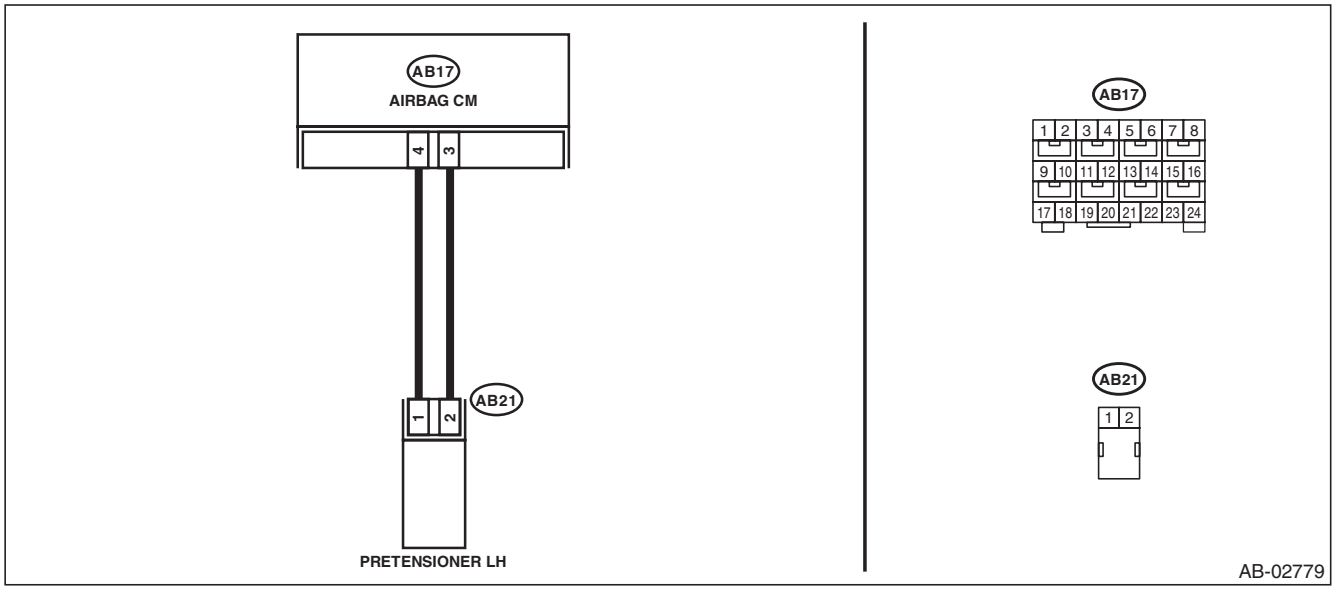

- Type B

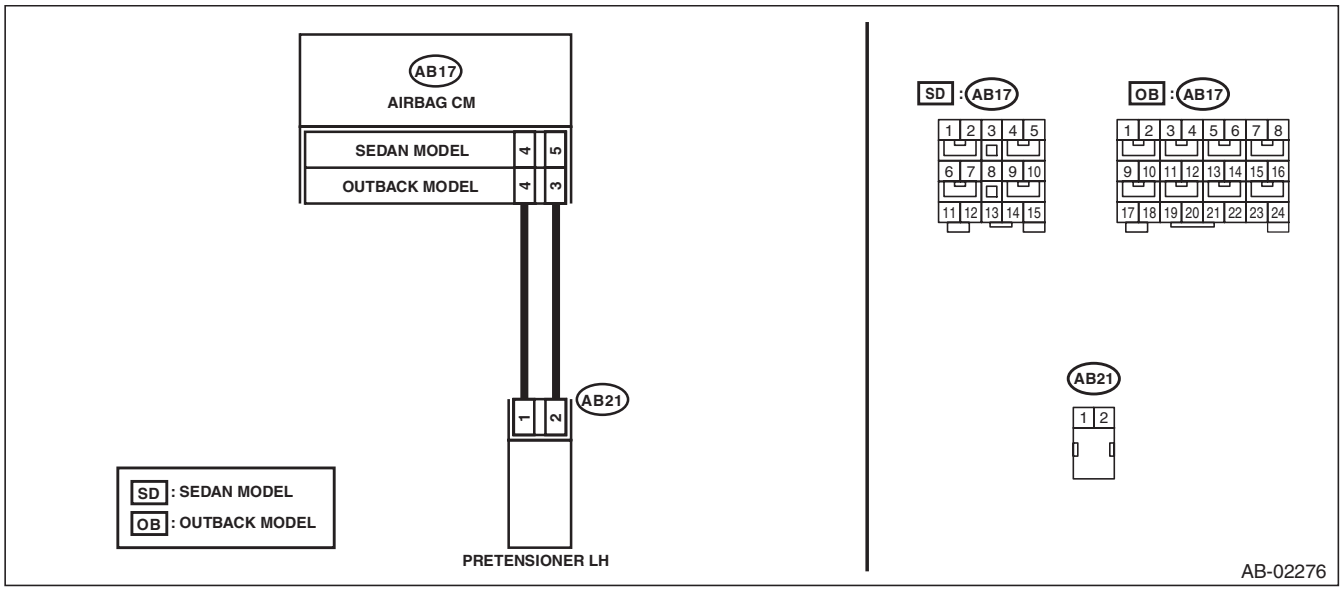

GETtheMANUALS.org

Diagnostic Chart with Trouble Code

	Step	Check	Yes	No
1	**CHECK POOR CONTACT OF CONNECTORS.** Check for poor contact of the connectors between the airbag control module and the seat belt pretensioner LH.	Is there poor contact?	Replace the airbag rear harness along with body harness.	Go to step **2**.
2	**CHECK SEAT BELT PRETENSIONER.** 1) Turn the ignition switch to OFF, disconnect the battery ground cable, and wait for 60 seconds or more. 2) Disconnect the connector (AB21) from seat belt pretensioner (LH). 3) Connect the connector (1N) in the test harness N to the connector (AB21). 4) Connect the airbag resistor to the connector (2N) of test harness N. 5) Connect the battery ground terminal and turn the ignition switch to ON.	Does the airbag warning light illuminate for six seconds and go off?	Replace the seat belt pretensioner (LH). <Ref. to SB-17, Front Seat Belt.>	Go to step **3**.
3	**CHECK AIRBAG REAR HARNESS (PRETENSIONER HARNESS LH).** 1) Turn the ignition switch to OFF, disconnect the battery ground cable, and wait for 60 seconds or more. 2) Disconnect the airbag resistor from test harness N. 3) Disconnect connector (AB19) from side airbag module (LH). 4) Disconnect the connector (AB31) from curtain airbag module (LH). 5) Disconnect the connectors (AB6, AB17, AB18) from airbag control module. 6) Connect the connector (1AG) in the test harness AG to the connectors (AB6, AB17, AB18). NOTE: For type B (sedan models), connect test harness AH between the connectors (AB6, AB17, AB18) and (1AG). 7) Connect the battery ground terminal and turn the ignition switch to ON. 8) Measure the voltage between connector (3AG) in the test harness AG and chassis ground. ***Connector & terminal*** ***(3AG) No. 18 (+) — Chassis ground (–):*** ***(3AG) No. 20 (+) — Chassis ground (–):***	Is the voltage less than 1 V?	Go to step **4**.	Replace the airbag rear harness along with body harness.
4	**CHECK AIRBAG CONTROL MODULE.** 1) Connect all connectors. 2) Clear the memory. 3) Perform the Inspection Mode. 4) Read the DTC.	Is the same DTC displayed?	Replace the airbag control module. <Ref. to AB-68, Airbag Control Module.>	Go to step **5**.
5	**CHECK FOR ANY OTHER DTC ON DISPLAY.**	Is any other DTC displayed?	Check DTC using "List of Diagnostic Trouble Code (DTC)". <Ref. to AB(diag)-41, List of Diagnostic Trouble Code (DTC).>	Finish the diagnosis.

GETtheMANUALS.org

AR:DTC 6A BELT PRETENSIONER RH FAILURE

DTC DETECTING CONDITION:

- Seat belt pretensioner (RH) circuit is shorted.
- Pretensioner (RH) is faulty.
- Pretensioner harness is faulty.
- Airbag control module is faulty.

CAUTION:

Before performing diagnosis, refer to "CAUTION" in "General Description". <Ref. to AB(diag)-5, CAUTION, General Description.>

WIRING DIAGRAM:

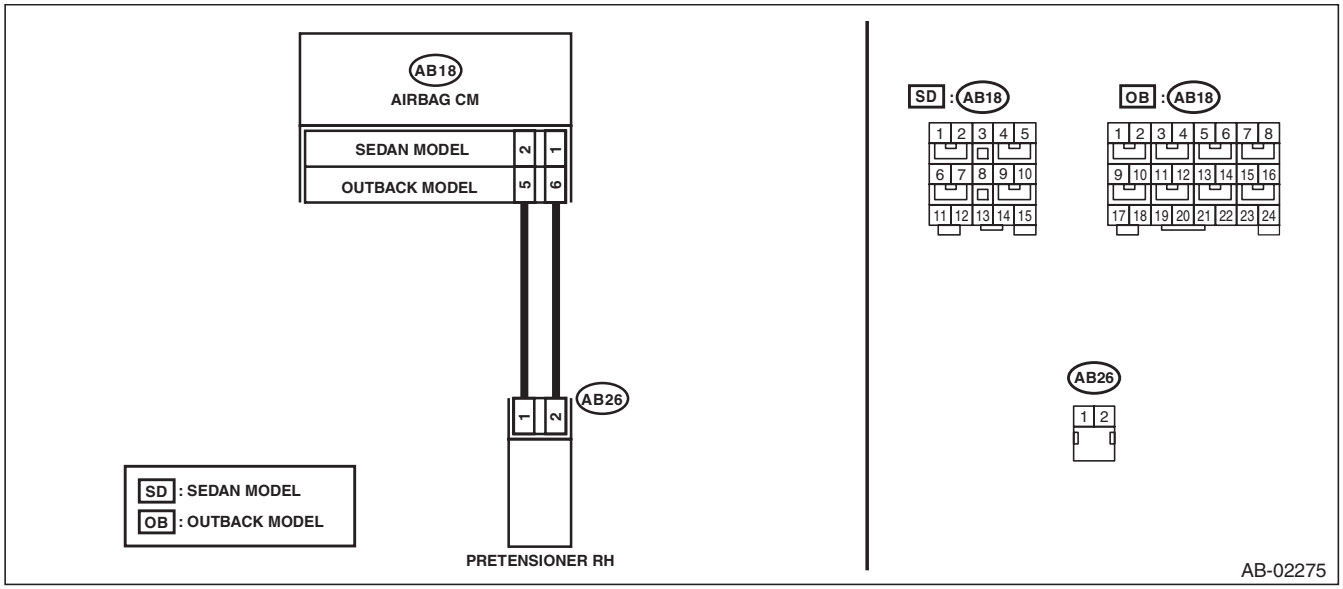

Step		Check	Yes	No
1	**CHECK POOR CONTACT OF CONNECTORS.** Check for poor contact of the connectors between the airbag control module and the seat belt pretensioner RH.	Is there poor contact?	Replace the airbag rear harness along with body harness.	Go to step **2**.
2	**CHECK SEAT BELT PRETENSIONER.** 1) Turn the ignition switch to OFF, disconnect the battery ground cable, and wait for 60 seconds or more. 2) Disconnect the connector (AB26) from seat belt pretensioner (RH). 3) Connect the connector (1N) in the test harness N to the connector (AB26). 4) Connect the airbag resistor to the connector (2N) of test harness N. 5) Connect the battery ground terminal and turn the ignition switch to ON.	Does the airbag warning light illuminate for six seconds and go off?	Replace the seat belt pretensioner (RH). <Ref. to SB-17, Front Seat Belt.>	Go to step **3**.

GETtheMANUALS.org

	Step	Check	Yes	No
3	**CHECK AIRBAG REAR HARNESS (PRE-TENSIONER HARNESS RH).** 1) Turn the ignition switch to OFF, disconnect the battery ground cable, and wait for 60 seconds or more. 2) Disconnect the airbag resistor from test harness N. 3) Disconnect connector (AB24) from side airbag module (RH). 4) Disconnect the connector (AB33) from curtain airbag module (RH). 5) Disconnect the connectors (AB6, AB17, AB18) from airbag control module. 6) Connect the connector (1AG) in the test harness AG to the connectors (AB6, AB17, AB18). NOTE: For sedan models, connect test harness AH between the connectors (AB6, AB17, AB18) and (1AG). 7) Measure the resistance between connector (3AG) terminals in test harness AG. ***Connector & terminal*** ***(3AG) No. 10 — (3AG) No. 12:***	Is the resistance 1 MΩ or more?	Go to step **4**.	Replace the airbag rear harness along with body harness.
4	**CHECK AIRBAG CONTROL MODULE.** 1) Connect all connectors. 2) Clear the memory. 3) Perform the Inspection Mode. 4) Read the DTC.	Is the same DTC displayed?	Replace the airbag control module. <Ref. to AB-68, Airbag Control Module.>	Go to step **5**.
5	**CHECK FOR ANY OTHER DTC ON DISPLAY.**	Is any other DTC displayed?	Check DTC using “List of Diagnostic Trouble Code (DTC)”. <Ref. to AB(diag)-41, List of Diagnostic Trouble Code (DTC).>	Finish the diagnosis.

GETtheMANUALS.org

AS:DTC 6B BELT PRETENSIONER LH FAILURE

DTC DETECTING CONDITION:

- Seat belt pretensioner (LH) circuit is shorted.
- Pretensioner (LH) is faulty.
- Pretensioner harness is faulty.
- Airbag control module is faulty.

CAUTION:

Before performing diagnosis, refer to "CAUTION" in "General Description". <Ref. to AB(diag)-5, CAUTION, General Description.>

WIRING DIAGRAM:

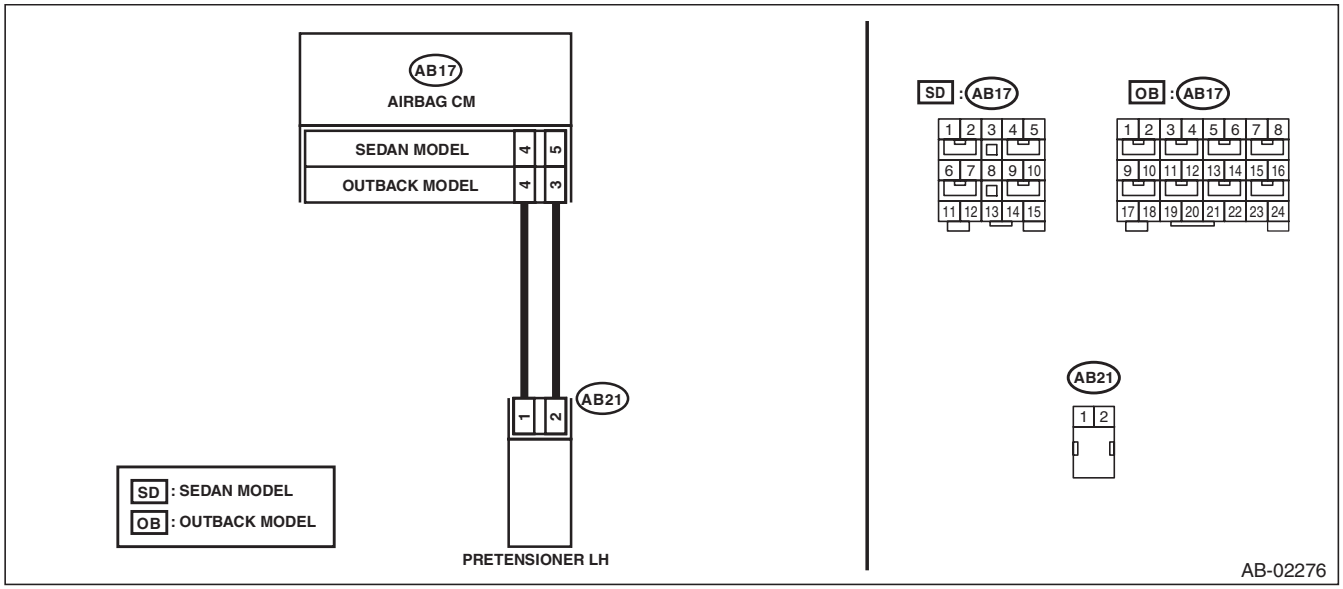

Step		Check	Yes	No
1	**CHECK POOR CONTACT OF CONNECTORS.** Check for poor contact of the connectors between the airbag control module and the seat belt pretensioner LH.	Is there poor contact?	Replace the airbag rear harness along with body harness.	Go to step **2**.
2	**CHECK SEAT BELT PRETENSIONER.** 1) Turn the ignition switch to OFF, disconnect the battery ground cable, and wait for 60 seconds or more. 2) Disconnect the connector (AB21) from seat belt pretensioner (LH). 3) Connect the connector (1N) in the test harness N to the connector (AB21). 4) Connect the airbag resistor to the connector (2N) of test harness N. 5) Connect the battery ground terminal and turn the ignition switch to ON.	Does the airbag warning light illuminate for six seconds and go off?	Replace the seat belt pretensioner (LH). <Ref. to SB-17, Front Seat Belt.>	Go to step **3**.

GETtheMANUALS.org

	Step	Check	Yes	No
3	**CHECK AIRBAG REAR HARNESS (PRE-TENSIONER HARNESS LH).** 1) Turn the ignition switch to OFF, disconnect the battery ground cable, and wait for 60 seconds or more. 2) Disconnect the airbag resistor from test harness N. 3) Disconnect connector (AB19) from side airbag module (LH). 4) Disconnect the connector (AB31) from curtain airbag module (LH). 5) Disconnect the connectors (AB6, AB17, AB18) from airbag control module. 6) Connect the connector (1AG) in the test harness AG to the connectors (AB6, AB17, AB18). NOTE: For sedan models, connect test harness AH between the connectors (AB6, AB17, AB18) and (1AG). 7) Measure the resistance between connector (3AG) terminals in test harness AG. ***Connector & terminal*** ***(3AG) No. 18 — (3AG) No. 20:***	Is the resistance 1 MΩ or more?	Go to step **4**.	Replace the airbag rear harness along with body harness.
4	**CHECK AIRBAG CONTROL MODULE.** 1) Connect all connectors. 2) Clear the memory. 3) Perform the Inspection Mode. 4) Read the DTC.	Is the same DTC displayed?	Replace the airbag control module. <Ref. to AB-68, Airbag Control Module.>	Go to step **5**.
5	**CHECK FOR ANY OTHER DTC ON DISPLAY.**	Is any other DTC displayed?	Check DTC using “List of Diagnostic Trouble Code (DTC)”. <Ref. to AB(diag)-41, List of Diagnostic Trouble Code (DTC).>	Finish the diagnosis.

GETtheMANUALS.org

AT:DTC 6D BELT PRETENSIONER RH FAILURE

DTC DETECTING CONDITION:

- Seat belt pretensioner (RH) circuit is open.
- Pretensioner (RH) is faulty.
- Pretensioner harness is faulty.
- Airbag control module is faulty.

CAUTION:

Before performing diagnosis, refer to "CAUTION" in "General Description". <Ref. to AB(diag)-5, CAUTION, General Description.>

WIRING DIAGRAM:

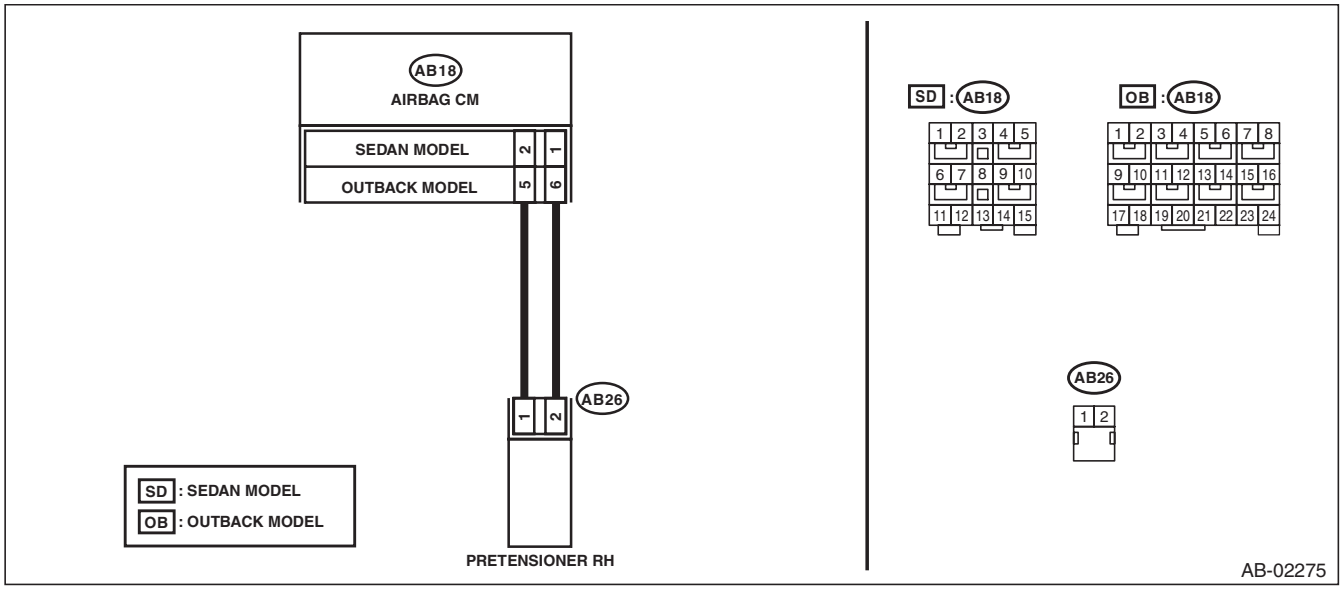

Step		Check	Yes	No
1	**CHECK POOR CONTACT OF CONNECTORS.** Check for poor contact of the connectors between the airbag control module and the seat belt pretensioner RH.	Is there poor contact?	Replace the airbag rear harness along with body harness.	Go to step **2**.
2	**CHECK SEAT BELT PRETENSIONER.** 1) Turn the ignition switch to OFF, disconnect the battery ground cable, and wait for 60 seconds or more. 2) Disconnect the connector (AB26) from seat belt pretensioner (RH). 3) Connect the connector (1N) in the test harness N to the connector (AB26). 4) Connect the airbag resistor to the connector (2N) of test harness N. 5) Connect the battery ground terminal and turn the ignition switch to ON.	Does the airbag warning light illuminate for six seconds and go off?	Replace the seat belt pretensioner (RH). <Ref. to SB-17, Front Seat Belt.>	Go to step **3**.

GETtheMANUALS.org

	Step	Check	Yes	No
3	**CHECK AIRBAG REAR HARNESS (PRE-TENSIONER HARNESS RH).** 1) Turn the ignition switch to OFF, disconnect the battery ground cable, and wait for 60 seconds or more. 2) Disconnect the airbag resistor from test harness N. 3) Disconnect connector (AB24) from side airbag module (RH). 4) Disconnect the connector (AB33) from curtain airbag module (RH). 5) Disconnect the connectors (AB6, AB17, AB18) from airbag control module. 6) Connect the connector (1AG) in the test harness AG to the connectors (AB6, AB17, AB18). NOTE: For sedan models, connect test harness AH between the connectors (AB6, AB17, AB18) and (1AG). 7) Measure the resistance between connector (3AG) in the test harness AG and connector (2N) in the test harness N. ***Connector & terminal*** ***(3AG) No. 10 — (2N) No. 2:*** ***(3AG) No. 12 — (2N) No. 1:***	Is the resistance less than 10 Ω?	Go to step **4**.	Replace the airbag rear harness along with body harness.
4	**CHECK AIRBAG CONTROL MODULE.** 1) Connect all connectors. 2) Clear the memory. 3) Perform the Inspection Mode. 4) Read the DTC.	Is the same DTC displayed?	Replace the airbag control module. <Ref. to AB-68, Airbag Control Module.>	Go to step **5**.
5	**CHECK FOR ANY OTHER DTC ON DISPLAY.**	Is any other DTC displayed?	Check DTC using “List of Diagnostic Trouble Code (DTC)”. <Ref. to AB(diag)-41, List of Diagnostic Trouble Code (DTC).>	Finish the diagnosis.

GETthemMANUALS.org

AU:DTC 6E BELT PRETENSIONER LH FAILURE

DTC DETECTING CONDITION:

- Seat belt pretensioner (LH) circuit is open.
- Pretensioner (LH) is faulty.
- Pretensioner harness is faulty.
- Airbag control module is faulty.

CAUTION:

Before performing diagnosis, refer to "CAUTION" in "General Description". <Ref. to AB(diag)-5, CAUTION, General Description.>

WIRING DIAGRAM:

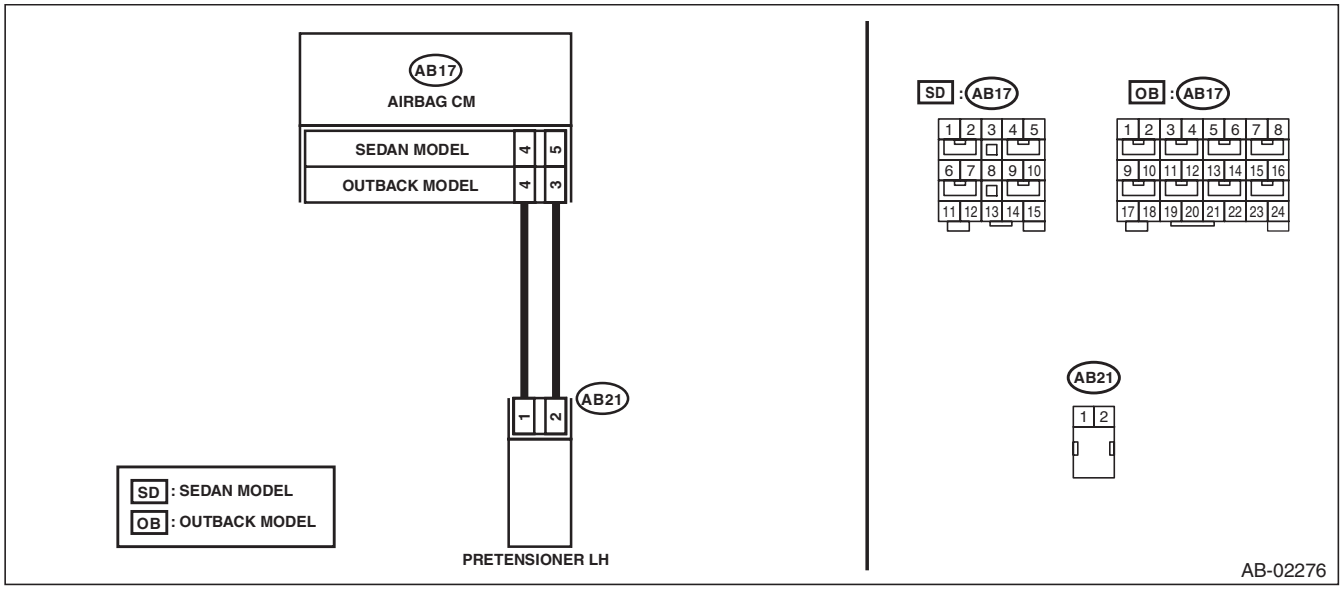

Step		Check	Yes	No
1	**CHECK POOR CONTACT OF CONNECTORS.** Check for poor contact of the connectors between the airbag control module and the seat belt pretensioner LH.	Is there poor contact?	Replace the airbag rear harness along with body harness.	Go to step **2**.
2	**CHECK SEAT BELT PRETENSIONER.** 1) Turn the ignition switch to OFF, disconnect the battery ground cable, and wait for 60 seconds or more. 2) Disconnect the connector (AB21) from seat belt pretensioner (LH). 3) Connect the connector (1N) in the test harness N to the connector (AB21). 4) Connect the airbag resistor to the connector (2N) of test harness N. 5) Connect the battery ground terminal and turn the ignition switch to ON.	Does the airbag warning light illuminate for six seconds and go off?	Replace the seat belt pretensioner (LH). <Ref. to SB-17, Front Seat Belt.>	Go to step **3**.

GETtheMANUALS.org

	Step	Check	Yes	No
3	**CHECK AIRBAG REAR HARNESS (PRE-TENSIONER HARNESS LH).** 1) Turn the ignition switch to OFF, disconnect the battery ground cable, and wait for 60 seconds or more. 2) Disconnect the airbag resistor from test harness N. 3) Disconnect connector (AB19) from side airbag module (LH). 4) Disconnect the connector (AB31) from curtain airbag module (LH). 5) Disconnect the connectors (AB6, AB17, AB18) from airbag control module. 6) Connect the connector (1AG) in the test harness AG to the connectors (AB6, AB17, AB18). NOTE: For sedan models, connect test harness AH between the connectors (AB6, AB17, AB18) and (1AG). 7) Measure the resistance between connector (3AG) in the test harness AG and connector (2N) in the test harness N. ***Connector & terminal*** ***(3AG) No. 18 — (2N) No. 1:*** ***(3AG) No. 20 — (2N) No. 2:***	Is the resistance less than 10 Ω?	Go to step **4**.	Replace the airbag rear harness along with body harness.
4	**CHECK AIRBAG CONTROL MODULE.** 1) Connect all connectors. 2) Clear the memory. 3) Perform the Inspection Mode. 4) Read the DTC.	Is the same DTC displayed?	Replace the airbag control module. <Ref. to AB-68, Airbag Control Module.>	Go to step **5**.
5	**CHECK FOR ANY OTHER DTC ON DISPLAY.**	Is any other DTC displayed?	Check DTC using "List of Diagnostic Trouble Code (DTC)". <Ref. to AB(diag)-41, List of Diagnostic Trouble Code (DTC).>	Finish the diagnosis.

GETthemANUALS.org

AV:DTC 71 DRIVER'S AIRBAG FAILURE

NOTE:
Be sure to properly identify the Airbag system type prior to performing any diagnostics.

1. TYPE A

DTC DETECTING CONDITION:
- Airbag main harness circuit is open, shorted or shorted to ground.
- Airbag module harness (Driver's side) circuit is open, shorted or shorted to ground.
- Roll connector circuit is open, shorted or shorted to ground.
- Driver's airbag module is faulty.
- Airbag control module is faulty.

CAUTION:
Before performing diagnosis, refer to "CAUTION" in "General Description". <Ref. to AB(diag)-5, CAUTION, General Description.>

NOTE:
Prior to starting work, prepare two AIRBAG RESISTORs (98299PA040).
WIRING DIAGRAM:

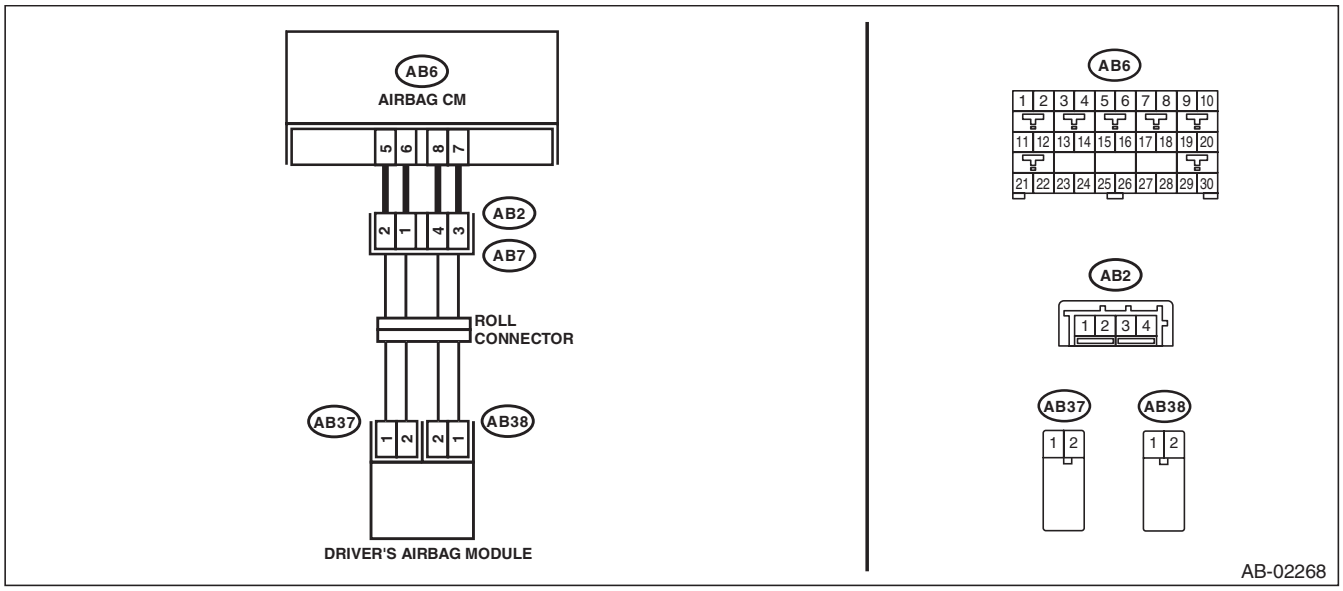

Step		Check	Yes	No
1	**CHECK POOR CONTACT OF CONNECTORS.** Check for poor contact of the connectors between the airbag control module and the driver's airbag module.	Is there poor contact?	Replace the airbag harness.	Go to step **2**.

GETthemANUALS.org

	Step	Check	Yes	No
2	**CHECK DRIVER'S AIRBAG MODULE.** 1) Turn the ignition switch to OFF, disconnect the battery ground cable, and wait for 60 seconds or more. 2) Remove the driver's airbag module. 3) Connect the connector (1N) in the test harness N to the connector (AB38). 4) Connect the airbag resistor to the connector (2N) of test harness N. 5) Connect the connector (1Q) in the test harness Q to connector (AB37). 6) Connect the airbag resistor to the connector (2Q) in the test harness Q. 7) Connect the battery ground terminal and turn the ignition switch to ON.	Does the airbag warning light illuminate for six seconds and go off?	Replace the driver's airbag module. <Ref. to AB-35, Driver's Airbag Module.>	Go to step **3**.
3	**CHECK ROLL CONNECTOR AND AIRBAG MAIN HARNESS (DRIVER'S AIRBAG HARNESS).** 1) Turn the ignition switch to OFF, disconnect the battery ground cable, and wait for 60 seconds or more. 2) Remove the console front panel and disconnect the connector (AB9). 3) Disconnect the airbag resistor from the connector (2N) in test harness N. 4) Disconnect the airbag resistor from the connector (2Q) of test harness Q. 5) Disconnect the connectors (AB6, AB17, AB18) from airbag control module. 6) Measure the resistance between connector (2N) terminals in test harness N. ***Connector & terminal*** ***(2N) No. 1 — (2N) No. 2:***	Is the resistance less than 10 Ω?	Go to step **5**.	Go to step **4**.
4	**CHECK ROLL CONNECTOR.** 1) Remove the instrument panel lower cover and column cover, and disconnect the connector (AB7) from (AB2). 2) Measure the resistance between connector (2N) terminals in test harness N. ***Connector & terminal*** ***(2N) No. 1 — (2N) No. 2:***	Is the resistance less than 10 Ω?	Replace the airbag main harness along with body harness.	Replace the roll connector. <Ref. to AB-96, Roll Connector.>
5	**CHECK ROLL CONNECTOR AND AIRBAG MAIN HARNESS (DRIVER'S AIRBAG HARNESS).** 1) Remove the instrument panel lower cover and column cover, and disconnect the connector (AB7) from (AB2). 2) Measure the resistance between connector (2N) in the test harness N and chassis ground. ***Connector & terminal*** ***(2N) No. 1 — Chassis ground:*** ***(2N) No. 2 — Chassis ground:***	Is the resistance 1 MΩ or more?	Go to step **8**.	Go to step **6**.

GETthemANUALS.org

	Step	Check	Yes	No
6	**CHECK ROLL CONNECTOR.** 1) Remove the instrument panel lower cover and column cover, and disconnect the connector (AB7) from (AB2). 2) Measure the resistance between connector (2N) in the test harness N and chassis ground. ***Connector & terminal*** ***(2N) No. 1 — Chassis ground:*** ***(2N) No. 2 — Chassis ground:***	Is the resistance 1 MΩ or more?	Go to step **7**.	Replace the roll connector. <Ref. to AB-96, Roll Connector.>
7	**CHECK AIRBAG MAIN HARNESS (DRIVER'S AIRBAG HARNESS).** 1) Connect the test harness AG connector (1AG) to the connectors (AB6, AB17, AB18). 2) Measure the resistance between connector (3AG) in the test harness AG and chassis ground. ***Connector & terminal*** ***(3AG) No. 2 — Chassis ground:*** ***(3AG) No. 4 — Chassis ground:***	Is the resistance 1 MΩ or more?	Go to step **10**.	Replace the airbag main harness along with body harness.
8	**CHECK ROLL CONNECTOR AND AIRBAG MAIN HARNESS (DRIVER'S AIRBAG HARNESS).** 1) Connect the test harness AG connector (1AG) to the connectors (AB6, AB17, AB18). 2) Measure the resistance between connector (2N) terminals in test harness N. ***Connector & terminal*** ***(2N) No. 1 — (2N) No. 2:***	Is the resistance 1 MΩ or more?	Go to step **10**.	Go to step **9**.
9	**CHECK ROLL CONNECTOR AND AIRBAG MAIN HARNESS (DRIVER'S AIRBAG HARNESS).** 1) Remove the instrument panel lower cover and column cover, and disconnect the connector (AB7) from (AB2). 2) Measure the resistance between connector (3AG) terminals in test harness AG. ***Connector & terminal*** ***(3AG) No. 2 — (3AG) No. 4:***	Is the resistance 1 MΩ or more?	Replace the roll connector. <Ref. to AB-96, Roll Connector.>	Replace the airbag main harness along with body harness.
10	**CHECK AIRBAG CONTROL MODULE.** 1) Connect all connectors. 2) Clear the memory. 3) Perform the Inspection Mode. 4) Read the DTC.	Is the same DTC displayed?	Replace the airbag control module. <Ref. to AB-68, Airbag Control Module.>	Go to step **11**.
11	**CHECK FOR ANY OTHER DTC ON DISPLAY.**	Is any other DTC displayed?	Check DTC using "List of Diagnostic Trouble Code (DTC)". <Ref. to AB(diag)-41, List of Diagnostic Trouble Code (DTC).>	Finish the diagnosis.

GETtheMANUALS.org

2. TYPE B

DTC DETECTING CONDITION:

- Airbag main harness circuit is shorted to ground.
- Airbag module harness (driver's side) circuit is shorted to ground.
- Roll connector circuit is shorted to ground.
- Driver's airbag module is faulty.
- Airbag control module is faulty.

CAUTION:

Before performing diagnosis, refer to "CAUTION" in "General Description". <Ref. to AB(diag)-5, CAUTION, General Description.>

NOTE:
Prior to starting work, prepare two AIRBAG RESISTORs (98299PA040).

WIRING DIAGRAM:

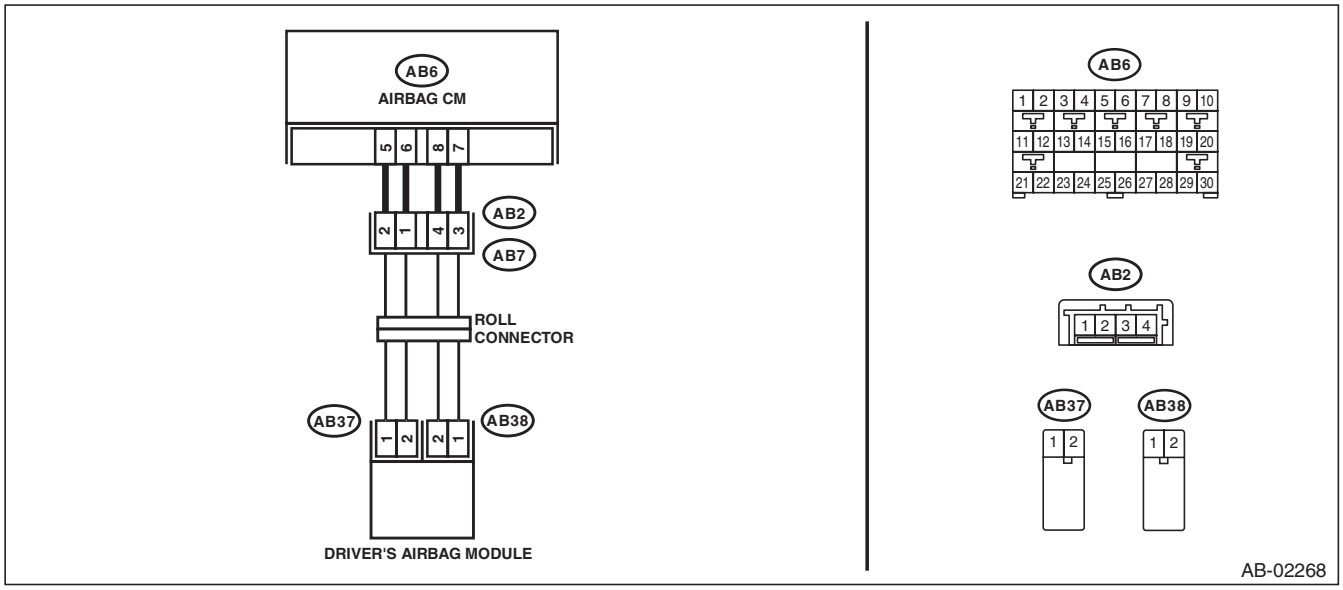

Step		Check	Yes	No
1	**CHECK POOR CONTACT OF CONNECTORS.** Check for poor contact of the connectors between the airbag control module and the driver's airbag module.	Is there poor contact?	Replace the airbag harness.	Go to step **2**.
2	**CHECK DRIVER'S AIRBAG MODULE.** 1) Turn the ignition switch to OFF, disconnect the battery ground cable, and wait for 60 seconds or more. 2) Remove the driver's airbag module. 3) Connect the connector (1N) in the test harness N to the connector (AB38). 4) Connect the airbag resistor to the connector (2N) of test harness N. 5) Connect the connector (1Q) in the test harness Q to connector (AB37). 6) Connect the airbag resistor to the connector (2Q) in the test harness Q. 7) Connect the battery ground terminal and turn the ignition switch to ON.	Does the airbag warning light illuminate for six seconds and go off?	Replace the driver's airbag module. <Ref. to AB-35, Driver's Airbag Module.>	Go to step **3**.

GETtheMANUALS.org

	Step	Check	Yes	No
3	**CHECK ROLL CONNECTOR.** 1) Turn the ignition switch to OFF, disconnect the battery ground cable, and wait for 60 seconds or more. 2) Remove the instrument panel lower cover and column cover, and disconnect the connector (AB7) from (AB2). 3) Disconnect the airbag resistor from the connector (2N) in test harness N and from the connector (2Q) in test harness Q. 4) Measure the resistance between connector (2N) in the test harness N and chassis ground. ***Connector & terminal*** ***(2N) No. 1 — Chassis ground:*** ***(2N) No. 2 — Chassis ground:***	Is the resistance 1 MΩ or more?	Go to step **4**.	Replace the roll connector. <Ref. to AB-96, Roll Connector.>
4	**CHECK AIRBAG MAIN HARNESS (DRIVER'S AIRBAG HARNESS).** 1) Disconnect the test harness N from connector (AB38). 2) Disconnect the test harness Q from connector (AB37). 3) Remove the console front panel and disconnect the connector (AB9). 4) Disconnect the connectors (AB6, AB17, AB18) from the airbag control module, and connect the connector (1AG) in the test harness AG. NOTE: For sedan models, connect test harness AH between the connectors (AB6, AB17, AB18) and (1AG). 5) Measure the resistance between connector (3AG) in the test harness AG and chassis ground. ***Connector & terminal*** ***(3AG) No. 2 — Chassis ground:*** ***(3AG) No. 4 — Chassis ground:***	Is the resistance 1 MΩ or more?	Go to step **5**.	Replace the airbag main harness along with body harness.
5	**CHECK AIRBAG CONTROL MODULE.** 1) Connect all connectors. 2) Clear the memory. 3) Perform the Inspection Mode. 4) Read the DTC.	Is the same DTC displayed?	Replace the airbag control module. <Ref. to AB-68, Airbag Control Module.>	Go to step **6**.
6	**CHECK FOR ANY OTHER DTC ON DISPLAY.**	Is any other DTC displayed?	Check DTC using "List of Diagnostic Trouble Code (DTC)". <Ref. to AB(diag)-41, List of Diagnostic Trouble Code (DTC).>	Finish the diagnosis.

GETtheMANUALS.org

AW:DTC 72 PASSENGER'S AIRBAG FAILURE

NOTE:
Be sure to properly identify the Airbag system type prior to performing any diagnostics.

1. TYPE A

DTC DETECTING CONDITION:
- Airbag main harness circuit is open, shorted or shorted to ground.
- Airbag module harness (Passenger's side) circuit is open, shorted or shorted to ground.
- Passenger's airbag module is faulty.
- Airbag control module is faulty.

CAUTION:
Before performing diagnosis, refer to "CAUTION" in "General Description". <Ref. to AB(diag)-5, CAUTION, General Description.>

NOTE:
Prior to starting work, prepare two AIRBAG RESISTORs (98299PA040).
WIRING DIAGRAM:

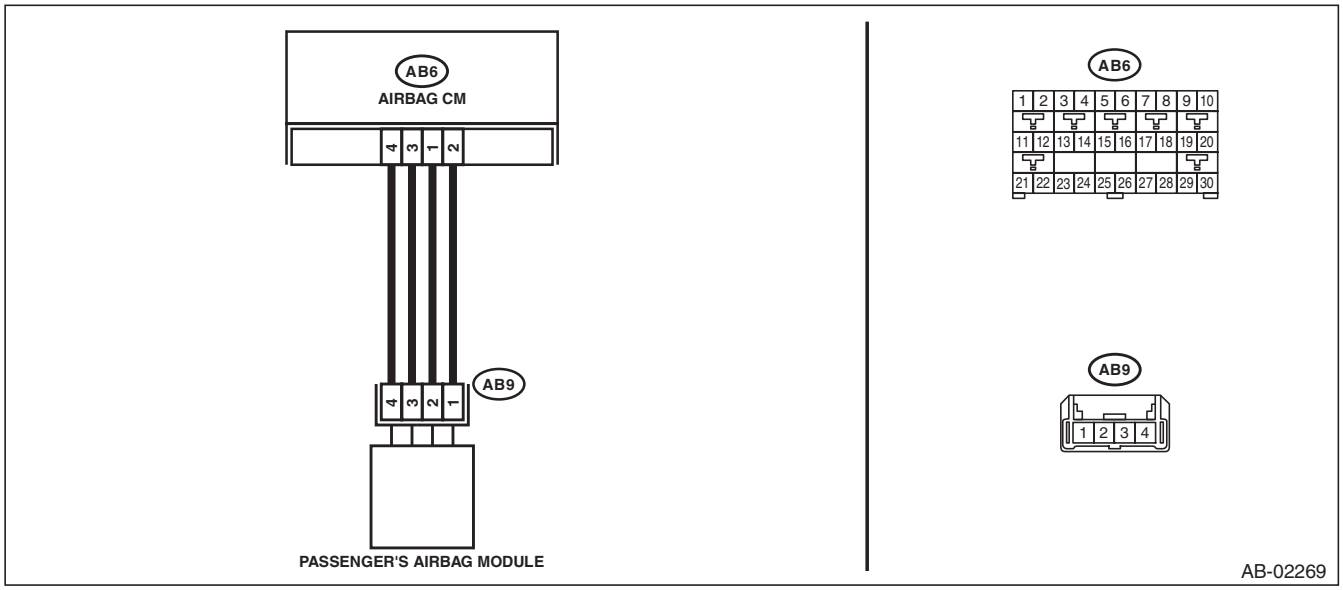

Step		Check	Yes	No
1	**CHECK POOR CONTACT OF CONNECTORS.** Check for poor contact of the connectors between the airbag control module and the passenger's airbag module.	Is there poor contact?	Replace the airbag main harness along with body harness.	Go to step **2**.
2	**CHECK PASSENGER'S AIRBAG MODULE.** 1) Turn the ignition switch to OFF, disconnect the battery ground cable, and wait for 60 seconds or more. 2) Remove the console front panel and disconnect the connectors (AB10) from (AB9). 3) Connect the connector (1P) in the test harness P to connector (AB9). 4) Connect the airbag resistor to the connectors (2P) and (3P) of test harness P. 5) Connect the battery ground terminal and turn the ignition switch to ON.	Does the airbag warning light illuminate for six seconds and go off?	Replace the passenger's airbag module. <Ref. to AB-37, Passenger's Airbag Module.>	Go to step **3**.

GETtheMANUALS.org

	Step	Check	Yes	No
3	**CHECK AIRBAG MAIN HARNESS (PASSENGER'S AIRBAG HARNESS).** 1) Turn the ignition switch to OFF, disconnect the battery ground cable, and wait for 60 seconds or more. 2) Disconnect the airbag resistor from the connectors (2P) and (3P) of test harness P. 3) Remove the instrument panel lower cover and disconnect the connector (AB7) from (AB2). 4) Disconnect the connectors (AB6, AB17, AB18) from the airbag control module, and connect the connector (1AG) in the test harness AG. 5) Measure the resistance between connectors (3AG) in the test harness AG, and between connector (3AG) and chassis ground. ***Connector & terminal*** ***(3AG) No. 8 — (3AG) No. 6:*** ***(3AG) No. 8 — Chassis ground:*** ***(3AG) No. 6 — Chassis ground:***	Is the resistance 1 MΩ or more?	Go to step **4**.	Replace the airbag main harness along with body harness.
4	**CHECK AIRBAG MAIN HARNESS (PASSENGER'S AIRBAG HARNESS).** Measure the resistance between connector (3AG) of test harness AG and connector (3P) of test harness P. ***Connector & terminal*** ***(3AG) No. 6 — (3P) No. 4:*** ***(3AG) No. 8 — (3P) No. 3:***	Is the resistance less than 10 Ω?	Go to step **5**.	Replace the airbag main harness along with body harness.
5	**CHECK AIRBAG CONTROL MODULE.** 1) Connect all connectors. 2) Clear the memory. 3) Perform the Inspection Mode. 4) Read the DTC.	Is the same DTC displayed?	Replace the airbag control module. <Ref. to AB-68, Airbag Control Module.>	Go to step **6**.
6	**CHECK FOR ANY OTHER DTC ON DISPLAY.**	Is any other DTC displayed?	Check DTC using "List of Diagnostic Trouble Code (DTC)". <Ref. to AB(diag)-41, List of Diagnostic Trouble Code (DTC).>	Finish the diagnosis.

GETtheMANUALS.org

2. TYPE B

DTC DETECTING CONDITION:

- Airbag main harness circuit is shorted to ground.
- Airbag module harness (passenger's side) circuit is shorted to ground.
- Passenger's airbag module is faulty.
- Airbag control module is faulty.

CAUTION:

Before performing diagnosis, refer to "CAUTION" in "General Description". <Ref. to AB(diag)-5, CAUTION, General Description.>

NOTE:

Prior to starting work, prepare two AIRBAG RESISTORs (98299PA040).

WIRING DIAGRAM:

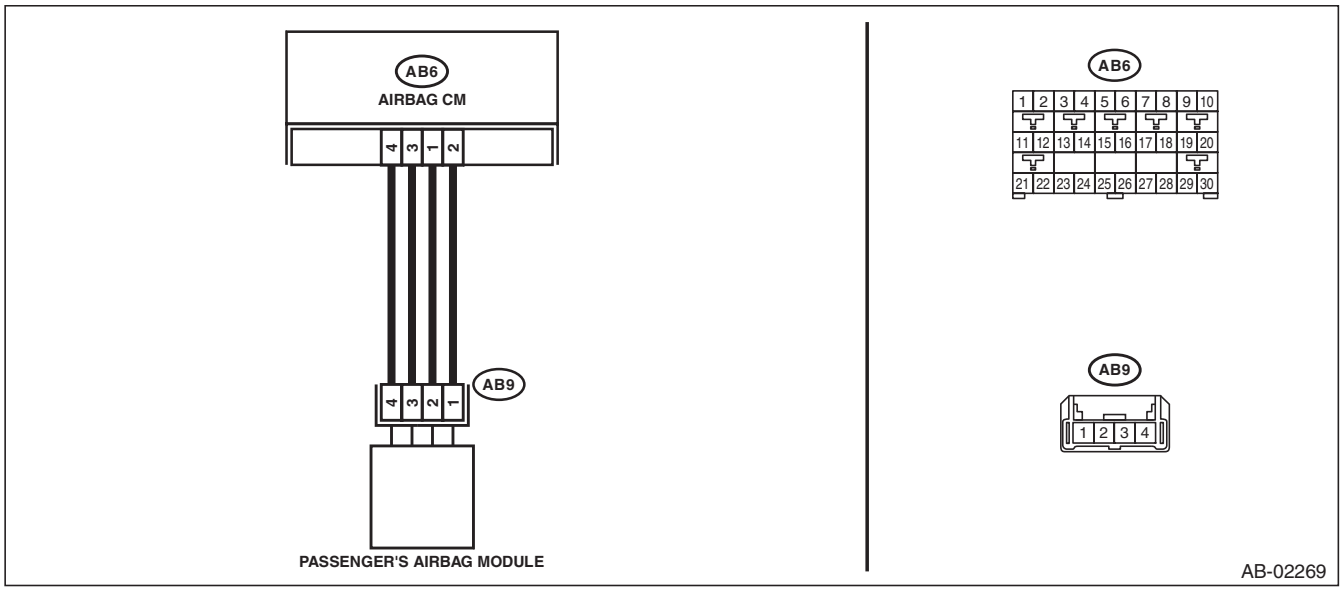

	Step	Check	Yes	No
1	**CHECK POOR CONTACT OF CONNECTORS.** Check for poor contact of the connectors between the airbag control module and the passenger's airbag module.	Is there poor contact?	Replace the airbag harness.	Go to step **2**.
2	**CHECK PASSENGER'S AIRBAG MODULE.** 1) Turn the ignition switch to OFF, disconnect the battery ground cable, and wait for 60 seconds or more. 2) Remove the console front panel and disconnect the connector (AB9). 3) Connect the connector (1P) in the test harness P to connector (AB9). 4) Connect the airbag resistor to the connectors (2P) and (3P) of test harness P. 5) Connect the battery ground terminal and turn the ignition switch to ON.	Does the airbag warning light illuminate for six seconds and go off?	Replace the passenger's airbag module. <Ref. to AB-37, Passenger's Airbag Module.>	Go to step **3**.

GETtheMANUALS.org

	Step	Check	Yes	No
3	**CHECK AIRBAG MAIN HARNESS (PASSENGER'S AIRBAG HARNESS).** 1) Turn the ignition switch to OFF, disconnect the battery ground cable, and wait for 60 seconds or more. 2) Disconnect the airbag resistor from the connectors (2P) and (3P) of test harness P. 3) Remove the instrument panel lower cover and column cover, and disconnect the connector (AB7) from (AB2). 4) Disconnect the connectors (AB6, AB17, AB18) from the airbag control module, and connect the connector (1AG) in the test harness AG. NOTE: For sedan models, connect test harness AH between the connectors (AB6, AB17, AB18) and (1AG). 5) Measure the resistance between connector (3AG) in the test harness AG and chassis ground. ***Connector & terminal*** ***(3AG) No. 8 — Chassis ground:*** ***(3AG) No. 6 — Chassis ground:***	Is the resistance 1 MΩ or more?	Go to step **4**.	Replace the airbag main harness along with body harness.
4	**CHECK AIRBAG CONTROL MODULE.** 1) Connect all connectors. 2) Clear the memory. 3) Perform the Inspection Mode. 4) Read the DTC.	Is the same DTC displayed?	Replace the airbag control module. <Ref. to AB-68, Airbag Control Module.>	Go to step **5**.
5	**CHECK FOR ANY OTHER DTC ON DISPLAY.**	Is any other DTC displayed?	Check DTC using "List of Diagnostic Trouble Code (DTC)". <Ref. to AB(diag)-41, List of Diagnostic Trouble Code (DTC).>	Finish the diagnosis.

GETtheMANUALS.org

AX:DTC 75 DRIVER'S AIRBAG FAILURE

DTC DETECTING CONDITION:

- Airbag main harness circuit is shorted to power supply.
- Airbag module harness (driver's side) circuit is shorted to power supply.
- Roll connector is shorted to power supply.
- Driver's airbag module is faulty.
- Airbag control module is faulty.

CAUTION:
Before performing diagnosis, refer to "CAUTION" in "General Description". <Ref. to AB(diag)-5, CAUTION, General Description.>

NOTE:
Prior to starting work, prepare two AIRBAG RESISTORs (98299PA040).

WIRING DIAGRAM:

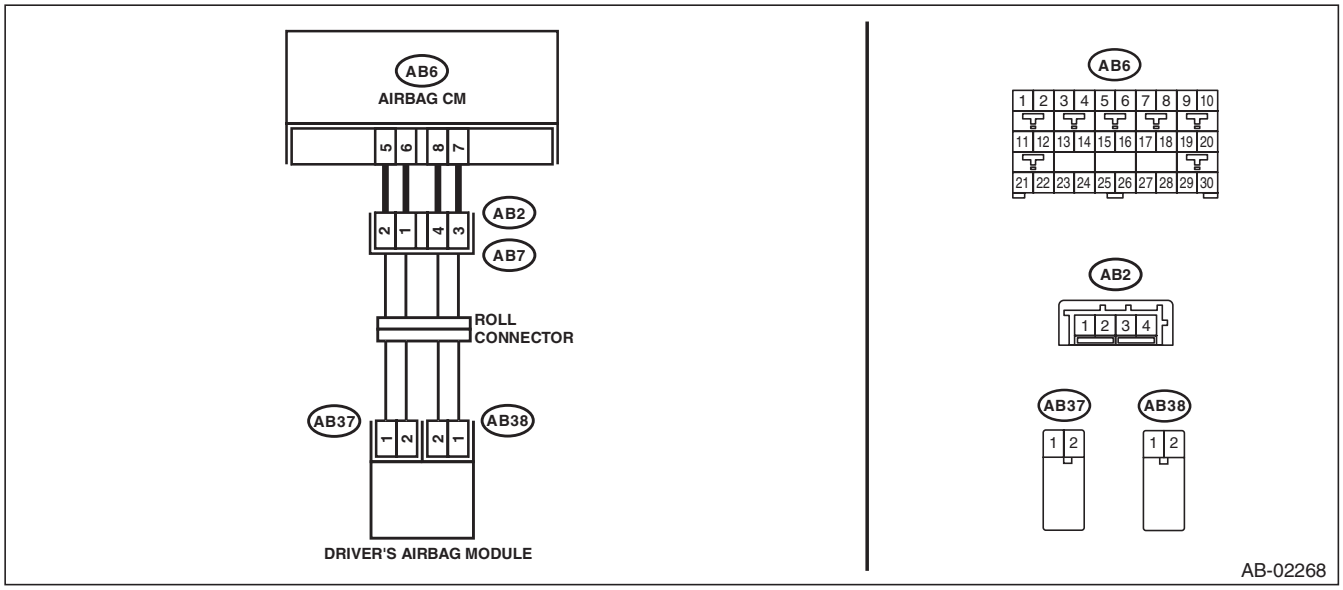

Step		Check	Yes	No
1	**CHECK POOR CONTACT OF CONNECTORS.** Check for poor contact of the connectors between the airbag control module and the driver's airbag module.	Is there poor contact?	Replace the airbag harness.	Go to step **2**.
2	**CHECK DRIVER'S AIRBAG MODULE.** 1) Turn the ignition switch to OFF, disconnect the battery ground cable, and wait for 60 seconds or more. 2) Remove the driver's airbag module. 3) Connect the connector (1N) in the test harness N to the connector (AB38). 4) Connect the airbag resistor to the connector (2N) of test harness N. 5) Connect the connector (1Q) in the test harness Q to connector (AB37). 6) Connect the airbag resistor to the connector (2Q) in the test harness Q. 7) Connect the battery ground terminal and turn the ignition switch to ON.	Does the airbag warning light illuminate for six seconds and go off?	Replace the driver's airbag module. <Ref. to AB-35, Driver's Airbag Module.>	Go to step **3**.

GETthemMANUALS.org

	Step	Check	Yes	No
3	**CHECK ROLL CONNECTOR.** 1) Turn the ignition switch to OFF, disconnect the battery ground cable, and wait for 60 seconds or more. 2) Remove the instrument panel lower cover and column cover, and disconnect the connector (AB7) from (AB2). 3) Disconnect the airbag resistor from the connector (2N) in test harness N and from the connector (2Q) in test harness Q. 4) Measure the voltage between connector (2N) in the test harness N and chassis ground. ***Connector & terminal*** ***(2N) No. 1 (+) — Chassis ground (–):*** ***(2N) No. 2 (+) — Chassis ground (–):***	Is the voltage less than 1 V?	Go to step **4**.	Replace the roll connector. <Ref. to AB-96, Roll Connector.>
4	**CHECK AIRBAG MAIN HARNESS (DRIVER'S AIRBAG HARNESS).** 1) Disconnect the test harness N from connector (AB38). 2) Disconnect the test harness Q from connector (AB37). 3) Remove the console front panel and disconnect the connector (AB9). 4) Disconnect the connectors (AB6, AB17, AB18) from the airbag control module, and connect the connector (1AG) in the test harness AG. NOTE: For type B (sedan models), connect test harness AH between the connectors (AB6, AB17, AB18) and (1AG). 5) Measure the voltage between connector (3AG) in the test harness AG and chassis ground. ***Connector & terminal*** ***(3AG) No. 2 (+) — Chassis ground (–):*** ***(3AG) No. 4 (+) — Chassis ground (–):***	Is the voltage less than 1 V?	Go to step **5**.	Replace the airbag main harness along with body harness.
5	**CHECK AIRBAG CONTROL MODULE.** 1) Connect all connectors. 2) Clear the memory. 3) Perform the Inspection Mode. 4) Read the DTC.	Is the same DTC displayed?	Replace the airbag control module. <Ref. to AB-68, Airbag Control Module.>	Go to step **6**.
6	**CHECK FOR ANY OTHER DTC ON DISPLAY.**	Is any other DTC displayed?	Check DTC using "List of Diagnostic Trouble Code (DTC)". <Ref. to AB(diag)-41, List of Diagnostic Trouble Code (DTC).>	Finish the diagnosis.

GETtheMANUALS.org

AY:DTC 76 PASSENGER'S AIRBAG FAILURE

DTC DETECTING CONDITION:

- Airbag main harness circuit is shorted to power supply.
- Airbag module harness (passenger's side) circuit is shorted to power supply.
- Passenger's airbag module is faulty.
- Airbag control module is faulty.

CAUTION:

Before performing diagnosis, refer to "CAUTION" in "General Description". <Ref. to AB(diag)-5, CAUTION, General Description.>

NOTE:
Prior to starting work, prepare two AIRBAG RESISTORs (98299PA040).

WIRING DIAGRAM:

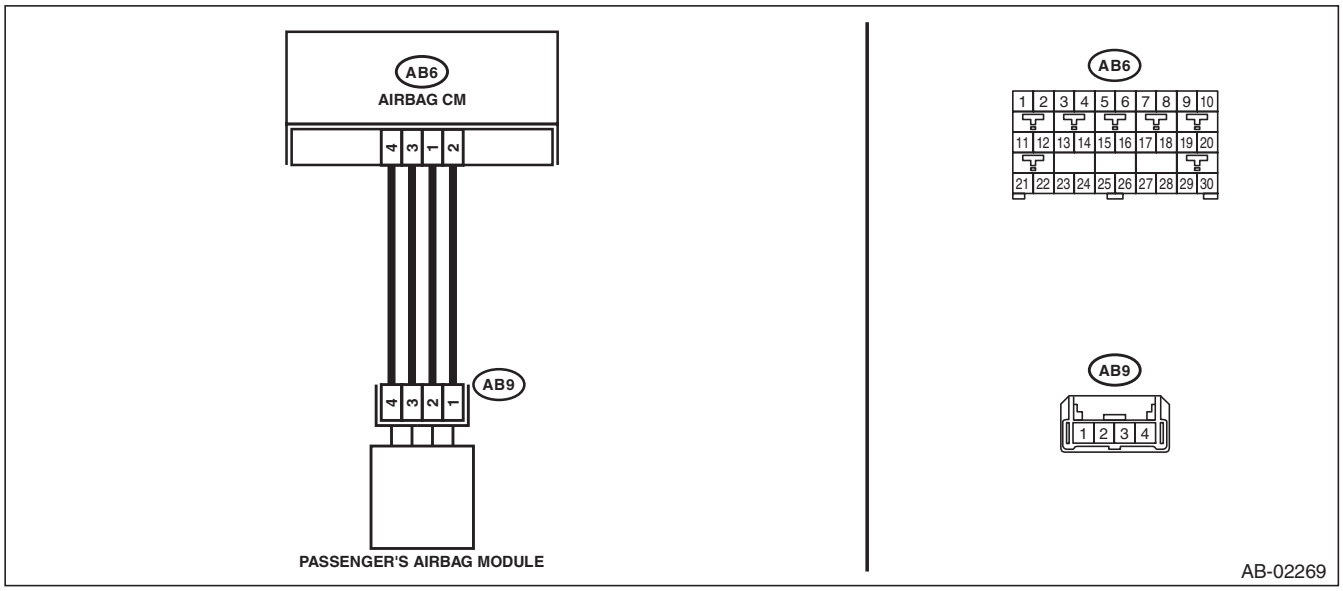

Step		Check	Yes	No
1	**CHECK POOR CONTACT OF CONNECTORS.** Check for poor contact of the connectors between the airbag control module and the passenger's airbag module.	Is there poor contact?	Replace the airbag harness along with chassis harness.	Go to step **2**.
2	**CHECK PASSENGER'S AIRBAG MODULE.** 1) Turn the ignition switch to OFF, disconnect the battery ground cable, and wait for 60 seconds or more. 2) Remove the console front panel and disconnect the connector (AB9). 3) Connect the connector (1P) in the test harness P to connector (AB9). 4) Connect the airbag resistor to the connectors (2P) and (3P) of test harness P. 5) Connect the battery ground terminal and turn the ignition switch to ON.	Does the airbag warning light illuminate for six seconds and go off?	Replace the passenger's airbag module. <Ref. to AB-37, Passenger's Airbag Module.>	Go to step **3**.

GETtheMANUALS.org

	Step	Check	Yes	No
3	**CHECK AIRBAG MAIN HARNESS (PASSENGER'S AIRBAG HARNESS).** 1) Turn the ignition switch to OFF, disconnect the battery ground cable, and wait for 60 seconds or more. 2) Disconnect the airbag resistor from the connectors (2P) and (3P) of test harness P. 3) Remove the instrument panel lower cover and column cover, and disconnect the connector (AB7) from (AB2). 4) Disconnect the connectors (AB6, AB17, AB18) from the airbag control module, and connect the connector (1AG) in the test harness AG. NOTE: For type B (sedan models), connect test harness AH between the connectors (AB6, AB17, AB18) and (1AG). 5) Measure the voltage between connector (3AG) in the test harness AG and chassis ground. ***Connector & terminal*** ***(3AG) No. 8 (+) — Chassis ground (–):*** ***(3AG) No. 6 (+) — Chassis ground (–):***	Is the voltage less than 1 V?	Go to step **4**.	Replace the airbag main harness along with body harness.
4	**CHECK AIRBAG CONTROL MODULE.** 1) Connect all connectors. 2) Clear the memory. 3) Perform the Inspection Mode. 4) Read the DTC.	Is the same DTC displayed?	Replace the airbag control module. <Ref. to AB-68, Airbag Control Module.>	Go to step **5**.
5	**CHECK FOR ANY OTHER DTC ON DISPLAY.**	Is any other DTC displayed?	Check DTC using "List of Diagnostic Trouble Code (DTC)". <Ref. to AB(diag)-41, List of Diagnostic Trouble Code (DTC).>	Finish the diagnosis.

GETtheMANUALS.org

AZ:DTC 7A DRIVER'S AIRBAG FAILURE

DTC DETECTING CONDITION:

- Airbag main harness circuit is shorted.
- Airbag module harness (driver's side) circuit is shorted.
- Roll connector circuit is shorted.
- Driver's airbag module is faulty.
- Airbag control module is faulty.

CAUTION:

Before performing diagnosis, refer to "CAUTION" in "General Description". <Ref. to AB(diag)-5, CAUTION, General Description.>

NOTE:

Prior to starting work, prepare two AIRBAG RESISTORs (98299PA040).

WIRING DIAGRAM:

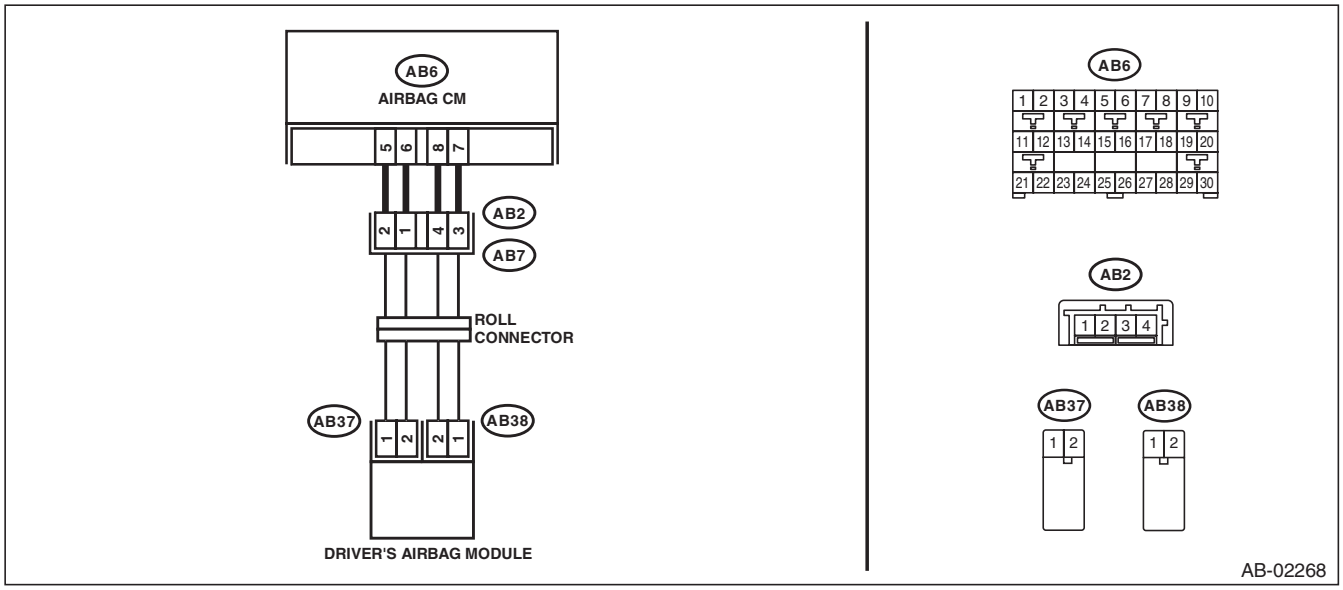

Step		Check	Yes	No
1	**CHECK POOR CONTACT OF CONNECTORS.** Check for poor contact of the connectors between the airbag control module and the driver's airbag module.	Is there poor contact?	Replace the airbag harness.	Go to step **2**.
2	**CHECK DRIVER'S AIRBAG MODULE.** 1) Turn the ignition switch to OFF, disconnect the battery ground cable, and wait for 60 seconds or more. 2) Remove the driver's airbag module. 3) Connect the connector (1N) in the test harness N to the connector (AB38). 4) Connect the airbag resistor to the connector (2N) of test harness N. 5) Connect the connector (1Q) in the test harness Q to connector (AB37). 6) Connect the airbag resistor to the connector (2Q) in the test harness Q. 7) Connect the battery ground terminal and turn the ignition switch to ON.	Does the airbag warning light illuminate for six seconds and go off?	Replace the driver's airbag module. <Ref. to AB-35, Driver's Airbag Module.>	Go to step **3**.

GETtheMANUALS.org

	Step	Check	Yes	No
3	**CHECK ROLL CONNECTOR AND AIRBAG MAIN HARNESS (DRIVER'S AIRBAG HARNESS).** 1) Turn the ignition switch to OFF, disconnect the battery ground cable, and wait for 60 seconds or more. 2) Remove the console front panel and disconnect the connector (AB9). 3) Disconnect the airbag resistor from the connector (2N) in test harness N and from the connector (2Q) in test harness Q. 4) Disconnect the connectors (AB6, AB17, AB18) from the airbag control module, and connect the connector (1AG) in the test harness AG. NOTE: For sedan models, connect test harness AH between the connectors (AB6, AB17, AB18) and (1AG). 5) Measure the resistance between connector (2N) terminals in test harness N. ***Connector & terminal*** ***(2N) No. 1 — (2N) No. 2:***	Is the resistance 1 MΩ or more?	Go to step **5**.	Go to step **4**.
4	**CHECK AIRBAG MAIN HARNESS (DRIVER'S AIRBAG HARNESS).** 1) Remove the instrument panel lower cover and column cover, and disconnect the connector (AB7) from (AB2). 2) Disconnect the test harness Q from connector (AB37). 3) Measure the resistance between connector (3AG) terminals in test harness AG. ***Connector & terminal*** ***(3AG) No. 2 — (3AG) No. 4:***	Is the resistance 1 MΩ or more?	Replace the roll connector. <Ref. to AB-96, Roll Connector.>	Replace the airbag main harness along with body harness.
5	**CHECK AIRBAG CONTROL MODULE.** 1) Connect all connectors. 2) Clear the memory. 3) Perform the Inspection Mode. 4) Read the DTC.	Is the same DTC displayed?	Replace the airbag control module. <Ref. to AB-68, Airbag Control Module.>	Go to step **6**.
6	**CHECK FOR ANY OTHER DTC ON DISPLAY.**	Is any other DTC displayed?	Check DTC using "List of Diagnostic Trouble Code (DTC)". <Ref. to AB(diag)-41, List of Diagnostic Trouble Code (DTC).>	Finish the diagnosis.

GETtheMANUALS.org

BA:DTC 7B PASSENGER'S AIRBAG FAILURE

DTC DETECTING CONDITION:

- Airbag main harness circuit is shorted.
- Airbag module harness (passenger's side) circuit is shorted.
- Passenger's airbag module is faulty.
- Airbag control module is faulty.

CAUTION:

Before performing diagnosis, refer to "CAUTION" in "General Description". <Ref. to AB(diag)-5, CAUTION, General Description.>

NOTE:
Prior to starting work, prepare two AIRBAG RESISTORs (98299PA040).

WIRING DIAGRAM:

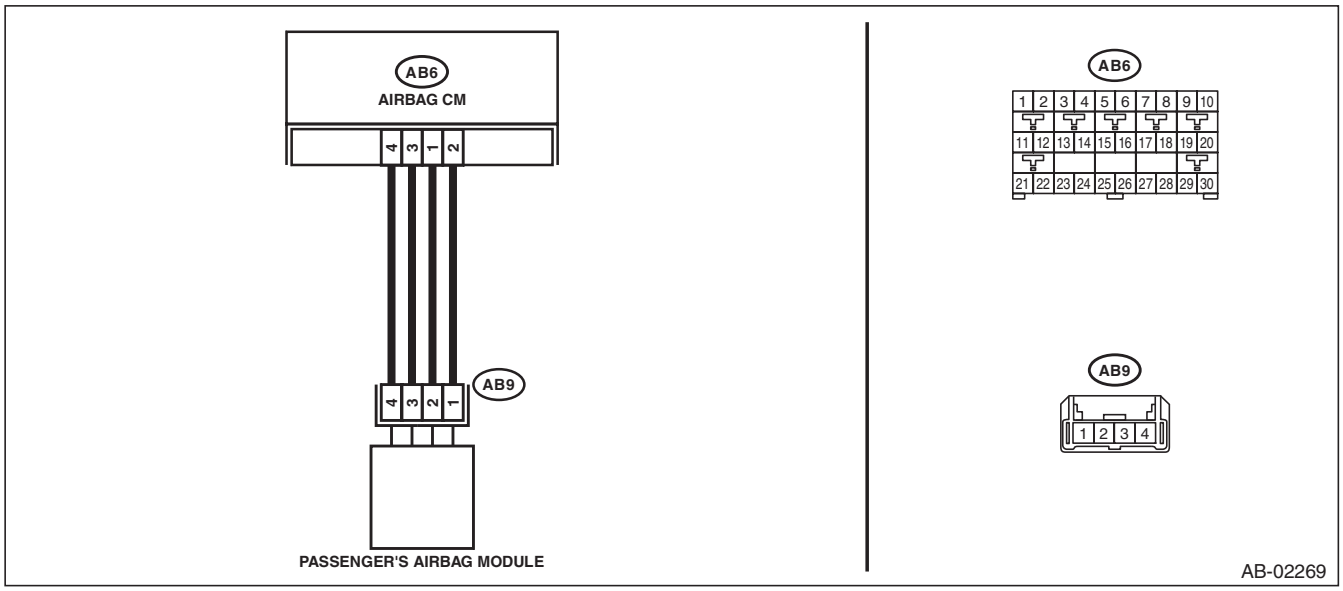

	Step	Check	Yes	No
1	**CHECK POOR CONTACT OF CONNECTORS.** Check for poor contact of the connectors between the airbag control module and the passenger's airbag module.	Is there poor contact?	Replace the airbag harness.	Go to step **2**.
2	**CHECK PASSENGER'S AIRBAG MODULE.** 1) Turn the ignition switch to OFF, disconnect the battery ground cable, and wait for 60 seconds or more. 2) Remove the console front panel and disconnect the connector (AB9). 3) Connect the connector (1P) in the test harness P to connector (AB9). 4) Connect the airbag resistor to the connectors (2P) and (3P) of test harness P. 5) Connect the battery ground terminal and turn the ignition switch to ON.	Does the airbag warning light illuminate for six seconds and go off?	Replace the passenger's airbag module. <Ref. to AB-37, Passenger's Airbag Module.>	Go to step **3**.

GETtheMANUALS.org

	Step	Check	Yes	No
3	**CHECK AIRBAG MAIN HARNESS (PASSENGER'S AIRBAG HARNESS).** 1) Turn the ignition switch to OFF, disconnect the battery ground cable, and wait for 60 seconds or more. 2) Disconnect the airbag resistor from the connectors (2P) and (3P) of test harness P. 3) Remove the instrument panel lower cover and column cover, and disconnect the connector (AB7) from (AB2). 4) Disconnect the connectors (AB6, AB17, AB18) from the airbag control module, and connect the connector (1AG) in the test harness AG. NOTE: For sedan models, connect test harness AH between the connectors (AB6, AB17, AB18) and (1AG). 5) Measure the resistance between connector (3AG) terminals in test harness AG. ***Connector & terminal*** ***(3AG) No. 6 — (3AG) No. 8:***	Is the resistance 1 MΩ or more?	Go to step **4**.	Replace the airbag main harness along with body harness.
4	**CHECK AIRBAG CONTROL MODULE.** 1) Connect all connectors. 2) Clear the memory. 3) Perform the Inspection Mode. 4) Read the DTC.	Is the same DTC displayed?	Replace the airbag control module. <Ref. to AB-68, Airbag Control Module.>	Go to step **5**.
5	**CHECK FOR ANY OTHER DTC ON DISPLAY.**	Is any other DTC displayed?	Check DTC using "List of Diagnostic Trouble Code (DTC)". <Ref. to AB(diag)-41, List of Diagnostic Trouble Code (DTC).>	Finish the diagnosis.

GETtheMANUALS.org

BB:DTC 7D DRIVER'S AIRBAG FAILURE

DTC DETECTING CONDITION:

- Airbag main harness circuit is open.
- Airbag module harness (driver's side) circuit is open.
- Roll connector circuit is open.
- Driver's airbag module is faulty.
- Airbag control module is faulty.

CAUTION:

Before performing diagnosis, refer to "CAUTION" in "General Description". <Ref. to AB(diag)-5, CAUTION, General Description.>

NOTE:

Prior to starting work, prepare two AIRBAG RESISTORs (98299PA040).

WIRING DIAGRAM:

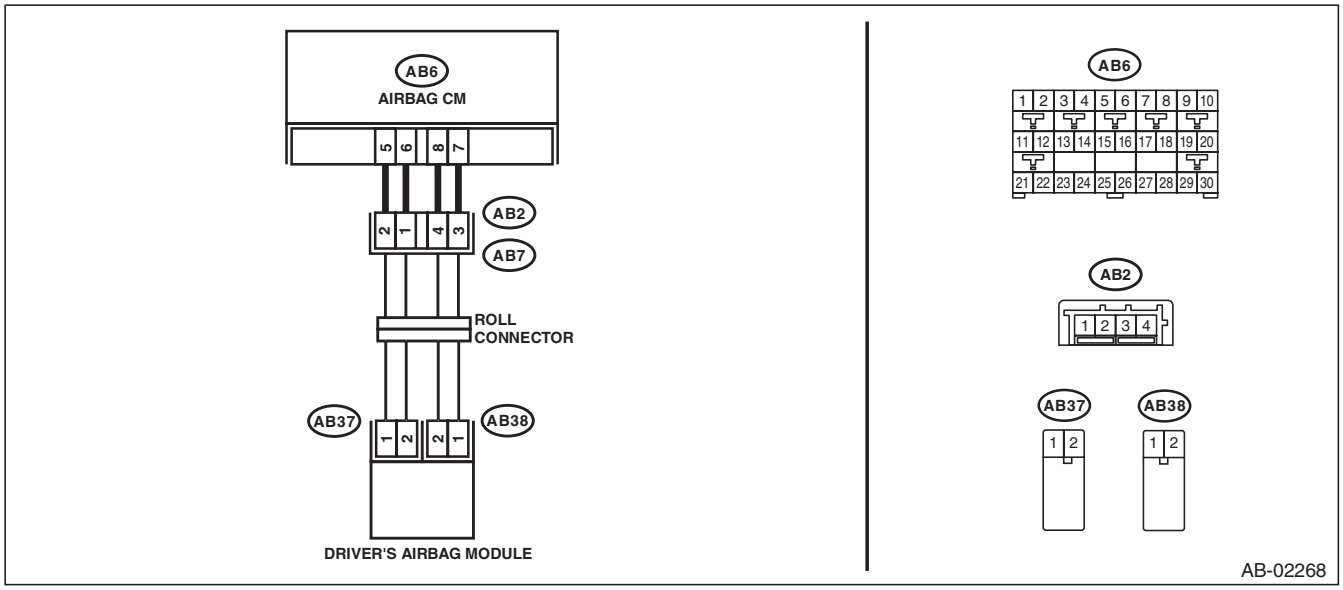

Step		Check	Yes	No
1	**CHECK POOR CONTACT OF CONNECTORS.** Check for poor contact of the connectors between the airbag control module and the driver's airbag module.	Is there poor contact?	Replace the airbag harness.	Go to step **2**.
2	**CHECK DRIVER'S AIRBAG MODULE.** 1) Turn the ignition switch to OFF, disconnect the battery ground cable, and wait for 60 seconds or more. 2) Remove the driver's airbag module. 3) Connect the connector (1N) in the test harness N to the connector (AB38). 4) Connect the airbag resistor to the connector (2N) of test harness N. 5) Connect the connector (1Q) in the test harness Q to connector (AB37). 6) Connect the airbag resistor to the connector (2Q) in the test harness Q. 7) Connect the battery ground terminal and turn the ignition switch to ON.	Does the airbag warning light illuminate for six seconds and go off?	Replace the driver's airbag module. <Ref. to AB-35, Driver's Airbag Module.>	Go to step **3**.

GETtheMANUALS.org

	Step	Check	Yes	No
3	**CHECK ROLL CONNECTOR AND AIRBAG MAIN HARNESS (DRIVER'S AIRBAG HARNESS).** 1) Turn the ignition switch to OFF, disconnect the battery ground cable, and wait for 60 seconds or more. 2) Remove the console front panel and disconnect the connector (AB9). 3) Disconnect the airbag resistor from the connector (2N) in test harness N. 4) Disconnect the airbag resistor from the connector (2Q) of test harness Q. 5) Disconnect the connectors (AB6, AB17, AB18) from airbag control module. 6) Measure the resistance between connector (2N) terminals in test harness N. ***Connector & terminal*** ***(2N) No. 1 — (2N) No. 2:***	Is the resistance less than 10 Ω?	Go to step **5**.	Go to step **4**.
4	**CHECK ROLL CONNECTOR.** 1) Remove the instrument panel lower cover and column cover, and disconnect the connector (AB7) from (AB2). 2) Measure the resistance between connector (2N) terminals in test harness N. ***Connector & terminal*** ***(2N) No. 1 — (2N) No. 2:***	Is the resistance less than 10 Ω?	Replace the airbag main harness along with body harness.	Replace the roll connector. <Ref. to AB-96, Roll Connector.>
5	**CHECK AIRBAG CONTROL MODULE.** 1) Connect all connectors. 2) Clear the memory. 3) Perform the Inspection Mode. 4) Read the DTC.	Is the same DTC displayed?	Replace the airbag control module. <Ref. to AB-68, Airbag Control Module.>	Go to step **6**.
6	**CHECK FOR ANY OTHER DTC ON DISPLAY.**	Is any other DTC displayed?	Check DTC using "List of Diagnostic Trouble Code (DTC)". <Ref. to AB(diag)-41, List of Diagnostic Trouble Code (DTC).>	Finish the diagnosis.

GETtheMANUALS.org

BC:DTC 7E PASSENGER'S AIRBAG FAILURE

DTC DETECTING CONDITION:

- Airbag main harness circuit is open.
- Airbag module harness (passenger's side) circuit is open.
- Passenger's airbag module is faulty.
- Airbag control module is faulty.

CAUTION:

Before performing diagnosis, refer to "CAUTION" in "General Description". <Ref. to AB(diag)-5, CAUTION, General Description.>

NOTE:
Prior to starting work, prepare two AIRBAG RESISTORs (98299PA040).

WIRING DIAGRAM:

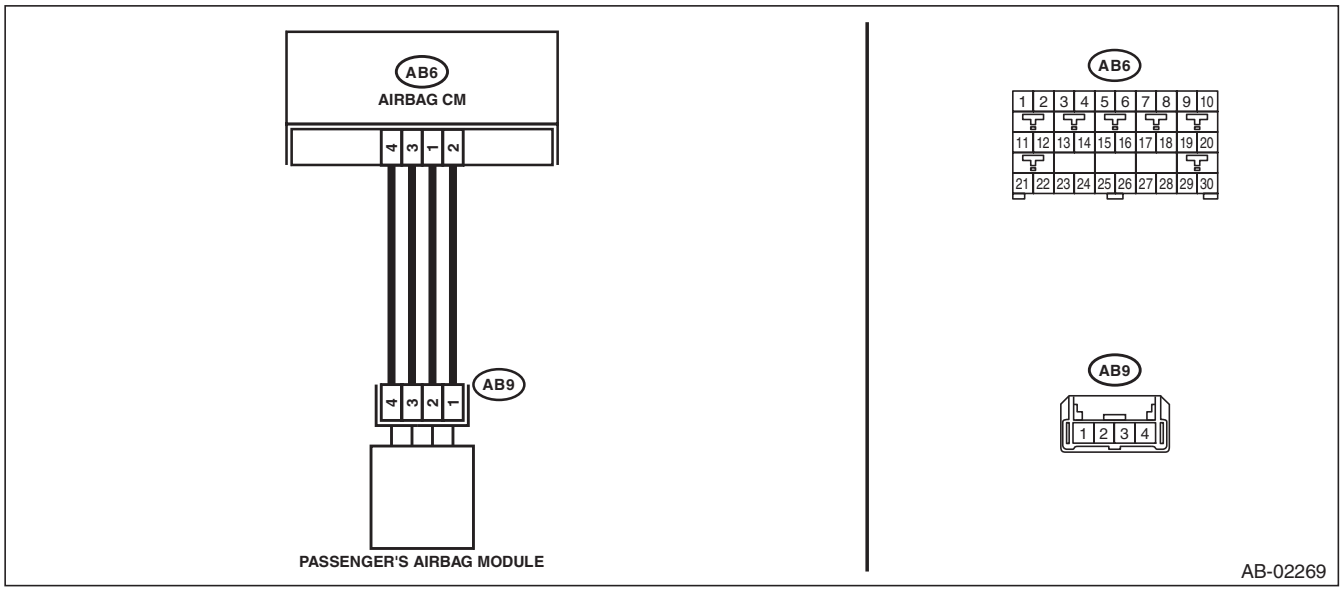

	Step	Check	Yes	No
1	**CHECK POOR CONTACT OF CONNECTORS.** Check for poor contact of the connectors between the airbag control module and the passenger's airbag module.	Is there poor contact?	Replace the airbag harness.	Go to step **2**.
2	**CHECK PASSENGER'S AIRBAG MODULE.** 1) Turn the ignition switch to OFF, disconnect the battery ground cable, and wait for 60 seconds or more. 2) Remove the console front panel and disconnect the connector (AB9). 3) Connect the connector (1P) in the test harness P to connector (AB9). 4) Connect the airbag resistor to the connectors (2P) and (3P) of test harness P. 5) Connect the battery ground terminal and turn the ignition switch to ON.	Does the airbag warning light illuminate for six seconds and go off?	Replace the passenger's airbag module. <Ref. to AB-37, Passenger's Airbag Module.>	Go to step **3**.

GETtheMANUALS.org

	Step	Check	Yes	No
3	**CHECK AIRBAG MAIN HARNESS (PASSENGER'S AIRBAG HARNESS).** 1) Turn the ignition switch to OFF, disconnect the battery ground cable, and wait for 60 seconds or more. 2) Disconnect the airbag resistor from the connectors (2P) and (3P) of test harness P. 3) Remove the instrument panel lower cover and column cover, and disconnect the connector (AB7) from (AB2). 4) Disconnect the connectors (AB6, AB17, AB18) from the airbag control module, and connect the connector (1AG) in the test harness AG. NOTE: For sedan models, connect test harness AH between the connectors (AB6, AB17, AB18) and (1AG). 5) Measure the resistance between connector (3AG) of test harness AG and connector (3P) of test harness P. ***Connector & terminal*** ***(3AG) No. 6 — (3P) No. 4:*** ***(3AG) No. 8 — (3P) No. 3:***	Is the resistance less than 10 Ω?	Go to step **4**.	Replace the airbag main harness along with body harness.
4	**CHECK AIRBAG CONTROL MODULE.** 1) Connect all connectors. 2) Clear the memory. 3) Perform the Inspection Mode. 4) Read the DTC.	Is the same DTC displayed?	Replace the airbag control module. <Ref. to AB-68, Airbag Control Module.>	Go to step **5**.
5	**CHECK FOR ANY OTHER DTC ON DISPLAY.**	Is any other DTC displayed?	Check DTC using "List of Diagnostic Trouble Code (DTC)". <Ref. to AB(diag)-41, List of Diagnostic Trouble Code (DTC).>	Finish the diagnosis.

GETtheMANUALS.org

BD:DTC 91 CURTAIN AIRBAG MODULE RH FAILURE

NOTE:
Be sure to properly identify the Airbag system type prior to performing any diagnostics.

1. TYPE A

DTC DETECTING CONDITION:
- Curtain airbag harness (RH) is faulty.
- Curtain airbag module (RH) is faulty.
- Airbag control module is faulty.

CAUTION:
Before performing diagnosis, refer to "CAUTION" in "General Description". <Ref. to AB(diag)-5, CAUTION, General Description.>
WIRING DIAGRAM:

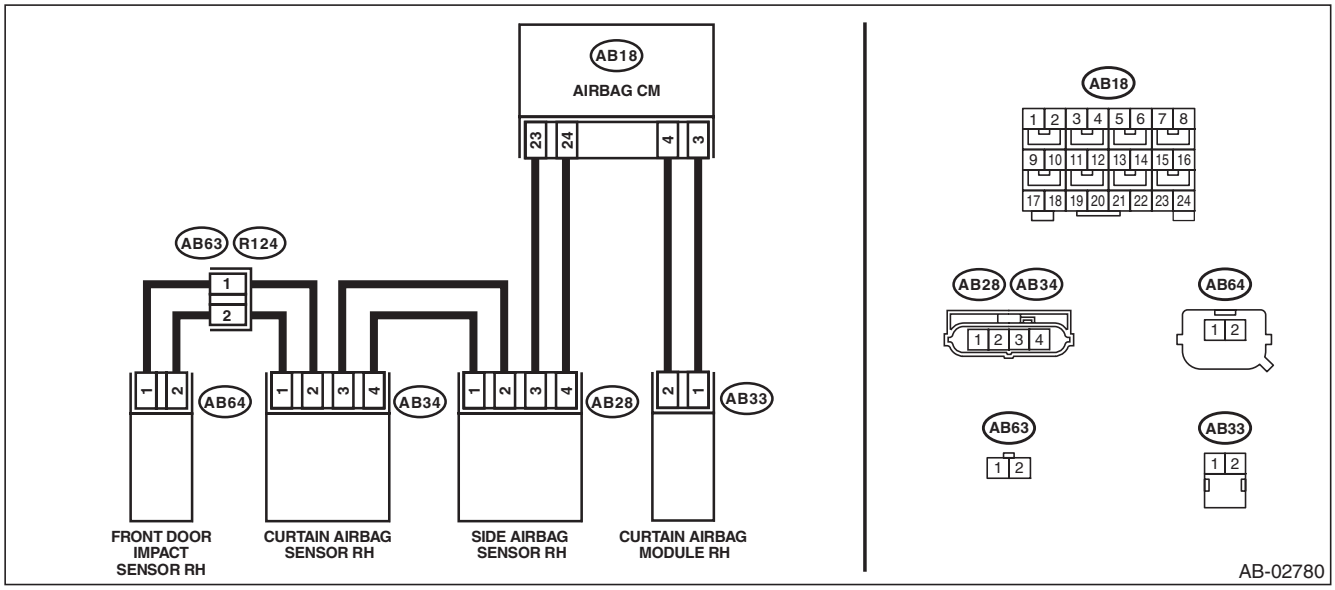

Step		Check	Yes	No
1	**CHECK POOR CONTACT OF CONNECTORS.** Check for poor contact of the connectors between the airbag control module, curtain airbag module RH and the curtain airbag sensor RH.	Is there poor contact?	Replace the airbag rear harness along with body harness.	Go to step **2**.
2	**CHECK CURTAIN AIRBAG MODULE.** 1) Turn the ignition switch to OFF, disconnect the battery ground cable, and wait for 60 seconds or more. 2) Disconnect the connector (AB33), and connect the connector (1N) in test harness N to connector (AB33). 3) Connect the airbag resistor to the connector (2N) of test harness N. 4) Connect the battery ground terminal and turn the ignition switch to ON.	Does the airbag warning light illuminate for six seconds and go off?	Replace the curtain airbag module (RH). <Ref. to AB-65, Curtain Airbag Module.>	Go to step **3**.

GETtheMANUALS.org

	Step	Check	Yes	No
3	**CHECK AIRBAG REAR HARNESS (CURTAIN AIRBAG MODULE HARNESS RH).** 1) Turn the ignition switch to OFF, disconnect the battery ground cable, and wait for 60 seconds or more. 2) Disconnect the connector (AB26) from seat belt pretensioner (RH). 3) Disconnect connector (AB24) from side airbag module (RH). 4) Disconnect the airbag resistor from test harness N. 5) Disconnect the connectors (AB6, AB17, AB18) from airbag control module. 6) Connect the connector (1AG) in the test harness AG to the connectors (AB6, AB17, AB18). 7) Measure the resistance between connector (2N) terminals in the test harness N, and between connector (2N) and chassis ground. ***Connector & terminal*** ***(2N) No. 1 — (2N) No. 2:*** ***(2N) No. 1 — Chassis ground:*** ***(2N) No. 2 — Chassis ground:***	Is the resistance 1 MΩ or more?	Go to step **4**.	Replace the airbag rear harness along with body harness.
4	**CHECK AIRBAG REAR HARNESS (CURTAIN AIRBAG MODULE HARNESS RH).** Measure the resistance between connector (6AG) in the test harness AG and connector (2N) in the test harness N. ***Connector & terminal*** ***(6AG) No. 1 — (2N) No. 1:*** ***(6AG) No. 3 — (2N) No. 2:***	Is the resistance less than 10 Ω?	Go to step **5**.	Replace the airbag rear harness along with body harness.
5	**CHECK AIRBAG CONTROL MODULE.** 1) Connect all connectors. 2) Clear the memory. 3) Perform the Inspection Mode. 4) Read the DTC.	Is the same DTC displayed?	Replace the airbag control module. <Ref. to AB-68, Airbag Control Module.>	Go to step **6**.
6	**CHECK FOR ANY OTHER DTC ON DISPLAY.**	Is any other DTC displayed?	Check DTC using "List of Diagnostic Trouble Code (DTC)". <Ref. to AB(diag)-41, List of Diagnostic Trouble Code (DTC).>	Finish the diagnosis.

GETtheMANUALS.org

2. TYPE B

DTC DETECTING CONDITION:

- Curtain airbag harness (RH) circuit is shorted to ground.
- Curtain airbag module (RH) is faulty.
- Airbag control module is faulty.

CAUTION:

Before performing diagnosis, refer to "CAUTION" in "General Description". <Ref. to AB(diag)-5, CAUTION, General Description.>

WIRING DIAGRAM:

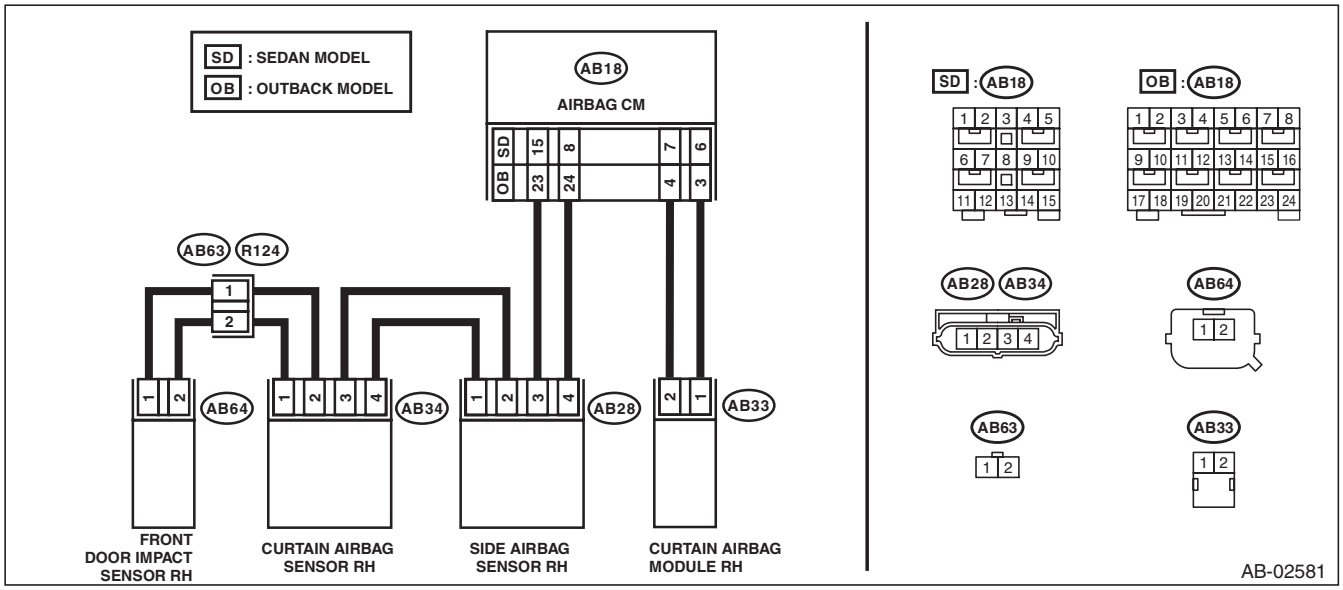

Step		Check	Yes	No
1	**CHECK POOR CONTACT OF CONNECTORS.** Check for poor contact of the connectors between the airbag control module, curtain airbag module RH and the curtain airbag sensor RH.	Is there poor contact?	Replace the airbag rear harness along with body harness.	Go to step **2**.
2	**CHECK CURTAIN AIRBAG MODULE.** 1) Turn the ignition switch to OFF, disconnect the battery ground cable, and wait for 60 seconds or more. 2) Disconnect the connector (AB33) from curtain airbag module (RH). 3) Connect the connector (1N) in the test harness N to the connector (AB33). 4) Connect the airbag resistor to the connector (2N) of test harness N. 5) Connect the battery ground terminal and turn the ignition switch to ON.	Does the airbag warning light illuminate for six seconds and go off?	Replace the curtain airbag module (RH). <Ref. to AB-65, Curtain Airbag Module.>	Go to step **3**.

GETtheMANUALS.org

	Step	Check	Yes	No
3	**CHECK AIRBAG REAR HARNESS (CURTAIN AIRBAG MODULE HARNESS RH).** 1) Turn the ignition switch to OFF, disconnect the battery ground cable, and wait for 60 seconds or more. 2) Disconnect the connector (AB26) from seat belt pretensioner (RH). 3) Disconnect connector (AB24) from side airbag module (RH). 4) Disconnect the airbag resistor from test harness N. 5) Disconnect the connectors (AB6, AB17, AB18) from airbag control module. 6) Connect the connector (1AG) in the test harness AG to the connectors (AB6, AB17, AB18). NOTE: For sedan models, connect test harness AH between the connectors (AB6, AB17, AB18) and (1AG). 7) Measure the resistance between connector (2N) in the test harness N and chassis ground. ***Connector & terminal*** ***(2N) No. 1 — Chassis ground:*** ***(2N) No. 2 — Chassis ground:***	Is the resistance 1 MΩ or more?	Go to step **4**.	Replace the airbag rear harness along with body harness.
4	**CHECK AIRBAG CONTROL MODULE.** 1) Connect all connectors. 2) Clear the memory. 3) Perform the Inspection Mode. 4) Read the DTC.	Is the same DTC displayed?	Replace the airbag control module. <Ref. to AB-68, Airbag Control Module.>	Go to step **5**.
5	**CHECK FOR ANY OTHER DTC ON DISPLAY.**	Is any other DTC displayed?	Check DTC using "List of Diagnostic Trouble Code (DTC)". <Ref. to AB(diag)-41, List of Diagnostic Trouble Code (DTC).>	Finish the diagnosis.

GETtheMANUALS.org

BE:DTC 92 CURTAIN AIRBAG MODULE LH FAILURE

NOTE:
Be sure to properly identify the Airbag system type prior to performing any diagnostics.

1. TYPE A

DTC DETECTING CONDITION:
- Curtain airbag harness (LH) is faulty.
- Curtain airbag module (LH) is faulty.
- Airbag control module is faulty.

CAUTION:
Before performing diagnosis, refer to "CAUTION" in "General Description". <Ref. to AB(diag)-5, CAUTION, General Description.>
WIRING DIAGRAM:

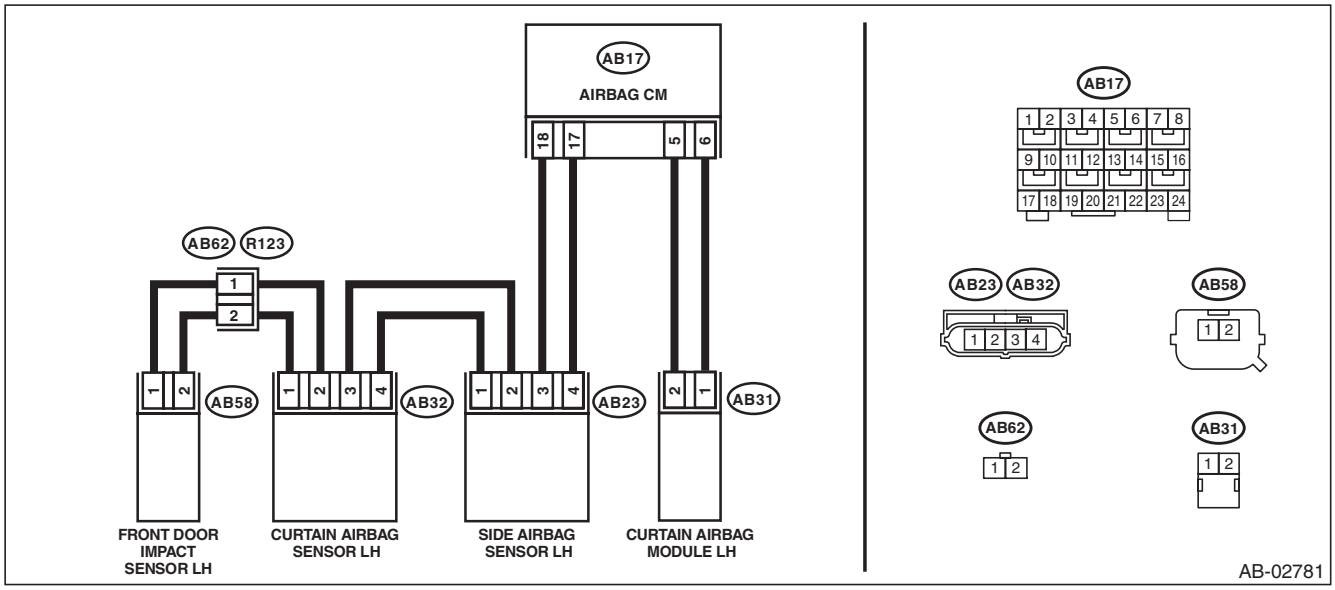

	Step	Check	Yes	No
1	**CHECK POOR CONTACT OF CONNECTORS.** Check for poor contact of the connectors between the airbag control module, curtain airbag module LH and the curtain airbag sensor LH.	Is there poor contact?	Replace the airbag rear harness along with body harness.	Go to step **2**.
2	**CHECK CURTAIN AIRBAG MODULE.** 1) Turn the ignition switch to OFF, disconnect the battery ground cable, and wait for 60 seconds or more. 2) Disconnect the connector (AB31), and connect the connector (1N) in test harness N to connector (AB31). 3) Connect the airbag resistor to the connector (2N) of test harness N. 4) Connect the battery ground terminal and turn the ignition switch to ON.	Does the airbag warning light illuminate for six seconds and go off?	Replace the curtain airbag module (LH). <Ref. to AB-65, Curtain Airbag Module.>	Go to step **3**.

GETthemANUALS.org

	Step	Check	Yes	No
3	**CHECK AIRBAG REAR HARNESS (CURTAIN AIRBAG MODULE HARNESS LH).** 1) Turn the ignition switch to OFF, disconnect the battery ground cable, and wait for 60 seconds or more. 2) Disconnect the connector (AB21) from seat belt pretensioner (LH). 3) Disconnect connector (AB19) from side airbag module (LH). 4) Disconnect the airbag resistor from test harness N. 5) Disconnect the connectors (AB6, AB17, AB18) from airbag control module. 6) Connect the connector (1AG) in the test harness AG to the connectors (AB6, AB17, AB18). 7) Measure the resistance between connector (2N) terminals in the test harness N, and between connector (2N) and chassis ground. ***Connector & terminal*** ***(2N) No. 1 — (2N) No. 2:*** ***(2N) No. 1 — Chassis ground:*** ***(2N) No. 2 — Chassis ground:***	Is the resistance 1 MΩ or more?	Go to step **4**.	Replace the airbag rear harness along with body harness.
4	**CHECK AIRBAG REAR HARNESS (CURTAIN AIRBAG MODULE HARNESS LH).** Measure the resistance between connector (6AG) in the test harness AG and connector (2N) in the test harness N. ***Connector & terminal*** ***(6AG) No. 8 — (2N) No. 1:*** ***(6AG) No. 6 — (2N) No. 2:***	Is the resistance less than 10 Ω?	Go to step **5**.	Replace the airbag rear harness along with body harness.
5	**CHECK AIRBAG CONTROL MODULE.** 1) Connect all connectors. 2) Clear the memory. 3) Perform the Inspection Mode. 4) Read the DTC.	Is the same DTC displayed?	Replace the airbag control module. <Ref. to AB-68, Airbag Control Module.>	Go to step **6**.
6	**CHECK FOR ANY OTHER DTC ON DISPLAY.**	Is any other DTC displayed?	Check DTC using "List of Diagnostic Trouble Code (DTC)". <Ref. to AB(diag)-41, List of Diagnostic Trouble Code (DTC).>	Finish the diagnosis.

GETtheMANUALS.org

2. TYPE B

DTC DETECTING CONDITION:

- Curtain airbag harness (LH) circuit is shorted to ground.
- Curtain airbag module (LH) is faulty.
- Airbag control module is faulty.

CAUTION:

Before performing diagnosis, refer to "CAUTION" in "General Description". <Ref. to AB(diag)-5, CAUTION, General Description.>

WIRING DIAGRAM:

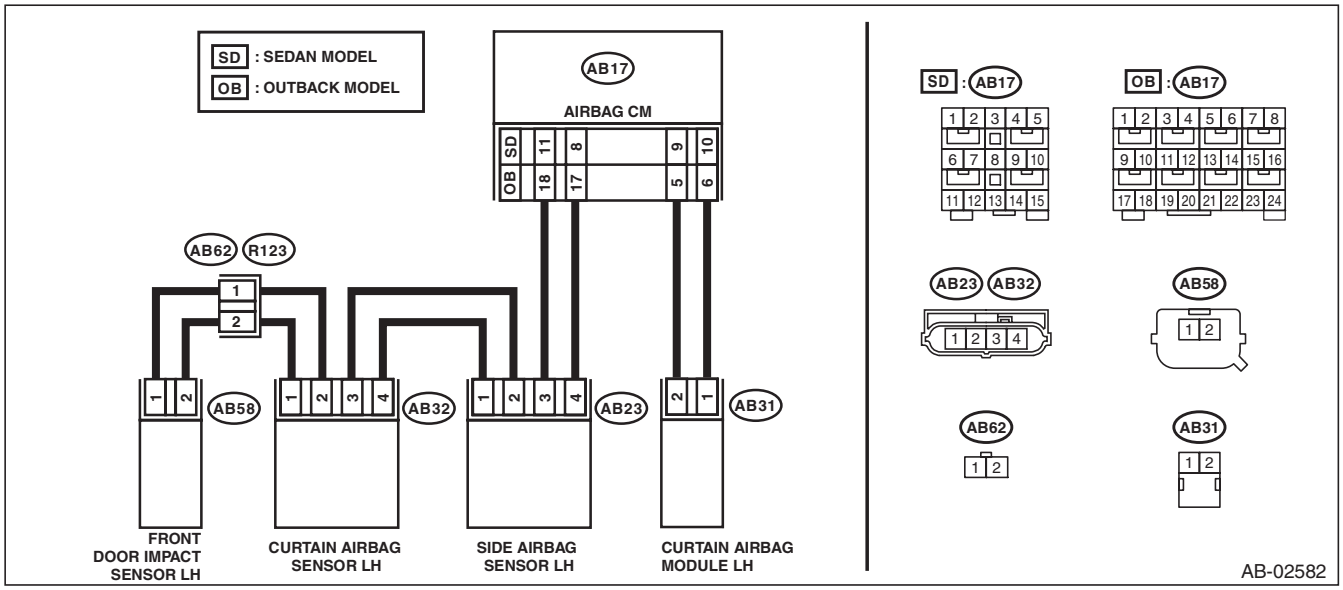

Step		Check	Yes	No
1	**CHECK POOR CONTACT OF CONNECTORS.** Check for poor contact of the connectors between the airbag control module, curtain airbag module LH and the curtain airbag sensor LH.	Is there poor contact?	Replace the airbag rear harness along with body harness.	Go to step **2**.
2	**CHECK CURTAIN AIRBAG MODULE.** 1) Turn the ignition switch to OFF, disconnect the battery ground cable, and wait for 60 seconds or more. 2) Disconnect the connector (AB31) from curtain airbag module (LH). 3) Connect the connector (1N) in the test harness N to the connector (AB31). 4) Connect the airbag resistor to the connector (2N) of test harness N. 5) Connect the battery ground terminal and turn the ignition switch to ON.	Does the airbag warning light illuminate for six seconds and go off?	Replace the curtain airbag module (LH). <Ref. to AB-65, Curtain Airbag Module.>	Go to step **3**.

GETthemANUALS.org

	Step	Check	Yes	No
3	**CHECK AIRBAG REAR HARNESS (CURTAIN AIRBAG MODULE HARNESS LH).** 1) Turn the ignition switch to OFF, disconnect the battery ground cable, and wait for 60 seconds or more. 2) Disconnect the connector (AB21) from seat belt pretensioner (LH). 3) Disconnect connector (AB19) from side airbag module (LH). 4) Disconnect the airbag resistor from test harness N. 5) Disconnect the connectors (AB6, AB17, AB18) from airbag control module. 6) Connect the connector (1AG) in the test harness AG to the connectors (AB6, AB17, AB18). NOTE: For sedan models, connect test harness AH between the connectors (AB6, AB17, AB18) and (1AG). 7) Measure the resistance between connector (2N) in the test harness N and chassis ground. ***Connector & terminal*** ***(2N) No. 1 — Chassis ground:*** ***(2N) No. 2 — Chassis ground:***	Is the resistance 1 MΩ or more?	Go to step **4**.	Replace the airbag rear harness along with body harness.
4	**CHECK AIRBAG CONTROL MODULE.** 1) Connect all connectors. 2) Clear the memory. 3) Perform the Inspection Mode. 4) Read the DTC.	Is the same DTC displayed?	Replace the airbag control module. <Ref. to AB-68, Airbag Control Module.>	Go to step **5**.
5	**CHECK FOR ANY OTHER DTC ON DISPLAY.**	Is any other DTC displayed?	Check DTC using "List of Diagnostic Trouble Code (DTC)". <Ref. to AB(diag)-41, List of Diagnostic Trouble Code (DTC).>	Finish the diagnosis.

GETtheMANUALS.org

BF:DTC 95 CURTAIN AIRBAG MODULE RH FAILURE

DTC DETECTING CONDITION:

- Curtain airbag harness (RH) is shorted to power supply.
- Curtain airbag module (RH) is faulty.
- Airbag control module is faulty.

CAUTION:

Before performing diagnosis, refer to "CAUTION" in "General Description". <Ref. to AB(diag)-5, CAUTION, General Description.>

WIRING DIAGRAM:

- Type A

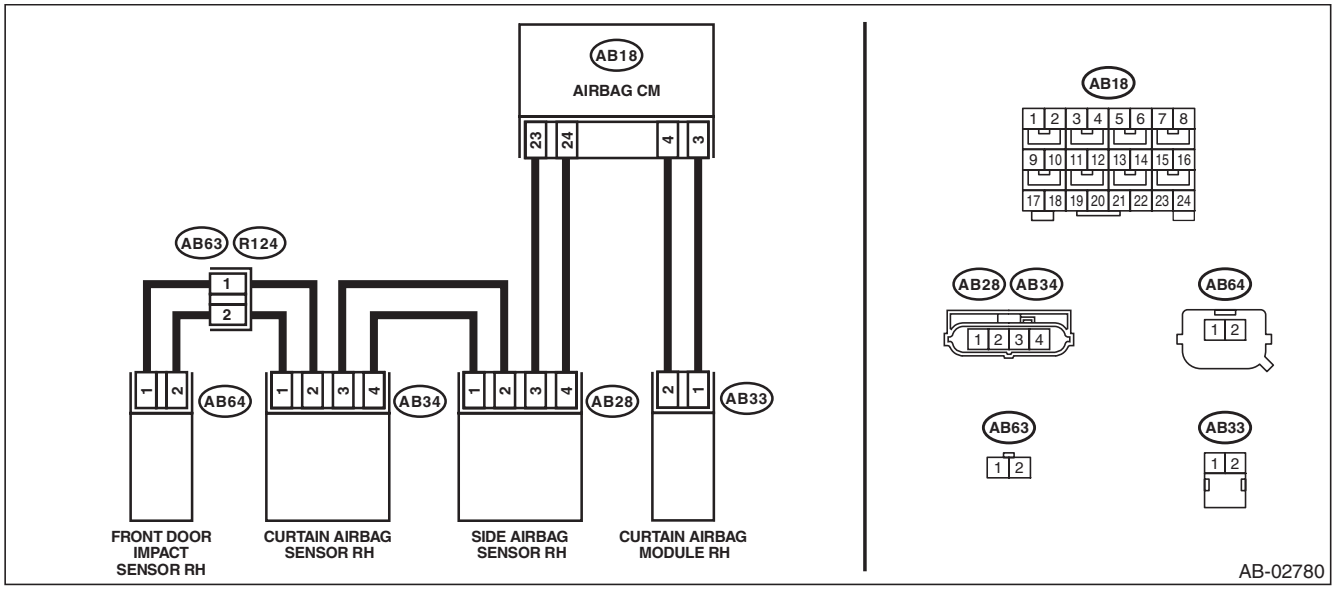

- Type B

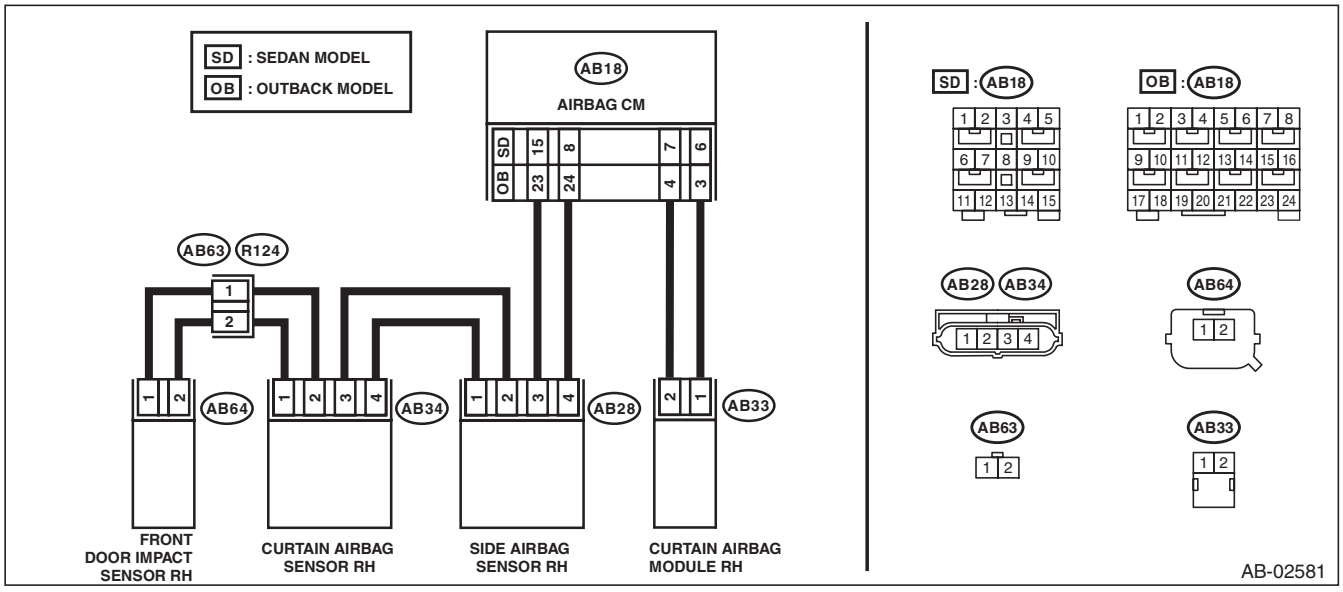

GETthemANUALS.org

Diagnostic Chart with Trouble Code

	Step	Check	Yes	No
1	**CHECK POOR CONTACT OF CONNECTORS.** Check for poor contact of the connectors between the airbag control module, curtain airbag module RH and the curtain airbag sensor RH.	Is there poor contact?	Replace the airbag rear harness along with body harness.	Go to step **2**.
2	**CHECK CURTAIN AIRBAG MODULE.** 1) Turn the ignition switch to OFF, disconnect the battery ground cable, and wait for 60 seconds or more. 2) Disconnect the connector (AB33), and connect the connector (1N) in test harness N to connector (AB33). 3) Connect the airbag resistor to the connector (2N) of test harness N. 4) Connect the battery ground terminal and turn the ignition switch to ON.	Does the airbag warning light illuminate for six seconds and go off?	Replace the curtain airbag module (RH). <Ref. to AB-65, Curtain Airbag Module.>	Go to step **3**.
3	**CHECK AIRBAG REAR HARNESS (CURTAIN AIRBAG MODULE HARNESS RH).** 1) Turn the ignition switch to OFF, disconnect the battery ground cable, and wait for 60 seconds or more. 2) Disconnect the connector (AB26) from seat belt pretensioner (RH). 3) Disconnect connector (AB24) from side airbag module (RH). 4) Disconnect the airbag resistor from test harness N. 5) Disconnect the connectors (AB6, AB17, AB18) from airbag control module. 6) Connect the connector (1AG) in the test harness AG to the connectors (AB6, AB17, AB18). NOTE: For type B (sedan models), connect test harness AH between the connectors (AB6, AB17, AB18) and (1AG). 7) Connect the battery ground terminal and turn the ignition switch to ON. 8) Measure the voltage between connector (2N) in the test harness N and chassis ground. ***Connector & terminal*** ***(2N) No. 1 (+) — Chassis ground (–):*** ***(2N) No. 2 (+) — Chassis ground (–):***	Is the voltage less than 1 V?	Go to step **4**.	Replace the airbag rear harness along with body harness.
4	**CHECK AIRBAG CONTROL MODULE.** 1) Connect all connectors. 2) Clear the memory. 3) Perform the Inspection Mode. 4) Read the DTC.	Is the same DTC displayed?	Replace the airbag control module. <Ref. to AB-68, Airbag Control Module.>	Go to step **5**.
5	**CHECK FOR ANY OTHER DTC ON DISPLAY.**	Is any other DTC displayed?	Check DTC using "List of Diagnostic Trouble Code (DTC)". <Ref. to AB(diag)-41, List of Diagnostic Trouble Code (DTC).>	Finish the diagnosis.

GETtheMANUALS.org

BG:DTC 96 CURTAIN AIRBAG MODULE LH FAILURE

DTC DETECTING CONDITION:

- Curtain airbag harness (LH) is shorted to power supply.
- Curtain airbag module (LH) is faulty.
- Airbag control module is faulty.

CAUTION:

Before performing diagnosis, refer to “CAUTION” in “General Description”. <Ref. to AB(diag)-5, CAUTION, General Description.>

WIRING DIAGRAM:

- Type A

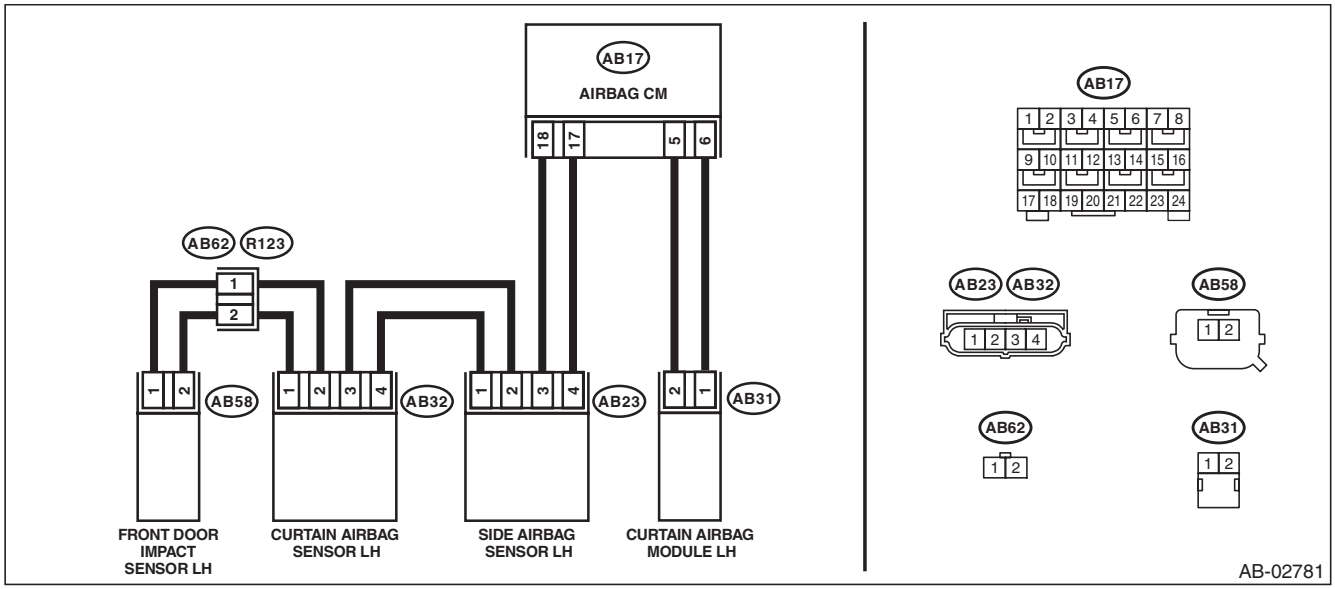

- Type B

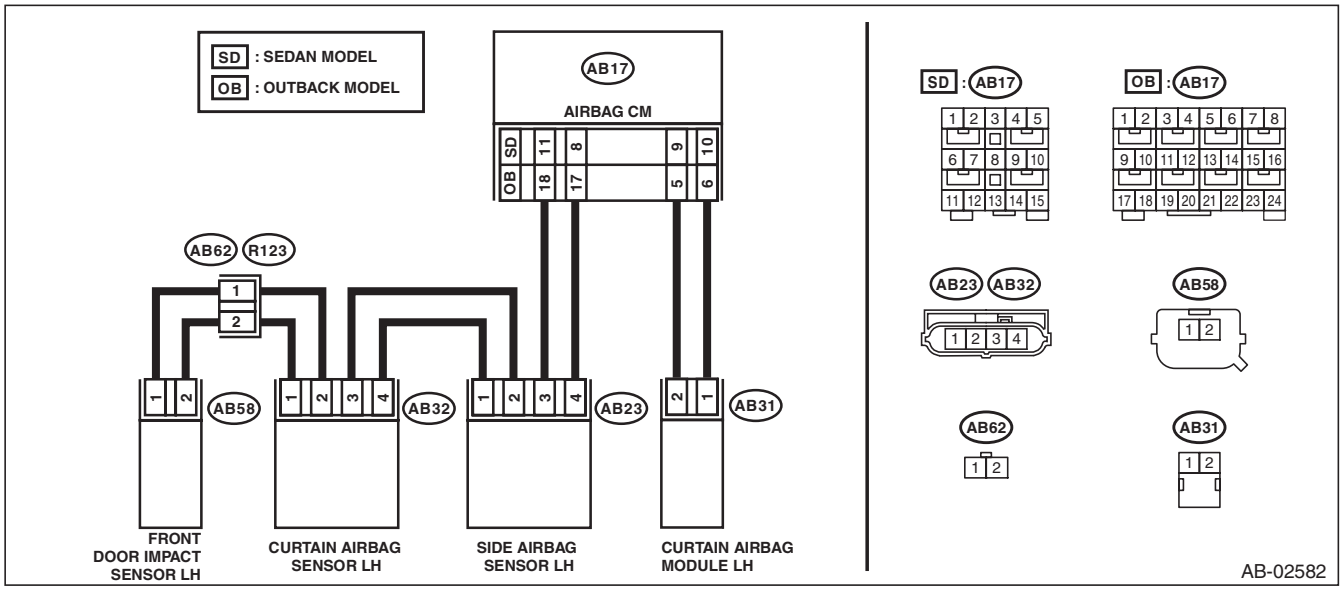

GETtheMANUALS.org

	Step	Check	Yes	No
1	**CHECK POOR CONTACT OF CONNECTORS.** Check for poor contact of the connectors between the airbag control module, curtain airbag module LH and the curtain airbag sensor LH.	Is there poor contact?	Replace the airbag rear harness along with body harness.	Go to step **2**.
2	**CHECK CURTAIN AIRBAG MODULE.** 1) Turn the ignition switch to OFF, disconnect the battery ground cable, and wait for 60 seconds or more. 2) Disconnect the connector (AB31), and connect the connector (1N) in test harness N to connector (AB31). 3) Connect the airbag resistor to the connector (2N) of test harness N. 4) Connect the battery ground terminal and turn the ignition switch to ON.	Does the airbag warning light illuminate for six seconds and go off?	Replace the curtain airbag module (LH). <Ref. to AB-65, Curtain Airbag Module.>	Go to step **3**.
3	**CHECK AIRBAG REAR HARNESS (CURTAIN AIRBAG MODULE HARNESS LH).** 1) Turn the ignition switch to OFF, disconnect the battery ground cable, and wait for 60 seconds or more. 2) Disconnect the connector (AB21) from seat belt pretensioner (LH). 3) Disconnect connector (AB19) from side airbag module (LH). 4) Disconnect the airbag resistor from test harness N. 5) Disconnect the connectors (AB6, AB17, AB18) from airbag control module. 6) Connect the connector (1AG) in the test harness AG to the connectors (AB6, AB17, AB18). NOTE: For type B (sedan models), connect test harness AH between the connectors (AB6, AB17, AB18) and (1AG). 7) Connect the battery ground terminal and turn the ignition switch to ON. 8) Measure the voltage between connector (2N) in the test harness N and chassis ground. ***Connector & terminal*** ***(2N) No. 1 (+) — Chassis ground (–):*** ***(2N) No. 2 (+) — Chassis ground (–):***	Is the voltage less than 1 V?	Go to step **4**.	Replace the airbag rear harness along with body harness.
4	**CHECK AIRBAG CONTROL MODULE.** 1) Connect all connectors. 2) Clear the memory. 3) Perform the Inspection Mode. 4) Read the DTC.	Is the same DTC displayed?	Replace the airbag control module. <Ref. to AB-68, Airbag Control Module.>	Go to step **5**.
5	**CHECK FOR ANY OTHER DTC ON DISPLAY.**	Is any other DTC displayed?	Check DTC using "List of Diagnostic Trouble Code (DTC)". <Ref. to AB(diag)-41, List of Diagnostic Trouble Code (DTC).>	Finish the diagnosis.

GETthemMANUALS.org

BH:DTC 9A CURTAIN AIRBAG MODULE RH FAILURE

DTC DETECTING CONDITION:

- Curtain airbag harness (RH) circuit is shorted.
- Curtain airbag module (RH) is faulty.
- Airbag control module is faulty.

CAUTION:

Before performing diagnosis, refer to "CAUTION" in "General Description". <Ref. to AB(diag)-5, CAUTION, General Description.>

WIRING DIAGRAM:

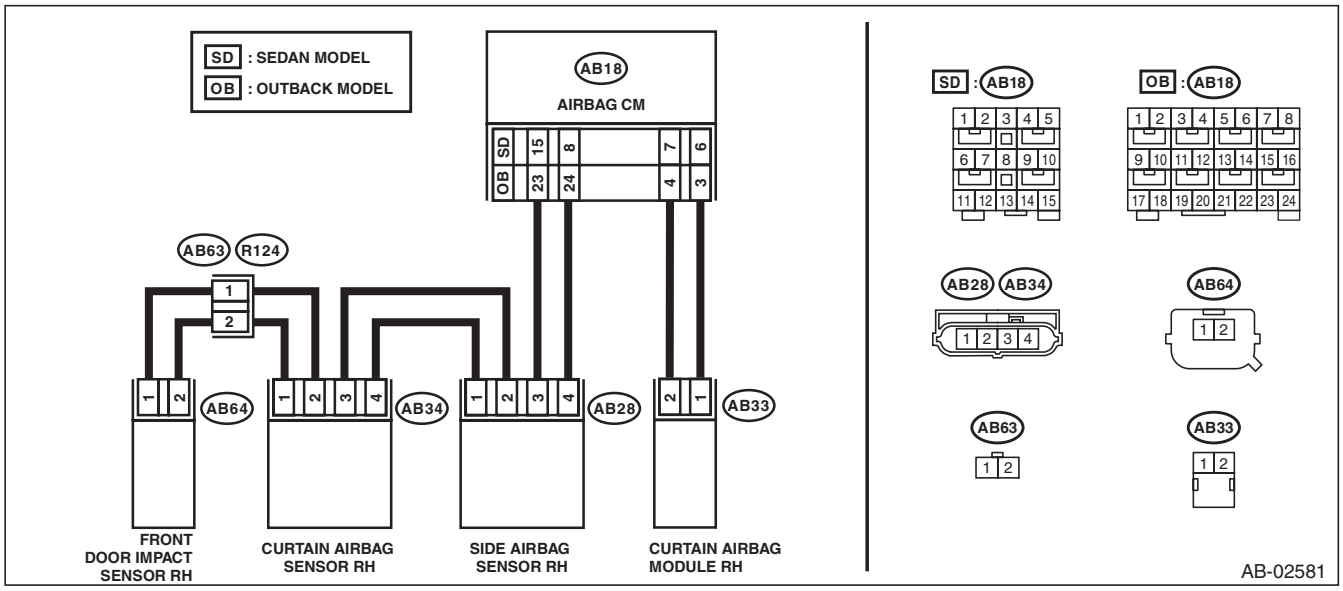

Step		Check	Yes	No
1	**CHECK POOR CONTACT OF CONNECTORS.** Check for poor contact of the connectors between the airbag control module, curtain airbag module RH and the curtain airbag sensor RH.	Is there poor contact?	Replace the airbag rear harness along with body harness.	Go to step **2**.
2	**CHECK CURTAIN AIRBAG MODULE.** 1) Turn the ignition switch to OFF, disconnect the battery ground cable, and wait for 60 seconds or more. 2) Disconnect the connector (AB33) from curtain airbag module (RH), and connect the connector (1N) in test harness N to connector (AB33). 3) Connect the airbag resistor to the connector (2N) of test harness N. 4) Connect the battery ground terminal and turn the ignition switch to ON.	Does the airbag warning light illuminate for six seconds and go off?	Replace the curtain airbag module (RH). <Ref. to AB-65, Curtain Airbag Module.>	Go to step **3**.

GETtheMANUALS.org

	Step	Check	Yes	No
3	**CHECK AIRBAG REAR HARNESS (CURTAIN AIRBAG MODULE HARNESS RH).** 1) Turn the ignition switch to OFF, disconnect the battery ground cable, and wait for 60 seconds or more. 2) Disconnect the connector (AB26) from seat belt pretensioner (RH). 3) Disconnect connector (AB24) from side airbag module (RH). 4) Disconnect the airbag resistor from test harness N. 5) Disconnect the connectors (AB6, AB17, AB18) from airbag control module. 6) Connect the connector (1AG) in the test harness AG to the connectors (AB6, AB17, AB18). NOTE: For sedan models, connect test harness AH between the connectors (AB6, AB17, AB18) and (1AG). 7) Measure the resistance between connector (2N) terminals in test harness N. ***Connector & terminal*** ***(2N) No. 1 — (2N) No. 2:***	Is the resistance 1 MΩ or more?	Go to step **4**.	Replace the airbag rear harness along with body harness.
4	**CHECK AIRBAG CONTROL MODULE.** 1) Connect all connectors. 2) Clear the memory. 3) Perform the Inspection Mode. 4) Read the DTC.	Is the same DTC displayed?	Replace the airbag control module. <Ref. to AB-68, Airbag Control Module.>	Go to step **5**.
5	**CHECK FOR ANY OTHER DTC ON DISPLAY.**	Is any other DTC displayed?	Check DTC using “List of Diagnostic Trouble Code (DTC)”. <Ref. to AB(diag)-41, List of Diagnostic Trouble Code (DTC).>	Finish the diagnosis.

GETtheMANUALS.org

BI: DTC 9B CURTAIN AIRBAG MODULE LH FAILURE

DTC DETECTING CONDITION:

- Curtain airbag harness (LH) circuit is shorted.
- Curtain airbag module (LH) is faulty.
- Airbag control module is faulty.

CAUTION:

Before performing diagnosis, refer to "CAUTION" in "General Description". <Ref. to AB(diag)-5, CAUTION, General Description.>

WIRING DIAGRAM:

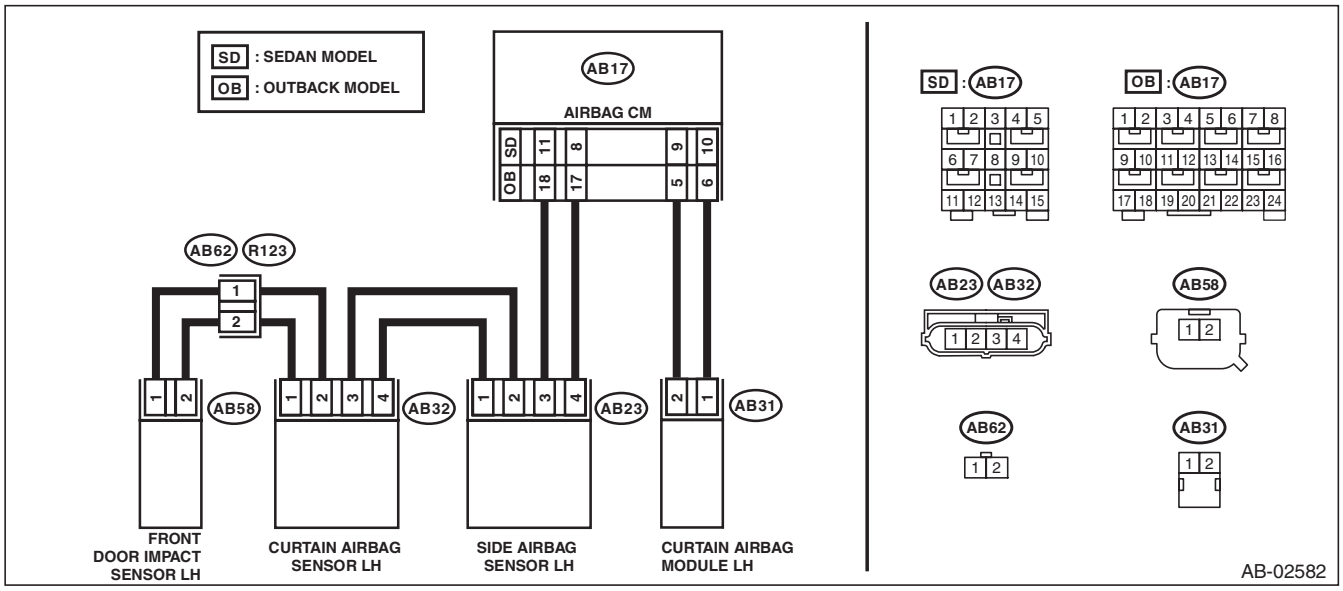

Step		Check	Yes	No
1	**CHECK POOR CONTACT OF CONNECTORS.** Check for poor contact of the connectors between the airbag control module, curtain airbag module LH and the curtain airbag sensor LH.	Is there poor contact?	Replace the airbag rear harness along with body harness.	Go to step **2**.
2	**CHECK CURTAIN AIRBAG MODULE.** 1) Turn the ignition switch to OFF, disconnect the battery ground cable, and wait for 60 seconds or more. 2) Disconnect the connector (AB31) from curtain airbag module (LH), and connect the connector (1N) in test harness N to connector (AB31). 3) Connect the airbag resistor to the connector (2N) of test harness N. 4) Connect the battery ground terminal and turn the ignition switch to ON.	Does the airbag warning light illuminate for six seconds and go off?	Replace the curtain airbag module (LH). <Ref. to AB-65, Curtain Airbag Module.>	Go to step **3**.

GETthemMANUALS.org

	Step	Check	Yes	No
3	**CHECK AIRBAG REAR HARNESS (CURTAIN AIRBAG MODULE HARNESS LH).** 1) Turn the ignition switch to OFF, disconnect the battery ground cable, and wait for 60 seconds or more. 2) Disconnect the connector (AB21) from seat belt pretensioner (LH). 3) Disconnect connector (AB19) from side airbag module (LH). 4) Disconnect the airbag resistor from test harness N. 5) Disconnect the connectors (AB6, AB17, AB18) from airbag control module. 6) Connect the connector (1AG) in the test harness AG to the connectors (AB6, AB17, AB18). NOTE: For sedan models, connect test harness AH between the connectors (AB6, AB17, AB18) and (1AG). 7) Measure the resistance between connector (2N) terminals in test harness N. ***Connector & terminal*** ***(2N) No. 1 — (2N) No. 2:***	Is the resistance 1 MΩ or more?	Go to step **4**.	Replace the airbag rear harness along with body harness.
4	**CHECK AIRBAG CONTROL MODULE.** 1) Connect all connectors. 2) Clear the memory. 3) Perform the Inspection Mode. 4) Read the DTC.	Is the same DTC displayed?	Replace the airbag control module. <Ref. to AB-68, Airbag Control Module.>	Go to step **5**.
5	**CHECK FOR ANY OTHER DTC ON DISPLAY.**	Is any other DTC displayed?	Check DTC using “List of Diagnostic Trouble Code (DTC)”. <Ref. to AB(diag)-41, List of Diagnostic Trouble Code (DTC).>	Finish the diagnosis.

GETtheMANUALS.org

BJ:DTC 9D CURTAIN AIRBAG MODULE RH FAILURE

DTC DETECTING CONDITION:

- Curtain airbag harness (RH) circuit is open.
- Curtain airbag module (RH) is faulty.
- Airbag control module is faulty.

CAUTION:

Before performing diagnosis, refer to "CAUTION" in "General Description". <Ref. to AB(diag)-5, CAUTION, General Description.>

WIRING DIAGRAM:

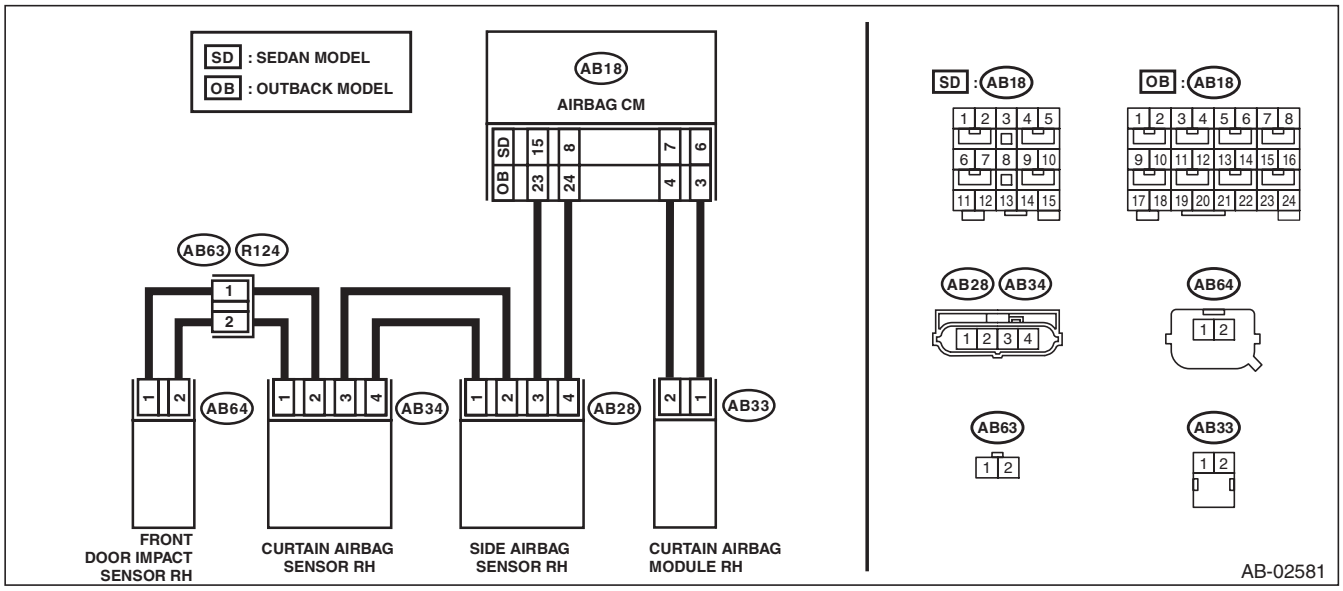

Step		Check	Yes	No
1	**CHECK POOR CONTACT OF CONNECTORS.** Check for poor contact of the connectors between the airbag control module, curtain airbag module RH and the curtain airbag sensor RH.	Is there poor contact?	Replace the airbag rear harness along with body harness.	Go to step **2**.
2	**CHECK CURTAIN AIRBAG MODULE.** 1) Turn the ignition switch to OFF, disconnect the battery ground cable, and wait for 60 seconds or more. 2) Disconnect the connector (AB33) from curtain airbag module (RH), and connect the connector (1N) in test harness N to connector (AB33). 3) Connect the airbag resistor to the connector (2N) of test harness N. 4) Connect the battery ground terminal and turn the ignition switch to ON.	Does the airbag warning light illuminate for six seconds and go off?	Replace the curtain airbag module (RH). <Ref. to AB-65, Curtain Airbag Module.>	Go to step **3**.

GETtheMANUALS.org

	Step	Check	Yes	No
3	**CHECK AIRBAG REAR HARNESS (CURTAIN AIRBAG MODULE HARNESS RH).** 1) Turn the ignition switch to OFF, disconnect the battery ground cable, and wait for 60 seconds or more. 2) Disconnect the connector (AB26) from seat belt pretensioner (RH). 3) Disconnect connector (AB24) from side airbag module (RH). 4) Disconnect the airbag resistor from test harness N. 5) Disconnect the connectors (AB6, AB17, AB18) from airbag control module. 6) Connect the connector (1AG) in the test harness AG to the connectors (AB6, AB17, AB18). NOTE: For sedan models, connect test harness AH between the connectors (AB6, AB17, AB18) and (1AG). 7) Measure the resistance between connector (5AG) or (6AG) in the test harness AG and connector (2N) in the test harness N. ***Connector & terminal*** ***Sedan model*** ***(5AG) No. 2 — (2N) No. 1:*** ***(5AG) No. 4 — (2N) No. 2:*** ***OUTBACK model*** ***(6AG) No. 1 — (2N) No. 1:*** ***(6AG) No. 3 — (2N) No. 2:***	Is the resistance less than 10 Ω?	Go to step **4**.	Replace the airbag rear harness along with body harness.
4	**CHECK AIRBAG CONTROL MODULE.** 1) Connect all connectors. 2) Clear the memory. 3) Perform the Inspection Mode. 4) Read the DTC.	Is the same DTC displayed?	Replace the airbag control module. <Ref. to AB-68, Airbag Control Module.>	Go to step **5**.
5	**CHECK FOR ANY OTHER DTC ON DISPLAY.**	Is any other DTC displayed?	Check DTC using “List of Diagnostic Trouble Code (DTC)”. <Ref. to AB(diag)-41, List of Diagnostic Trouble Code (DTC).>	Finish the diagnosis.

GETtheMANUALS.org

BK:DTC 9E CURTAIN AIRBAG MODULE LH FAILURE

DTC DETECTING CONDITION:

- Curtain airbag harness (LH) circuit is open.
- Curtain airbag module (LH) is faulty.
- Airbag control module is faulty.

CAUTION:

Before performing diagnosis, refer to "CAUTION" in "General Description". <Ref. to AB(diag)-5, CAUTION, General Description.>

WIRING DIAGRAM:

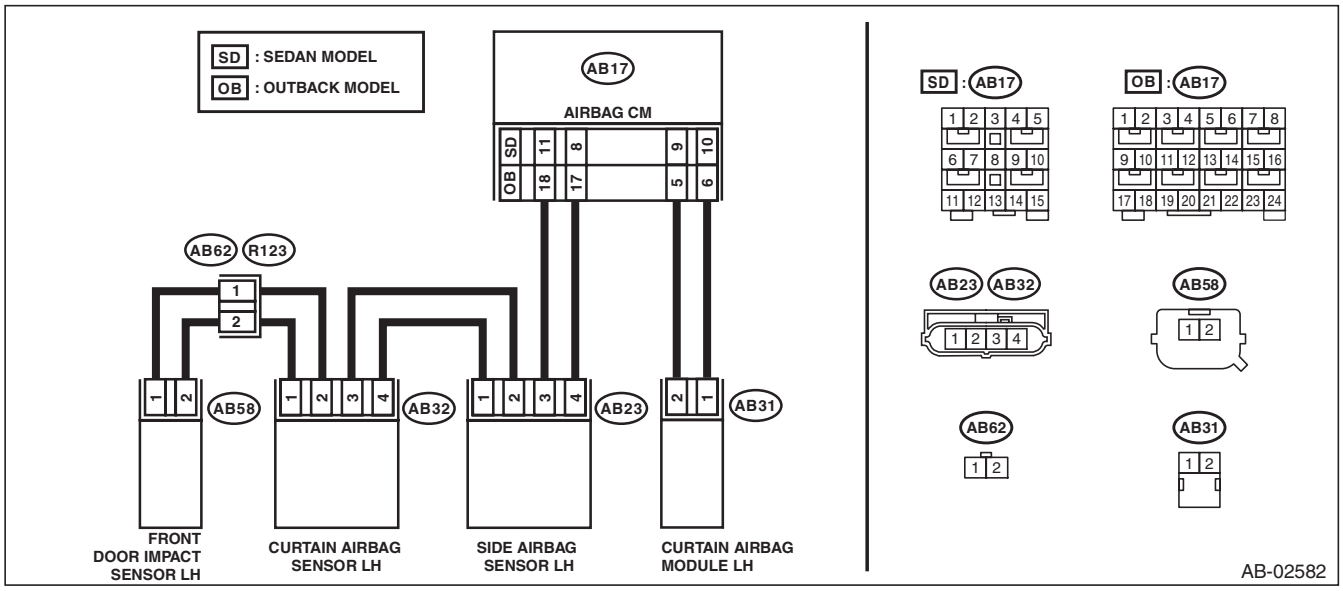

Step		Check	Yes	No
1	**CHECK POOR CONTACT OF CONNECTORS.** Check for poor contact of the connectors between the airbag control module, curtain airbag module LH and the curtain airbag sensor LH.	Is there poor contact?	Replace the airbag rear harness along with body harness.	Go to step **2**.
2	**CHECK CURTAIN AIRBAG MODULE.** 1) Turn the ignition switch to OFF, disconnect the battery ground cable, and wait for 60 seconds or more. 2) Disconnect the connector (AB31) from curtain airbag module (LH), and connect the connector (1N) in test harness N to connector (AB31). 3) Connect the airbag resistor to the connector (2N) of test harness N. 4) Connect the battery ground terminal and turn the ignition switch to ON.	Does the airbag warning light illuminate for six seconds and go off?	Replace the curtain airbag module (LH). <Ref. to AB-65, Curtain Airbag Module.>	Go to step **3**.

GETthemANUALS.org

	Step	Check	Yes	No
3	**CHECK AIRBAG REAR HARNESS (CURTAIN AIRBAG MODULE HARNESS LH).** 1) Turn the ignition switch to OFF, disconnect the battery ground cable, and wait for 60 seconds or more. 2) Disconnect the connector (AB21) from seat belt pretensioner (LH). 3) Disconnect connector (AB19) from side airbag module (LH). 4) Disconnect the airbag resistor from test harness N. 5) Disconnect the connectors (AB6, AB17, AB18) from airbag control module. 6) Connect the connector (1AG) in the test harness AG to the connectors (AB6, AB17, AB18). NOTE: For sedan models, connect test harness AH between the connectors (AB6, AB17, AB18) and (1AG). 7) Measure the resistance between connector (5AG) or (6AG) in the test harness AG and connector (2N) in the test harness N. ***Connector & terminal*** ***Sedan model*** ***(5AG) No. 6 — (2N) No. 1:*** ***(5AG) No. 12 — (2N) No. 2:*** ***OUTBACK model*** ***(6AG) No. 8 — (2N) No. 1:*** ***(6AG) No. 6 — (2N) No. 2:***	Is the resistance less than 10 Ω?	Go to step **4**.	Replace the airbag rear harness along with body harness.
4	**CHECK AIRBAG CONTROL MODULE.** 1) Connect all connectors. 2) Clear the memory. 3) Perform the Inspection Mode. 4) Read the DTC.	Is the same DTC displayed?	Replace the airbag control module. <Ref. to AB-68, Airbag Control Module.>	Go to step **5**.
5	**CHECK FOR ANY OTHER DTC ON DISPLAY.**	Is any other DTC displayed?	Check DTC using “List of Diagnostic Trouble Code (DTC)”. <Ref. to AB(diag)-41, List of Diagnostic Trouble Code (DTC).>	Finish the diagnosis.

GETtheMANUALS.org

BL:DTC A1 FRONT SENSOR BUS COMMUNICATION ERROR

DTC DETECTING CONDITION:

- Harness between airbag control module and front sub sensor is open or shorted.
- Front sub sensor is faulty.
- Airbag control module is faulty.

CAUTION:

Before performing diagnosis, refer to “CAUTION” in “General Description”. <Ref. to AB(diag)-5, CAUTION, General Description.>

WIRING DIAGRAM:

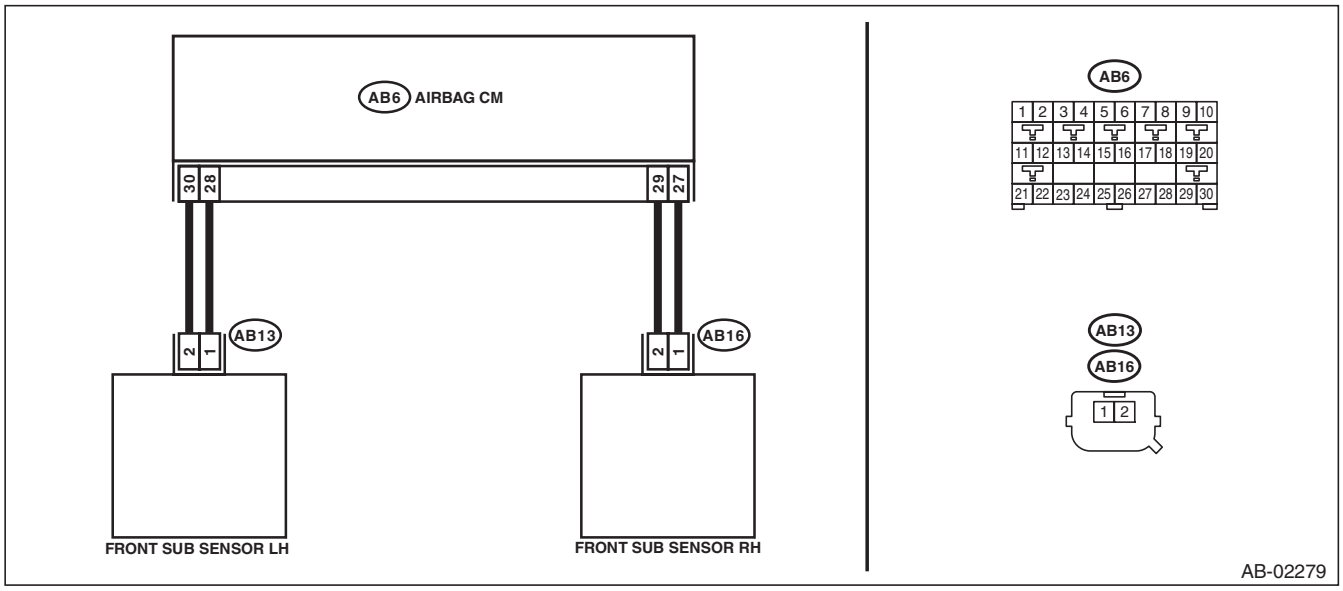

Step		Check	Yes	No
1	**CHECK POOR CONTACT OF CONNECTORS.** Check for poor contact of the connectors between the airbag control module and the front sub sensor.	Is there poor contact?	Replace the airbag main harness along with body harness.	Go to step **2**.

GETtheMANUALS.org

	Step	Check	Yes	No
2	**CHECK AIRBAG MAIN HARNESS (FRONT SENSOR BUS LH).** 1) Turn the ignition switch to OFF, disconnect the battery ground cable, and wait for 60 seconds or more. 2) Remove the instrument panel lower cover and column cover, and disconnect the connectors (AB7) and (AB2). 3) Remove the console front panel and disconnect the connector (AB9). 4) Disconnect the connectors (AB6, AB17, AB18) from airbag control module. 5) Connect the connector (1AG) in the test harness AG to the connectors (AB6, AB17, AB18). NOTE: For sedan models, connect test harness AH between the connectors (AB6, AB17, AB18) and (1AG). 6) Disconnect the connector (AB13) from the front sub sensor (LH), and then connect the connector (1H) in the test harness H to connector (AB13). 7) Measure the resistance between connector (4AG) in the test harness AG and connector (3H) in the test harness H. ***Connector & terminal*** ***(4AG) No. 7 — (3H) No. 5:*** ***(4AG) No. 9 — (3H) No. 6:***	Is the resistance less than 10 Ω?	Go to step **3**.	Replace the airbag main harness along with body harness.
3	**CHECK AIRBAG MAIN HARNESS (FRONT SENSOR BUS LH).** Measure the resistance between connector (4AG) in the test harness AG and chassis ground, and the resistance between connector (4AG) terminals in the test harness AG. ***Connector & terminal*** ***(4AG) No. 7 — Chassis ground:*** ***(4AG) No. 9 — Chassis ground:*** ***(4AG) No. 7 — (4AG) No. 9:***	Is the resistance 1 MΩ or more?	Go to step **4**.	Replace the airbag rear harness along with body harness.
4	**CHECK AIRBAG MAIN HARNESS (FRONT SENSOR BUS RH).** 1) Disconnect the connector (AB16) from the front sub sensor (RH), and then connect the connector (1H) in the test harness H to connector (AB16). 2) Measure the resistance between connector (4AG) in the test harness AG and connector (3H) in the test harness H. ***Connector & terminal*** ***(4AG) No. 14 — (3H) No. 5:*** ***(4AG) No. 12 — (3H) No. 6:***	Is the resistance less than 10 Ω?	Go to step **5**.	Replace the airbag main harness along with body harness.
5	**CHECK AIRBAG MAIN HARNESS (FRONT SENSOR BUS RH).** Measure the resistance between connector (4AG) in the test harness AG and chassis ground, and the resistance between connector (4AG) terminals in the test harness AG. ***Connector & terminal*** ***(4AG) No. 12 — Chassis ground:*** ***(4AG) No. 14 — Chassis ground:*** ***(4AG) No. 12 — (4AG) No. 14:***	Is the resistance 1 MΩ or more?	Go to step **6**.	Replace the airbag rear harness along with body harness.

GETtheMANUALS.org

Step		Check	Yes	No
6	**CHECK AIRBAG CONTROL MODULE.** 1) Connect all connectors. 2) Clear the memory. 3) Perform the Inspection Mode. 4) Read the DTC.	Is the same DTC displayed?	Replace the front sub sensor (LH) and front sub sensor (RH). <Ref. to AB-71, REMOVAL, Front Sub Sensor.> Replace the airbag control module if not operating normally even after replacing the sensor. <Ref. to AB-68, REMOVAL, Airbag Control Module.>	Go to step **7**.
7	**CHECK FOR ANY OTHER DTC ON DISPLAY.**	Is any other DTC displayed?	Check DTC using "List of Diagnostic Trouble Code (DTC)". <Ref. to AB(diag)-41, List of Diagnostic Trouble Code (DTC).>	Finish the diagnosis.

BM:DTC A2 DOOR SENSOR BUS RH COMMUNICATION ERROR

NOTE:
Refer to DTC A3 for DTC A2. <Ref. to AB(diag)-167, DTC A3 DOOR SENSOR BUS RH COMMUNICATION ERROR, Diagnostic Chart with Trouble Code.>

GETtheMANUALS.org

BN:DTC A3 DOOR SENSOR BUS RH COMMUNICATION ERROR

DTC DETECTING CONDITION:

- Open or short circuit in harness of side sensor bus (RH).
- Front door impact sensor (RH) is faulty.
- Curtain airbag sensor (RH) is faulty.
- Airbag control module is faulty.

CAUTION:

Before performing diagnosis, refer to “CAUTION” in “General Description”. <Ref. to AB(diag)-5, CAUTION, General Description.>

WIRING DIAGRAM:

- Type A

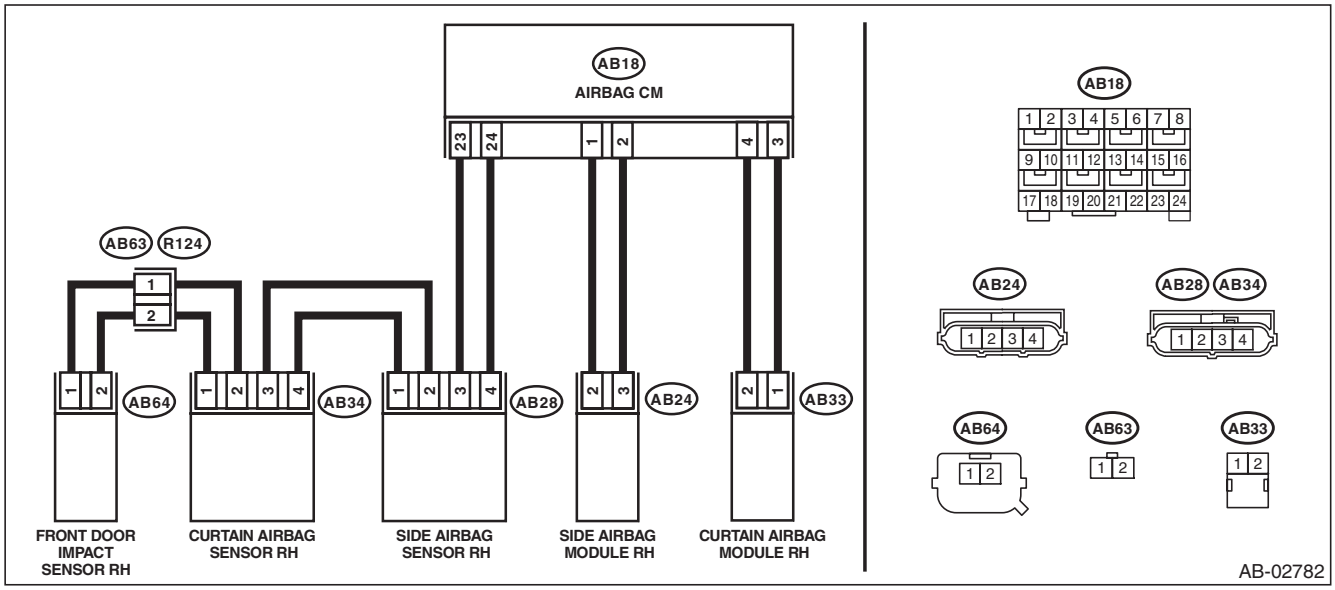

- Type B

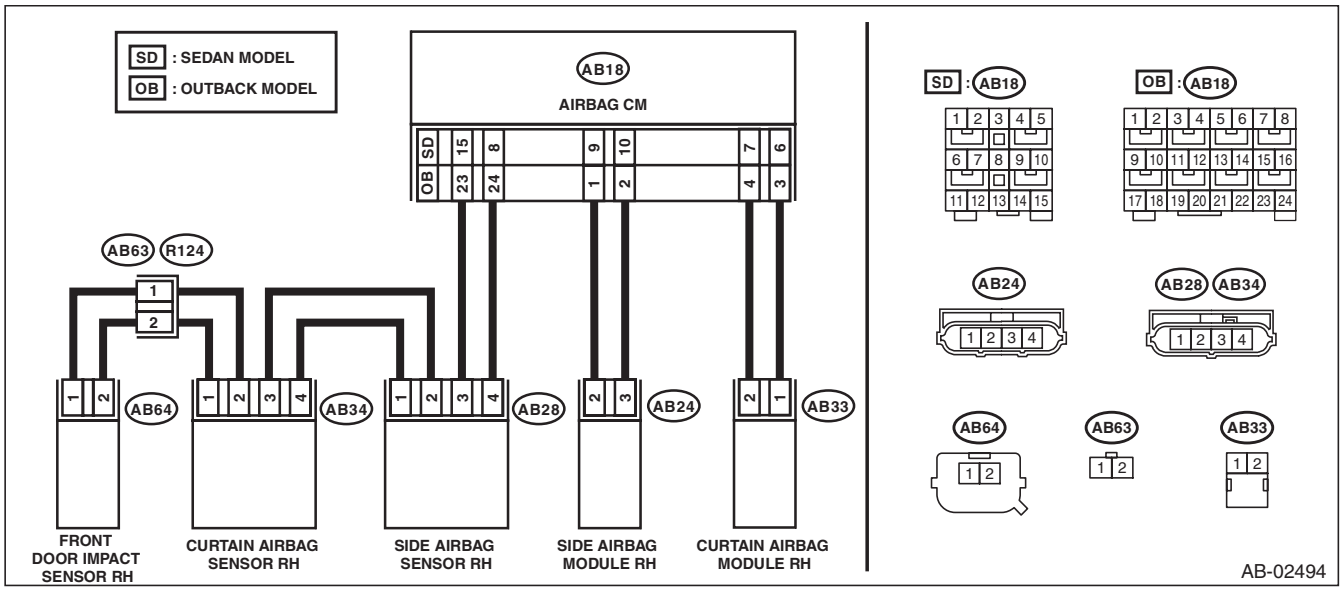

GETthemMANUALS.org

Diagnostic Chart with Trouble Code

	Step	Check	Yes	No
1	**CHECK DTC.** Read the DTC.	Is DTC EB or EC displayed?	Perform the diagnosis of DTC EC. <Ref. to AB(diag)-189, DTC EC SIDE SENSOR BUS RH COMMUNICATION ERROR, Diagnostic Chart with Trouble Code.>	Go to step **2**.
2	**CHECK DTC.** Read the DTC.	Is DTC ED or EE displayed?	Perform the diagnosis of DTC EE. <Ref. to AB(diag)-192, DTC EE SIDE SENSOR BUS RH COMMUNICATION ERROR, Diagnostic Chart with Trouble Code.>	Go to step **3**.
3	**CHECK POOR CONTACT OF CONNECTORS.** Check for poor contact of the connectors between the airbag control module and the front door impact sensor (RH).	Is there poor contact?	Replace the airbag rear harness and the door harness.	Go to step **4**.
4	**CHECK AIRBAG REAR HARNESS AND DOOR HARNESS (BETWEEN CURTAIN AIRBAG SENSOR RH AND DOOR SENSOR RH).** 1) Turn the ignition switch to OFF, disconnect the battery ground cable, and wait for 60 seconds or more. 2) Disconnect the connector (AB26) from seat belt pretensioner (RH). 3) Disconnect the connector (AB33) from curtain airbag module (RH). 4) Disconnect connector (AB24) from side airbag module (RH). 5) Disconnect the connector (AB34) from curtain airbag sensor (RH), and connect the connector (2V) in test harness V to connector (AB34). 6) Disconnect the connector (AB64) from the front door impact sensor (RH), and connect the connector (1H) in the test harness H to connector (AB64). 7) Measure the resistance between connector (3V) in the test harness V and connector (3H) in the test harness H. ***Connector & terminal*** ***(3V) No. 4 — (3H) No. 5:*** ***(3V) No. 5 — (3H) No. 6:***	Is the resistance less than 10 Ω?	Go to step **5**.	Check the door harness, and if any fault is found, replace the harness. If there is no fault, replace the airbag rear harness together with body harness.

GETtheMANUALS.org

Step		Check	Yes	No
5	**CHECK AIRBAG REAR HARNESS AND DOOR HARNESS (BETWEEN CURTAIN AIRBAG SENSOR RH AND DOOR SENSOR RH).** Measure the resistance between connector (3V) in test harness V and chassis ground, and the resistance between connector (3V) terminals in test harness V. ***Connector & terminal*** ***(3V) No. 4 — Chassis ground:*** ***(3V) No. 5 — Chassis ground:*** ***(3V) No. 4 — (3V) No. 5:***	Is the resistance 1 MΩ or more?	Go to step **6**.	Check the door harness, and if any fault is found, replace the harness. If there is no fault, replace the airbag rear harness together with body harness.
6	**CHECK AIRBAG CONTROL MODULE.** 1) Connect all connectors. 2) Clear the memory. 3) Perform the Inspection Mode. 4) Read the DTC.	Is the same DTC displayed?	Go to step **7**.	Go to step **9**.
7	**REPLACE FRONT DOOR IMPACT SENSOR (RH) AND CHECK AIRBAG CONTROL MODULE AFTER REPLACEMENT.** 1) Turn the ignition switch to OFF, disconnect the battery ground cable, and wait for 60 seconds or more. 2) Replace the front door impact sensor (RH). <Ref. to AB-78, REMOVAL, Front Door Impact Sensor.> 3) Connect all connectors. 4) Clear the memory. 5) Perform the Inspection Mode. 6) Read the DTC.	Is the same DTC displayed?	Go to step **8**.	Go to step **9**.
8	**REPLACE CURTAIN AIRBAG SENSOR (RH) AND CHECK AIRBAG CONTROL MODULE AFTER REPLACEMENT.** 1) Turn the ignition switch to OFF, disconnect the battery ground cable, and wait for 60 seconds or more. 2) Replace the curtain airbag sensor (RH). <Ref. to AB-87, REMOVAL, Curtain Airbag Sensor.> 3) Connect all connectors. 4) Clear the memory. 5) Perform the Inspection Mode. 6) Read the DTC.	Is the same DTC displayed?	Replace the airbag control module. <Ref. to AB-68, REMOVAL, Airbag Control Module.>	Go to step **9**.
9	**CHECK FOR ANY OTHER DTC ON DISPLAY.**	Is any other DTC displayed?	Check DTC using "List of Diagnostic Trouble Code". <Ref. to AB(diag)-41, LIST, List of Diagnostic Trouble Code (DTC).>	Finish the diagnosis.

BO:DTC A4 DOOR SENSOR BUS LH COMMUNICATION ERROR

NOTE:
Refer to DTC A5 for DTC A4. <Ref. to AB(diag)-170, DTC A5 DOOR SENSOR BUS LH COMMUNICATION ERROR, Diagnostic Chart with Trouble Code.>

GETtheMANUALS.org

BP:DTC A5 DOOR SENSOR BUS LH COMMUNICATION ERROR

DTC DETECTING CONDITION:

- Open or short circuit in harness of side sensor bus (LH).
- Front door impact sensor (LH) is faulty.
- Curtain airbag sensor (LH) is faulty.
- Airbag control module is faulty.

CAUTION:

Before performing diagnosis, refer to “CAUTION” in “General Description”. <Ref. to AB(diag)-5, CAUTION, General Description.>

WIRING DIAGRAM:

- Type A

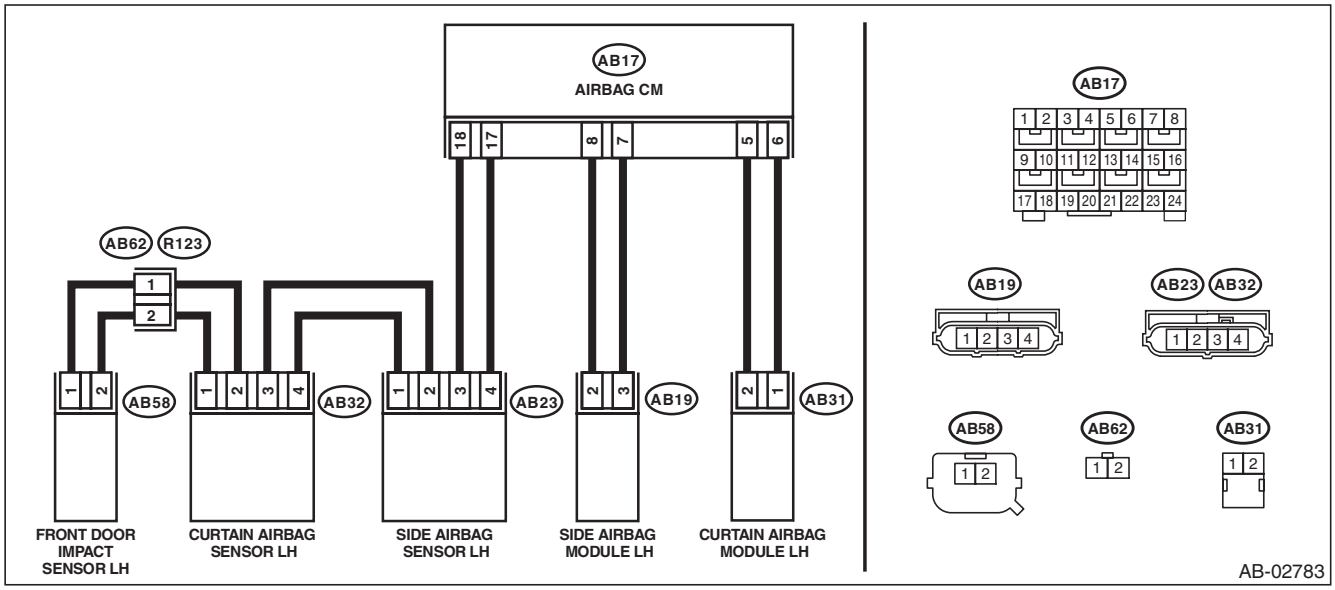

- Type B

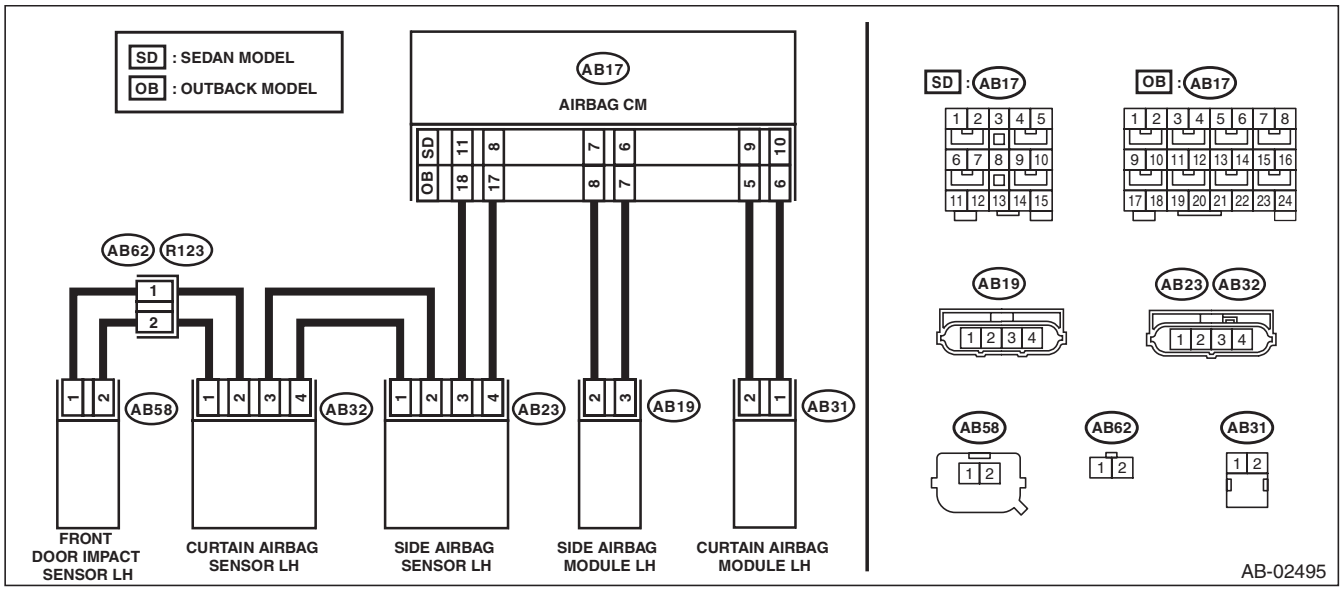

GETthemANUALS.org

Diagnostic Chart with Trouble Code

	Step	Check	Yes	No
1	**CHECK DTC.** Read the DTC.	Is DTC F3 or F4 displayed?	Perform the diagnosis of DTC F4. <Ref. to AB(diag)-201, DTC F4 SIDE SENSOR BUS LH COMMUNICATION ERROR, Diagnostic Chart with Trouble Code.>	Go to step **2**.
2	**CHECK DTC.** Read the DTC.	Is DTC F5 or F6 displayed?	Perform the diagnosis of DTC F6. <Ref. to AB(diag)-204, DTC F6 SIDE SENSOR BUS LH COMMUNICATION ERROR, Diagnostic Chart with Trouble Code.>	Go to step **3**.
3	**CHECK POOR CONTACT OF CONNECTORS.** Check for poor contact of the connectors between the airbag control module and the front door impact sensor (LH).	Is there poor contact?	Replace the airbag rear harness and the door harness.	Go to step **4**.
4	**CHECK AIRBAG REAR HARNESS AND DOOR HARNESS (BETWEEN CURTAIN AIRBAG SENSOR LH AND FRONT DOOR IMPACT SENSOR LH).** 1) Turn the ignition switch to OFF, disconnect the battery ground cable, and wait for 60 seconds or more. 2) Disconnect the connector (AB21) from seat belt pretensioner (LH). 3) Disconnect the connector (AB31) from curtain airbag module (LH). 4) Disconnect connector (AB19) from side airbag module (LH). 5) Disconnect the connector (AB32) from curtain airbag sensor (LH), and connect the connector (2V) in test harness V to connector (AB32). 6) Disconnect the connector (AB58) from the front door impact sensor (LH), and connect the connector (1H) in the test harness H to connector (AB58). 7) Measure the resistance between connector (3V) in the test harness V and connector (3H) in the test harness H. ***Connector & terminal*** ***(3V) No. 4 — (3H) No. 5:*** ***(3V) No. 5 — (3H) No. 6:***	Is the resistance less than 10 Ω?	Go to step **5**.	Check the door harness, and if any fault is found, replace the harness. If there is no fault, replace the airbag rear harness together with body harness.

GETtheMANUALS.org

	Step	Check	Yes	No
5	**CHECK AIRBAG REAR HARNESS AND DOOR HARNESS (BETWEEN CURTAIN AIRBAG SENSOR LH AND FRONT DOOR IMPACT SENSOR LH).** Measure the resistance between connector (3V) in test harness V and chassis ground, and the resistance between connector (3V) terminals in test harness V. ***Connector & terminal*** ***(3V) No. 4 — Chassis ground:*** ***(3V) No. 5 — Chassis ground:*** ***(3V) No. 4 — (3V) No. 5:***	Is the resistance 1 MΩ or more?	Go to step **6**.	Check the door harness, and if any fault is found, replace the harness. If there is no fault, replace the airbag rear harness together with body harness.
6	**CHECK AIRBAG CONTROL MODULE.** 1) Connect all connectors. 2) Clear the memory. 3) Perform the Inspection Mode. 4) Read the DTC.	Is the same DTC displayed?	Go to step **7**.	Go to step **9**.
7	**REPLACE FRONT DOOR IMPACT SENSOR (LH) AND CHECK AIRBAG CONTROL MODULE AFTER REPLACEMENT.** 1) Turn the ignition switch to OFF, disconnect the battery ground cable, and wait for 60 seconds or more. 2) Replace the front door impact sensor (LH). <Ref. to AB-78, REMOVAL, Front Door Impact Sensor.> 3) Connect all connectors. 4) Clear the memory. 5) Perform the Inspection Mode. 6) Read the DTC.	Is the same DTC displayed?	Go to step **8**.	Go to step **9**.
8	**REPLACE CURTAIN AIRBAG SENSOR (LH) AND CHECK AIRBAG CONTROL MODULE AFTER REPLACEMENT.** 1) Turn the ignition switch to OFF, disconnect the battery ground cable, and wait for 60 seconds or more. 2) Replace the curtain airbag sensor (LH). <Ref. to AB-87, REMOVAL, Curtain Airbag Sensor.> 3) Connect all connectors. 4) Clear the memory. 5) Perform the Inspection Mode. 6) Read the DTC.	Is the same DTC displayed?	Replace the airbag control module. <Ref. to AB-68, REMOVAL, Airbag Control Module.>	Go to step **9**.
9	**CHECK FOR ANY OTHER DTC ON DISPLAY.** Read the DTC.	Is any other DTC displayed?	Check DTC using "List of Diagnostic Trouble Code". <Ref. to AB(diag)-41, LIST, List of Diagnostic Trouble Code (DTC).>	Finish the diagnosis.

GETtheMANUALS.org

BQ:DTC AA DOOR SENSOR RH FAILURE

DTC DETECTING CONDITION:

Front door impact sensor (RH) is faulty.
If DTC AA is displayed, the circuit within the front door impact sensor (RH) is faulty.
Replace the front door impact sensor (RH). <Ref. to AB-78, REMOVAL, Front Door Impact Sensor.>

BR:DTC AB DOOR SENSOR LH FAILURE

DTC DETECTING CONDITION:

Front door impact sensor (LH) is faulty.
If DTC AB is displayed, the circuit within the front door impact sensor (LH) is faulty.
Replace the front door impact sensor (LH). <Ref. to AB-78, REMOVAL, Front Door Impact Sensor.>

BS:DTC AC DOOR SENSOR RH FALSE INSTALLATION

DTC DETECTING CONDITION:

- Front door impact sensor (RH) is misinstalled.
- Airbag control module is faulty.

Step		Check	Yes	No
1	**REPLACE FRONT DOOR IMPACT SENSOR (RH).** 1) Turn the ignition switch to OFF, disconnect the battery ground cable, and wait for 60 seconds or more. 2) Replace the front door impact sensor (RH) with a genuine sensor. <Ref. to AB-78, REMOVAL, Front Door Impact Sensor.>	Does the warning light go off?	Finish the diagnosis.	Replace the airbag control module. <Ref. to AB-68, REMOVAL, Airbag Control Module.>

BT:DTC AD DOOR SENSOR LH FALSE INSTALLATION

DTC DETECTING CONDITION:

- Front door impact sensor (LH) is misinstalled.
- Airbag control module is faulty.

Step		Check	Yes	No
1	**REPLACE FRONT DOOR IMPACT SENSOR (LH).** 1) Turn the ignition switch to OFF, disconnect the battery ground cable, and wait for 60 seconds or more. 2) Replace the front door impact sensor (LH) with a genuine sensor. <Ref. to AB-78, REMOVAL, Front Door Impact Sensor.>	Does the warning light go off?	Finish the diagnosis.	Replace the airbag control module. <Ref. to AB-68, REMOVAL, Airbag Control Module.>

BU:DTC BB ROLL OVER: FIRING OUTPUT

This DTC is indicated when the curtain airbag module and the seat belt pretensioner are deployed.
Once this DTC is displayed, the memory cannot be cleared. Replace the following parts.

- Airbag control module <Ref. to AB-68, Airbag Control Module.>
- Curtain airbag module (operating side) <Ref. to AB-65, Curtain Airbag Module.>
- Curtain airbag sensor (operating side) <Ref. to AB-87, Curtain Airbag Sensor.>
- Front outer seat belt with pretensioner (operating side) <Ref. to SB-17, Front Seat Belt.>

BV:DTC E2 FRONT SENSOR BUS RH COMMUNICATION ERROR

NOTE:
Refer to DTC E4 for details on DTC E2. <Ref. to AB(diag)-175, DTC E4 FRONT SENSOR BUS RH COMMUNICATION ERROR, Diagnostic Chart with Trouble Code.>

GETtheMANUALS.org

BW:DTC E3 FRONT SENSOR BUS RH COMMUNICATION ERROR

NOTE:
Be sure to properly identify the Airbag system type prior to performing any diagnostics.

- Type A

NOTE:
Refer to DTC E4 for details on DTC E3. <Ref. to AB(diag)-175, DTC E4 FRONT SENSOR BUS RH COMMUNICATION ERROR, Diagnostic Chart with Trouble Code.>

- Type B

NOTE:
Refer to DTC A1 for DTC E3. <Ref. to AB(diag)-164, DTC A1 FRONT SENSOR BUS COMMUNICATION ERROR, Diagnostic Chart with Trouble Code.>

GETtheMANUALS.org

BX:DTC E4 FRONT SENSOR BUS RH COMMUNICATION ERROR

NOTE:
Be sure to properly identify the Airbag system type prior to performing any diagnostics.

1. TYPE A

DTC DETECTING CONDITION:
- Open or short circuit in harness of front sensor bus (RH).
- Front sub sensor (RH) is faulty.
- Airbag control module is faulty.

CAUTION:
Before performing diagnosis, refer to "CAUTION" in "General Description". <Ref. to AB(diag)-5, CAUTION, General Description.>
WIRING DIAGRAM:

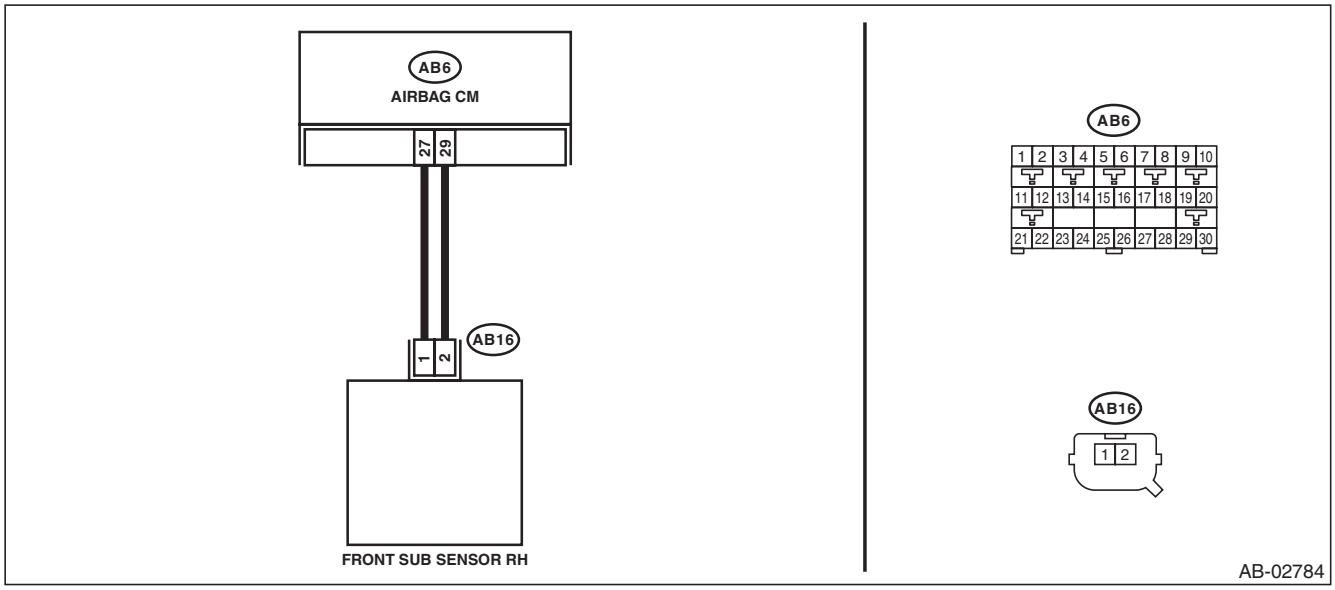

Step		Check	Yes	No
1	**CHECK POOR CONTACT OF CONNECTORS.** Check for poor contact of the connectors between the airbag control module and the front sub sensor (RH).	Is there poor contact?	Replace the airbag main harness along with body harness.	Go to step **2**.

GETtheMANUALS.org

	Step	Check	Yes	No
2	**CHECK AIRBAG MAIN HARNESS (FRONT SENSOR BUS RH).** 1) Turn the ignition switch to OFF, disconnect the battery ground cable, and wait for 60 seconds or more. 2) Remove the instrument panel lower cover and disconnect the connectors (AB7) and (AB2). 3) Remove the console front panel and disconnect the connectors (AB10) and (AB9). 4) Disconnect the connectors (AB17, AB6, AB18) from airbag control module. 5) Connect the connector (1AG) in the test harness AG to the connectors (AB17, AB6, AB18). 6) Disconnect the front sub sensor (RH), and then connect the connector (1H) in the test harness H to connector (AB16). 7) Measure the resistance between connector (4AG) in the test harness AG and connector (3H) in the test harness H. ***Connector & terminal*** ***(4AG) No. 14 — (3H) No. 5:*** ***(4AG) No. 12 — (3H) No. 6:***	Is the resistance less than 10 Ω?	Go to step **3**.	Replace the airbag main harness along with body harness.
3	**CHECK AIRBAG MAIN HARNESS (FRONT SENSOR BUS RH).** Measure the resistance between connector (4AG) in the test harness AG and chassis ground, and the resistance between connector (4AG) in the test harness AG and connector (3H) in test harness H. ***Connector & terminal*** ***(4AG) No. 14 — Chassis ground:*** ***(4AG) No. 12 — Chassis ground:*** ***(4AG) No. 14 — (4AG) No. 12:***	Is the resistance 1 MΩ or more?	Go to step **4**.	Replace the airbag main harness along with body harness.
4	**CHECK AIRBAG CONTROL MODULE.** 1) Connect all connectors. 2) Clear the memory. 3) Perform the Inspection Mode. 4) Read the DTC.	Is the same DTC displayed?	Replace the front sub sensor (RH). <Ref. to AB-71, REMOVAL, Front Sub Sensor.> Replace the airbag control module if not operating normally even after replacing the sensor. <Ref. to AB-68, REMOVAL, Airbag Control Module.>	Go to step **5**.
5	**CHECK FOR ANY OTHER DTC ON DISPLAY.**	Is any other DTC displayed?	Check DTC using "List of Diagnostic Trouble Code". <Ref. to AB(diag)-41, LIST, List of Diagnostic Trouble Code (DTC).>	Finish the diagnosis.

2. TYPE B

NOTE:
Refer to DTC A1 for DTC E4. <Ref. to AB(diag)-164, DTC A1 FRONT SENSOR BUS COMMUNICATION ERROR, Diagnostic Chart with Trouble Code.>

GETthemANUALS.org

BY:DTC E6 FRONT SENSOR BUS LH COMMUNICATION ERROR

NOTE:
Refer to DTC E8 for details on DTC E6. <Ref. to AB(diag)-181, DTC E8 FRONT SENSOR BUS LH COMMUNICATION ERROR, Diagnostic Chart with Trouble Code.>

GETtheMANUALS.org

BZ:DTC E7 FRONT SENSOR BUS LH COMMUNICATION ERROR

NOTE:
Be sure to properly identify the Airbag system type prior to performing any diagnostics.

1. TYPE A

NOTE:
Refer to DTC E8 for details on DTC E7. <Ref. to AB(diag)-181, DTC E8 FRONT SENSOR BUS LH COMMUNICATION ERROR, Diagnostic Chart with Trouble Code.>

GETtheMANUALS.org

2. TYPE B

DTC DETECTING CONDITION:

- Open or short circuit in harness of front sensor bus (LH).
- Front sub sensor (LH) is faulty.
- Airbag control module is faulty.

CAUTION:

Before performing diagnosis, refer to "CAUTION" in "General Description". <Ref. to AB(diag)-5, CAUTION, General Description.>

WIRING DIAGRAM:

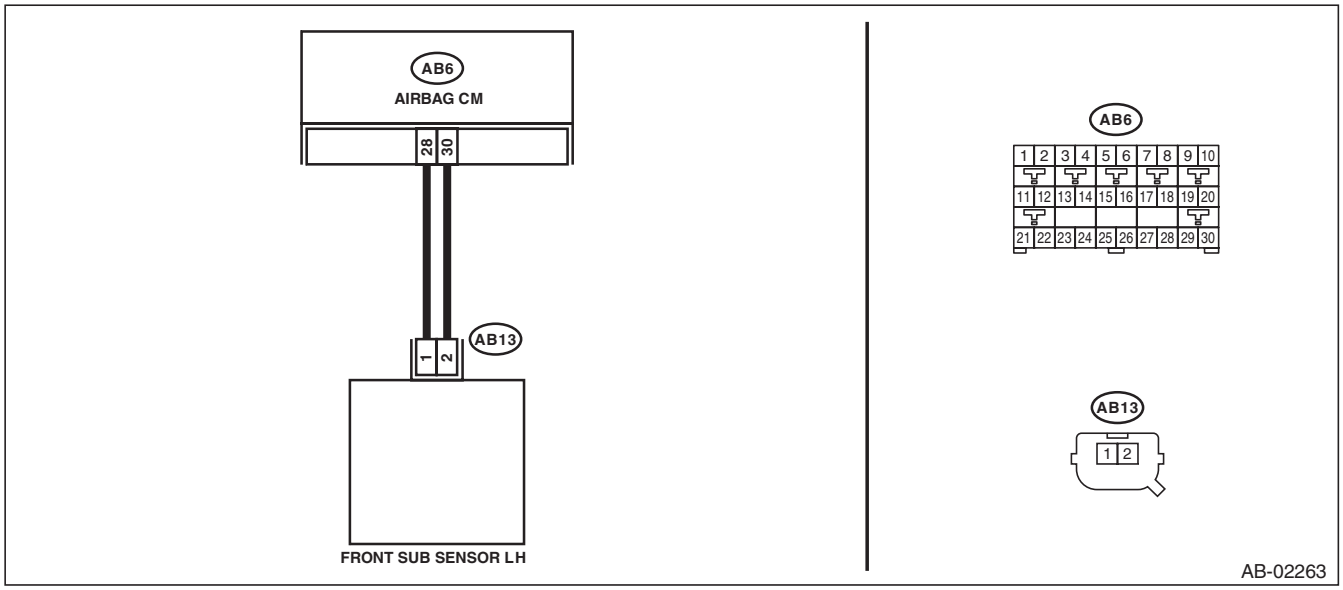

Step		Check	Yes	No
1	**CHECK POOR CONTACT OF CONNECTORS.** Check for poor contact of the connectors (AB6, AB13) between the airbag control module and the front sub sensor (LH).	Is there poor contact?	Replace the airbag main harness along with body harness.	Go to step **2**.

GETtheMANUALS.org

	Step	Check	Yes	No
2	**CHECK AIRBAG MAIN HARNESS (FRONT SENSOR BUS LH).** 1) Turn the ignition switch to OFF, disconnect the battery ground cable, and wait for 60 seconds or more. 2) Remove the instrument panel lower cover and column cover, and disconnect the connectors (AB7) and (AB2). 3) Remove the console front panel and disconnect the connector (AB9). 4) Disconnect the connectors (AB6, AB17, AB18) from airbag control module. 5) Connect the connector (1AG) in the test harness AG to the connectors (AB6, AB17, AB18). NOTE: For sedan models, connect test harness AH between the connectors (AB6, AB17, AB18) and (1AG). 6) Disconnect the front sub sensor (LH), and then connect the connector (1H) in the test harness H to connector (AB13). 7) Measure the resistance between connector (4AG) in the test harness AG and connector (3H) in the test harness H. ***Connector & terminal*** ***(4AG) No. 7 — (3H) No. 5:*** ***(4AG) No. 9 — (3H) No. 6:***	Is the resistance less than 10 Ω?	Go to step **3**.	Replace the airbag main harness along with body harness.
3	**CHECK AIRBAG MAIN HARNESS (FRONT SENSOR BUS LH).** Measure the resistance between connector (4AG) in the test harness AG and chassis ground, and the resistance between connector (4AG) terminals in the test harness AG. ***Connector & terminal*** ***(4AG) No. 7 — Chassis ground:*** ***(4AG) No. 9 — Chassis ground:*** ***(4AG) No. 7 — (4AG) No. 9:***	Is the resistance 1 MΩ or more?	Go to step **4**.	Replace the airbag main harness along with body harness.
4	**CHECK AIRBAG CONTROL MODULE.** 1) Connect all connectors. 2) Clear the memory. 3) Perform the Inspection Mode. 4) Read the DTC.	Is the same DTC displayed?	Replace the front sub sensor (LH). <Ref. to AB-71, REMOVAL, Front Sub Sensor.> Replace the airbag control module if not operating normally even after replacing the sensor. <Ref. to AB-68, REMOVAL, Airbag Control Module.>	Go to step **5**.
5	**CHECK FOR ANY OTHER DTC ON DISPLAY.**	Is any other DTC displayed?	Check DTC using "List of Diagnostic Trouble Code". <Ref. to AB(diag)-41, LIST, List of Diagnostic Trouble Code (DTC).>	Finish the diagnosis.

GETthemANUALS.org

CA:DTC E8 FRONT SENSOR BUS LH COMMUNICATION ERROR

NOTE:
Be sure to properly identify the Airbag system type prior to performing any diagnostics.

1. TYPE A

DTC DETECTING CONDITION:
- Open or short circuit in harness of front sensor bus (LH).
- Front sub sensor (LH) is faulty.
- Airbag control module is faulty.

CAUTION:
Before performing diagnosis, refer to “CAUTION” in “General Description”. <Ref. to AB(diag)-5, CAUTION, General Description.>
WIRING DIAGRAM:

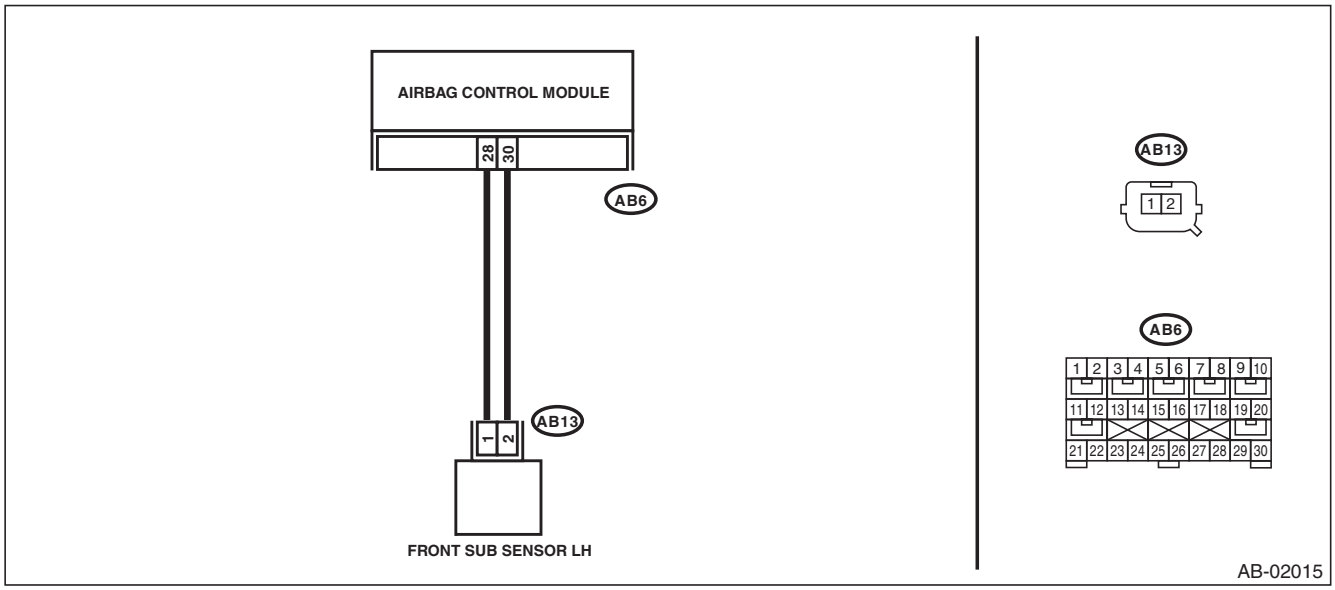

Step		Check	Yes	No
1	**CHECK POOR CONTACT OF CONNECTORS.** Check for poor contact of the connectors (AB6, AB13) between the airbag control module and the front sub sensor (LH).	Is there poor contact?	Replace the airbag main harness along with body harness.	Go to step **2**.

GETtheMANUALS.org

Step		Check	Yes	No
2	**CHECK AIRBAG MAIN HARNESS (FRONT SENSOR BUS LH).** 1) Turn the ignition switch to OFF, disconnect the battery ground cable, and wait for 60 seconds or more. 2) Remove the instrument panel lower cover and disconnect the connectors (AB7) and (AB2). 3) Remove the console front panel and disconnect the connectors (AB9) and (AB10). 4) Disconnect the connectors (AB17, AB6, AB18) from airbag control module. 5) Connect the connector (1AG) in the test harness AG to the connectors (AB17, AB6, AB18). 6) Disconnect the front sub sensor (LH), and then connect the connector (1H) in the test harness H to connector (AB13). 7) Measure the resistance between connector (4AG) in the test harness AG and connector (3H) in the test harness H. ***Connector & terminal*** ***(4AG) No. 7 — (3H) No. 5:*** ***(4AG) No. 9 — (3H) No. 6:***	Is the resistance less than 10 Ω?	Go to step **3**.	Replace the airbag main harness along with body harness.
3	**CHECK AIRBAG MAIN HARNESS (FRONT SENSOR BUS LH).** Measure the resistance between connector (4AG) in the test harness AG and chassis ground, and the resistance between connector (4AG) terminals in the test harness AG. ***Connector & terminal*** ***(4AG) No. 7 — Chassis ground:*** ***(4AG) No. 9 — Chassis ground:*** ***(4AG) No. 7 — (4AG) No. 9:***	Is the resistance 1 MΩ or more?	Go to step **4**.	Replace the airbag main harness along with body harness.
4	**CHECK AIRBAG CONTROL MODULE.** 1) Connect all connectors. 2) Clear the memory. 3) Perform the Inspection Mode. 4) Read the DTC.	Is the same DTC displayed?	Replace the front sub sensor (LH). <Ref. to AB-71, REMOVAL, Front Sub Sensor.> Replace the airbag control module if not operating normally even after replacing the sensor. <Ref. to AB-68, REMOVAL, Airbag Control Module.>	Go to step **5**.
5	**CHECK FOR ANY OTHER DTC ON DISPLAY.**	Is any other DTC displayed?	Check DTC using "List of Diagnostic Trouble Code". <Ref. to AB(diag)-41, LIST, List of Diagnostic Trouble Code (DTC).>	Finish the diagnosis.

2. TYPE B

NOTE:
Refer to DTC E7 for DTC E8. <Ref. to AB(diag)-178, DTC E7 FRONT SENSOR BUS LH COMMUNICATION ERROR, Diagnostic Chart with Trouble Code.>

GETthemANUALS.org

CB:DTC E9 SIDE SENSOR BUS RH COMMUNICATION ERROR

NOTE:
Be sure to properly identify the Airbag system type prior to performing any diagnostics.

DTC DETECTING CONDITION:

- Open or short circuit in harness of side sensor bus (RH).
- Side airbag sensor (RH) is faulty.
- Curtain airbag sensor (RH) is faulty.
- Front door impact sensor (RH) is faulty.
- Airbag control module is faulty.

CAUTION:

Before performing diagnosis, refer to “CAUTION” in “General Description”. <Ref. to AB(diag)-5, CAUTION, General Description.>

WIRING DIAGRAM:

- Type A

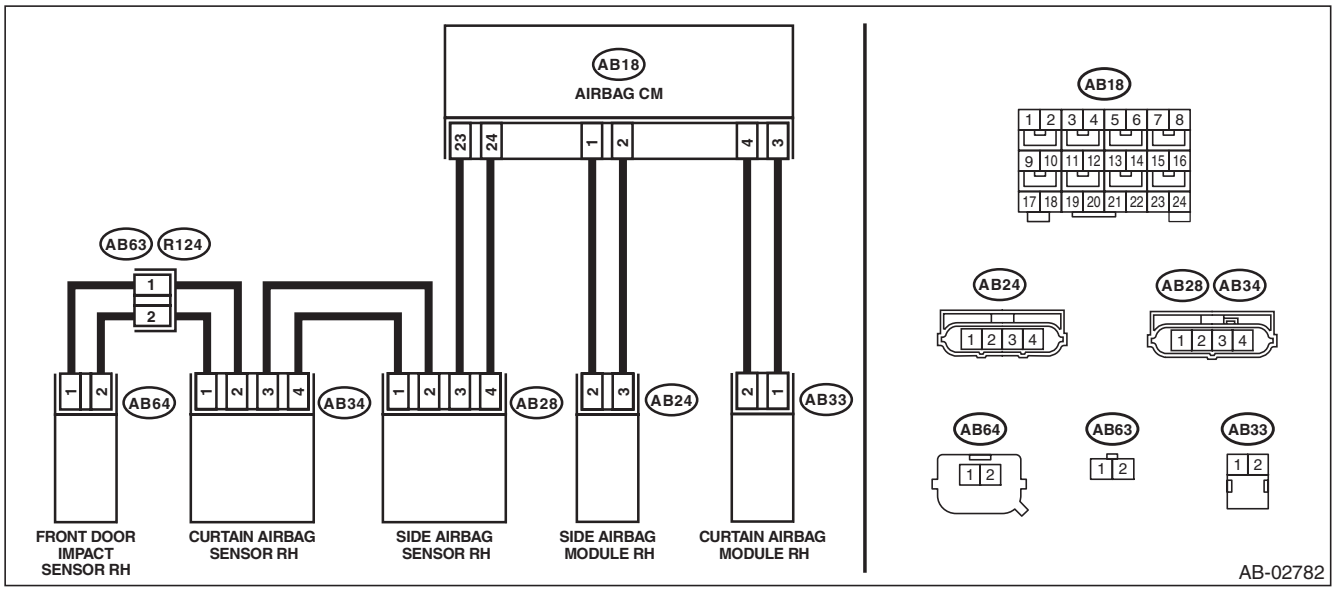

- Type B

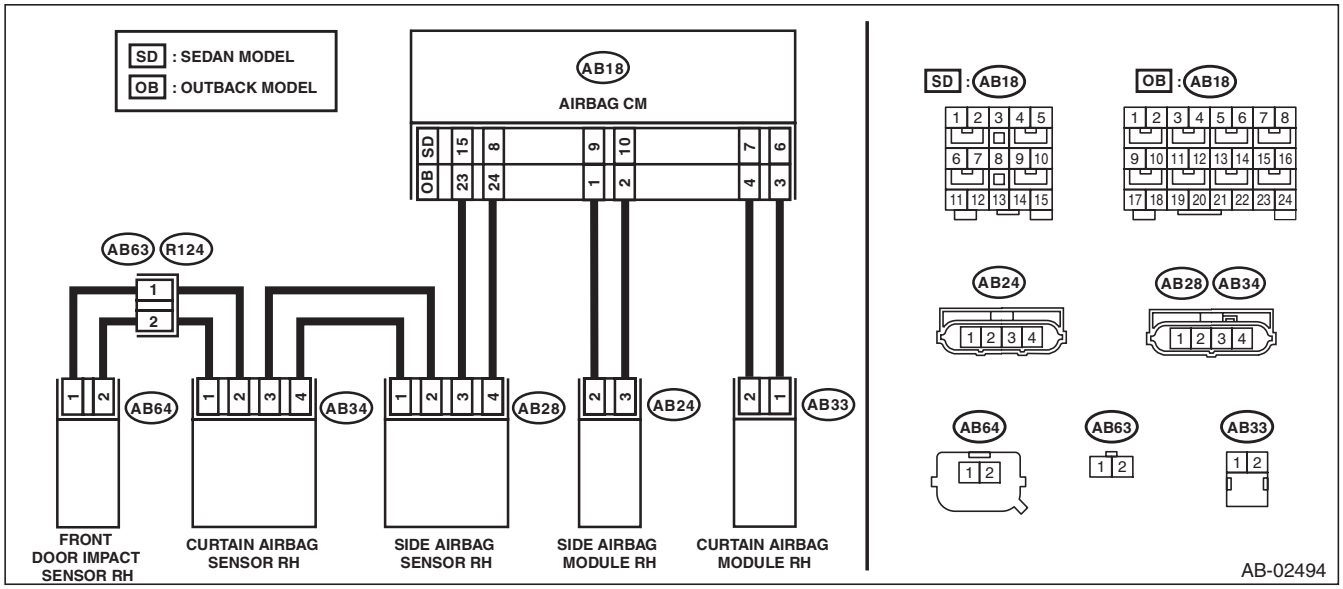

GETthemMANUALS.org

Diagnostic Chart with Trouble Code

Step		Check	Yes	No
1	**CHECK DTC.** Read the DTC.	Is DTC EB or EC displayed?	Perform the diagnosis of DTC EC. <Ref. to AB(diag)-189, DTC EC SIDE SENSOR BUS RH COMMUNICATION ERROR, Diagnostic Chart with Trouble Code.>	Go to step **2**.
2	**CHECK DTC.** Read the DTC.	Is DTC ED or EE displayed?	Perform the diagnosis of DTC EE. <Ref. to AB(diag)-192, DTC EE SIDE SENSOR BUS RH COMMUNICATION ERROR, Diagnostic Chart with Trouble Code.>	Go to step **3**.
3	**CHECK DTC.** Read the DTC.	Is DTC A2 or A3 displayed?	Perform the diagnosis of DTC A3. <Ref. to AB(diag)-167, DTC A3 DOOR SENSOR BUS RH COMMUNICATION ERROR, Diagnostic Chart with Trouble Code.>	Go to step **4**.
4	**CHECK POOR CONTACT OF CONNECTORS.** Check for poor contact of the connectors between the airbag control module and the front door impact sensor (RH).	Is there poor contact?	Replace the airbag rear harness and the door harness.	Go to step **5**.

GETtheMANUALS.org

	Step	Check	Yes	No
5	**CHECK AIRBAG REAR HARNESS (BETWEEN AIRBAG CONTROL MODULE AND SIDE AIRBAG SENSOR RH).** 1) Turn the ignition switch to OFF, disconnect the battery ground cable, and wait for 60 seconds or more. 2) Disconnect the connector (AB26) from seat belt pretensioner (RH). 3) Disconnect the connector (AB33) from curtain airbag module (RH). 4) Disconnect connector (AB24) of the side airbag module (RH). 5) Disconnect the connectors (AB6, AB17, AB18) from airbag control module. 6) Connect the connector (1AG) in the test harness AG to the connectors (AB6, AB17, AB18). NOTE: For type B (sedan models), connect test harness AH between the connectors (AB6, AB17, AB18) and (1AG). 7) Disconnect connector (AB28) from side airbag sensor (RH). 8) Connect the connector (2V) in the test harness V to the connector (AB28). 9) Measure the resistance between connector (5AG) in the test harness AG and connector (3V) in the test harness V. ***Connector & terminal*** ***Type A & Type B (OUTBACK model)*** ***(5AG) No. 8 — (3V) No. 2:*** ***(5AG) No. 10 — (3V) No. 1:*** ***Type B (Sedan model)*** ***(5AG) No. 9 — (3V) No. 2:*** ***(5AG) No. 10 — (3V) No. 1:***	Is the resistance less than 10 Ω?	Go to step **6**.	Replace the airbag rear harness along with body harness.
6	**CHECK AIRBAG REAR HARNESS (BETWEEN AIRBAG CONTROL MODULE AND SIDE AIRBAG SENSOR RH).** Measure the resistance between connector (3V) in test harness V and chassis ground, and the resistance between connector (3V) terminals. ***Connector & terminal*** ***(3V) No. 1 — Chassis ground:*** ***(3V) No. 2 — Chassis ground:*** ***(3V) No. 1 — (3V) No. 2:***	Is the resistance 1 MΩ or more?	Go to step **7**.	Replace the airbag rear harness along with body harness.

GETtheMANUALS.org

	Step	Check	Yes	No
7	**CHECK AIRBAG REAR HARNESS (BETWEEN SIDE AIRBAG SENSOR AND CURTAIN AIRBAG SENSOR RH).** 1) Disconnect the connector (2V) in the test harness V from the connector (AB28) of side airbag sensor (RH). 2) Connect the connector (AB28) of side airbag sensor (RH) and the connector (1AI) in the test harness AI. 3) Connect the connector (2AI) in the test harness AI and the connector (1V) in the test harness V. 4) Disconnect the connector (AB34) from curtain airbag sensor (RH), and connect the connector (2V) in test harness V to connector (AB34). 5) Measure the resistance between connector (3V) terminals in the test harness V. ***Connector & terminal*** ***(3V) No. 2 — (3V) No. 6:*** ***(3V) No. 1 — (3V) No. 7:***	Is the resistance less than 10 Ω?	Go to step **8**.	Replace the airbag rear harness along with body harness.
8	**CHECK AIRBAG REAR HARNESS (BETWEEN SIDE AIRBAG SENSOR AND CURTAIN AIRBAG SENSOR RH).** Measure the resistance between connector (3V) in test harness V and chassis ground, and the resistance between connector (3V) terminals in test harness V. ***Connector & terminal*** ***(3V) No. 2 — Chassis ground:*** ***(3V) No. 1 — Chassis ground:*** ***(3V) No. 1 — (3V) No. 2:***	Is the resistance 1 MΩ or more?	Go to step **9**.	Replace the airbag rear harness along with body harness.
9	**CHECK AIRBAG REAR HARNESS AND DOOR HARNESS (BETWEEN CURTAIN AIRBAG SENSOR RH AND DOOR SENSOR RH).** 1) Disconnect the connector (AB64) from the front door impact sensor (RH), and connect the connector (1H) in the test harness H to connector (AB64). 2) Measure the resistance between connector (3V) in the test harness V and connector (3H) in the test harness H. ***Connector & terminal*** ***(3V) No. 4 — (3H) No. 5:*** ***(3V) No. 5 — (3H) No. 6:***	Is the resistance less than 10 Ω?	Go to step **10**.	Check the door harness, and if any fault is found, replace the harness. If there is no fault, replace the airbag rear harness together with body harness.
10	**CHECK AIRBAG REAR HARNESS AND DOOR HARNESS (BETWEEN CURTAIN AIRBAG SENSOR RH AND FRONT DOOR IMPACT SENSOR RH).** Measure the resistance between connector (3V) in test harness V and chassis ground, and the resistance between connector (3V) terminals in test harness V. ***Connector & terminal*** ***(3V) No. 4 — Chassis ground:*** ***(3V) No. 5 — Chassis ground:*** ***(3V) No. 4 — (3V) No. 5:***	Is the resistance 1 MΩ or more?	Go to step **11**.	Check the door harness, and if any fault is found, replace the harness. If there is no fault, replace the airbag rear harness together with body harness.

GETtheMANUALS.org

Step		Check	Yes	No
11	**CHECK AIRBAG CONTROL MODULE.** 1) Connect all connectors. 2) Clear the memory. 3) Perform the Inspection Mode. 4) Read the DTC.	Is the same DTC displayed?	Go to step **12**.	Go to step **15**.
12	**REPLACE SIDE AIRBAG SENSOR (RH) AND CHECK AIRBAG CONTROL MODULE AFTER REPLACEMENT.** 1) Turn the ignition switch to OFF, disconnect the battery ground cable, and wait for 60 seconds or more. 2) Replace the side airbag sensor (RH). <Ref. to AB-81, REMOVAL, Side Airbag Sensor.> 3) Connect all connectors. 4) Clear the memory. 5) Perform the Inspection Mode. 6) Read the DTC.	Is the same DTC displayed?	Go to step **13**.	Go to step **15**.
13	**REPLACE CURTAIN AIRBAG SENSOR (RH) AND CHECK AIRBAG CONTROL MODULE AFTER REPLACEMENT.** 1) Turn the ignition switch to OFF, disconnect the battery ground cable, and wait for 60 seconds or more. 2) Replace the curtain airbag sensor (RH). <Ref. to AB-87, REMOVAL, Curtain Airbag Sensor.> 3) Connect all connectors. 4) Clear the memory. 5) Perform the Inspection Mode. 6) Read the DTC.	Is the same DTC displayed?	Go to step **14**.	Go to step **15**.
14	**REPLACE FRONT DOOR IMPACT SENSOR (RH) AND CHECK AIRBAG CONTROL MODULE AFTER REPLACEMENT.** 1) Turn the ignition switch to OFF, disconnect the battery ground cable, and wait for 60 seconds or more. 2) Replace the front door impact sensor (RH). <Ref. to AB-78, REMOVAL, Front Door Impact Sensor.> 3) Connect all connectors. 4) Clear the memory. 5) Perform the Inspection Mode. 6) Read the DTC.	Is the same DTC displayed?	Replace the airbag control module. <Ref. to AB-68, REMOVAL, Airbag Control Module.>	Go to step **15**.
15	**CHECK FOR ANY OTHER DTC ON DISPLAY.** Read the DTC.	Is any other DTC displayed?	Check DTC using “List of Diagnostic Trouble Code”. <Ref. to AB(diag)-41, LIST, List of Diagnostic Trouble Code (DTC).>	Finish the diagnosis.

GETtheMANUALS.org

CC:DTC EA SIDE SENSOR BUS RH COMMUNICATION ERROR

NOTE:
Refer to DTC E9 for details on DTC EA. <Ref. to AB(diag)-183, DTC E9 SIDE SENSOR BUS RH COMMUNICATION ERROR, Diagnostic Chart with Trouble Code.>

CD:DTC EB SIDE SENSOR BUS RH COMMUNICATION ERROR

NOTE:
Refer to DTC EC for details on DTC EB. <Ref. to AB(diag)-189, DTC EC SIDE SENSOR BUS RH COMMUNICATION ERROR, Diagnostic Chart with Trouble Code.>

GETtheMANUALS.org

CE:DTC EC SIDE SENSOR BUS RH COMMUNICATION ERROR

NOTE:
Be sure to properly identify the Airbag system type prior to performing any diagnostics.

DTC DETECTING CONDITION:

- Open or short circuit in harness of side sensor bus (RH).
- Side airbag sensor (RH) is faulty.
- Airbag control module is faulty.

CAUTION:

Before performing diagnosis, refer to "CAUTION" in "General Description". <Ref. to AB(diag)-5, CAUTION, General Description.>

WIRING DIAGRAM:

- Type A

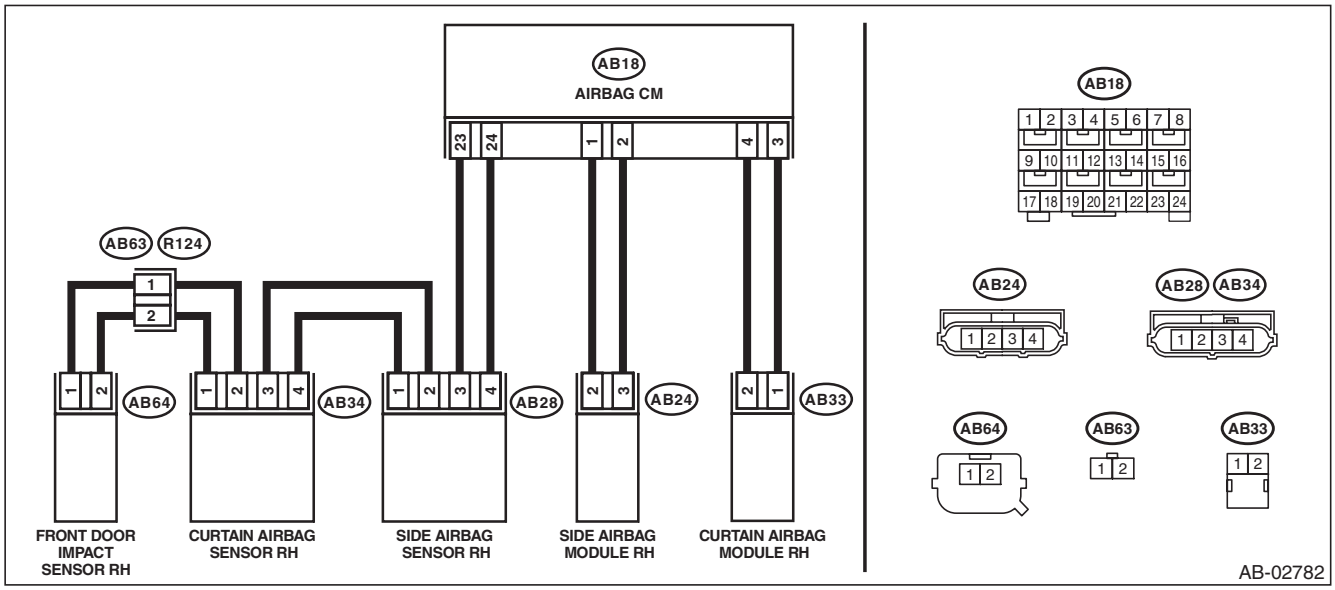

- Type B

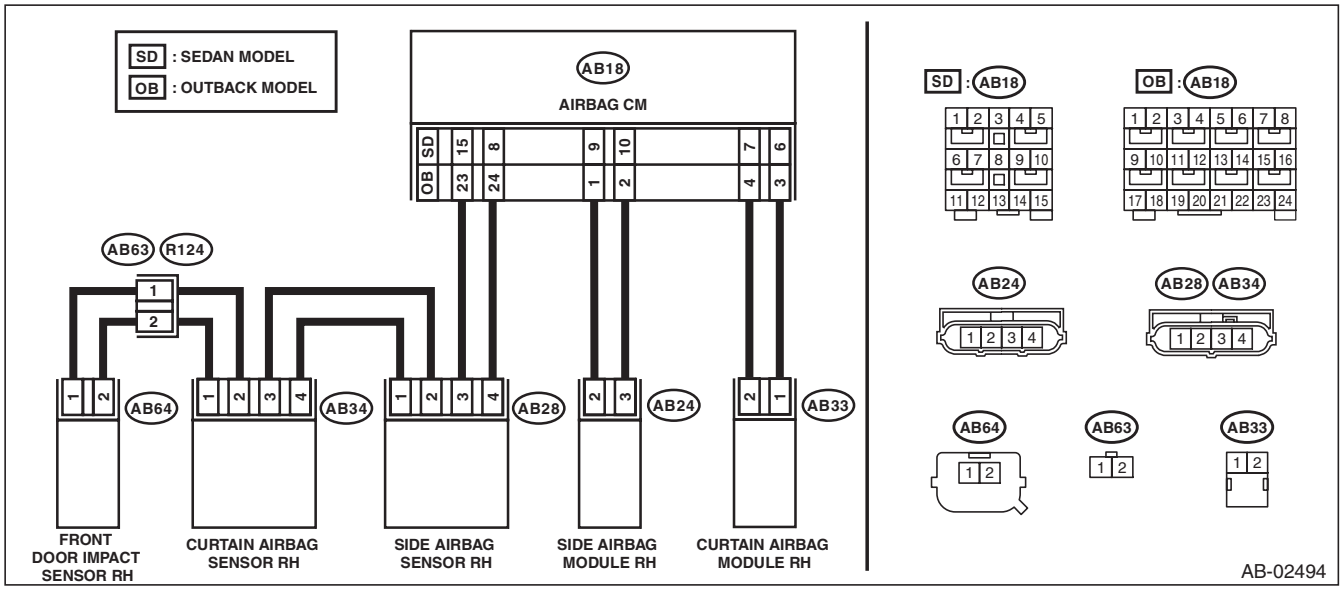

GETthemANUALS.org

Diagnostic Chart with Trouble Code

	Step	Check	Yes	No
1	**CHECK POOR CONTACT OF CONNECTORS.** Check for poor contact of the connectors between the airbag control module and the side airbag sensor (RH).	Is there poor contact?	Replace the airbag rear harness and the door harness.	Go to step **2**.
2	**CHECK AIRBAG REAR HARNESS (BETWEEN AIRBAG CONTROL MODULE AND SIDE AIRBAG SENSOR RH).** 1) Turn the ignition switch to OFF, disconnect the battery ground cable, and wait for 60 seconds or more. 2) Disconnect the connector (AB26) from seat belt pretensioner (RH). 3) Disconnect the connector (AB33) from curtain airbag module (RH). 4) Disconnect connector (AB24) of the side airbag module (RH). 5) Disconnect the connectors (AB6, AB17, AB18) from airbag control module. 6) Connect the connector (1AG) in the test harness AG to the connectors (AB6, AB17, AB18). NOTE: For type B (sedan models), connect test harness AH between the connectors (AB6, AB17, AB18) and (1AG). 7) Disconnect the connector (AB28) from side airbag sensor (RH), and connect the connector (2V) in test harness V to connector (AB28). 8) Measure the resistance between connector (5AG) in the test harness AG and connector (3V) in the test harness V. ***Connector & terminal*** ***Type A & Type B (OUTBACK model)*** ***(5AG) No. 8 — (3V) No. 2:*** ***(5AG) No. 10 — (3V) No. 1:*** ***Type B (Sedan model)*** ***(5AG) No. 9 — (3V) No. 2:*** ***(5AG) No. 10 — (3V) No. 1:***	Is the resistance less than 10 Ω?	Go to step **3**.	Replace the airbag rear harness along with body harness.
3	**CHECK AIRBAG REAR HARNESS (BETWEEN AIRBAG CONTROL MODULE AND SIDE AIRBAG SENSOR RH).** Measure the resistance between connector (3V) in test harness V and chassis ground, and the resistance between connector (3V) terminals in test harness V. ***Connector & terminal*** ***(3V) No. 2 — Chassis ground:*** ***(3V) No. 1 — Chassis ground:*** ***(3V) No. 1 — (3V) No. 2:***	Is the resistance 1 MΩ or more?	Go to step **4**.	Replace the airbag rear harness along with body harness.
4	**CHECK AIRBAG CONTROL MODULE.** 1) Connect all connectors. 2) Clear the memory. 3) Perform the Inspection Mode. 4) Read the DTC.	Is the same DTC displayed?	Go to step **5**.	Go to step **6**.

GETtheMANUALS.org

Step		Check	Yes	No
5	**REPLACE SIDE AIRBAG SENSOR (RH) AND CHECK AIRBAG CONTROL MODULE AFTER REPLACEMENT.** 1) Turn the ignition switch to OFF, disconnect the battery ground cable, and wait for 60 seconds or more. 2) Replace the side airbag sensor (RH). <Ref. to AB-81, REMOVAL, Side Airbag Sensor.> 3) Connect all connectors. 4) Clear the memory. 5) Perform the Inspection Mode. 6) Read the DTC.	Is the same DTC displayed?	Replace the airbag control module. <Ref. to AB-68, REMOVAL, Airbag Control Module.>	Go to step **6**.
6	**CHECK FOR ANY OTHER DTC ON DISPLAY.** Read the DTC.	Is any other DTC displayed?	Check DTC using "List of Diagnostic Trouble Code (DTC)". <Ref. to AB(diag)-41, List of Diagnostic Trouble Code (DTC).>	Finish the diagnosis.

CF:DTC ED SIDE SENSOR BUS RH COMMUNICATION ERROR

NOTE:
Refer to DTC EE for details on DTC ED. <Ref. to AB(diag)-192, DTC EE SIDE SENSOR BUS RH COMMUNICATION ERROR, Diagnostic Chart with Trouble Code.>

GETtheMANUALS.org

CG:DTC EE SIDE SENSOR BUS RH COMMUNICATION ERROR

NOTE:
Be sure to properly identify the Airbag system type prior to performing any diagnostics.

DTC DETECTING CONDITION:

- Open or short circuit in harness of side sensor bus (RH).
- Side airbag sensor (RH) or curtain airbag sensor (RH) are faulty.
- Airbag control module is faulty.

CAUTION:

Before performing diagnosis, refer to "CAUTION" in "General Description". <Ref. to AB(diag)-5, CAUTION, General Description.>

WIRING DIAGRAM:

- Type A

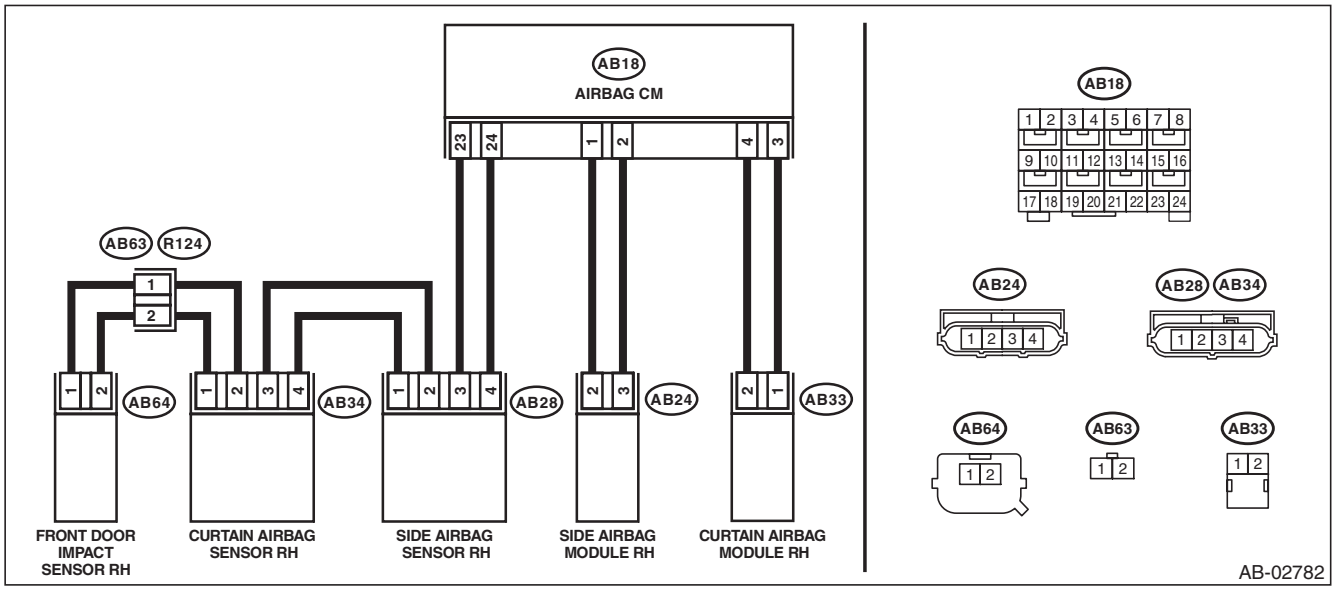

- Type B

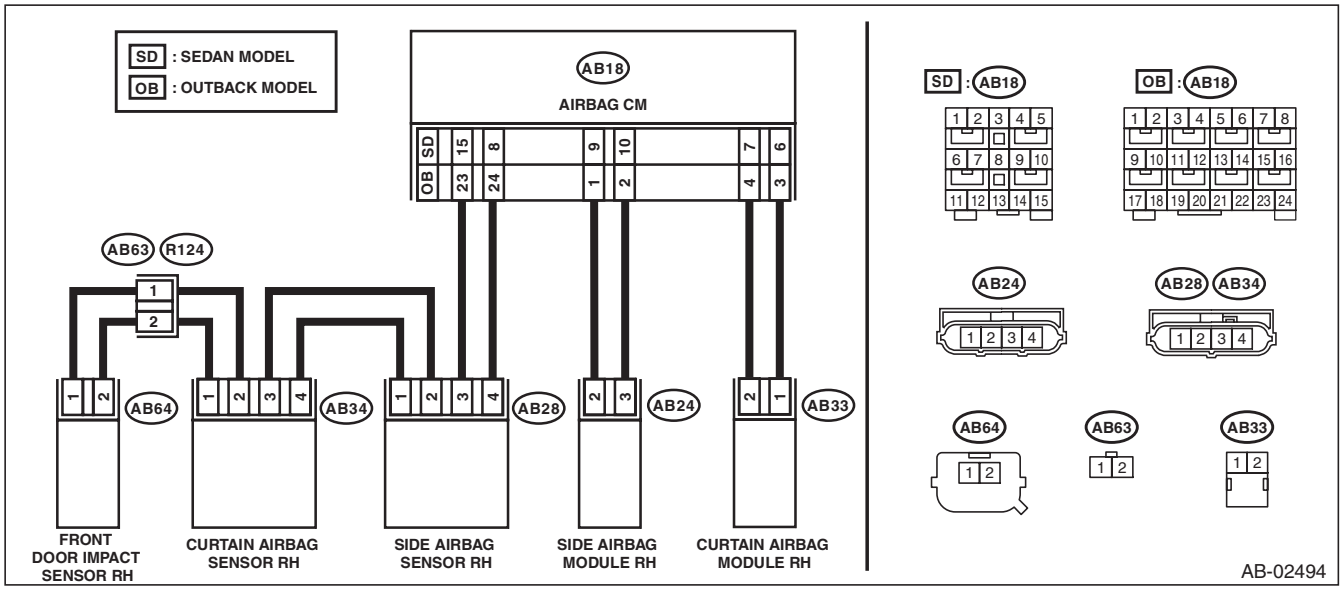

GETthemANUALS.org

	Step	Check	Yes	No
1	**CHECK DTC.** Read the DTC.	Is DTC EB or EC displayed?	Perform the diagnosis of DTC EC. <Ref. to AB(diag)-189, DTC EC SIDE SENSOR BUS RH COMMUNICATION ERROR, Diagnostic Chart with Trouble Code.>	Go to step **2**.
2	**CHECK POOR CONTACT OF CONNECTORS.** Check for poor contact of the connectors between the airbag control module and the front door impact sensor (RH).	Is there poor contact?	Replace the airbag rear harness and the door harness.	Go to step **3**.
3	**CHECK AIRBAG REAR HARNESS (BETWEEN SIDE AIRBAG SENSOR (RH) AND CURTAIN AIRBAG SENSOR (RH)).** 1) Turn the ignition switch to OFF, disconnect the battery ground cable, and wait for 60 seconds or more. 2) Disconnect the connector (AB26) from seat belt pretensioner (RH). 3) Disconnect the connector (AB33) from curtain airbag module (RH). 4) Disconnect connector (AB24) of the side airbag module (RH). 5) Disconnect connector (AB28) from side airbag sensor (RH). 6) Connect the connector (AB28) of side airbag sensor (RH) and the connector (1AI) in the test harness AI. 7) Connect the connector (2AI) in the test harness AI and the connector (1V) in the test harness V. 8) Disconnect the connector (AB34) from curtain airbag sensor (RH), and connect the connector (2V) in test harness V to connector (AB34). 9) Measure the resistance between connector (3V) terminals in the test harness V. ***Connector & terminal*** ***(3V) No. 2 — (3V) No. 6:*** ***(3V) No. 1 — (3V) No. 7:***	Is the resistance less than 10 Ω?	Go to step **4**.	Replace the airbag rear harness along with body harness.
4	**CHECK AIRBAG REAR HARNESS (BETWEEN SIDE AIRBAG SENSOR (RH) AND CURTAIN AIRBAG SENSOR (RH)).** Measure the resistance between connector (3V) in test harness V and chassis ground, and the resistance between connector (3V) terminals in test harness V. ***Connector & terminal*** ***(3V) No. 2 — Chassis ground:*** ***(3V) No. 1 — Chassis ground:*** ***(3V) No. 1 — (3V) No. 2:***	Is the resistance 1 MΩ or more?	Go to step **5**.	Replace the airbag rear harness along with body harness.
5	**CHECK AIRBAG CONTROL MODULE.** 1) Connect all connectors. 2) Clear the memory. 3) Perform the Inspection Mode. 4) Read the DTC.	Is the same DTC displayed?	Go to step **6**.	Go to step **8**.

GETtheMANUALS.org

Step		Check	Yes	No
6	**REPLACE CURTAIN AIRBAG SENSOR (RH) AND CHECK AIRBAG CONTROL MODULE AFTER REPLACEMENT.** 1) Turn the ignition switch to OFF, disconnect the battery ground cable, and wait for 60 seconds or more. 2) Replace the curtain airbag sensor (RH). <Ref. to AB-87, REMOVAL, Curtain Airbag Sensor.> 3) Connect all connectors. 4) Clear the memory. 5) Perform the Inspection Mode. 6) Read the DTC.	Is the same DTC displayed?	Go to step **7**.	Go to step **8**.
7	**REPLACE SIDE AIRBAG SENSOR (RH) AND CHECK AIRBAG CONTROL MODULE AFTER REPLACEMENT.** 1) Turn the ignition switch to OFF, disconnect the battery ground cable, and wait for 60 seconds or more. 2) Replace the side airbag sensor (RH). <Ref. to AB-81, REMOVAL, Side Airbag Sensor.> 3) Connect all connectors. 4) Clear the memory. 5) Perform the Inspection Mode. 6) Read the DTC.	Is the same DTC displayed?	Replace the airbag control module. <Ref. to AB-68, REMOVAL, Airbag Control Module.>	Go to step **8**.
8	**CHECK FOR ANY OTHER DTC.** Read the DTC.	Is any other DTC displayed?	Check DTC using “List of Diagnostic Trouble Code (DTC)”. <Ref. to AB(diag)-41, List of Diagnostic Trouble Code (DTC).>	Finish the diagnosis.

GETtheMANUALS.org

CH:DTC F1 SIDE SENSOR BUS LH COMMUNICATION ERROR

NOTE:
Be sure to properly identify the Airbag system type prior to performing any diagnostics.

DTC DETECTING CONDITION:

- Open or short circuit in harness of side sensor bus (LH).
- Side airbag sensor (LH) is faulty.
- Curtain airbag sensor (LH) is faulty.
- Front door impact sensor (LH) is faulty.
- Airbag control module is faulty.

CAUTION:

Before performing diagnosis, refer to “CAUTION” in “General Description”. <Ref. to AB(diag)-5, CAUTION, General Description.>

WIRING DIAGRAM:

- Type A

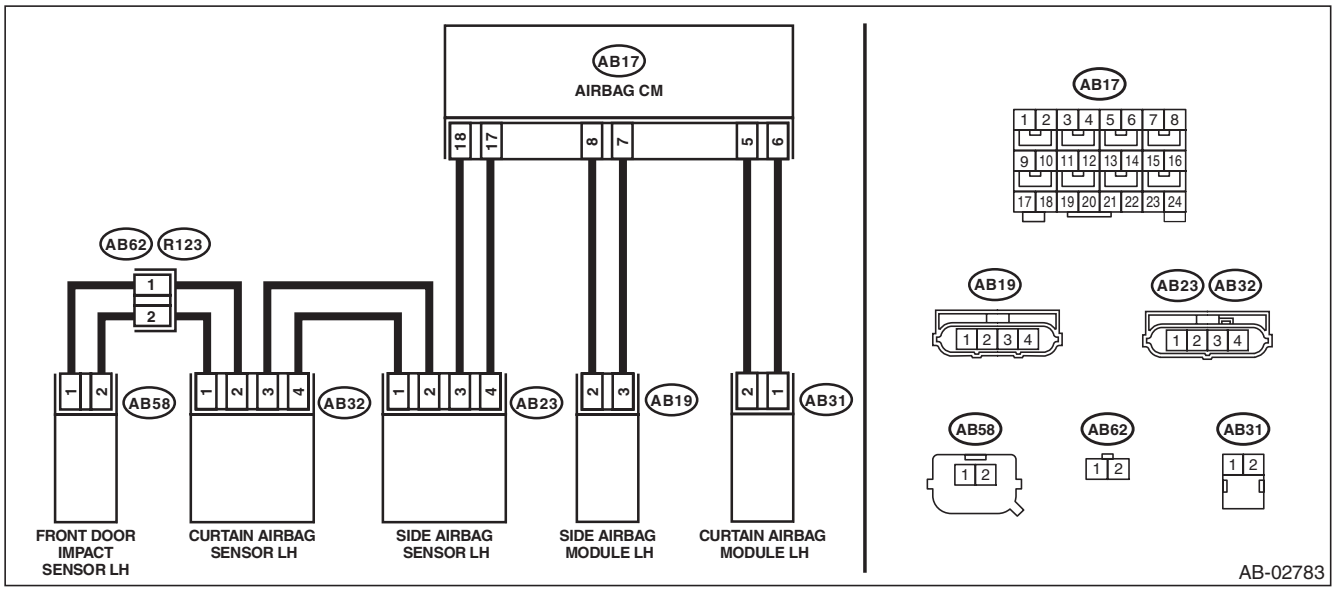

- Type B

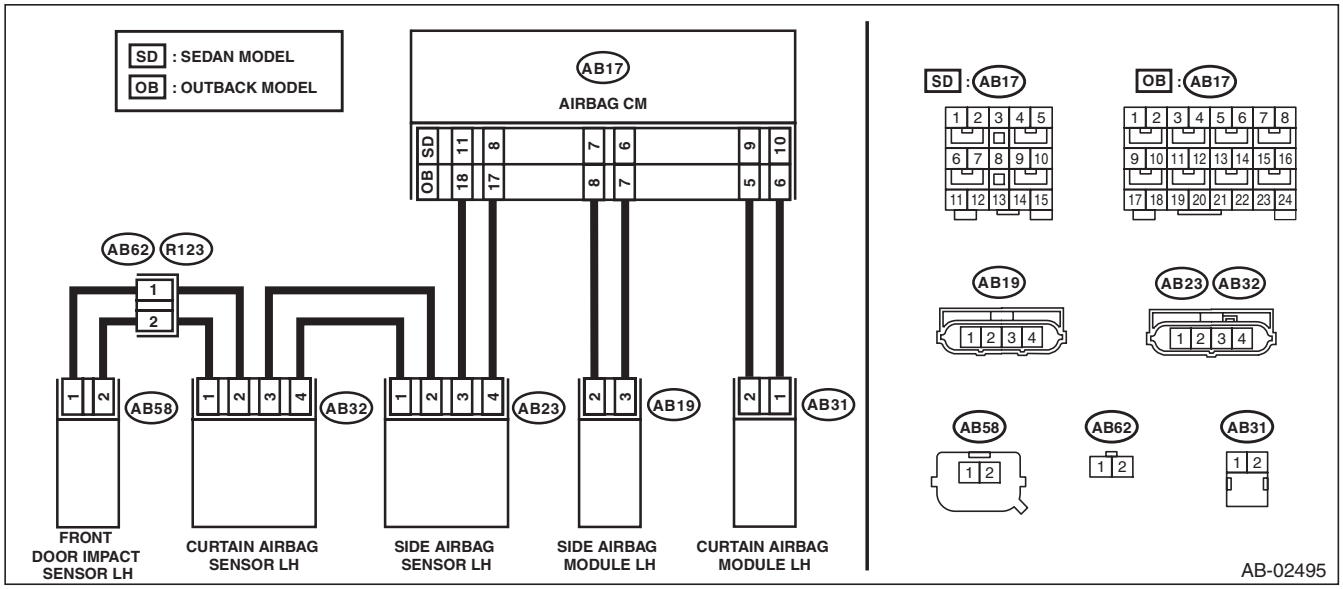

GETthemANUALS.org

Diagnostic Chart with Trouble Code

Step		Check	Yes	No
1	**CHECK DTC.** Read the DTC.	Is DTC F3 or F4 displayed?	Perform the diagnosis of DTC F4. <Ref. to AB(diag)-201, DTC F4 SIDE SENSOR BUS LH COMMUNICATION ERROR, Diagnostic Chart with Trouble Code.>	Go to step **2**.
2	**CHECK DTC.** Read the DTC.	Is DTC F5 or F6 displayed?	Perform the diagnosis of DTC F6. <Ref. to AB(diag)-204, DTC F6 SIDE SENSOR BUS LH COMMUNICATION ERROR, Diagnostic Chart with Trouble Code.>	Go to step **3**.
3	**CHECK DTC.** Read the DTC.	Is DTC A4 or A5 displayed?	Perform the diagnosis of DTC A5. <Ref. to AB(diag)-170, DTC A5 DOOR SENSOR BUS LH COMMUNICATION ERROR, Diagnostic Chart with Trouble Code.>	Go to step **4**.
4	**CHECK POOR CONTACT OF CONNECTORS.** Check for poor contact of the connectors between the airbag control module and the front door impact sensor (LH).	Is there poor contact?	Replace the airbag rear harness and the door harness.	Go to step **5**.

GETtheMANUALS.org

	Step	Check	Yes	No
5	**CHECK AIRBAG REAR HARNESS (BETWEEN AIRBAG CONTROL MODULE AND SIDE AIRBAG SENSOR LH).** 1) Turn the ignition switch to OFF, disconnect the battery ground cable, and wait for 60 seconds or more. 2) Disconnect the connector (AB21) from seat belt pretensioner (LH). 3) Disconnect the connector (AB31) from curtain airbag module (LH). 4) Disconnect connector (AB19) of the side airbag module (LH). 5) Disconnect the connectors (AB6, AB17, AB18) from airbag control module. 6) Connect the connector (1AG) in the test harness AG to the connectors (AB6, AB17, AB18). NOTE: For type B (sedan models), connect test harness AH between the connectors (AB6, AB17, AB18) and (1AG). 7) Disconnect the connector (AB23) from the side airbag sensor (LH). 8) Connect the connector (2V) in the test harness V to the connector (AB23). 9) Measure the resistance between connector (5AG) in the test harness AG and connector (3V) in the test harness V. ***Connector & terminal*** ***Type A & Type B (OUTBACK model)*** ***(5AG) No. 14 — (3V) No. 1:*** ***(5AG) No. 16 — (3V) No. 2:*** ***Type B (Sedan model)*** ***(5AG) No. 14 — (3V) No. 1:*** ***(5AG) No. 15 — (3V) No. 2:***	Is the resistance less than 10 Ω?	Go to step **6**.	Replace the airbag rear harness along with body harness.
6	**CHECK AIRBAG REAR HARNESS (BETWEEN AIRBAG CONTROL MODULE AND SIDE AIRBAG SENSOR LH).** Measure the resistance between connector (3V) in test harness V and chassis ground, and the resistance between connector (3V) terminals. ***Connector & terminal*** ***(3V) No. 1 — Chassis ground:*** ***(3V) No. 2 — Chassis ground:*** ***(3V) No. 1 — (3V) No. 2:***	Is the resistance 1 MΩ or more?	Go to step **7**.	Replace the airbag rear harness along with body harness.

GETtheMANUALS.org

	Step	Check	Yes	No
7	**CHECK AIRBAG REAR HARNESS (BETWEEN SIDE AIRBAG SENSOR AND CURTAIN AIRBAG SENSOR LH).** 1) Disconnect the connector (2V) in the test harness V from the connector (AB23) of side airbag sensor (LH). 2) Connect the connector (AB23) of side airbag sensor (LH) and the connector (1AI) in the test harness AI. 3) Connect the connector (2AI) in the test harness AI and the connector (1V) in the test harness V. 4) Disconnect the connector (AB32) from curtain airbag sensor (LH), and connect the connector (2V) in test harness V to connector (AB32). 5) Measure the resistance between connector (3V) terminals in the test harness V. ***Connector & terminal*** ***(3V) No. 2 — (3V) No. 6:*** ***(3V) No. 1 — (3V) No. 7:***	Is the resistance less than 10 Ω?	Go to step **8**.	Replace the airbag rear harness along with body harness.
8	**CHECK AIRBAG REAR HARNESS (BETWEEN SIDE AIRBAG SENSOR AND CURTAIN AIRBAG SENSOR LH).** Measure the resistance between connector (3V) in test harness V and chassis ground, and the resistance between connector (3V) terminals in test harness V. ***Connector & terminal*** ***(3V) No. 2 — Chassis ground:*** ***(3V) No. 1 — Chassis ground:*** ***(3V) No. 1 — (3V) No. 2:***	Is the resistance 1 MΩ or more?	Go to step **9**.	Replace the airbag rear harness along with body harness.
9	**CHECK AIRBAG REAR HARNESS AND DOOR HARNESS (BETWEEN CURTAIN AIRBAG SENSOR LH AND DOOR SENSOR LH).** 1) Disconnect the connector (AB58) from the front door impact sensor (LH), and connect the connector (1H) in the test harness H to connector (AB58). 2) Measure the resistance between connector (3V) in the test harness V and connector (3H) in the test harness H. ***Connector & terminal*** ***(3V) No. 4 — (3H) No. 5:*** ***(3V) No. 5 — (3H) No. 6:***	Is the resistance less than 10 Ω?	Go to step **10**.	Check the door harness, and if any fault is found, replace the harness. If there is no fault, replace the airbag rear harness together with body harness.
10	**CHECK AIRBAG REAR HARNESS AND DOOR HARNESS (BETWEEN CURTAIN AIRBAG SENSOR LH AND DOOR SENSOR LH).** Measure the resistance between connector (3V) in test harness V and chassis ground, and the resistance between connector (3V) terminals in test harness V. ***Connector & terminal*** ***(3V) No. 4 — Chassis ground:*** ***(3V) No. 5 — Chassis ground:*** ***(3V) No. 4 — (3V) No. 5:***	Is the resistance 1 MΩ or more?	Go to step **11**.	Check the door harness, and if any fault is found, replace the harness. If there is no fault, replace the airbag rear harness together with body harness.

GETtheMANUALS.org

Step		Check	Yes	No
11	**CHECK AIRBAG CONTROL MODULE.** 1) Connect all connectors. 2) Clear the memory. 3) Perform the Inspection Mode. 4) Read the DTC.	Is the same DTC displayed?	Go to step **12**.	Go to step **15**.
12	**REPLACE SIDE AIRBAG SENSOR (LH) AND CHECK AIRBAG CONTROL MODULE AFTER REPLACEMENT.** 1) Turn the ignition switch to OFF, disconnect the battery ground cable, and wait for 60 seconds or more. 2) Replace the side airbag sensor (LH). <Ref. to AB-81, REMOVAL, Side Airbag Sensor.> 3) Connect all connectors. 4) Clear the memory. 5) Perform the Inspection Mode. 6) Read the DTC.	Is the same DTC displayed?	Go to step **13**.	Go to step **15**.
13	**REPLACE CURTAIN AIRBAG SENSOR (LH) AND CHECK AIRBAG CONTROL MODULE AFTER REPLACEMENT.** 1) Turn the ignition switch to OFF, disconnect the battery ground cable, and wait for 60 seconds or more. 2) Replace the curtain airbag sensor (LH). <Ref. to AB-87, REMOVAL, Curtain Airbag Sensor.> 3) Connect all connectors. 4) Clear the memory. 5) Perform the Inspection Mode. 6) Read the DTC.	Is the same DTC displayed?	Go to step **14**.	Go to step **15**.
14	**REPLACE FRONT DOOR IMPACT SENSOR (LH) AND CHECK AIRBAG CONTROL MODULE AFTER REPLACEMENT.** 1) Turn the ignition switch to OFF, disconnect the battery ground cable, and wait for 60 seconds or more. 2) Replace the front door impact sensor (LH). <Ref. to AB-78, REMOVAL, Front Door Impact Sensor.> 3) Connect all connectors. 4) Clear the memory. 5) Perform the Inspection Mode. 6) Read the DTC.	Is the same DTC displayed?	Replace the airbag control module. <Ref. to AB-68, REMOVAL, Airbag Control Module.>	Go to step **15**.
15	**CHECK FOR ANY OTHER DTC ON DISPLAY.**	Is any other DTC displayed?	Check DTC using “List of Diagnostic Trouble Code”. <Ref. to AB(diag)-41, LIST, List of Diagnostic Trouble Code (DTC).>	Finish the diagnosis.

GETtheMANUALS.org

CI: DTC F2 SIDE SENSOR BUS LH COMMUNICATION ERROR

NOTE:
Refer to DTC F1 for details on DTC F2. <Ref. to AB(diag)-195, DTC F1 SIDE SENSOR BUS LH COMMUNICATION ERROR, Diagnostic Chart with Trouble Code.>

CJ:DTC F3 SIDE SENSOR BUS LH COMMUNICATION ERROR

NOTE:
Refer to DTC F4 for details on DTC F3. <Ref. to AB(diag)-201, DTC F4 SIDE SENSOR BUS LH COMMUNICATION ERROR, Diagnostic Chart with Trouble Code.>

GETtheMANUALS.org

CK:DTC F4 SIDE SENSOR BUS LH COMMUNICATION ERROR

NOTE:
Be sure to properly identify the Airbag system type prior to performing any diagnostics.

DTC DETECTING CONDITION:

- Open or short circuit in harness of side sensor bus (LH).
- Side airbag sensor (LH) and curtain airbag sensor (LH) are faulty.
- Airbag control module is faulty.

CAUTION:

Before performing diagnosis, refer to "CAUTION" in "General Description". <Ref. to AB(diag)-5, CAUTION, General Description.>

WIRING DIAGRAM:

- Type A

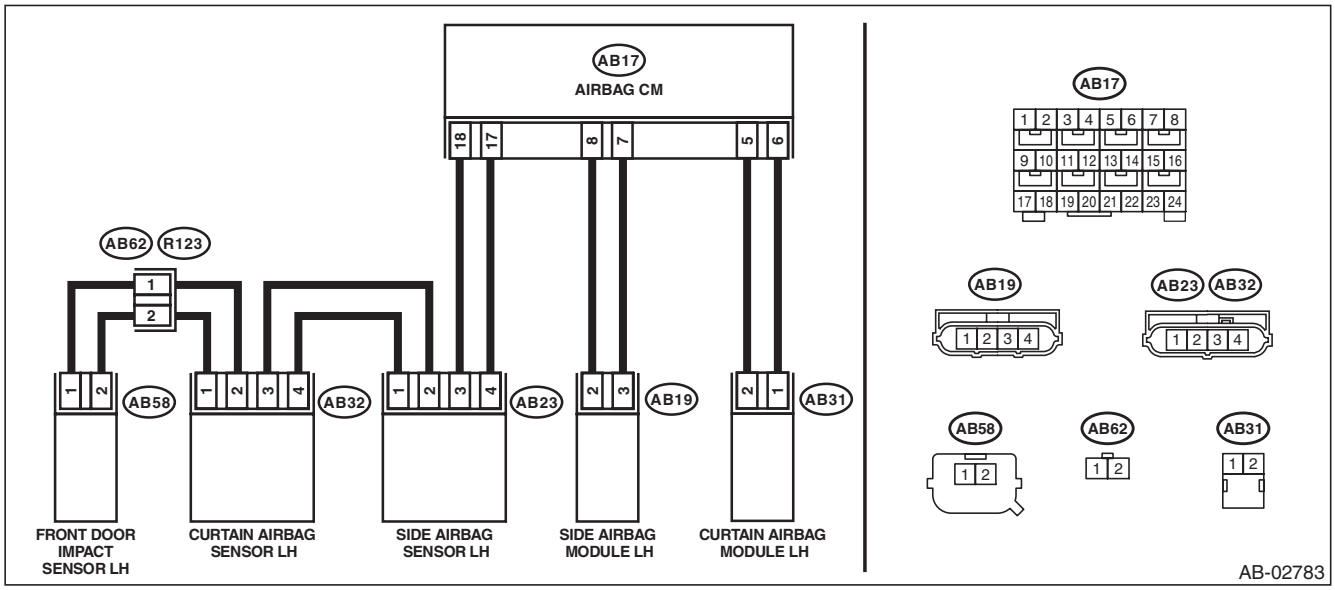

- Type B

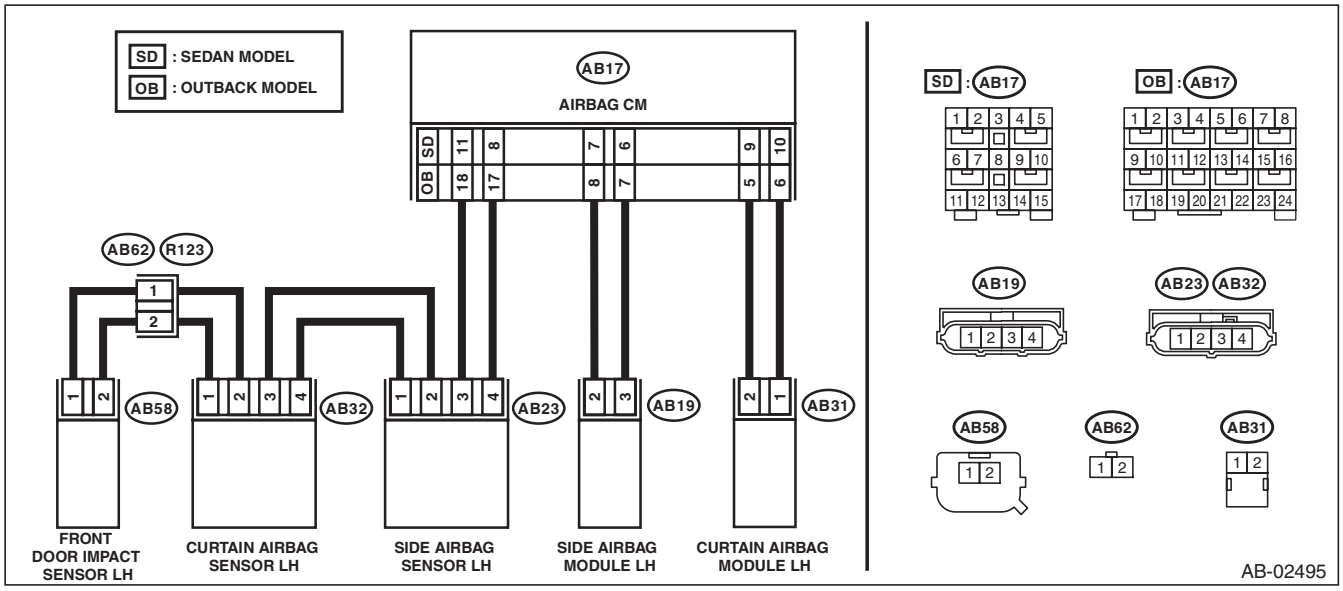

GETtheMANUALS.org

Diagnostic Chart with Trouble Code

	Step	Check	Yes	No
1	**CHECK POOR CONTACT OF CONNECTORS.** Check for poor contact of the connectors between the airbag control module and the curtain airbag sensor (LH).	Is there poor contact?	Replace the airbag rear harness and the door harness.	Go to step **2**.
2	**CHECK AIRBAG REAR HARNESS (BETWEEN AIRBAG CONTROL MODULE AND SIDE AIRBAG SENSOR LH).** 1) Turn the ignition switch to OFF, disconnect the battery ground cable, and wait for 60 seconds or more. 2) Disconnect the connector (AB21) from seat belt pretensioner (LH). 3) Disconnect the connector (AB31) from curtain airbag module (LH). 4) Disconnect connector (AB19) of the side airbag module (LH). 5) Disconnect the connectors (AB6, AB17, AB18) from airbag control module. 6) Connect the connector (1AG) in the test harness AG to the connectors (AB6, AB17, AB18). NOTE: For type B (sedan models), connect test harness AH between the connectors (AB6, AB17, AB18) and (1AG). 7) Disconnect the connector (AB23) from side airbag sensor (LH), and connect the connector (2V) in test harness V to connector (AB23). 8) Measure the resistance between connector (5AG) in the test harness AG and connector (3V) in the test harness V. ***Connector & terminal*** ***Type A & Type B (OUTBACK model)*** ***(5AG) No. 14 — (3V) No. 1:*** ***(5AG) No. 16 — (3V) No. 2:*** ***Type B (Sedan model)*** ***(5AG) No. 14 — (3V) No. 1:*** ***(5AG) No. 15 — (3V) No. 2:***	Is the resistance less than 10 Ω?	Go to step **3**.	Replace the airbag rear harness along with body harness.
3	**CHECK AIRBAG REAR HARNESS (BETWEEN AIRBAG CONTROL MODULE AND SIDE AIRBAG SENSOR LH).** Measure the resistance between connector (3V) in test harness V and chassis ground, and the resistance between connector (3V) terminals. ***Connector & terminal*** ***(3V) No. 1 — Chassis ground:*** ***(3V) No. 2 — Chassis ground:*** ***(3V) No. 1 — (3V) No. 2:***	Is the resistance 1 MΩ or more?	Go to step **4**.	Replace the airbag rear harness along with body harness.
4	**CHECK AIRBAG CONTROL MODULE.** 1) Connect all connectors. 2) Clear the memory. 3) Perform the Inspection Mode. 4) Read the DTC.	Is the same DTC displayed?	Go to step **5**.	Go to step **6**.

GETthemMANUALS.org

Step		Check	Yes	No
5	**REPLACE SIDE AIRBAG SENSOR (LH) AND CHECK AIRBAG CONTROL MODULE AFTER REPLACEMENT.** 1) Turn the ignition switch to OFF, disconnect the battery ground cable, and wait for 60 seconds or more. 2) Replace the side airbag sensor (LH). <Ref. to AB-81, REMOVAL, Side Airbag Sensor.> 3) Connect all connectors. 4) Clear the memory. 5) Perform the Inspection Mode. 6) Read the DTC.	Is the same DTC displayed?	Replace the airbag control module. <Ref. to AB-68, REMOVAL, Airbag Control Module.>	Go to step **6**.
6	**CHECK FOR ANY OTHER DTC ON DISPLAY.** Read the DTC.	Is any other DTC displayed?	Check DTC using "List of Diagnostic Trouble Code (DTC)". <Ref. to AB(diag)-41, List of Diagnostic Trouble Code (DTC).>	Finish the diagnosis.

CL:DTC F5 SIDE SENSOR BUS LH COMMUNICATION ERROR

NOTE:
Refer to DTC F6 for details on DTC F5. <Ref. to AB(diag)-204, DTC F6 SIDE SENSOR BUS LH COMMUNICATION ERROR, Diagnostic Chart with Trouble Code.>

GETtheMANUALS.org

CM:DTC F6 SIDE SENSOR BUS LH COMMUNICATION ERROR

DTC DETECTING CONDITION:

- Open or short circuit in harness of side sensor bus (LH).
- Side airbag sensor (LH) or curtain airbag sensor (LH) are faulty.
- Airbag control module is faulty.

CAUTION:

Before performing diagnosis, refer to “CAUTION” in “General Description”. <Ref. to AB(diag)-5, CAUTION, General Description.>

WIRING DIAGRAM:

- Type A

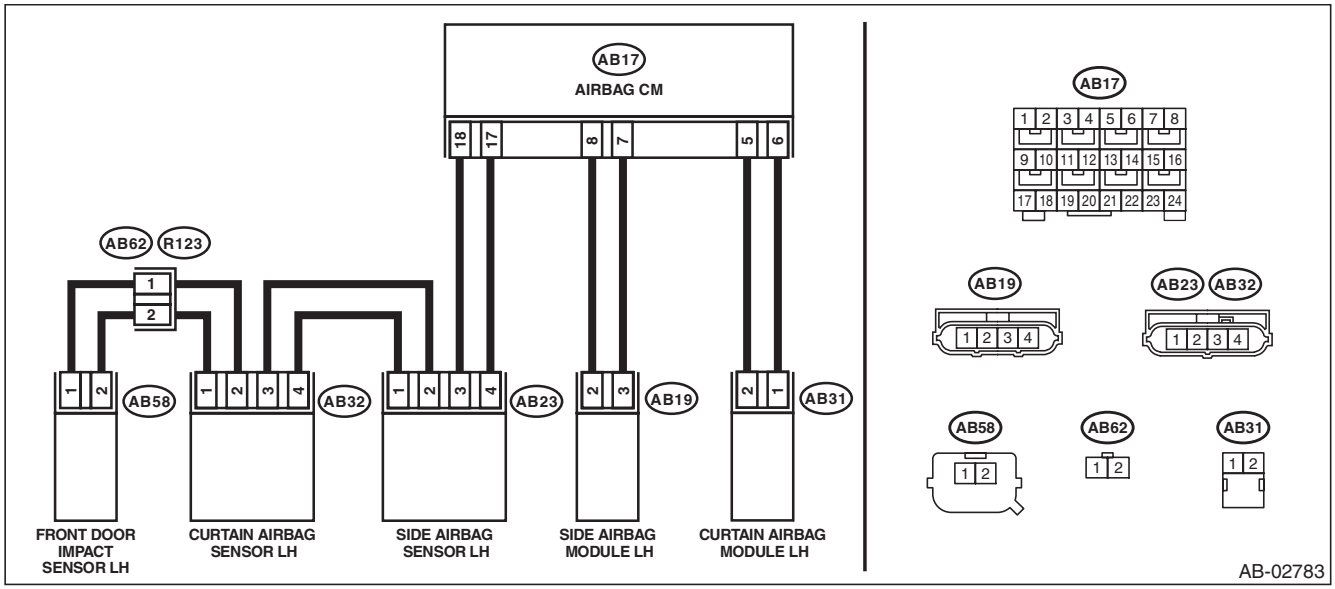

- Type B

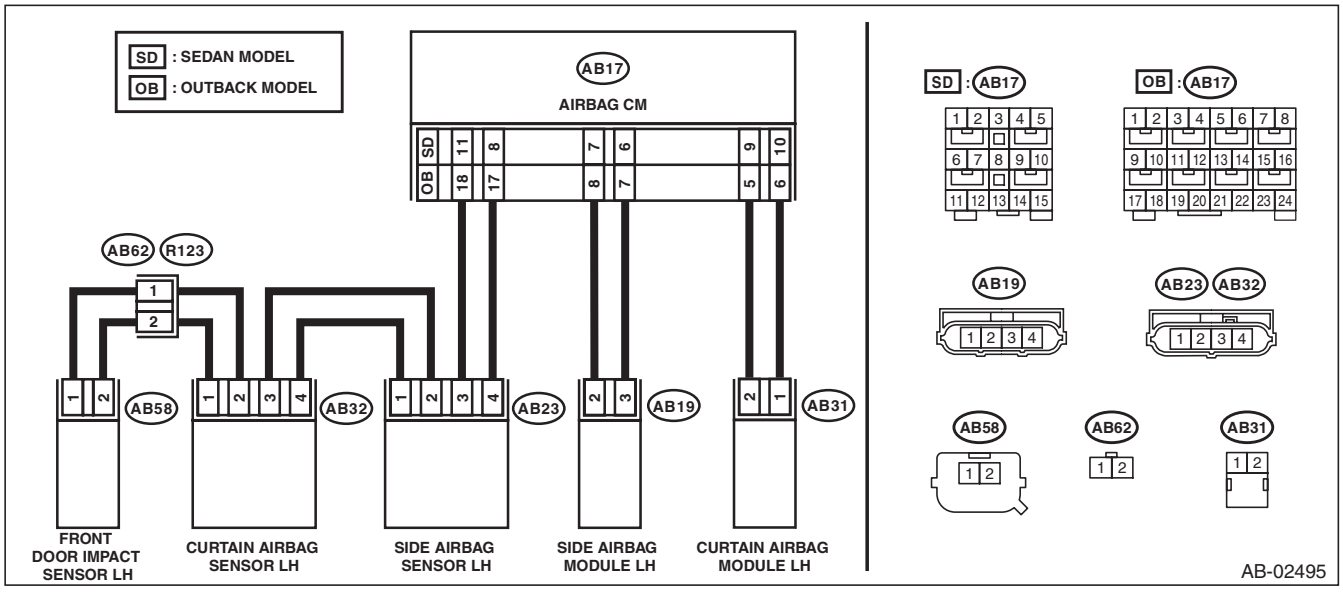

GETtheMANUALS.org

	Step	Check	Yes	No
1	**CHECK DTC.** Read the DTC.	Is DTC F3 or F4 displayed?	Perform the diagnosis of DTC F4. <Ref. to AB(diag)-201, DTC F4 SIDE SENSOR BUS LH COMMUNICATION ERROR, Diagnostic Chart with Trouble Code.>	Go to step **2**.
2	**CHECK POOR CONTACT OF CONNECTORS.** Check for poor contact of the connectors between the airbag control module and the curtain airbag sensor (LH).	Is there poor contact?	Replace the airbag rear harness and the door harness.	Go to step **3**.
3	**CHECK AIRBAG REAR HARNESS (BETWEEN SIDE AIRBAG SENSOR LH AND CURTAIN AIRBAG SENSOR LH).** 1) Turn the ignition switch to OFF, disconnect the battery ground cable, and wait for 60 seconds or more. 2) Disconnect the connector (AB21) from seat belt pretensioner (LH). 3) Disconnect the connector (AB31) from curtain airbag module (LH). 4) Disconnect connector (AB19) of the side airbag module (LH). 5) Disconnect the connector (AB23) in the side airbag sensor (LH). 6) Connect the connector (AB23) of side airbag sensor (LH) and the connector (1AI) in the test harness AI. 7) Connect the connector (2AI) in the test harness AI and the connector (1V) in the test harness V. 8) Disconnect the connector (AB32) from curtain airbag sensor (LH), and connect the connector (2V) in test harness V to connector (AB32). 9) Measure the resistance between connector (3V) terminals in the test harness V. ***Connector & terminal*** ***(3V) No. 2 — (3V) No. 6:*** ***(3V) No. 1 — (3V) No. 7:***	Is the resistance less than 10 Ω?	Go to step **4**.	Replace the airbag rear harness along with body harness.
4	**CHECK AIRBAG REAR HARNESS (BETWEEN SIDE AIRBAG SENSOR AND CURTAIN AIRBAG SENSOR LH).** Measure the resistance between connector (3V) in test harness V and chassis ground, and the resistance between connector (3V) terminals in test harness V. ***Connector & terminal*** ***(3V) No. 1 — Chassis ground:*** ***(3V) No. 2 — Chassis ground:*** ***(3V) No. 1 — (3V) No. 2:***	Is the resistance 1 MΩ or more?	Go to step **5**.	Replace the airbag rear harness along with body harness.
5	**CHECK AIRBAG CONTROL MODULE.** 1) Connect all connectors. 2) Clear the memory. 3) Perform the Inspection Mode. 4) Read the DTC.	Is the same DTC displayed?	Go to step **6**.	Go to step **8**.

GETthemANUALS.org

Step		Check	Yes	No
6	**REPLACE CURTAIN AIRBAG SENSOR (LH) AND CHECK AIRBAG CONTROL MODULE AFTER REPLACEMENT.** 1) Turn the ignition switch to OFF, disconnect the battery ground cable, and wait for 60 seconds or more. 2) Replace the curtain airbag sensor (LH). <Ref. to AB-87, REMOVAL, Curtain Airbag Sensor.> 3) Connect all connectors. 4) Clear the memory. 5) Perform the Inspection Mode. 6) Read the DTC.	Is the same DTC displayed?	Go to step **7**.	Go to step **8**.
7	**REPLACE SIDE AIRBAG SENSOR (LH) AND CHECK AIRBAG CONTROL MODULE AFTER REPLACEMENT.** 1) Turn the ignition switch to OFF, disconnect the battery ground cable, and wait for 60 seconds or more. 2) Replace the side airbag sensor (LH). <Ref. to AB-81, REMOVAL, Side Airbag Sensor.> 3) Connect all connectors. 4) Clear the memory. 5) Perform the Inspection Mode. 6) Read the DTC.	Is the same DTC displayed?	Replace the airbag control module. <Ref. to AB-68, REMOVAL, Airbag Control Module.>	Go to step **8**.
8	**CHECK FOR ANY OTHER DTC ON DISPLAY.**	Is any other DTC displayed?	Check DTC using “List of Diagnostic Trouble Code (DTC)”. <Ref. to AB(diag)-41, List of Diagnostic Trouble Code (DTC).>	Finish the diagnosis.

GETtheMANUALS.org

OCCUPANT DETECTION SYSTEM (DIAGNOSTICS)

OD(diag)

		Page
1.	Basic Diagnostic Procedure	2
2.	Check List for Interview	3
3.	General Description	4
4.	Electrical Component Location	7
5.	Airbag Connector	8
6.	Control Module I/O Signal	9
7.	Subaru Select Monitor	10
8.	Read Diagnostic Trouble Code (DTC)	11
9.	Inspection Mode	12
10.	Clear Memory Mode	13
11.	Display of Status Information	14
12.	System Calibration (Rezeroing)	15
13.	Airbag Warning Light Illumination Pattern	17
14.	Passenger's Airbag ON/OFF Indicator Light Illumination Pattern	18
15.	List of Diagnostic Trouble Code (DTC)	19
16.	Diagnostic Procedure with Diagnostic Trouble Code (DTC)	20

GETtheMANUALS.org

1. Basic Diagnostic Procedure

A: PROCEDURE

Step		Check	Yes	No
1	**CHECK WARNING LIGHT.** Check whether the airbag warning light in the combination meter is lit.	Does the airbag warning light illuminate?	Go to step **2**.	Perform the diagnosis according to phenomenon of the problem.
2	**READ DTC.** 1) Turn the ignition switch to OFF. 2) Connect the Subaru Select Monitor to data link connector. 3) Turn the ignition switch to ON and run the Subaru Select Monitor. 4) Read the DTC. <Ref. to OD(diag)-11, OPERATION, Read Diagnostic Trouble Code (DTC).> NOTE: If the communication function of the Subaru Select Monitor cannot be executed normally, check the communication circuit. <Ref. to AB(diag)-29, COMMUNICATION FOR INITIALIZING IMPOSSIBLE, INSPECTION, Subaru Select Monitor.> 5) Record all DTCs and freeze frame data.	Is DTC displayed?	Go to step **3**.	Go to “Airbag Warning Light Failure” <Ref. to AB(diag)-37, Airbag Warning Light Failure.>.
3	**PERFORM DIAGNOSIS.** 1) Determine the possible cause “List of Diagnostic Trouble Code (DTC)” <Ref. to OD(diag)-19, List of Diagnostic Trouble Code (DTC).>. 2) Inspect the DTC using “List of Diagnostic Trouble Code (DTC)”. 3) Repair the trouble cause. 4) Perform the Clear Memory Mode. <Ref. to OD(diag)-13, Clear Memory Mode.> 5) Perform the Inspection Mode. <Ref. to OD(diag)-12, Inspection Mode.> 6) Read any other DTCs displayed.	Is DTC displayed?	Perform the procedure 1) to 5) in step 3.	Finish the diagnosis.

GETthemANUALS.org

2. Check List for Interview

A: CHECK

Customer's name		Inspector's name	
Date vehicle brought in	/ /	Registration No.	
Odometer reading	km miles	V.I.N.	
Date problem occurred	/ /	Registration year	/ /
Weather	❑ Fine ❑ Cloudy ❑ Rainy ❑ Snowy ❑ Others :		
Temperature	°C (°F)		
Road condition	❑ Flat road ❑ Uphill ❑ Downhill ❑ Gravel road ❑ Others :		
Vehicle operation	❑ Starting ❑ Idling ❑ Driving ❑ Constant speed ❑ Accelerating ❑ Decelerating ❑ Turning ❑ Others :		
Details of problem			
Airbag warning light operation	❑ Normal (After turning the ignition switch to ON, illuminates for 6 seconds then goes off.) ❑ Remains ON ❑ Remains OFF		
Passenger's airbag ON/OFF indicator does not operate.	❑ Normal (After turning the ignition switch to ON, illuminates for 6 seconds then goes off for 2 seconds; Lights ON (adult) or OFF (children/unoccupied).) ❑ Both remain ON ❑ Both remain OFF		
DTC output	❑ OK code ❑ DTC: (Code:)		

GETtheMANUALS.org

3. General Description

A: CAUTION

1) If the seat cushion cover is removed or replaced, make sure to perform the occupant detection system adjustment after installing the seat to the vehicle. <Ref. to OD(diag)-15, System Calibration (Rezeroing).> Failure to do so may cause improper operation of the occupant detection system.
2) The occupant detection system (passenger seat only) control module and the occupant detection sensor are fixed to the seat cushion frame. Never remove the occupant detection control module or the occupant detection sensor from the seat cushion frame.
3) Do not replace the seat cushion pad by itself. Always replace the seat cushion pad & frame assembly as a set. The seat cushion pad and cushion frame are adjusted as a set at the time of manufacture. If cushion pads and cushion frames are combined from those of other vehicles or other sets, the occupant detection system may not operate properly.
4) If the seat cushion cover is removed, make sure to replace the hang wire on the seat cushion cover side with a new wire.
5) Never connect the battery in reverse polarity. Occupant detection system may be destroyed instantly.
6) Do not disconnect the battery terminals while the engine is running. A large counter electromotive force will be generated in the generator, and this voltage may damage electronic parts such as occupant detection control module.
7) Before disconnecting the connectors of each sensor and control module, be sure to turn the ignition switch to OFF and wait for 60 seconds or more. Occupant detection control module may be damaged.
8) Every occupant detection system-related part is a precision part. Do not drop them.

CAUTION:
- **Do not use electrical test devices on airbag system wiring harnesses or connector circuits.**
- **Be careful not to damage the airbag system wiring harness, when servicing the occupant detection system.**
- **Refer to CAUTION in Airbag System when repairing occupant detection system. <Ref. to AB-9, CAUTION, General Description.>**

B: INSPECTION

Measure the battery voltage and check electrolyte.

Standard voltage:
12 V

Specific gravity:
1.260 or more

Fluid level:
Between the upper level and lower level

GETthemANUALS.org

C: PREPARATION TOOL

CAUTION:
To measure the voltage and resistance of airbag system and occupant detection system components, be sure to use the specified test harness.

1. SPECIAL TOOL

ILLUSTRATION	TOOL NUMBER	DESCRIPTION	REMARKS
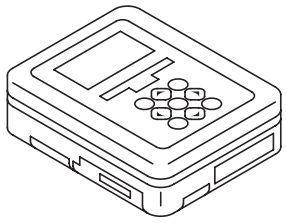 ST1B022XU0	1B022XU0	SUBARU SELECT MONITOR III KIT	Used for troubleshooting the electrical system.

- TEST HARNESS Y

ILLUSTRATION	TOOL NUMBER	DESCRIPTION	REMARKS
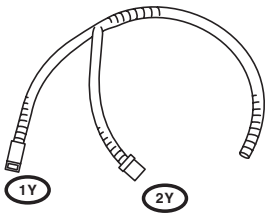 ST98299AG040	98299AG040	TEST HARNESS Y	Used for troubleshooting seat belt buckle switch.

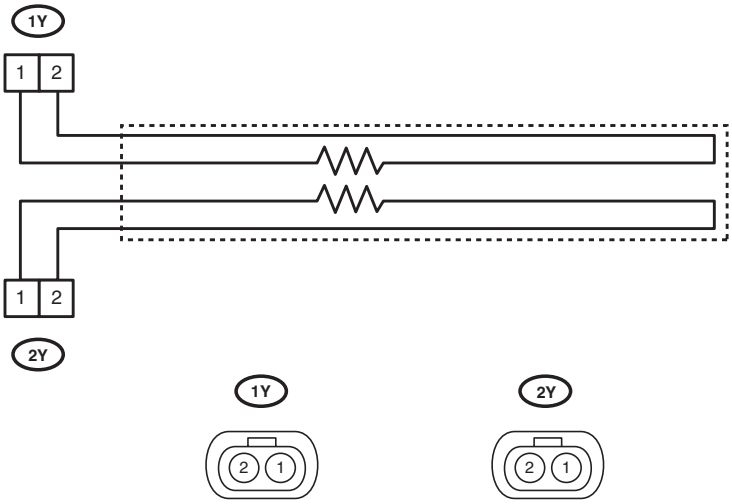

AB-01069

GETtheMANUALS.org

- TEST HARNESS AE

ILLUSTRATION	TOOL NUMBER	DESCRIPTION	REMARKS
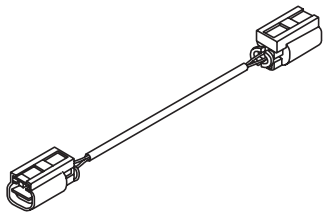 ST98299XA030	98299XA030	TEST HARNESS AE	TEST HARNESS Y ADAPTER HARNESS Used for troubleshooting seat belt buckle switch.

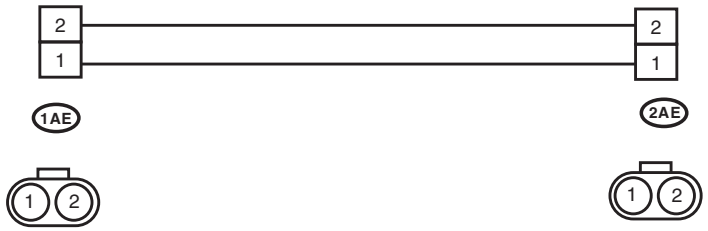

OD-00026

2. GENERAL TOOL

TOOL NAME	REMARKS
Circuit tester	Used for measuring resistance, voltage and current.

GETtheMANUALS.org

4. Electrical Component Location

A: LOCATION

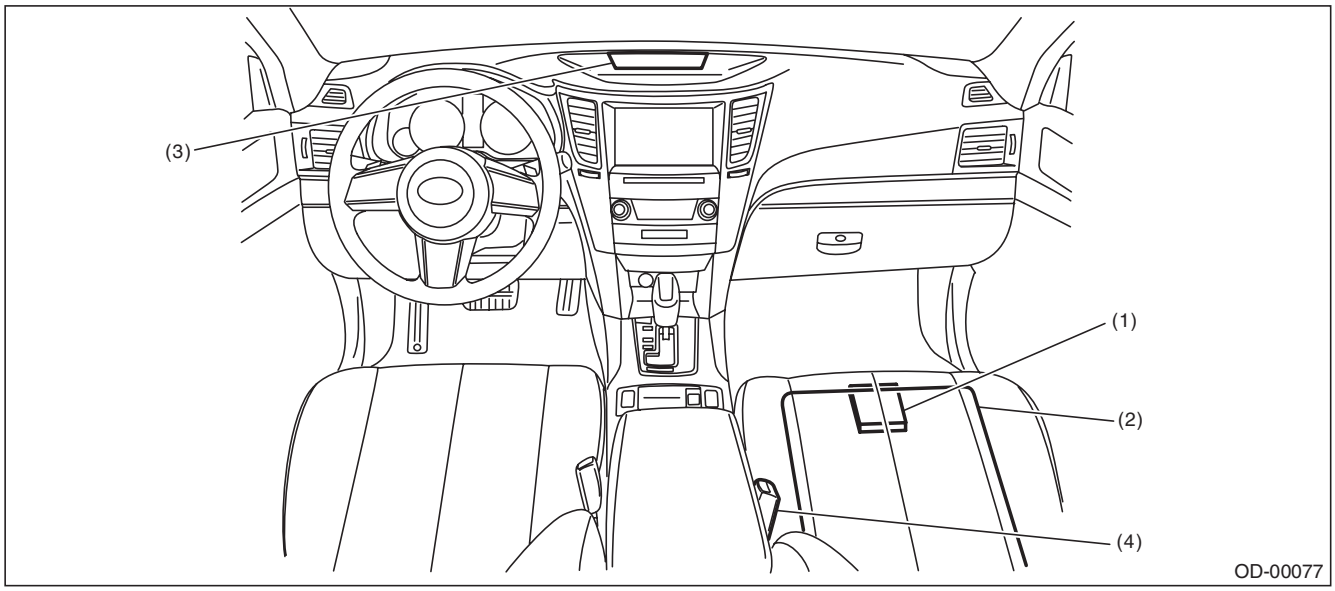

(1) Occupant detection control module
(2) Occupant detection sensor
(3) Airbag ON/OFF indicator light
(4) Buckle switch (passenger's seat)

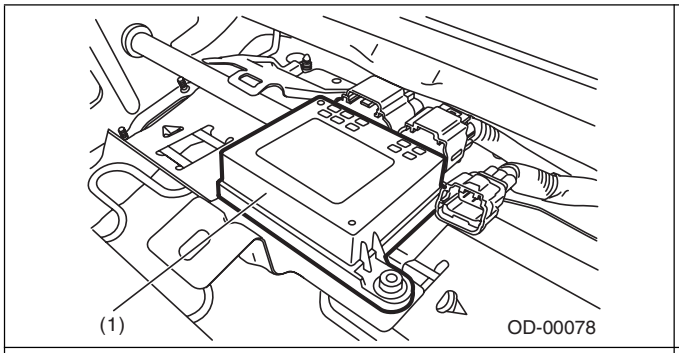

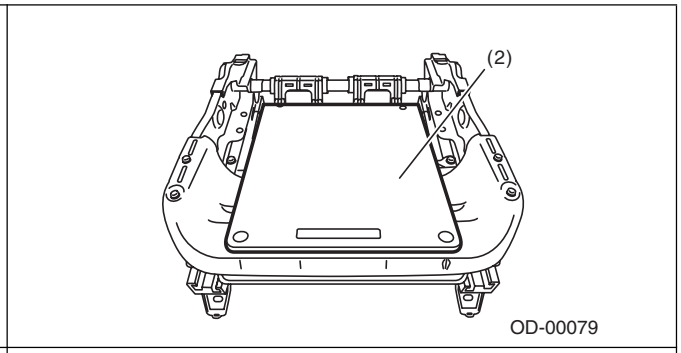

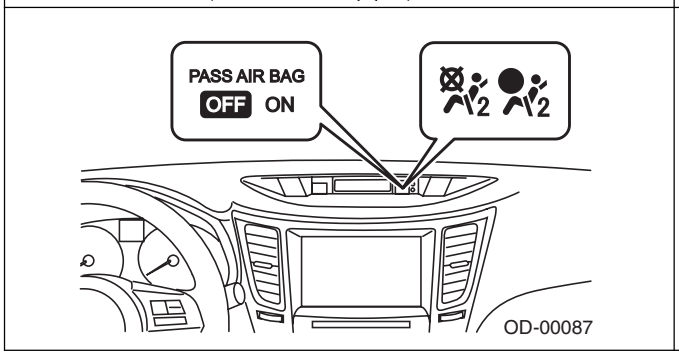

SUBARU.

GETthemANUALS.org

5. Airbag Connector

A: PROCEDURE

1. OCCUPANT DETECTION SYSTEM (BETWEEN AIRBAG REAR HARNESS AND SEAT HARNESS)

1) How to disconnect:
Push the lock arm (A), and disconnect the connector.

CAUTION:
When pulling the slide lock or disconnecting connector, be sure to hold the connector, not the harness.

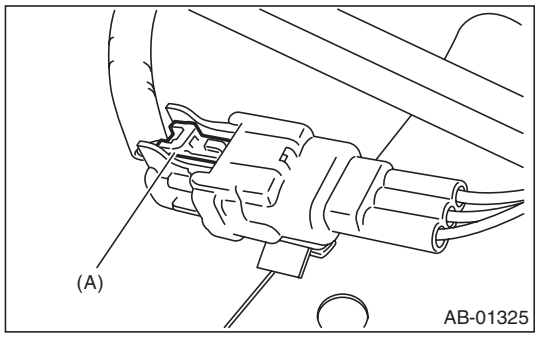

2) How to connect:
Holding the connector, push it in securely until a clicking sound is heard.

CAUTION:
Be sure to insert the connector in until it is locked. Then pull it gently to make sure that it is locked.

2. AIRBAG CONTROL MODULE

Refer to Airbag System section. <Ref. to AB-19, AIRBAG CONTROL MODULE, PROCEDURE, Airbag Connector.>

3. BUCKLE SWITCH RH

Refer to Airbag System section. <Ref. to AB-27, BUCKLE SWITCH RH, PROCEDURE, Airbag Connector.>

GETthemANDALS.org

6. Control Module I/O Signal

A: ELECTRICAL SPECIFICATION

CAUTION:
Never remove the occupant detection control module, occupant detection sensor or seat frame, because they are integrated into one unit.

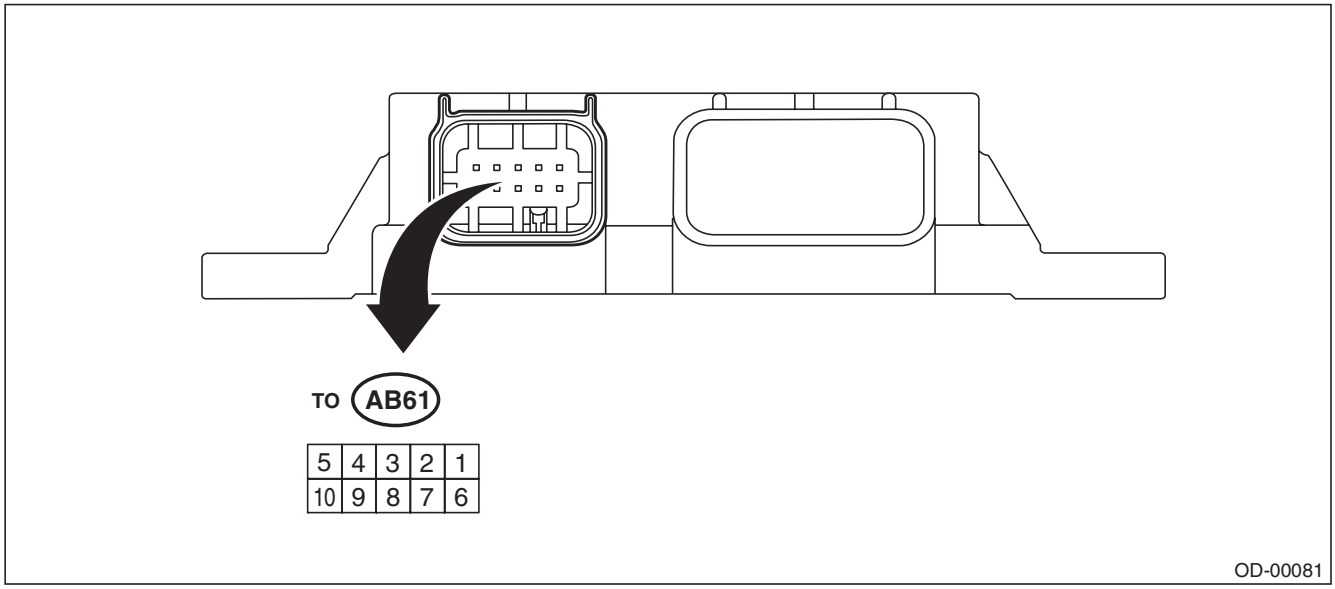

Terminal name	Terminal No.	Input/output value	Remarks
IG – power supply	5	9 — 16 V	When ignition switch is ON
Airbag control module communication (COM)	3	Open collector terminal	Communication line
Airbag control module communication (GND)	4	0 V	Ground
Buckle switch	9	0 — IG voltage	Ignition voltage when switch is ON
Buckle switch (GND)	8	0 V	Switch ground

B: WIRING DIAGRAM

Refer to the electrical wiring diagram. <Ref. to WI-191, WIRING DIAGRAM, Occupant Detection System.>

GETthemANUALS.org

7. Subaru Select Monitor

A: OPERATION

For detailed operation procedures, refer to the “PC application help for Subaru Select Monitor”.

B: INSPECTION

1. COMMUNICATION FOR INITIALIZING IMPOSSIBLE

DETECTING CONDITION:
Defective harness connector
TROUBLE SYMPTOM:
Communication is impossible between the airbag control module and the Subaru Select Monitor.
Refer to “Communication for Initializing Impossible” in AIRBAG SYSTEM (DIAGNOSTICS). <Ref. to AB(diag)-29, COMMUNICATION FOR INITIALIZING IMPOSSIBLE, INSPECTION, Subaru Select Monitor.>

GETtheMANUALS.org

8. Read Diagnostic Trouble Code (DTC)

A: OPERATION

Read out the DTC stored in airbag control module. For operation procedures, refer to AIRBAG SYSTEM (DIAGNOSTICS). <Ref. to AB(diag)-32, OPERATION, Read Diagnostic Trouble Code (DTC).>

NOTE:
For details concerning DTCs, refer to the List of Diagnostic Trouble Code (DTC) (airbag system, occupant detection system). <Ref. to AB(diag)-41, List of Diagnostic Trouble Code (DTC).> <Ref. to OD(diag)-19, List of Diagnostic Trouble Code (DTC).>

GETtheMANUALS.org

9. Inspection Mode

A: PROCEDURE

Recreate the circumstance by referring to the conditions described in the checklist.

GETtheMANUALS.org

10. Clear Memory Mode

A: OPERATION

For operation procedures, refer to AIRBAG SYSTEM (DIAGNOSTICS). <Ref. to AB(diag)-34, OPERATION, Clear Memory Mode.>

GETtheMANUALS.org

11. Display of Status Information

A: OPERATION

Check the operating condition of each sensor in the event of malfunction in seat belt buckle switch and seat position sensor, or when the seat belt buckle switch and seat position sensor has been replaced.
1) On «Main Menu» display, select {Each System Check}.
2) On «System Selection Menu» display, select {Airbag System}.
3) On «Airbag System» display, select {Status Data}.
The following table is for support data.

Items	Display
Seat position sensor LH	—*2
Seat position sensor RH	—*2
Seat belt buckle switch LH	—*6
Seat belt buckle switch RH	Fastened*3/Not fastened*4/Other*5/Initial setting*1/—*6
Passenger's airbag control status	ON*7/OFF*8/Initial setting*1

*1: Displayed when it is initial
*2: Seat position sensor not supported
*3: Seat belt fastened
*4: Seat belt not fastened
*5: Displayed when data other than belt fastened or not fastened, such as breakdown, is input
*6: Seat belt buckle switch not supported
*7: Passenger's airbag operating state
*8: Passenger's airbag non-operating state

NOTE:
For detailed operation procedures, refer to "PC application help for Subaru Select Monitor".

GETtheMANUALS.org

12. System Calibration (Rezeroing)

A: OPERATION

NOTE:
When replacing the occupant detection system, or removing and disassembling the passenger's seat, always perform the system calibration after installing a seat in the vehicle.

1) Park empty vehicle on a level surface.
2) Check the following items to adjust the condition of the vehicle.
• Adjust the seat backrest to be fully upright. (For models with power seats, press the power seat button until the backrest comes to a stop.)
• Adjust the seat slide position all the way back. (For models with power seats, press the power seat button until the seat slide does not move any further.)
• Do not place anything on the top of the seat cushion.
• Sit on the seat cushion to smooth the seat surface.
• Check that the passenger's seat belt is not inserted into the buckle, not tense or not stuck.
• Check that ambient temperature is in a range from 0 to 40°C (32 to 104°F).
3) Turn the ignition switch OFF once, then turn it ON again.

NOTE:
• This operation is performed to reset the occupant detection.
• Do not touch the seat until the system calibration (Rezeroing) is completed. If you have touched the seat even if only once, re-perform the steps from the step 3) again.

4) On «Main Menu» display, select {Each System Check}.
5) On «System Selection Menu» display, select {Occupant Detection System}.
6) On the {Occupant Detection System} display, select {Rezeroing}.
7) When «See service manual. And check vehicle condition for successfully completing the rezeroing.» is displayed, check the condition of the vehicle.
8) When the «Re-zeroing Adjust the passenger seat to the condition shown in service manual» is displayed, slide the passenger seat all the way to the back, check that the backrest is adjusted to all the way up, and select the [OK].

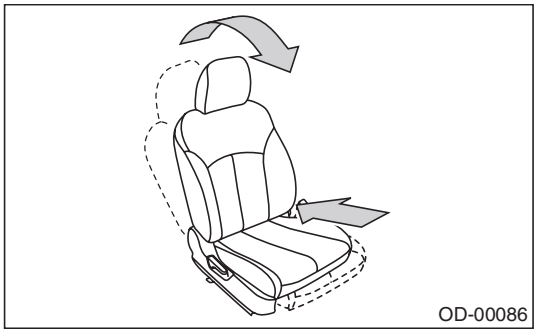

9) When the «Re-zeroing Unbelt the Passenger seatbelt Continue: OK, Quit: NO» is displayed, make sure the passengers seatbelt is disconnected from the buckle and select the [OK].
10) When the «Re-zeroing Empty the passenger seat Continue: OK, Quit: NO» is displayed, make sure that the passenger's seat is empty, airbag OFF indicator illuminates and airbag ON indicator does not illuminate, and select the [OK].

NOTE:
• After selecting the [OK], «In process... Please wait for a while without touching vehicle» is displayed. Do not touch or rock the vehicle while the message is displayed.
• During the system calibration process, if the «Re-zeroing is unsuccessful See service manual Press "OK" to END» is displayed, go to step 12).

11) When the re-zeroing is ended normally, the «Re-zeroing is successfully completed Press "OK" to END» is displayed. And then turn the ignition switch to OFF to finish the diagnosis.
12) During the system calibration process, if «Re-zeroing is unsuccessful See service manual Press "OK" to END» is displayed, turn the ignition switch to OFF once and turn it ON again, then read the DTC of the airbag system. <Ref. to OD(diag)-11, Read Diagnostic Trouble Code (DTC).>
When DTC is input, fix the fault and then perform the system calibration. When DTC is not input, check the seat and vehicle status and then perform the system calibration again. <Ref. to OD(diag)-15, System Calibration (Rezeroing).>

GETtheMANUALS.org

NOTE:
When the re-zeroing is unsuccessful, there could be occupant detection system failure or improper seat and vehicle status. When the airbag warning light illuminates, read the DTC of the airbag system, and perform the diagnosis while referring to List of Diagnostic Trouble Code (DTC). <Ref. to OD(diag)-11, Read Diagnostic Trouble Code (DTC).> <Ref. to AB(diag)-41, LIST, List of Diagnostic Trouble Code (DTC).>

GETtheMANUALS.org

13. Airbag Warning Light Illumination Pattern

A: INSPECTION

Turn the ignition switch to ON, and confirm that the airbag warning light remains on for approx. 6 seconds and then goes off afterwards.

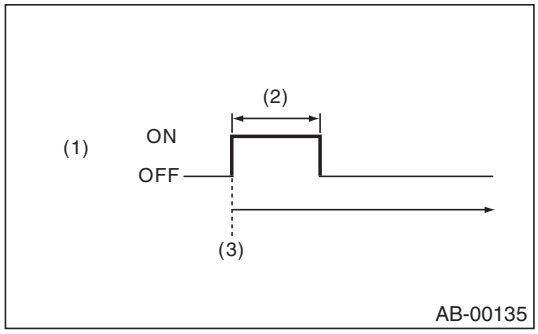

(1) Airbag warning light
(2) Approx. 6 sec.
(3) Ignition switch ON

GETtheMANUALS.org

14. Passenger's Airbag ON/OFF Indicator Light Illumination Pattern

A: INSPECTION

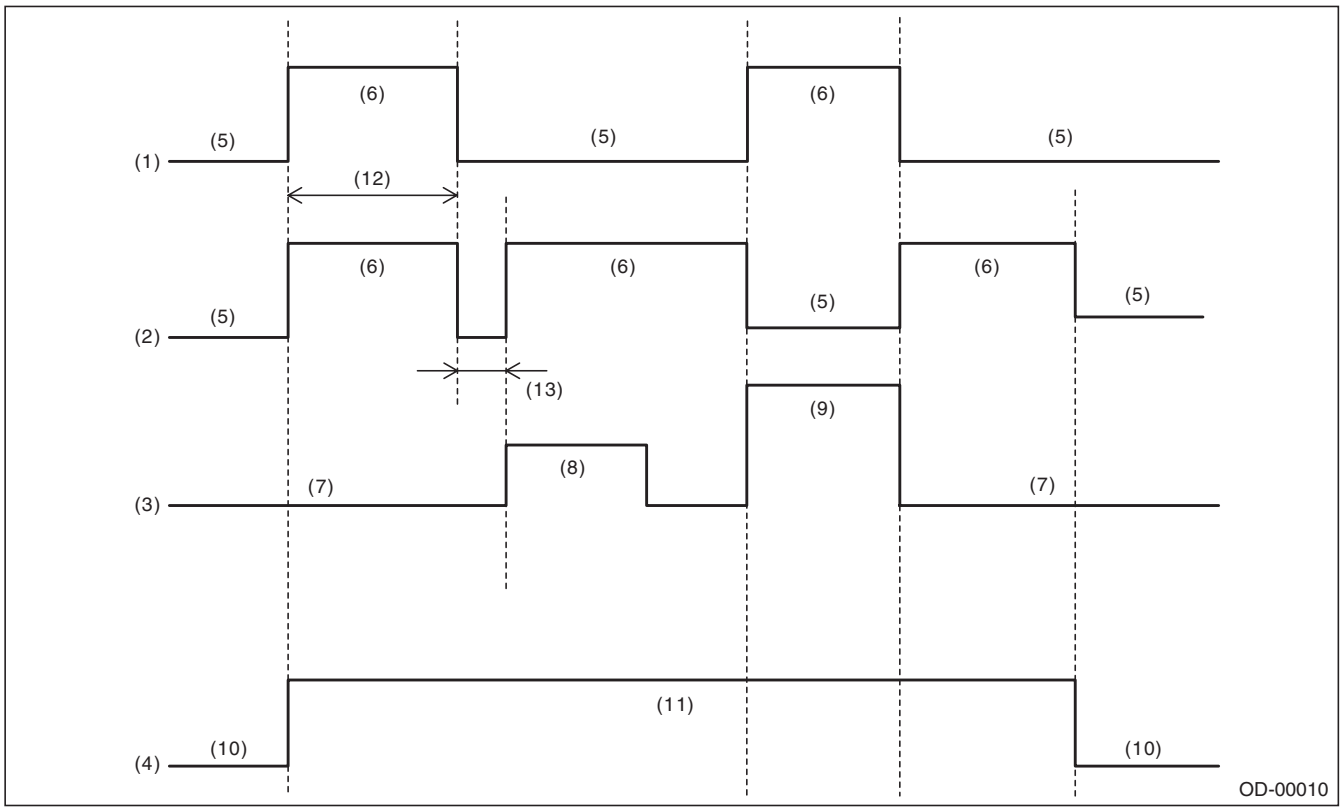

(1)	Passenger's airbag ON indicator light	(6)	Light ON	(10)	OFF
(2)	Passenger's airbag OFF indicator light	(7)	Empty	(11)	ON
(3)	Occupant seating	(8)	Child	(12)	Approx. 6 sec.
(4)	Ignition switch	(9)	Adult	(13)	Approx. 2 sec.
(5)	Light OFF				

GETtheMANUALS.org

15. List of Diagnostic Trouble Code (DTC)

A: LIST

DTC	Item	Content of diagnosis	Reference
27	ODS Communication error	• Occupant detection control module and airbag control module communication is faulty. • Airbag rear harness circuit is open, shorted, shorted to ground or shorted to power supply. • Occupant detection harness is faulty. • Occupant detection system is faulty. • Airbag control module is faulty.	<Ref. to OD(diag)-20, DTC 27 ODS COMMUNICATION ERROR, Diagnostic Procedure with Diagnostic Trouble Code (DTC).>
29	ODS failure	• Occupant detection sensor is faulty. • Occupant detection control module is faulty. • Occupant detection harness is faulty. • Fuse No. 25 (in joint box) is blown.	<Ref. to OD(diag)-21, DTC 29 ODS FAILURE, Diagnostic Procedure with Diagnostic Trouble Code (DTC).>
2A	ODS Calibration error	• Occupant detection control module is faulty. • Calibration of occupant detection control module is initial setting or faulty.	<Ref. to OD(diag)-22, DTC 2A ODS CALIBRATION ERROR, Diagnostic Procedure with Diagnostic Trouble Code (DTC).>
2B	ODS System wrong parts	• Specification of occupant detection control module is improper. • Occupant detection control module is faulty.	<Ref. to OD(diag)-22, DTC 2B ODS SYSTEM WRONG PARTS, Diagnostic Procedure with Diagnostic Trouble Code (DTC).>
37	Buckle Switch RH failure	• Passenger's buckle switch circuit is open, shorted or shorted to ground. • Occupant detection system is faulty. • Occupant detection harness is faulty.	<Ref. to OD(diag)-23, DTC 37 BUCKLE SWITCH RH FAILURE, Diagnostic Procedure with Diagnostic Trouble Code (DTC).>

GETtheMANUALS.org

16. Diagnostic Procedure with Diagnostic Trouble Code (DTC)

A: DTC 27 ODS COMMUNICATION ERROR

Perform the diagnosis following diagnostic procedures for the airbag system. <Ref. to AB(diag)-73, DTC 27 ODS COMMUNICATION ERROR, Diagnostic Chart with Trouble Code.>

GETtheMANUALS.org

B: DTC 29 ODS FAILURE

DTC DETECTING CONDITION:

- Occupant detection sensor is faulty.
- Occupant detection control module is faulty.
- Occupant detection harness is faulty.
- Rear airbag harness (RH) is faulty.
- Fuse No. 25 (in fuse box) is blown out.
- System calibration (rezeroing) is unsuccessful.

Step		Check	Yes	No
1	**CHECK POOR CONTACT OF CONNECTORS.** Check for poor contact of the connectors between the occupant detection control module and airbag control module.	Is there poor contact?	Reconnect the connector. If the fault is not fixed, replace the airbag harness.	Go to step **2**.
2	**CHECK DTC.** Read DTC of the airbag system.	Is another DTC displayed?	Perform the diagnosis according to DTC.	Go to step **3**.
3	**PERFORM SYSTEM CALIBRATION (REZEROING).** Perform system calibration (rezeroing).	Did the system calibration (rezeroing) complete properly?	Turn the ignition switch OFF once, then turn it ON again and check that the airbag warning light turns off.	Check the seat harness, and if any fault is found, replace the seat harness. If the fault is not fixed, replace the occupant detection system. <Ref. to SE-12, DISASSEMBLY, Front Seat.>

GETtheMANUALS.org

C: DTC 2A ODS CALIBRATION ERROR

DTC DETECTING CONDITION:

- Calibration of occupant detection control module is initial setting or faulty.
- Occupant detection control module is faulty.

Step		Check	Yes	No
1	**CHECK DTC.** Read the DTC of the airbag system using the Subaru Select Monitor.	Is DTC other than 2A displayed?	Perform the diagnosis according to the displayed DTC.	Go to step **2**.
2	**PERFORM RE-ZEROING.** Perform system calibration using the Subaru Select Monitor. <Ref. to OD(diag)-15, System Calibration (Rezeroing).>	Did the system calibration complete properly?	Go to step **3**.	Replace the occupant detection system. <Ref. to SE-27, PASSENGER'S SEAT, DISASSEMBLY, Front Seat.>
3	**CHECK DTC.** 1) Turn the ignition switch to OFF and wait for 60 seconds or more. 2) Turn the ignition switch to ON, and then read the DTC of the airbag system.	Is DTC other than DTC 2A displayed?	Perform the diagnosis according to the displayed DTC.	When DTC is 2A, replace the occupant detection system. <Ref. to SE-27, PASSENGER'S SEAT, DISASSEMBLY, Front Seat.> When DTC is not displayed, end the diagnosis.

CAUTION:
When DTC other than DTC 2A is present, system calibration (re-zeroing) cannot be completed normally.
When occupant detection system DTC other than DTC 2A is present (27, 29, 2B, 37), perform the diagnosis of the DTCs other than 2A first.

D: DTC 2B ODS SYSTEM WRONG PARTS

DTC DETECTING CONDITION:

- Wrong occupant detection control module is installed.
- Occupant detection control module is faulty.

When DTC 2B is displayed, the occupant detection control module is faulty.
Replace the occupant detection control module with a genuine occupant detection control module.

GETtheMANUALS.org

E: DTC 37 BUCKLE SWITCH RH FAILURE

DTC DETECTING CONDITION:

- Passenger's buckle switch circuit is open, shorted or shorted to ground.
- Seat harness circuit is open, shorted or shorted to ground.
- Occupant detection control module is faulty.

WIRING DIAGRAM:

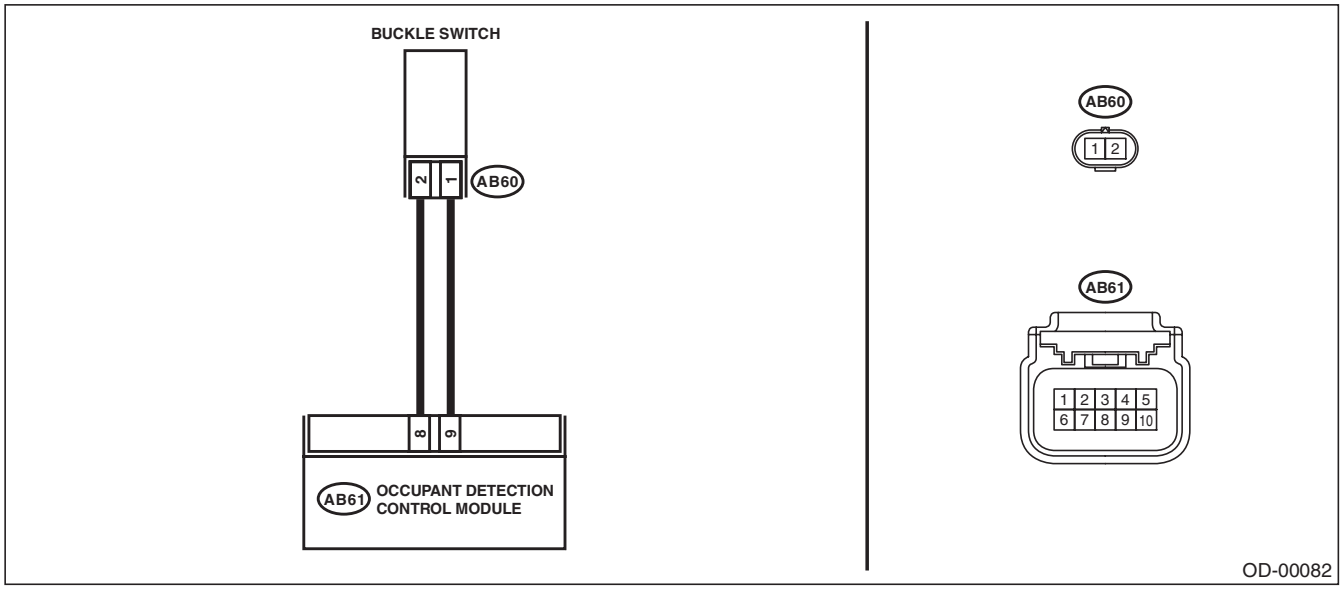

Step		Check	Yes	No
1	**CHECK POOR CONTACT OF CONNECTORS.** Check for poor contact of the connectors between the occupant detection control module and buckle switch.	Is there poor contact?	Reconnect the connectors. If the fault is not fixed, replace the airbag harness.	Go to step **2**.
2	**CHECK BUCKLE SWITCH.** 1) Turn the ignition switch to OFF, disconnect the battery ground cable, and wait for 60 seconds. 2) Disconnect the buckle switch connector (AB60). 3) Connect the test harness AE and test harness connector Y to buckle switch connector (AB60). 4) Connect the battery ground terminal and turn the ignition switch to ON.	Does the airbag warning light illuminate for 6 seconds and go off?	Replace the buckle switch. <Ref. to SB-17, OUTER BELT ASSY, REMOVAL, Front Seat Belt.>	Check the seat harness, and if any fault is found, replace the seat harness. If the fault is not fixed, replace the occupant detection system.

GETtheMANUALS.org

GETtheMANUALS.org

SEAT BELT SYSTEM

SB

Page

1. General Description 2
2. Pretensioner Connector 11
3. Inspection Locations after a Collision 12
4. Seat Belt Warning System 13
5. Front Seat Belt 17
6. Rear Seat Belt 30

GETtheMANUALS.org

1. General Description

A: COMPONENT

1. FRONT SEAT BELT

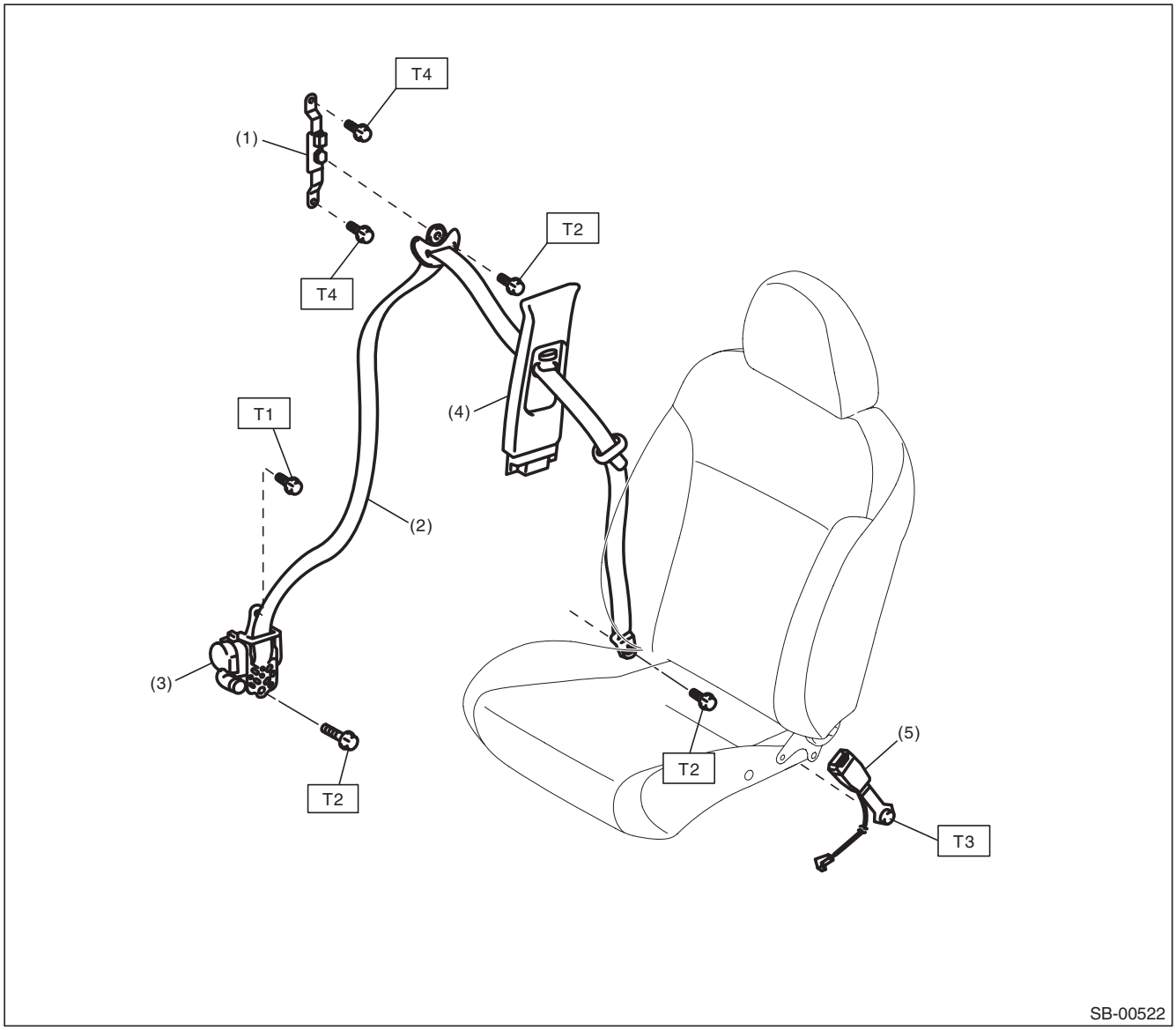

(1) Adjustable anchor ASSY
(2) Outer belt ASSY
(3) Seat belt retractor ASSY (Outer belt ASSY)
(4) Center pillar trim UPR
(5) Inner belt ASSY

Tightening torque:N·m (kgf-m, ft-lb)
T1: 7.5 (0.76, 5.5)
T2: 30 (3.06, 22.1)
T3: 38 (3.87, 28.0)
T4: 53 (5.4, 39.1)

GETtheMANUALS.org

2. REAR SEAT BELT (SEDAN MODEL)

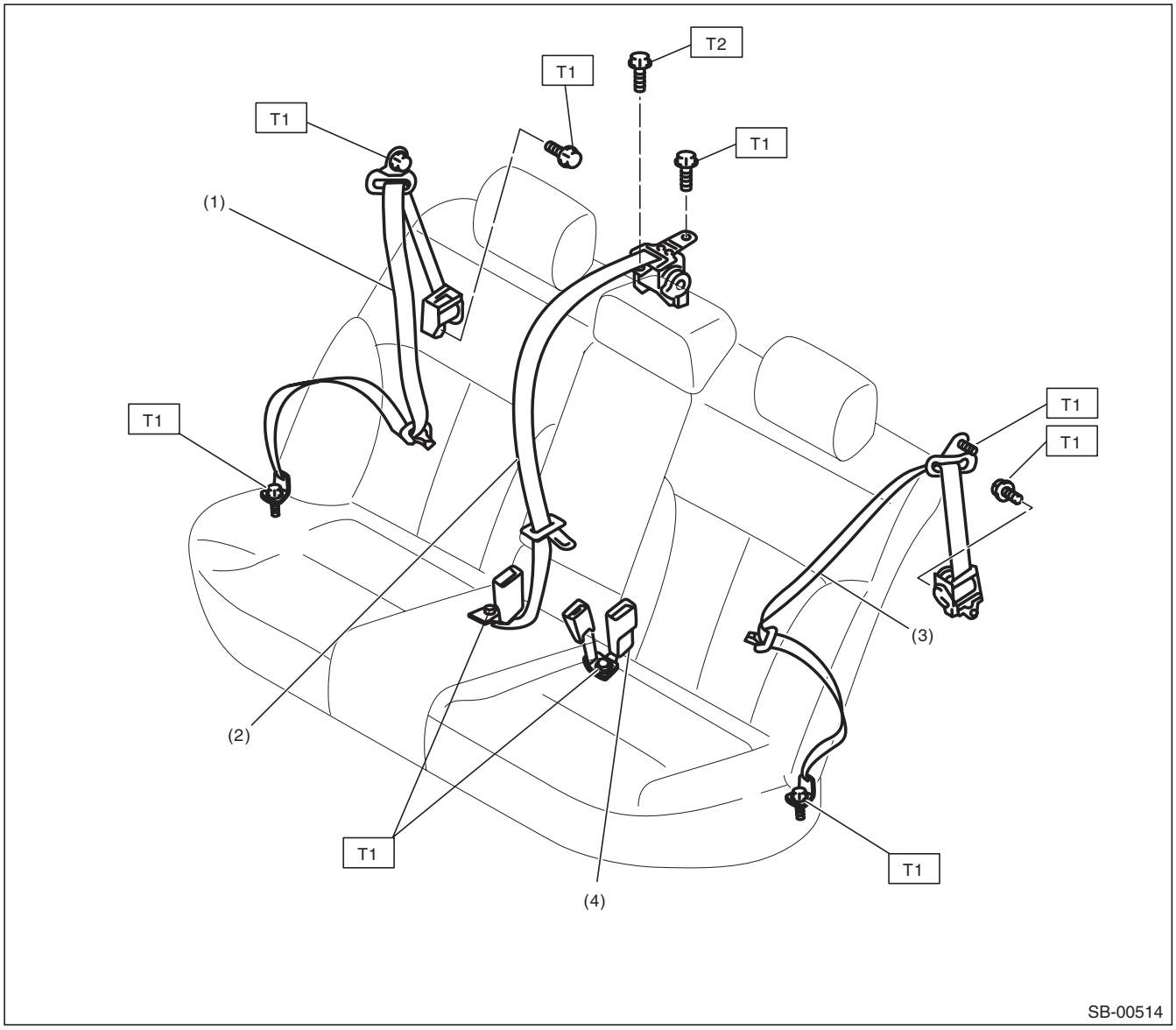

(1)	Outer belt ASSY RH	(3)	Outer belt ASSY LH
(2)	Shoulder belt ASSY CTR	(4)	Center belt ASSY LH

Tightening torque:N·m (kgf-m, ft-lb)

T1: 30 (3.06, 22.1)

T2: 53 (5.4, 39.1)

GETtheMANUALS.org

3. REAR SEAT BELT (OUTBACK MODEL)

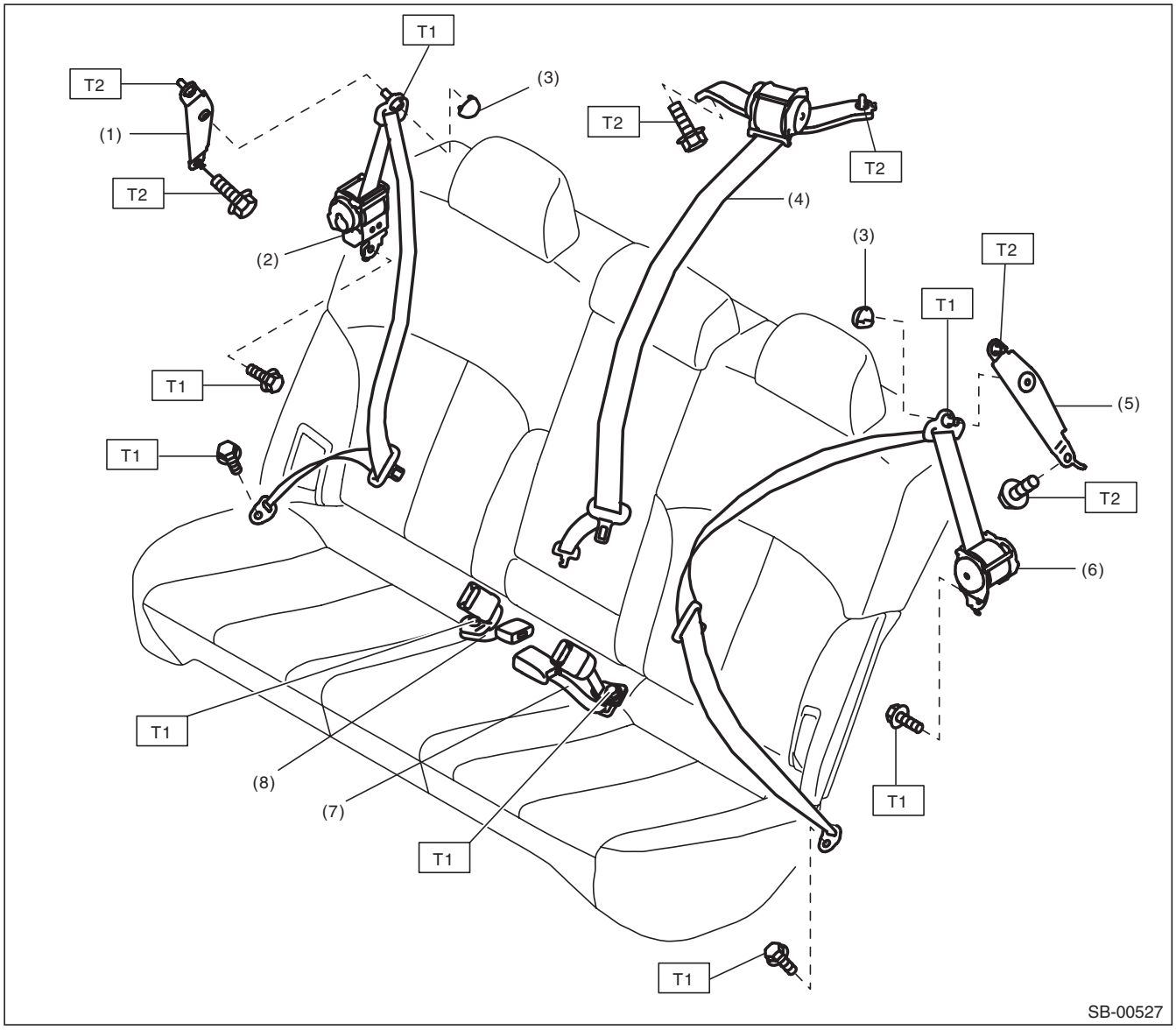

(1)	Shoulder anchor bracket RH	(5)	Shoulder anchor bracket LH
(2)	Outer belt ASSY RH	(6)	Outer belt ASSY LH
(3)	Shoulder anchor cover	(7)	Center belt ASSY LH
(4)	Shoulder belt ASSY CTR	(8)	Center belt ASSY RH

Tightening torque:N·m (kgf-m, ft-lb)
T1: 30 (3.06, 22.1)
T2: 53 (5.4, 39.1)

GETtheMANUALS.org

B: CAUTION

- Before starting the work, turn the ignition switch to OFF, disconnect the battery ground cable and wait for 60 seconds or more.
- The pretensioner system is fitted with a backup power supply. After disconnecting the battery ground cable, the pretensioner may operate if you do not wait for 60 seconds or more before starting pretensioner system servicing.
- Do not drop or apply any impact to the pretensioner.
- If oil, grease or water gets on the pretensioner, wipe it off immediately with a dry cloth.
- Do not expose the pretensioner to high temperature or flame.
- Do not allow current to flow through or voltage to reach the pretensioner. Do not use a circuit tester to check resistance of the pretensioner.
- Do not disassemble or attempt to repair the pretensioner. If it is dented, cracked or deformed, replace it with a new genuine part.
- Do not use the airbag or pretensioner parts from other vehicles. Always use a new genuine part for replacement.
- When handling a seat belt with deployed pretensioner, wear gloves and goggles. Wash your hands afterwards.
- Do not reuse a seat belt with deployed pretensioner.
- Before disposal, make sure to perform an operation process to the pretensioners.
- If material from the pretensioner enters the eyes or contacts skin during operation process, wash it away with clean water, and then consult a doctor.

C: PREPARATION TOOL

1. SPECIAL TOOL

- Subaru Select Monitor

ILLUSTRATION	TOOL NUMBER	DESCRIPTION	REMARKS
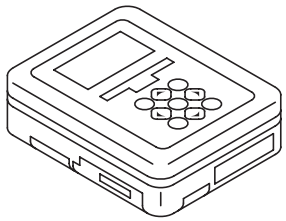 ST1B022XU0	1B022XU0	SUBARU SELECT MONITOR III KIT	Used for setting of each function and troubleshooting for electrical system.

GETtheMANUALS.org

- TEST HARNESS AD

ILLUSTRATION	TOOL NUMBER	DESCRIPTION	REMARKS
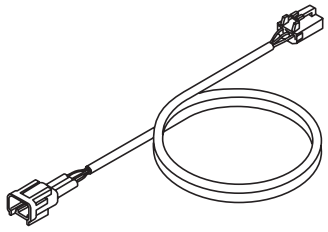 ST98299XA020	98299XA020	TEST HARNESS AD	Used when measuring voltage and resistance of the occupant detection system.

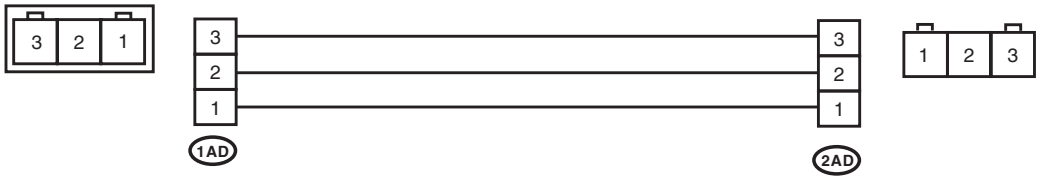

OD-00028

GETtheMANUALS.org

- TEST HARNESS AG

ILLUSTRATION	TOOL NUMBER	DESCRIPTION	REMARKS
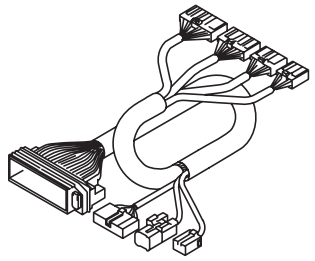 ST98299AG070	98299AG070	TEST HARNESS AG	Used when measuring voltage and resistance of airbag control module.

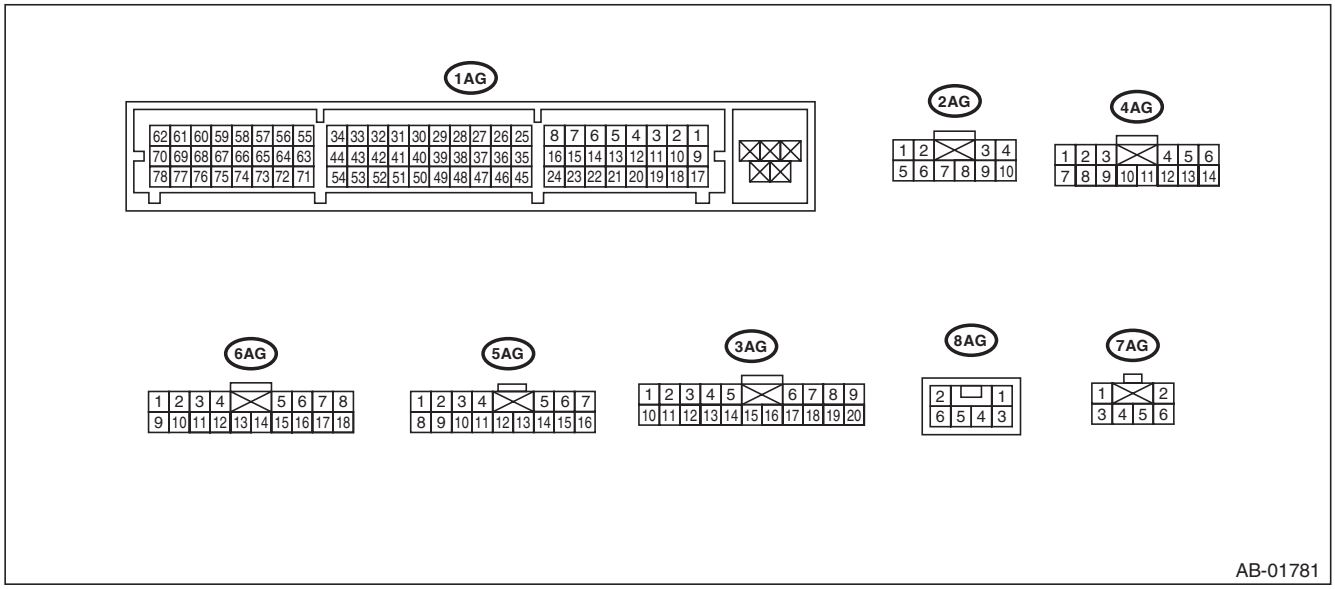

GETtheMANUALS.org

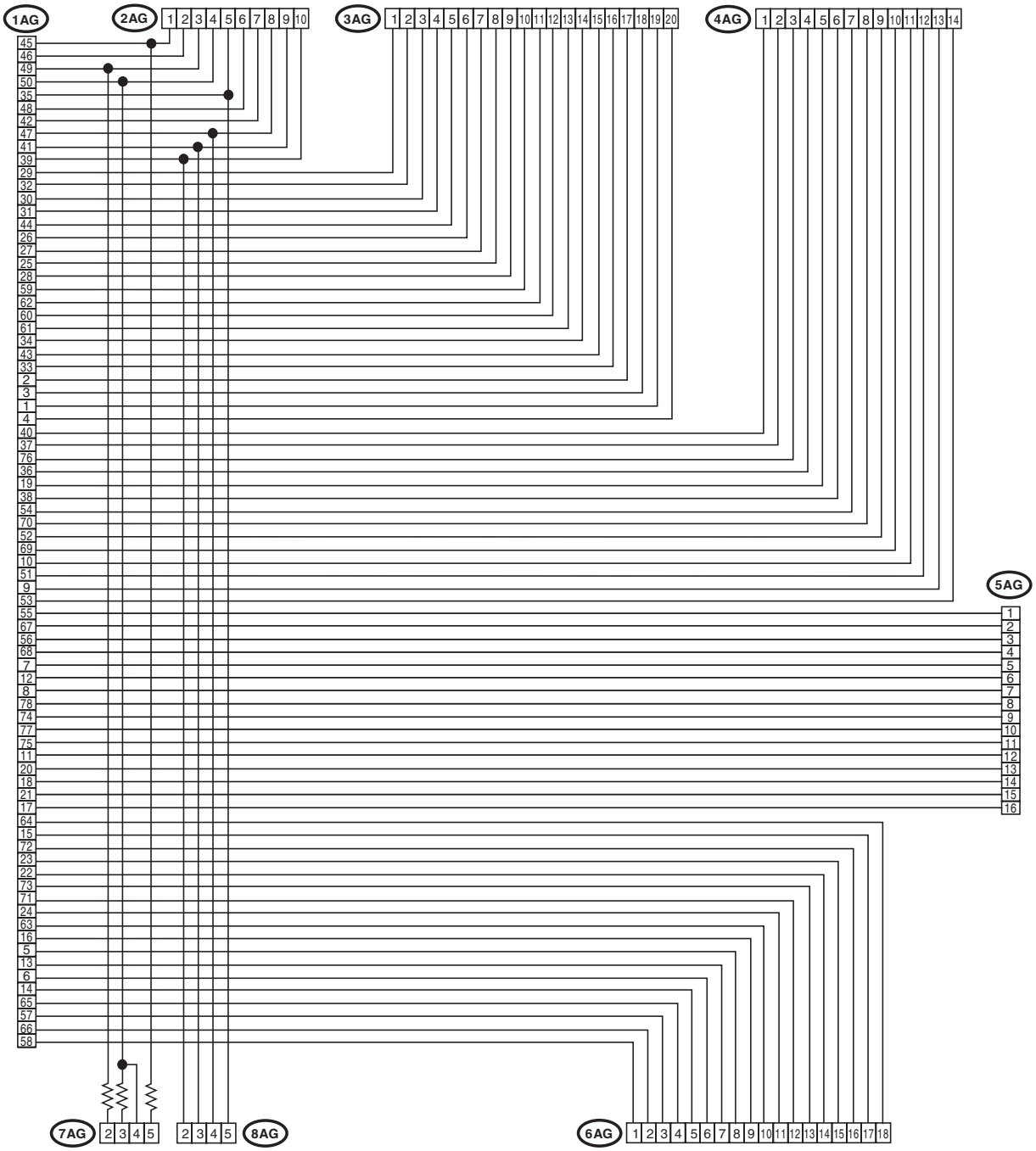

AB-01902

GETtheMANUALS.org

- TEST HARNESS Y

ILLUSTRATION	TOOL NUMBER	DESCRIPTION	REMARKS
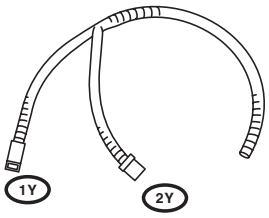 ST98299AG040	98299AG040	TEST HARNESS Y	Used for troubleshooting seat belt buckle switch.

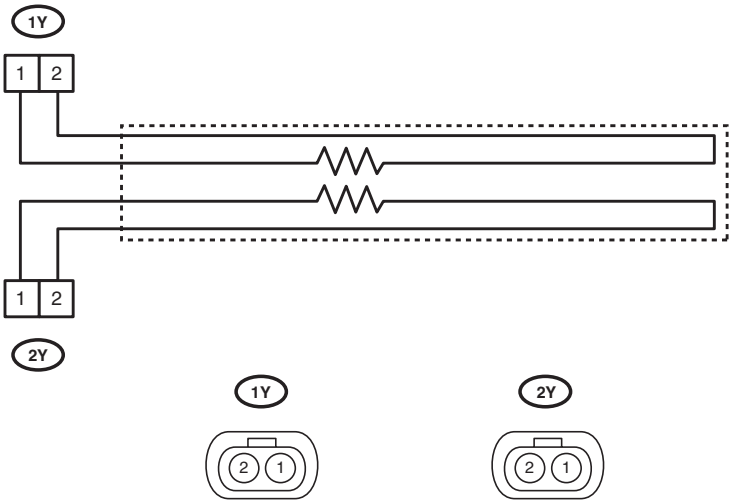

AB-01069

GETtheMANUALS.org

- AIRBAG RESISTOR

ILLUSTRATION	TOOL NUMBER	DESCRIPTION	REMARKS
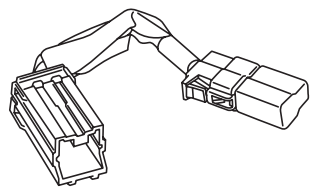 ST98299PA040	98299PA040	AIRBAG RESISTOR	Used in replacement of airbag module for which resistance value is same as airbag module. Two STs are required for diagnosis of two-stage inflator type airbag module.

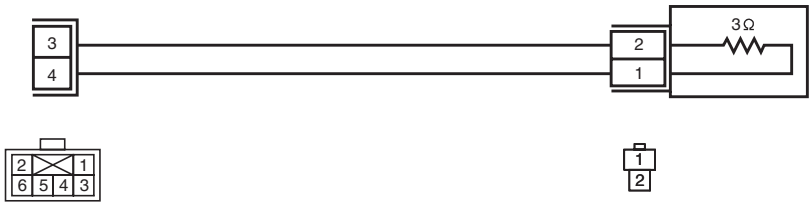

AB-00433

2. GENERAL TOOL

TOOL NAME	REMARKS
Circuit tester	Used for measuring resistance and voltage.

GETtheMANUALS.org

2. Pretensioner Connector

A: PROCEDURE

For connectors of seat belt pretensioner and buckle switch RH, refer to “Airbag System” or “Occupant Detection System”.

- Airbag system: <Ref. to AB-18, PROCEDURE, Airbag Connector.>
- Occupant detection system: <Ref. to OD(diag)-8, PROCEDURE, Airbag Connector.>

GETtheMANUALS.org

3. Inspection Locations after a Collision

A: INSPECTION

Refer to “Inspection Locations After a Collision” in the AIRBAG SYSTEM section. <Ref. to AB-29, Inspection Locations after a Collision.>

GETtheMANUALS.org

4. Seat Belt Warning System

A: WIRING DIAGRAM

Refer to “Seat Belt Warning System” in the wiring diagram. <Ref. to WI-226, WIRING DIAGRAM, Seat Belt Warning System.>

B: INSPECTION

CAUTION:
- **Before diagnosing the airbag system, always turn the ignition switch to OFF, disconnect the battery ground cable, and then wait for 60 seconds or more.**
- **When replacing the airbag module, seat belt pretensioner, roll connector, control module, or sensors, reconnect the replacement part and check that the warning light operates normally.**
- **When inspecting the airbag main harness, disconnect the airbag module connectors of the driver’s and passenger’s seats for safety.**
- **When inspecting the airbag rear harness, disconnect the side airbag module connector, curtain airbag module connector and seat belt pretensioner connector for safety reasons.**

Step		Check	Yes	No
1	**CHECK CURRENT SETTINGS.** 1) Prepare the Subaru Select Monitor. 2) Turn the ignition switch to ON (engine OFF) and run the “PC application for Subaru Select Monitor”. 3) Select the “current data display” and read the data of the “Belt Warning Switch”.	Is the belt warning display ON?	Go to step **2**.	Turn the belt warning ON with unit customization.
2	**CHECK CURRENT DATA.** 1) Select the “current data display” and read the data of the “IG power supply voltage”. 2) Turn the ignition switch ON ←→ OFF.	Does the voltage change between 10 V or higher ←→ less than 1.5 V, according to the ignition switch ON ←→ OFF operation?	Go to step **3**.	Check the ignition switch circuit.
3	**CHECK FUNCTION.** 1) Sit on the driver’s seat and passenger’s seat and disconnect the seat belts of the both. 2) Turn the ignition switch to ON (engine OFF). 3) Check the illumination of the driver’s seat belt warning light in the combination meter, and the passenger’s seat belt warning light in the clock, and the sounding of the buzzer.	Do the driver’s warning light and passenger’s warning light blink and the buzzer sound while blinking?	Go to step **4**.	• Malfunction of the driver’s seat belt warning light →Go to step **10**. • Malfunction of the passenger’s seat belt warning light →Go to step **16**. • The buzzer does not sound →Go to step **6**.
4	**CHECK FUNCTION.** 1) Wait until the buzzer sound stops in step 3. (for approximately six seconds after starting sounding) 2) Connect and disconnect the seat belts of the driver’s and passenger’s. 3) Check the illumination of the driver’s seat belt warning light in the combination meter and the passenger’s seat belt warning light in the clock.	Do the seat belts warning light illuminate ←→ go off according to the operation?	Go to step **5**.	• Malfunction of the driver’s seat belt warning light →Go to step **6**. • Malfunction of the passenger’s seat belt warning light →Go to step **12**.

GETtheMANUALS.org

Step		Check	Yes	No
5	**CHECK FUNCTION.** 1) Wait until the buzzer sound stops in step 3. (for approximately six seconds after starting sounding) 2) Start the engine, and set the vehicle speed at 20 km/h (12 MPH) or more. 3) Check the seat belt warning lights of the driver's and the passenger's, and if the warning buzzer sounds.	Do the driver's warning light and passenger's warning light blink and the buzzer sound while blinking?	Seat belt warning system is normal.	Go to step **20**.
6	**CHECK CURRENT DATA.** 1) Select the "current data display" and read the data of the seat belt switch of the driver's. 2) Connect and disconnect the seat belt buckle.	Does the seat belt SW display turn ON ←→ OFF according to the operation?	Go to step **10**.	Go to step **7**.
7	**CHECK HARNESS.** 1) Disconnect the negative terminal from the battery, and wait for 60 seconds or more. 2) Disconnect the connector of body integrated unit and the seat belt buckle switch. 3) Check for short circuit to battery, open circuit and short circuit to ground between the body integrated unit and the seat belt buckle switch LH. ***Connector & terminal*** ***Manual seat*** ***(i84) No. 30 — (R108) No. 1:*** ***Power seat*** ***(i84) No. 30 — (R381) No. 1:***	Is the harness normal?	Go to step **8**.	Repair or replace the harness.
8	**CHECK HARNESS.** Measure the resistance between the seat belt buckle switch LH and chassis ground. ***Connector & terminal*** ***Manual seat*** ***(R108) No. 2 — Chassis ground:*** ***Power seat*** ***(R381) No. 2 — Chassis ground:***	Is the resistance less than 10 Ω?	Go to step **9**.	Repair or replace the harness.
9	**CHECK SEAT BELT BUCKLE SWITCH LH.** Measure the resistance between the connector terminals of the driver's seat belt switch when the driver's seat belt is fastened and detached. ***Connector & terminal*** ***Manual seat*** ***(R108) No. 1 — (R108) No. 2:*** ***Power seat*** ***(R381) No. 1 — (R381) No. 2:***	Is the resistance when the belt is fastened 1 MΩ or more, and less than 10 Ω when the belt is detached?	Replace the body integrated unit. <Ref. to SL-71, REMOVAL, Body Integrated Unit.>	Replace the inner belt assembly LH. <Ref. to SB-17, OUTER BELT ASSY, REMOVAL, Front Seat Belt.>
10	**CHECK DTC.** Read the DTC using Subaru Select Monitor.	Is any CAN-related body system DTC detected?	Check the CAN system according to the DTC.	Go to step **11**.
11	**CHECK COMBINATION METER.** Perform the self-diagnosis of combination meter. <Ref. to IDI-6, SELF-DIAGNOSIS DISPLAY MODE, OPERATION, Combination Meter System.>	At the start of combination meter self diagnosis, did the buzzer sound and the seat belt warning light illuminate?	Replace the body integrated unit or the combination meter. Or replace both. It may be due to the transmission failure of the body integrated unit or the reception failure of the combination meter.	Replace the combination meter. <Ref. to IDI-21, REMOVAL, Combination Meter.>

GETtheMANUALS.org

Step		Check	Yes	No
12	**CHECK CURRENT DATA.** 1) Sit in the passenger's seat. 2) Select "Current Data Display" and display the data of "P seat belt SW input ". 3) Fasten and detach the passenger's side seat belt buckle, and read the data of the seat belt switch. <Ref. to BC(diag)-12, OPERATION, Read Current Data.>	Does the seat belt switch display turn ON ←→ OFF according to the operation of the seat belt buckle?	Go to step **16**.	Go to step **13**.
13	**CHECK AIRBAG SYSTEM AND OCCUPANT DETECTION SYSTEM.** Perform the check in accordance with the diagnostic procedure DTC 27 of the airbag system. <Ref. to AB(diag)-73, DTC 27 ODS COMMUNICATION ERROR, Diagnostic Chart with Trouble Code.>	Is there any problem on the inspection result?	Go to step **14**.	Repair or replace with new parts according to DTC 27.
14	**CHECK BUCKLE SWITCH RH.** Perform the check in accordance with the diagnostic procedure DTC 37 of the occupant detection system. <Ref. to OD(diag)-23, DTC 37 BUCKLE SWITCH RH FAILURE, Diagnostic Procedure with Diagnostic Trouble Code (DTC).>	Is there any problem on the inspection result?	Go to step **15**.	Repair or replace with new parts according to DTC 37.
15	**CHECK AIRBAG CONTROL MODULE AND BODY INTEGRATED UNIT.** Check the airbag control module, occupant detection sensor and seat belt buckle switch RH. Perform the check in accordance with the diagnostic procedure DTC 39 of the airbag system. <Ref. to AB(diag)-79, DTC 39 SEAT BELT WARNING FAILURE, Diagnostic Chart with Trouble Code.>	Is there any problem on the inspection result?	Replace the body integrated unit. <Ref. to SL-71, REMOVAL, Body Integrated Unit.>	Repair or replace with new parts according to DTC 39.
16	**CHECK CLOCK POWER SUPPLY VOLTAGE.** 1) Disconnect the clock connector. 2) Turn the ignition switch to ON. 3) Measure the voltage between the ignition power supply and the clock. ***Connector & terminal*** ***(i59) No. 10 (+) — Chassis ground (–):*** ***(i59) No. 8 (+) — Chassis ground (–):***	Is the voltage 10 V or more?	Go to step **17**.	Check the harness for a open or short between the fuse and clock.
17	**CHECK CLOCK GROUND CIRCUIT.** 1) Turn the ignition switch to OFF. 2) Measure the resistance between clock and chassis ground. ***Connector & terminal*** ***(i59) No. 6 — Chassis ground:***	Is the resistance less than 10 Ω?	Go to step **18**.	Repair or replace the harness.
18	**CHECK BODY INTEGRATED UNIT DATA.** Read the DTC of body integrated unit using Subaru Select Monitor.	Is DTC detected?	Perform the diagnosis according to DTC.	Go to step **19**.
19	**CHECK HARNESS BETWEEN BODY INTEGRATED UNIT AND COMBINATION METER.** 1) Turn the ignition switch to OFF. 2) Disconnect the harness of the body integrated unit and the combination meter. 3) Measure the resistance between body integrated unit and combination meter. ***Connector & terminal*** ***(i84) No. 27 — (i10) No. 33:*** ***(i84) No. 35 — (i10) No. 32:***	Is the resistance less than 10 Ω?	Go to step **20**.	Repair or replace the harness.

GETtheMANUALS.org

Step		Check	Yes	No
20	**CHECK HARNESS BETWEEN CLOCK AND COMBINATION METER.** 1) Disconnect the harness of the clock and the combination meter. 2) Measure the resistance between clock and combination meter. ***Connector & terminal*** ***(i59) No. 5 — (i10) No. 3:***	Is the resistance less than 10 Ω?	Go to step **21**.	Repair or replace the harness.
21	**CHECK COMMUNICATION STATUS BETWEEN CLOCK AND COMBINATION METER.** 1) Remove the clock, and install a properly operating clock (new clock). 2) Connect the connector and then turn the ignition switch to ON. ***Connector & terminal*** ***(i59) No. 5 — (i10) No. 3:***	Is the clock properly displayed?	Replace the clock.	Replace the meter case assembly.

GETtheMANUALS.org

5. Front Seat Belt

A: REMOVAL

1. OUTER BELT ASSY

CAUTION:
- **The airbag system is fitted with a backup power supply. After disconnecting the battery ground cable, the airbag may operate if you do not wait for 60 seconds before starting the service of airbag system.**
- **Do not drop or subject the pretensioner to any impact.**
- **Since the pretensioner and bracket are integrated as a unit, do not disassemble them.**

1) Before working, turn the ignition switch to OFF, disconnect the battery ground cable, and wait for 60 seconds or more.

NOTE:
Remove the front and rear bolts from the slide rail of the power seat before removing the battery ground.
2) Tilt the backrest forward and move the seat to the front most position.

CAUTION:
For the power seat, after moving the seat, check that the battery ground has been removed. If not, disconnect the battery ground cable and wait for 60 seconds or more.
3) Release the claws, and then remove the side sill cover - front INN. (On the side where seat belt assembly is removed)

CAUTION:
Do not pull with excessive force. Doing so may damage the claws of the side sill cover INN.

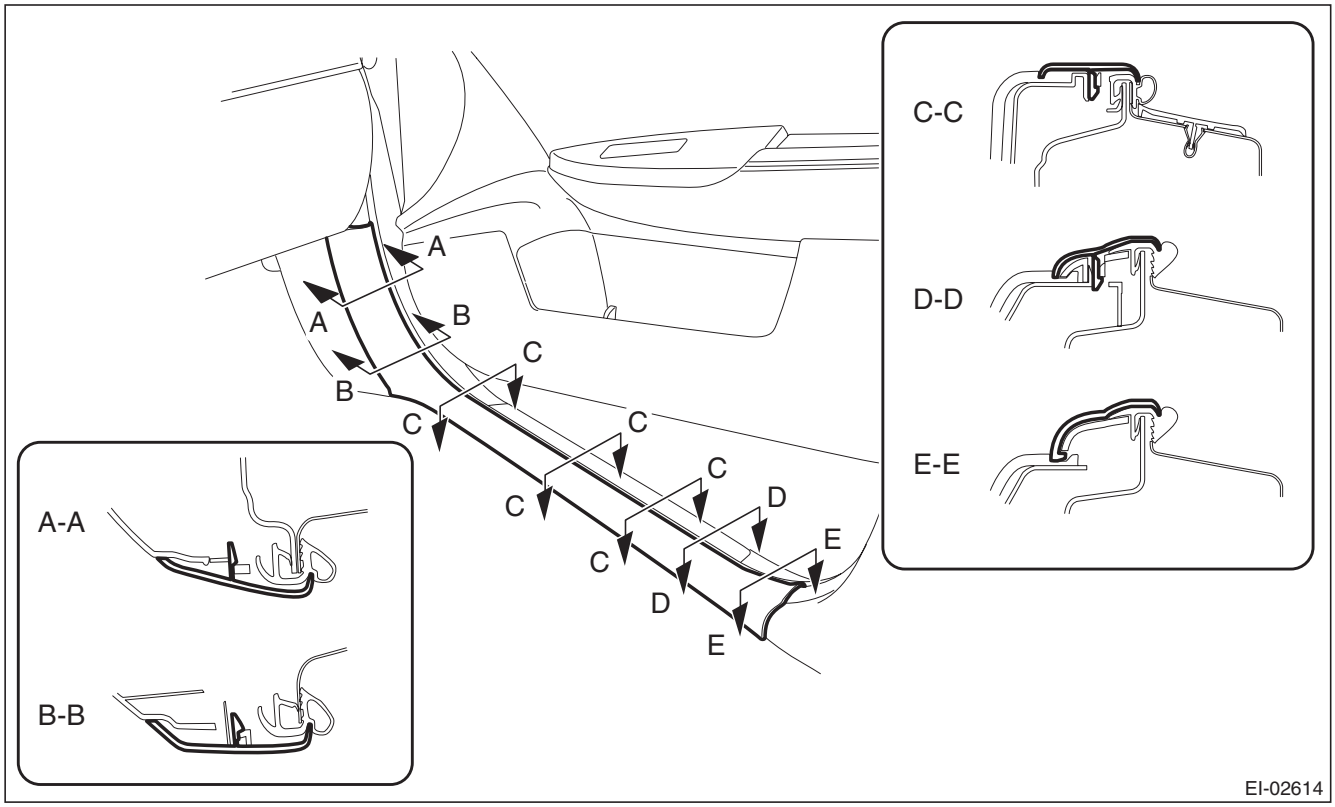

NOTE:
To release the claws of the side sill cover INN, the following steps are recommended.
1. Take out the weather strip from under the side sill cover INN.
2. Turn over the floor mat and release the claw (C-C) by accessing from behind the side sill cover INN.

GETtheMANUALS.org

4) Release the clips and claws, and then remove the side sill cover - rear INN. (On the side where seat belt assembly is removed)

CAUTION:
Do not pull with excessive force. Doing so may damage the claws of the side sill cover INN.

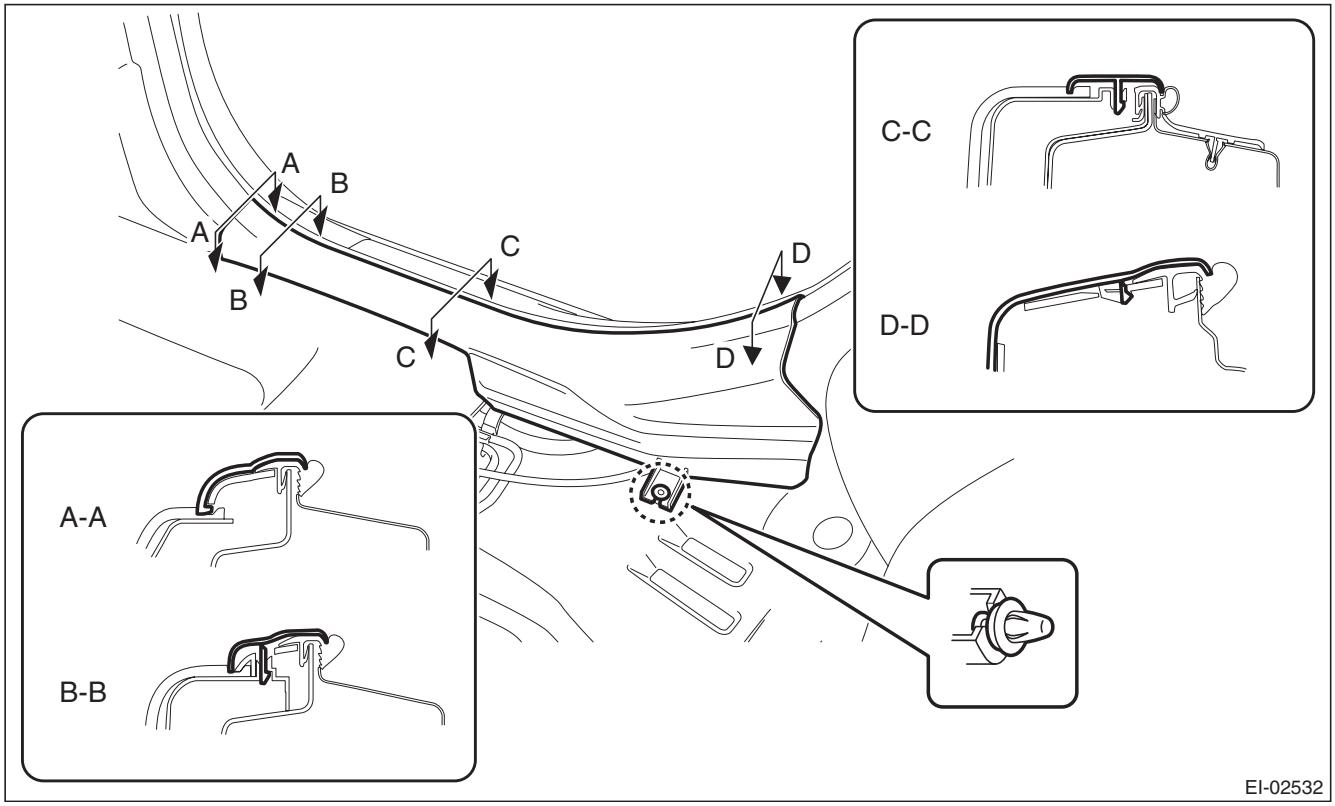

NOTE:
To release the claws of the side sill cover INN, the following steps are recommended.
1. Take out the weather strip from under the side sill cover INN.
2. Turn over the floor mat and release the claw (C-C and D-D) by accessing from behind the side sill cover INN.

GETtheMANUALS.org

5) Remove the center pillar trim LWR. (On the side where seat belt assembly is removed)
   (1) Release the clip by pulling the center pillar trim LWR toward you.
   (2) Expand the claws of center pillar trim LWR outward and remove it from the center pillar trim UPR.

CAUTION:
Do not expand the center pillar trim LWR excessively. Doing so may damage the trim.

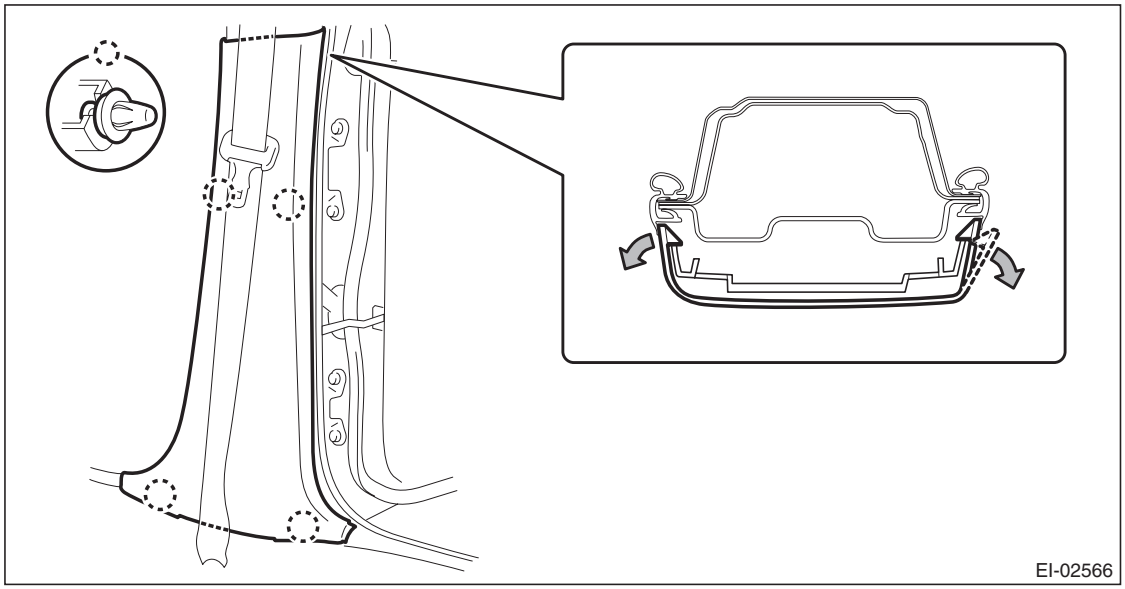

NOTE:
First release the claw located to the rear of the vehicle.

6) Remove the center pillar trim UPR. (On the side where seat belt assembly is removed)
   (1) Release the clip by pulling the center pillar trim UPR toward you.
   (2) Remove the center pillar trim UPR by lowering the entire trim.

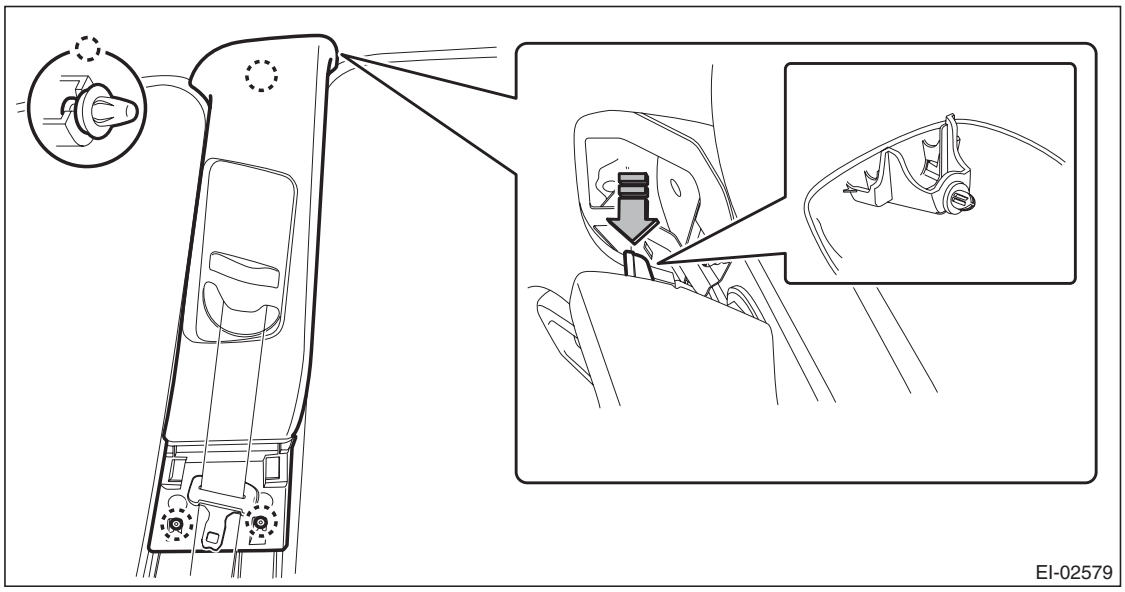

GETtheMANUALS.org

(3) Remove the shoulder anchor bolt.

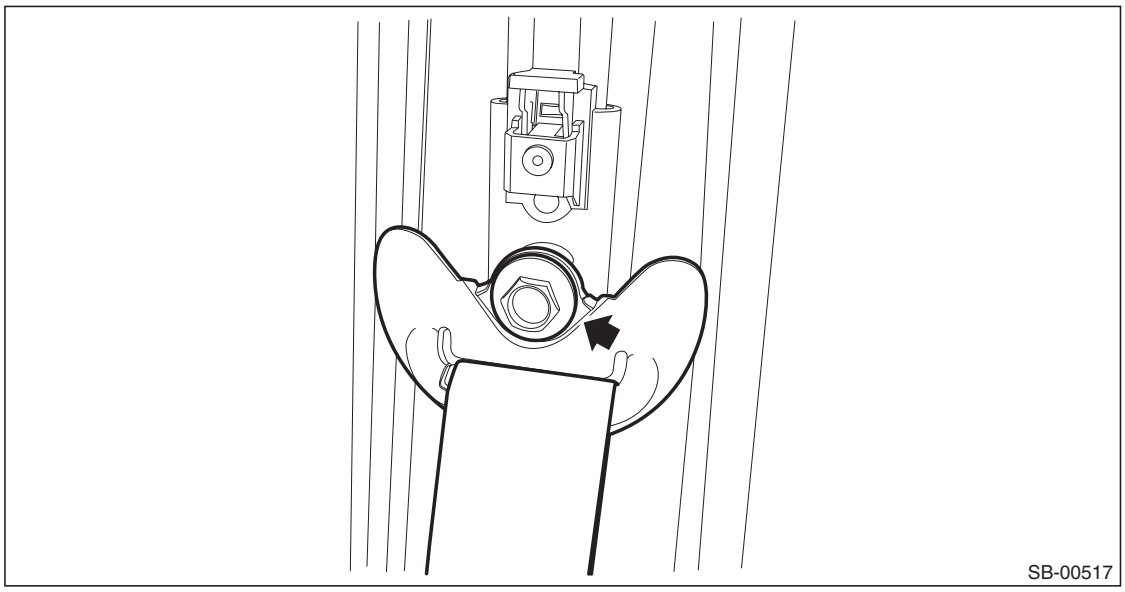

7) Remove the seat belt assembly.
   (1) Turn over the floor mat to disconnect the belt tension sensor connector.
   (2) Remove the bolt to remove the seat belt retractor and lower anchor bolt.

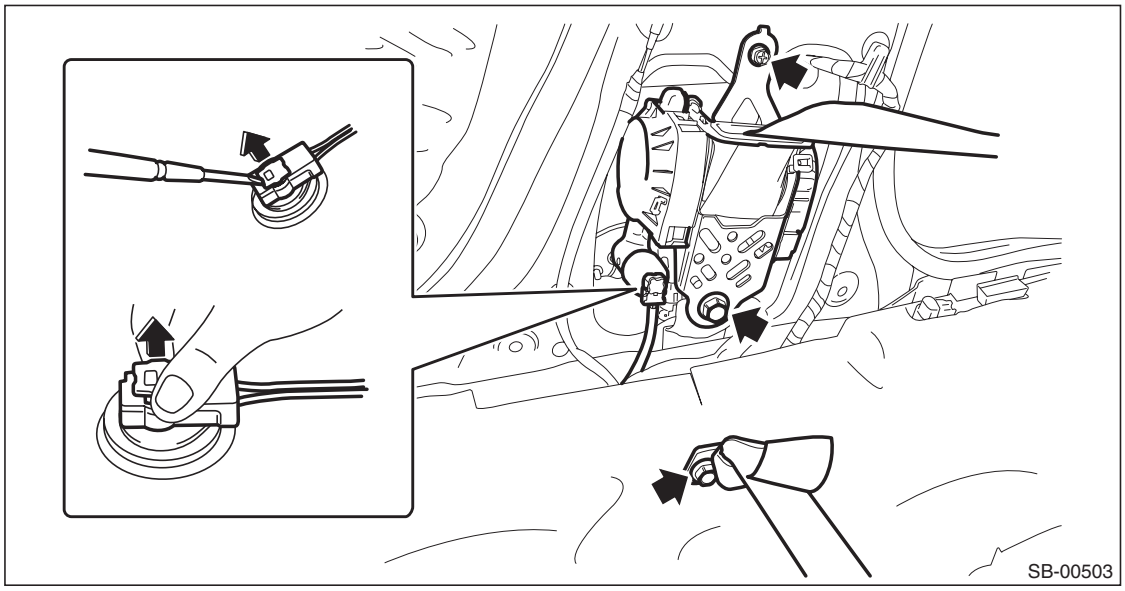

   (3) Pull out the seat belt from the center pillar trim UPR.

2. INNER BELT ASSY

CAUTION:
The airbag system is fitted with a backup power supply. After disconnecting the battery ground cable, the airbag may operate if you do not wait for 60 seconds before starting the service of airbag system.

1) Turn the ignition switch to OFF.
2) Disconnect the ground cable from battery and wait for at least 60 seconds before starting work.

NOTE:
For the power seat, remove the slide rail installing bolt before removing the battery ground.

GETtheMANUALS.org

3) Remove the front seats.
   (1) Remove the slide rail installing bolt.
      a) Tilt the backrest forward and move the seat to the front most position.
      b) Remove the rear bolt cover (A) and remove the two bolts.
      c) Move the seat to the rearmost position.
      d) Remove the front bolt cover (B) and remove the two bolts.

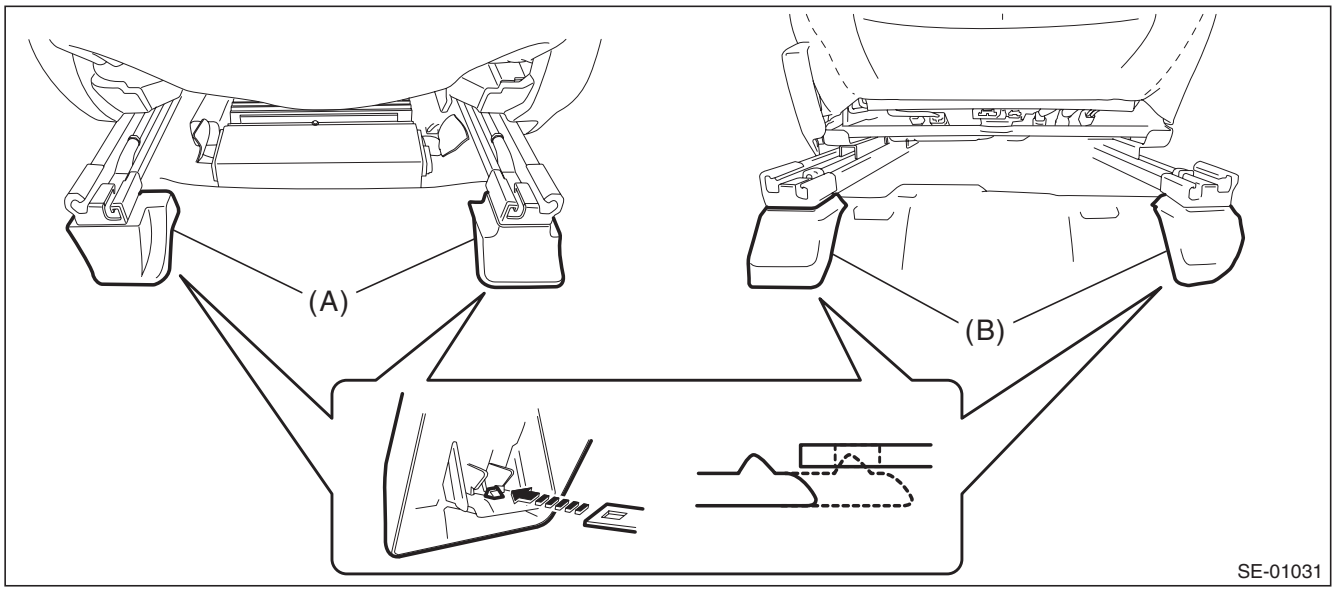

   (2) Disconnect the connector under the seat.

CAUTION:
Disconnect the ground cable from battery, and wait 60 seconds before disconnecting the connector.
- Seat belt warning light connector (driver's seat)
- Occupant detection system harness connector (passenger's seat)
- Side airbag connector
- Seat heater connector (model with seat heater)
- Power seat connector (model with power seats)
- Headrest monitor connector (model with headrest monitor)

4) Remove the inner seat belt assembly.
   (1) Remove the nut and remove the inner seat belt assembly.
   (2) Remove the clip for the inner seat belt harness located under the seat cushion.

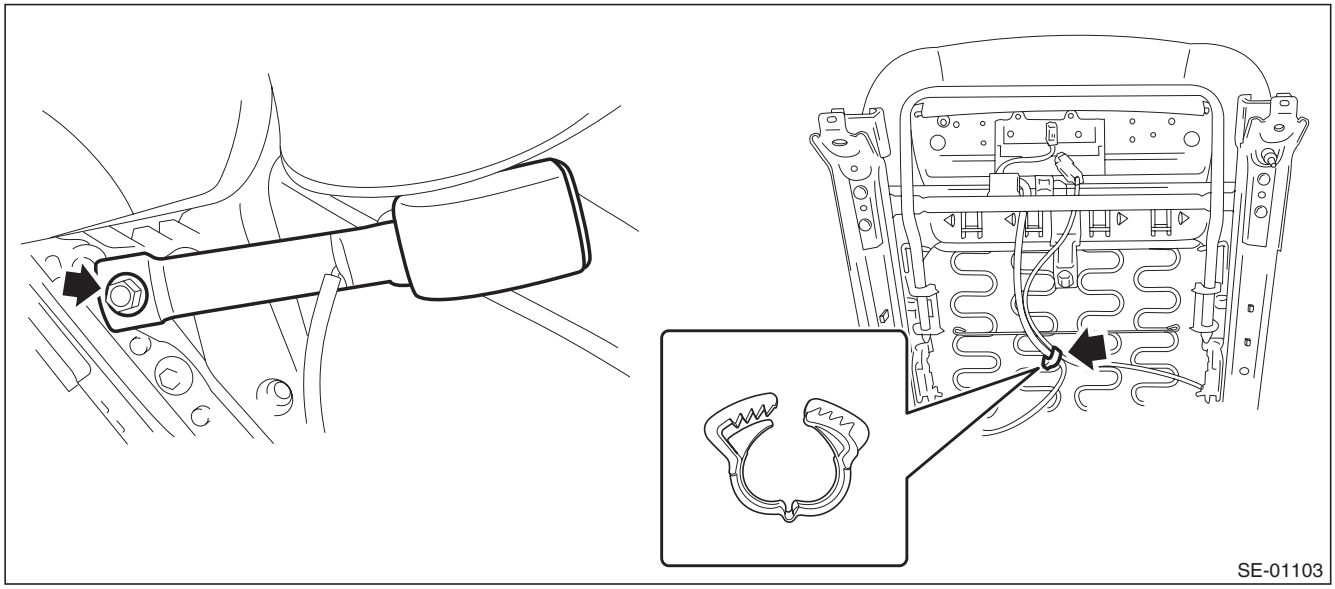

GETtheMANUALS.org

3. ADJUSTABLE ANCHOR ASSY

CAUTION:

- **The airbag system is fitted with a backup power supply. After disconnecting the battery ground cable, the airbag may operate if you do not wait for 60 seconds before starting the service of airbag system.**
- **Do not drop or subject the pretensioner to any impact.**
- **Since the pretensioner and bracket are integrated as a unit, do not disassemble them.**

1) Before working, turn the ignition switch to OFF, disconnect the battery ground cable, and wait for 60 seconds or more.

NOTE:
For the power seat model, move the seat all the way forward before removing the battery ground terminal.

2) Tilt the backrest forward and move the seat to the front most position.

CAUTION:
For the power seat, after moving the seat, check that the battery ground has been removed. If not, disconnect the battery ground cable and wait for 60 seconds or more.

3) Release the claws, and then remove the side sill cover - front INN. (On the side where seat belt assembly is removed)

CAUTION:
Do not pull with excessive force. Doing so may damage the claws of the side sill cover INN.

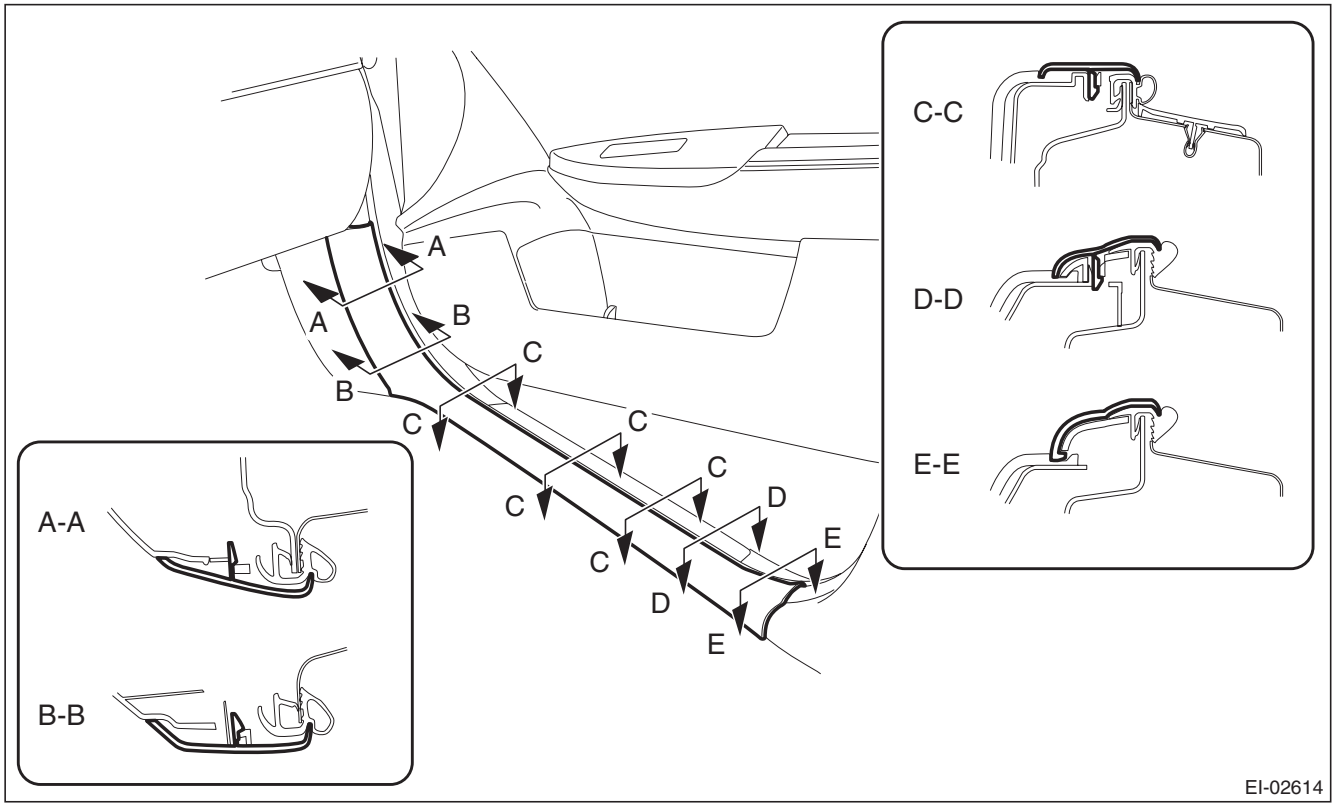

NOTE:
To release the claws of the side sill cover INN, the following steps are recommended.

1. Take out the weather strip from under the side sill cover INN.
2. Turn over the floor mat and release the claw (C-C) by accessing from behind the side sill cover INN.

GETtheMANUALS.org

4) Release the clips and claws, and then remove the side sill cover - rear INN. (On the side where seat belt assembly is removed)

CAUTION:
Do not pull with excessive force. Doing so may damage the claws of the side sill cover INN.

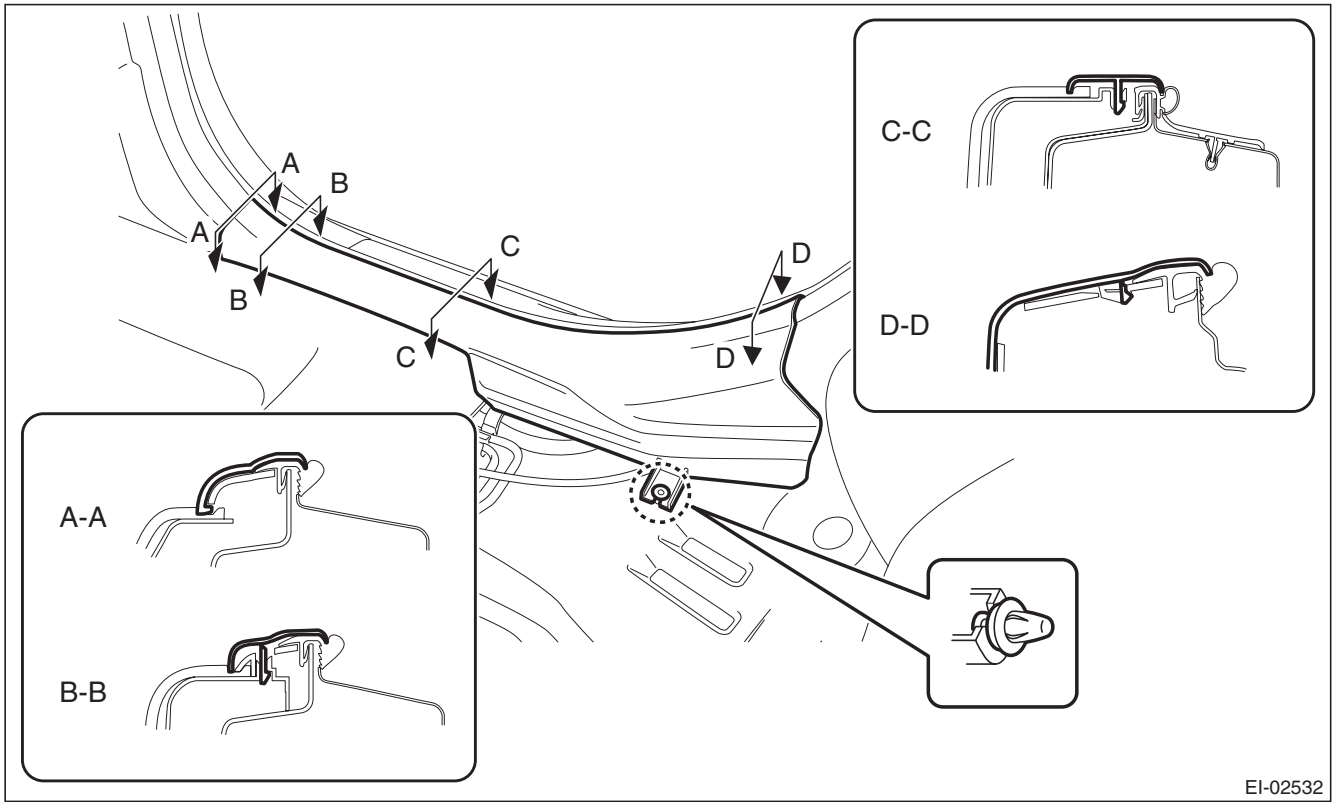

NOTE:
To release the claws of the side sill cover INN, the following steps are recommended.
1. Take out the weather strip from under the side sill cover INN.
2. Turn over the floor mat and release the claw (C-C and D-D) by accessing from behind the side sill cover INN.

GETtheMANUALS.org

5) Remove the center pillar trim LWR. (On the side where seat belt assembly is removed)
   (1) Release the clip by pulling the center pillar trim LWR toward you.
   (2) Expand the claws of center pillar trim LWR outward and remove it from the center pillar trim UPR.

CAUTION:
Do not expand the center pillar trim LWR excessively. Doing so may damage the trim.

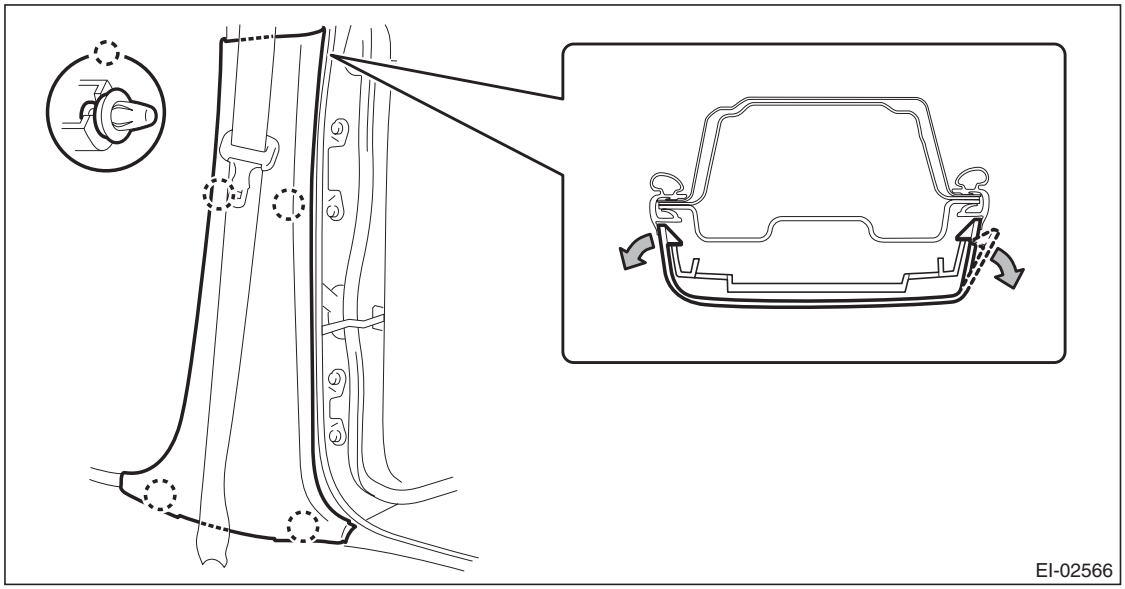

NOTE:
First release the claw located to the rear of the vehicle.

6) Remove the center pillar trim UPR. (On the side where seat belt assembly is removed)
   (1) Release the clip by pulling the center pillar trim UPR toward you.
   (2) Remove the center pillar trim UPR by lowering the entire trim.

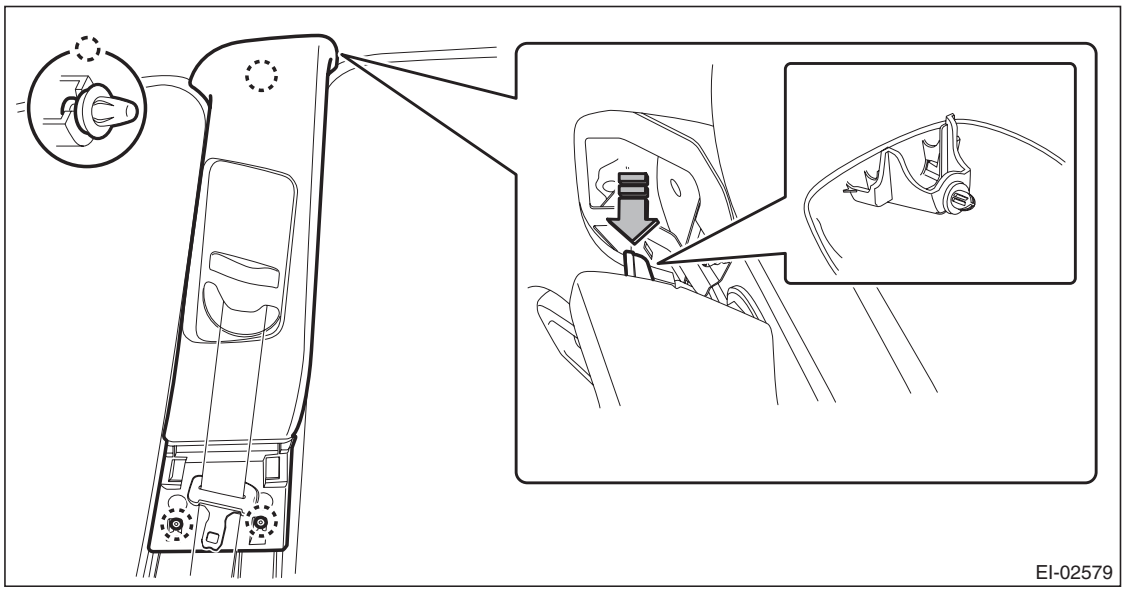

GETtheMANUALS.org

(3) Remove the shoulder anchor bolt.

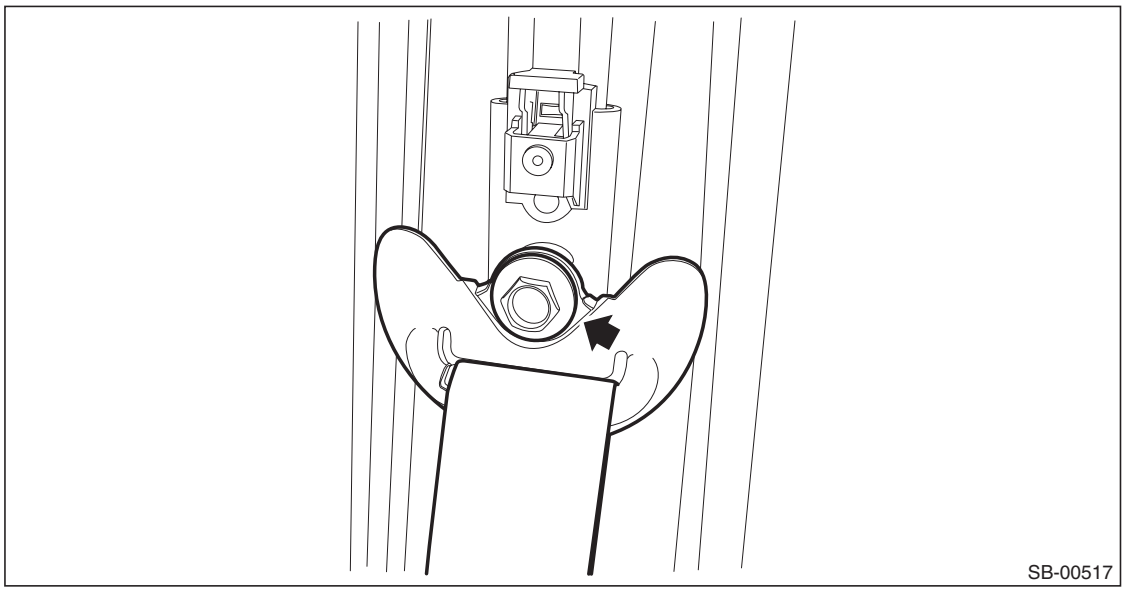

7) Remove the two bolts to remove the adjustable anchor assembly.

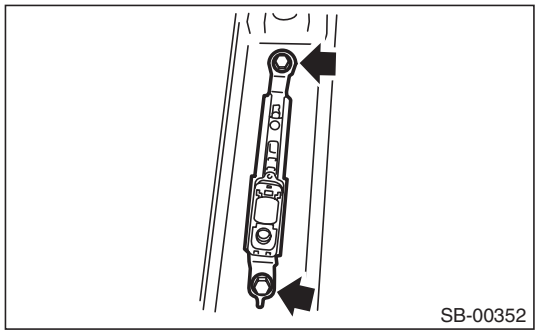

B: INSTALLATION

1. OUTER BELT ASSY

CAUTION:

- **The parts of the driver and passenger sides are not the same. Before installation, make sure that the correct part is used.**
- **During installation, make sure that the seat belts are not twisted.**
- **After installation, make sure that the seat belt can be pulled out and retracted smoothly.**
- **Make sure that the seat belt harness is not caught anywhere. Wrong harness rooting may cause the harness short from pinch.**
- **Do not reuse the clips in the upper section of the center pillar trim. Always replace with a new part. Once the pillar trim is removed, the clip retention power deteriorates and the center pillar trim may come off.**

1) Before installation, perform a unit inspection of retractor. <Ref. to SB-28, INSPECTION, Front Seat Belt.>
2) Install the outer belt assembly.

Tightening torque:
Front seat belt: <Ref. to SB-2, FRONT SEAT BELT, COMPONENT, General Description.>

GETtheMANUALS.org

3) Assemble the center pillar trim LWR to the center pillar trim UPR securely.

CAUTION:
Do not forget to install the seat belt.

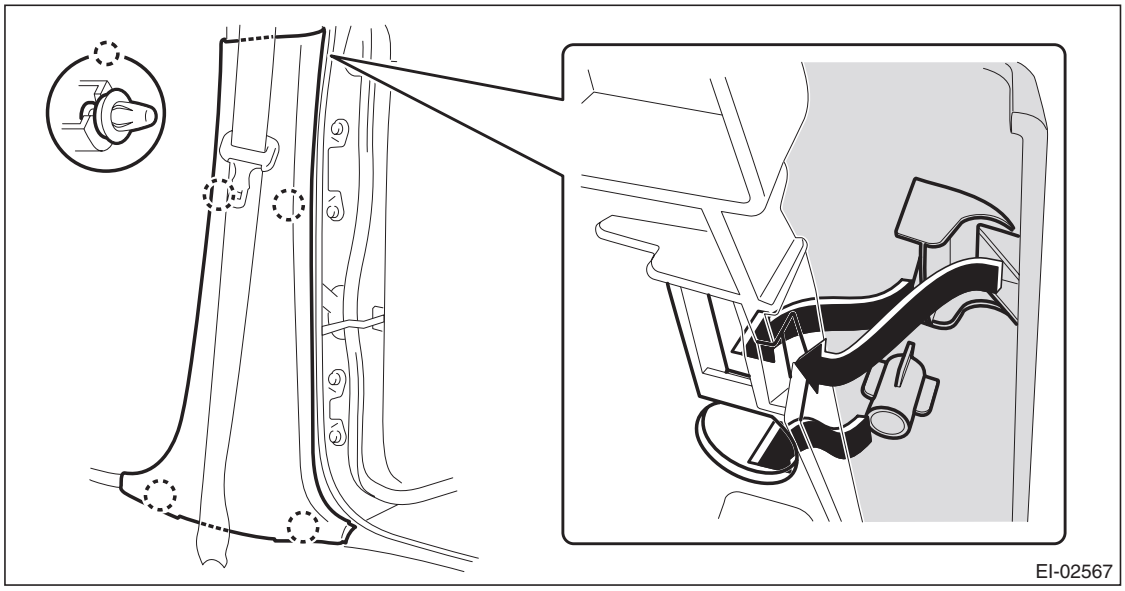

4) Assemble the center pillar trim LWR and center pillar trim UPR to the body.

CAUTION:
Do not reuse the clips in the upper section of the pillar trim. Always replace with a new part.

(1) Guide the seat belt through the center pillar trim UPR.
(2) Insert the upper claws of the pillar trim.
(3) Attach the pillar trim by fitting the lower clips to the body.

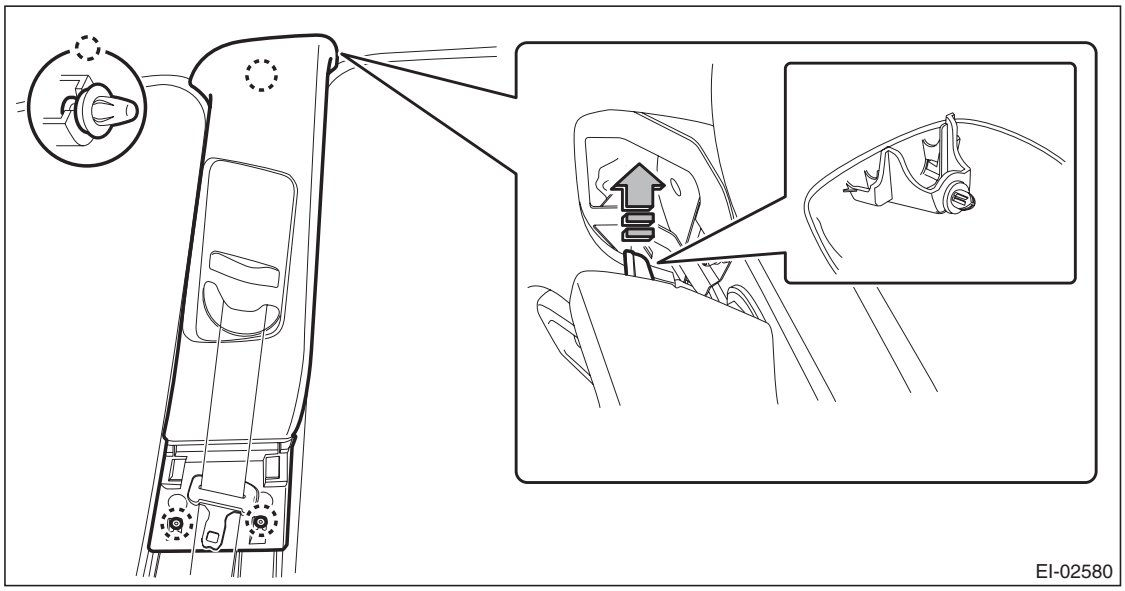

5) Install the remaining parts in the reverse order of removal.
6) After installation, check the following points.

- The seat belt is not twisted.
- The seat belt can be pulled out and retracted smoothly.
- The adjustable anchor can be moved smoothly.
- Check that the airbag warning light lights up for approximately 6 seconds and then turns off when connecting the battery ground cable and turning the ignition switch to ON.

GETtheMANUALS.org

2. INNER BELT ASSY

CAUTION:
- **Before installation, make sure that the correct part is used.**
- **During installation, make sure that the seat belts are not twisted.**
- **Make sure that the seat belt harness is not caught. Wrong routing of harnesses may cause short circuits because of getting caught.**

1) Install the inner belt assembly.

Tightening torque:
Front seat belt: <Ref. to SB-2, FRONT SEAT BELT, COMPONENT, General Description.>

2) Locate the seat belt harness and retain it with a harness clip.

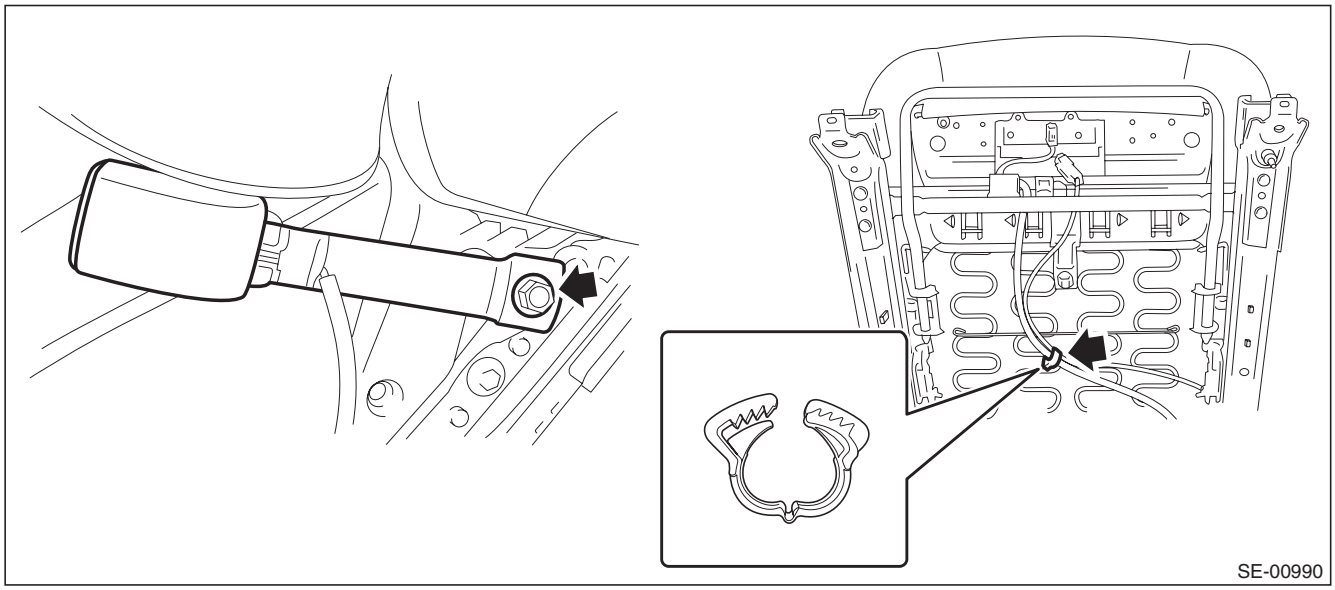

3) Install the seat assembly to the body.

CAUTION:
- **The seat mounting bolts differ between the front mounting points and the rear mounting points. Make sure that you are using correct bolts at correct positions.**
- **Tighten the slide rail installing bolt gradually in several steps to the specified torque in the order as shown in the figure.**

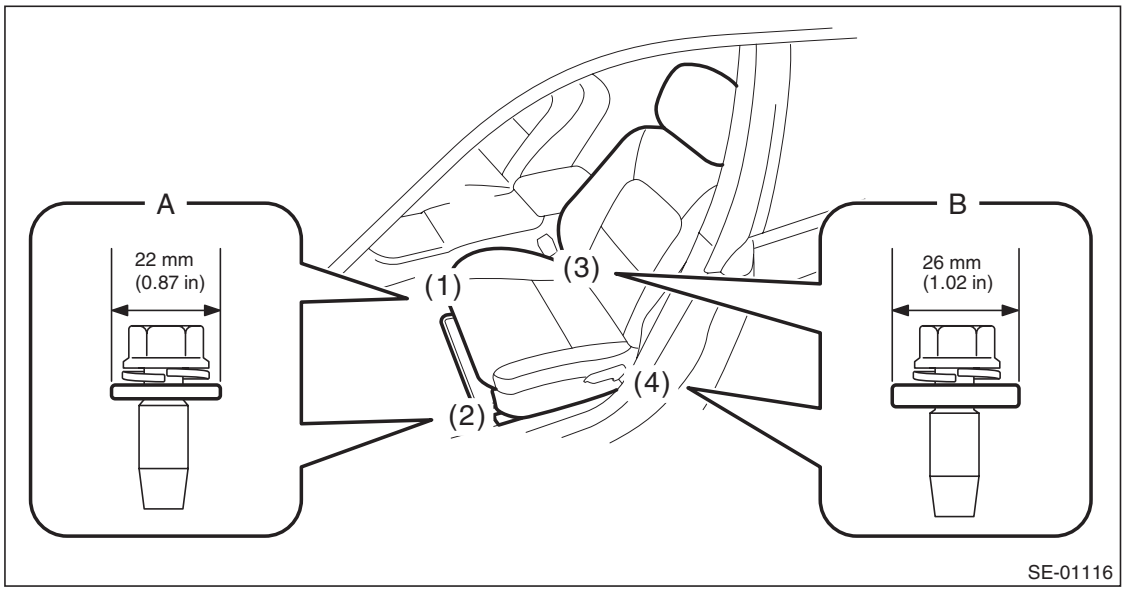

- **Front (bolt A): Washer diameter 22 mm (0.87 in)**
- **Rear (bolt B): Washer diameter 26 mm (1.02 in)**

GETtheMANUALS.org

Tightening torque:
Front seat assembly: 53 N·m (5.4 kgf-m, 39.1 ft-lb)

4) Check that no harness is caught by sliding the seat back and forth.

3. ADJUSTABLE ANCHOR ASSY

Referring to the installation procedure for outer belt ASSY, install the parts in the reverse order of removal.

Tightening torque:
Front seat belt: <Ref. to SB-2, FRONT SEAT BELT, COMPONENT, General Description.>

C: INSPECTION

1. VISUAL INSPECTION

Check for the following, and replace with new parts if necessary.

- Pretensioner is cracked or deformed.
- Adjustable anchor assembly is cracked or deformed.
- Seat belt is slackened, bent or worn.
- Seat belt is abnormally wound or extended.
- Inner belt ASSY is deformed or damaged.
- Seat belt buckle cannot be engaged properly.

2. ELR LOCK MECHANISM INSPECTION

1) Hold the retractor upright (as installed in the vehicle) and check the ELR lock mechanism.
2) Tilt the retractor from the upright posture and check the following points.

- It does not lock if the inclination angle is 12° or less.

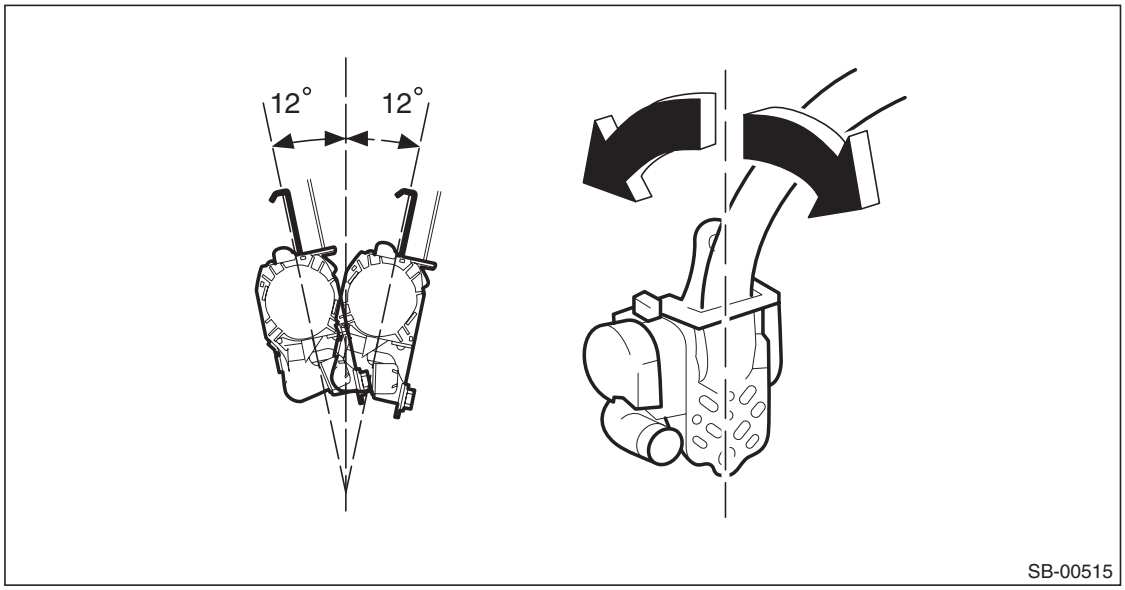

GETtheMANUALS.org

- It remains locked if the inclination angle is 27° or more.

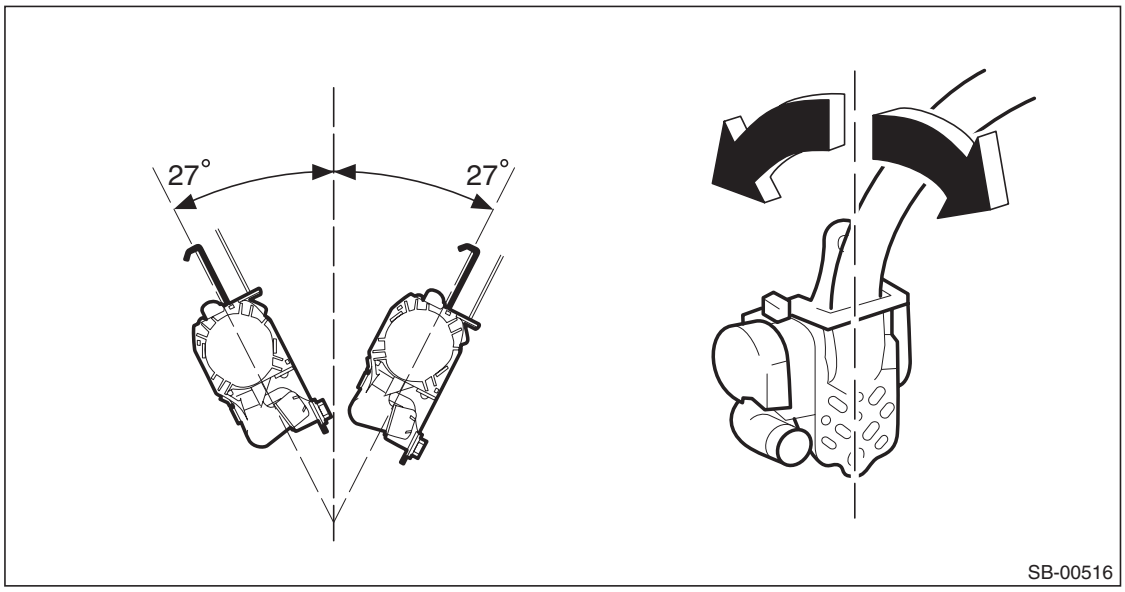

3) If the ELR lock mechanism does not operate correctly, replace the outer belt assembly with a new part.

3. SEAT BELT SWITCH INSPECTION

Preparation tool: Circuit tester

- Driver's seat

Check the resistance between the terminals when the inner belt assembly is in each of the following operation conditions.

Terminal No.	Inspection conditions	Standard	Circuit
1 — 2	Tongue plate inserted	10 kΩ or more	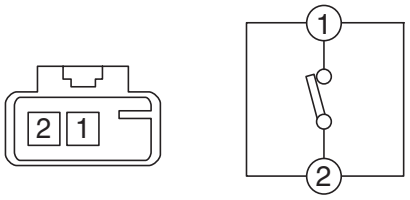
1 — 2	Tongue plate detached	Less than 1 Ω	

Replace the inner belt assembly if the inspection result is not within the standard value.

- Passenger's seat

Check the current value between the terminals when the inner belt assembly is in each of the following operation conditions.

Terminal No.	Inspection conditions	Standard	Circuit
1 — 2	Tongue plate inserted	12 — 18 mA	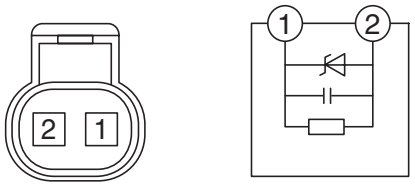
1 — 2	Tongue plate detached	4 — 7 mA	

Replace the inner belt assembly if the inspection result is not within the standard value.

GETtheMANUALS.org

6. Rear Seat Belt

A: REMOVAL

1. OUTER BELT ASSEMBLY RH & LH (SEDAN MODEL)

1) Disconnect the ground cable from battery and wait for at least 60 seconds before starting work.

CAUTION:
The airbag system is fitted with a backup power supply. After disconnecting the battery ground cable, the airbag may operate if you do not wait for 60 seconds before starting the service of airbag system.

2) Remove the rear seat cushion.
   (1) Pull up the seat cushion and release the hook.

CAUTION:
If the hook is disconnected from the vehicle body, replace the hook with the new part to prevent the decline of the fixed force of the seat.

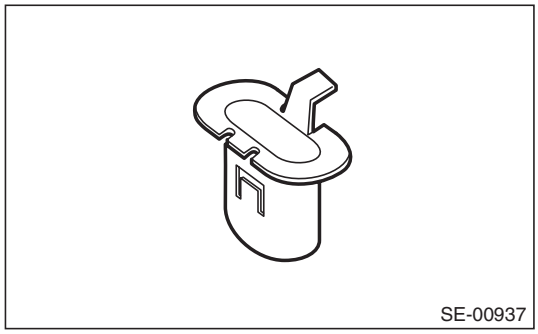

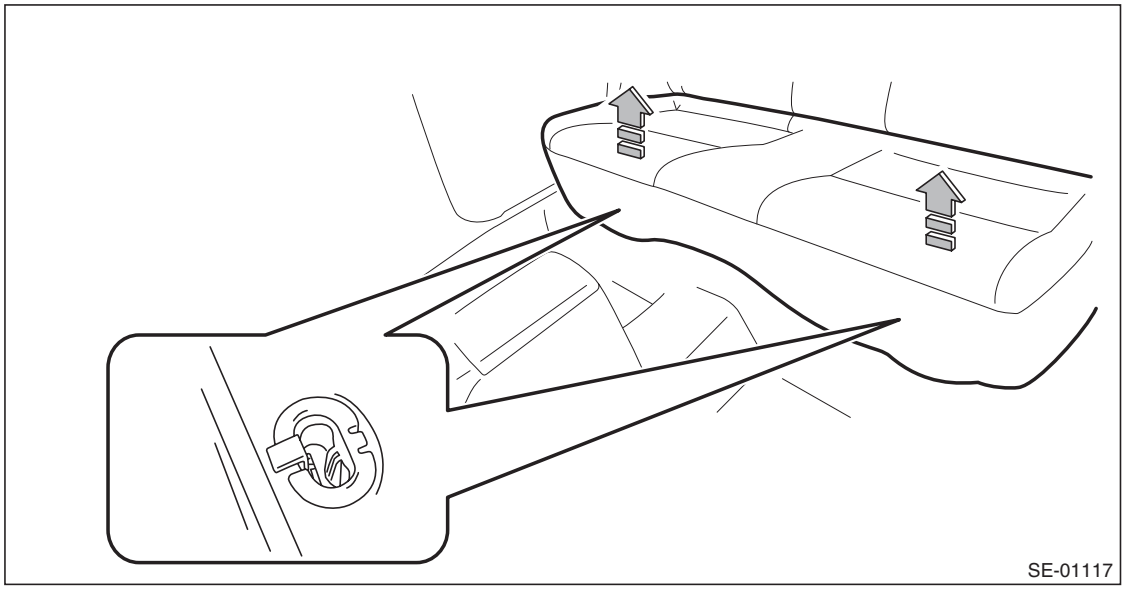

GETtheMANUALS.org

(2) Remove the hook (A) by pushing it back while lifting the front side of the seat cushion, and remove the seat cushion.

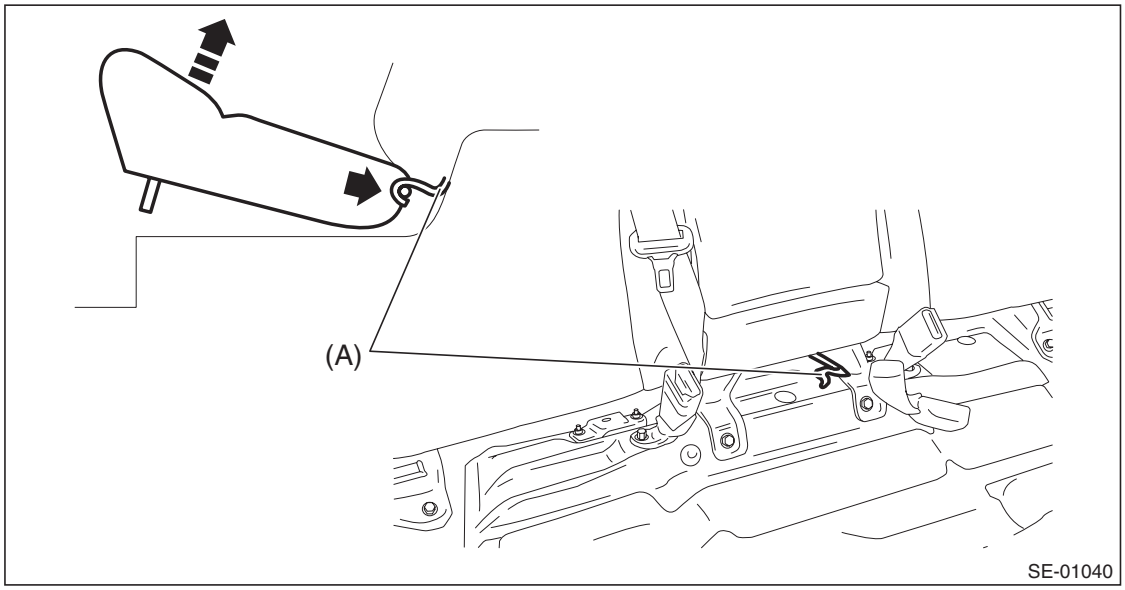

3) Release the clips and claws, and then remove the side sill cover - rear INN. (On the side where seat belt assembly is removed)

CAUTION:
Do not pull with excessive force. Doing so may damage the claws of the side sill cover INN.

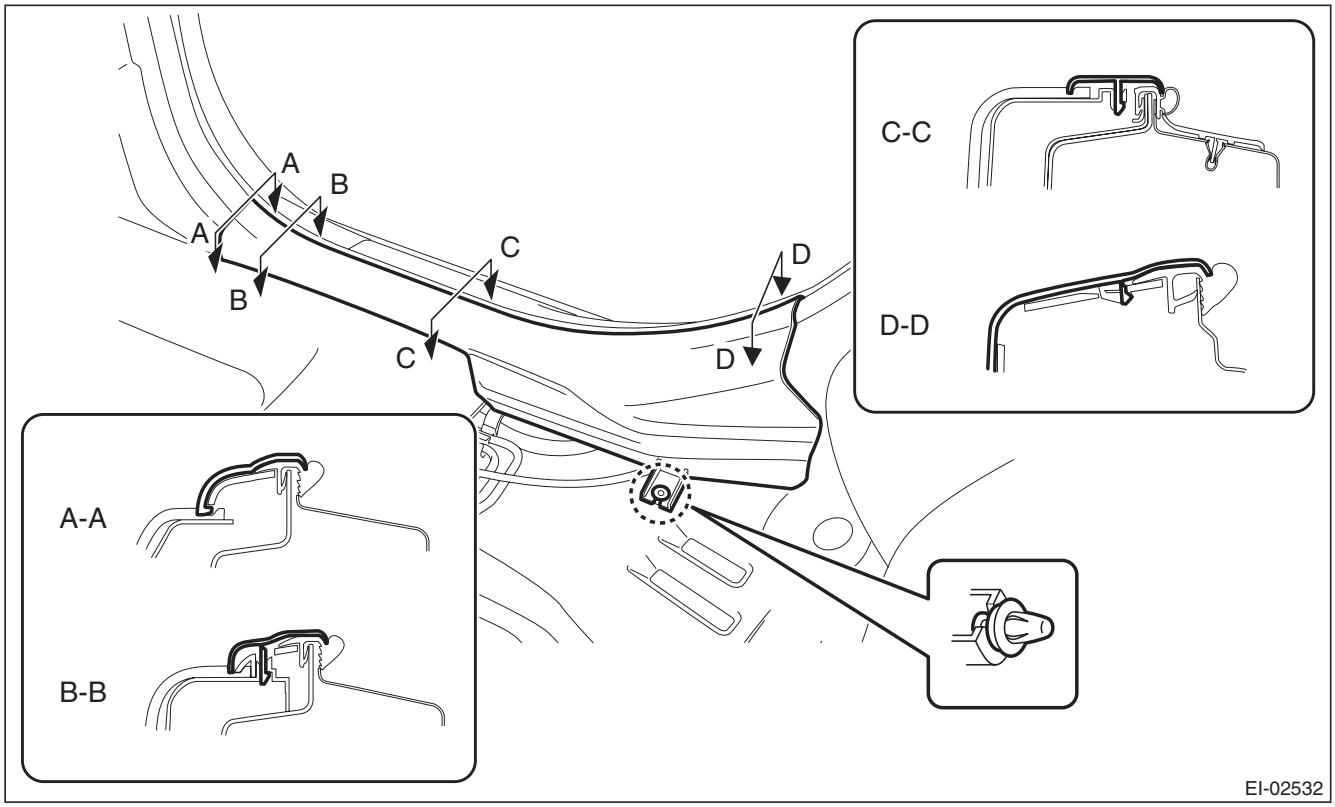

NOTE:
To release the claws of the side sill cover INN, the following steps are recommended.
1. Take out the weather strip from under the side sill cover INN.
2. Turn over the floor mat and release the claw (C-C and D-D) by accessing from behind the side sill cover INN.

GETtheMANUALS.org

4) Remove the rear quarter trim LWR. (On the side where seat belt assembly is removed)
   (1) Remove the backrest side pad assembly.
      a) Remove the screws.

Preparation tool: Stubby screwdriver

      b) Turn over the bottom end of the backrest side pad in the forward direction so that the claws are released.
      c) Remove the backrest side pad by pulling it up.

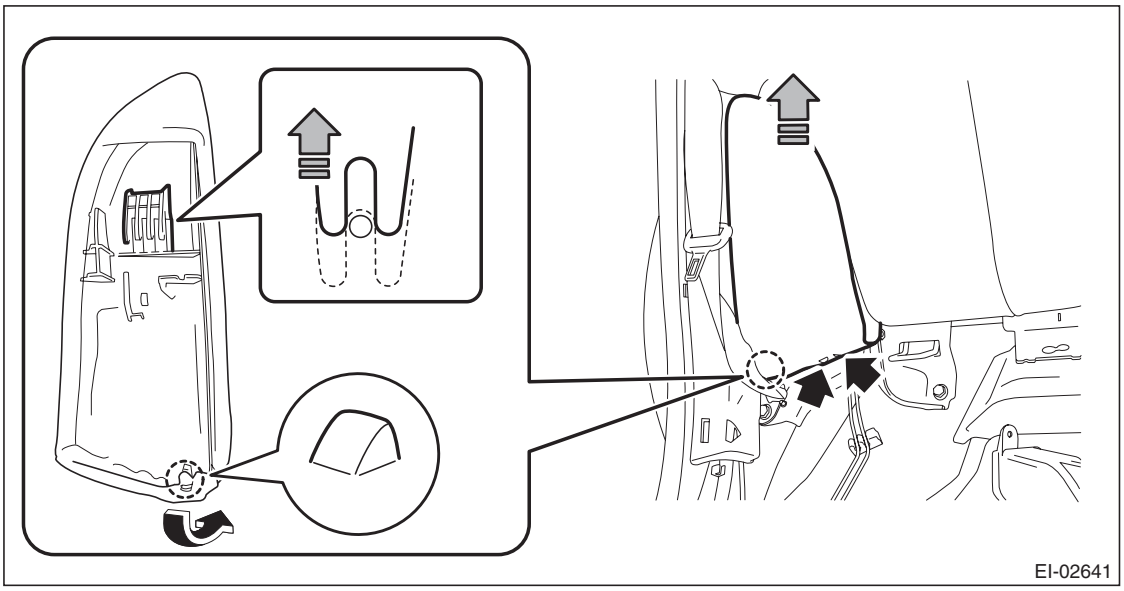

   (2) Pull the release lever in the trunk room, and then tilt the backrest forward.

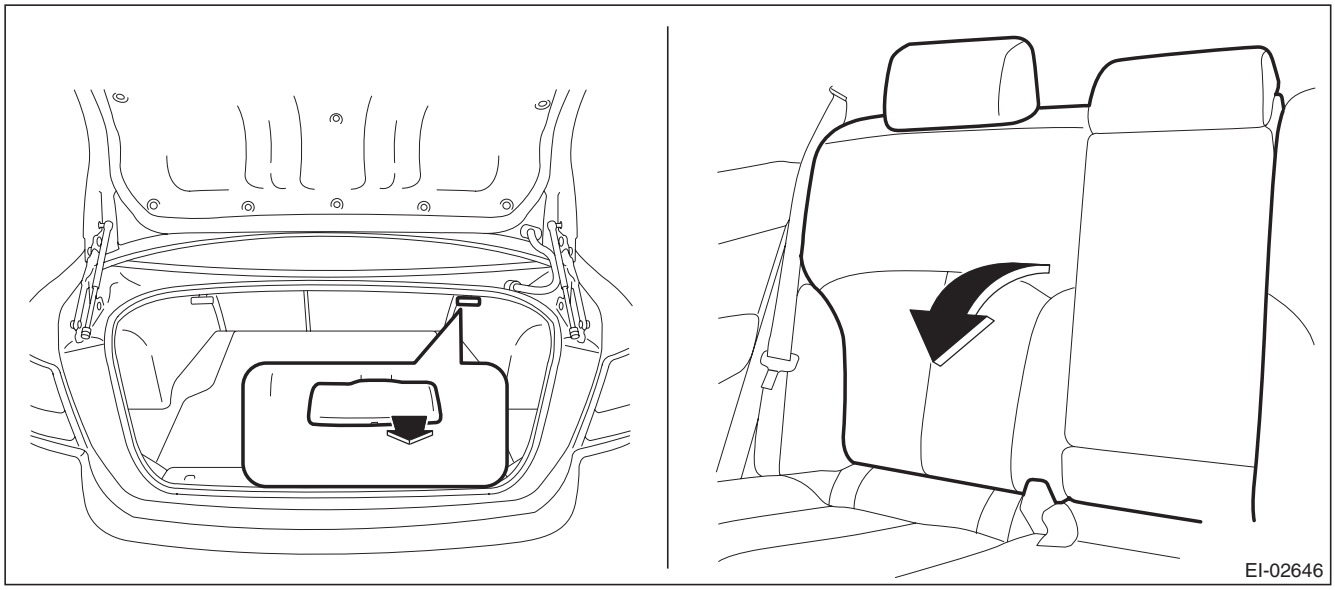

   (3) Release the clips of the trunk trim panel assembly - side.

GETtheMANUALS.org

(4) Remove the clips, and remove the rear quarter trim LWR.

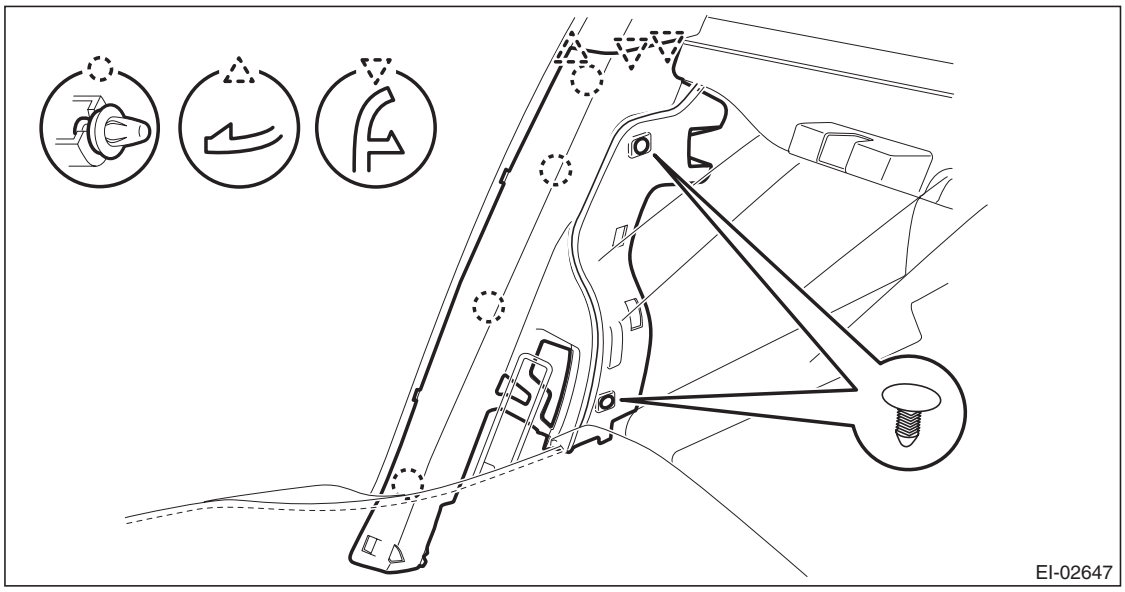

5) Remove the rear quarter trim UPR. (On the side where seat belt assembly is removed)
(1) Remove the lower anchor bolt of the outer belt assembly.

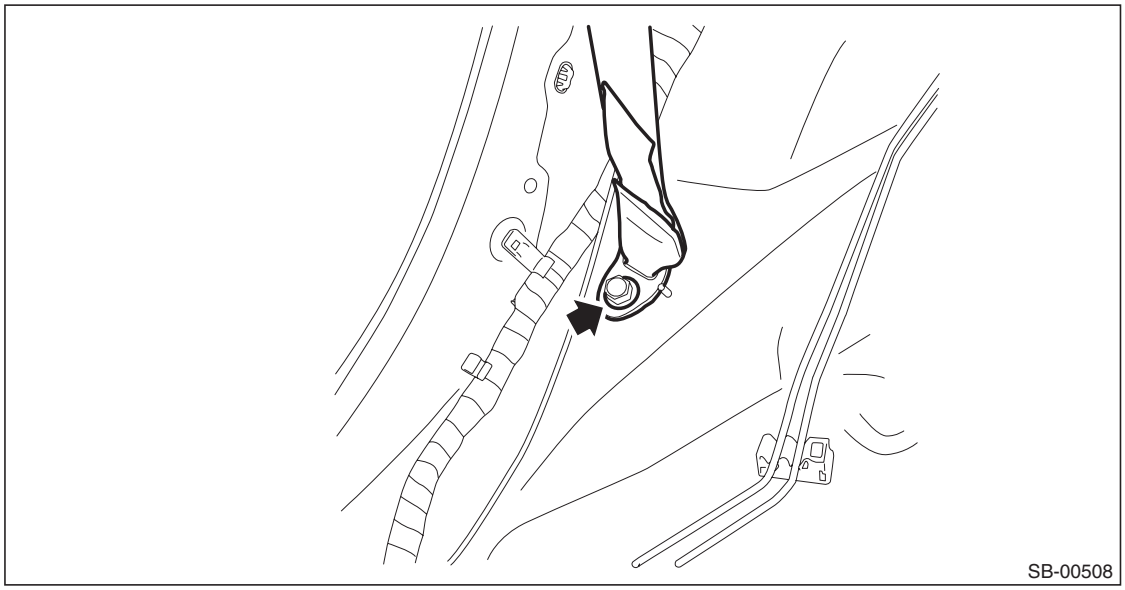

GETtheMANUALS.org

(2) Release the clips, and remove the rear quarter trim UPR.

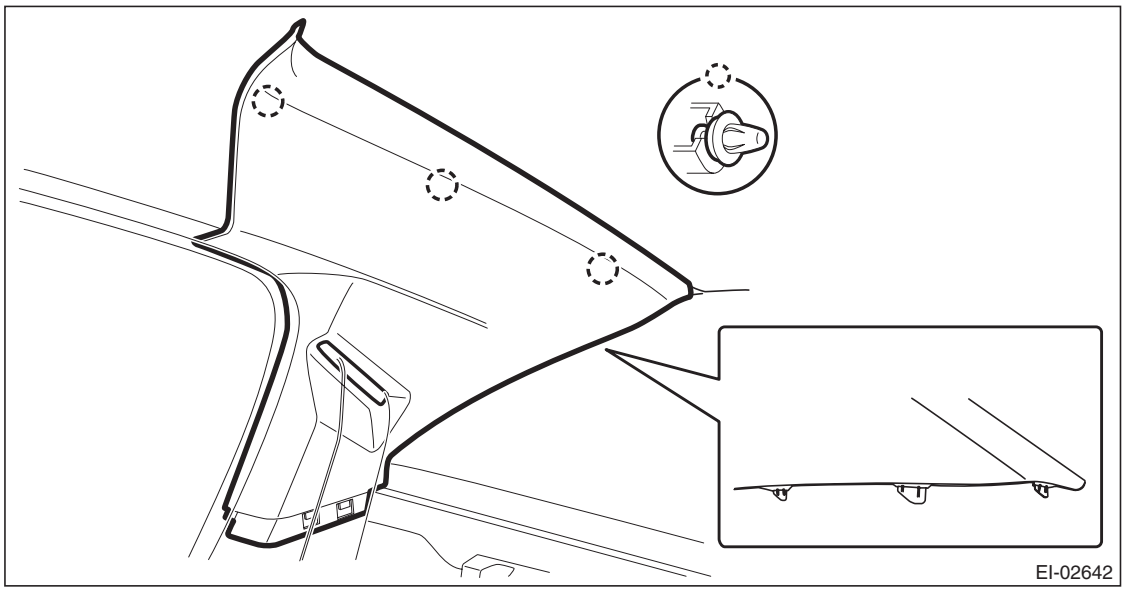

(3) Pull out the seat belt and remove the rear quarter trim UPR.

6) Remove the outer seat belt assembly.

(1) Remove the bolts and remove the seat belt anchor.

(2) Remove the bolts, and remove the seat belt retractor assembly.

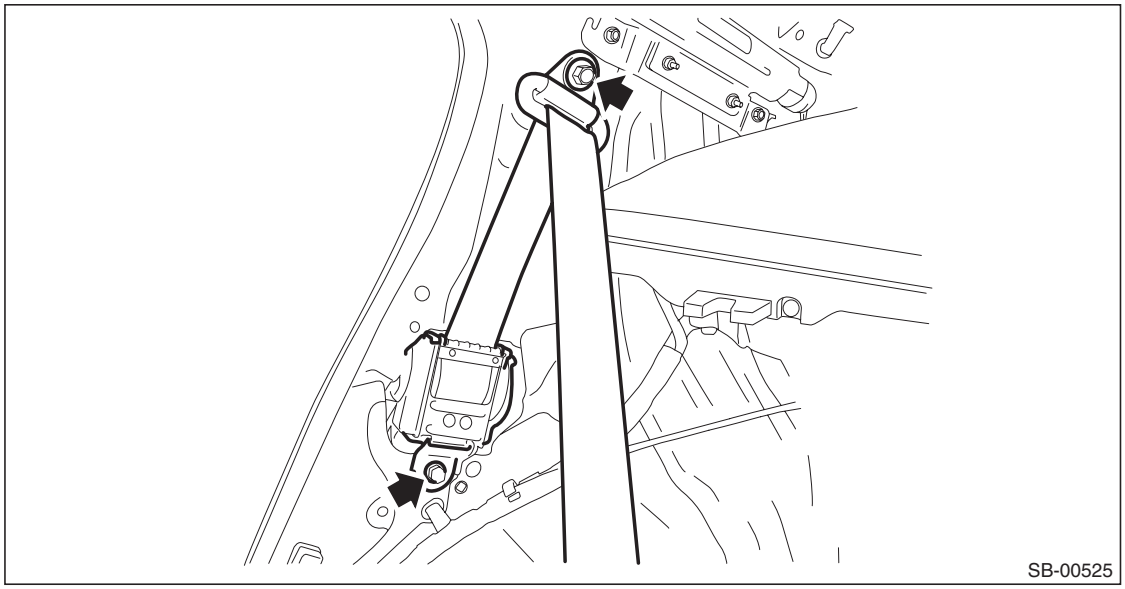

GETtheMANUALS.org

2. OUTER BELT ASSEMBLY RH & LH (OUTBACK MODEL)

1) Disconnect the ground cable from battery and wait for at least 60 seconds before starting work.

CAUTION:
The airbag system is fitted with a backup power supply. After disconnecting the battery ground cable, the airbag may operate if you do not wait for 60 seconds before starting the service of airbag system.

2) Remove the rear seat cushion.
   (1) Pull up the seat cushion and release the hook.

CAUTION:
If the hook is disconnected from the vehicle body, replace the hook with the new part to prevent the decline of the fixed force of the seat.

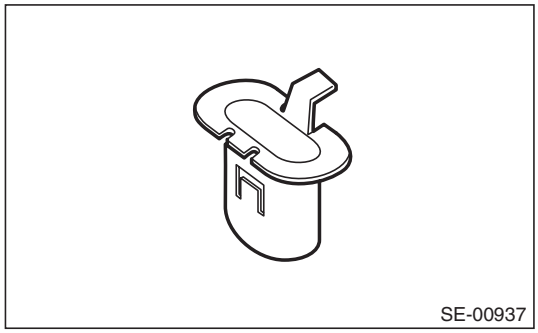

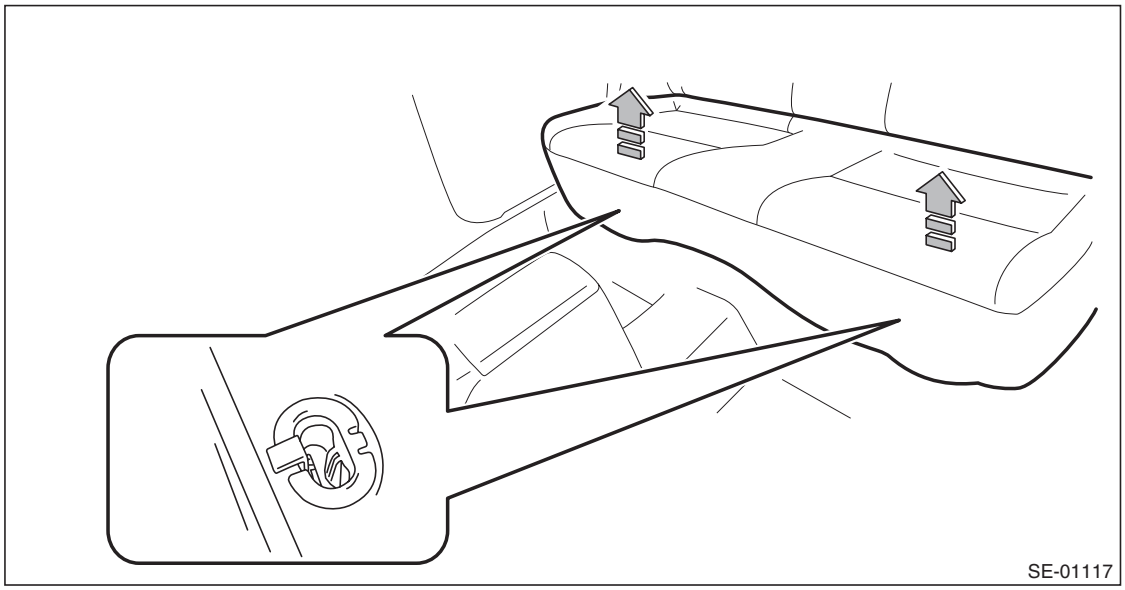

GETtheMANUALS.org

(2) Remove the hook (A) by pushing it back while lifting the front side of the seat cushion, and remove the seat cushion.

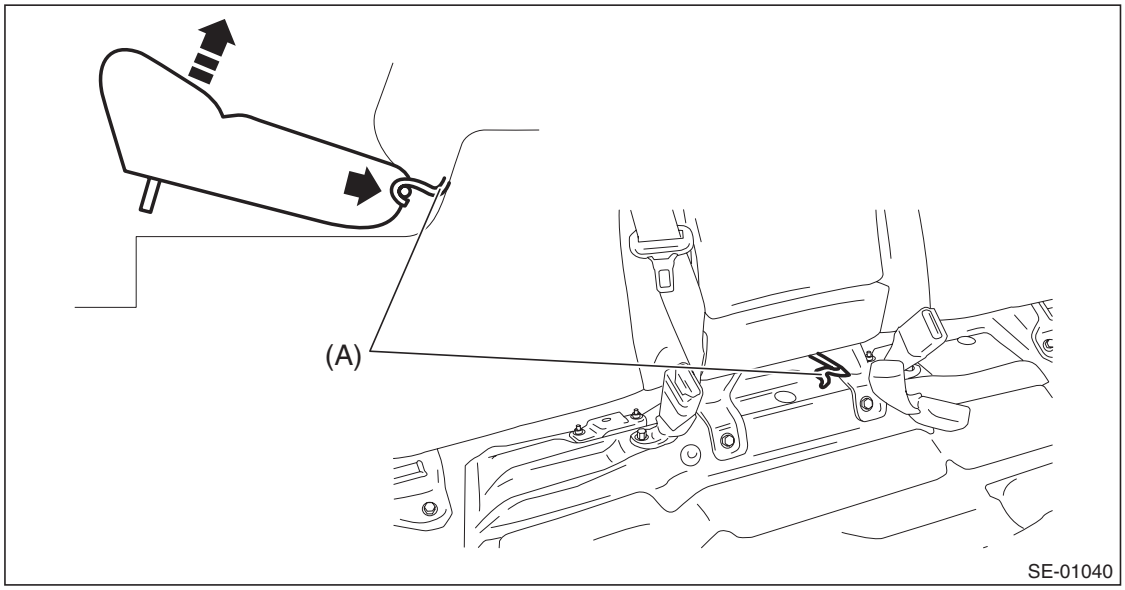

3) Release the clips and claws, and then remove the side sill cover - rear INN. (On the side where seat belt assembly is removed)

CAUTION:
Do not pull with excessive force. Doing so may damage the claws of the side sill cover INN.

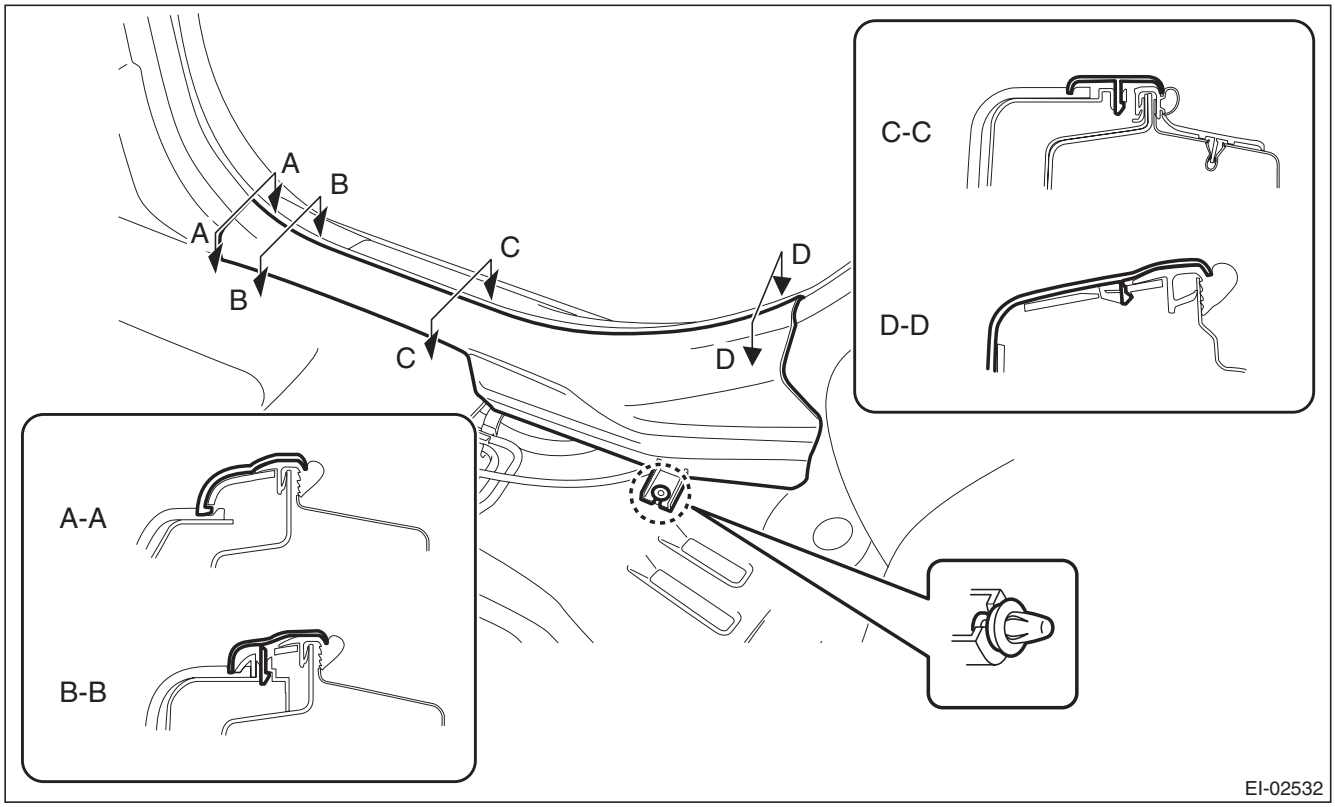

NOTE:
To release the claws of the side sill cover INN, the following steps are recommended.
1. Take out the weather strip from under the side sill cover INN.
2. Turn over the floor mat and release the claw (C-C and D-D) by accessing from behind the side sill cover INN.

GETtheMANUALS.org

4) Tilt the backrest forward, and then turn over the backrest backside mat.

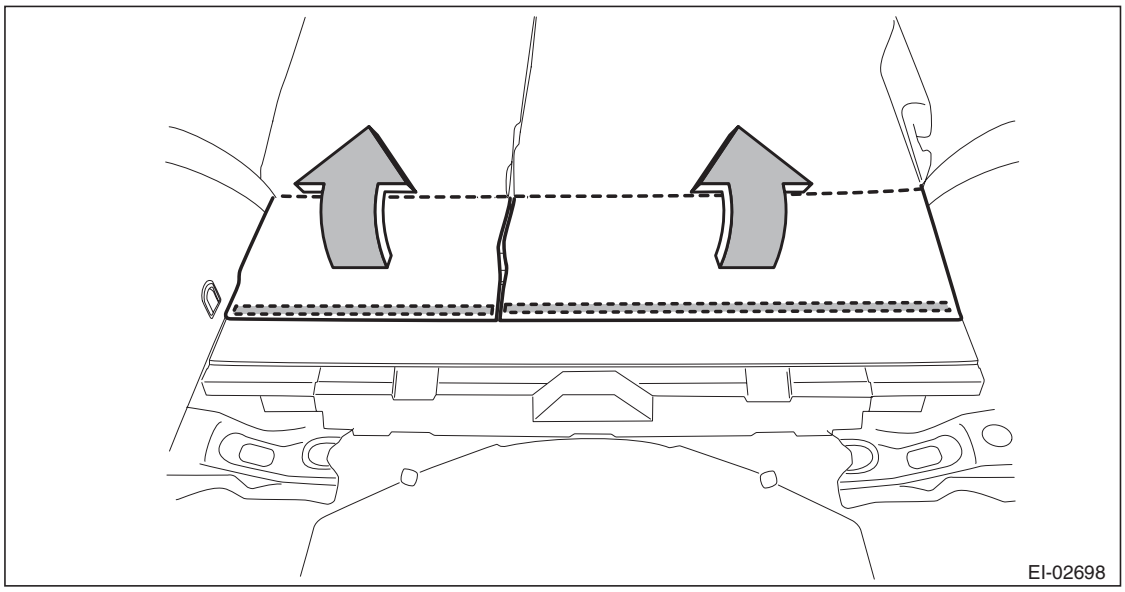

5) Remove the backrest side pad assembly. (On the side where seat belt assembly is removed)
   (1) Disconnect the backrest cable and reclining lever cable.
   (2) Remove the screws and remove the reclining lever assembly by pulling it downward.

Preparation tool: Stubby screwdriver

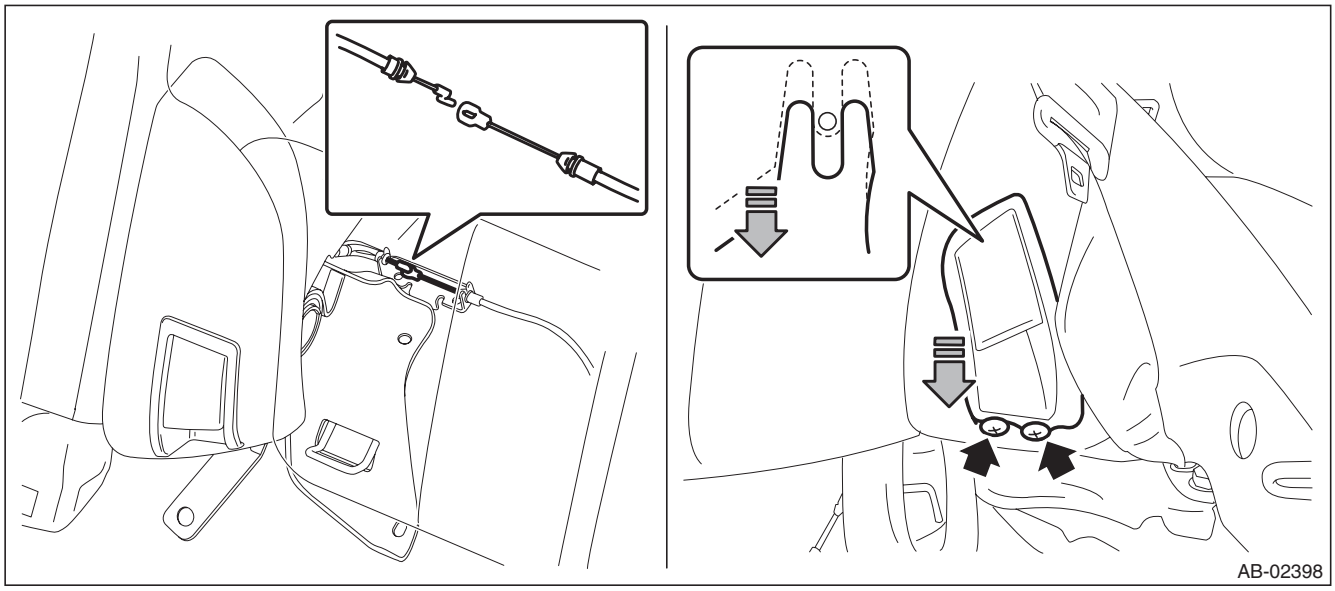

   (3) Turn over the bottom end of the backrest side pad in the forward direction so that the claws are released.

GETtheMANUALS.org

(4) Remove the backrest side pad by pulling it up.

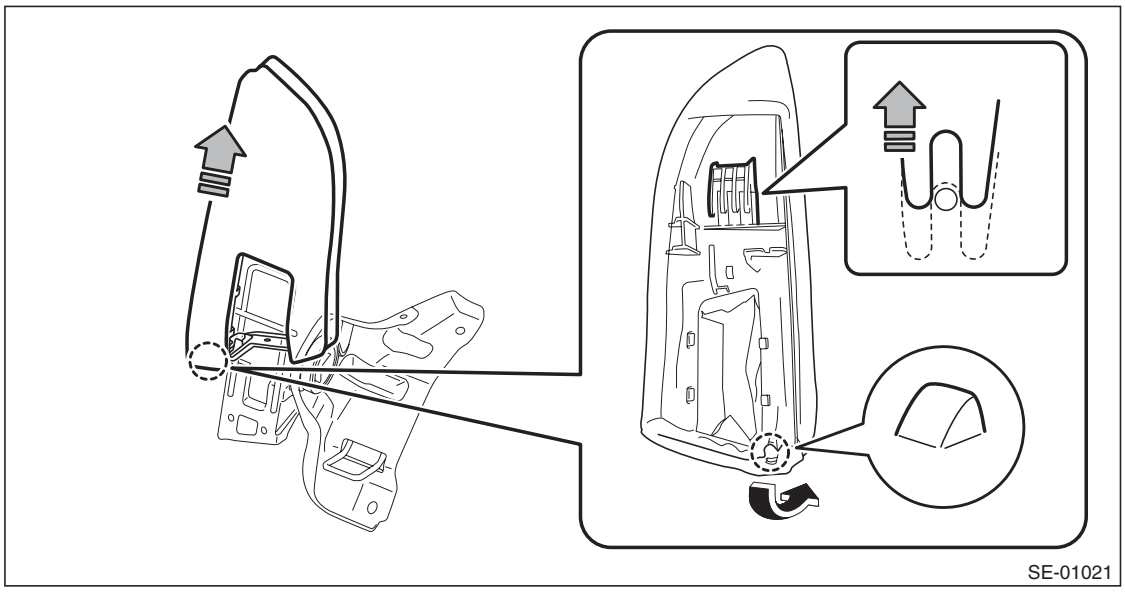

6) Remove the clips, and remove the luggage floor box and rear floor edge cover.

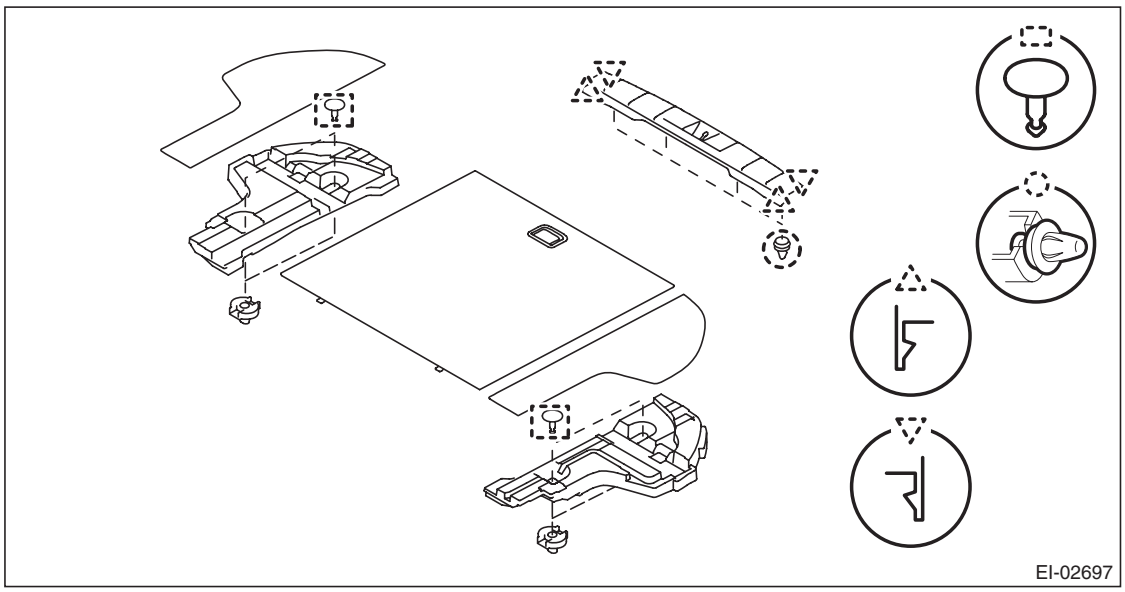

GETtheMANUALS.org

7) Remove the rear quarter trim LWR. (On the side where seat belt assembly is removed)
   (1) Remove the caps, screws, and bolts. (A), (C)
   (2) Take out the hook and remove the screw inside. (B)
   (3) Remove the clips, and remove the rear quarter trim LWR.

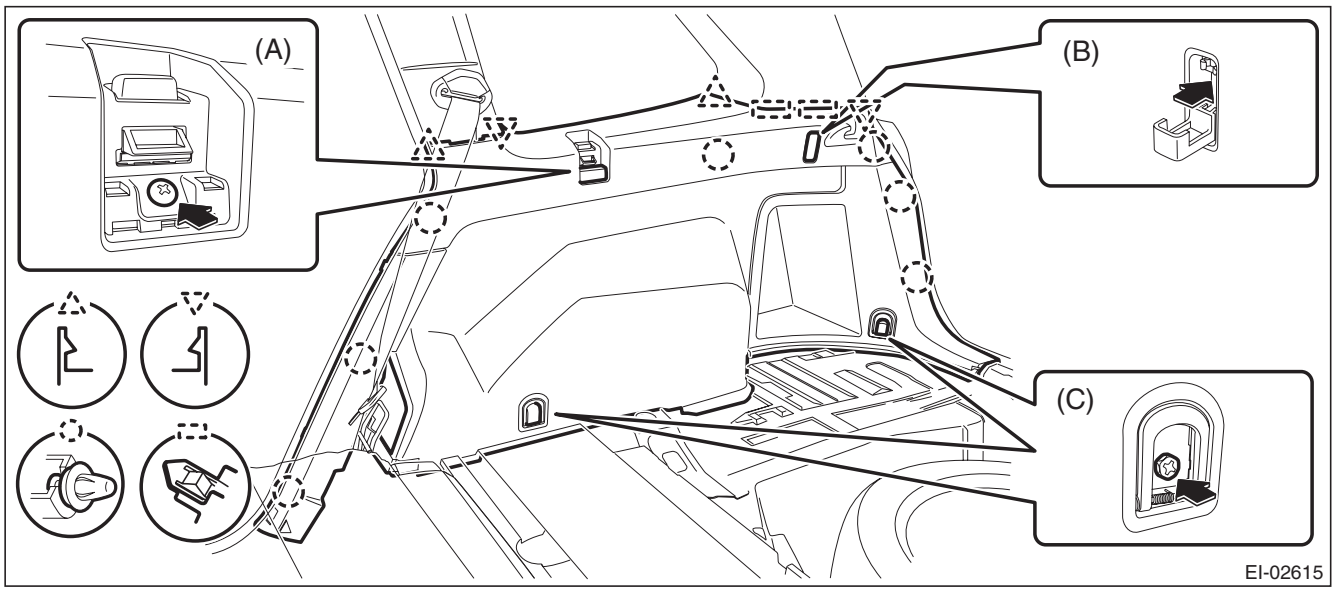

8) Remove the outer seat belt assembly.
   (1) Remove the seat belt lower anchor bolt.
   (2) Open the cap and remove the bolt to remove the seat belt anchor.
   (3) Remove the bolts, and remove the seat belt retractor assembly.

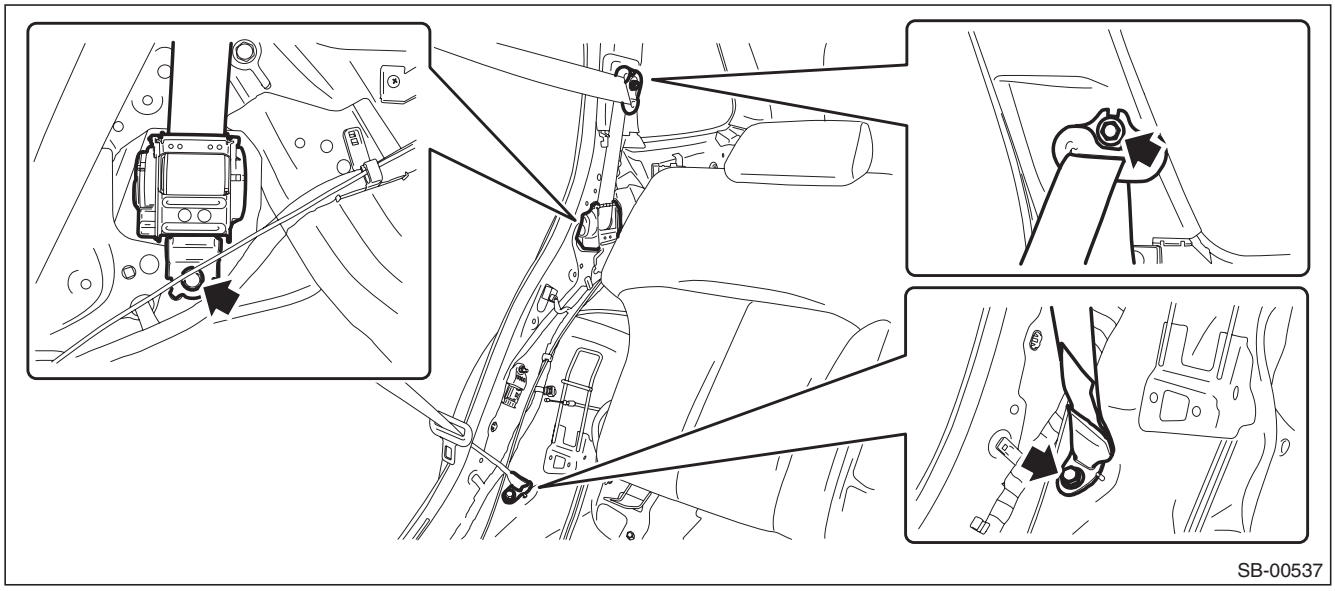

GETtheMANUALS.org

3. SHOULDER BELT ASSEMBLY CTR (SEDAN MODEL)

1) Disconnect the ground cable from battery and wait for at least 60 seconds before starting work.

CAUTION:
The airbag system is fitted with a backup power supply. After disconnecting the battery ground cable, the airbag may operate if you do not wait for 60 seconds before starting the service of airbag system.

2) Remove the rear seat cushion.
   (1) Pull up the seat cushion and release the hook.

CAUTION:
If the hook is disconnected from the vehicle body, replace the hook with the new part to prevent the decline of the fixed force of the seat.

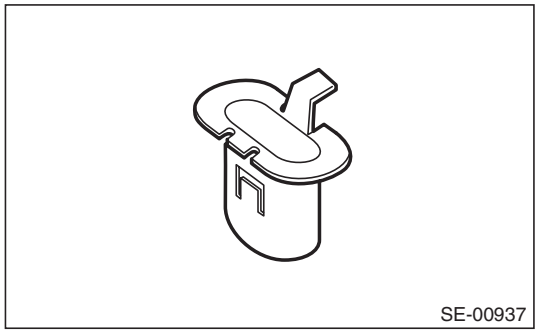

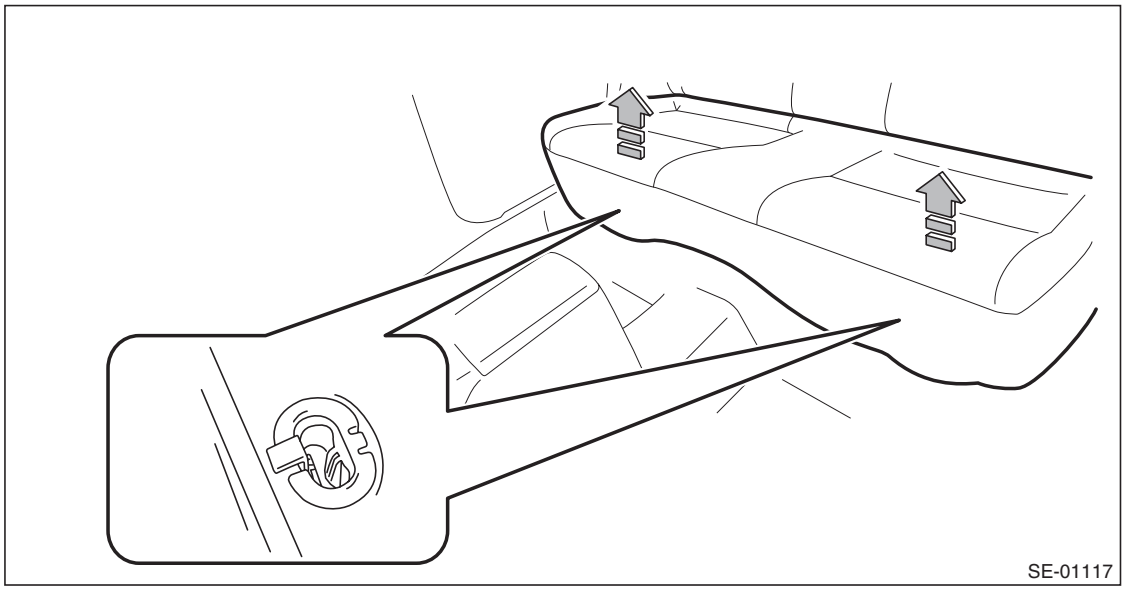

GETtheMANUALS.org

(2) Remove the hook (A) by pushing it back while lifting the front side of the seat cushion, and remove the seat cushion.

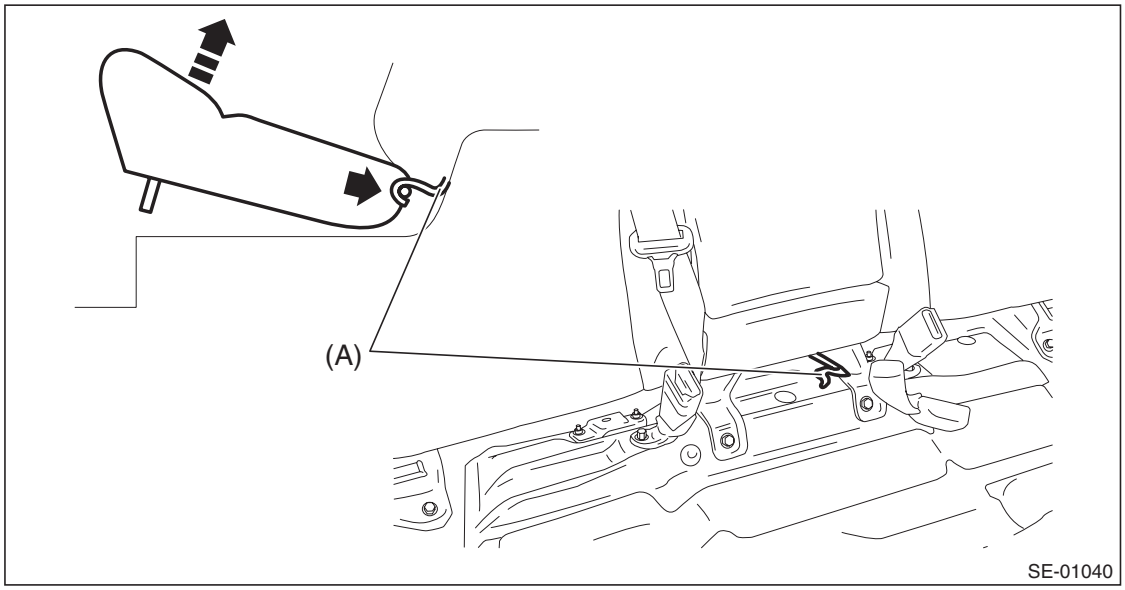

3) Release the clips and claws, and remove the side sill covers - rear INN on the left and right sides.

CAUTION:
Do not pull with excessive force. Doing so may damage the claws of the side sill cover INN.

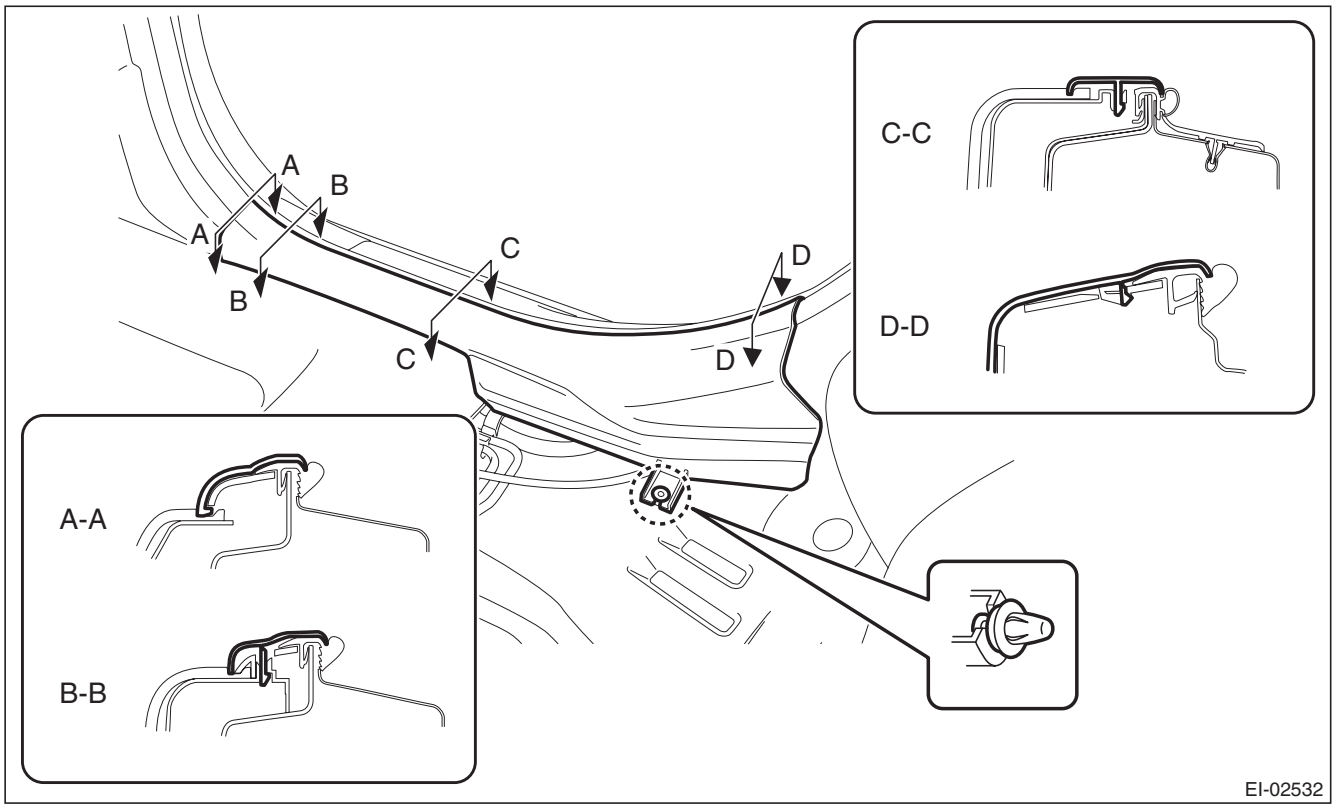

NOTE:
To release the claws of the side sill cover INN, the following steps are recommended.
1. Take out the weather strip from under the side sill cover INN.
2. Turn over the floor mat and release the claw (C-C and D-D) by accessing from behind the side sill cover INN.

GETtheMANUALS.org

4) Remove the left and right rear quarter trim LWR.
   (1) Remove the left and right backrest side pad.
      a) Remove the screws.

Preparation tool: Stubby screwdriver

      b) Turn over the bottom end of the backrest side pad in the forward direction so that the claws are released.
      c) Remove the backrest side pad by pulling it up.

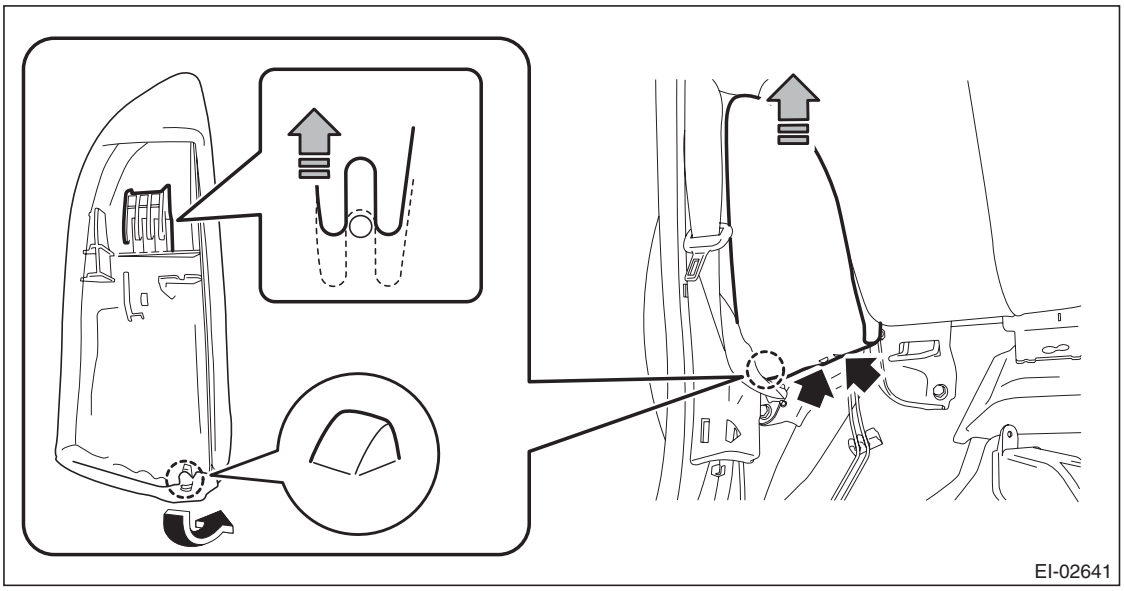

   (2) Pull the release lever in the trunk room, and then tilt the left and right backrest forward.

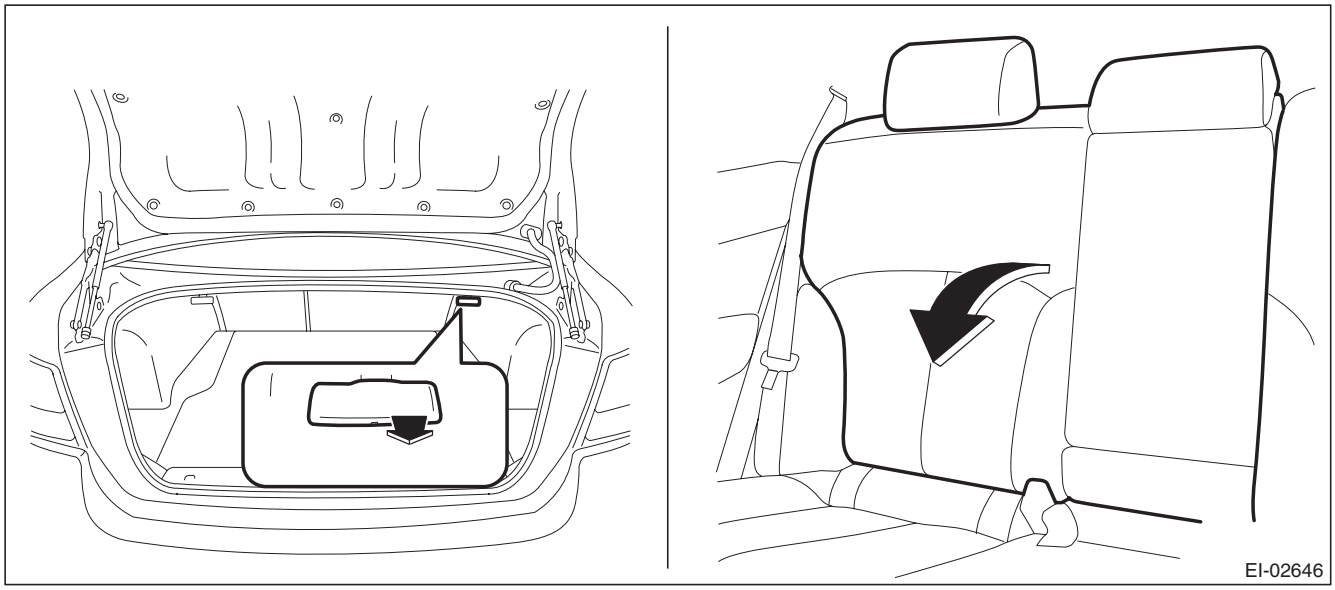

   (3) Release the clips of the trunk trim panel assembly - side.

GETtheMANUALS.org

(4) Remove the clips, and remove the left and right rear quarter trim LWR.

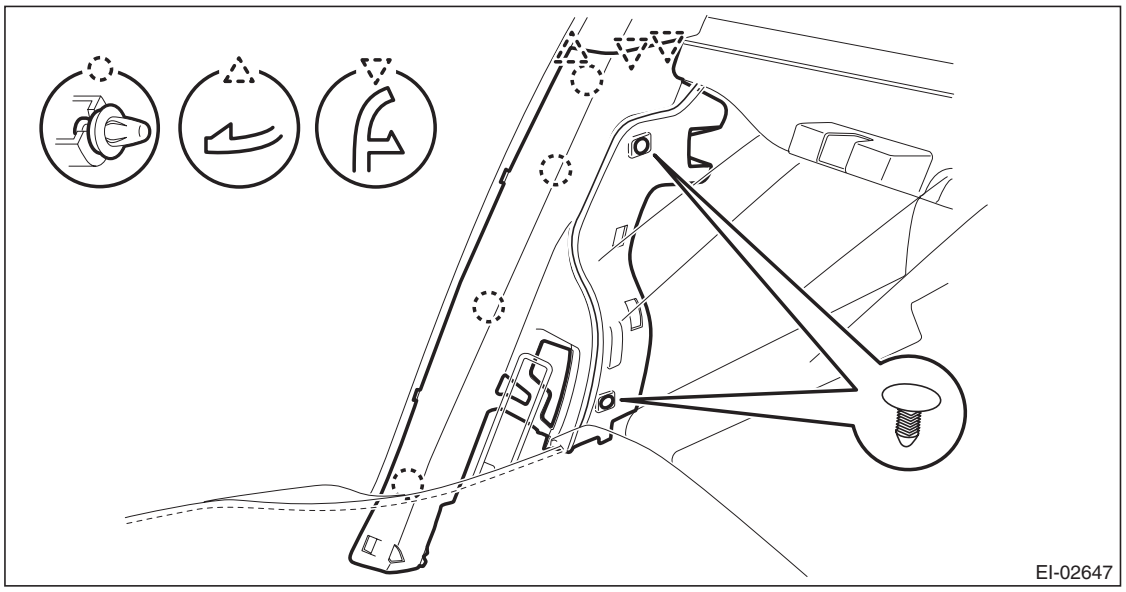

5) Remove the left and right rear quarter trim UPR.
(1) Remove the lower anchor bolt of the outer belt assembly.

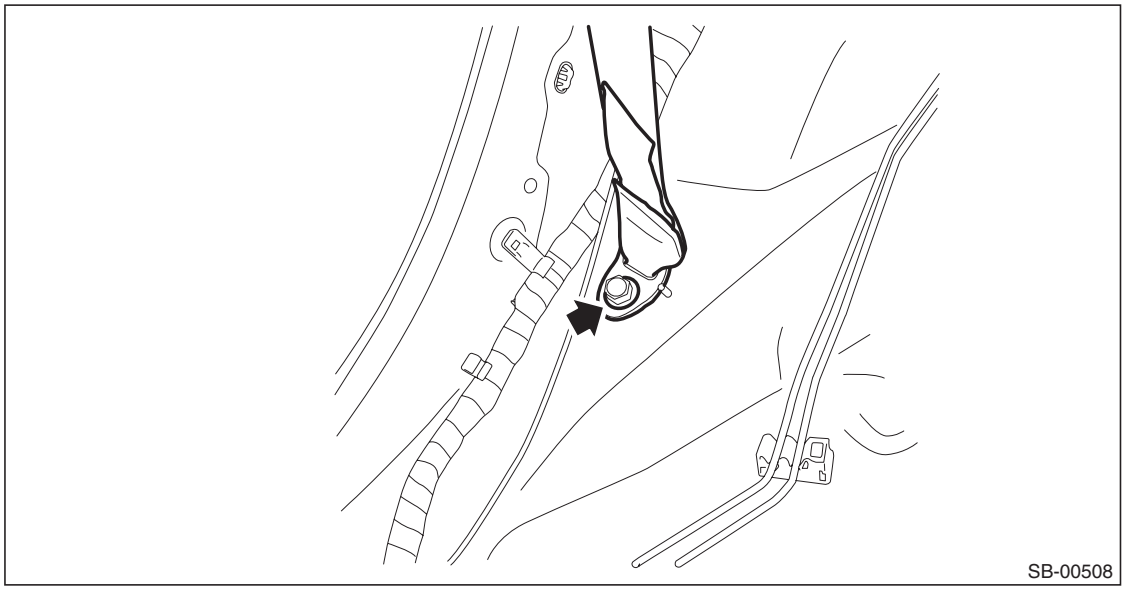

GETtheMANUALS.org

(2) Release the clips, and remove the rear quarter trim UPR.

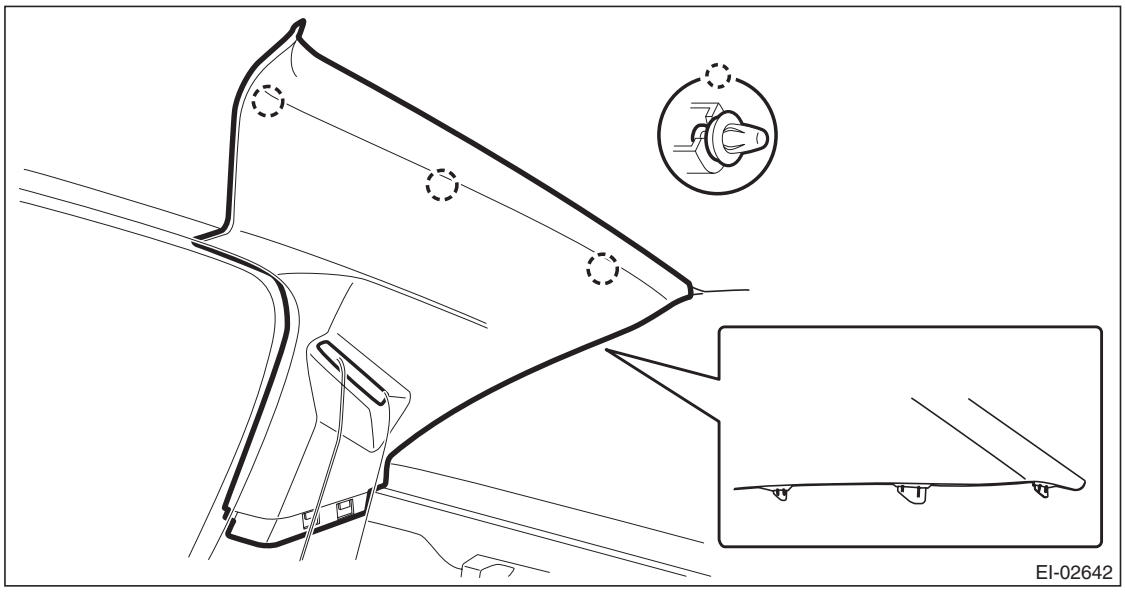

(3) Pull out the seat belt and remove the rear quarter trim UPR.

6) Release the clips and remove the trunk trim panel assembly - front on the left and right sides.

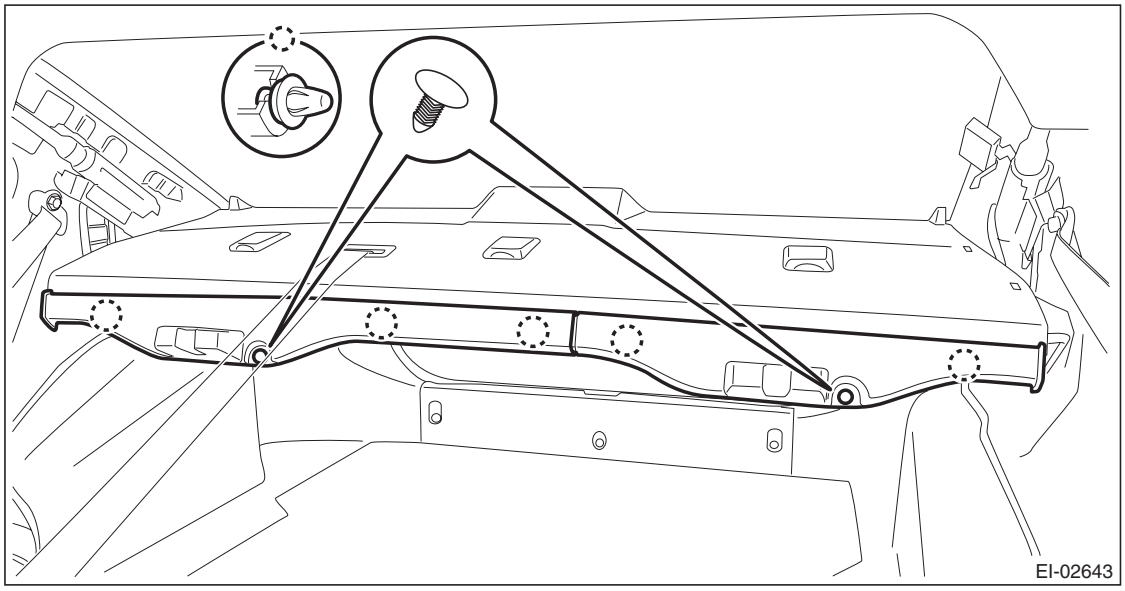

GETtheMANUALS.org

7) Remove the lower anchor of the shoulder belt assembly CTR.
   (1) Remove the nuts and remove the ISO-FIX anchor.
   (2) Remove the bolts, and remove the lower anchor of shoulder belt assembly CTR.

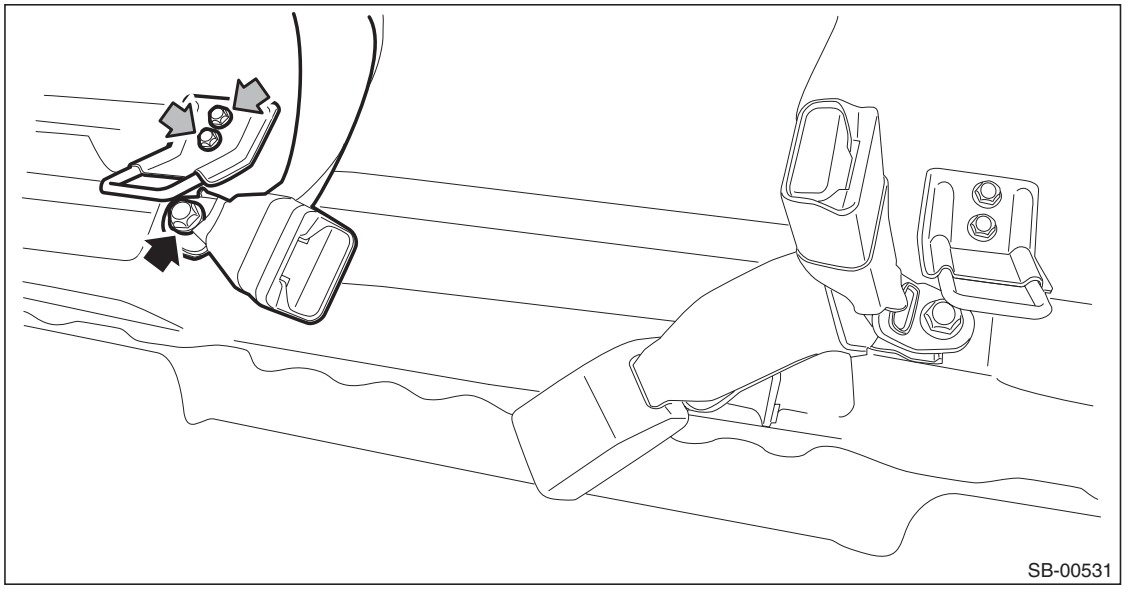

8) Remove the rear shelf panel assembly.
   (1) Release the clips to float the rear shelf panel assembly.
   (2) Release the belt guide and guide the anchor of rear center seat belt to behind the shelf panel.
   (3) Disconnect the connector of high-mounted stop light.
   (4) Remove the rear shelf panel assembly.

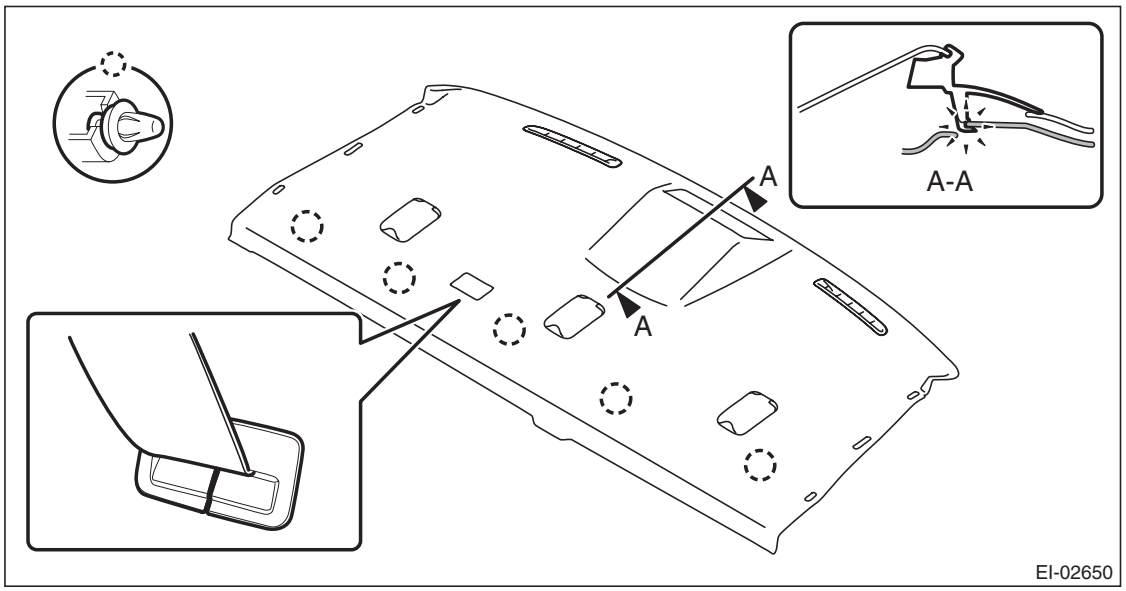

GETtheMANUALS.org

9) Remove the bolts, and remove the shoulder belt assembly CTR.

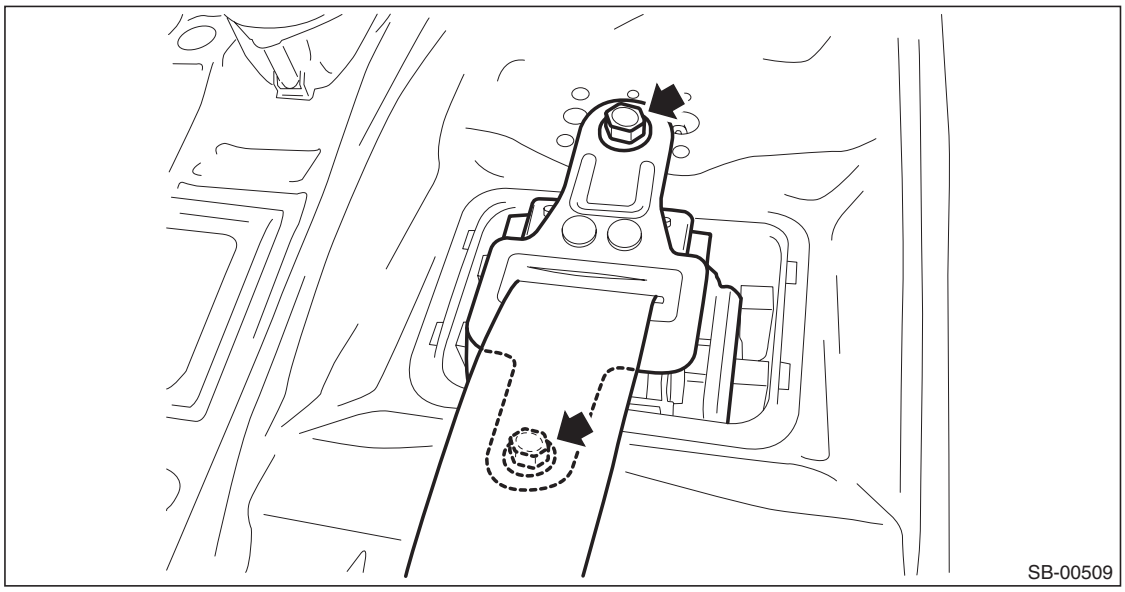

GETtheMANUALS.org

4. SHOULDER BELT ASSEMBLY CTR (OUTBACK MODEL)

1) Disconnect the ground cable from battery and wait for at least 60 seconds before starting work.

CAUTION:
The airbag system is fitted with a backup power supply. After disconnecting the battery ground cable, the airbag may operate if you do not wait for 60 seconds before starting the service of airbag system.

2) Remove the rear seat cushion.
   (1) Pull up the seat cushion and release the hook.

CAUTION:
If the hook is disconnected from the vehicle body, replace the hook with the new part to prevent the decline of the fixed force of the seat.

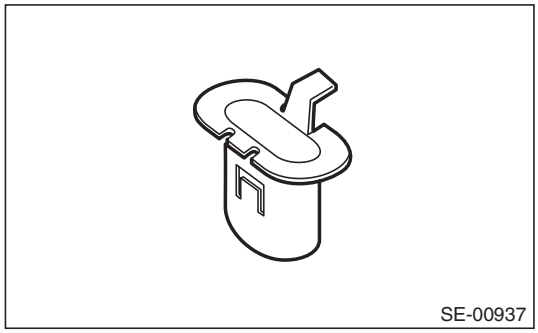

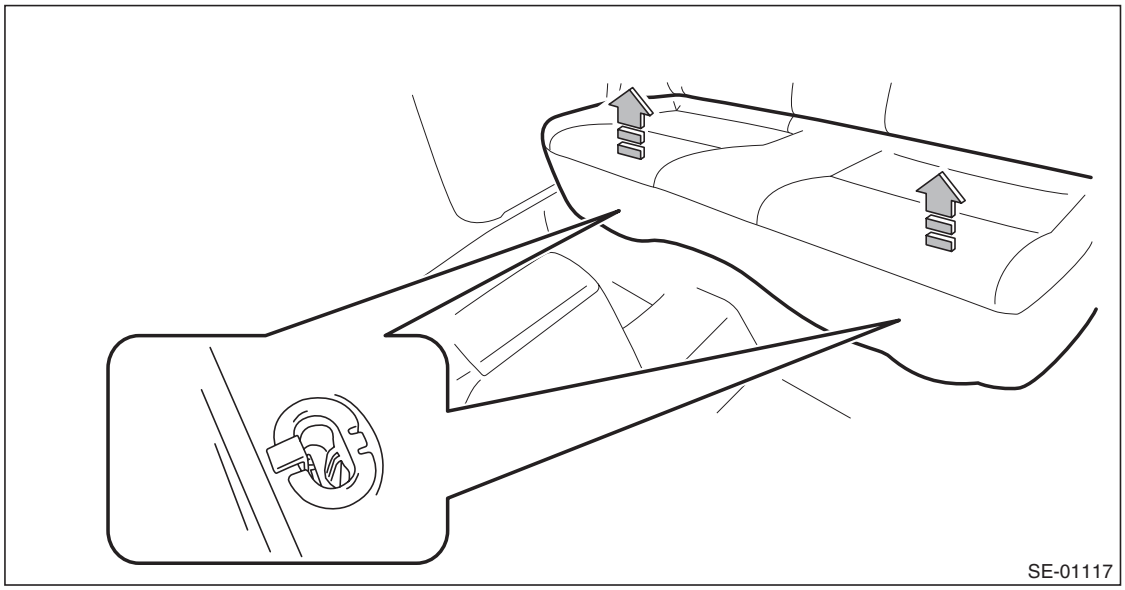

GETtheMANUALS.org

(2) Remove the hook (A) by pushing it back while lifting the front side of the seat cushion, and remove the seat cushion.

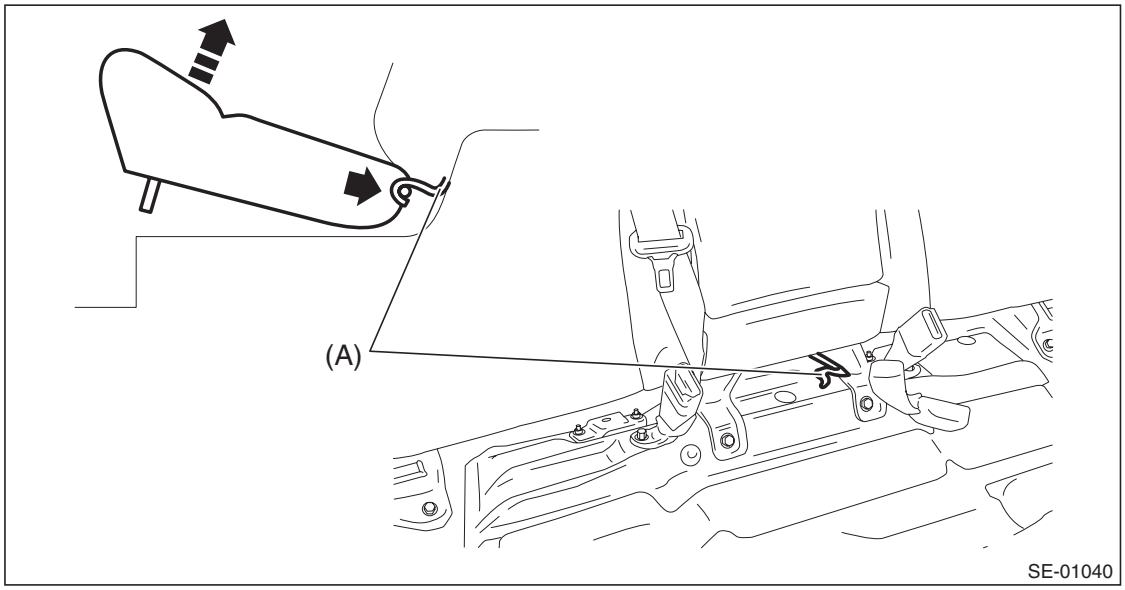

3) Release the clips and claws, and remove the side sill covers - rear INN on the left and right sides.

CAUTION:
Do not pull with excessive force. Doing so may damage the claws of the side sill cover INN.

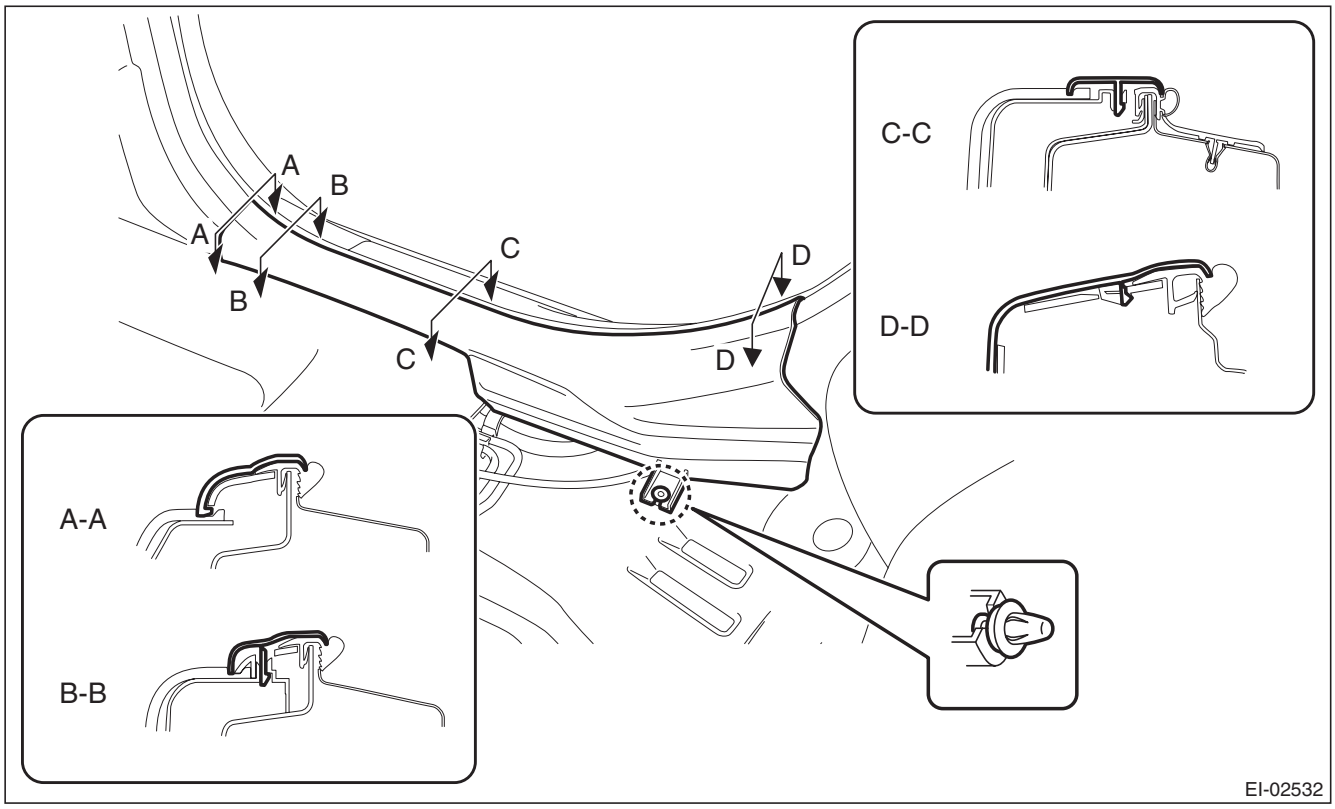

NOTE:
To release the claws of the side sill cover INN, the following steps are recommended.
1. Take out the weather strip from under the side sill cover INN.
2. Turn over the floor mat and release the claw (C-C and D-D) by accessing from behind the side sill cover INN.

GETtheMANUALS.org

4) Tilt the backrest forward, and then turn over the backrest backside mat.

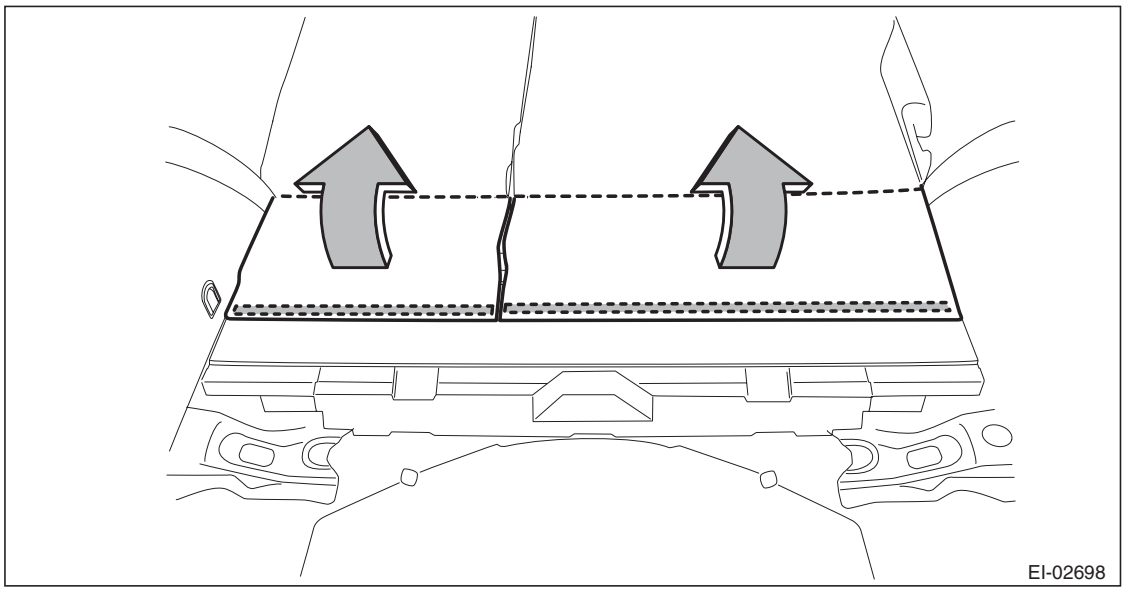

5) Remove the left and right backrest side pad assembly.
   (1) Disconnect the backrest cable and reclining lever cable.
   (2) Remove the screws and remove the reclining lever assembly by pulling it downward.

Preparation tool: Stubby screwdriver

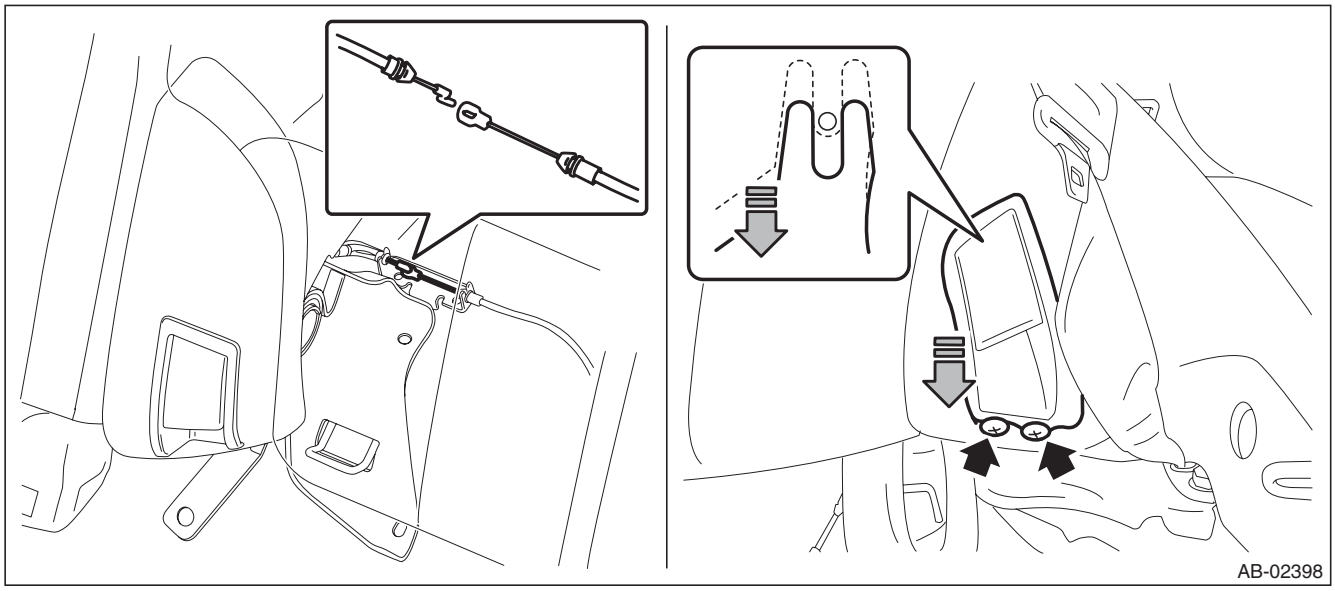

   (3) Turn over the bottom end of the backrest side pad in the forward direction so that the claws are released.

GETtheMANUALS.org

(4) Remove the backrest side pad by pulling it up.

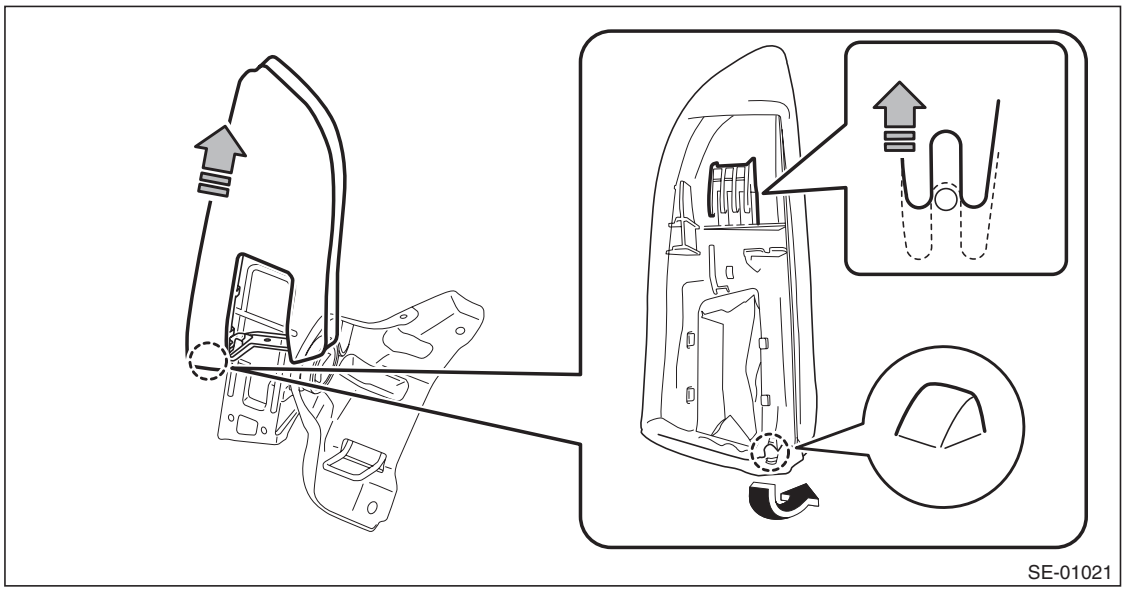

6) Remove the clips, and remove the luggage floor box and rear floor edge cover.

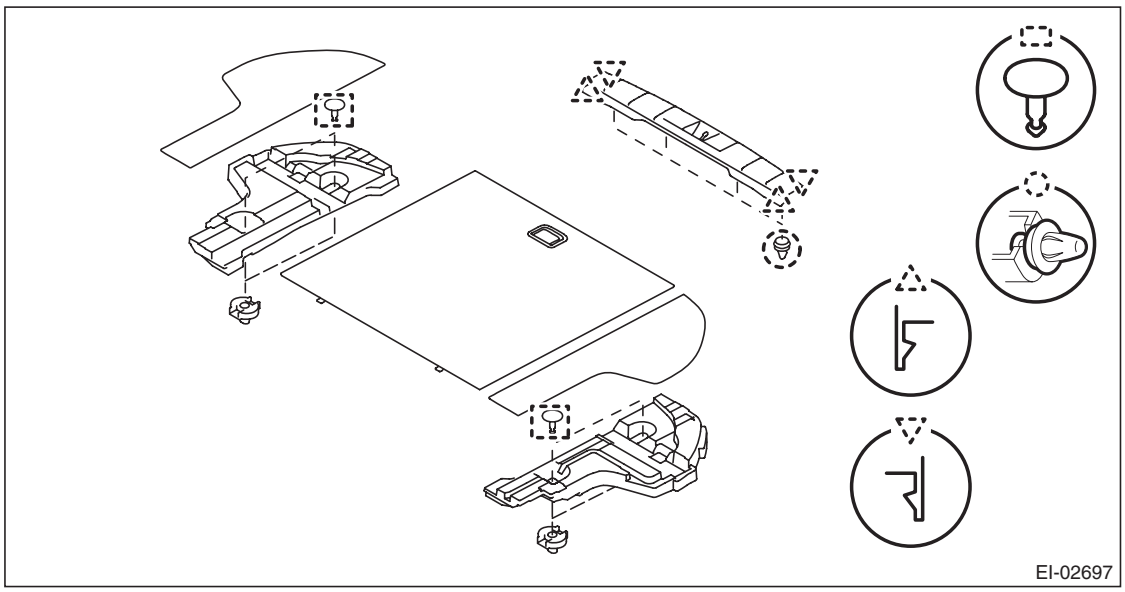

GETtheMANUALS.org

7) Remove the left and right rear quarter trim LWR.
   (1) Remove the caps, screws, and bolts. (A), (C)
   (2) Take out the hook and remove the screw inside. (B)
   (3) Remove the clips, and remove the rear quarter trim LWR.

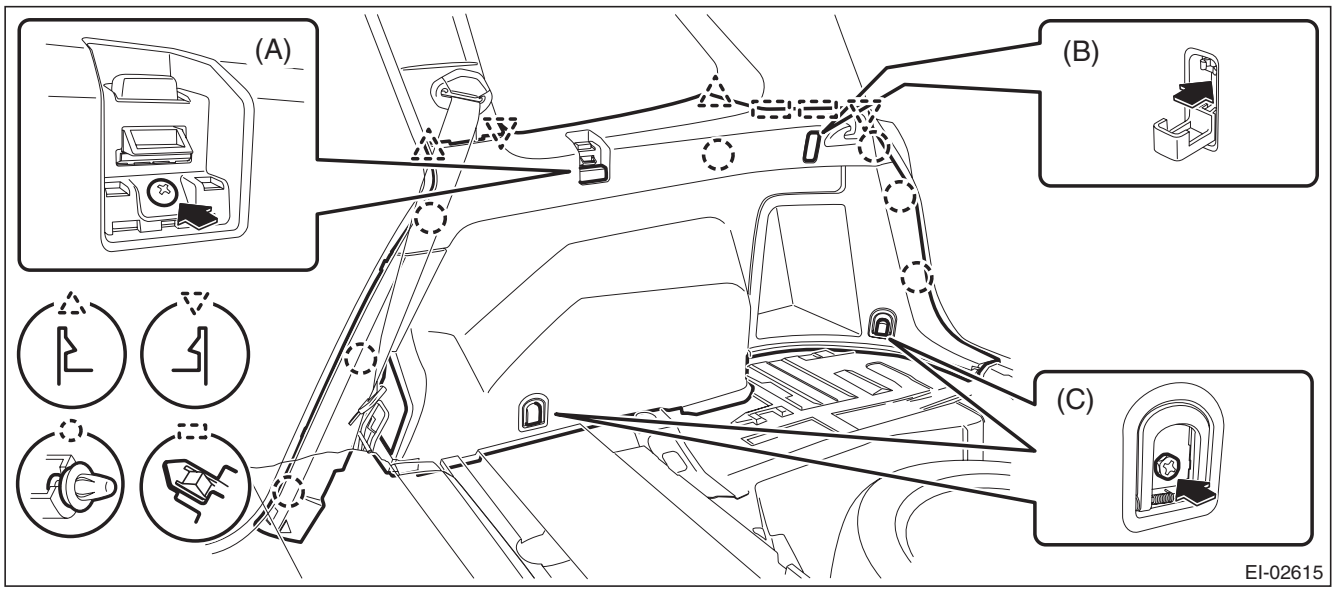

8) Remove the left and right rear quarter trim UPR.
   (1) Open the cap and remove the bolt to remove the seat belt anchor.
   (2) Remove the clips, and remove the rear quarter trim UPR - front.
   (3) Remove the clips, and remove the rear quarter trim UPR - rear.

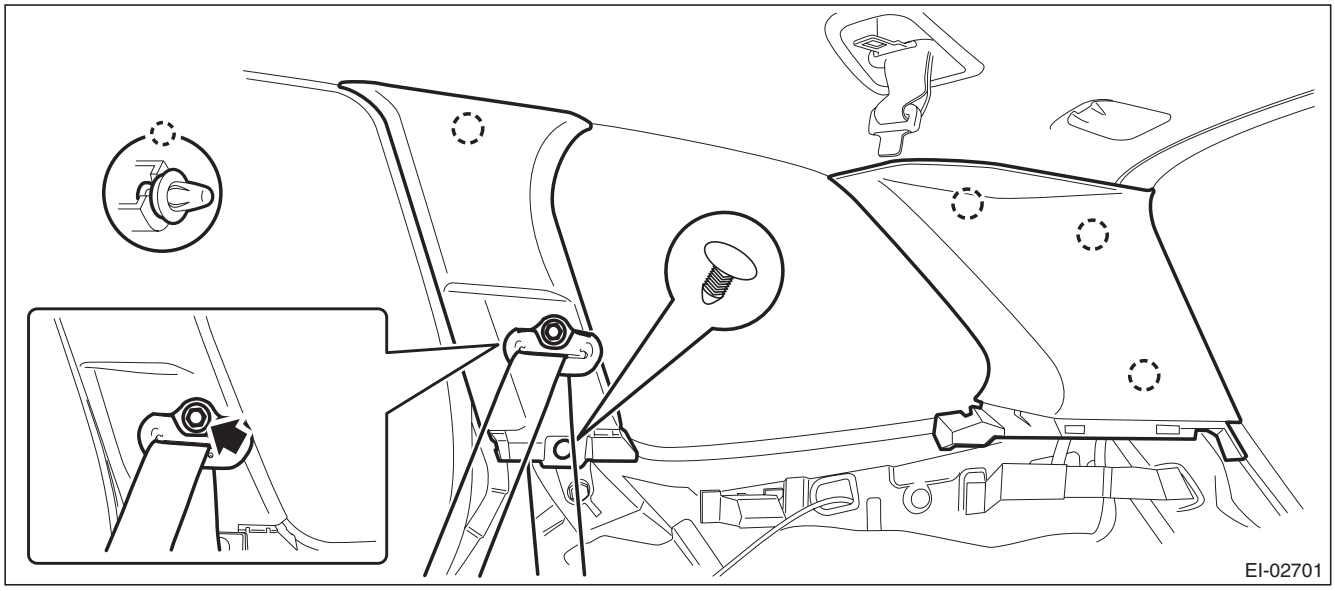

9) Remove the left and right front pillar trims.
   (1) Pull the upper part of the front pillar trim towards the center of the vehicle.
   (2) Insert long-nose pliers into the top part of the trim, grip the clip with the pliers and twist 90° in that position.

CAUTION:
Be careful not to damage the pillar trim surface and curtain airbag module when inserting the pliers.
   (3) Holding the clip twisted as in the previous step, remove the front pillar trim from the clip.

GETtheMANUALS.org

(4) Remove the clip and the front pillar trim.

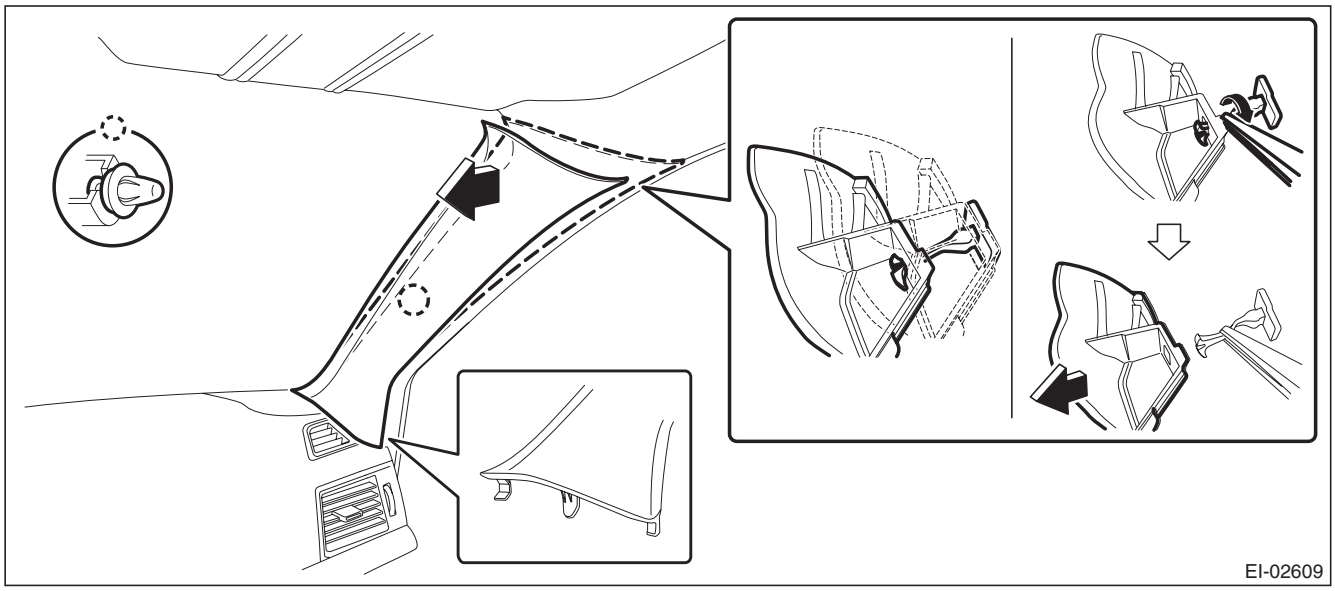

10) Release the claws, and then remove the side sill cover - front INN on the left and right sides.

CAUTION:
Do not pull with excessive force. Doing so may damage the claws of the side sill cover INN.

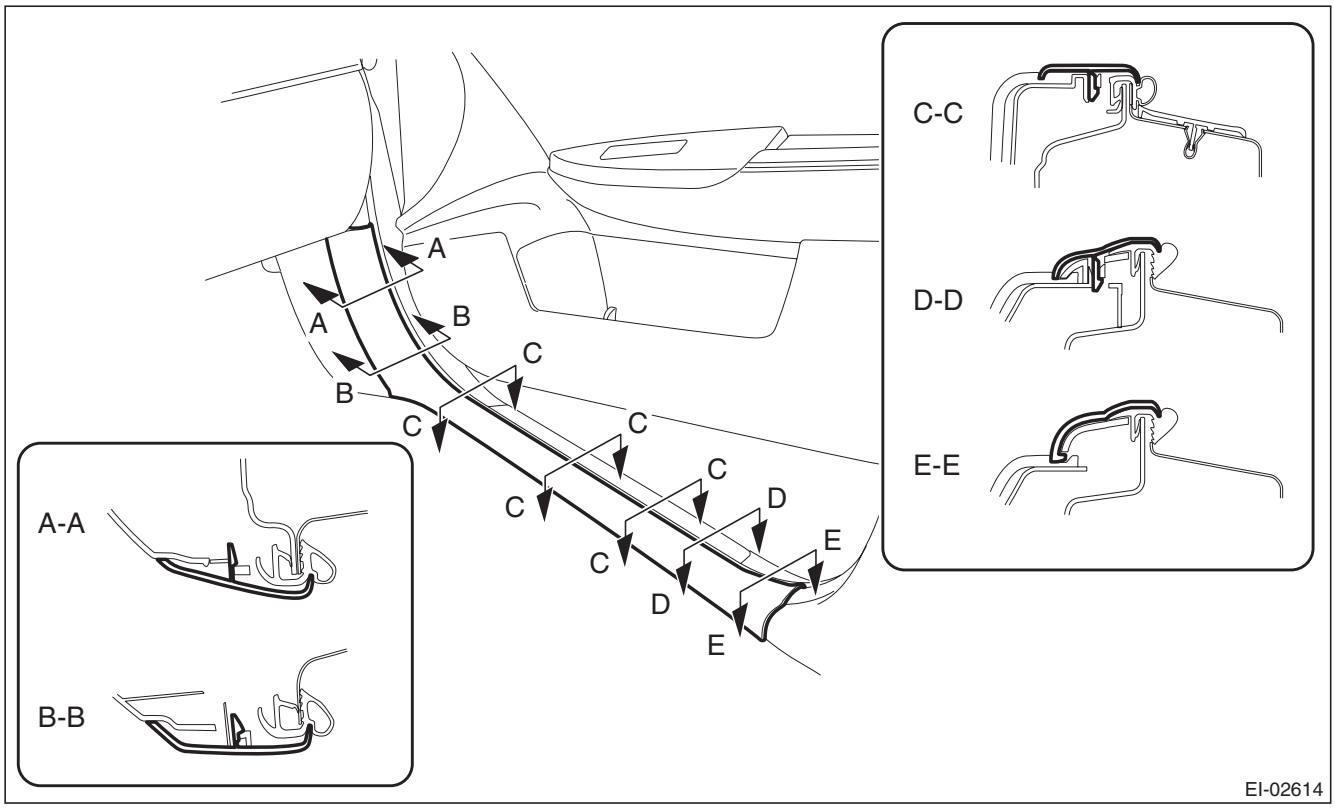

NOTE:
To release the claws of the side sill cover INN, the following steps are recommended.
1. Take out the weather strip from under the side sill cover INN.
2. Turn over the floor mat and release the claw (C-C) by accessing from behind the side sill cover INN.

GETtheMANUALS.org

11) Remove the left and right center pillar trim LWR.
   (1) Release the clip by pulling the center pillar trim LWR toward you.
   (2) Expand the claws of center pillar trim LWR outward and remove it from the center pillar trim UPR.

CAUTION:
Do not expand the center pillar trim LWR excessively. Doing so may damage the trim.

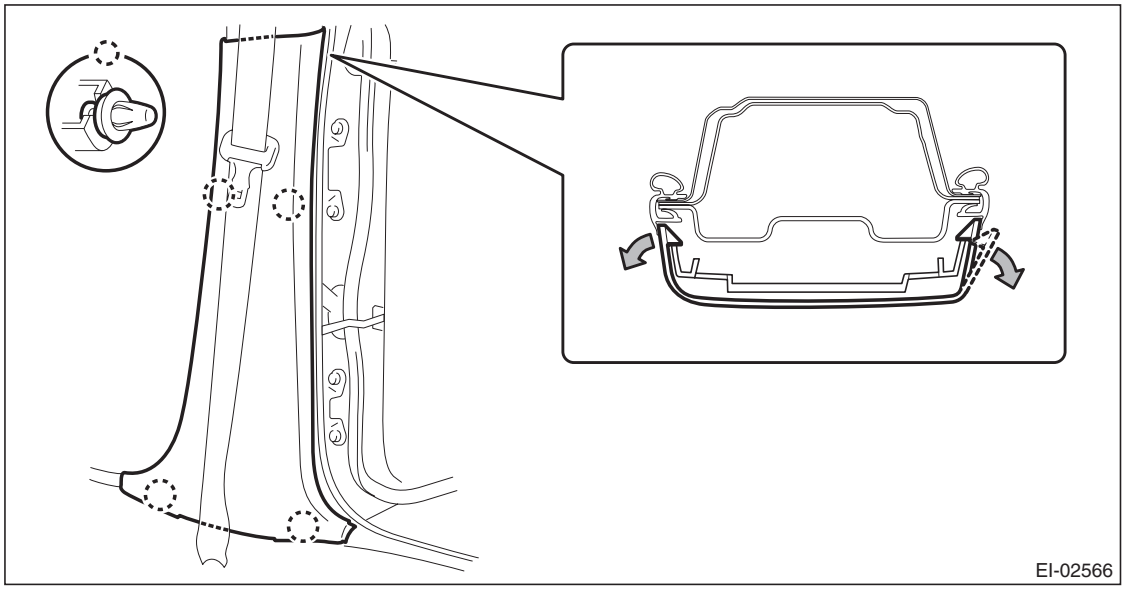

NOTE:
First release the claw located to the rear of the vehicle.

12) Remove the left and right center pillar trim UPR.
   (1) Remove the seat belt lower anchor bolt.

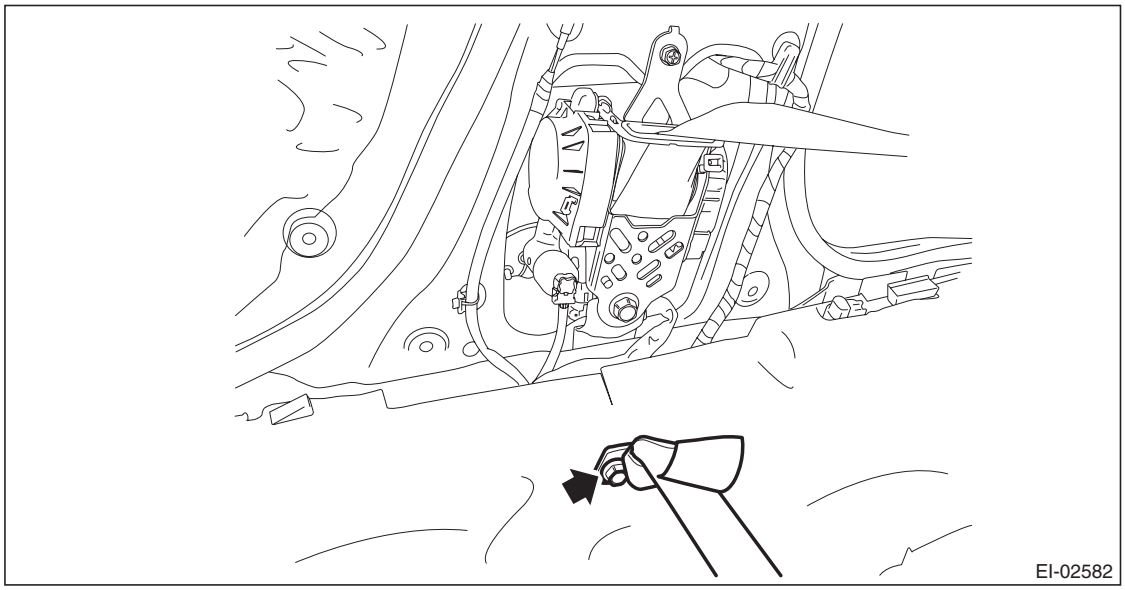

   (2) Release the clip by pulling the center pillar trim UPR toward you.

GETtheMANUALS.org

(3) Remove the center pillar trim UPR by lowering the entire trim.

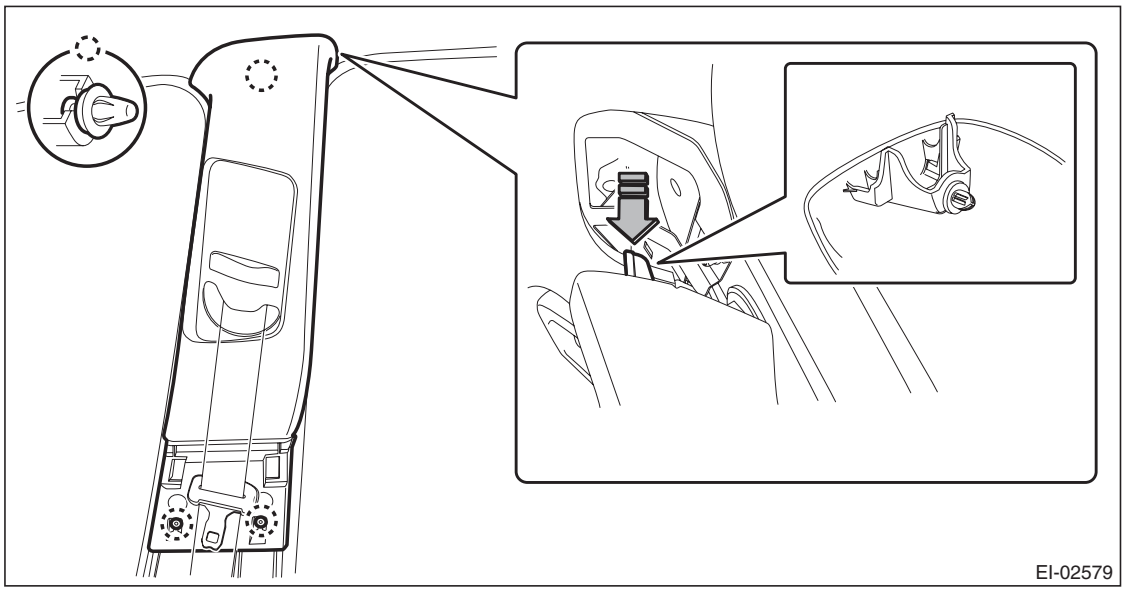

(4) Pull out the seat belt from the center pillar trim UPR.

13) Remove the overhead console assembly.

(1) Push and open the rear end of the overhead console lid, and remove the screws.

(2) Disconnect the connector and remove the overhead console assembly.

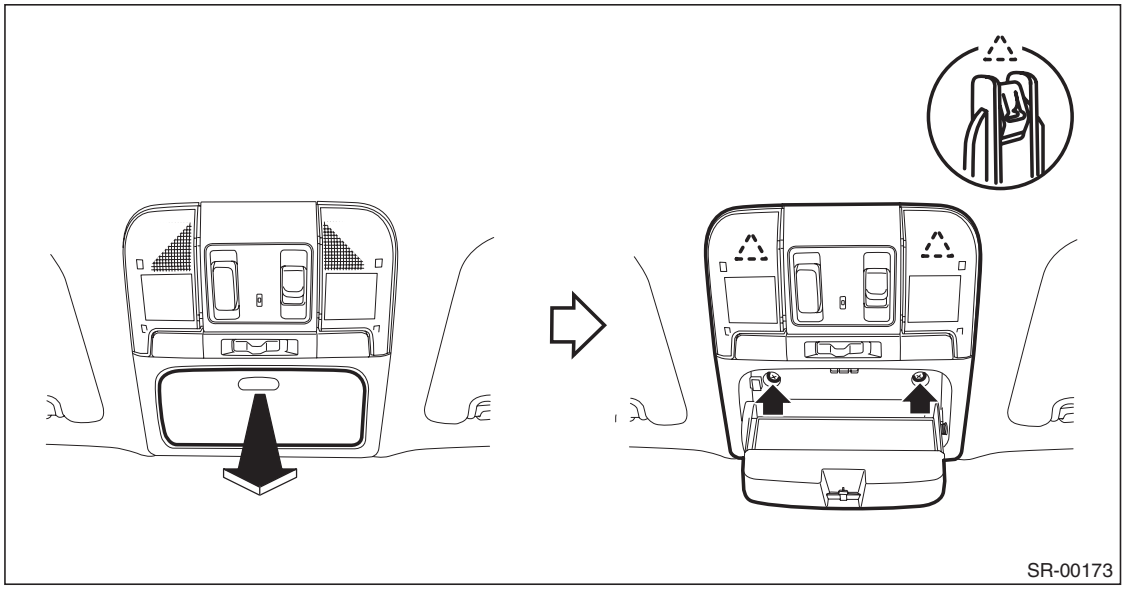

GETtheMANUALS.org

14) Remove the left and right sun visor assembly.
   (1) Remove the cover, loosen the screws, and remove the sun visor assembly.
   (2) Press the both sides of the sun visor hook using a flat tip screwdriver.
   (3) Remove the sun visor hook by pulling toward you.

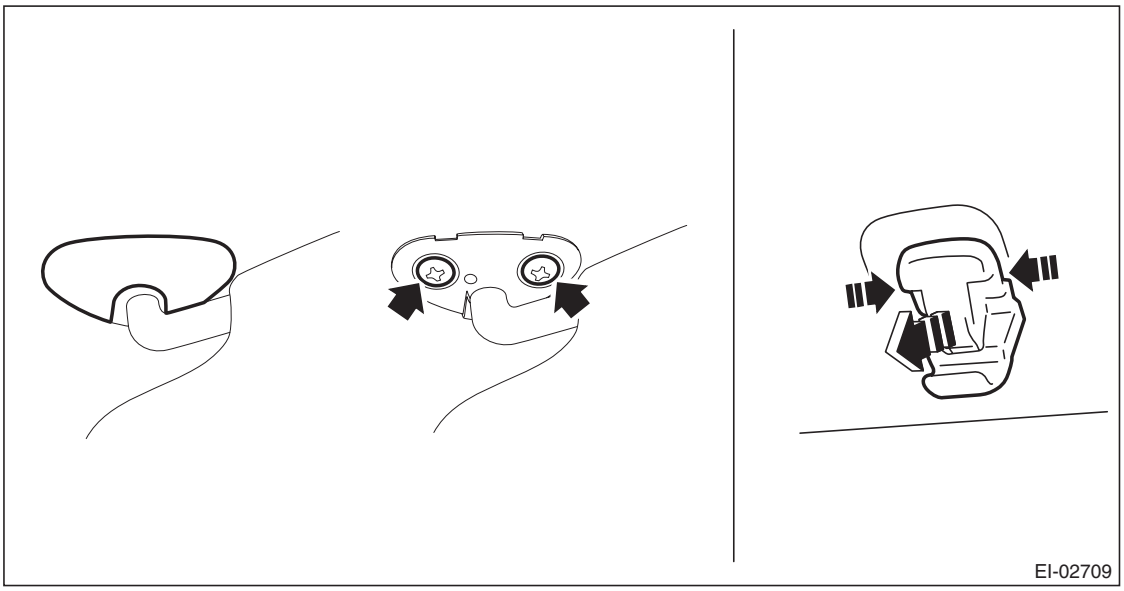

15) Remove the room light assembly.
   (1) Release the claws and remove the cover.
   (2) Remove the two screws.

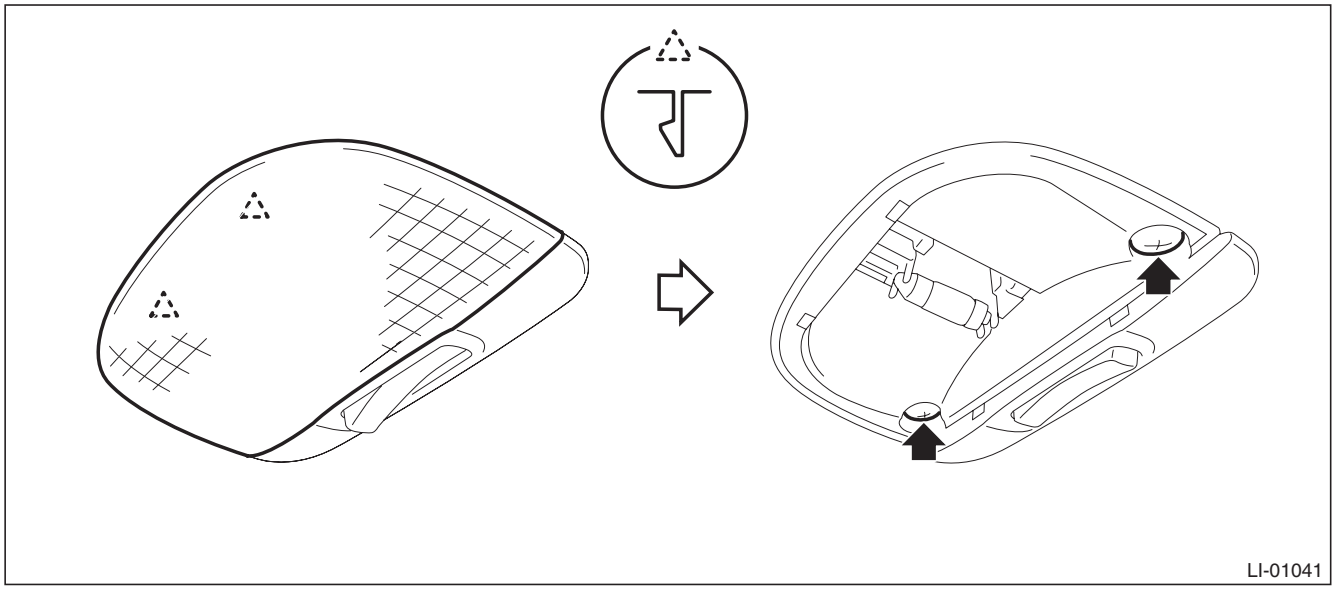

   (3) Disconnect the connector and remove the room light assembly.

GETtheMANUALS.org

16) Remove the luggage room light.
   (1) Release the claws and remove the luggage room light main body.
   (2) Disconnect the connector and remove the luggage room light.

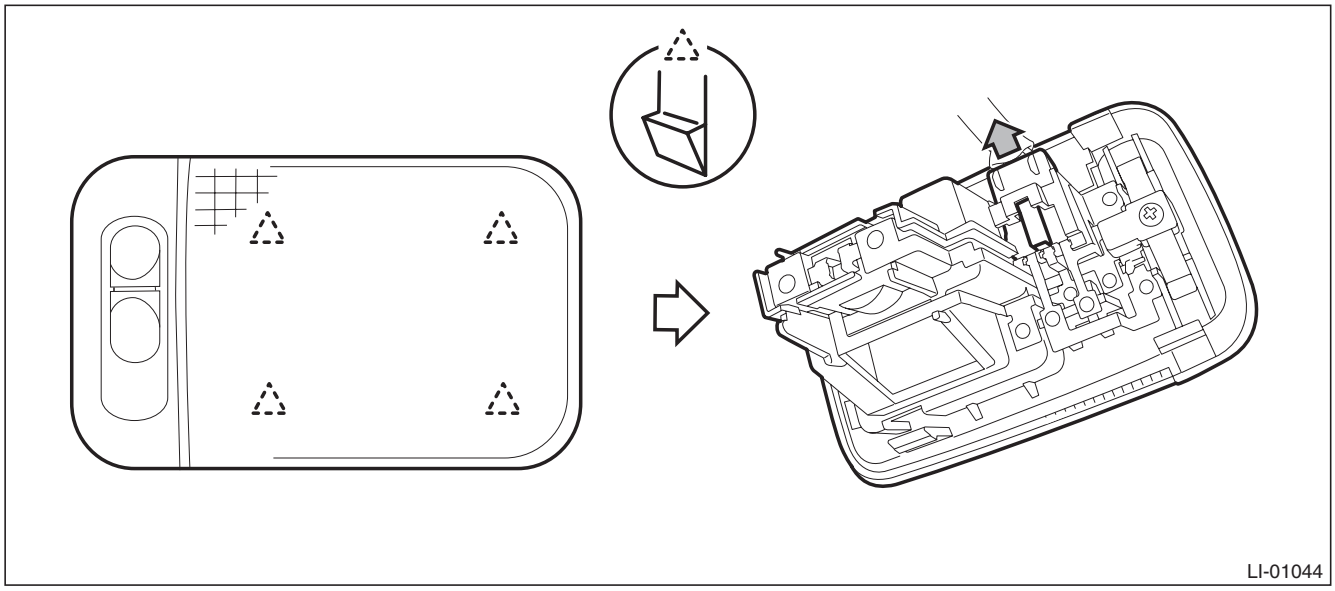

17) Remove all assist grip assembly.
   (1) Remove the cap (a).
   (2) Pull the assist grip toward you (to the vehicle center) and remove the metal clip from the bracket.

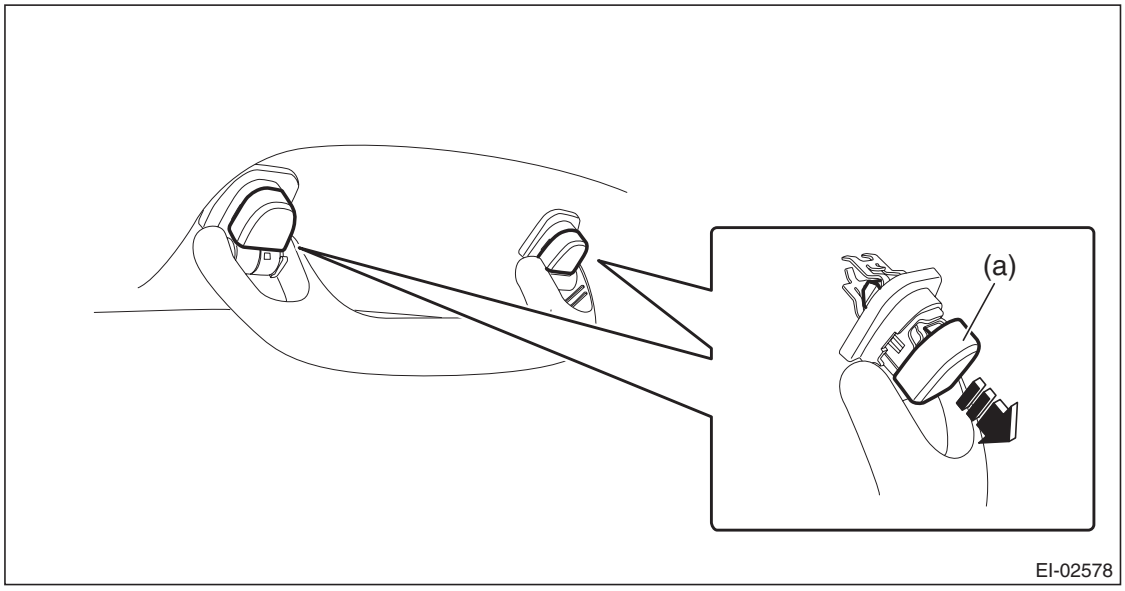

18) Remove the sun roof garnish. (model with sunroof)

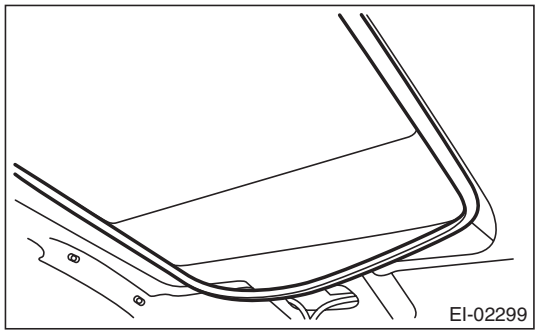

GETtheMANUALS.org

19) Disconnect the roof harness connector at the front pillar RH.
20) Remove the roof trim assembly.
    (1) Release the clips and remove the feeder cable from the roof trim.
    (2) Take out the roof trim assembly from the rear gate opening to outside.

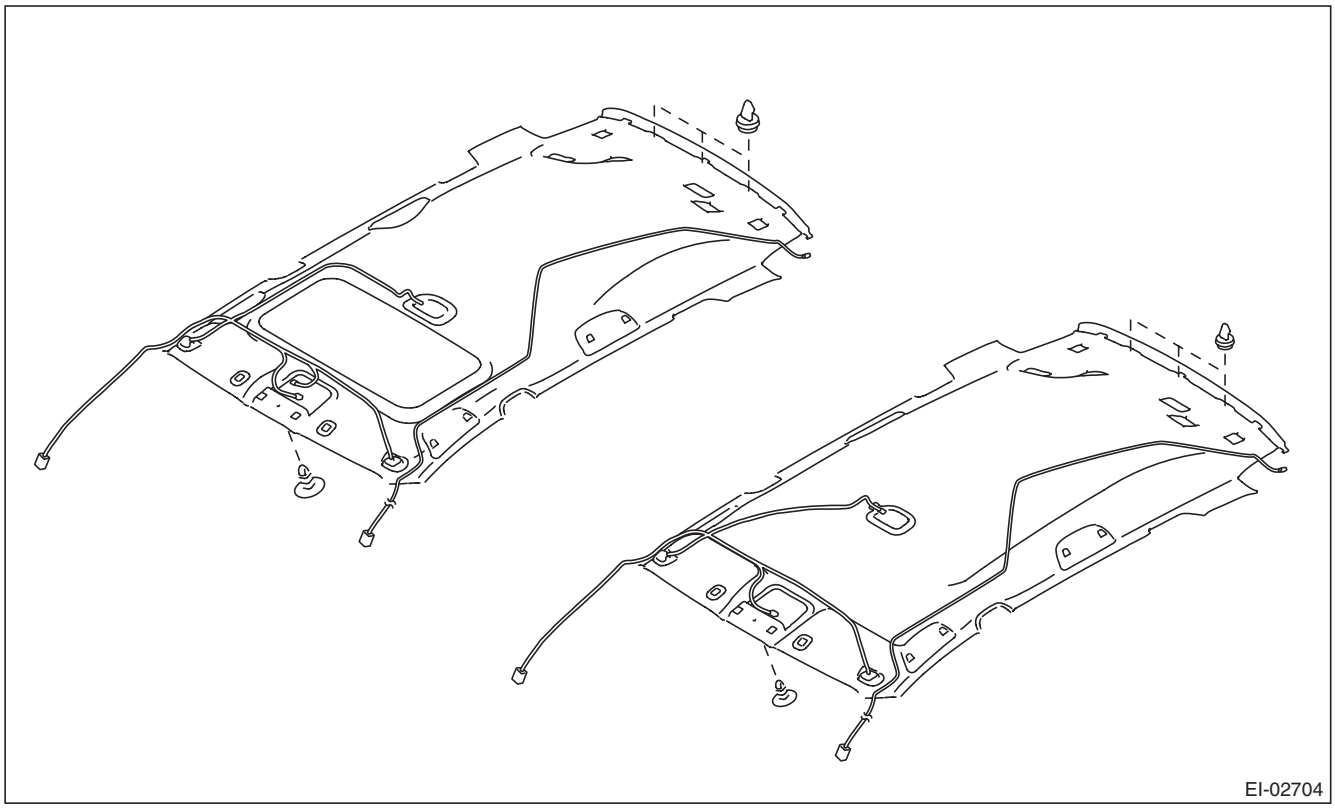

21) Remove the bolts, and remove the shoulder belt assembly CTR.

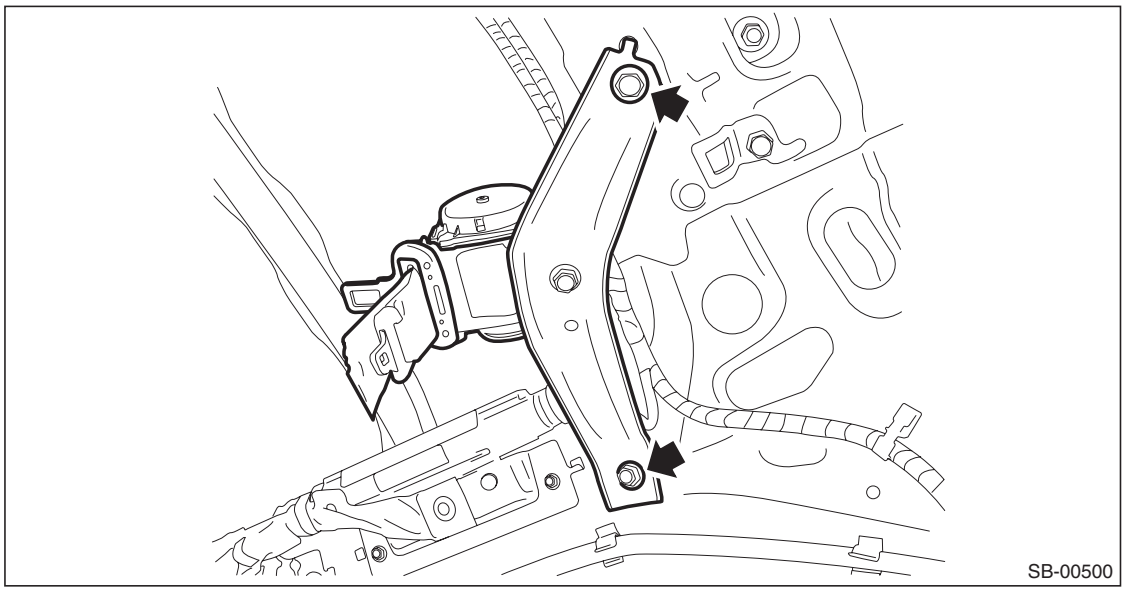

GETtheMANUALS.org

5. CENTER BELT RH ASSEMBLY & LH ASSEMBLY

1) Disconnect the ground cable from battery and wait for at least 60 seconds before starting work.

CAUTION:
The airbag system is fitted with a backup power supply. After disconnecting the battery ground cable, the airbag may operate if you do not wait for 60 seconds before starting the service of airbag system.

2) Remove the rear seat cushion.
   (1) Pull up the seat cushion and release the hook.

CAUTION:
If the hook is disconnected from the vehicle body, replace the hook with the new part to prevent the decline of the fixed force of the seat.

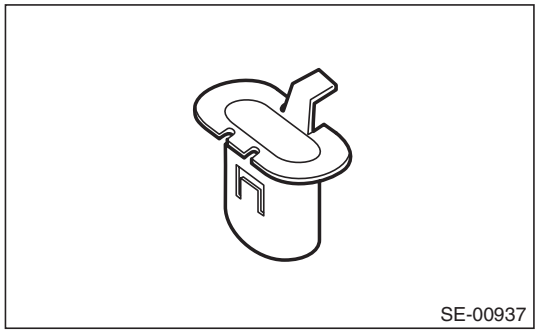

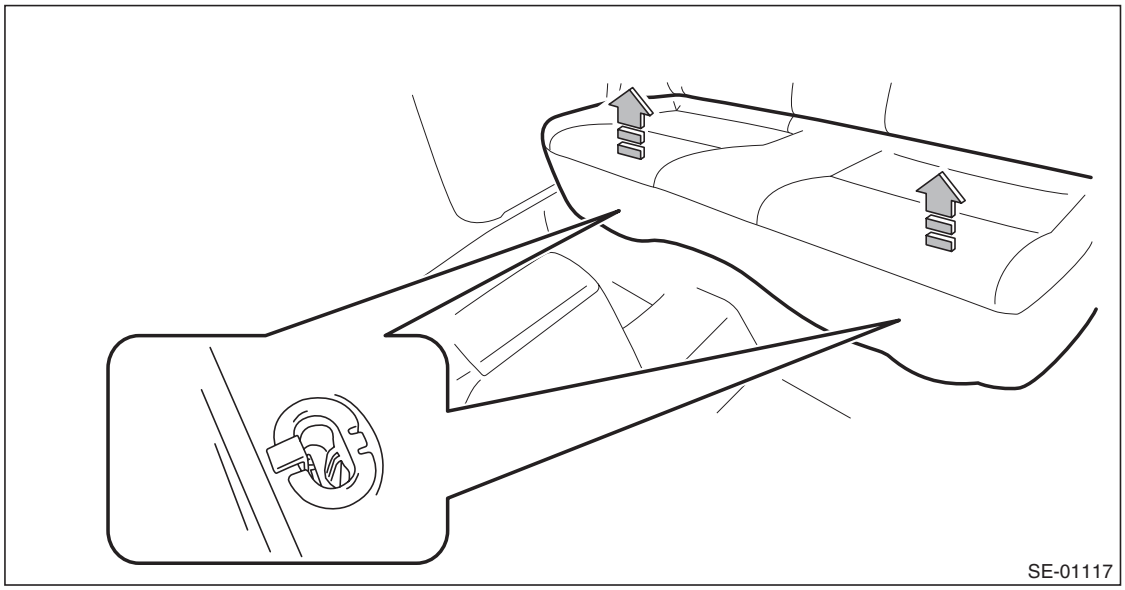

GETtheMANUALS.org

(2) Remove the hook (A) by pushing it back while lifting the front side of the seat cushion, and remove the seat cushion.

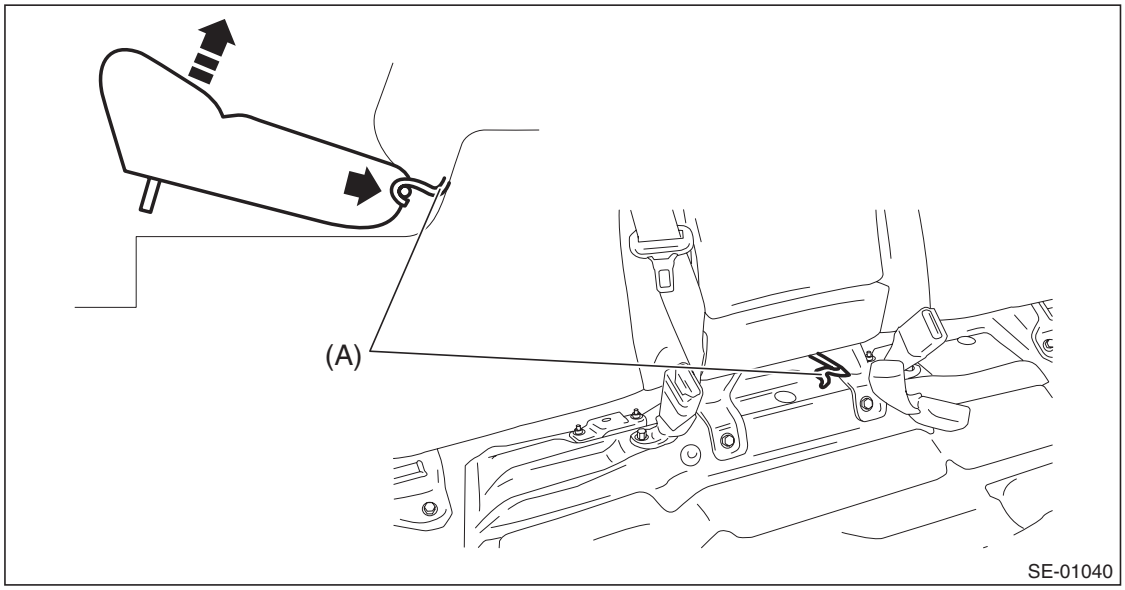

3) Remove the center belt RH assembly & LH assembly.
   (1) Remove the bolts and remove the ISO-FIX anchor.
   (2) Remove the bolts, then remove the center belt RH assembly & LH assembly.
   - Sedan model

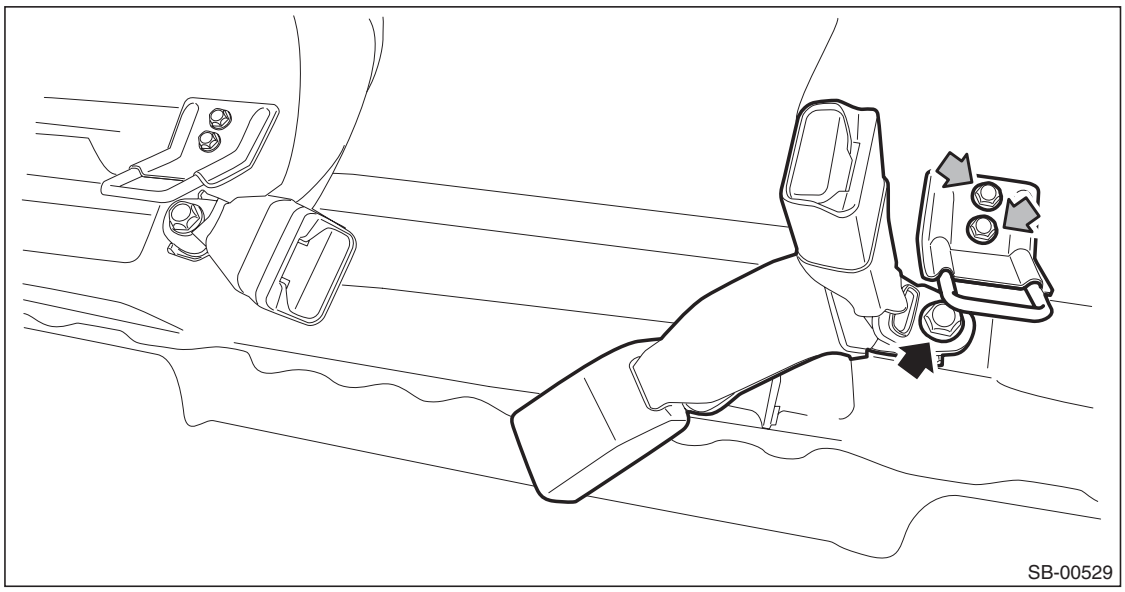

GETtheMANUALS.org

- OUTBACK model

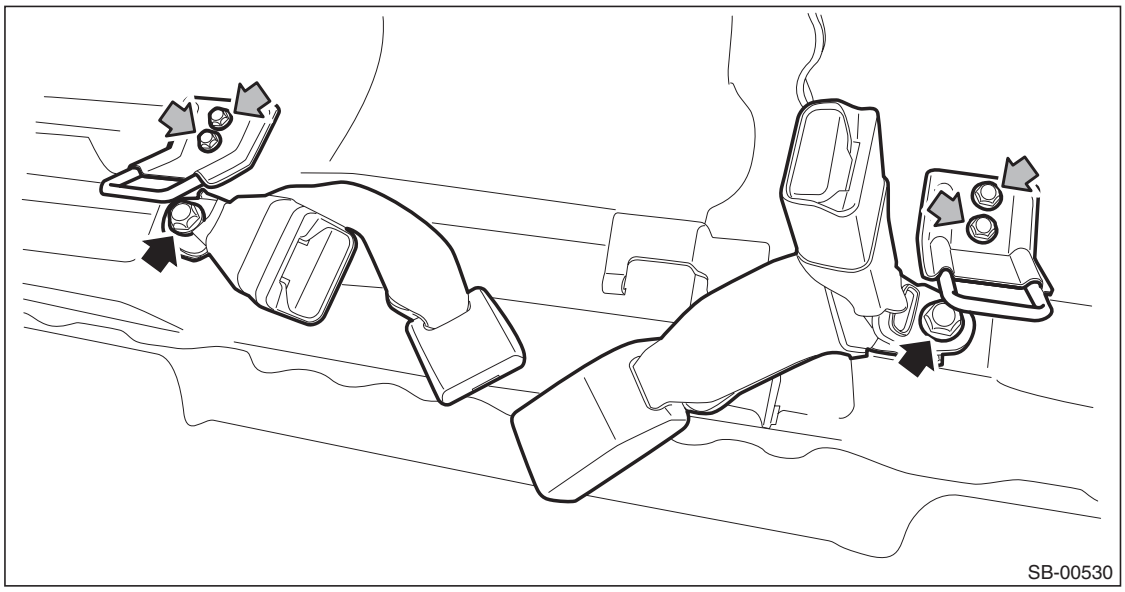

B: INSTALLATION

1. OUTER BELT RH ASSEMBLY & LH ASSEMBLY (SEDAN MODEL)

CAUTION:
If the hook is disconnected from the vehicle body, replace the hook with the new part to prevent the decline of the fixed force of the seat.

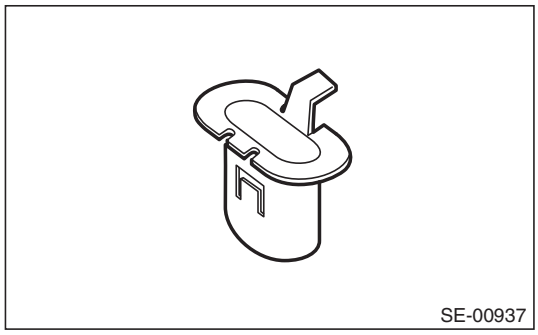

1) Before installation, perform a unit inspection of retractor. <Ref. to SB-63, INSPECTION, Rear Seat Belt.>
2) Install the outer belt assembly.

CAUTION:
- **During installation, make sure that the seat belts are not twisted.**
- **After installation, make sure that the seat belts are smoothly extended and wound.**

Tightening torque:
REAR SEAT BELT (SEDAN MODEL): <Ref. to SB-3, REAR SEAT BELT (SEDAN MODEL), COMPONENT, General Description.>

3) Install the remaining parts in the reverse order of removal.
4) After installation, check the following points.
- The seat belt is not twisted.
- The seat belt can be pulled out and retracted smoothly.

GETtheMANUALS.org

2. OUTER BELT RH ASSEMBLY & LH ASSEMBLY (OUTBACK MODEL)

CAUTION:
If the hook is disconnected from the vehicle body, replace the hook with the new part to prevent the decline of the fixed force of the seat.

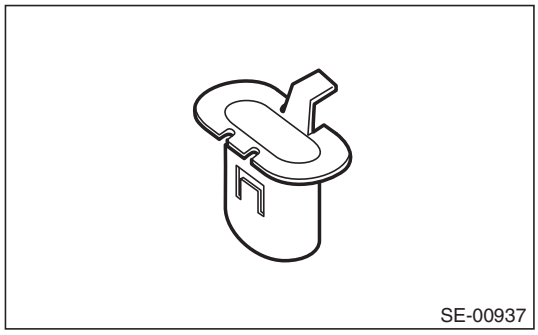

1) Before installation, perform a unit inspection of retractor. <Ref. to SB-63, INSPECTION, Rear Seat Belt.>
2) Install the outer seat belt retractor.

Tightening torque:
Rear seat belt (OUTBACK model): <Ref. to SB-4, REAR SEAT BELT (OUTBACK MODEL), COMPONENT, General Description.>

3) Install the rear quarter trim UPR.
4) Install the outer belt shoulder anchor.
5) Install the outer belt lower anchor.

CAUTION:
- **During installation, make sure that the seat belts are not twisted.**
- **After installation, make sure that the seat belts are smoothly extended and wound.**

Tightening torque:
Rear seat belt (OUTBACK model): <Ref. to SB-4, REAR SEAT BELT (OUTBACK MODEL), COMPONENT, General Description.>

6) Install the remaining parts in the reverse order of removal.
7) After installation, check the following points.
- The seat belt is not twisted.
- The seat belt can be pulled out and retracted smoothly.

3. SHOULDER BELT CTR ASSEMBLY (SEDAN MODEL)

CAUTION:
If the hook is removed from vehicle body, replace the hook with the new part to avoid the deterioration of seat securing.

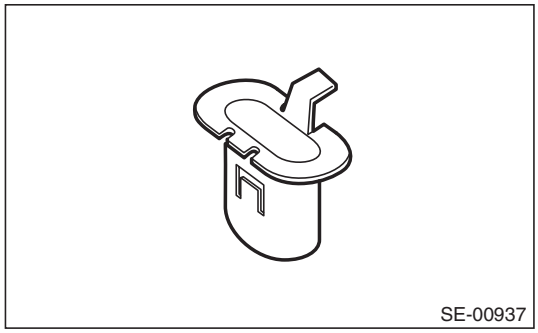

1) Install the shoulder belt retractor.

Tightening torque:
REAR SEAT BELT (SEDAN MODEL): <Ref. to SB-3, REAR SEAT BELT (SEDAN MODEL), COMPONENT, General Description.>

2) Install the rear shelf trim.

GETtheMANUALS.org

3) Install the shoulder belt lower anchor.

CAUTION:
- **During installation, make sure that the seat belts are not twisted.**
- **After installation, make sure that the seat belts are smoothly extended and wound.**

Tightening torque:
REAR SEAT BELT (SEDAN MODEL): <Ref. to SB-3, REAR SEAT BELT (SEDAN MODEL), COMPONENT, General Description.>

4) Rear quarter upper trim
5) Install the remaining parts in the reverse order of removal.
6) After installation, check the following points.
- The seat belt is not twisted.
- The seat belt can be pulled out and retracted smoothly.

4. SHOULDER BELT CTR ASSEMBLY (OUTBACK MODEL)

CAUTION:
If the hook is removed from vehicle body, replace the hook with the new part to avoid the deterioration of seat securing.

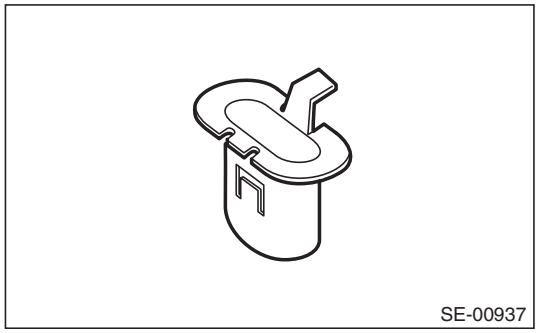

1) Install the shoulder belt retractor.

Tightening torque:
Rear seat belt (OUTBACK model): <Ref. to SB-4, REAR SEAT BELT (OUTBACK MODEL), COMPONENT, General Description.>

2) Install the roof trim.
3) Install the remaining parts in the reverse order of removal.
4) After installation, check the following points.
- The seat belt is not twisted.
- The seat belt can be pulled out and retracted smoothly.

5. CENTER BELT ASSEMBLY RH & LH

1) Install the center belt assembly.

Tightening torque:
REAR SEAT BELT (SEDAN MODEL): <Ref. to SB-3, REAR SEAT BELT (SEDAN MODEL), COMPONENT, General Description.>
Rear seat belt (OUTBACK model): <Ref. to SB-4, REAR SEAT BELT (OUTBACK MODEL), COMPONENT, General Description.>

2) Install the ISO-FIX anchor.

Tightening torque:
25 N·m (2.55 kgf-m, 18.4 ft-lb)

GETtheMANUALS.org

3) Install the rear seat cushion.

CAUTION:
If the hook is disconnected from the vehicle body, replace the hook with the new part to prevent the decline of the fixed force of the seat.

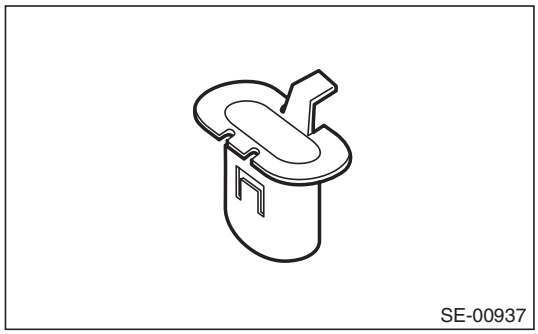

4) Install the remaining parts in the reverse order of removal.
5) After installation, check the following points.
- The seat belt is not twisted.
- Check that the airbag warning light lights up for approximately 6 seconds and then turns off when connecting the battery ground cable and turning the ignition switch to ON.

C: INSPECTION

1. VISUAL INSPECTION

Check for the following, and replace with new parts if necessary.
- Seat belt is slackened, bent or worn.
- Seat belt is abnormally wound or extended.
- Inner belt ASSY is deformed or damaged.
- Seat belt buckle cannot be engaged properly.

2. ELR LOCK MECHANISM INSPECTION

1) Hold the retractor upright (as installed in the vehicle) and check the ELR lock mechanism.
2) Tilt the retractor from the upright posture and check the following points.
- It does not lock if the inclination angle is 12° or less.

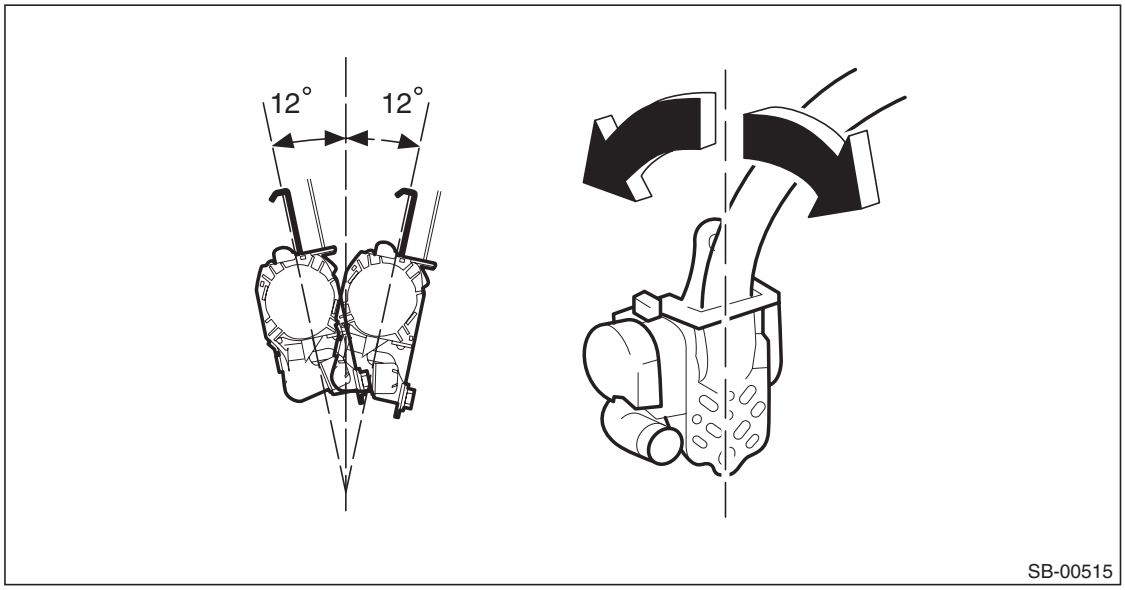

GETtheMANUALS.org

- It remains locked if the inclination angle is 27° or more.

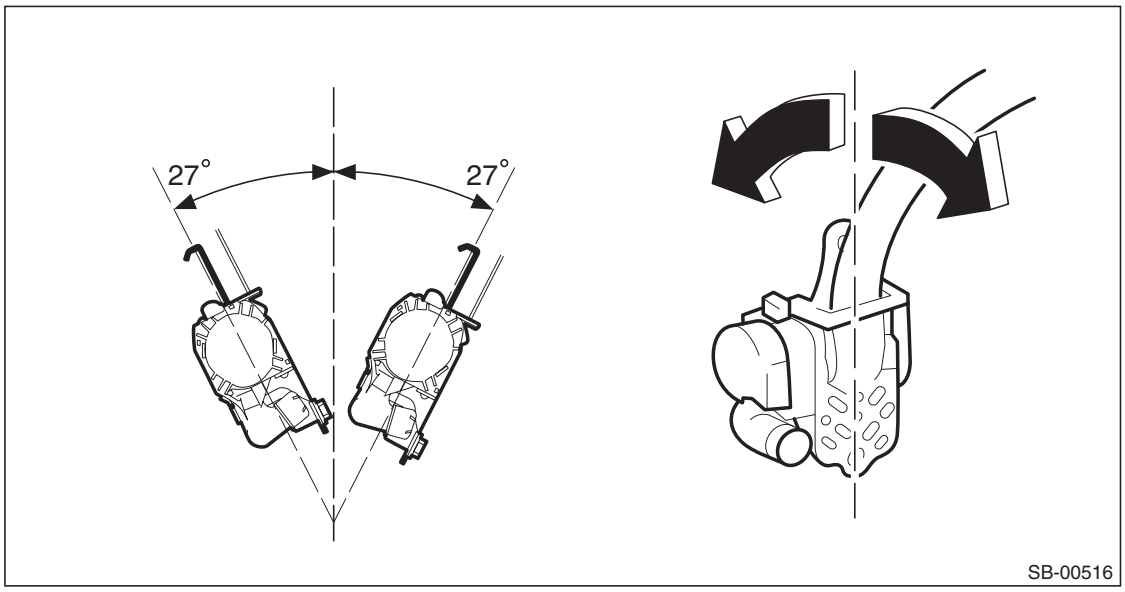

3) If the ELR lock mechanism does not operate correctly, replace the outer belt assembly with a new part.

GETtheMANUALS.org

LIGHTING SYSTEM

LI

		Page
1.	General Description	2
2.	Relay and Fuse	4
3.	Headlight System	6
4.	Day Time Running Light System	8
5.	Clearance Light and Illumination Light System	9
6.	Front Fog Light System	10
7.	Turn Signal Light and Hazard Light System	11
8.	Back-up Light System	13
9.	Stop Light System	15
10.	Interior Light System	16
11.	Combination Switch (Light)	19
12.	Light Control Sensor	24
13.	Headlight Assembly	25
14.	Headlight Bulb	31
15.	Front Turn Signal Light Bulb	35
16.	Clearance/Parking Light Bulb	37
17.	Front Side Marker Light Bulb	38
18.	Front Fog Light Assembly	40
19.	Front Fog Light Bulb	43
20.	Side Turn Signal Light Assembly	44
21.	Rear Combination Light Assembly	45
22.	Tail/Stop Light Bulb	47
23.	Rear Turn Signal Light Bulb	51
24.	Rear Finisher Light Assembly	54
25.	Back-up Light Bulb	56
26.	License Plate Light	58
27.	High-mounted Stop Light	60
28.	Spot Map Light	62
29.	Room Light	64
30.	Luggage Room Light	66
31.	Trunk Room Light	68
32.	Glove Box Light	69
33.	Door Step Light	70
34.	Ignition Switch Illumination	71
35.	Day Time Running Resistor	74
36.	Reflex Reflector	75
37.	Door Switch	76

GETtheMANUALS.org

1. General Description

A: SPECIFICATION

Headlight		High beam	12 V — 60 W
		Low beam	12 V — 55 W
Front turn signal light			12 V — 21 W
Parking light			12 V — 5 W
Side marker light			12 V — 5 W
Front fog light			12 V — 55 W
Side turn signal light (C6 model)			12 V — 1.4 W (LED)
Rear combination light	Sedan model	Tail/stop light	12 V — 5 / 21 W
		Turn signal light	12 V — 21 W
		Back-up light	12 V — 16 W
	OUTBACK model	Tail light	12 V — 5 W
		Stop light	12 V — 21 W
		Turn signal light	12 V — 21 W
Rear finisher light	Sedan model	Tail light	12 V — 5 W
	OUTBACK model	Tail light	12 V — 5 W
		Back-up light	12 V — 16 W
License plate light			12 V — 5 W
High-mounted stop light	Sedan model		12 V — 1 W (LED)
	OUTBACK model		12 V — 2.1 W (LED)
Room light			12 V — 8 W
Spot map light			12 V — 8 W
Luggage room light			12 V — 5 W
Trunk room light			12 V — 5 W
Glove box light			12 V — 1.4 W
Door step light			12 V — 5 W

B: CAUTION

- Before disassembling or reassembling parts, always disconnect the battery ground cable from battery. When replacing the audio, control module and other parts provided with memory functions, record the memory contents before disconnecting the battery ground cable. Otherwise, the memory is cleared.
- Reassemble the parts in the reverse order of disassembly procedure unless otherwise indicated.
- Connect the connectors securely during reassembly.
- After reassembly, make sure that the functional parts operate normally.
- Yellow connectors and harnesses with yellow tapes around them are the connectors and harnesses for the airbag system. Using a tester above such circuits may cause malfunction of airbag system. Follow the cautions for the airbag system in this case. <Ref. to AB-9, CAUTION, General Description.>
- Be careful not to damage the airbag system wiring harness when servicing electrical parts and switches.

GETtheMANUALS.org

C: PREPARATION TOOL

1. SPECIAL TOOL

ILLUSTRATION	TOOL NUMBER	DESCRIPTION	REMARKS
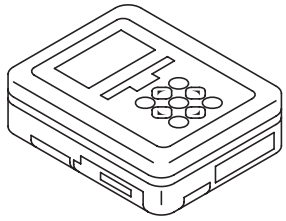 ST1B022XU0	1B022XU0	SUBARU SELECT MONITOR III KIT	Used for setting of each function and trouble-shooting for electrical system.

2. GENERAL TOOL

TOOL NAME	REMARKS
Circuit tester	Used for measuring resistance and voltage.

GETtheMANUALS.org

2. Relay and Fuse

A: LOCATION

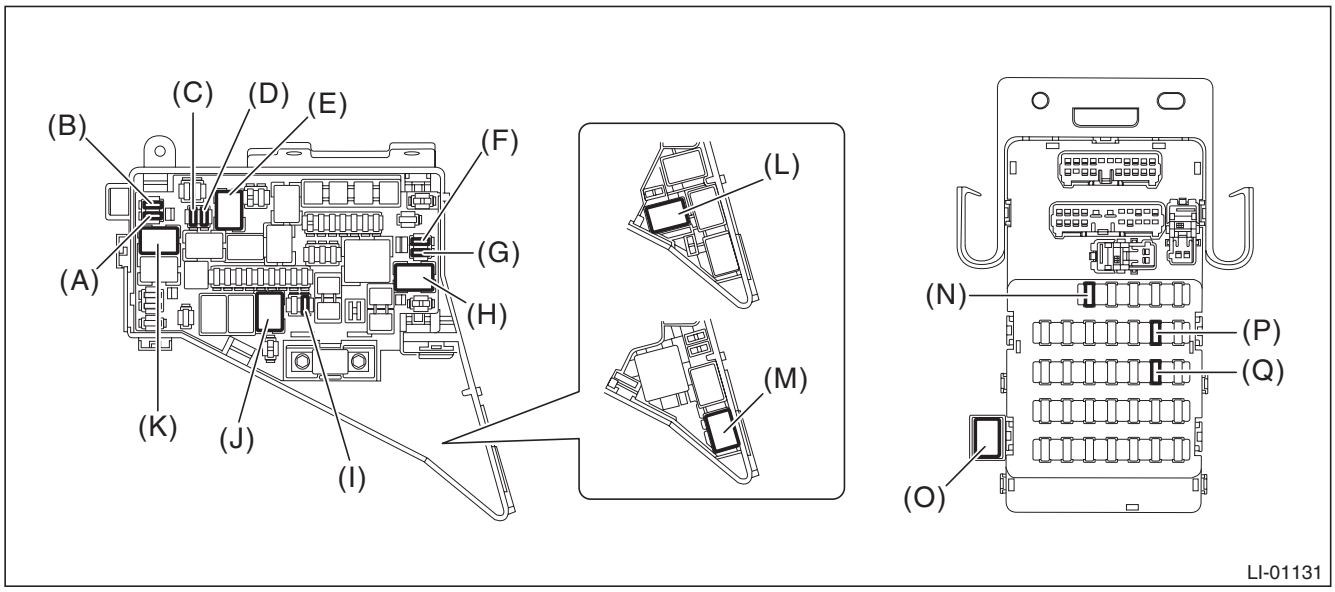

Main fuse box	Fuse 15A (front combination light RH)	(A)
	Fuse 15A (front combination light LH)	(B)
	Fuse 10A (front combination light LH)	(C)
	Fuse 10A (front combination light RH)	(D)
	Headlight relay (Hi)	(E)
	Fuse 10A (front fog light LH)	(F)
	Fuse 10A (front fog light RH)	(G)
	Front fog light relay	(H)
	Fuse 10A (rear combination light)	(I)
	Tail & Illumination relay	(J)
	Headlight relay (Lo)	(K)
A/C relay holder (in main fuse box)	Daytime running light relay (H4 model)	(L)
	Daytime running light relay (H6 model)	(M)
Relay & fuse box	Fuse 15A (trailer connector)	(N)
	Back-up light relay	(O)
	Fuse 7.5A (turn signal & hazard unit)	(P)
	Fuse 7.5A (inhibitor switch, back-up light relay)	(Q)

NOTE:
For other related fuses, refer to the wiring diagram. <Ref. to WI-15, Power Supply Circuit.>

GETtheMANUALS.org

B: INSPECTION

1. CHECK FUSE.

1) Remove the fuse and inspect visually.
2) If the fuse is blown out, replace the fuse.

NOTE:
If the fuse is blown again, check the system wiring harness.

2. CHECK RELAY

1) Check the resistance between relay terminals.

Terminal No.	Inspection conditions	Specification	Circuit
1 — 2	Always	1 MΩ or more	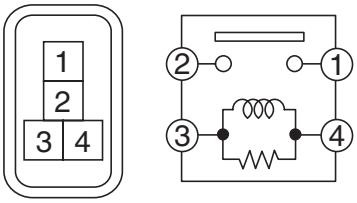 SR-00180
1 — 2	Apply battery voltage between 4 — 3 terminals.	Less than 1 Ω	

Terminal No.	Inspection conditions	Specification	Circuit
1 — 2	Always	1 MΩ or more	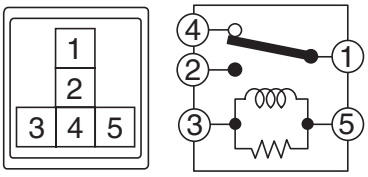 SL-01085
1 — 4	Always	Less than 1 Ω	
1 — 2	Apply battery voltage between 3 — 5 terminals.	Less than 1 Ω	

2) Replace the relay if the inspection result is not within the standard value.

GETtheMANUALS.org

3. Headlight System

A: WIRING DIAGRAM

Refer to “Headlight System” in the wiring diagram. <Ref. to WI-172, WIRING DIAGRAM, Headlight System.>

B: INSPECTION

1. AUTO HEADLIGHT SYSTEM CHECK

Preparation tool:
Subaru Select Monitor III KIT
Circuit tester

	Step	Check	Yes	No
1	**CHECK HEADLIGHT ILLUMINATION.** Set the lighting switch to the switch 1 (TAIL) and switch 2 (HEAD).	Do the tail and headlight illuminate?	Go to step **2**.	Check the combination switch (light) and headlight bulb.
2	**CHECK INPUT SIGNAL.** 1) Prepare the Subaru Select Monitor kit. 2) Turn the ignition switch to ON (engine OFF) and run the “PC application for Subaru Select Monitor”. 3) On «System Selection Menu» display, select {Integ. unit mode}. 4) Select the {Lighting AUTO input} from {Current Data Display & Save}.	Does the display switch between OFF ←→ ON when the lighting switch is moved to AUTO position?	Go to step **3**.	Go to step **8**.
3	**CHECK INPUT SIGNAL.** 1) From {Current Data Display & Save}, select {Illumination Sensor Output}. 2) Light up the darkness around light control sensor.	Is the value depending on the brightness output? (darkness: 47 — 53 Hz)	Check and replace the body integrated unit. • Inspection: <Ref. to BC(diag)-2, Basic Diagnostic Procedure.> • Replacement: <Ref. to SL-71, Body Integrated Unit.>	Go to step **4**.
4	**CHECK HARNESS.** 1) Disconnect the body integrated unit connector and light control sensor connector. 2) Check the harness between body integrated unit connector and light control sensor connector. ***Connector & terminal*** ***(B280) No. 19 — (i194) No. 4:*** ***(B280) No. 29 — (i194) No. 6:***	Is harness normal?	Go to step **5**.	Repair or replace the harness.
5	**CHECK HARNESS.** 1) Turn the ignition switch to ON. 2) Measure the voltage between light control sensor connector and chassis ground. ***Connector & terminal*** ***(i194) No. 3 (+) — Chassis ground (–):***	Is the voltage 10 V or more?	Go to step **6**.	Repair or replace the harness.
6	**CHECK BODY INTEGRATED UNIT.** 1) Connect the body integrated unit connector. 2) Measure the resistance between body integrated unit connector and chassis ground. ***Connector & terminal*** ***(B280) No. 29 — Chassis ground:***	Is the resistance less than 10 Ω?	Go to step **7**.	Replace the body integrated unit. <Ref. to SL-71, Body Integrated Unit.>

GETtheMANUALS.org

Step		Check	Yes	No
7	**CHECK LIGHT CONTROL SENSOR.** 1) Connect the light control sensor connector. 2) Turn the ignition switch to ON. 3) Set the lighting switch to AUTO position. 4) Connect the Subaru Select Monitor, and read the waveform data between light control sensor connector. ***Connector & terminal*** ***(i194) No. 4 — No. 6:*** 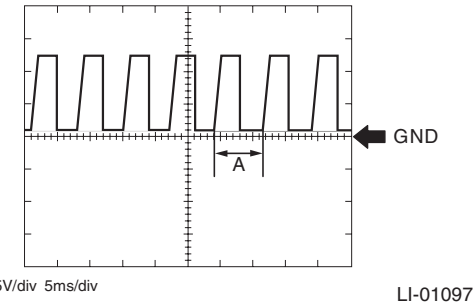 	Is waveform normal? (Interval of A becomes shorter as the surrounding becomes brighter.)	Go to step **8**.	Replace the light control sensor.
8	**CHECK COMBINATION SWITCH (LIGHT).** Check the combination switch (light). <Ref. to LI-23, INSPECTION, Combination Switch (Light).>	Is the combination switch (light) normal?	Go to step **9**.	Replace the combination switch (light).
9	**CHECK HARNESS.** 1) Disconnect the body integrated unit connector. 2) Check the harness between body integrated unit connector and combination switch (light) connector. ***Connector & terminal*** ***(B71) No. 14 — (B281) No. 16:***	Is harness normal?	Check and replace the body integrated unit. • Inspection: <Ref. to BC(diag)-2, Basic Diagnostic Procedure.> • Replacement: <Ref. to SL-71, Body Integrated Unit.>	Repair or replace the harness.

2. CHECK LIGHTING SWITCH

Measure the resistance between lighting switch terminals. <Ref. to LI-23, INSPECTION, Combination Switch (Light).>

3. CHECK DIMMER & PASSING SWITCH

Measure the resistance between dimmer & passing switch terminals. <Ref. to LI-23, INSPECTION, Combination Switch (Light).>

C: NOTE

For operation procedures of each component of the headlight system, refer to the respective section.

- Headlight Assembly: <Ref. to LI-25, Headlight Assembly.>
- Headlight bulb: <Ref. to LI-31, Headlight Bulb.>
- Combination switch (light): <Ref. to LI-19, Combination Switch (Light).>
- Light control sensor: <Ref. to LI-24, Light Control Sensor.>

GETtheMANUALS.org

4. Day Time Running Light System

A: WIRING DIAGRAM

Refer to “Headlight System” in the wiring diagram. <Ref. to WI-172, WIRING DIAGRAM, Headlight System.>

B: INSPECTION

1. DAYTIME RUNNING LIGHT SYSTEM CHECK

Step		Check	Yes	No
1	**CHECK DTC.** 1) Prepare the Subaru Select Monitor kit. 2) Turn the ignition switch to ON (engine OFF) and run the “PC application for Subaru Select Monitor”. 3) On «System Selection Menu» display, select {Integ. unit mode}. 4) Select {Diagnostic Code(s) Display}.	Is DTC displayed?	Perform the diagnosis according to DTC.	Go to step **2**.
2	**CHECK INPUT SIGNAL.** 1) From the state in step 1), select {Integ. unit mode}. 2) Select the following input signals. (1) Parking Brake Switch Input (2) Shift position (3) Lighting II Switch Input	Is the input signal normal?	Go to step **3**.	Check the defective part.
3	**CHECK RELAY.** Check the daytime running light relay. <Ref. to LI-5, CHECK RELAY, INSPECTION, Relay and Fuse.>	Is the relay OK?	Go to step **4**.	Replace the relay.
4	**CHECK HARNESS.**	Is harness normal?	Replace the body integrated unit. <Ref. to SL-71, REMOVAL, Body Integrated Unit.>	Repair or replace the harness.

C: NOTE

For operation procedures of each component of the daytime running light system, refer to the respective section.

- Headlight Assembly: <Ref. to LI-74, Day Time Running Resistor.>
- Headlight bulb: <Ref. to LI-31, Headlight Bulb.>
- Combination switch (light): <Ref. to LI-19, Combination Switch (Light).>
- Daytime running resistor: <Ref. to LI-74, Day Time Running Resistor.>

GETtheMANUALS.org

5. Clearance Light and Illumination Light System

A: WIRING DIAGRAM

Refer to “Clearance Light and Illumination Light System” in the wiring diagram. <Ref. to WI-89, WIRING DIAGRAM, Clearance Light and Illumination Light System.>

B: INSPECTION

1. CHECK LIGHTING SWITCH

Measure the resistance between lighting switch terminals. <Ref. to LI-23, INSPECTION, Combination Switch (Light).>

C: NOTE

For operation procedures of each component of the clearance light & illumination light system, refer to the respective sections.

- Combination switch (light): <Ref. to LI-19, Combination Switch (Light).>
- Clearance light/parking light bulb: <Ref. to LI-37, Clearance/Parking Light Bulb.>
- License plate light: <Ref. to LI-58, License Plate Light.>
- Ignition switch illumination: <Ref. to LI-71, Ignition Switch Illumination.>

GETtheMANUALS.org

6. Front Fog Light System

A: WIRING DIAGRAM

Refer to “Front Fog Light System” in the wiring diagram. <Ref. to WI-167, WIRING DIAGRAM, Front Fog Light System.>

B: INSPECTION

1. CHECK FRONT FOG LIGHT SWITCH

Measure the resistance between front fog light switch terminals. <Ref. to LI-23, INSPECTION, Combination Switch (Light).>

C: NOTE

For operation procedures of each component of the front fog light system, refer to the respective section.

- Combination switch (light): <Ref. to LI-19, Combination Switch (Light).>
- Front fog light assembly: <Ref. to LI-40, Front Fog Light Assembly.>
- Front fog light bulb: <Ref. to LI-43, Front Fog Light Bulb.>

GETtheMANUALS.org

7. Turn Signal Light and Hazard Light System

A: WIRING DIAGRAM

Refer to “Turn Signal Light and Hazard Light System” in the wiring diagram. <Ref. to WI-249, WIRING DIAGRAM, Turn Signal Light and Hazard Light System.>

B: INSPECTION

1. CHECK TURN SIGNAL SWITCH

Measure the resistance between turn signal switch terminals. <Ref. to LI-23, INSPECTION, Combination Switch (Light).>

2. CHECK HAZARD SWITCH

1) Remove the A/C control panel.
- Manual A/C model: <Ref. to AC-49, MANUAL A/C MODEL, REMOVAL, Control Panel.>
- Auto A/C model: <Ref. to AC-46, AUTO A/C MODEL, REMOVAL, Control Panel.>

2) Measure the resistance between hazard switch terminals.

Preparation tool: Circuit tester
- AUTO A/C MODEL

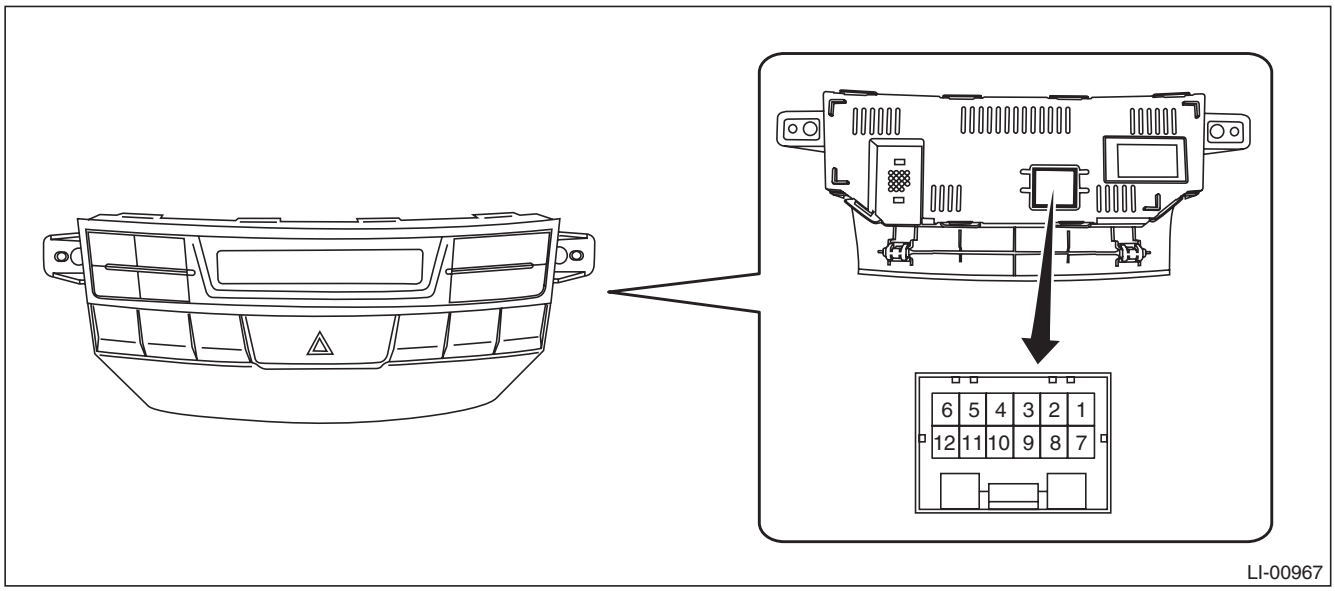

Terminal No.	Inspection conditions	Specification
1 — 2	Switch OFF	1 MΩ or more
	Switch ON	Less than 1 Ω

GETtheMANUALS.org

- MANUAL A/C MODEL

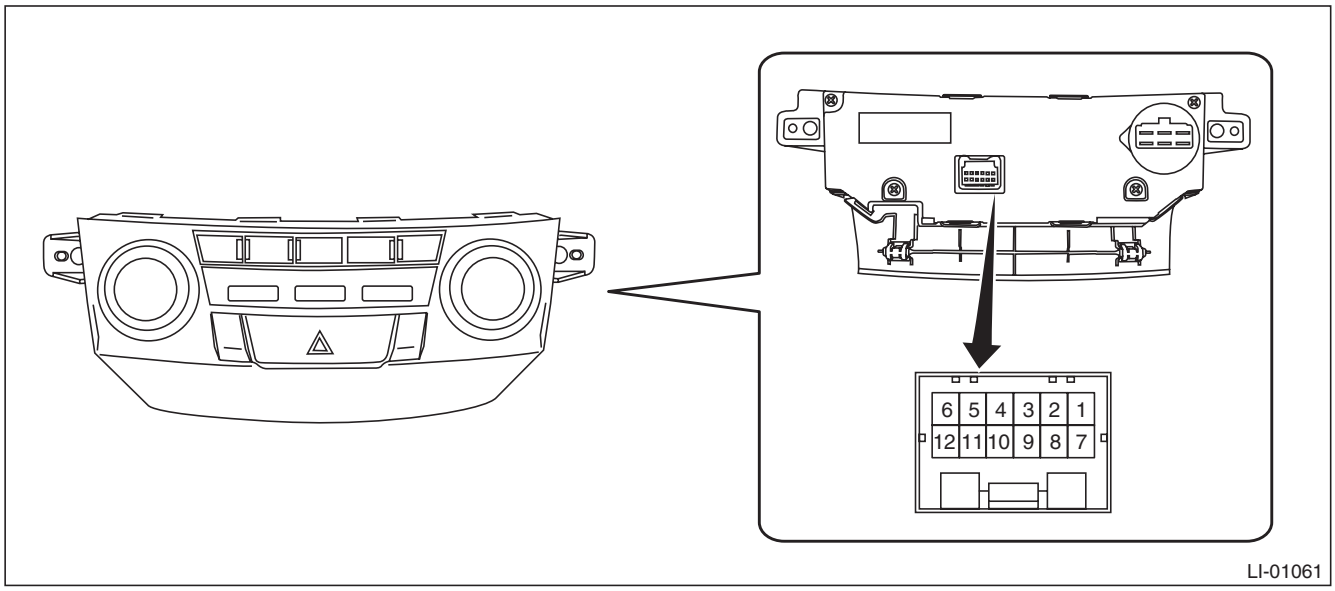

Terminal No.	Inspection conditions	Specification
4 — 5	Switch OFF	1 MΩ or more
	Switch ON	Less than 1 Ω

3) Replace the A/C control panel if the inspection result is not within the standard value.

3. CHECK TURN SIGNAL AND HAZARD MODULE

1) Measure the voltage between turn signal & hazard module connector and chassis ground.

Preparation tool: Circuit tester

Connector

Terminal No.	Input/Output	Inspection conditions	Standard
6 ←→ Chassis ground	Input	Turn signal switch (Right) OFF → ON	9 V or more → less than 1 V
5 ←→ Chassis ground	Input	Turn signal switch (Left) OFF → ON	9 V or more → less than 1 V
8 ←→ Chassis ground	Input	Hazard switch OFF → ON	9 V or more → less than 1 V
2 ←→ Chassis ground	Output	Turn signal switch (Right) OFF → ON	Repeat less than 1 V → less than 1 V ←→ more than 9 V at 60 to 120 times per minute.
3 ←→ Chassis ground	Output	Turn signal switch (Left) OFF → ON	Repeat less than 1 V → less than 1 V ←→ more than 9 V at 60 to 120 times per minute.
2 ←→ Chassis ground	Output	Hazard switch OFF → ON	Repeat less than 1 V → less than 1 V ←→ more than 9 V at 60 to 120 times per minute.
3 ←→ Chassis ground	Output	Hazard switch OFF → ON	Repeat less than 1 V → less than 1 V ←→ more than 9 V at 60 to 120 times per minute.

2) Replace the turn signal and hazard module if the inspection result is not within the standard value.

C: NOTE

For operation procedures of each component of the turn signal and hazard light system, refer to the respective sections.

- Combination switch (light): <Ref. to LI-19, Combination Switch (Light).>
- Front turn signal light bulb: <Ref. to LI-35, Front Turn Signal Light Bulb.>
- Side turn signal light assembly: <Ref. to LI-44, Side Turn Signal Light Assembly.>
- Rear combination light assembly: <Ref. to LI-45, Rear Combination Light Assembly.>
- Rear turn signal light bulb: <Ref. to LI-51, Rear Turn Signal Light Bulb.>

GETtheMANUALS.org

8. Back-up Light System

A: WIRING DIAGRAM

Refer to “Back-up Light System” in the wiring diagram. <Ref. to WI-82, WIRING DIAGRAM, Back-up Light System.>

B: INSPECTION

1. CHECK BACK-UP LIGHT SWITCH (MT MODEL)

1) Disconnect the back-up light switch connector.
2) Measure the resistance between back-up light switch terminals.

Preparation tool: Circuit tester

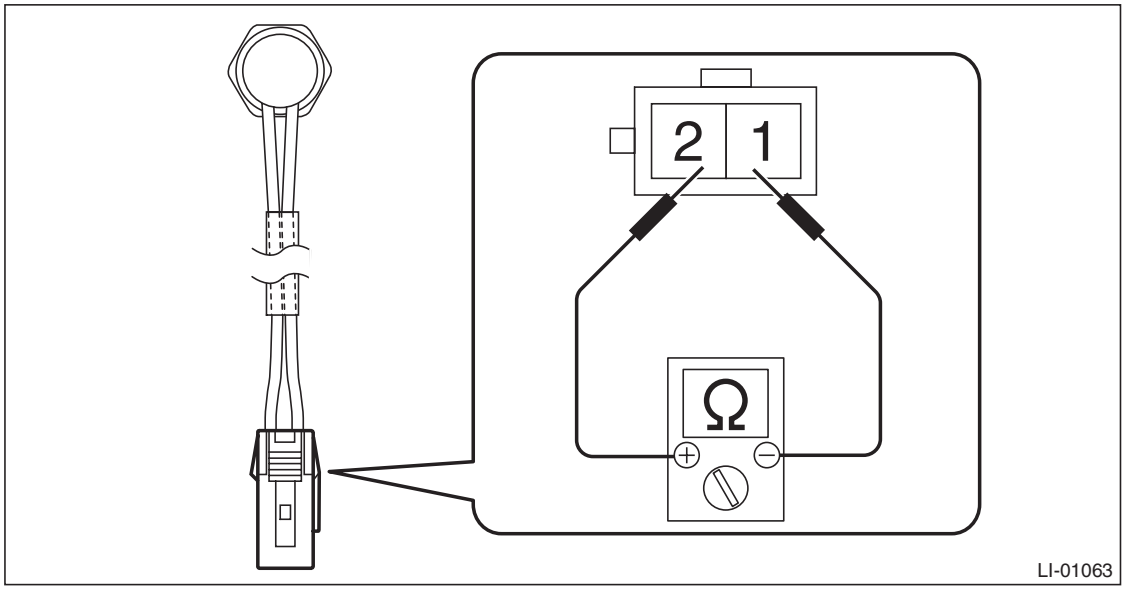

Terminal No.	Inspection conditions	Specification
1 — 2	When shift lever is set in reverse position	Less than 1 Ω
	Other positions	1 MΩ or more

3) Replace the back-up light switch if the inspection result is not within the standard value.

GETtheMANUALS.org

2. CHECK INHIBITOR SWITCH (AT/CVT MODEL)

1) Disconnect the inhibitor switch connector.
2) Measure the resistance between inhibitor switch terminals.

Preparation tool: Circuit tester

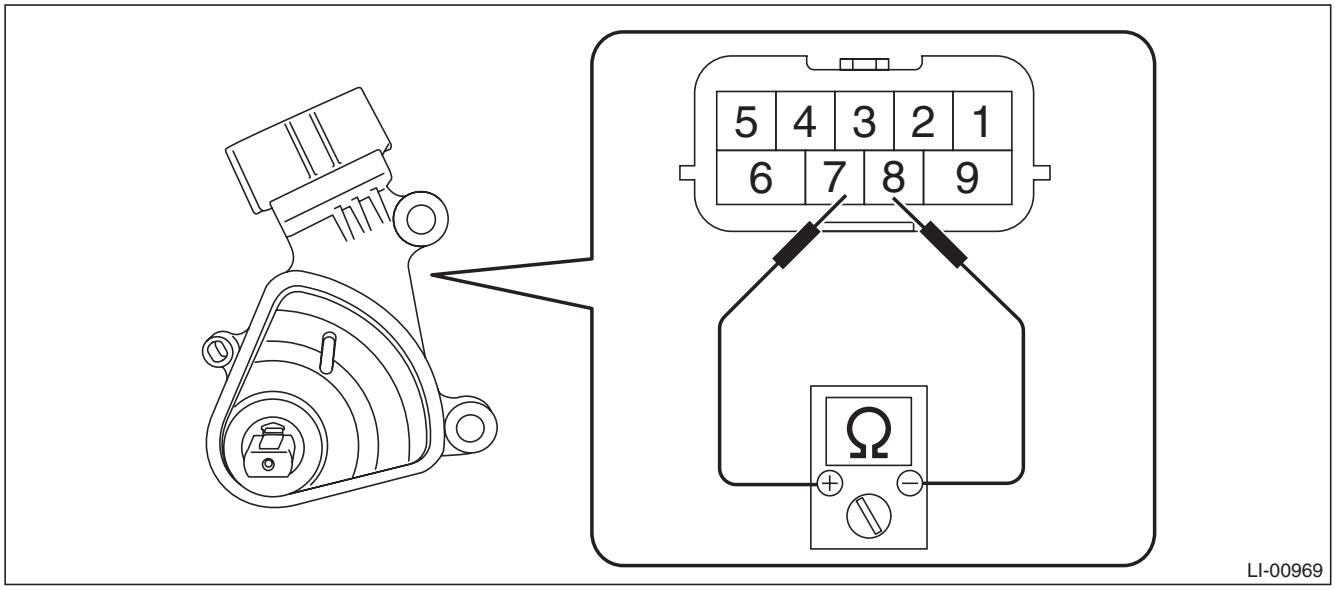

Terminal No.	Inspection conditions	Specification
7 — 8	When the selector lever is in the “R” range	Less than 1 Ω
	Other positions	1 MΩ or more

3) Replace the inhibitor switch if the inspection result is not within the standard value.

C: NOTE

For operation procedures of each component of the back-up light system, refer to the respective section.

- Rear combination light assembly: <Ref. to LI-45, Rear Combination Light Assembly.>
- Rear finisher light assembly: <Ref. to LI-54, Rear Finisher Light Assembly.>
- Back-up light bulb: <Ref. to LI-56, Back-up Light Bulb.>

GETtheMANUALS.org

9. Stop Light System

A: WIRING DIAGRAM

Refer to “Stop Light System” in the wiring diagram. <Ref. to WI-244, WIRING DIAGRAM, Stop Light System.>

B: INSPECTION

1. CHECK STOP LIGHT SWITCH

1) Disconnect the stop light switch connector.
2) Measure the resistance between stop light switch terminals.

Preparation tool: Circuit tester

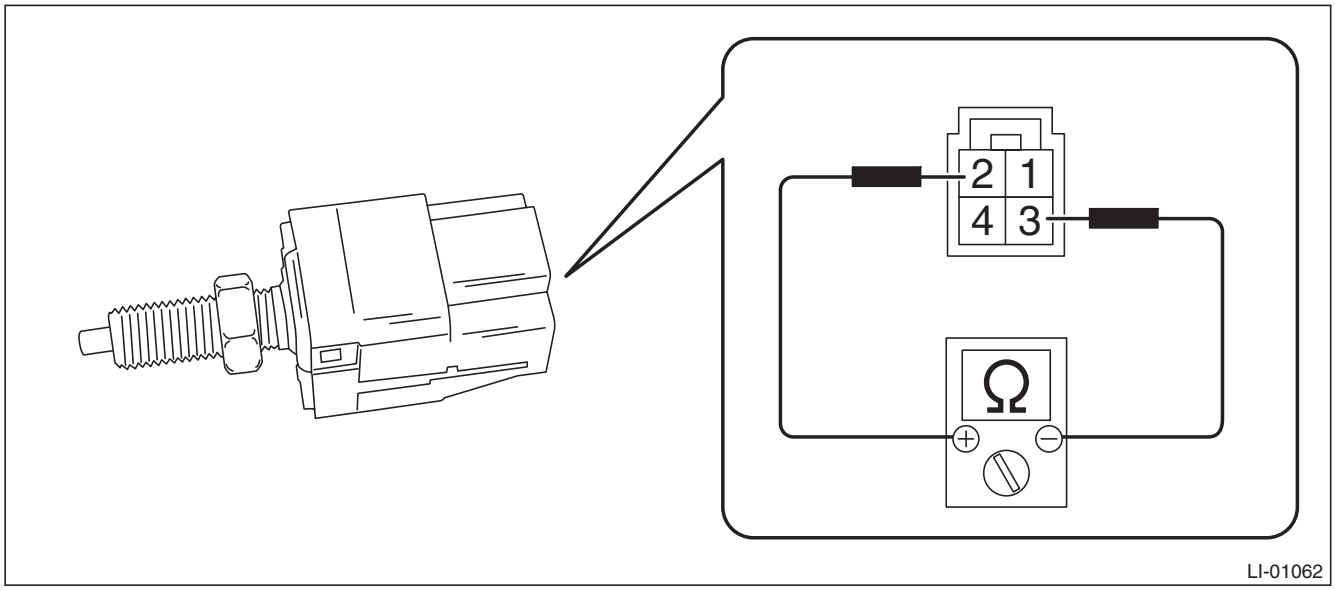

Terminal No.	Inspection conditions	Specification
2 — 3	When brake pedal is depressed	Less than 1 Ω
	When brake pedal is released	1 MΩ or more

3) Replace the stop light switch if the inspection result is not within the standard value.

C: NOTE

For operation procedures of each component of the stop light system, refer to the respective section.

- Rear combination light assembly: <Ref. to LI-45, Rear Combination Light Assembly.>
- Rear finisher light assembly: <Ref. to LI-54, Rear Finisher Light Assembly.>
- Tail light/stop light bulb: <Ref. to LI-47, Tail/Stop Light Bulb.>
- High-mounted stop light: <Ref. to LI-60, High-mounted Stop Light.>

GETtheMANUALS.org

10.Interior Light System

A: WIRING DIAGRAM

Refer to “Interior Light System” in the wiring diagram. <Ref. to WI-177, WIRING DIAGRAM, Interior Light System.>

B: INSPECTION

1. CHECK DOOR SWITCH.

1) Remove the door switch.
2) Measure the resistance between door switch terminals.

Preparation tool: Circuit tester

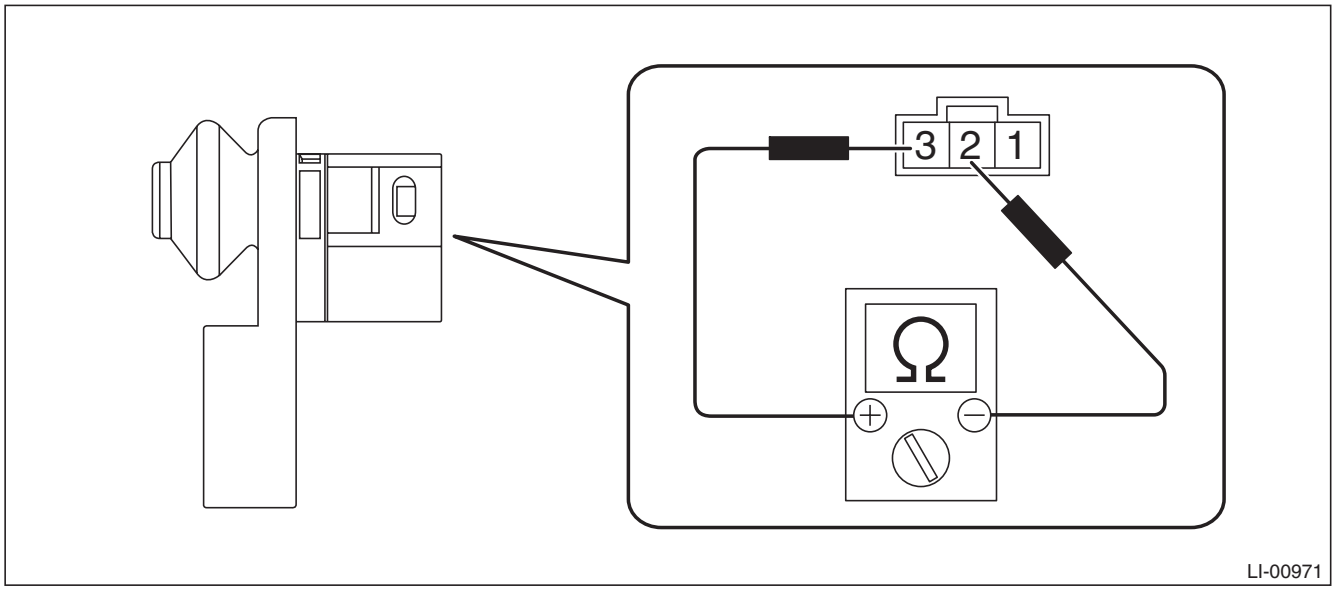

Terminal No.	Inspection conditions	Specification
2 — 3	When door is opened	Less than 1 Ω
	When door is closed	1 MΩ or more

3) Replace the door switch if the inspection result is not within the standard value.

GETtheMANUALS.org

2. CHECK REAR GATE LATCH SWITCH

1) Disconnect the rear gate latch switch connector.
2) Measure the resistance between rear gate latch switch terminals.

Preparation tool: Circuit tester

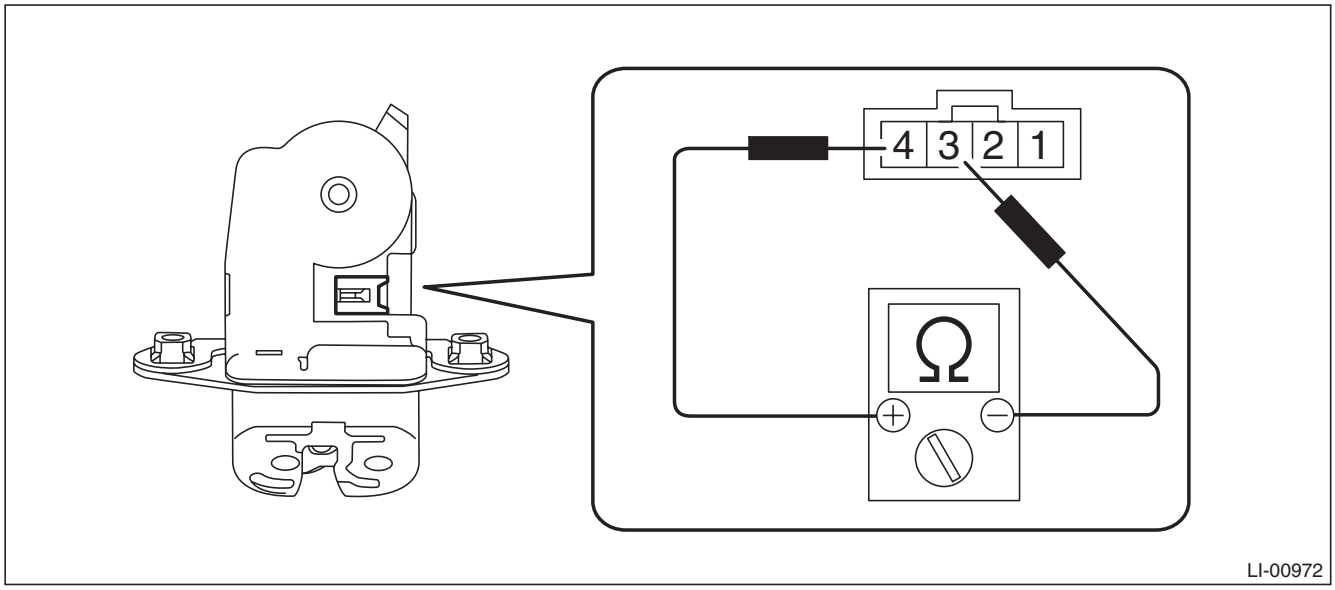

Terminal No.	Inspection conditions	Specification
3 — 4	When rear gate is opened	Less than 1 Ω
	When rear gate is closed	1 MΩ or more

3) If the inspection result is not within the standard value, replace the rear gate latch and actuator assembly.

GETtheMANUALS.org

3. CHECK TRUNK LID LATCH SWITCH

1) Disconnect the trunk lid latch switch connector.
2) Measure the resistance between trunk lid latch switch terminals.

Preparation tool: Circuit tester

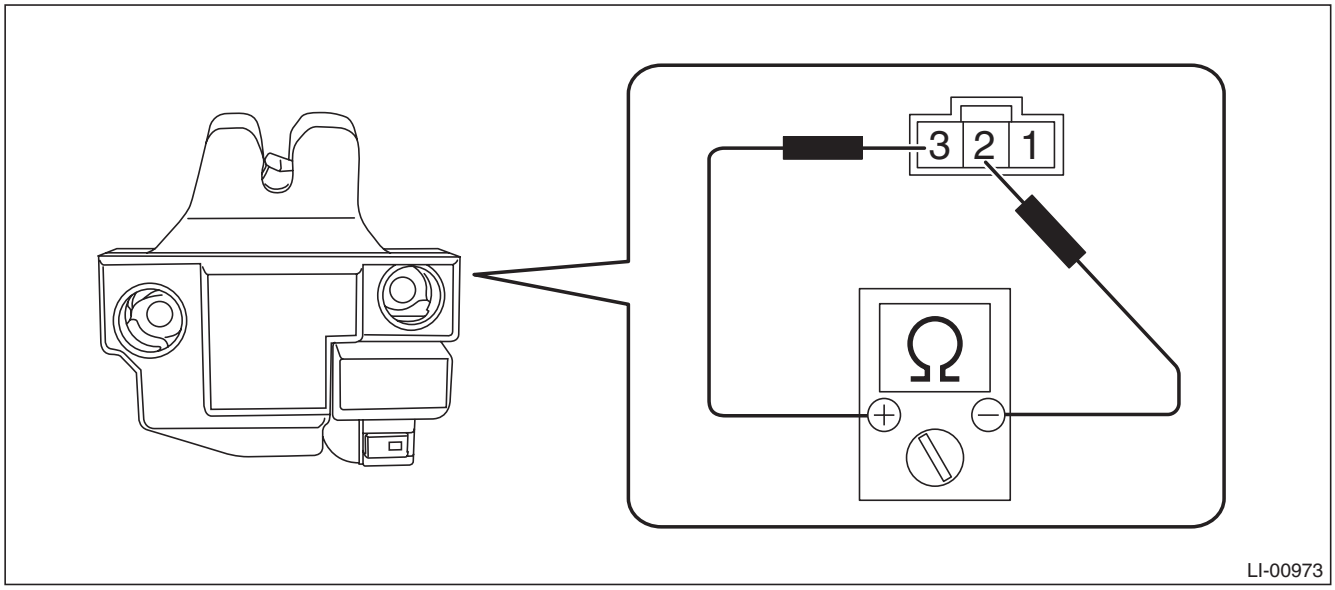

Terminal No.	Inspection conditions	Specification
2 — 3	When trunk lid is opened	Less than 1 Ω
	When trunk lid is closed	1 MΩ or more

3) If the inspection result is not within the standard value, replace the trunk lid latch and actuator assembly.

C: NOTE

For operation procedures of each component of the interior light system, refer to the respective section.

- Spot map light: <Ref. to LI-62, Spot Map Light.>
- Room light: <Ref. to LI-64, Room Light.>
- Luggage room light: <Ref. to LI-66, Luggage Room Light.>
- Trunk room light: <Ref. to LI-68, Trunk Room Light.>
- Glove box light: <Ref. to LI-69, Glove Box Light.>
- Door step light: <Ref. to LI-70, Door Step Light.>
- Door switch: <Ref. to LI-76, Door Switch.>

GETtheMANUALS.org

11.Combination Switch (Light)

A: REMOVAL

1) Position the front wheels straight ahead. (After moving a vehicle 5 m (16 ft) or more with front wheels positioned straight ahead, make sure that the vehicle moves straight ahead.)
2) Turn the ignition switch to OFF.
3) Disconnect the ground cable from battery and wait for at least 60 seconds before starting work.
4) Remove the driver's airbag module assembly.

CAUTION:
Before handling the airbag module, refer to "CAUTION" of "General Description" in "AIRBAG SYSTEM". <Ref. to AB-9, CAUTION, General Description.>

(1) Using a hexagon wrench etc. wrapped by protective tape, insert the snap pins and release the locks (3 locations).

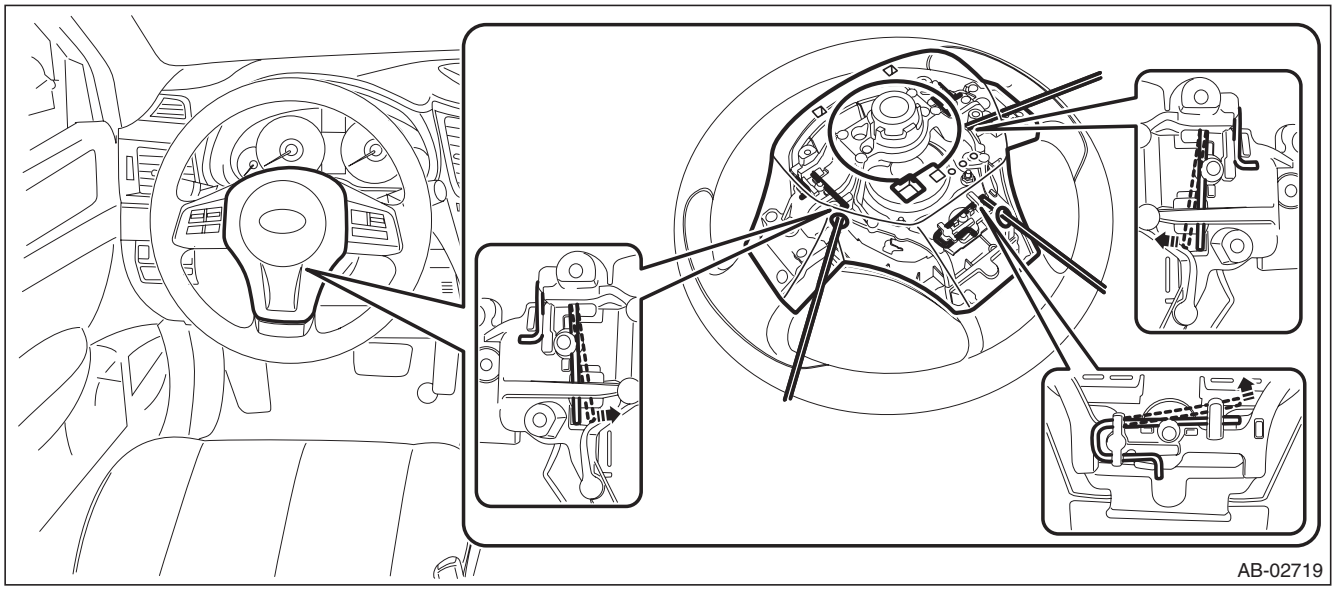

(2) Disconnect the horn harness and airbag connector and remove the airbag module assembly. <Ref. to AB-18, PROCEDURE, Airbag Connector.>

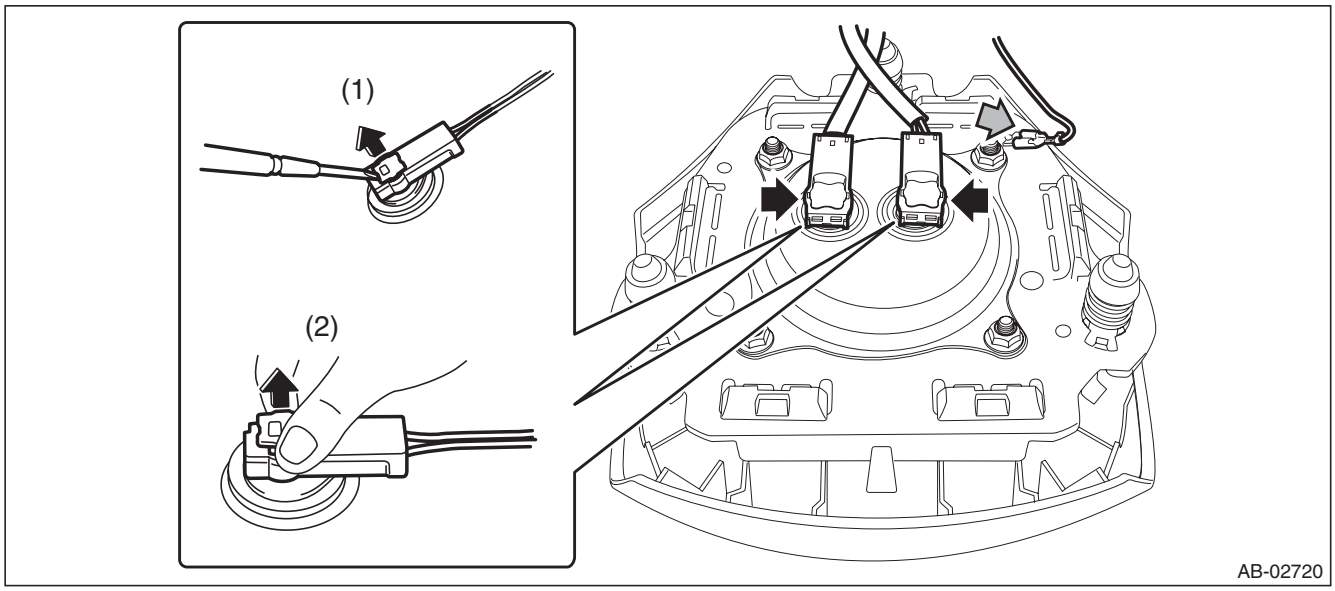

GETtheMANUALS.org

5) Remove the steering wheel.

CAUTION:
- **Always use the steering wheel puller for removal to avoid deforming the steering wheel.**
- **If the steering wheel has been removed, make sure that the roll connector is not turned from the original position.**

Preparation tool: Steering wheel puller

(1) Disconnect the connector and remove the nut.
(2) Put alignment marks and remove the steering wheel using a steering puller.

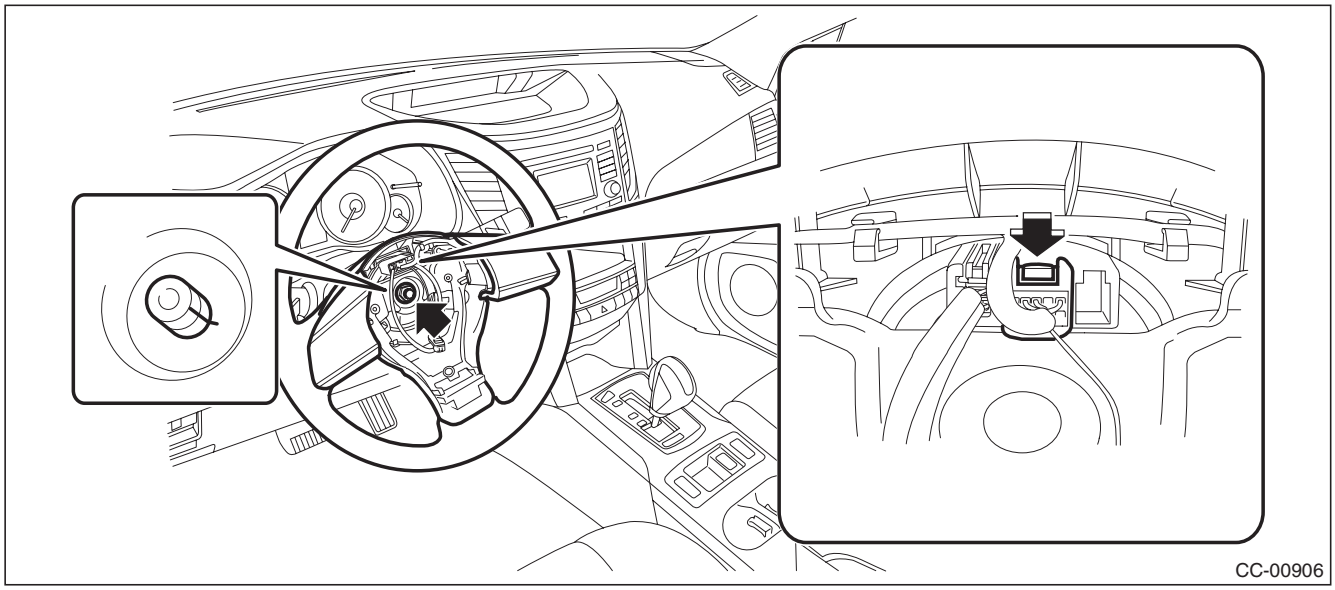

6) Remove the steering column cover.

(1) Lower the lever of the steering column.
(2) Release the claws and remove the screws, then detach the steering column lower cover.

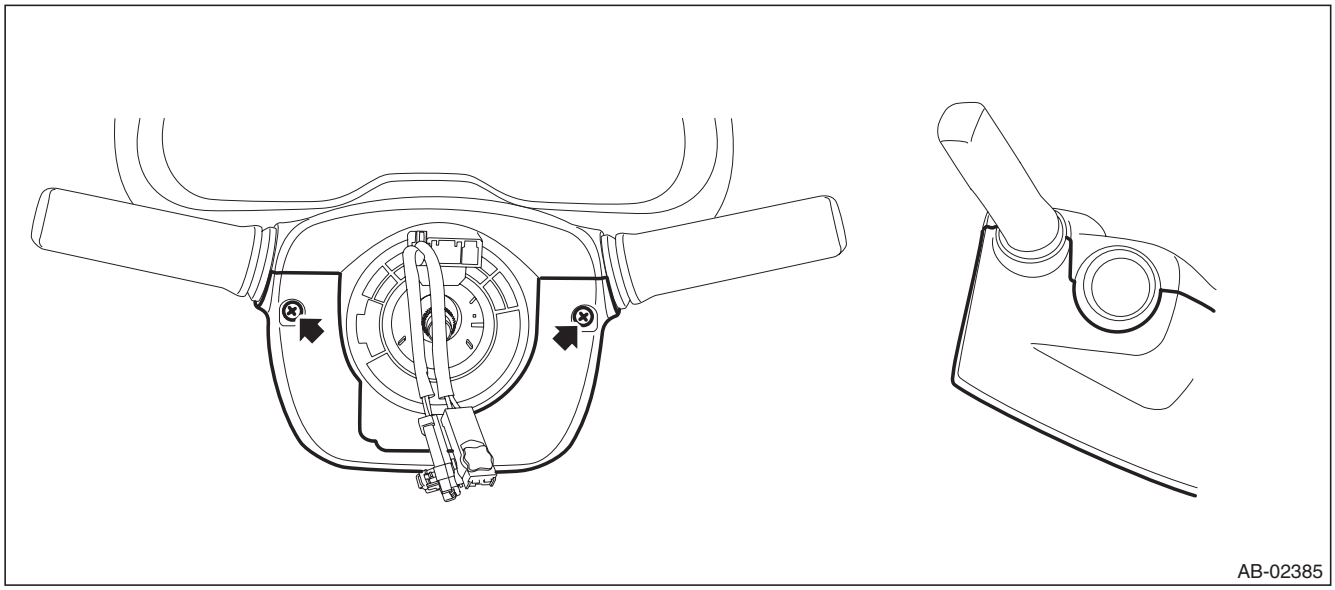

GETtheMANUALS.org

(3) Separate the steering column upper cover and steering upper cover, and remove the steering column upper cover.

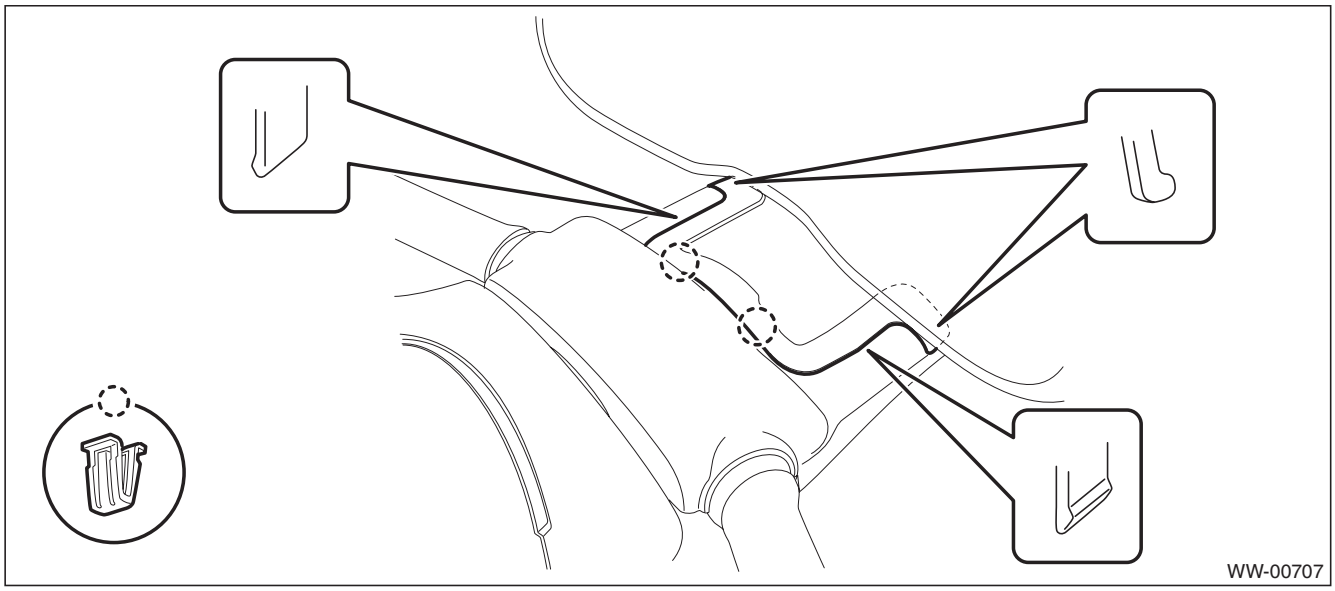

7) Remove the roll connector.

CAUTION:
Make sure that the roll connector is not turned from the original position.

(1) Disconnect the connector under the roll connector.
(2) Release the claws and remove the roll connector.

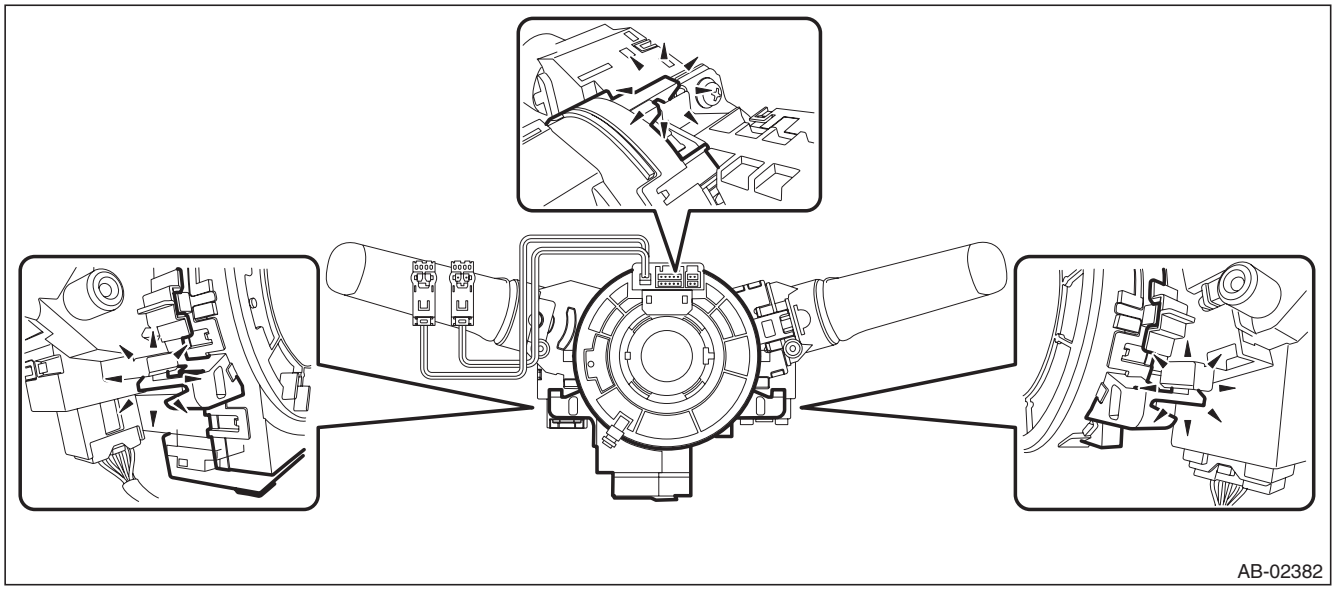

GETtheMANUALS.org

8) Remove the wiper switch assembly.
   (1) Disconnect the connector from wiper switch.
   (2) Release the claws, and pull out the wiper switch assembly.

CAUTION:
Do not press the claws with excessive force. They may be damaged.

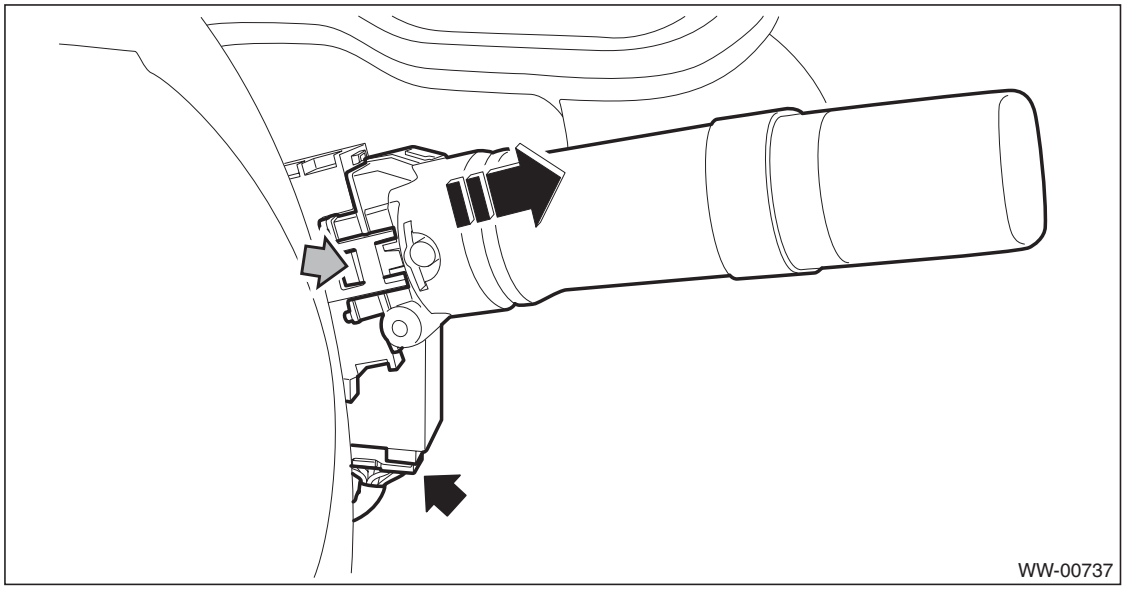

9) Remove the combination switch (light).
   (1) Disconnect the connector of combination switch.
   (2) Remove the screws and detach the combination switch (light).

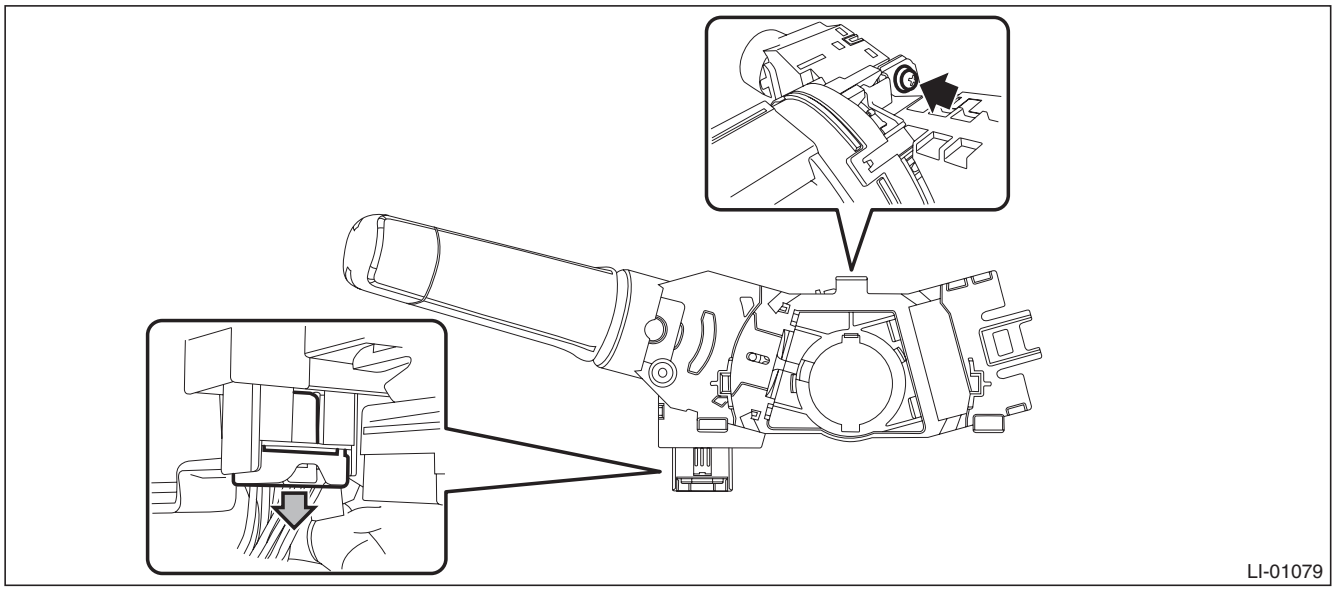

B: INSTALLATION

1) Install each part in the reverse order of removal.

CAUTION:
- **Before handling the airbag module, refer to “CAUTION” of “General Description” in “AIRBAG SYSTEM”. <Ref. to AB-9, CAUTION, General Description.>**
- **Do not allow harness and connectors to interfere or get tangled up with other parts.**

2) Before installing steering wheel, be sure to adjust the direction of roll connector with steering. <Ref. to AB-101, ADJUSTMENT, Roll Connector.>

GETtheMANUALS.org

Tightening torque:
Combination switch (light): 3.5 N·m (0.36 kgf-m, 2.6 ft-lb)
Steering wheel: 39 N·m (3.98 kgf-m, 28.8 ft-lb)

Clearance:
Between column cover and steering wheel: 2 — 4 mm (0.08 — 0.16 in)

C: INSPECTION

1) Disconnect the combination switch (light) connector.
2) Measure the resistance between combination switch (light) connector terminals.

Preparation tool: Circuit tester

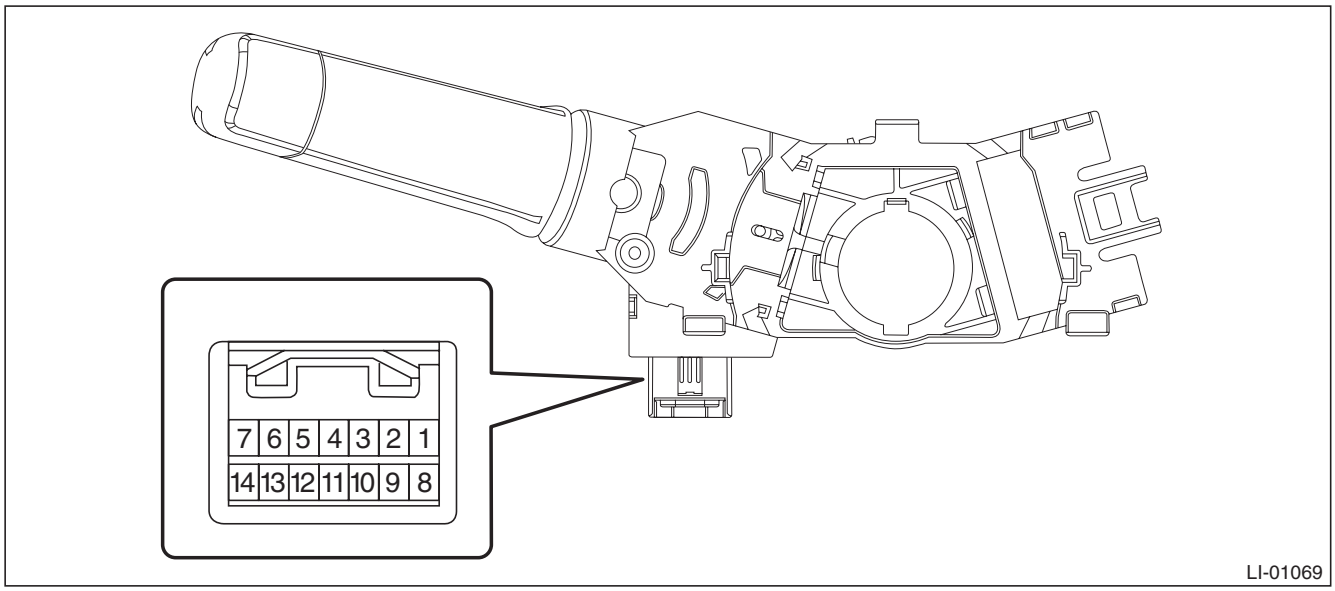

3) Replace the combination switch (light) if the inspection result is not within the standard value.

1. LIGHTING SWITCH

Terminal No.	Inspection Conditions	Standard
—	Switch OFF	1 MΩ or more
5 — 7	Switch 1 (TAIL)	Less than 1 Ω
6, 5 — 7	Switch 2 (HEAD)	Less than 1 Ω
14 — 7	Switch AUTO	Less than 1 Ω

2. DIMMER & PASSING SWITCH

Terminal No.	Inspection Conditions	Standard
4, 3 — 7	Switch PASS	Less than 1 Ω
4 — 7	Switch UP	Less than 1 Ω

3. TURN SIGNAL SWITCH

Terminal No.	Inspection Conditions	Specification
1 — 7	Switch TURN (RH)	Less than 1 Ω
2 — 7	Switch TURN (LH)	Less than 1 Ω

4. FRONT FOG LIGHT SWITCH

Terminal No.	Inspection Conditions	Specification
12 — 11	Switch OFF	1 MΩ or more
	Switch ON	Less than 1 Ω

GETtheMANUALS.org

12. Light Control Sensor

A: REMOVAL

NOTE:
The light control sensor is integrated with the sunload sensor.
1) Disconnect the ground cable from battery.
2) Remove the light control sensor.

CAUTION:
Be careful not to damage the sensors and interior trims when removing.

(1) Release the claws and clips, then detach the side speaker cover (RH).

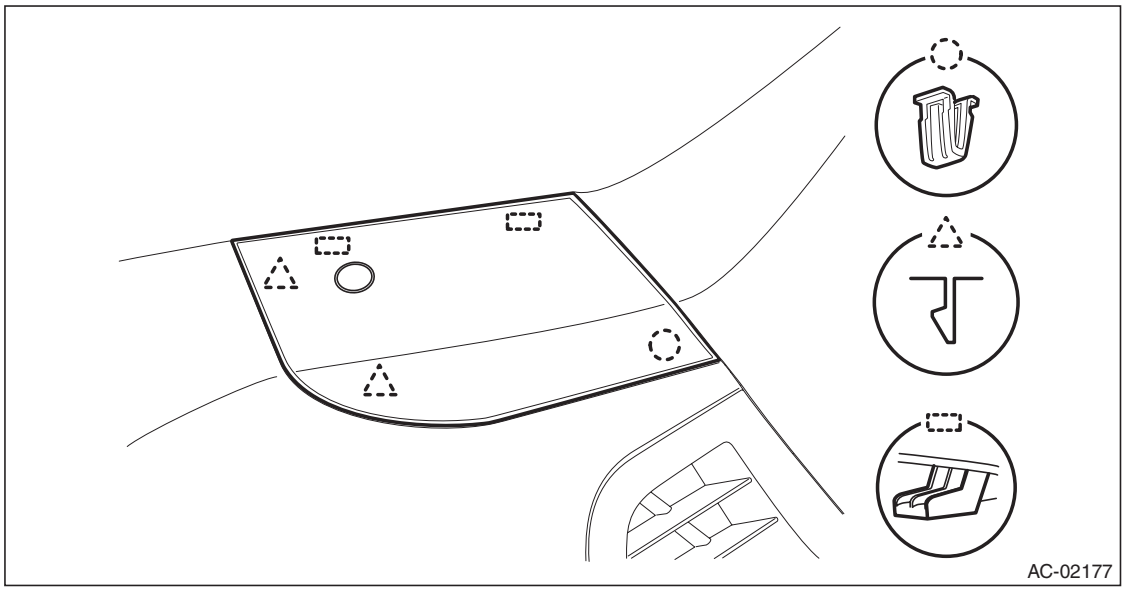

(2) Push out the light control sensor by pressing the left and right claws.
(3) Disconnect the connector, and remove the light control sensor.

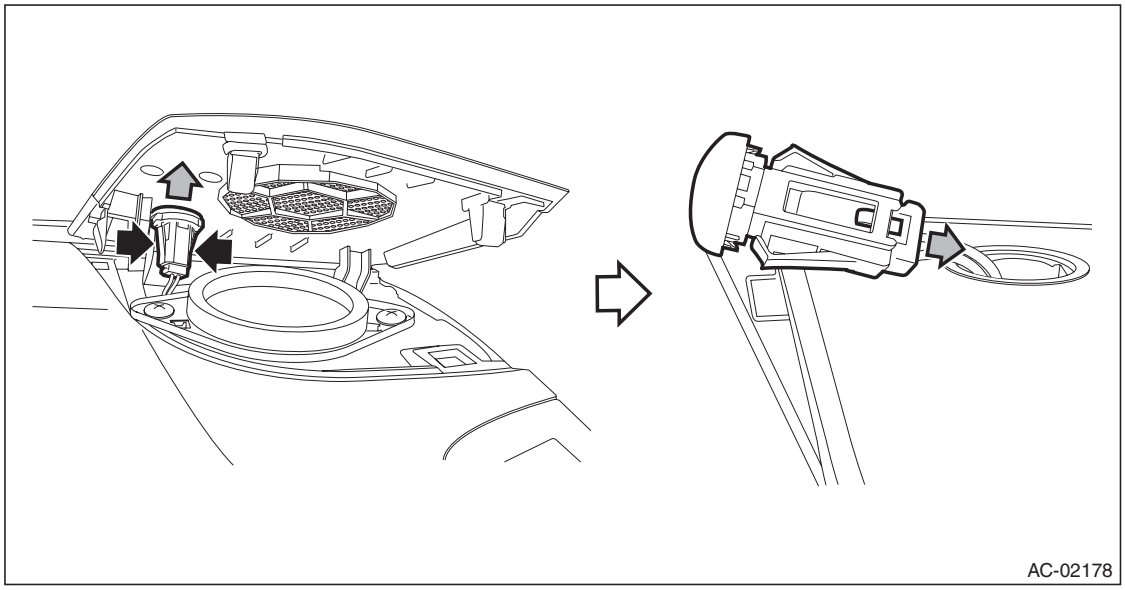

B: INSTALLATION

Install each part in the reverse order of removal.

C: INSPECTION

For the inspection of the light control sensor, refer to “AUTO HEADLIGHT SYSTEM CHECK” of “Headlight System”. <Ref. to LI-6, AUTO HEADLIGHT SYSTEM CHECK, INSPECTION, Headlight System.>

GETtheMANUALS.org

13. Headlight Assembly

A: REMOVAL

CAUTION:
Do not perform work with wet hands.

1) Disconnect the ground cable from battery.
2) Remove the clips and remove the air intake duct. (When removing the headlight RH)

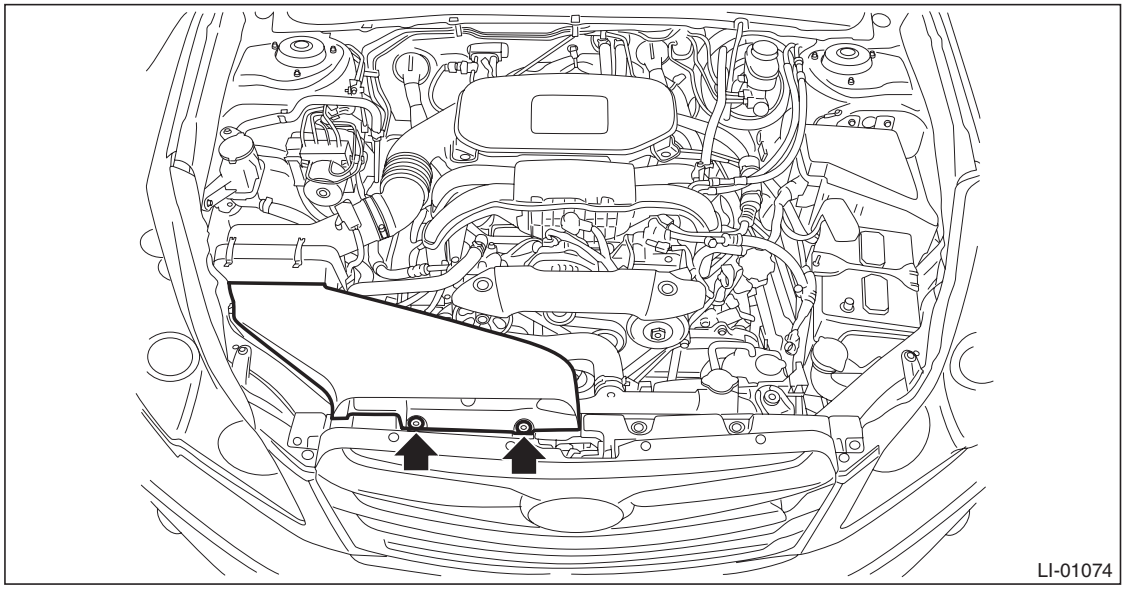

3) Remove the front bumper face assembly. <Ref. to EI-39, REMOVAL, Front Bumper.>
4) Remove the fender cover assembly UPR.
   (1) Remove the clip.
   (2) Release the claws of the fender cover assembly UPR by pulling it forward and remove the fender cover.

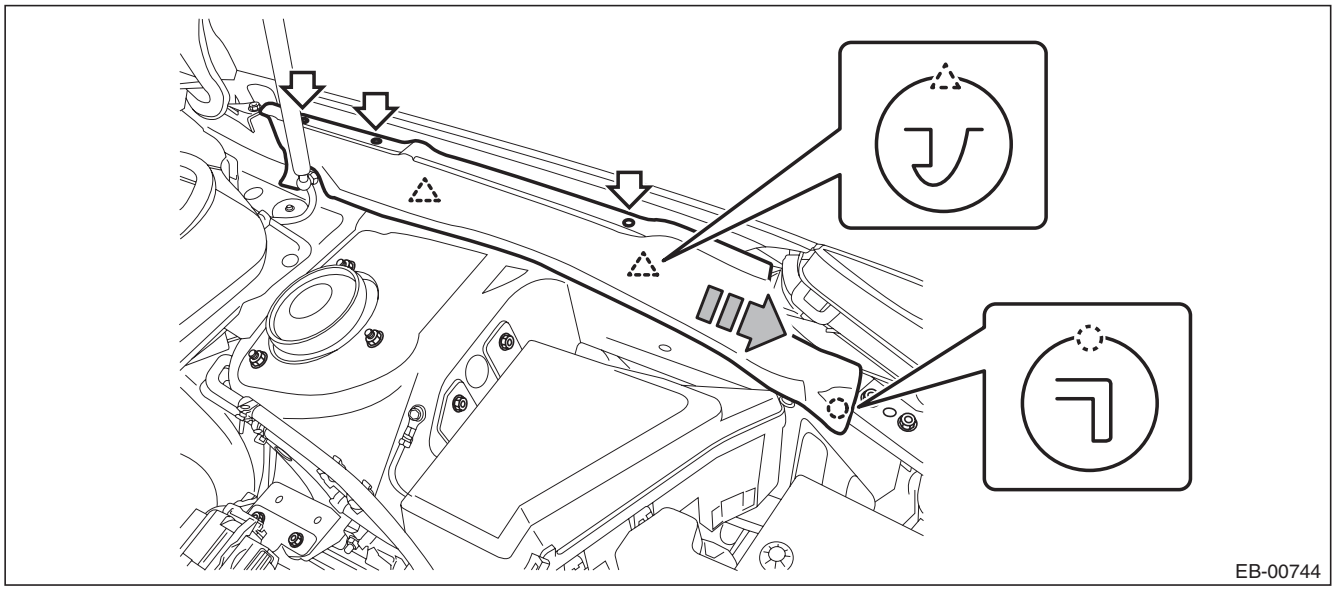

GETtheMANUALS.org

5) Remove the headlight assembly.
(1) Remove the bolts and clips, and pull out the headlight assembly to the front of the vehicle.

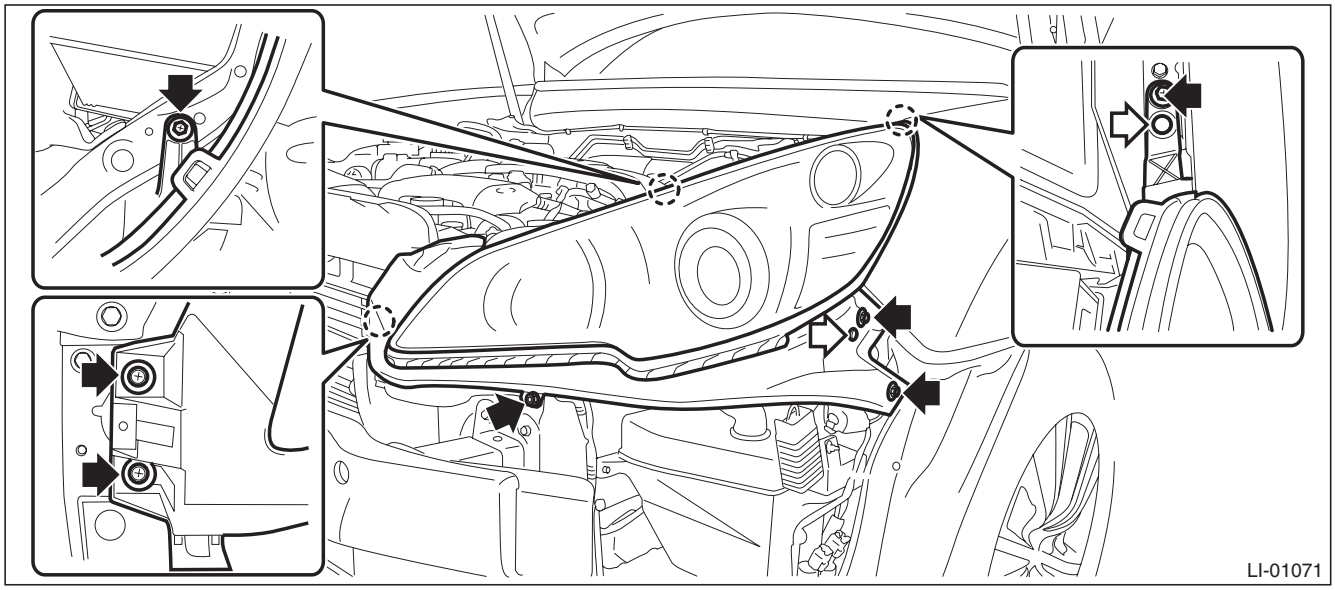

(2) Disconnect the connector and remove the headlight assembly.
- Headlight connector RH

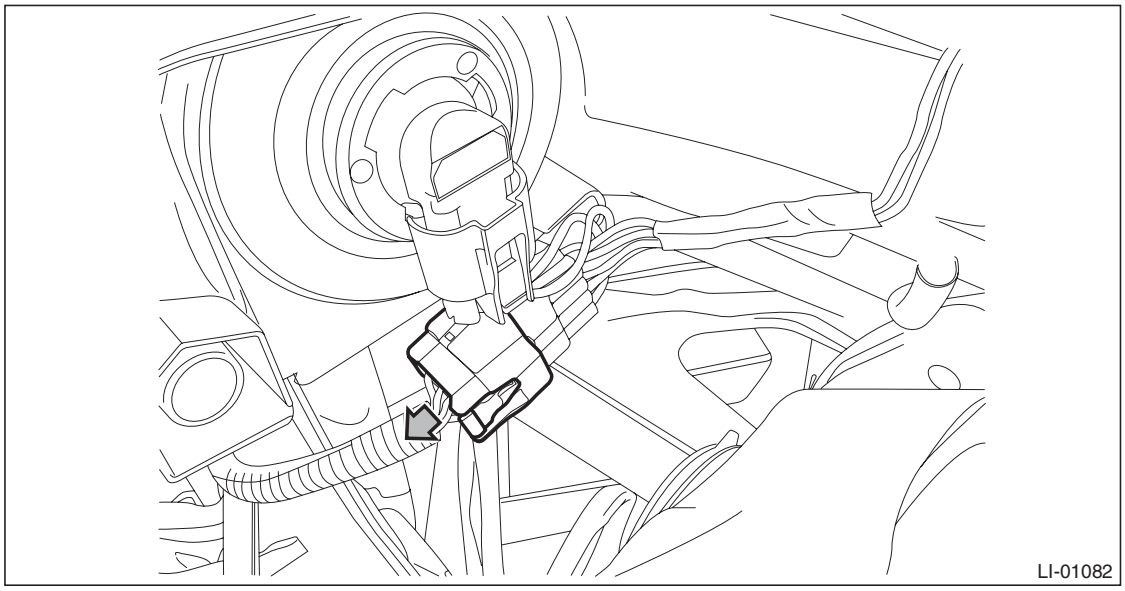

GETtheMANUALS.org

- Headlight connector LH

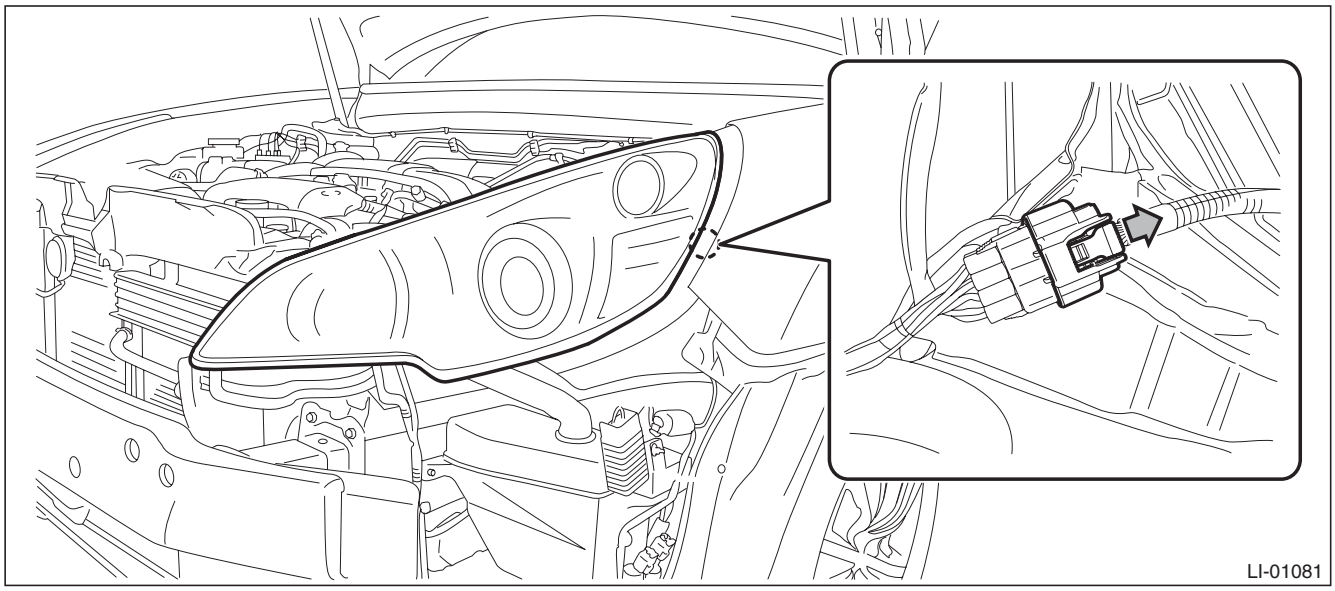

B: INSTALLATION

1) Install each part in the reverse order of removal.

Tightening torque:
Headlight assembly: 7.5 N·m (0.76 kgf-m, 5.5 ft-lb)

2) Adjust the headlight beam and fog light beam.
- Adjust the headlight beam. <Ref. to LI-27, HEADLIGHT BEAM ADJUSTMENT, ADJUSTMENT, Headlight Assembly.>
- Adjust the fog light beam. (Model with fog light) <Ref. to LI-41, FOG LIGHT AIMING, ADJUSTMENT, Front Fog Light Assembly.>

C: ADJUSTMENT

1. HEADLIGHT BEAM ADJUSTMENT

CAUTION:
- **Turn off the light before adjusting the headlight beam level. If it is necessary to inspect the beam level, do not keep the light on for two minutes or more.**
- **When blocking the light emitted from the headlight, use a light shield or equivalent.**

Do not apply the tape on the lens or place the cloth over it. It may raise the temperature in the light and cause deformation/bubble formations of the plastic lens.

1) Before checking the headlight beam level, be sure of the following:
- The area around the headlight has not sustained any scratches, damage or other type of deformation.
- Vehicle is parked on a level surface.
- The inflation pressure of tires is correct.
- Vehicle's fuel tank is fully filled.

2) Bounce the vehicle several times to normalize the suspension.
3) Make certain that someone is seated in the driver's seat.

GETtheMANUALS.org

4) Measure the distance between the low beam bulb centers and the height of the bulb center.

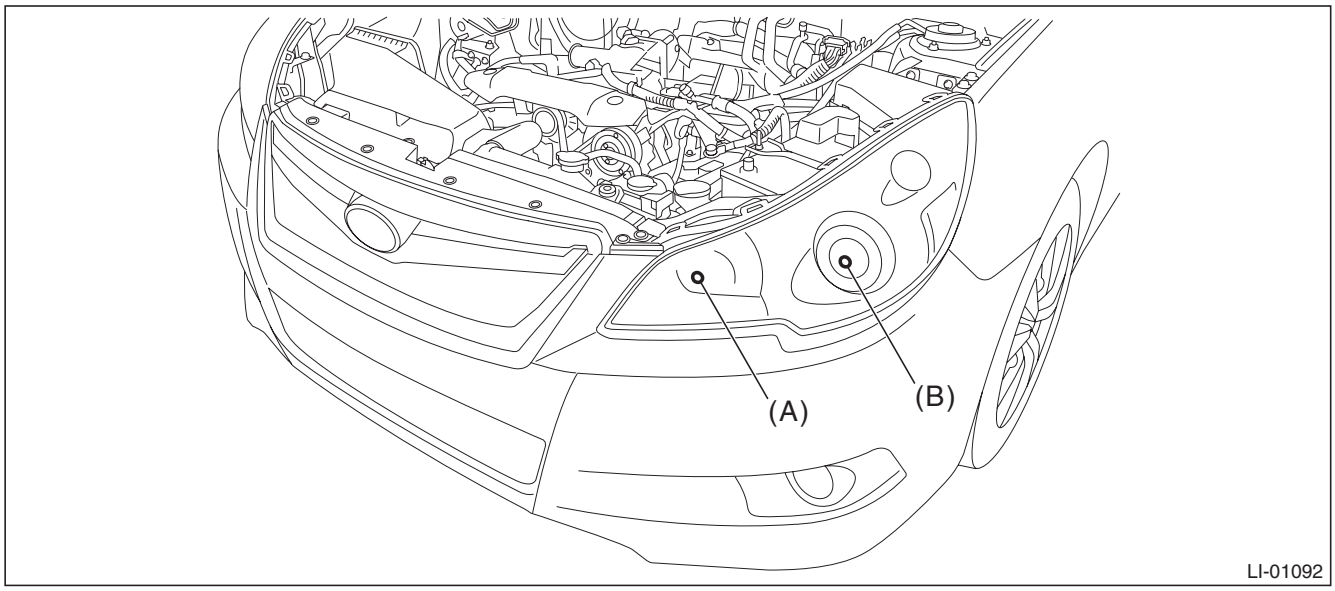

(A) High beam (B) Low beam

5) Place the vehicle with the front end facing to the measurement panel.

NOTE:
Adjustment type is recognized by marking of the right and left headlight. Confirm that which is displayed VOL or VOR, and then perform the operation according to the actual adjustment type.

- RH side headlight: Marking is placed at (A) or (B).
- LH side headlight: Marking is placed at (C).

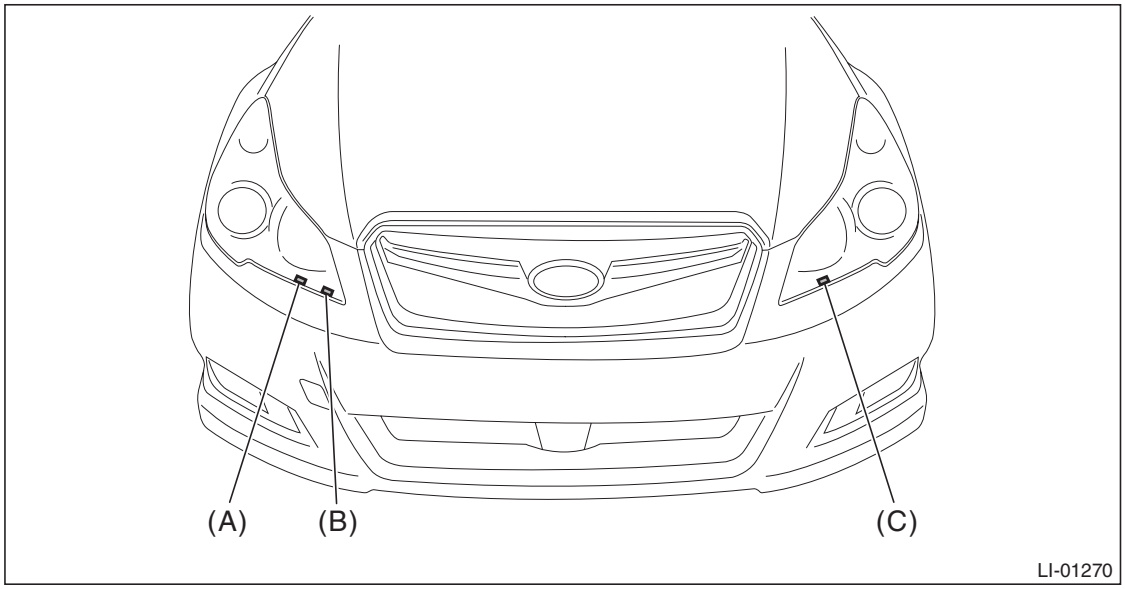

GETtheMANUALS.org

- VOL type

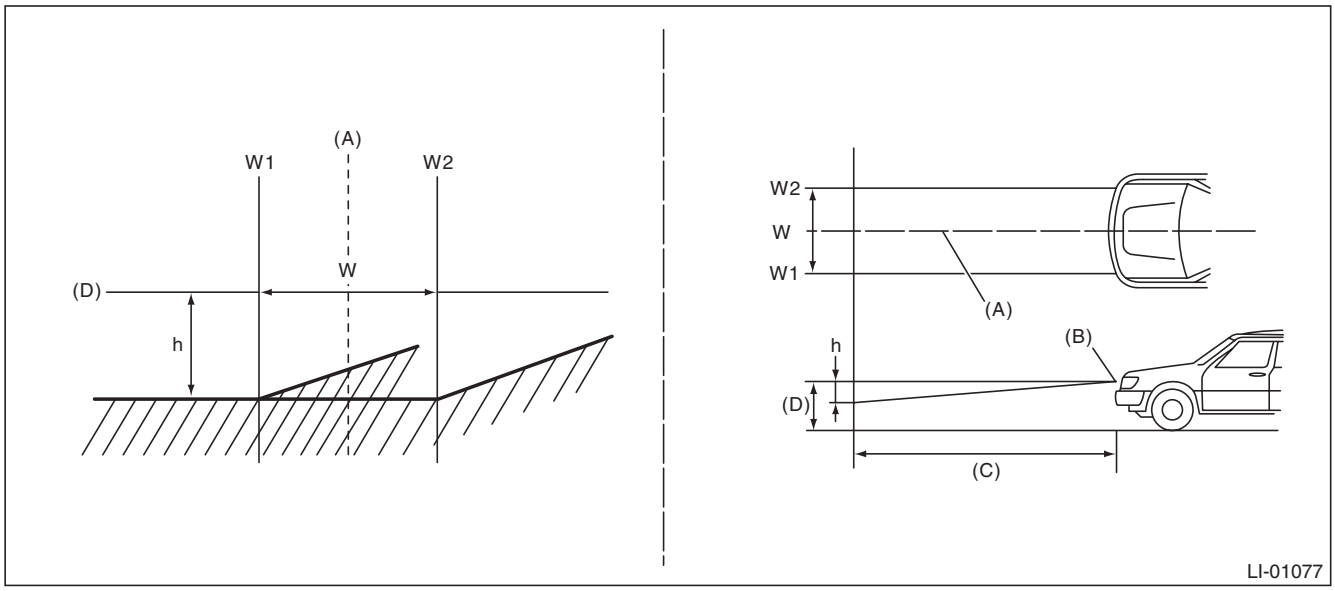

(A) Vehicle center
(B) Bulb center marking
(C) 3 m (10 ft)
(D) Height of headlight center

W mm (in)	h mm (in) at 3 m (10 ft)
1,404 (55.28)	21 (0.83)

- VOR type

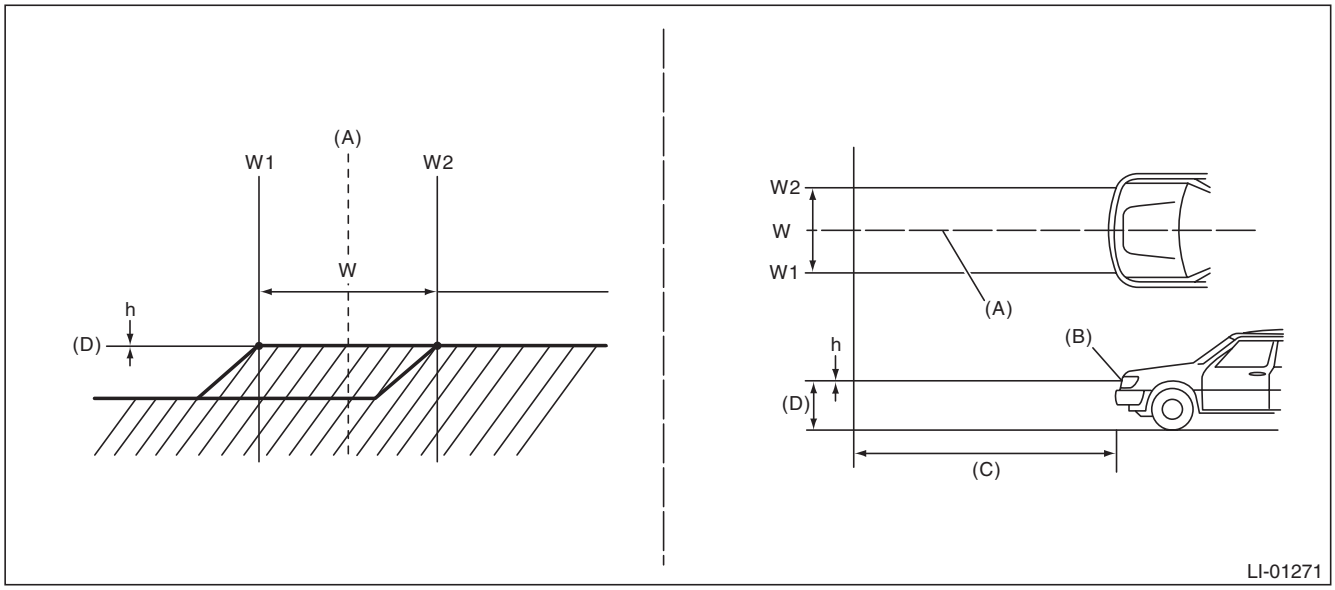

(A) Vehicle center
(B) Bulb center marking
(C) 3 m (10 ft)
(D) Height of headlight center

W mm (in)	h mm (in) at 3 m (10 ft)
1,404 (55.28)	Height of headlight center

GETtheMANUALS.org

6) Adjust the headlight low beam by turning the aiming screw.

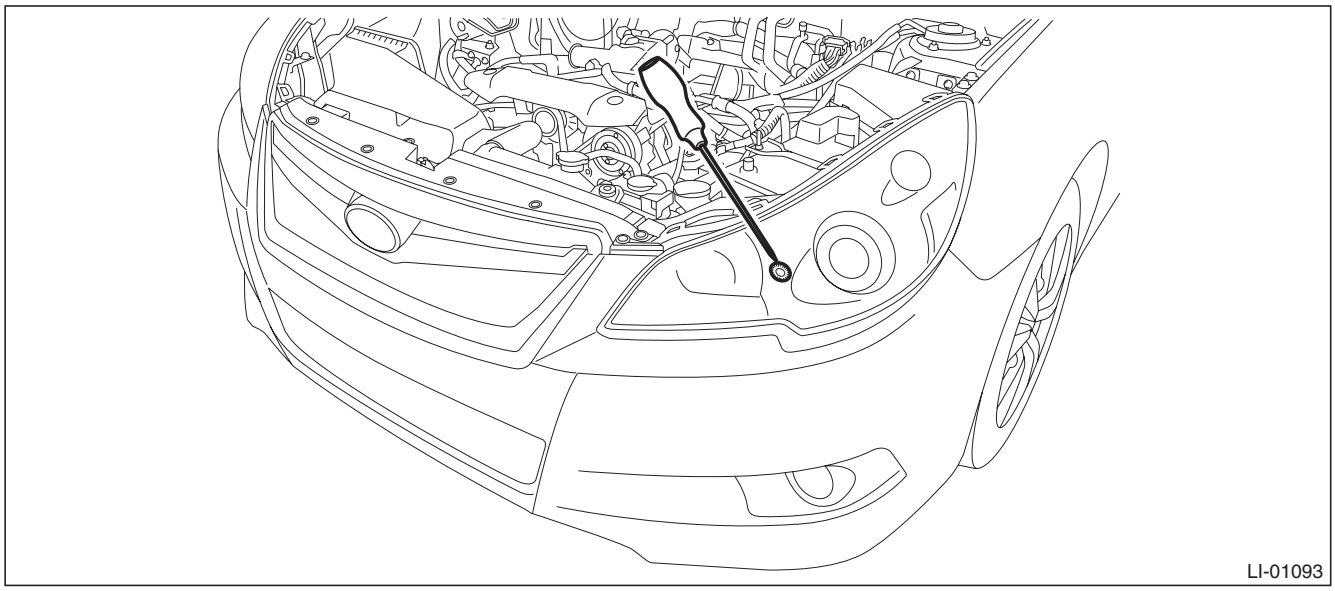

NOTE:
When using a tester, follow the instructions of the tester manual.

GETtheMANUALS.org

14.Headlight Bulb

A: REMOVAL

1. HIGH BEAM

CAUTION:

- **Because the halogen bulb operates at a high temperature, dirt and oil on the bulb surface reduces the bulb's service life. Hold the flange portion when replacing the bulb. Never touch the glass portion.**
- **Do not leave the headlight without a bulb for a long time. Dust, moisture, etc. entering the headlight may affect its performance.**

1) Disconnect the ground cable from battery.
2) Remove the clips and remove the air intake duct. (When removing the headlight high beam bulb RH)

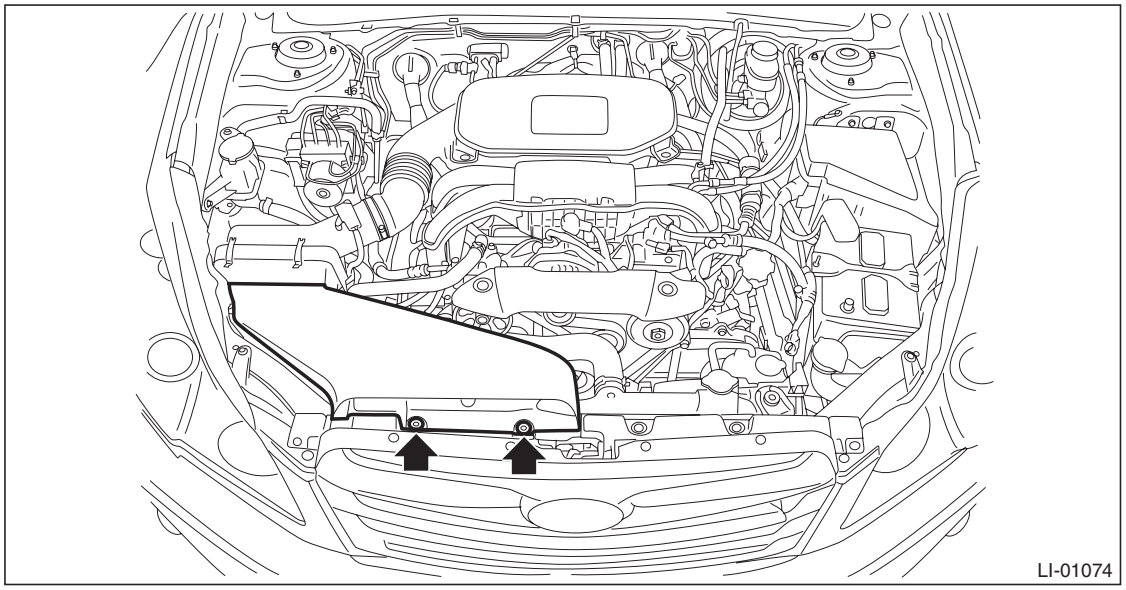

3) Disconnect the connector and remove the headlight high beam bulb.

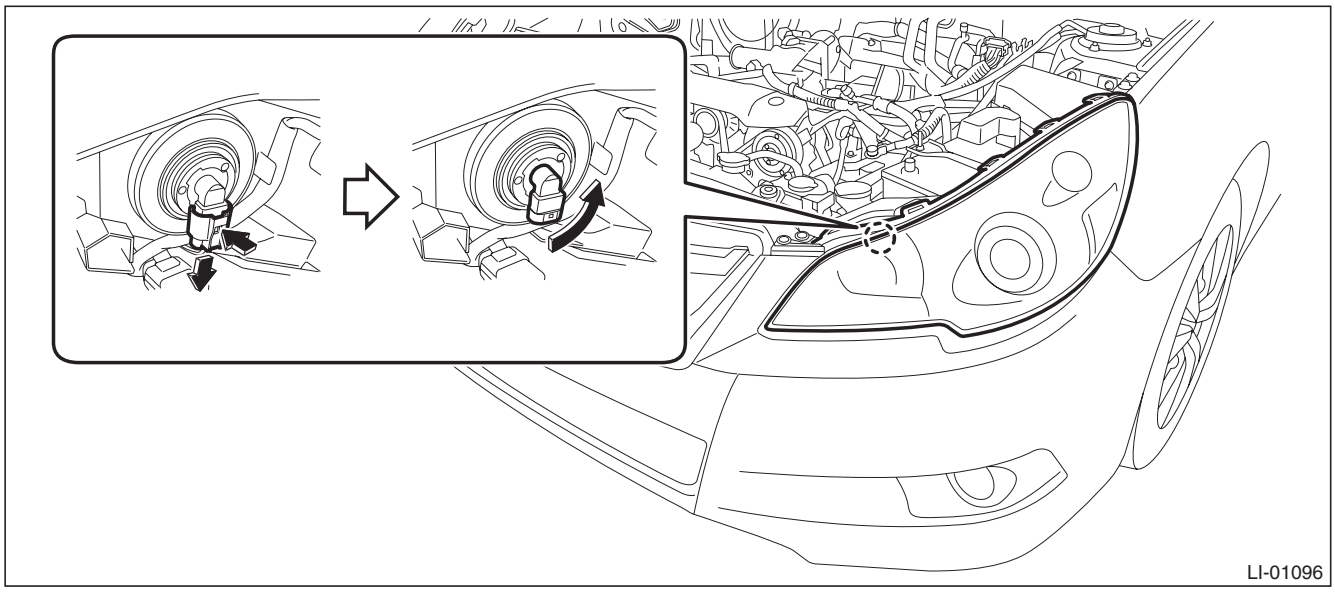

GETtheMANUALS.org

2. LOW BEAM

CAUTION:

- **Because the halogen bulb operates at a high temperature, dirt and oil on the bulb surface reduces the bulb's service life. Hold the flange portion when replacing the bulb. Never touch the glass portion.**
- **Do not leave the headlight without a bulb and back cover for a long time. Dust, moisture, etc. entering the headlight may affect its performance.**

1) Disconnect the ground cable from battery.
2) Remove the clips and remove the air intake duct. (When removing the headlight low beam bulb RH)

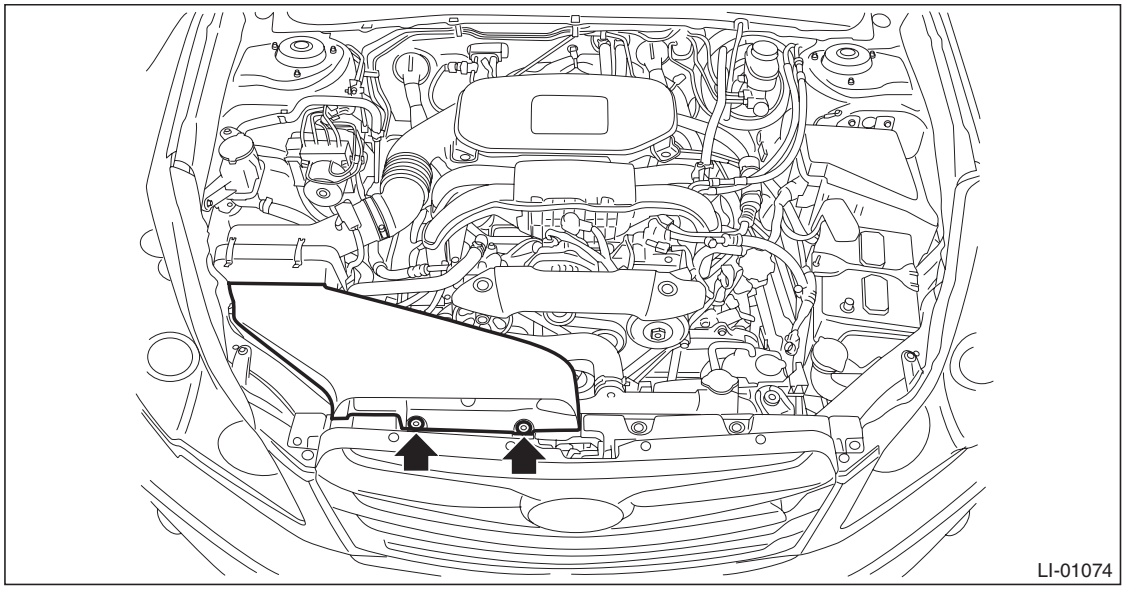

3) Turn the steering wheel in the opposite direction from the parts to be removed. Then remove the clips and turn over the mud guard.

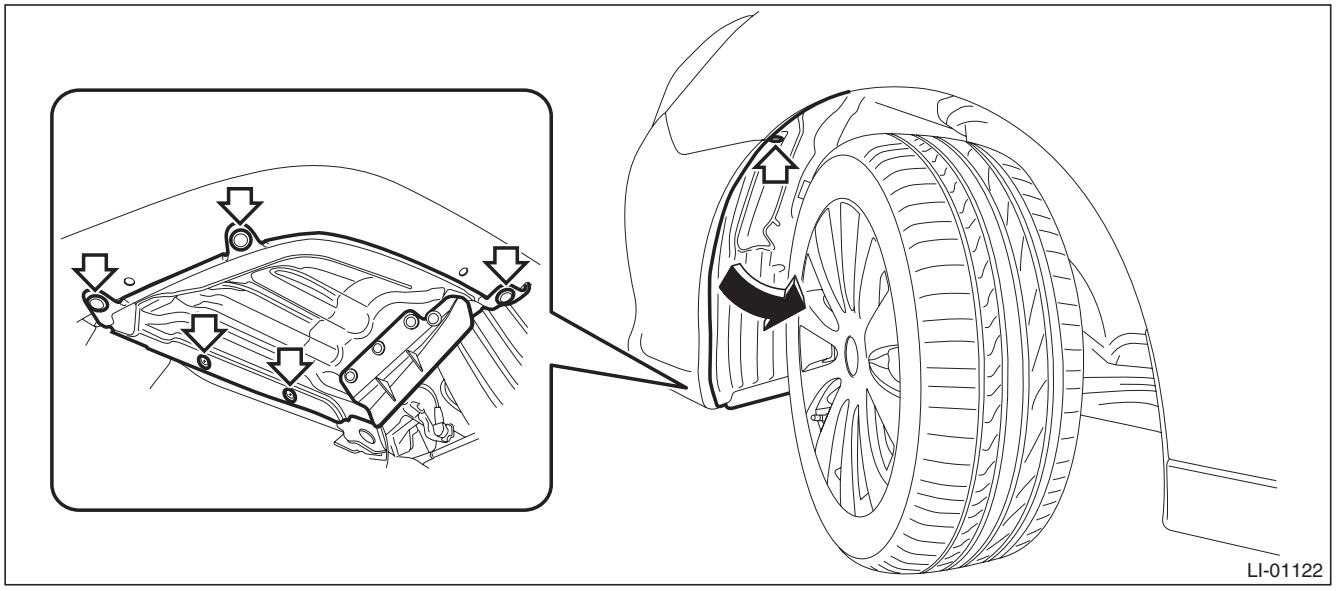

GETtheMANUALS.org

4) Remove the headlight low beam bulb.
   (1) Remove the back cover.

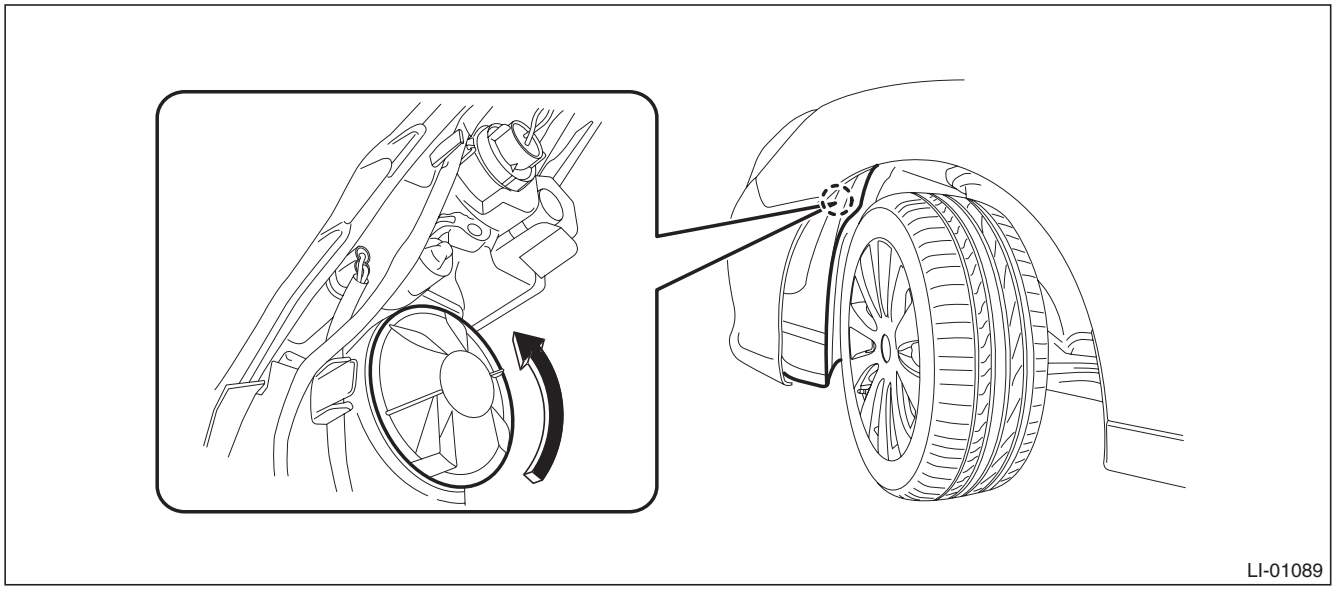

   (2) Unlock the bulb socket and bulb spring, and remove the headlight low beam bulb.

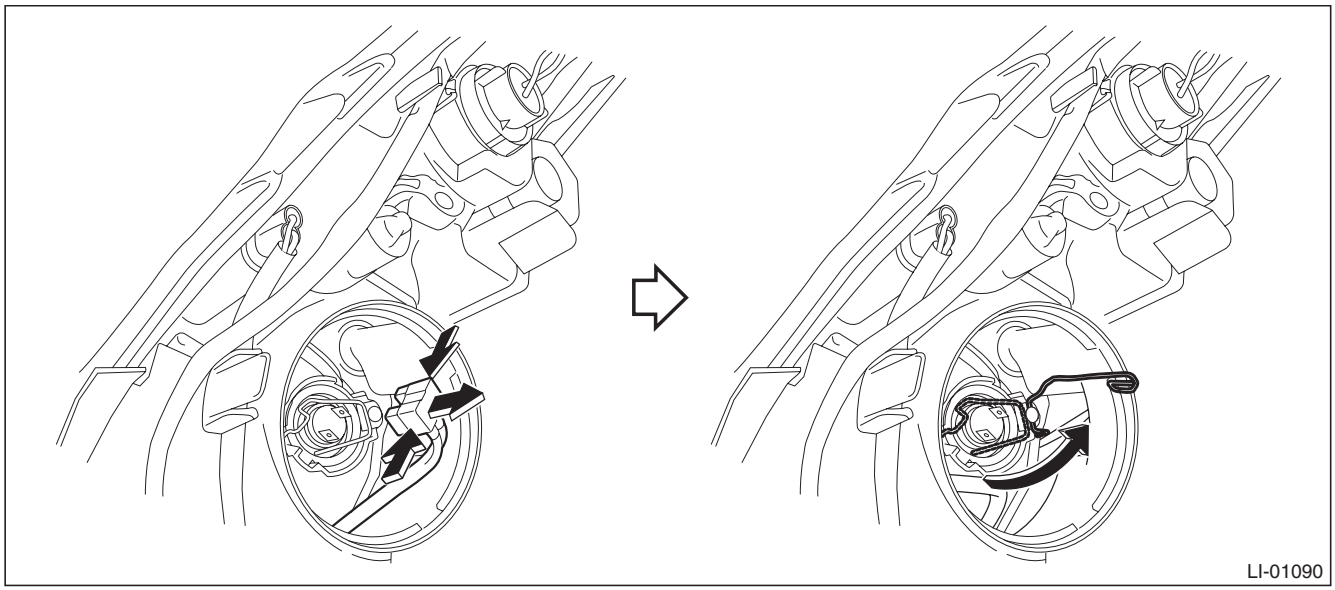

GETtheMANUALS.org

B: INSTALLATION

NOTE:
When installing the back cover, turn it to the position shown in the figure to lock while pressing the entire periphery of the cover.

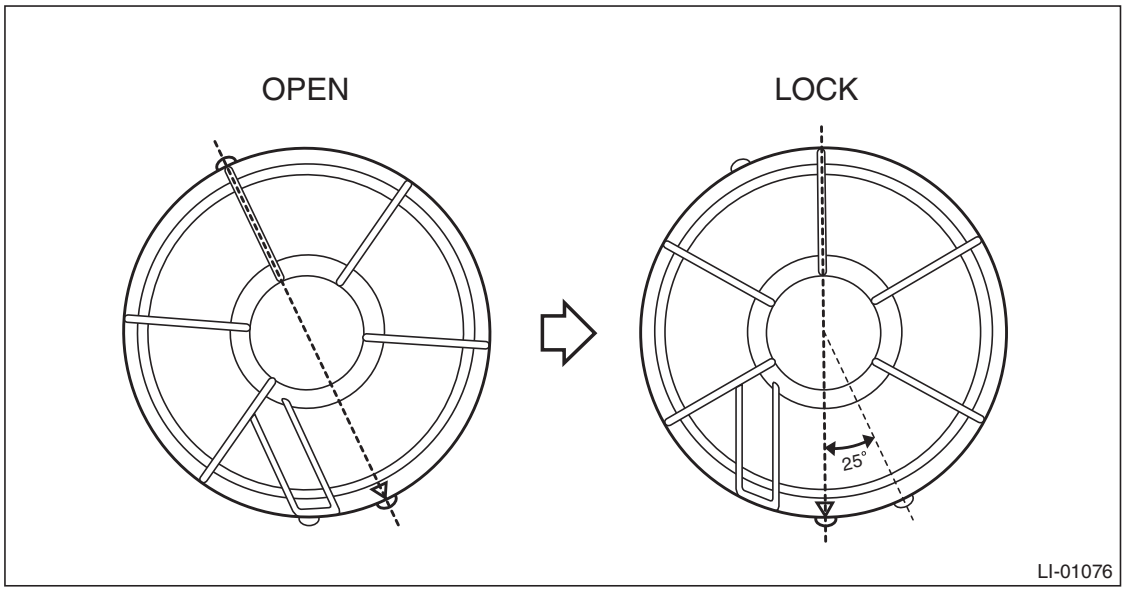

Install each part in the reverse order of removal.

C: INSPECTION

CAUTION:
- **Do not perform work with wet hands.**
- **Because the halogen bulb operates at a high temperature, dirt and oil on the bulb surface reduces the bulb's service life. Hold the flange portion when replacing the bulb. Never touch the glass portion.**
- **Do not leave the headlight without a bulb and back cover for a long time. Dust, moisture, etc. entering the headlight may affect its performance.**

1) Visually check the bulb for blow out.
2) Check the bulb specification. <Ref. to LI-2, SPECIFICATION, General Description.>
3) Replace the bulb if it is found defective.

GETtheMANUALS.org

15. Front Turn Signal Light Bulb

A: REMOVAL

1) Disconnect the ground cable from battery.
2) Remove the clips and remove the air intake duct. (When removing the front turn signal light bulb RH)

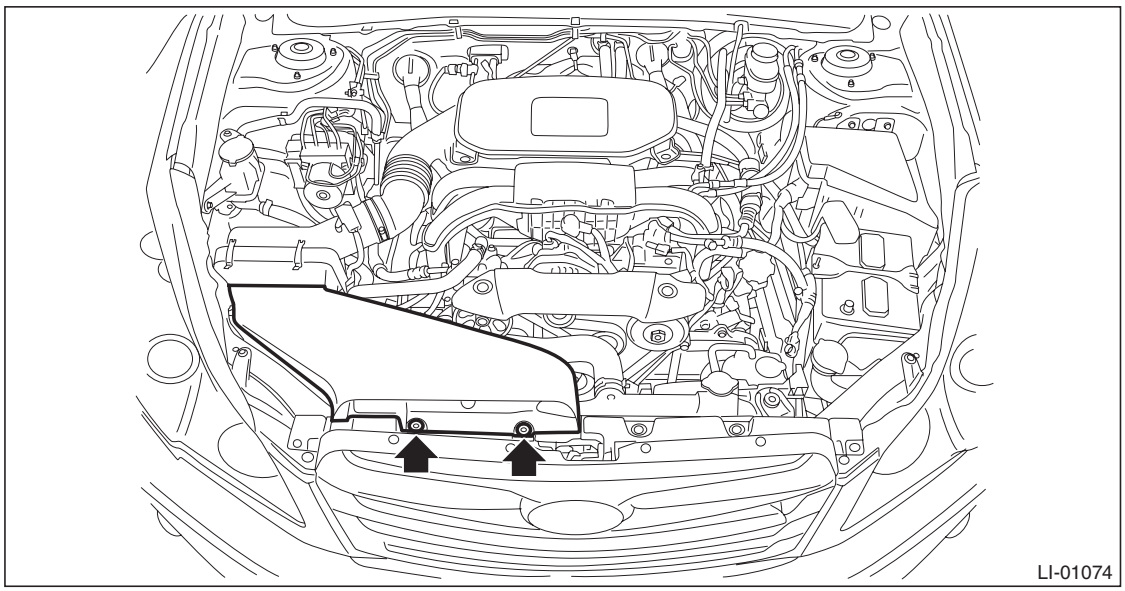

3) Remove the fender cover assembly UPR.
   (1) Remove the clip.
   (2) Release the claws of the fender cover assembly UPR by pulling it forward and remove the fender cover.

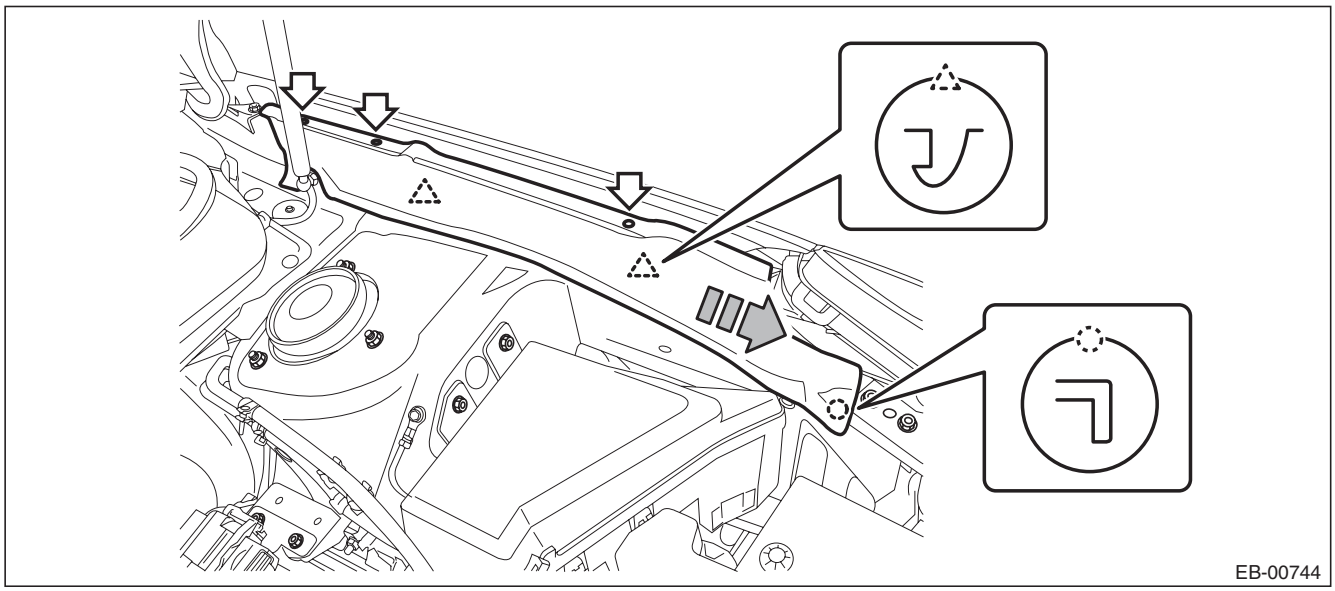

GETtheMANUALS.org

4) Remove the bulb socket and turn signal light bulb.

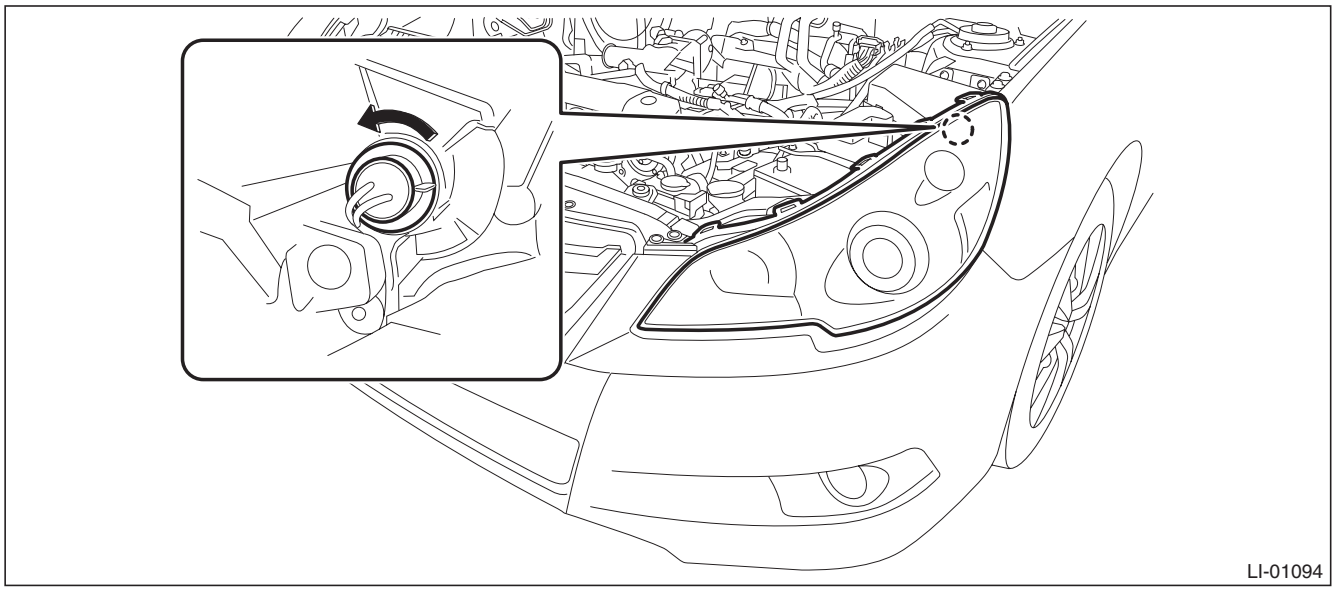

B: INSTALLATION

Install each part in the reverse order of removal.

C: INSPECTION

1) Visually check the bulb for blow out.
2) Check the bulb specification. <Ref. to LI-2, SPECIFICATION, General Description.>
3) Replace the bulb if it is found defective.

GETtheMANUALS.org

16. Clearance/Parking Light Bulb

A: REMOVAL

1) Disconnect the ground cable from battery.
2) Remove the clips and remove the air intake duct. (When removing the parking light bulb RH)

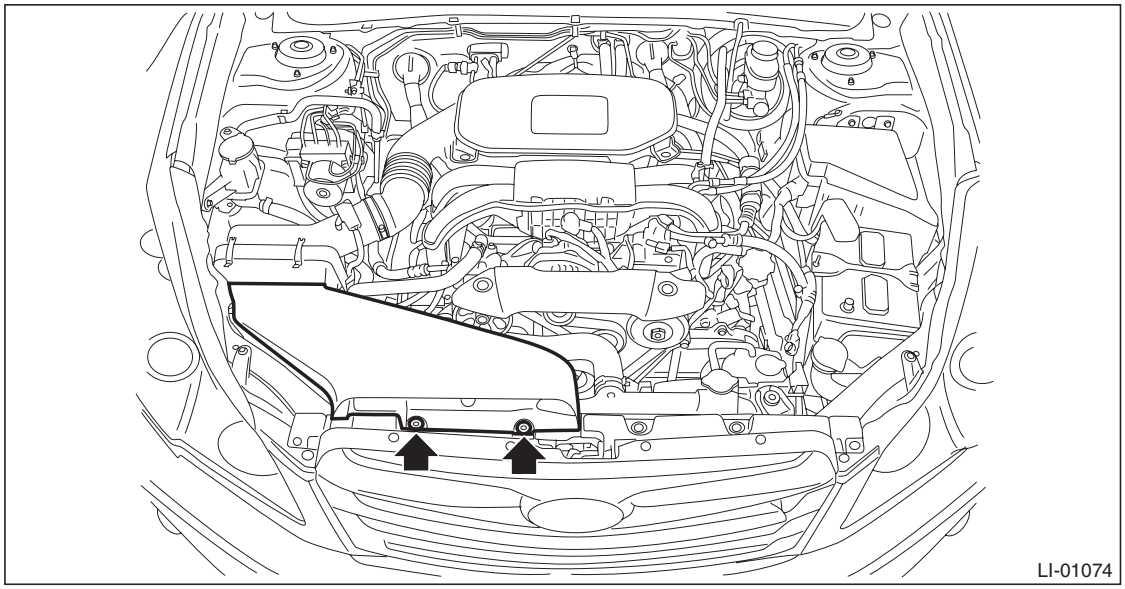

3) Remove the bulb socket and parking light bulb.

NOTE:
Move the battery rearward as required. (When removing the parking light bulb LH)

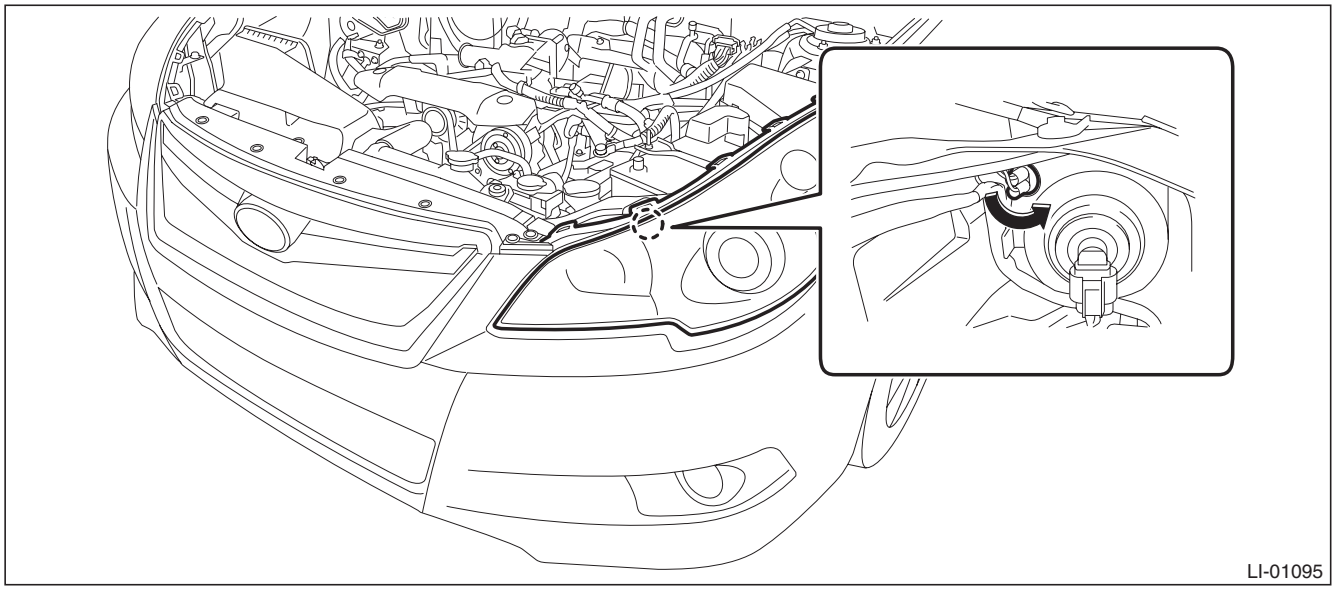

B: INSTALLATION

Install each part in the reverse order of removal.

C: INSPECTION

1) Visually check the bulb for blow out.
2) Check the bulb specification. <Ref. to LI-2, SPECIFICATION, General Description.>
3) Replace the bulb if it is found defective.

GETtheMANUALS.org

17. Front Side Marker Light Bulb

A: REMOVAL

1) Disconnect the ground cable from battery.
2) Remove the clips and remove the air intake duct. (When removing the front turn signal light bulb RH)

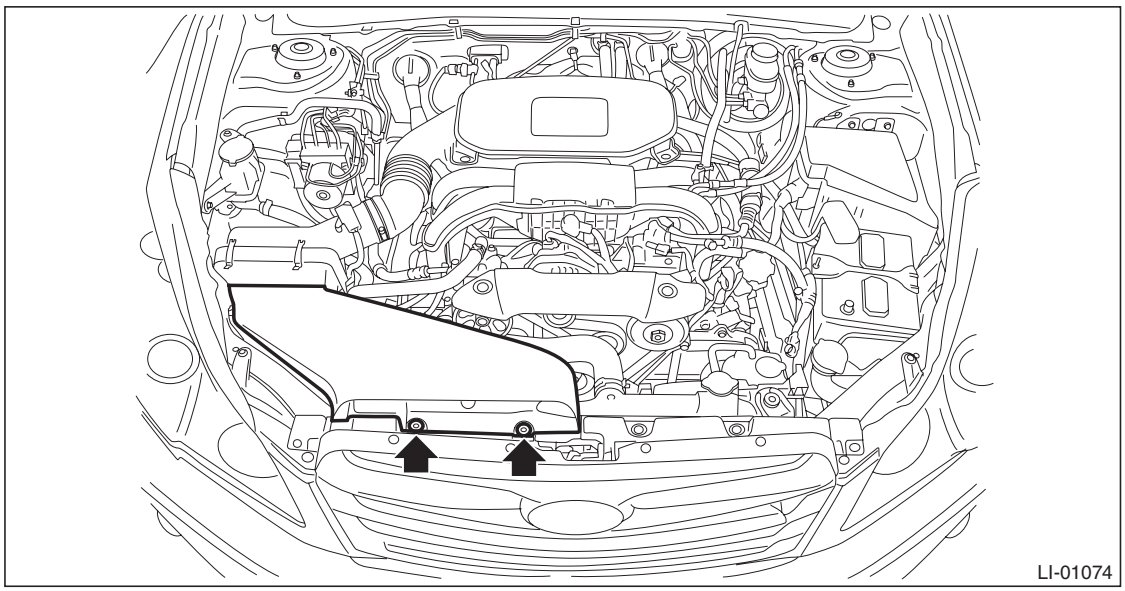

3) Turn the steering wheel in the opposite direction to the headlight to be removed. Then remove the clips and turn over the mud guard.

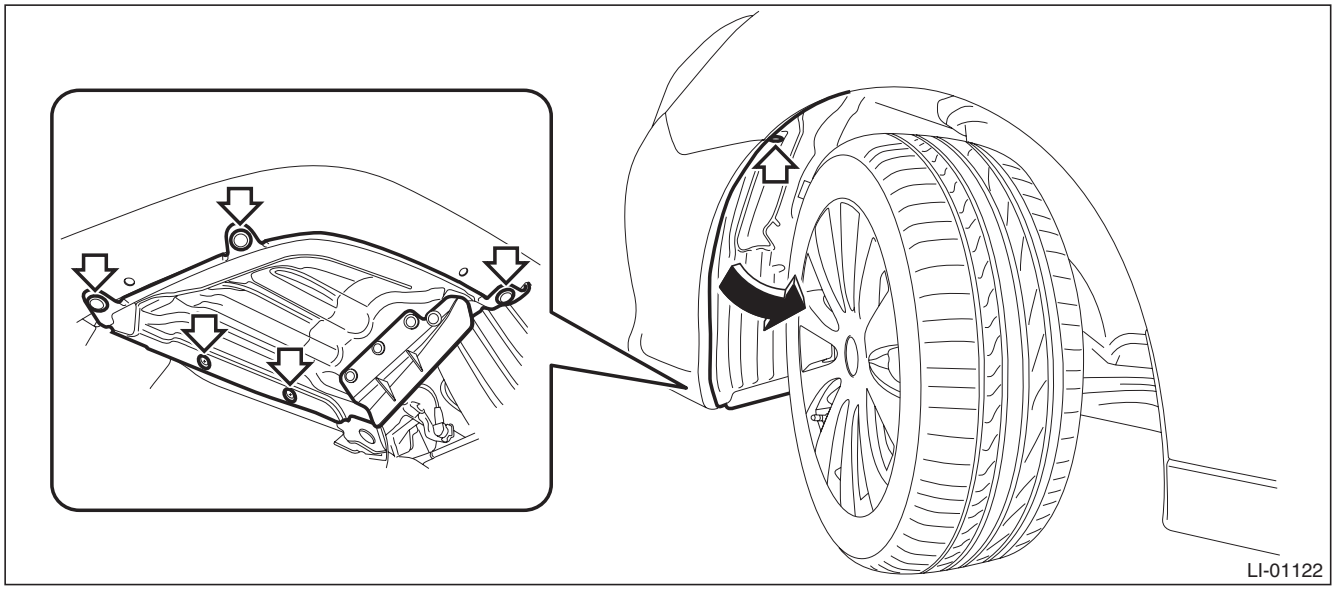

GETtheMANUALS.org

4) Remove the bulb socket and turn signal light bulb.

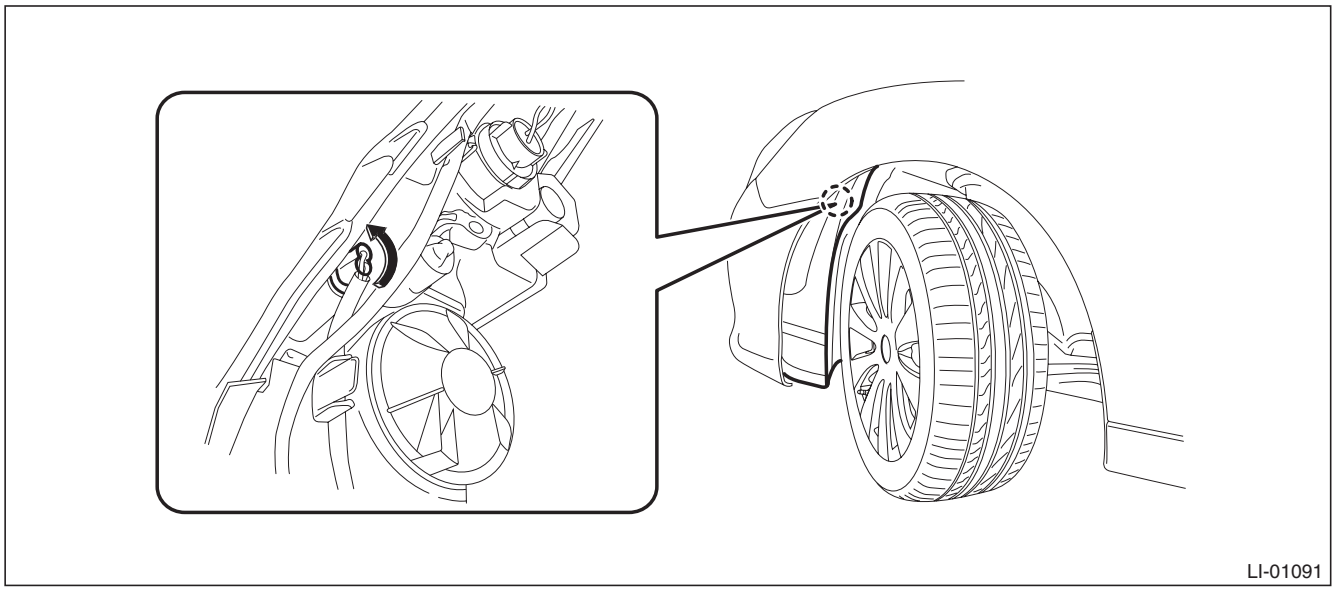

B: INSTALLATION

Install each part in the reverse order of removal.

C: INSPECTION

1) Visually check the bulb for blow out.
2) Check the bulb specification. <Ref. to LI-2, SPECIFICATION, General Description.>
3) Replace the bulb if it is found defective.

GETtheMANUALS.org

18. Front Fog Light Assembly

A: REMOVAL

1) Disconnect the ground cable from battery.
2) Remove the clips and turn over the front end of front mud guard.

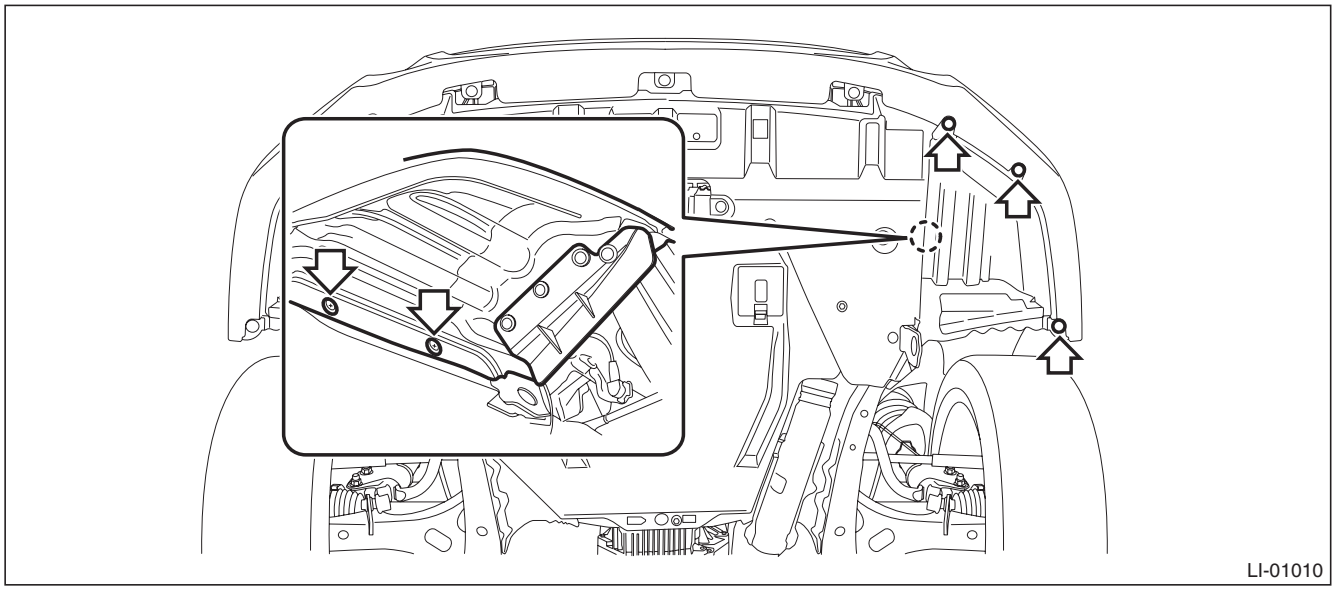

3) From the bottom of bumper face, remove the front fog light assembly.
   (1) Disconnect the connector.
   (2) Remove the bolts, and remove the front fog light assembly.

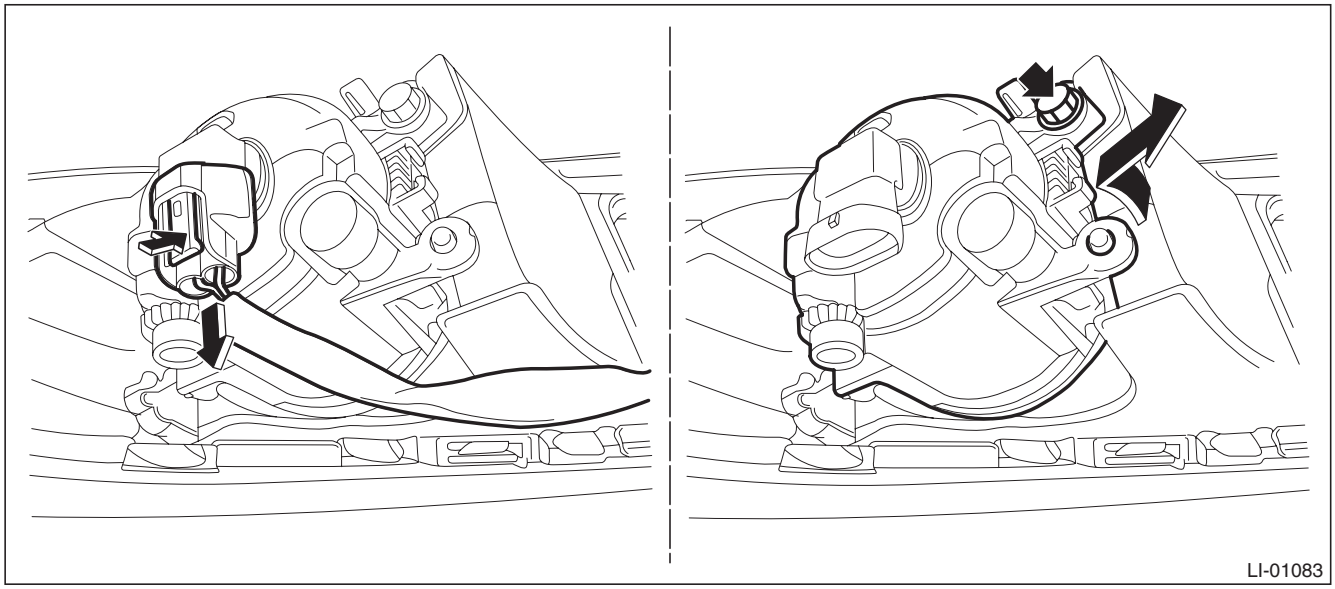

B: INSTALLATION

1) Install each part in the reverse order of removal.

Tightening torque:
Front fog light assembly: 7.5 N·m (0.76 kgf-m, 5.5 ft-lb)

2) Adjust the fog light beam. <Ref. to LI-41, FOG LIGHT AIMING, ADJUSTMENT, Front Fog Light Assembly.>

GETtheMANUALS.org

C: ADJUSTMENT

1. FOG LIGHT AIMING

1) Before checking the fog light beam level, be sure of the following:
- The area around the fog light has not sustained any accident, damage or other type of deformation.
- Vehicle is parked on a level surface.
- The inflation pressure of tires is correct.
- Vehicle's fuel tank is fully filled.

2) Bounce the vehicle several times to normalize the suspension.
3) Make certain that someone is seated in the driver's seat.
4) Place the vehicle with the front end facing to the measurement panel.

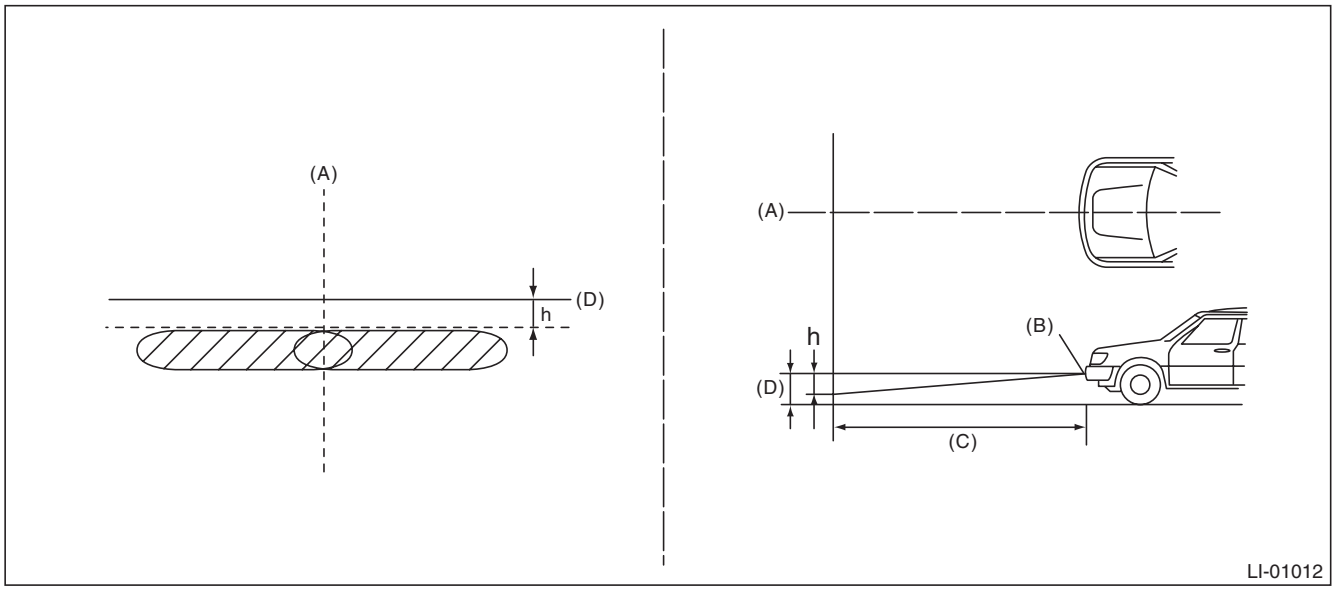

(A) Vehicle center
(B) Bulb center marking
(C) 3 m (10 ft)
(D) Height of fog light center

h mm (in) at 3 m (10 ft)
40 (1.58)

GETtheMANUALS.org

5) Adjust the fog light beam.
(1) Remove the clips and turn over the front end of front mud guard.

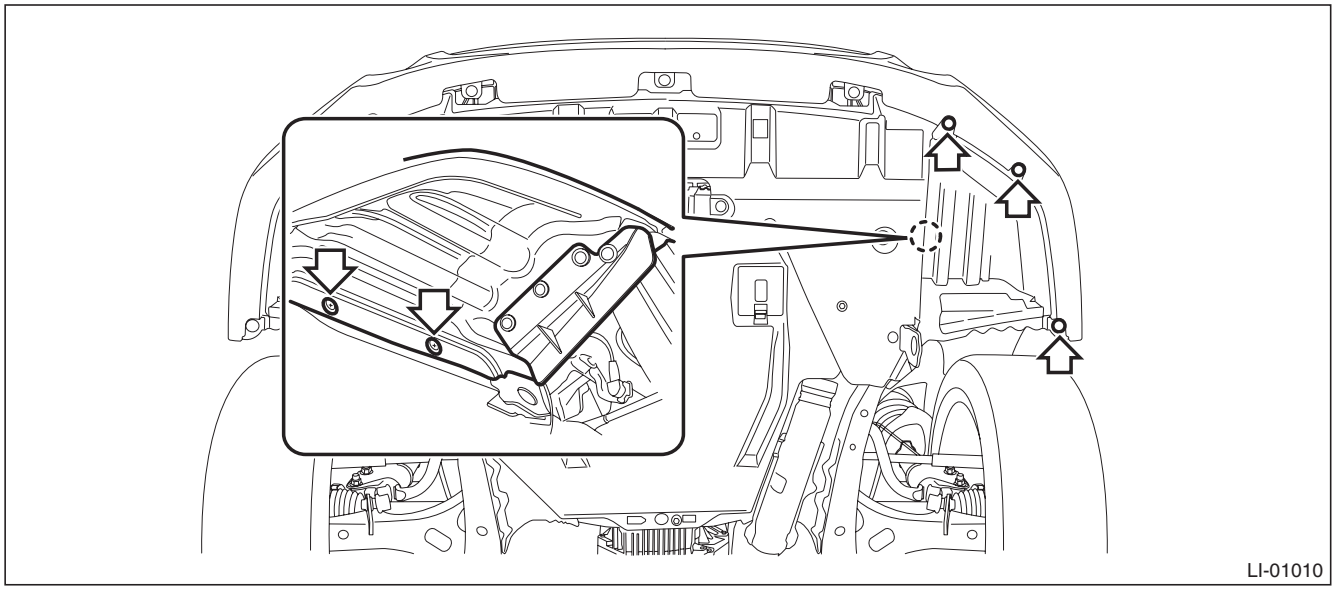

(2) Adjust the beam direction by turning the aiming screw from the bottom of front bumper face.

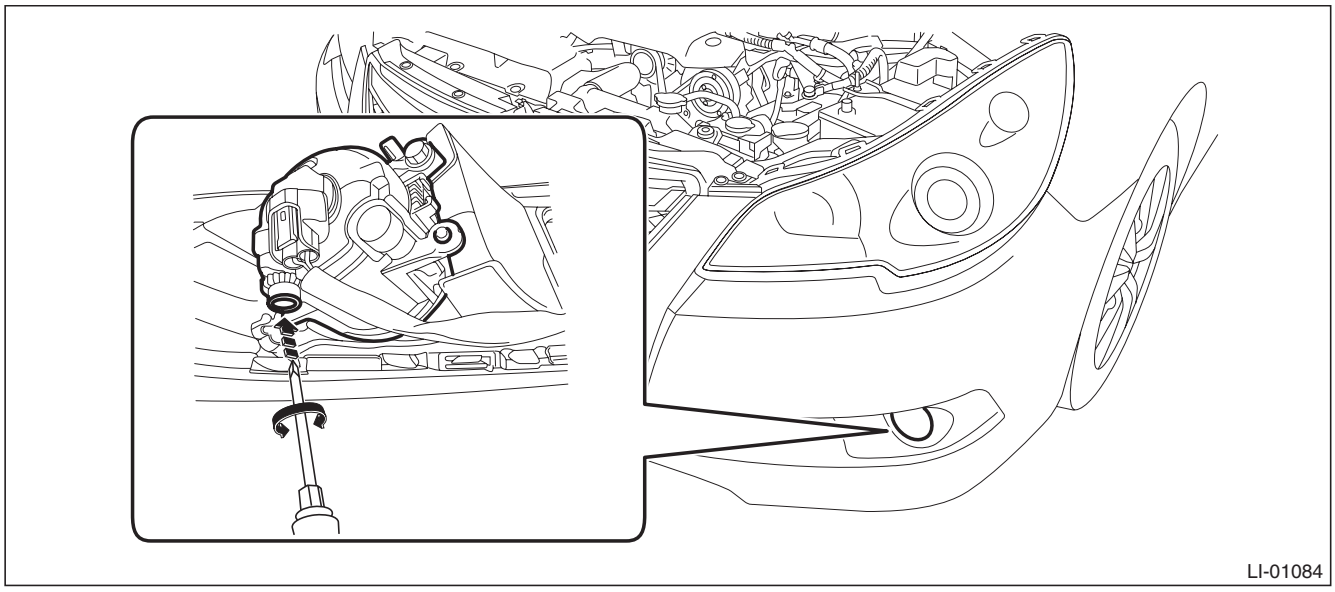

GETtheMANUALS.org

19. Front Fog Light Bulb

A: REMOVAL

1) Disconnect the ground cable from battery.
2) Remove the clips and turn over the front end of front mud guard.

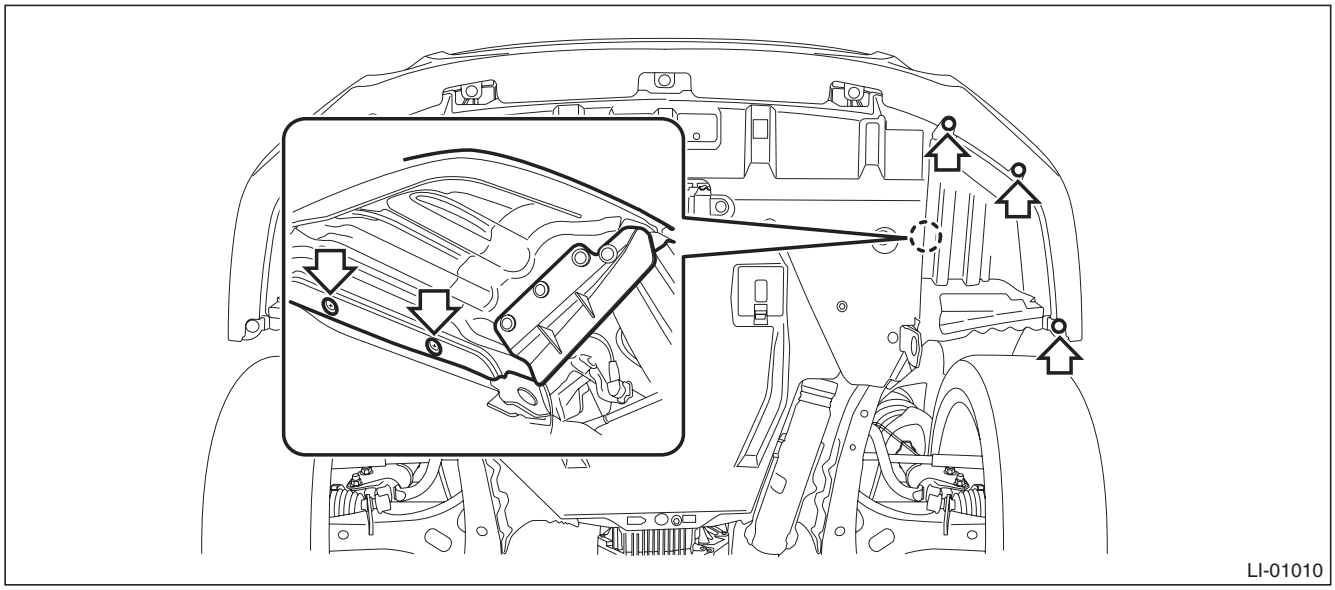

3) From the bottom of bumper face, remove the front fog light bulb.
   (1) Disconnect the connector.
   (2) Remove the bulb.

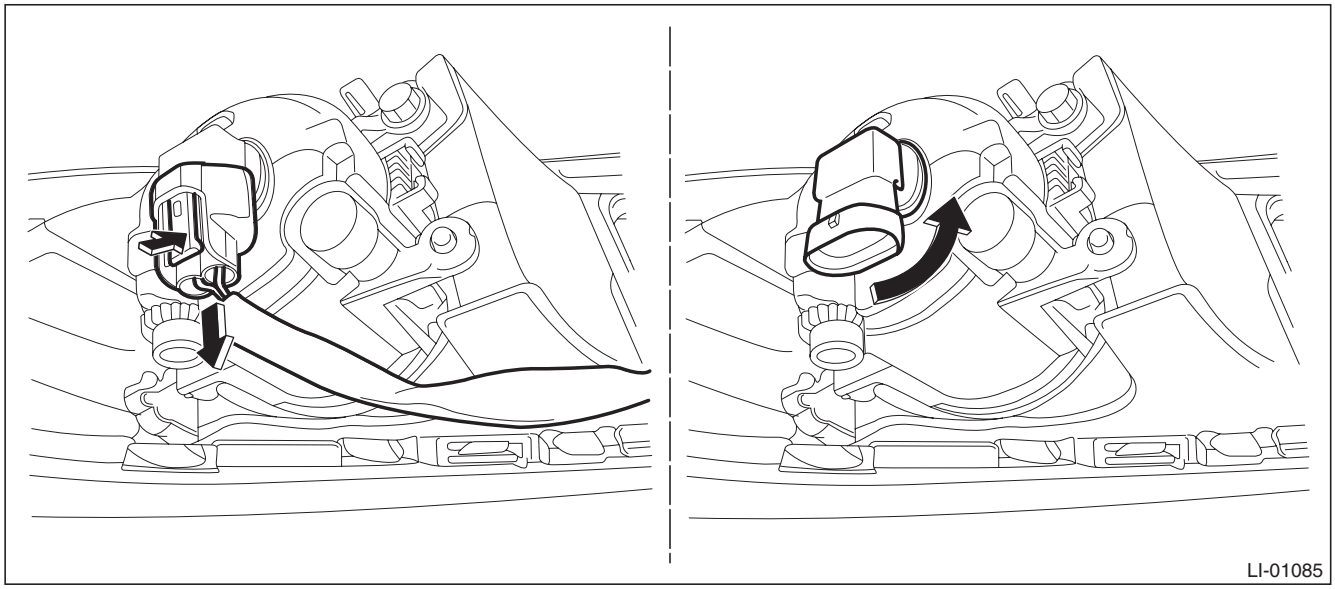

B: INSTALLATION

CAUTION:
After connecting the connector, make sure that the bulb is locked securely.
Install each part in the reverse order of removal.

C: INSPECTION

1) Visually check the bulb for blow out.
2) Check the bulb specification. <Ref. to LI-2, SPECIFICATION, General Description.>
3) Replace the bulb if it is found defective.

GETtheMANUALS.org

20.Side Turn Signal Light Assembly

A: REMOVAL

1) Disconnect the ground cable from battery.
2) Remove the mirror. <Ref. to GW-30, REPLACEMENT, Outer Mirror.>
3) Remove the scalp cap. <Ref. to GW-23, REPLACEMENT, Scalp Cap.>
4) Remove the side turn signal light assembly.
   (1) Remove the screws and pull out the side turn signal light assembly.
   (2) Disconnect the connector and remove the side turn signal light assembly.

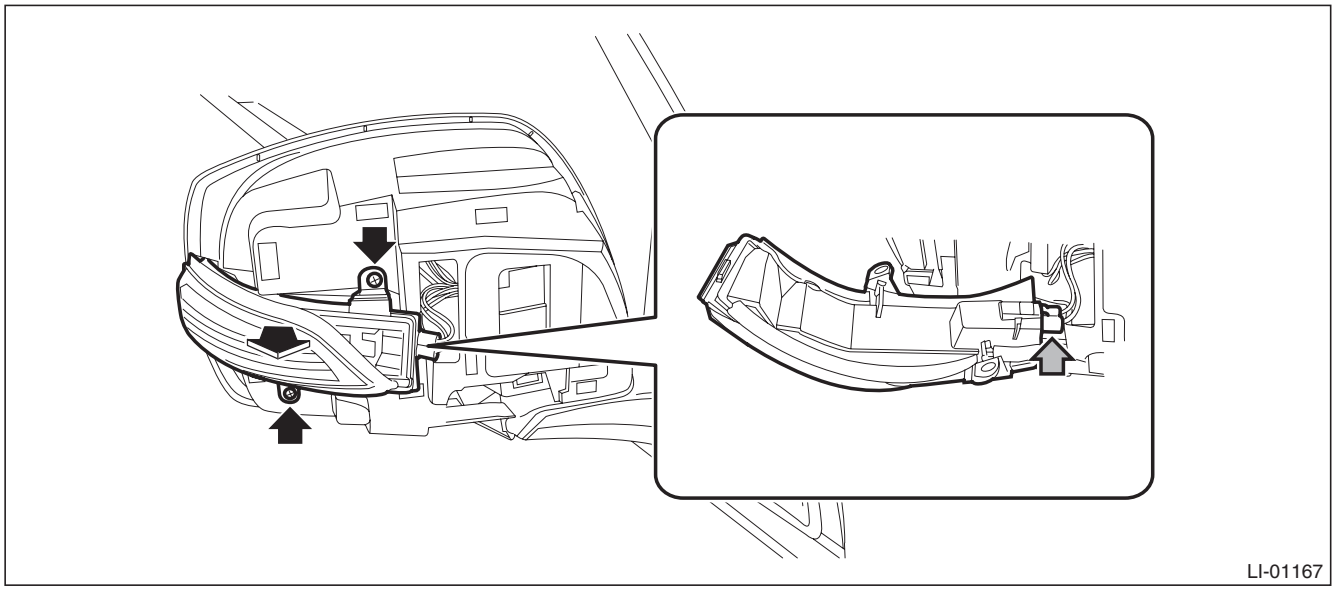

B: INSTALLATION

Install each part in the reverse order of removal.

C: INSPECTION

1) Install the side turn signal light assembly and check that it blinks normally.
2) If it is found not to blink normally, replace the side turn signal light assembly with a new part.

NOTE:
Since LED (Light Emitting Diode) is used for the side turn signal light, replace the side turn signal light assembly if the LED burns out.

GETtheMANUALS.org

21. Rear Combination Light Assembly

A: REMOVAL

1. SEDAN MODEL

1) Disconnect the ground cable from battery.
2) Remove the trunk room trim. <Ref. to EI-127, REMOVAL, Trunk Room Trim.>
3) Remove the rear combination light assembly.
   (1) Disconnect the connector.
   (2) Release the nuts and clips, then remove the rear combination light assembly.

CAUTION:
Be careful not to damage the clips.

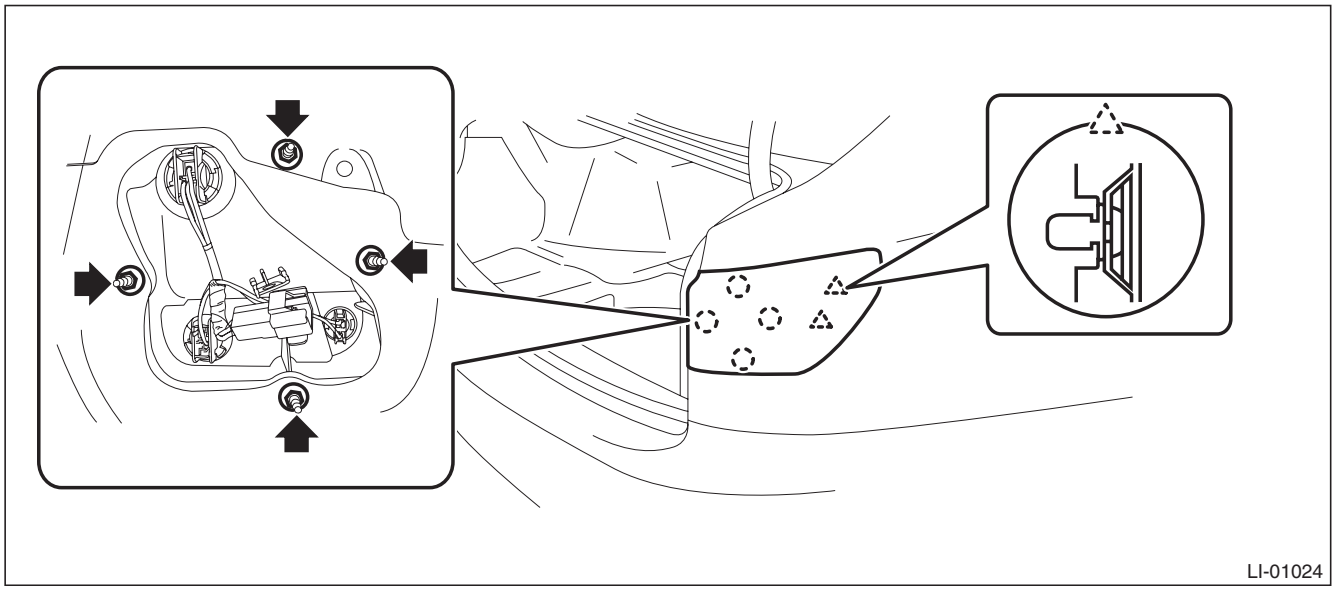

2. OUTBACK MODEL

1) Disconnect the ground cable from battery.
2) Remove the clips and detach the rear combination light covers.

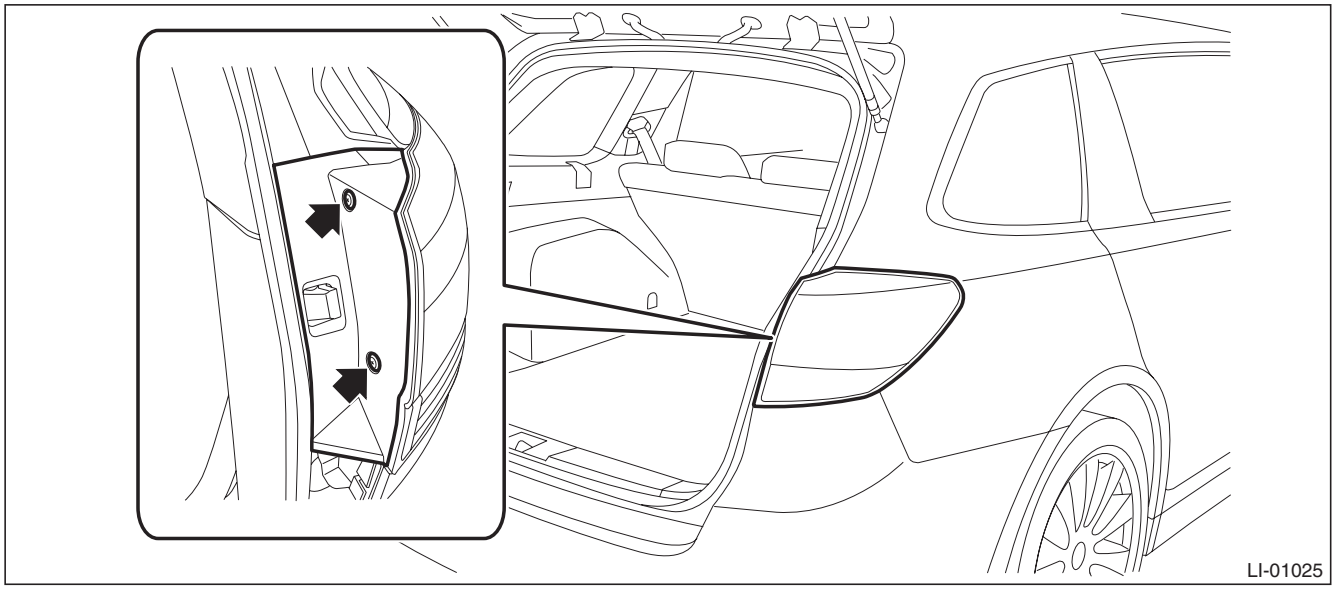

GETtheMANUALS.org

3) Remove the rear combination light assembly.

CAUTION:
Be careful not to damage the clips.

(1) Release the bolts and clips, then pull out the rear combination light assembly to the vehicle rear.
(2) Disconnect the connector and remove the rear combination light assembly.

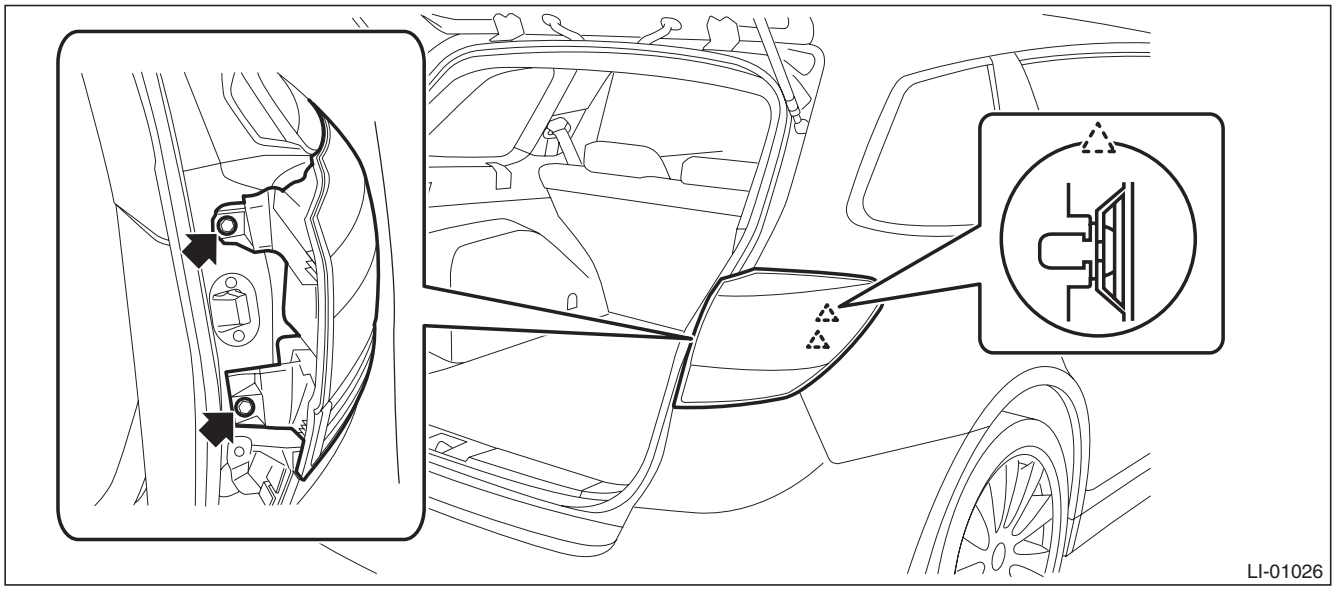

B: INSTALLATION

CAUTION:
For sedan models, replace the seal gasket of the rear combination light assembly with a new part. If the seal gasket is reused, water may come inside of the vehicle.
Install each part in the reverse order of removal.

Tightening torque:
Sedan model: 4.5 N·m (0.46 kgf-m, 3.3 ft-lb)
OUTBACK model: 7.5 N·m (0.76 kgf-m, 5.5 ft-lb)

C: INSPECTION

1) Visually check the bulb for blow out.
2) Check the bulb specification. <Ref. to LI-2, SPECIFICATION, General Description.>
3) Replace the bulb if it is found defective.

GETtheMANUALS.org

22. Tail/Stop Light Bulb

A: REMOVAL

1. SEDAN MODEL

- **Rear combination light side**

1) Disconnect the ground cable from battery.
2) Release the lock and remove the bulb inspection cover of trunk room trim.

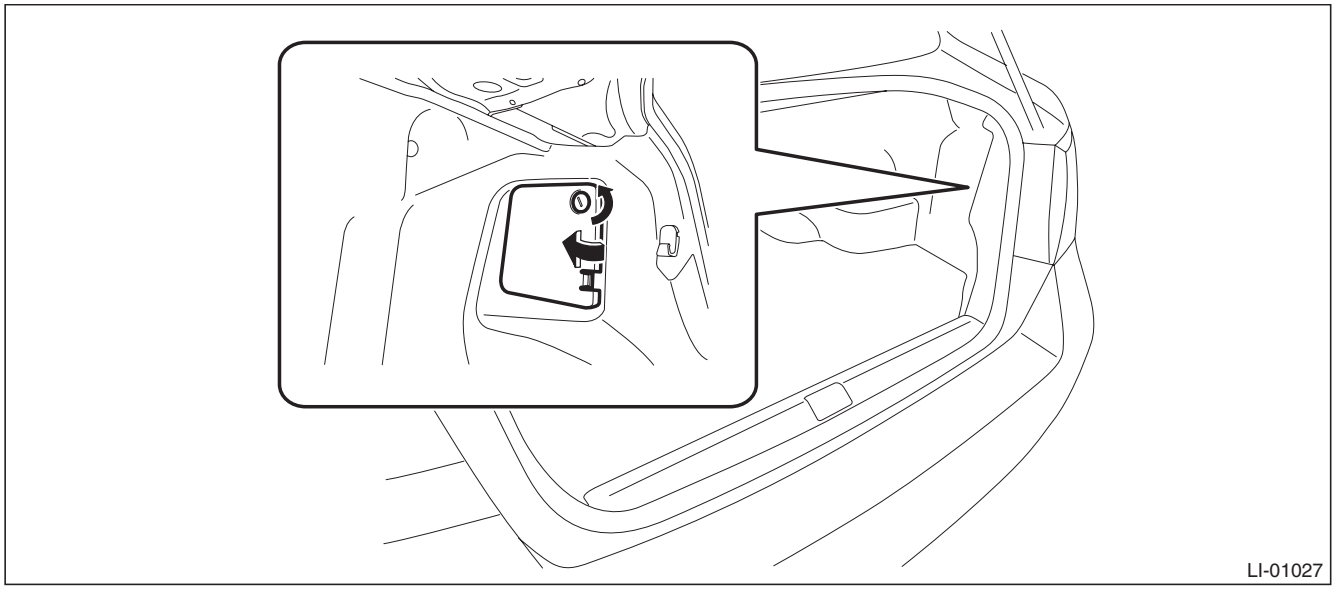

3) Remove the bulb socket and tail light/stop light bulb.

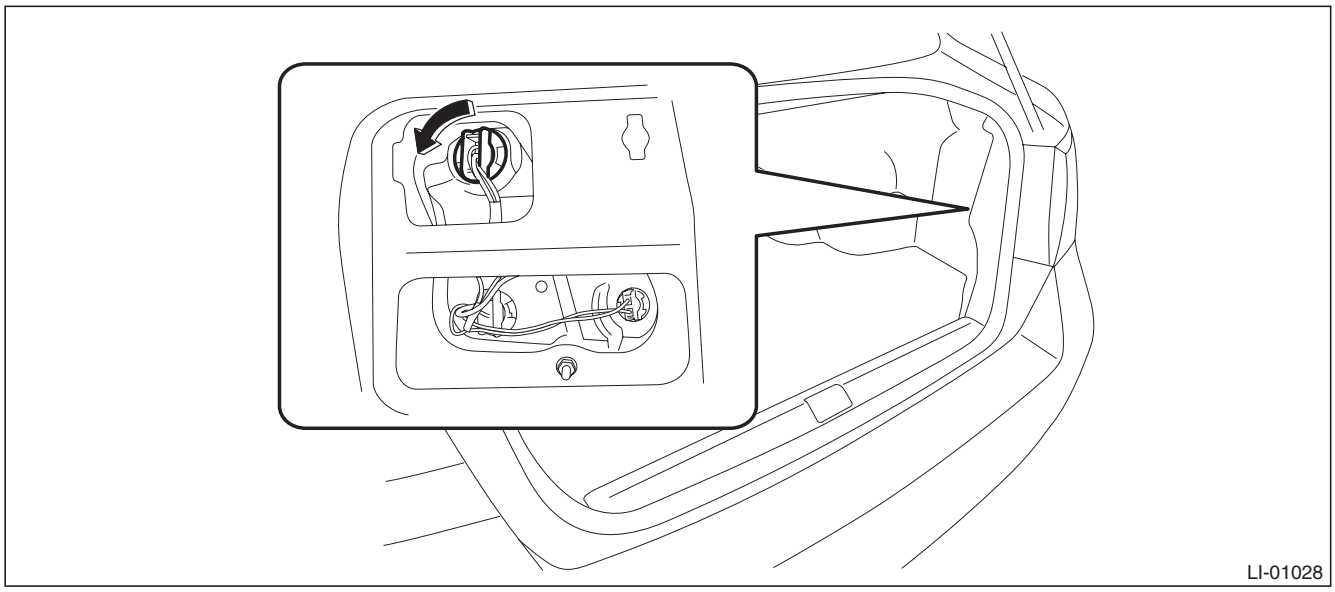

GETtheMANUALS.org

- **Rear finisher light side**

1) Disconnect the ground cable from battery.
2) Remove the trunk lid trim. <Ref. to EI-127, TRUNK LID TRIM, REMOVAL, Trunk Room Trim.>
3) Remove the bulb socket and tail light bulb.

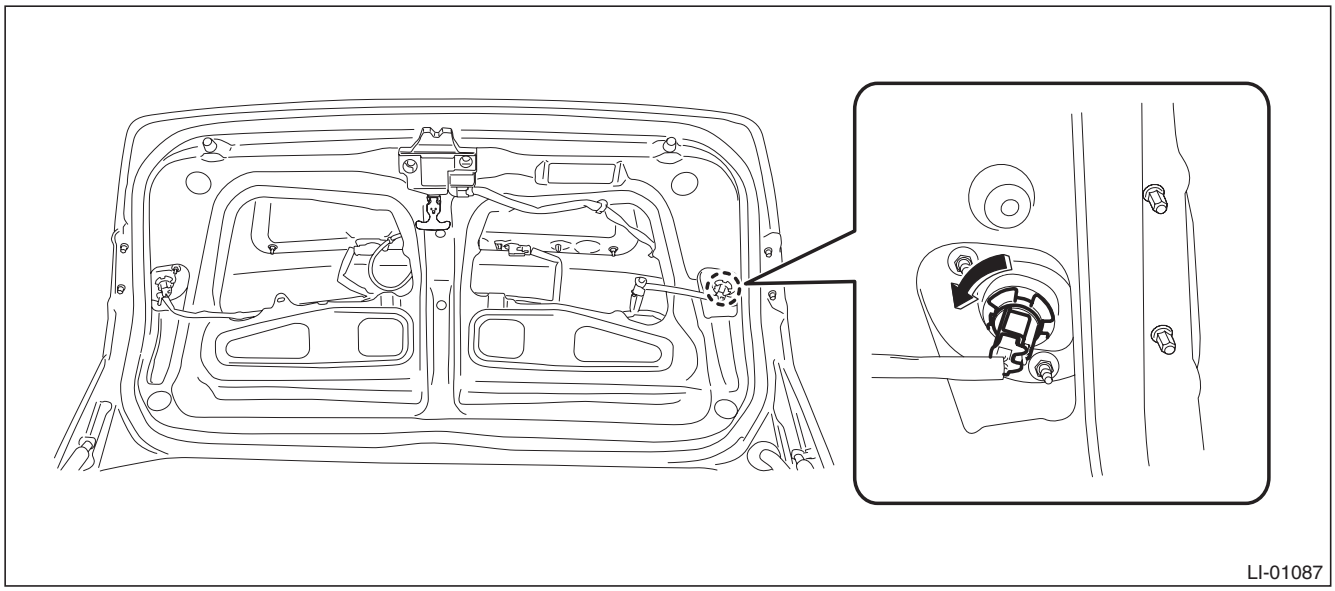

2. OUTBACK MODEL

- **Rear combination light side**

1) Disconnect the ground cable from battery.
2) Remove the clips and detach the rear combination light covers.

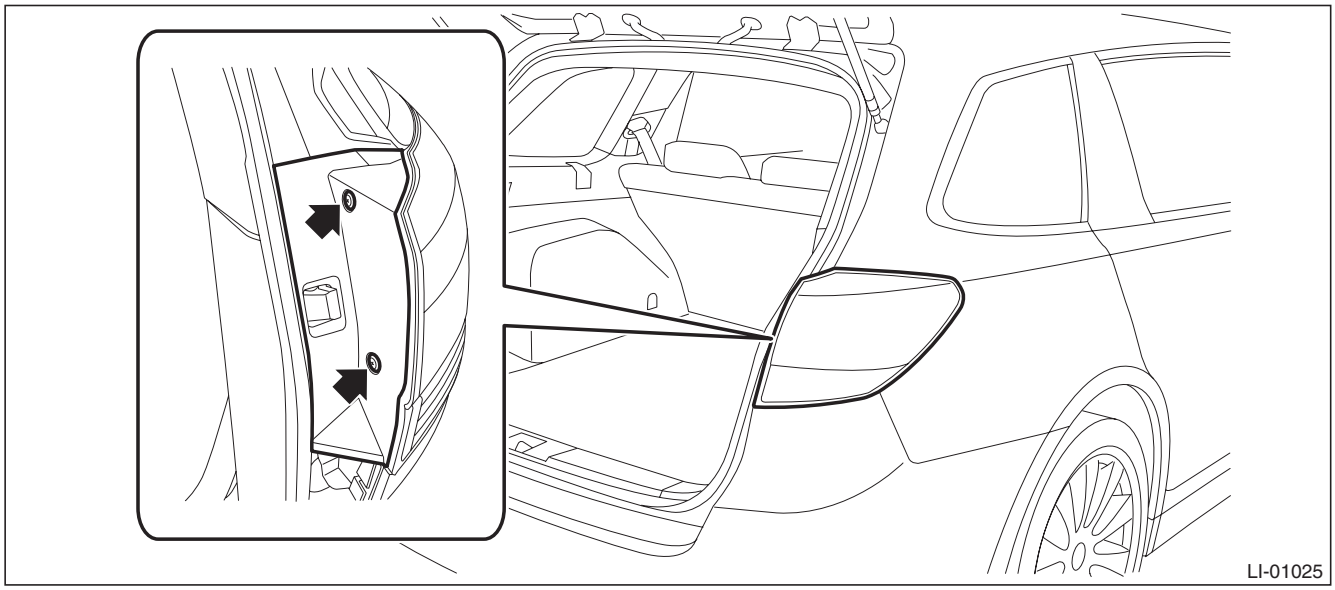

GETtheMANUALS.org

3) Remove the rear combination light assembly.

CAUTION:
Be careful not to damage the clips.

(1) Release the bolts and clips, then pull out the rear combination light assembly to the vehicle rear.
(2) Disconnect the connector and remove the rear combination light assembly.

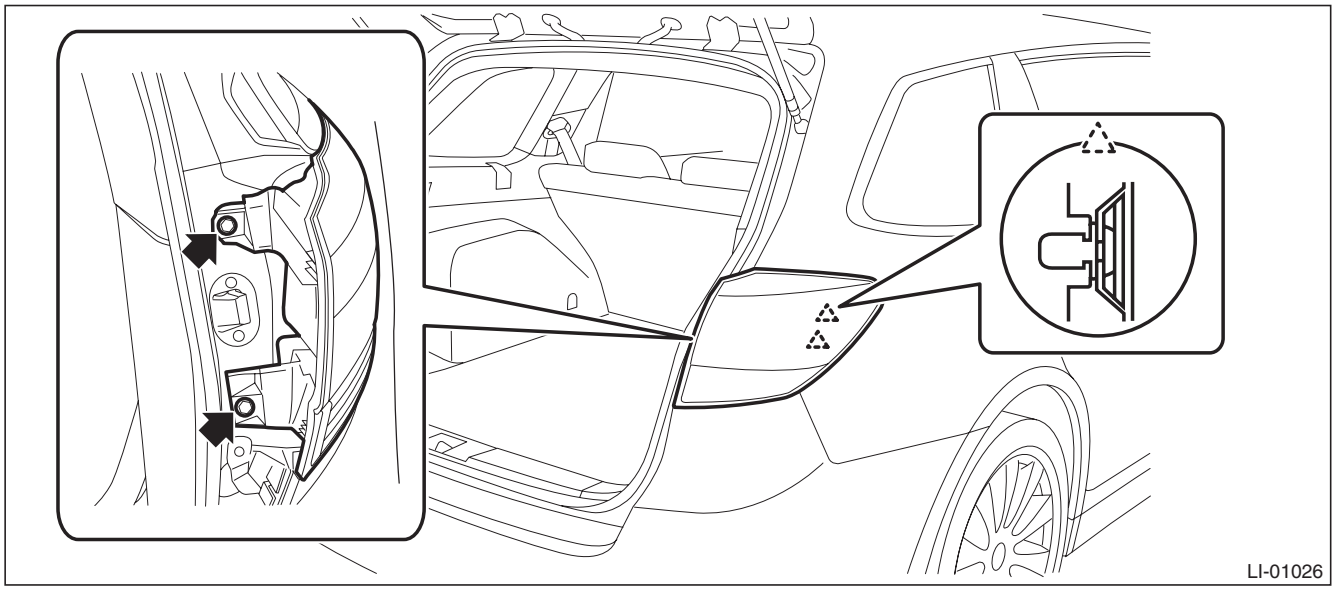

4) Remove the bulb sockets and bulbs.

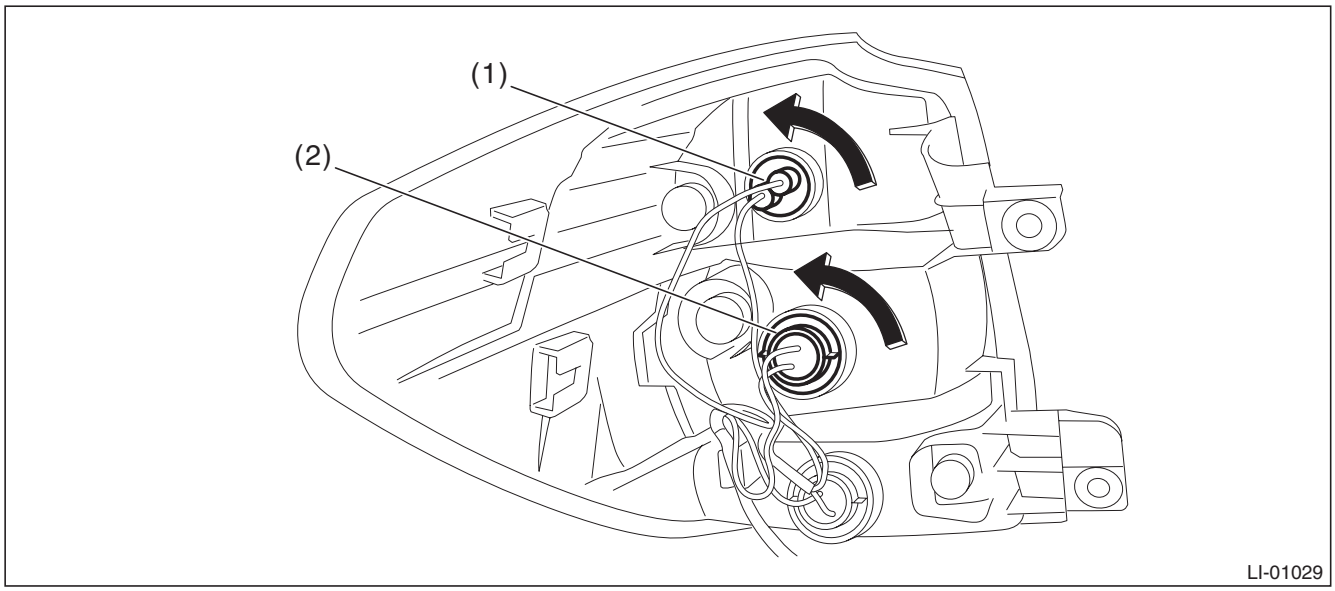

(1) Tail light bulb
(2) Stop light bulb

GETtheMANUALS.org

- **Rear finisher light side**

1) Release the claws and remove the bulb inspection cover of rear gate trim

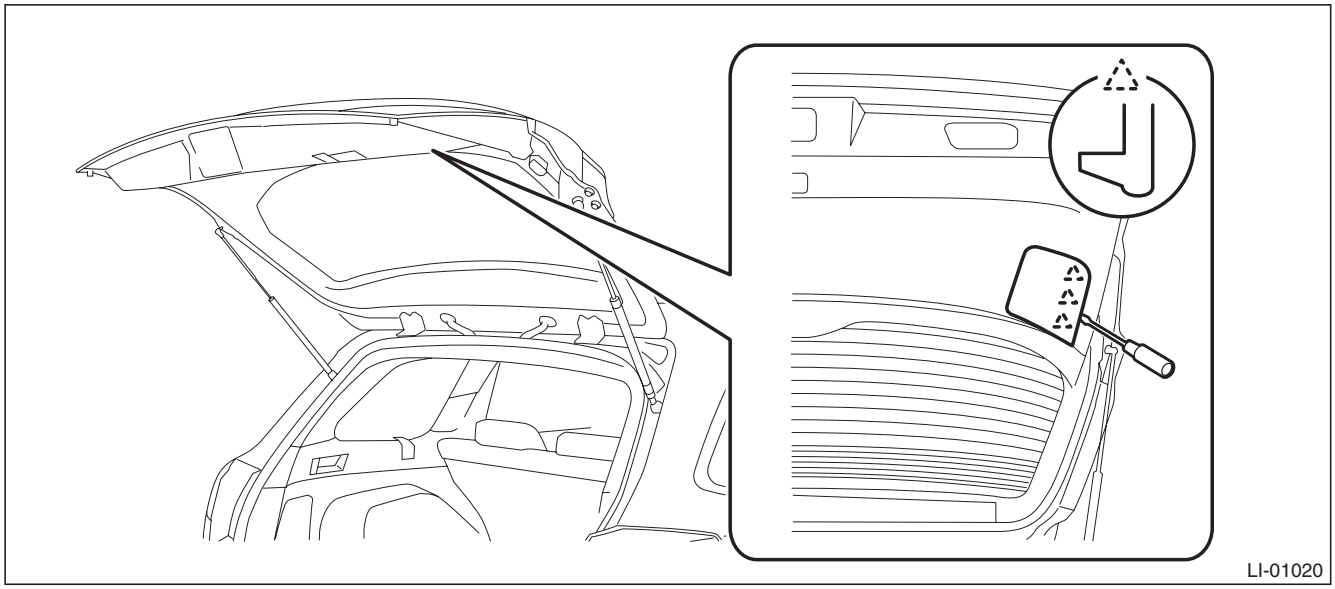

2) Remove the bulb socket and tail light bulb.

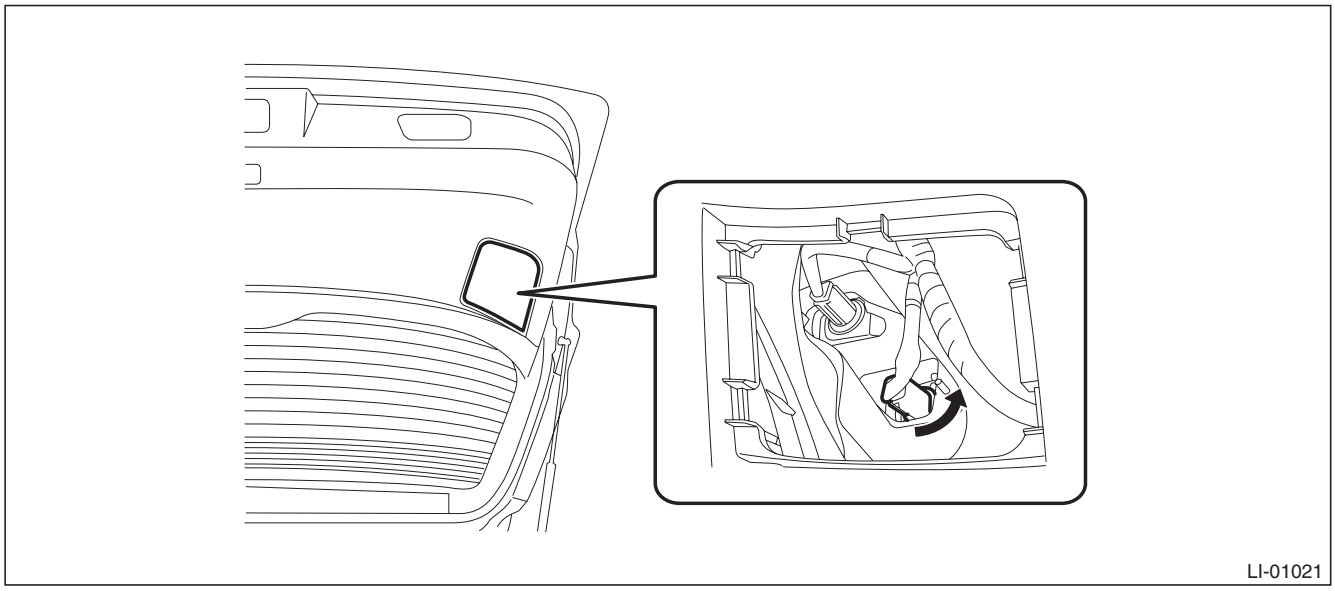

B: INSTALLATION

Install each part in the reverse order of removal.

Tightening torque:
Rear combination light ASSY: 7.5 N·m (0.76 kgf-m, 5.5 ft-lb)

C: INSPECTION

1) Visually check the bulb for blow out.
2) Check the bulb specification. <Ref. to LI-2, SPECIFICATION, General Description.>
3) Replace the bulb if it is found defective.

GETtheMANUALS.org

23. Rear Turn Signal Light Bulb

A: REMOVAL

1. SEDAN MODEL

1) Disconnect the ground cable from battery.
2) Release the lock and remove the bulb inspection cover of trunk room trim.

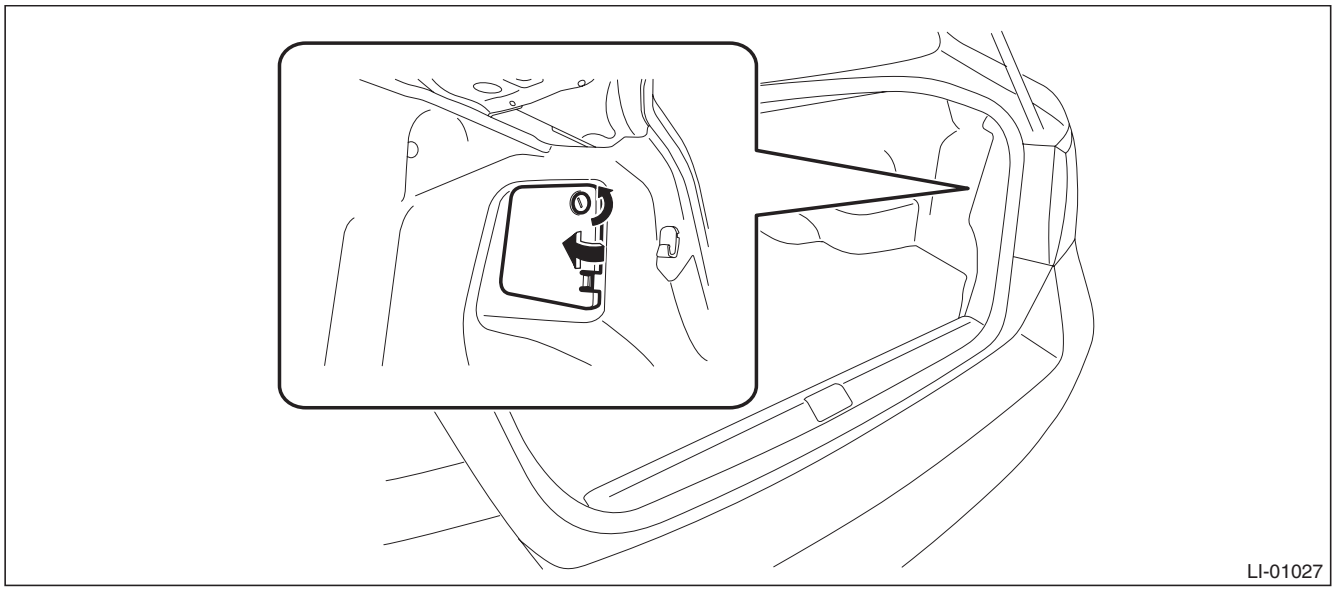

3) Remove the bulb socket and rear turn signal light bulb.

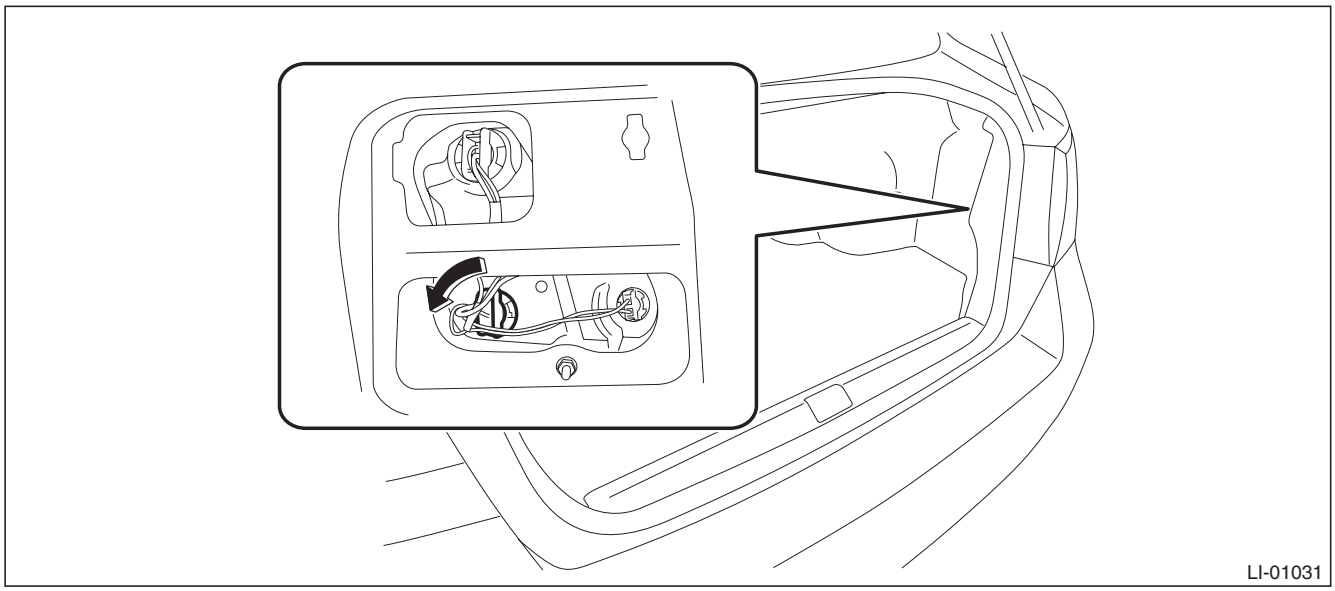

GETtheMANUALS.org

2. OUTBACK MODEL

1) Disconnect the ground cable from battery.
2) Remove the clips and detach the rear combination light covers.

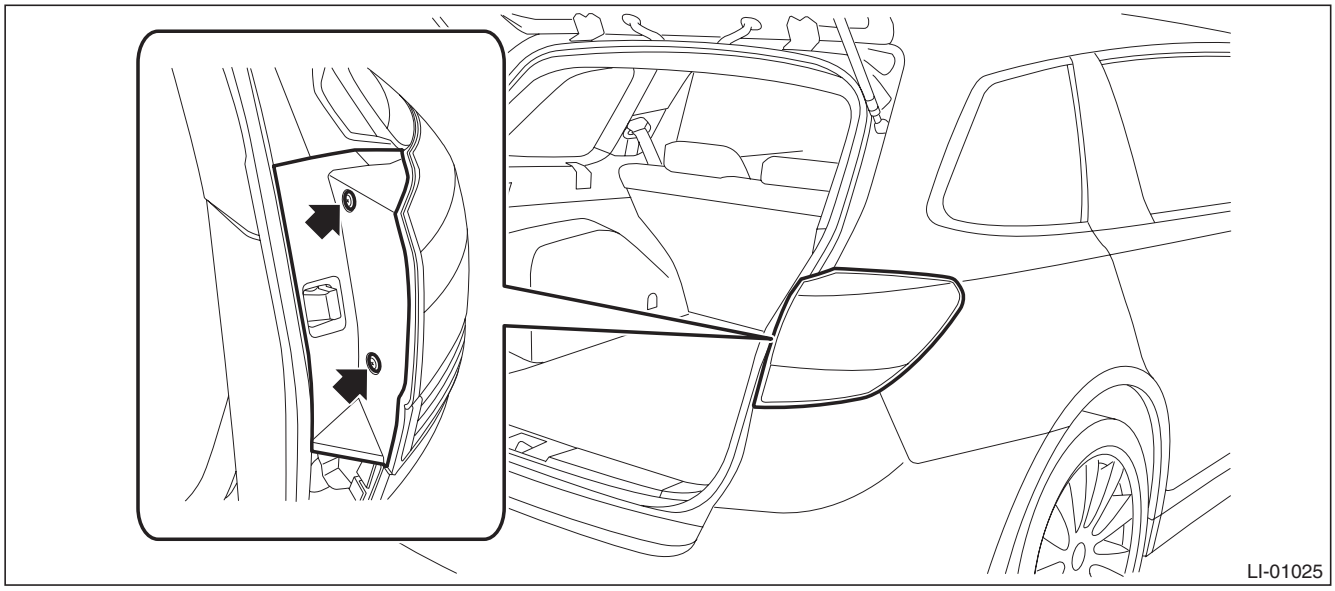

3) Remove the rear combination light assembly.

CAUTION:
Be careful not to damage the clips.

(1) Release the bolts and clips, then pull out the rear combination light assembly to the vehicle rear.
(2) Disconnect the connector and remove the rear combination light assembly.

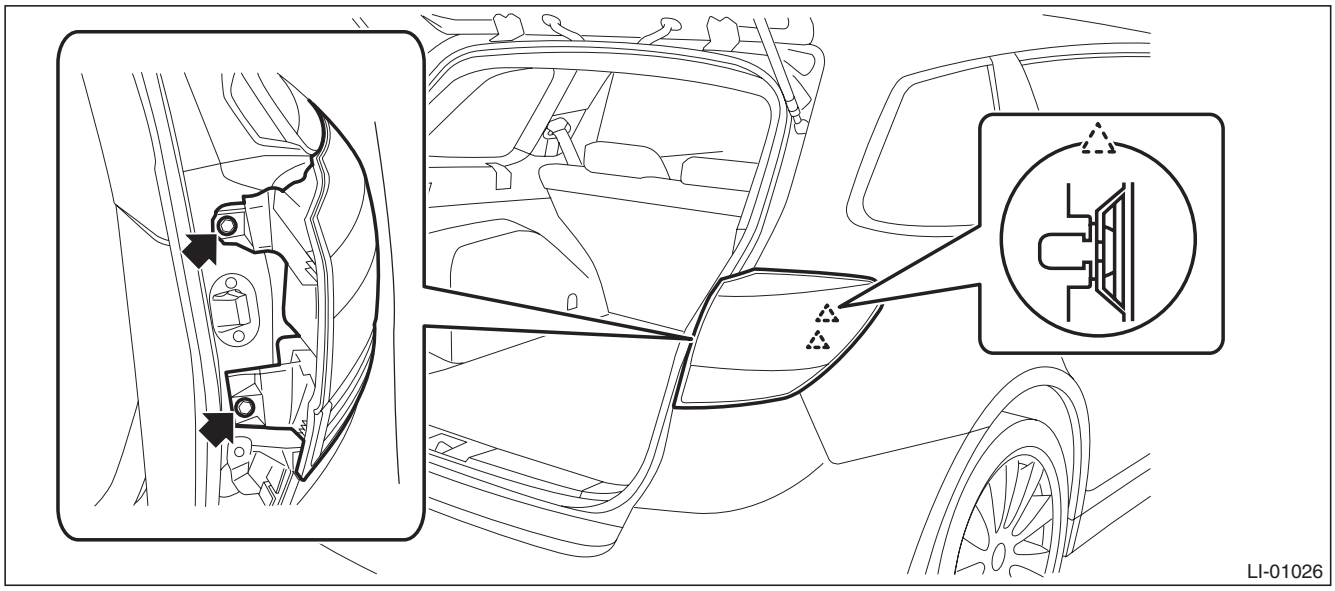

GETtheMANUALS.org

4) Remove the bulb socket and rear turn signal light bulb.

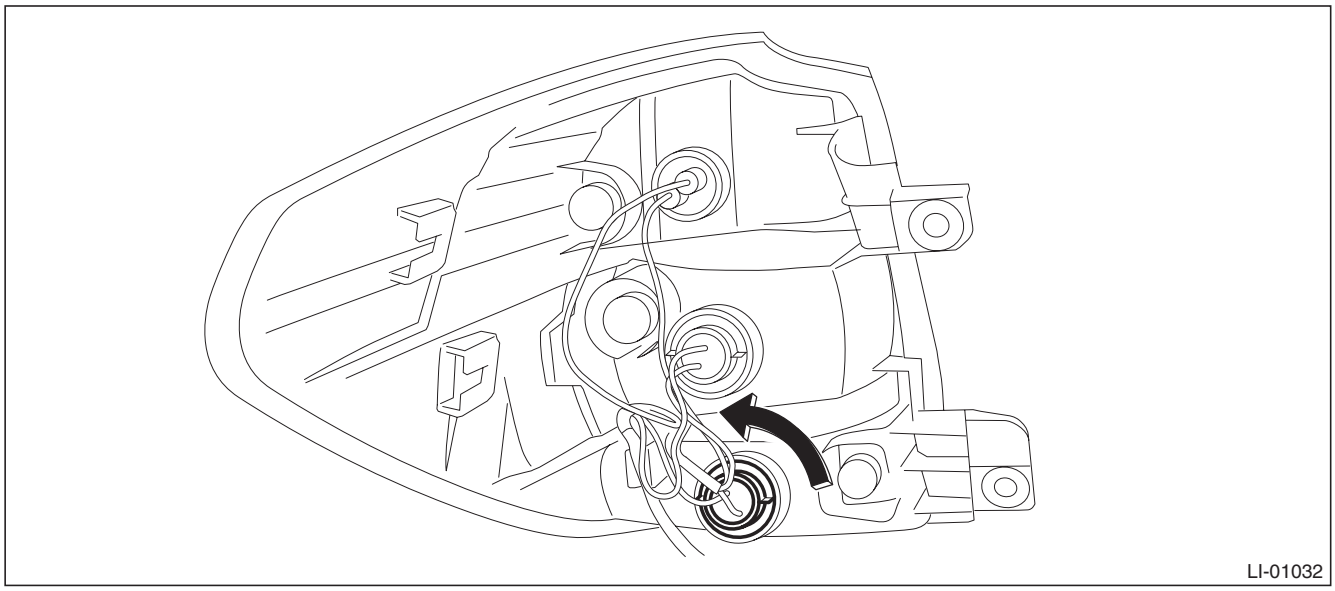

B: INSTALLATION

Install each part in the reverse order of removal.

Tightening torque:
Rear combination light ASSY: 7.5 N·m (0.76 kgf-m, 5.5 ft-lb)

C: INSPECTION

1) Visually check the bulb for blow out.
2) Check the bulb specification. <Ref. to LI-2, SPECIFICATION, General Description.>
3) Replace the bulb if it is found defective.

GETtheMANUALS.org

24. Rear Finisher Light Assembly

A: REMOVAL

1. SEDAN MODEL

1) Disconnect the ground cable from battery.
2) Remove the trunk lid trim. <Ref. to EI-127, REMOVAL, Trunk Room Trim.>
3) Remove the rear finisher light assembly.
   (1) Disconnect the connector.
   (2) Remove the nuts and bolts and remove the rear finisher light assembly.

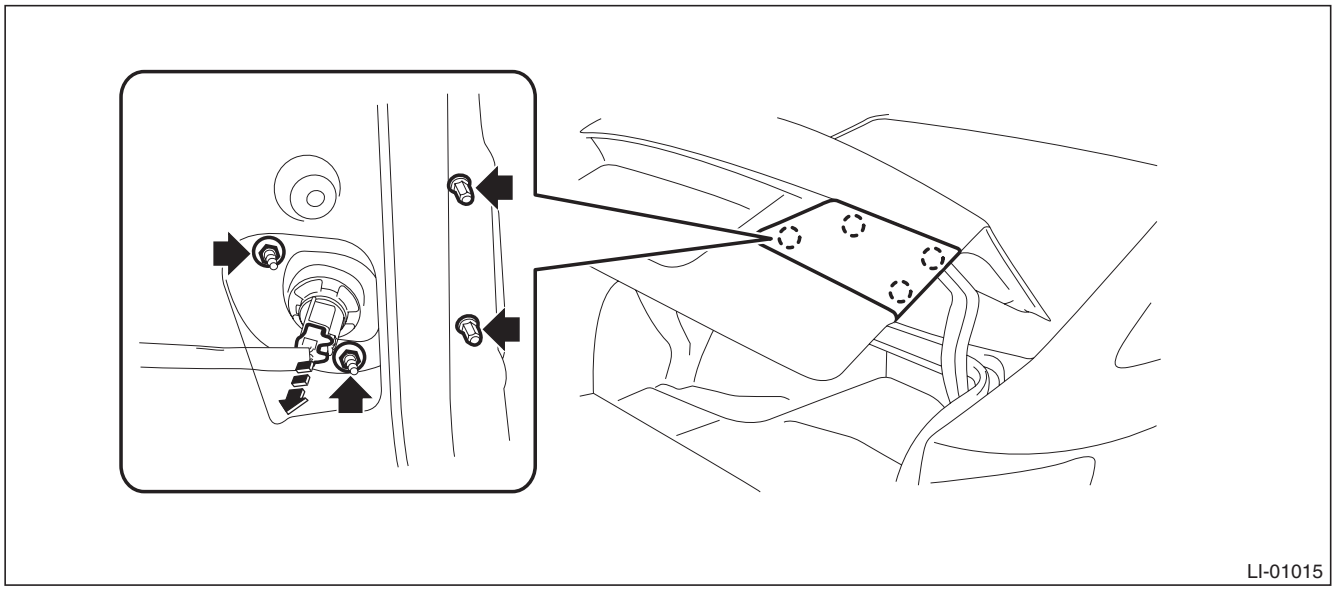

2. OUTBACK MODEL

1) Disconnect the ground cable from battery.
2) Remove the rear gate trim. <Ref. to EI-160, REMOVAL, Rear Gate Trim.>
3) Remove the rear gate garnish. <Ref. to EI-164, REMOVAL, Rear Gate Garnish.>
4) Release the clips and claws, then detach the rear finisher light side cover.

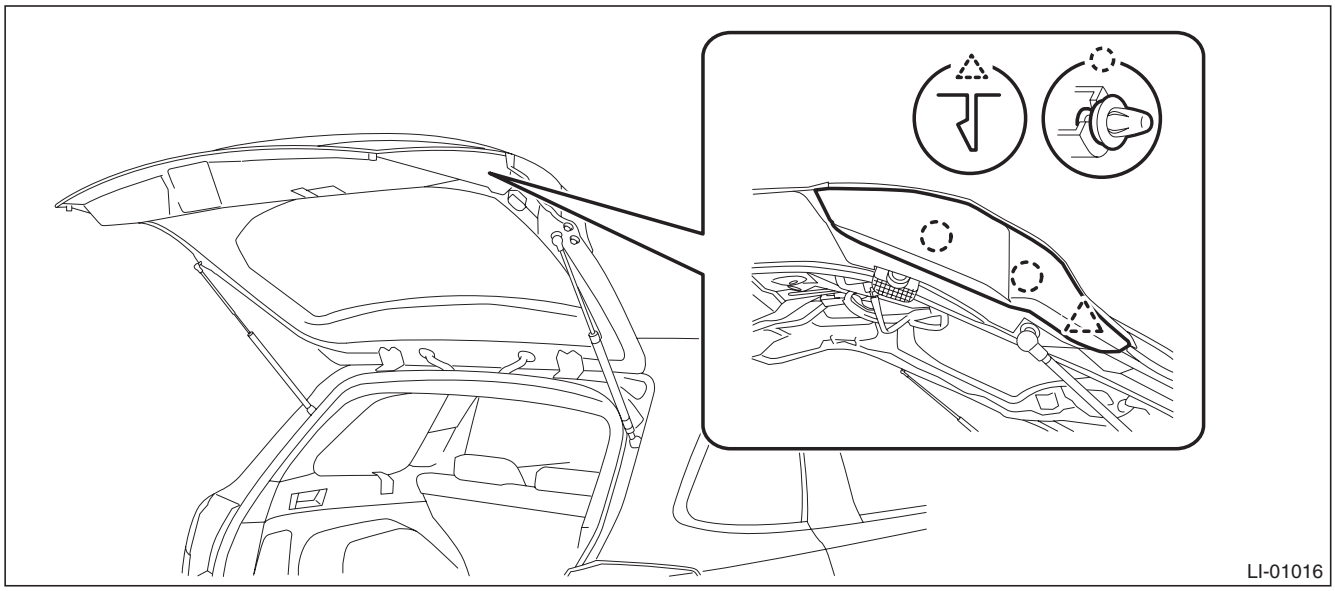

GETtheMANUALS.org

5) Remove the rear finisher light assembly.
   (1) Disconnect the connector.
   (2) Remove the nuts and release the pin, then remove the rear finisher light assembly.

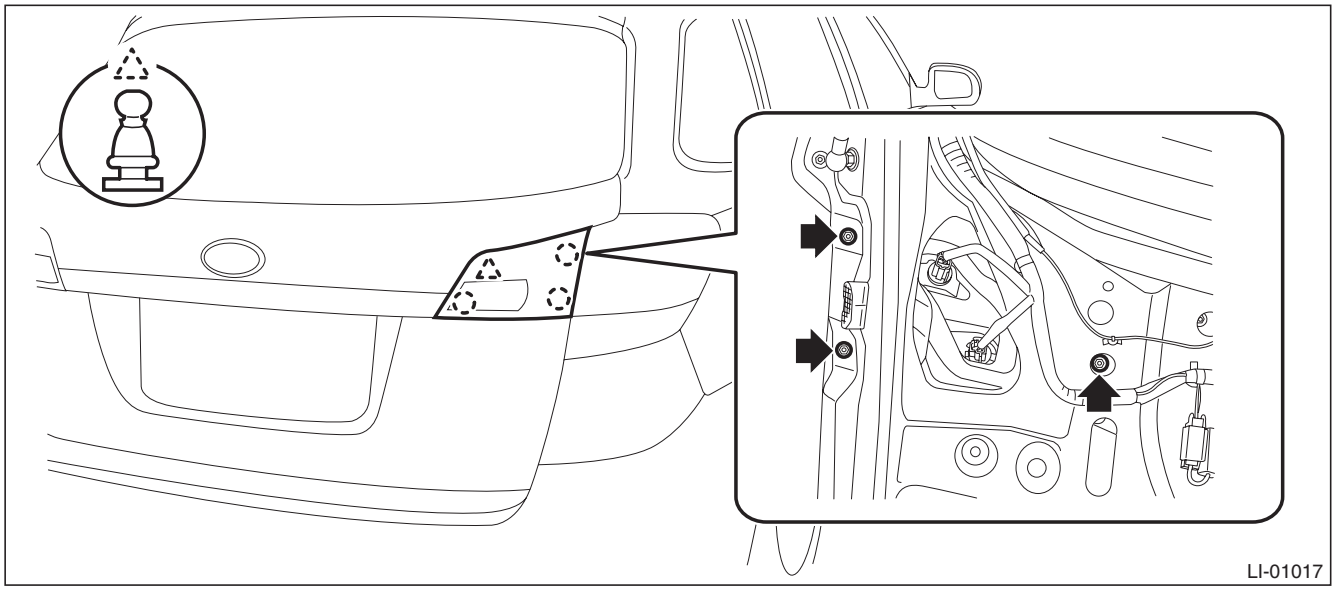

B: INSTALLATION

CAUTION:
Replace the body seal gasket with a new part.
Install each part in the reverse order of removal.

Tightening torque:
Rear finisher light assembly: 4.5 N·m (0.45 kgf-m, 3.3 ft-lb)

GETtheMANUALS.org

25. Back-up Light Bulb

A: REMOVAL

1. SEDAN MODEL

1) Disconnect the ground cable from battery.
2) Release the lock and remove the bulb inspection cover of trunk room trim.

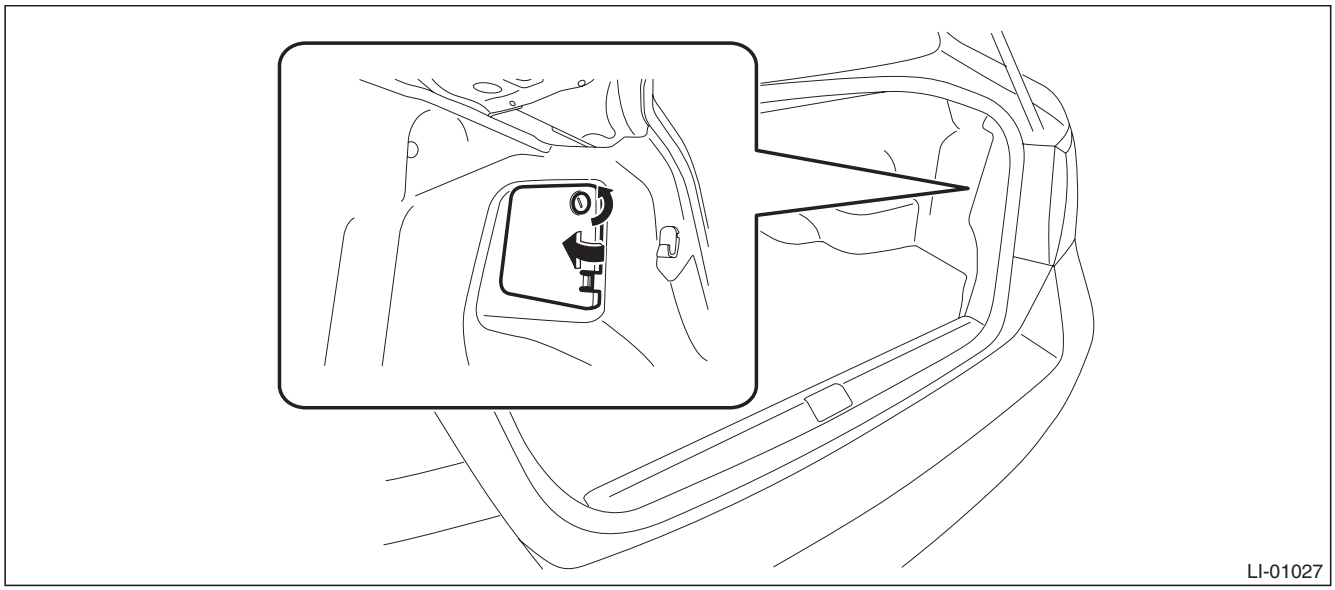

3) Remove the bulb socket and back-up light bulb.

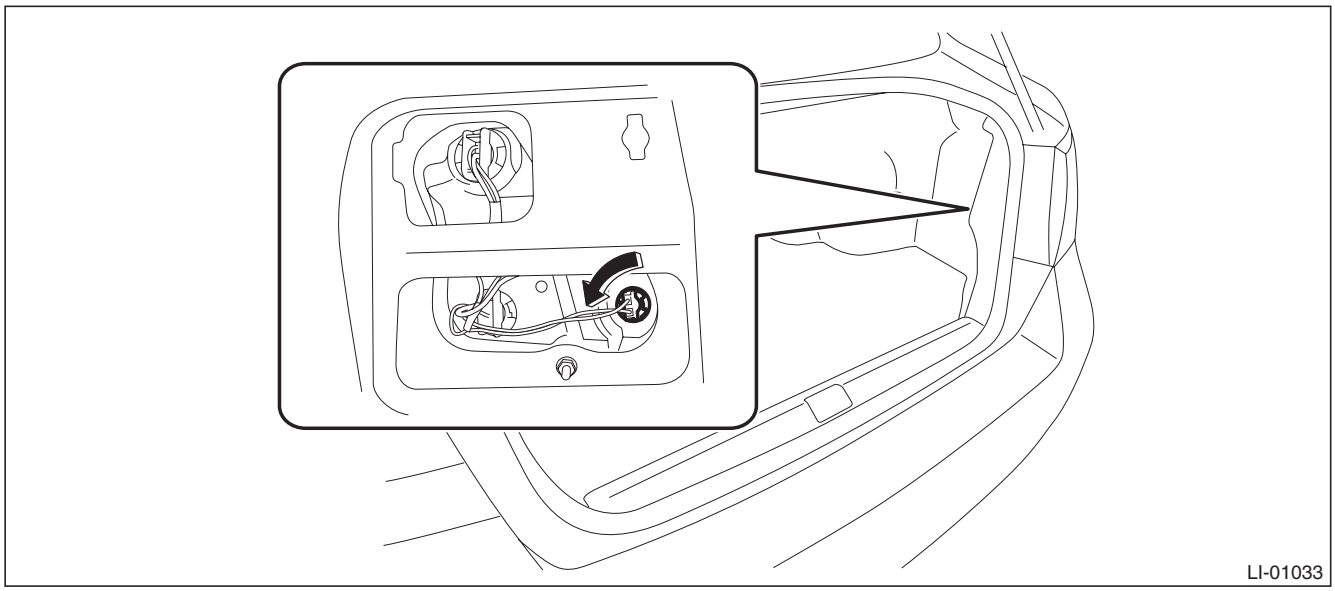

GETtheMANUALS.org

2. OUTBACK MODEL

1) Disconnect the ground cable from battery.
2) Release the claws and remove the bulb inspection cover of rear gate trim

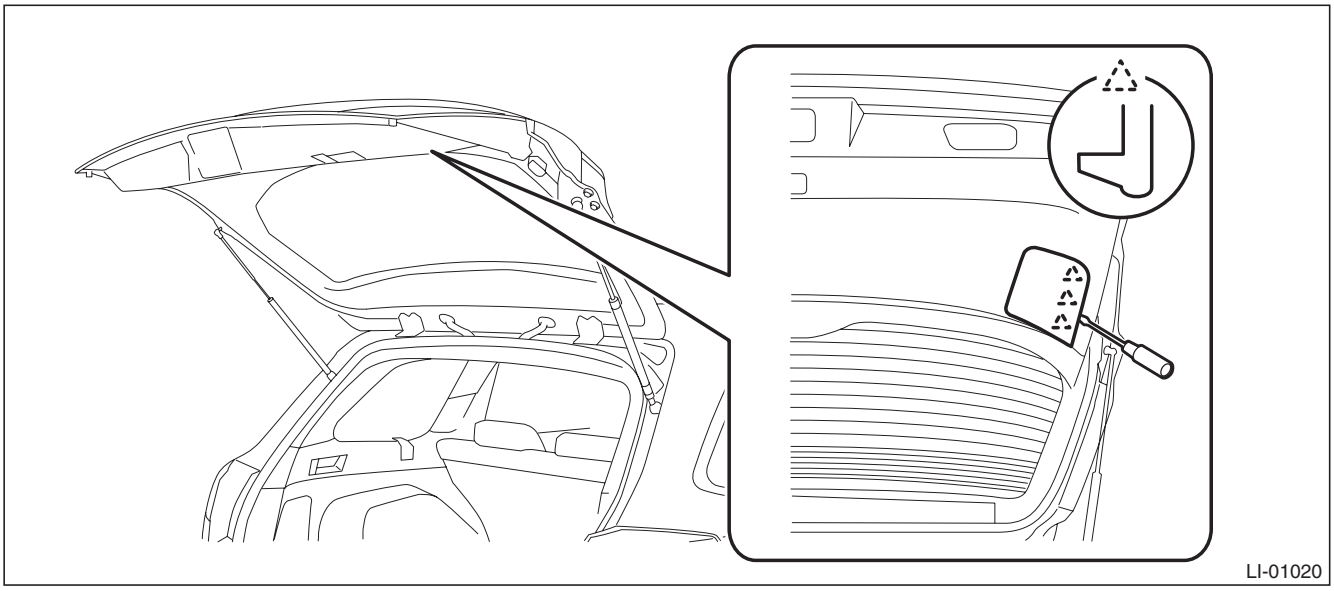

3) Remove the bulb socket and back-up light bulb.

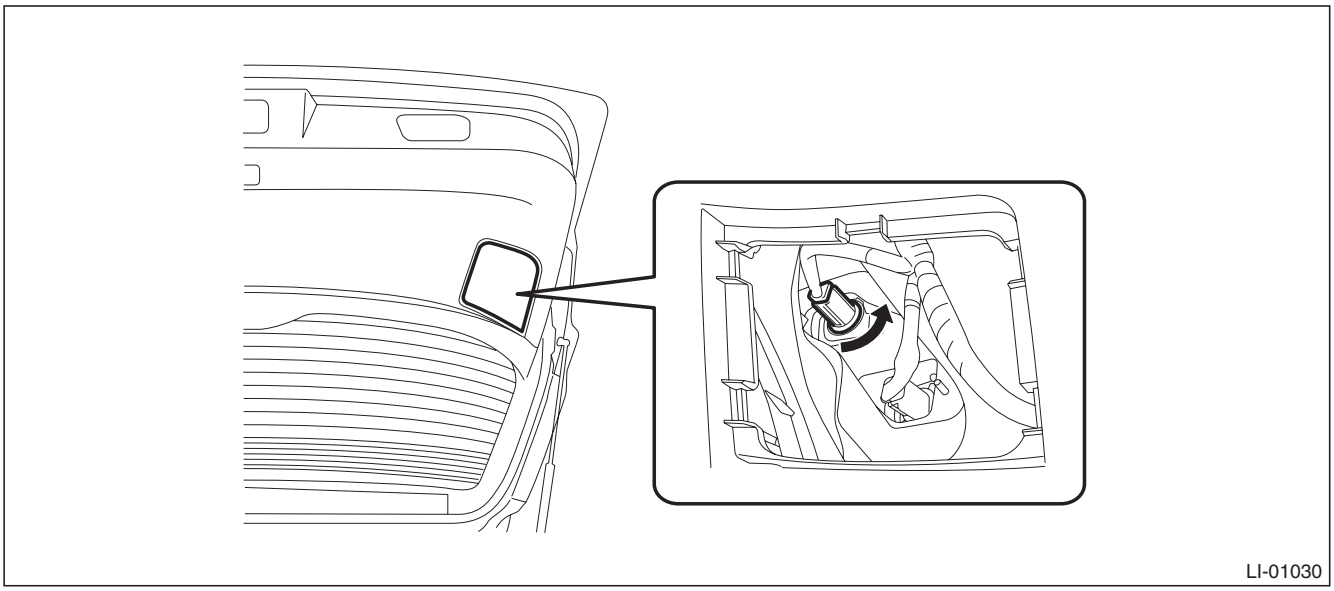

B: INSTALLATION

Install each part in the reverse order of removal.

C: INSPECTION

1) Visually check the bulb for blow out.
2) Check the bulb specification. <Ref. to LI-2, SPECIFICATION, General Description.>
3) Replace the bulb if it is found defective.

GETtheMANUALS.org

26. License Plate Light

A: REMOVAL

1. SEDAN MODEL

1) Disconnect the ground cable from battery.
2) Remove the trunk lid trim. <Ref. to EI-127, TRUNK LID TRIM, REMOVAL, Trunk Room Trim.>
3) Remove the trunk lid garnish. <Ref. to EI-163, REMOVAL, Trunk Lid Garnish.>
4) Disconnect the connector and remove the bulb socket.

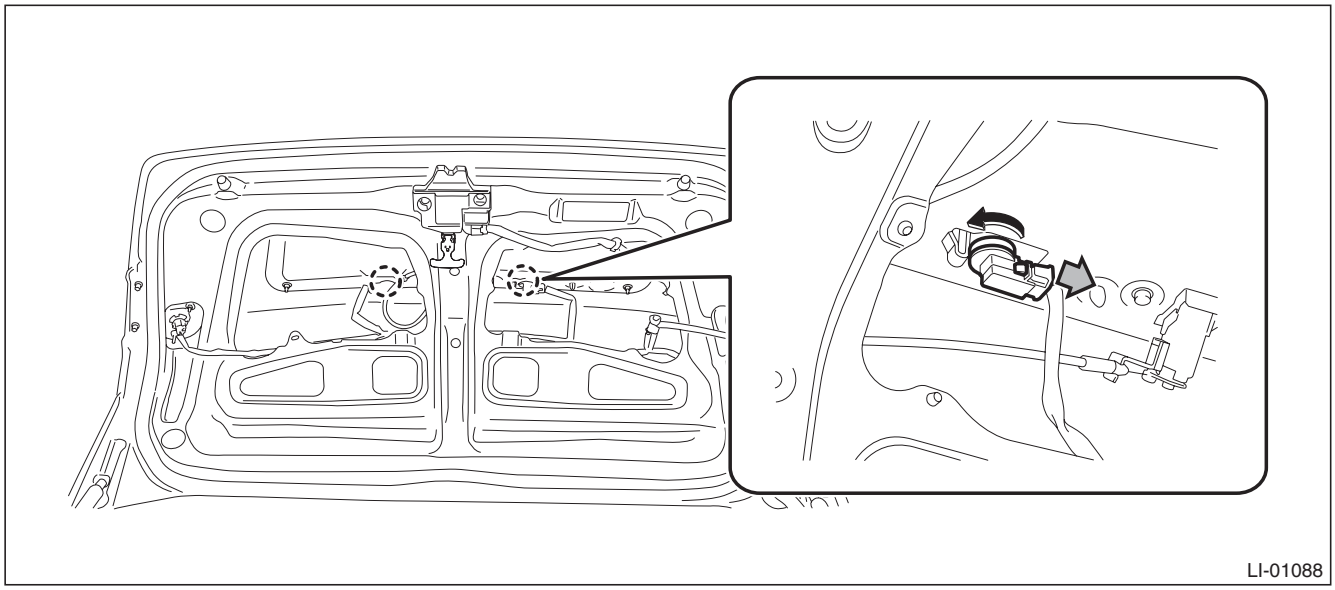

5) Remove the license plate light.

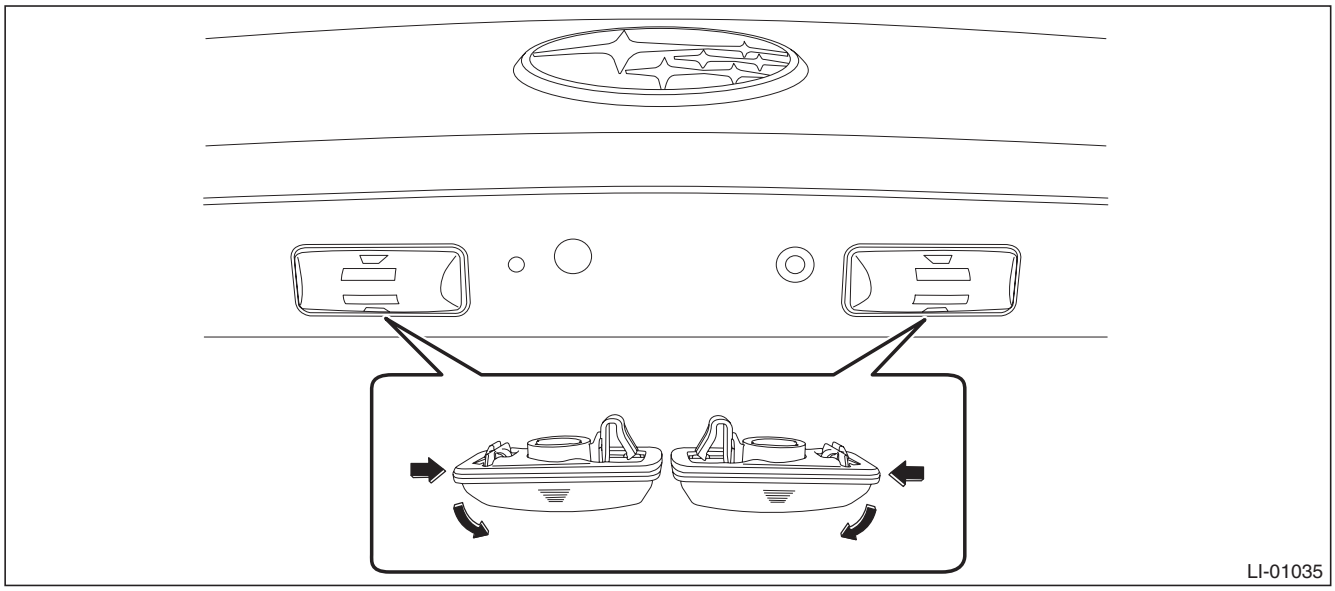

GETtheMANUALS.org

2. OUTBACK MODEL

1) Disconnect the ground cable from battery.
2) Remove the screws and remove the license plate light.

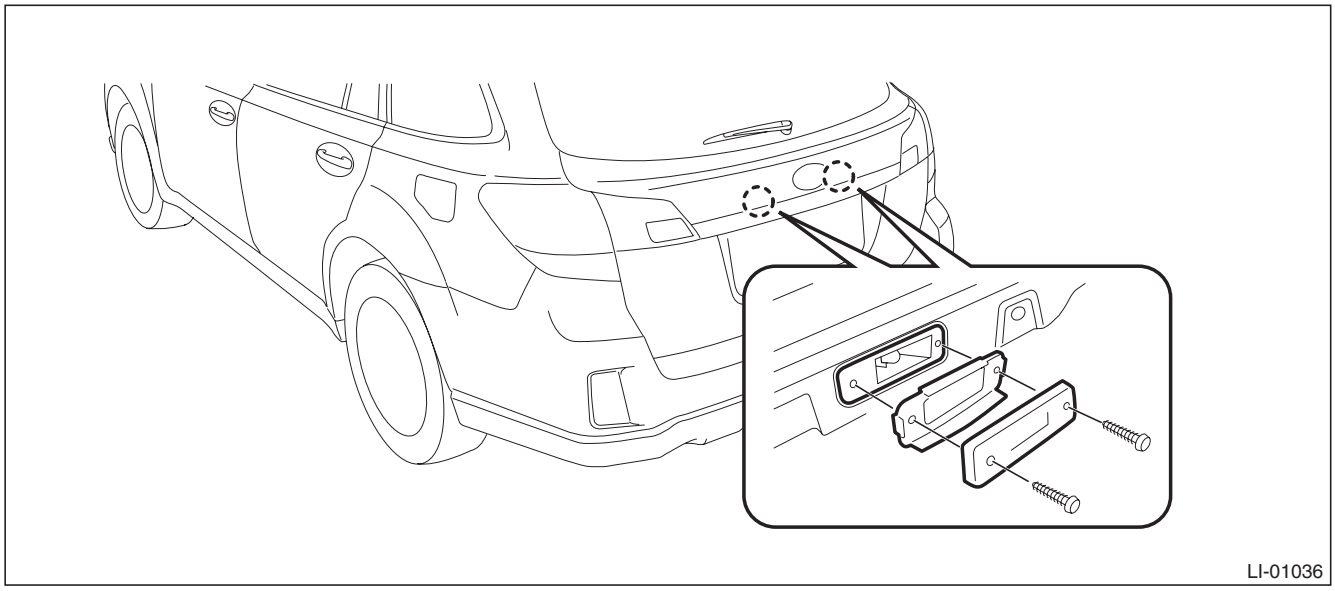

NOTE:
When removing the license plate light assembly harness, remove the following parts.
- Rear gate garnish: <Ref. to EI-164, REMOVAL, Rear Gate Garnish.>
- Rear gate opener button: <Ref. to SL-43, REMOVAL, Rear Gate Opener Button.>

B: INSTALLATION

Install each part in the reverse order of removal.

C: INSPECTION

1) Visually check the bulb for blow out.
2) Check the bulb specification. <Ref. to LI-2, SPECIFICATION, General Description.>
3) Replace the bulb if it is found defective.

GETtheMANUALS.org

27.High-mounted Stop Light

A: REMOVAL

1. SEDAN MODEL

1) Disconnect the ground cable from battery.
2) Remove the rear shelf trim. <Ref. to EI-120, REMOVAL, Rear Shelf Trim.>
3) Remove the high-mounted stop light.
   (1) Disconnect the connector.
   (2) Remove the lock washers and remove the high-mounted stop light.

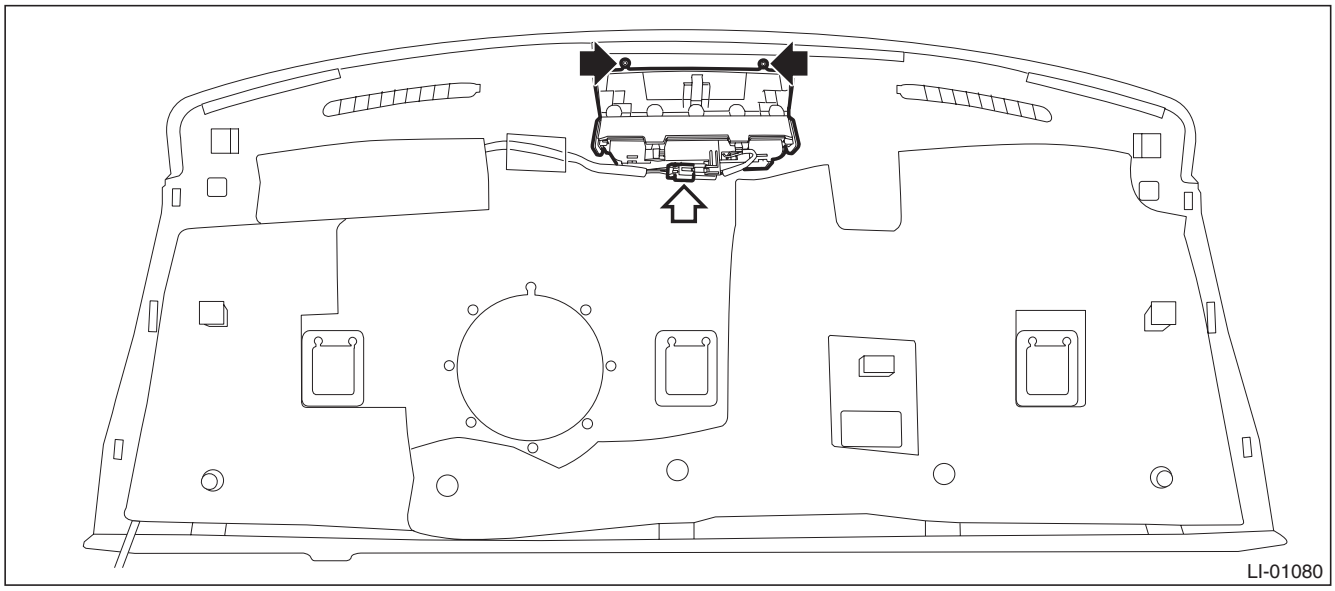

2. OUTBACK MODEL

1) Disconnect the ground cable from battery.
2) Remove the rear gate upper trim.
   (1) Release the claws in the trim end.
   (2) Disconnect the claws in the center of trim, and remove the rear gate upper trim.

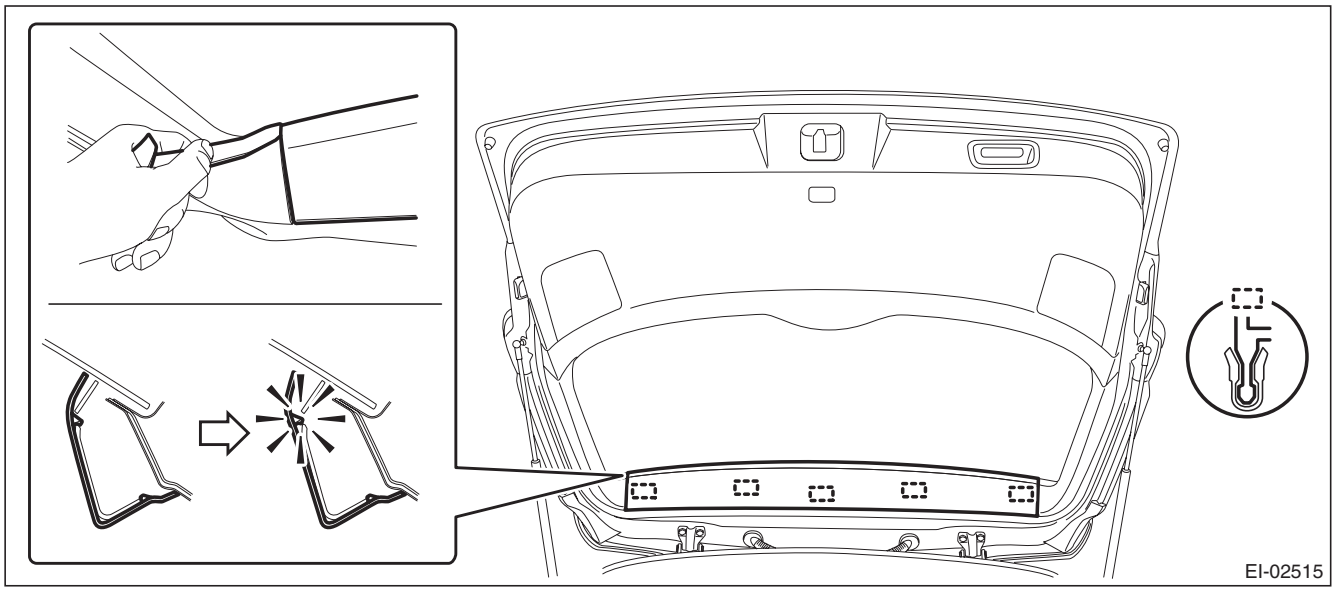

GETtheMANUALS.org

3) Remove the high-mounted stop light.
(1) Remove the nuts and take out the high-mounted stop light toward vehicle rear.

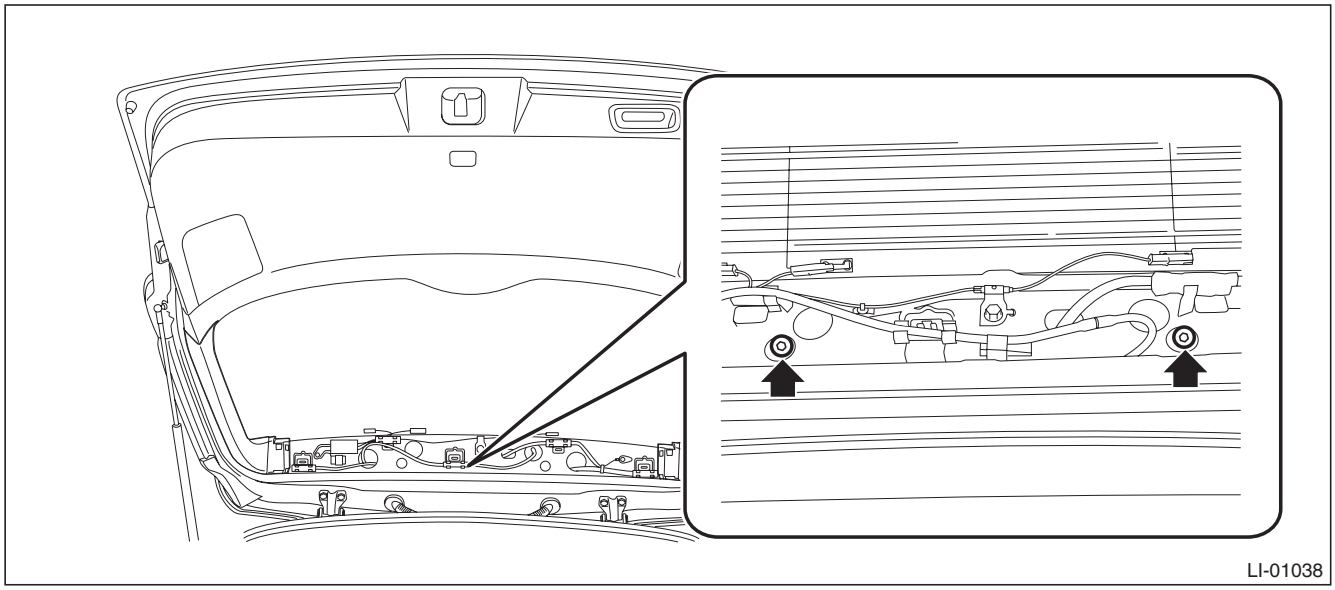

(2) Disconnect the connector and remove the high-mounted stop light.

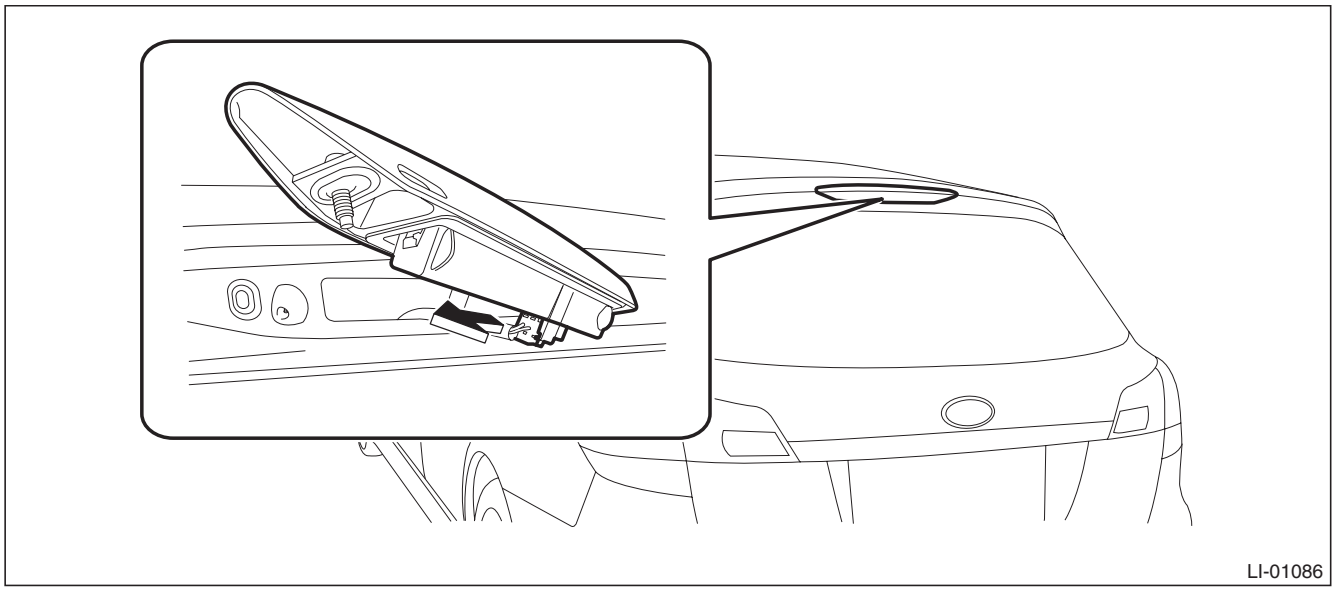

B: INSTALLATION

Install each part in the reverse order of removal.

Tightening torque:
High-mounted stop light: 4.5 N·m (0.46 kgf-m, 3.3 ft-lb)

C: INSPECTION

1) Install the high-mounted stop light to test if it illuminates normally.
2) If it fails to illuminate normally, replace the high-mounted stop light with a new part.

NOTE:
Since LED (Light Emitting Diode) is used for the high-mounted stop light, replace the high-mounted stop light assembly if the LED burns out.

GETtheMANUALS.org

28.Spot Map Light

A: REMOVAL

NOTE:
The spot map light is a single unit with the overhead console.
1) Disconnect the ground cable from battery.
2) Remove the overhead console assembly.
   (1) Push and open the rear end of the overhead console lid, and remove the screws.
   (2) Remove the clips and pull out the overhead console to disconnect the connectors.

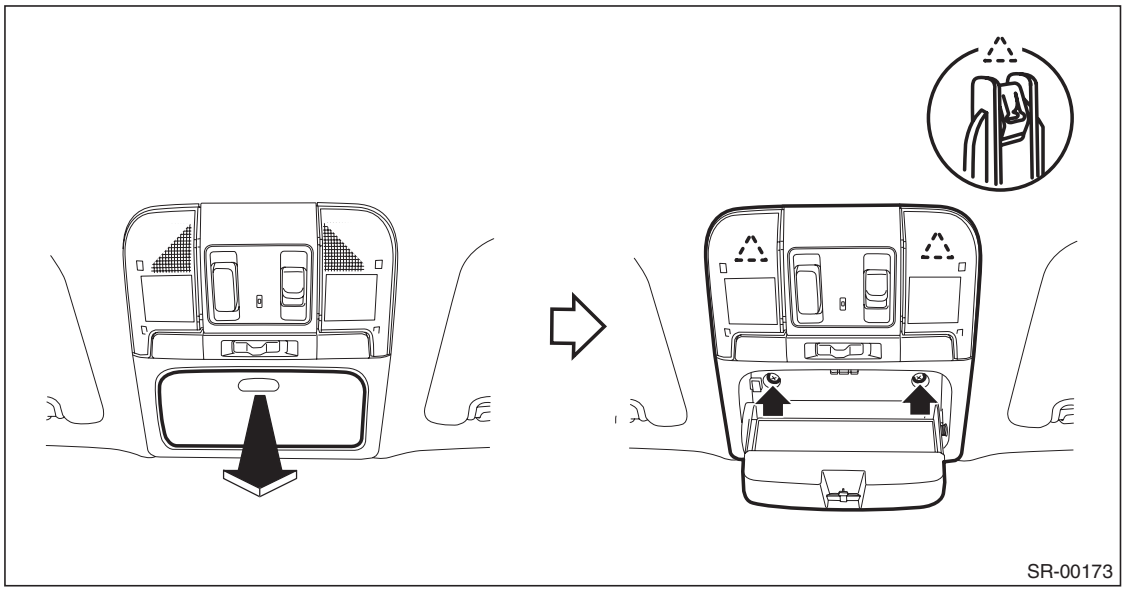

3) Release the claws, then detach the spot map light cover and bulb.

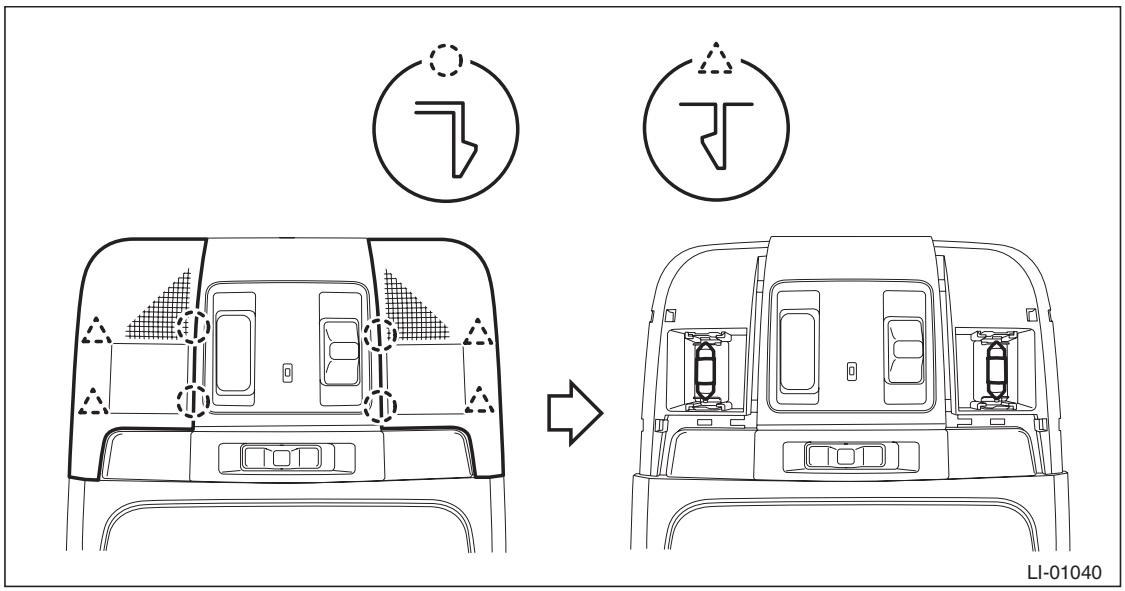

B: INSTALLATION

Install each part in the reverse order of removal.

GETtheMANUALS.org

C: INSPECTION

1. SPOT MAP LIGHT BULB

1) Visually check the bulb for blow out.
2) Check the bulb specification. <Ref. to LI-2, SPECIFICATION, General Description.>
3) Replace the bulb if it is found defective.

2. SPOT MAP LIGHT SWITCH

1) Remove the overhead console assembly.
2) Measure the resistance between spot map light switch terminals.

Preparation tool: Circuit tester

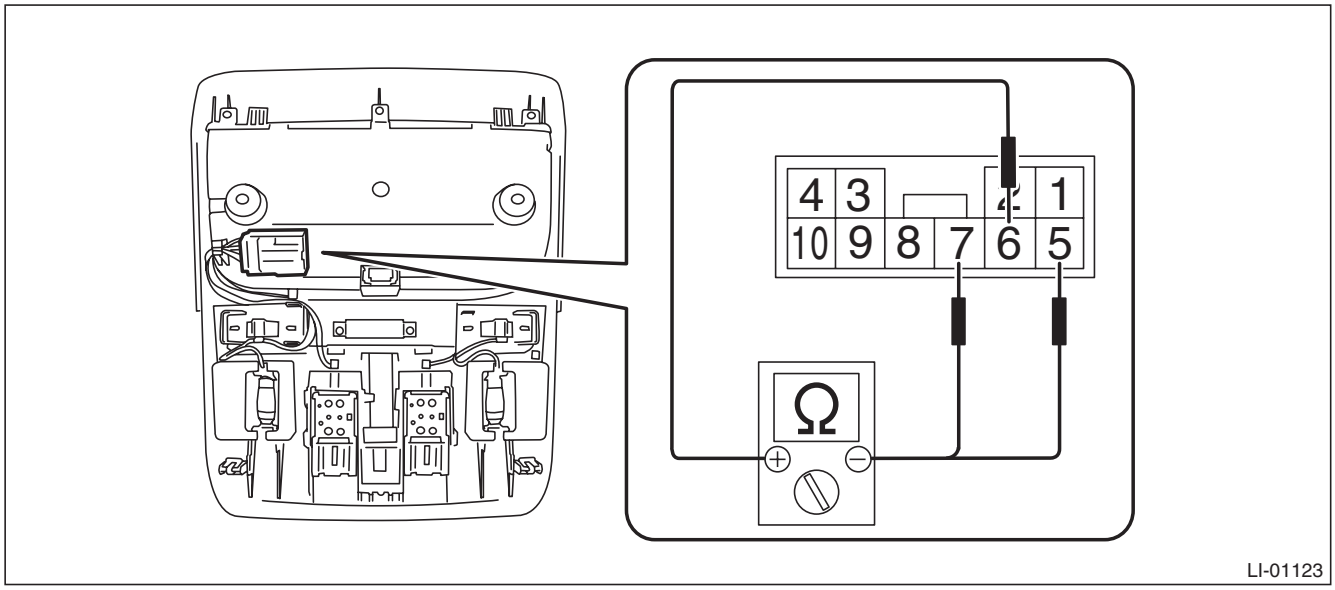

Terminal No.	Inspection Conditions	Specification
—	Switch OFF	1 MΩ or more
6 — 5	Switch ON	Less than 1 Ω
6 — 7	Switch door	Less than 1 Ω

3) Replace the overhead console assembly if the inspection result is not within the standard value.

3. OVERHEAD CONSOLE ILLUMINATION LIGHT BULB

NOTE:
Since LEDs (Light Emitting Diode) are used for the overhead console illumination light bulb, replace the overhead console assembly if an LED burns out.

GETtheMANUALS.org

29. Room Light

A: REMOVAL

1) Disconnect the ground cable from battery.
2) Remove the room light.
   (1) Release the claws and remove the cover.
   (2) Remove the screws.

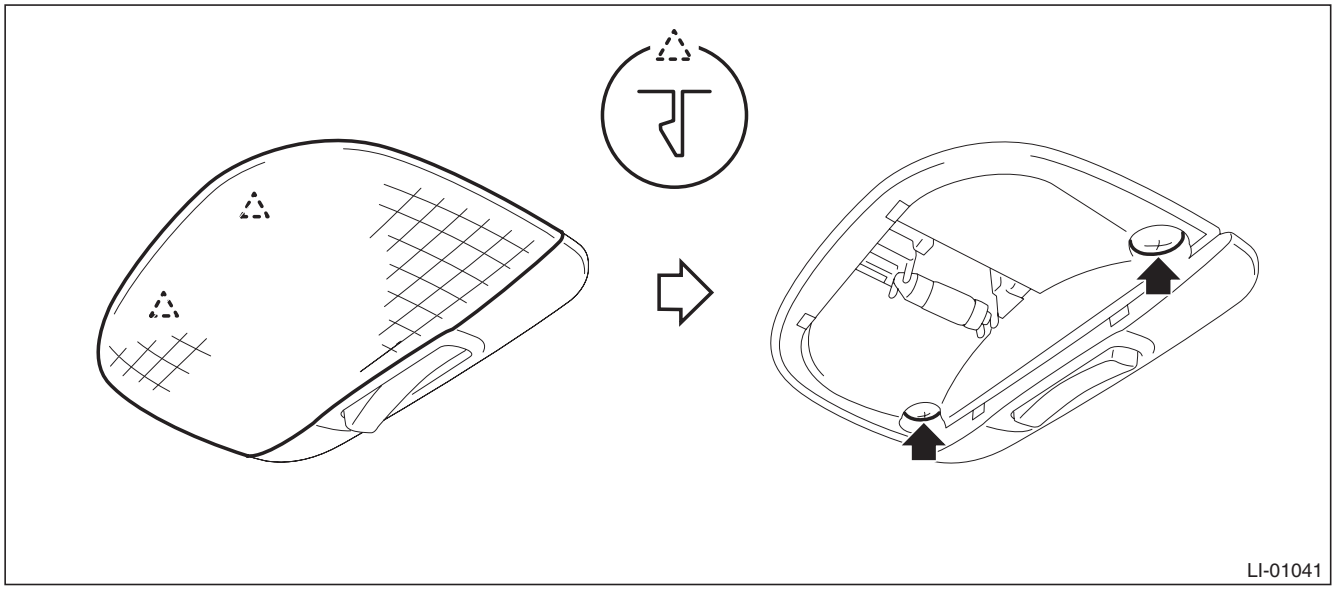

   (3) Disconnect the connector and remove the room light and bulb.

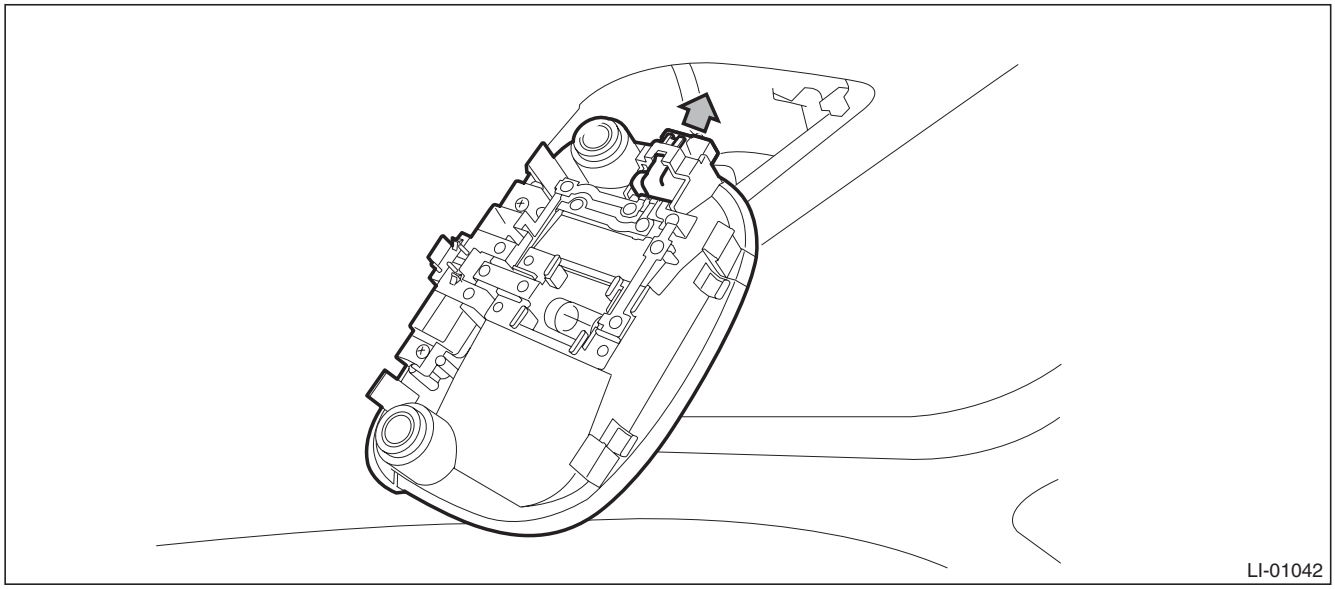

B: INSTALLATION

Install each part in the reverse order of removal.

GETtheMANUALS.org

C: INSPECTION

1. ROOM LIGHT BULB

1) Visually check the bulb for blow out.
2) Check the bulb specification. <Ref. to LI-2, SPECIFICATION, General Description.>
3) Replace the bulb if it is found defective.

2. ROOM LIGHT SWITCH

1) Remove the room light.
2) Measure the resistance between room light switch terminals.

Preparation tool: Circuit tester

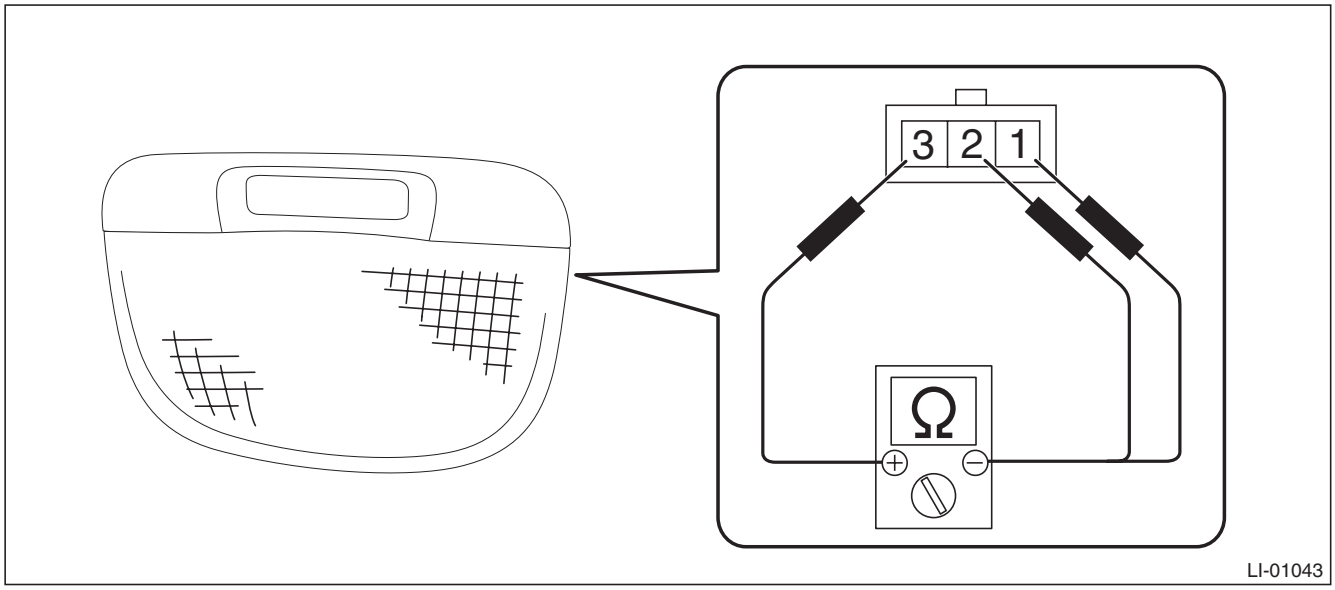

Terminal No.	Inspection Conditions	Specification
—	Switch OFF	1 MΩ or more
1 — 3	Switch ON	Less than 1 Ω
2 — 3	Switch door	Less than 1 Ω

3) Apply battery voltage to check the lighting condition of room light.

Terminal No.	Inspection Conditions	Specification
3 (+) — 1,2 (–)	Switch OFF	Light OFF
	Switch ON	Light ON
	Switch door	Light ON

4) Replace the spot map light switch if the inspection result is not within the standard value.

GETtheMANUALS.org

30. Luggage Room Light

A: REMOVAL

1) Disconnect the ground cable from battery.
2) Remove the luggage room light.
   (1) Release the claws and remove the luggage room light main body.
   (2) Disconnect the connector and remove the luggage room light.

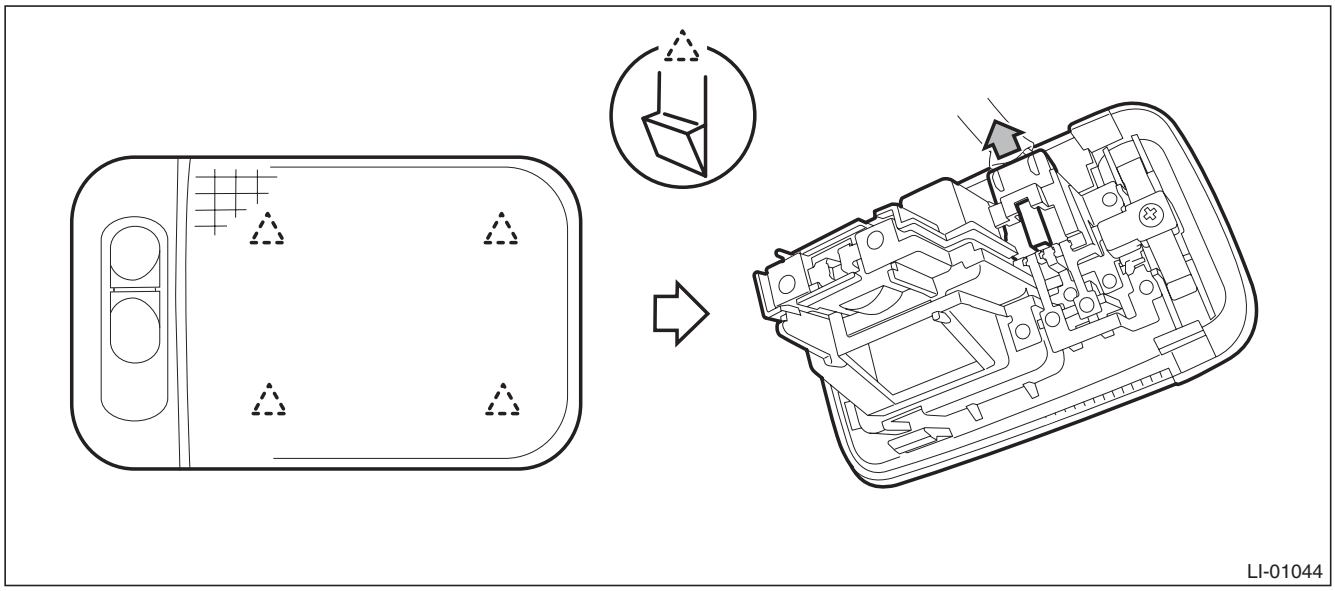

3) Release the claws, and detach the luggage room light cover and bulb.

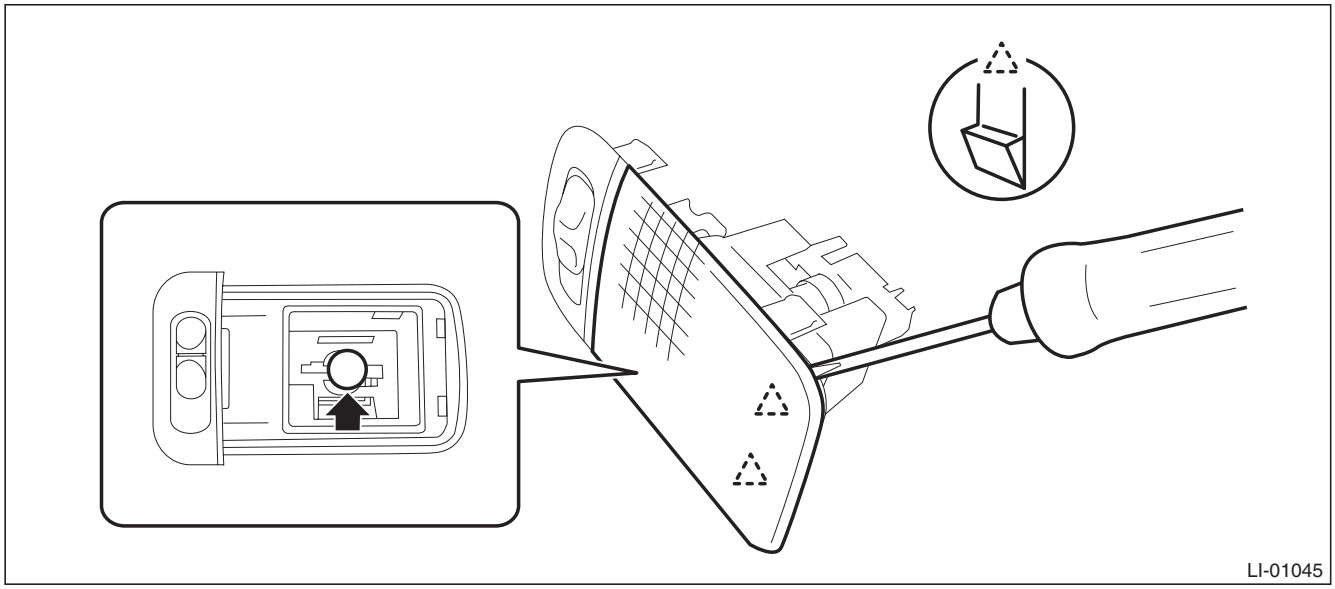

B: INSTALLATION

Install each part in the reverse order of removal.

GETtheMANUALS.org

C: INSPECTION

1. LUGGAGE ROOM LIGHT BULB

1) Visually check the bulb for blow out.
2) Check the bulb specification. <Ref. to LI-2, SPECIFICATION, General Description.>
3) Replace the bulb if it is found defective.

2. LUGGAGE ROOM LIGHT SWITCH

1) Remove the luggage room light.
2) Measure the resistance between luggage room light switch terminals.

Preparation tool: Circuit tester

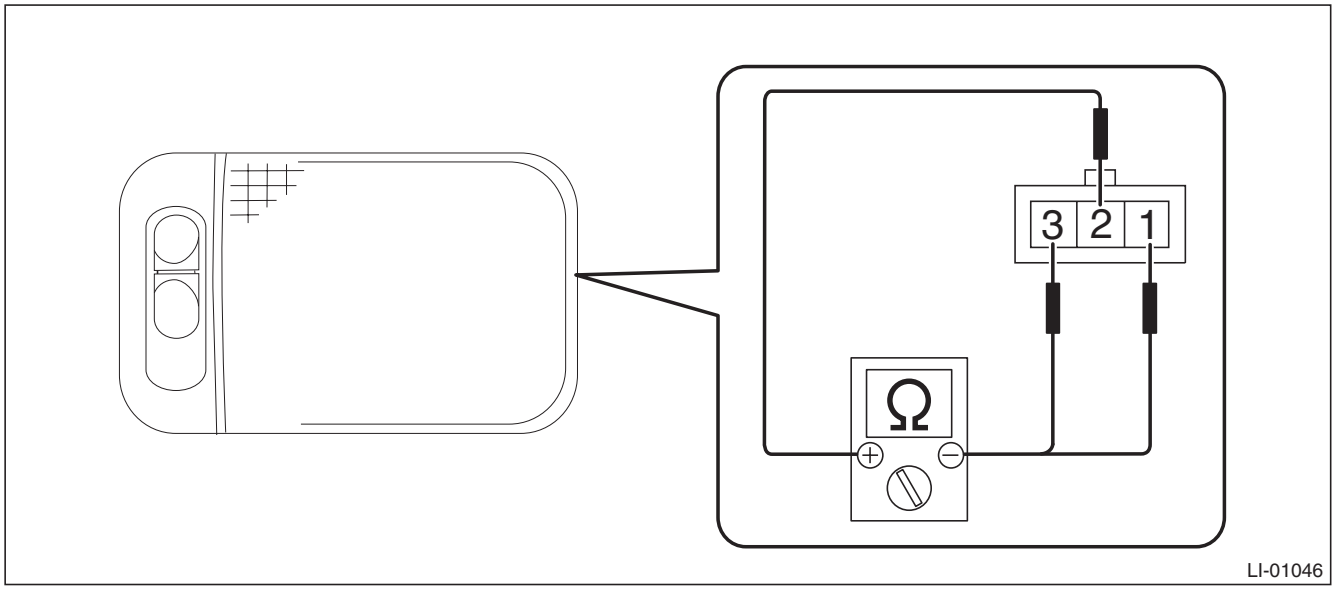

Terminal No.	Inspection Conditions	Specification
—	Switch OFF	1 MΩ or more
1 — 2	Switch ON	Less than 1 Ω
2 — 3	Switch door	Less than 1 Ω

3) Replace the luggage room light if the inspection result is not within the standard value.

GETtheMANUALS.org

31.Trunk Room Light

A: REMOVAL

1) Disconnect the ground cable from battery.
2) Remove the trunk room light
   (1) Disconnect the connector.
   (2) Turn the trunk room light counterclockwise to 60° and remove the light.

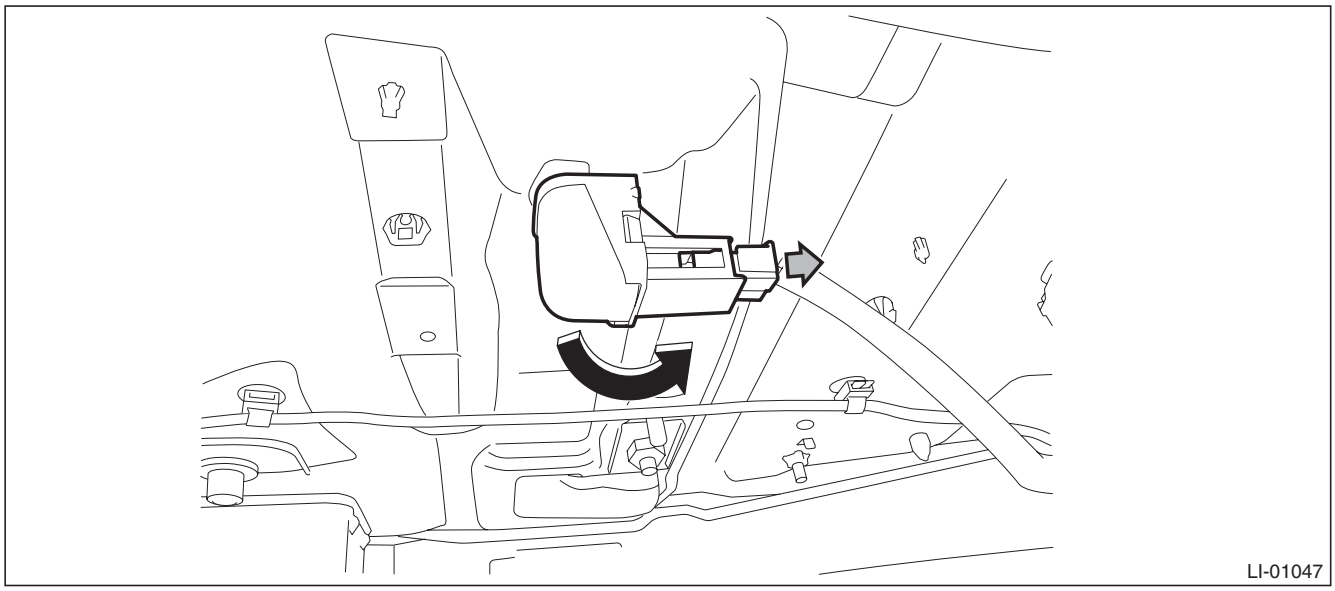

3) Release the claws, and detach the trunk room light cover and bulb.

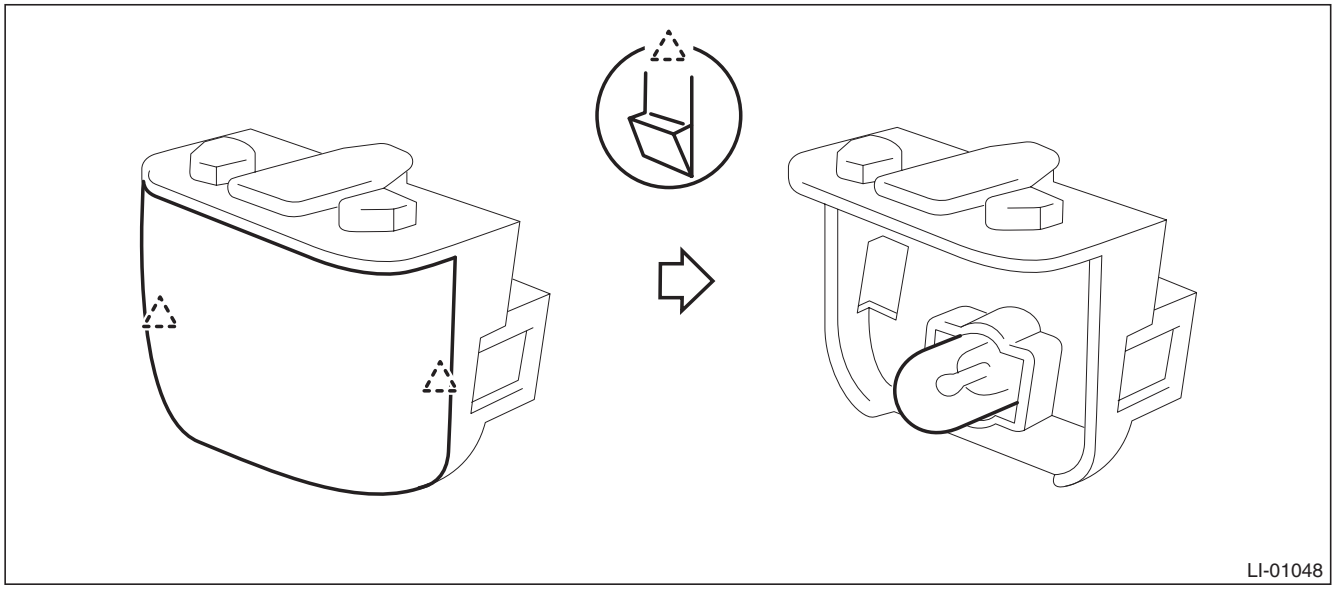

B: INSTALLATION

Install each part in the reverse order of removal.

C: INSPECTION

1) Visually check the bulb for blow out.
2) Check the bulb specification. <Ref. to LI-2, SPECIFICATION, General Description.>
3) Replace the bulb if it is found defective.

GETtheMANUALS.org

32. Glove Box Light

A: REMOVAL

1) Disconnect the ground cable from battery.
2) Remove the glove box. <Ref. to EI-66, REMOVAL, Glove Box.>
3) Remove the glove box light from the glove box back panel.

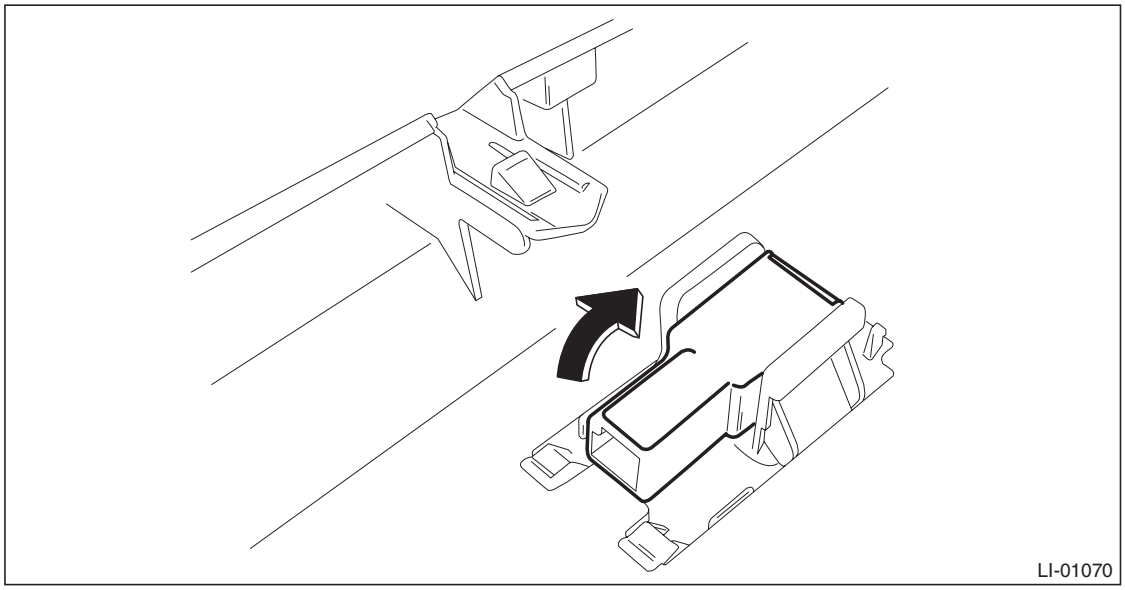

B: INSTALLATION

Install each part in the reverse order of removal.

C: INSPECTION

1) Install the glove box light and test if it illuminates normally.
2) If it is found not to illuminate normally, replace the glove box light with a new part.

NOTE:
Since LED (Light Emitting Diode) is used for the glove box light, replace the glove box light assembly if the LED burns out.

GETtheMANUALS.org

33. Door Step Light

A: REMOVAL

1) Disconnect the ground cable from battery.
2) Remove the door step light.

CAUTION:
Be careful not to damage light and door trim.
(1) Insert a flat tip screwdriver into the slit of the door step light to release the claw.
(2) Disconnect the connector and remove the door step light.

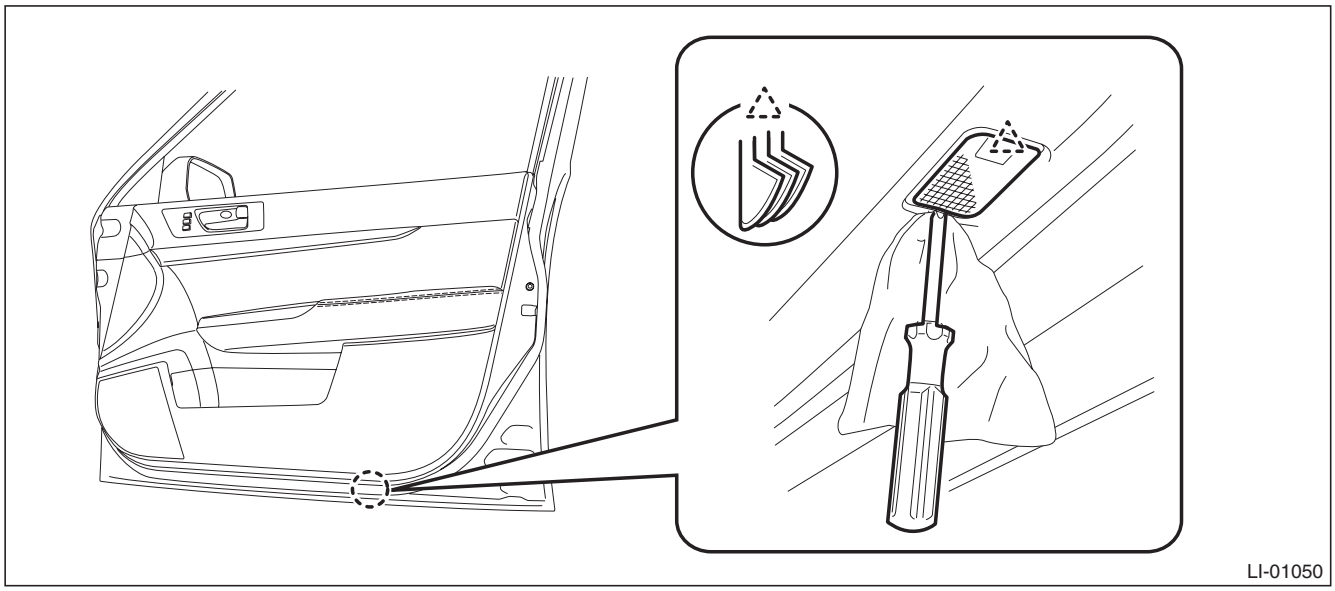

B: INSTALLATION

Install each part in the reverse order of removal.

C: INSPECTION

1) Visually check the bulb for blow out.
2) Check the bulb specification. <Ref. to LI-2, SPECIFICATION, General Description.>
3) Replace the bulb if it is found defective.

GETtheMANUALS.org

34.Ignition Switch Illumination

A: REMOVAL

1) Disconnect the ground cable from battery.
2) Remove the steering column cover.
   (1) Remove the screws by turning the steering wheel to right and left.

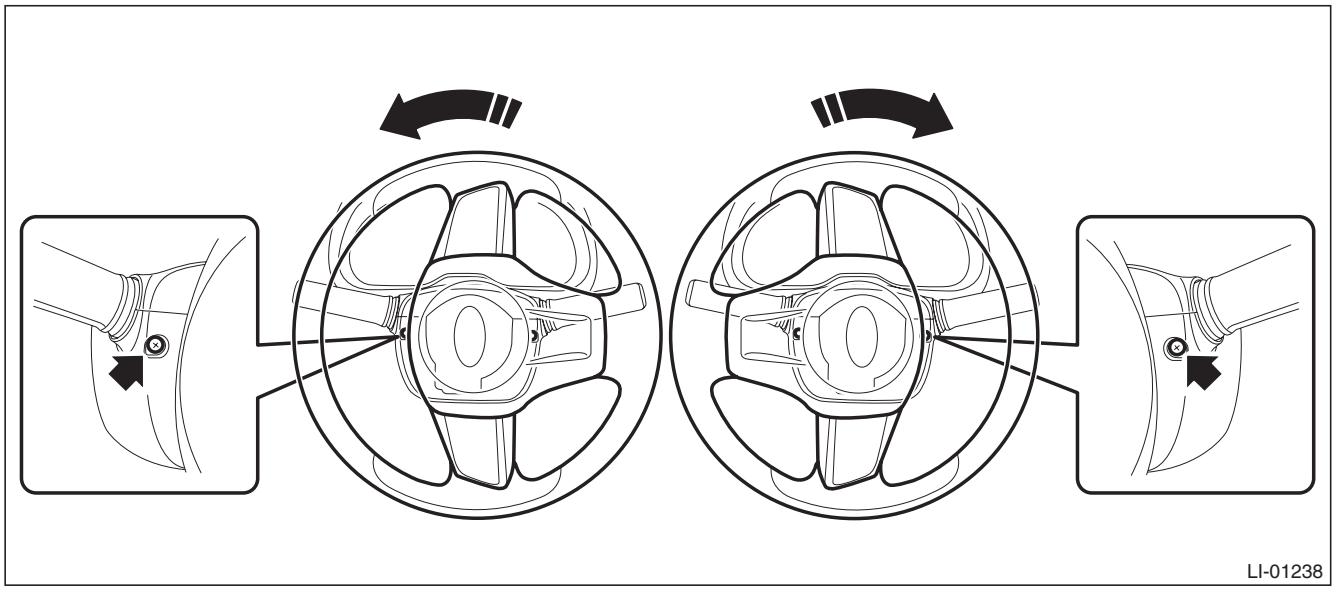

   (2) Release the claws and remove the steering column lower cover.

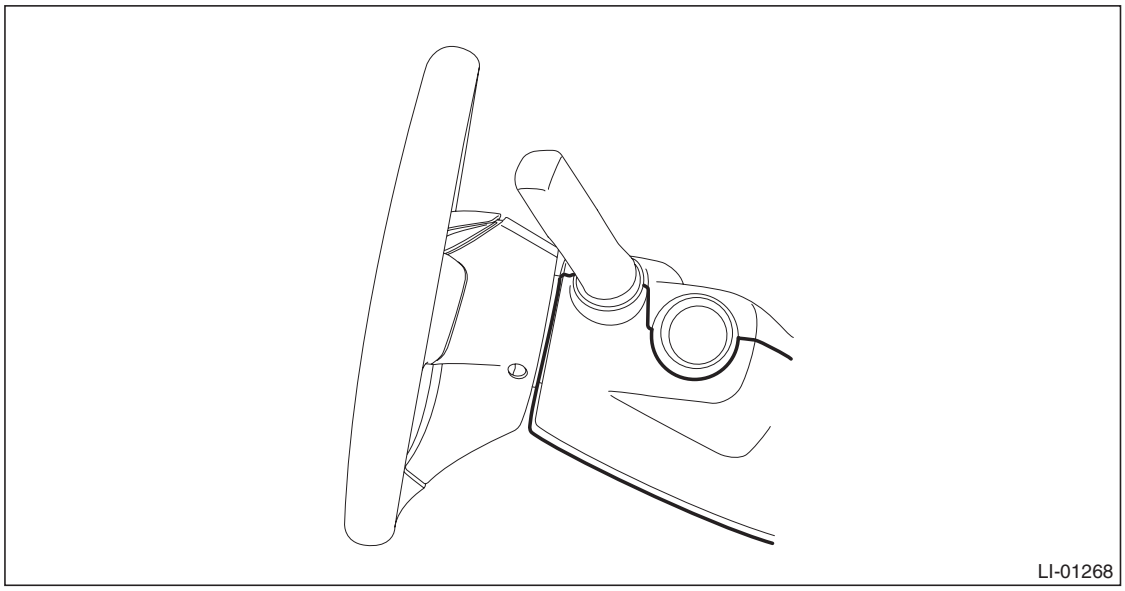

GETtheMANUALS.org

(3) Separate the steering column upper cover and steering upper cover, and remove the steering column upper cover.

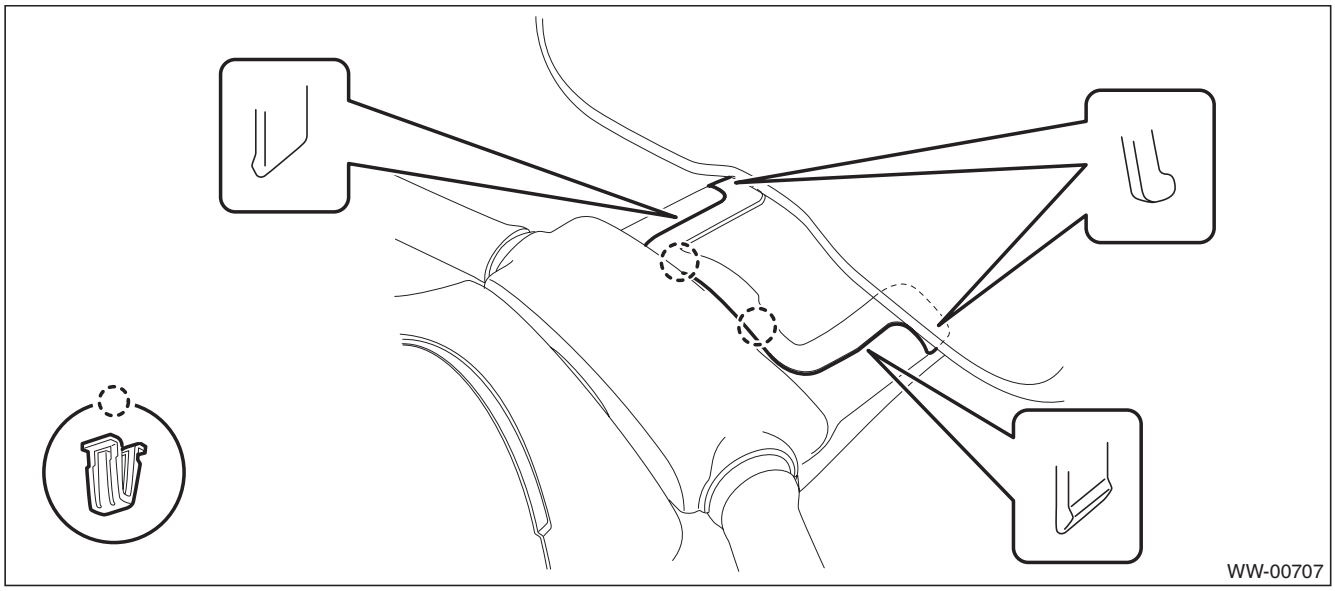

3) Remove the bulb socket and ignition switch illumination bulb.

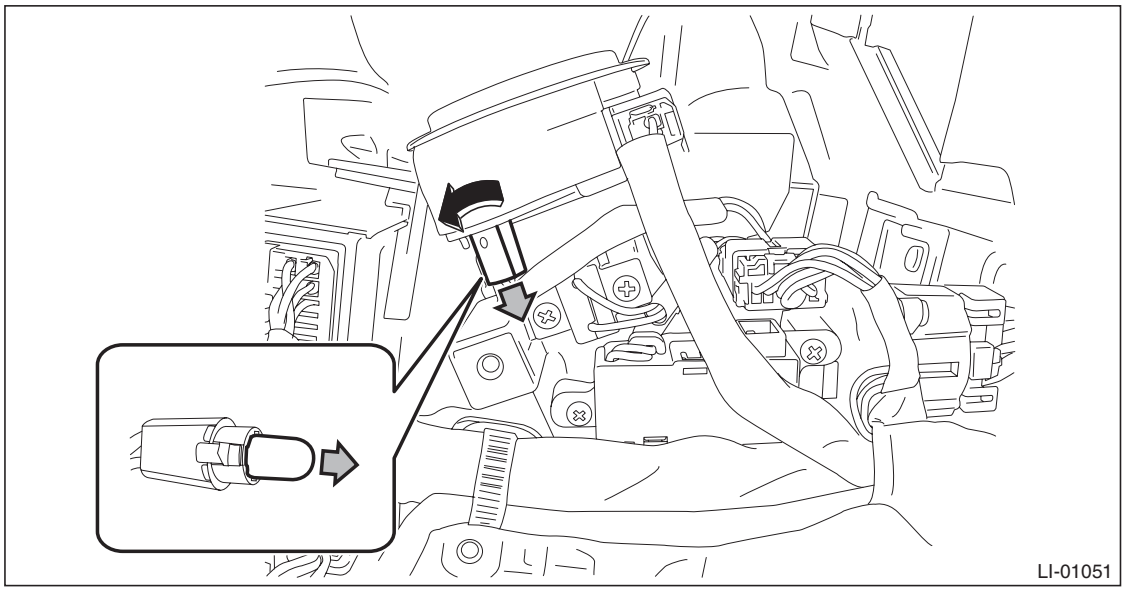

NOTE:
If the bulb socket is faulty, replace the ignition key lock. <Ref. to SL-58, Ignition Key Lock.>

B: INSTALLATION

Install each part in the reverse order of removal.

GETtheMANUALS.org

C: INSPECTION

Step		Check	Yes	No
1	**CHECK THE IGNITION SWITCH ILLUMINATION.** Make sure the ignition switch illumination illuminates when driver's side door is open.	Does the ignition switch illumination illuminate?	Ignition switch illumination is normal.	Go to step **2**.
2	**CHECK THE IGNITION SWITCH ILLUMINATION.** Make sure the ignition switch illumination blinks when the ignition switch is turned to ON.	Does the ignition switch illumination blink?	Check the function setting of body integrated unit. <Ref. to BC(diag)-2, Basic Diagnostic Procedure.>	Check the ignition switch illumination circuit. <Ref. to SL-25, CHECK IGNITION SWITCH ILLUMINATION, INSPECTION, Keyless Entry System.>

GETtheMANUALS.org

35. Day Time Running Resistor

A: REMOVAL

1) Remove the front bumper face assembly. <Ref. to EI-39, REMOVAL, Front Bumper.>
2) Remove the daytime running resistor.
   (1) Disconnect the connector.
   (2) Remove the bolt, and remove the daytime running resistor.

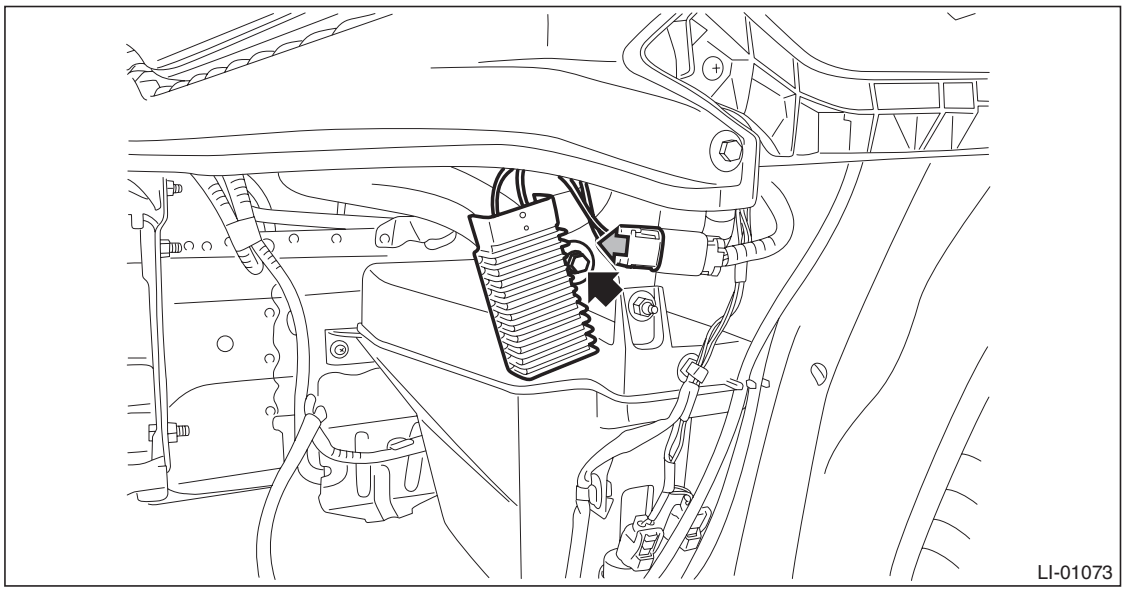

B: INSTALLATION

1) Install each part in the reverse order of removal.

Tightening torque:
Daytime running resistor: 7.5 N·m (0.76 kgf-m, 5.5 ft-lb)

2) Adjust the fog light beam. (Model with fog light) <Ref. to LI-41, FOG LIGHT AIMING, ADJUSTMENT, Front Fog Light Assembly.>

GETtheMANUALS.org

36. Reflex Reflector

A: REMOVAL

From behind the bumper, release the claws and remove the reflex reflector.

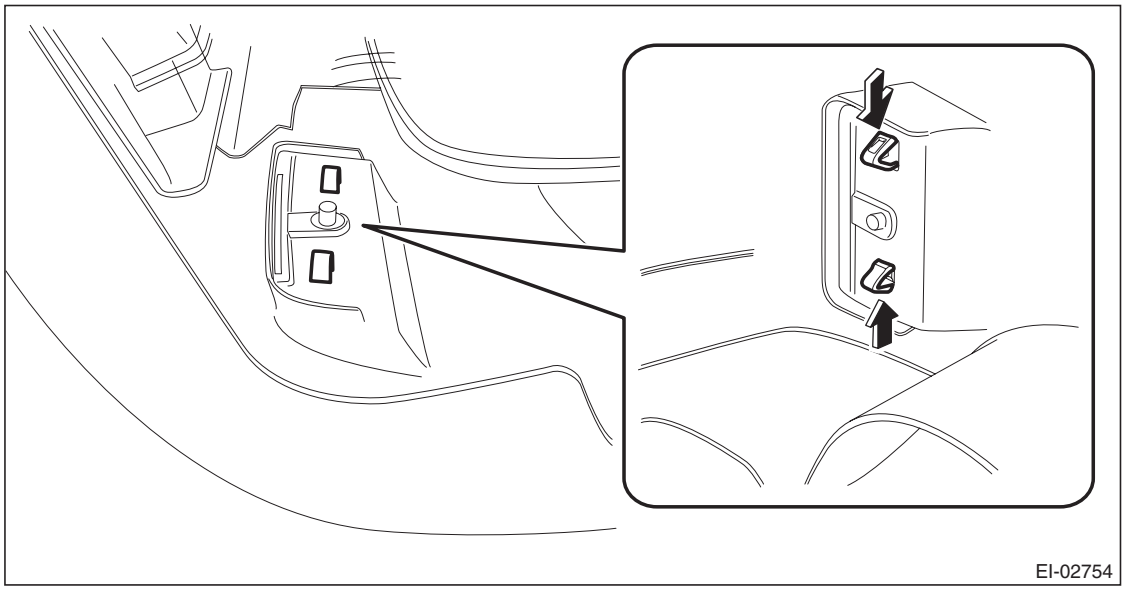

B: INSTALLATION

Install each part in the reverse order of removal.

GETtheMANUALS.org

37. Door Switch

A: REMOVAL

1) Disconnect the ground cable from battery.
2) Remove the door switch.
   (1) Remove the screws, and pull out the door switch.
   (2) Disconnect the connector and remove the door switch.

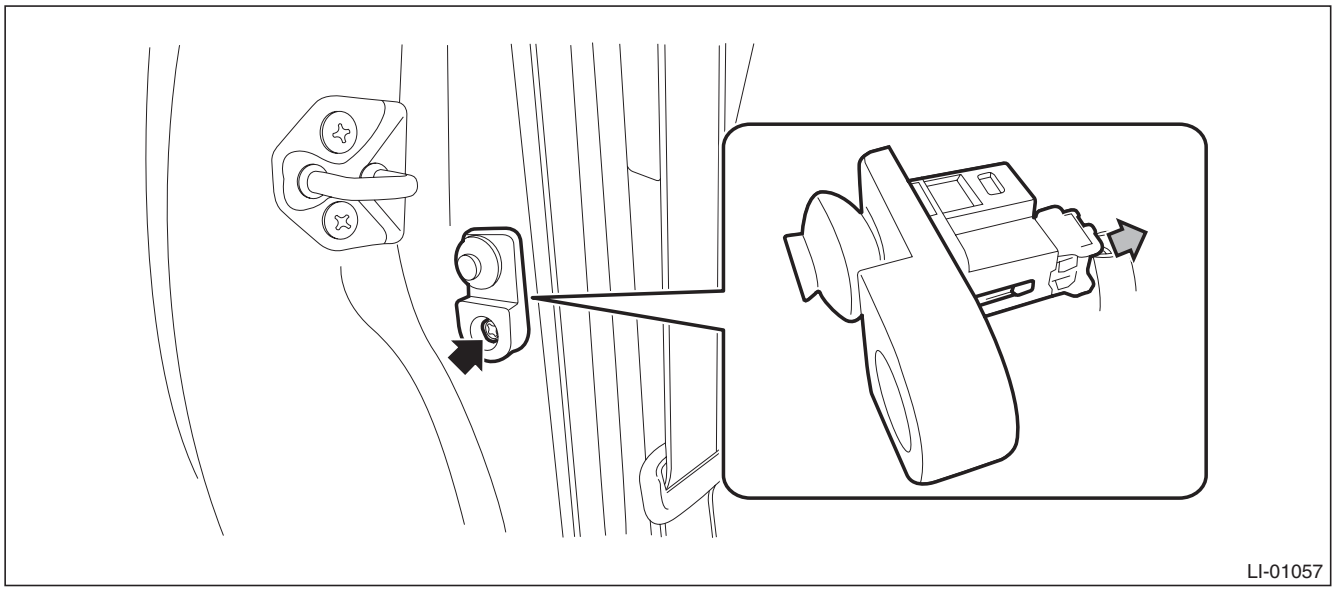

B: INSTALLATION

Install each part in the reverse order of removal.

C: INSPECTION

Refer to “CHECK DOOR SWITCH” of “Interior Light System”. <Ref. to LI-16, CHECK DOOR SWITCH., INSPECTION, Interior Light System.>

GETtheMANUALS.org

WIPER AND WASHER SYSTEMS

WW

		Page
1.	General Description	2
2.	Wiper and Washer System	8
3.	Combination Switch (Wiper)	9
4.	Wiper Blade	16
5.	Washer Tank and Motor	19
6.	Front Wiper Arm	24
7.	Front Wiper Motor and Link	25
8.	Front Washer Nozzle	31
9.	Rear Wiper Arm	36
10.	Rear Wiper Motor	38
11.	Rear Washer	43

GETtheMANUALS.org

1. General Description

A: SPECIFICATION

Front wiper motor	Input	12 V — 72 W or less
Rear wiper motor	Input	12 V — 42 W or less
Front washer motor	Pump type	Centrifugal
	Input	12 V — 36 W or less
Rear washer motor	Pump type	Centrifugal
	Input	12 V — 36 W or less

GETtheMANUALS.org

B: COMPONENT

1. FRONT WIPER

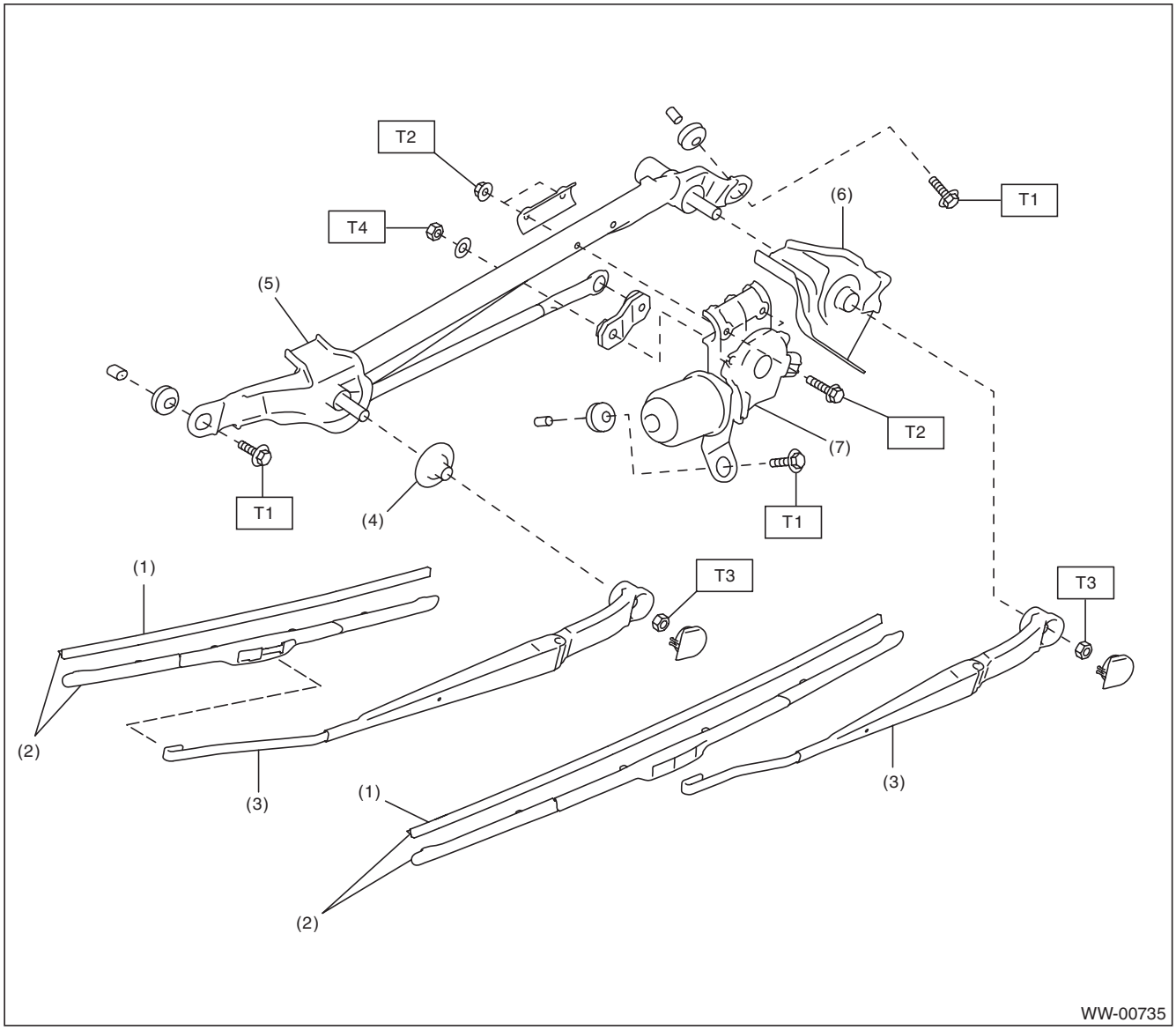

(1)	Wiper rubber	(5)	Wiper link ASSY
(2)	Wiper blade ASSY	(6)	Pivot cover C
(3)	Wiper arm ASSY	(7)	Wiper motor assembly
(4)	Pivot cover B		

Tightening torque:N·m (kgf-m, ft-lb)

T1: 6 (0.61, 4.4)
T2: 7.5 (0.76, 5.5)
T3: 22 (2.24, 16.2)
T4: 32.1 (3.27, 23.7)

GETtheMANUALS.org

2. REAR WIPER

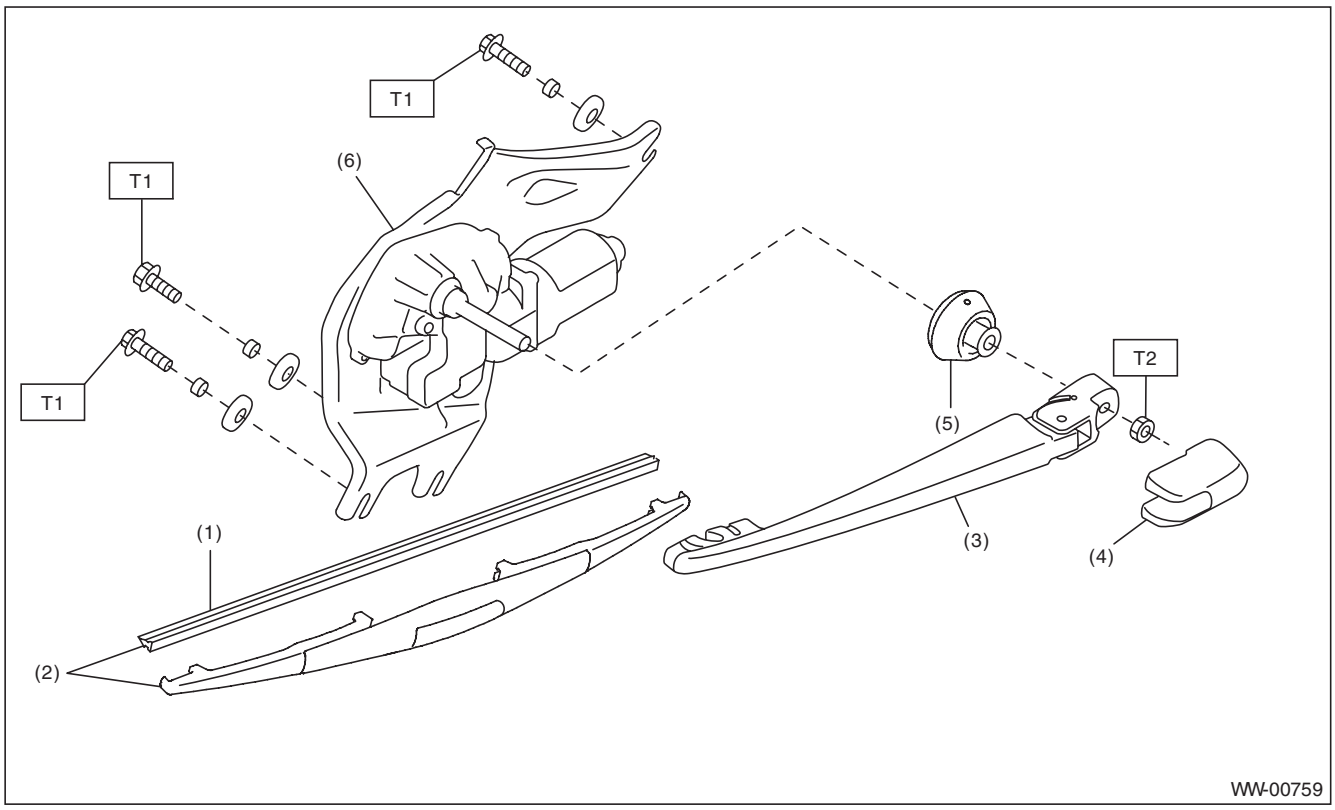

(1)	Wiper rubber	(4)	Wiper arm cover	***Tightening torque:N·m (kgf-m, ft-lb)***
(2)	Wiper blade ASSY	(5)	Pivot cap	***T1: 7 (0.71, 5.2)***
(3)	Wiper arm	(6)	Wiper motor ASSY	***T2: 8 (0.82, 5.9)***

GETtheMANUALS.org

3. WASHER TANK

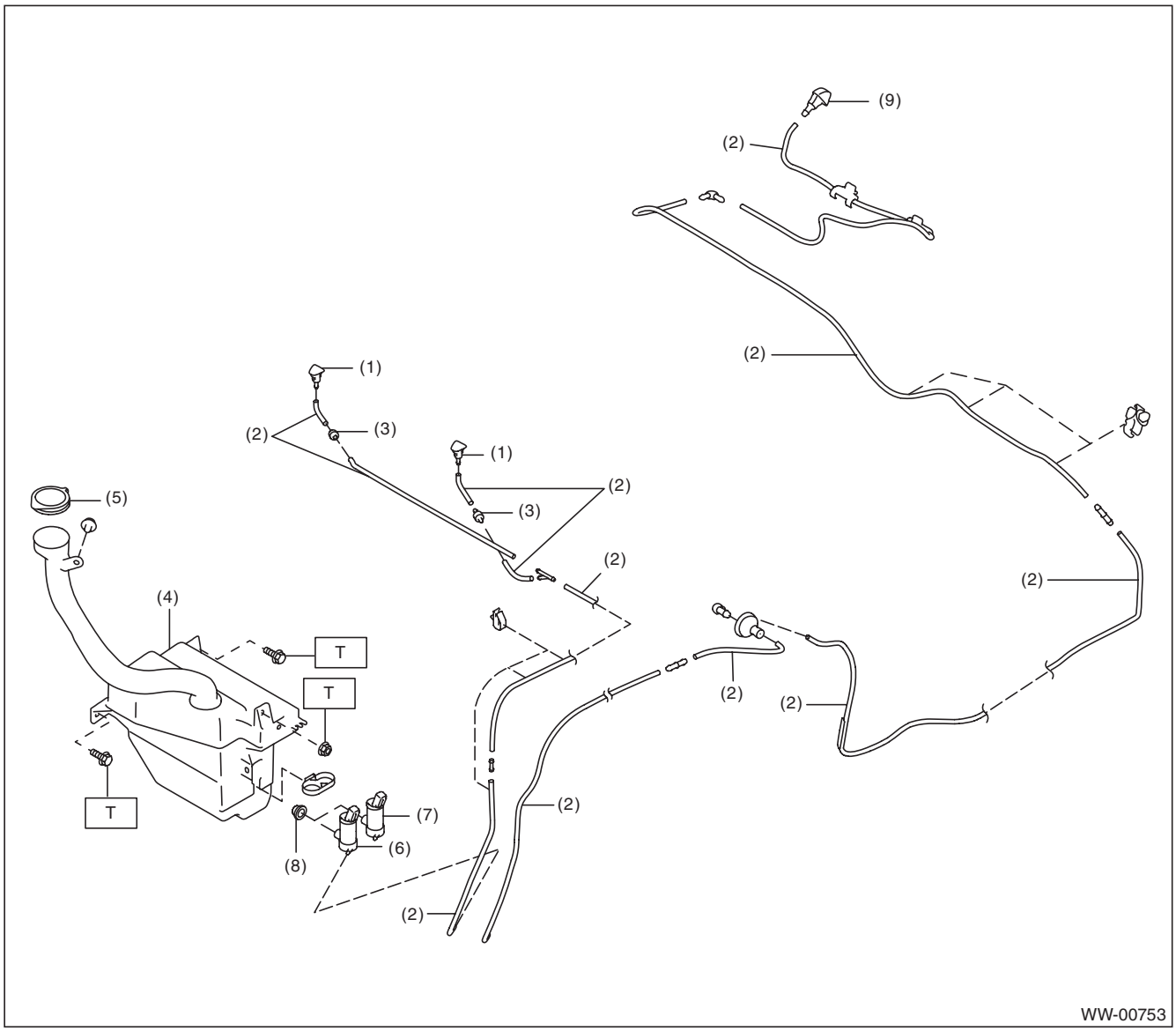

(1) Front washer nozzle
(2) Washer hose
(3) Check valve
(4) Washer tank
(5) Washer tank cap
(6) Front washer motor
(7) Rear washer motor (OUTBACK model only)
(8) Grommet
(9) Rear washer nozzle (OUTBACK model only)

Tightening torque:N·m (kgf-m, ft-lb)
T: 6 (0.61, 4.4)

C: CAUTION

- Connect the connectors and hoses securely during reassembly.
- After reassembly, make sure functional parts operates smoothly.
- Be careful with the airbag system wiring harness which passes near electrical parts and switches.
- Yellow connectors and harnesses with yellow tapes around them are the connectors and harnesses for the airbag system. Using a tester above such circuits may cause malfunction of airbag system. Follow the cautions for the airbag system in this case. <Ref. to AB-9, CAUTION, General Description.>
- When connecting the pipe hoses, be careful not to cause bend or blockage.
- If even a small amount of silicon oil or grease enters tank and washer fluid passages, an oil film will be formed on the glass and will cause the wiper to chatter and judder. Make sure that no oil comes into contact with the system.

GETtheMANUALS.org

D: PREPARATION TOOL

1. SPECIAL TOOL

ILLUSTRATION	TOOL NUMBER	DESCRIPTION	REMARKS
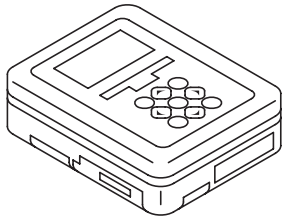 ST1B022XU0	1B022XU0	SUBARU SELECT MONITOR III KIT	Used for setting of each function and trouble-shooting for electrical system.

2. GENERAL TOOL

TOOL NAME	REMARKS
Circuit tester	Used for checking voltage and continuity.

NOTE:
Refer to the data described below, prepare the materials to make a front washer nozzle adjustment tool.

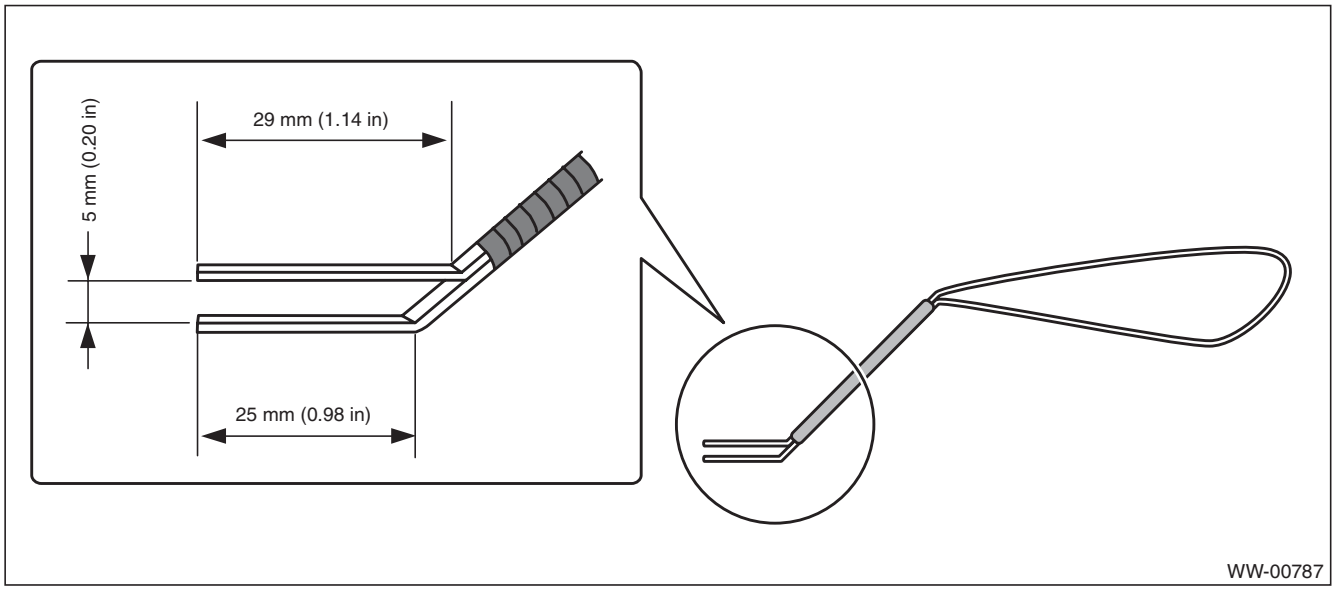

Materials
- Vertebra of wiper blade which is to be discarded
- Vinyl tape

GETtheMANUALS.org

Steps of making a front washer nozzle adjustment tool

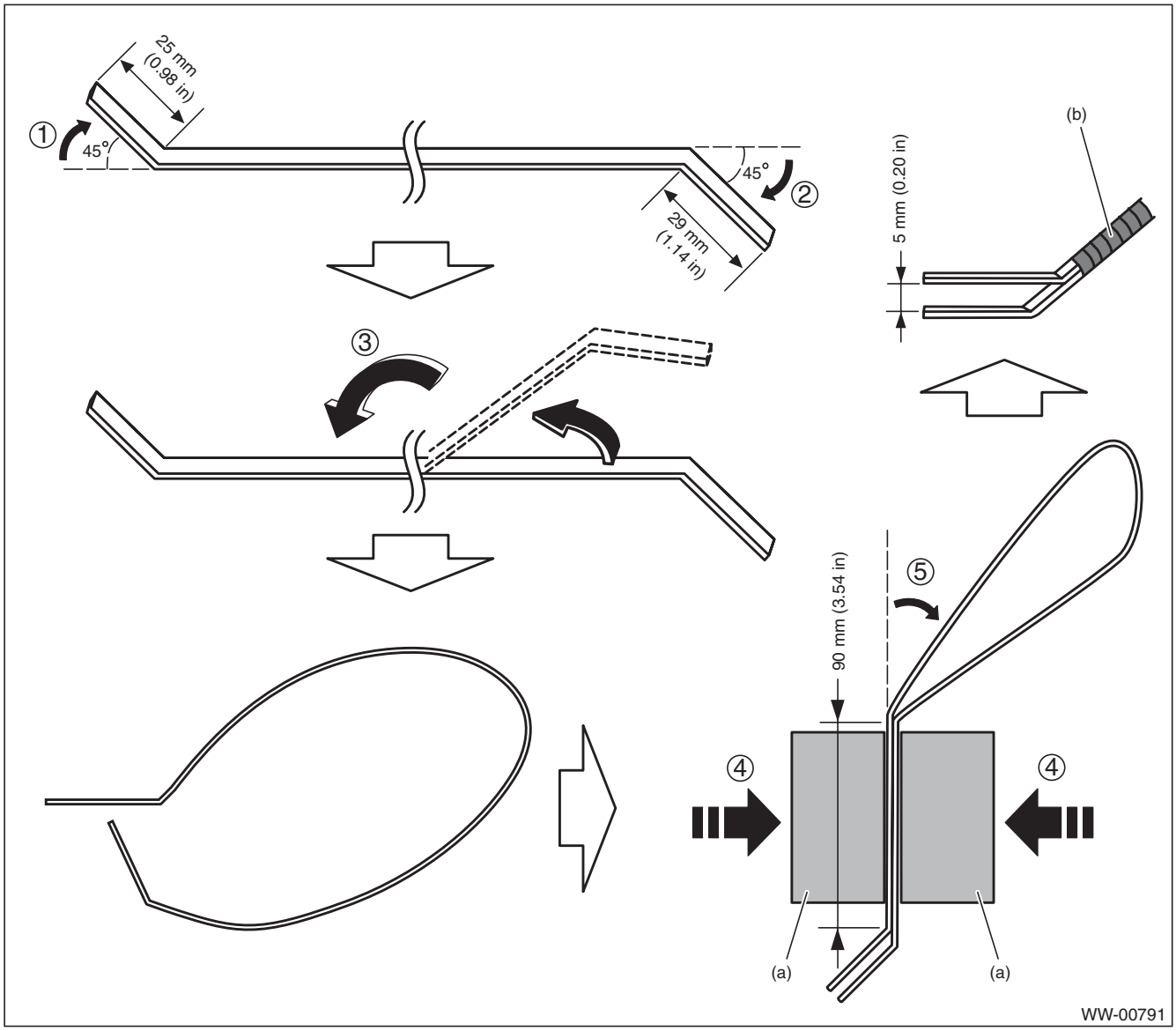

1. Bend the vertebra at the position 25 mm (0.98 in) away from its end by 45°.
2. Bend the vertebra at the position 29 mm (1.14 in) away from the other end by 45°.
3. Double up the vertebra so that the longer end (29 mm (1.14 in)) comes upward.
4. Secure the vertebra with a vise (a) so that the tip clearance becomes 5 mm (0.20 in).
5. Bend the vertebra at the position approximately 90 mm (3.54 in) away from the bending point for the longer end.
6. Check that the tip clearance is 5 mm (0.20 in), and secure the vertebra with vinyl tape (b).

GETtheMANUALS.org

2. Wiper and Washer System

A: WIRING DIAGRAM

1. WIPER AND WASHER (FRONT)

Refer to “Front Wiper and Washer System” in the wiring diagram. <Ref. to WI-169, WIRING DIAGRAM, Front Wiper and Washer System.>

2. WIPER AND WASHER (REAR)

Refer to “Rear Wiper and Washer System” in the wiring diagram. <Ref. to WI-219, WIRING DIAGRAM, Rear Wiper and Washer System.>

B: INSPECTION

Symptoms	Repair order
Wiper and washers do not operate.	1. Wiper fuse (F/B No. 14, 15) 2. Combination switch 3. Wiper motor assembly 4. Wiring harness
Wipers do not operate in LO or HI.	1. Combination switch 2. Wiper motor assembly 3. Wiring harness
Wipers do not operate in INT.	1. Combination switch 2. Wiper motor assembly 3. Wiring harness
Washer motor does not operate.	1. Washer switch 2. Washer motor 3. Wiring harness
Wipers do not operate when washer switch is ON.	1. Wiper motor assembly 2. Wiring harness
Washer fluid spray does not operate properly.	1. Washer motor 2. Washer hose and nozzle

C: NOTE

For procedure of each component of the wiper and washer system, refer to the respective sections.

- Combination switch (wiper): <Ref. to WW-9, Combination Switch (Wiper).>
- Wiper blade: <Ref. to WW-16, Wiper Blade.>
- Washer tank and motor: <Ref. to WW-19, Washer Tank and Motor.>
- Front wiper arm: <Ref. to WW-24, Front Wiper Arm.>
- Front wiper motor and link: <Ref. to WW-25, Front Wiper Motor and Link.>
- Front washer nozzle: <Ref. to WW-31, Front Washer Nozzle.>
- Rear wiper arm: <Ref. to WW-36, Rear Wiper Arm.>
- Rear wiper motor: <Ref. to WW-38, Rear Wiper Motor.>
- Rear washer nozzle: <Ref. to WW-43, Rear Washer.>

GETtheMANUALS.org

3. Combination Switch (Wiper)

A: REMOVAL

1) Disconnect the ground cable from battery.
2) Remove the steering column cover.
   (1) Remove the screws by turning the steering wheel to right and left.

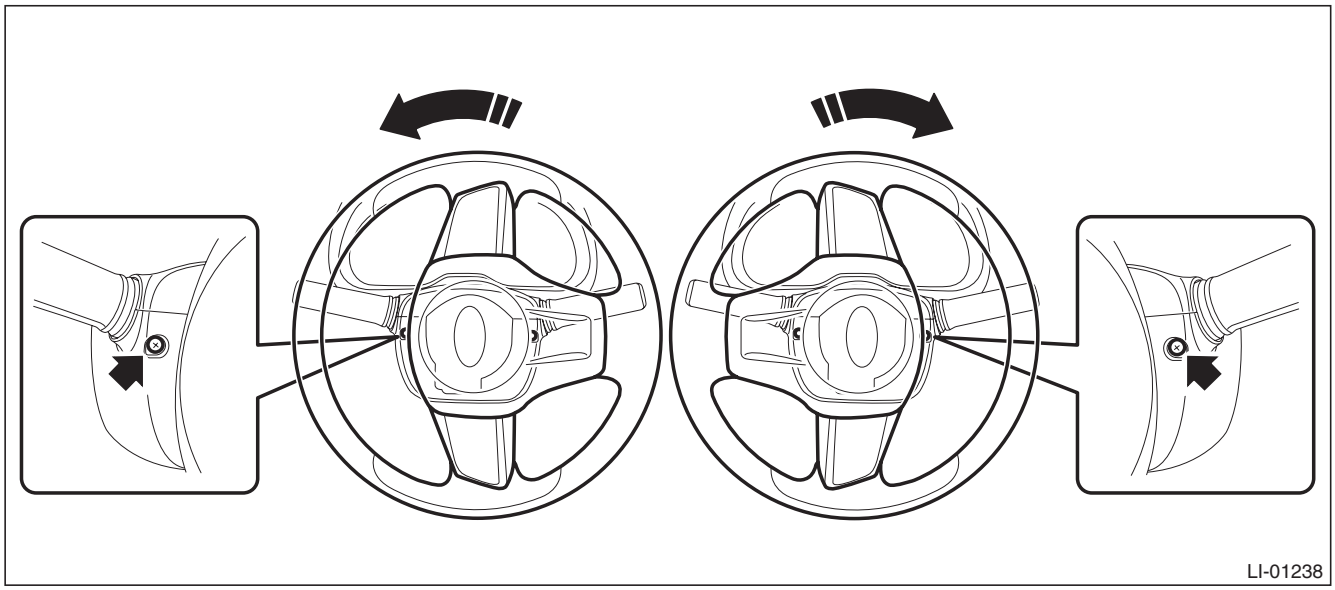

   (2) Release the claws and remove the steering column lower cover.
   (3) Separate the steering column upper cover and steering upper cover, and remove the steering column upper cover.

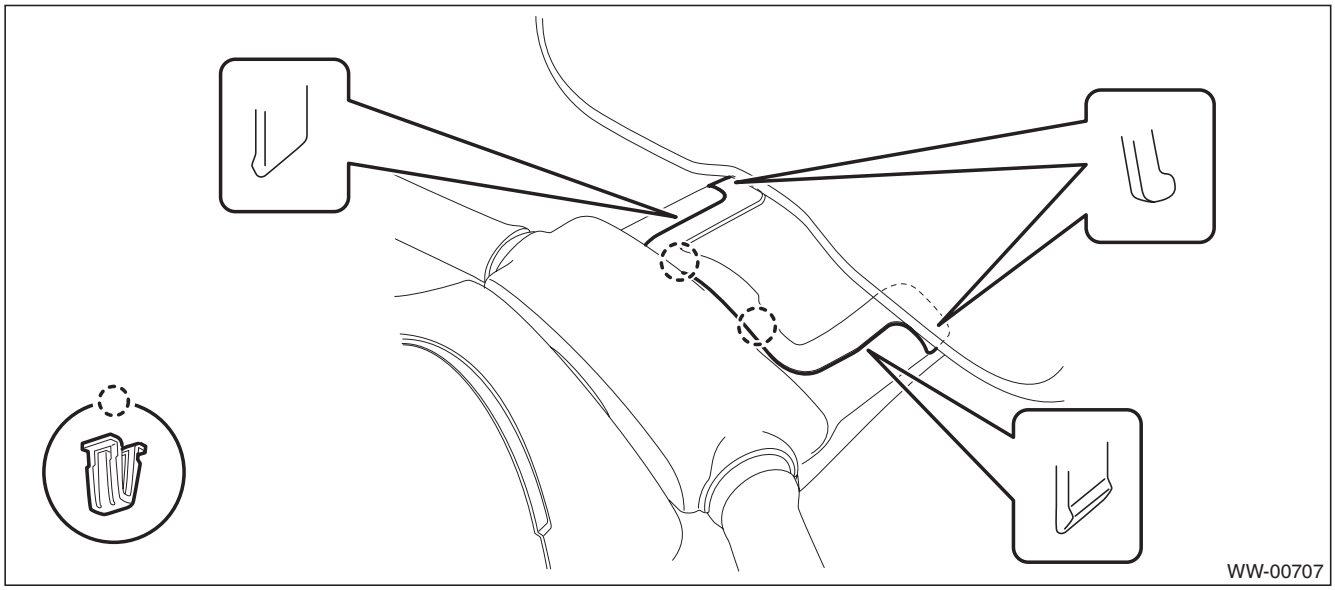

GETtheMANUALS.org

3) Remove the wiper switch assembly.
   (1) Disconnect the connector from wiper switch.
   (2) Release the claws, and pull out the wiper switch assembly.

CAUTION:
Do not press the claws with excessive force. They may be damaged.

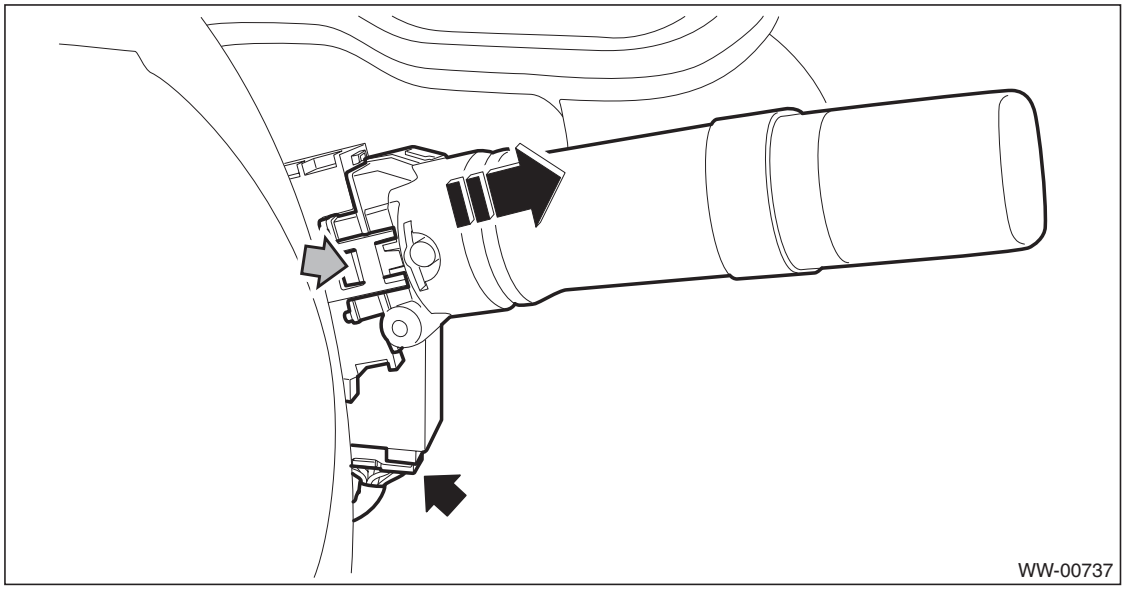

B: INSTALLATION

Install each part in the reverse order of removal.

GETtheMANUALS.org

C: INSPECTION

1. INSPECTION OF SWITCH UNIT

1) Operate the switches to check the continuity between terminals.

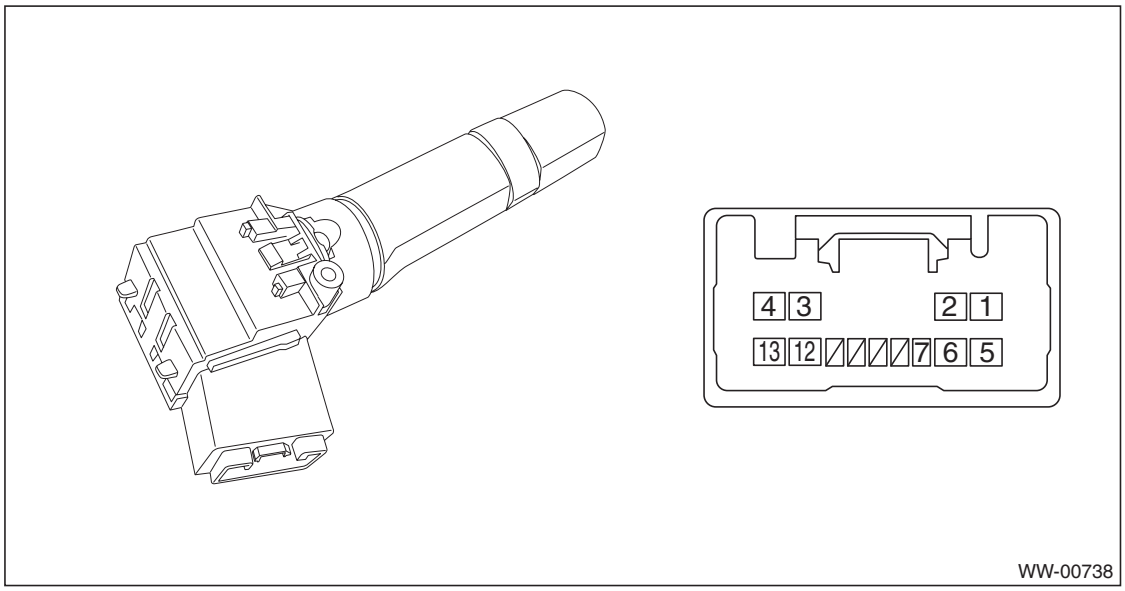

	Switch position	Terminal No.	Specification
Front	OFF	3 and 12	Less than 1 Ω
	INT	3 and 12	Less than 1 Ω
	LO	3 and 4	Less than 1 Ω
	HI	4 and 13	Less than 1 Ω
	Washer ON	1 and 2	Less than 1 Ω
Rear	OFF	5 and 2 5 and 6 2 and 6	1 MΩ or more
	ON	2 and 6	Less than 1 Ω
	INT	2 and 7	Less than 1 Ω
	Washer ON	5 and 2 5 and 6 2 and 6	Less than 1 Ω

2) Replace the switch if the inspection result is not within the standard value.

2. FRONT WIPER

1) Check with Subaru Select Monitor
   (1) Check the input signal when the front wiper switch is turned to LO or HI, using the current data display of body integrated unit.
   (2) Does the input signal change corresponding to the switch operation?
   - **Yes** → Finish the diagnosis.
   - **No** →
     1. Check the harness.
     2. Check the input voltage of body integrated unit.

Connector & terminal
(B280) No. 2 (+) — Chassis ground (–):

3. Replace the body integrated unit. <Ref. to SL-71, Body Integrated Unit.>

GETtheMANUALS.org

2) Check the intermittent operation (inspection of the wiper switch alone)

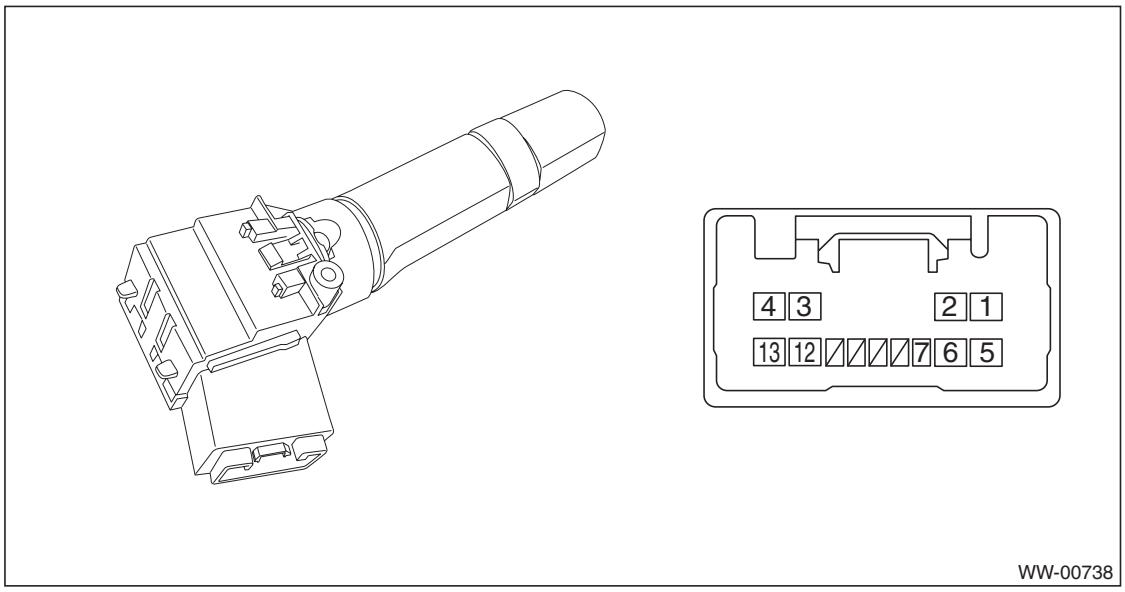

(1) Set the voltage meter between terminal No. 4 (+) and No. 3 (–).
(2) Connect the battery to connector. (Terminal No. 4 (+), terminal No. 2 & 3 (–))
(3) Turn the front wiper switch to INT.
(4) Connect the battery (+) to the terminal No. 4 for 5 seconds.
(5) Connect the battery (–) to the terminal No. 2 and check the voltage between terminal No. 4 — terminal No. 3 during intermittent operation.
(6) Perform step (1) to (5) above when intermittent control switch is in MIN or MAX, and replace the switch if the operation is not as specified.

Intermittent stationary time
MIN: Approx. 2 seconds
MAX: Approx. 16 seconds

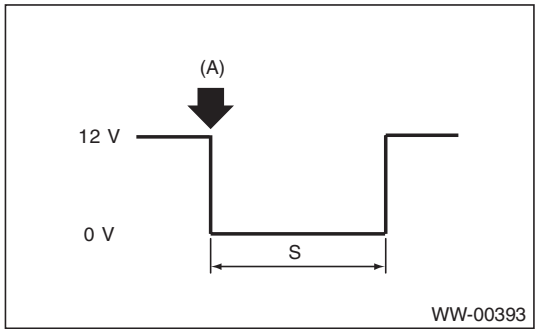

(A): Connect the battery (–) to the terminal No. 12.
S: Intermittent downtime (sec.)

3. REAR WIPER

1) Check input of body integrated unit.
Check the input signal when the rear wiper switch is operated using Subaru Select Monitor.
(1) Turn the ignition switch to ON.
(2) Operate the rear wiper switch to each position of ON, INT and Washer ON.
(3) Does the input signal change corresponding to the switch operation?
- **Yes** → Go to step 4.
- **No** → Go to step 2.

GETtheMANUALS.org

2) Check harness.
(1) Turn the ignition switch to OFF, disconnect the ground cable from battery.
(2) Disconnect the connector of body integrated unit and wiper switch.
(3) Measure the resistance between body integrated unit and wiper switch.

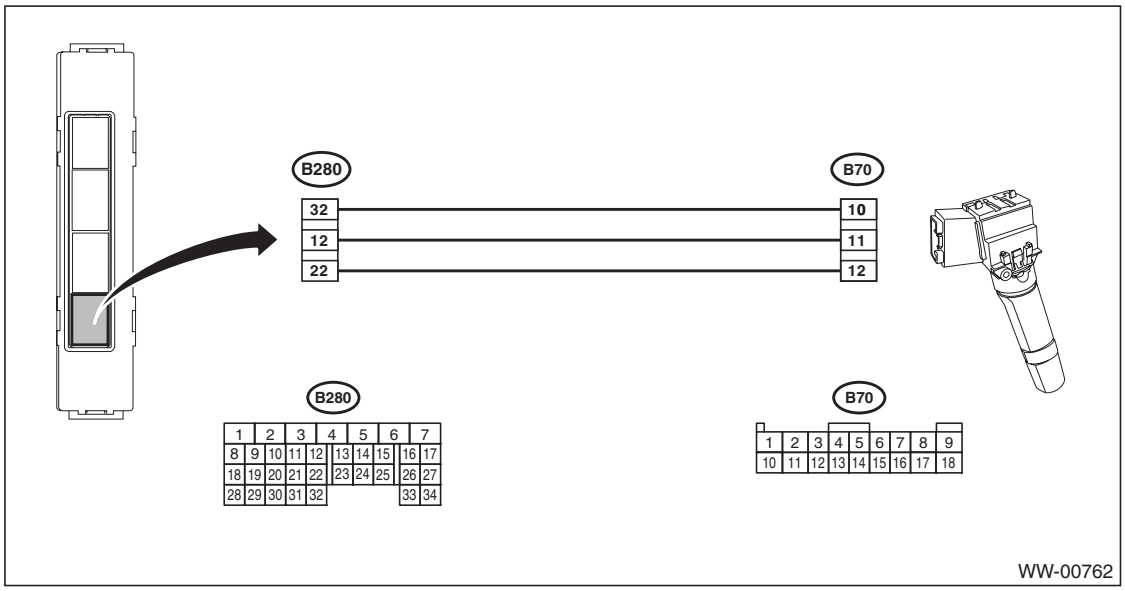

Connector & terminal
(B280) No. 32 — (B70) No. 10:
(B280) No. 12 — (B70) No. 11:
(B280) No. 22 — (B70) No. 12:
(4) Is the resistance less than 10 Ω?
- **Yes** → Go to step 3.
- **No** → Repair the harness between the body integrated unit and wiper switch.

3) Check input voltage of body integrated unit.
(1) Connect the ground cable to battery.
(2) Turn the ignition switch to ON and check the input voltage of body integrated unit.

Connector & terminal
(B280) No. 5 (+) — Chassis ground (–):
(i171) No. 17 (+) — Chassis ground (–):
(3) Is the voltage 10 V or more?
- **Yes** → Go to step 4.
- **No** → Check the harness and fuse.

4) Check output of body integrated unit.
Check the output signal when the rear wiper switch is operated using Subaru Select Monitor.
(1) Turn the ignition switch to ON.
(2) Operate the rear wiper switch to ON and Washer ON.
(3) When the operation in step (2) is performed, check the output signal of body integrated unit to rear wiper motor.
(4) When the rear wiper switch is set to ON, is ON output continuous? Also, when the washer is set to ON, is ON output?
- **Yes** → Go to step 5.
- **No** → Replace the body integrated unit. <Ref. to SL-71, Body Integrated Unit.>

5) Check output of body integrated unit.
Check the output signal when the rear wiper switch is operated using Subaru Select Monitor.
(1) Turn the ignition switch to ON.
(2) Set the rear wiper switch to INT.
(3) When the operation in step (2) is performed, check the output signal of body integrated unit.

GETtheMANUALS.org

(4) When the rear wiper switch is set to INT, is ON/OFF output repeated? (INT OFF time (when vehicle parked): 12 seconds)
- **Yes** → Go to step 8.
- **No** → Go to step 6.

6) Check harness between body integrated unit and rear wiper motor.
(1) Turn the ignition switch to OFF, disconnect the ground cable from battery.
(2) Disconnect the connector of body integrated unit and wiper switch.
(3) Measure the resistance between the harness connector terminals of the body integrated unit and rear wiper motor.

Connector & terminal
(B280) No. 6 — (D43) No. 2:
(4) Is the resistance less than 10 Ω?
- **Yes** → Go to step 7.
- **No** → Repair the open circuit of the harness between body integrated unit and rear wiper motor.

7) Check stop position circuit of the rear wiper motor.
(1) Disconnect the harness connector of the rear wiper motor.
(2) Check the continuity of the circuit of rear wiper motor stop position.

Connector & terminal
(D43) No. 1 (+) — (D43) No. 4 (–):
(3) Is there continuity between terminals?
- **Yes** → Go to step 8.
- **No** → Replace the rear wiper motor assembly.

8) Check power supply circuit of the rear wiper motor.
(1) Disconnect the harness connector of the rear wiper motor.
(2) Turn the ignition switch to ON.
(3) Measure the voltage between the rear wiper motor harness connector terminal and chassis ground.

Connector & terminal
(D43) No. 3 (+) — Chassis ground (–):
(4) Is the voltage 10 V or more?
- **Yes** → Go to step 9.
- **No** → Check the fuse (No. 27 in main fuse box).

9) Check ground circuit of rear wiper motor.
(1) Turn the ignition switch to OFF.
(2) Measure the resistance between the rear wiper motor harness connector terminal and chassis ground.

Connector & terminal
(D43) No. 4 — Chassis ground:
(3) Is the resistance less than 10 Ω?
- **Yes** → Go to step 10.
- **No** → Repair the open circuit of the rear wiper motor ground circuit.

10) Check harness between body integrated unit and rear wiper motor.
(1) Turn the ignition switch to OFF.
(2) Disconnect the harness connector of body integrated unit.
(3) Disconnect the harness connector of the rear wiper motor.
(4) Measure the resistance between the harness connector terminals of the body integrated unit and rear wiper motor.

Connector & terminal
(B280) No. 7 — (D43) No. 1:
(5) Is the resistance less than 10 Ω?
- **Yes** → Go to step 11.
- **No** → Repair the open circuit of the harness between body integrated unit and rear wiper motor.

GETtheMANUALS.org

11) Check output of body integrated unit.
(1) Connect the harness connector of body integrated unit.
(2) Disconnect the connector of the rear wiper motor.
(3) Turn the ignition switch to ON.
(4) Measure the voltage between rear wiper motor connector and chassis ground.

Connector & terminal
(D43) No. 2 (+) — Chassis ground (–):
(5) Is the voltage less than 1.5 V when the rear wiper switch is OFF, and is the voltage 10 V or more when the rear wiper switch is ON?
- **Yes** → Go to step 12.
- **No** → Replace the body integrated unit. <Ref. to SL-71, Body Integrated Unit.>

12) Check operation of rear wiper motor.
(1) Remove the rear wiper motor.
(2) Check the rear wiper motor. <Ref. to WW-42, INSPECTION, Rear Wiper Motor.>
(3) Does the rear wiper motor rotate normally?
- **Yes** → Finished.
- **No** → Replace the rear wiper motor assembly.

NOTE:
Rear wiper intermittent time

Select lever position	Vehicle speed (km/h (MPH))	Intermittent stopping time (sec.)
Rev.	—	Continuous operation
Except for reverse mode	80 — (50 —)	3
	50 — 80 (31 — 50)	6
	20 — 50 (12 — 31)	9
	0 — 20 (0 — 12)	12

GETtheMANUALS.org

4. Wiper Blade

A: REMOVAL

1. FRONT

Remove the blade assembly.
1) Lift up the locking clip (A).
2) Turn the blade assembly in the arrow direction.
3) Press the arm in.
4) Pull out the arm while lifting it, and remove the blade assembly from the arm.

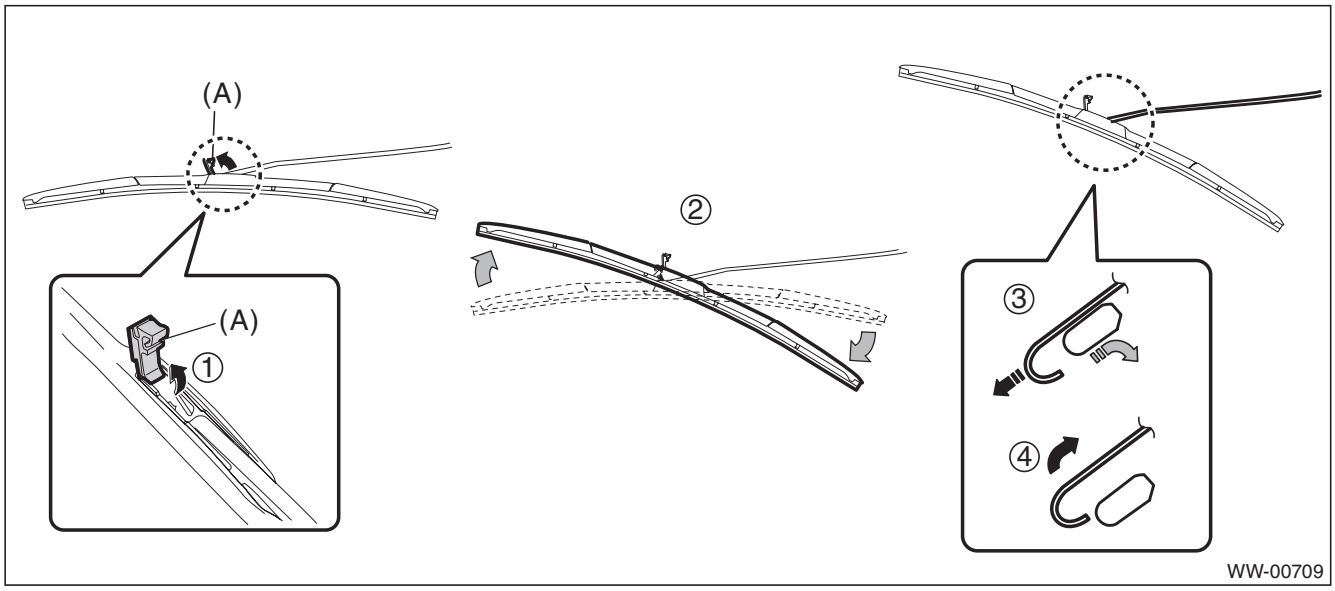

2. REAR

Turn the blade in the direction of arrow (A) and remove it from arm.

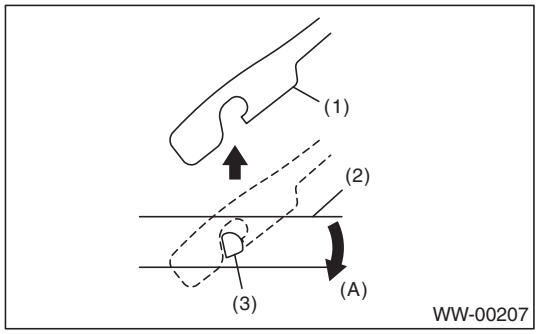

(A) Turn the wiper blade.

(1) Wiper arm
(2) Wiper blade
(3) Wiper blade attachment section

B: INSTALLATION

1) Install each part in the reverse order of removal.
2) Confirm that the clip is locked securely.

GETtheMANUALS.org

C: DISASSEMBLY

1. FRONT

Pull side (A) of the wiper rubber stopper and remove the rubber from the blade assembly.

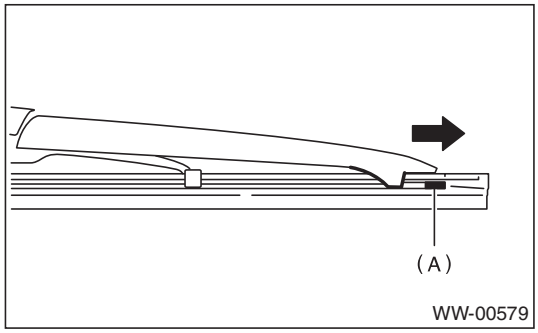

2. REAR

Pull the wiper rubber top slightly from stopper (A) and pull out completely.

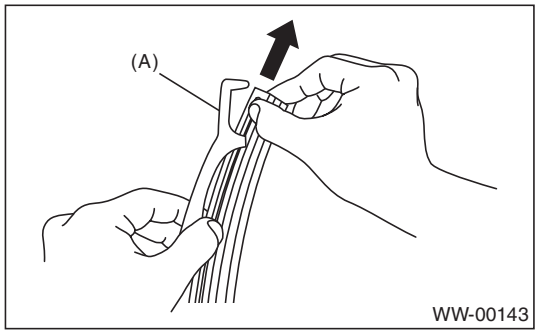

D: ASSEMBLY

1. FRONT

1) Insert the wiper rubber onto the blade so that the stopper is in the position shown in the figure.

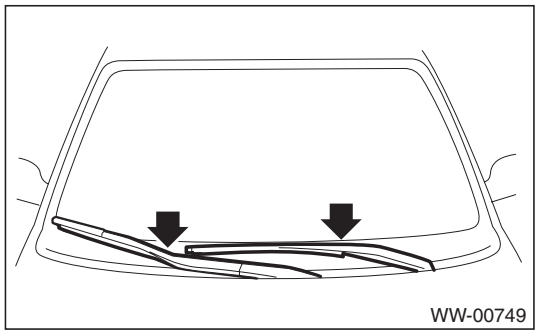

2) Make sure the wiper rubber is securely fastened to the pull stopper (A).

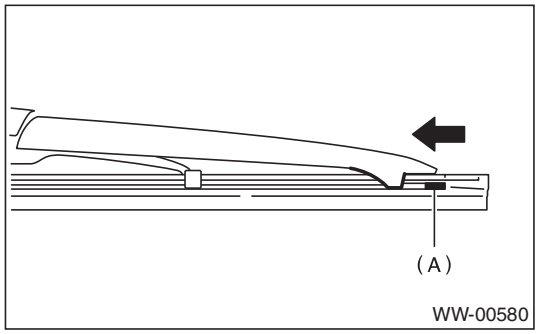

GETtheMANUALS.org

2. REAR

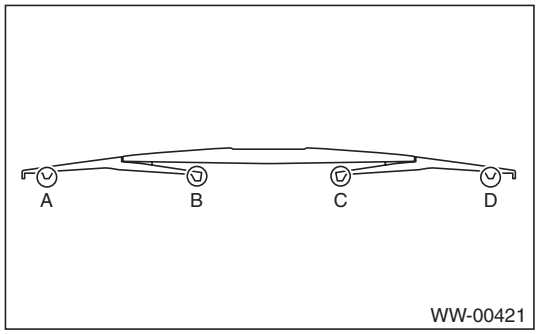

1) Insert the wiper rubber into claw (B).

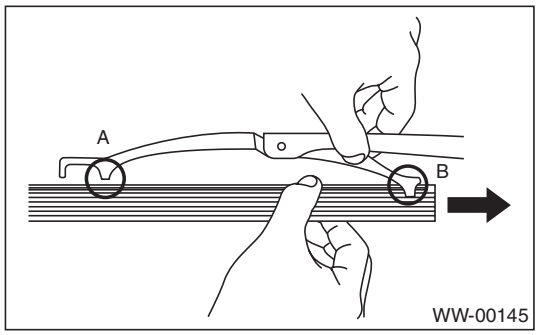

2) Insert the wiper rubber until its top end protrudes approx. 20 mm (0.79 in) from stopper (D).

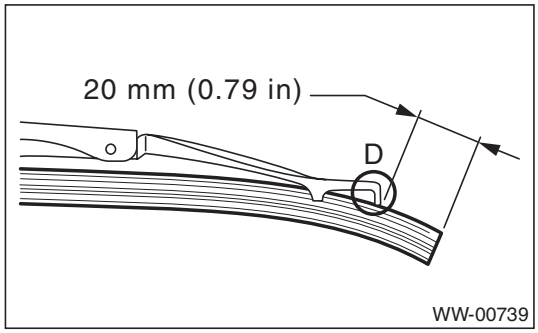

3) Insert the wiper rubber into claw (A).

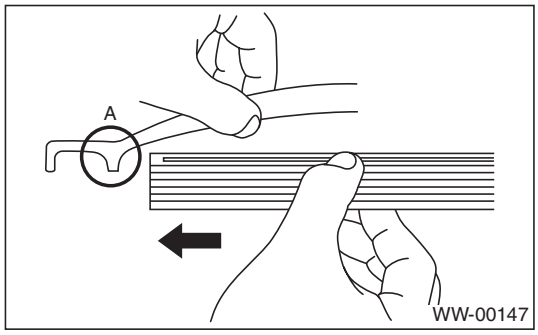

E: INSPECTION

1) When the wiper does not operate properly, inspect the following item.
- Make sure that the movable part of blade assembly moves smoothly.
- Make sure the wiper rubber is not deformed or damaged.

2) If damaged, replace with a new part.

GETtheMANUALS.org

5. Washer Tank and Motor

A: REMOVAL

1) Open the front hood.
2) Disconnect the ground cable from battery.
3) Remove the bumper face.
   (1) Remove the clips, turn over the front mud guard, and disconnect the fog light connector. (Model with fog light)

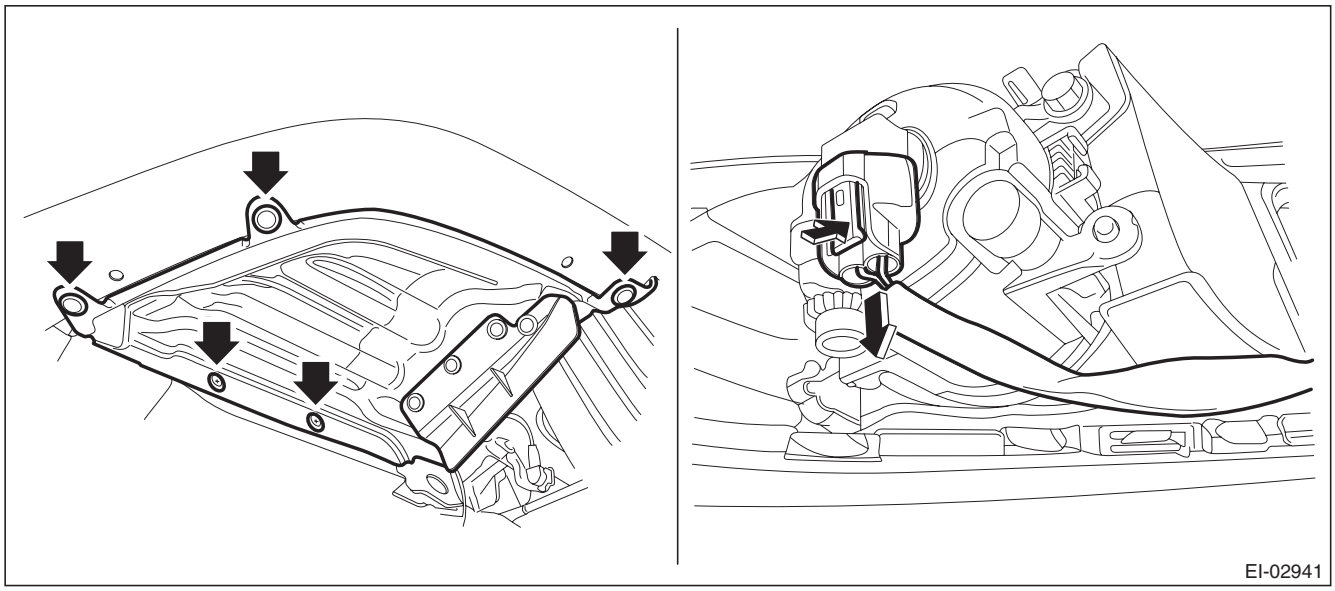

   (2) Remove the clips at the upper side of the bumper.
   (3) Remove the clips from the fender.

GETtheMANUALS.org

(4) Remove the clips at the lower side of bumper.

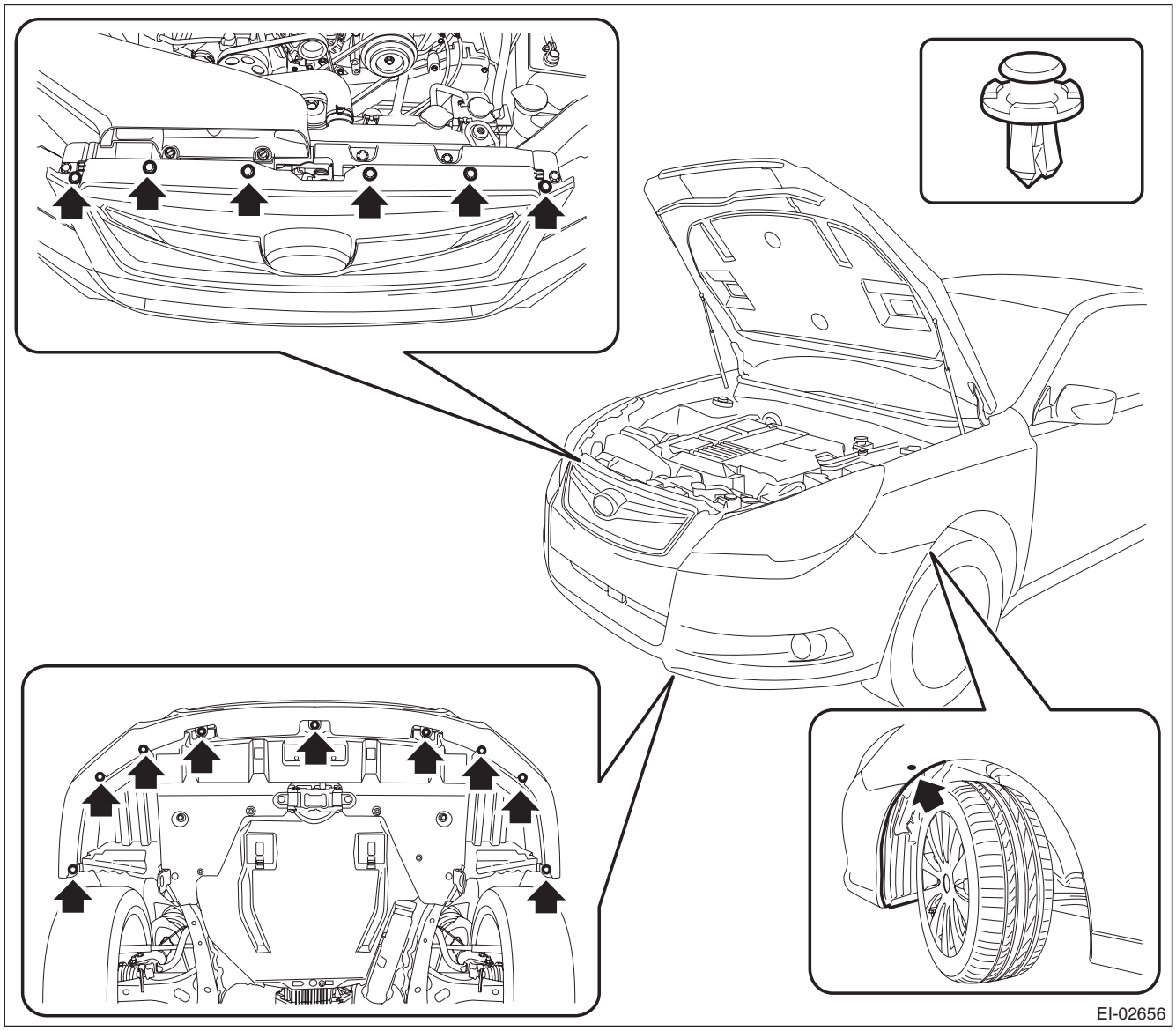

GETtheMANUALS.org

(5) Detach the flange section on the bumper face side from the bracket side front UPR.

CAUTION:
Do not pull forcibly. It may damage the flange sections of the bumper face.

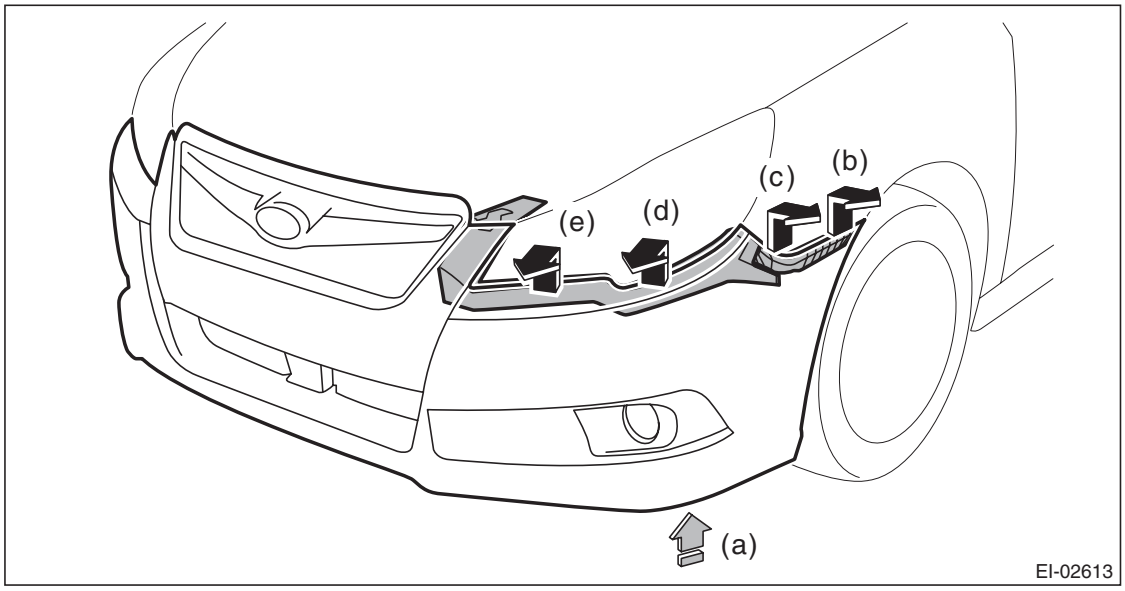

NOTE:
Pushing up the lower side (a) of the fog light, remove from (b) to (e).
Detach the opposite side in the same manner.

4) Remove the washer tank assembly.

(1) Remove the clip of the washer tank duct.

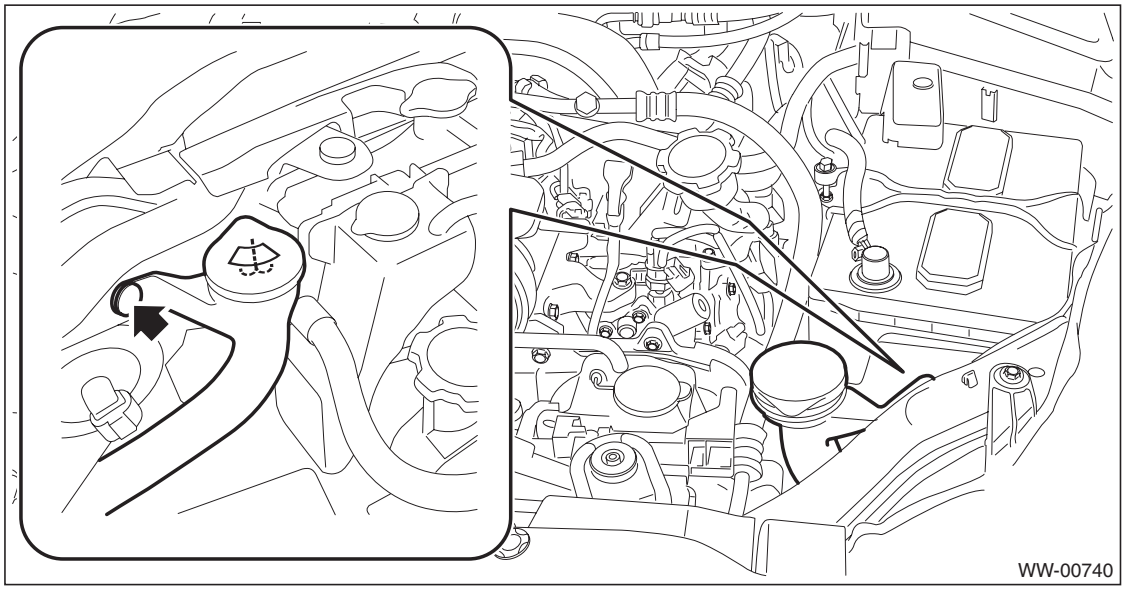

(2) Prepare a container before disconnecting the washer hose and drain all washer fluid in the tank.

(3) Disconnect the connector from the washer motor and washer tank level sensor, and then remove the harness clip.

GETtheMANUALS.org

(4) Remove the bolt and nuts and remove the washer tank assembly.

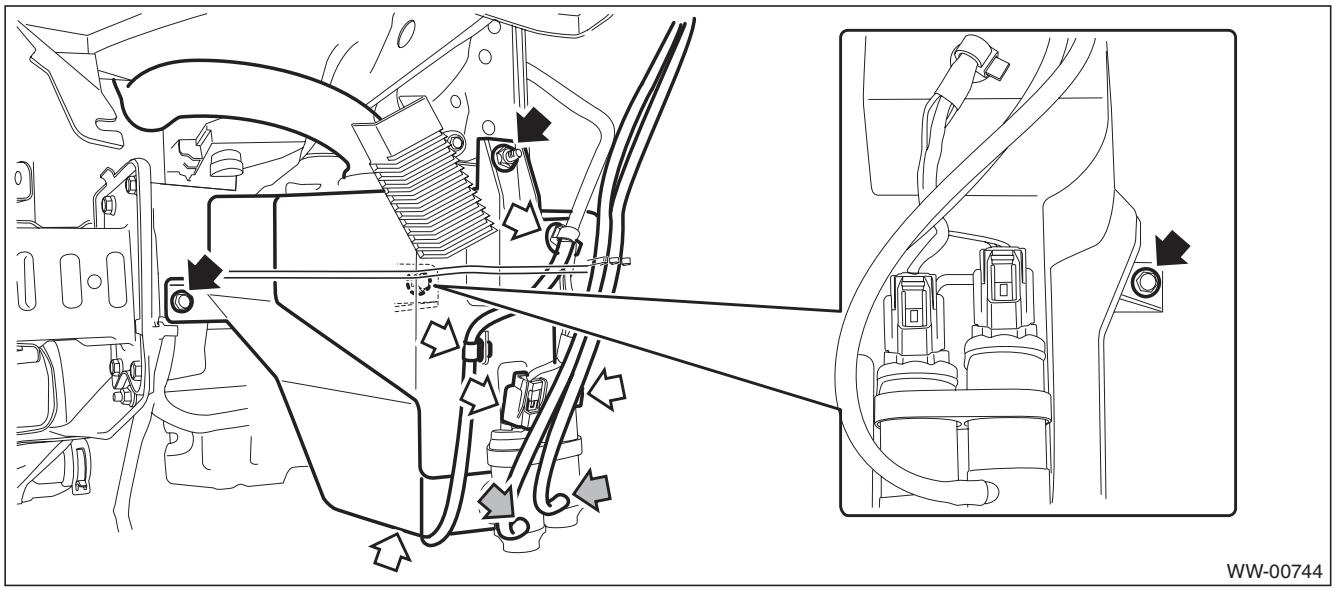

5) Remove the washer motor from the tank.

B: INSTALLATION

1) Install each part in the reverse order of removal.

CAUTION:
Install the bumper face so that the under cover front end (b) comes inside the front bumper face (a).

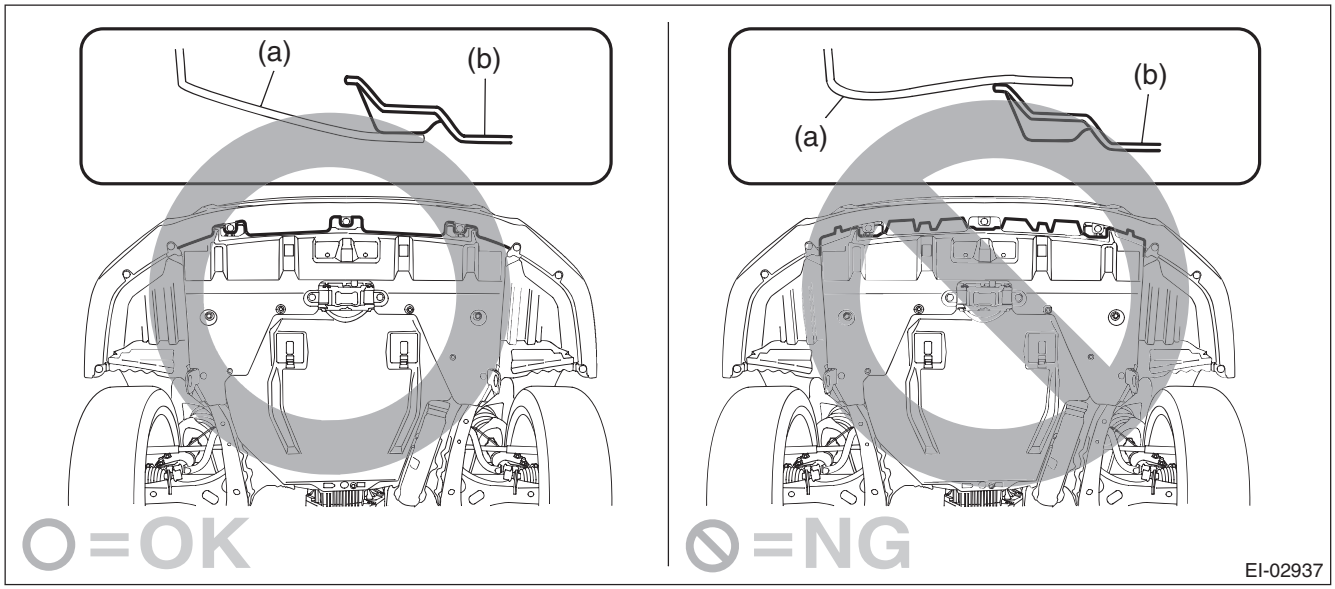

2) Add new washer fluid.

Tightening torque:
6 N·m (0.61 kgf-m, 4.4 ft-lb)

3) Adjust the fog light beam. (Model with fog light) <Ref. to LI-41, FOG LIGHT AIMING, ADJUSTMENT, Front Fog Light Assembly.>

GETtheMANUALS.org

C: INSPECTION

Apply battery voltage to the connector terminal of the washer motor and make sure that the motor operates.

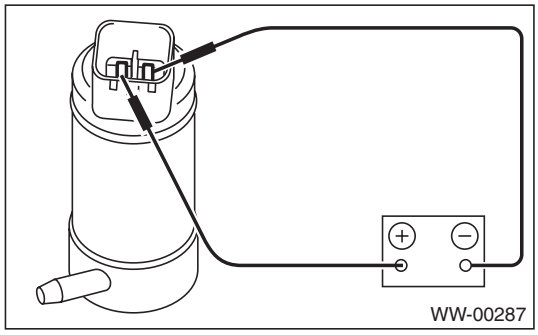

GETtheMANUALS.org

6. Front Wiper Arm

A: REMOVAL

CAUTION:
Follow the steps below when standing up the wiper arm. Not following the steps may cause contacting of wiper arms and damages of wiper arms.
1. Stand up the driver's side wiper arm.
2. Stand up the passenger's side wiper arm.
Fold the wiper arms in the reverse order.
1) Open the front hood.
2) Remove the front wiper arm assembly.
(1) Remove the cap.
(2) Remove the nuts, and remove the front wiper arm assembly.

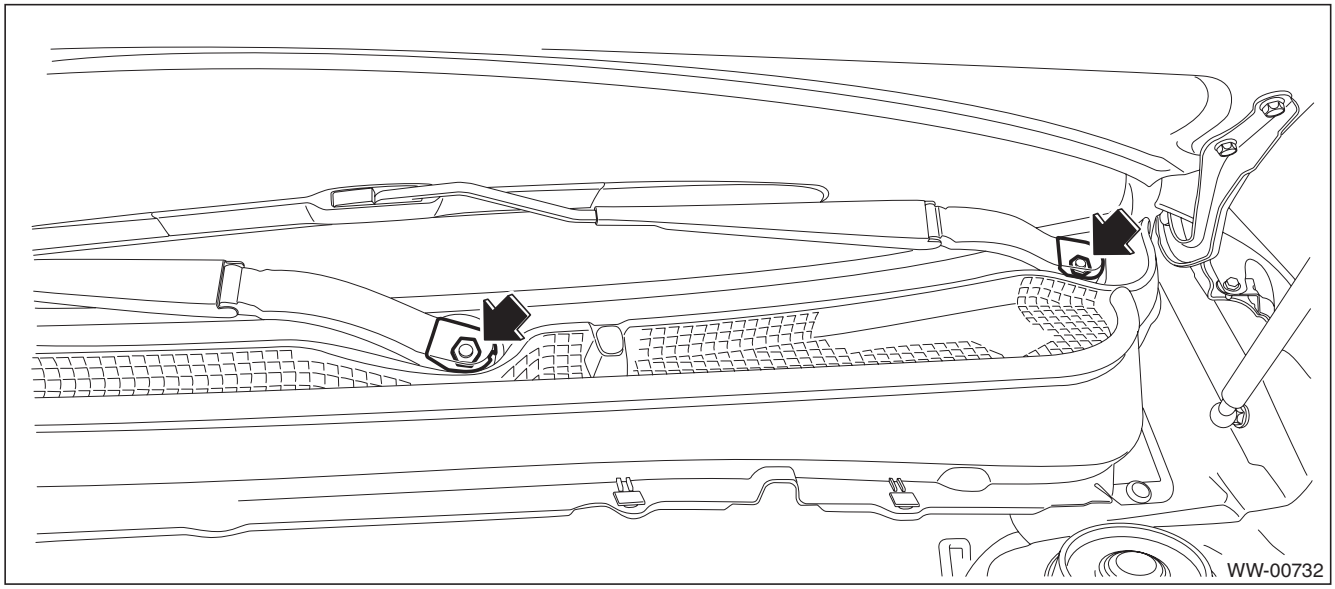

B: INSTALLATION

CAUTION:
Follow the steps below when tilting the wiper arm. Not following the steps may cause contacting of wiper arms and damages of wiper arms.
1. Tilt the passenger's side wiper arm.
2. Tilt the driver's side wiper arm.
1) Install the wiper arm assembly.

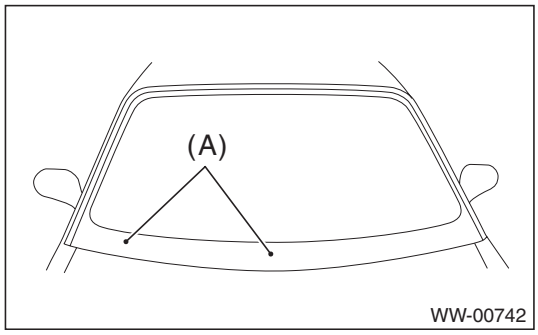

Tightening torque:
22 N·m (2.24 kgf-m, 16.2 ft-lb)
(1) Install the wiper arm assembly so that the wiper blade aligns with the ceramic print point mark (A) on windshield glass.
(2) Tighten the wiper arm assembly to specified torque and install the cap.
2) Operate the wiper to check whether the wiper blade aligns with the point mark. If not, perform installation over again.

GETtheMANUALS.org

7. Front Wiper Motor and Link

A: REMOVAL

1) Disconnect the ground cable from battery.
2) Remove the front wiper arm assembly.

CAUTION:
Follow the steps below when standing up the wiper arm. Not following the steps may cause contacting of wiper arms and damages of wiper arms.
1. Stand up the driver's side wiper arm.
2. Stand up the passenger's side wiper arm.
Fold the wiper arms in the reverse order.

(1) Remove the cap.
(2) Remove the nuts, and remove the front wiper arm assembly.

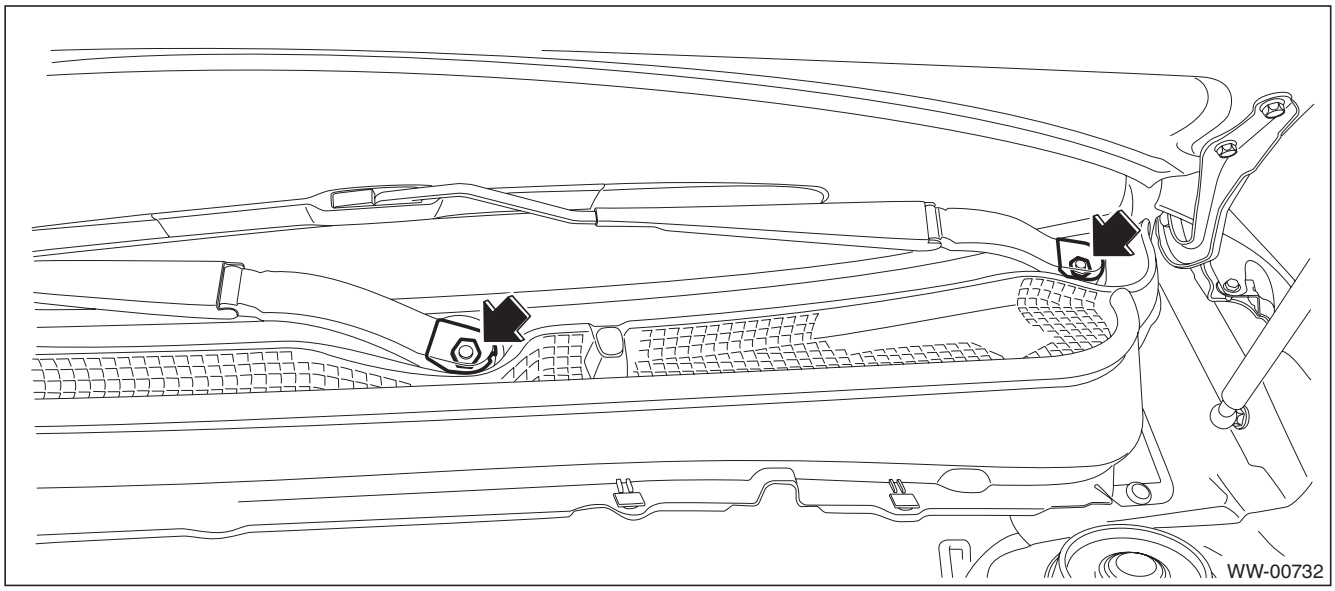

GETtheMANUALS.org

3) Remove the cowl panel side.
   (1) Detach the pins of the cowl panel side.
   (2) Remove the cowl panel side from inside the fender panel by pulling it.

CAUTION:
Applying excessive pulling force may damage the cowl panel side. If it is difficult to remove, use a plastic remover or equivalent tool.

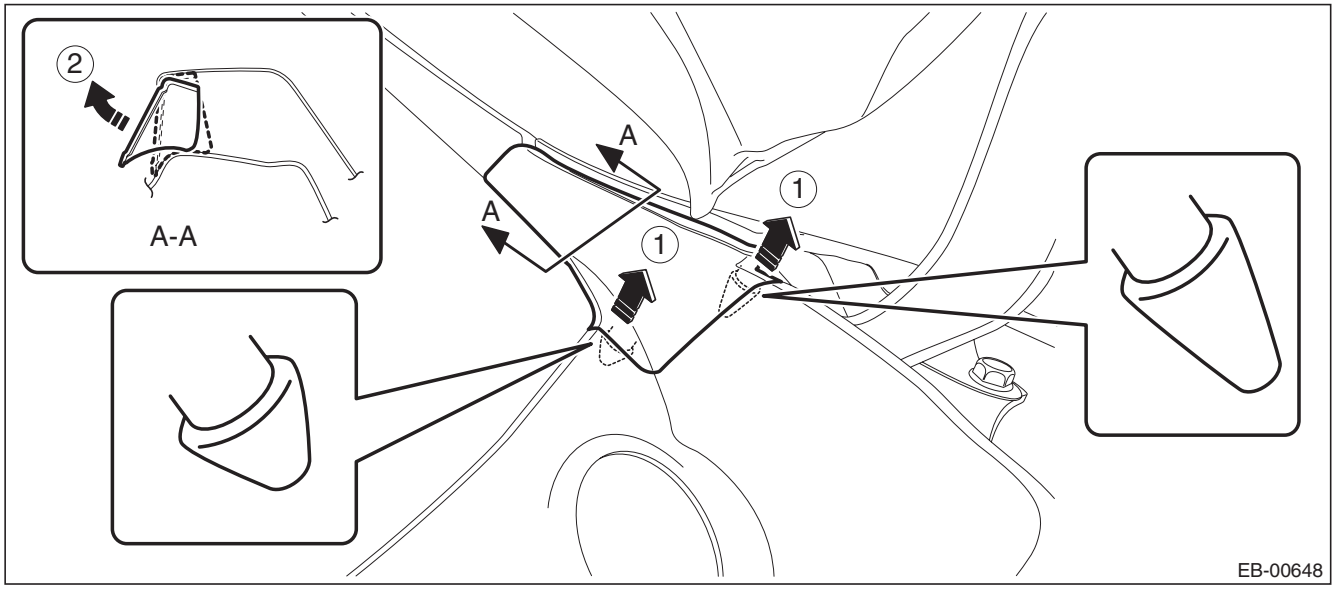

4) Remove the cowl panel.
   (1) Release the clip (A).
   (2) Push the claw of the clip (B) from both sides to remove it.

CAUTION:
When removing the clip (B), push the claw of the clip from both sides.
The clip may be damaged if forcibly pulled.

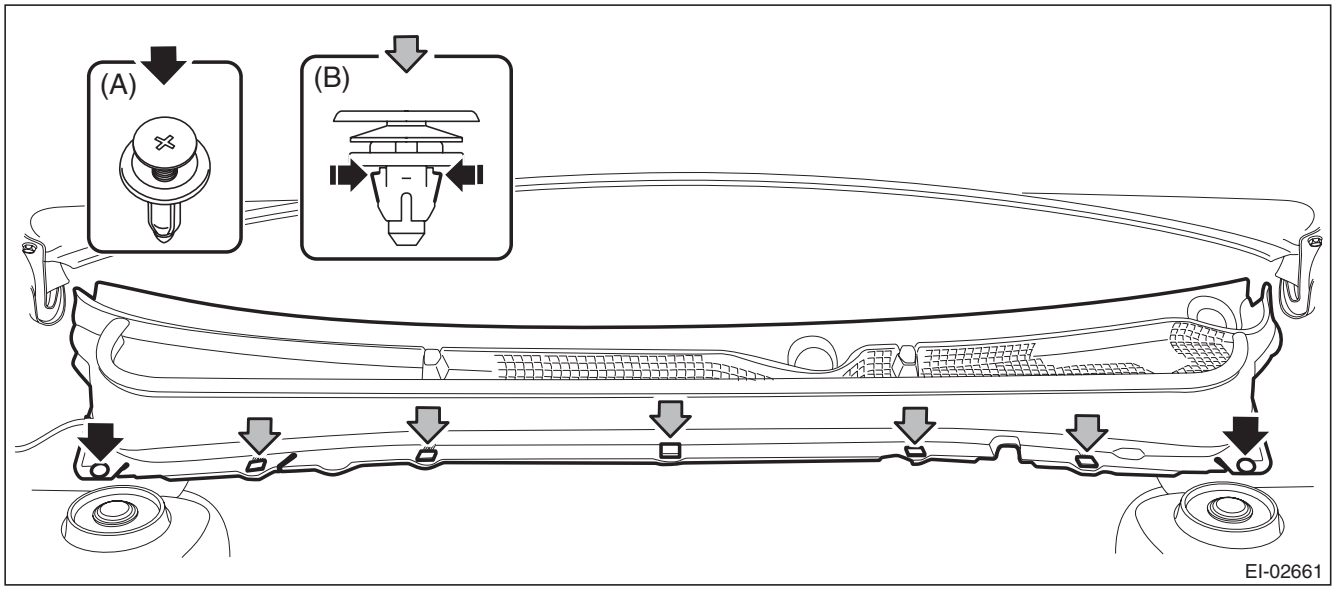

GETtheMANUALS.org

(3) Disconnect the washer hose.

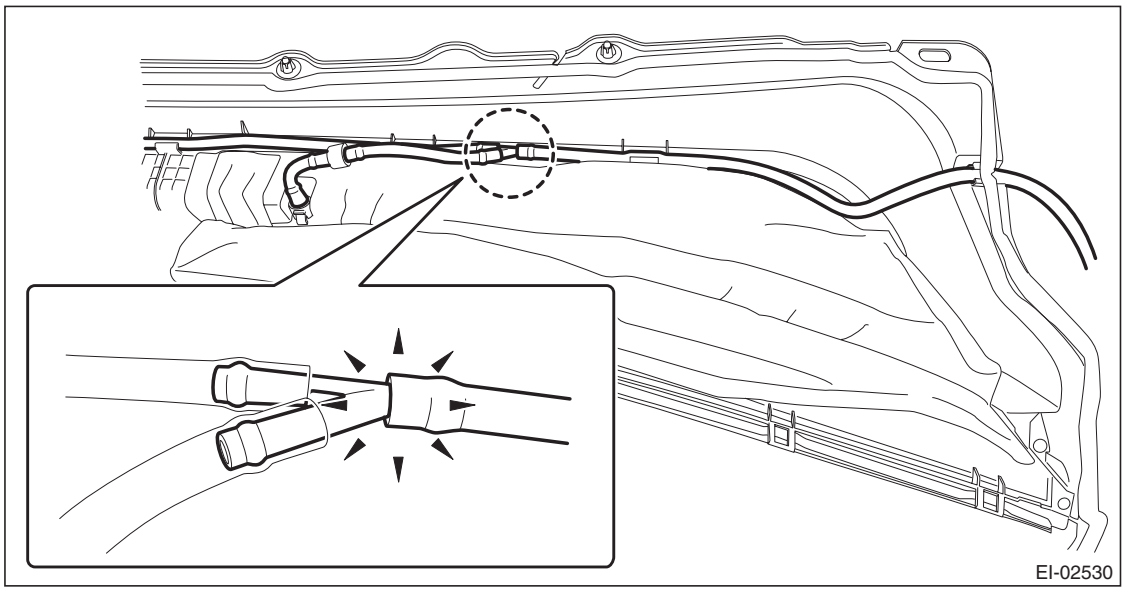

5) Remove the wiper link assembly.
   (1) Disconnect the motor connector.
   (2) Remove the bolts and harness clips and remove the wiper link assembly.

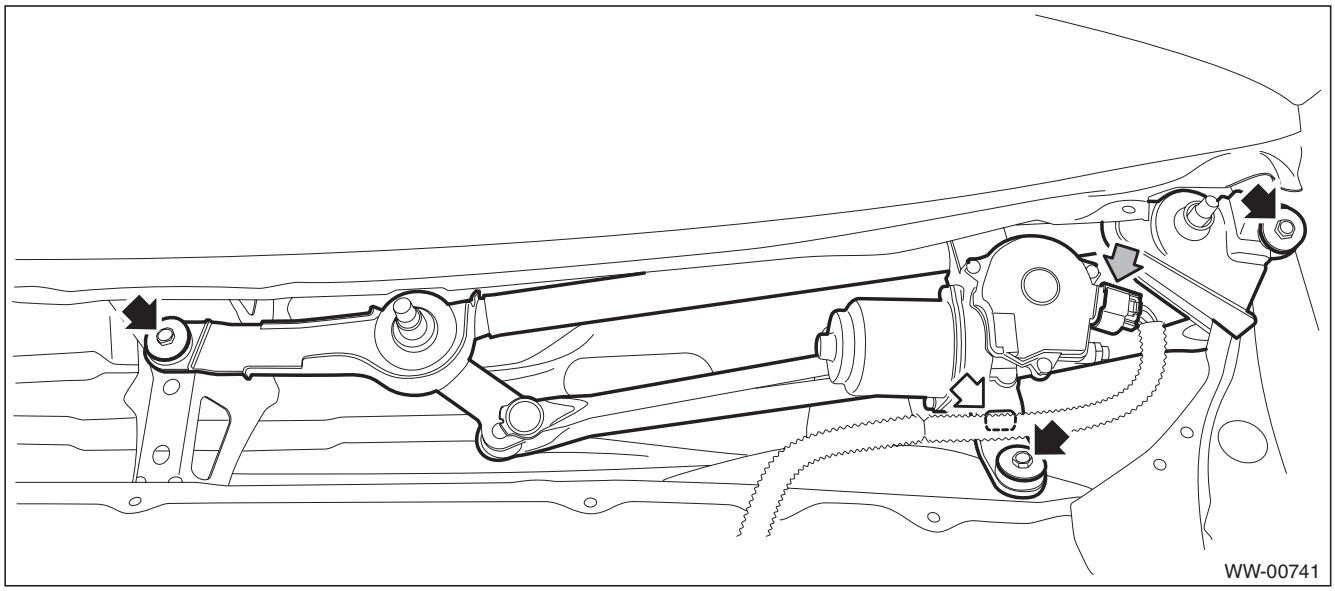

GETtheMANUALS.org

6) Remove the wiper motor assembly.
   (1) Remove the nuts on the link plate and motor assembly to be disconnected from the link assembly.
   (2) Remove the nuts and remove the wiper motor assembly.

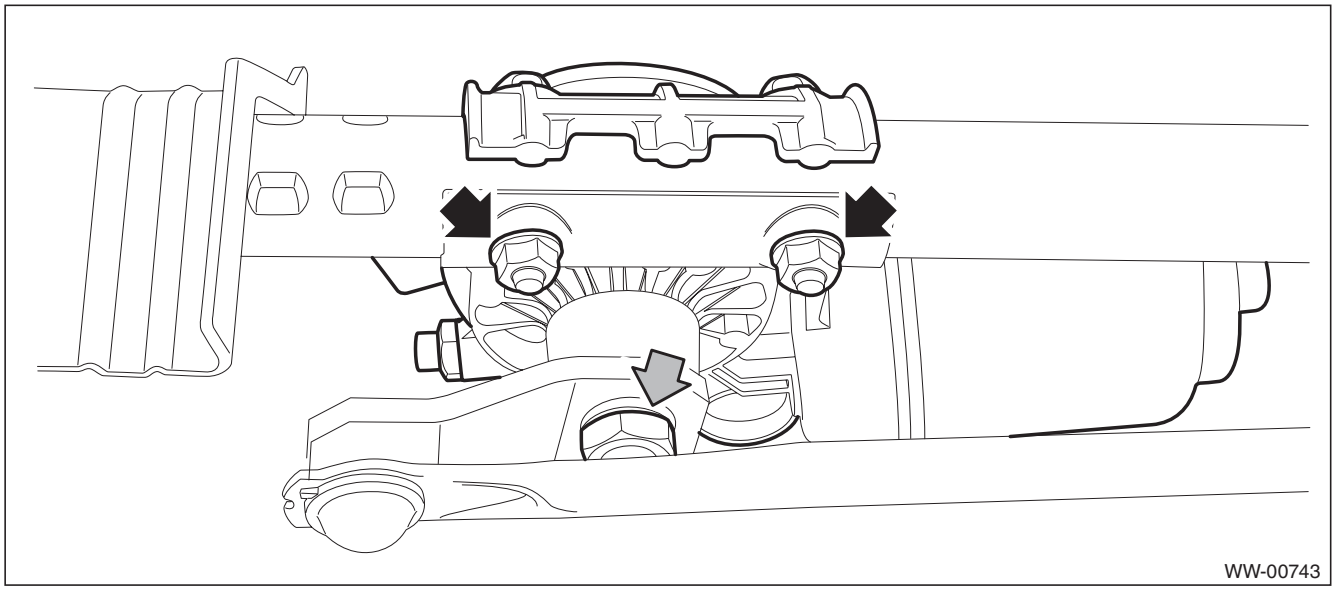

GETtheMANUALS.org

B: INSTALLATION

1) Connect the ground cable to battery.
2) To check whether the motor is at the automatic stop position, connect the harness to the motor and switch the wiper switch to ON/OFF.
3) Disconnect the ground cable from battery.
4) Install the wiper motor assembly.

CAUTION:
Tighten the nuts so that the rod (A) and link plate (B) align.

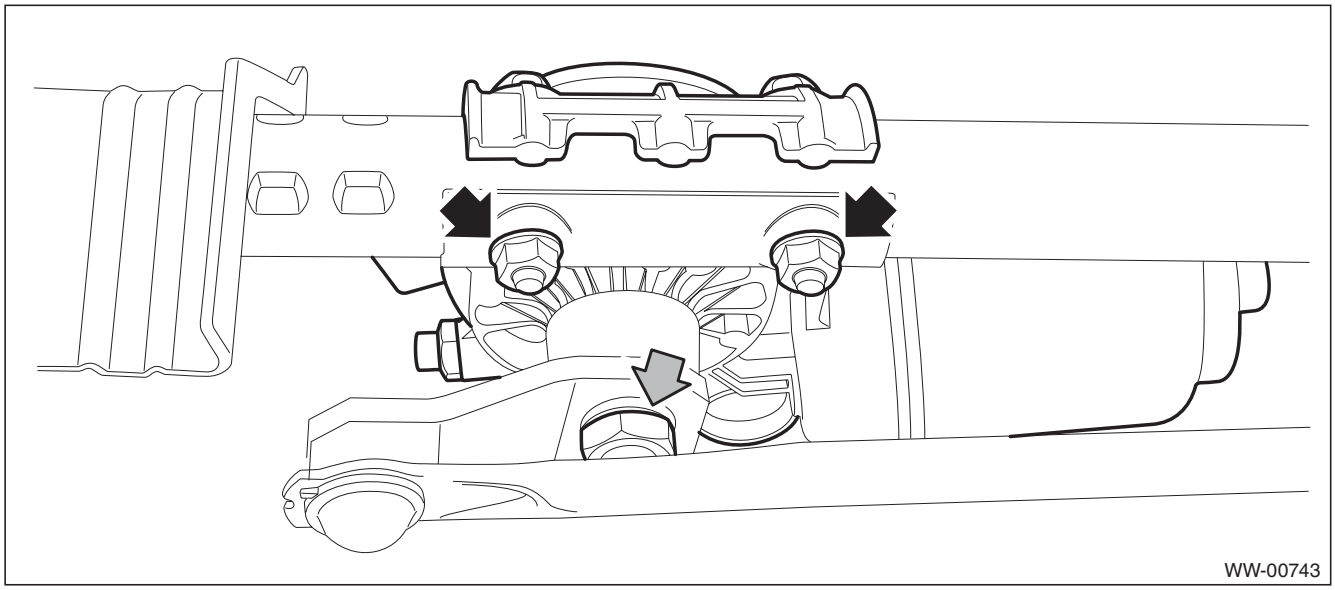

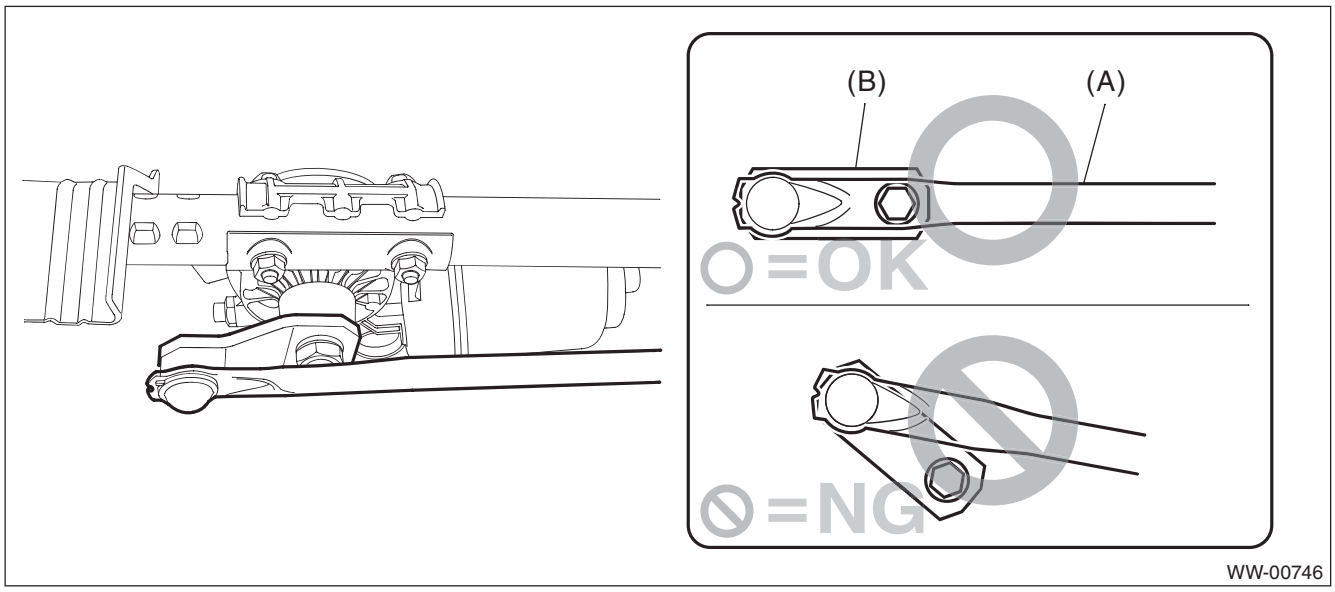

Tightening torque:
Refer to "COMPONENT" of "General Description". <Ref. to WW-3, FRONT WIPER, COMPONENT, General Description.>

5) Install the wiper link assembly and cowl panel in the reverse order of removal.

Tightening torque:
Refer to "COMPONENT" of "General Description". <Ref. to WW-3, FRONT WIPER, COMPONENT, General Description.>

GETtheMANUALS.org

C: INSPECTION

1) When the battery is connected to the terminal of connectors, confirm that the motor operates at low speed.
2) When the battery is connected to the terminal of connectors, confirm that the motor operates at high speed.
3) Connect the battery to the terminals of connector, then run the motor at low speed and disconnect the terminal in mid motion.
4) Connect the battery and confirm that the motor stops at the automatic stop position after the motor operates at low speed again.

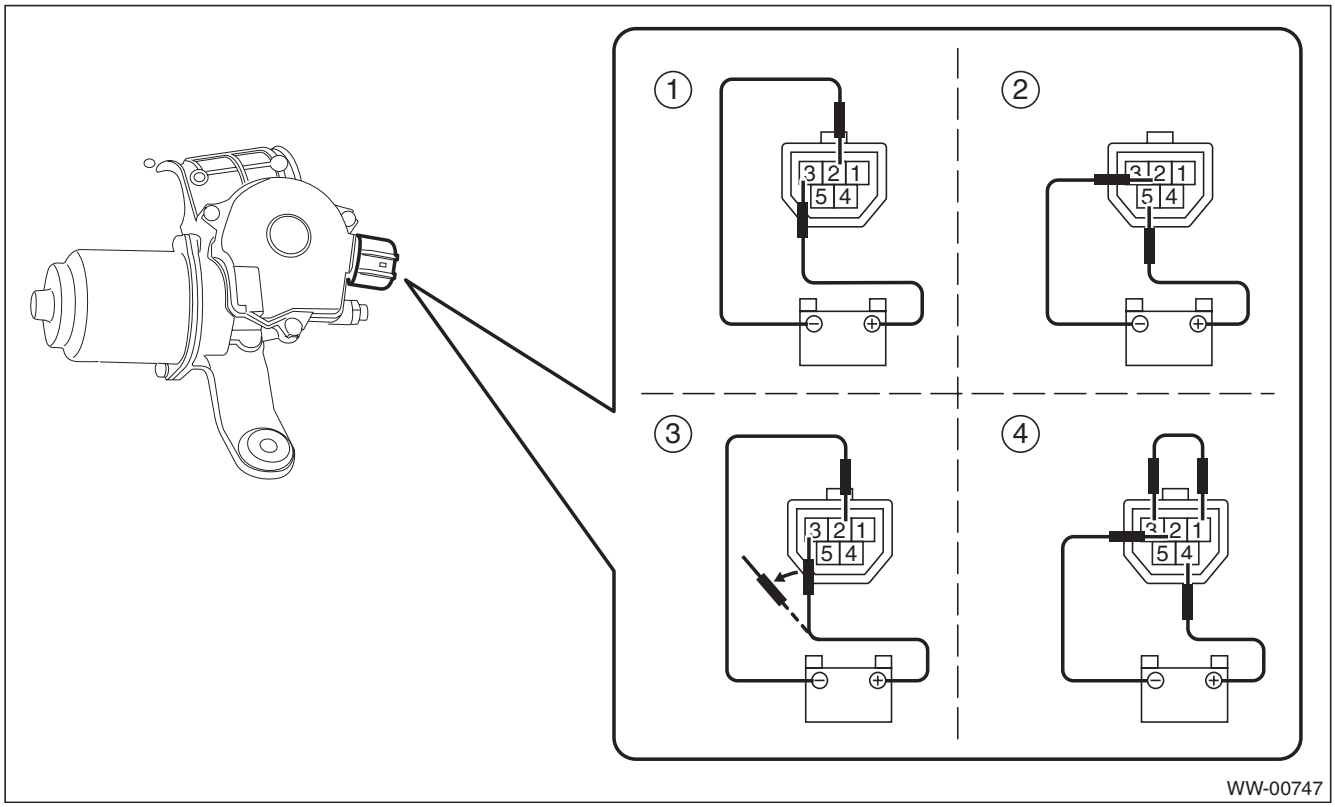

GETtheMANUALS.org

8. Front Washer Nozzle

A: REMOVAL

1) Disconnect the ground cable from battery.
2) Remove the front wiper arm assembly.

CAUTION:
Follow the steps below when standing up the wiper arm. Not following the steps may cause contacting of wiper arms and damages of wiper arms.
1. Stand up the driver's side wiper arm.
2. Stand up the passenger's side wiper arm.
Fold the wiper arms in the reverse order.

(1) Remove the cap.
(2) Remove the nuts, and remove the front wiper arm assembly.

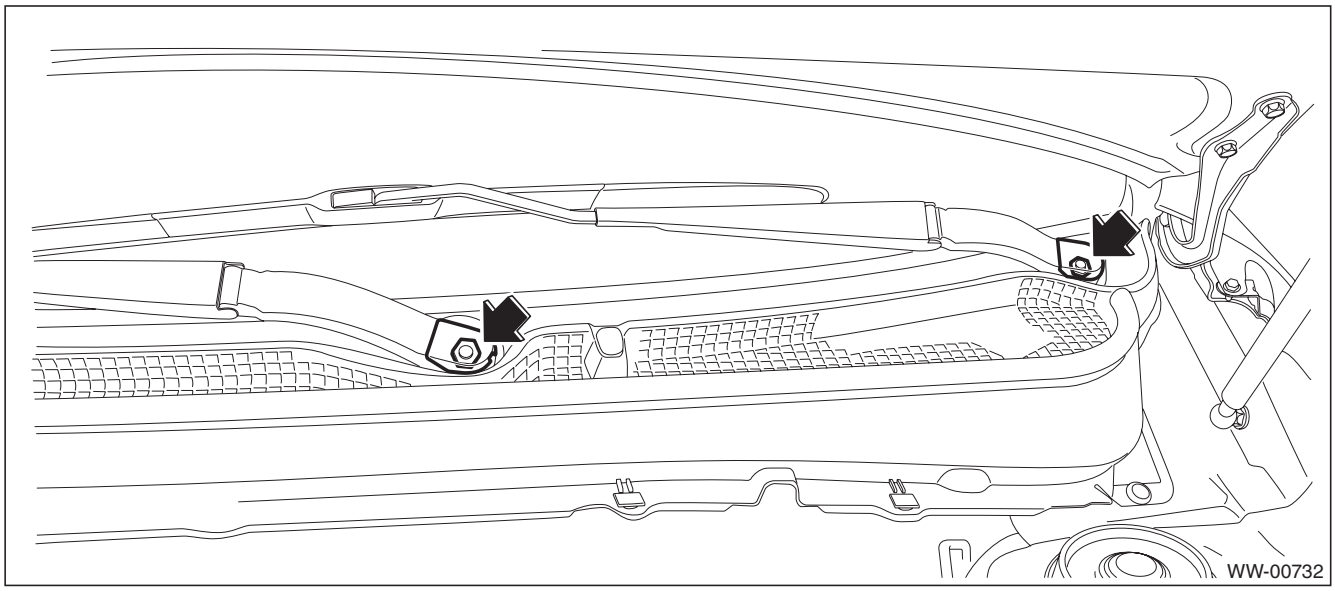

GETtheMANUALS.org

3) Remove the cowl panel side.
   (1) Detach the pins of the cowl panel side.
   (2) Remove the cowl panel side from inside the fender panel by pulling it.

CAUTION:
Applying excessive pulling force may damage the cowl panel side. If it is difficult to remove, use a plastic remover or equivalent tool.

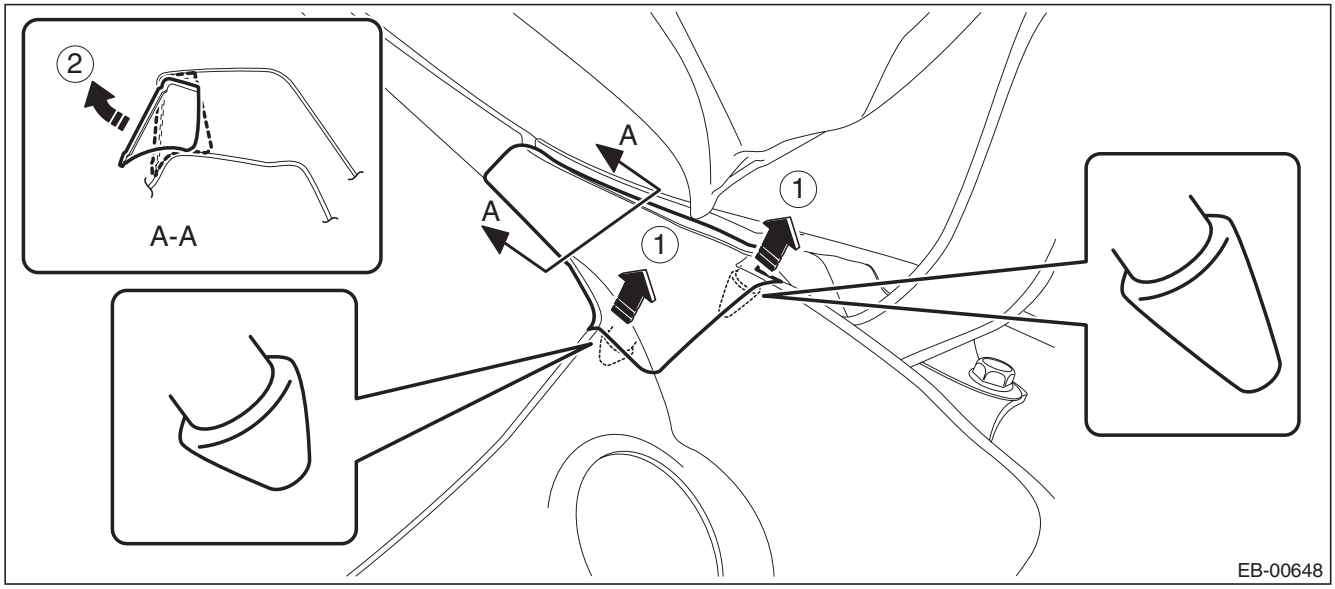

4) Remove the cowl panel.
   (1) Remove clips (A).
   (2) Push the claw of the clip (B) from both sides to remove it.

CAUTION:
When removing the clip (B), push the claw of the clip from both sides.
Be careful because the clip can be damaged if you pull unnecessarily hard on them.

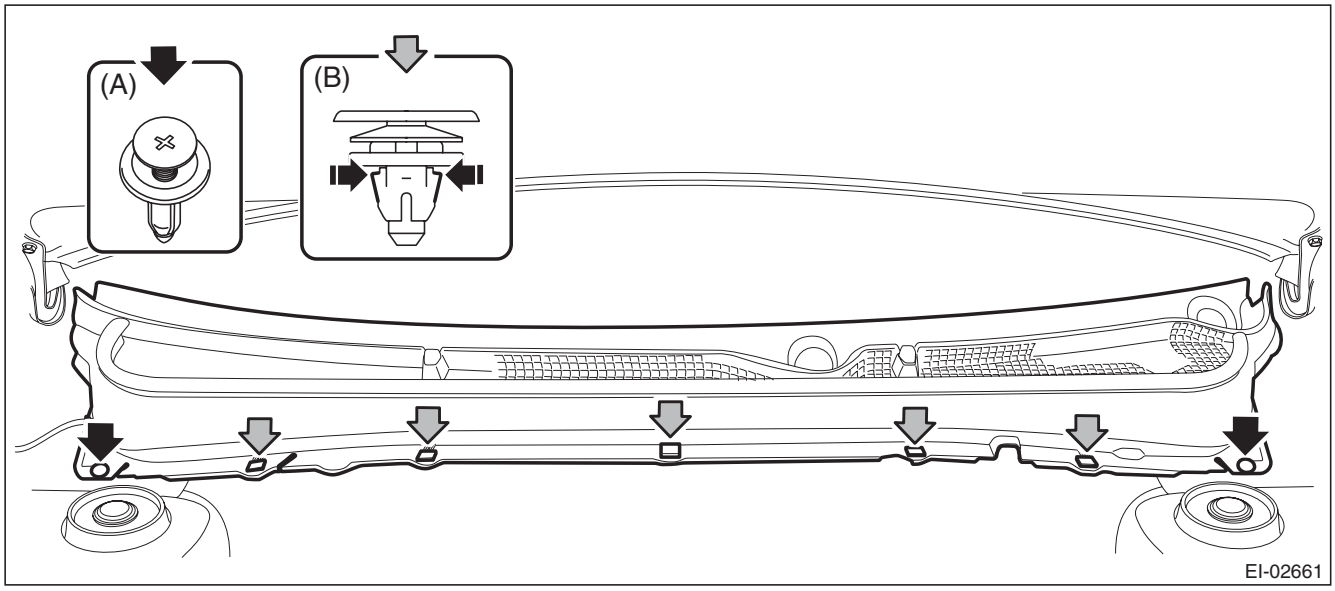

GETtheMANUALS.org

(3) Disconnect the washer hose.

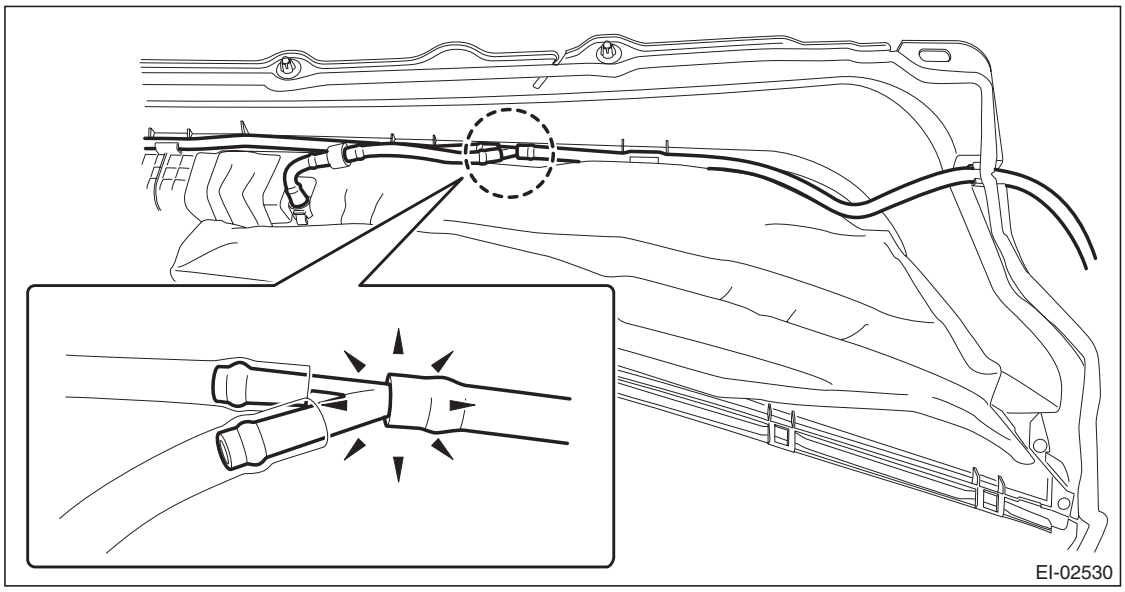

5) Remove the front washer nozzle.
   (1) Push the claw using a flat tip screwdriver, etc.
   (2) When the washer nozzle lifts up, pull out the nozzle using a clip remover, etc.
   (3) Disconnect the washer hose and remove the washer nozzle.

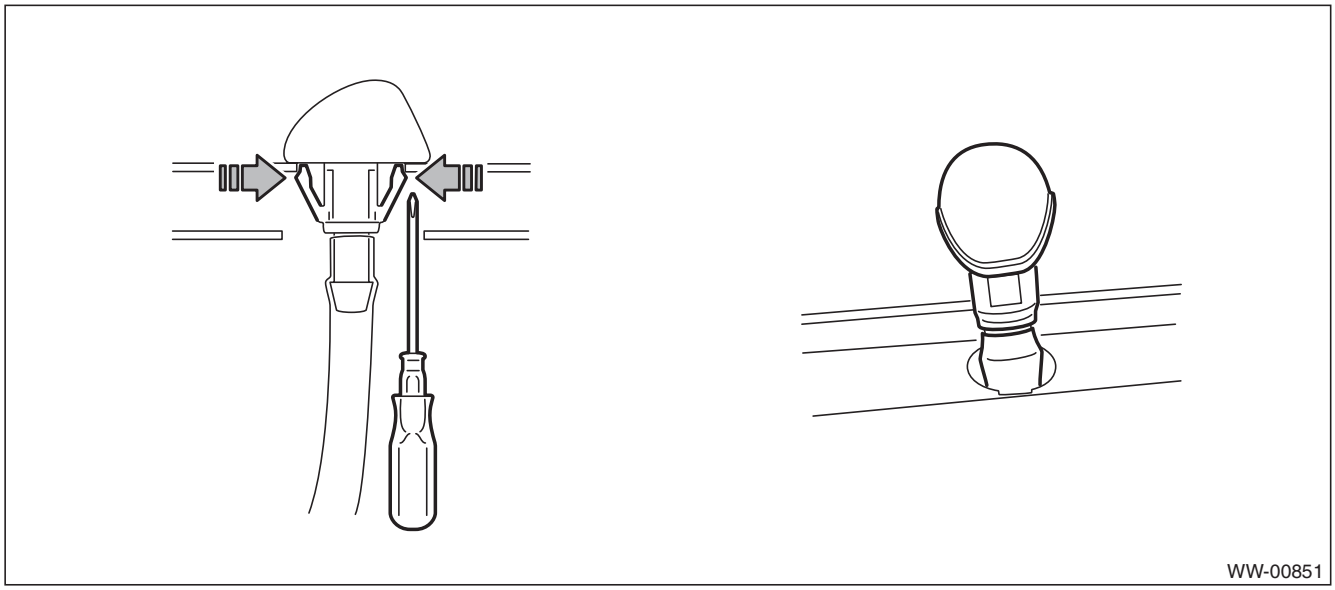

B: INSTALLATION

1) Install each part in the reverse order of removal.

Tightening torque:
Refer to "COMPONENT" of "General Description". <Ref. to WW-3, FRONT WIPER, COMPONENT, General Description.>

2) Adjust the washer nozzle position. <Ref. to WW-34, ADJUSTMENT, Front Washer Nozzle.>

C: INSPECTION

- Make sure the nozzle and hose are not clogged.
- Make sure the hose is not bent.

GETtheMANUALS.org

D: ADJUSTMENT

1) Turn the wiper switch to OFF position.
2) While the vehicle is at a standstill, insert the washer nozzle adjustment tool (a) into upper side (b) and lower side (c) of the washer nozzle to perform necessary adjustment.

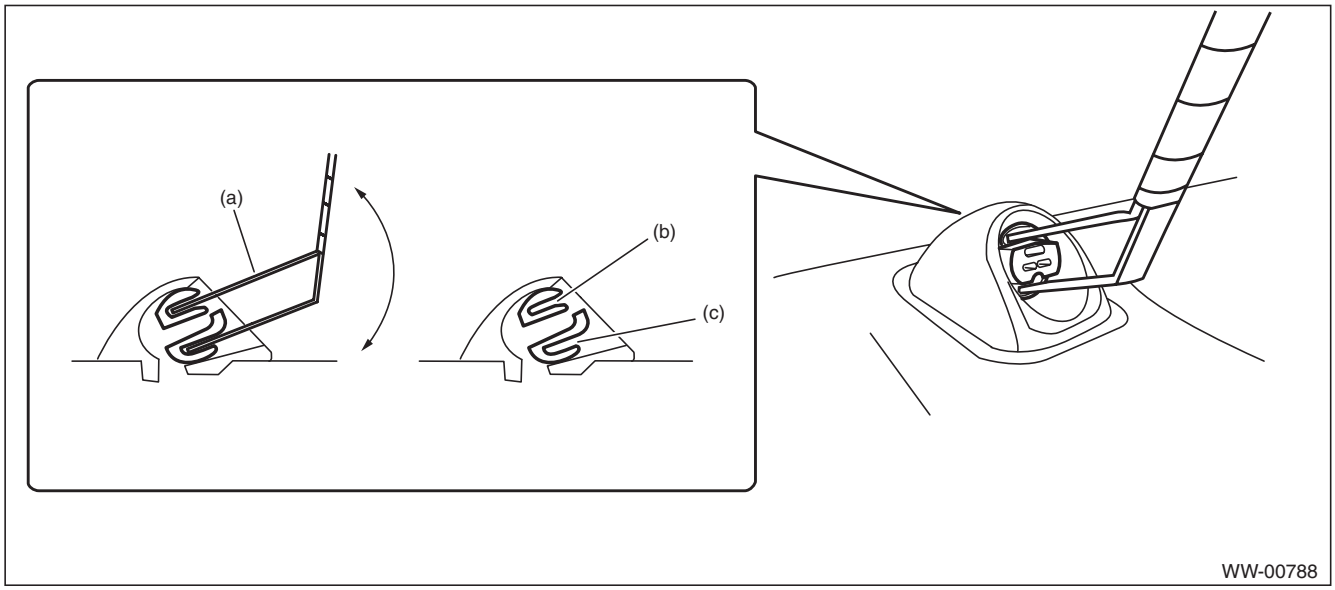

CAUTION:
Washer nozzle is made of resin. If precision screwdriver (A) or equivalent is inserted into discharge port for adjustment, the discharge port can be deformed, and washer fluid cannot be sprayed.

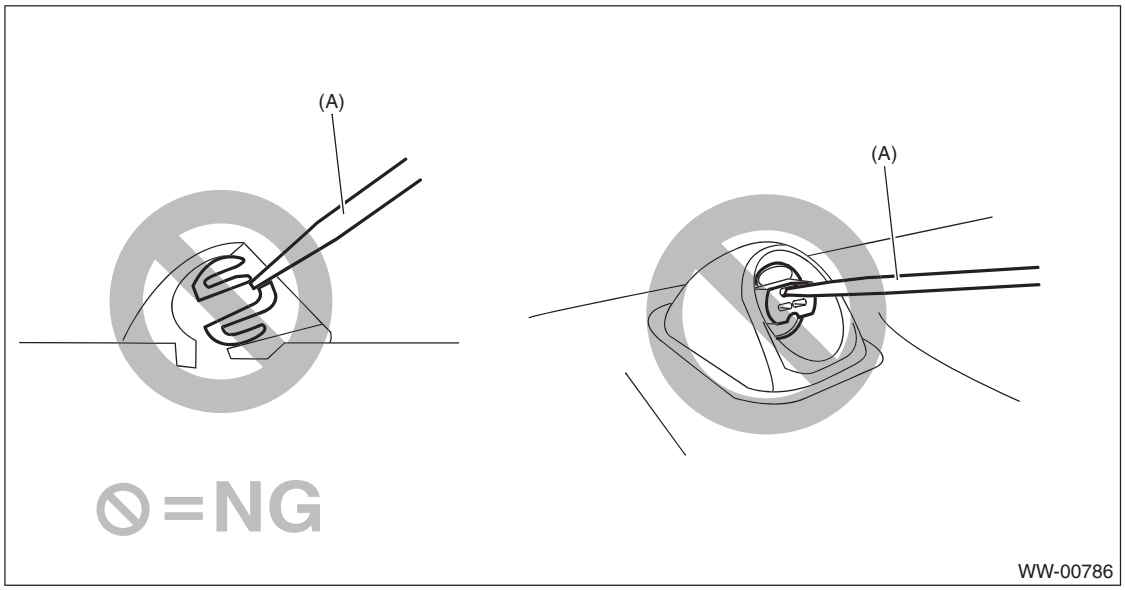

GETtheMANUALS.org

3) Adjust the injection position of the washer fluid as shown in the figure.

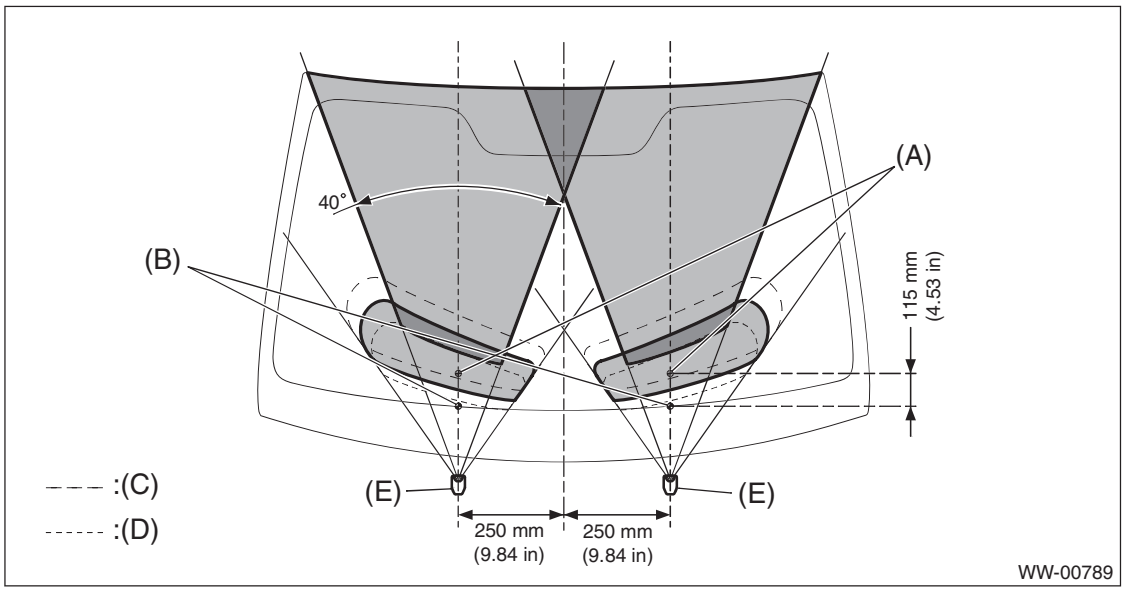

(A) Lower-side spray position center

(B) Ceramic line position on the nozzle center

(C) Washer fluid elevation angle, lower limit of spray area

(D) Washer fluid elevation angle, upper limit of spray area

(E) Washer nozzle

GETtheMANUALS.org

9. Rear Wiper Arm

A: REMOVAL

1) Pull up the wiper arm cover.
2) Remove the nut and remove the wiper arm.

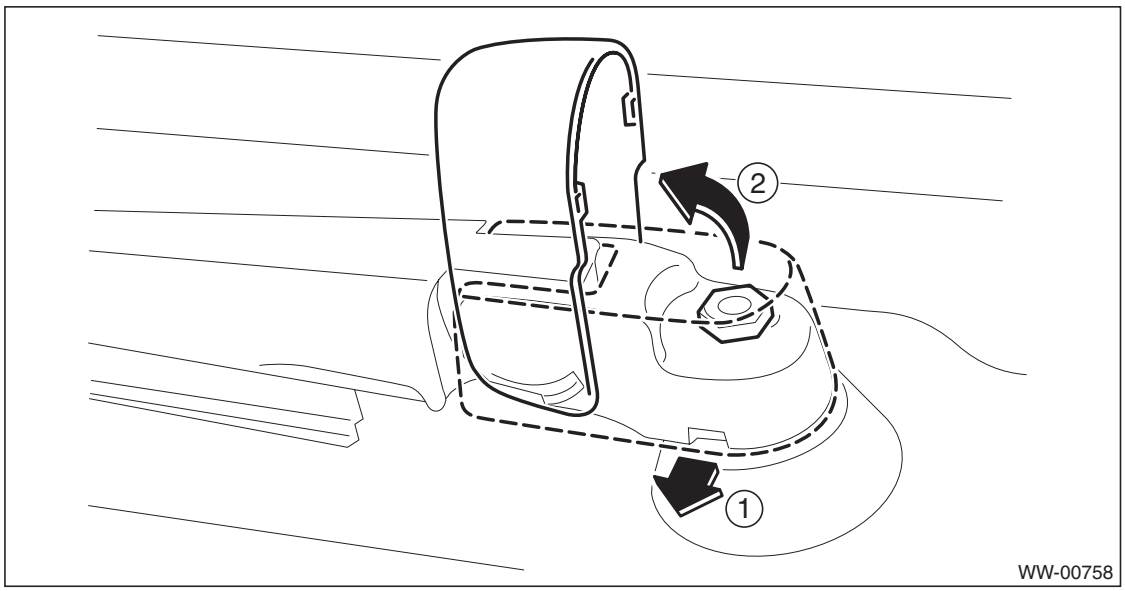

B: INSTALLATION

1) Install in the reverse order of removal.
2) Operate the rear wiper once.
3) Align the blade with the marking on the glass.

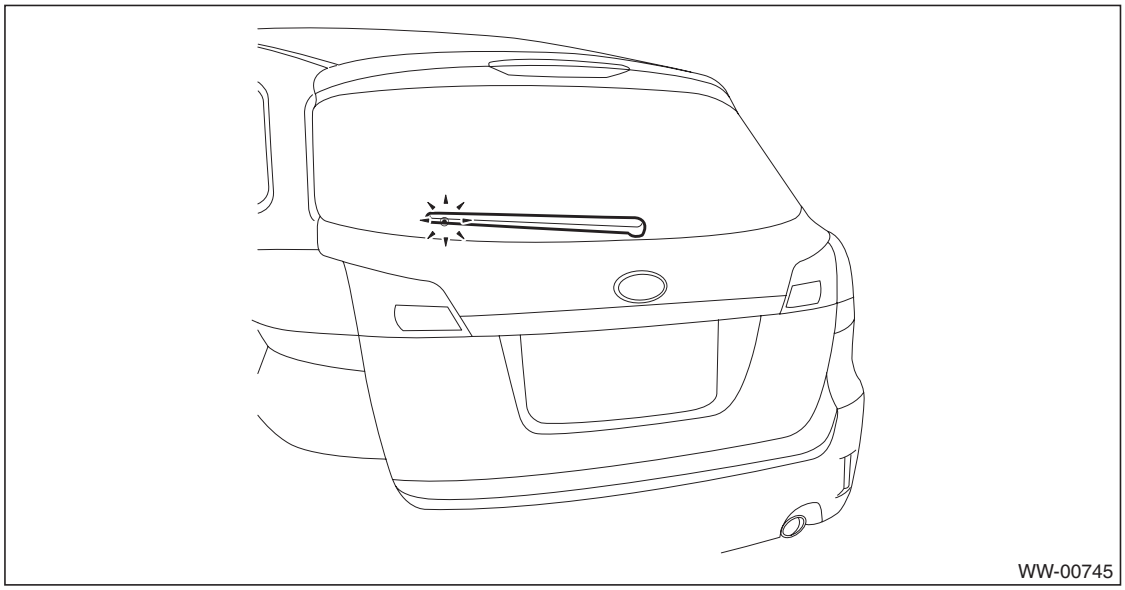

Tightening torque:
Refer to "COMPONENT" of "General Description". <Ref. to WW-4, REAR WIPER, COMPONENT, General Description.>

GETtheMANUALS.org

C: ADJUSTMENT

1) Operate the rear wiper once.
2) Align the blade with the marking on the glass.

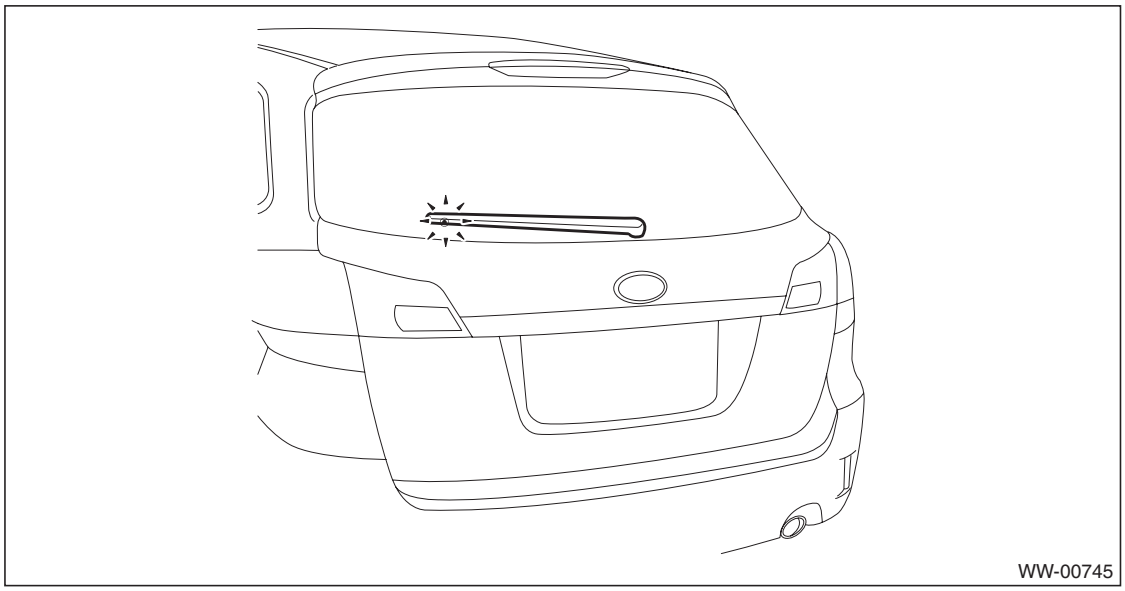

GETtheMANUALS.org

10. Rear Wiper Motor

A: REMOVAL

1) Disconnect the ground cable from battery.
2) Remove the rear wiper arm assembly.
   (1) Remove the wiper arm cover.
   (2) Remove the nut and remove the wiper arm.

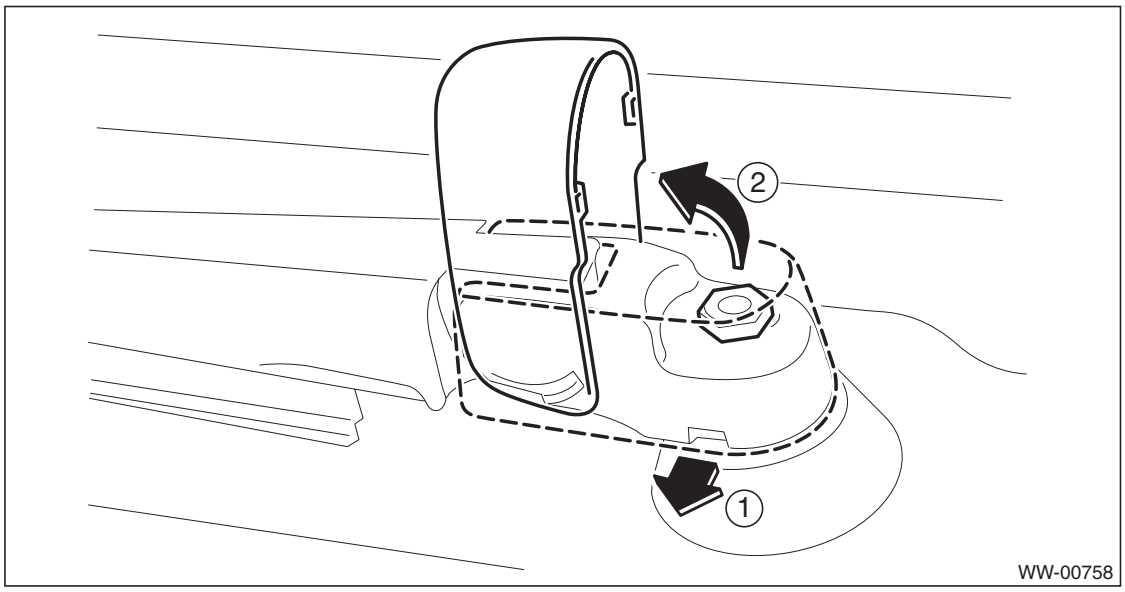

3) Remove the rear gate trim.
   (1) Remove the rear gate upper trim.
      a) Remove the claws on the trim edge.
      b) Disconnect the claws in the center of trim, and remove the rear gate upper trim.

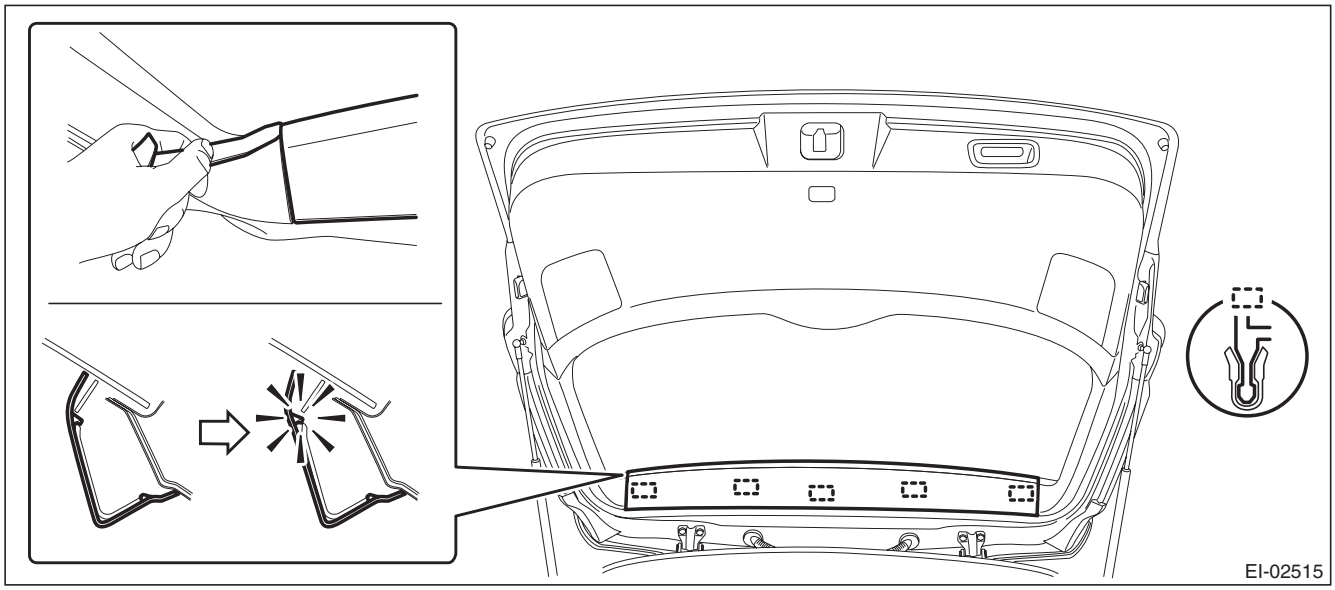

GETtheMANUALS.org

(2) Remove the rear gate pillar trim.
a) Release the claws.
b) Remove the claws on the bottom of trim, and remove the rear gate pillar trim.

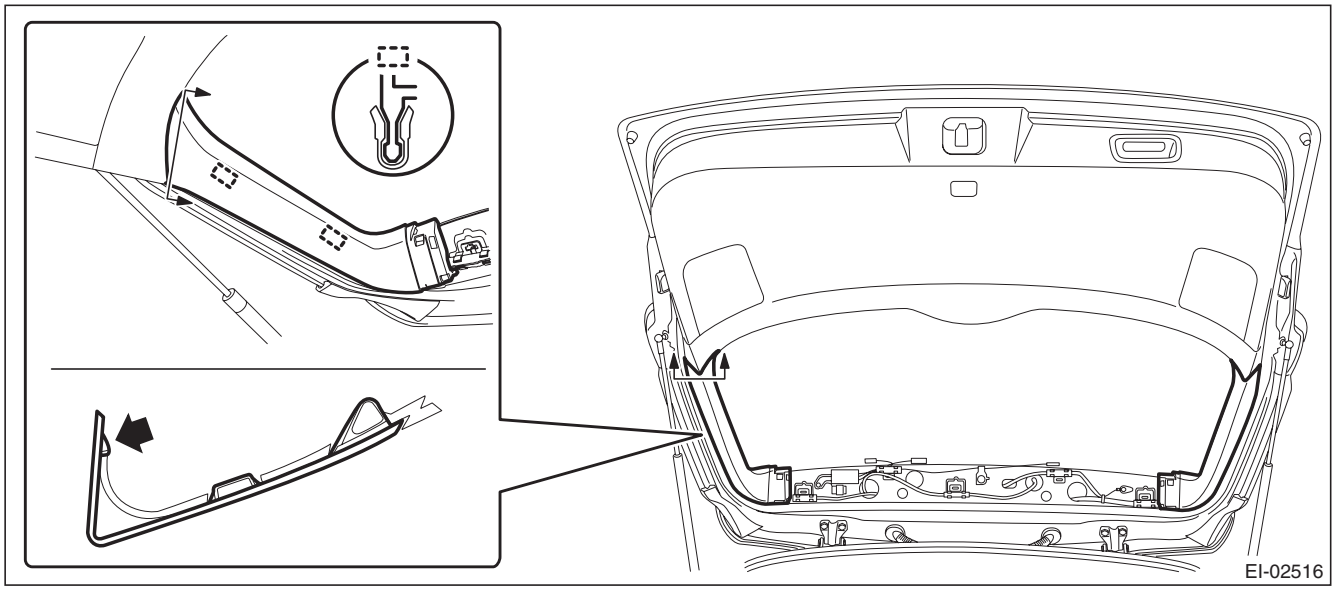

(3) Remove the hand grip of rear gate.

CAUTION:
- **Be careful not to scratch the trim.**
- **To protect the trim from damage, attach a protective tape to the tool in use.**

a) Insert a precision screwdriver (a).
b) With the screwdriver inserted, push it down to release the claw and pull it toward you.
c) Remove the screws and detach the hand grip.

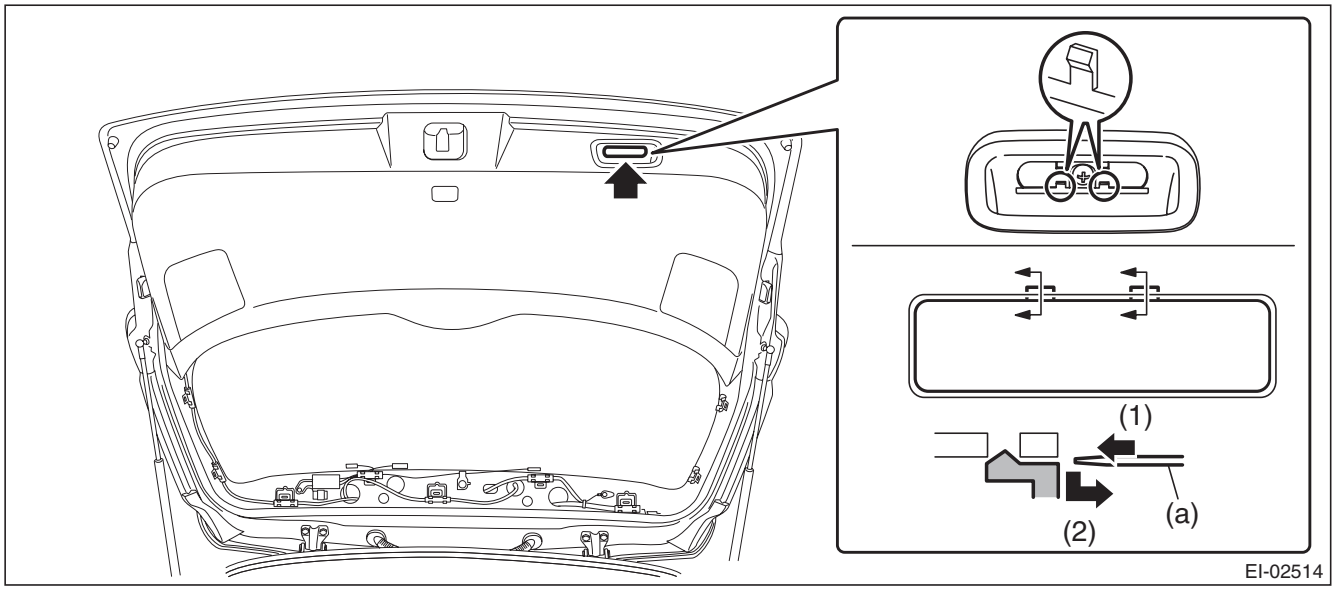

GETtheMANUALS.org

(4) Remove the rear gate lower trim.
a) Remove the clips on both ends.
b) Release the clips and remove the rear gate lower trim.

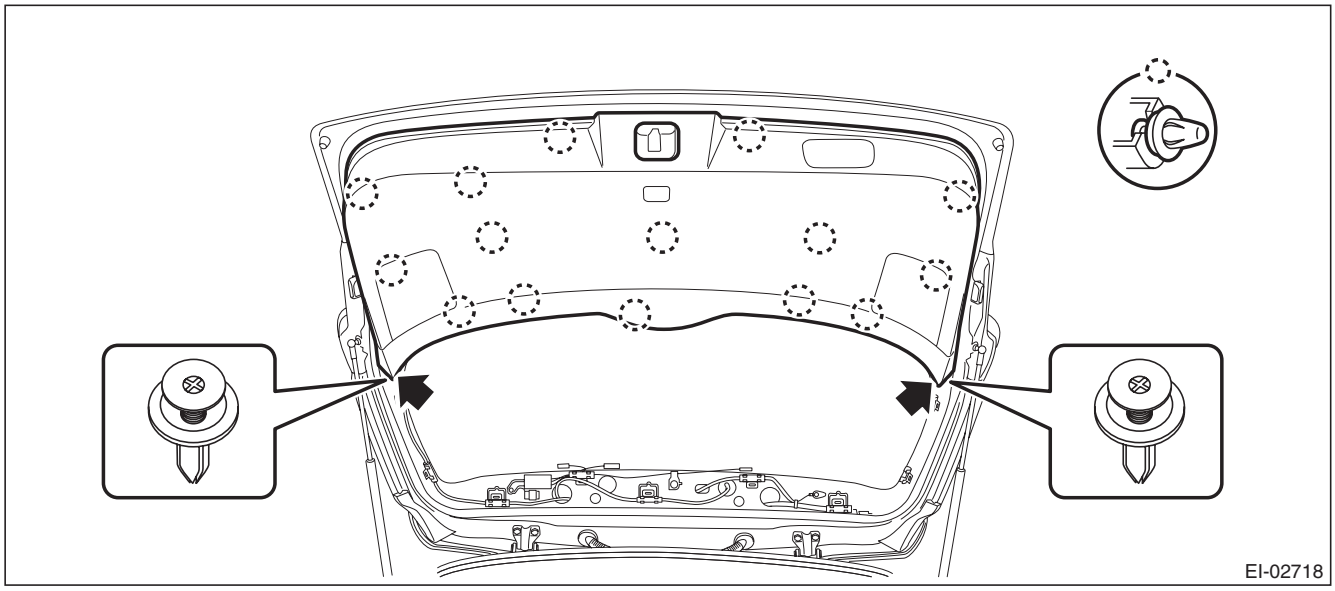

4) Remove the rear wiper motor assembly.
(1) Remove the harness clamp, and disconnect the harness connector of the wiper motor assembly.
(2) Remove the bolts, and then remove the wiper motor assembly.

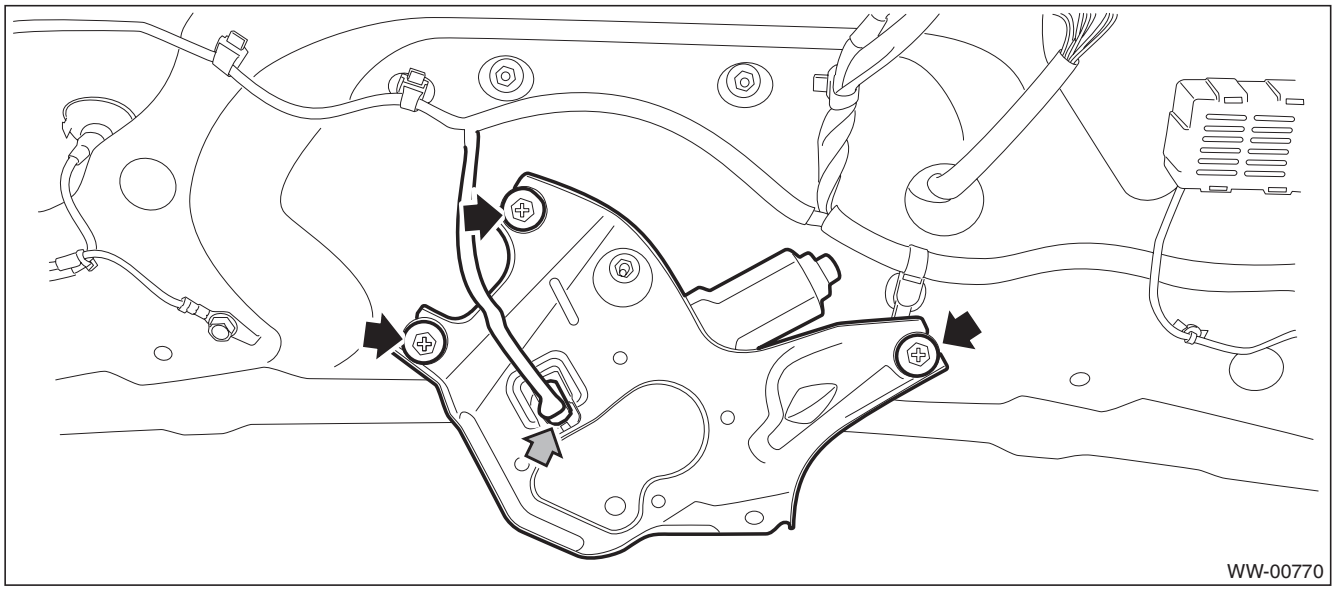

GETtheMANUALS.org

B: INSTALLATION

1) Install each part in the reverse order of removal.
2) Make sure that the ❍ mark on the pivot cap faces up, as shown in the figure.

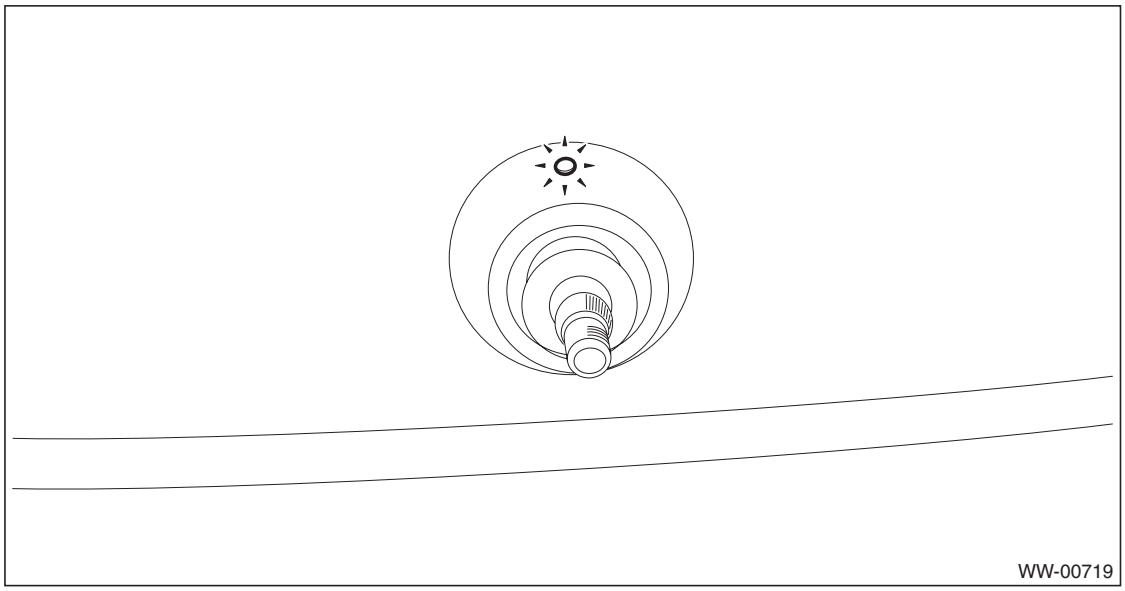

Tightening torque:
Refer to "COMPONENT" of "General Description". <Ref. to WW-4, REAR WIPER, COMPONENT, General Description.>

GETtheMANUALS.org

C: INSPECTION

1) Connect the battery to the wiper motor connector and confirm that wiper motor operates.
2) Connect the battery to the terminals of connector, then run the motor and disconnect the terminal in mid motion.
3) Connect the battery and confirm that the motor stops at the automatic stop position after the motor operates at low speed again.

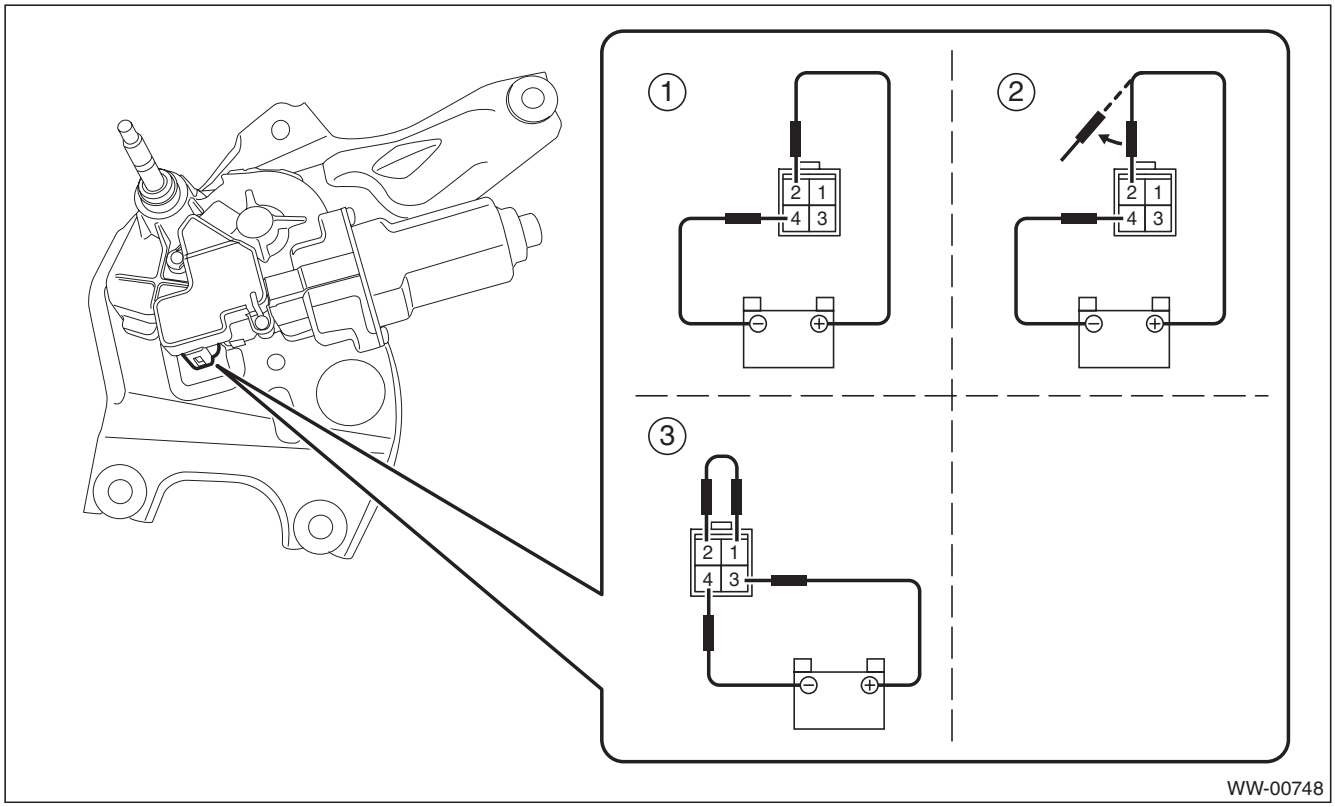

GETtheMANUALS.org

11. Rear Washer

A: REMOVAL

1) Disconnect the ground cable from battery.
2) Remove the rear gate upper trim.
   (1) Remove the claws on the trim edge.
   (2) Disconnect the claws in the center of trim, and remove the rear gate upper trim.

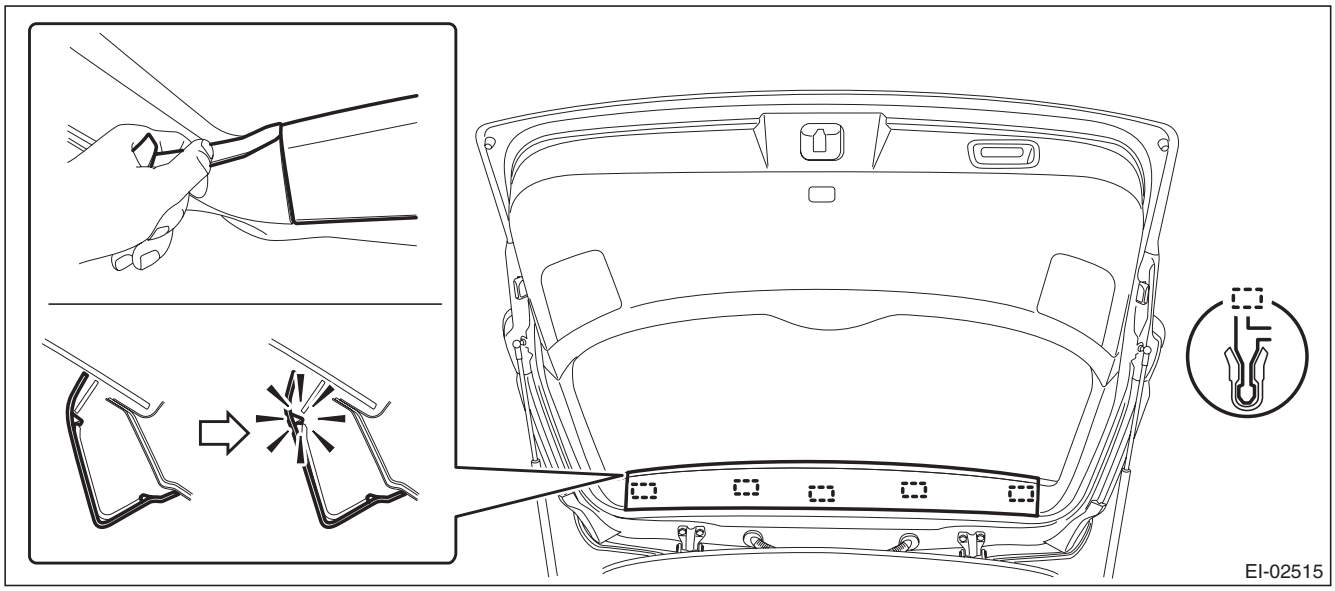

3) Remove the high-mounted stop light.
   (1) Remove the nut.

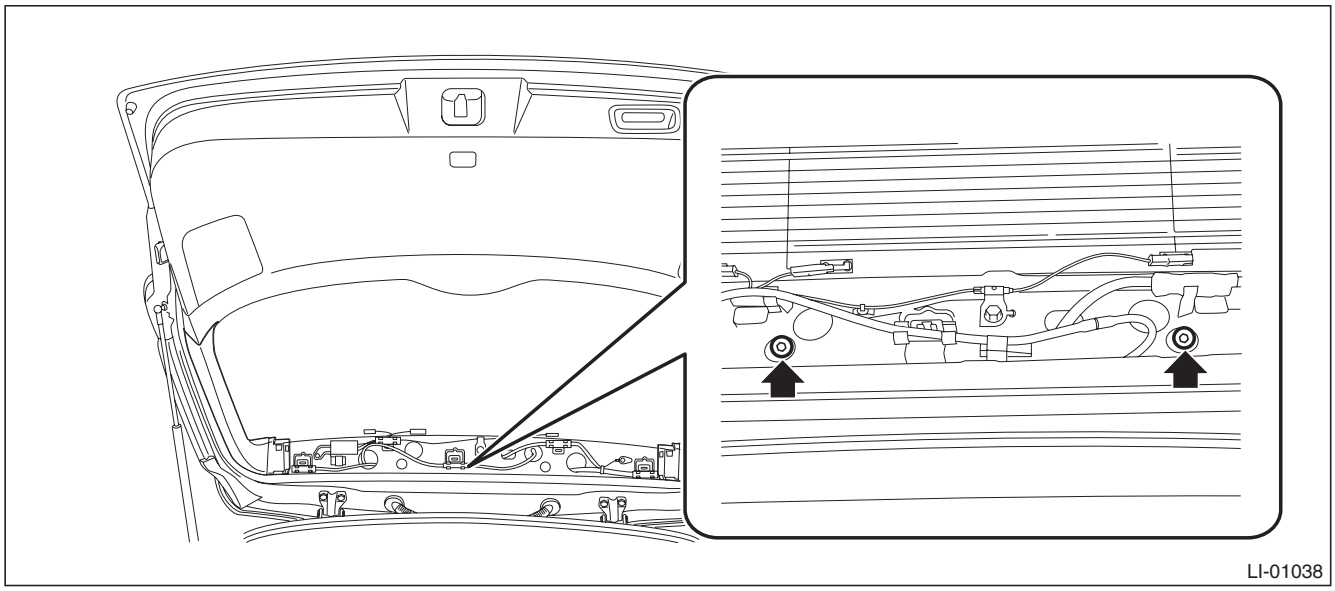

GETtheMANUALS.org

(2) Disconnect the connector and remove the high-mounted stop light.

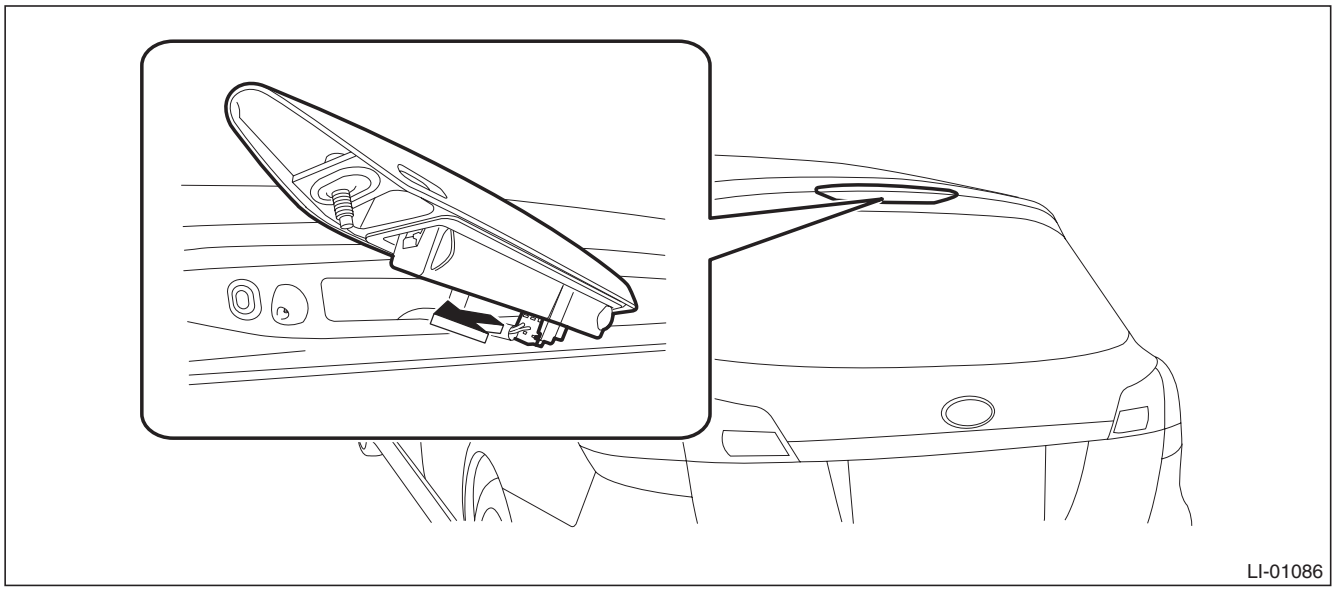

4) Remove the rear washer nozzle.

CAUTION:
Before removing, apply protective tape to the body panel and used tools not to damage the rear gate panel.

(1) Push the claw using a flat tip screwdriver, etc.
(2) When the washer nozzle lifts up, pull out the nozzle using a clip remover, etc.
(3) Disconnect the washer hose and remove the washer nozzle.

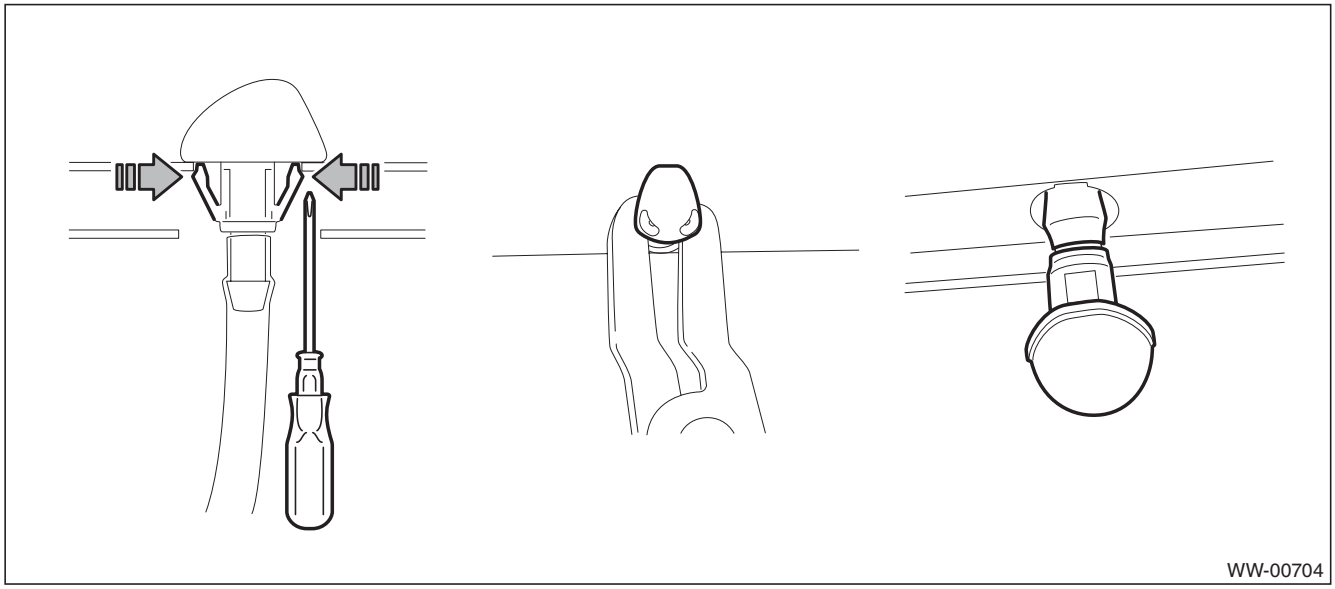

B: INSTALLATION

1) Install each part in the reverse order of removal.

Tightening torque:
High-mounted stop light assembly: 4.5 N·m (0.46 kgf-m, 3.3 ft-lb)

2) Check the washer nozzle position. <Ref. to WW-45, VISUAL INSPECTION, INSPECTION, Rear Washer.>

GETtheMANUALS.org

C: INSPECTION

1. VISUAL INSPECTION

Check for the following items, and if any malfunction is found, replace the corresponding part.
- Make sure the nozzle and hose are not clogged.
- Make sure the hose is not bent.

2. INSPECTING THE SPRAY POSITION

1) Turn the wiper switch to OFF position.
2) While the vehicle is stopped, check that the washer spray position is as shown in the figure.
3) After inspection, if the spray position is out of the specified range, adjust the position or replace with the new washer nozzle.

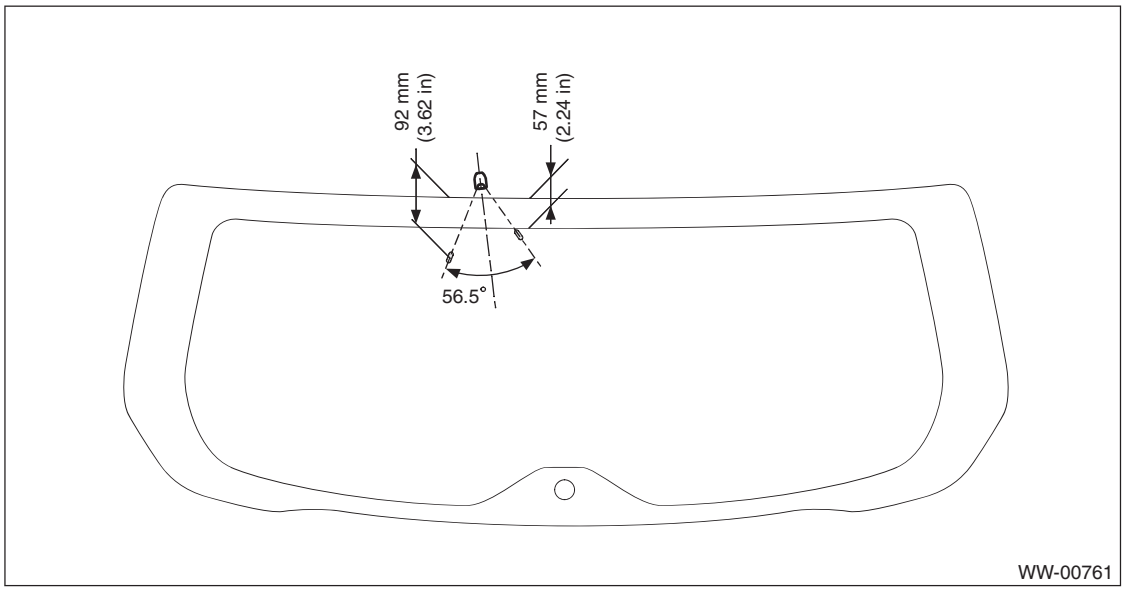

GETtheMANUALS.org

GETtheMANUALS.org

ENTERTAINMENT

ET

		Page
1.	General Description	2
2.	Audio System	3
3.	Navigation System	8
4.	Audio	12
5.	Front Speaker	14
6.	Rear Speaker	17
7.	Woofer	19
8.	Power Amplifier	21
9.	Antenna	22
10.	Noise Suppressor	30
11.	Steering Satellite Switch	32
12.	Navigation Body	38
13.	GPS Antenna	40
14.	Rearview Camera System	45
15.	Front Accessory Power Supply Socket	54
16.	Rear Accessory Power Supply Socket	58
17.	AUX Input Terminal	61

GETtheMANUALS.org

1. General Description

A: CAUTION

- Before disassembling or reassembling parts, always disconnect the battery ground cable from battery. When replacing the audio, control module and other parts provided with memory functions, record the memory contents before disconnecting the battery ground cable. Otherwise, the memory is cleared.
- Reassemble the parts in the reverse order of disassembly procedure unless otherwise indicated.
- Adjust parts to the given specifications.
- Connect the connectors securely during reassembly.
- After reassembly, make sure functional parts operate smoothly.

B: PREPARATION TOOL

1. GENERAL TOOL

TOOL NAME	REMARKS
Circuit tester	Used for measuring resistance and voltage.
Steering wheel puller	Used for removing the steering wheel.

GETtheMANUALS.org

2. Audio System

A: WIRING DIAGRAM

1. AUDIO

Refer to “Audio System” in the wiring diagram. <Ref. to WI-69, WIRING DIAGRAM, Audio System.>

B: INSPECTION

Symptoms	Repair order
No power coming in. (No display and no sound from speakers)	1. Check the fuse and power supply for audio. 2. Check the audio ground. 3. Remove the audio and repair them.
A specific speaker does not operate.	1. Check the speaker. 2. Check the output circuit between audio and speaker.
Audio generates noise with engine running.	1. Check the audio ground. 2. Check the generator. 3. Check the ignition coil. 4. Remove the audio and repair them.
Volume is low in AM and FM modes or interference noise occurs.	1. Check the antenna. 2. Check the antenna amplifier. 3. Check the rear window defogger. 4. Check the noise suppressor. 5. Check the audio ground. 6. Remove the audio and repair them.
Rear window defogger generates noise when it operate.	1. Check the rear window defogger.

1. CHECK EACH VEHICLE SIGNAL

1) With the ignition switch ON and audio OFF, turn the VOLUME dial by 40 clicks while pressing the preset 1 key.
2) When «System Diagnostic Menu» is displayed, select {Confirmation/Adjustment} by SCROLL/TUNE dial, then press ENTER/SETTING key (SCROLL/TUNE dial).

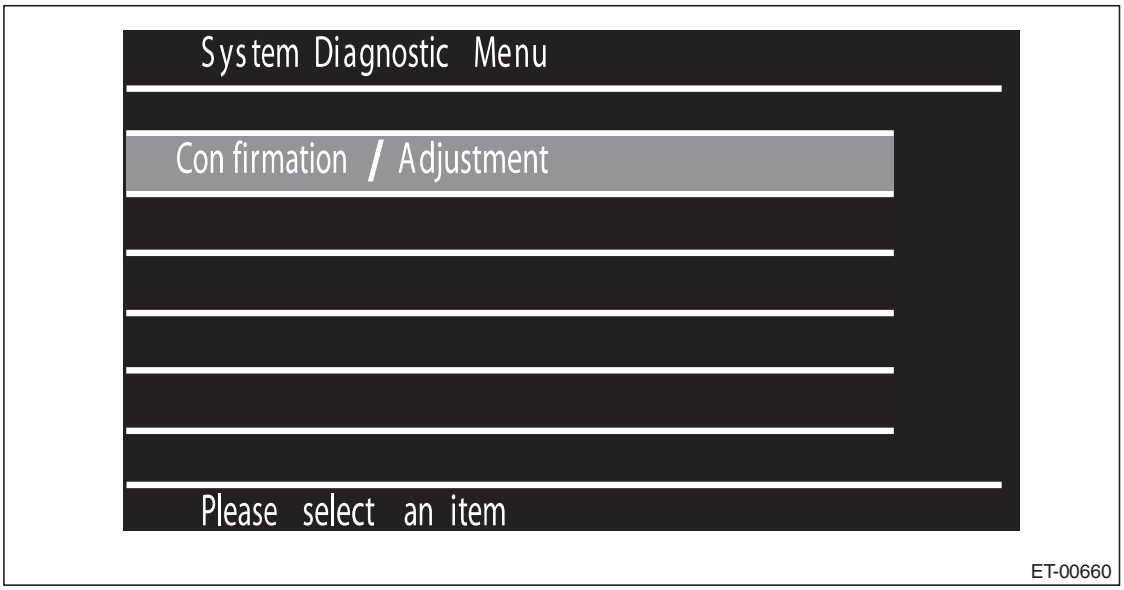

GETtheMANUALS.org

3) When «System.. > Confirmation/Adjustment» is displayed, select {Vehicle Signals} by SCROLL/TUNE dial, then press ENTER/SETTING key (SCROLL/TUNE dial).

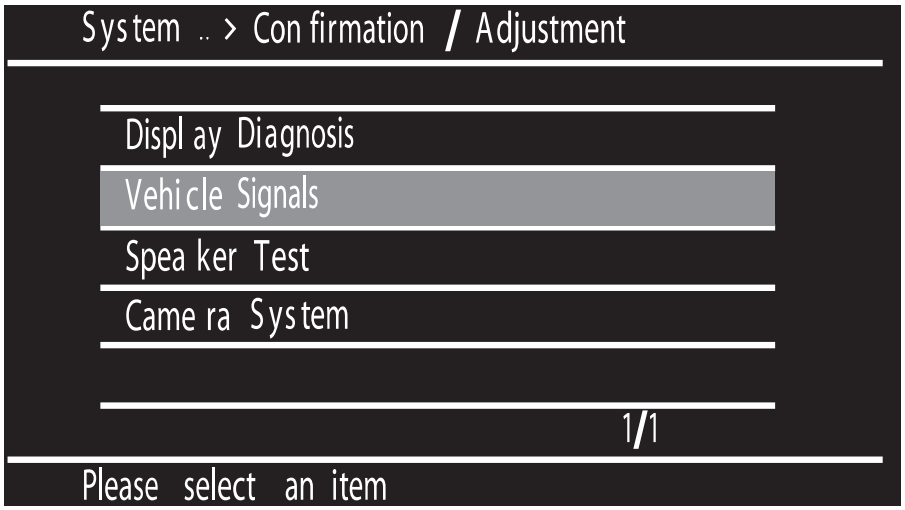

ET-00663

- **CHECK ILLUMINATION**

When the light switch is turned ON, make sure that “ON” lights in ILL+ and then the screen becomes dim.

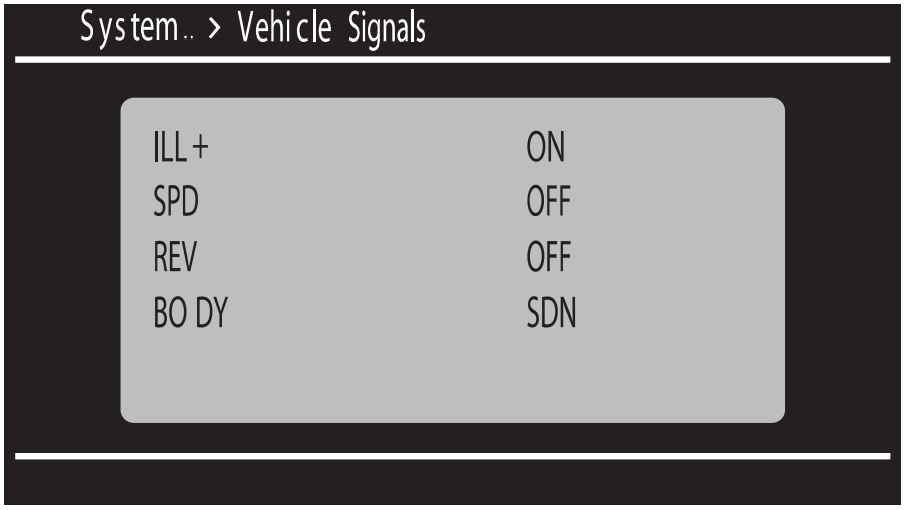

ET-00664

ON: Normal.
OFF: Abnormal. Check the signal line connector. If there are no problems, the unit could be faulty.

GETtheMANUALS.org

- **CHECK SPEED SENSOR**

NOTE:
- Before starting inspections, check the safety around the vehicle.
- Lift up the vehicle as necessary.
- When the diagnostic trouble code is input in the VDCCM, perform the Clear Memory operation.

1) Move the vehicle slowly 2 to 3 meters (6.6 to 9.8 ft).
2) Check that “ON” is displayed in SPD.

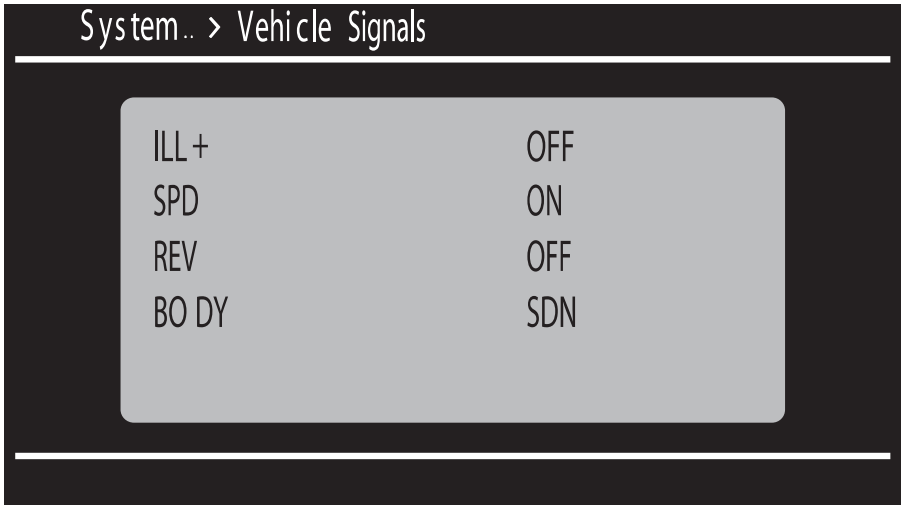

ET-00665

ON: Normal.
OFF: Abnormal. Check the signal line connector. If there are no problems, the unit could be faulty.

- **CHECK BACK SENSOR**

1) Turn the parking brake switch to ON and depress the brake pedal, then put the gear in reverse.
2) Make sure that “ON” is displayed in REV.

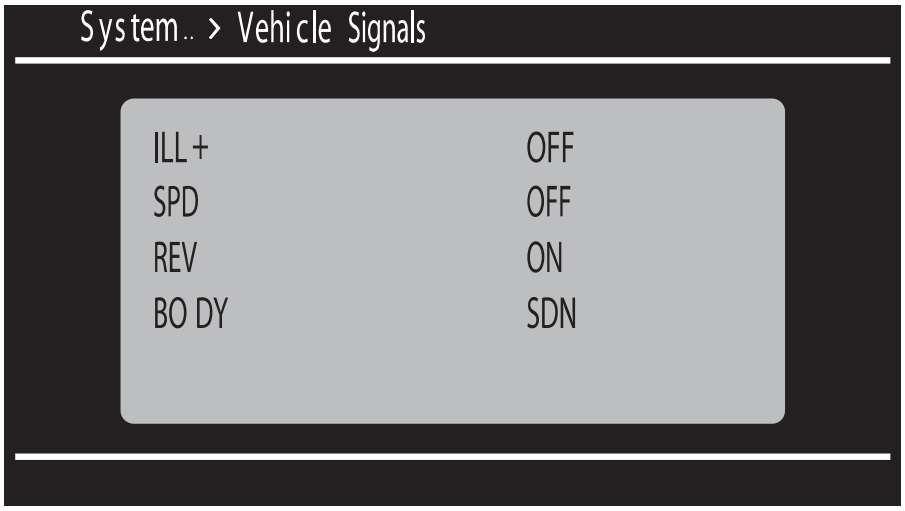

ET-00666

ON: Normal.
OFF: Abnormal. Check the signal line connector. If there are no problems, the unit could be faulty.

GETtheMANUALS.org

- **CHECK VEHICLE SETTING**

1) Check that “SDN” or “WGN” is displayed in BODY.

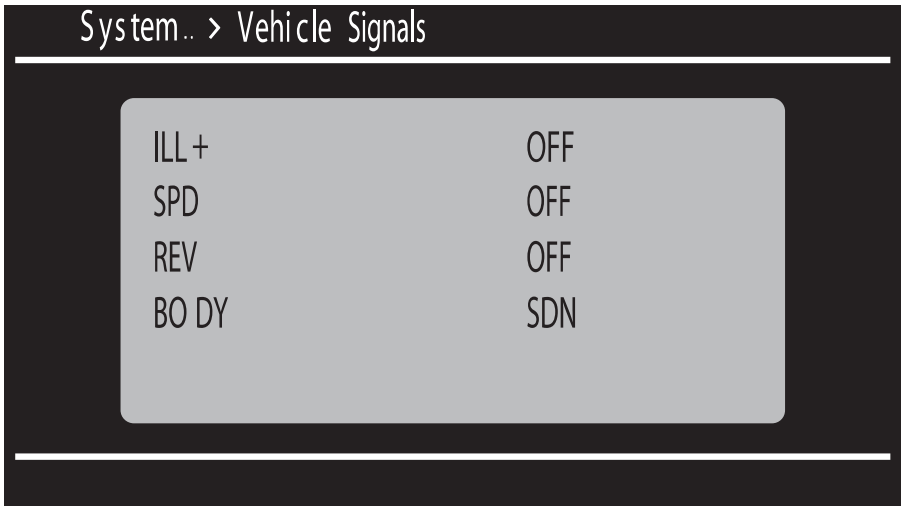

ET-00667

SDN: sedan model
WGN: OUTBACK model

2. CHECK MICROPHONE CONNECTION

Perform the inspection mode of the microphone connection.
1) When “HOOK OFF” button of the satellite switch is pressed with telephone unregistered, the screen switches to «BT» and “Welcome” is displayed.

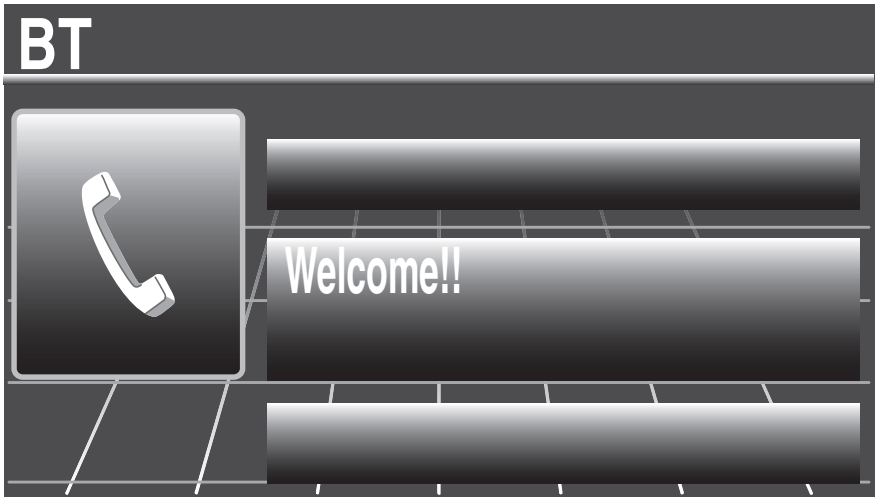

ET-00678

2) While “Welcome” is displayed, press “+” → “HOOK OFF” → “+” → “HOOK OFF” → “+” continuously in 5 seconds.

GETtheMANUALS.org

3) After “Speak loudly” is displayed, the inspection mode of the microphone connection is started.

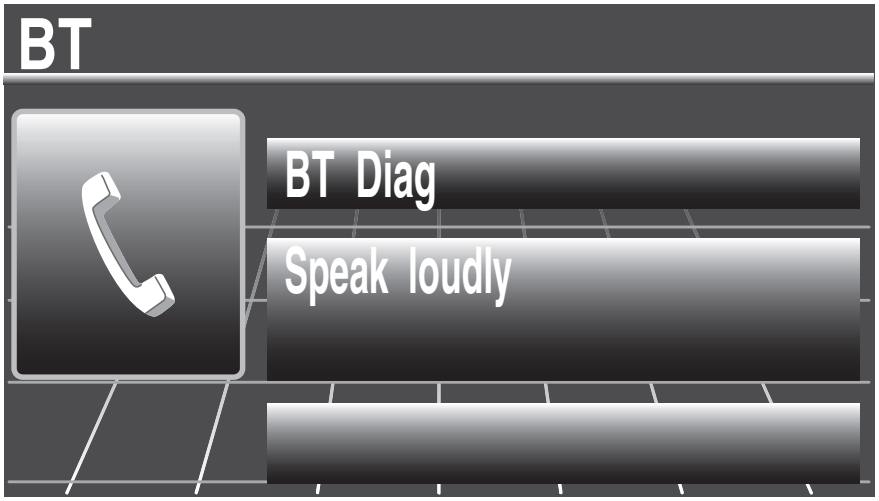

ET-00679

4) When the inspection mode of the microphone connection is completed, the inspection result is displayed.
MIC: good: normal
MIC: CHECK: There is something wrong with the connection status of the microphone. Check the following items.

- Connection status of the microphone
- Change the microphone or audio unit and check the microphone connection again then replace the faulty part.

C: NOTE

For procedure of each component in the audio system, refer to the respective sections.

- Audio unit: <Ref. to ET-12, Audio.>
- Power amplifier: <Ref. to ET-21, Power Amplifier.>
- Front side speaker: <Ref. to ET-14, FRONT SIDE SPEAKER, REMOVAL, Front Speaker.>
- Front door speaker: <Ref. to ET-15, FRONT DOOR SPEAKER, REMOVAL, Front Speaker.>
- Rear door speaker: <Ref. to ET-17, Rear Speaker.>
- Woofer: <Ref. to ET-19, Woofer.>
- Antenna: <Ref. to ET-22, Antenna.>
- Steering satellite switch: <Ref. to ET-32, Steering Satellite Switch.>
- Noise suppressor: <Ref. to ET-30, Noise Suppressor.>
- XM satellite radio antenna: <Ref. to ET-23, XM SATELLITE RADIO ANTENNA, REMOVAL, Antenna.>

GETtheMANUALS.org

3. Navigation System

A: WIRING DIAGRAM

Refer to “Navigation System” in the wiring diagram. <Ref. to WI-185, WIRING DIAGRAM, Navigation System.>

B: INSPECTION

NOTE:
If no problems are found in “CHECK NAVIGATION OPERATION”, “CHECK EACH CONNECTION” and “CHECK EACH VEHICLE SIGNAL” as described below, check the navigation system circuit. <Ref. to WI-185, WIRING DIAGRAM, Navigation System.>

1. CHECK NAVIGATION OPERATION

Start the engine and check that the opening screen is displayed.
Standard: Opening screen is displayed.
OK: Normal.
NG: If the screen is not displayed, check the following items.
- The map disk (DVD-ROM) is set in the navigation system unit
- Check the connection of the power supply connector at the backside of the navigation unit. If wire connection is correct or has got repaired, check again that the opening screen is displayed.

If it is not displayed at this time, it indicates the navigation unit trouble.

2. CHECK EACH CONNECTION

1) Press the «Audio» key to display the AUDIO OFF screen.
2) Touch the screen in the order of (1) to (6) shown in the figure.

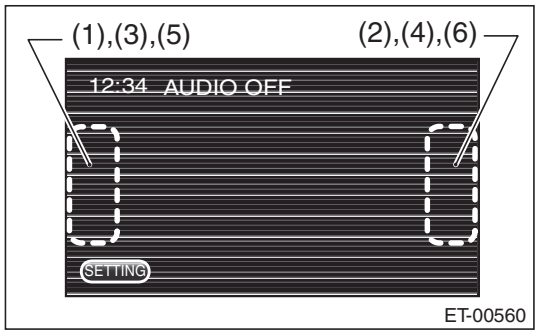

3) The display will switch to the Dealer Diag Menu screen.

GETtheMANUALS.org

- **CHECK MICROPHONE, AUX AND REARVIEW CAMERA**

NOTE:
Before starting inspections, check the safety around the rear end of the vehicle and then turn the ignition switch to ON.
1) Touch {Connection Info.} on the «Dealer Diag Menu» screen.
2) Check that “Connect” is displayed in all the MIC, AUX and Camera items.

NOTE:
{AUX} item is not displayed, if the suitable mini jack is not inserted in the AUX terminal in the console box.
Connect: Normal.
NC: Abnormal. Check the signal line connection. If there are no problems, the unit could be faulty.

- **CHECK GPS ANTENNA**

NOTE:
When checking the GPS antenna, perform the check operation outdoors to improve the receiver sensitivity.
1) Touch {Vehicle Signal Info.} on the «Dealer Diag Menu» screen.
2) Check that “Connect” is displayed in the GPS Antenna item.
Connect: Normal.
NC: Abnormal. Check the GPS antenna connection.

- **CHECK UART COMMUNICATION**

NOTE:
When checking the GPS antenna, perform the check operation outdoors to improve the receiver sensitivity.
1) Touch {Vehicle Signal Info.} on the «Dealer Diag Menu» screen.
2) Check that “ON” is displayed in the UART signal item.
OK: Normal.
NG: Abnormal. Check the signal line connection. If there are no problems, the unit could be faulty.

NOTE:
If the UART signal line connector is not connected, the marker line is not displayed when the rearview camera image is displayed.

3. CHECK EACH VEHICLE SIGNAL

1) Press «Audio» key to display the Audio OFF screen.
2) Touch the screen in the order of (1) to (6) shown in the figure.

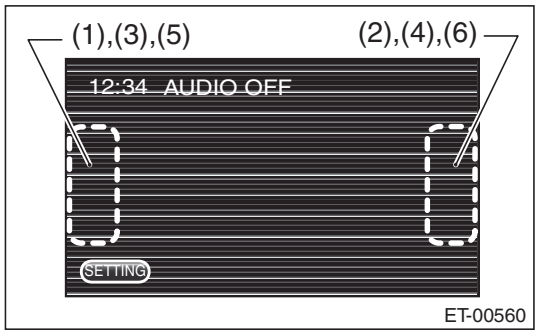

3) The display will switch to the Dealer Diag Menu screen.

GETtheMANUALS.org

- **CHECK BACK SENSOR**

1) Touch {Vehicle Signal Info.} on the «Dealer Diag Menu» screen.
2) Turn the parking brake switch to ON and depress the brake pedal, then put the gear in reverse.
3) Make sure that “ON” is displayed in the Reverse item.
ON: Normal.
OFF: Abnormal. Check the signal line connector. If there are no problems, the unit could be faulty.

- **CHECK IGNITION SWITCH.**

1) Touch {Vehicle Signal Info.} on the «Dealer Diag Menu» screen.
2) Make sure that “ON” lights in the IGN item and then the screen becomes dim.
ON: Normal.
OFF: Abnormal. Check the signal line connector. If there are no problems, the unit could be faulty.

- **CHECK SPEED SENSOR**

NOTE:
- Before starting inspections, check the safety around the vehicle.
- Lift up the vehicle as necessary.
- When the diagnostic trouble code is input in the VDCCM, perform the Clear Memory operation.

1) Touch {Vehicle Signal Info.} on the «Dealer Diag Menu» screen.
2) Move the vehicle slowly 2 to 3 meters (6.6 to 9.8 ft).
3) Check that “ON” is displayed in the Speed item.
ON: Normal.
OFF: Abnormal. Check the signal line connector. If there are no problems, the unit could be faulty.

- **CHECK PARKING BRAKE**

Touch {Vehicle Signal Info.} on the «Dealer Diag Menu» screen.

NOTE:
Because the navigation unit does not read the parking brake signal, OFF is displayed constantly.

4. CHECK DVD-ROM

Insert a DVD-ROM (region code 1) into the navigation unit and play it, and the screen switches to the image from DVD.

NOTE:
Region code 1 is the code for DVD-ROM designated for United States of America and Territories of the United States, Canada, Bermuda islands. DVD-ROMs of different region code cannot be played.
Standard: DVD images are displayed.
OK: Normal.
NG: If DVD images are not displayed, check the following points. If no problems are found, the navigation unit is faulty.
- Is a DVD-ROM set in the navigation unit?
- Is the DVD-ROM set in the unit properly?
- Is a correct type of DVD (DVD-VIDEO only) used?
- Is the playing side dirty or damaged?

NOTE:
- DVD images cannot be displayed while driving or the parking brake is not applied.
- The rear entertainment system cannot play MP3 files and DVD-Audio.

GETtheMANUALS.org

5. MESSAGE LIST

Message	Cause	Action
CHECK DISC	A nonconforming or unsupported disk or a disk with no data recorded is used, or the disk cannot be read due to damage, dirt, etc.	1. Is the playing side of the disk dirty or damaged? Check whether the disk conforming to the standard is used or the disk is set properly in the unit. 2. Check whether the disk is a playable data format.
REGION CODE ERROR	DVD region code mismatch.	Use a DVD with region code 1 displayed. (United States of America and Territories of the United States, Canada, Bermuda islands = Region code 1)
PARENTAL ERROR	Cannot play due to parental level setting.	Change the parental level set in the navigation unit.
PUSH EJECT	An error (including a high temperature error) occurred in the disk playback mechanism in the navigation unit while playing a CD (CDDA, MP3 or WMA).	1. Eject the CD and then insert again. 2. Turn the ignition switch to OFF and leave the device until the temperature lowers enough. If the message still appears after the step 1. above is performed, the unit could be faulty. 3. Turn the ignition switch to ACC/ON again and start DVD. 4. If the message still appears after the above-mentioned step is performed, the unit could be faulty.
PUSH EJECT	An error occurred in the disk playback mechanism in the navigation unit while playing a DVD.	1. Eject the DVD and then insert again. 2. Turn the ignition switch to OFF and leave the device until the temperature lowers enough. If the message still appears after the step 1. above is performed, the unit could be faulty. 3. Turn the ignition switch to ACC/ON again and start DVD. 4. If the message still appears after the above-mentioned step is performed, the unit could be faulty.

C: NOTE

For procedure of each component in the navigation system, refer to the respective section.

- Navigation unit: <Ref. to ET-38, Navigation Body.>
- GPS antenna: <Ref. to ET-40, GPS Antenna.>

GETtheMANUALS.org

4. Audio

A: REMOVAL

1) Disconnect the ground cable from battery.
2) Remove the center panel assembly.

CAUTION:
Do not put your finger on the fin of the air vent grille. Doing so may damage the fin.

(1) Attach the protective tape (a) to the meter visor.

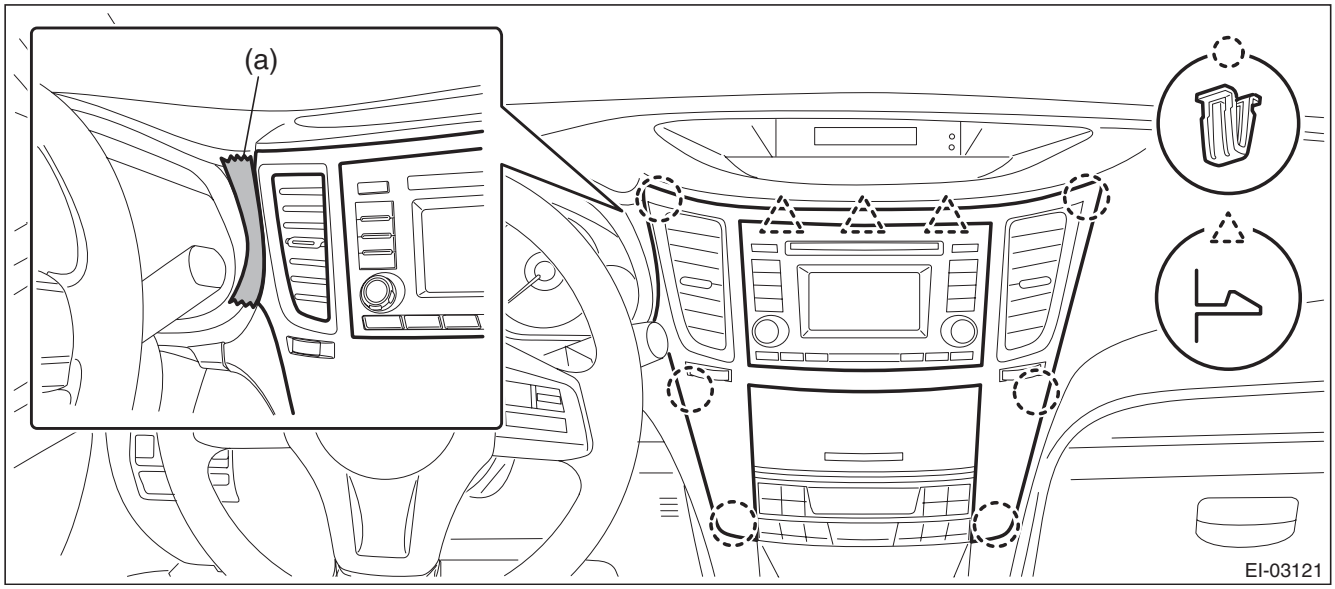

(2) Insert a finger into the air vent grille and release the left and right clips at the top of the center panel. (A), (B)
(3) Insert a finger into the air vent grille and release the left and right clips at the center of the center panel. (C), (D)

GETtheMANUALS.org

(4) Release the clips at the bottom of the center panel and remove the center panel assembly.

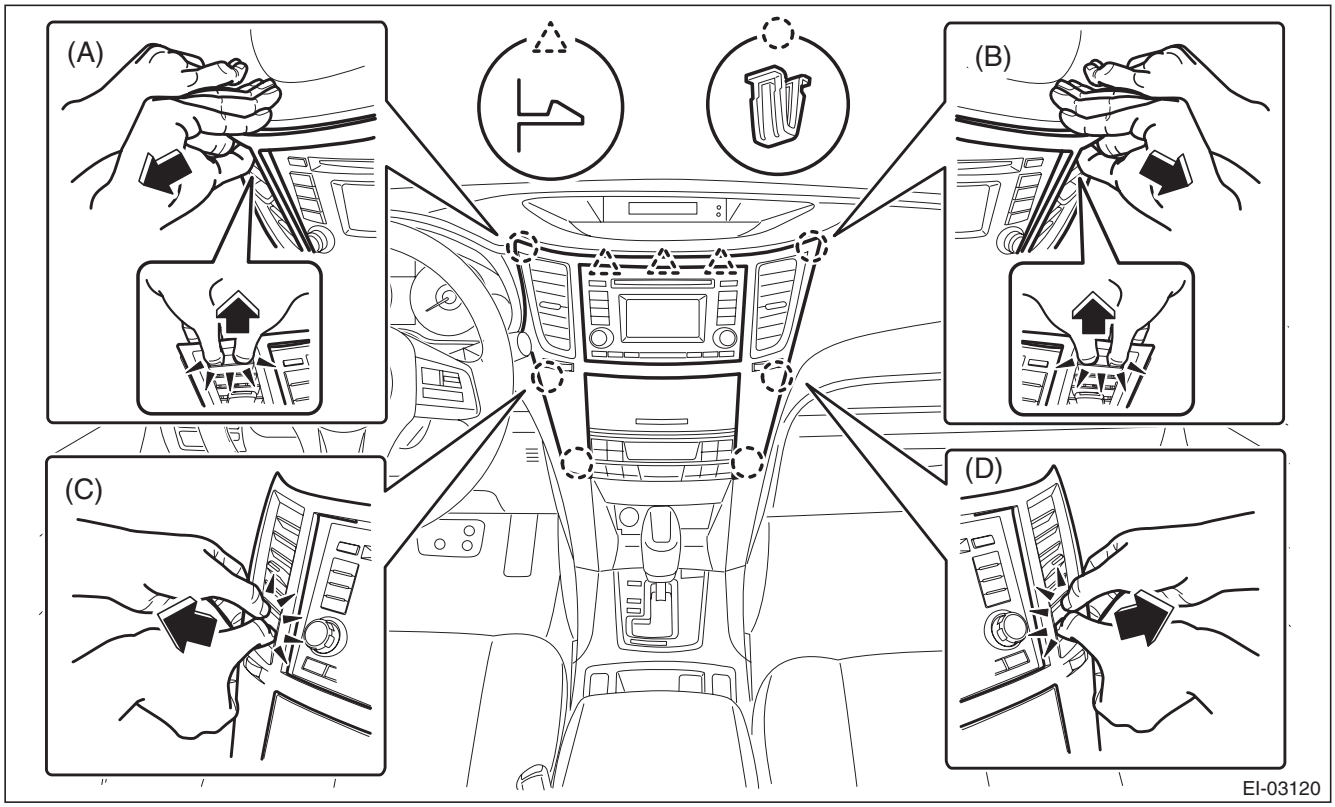

3) Remove the audio assembly.
(1) Remove the left and right screws, and partially pull the audio out from center console.
(2) Disconnect the connectors, and remove the audio assembly.

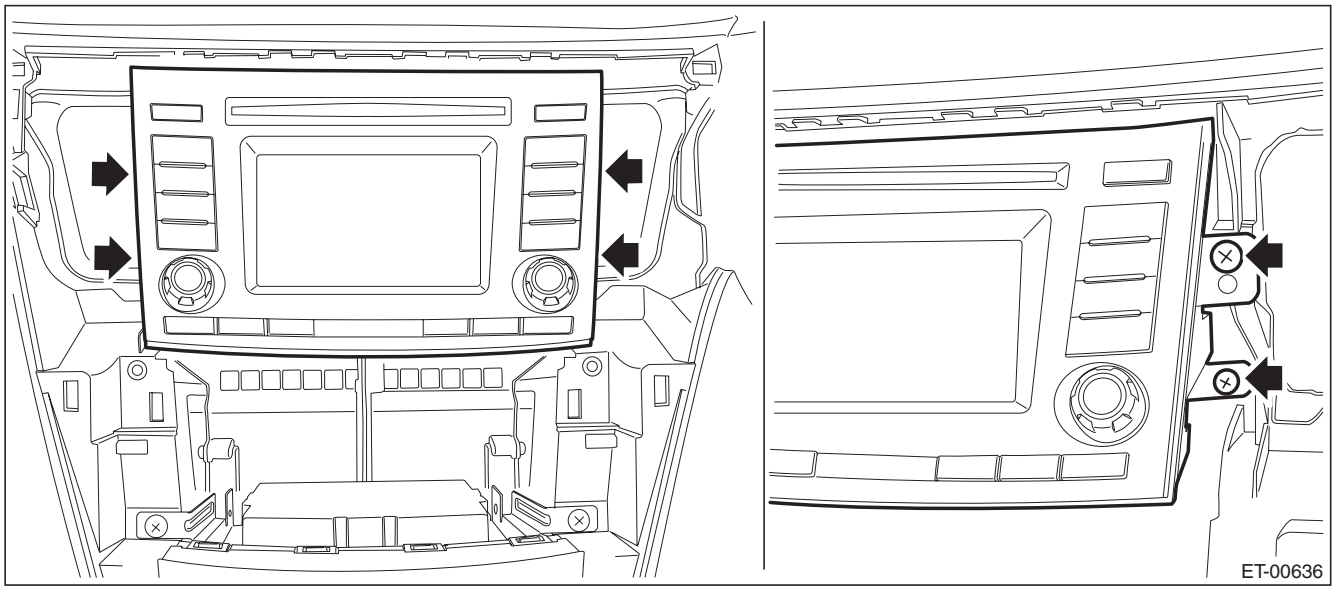

B: INSTALLATION

Install each part in the reverse order of removal.

GETtheMANUALS.org

5. Front Speaker

A: REMOVAL

1. FRONT SIDE SPEAKER

1) Disconnect the ground cable from battery.
2) Remove the front side speaker.
   (1) Release the clips and claws, then detach the speaker cover.

CAUTION:
Use a plastic clip remover for removal.

   (2) Remove the screws.

Preparation tool: Stubby screwdriver

   (3) Disconnect the connector and remove the front side speaker assembly.

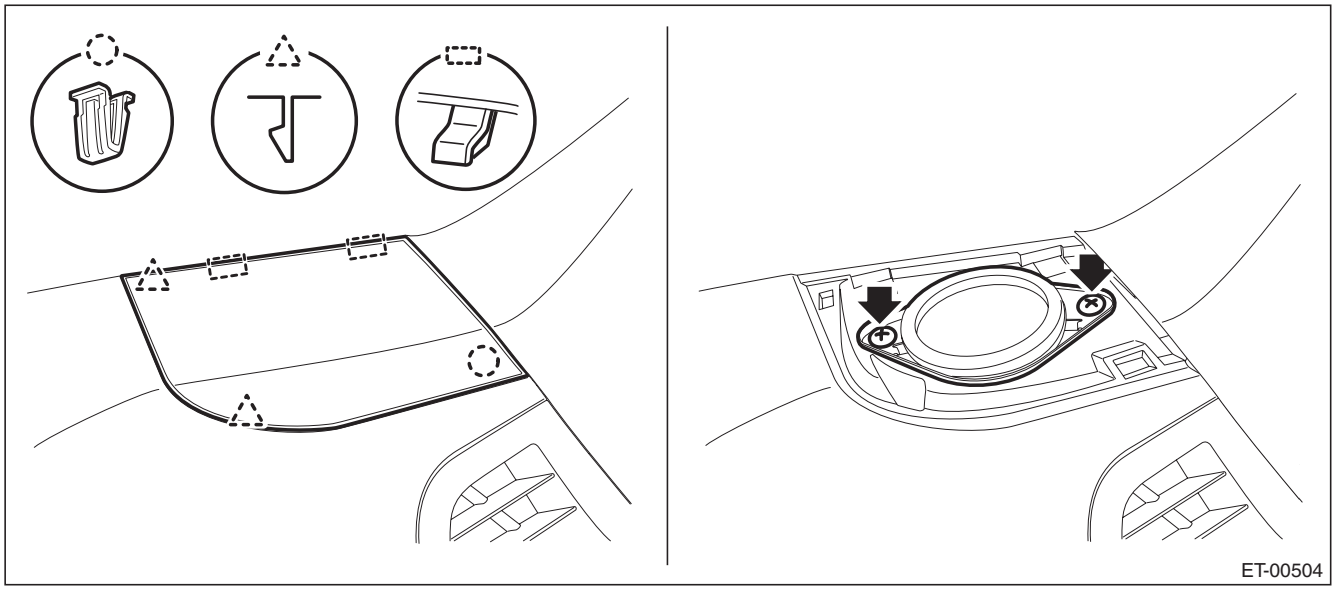

NOTE:
On the passenger's side, also disconnect the sunload sensor connector.

GETtheMANUALS.org

2. FRONT DOOR SPEAKER

1) Disconnect the ground cable from battery.
2) Remove the gusset cover.
   (1) Attach the protective tape (a) to the door trim.
   (2) Release the clips and claws, then detach the gusset cover.

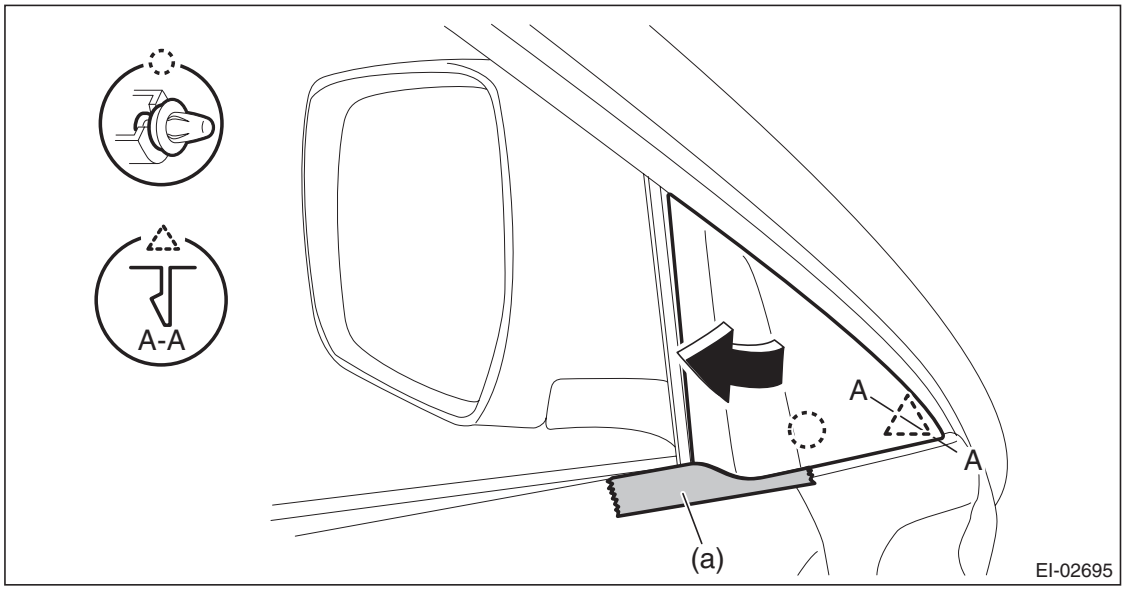

3) Remove the door trim assembly.
   (1) Open the cover and remove the screw.
   (2) Remove the clips in the order of (A) to (J) and remove the door trim assembly from the door panel.

CAUTION:
When removing the door trim, be sure to remove the clips in the correct order. Forcibly removing clips may damage the door panel assembly.

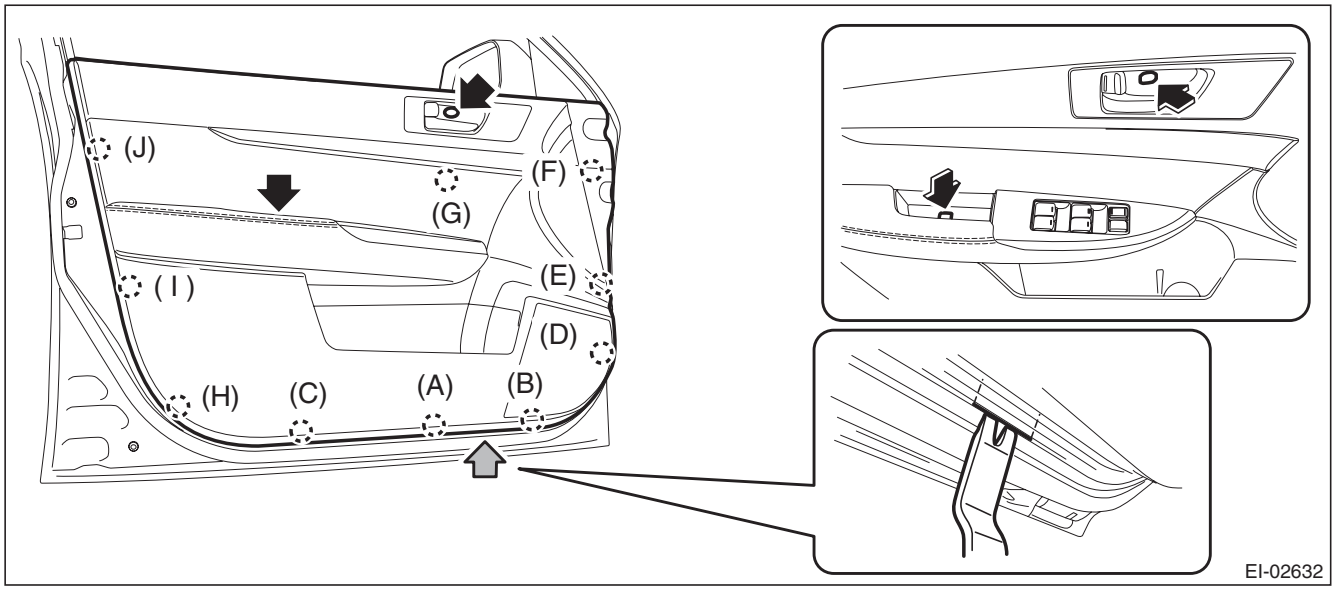

NOTE:
Insert a plastic clip remover into the slit at the bottom of the door trim, to lift the door trim.

GETtheMANUALS.org

(3) Remove the cables (a) and (b) from the cable holder of inner remote.

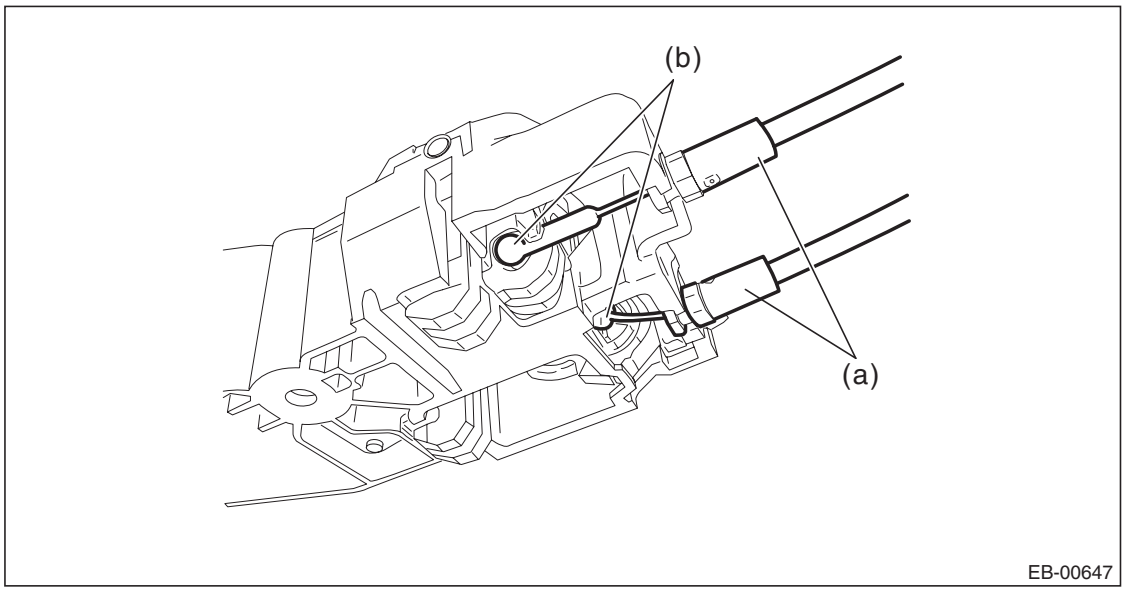

(4) Disconnect the harness connector and remove the door trim assembly.

4) Remove the front door speaker assembly.

(1) Remove the screws.

(2) Disconnect the harness connector and remove the front door speaker assembly.

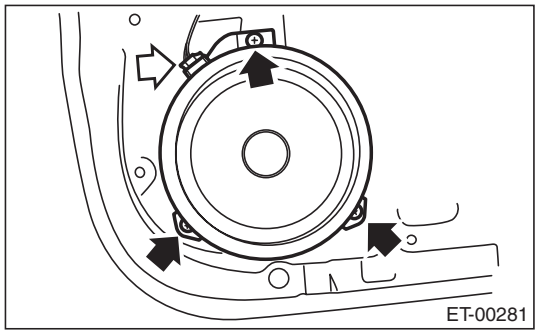

B: INSTALLATION

Install each part in the reverse order of removal.

GETtheMANUALS.org

6. Rear Speaker

A: REMOVAL

1) Disconnect the ground cable from battery.
2) Remove the door trim assembly.
   (1) Open the cover and remove the screw.
   (2) Remove the clips in the order of (A) to (H) and remove the door trim assembly from the door panel.

CAUTION:
When removing the door trim, be sure to remove the clips in the correct order. Forcibly removing clips may damage the door panel assembly.

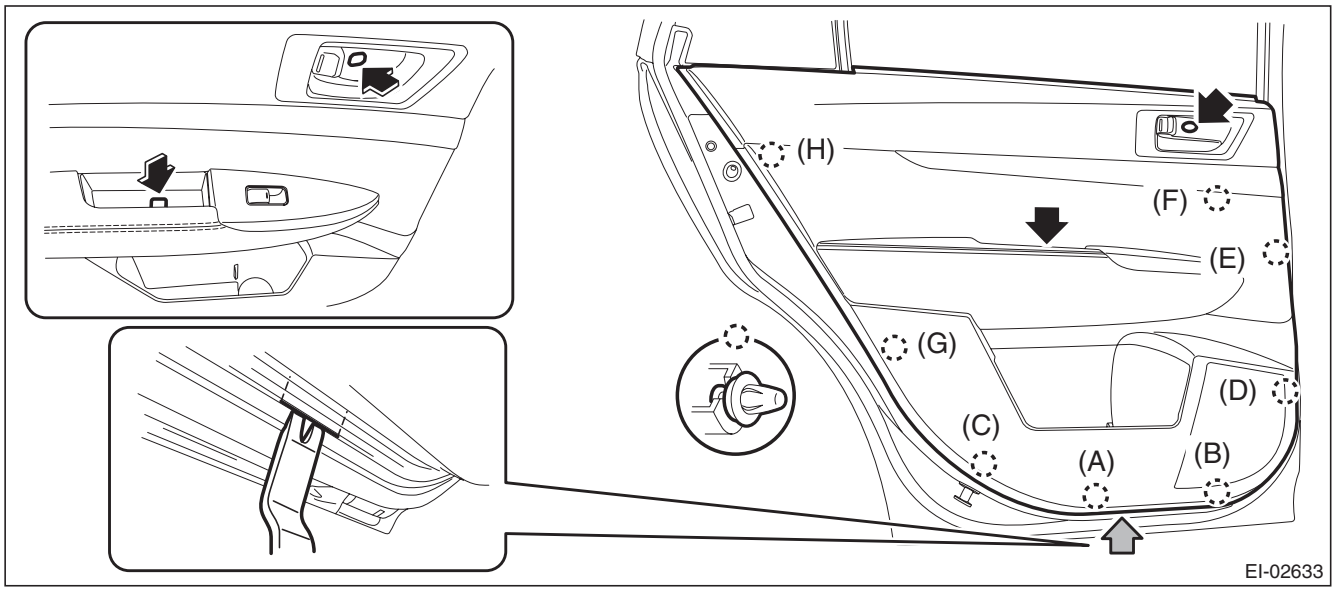

NOTE:
Insert a plastic clip remover into the slit at the bottom edge of the door trim and lift the door trim.
   (3) Remove the cables (a) and (b) from the cable holder of inner remote.

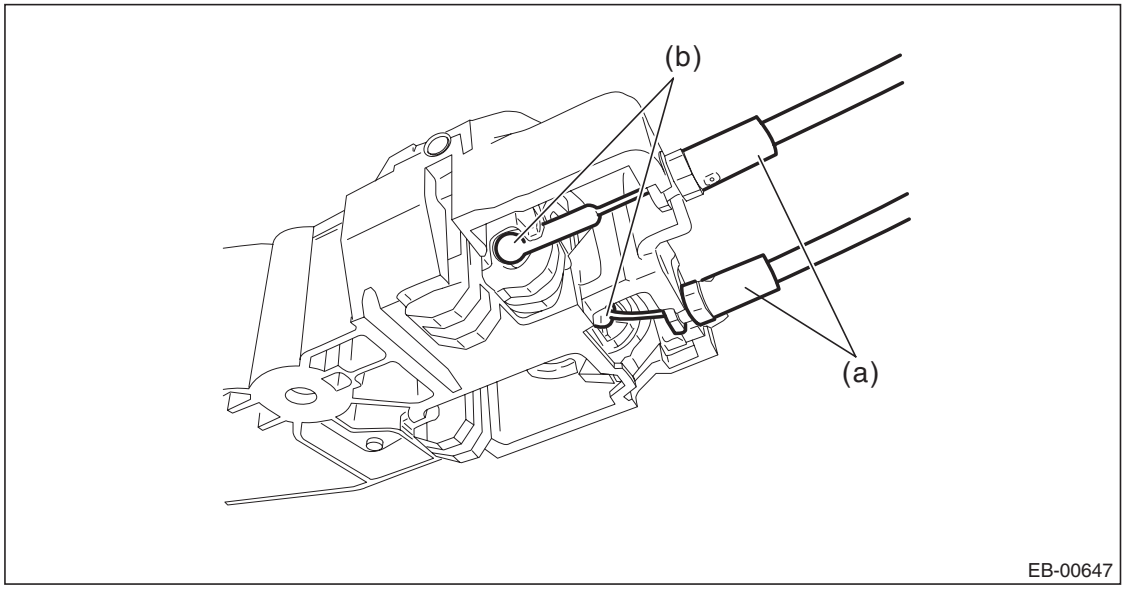

   (4) Disconnect the harness connector and remove the door trim.

GETtheMANUALS.org

3) Remove the rear speaker assembly.
   (1) Remove the screws.
   (2) Disconnect the harness connector and remove the rear speaker assembly.

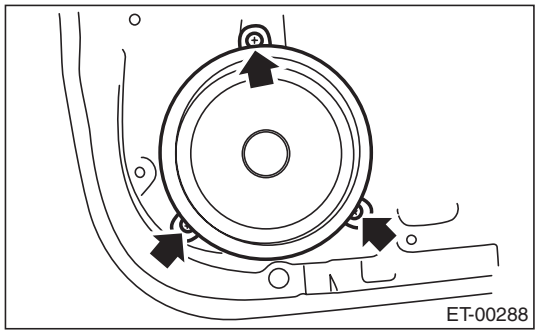

B: INSTALLATION

Install each part in the reverse order of removal.

GETtheMANUALS.org

7. Woofer

A: REMOVAL

1. SEDAN MODEL

NOTE:
harman/kardon® audio system only.
1) Disconnect the ground cable from battery.
2) Remove the rear shelf trim. <Ref. to EI-120, REMOVAL, Rear Shelf Trim.>
3) Remove the woofer.
   (1) Remove the screws.
   (2) Disconnect the harness connector and remove the woofer assembly.

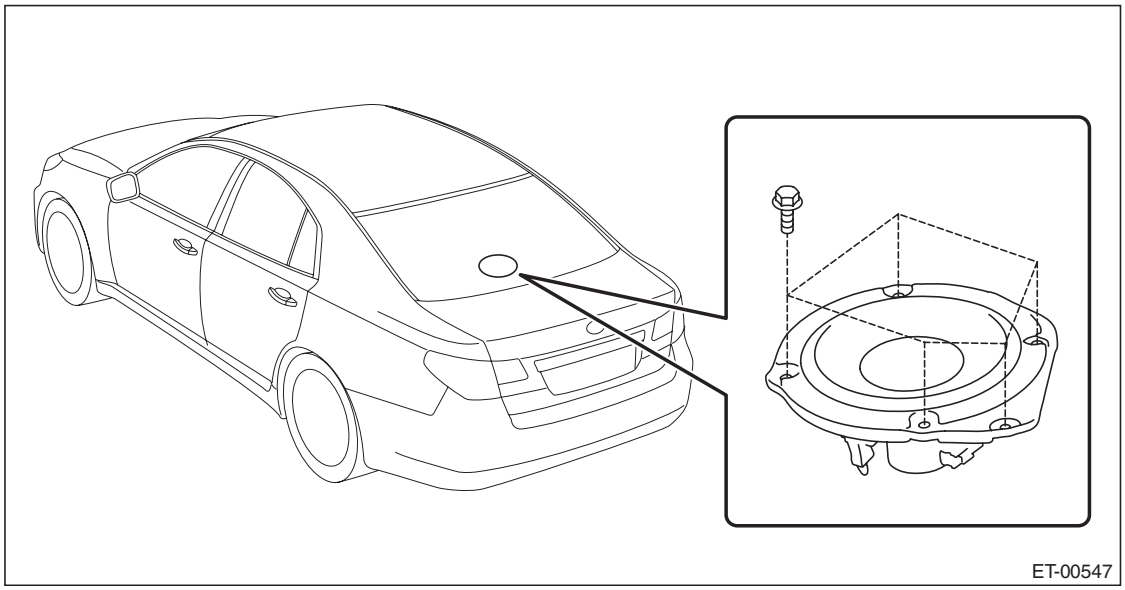

GETtheMANUALS.org

2. OUTBACK MODEL

NOTE:
harman/kardon® audio system only.
1) Disconnect the ground cable from battery.
2) Remove the rear quarter trim LWR. <Ref. to EI-114, OUTBACK MODEL, REMOVAL, Rear Quarter Trim.>
3) Remove the woofer.
   (1) Remove the woofer bracket mounting clips and screws, then remove the woofer bracket.
   (2) Disconnect the harness connector and remove the woofer assembly.

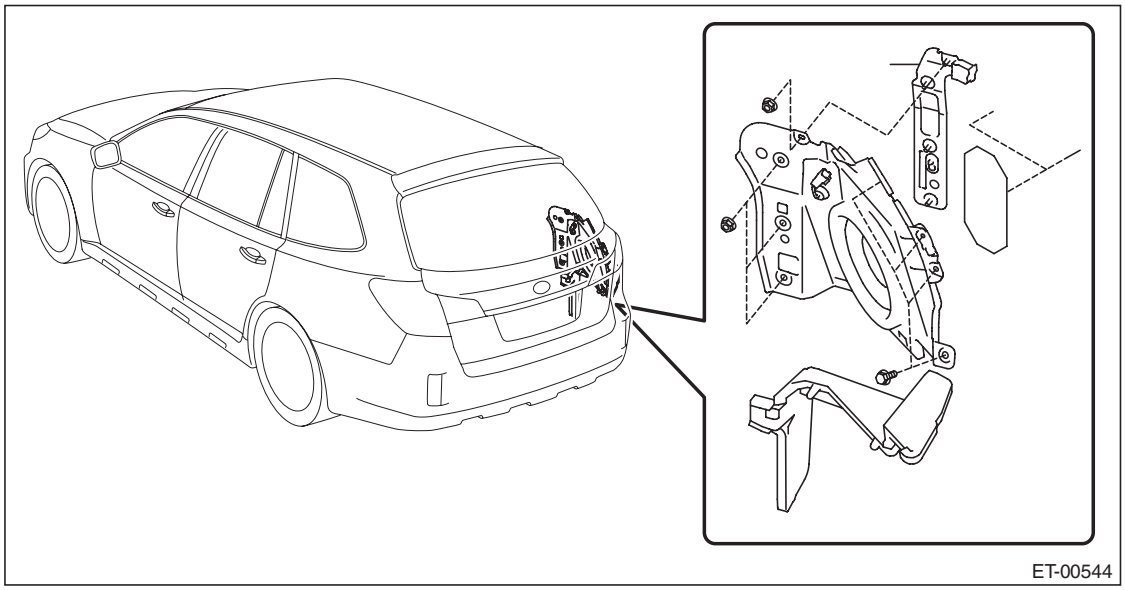

B: INSTALLATION

Install each part in the reverse order of removal.

Tightening torque:
7.5 N·m (0.76 kgf-m, 5.5 ft-lb)

GETtheMANUALS.org

8. Power Amplifier

A: REMOVAL

NOTE:
harman/kardon® audio system only.
1) Disconnect the ground cable from battery.

NOTE:
For the power seat, move the seat before removing the battery ground terminal.
2) Move the passenger's seat to the front-most position.
3) Remove the power amplifier.
   (1) Disconnect the harness connector.
   (2) Remove the nut and remove the power amplifier.

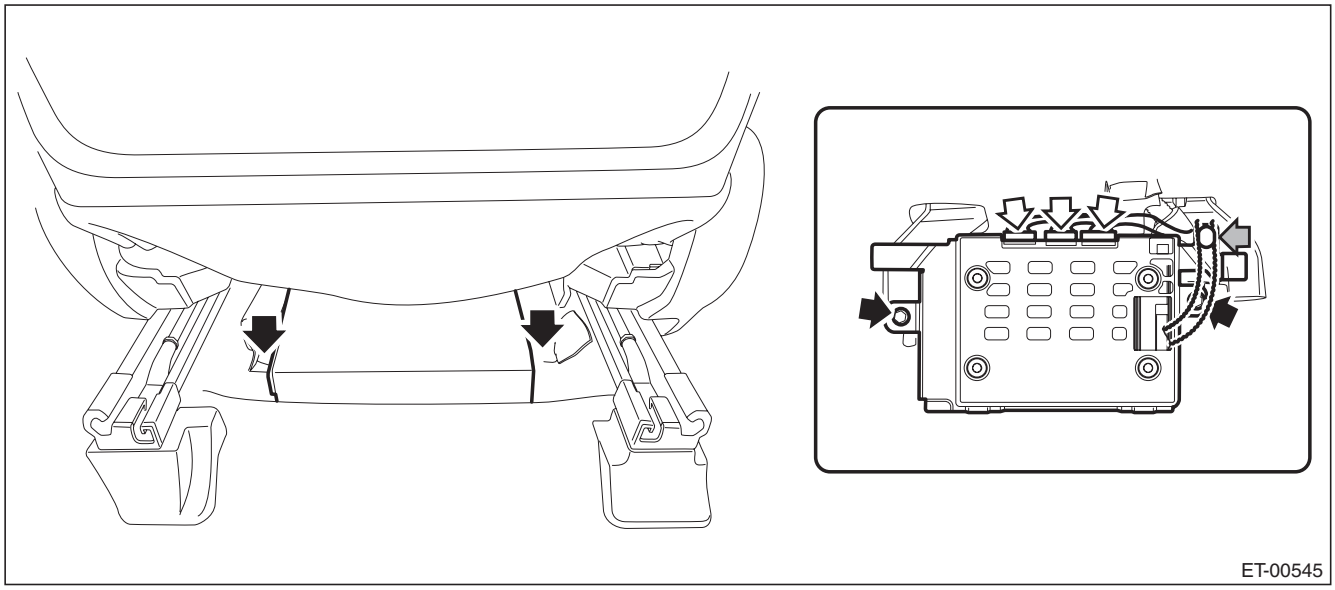

B: INSTALLATION

Install each part in the reverse order of removal.

Tightening torque:
4.5 N·m (0.46 kgf-m, 3.32 ft-lb)

GETtheMANUALS.org

9. Antenna

A: REMOVAL

1. RADIO ANTENNA AMPLIFIER

• Sedan model

1) Remove the rear quarter trim LH. <Ref. to EI-110, SEDAN MODEL, REMOVAL, Rear Quarter Trim.>
2) Remove the radio antenna amplifier assembly.
   (1) Disconnect the connector.
   (2) Remove the bolts, and then remove the radio antenna amplifier assembly.

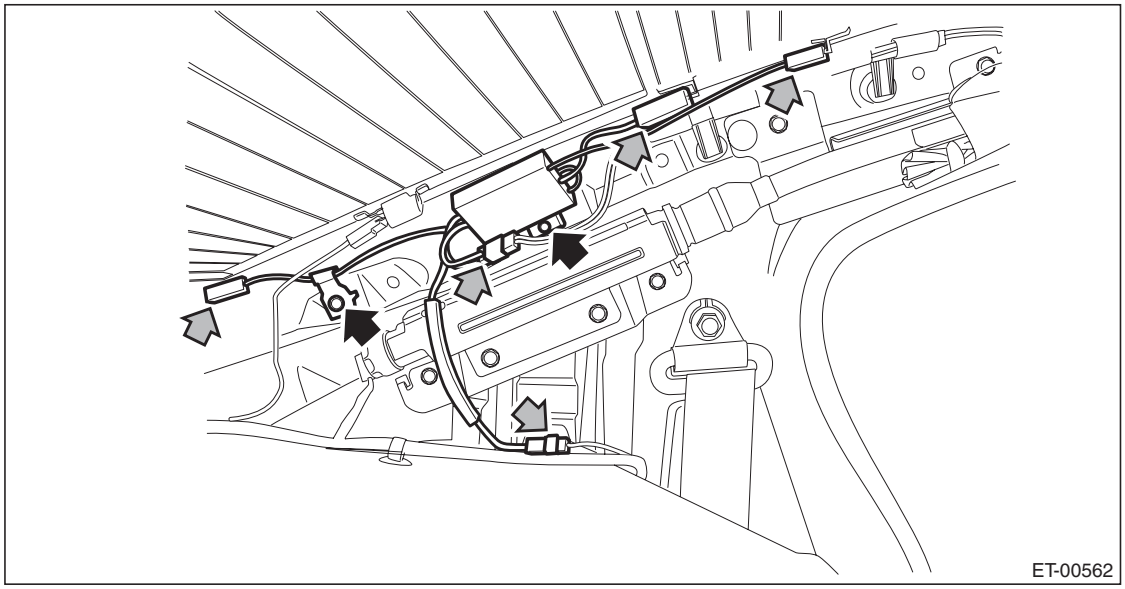

• OUTBACK model

1) Remove the rear gate upper trim.
   (1) Remove the claws on the trim edge.
   (2) Disconnect the claws in the center of trim, and remove the rear gate upper trim.

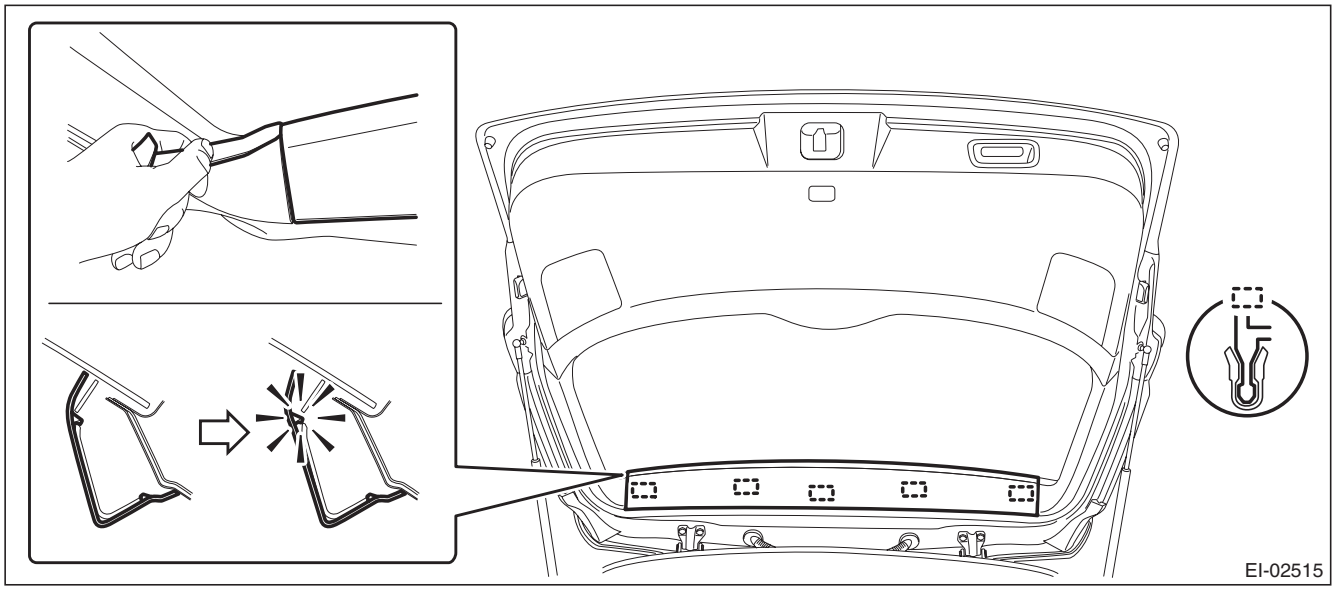

GETtheMANUALS.org

2) Remove the radio antenna amplifier assembly.
   (1) Disconnect the connector.
   (2) Remove the bolts, and then remove the radio antenna amplifier assembly.

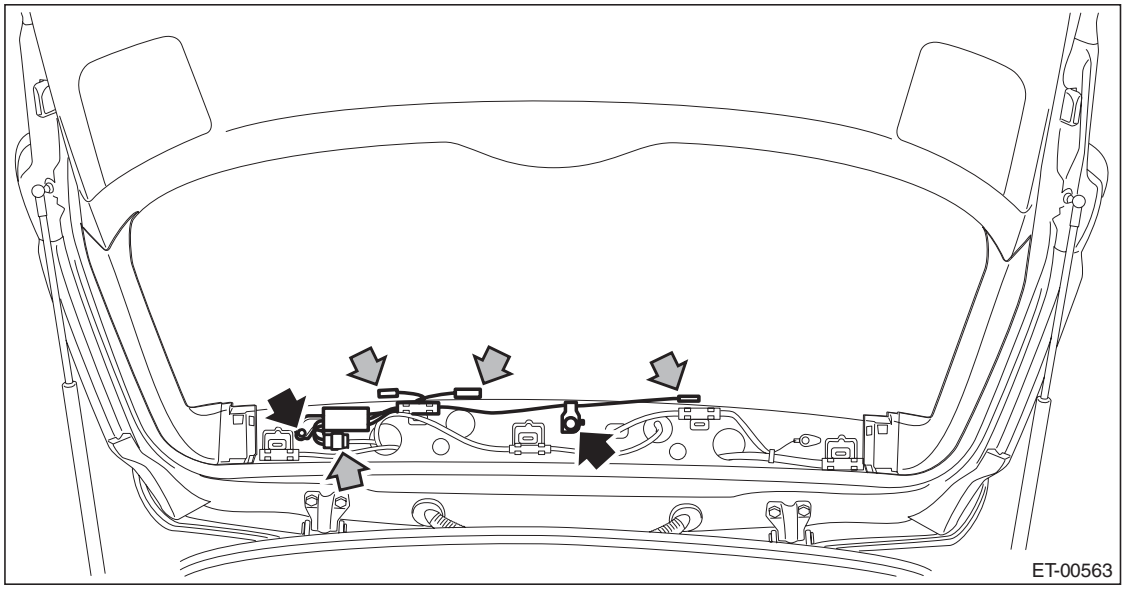

2. XM SATELLITE RADIO ANTENNA

1) Remove the roof trim. <Ref. to EI-131, REMOVAL, Roof Trim.>
2) Disconnect the harness connector and terminal, and remove the mounting nut (A).

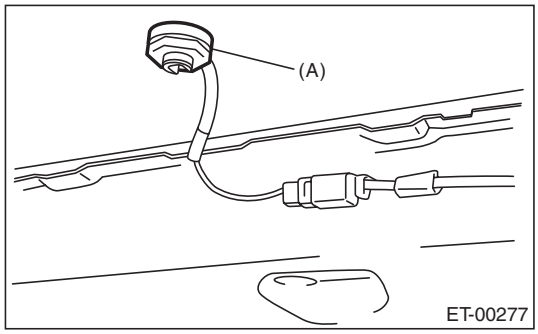

3) Pull out the antenna from the roof top.

B: INSTALLATION

Install each part in the reverse order of removal.

Tightening torque:
Radio antenna amplifier: 12 N·m (1.22 kgf-m, 8.9 ft-lb)
XM satellite radio antenna: 4.5 N·m (0.46 kgf-m, 3.3 ft-lb)

GETtheMANUALS.org

C: INSPECTION

CAUTION:
When wiping dirt off of the glass to avoid heat wire damage, be careful of the following.
- **Use a dry and soft cloth.**
- **Move the cloth along the heat wire.**

Inspection method of antenna, it is different from printing pattern of antenna.

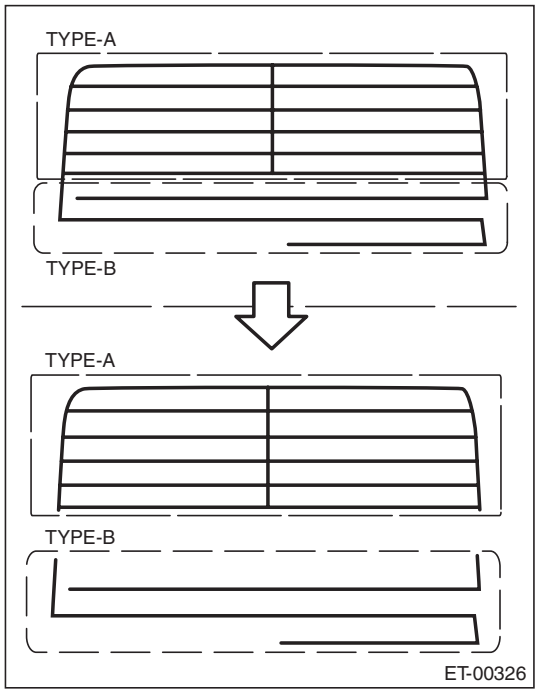

TYPE-A Printing pattern of grid
TYPE-B Printing pattern of straight

1. TYPE A

1) Disconnect the ground cable from battery.
2) Remove the trim.
Sedan model: Remove the rear quarter trim rear on both sides. <Ref. to EI-110, SEDAN MODEL, REMOVAL, Rear Quarter Trim.>
OUTBACK model: Remove the rear gate trim. <Ref. to EI-160, REMOVAL, Rear Gate Trim.>
3) Disconnect the antenna harness connector and antenna terminals.

GETtheMANUALS.org

4) Prepare the extension harness (A), (B).

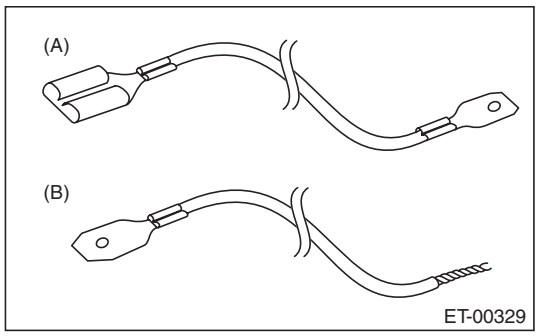

(A) Attach the flat terminals (male and female) to both ends of the harness of 2,000 mm (78.7 in) length (electrical wire unit dimensions approx. 2.0 mm^2 (0.0032 sq in)).

(B) Attach the flat terminal (female) to one side of the harness, another side to twist the harness of 2,000 mm (78.7 in) length (electrical wire unit dimensions approx. 2.0 mm^2 (0.0032 sq in)).

5) Connect the extension harness (A) to rear defogger harness (power supply side) terminal and antenna terminal.

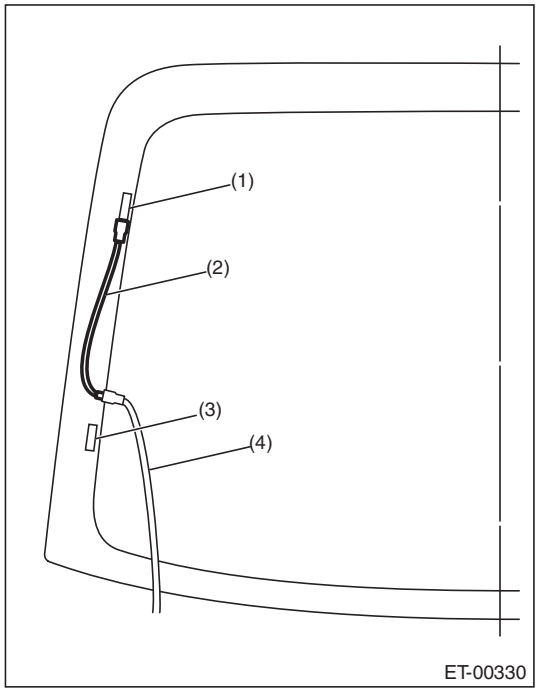

(1) Antenna terminal
(2) Extension harness (A)
(3) Rear defogger terminal
(4) Rear defogger harness (power supply side - red blue)

6) Connect the extension harness (B) to rear defogger harness (ground side) terminal.

GETtheMANUALS.org

7) Fasten the another side of extension harness (B) to end of antenna pattern of grid with tape.

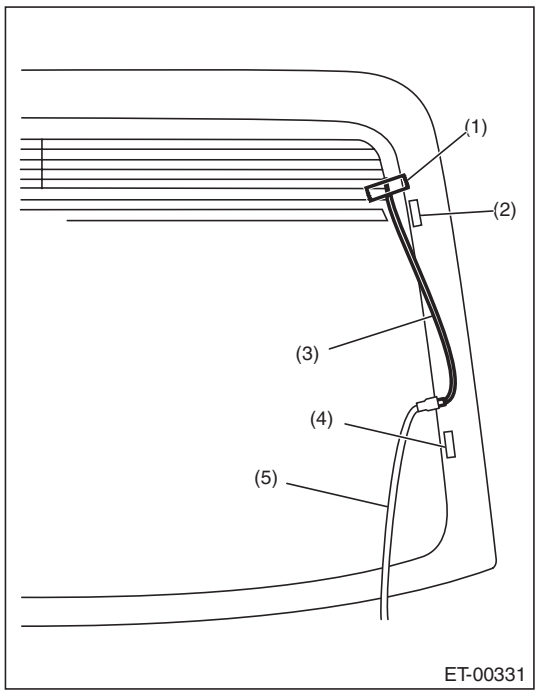

(1) Tape
(2) Antenna terminal
(3) Extension harness (B)
(4) Rear defogger terminal
(5) Rear defogger harness (ground side - black)

8) Connect the ground cable to battery.
9) Turn the ignition switch to ON.
10) Turn the rear defogger switch to ON.
11) Wrap a piece of aluminum foil around the tip of tester probe and press foil against antenna wire with your finger.

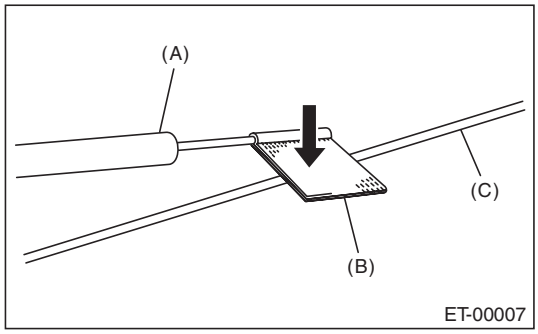

(A) Tester probe
(B) Aluminum foil
(C) Antenna wire

GETtheMANUALS.org

12) Measure the voltage around an antenna wire (a) and (b).

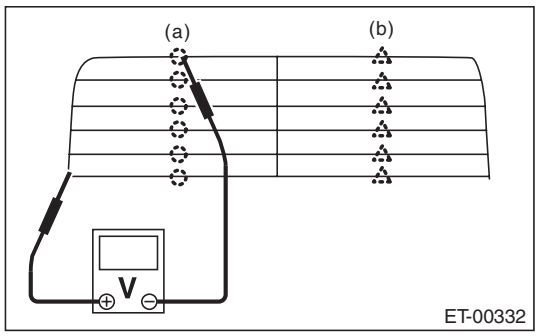

	Measured voltage value	Criteria
(a)	Approx. 3V (standard value)	Normal
	Approx. 6 V or 0 V	Open
(b)	Approx. 9V (standard value)	Normal
	Approx. 12 V or 6 V	Open

NOTE:
Measuring point (a)
- If the measured value is 6 V, heat wire is open between antenna wire center and positive (+) terminal of probe.
- If it is 0 V, the circuit is open between antenna wire center and ground.

Measuring point (b)
- If the measured value is 12 V, heat wire is open between antenna wire center and positive (+) terminal of probe.
- If it is 6 V, the circuit is open between antenna wire center and ground.

13) Fasten the voltmeter positive (+) side and negative (–) side to end of open harness positive side of step 12).
14) Search a point the voltage changes from 0 V, and move the negative (–) probe along antenna wire slowly.

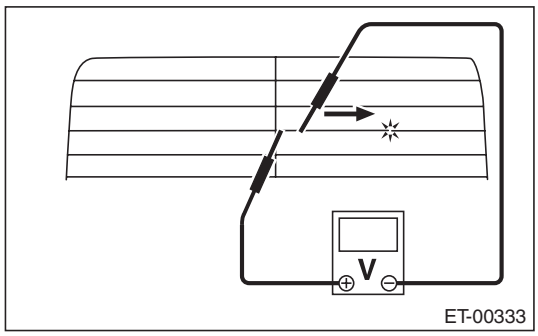

15) Repair the antenna wire if the place of the open circuit is identified. <Ref. to ET-29, REPAIR, Antenna.>

GETtheMANUALS.org

2. TYPE B

Measure the resistance between the antenna terminal and each antenna wire.

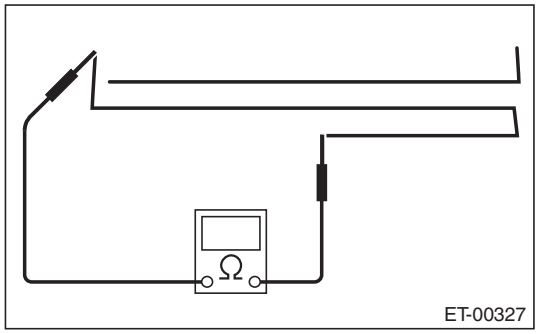

1) Disconnect the ground cable from battery.
2) Wrap a piece of aluminum foil around the tip of probe and press foil against antenna wire with your finger.

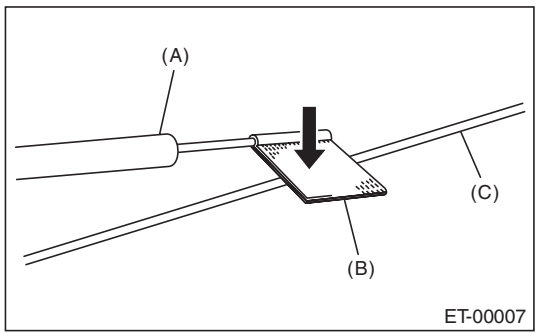

(A) Tester probe
(B) Aluminum foil
(C) Antenna wire

3) To locate the broken point, move the probe along antenna wire.

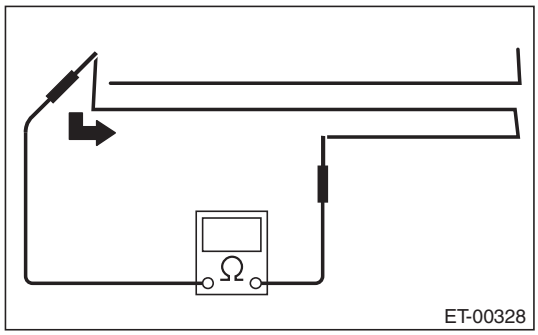

NOTE:
If an antenna wire is OK, resistance will be less than 20 Ω.
If an antenna wire is broken, resistance will be more than 1 MΩ.
4) Repair the antenna wire if the place of the open circuit is identified. <Ref. to ET-29, REPAIR, Antenna.>

GETtheMANUALS.org

D: REPAIR

1) Clean the external circumference of antenna wire and around with alcohol or white gasoline.
2) Paste a thin masking film on the glass along broken wire.
3) Apply the conductive silver composition (DUPONT No. 4817) on the broken portion with a drawing pen.

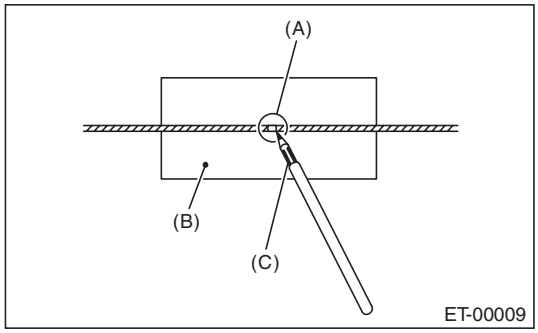

(A) Broken portion
(B) Masking film
(C) Conductive silver composition

4) Dry out the deposited portion.
5) After repair has been completed, measure the resistance in repaired wire.

GETtheMANUALS.org

10.Noise Suppressor

A: REMOVAL

1. SEDAN MODEL

1) Disconnect the ground cable from battery.
2) Remove the rear shelf trim. <Ref. to EI-120, REMOVAL, Rear Shelf Trim.>
3) Remove the noise suppressor.
   (1) Disconnect harness connector from noise suppressor.
   (2) Remove the harness clamps and bolts and detach the noise suppressor.

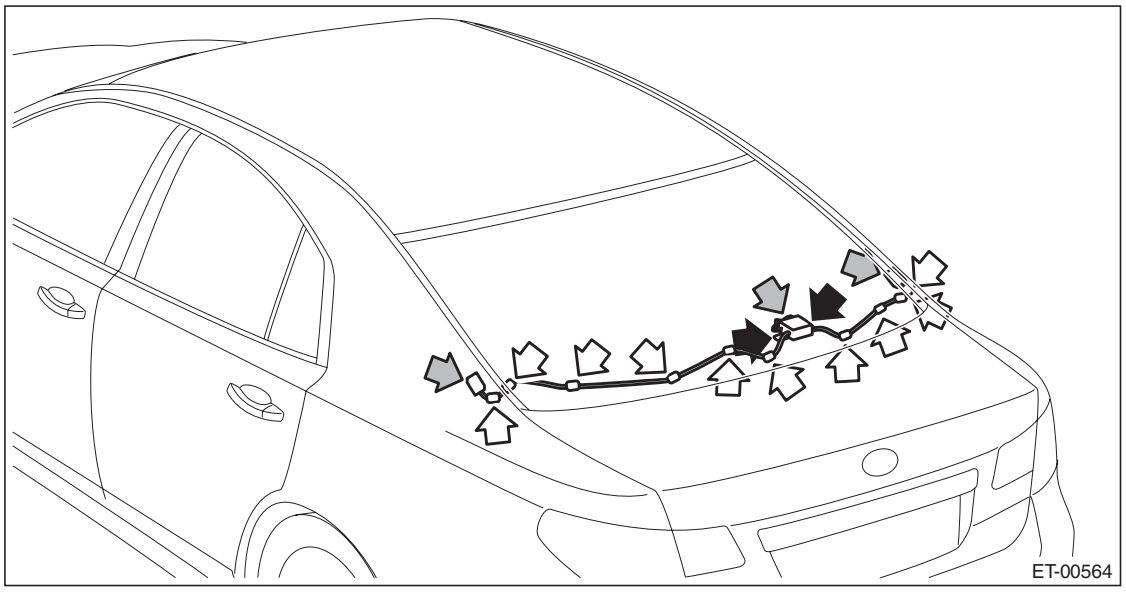

2. OUTBACK MODEL

1) Disconnect the ground cable from battery.
2) Remove the rear gate trim. <Ref. to EI-160, REMOVAL, Rear Gate Trim.>
3) Remove the noise suppressor.
   (1) Disconnect harness connector from noise suppressor.
   (2) Remove the harness clamps and bolts and detach the noise suppressor.

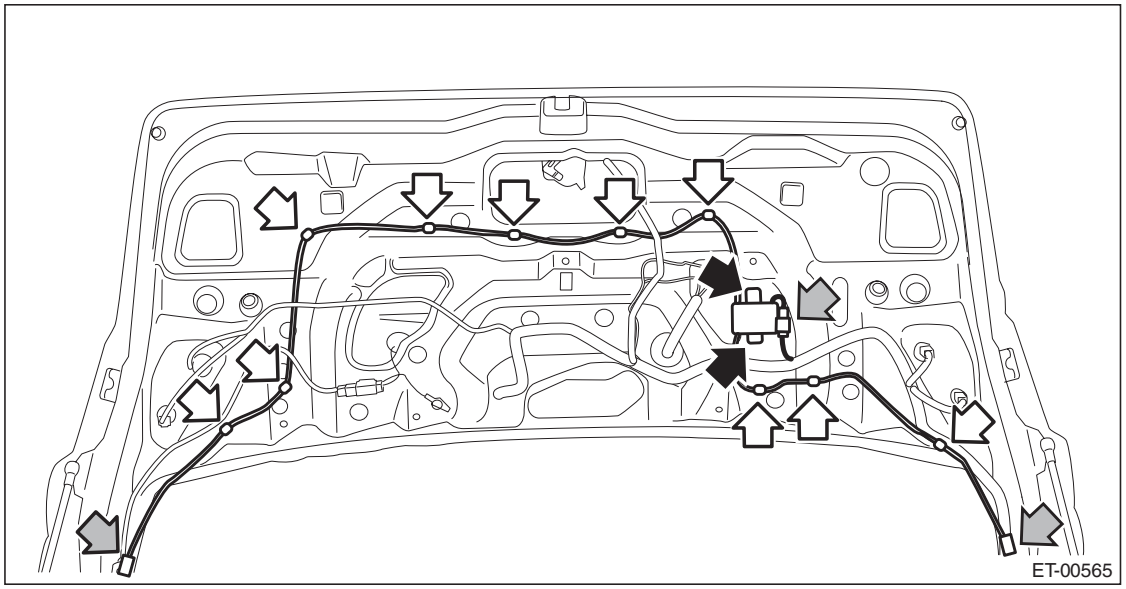

GETtheMANUALS.org

B: INSTALLATION

Install each part in the reverse order of removal.

Tightening torque:
Noise suppressor: 12 N·m (1.22 kgf-m, 8.9 ft-lb)

GETtheMANUALS.org

11.Steering Satellite Switch

A: REMOVAL

CAUTION:
Refer to “CAUTION” of “General Description” before handling the airbag module. <Ref. to AB-9, CAUTION, General Description.>

1) Position the front wheels straight ahead. (After moving a vehicle 5 m (16 ft) or more with front wheels positioned straight ahead, make sure that the vehicle moves straight ahead.)
2) Turn the ignition switch to OFF.
3) Disconnect the ground cable from battery and wait for at least 60 seconds before starting work.
4) Remove the driver’s airbag module assembly.
   (1) Using a hexagon wrench etc. wrapped by protective tape, insert the snap pins and release the locks (3 locations).

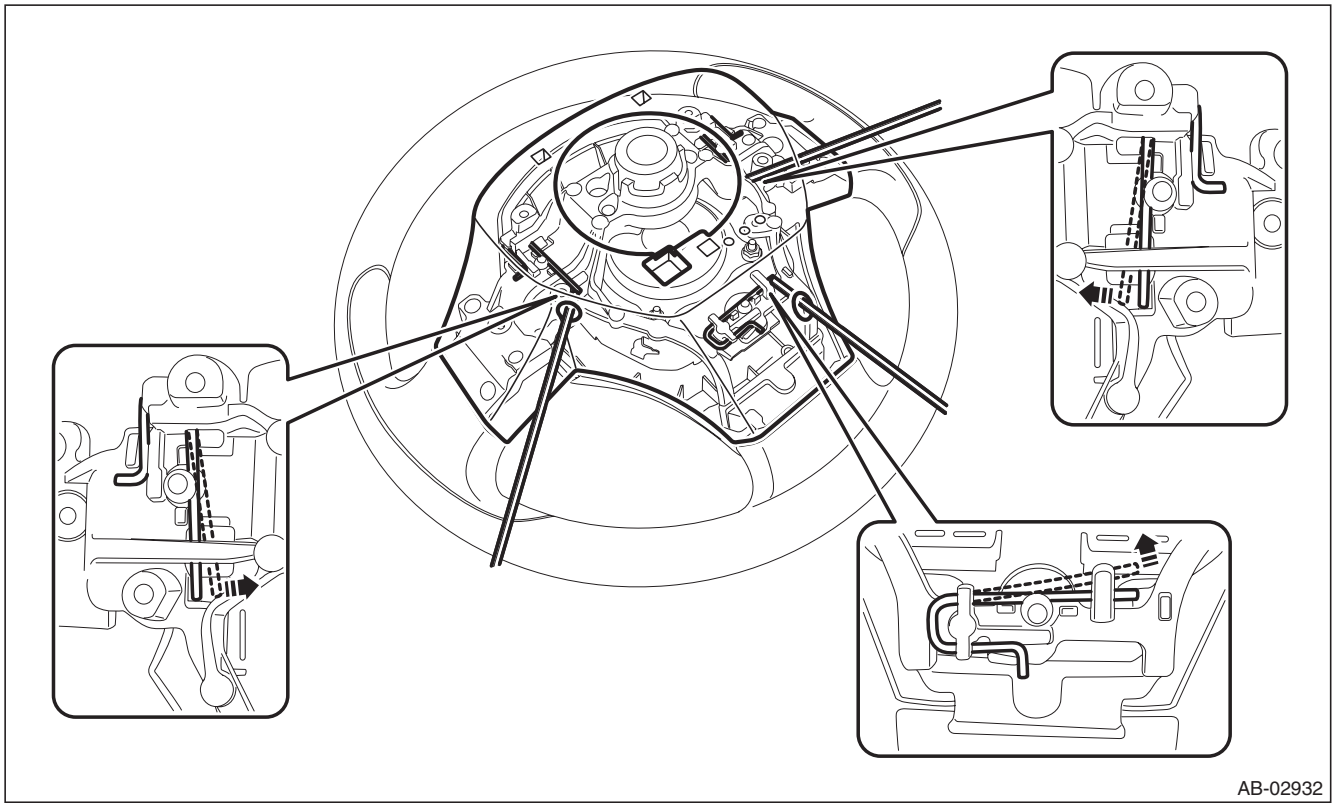

GETtheMANUALS.org

(2) Disconnect the horn harness and airbag connector and remove the airbag module assembly. <Ref. to AB-21, DRIVER'S AIRBAG MODULE, CURTAIN AIRBAG MODULE & PRETENSIONER, PROCEDURE, Airbag Connector.>

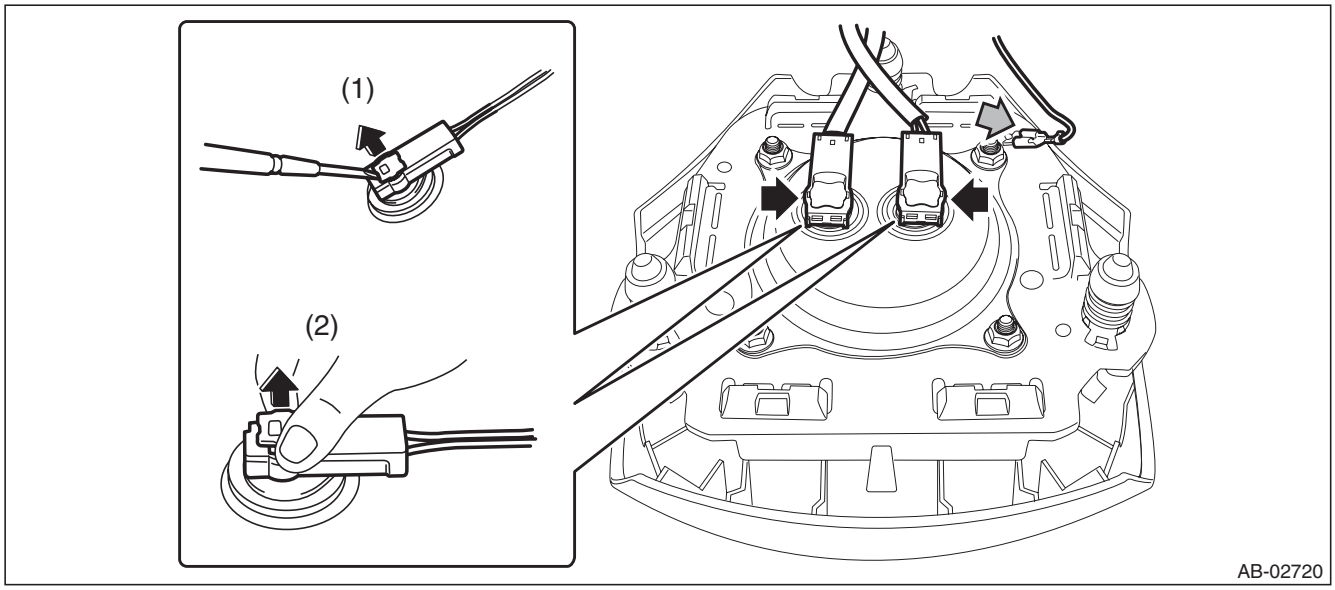

5) Remove the steering wheel.

CAUTION:

- **Always use the steering wheel puller for removal to avoid deforming the steering wheel.**
- **If the steering wheel has been removed, make sure that the roll connector is not turned from the original position.**

(1) Disconnect the connector and remove the nut.
(2) Put alignment marks and remove the steering wheel.

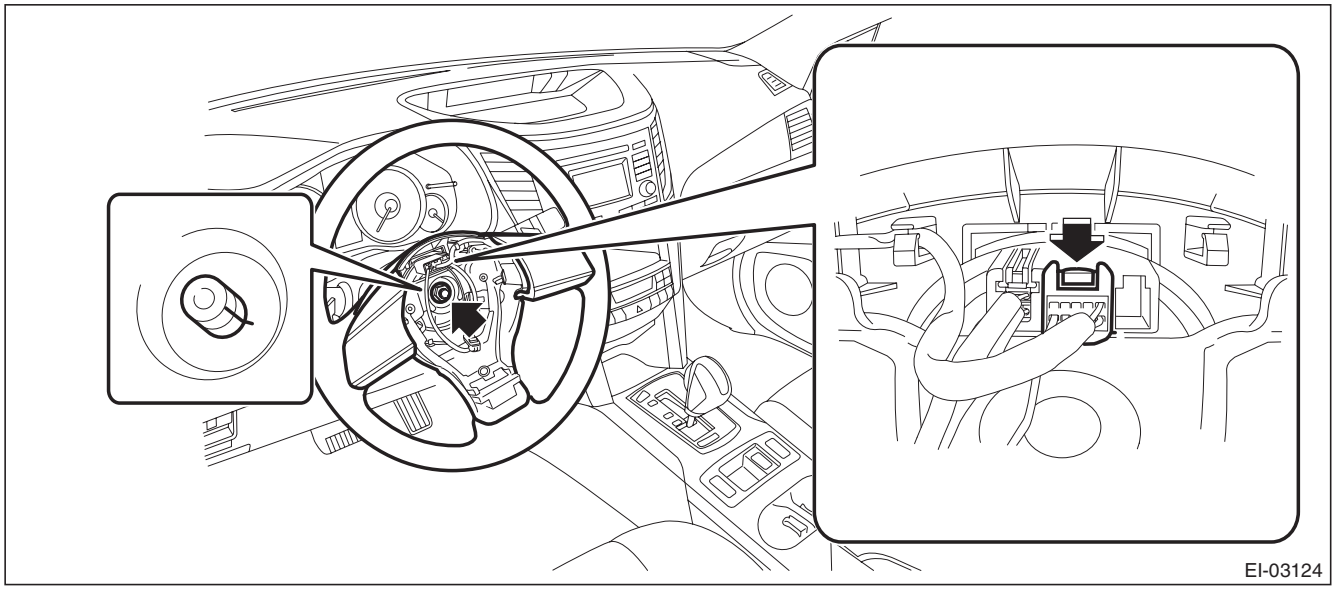

GETtheMANUALS.org

6) Remove the satellite switch.
   (1) Remove the screw, disconnect the connector and remove the paddle shift switch. (Model with paddle shift)

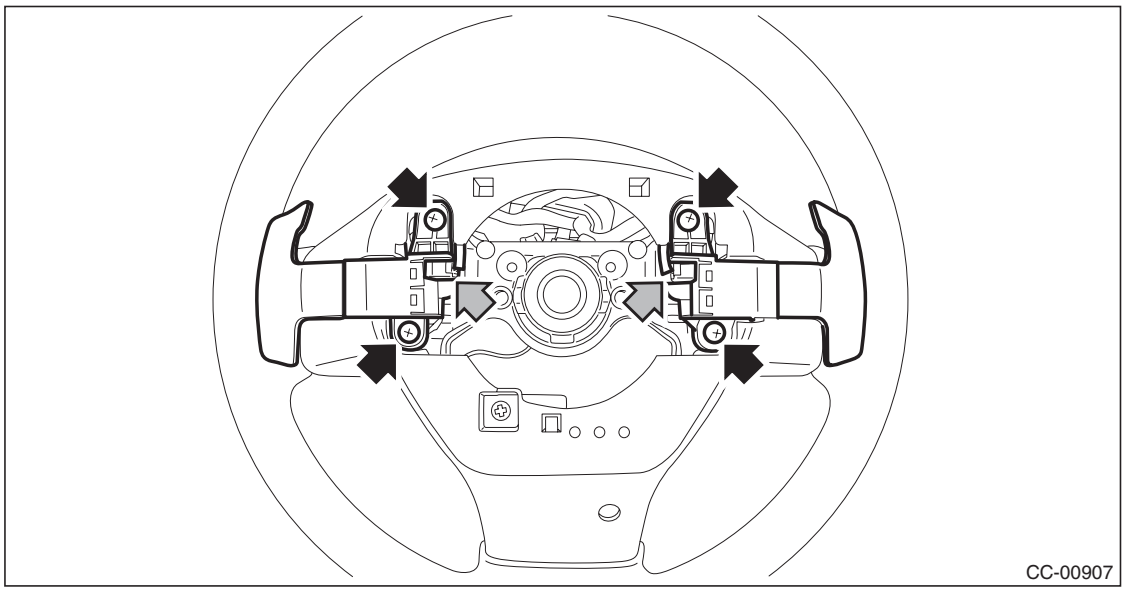

   (2) Release the claws and clips, detach the cover - steering wheel LWR.

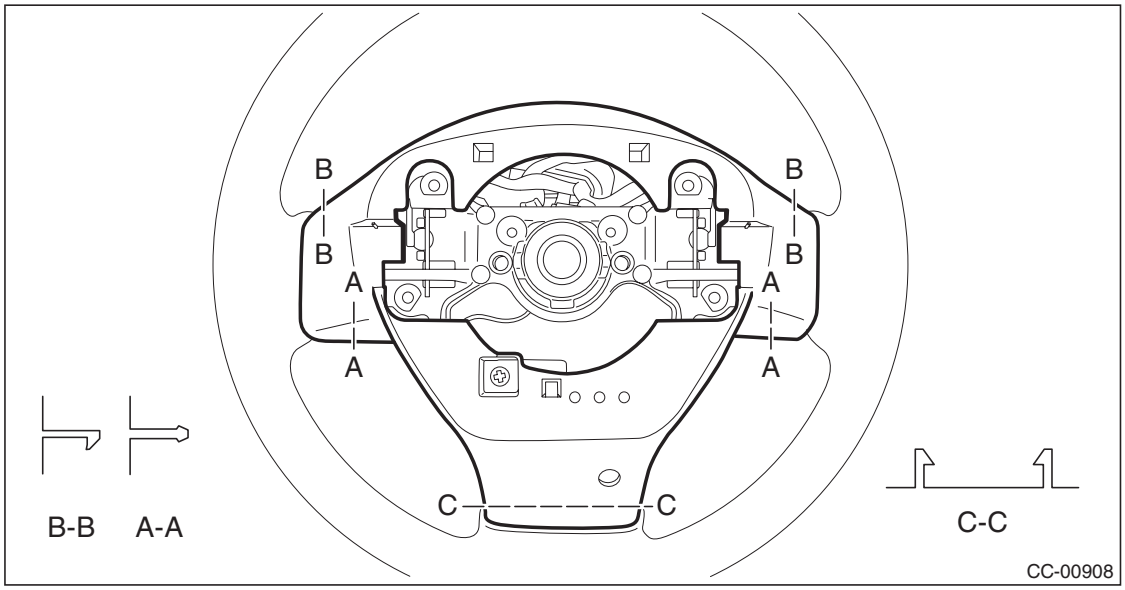

GETtheMANUALS.org

(3) Remove the screws and then remove the satellite switch assembly.

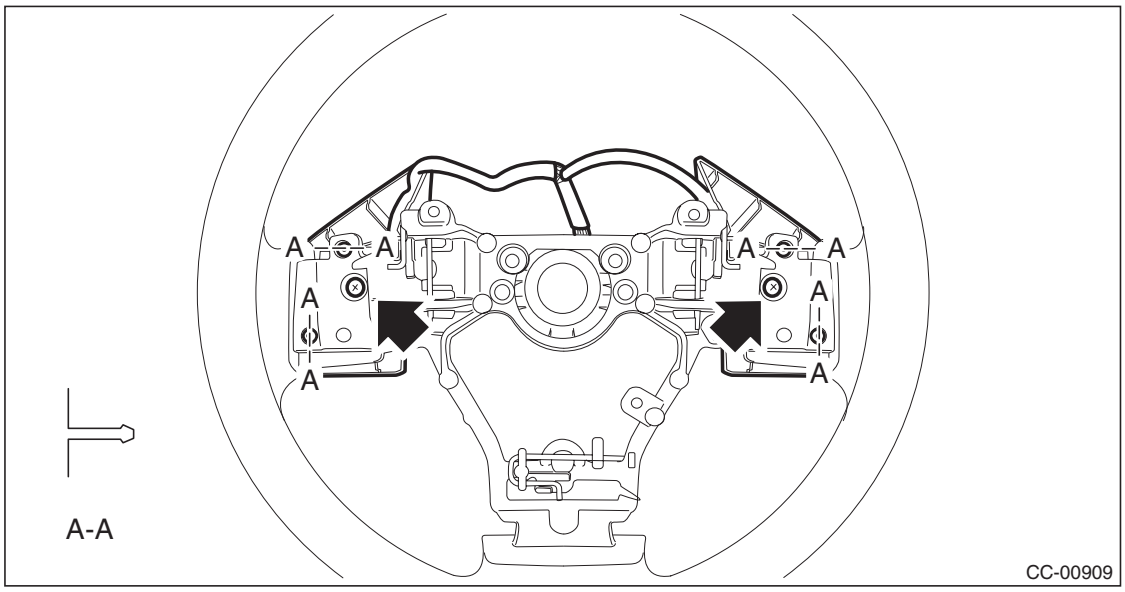

B: INSTALLATION

Install each part in the reverse order of removal.

Tightening torque:

Steering wheel: 39 N·m (4.0 kgf-m, 28.8 ft-lb)

Clearance:

Between column cover and steering wheel: 2 — 4 mm (0.08 — 0.16 in)

GETtheMANUALS.org

C: INSPECTION

1) Measure the resistance between satellite switch connector terminals.

- Audio operation

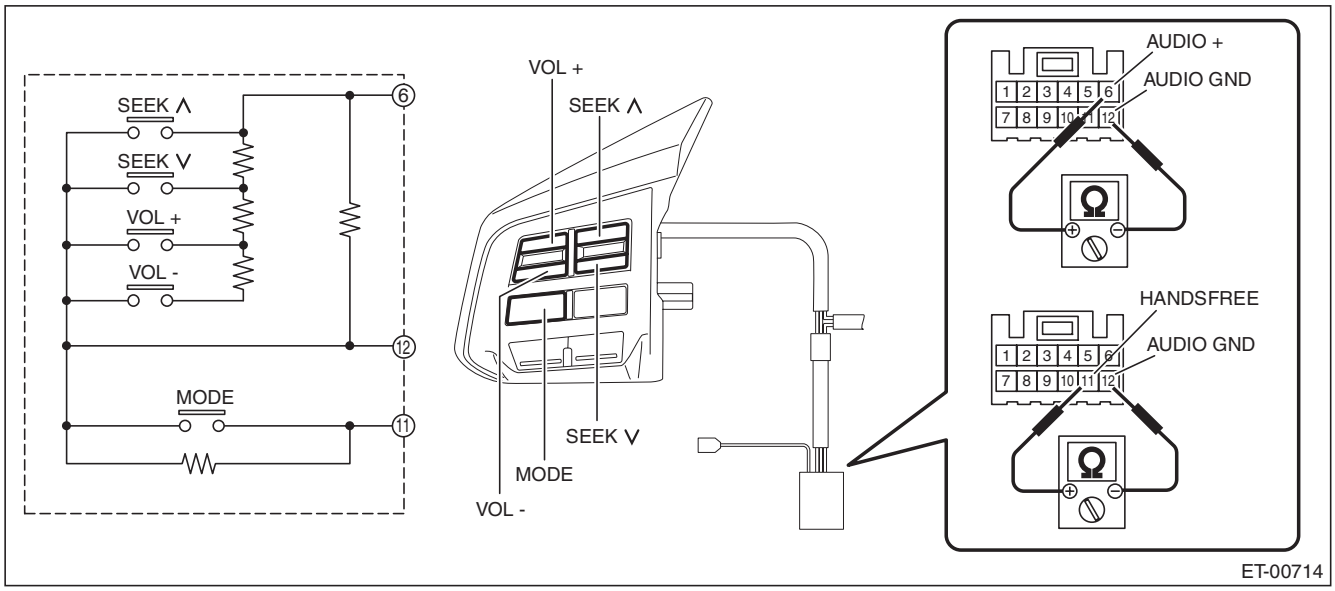

Switch	Switch operation	Terminal No.	Standard
VOL (+) VOL (–) SEEK (∧) SEEK (∨)	All OFF	6 and 12	Approx. 100 kΩ
MODE	OFF	11 and 12	Approx. 100 kΩ
VOL (+)	ON	6 and 12	Approx. 1000 Ω
VOL (–)	ON	6 and 12	Approx. 3110 Ω
Preset CH UP/SEEK (∧)	ON	6 and 12	Approx. less than 1 Ω
Preset CH DOWN/SEEK (∨)	ON	6 and 12	Approx. 330 Ω
MODE	ON	11 and 12	Approx. less than 1 Ω

GETtheMANUALS.org

- Handsfree operation

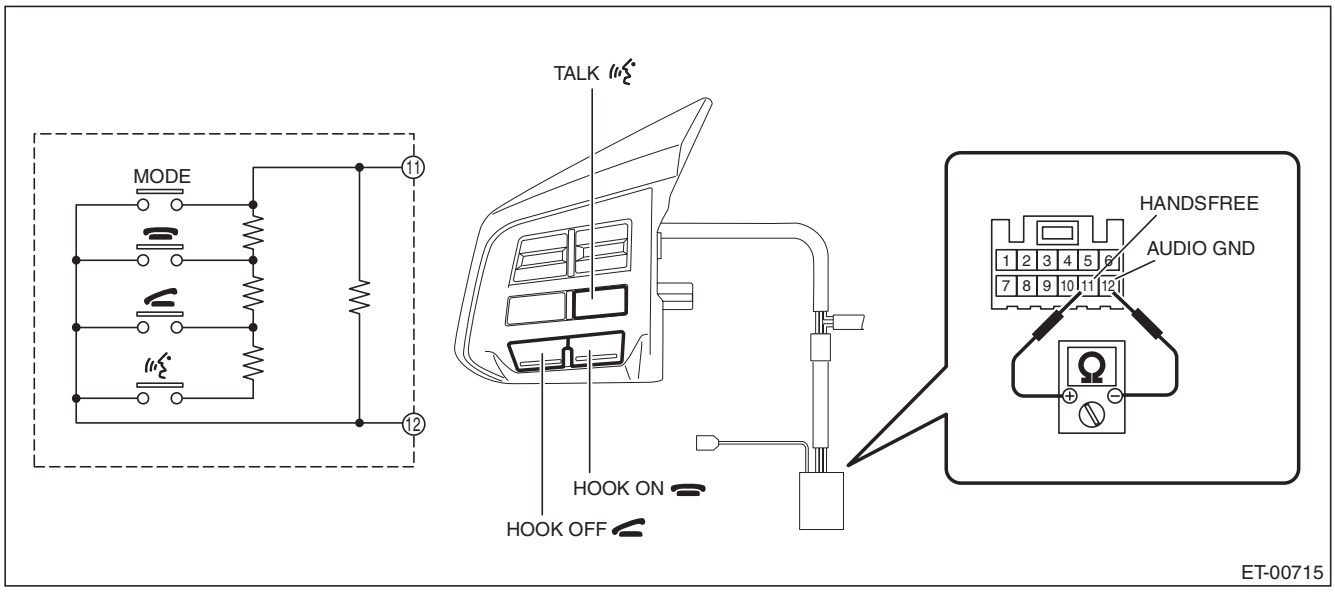

Switch	Switch operation	Terminal No.	Standard
HOOK ON HOOK OFF TALK	All OFF	11 and 12	Approx. 100 kΩ
HOOK ON	ON	11 and 12	Approx. 330 Ω
HOOK OFF	ON	11 and 12	Approx. 1000 Ω
TALK	ON	11 and 12	Approx. 3110 Ω

2) If the result of the measurement is not at the standard value, replace the satellite switch.

GETtheMANUALS.org

12.Navigation Body

A: REMOVAL

CAUTION:
- **When replacing the navigation unit, be sure to replace with specified navigation unit. The marker adjustment can not be performed correctly if replacing with unspecified navigation unit.**
- **After replacing the navigation unit, be sure to check that the rearview camera images and the marker line are displayed.**

1) Disconnect the ground cable from battery.
2) Remove the center panel assembly.

CAUTION:
Do not put your finger on the fin of the air vent grille. Doing so may damage the fin.

(1) Attach the protective tape (a) to the meter visor.

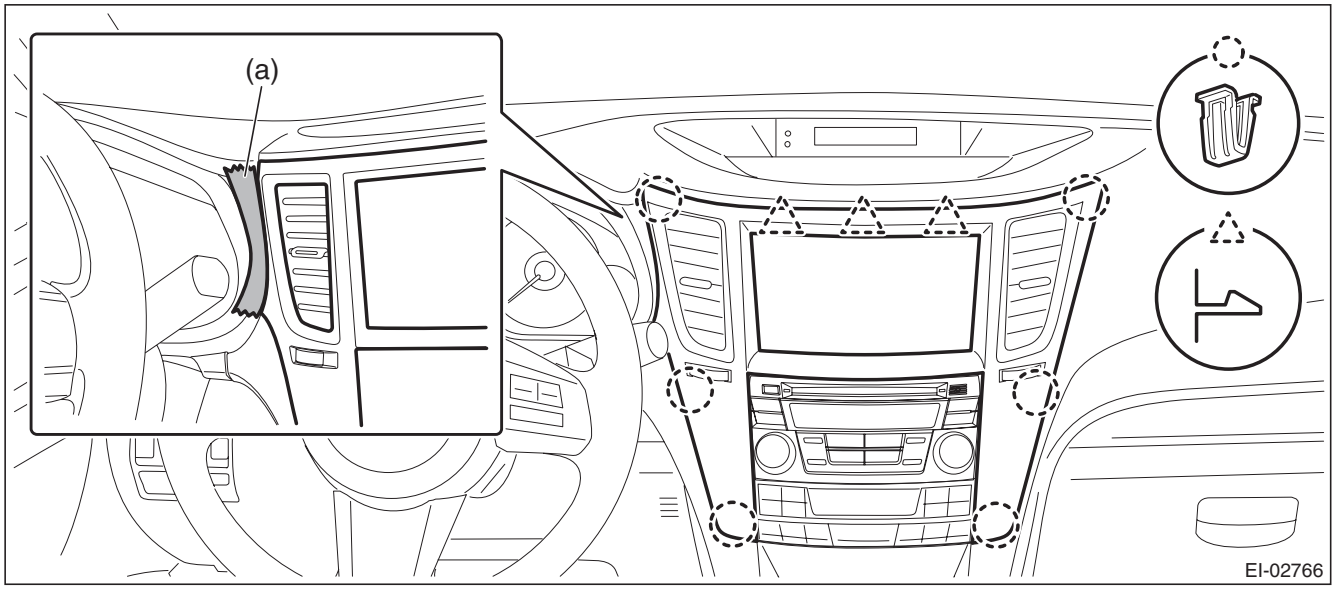

(2) Insert a finger into the air vent grille and release the left and right clips at the top of the center panel. (A), (B)
(3) Insert a finger into the air vent grille and release the left and right clips at the center of the center panel. (C), (D)

GETtheMANUALS.org

(4) Release the clips at the bottom of the center panel and remove the center panel assembly.

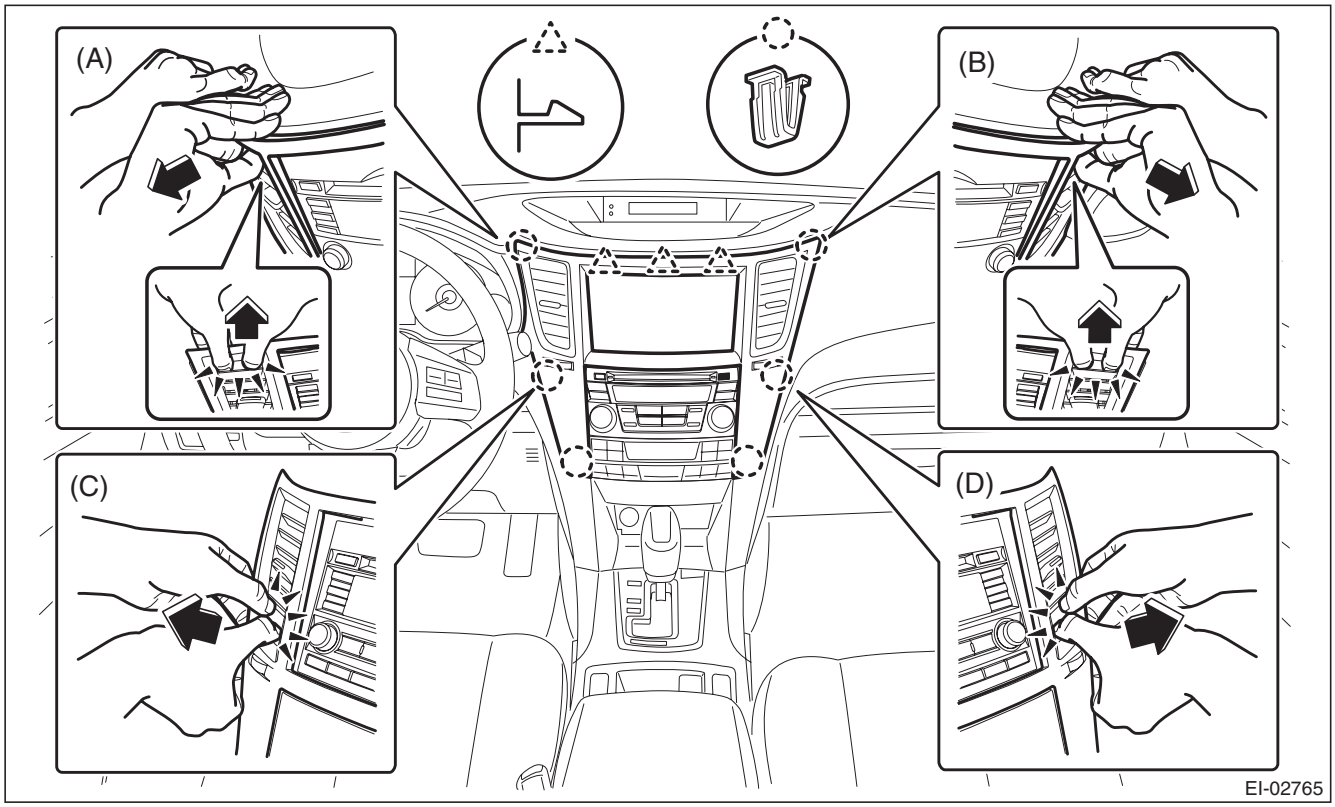

3) Remove the navigation assembly.
(1) Remove the left and right screws.
(2) Disconnect the connector and remove the navigation assembly.

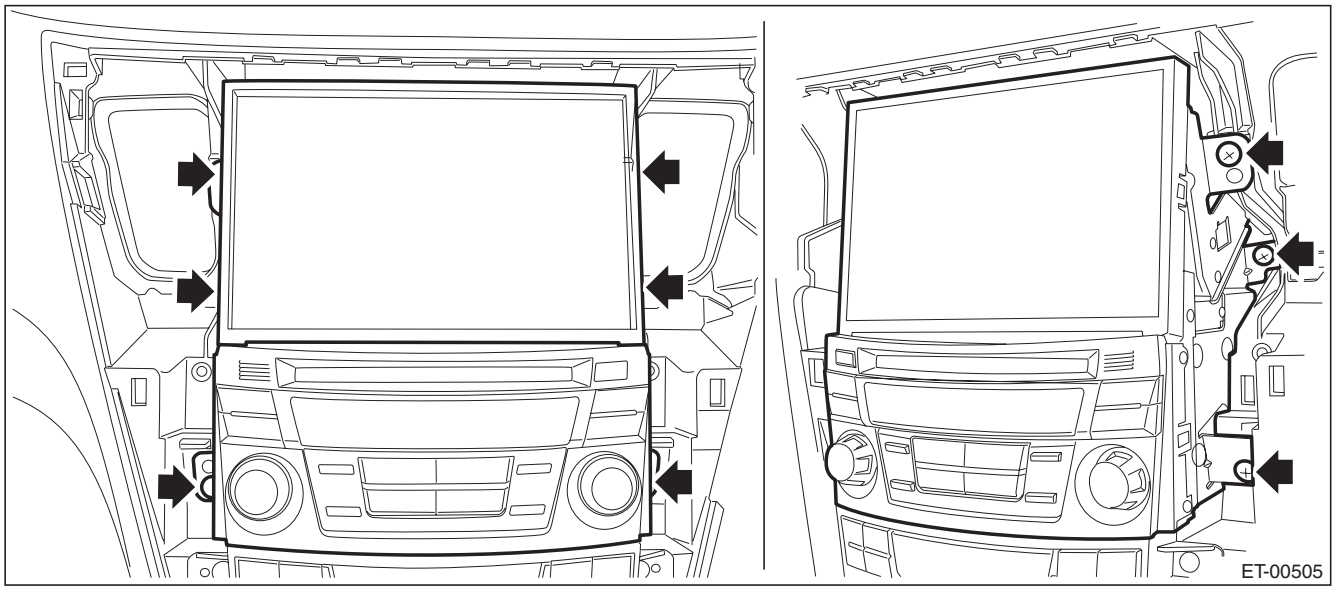

B: INSTALLATION

Install each part in the reverse order of removal.

GETtheMANUALS.org

13. GPS Antenna

A: REMOVAL

1) Disconnect the ground cable from battery.
2) Remove the center panel assembly.

CAUTION:
Do not put your finger on the fin of the air vent grille. Doing so may damage the fin.

(1) Attach the protective tape (a) to the meter visor.

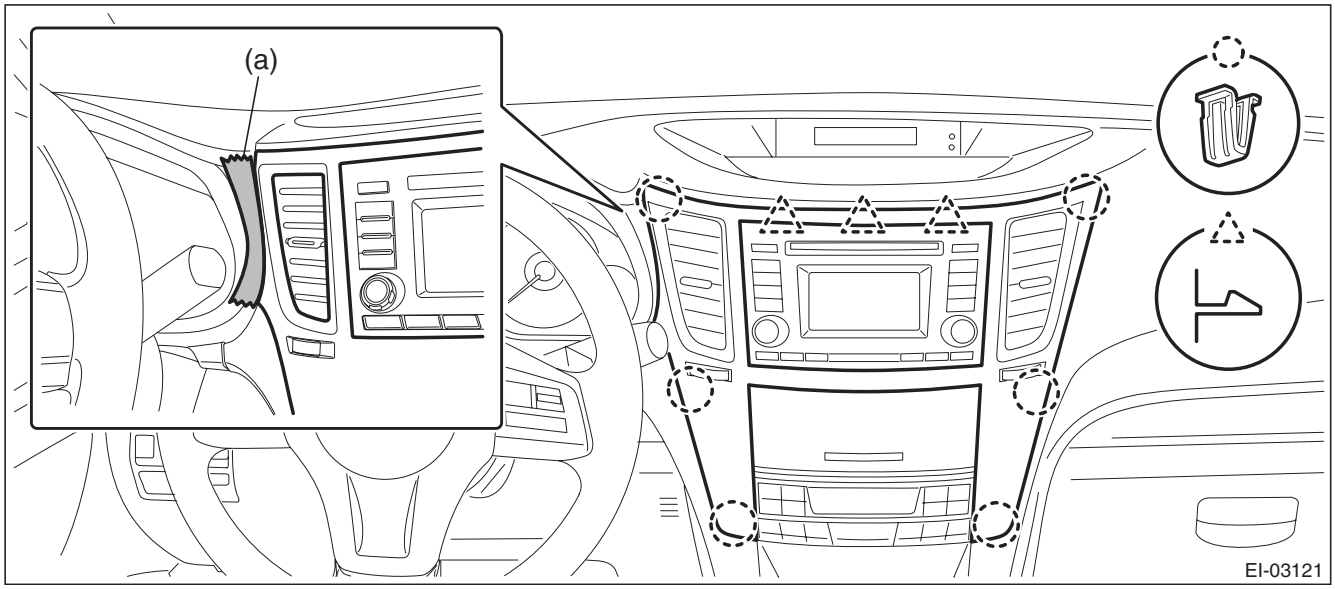

(2) Insert a finger into the air vent grille and release the left and right clips at the top of the center panel. (A), (B)
(3) Insert a finger into the air vent grille and release the left and right clips at the center of the center panel. (C), (D)

GETtheMANUALS.org

(4) Release the clips at the bottom of the center panel and remove the center panel assembly.

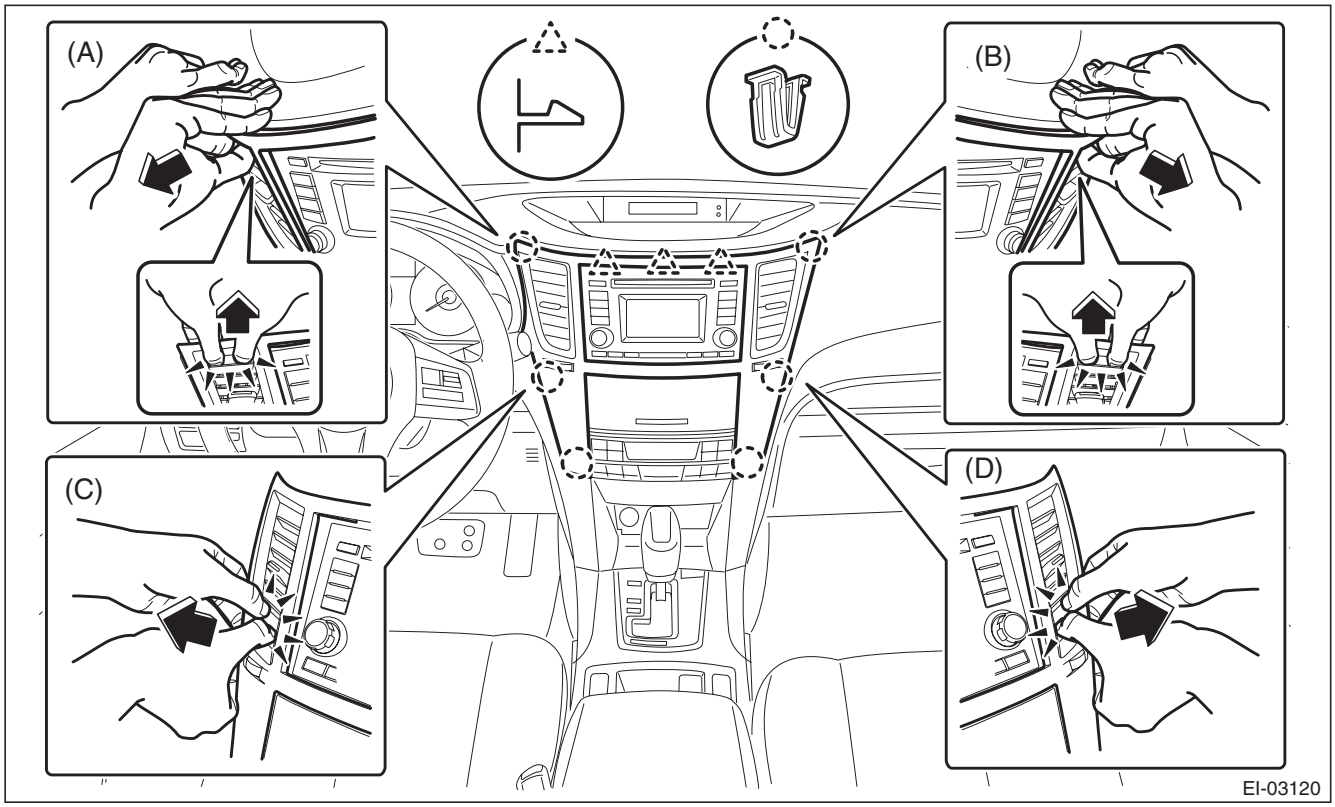

3) Remove the combination meter assembly.

CAUTION:

- **Be careful not to damage the meter or instrument panel.**
- **Pay particular attention to avoid damaging the meter glass.**

(1) Release the lock, tilt the steering column to the lowest end and fully extend the column by the telescopic system.

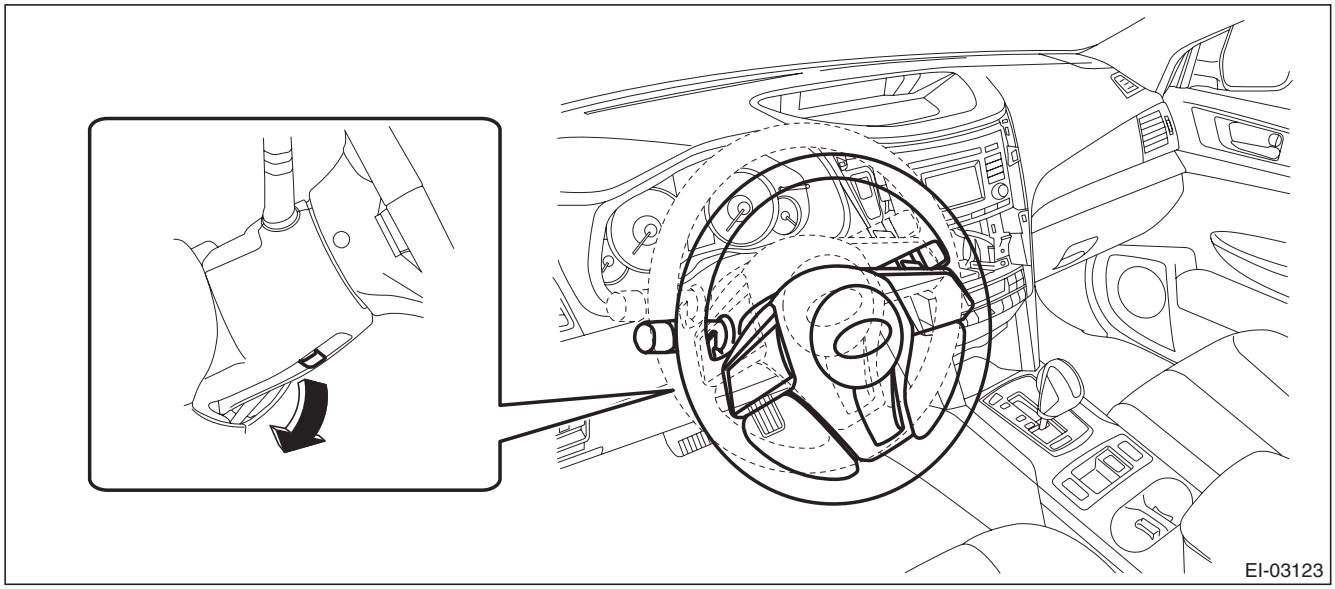

GETtheMANUALS.org

(2) Release the screws and clips, then detach the meter visor assembly.

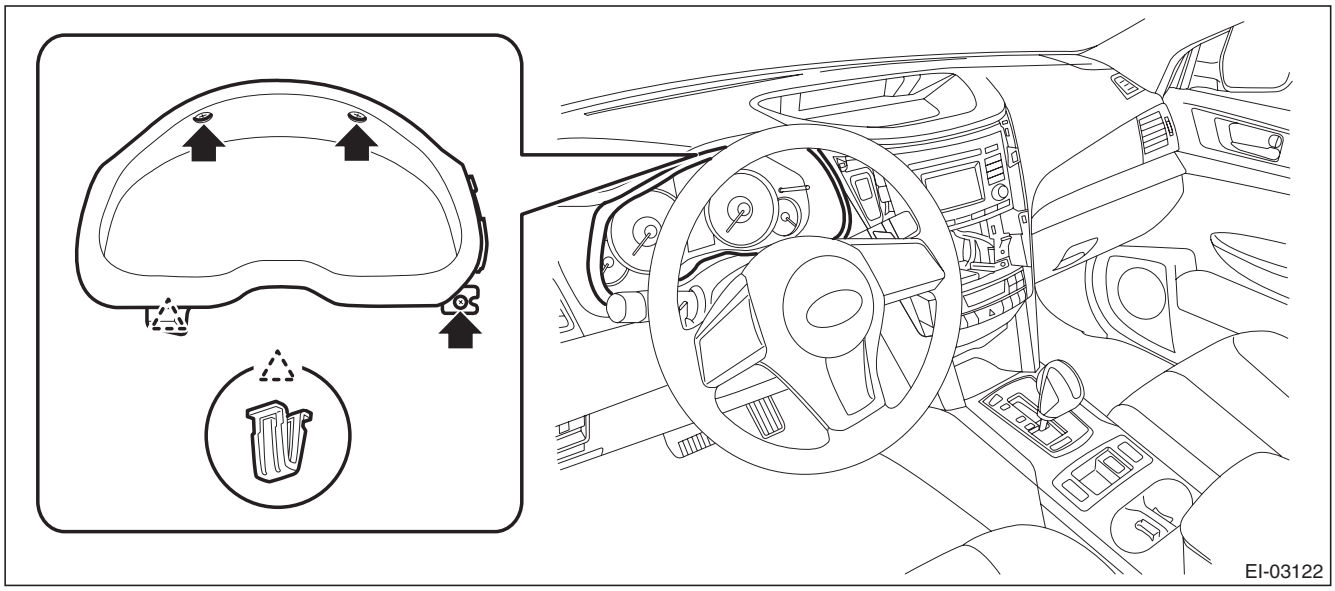

(3) Remove the screws and pull the steering COMPL upper cover toward you.

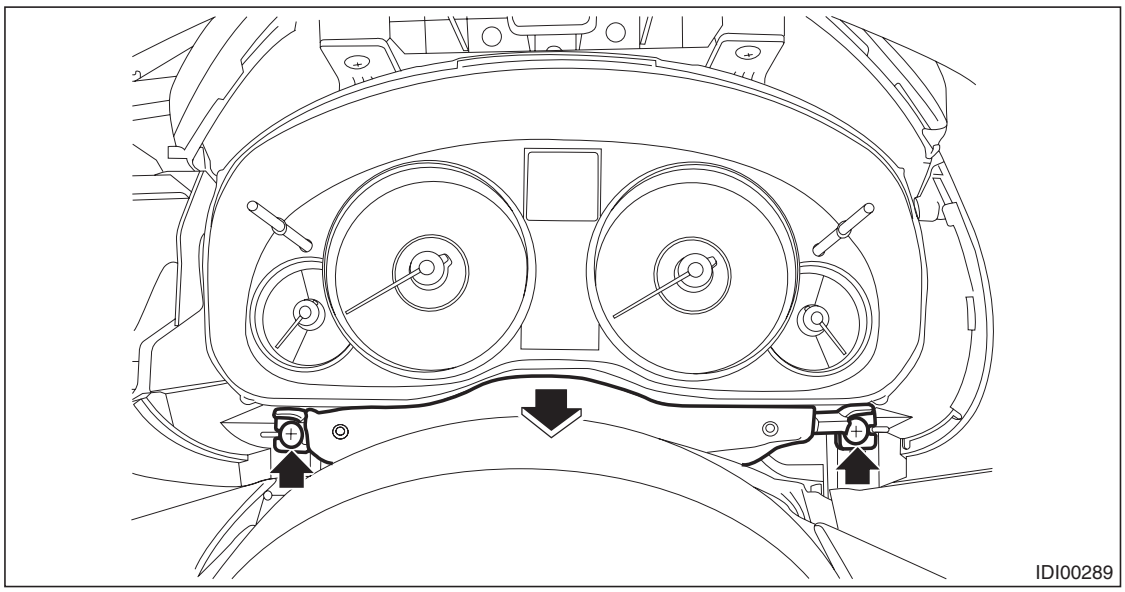

GETtheMANUALS.org

(4) Remove the screws and pull out the combination meter toward you to disconnect the connectors.

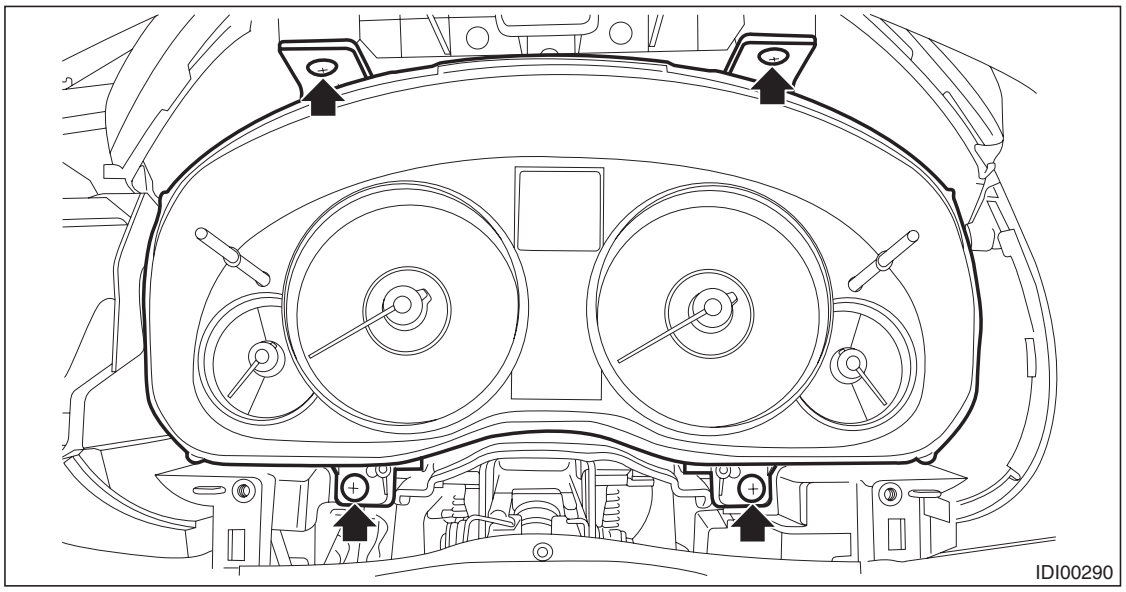

(5) Remove the combination meter assembly as shown in the figure.

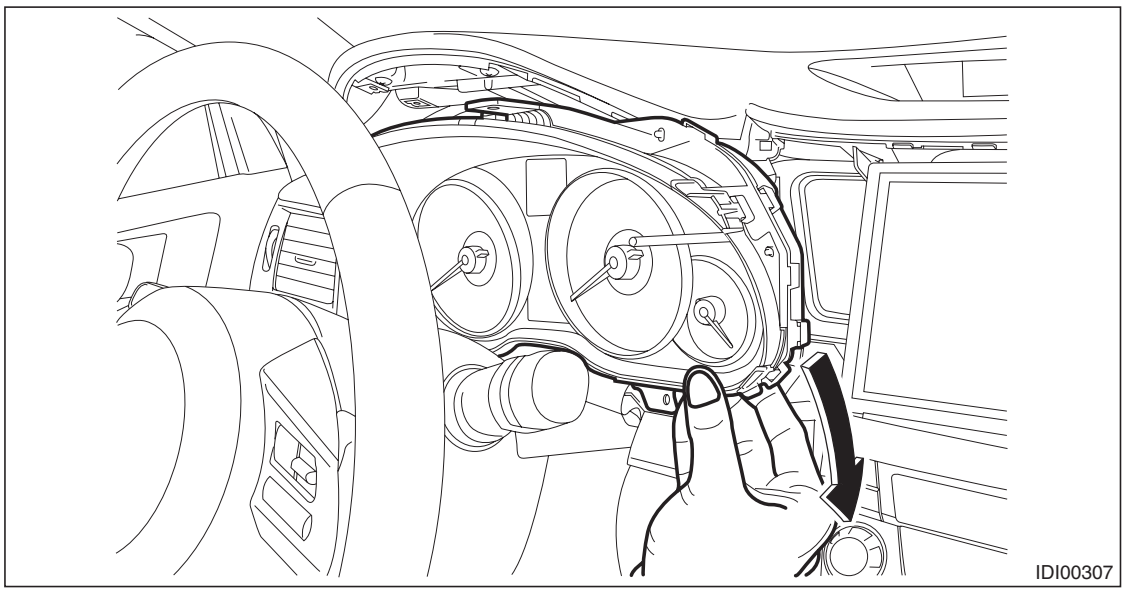

GETtheMANUALS.org

4) Remove the navigation assembly.
   (1) Remove the left and right screws.
   (2) Disconnect the connectors, and remove the navigation assembly.

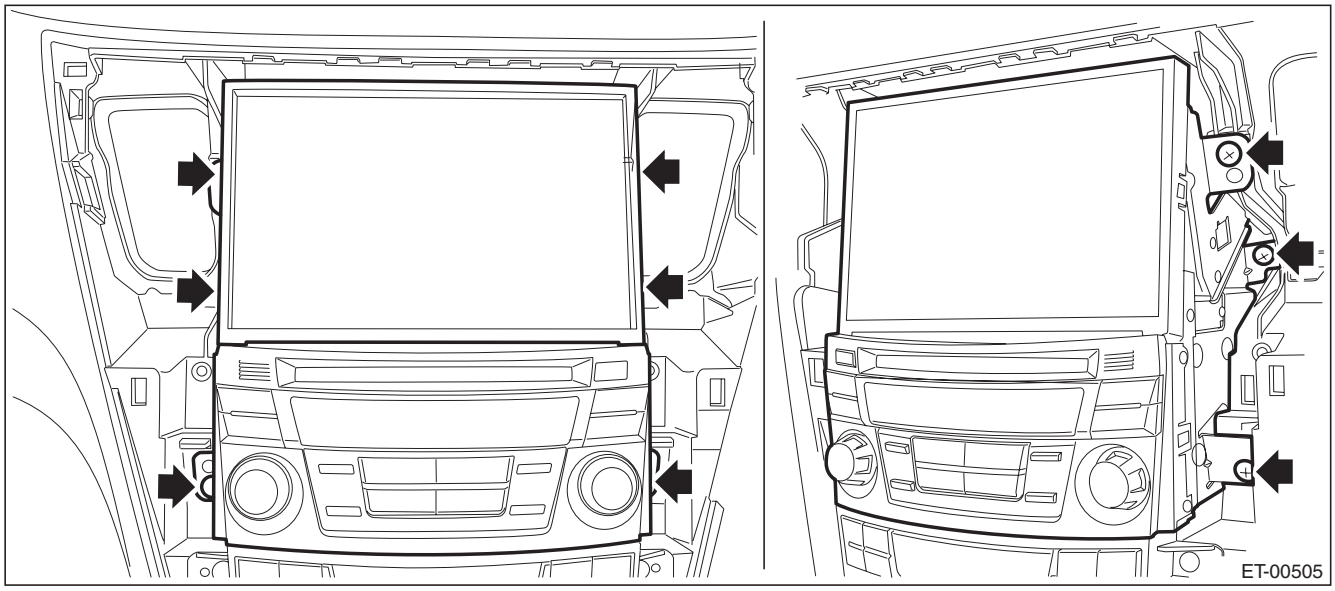

5) Remove the GPS antenna.

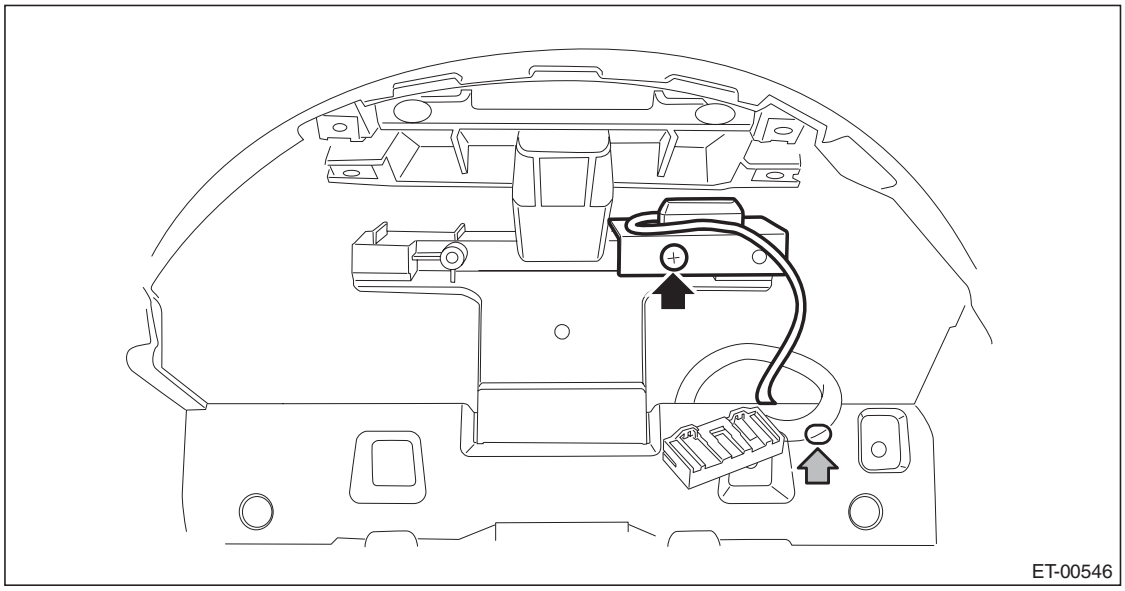

   (1) Tie a string to the GPS antenna harness connector on the navigation assembly side.

NOTE:
A string makes operation easier during installation.

   (2) Remove the screw and harness clamp to remove the GPS antenna.
   (3) When the GPS antenna is pulled out, remove the string attached to the connector in step (1).

B: INSTALLATION

Install each part in the reverse order of removal.

GETtheMANUALS.org

14. Rearview Camera System

A: WIRING DIAGRAM

Refer to “Rearview Camera System” in the wiring diagram. <Ref. to WI-213, WIRING DIAGRAM, Rearview Camera System.>

B: REMOVAL

1. SEDAN MODEL

1) Disconnect the ground cable from battery.
2) Remove the trunk lid trim.
   (1) Remove the trunk handle.
   (2) Remove the clips and the trunk lid trim.

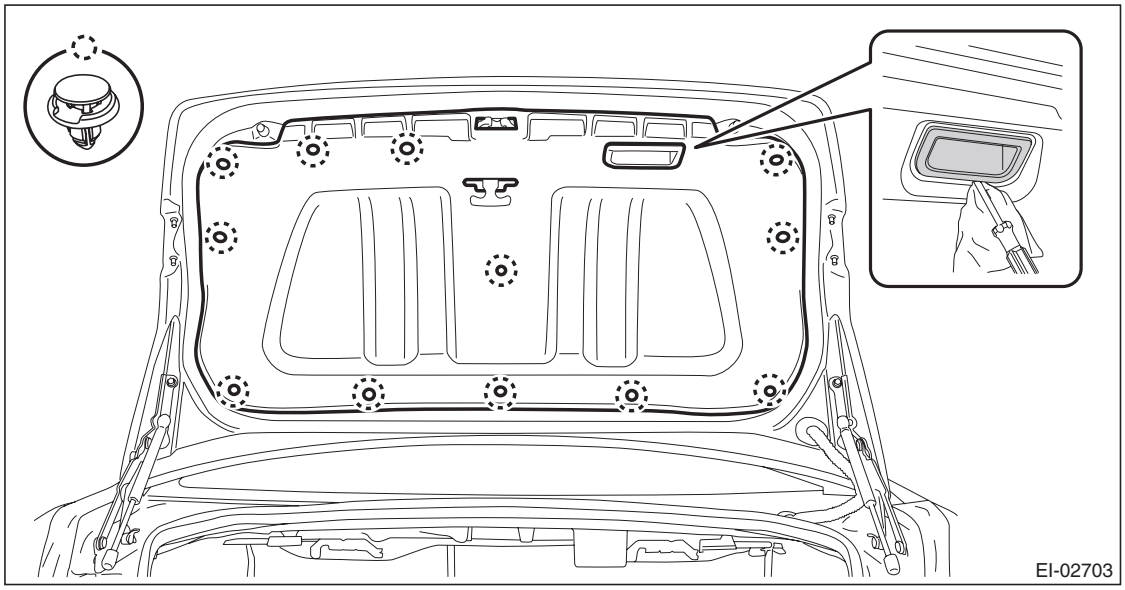

3) Remove the trunk lid garnish.
   (1) Remove the nut.
   (2) Remove the clips and the trunk lid garnish.

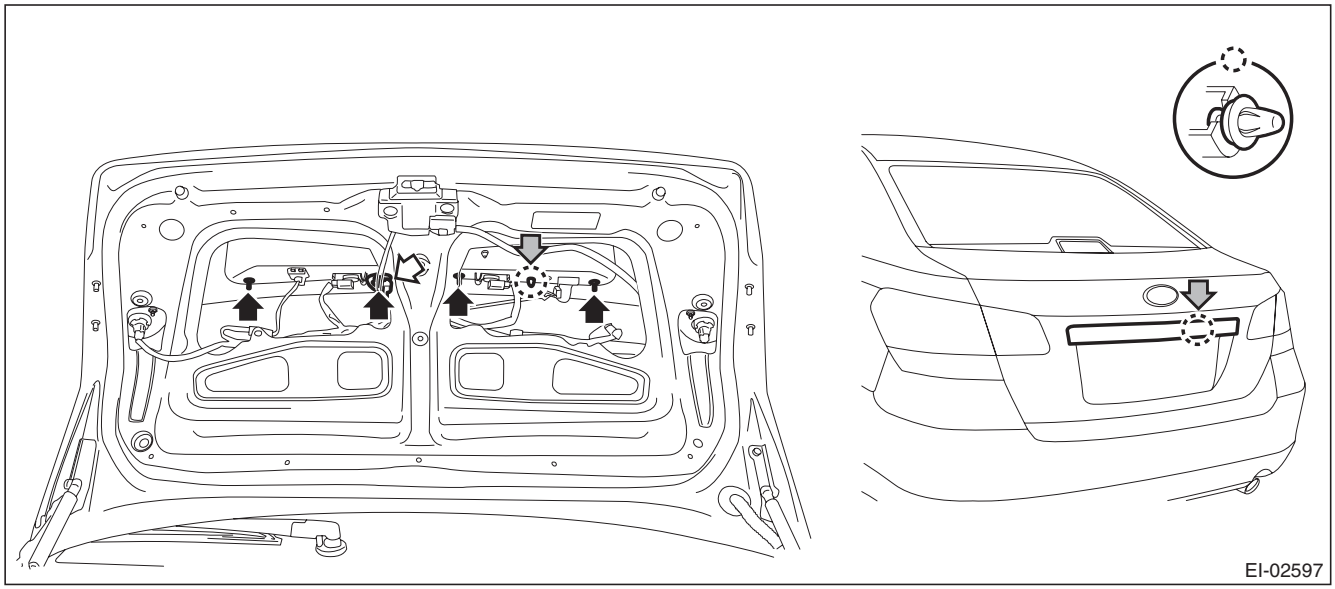

GETtheMANUALS.org

4) Remove the rearview camera.

CAUTION:
Do not drop or apply any impact to the rearview camera because it is a precision equipment.

(1) Disconnect the rearview camera connector.
(2) Remove the bolt from the face of trunk.
(3) Disconnect the claws and then remove the rearview camera assembly.

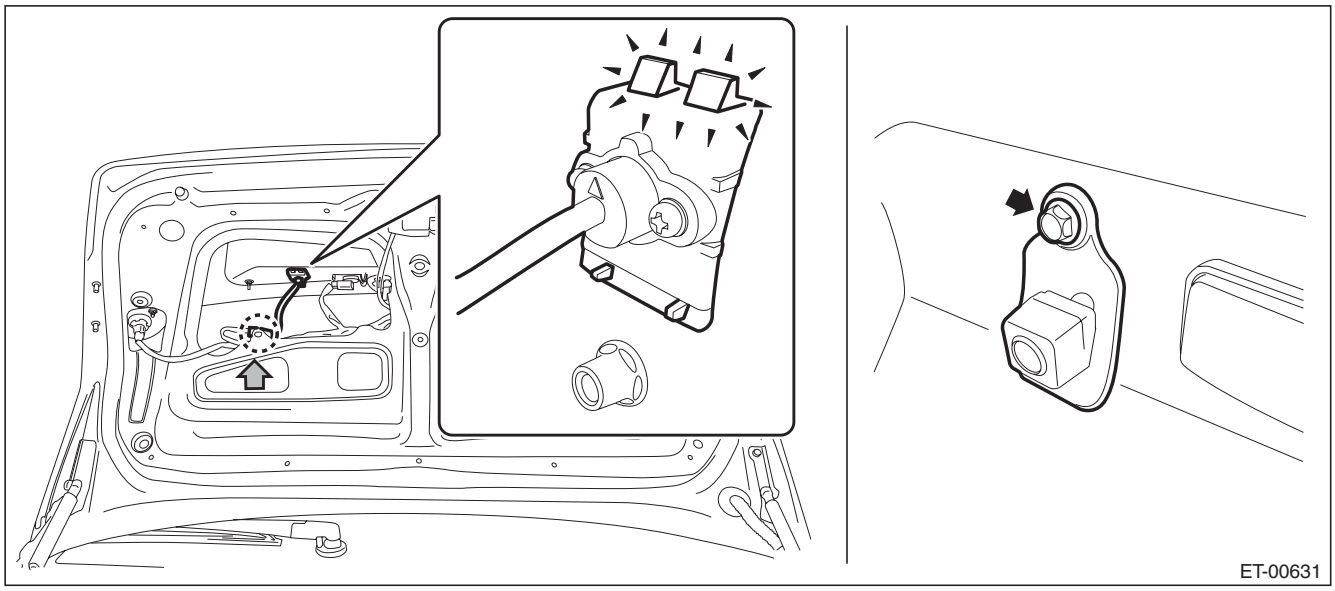

2. OUTBACK MODEL

1) Disconnect the ground cable from battery.
2) Remove the rear gate trim.
(1) Remove the rear gate upper trim.
a) Remove the claws on the trim edge.
b) Disconnect the claws in the center of trim, and remove the rear gate upper trim.

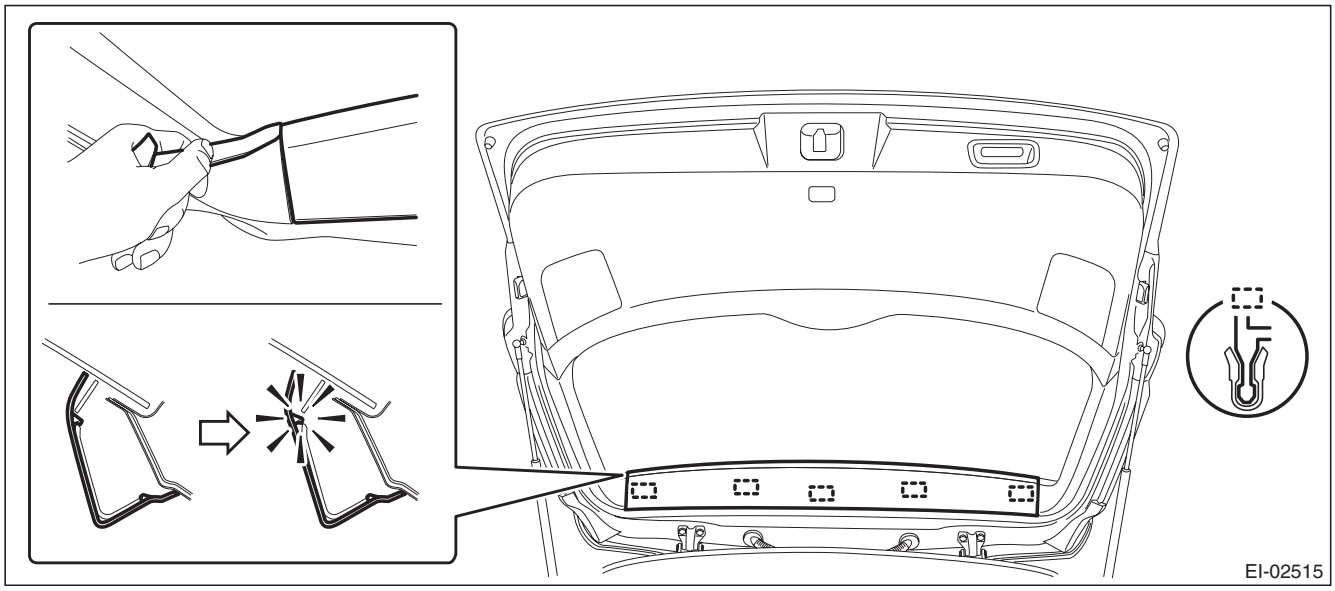

GETtheMANUALS.org

(2) Remove the rear gate pillar trim.
a) Release the claws.
b) Remove the claws on the bottom of trim, and remove the rear gate pillar trim.

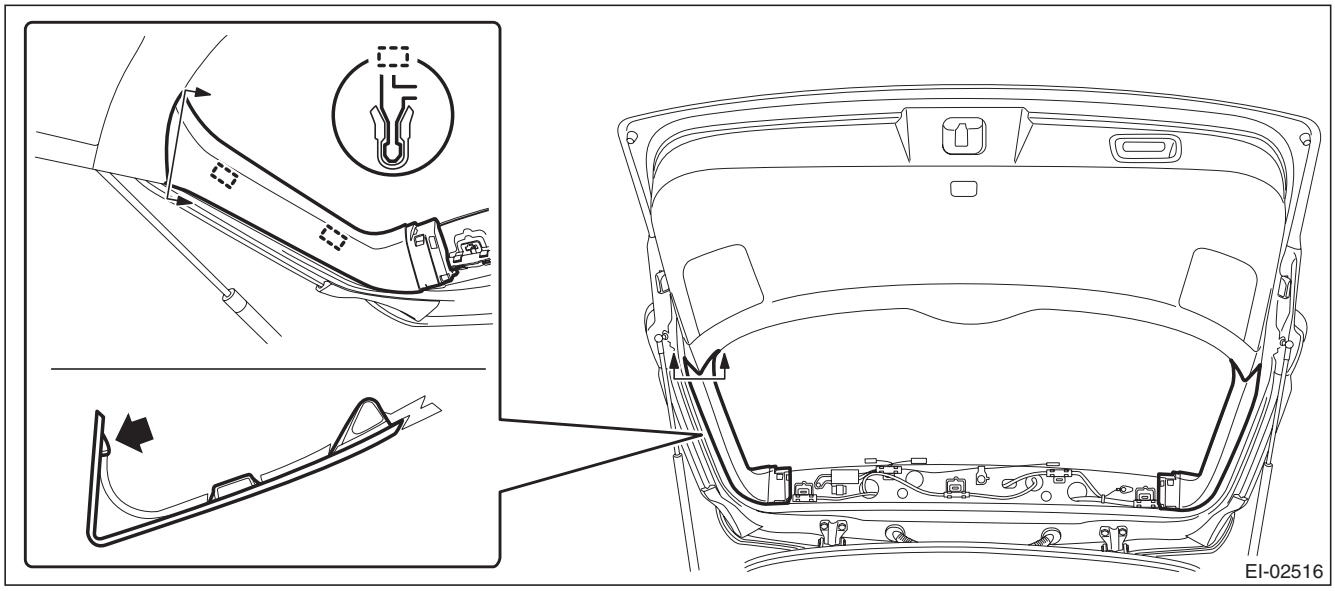

(3) Remove the hand grip of rear gate.

CAUTION:
- **Be careful not to scratch the trim.**
- **To protect the trim from damage, attach a protective tape to the tool in use.**

a) Insert a precision screwdriver (a).
b) With the screwdriver inserted, push it down to release the claw and pull it toward you.
c) Remove the screws and detach the hand grip.

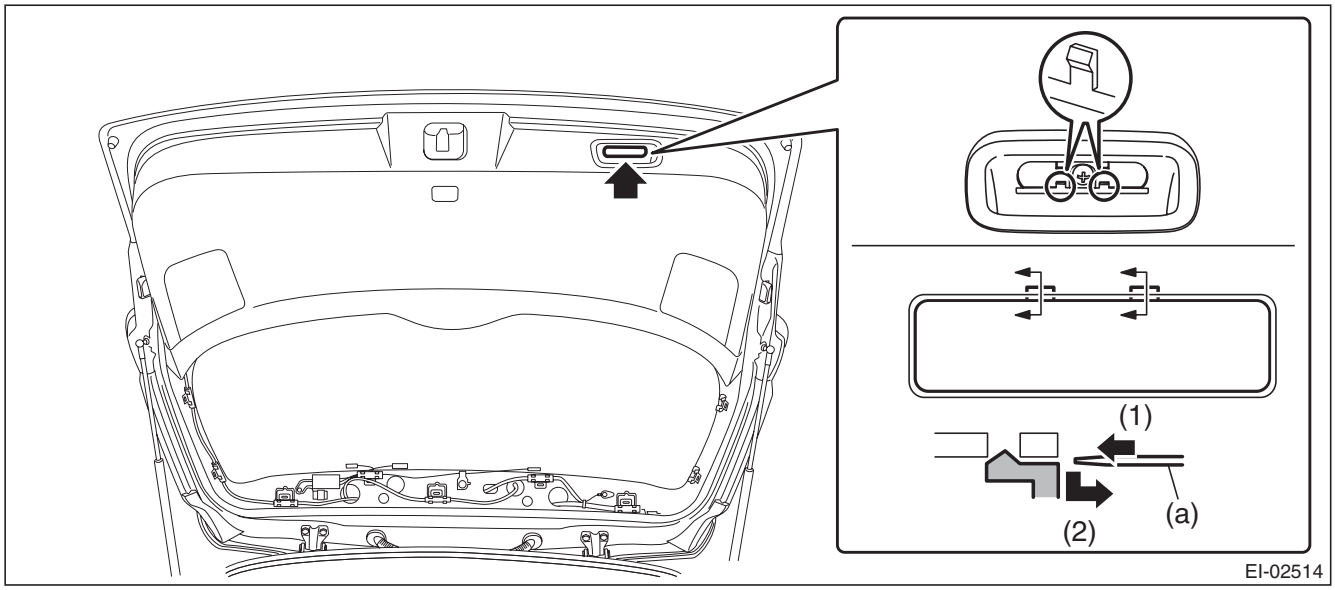

GETtheMANUALS.org

(4) Remove the rear gate lower trim.
a) Remove the clips on both ends.
b) Release the clips and remove the rear gate lower trim.

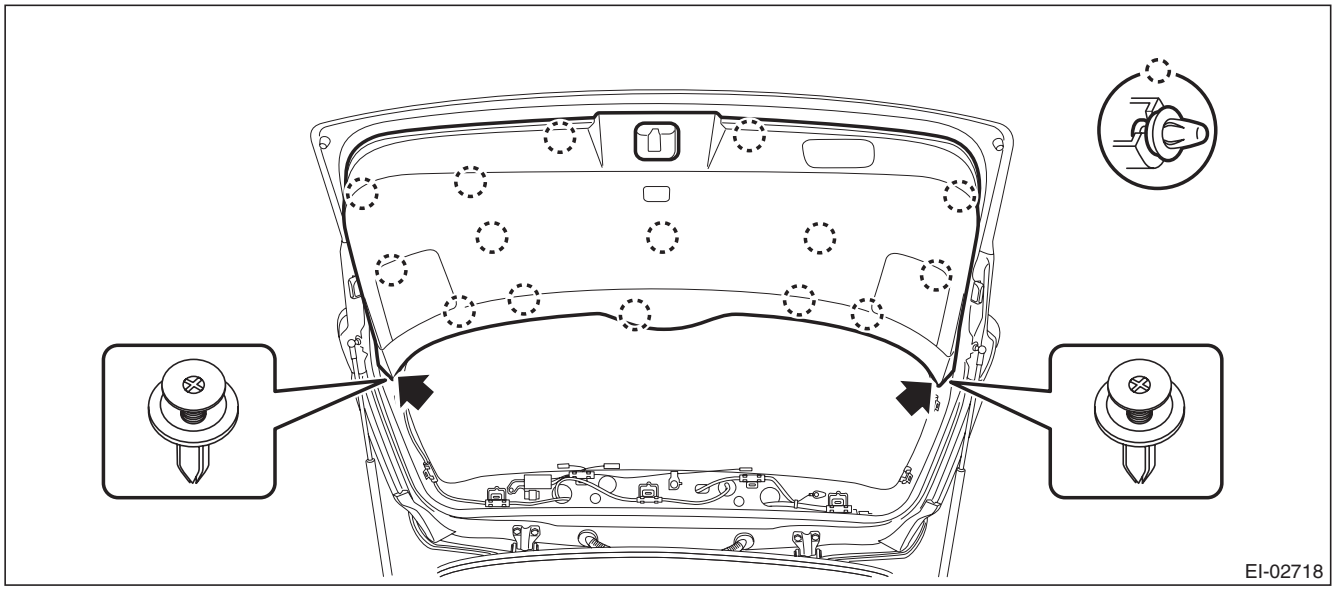

3) Remove the rear gate garnish.
(1) Release the clips and claws, then detach the rear finisher light side cover.

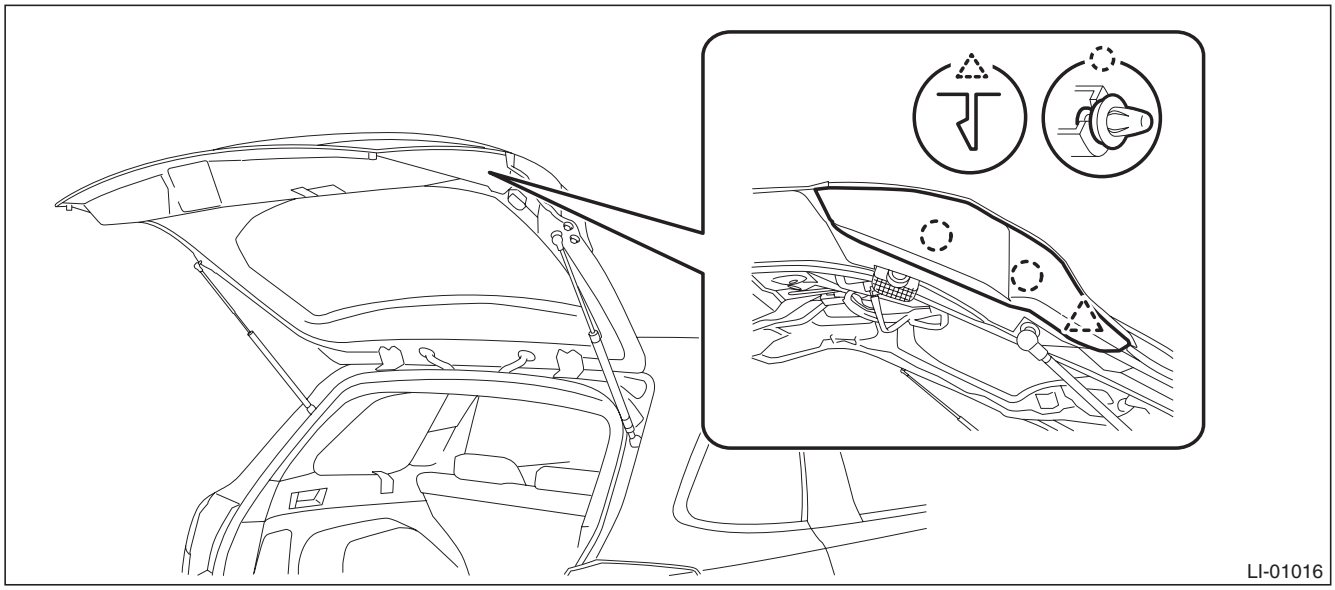

(2) Disconnect the harness connector of license plate light assembly.
(3) Remove the nuts.

GETtheMANUALS.org

(4) Remove the clips, and remove the rear gate garnish.

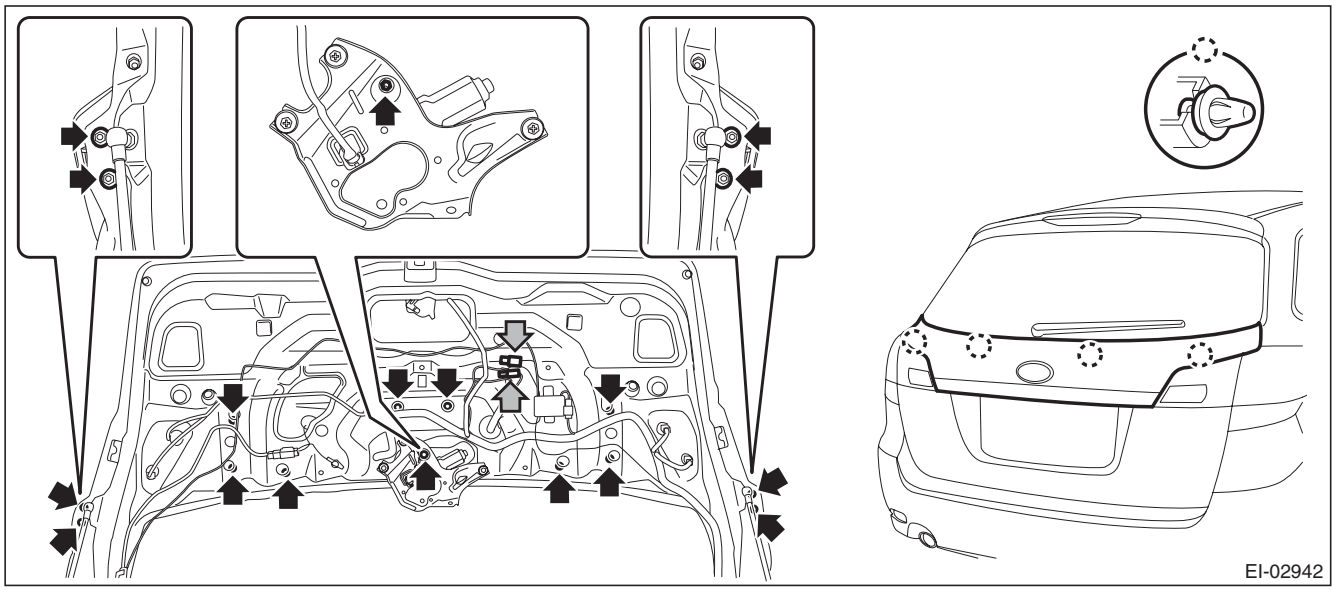

4) Remove the rearview camera assembly.

CAUTION:
Do not drop or apply any impact to the rearview camera because it is a precision equipment.

(1) Disconnect the rearview camera connector.
(2) Remove the nut and bolt on the back side of rear gate.
(3) Disconnect the claws (for temporary fastening) and remove the rearview camera assembly.

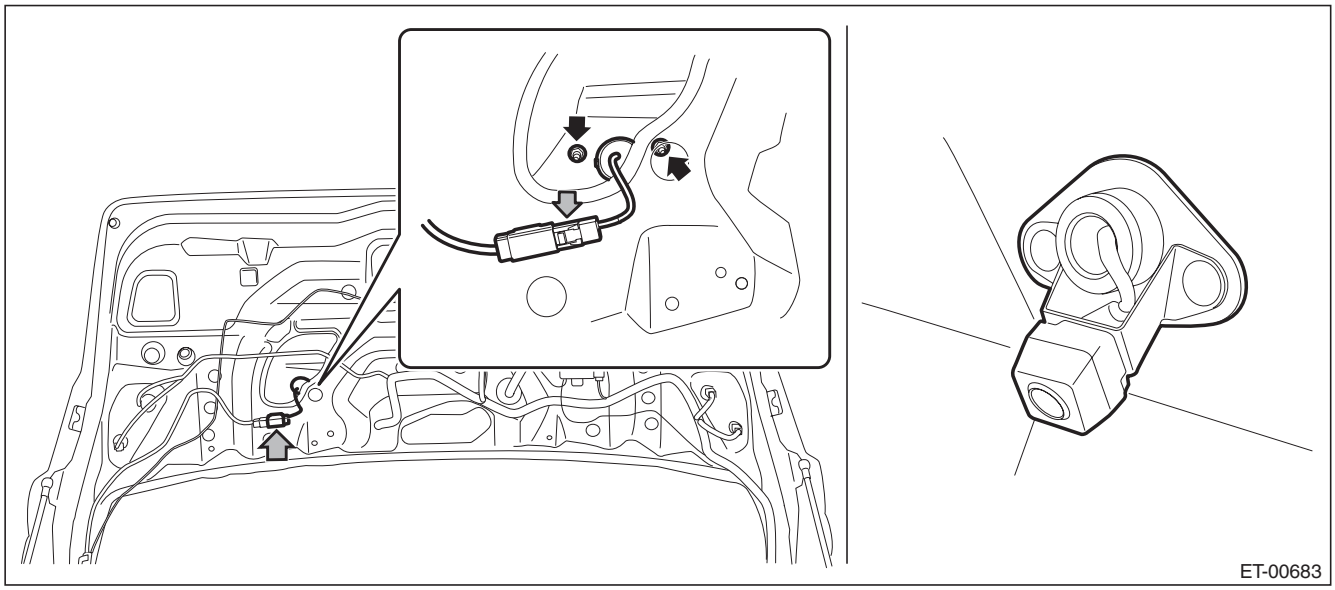

GETtheMANUALS.org

C: INSTALLATION

CAUTION:
Be sure to confirm the marker position, whenever the rearview camera is removed/installed/replaced.
Install each part in the reverse order of removal.

Tightening torque:
Sedan model
Rearview camera (bracket): 7.5 N·m (0.76 kgf-m, 5.5 ft-lb)
Trunk lid garnish: 4.5 N·m (0.46 kgf-m, 3.3 ft-lb)
OUTBACK model
Rearview camera (bracket (nut)): 4.5 N·m (0.46 kgf-m, 3.3 ft-lb)
Rear gate garnish: 4.5 N·m (0.46 kgf-m, 3.3 ft-lb)
Rear wiper motor & wiper arm: <Ref. to WW-4, REAR WIPER, COMPONENT, General Description.>

D: INSPECTION

1) Park the vehicle at the level place where there are enough area at the rear of the vehicle.
2) Attach the tape as the target point for standard at the floor rearward of the vehicle as shown in the figure below.

NOTE:
Standard tape width is about 30 — 50 mm (1.18 — 1.97 in) and brilliant color shall be used.

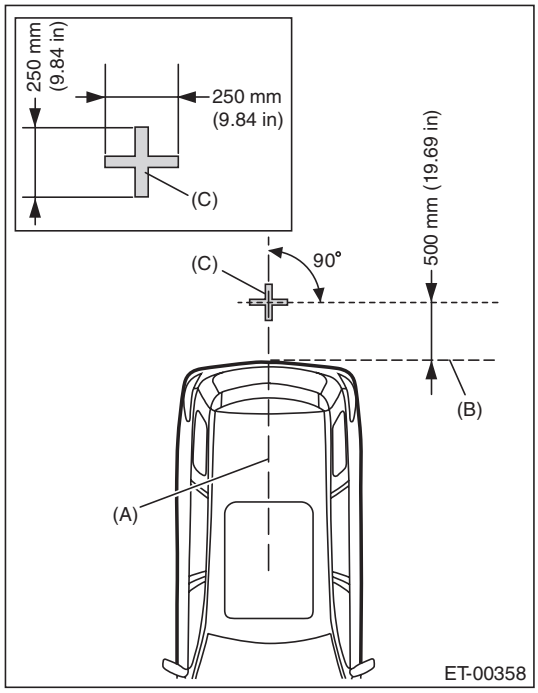

(A) Vehicle body center line
(B) Rear edge of bumper
(C) Target point

GETtheMANUALS.org

3) Confirm the following before checking the corresponding items.
- Navigation
  - If the display is blank.
  Rearview camera image is not displayed. (Navigation screen is displayed normally.)
    1. Check the condition of back sensor connection. <Ref. to ET-9, CHECK EACH VEHICLE SIGNAL, INSPECTION, Navigation System.>
    2. Check the condition of rearview camera connection. <Ref. to ET-8, CHECK EACH CONNECTION, INSPECTION, Navigation System.>
  - If the marker is not displayed.
    1. Check the UART communication. <Ref. to ET-8, CHECK EACH CONNECTION, INSPECTION, Navigation System.>
  - If the marker position is not aligned.
    1. Adjust the marker position according to the MARKER ADJUSTMENT MODE. <Ref. to ET-51, MARKER ADJUSTMENT MODE, ADJUSTMENT, Rearview Camera System.>
- Rearview mirror (RCD model)
  - If the rearview camera display is blank.
    1. Check the condition of back sensor connection. <Ref. to ET-9, CHECK EACH VEHICLE SIGNAL, INSPECTION, Navigation System.>
    2. Check the condition of rearview camera connection. <Ref. to ET-8, CHECK EACH CONNECTION, INSPECTION, Navigation System.>
    3. Check the room mirror. <Ref. to GW-62, ADJUSTMENT, Rearview Mirror (RCD Model).>

E: ADJUSTMENT

1. MARKER ADJUSTMENT MODE

Navigation

1) Prepare the target point. <Ref. to ET-50, INSPECTION, Rearview Camera System.>
2) Display the audio OFF screen by turning the ignition switch to ON, then touch the screen in the order of (1) — (6).

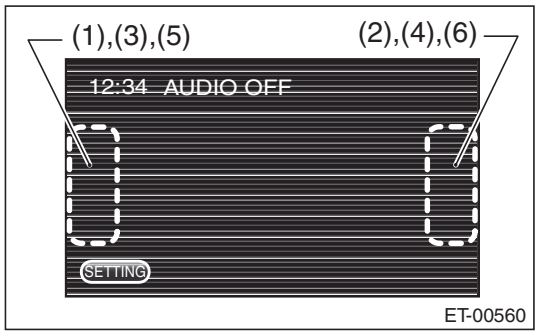

3) When the Dealer Diag menu screen is displayed, touch the “Rear Camera Setup” from the items.

CAUTION:
Do not select the item other than “Rear Camera Setup”. The navigation system can not operate normally.
4) Shift the select lever to the “R” position to display the image of the rearview camera.

GETtheMANUALS.org

5) Touch the adjustment keys on the display screen to adjust the marker line.

- Sedan model

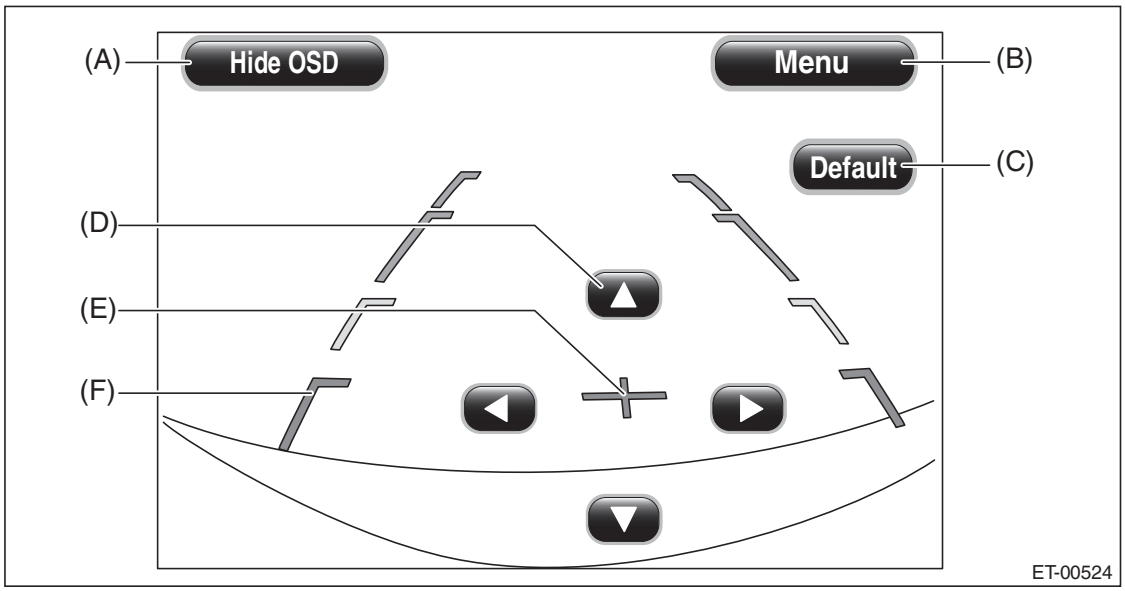

- OUTBACK model

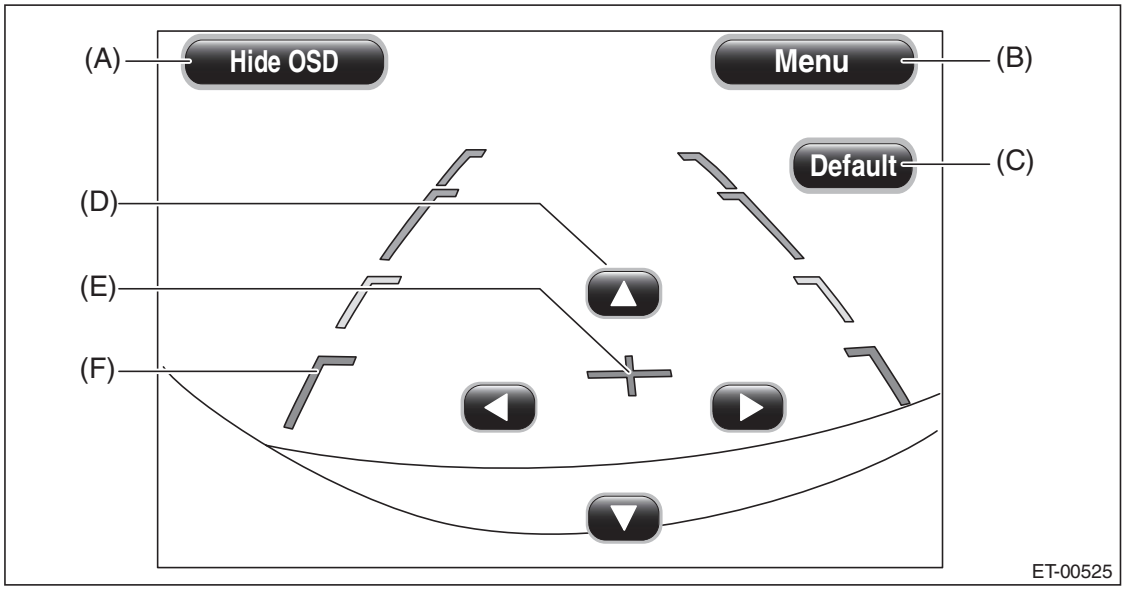

(A)	Hide OSD key	(C)	Default key	(E)	Cross line
(B)	Menu key	(D)	Adjustment keys	(F)	Vehicle width and distance reference line

(1) Confirm that the target point position in the display screen is identified.
(2) Adjust by touching the adjustment keys so that the cross line (E) and target point join together.

NOTE:

- Hide OSD key: Touching the Hide OSD key hides the operation keys. When the operation keys are not displayed, touching the display screen displays the operation keys again.
- Menu key: Touching this key shifts to the Dealer Diag Menu screen.
- Default key: Touching this key resets the adjustment values to the default condition.

GETtheMANUALS.org

6) Turn the ignition switch to OFF and wait for 60 seconds or more before turning the ignition switch to ON again.

CAUTION:
If the ignition switch is turned to OFF, be sure to wait for 60 seconds or more before turning the ignition switch to ON again.
If turning the ignition switch to ON again or disconnecting the ground cable from battery within 60 seconds after turning the ignition switch to OFF, the navigation unit data updating can not be performed correctly.

7) Shift the select lever to the “R” position to display the image of the rearview camera.
8) Confirm that the marker line position is correctly adjusted before turning the ignition switch to OFF, then finish the procedures.

GETtheMANUALS.org

15. Front Accessory Power Supply Socket

A: WIRING DIAGRAM

Refer to “Front Accessory Power Supply Socket System” in the wiring diagram. <Ref. to WI-166, WIRING DIAGRAM, Front Accessory Power Supply Socket System.>

B: REMOVAL

1) Disconnect the ground cable from battery.
2) Remove the center panel assembly.

CAUTION:
Do not put your finger on the fin of the air vent grille. Doing so may damage the fin.

(1) Attach the protective tape (a) to the meter visor.

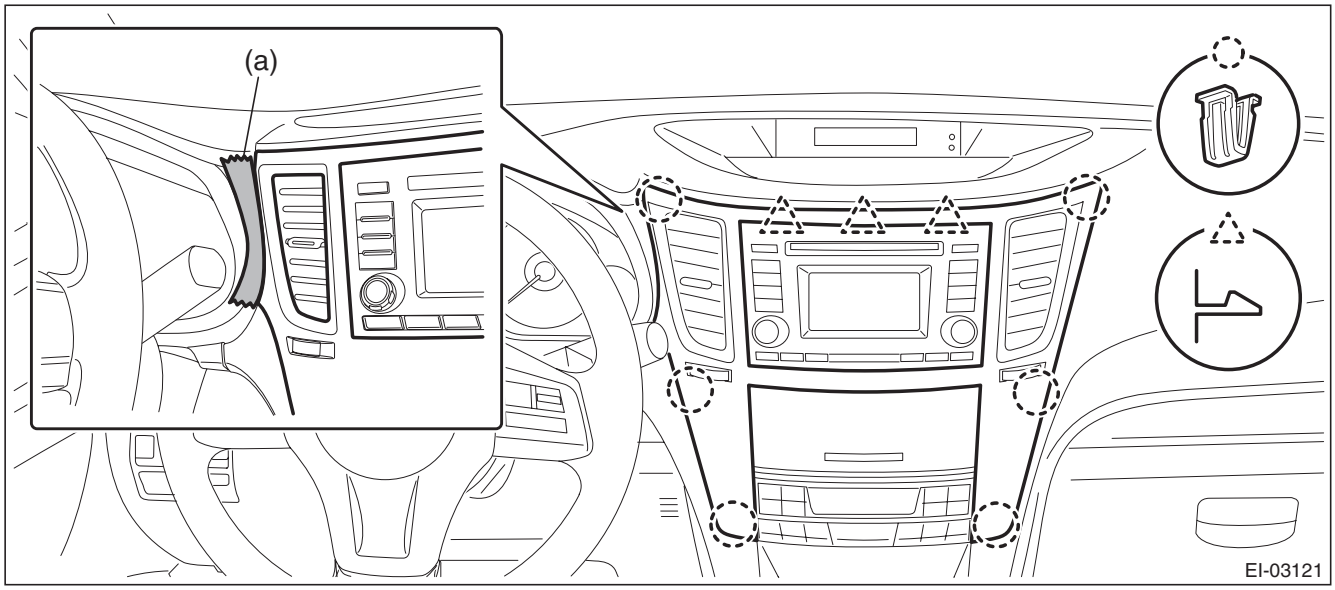

(2) Insert a finger into the air vent grille and release the left and right clips at the top of the center panel. (A), (B)
(3) Insert a finger into the air vent grille and release the left and right clips at the center of the center panel. (C), (D)

GETtheMANUALS.org

(4) Release the clips at the bottom of the center panel and remove the center panel assembly.

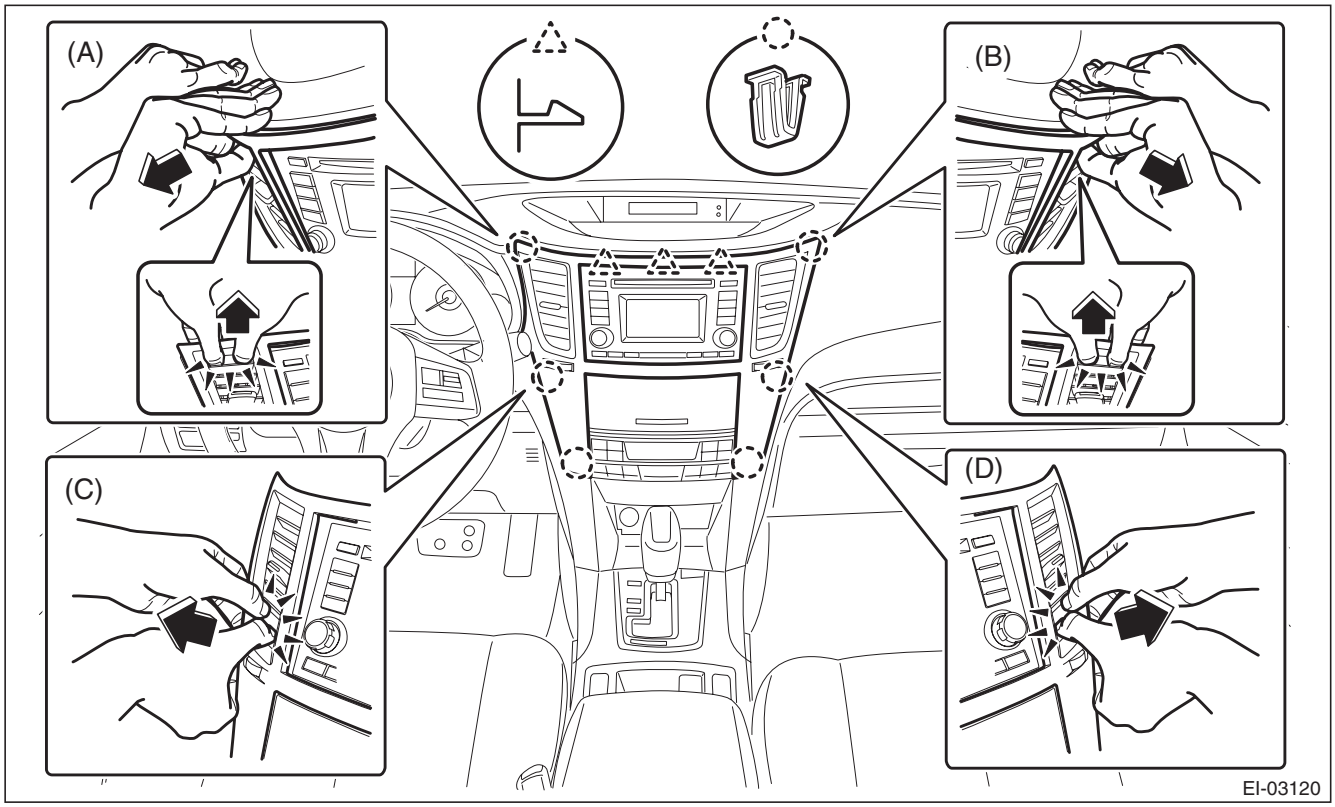

3) Remove the audio assembly.
(1) Remove the left and right screws, and partially pull the audio out from center console.
(2) Disconnect the connectors, and remove the audio assembly.

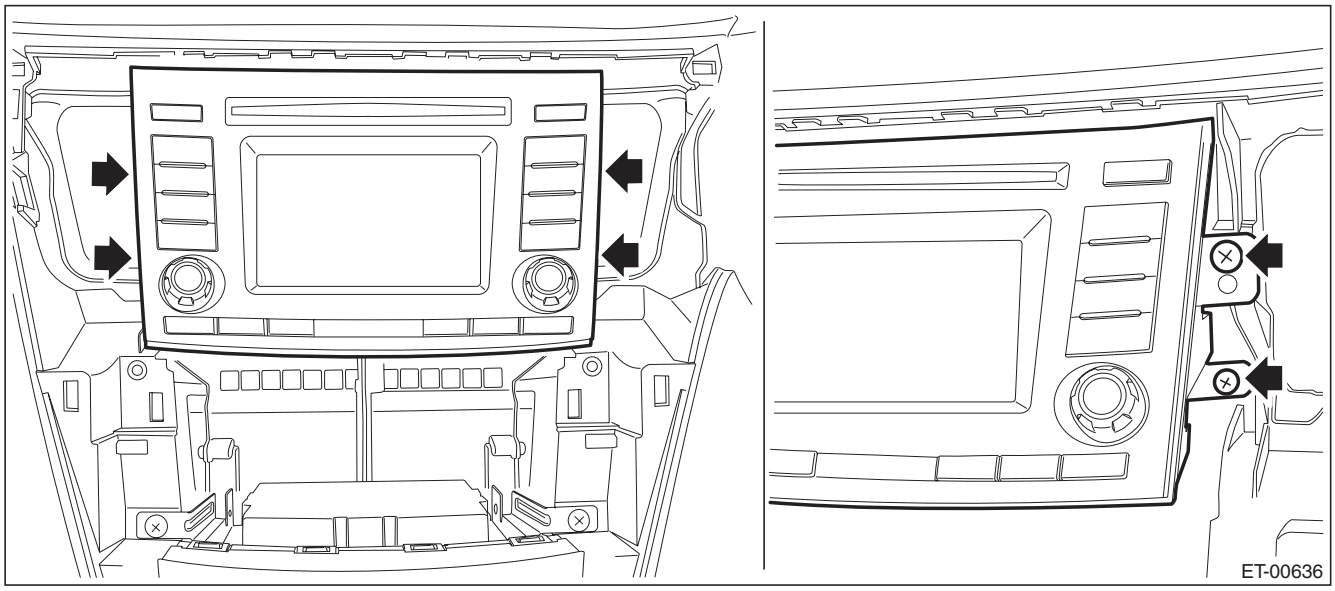

GETtheMANUALS.org

4) Remove the navigation assembly. (model with navigation)
   (1) Remove the left and right screws.
   (2) Disconnect the connectors, and remove the navigation assembly.

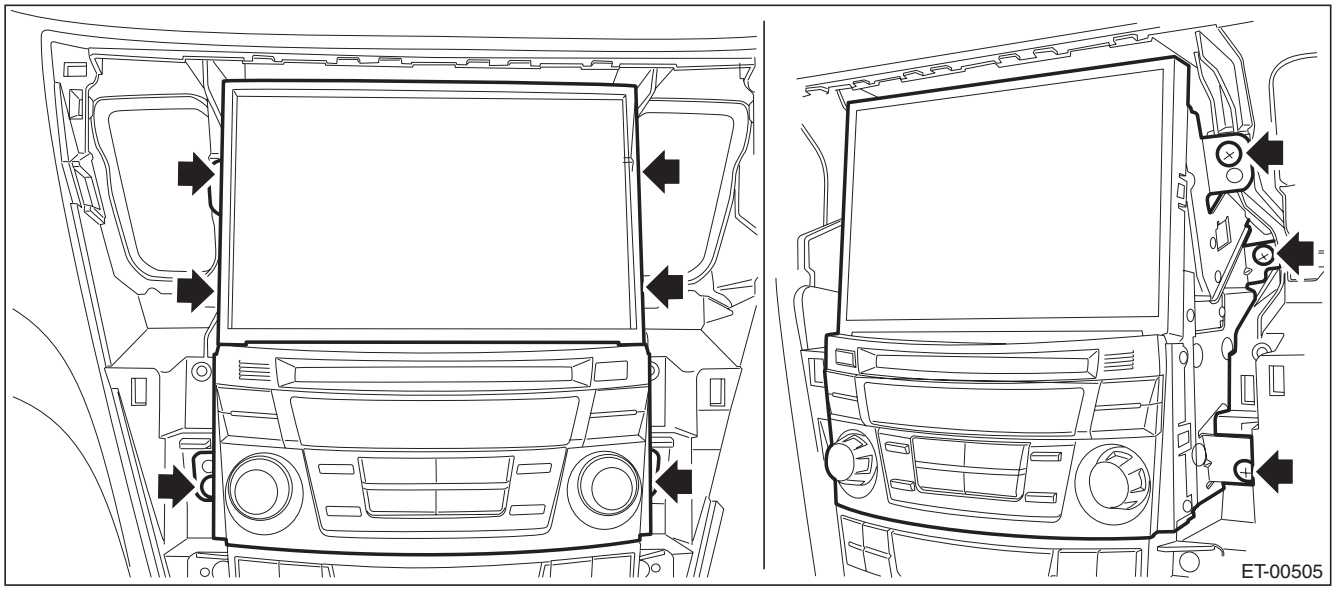

5) Remove the control panel assembly.
   (1) Remove the screws, and pull out the control panel assembly toward you.
   (2) Disconnect the connector, and remove the control panel assembly.

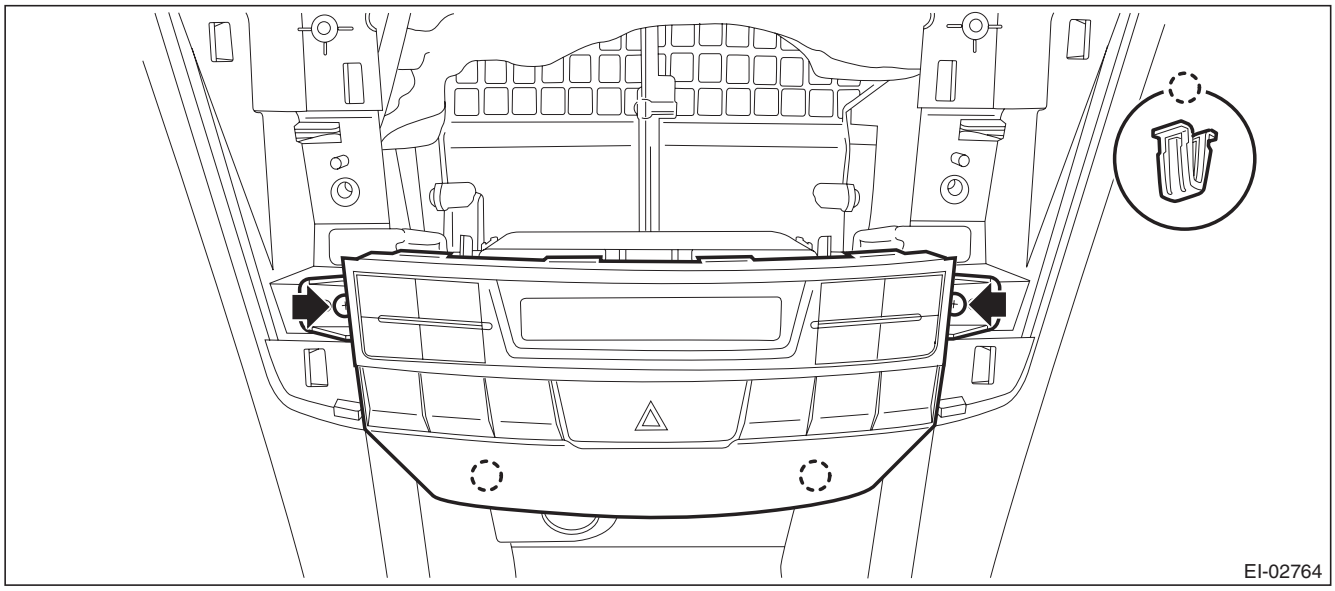

GETtheMANUALS.org

6) Remove the front accessory power supply socket.
   (1) Disconnect the connector and turn the securing cover to remove it.
   (2) Pull the accessory power supply socket out to remove.

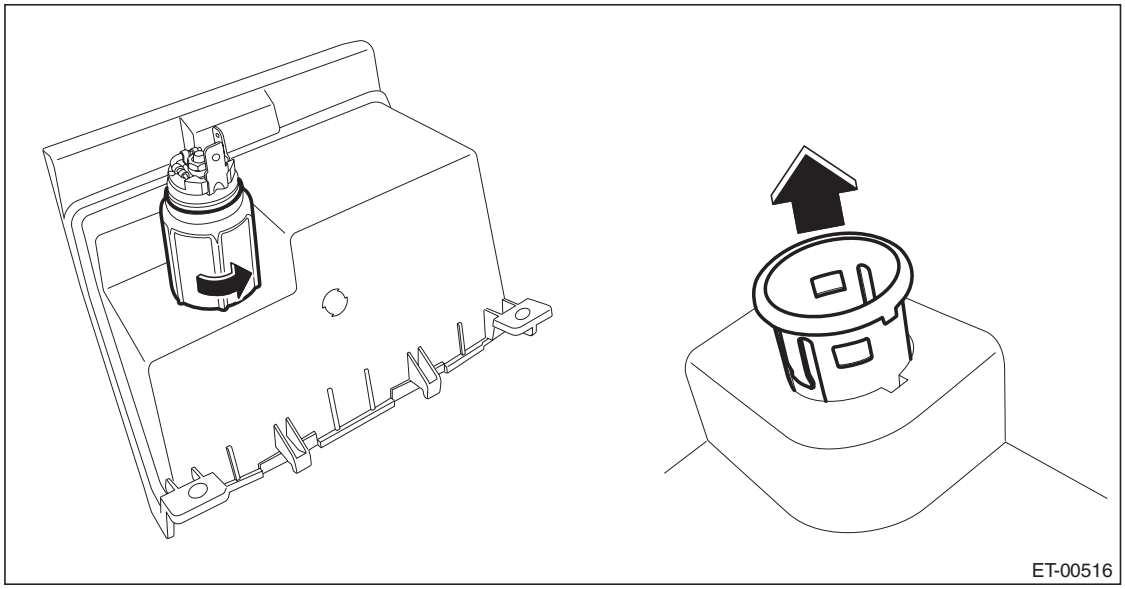

C: INSTALLATION

Install each part in the reverse order of removal.

GETtheMANUALS.org

16. Rear Accessory Power Supply Socket

A: WIRING DIAGRAM

Refer to “Rear Accessory Power Supply Socket System” in the wiring diagram. <Ref. to WI-211, WIRING DIAGRAM, Rear Accessory Power Supply Socket System.>

B: REMOVAL

1) Remove the console front cover assembly.

- MT model
  1. Remove the shift knob.
  2. Release the clips and claws, then pull up the console front cover assembly.

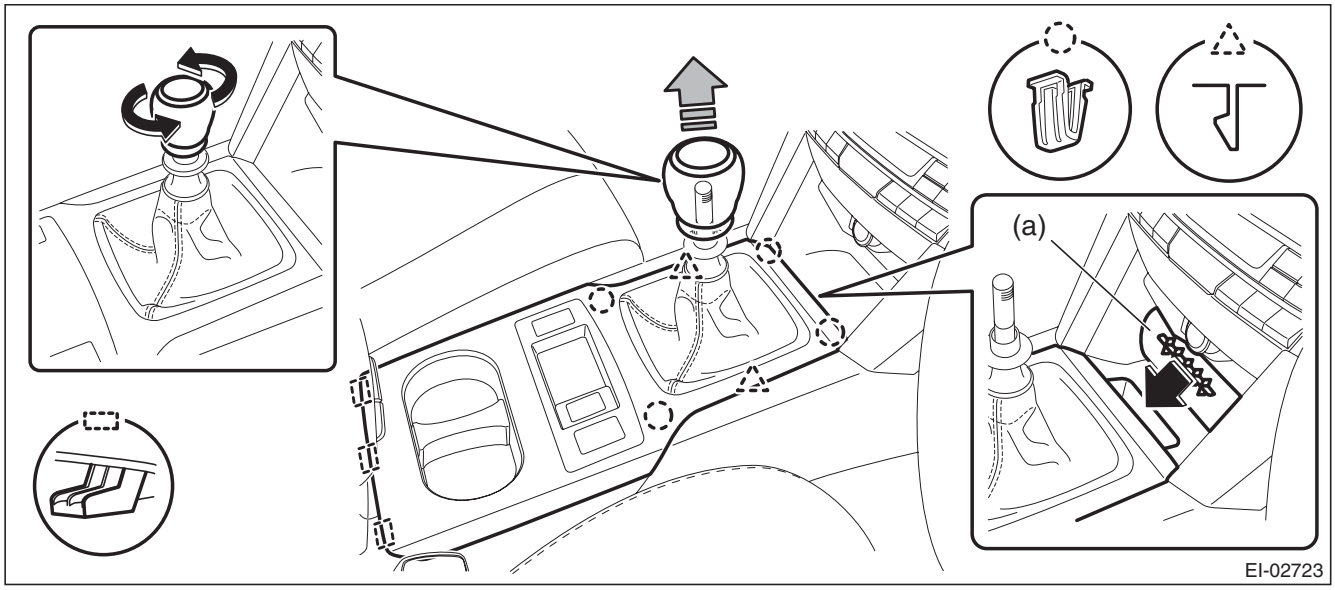

NOTE:
Turn over the front center pocket mat (a) and pull up the console front cover from the slit.

3. Disconnect the harness connector and remove the console front cover assembly.

GETtheMANUALS.org

- AT/CVT model
  1. Remove the select lever knob.
     a. Lower the cover grip AT.
     b. Remove the clamp grip pin, then remove the select lever knob.
  2. Release the clips and claws, then pull up the console front cover assembly.

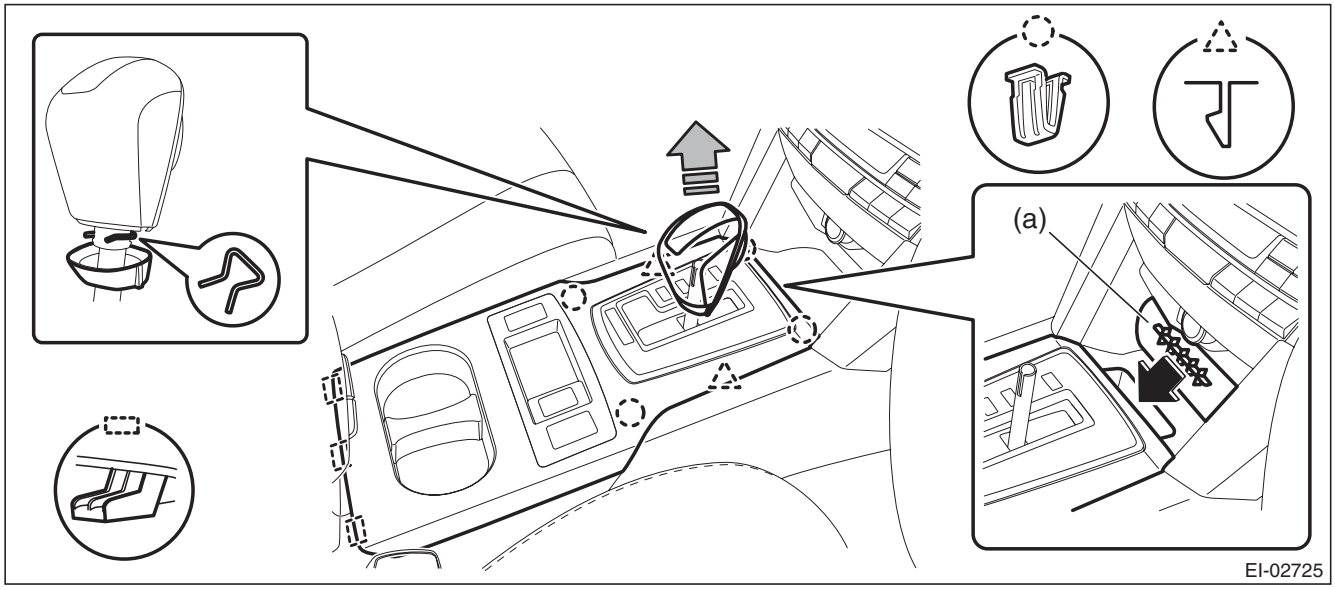

NOTE:
Turn over the front center pocket mat (a) and pull up the console front cover from the slit.

  3. Disconnect the harness connector and remove the console front cover assembly.

2) Remove the console front side cover assembly.
   (1) Remove the screws and release the clips (A) to (D) in order.
   (2) Remove the console front side cover assembly by pulling it up.

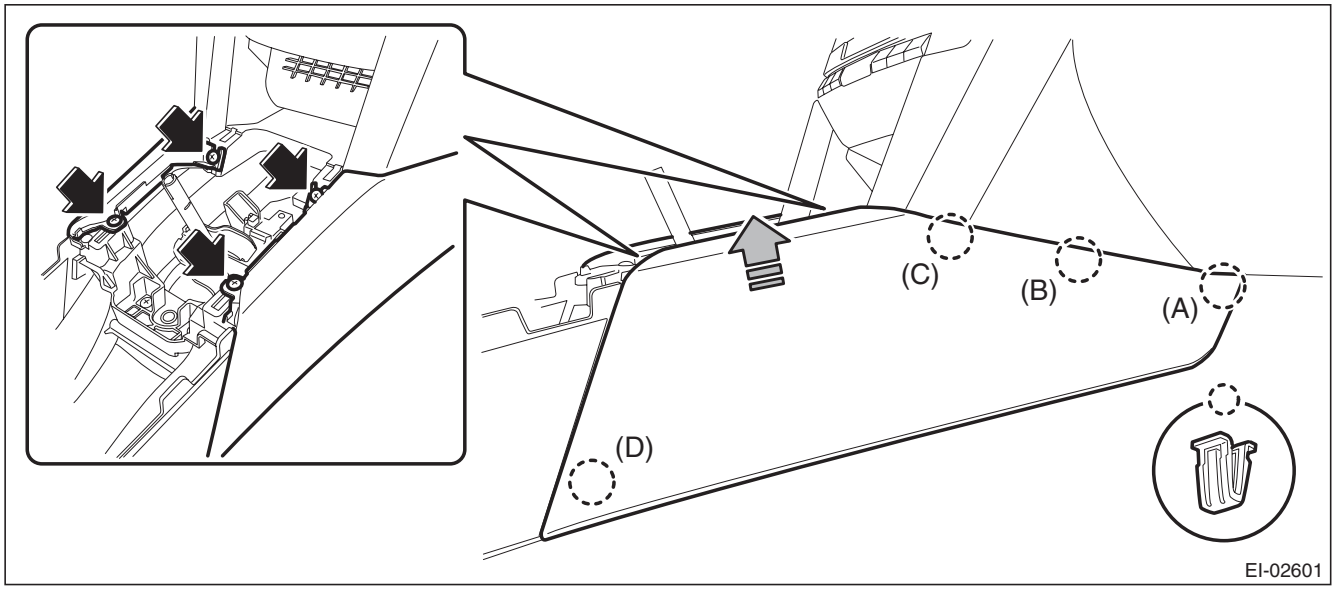

3) Remove the console box assembly.
   (1) Move the seat forward, and remove the bolts after detaching the left and right caps.

NOTE:
For a model with power seat, connect the battery ground cable and move the seat. Then, disconnect the battery ground cable again and wait for 60 seconds at least before restarting the work.

GETtheMANUALS.org

(2) Remove the screws, disconnect the harness connector and remove the console box assembly.

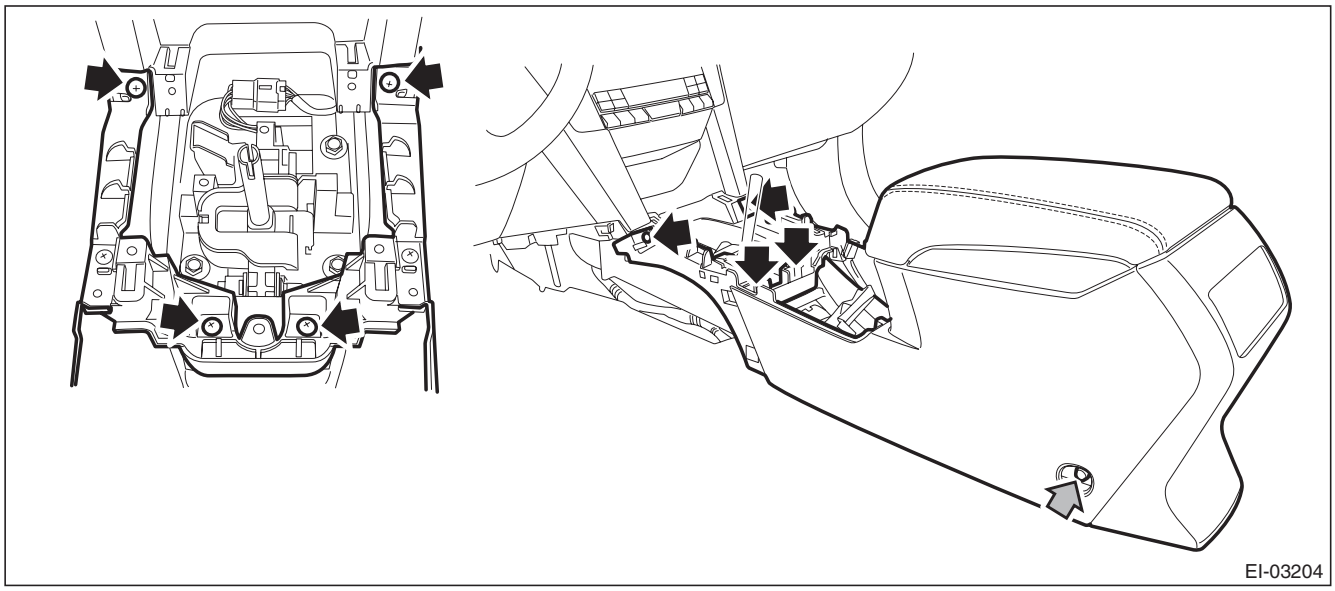

4) Remove the front accessory power supply socket.
   (1) Remove the claws (two) in accessory power supply socket.
   (2) Pull the accessory power supply socket out to remove.

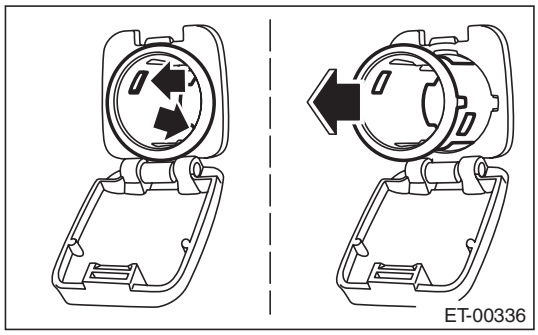

C: INSTALLATION

Install each part in the reverse order of removal.

Tightening torque:
Center console: 6.5 N·m (0.66 kgf-m, 4.8 ft-lb)

GETtheMANUALS.org

17. AUX Input Terminal

A: REMOVAL

1. AUX INPUT TERMINAL

1) Disconnect the ground cable from battery.
2) Remove the console front cover assembly.

- MT model
  1. Remove the shift knob.
  2. Release the clips and claws, then pull up the console front cover assembly.

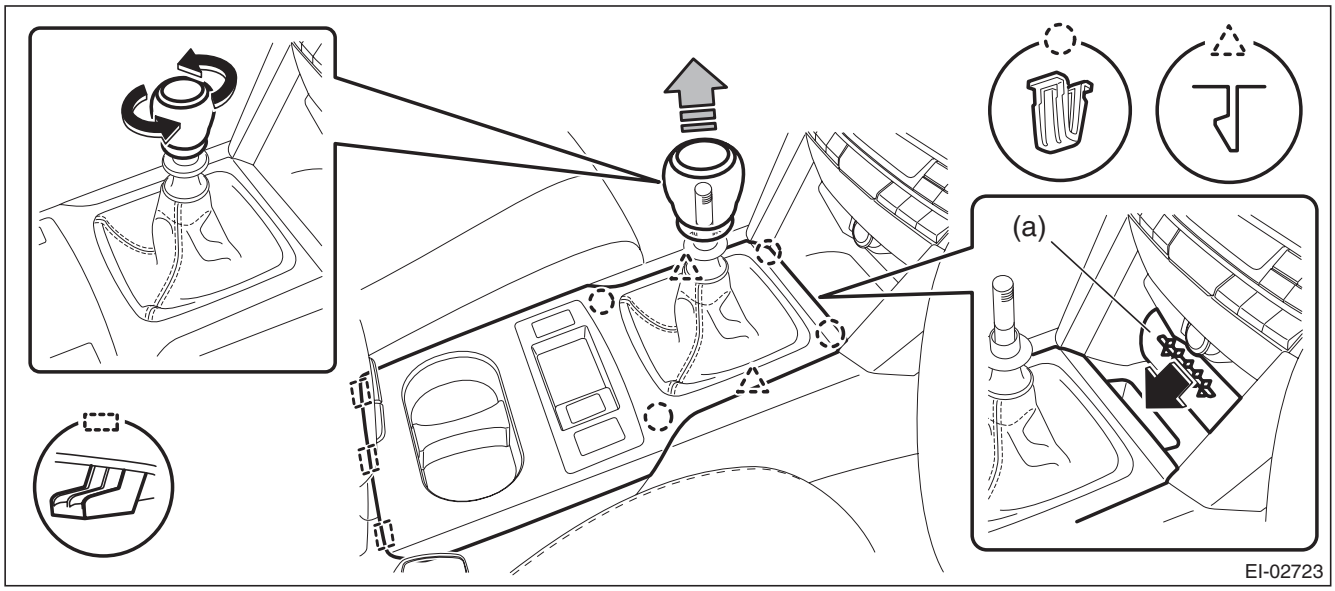

NOTE:
Turn over the front center pocket mat (a) and pull up the console front cover from the slit.

  3. Disconnect the harness connector and remove the console front cover assembly.

- AT/CVT model
  1. Remove the select lever knob.
     a. Lower the cover grip AT.
     b. Remove the clamp grip pin, then remove the select lever knob.
  2. Release the clips and claws, then pull up the console front cover assembly.

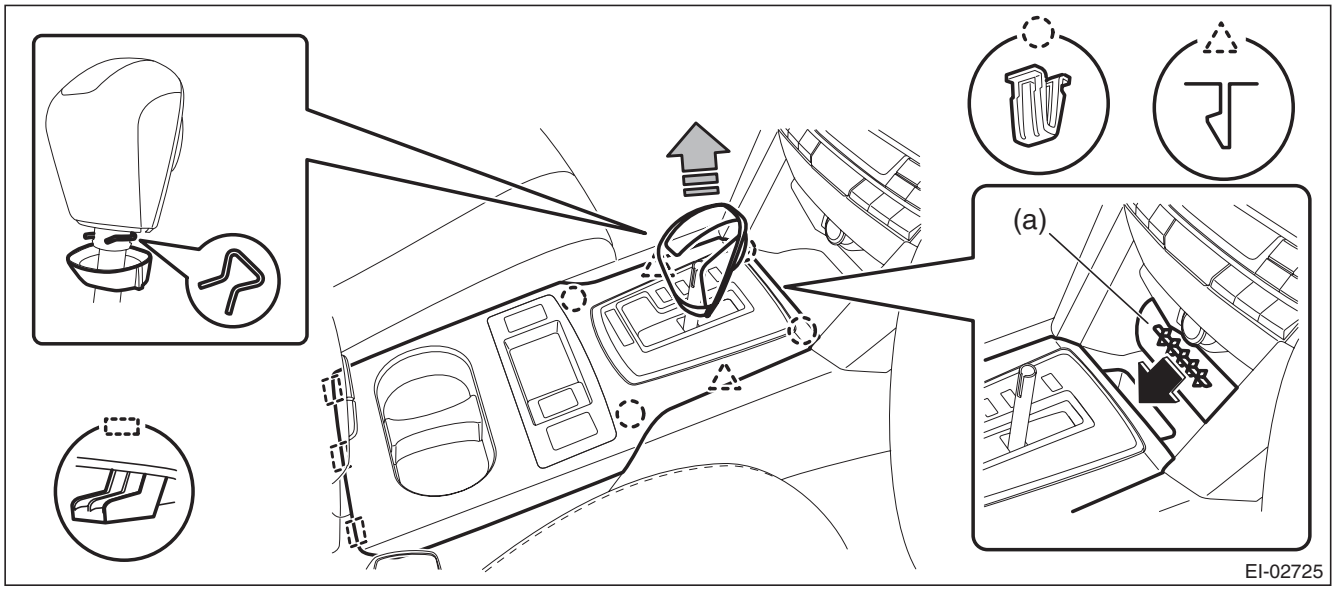

GETtheMANUALS.org

NOTE:
Turn over the front center pocket mat (a) and pull up the console front cover from the slit.

3. Disconnect the harness connector and remove the console front cover assembly.

3) Remove the console front side cover assembly.
   (1) Remove the screws and release the clips (A) to (D) in order.
   (2) Remove the console front side cover assembly by pulling it up.

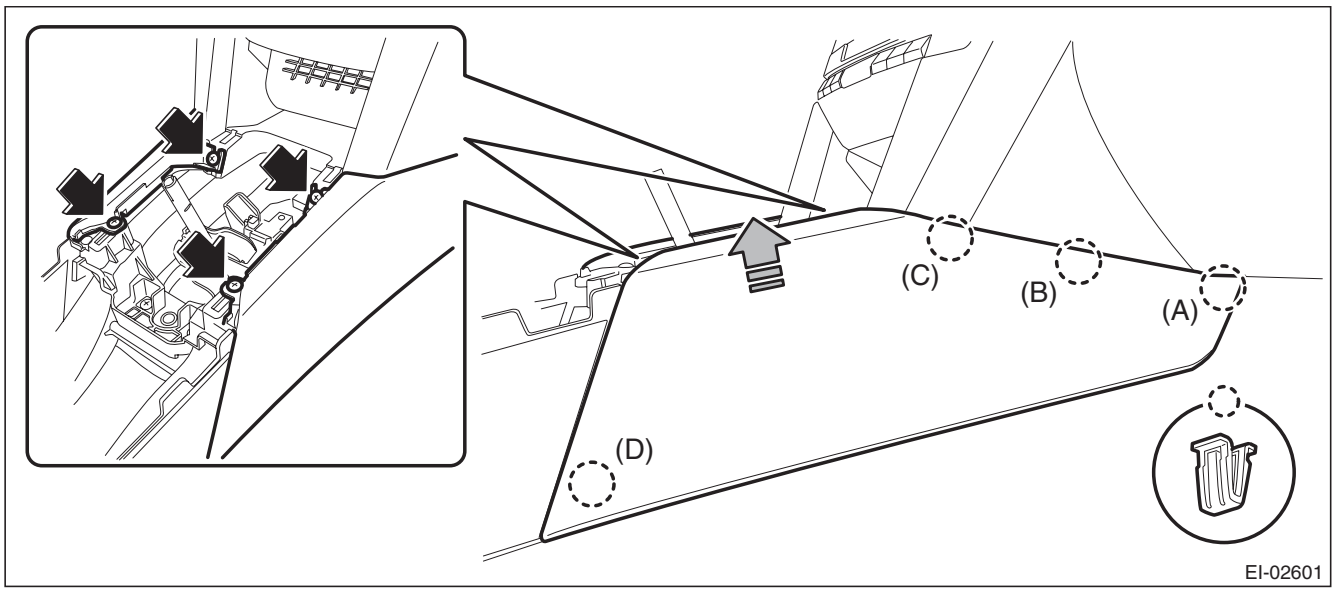

4) Remove the console box assembly.
   (1) Move the seat forward, and remove the bolts after detaching the left and right caps.

NOTE:
For a model with power seat, connect the battery ground cable and move the seat. Then, disconnect the battery ground cable again and wait for 60 seconds at least before restarting the work.

   (2) Remove the screws, disconnect the harness connector and remove the console box assembly.

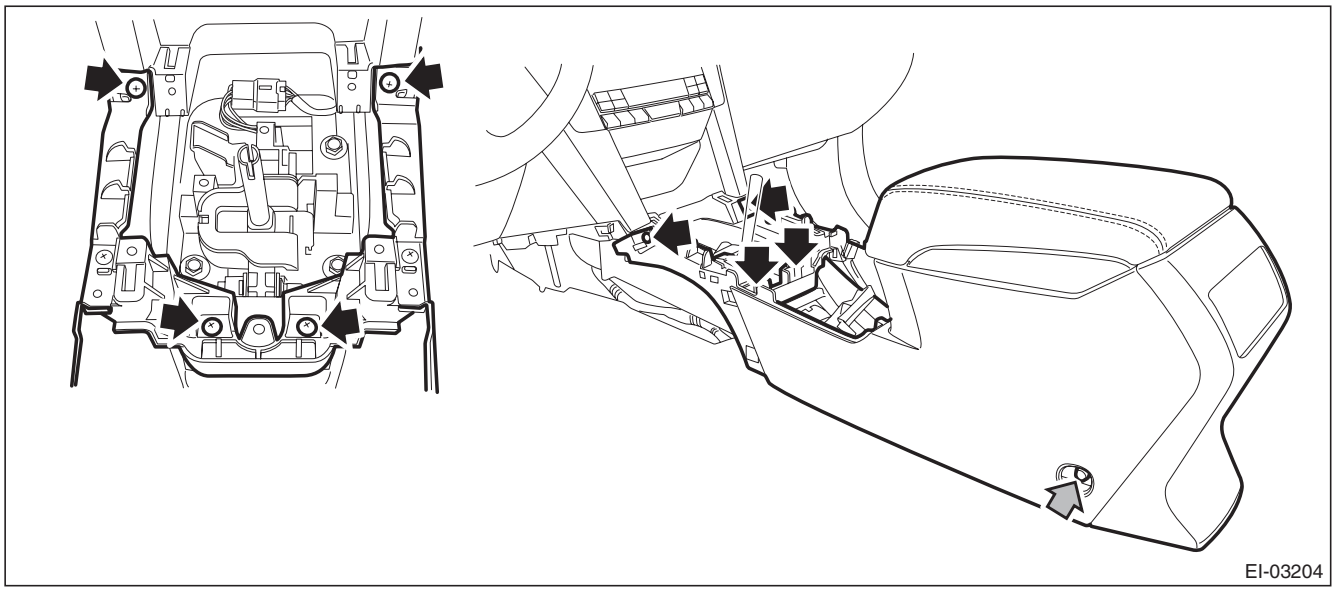

GETtheMANUALS.org

5) Remove the AUX input terminal.
   (1) Remove the claws at four locations.
   (2) Remove the AUX input terminal assembly by pushing it into the console box.

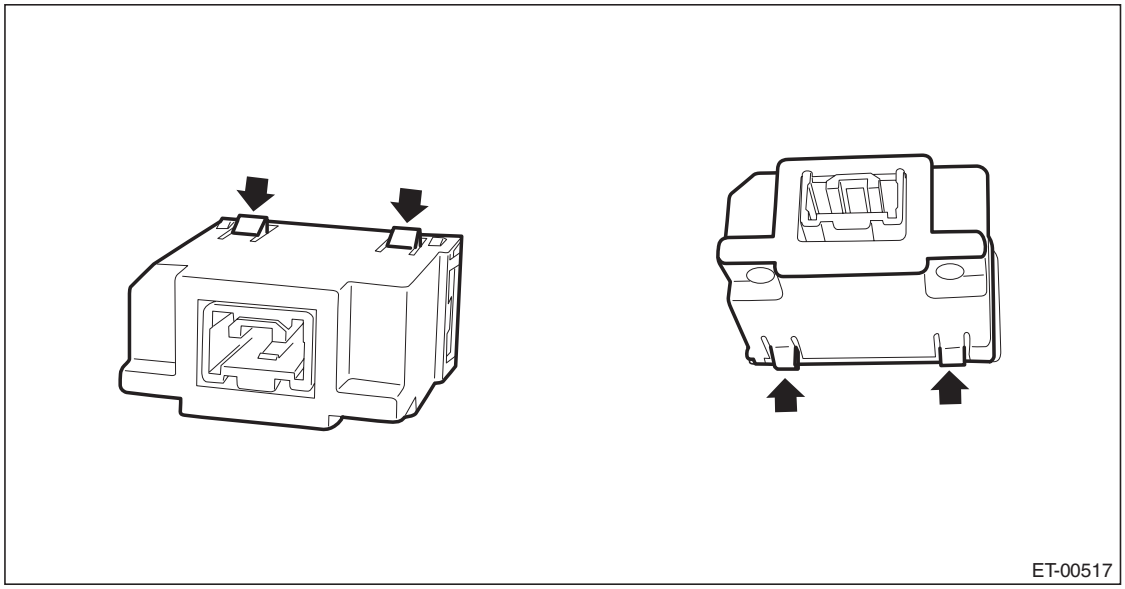

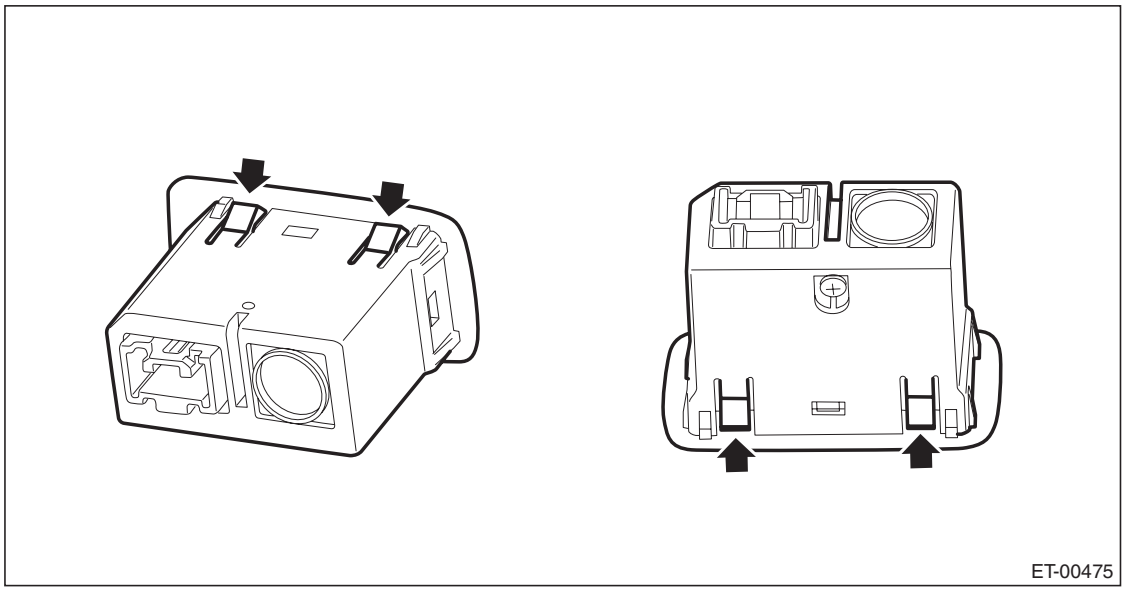

GETtheMANUALS.org

2. AUX TERMINAL HARNESS

1) Disconnect the ground cable from battery.
2) Remove the console front cover assembly.

- MT model
  1. Remove the shift knob.
  2. Release the clips and claws, then pull up the console front cover assembly.

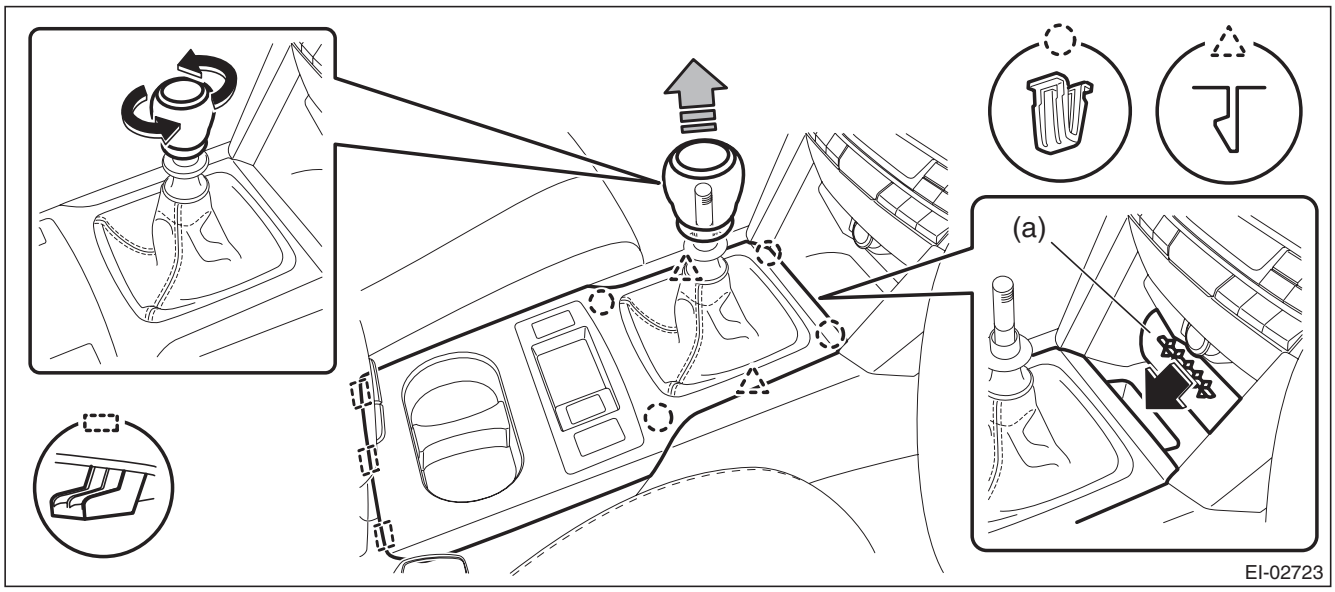

NOTE:
Turn over the front center pocket mat (a) and pull up the console front cover from the slit.

  3. Disconnect the harness connector and remove the console front cover assembly.

- AT/CVT model
  1. Remove the select lever knob.
     a. Lower the cover grip AT.
     b. Remove the clamp grip pin, then remove the select lever knob.
  2. Release the clips and claws, then pull up the console front cover assembly.

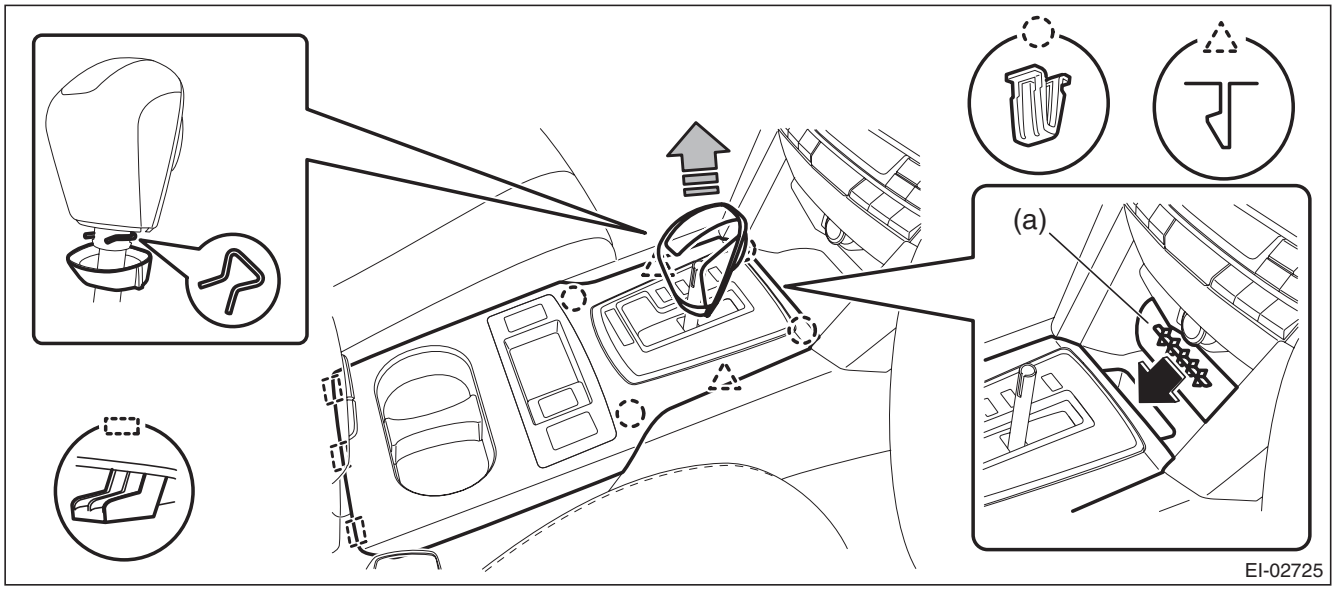

NOTE:
Turn over the front center pocket mat (a) and pull up the console front cover from the slit.

  3. Disconnect the harness connector and remove the console front cover assembly.

GETtheMANUALS.org

3) Remove the console front side cover assembly LH.
   (1) Remove the screws and release the clips (A) to (D) in order.
   (2) Remove the console front side cover assembly by pulling it up.

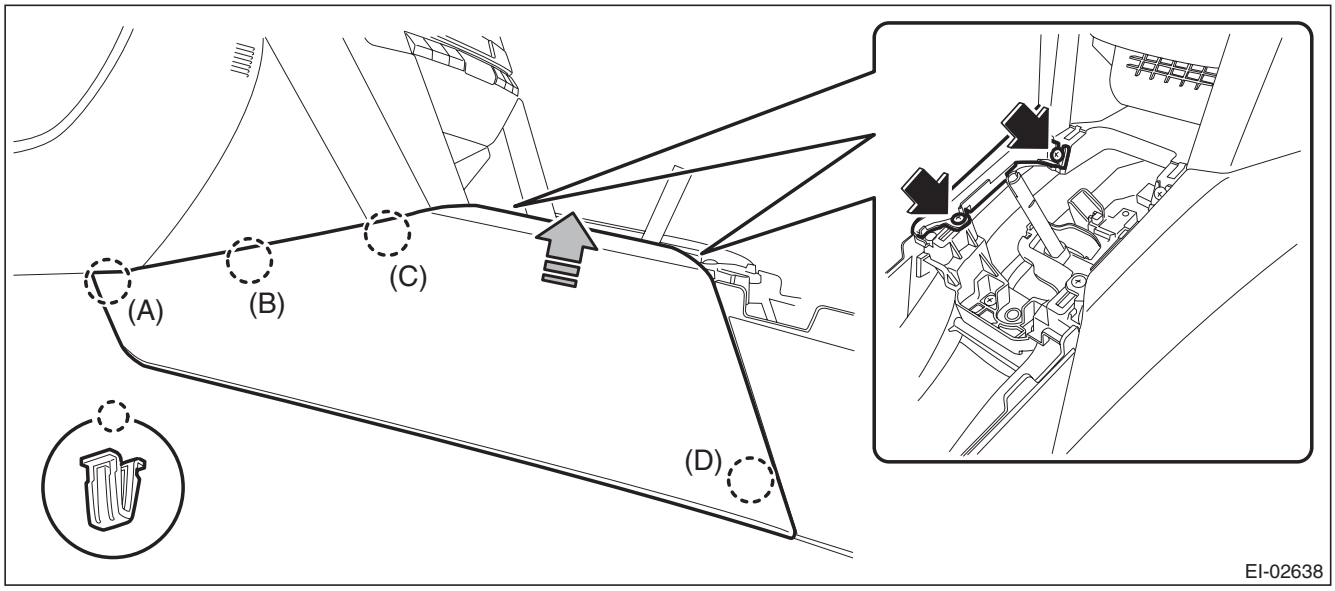

4) Remove the center panel assembly.

CAUTION:
Do not put your finger on the fin of the air vent grille. Doing so may damage the fin.
   (1) Attach the protective tape (a) to the meter visor.

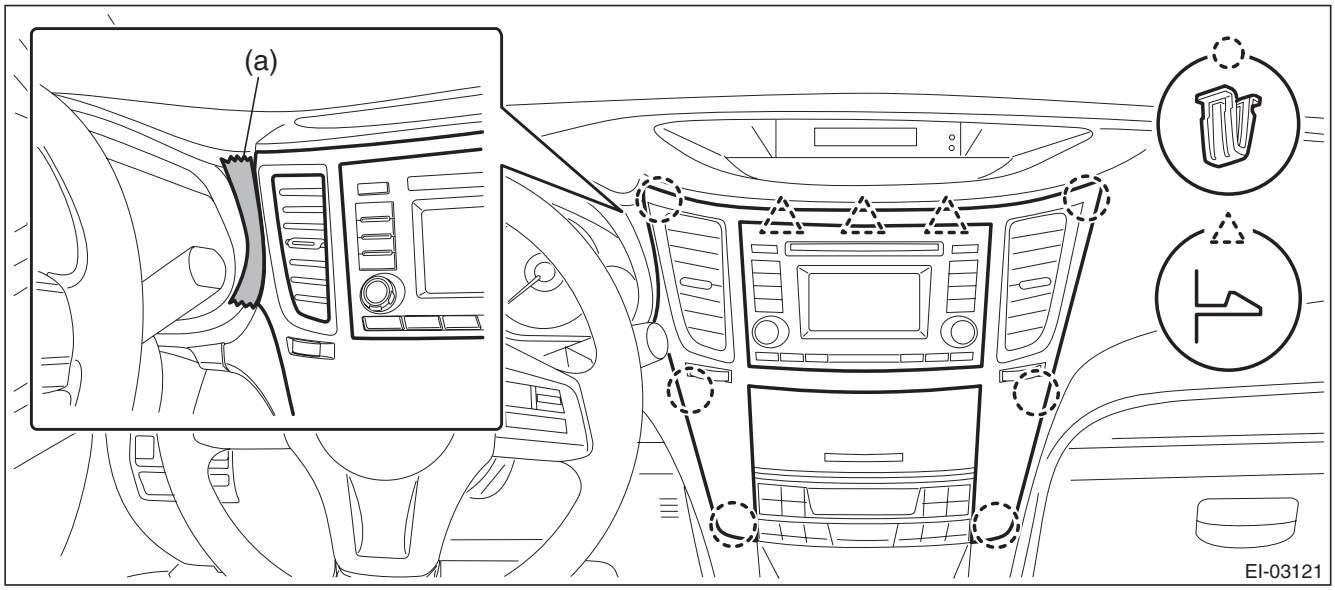

   (2) Insert a finger into the air vent grille and release the left and right clips at the top of the center panel. (A), (B)
   (3) Insert a finger into the air vent grille and release the left and right clips at the center of the center panel. (C), (D)

GETtheMANUALS.org

(4) Release the clips at the bottom of the center panel and remove the center panel assembly.

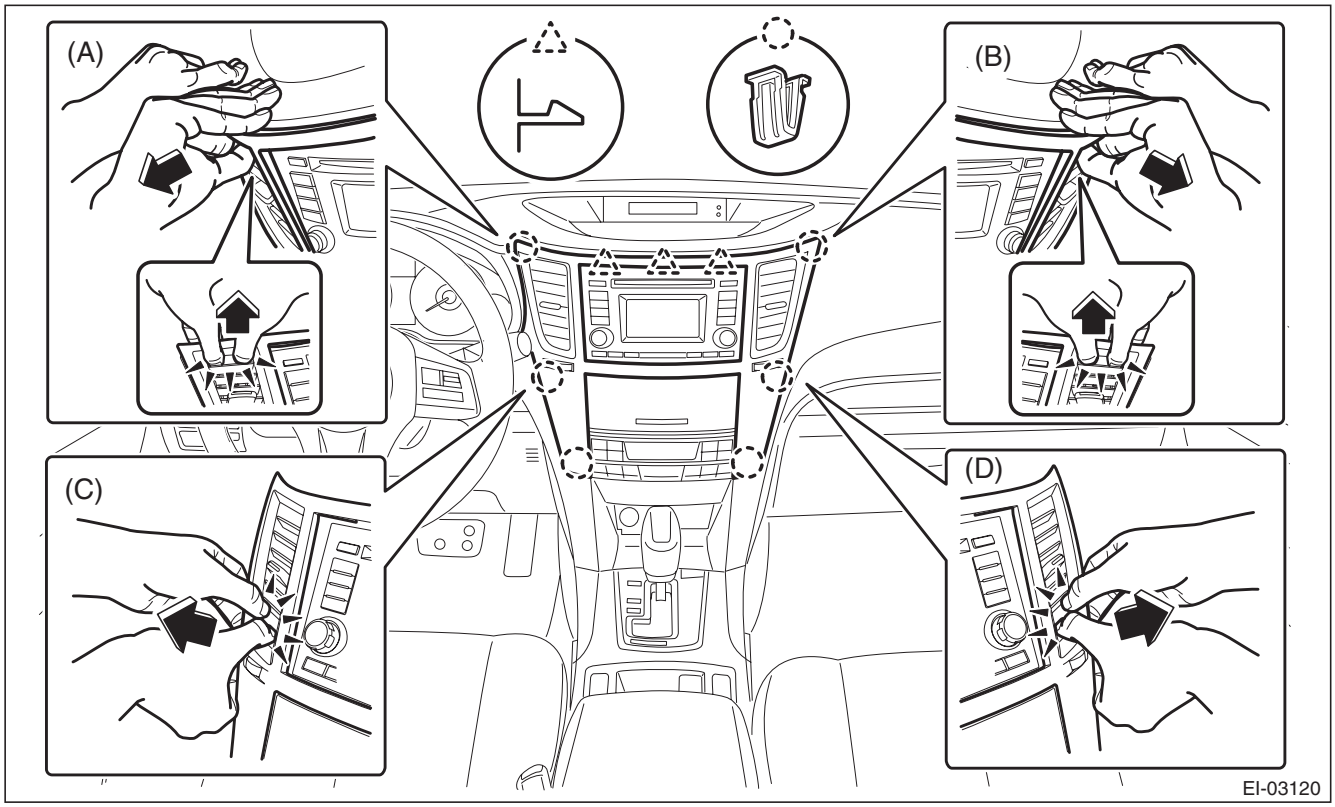

5) Remove the audio assembly.
(1) Remove the left and right screws, and partially pull the audio out from center console.
(2) Disconnect the connectors, and remove the audio assembly.

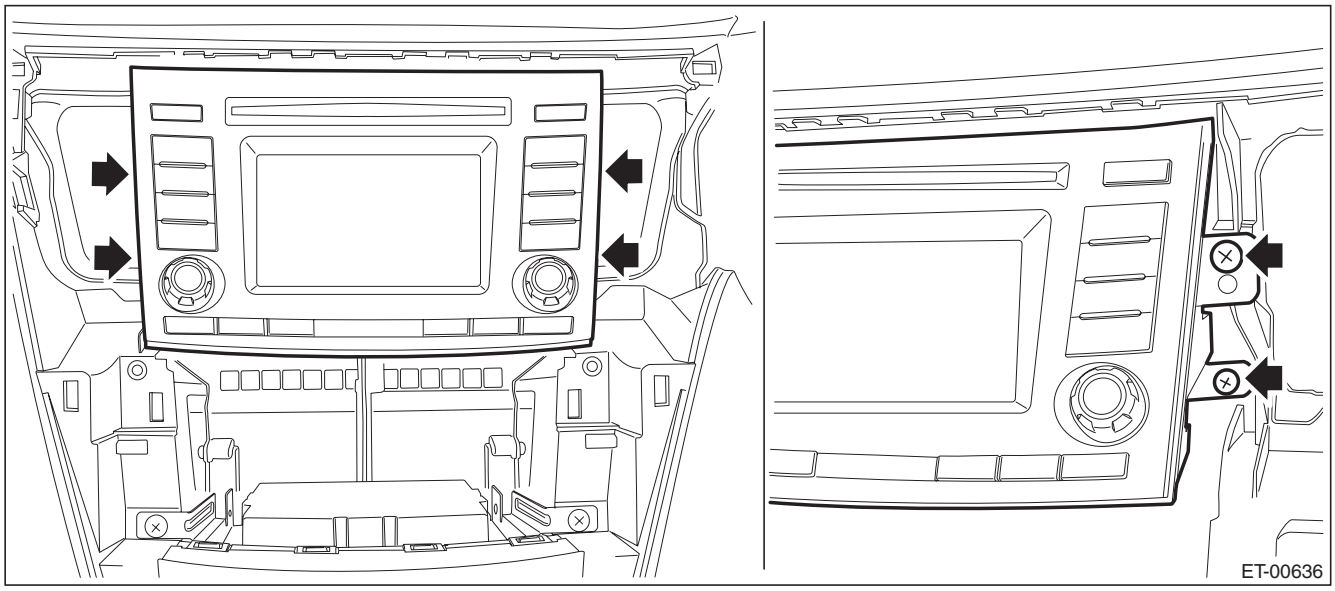

GETtheMANUALS.org

6) Remove the navigation assembly. (model with navigation)
   (1) Remove the left and right screws.
   (2) Disconnect the connectors, and remove the navigation assembly.

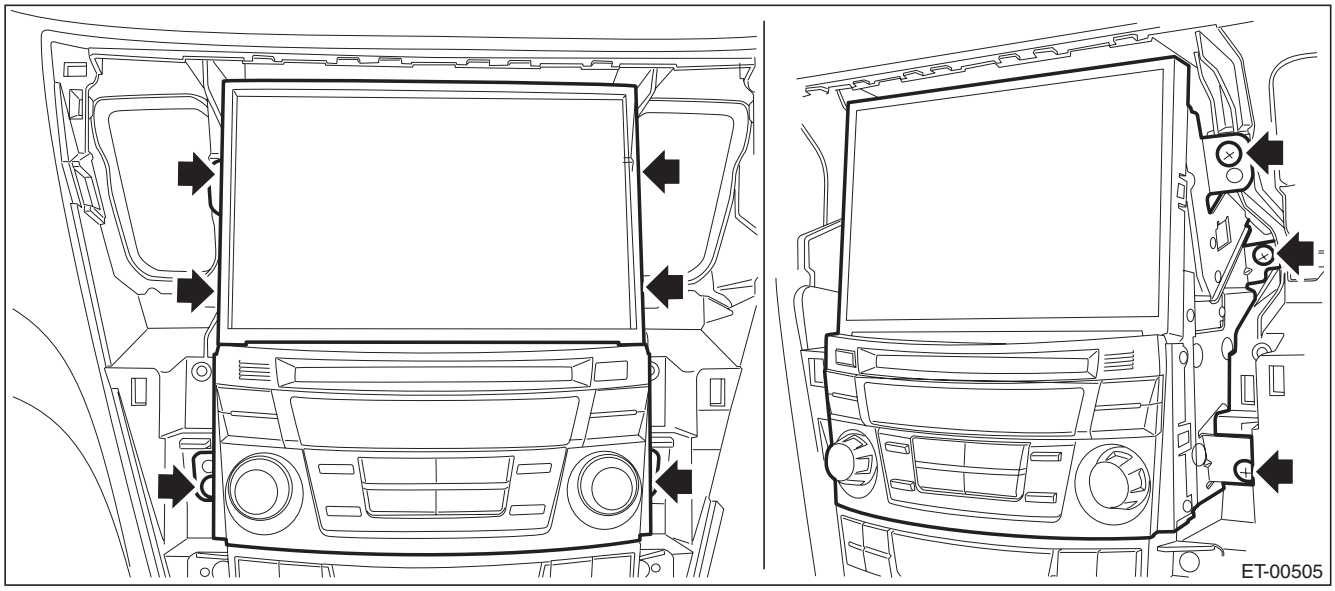

7) Remove the AUX terminal harness.
   (1) Remove the harness clamp.
   (2) Disconnect the connector from the AUX input terminal assembly, and remove the AUX terminal harness.

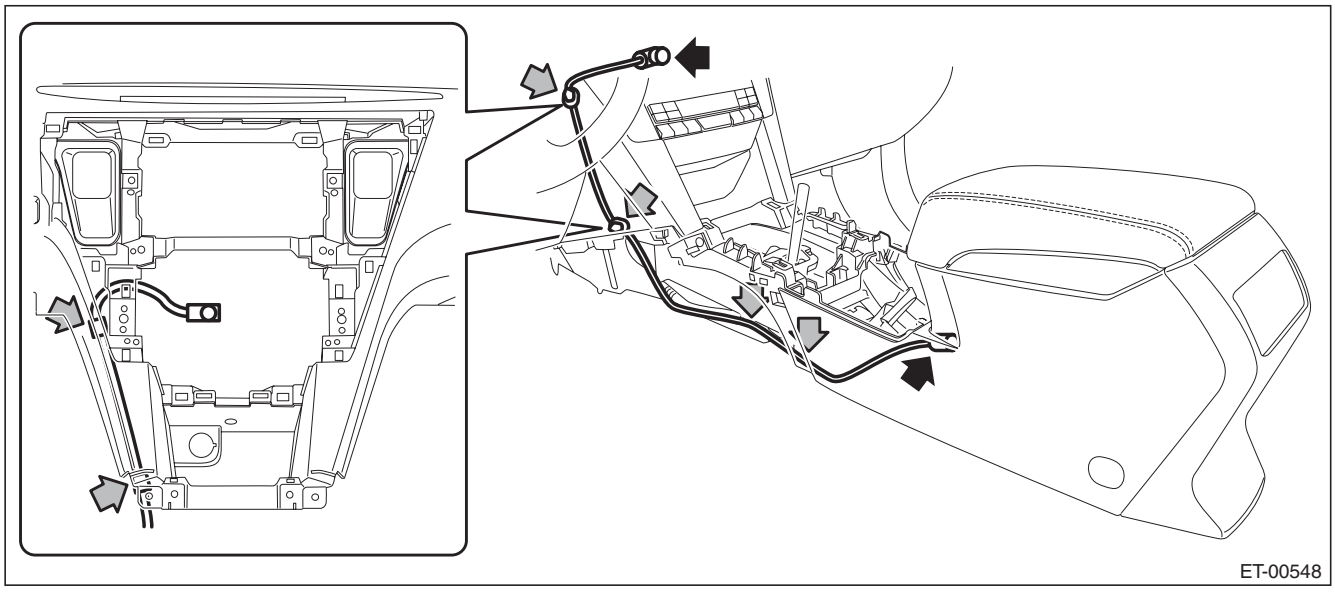

B: INSTALLATION

Install each part in the reverse order of removal.

Tightening torque:
Center console: 6.5 N·m (0.66 kgf-m, 4.8 ft-lb)

GETtheMANUALS.org

GETtheMANUALS.org

COMMUNICATION SYSTEM

COM

		Page
1.	General Description	2
2.	Relay and Fuse	3
3.	Horn System	4
4.	Horn	5
5.	Horn Switch	11

GETtheMANUALS.org

1. General Description

A: COMPONENT

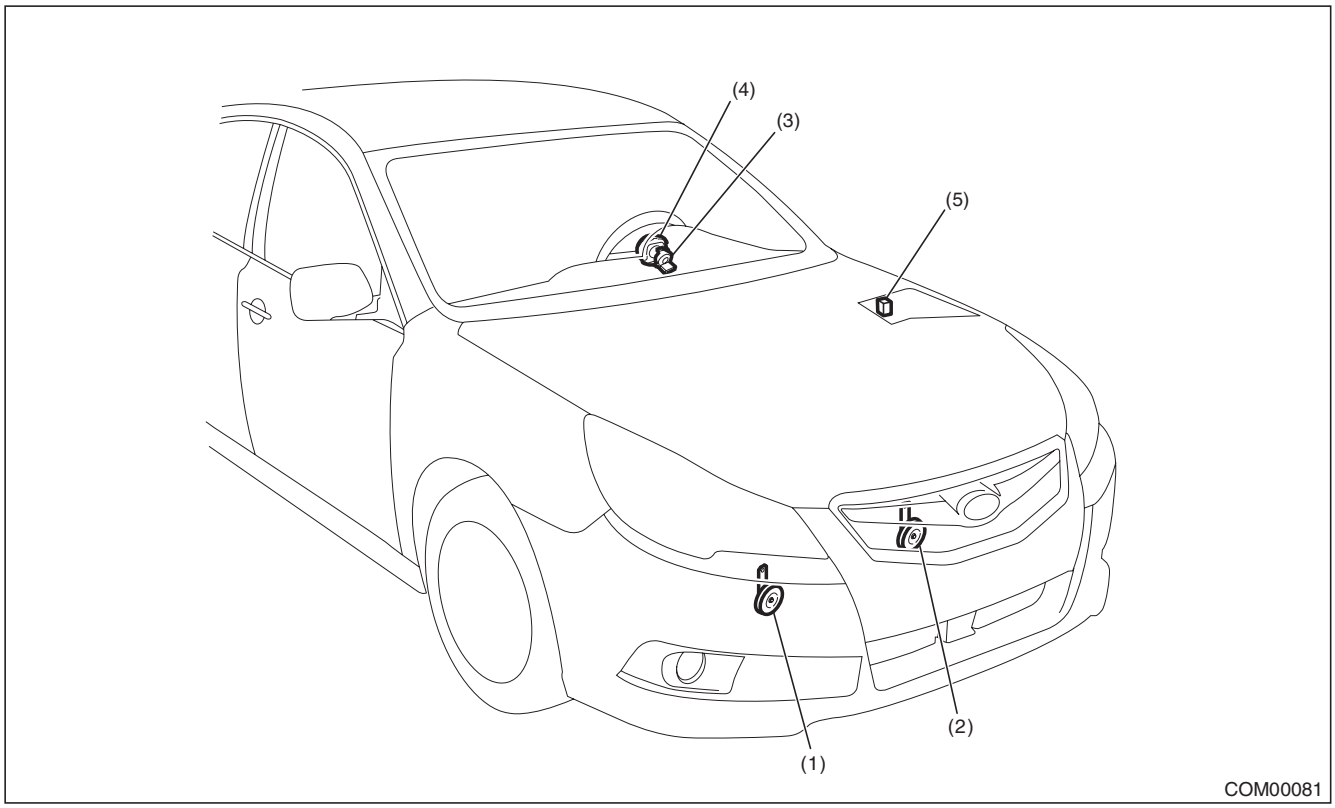

(1)	Hi pitch side horn	(3)	Roll connector	(5)	Horn relay
(2)	Lo pitch side horn	(4)	Horn switch (driver's airbag module ASSY)		

B: CAUTION

- Before disassembling or reassembling parts, always disconnect the battery ground cable from battery. When replacing the audio, control module and other parts provided with memory functions, record the memory contents before disconnecting the battery ground cable. Otherwise, the memory is cleared.
- Reassemble the parts in the reverse order of disassembly procedure unless otherwise indicated.
- Connect the connectors securely during reassembly.
- After reassembly, make sure that the functional parts operate normally.
- Yellow connectors and harnesses with yellow tapes around them are the connectors and harnesses for the airbag system. Using a tester above such circuits may cause malfunction of airbag system. Follow the cautions for the airbag system in this case. <Ref. to AB-9, CAUTION, General Description.>
- Be careful not to damage the airbag system wiring harness when servicing electrical parts and switches.

C: PREPARATION TOOL

1. GENERAL TOOL

TOOL NAME	REMARKS
Circuit tester	Used for measuring resistance and voltage.

GETtheMANUALS.org

2. Relay and Fuse

A: LOCATION

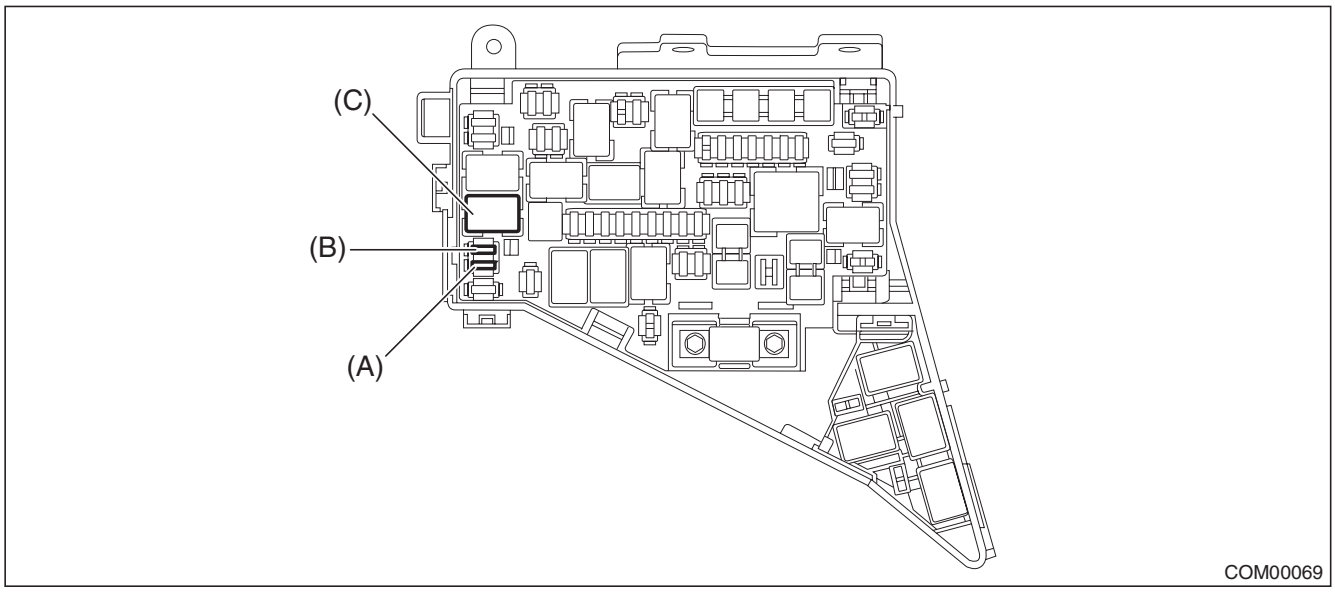

Main fuse box	Fuse 7.5A (Hi pitch (RH) side horn)	(A)
	Fuse 7.5A (Lo pitch (LH) side horn)	(B)
	Horn relay	(C)

NOTE:
For other related fuses, refer to the wiring diagram. <Ref. to WI-15, Power Supply Circuit.>

B: INSPECTION

1. CHECK FUSE.

1) Remove the fuse and check visually.
2) If the fuse is blown out, replace the fuse.

2. CHECK RELAY

1) Check the resistance between relay terminals.

Terminal No.	Inspection conditions	Specification	Circuit
1 — 2	Always	1 MΩ or more	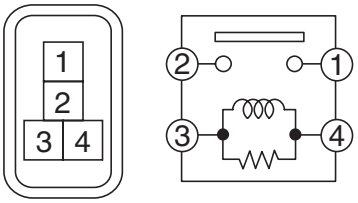
1 — 2	Apply battery voltage between 4 — 3 terminals.	Less than 1 Ω	

2) Replace the relay if the inspection result is not within the standard value.

GETtheMANUALS.org

3. Horn System

A: WIRING DIAGRAM

Refer to “Horn System” in the wiring diagram. <Ref. to WI-175, WIRING DIAGRAM, Horn System.>

B: INSPECTION

Symptoms	Inspection steps
Horn does not sound	1. Check the fuse.
	2. Check the horn relay.
	3. Check the role connector.
	4. Check the horn switch.
	5. Check the horn assembly.
	6. Check the harness.

C: NOTE

For operation procedures of each component of the horn system, refer to the respective section.

- Horn ASSY: <Ref. to COM-5, Horn.>
- Horn switch: <Ref. to COM-11, Horn Switch.>

GETtheMANUALS.org

4. Horn

A: REMOVAL

1) Disconnect the ground cable from battery.
2) Remove the bumper face assembly.
   (1) Remove the clips, turn over the front mud guard, and disconnect the fog light connector. (Model with fog light)

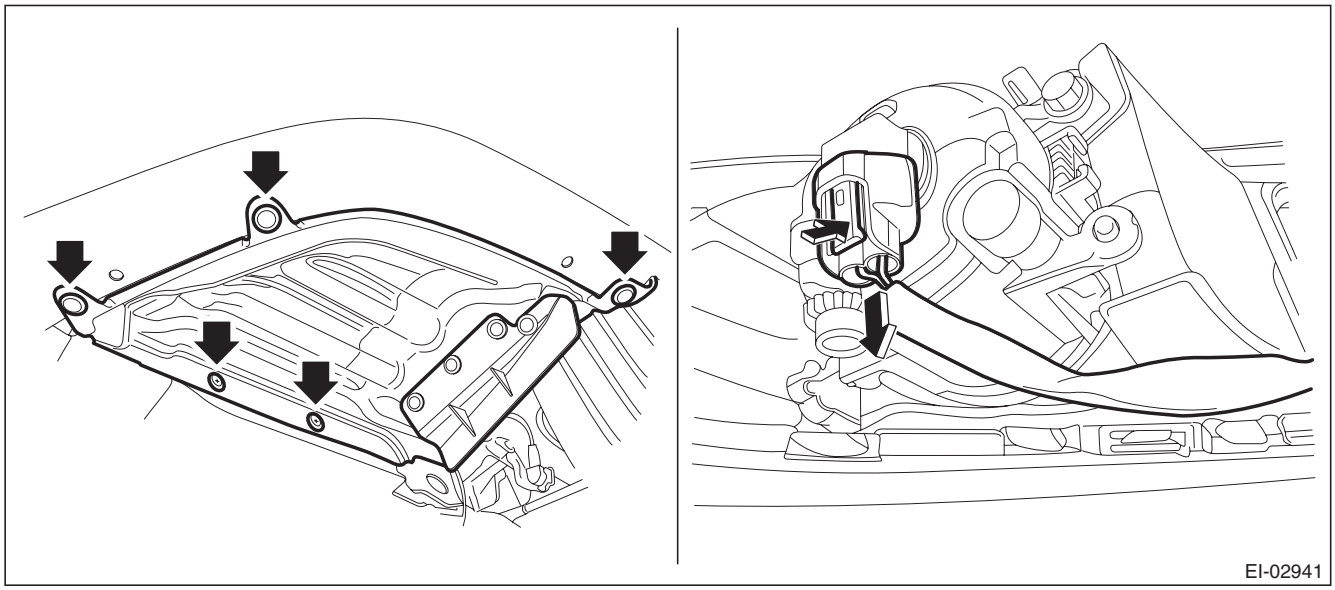

   (2) Remove the clips at the upper side of the bumper.
   (3) Remove the clips from the fender.

GETtheMANUALS.org

(4) Remove the clips at the lower side of bumper.

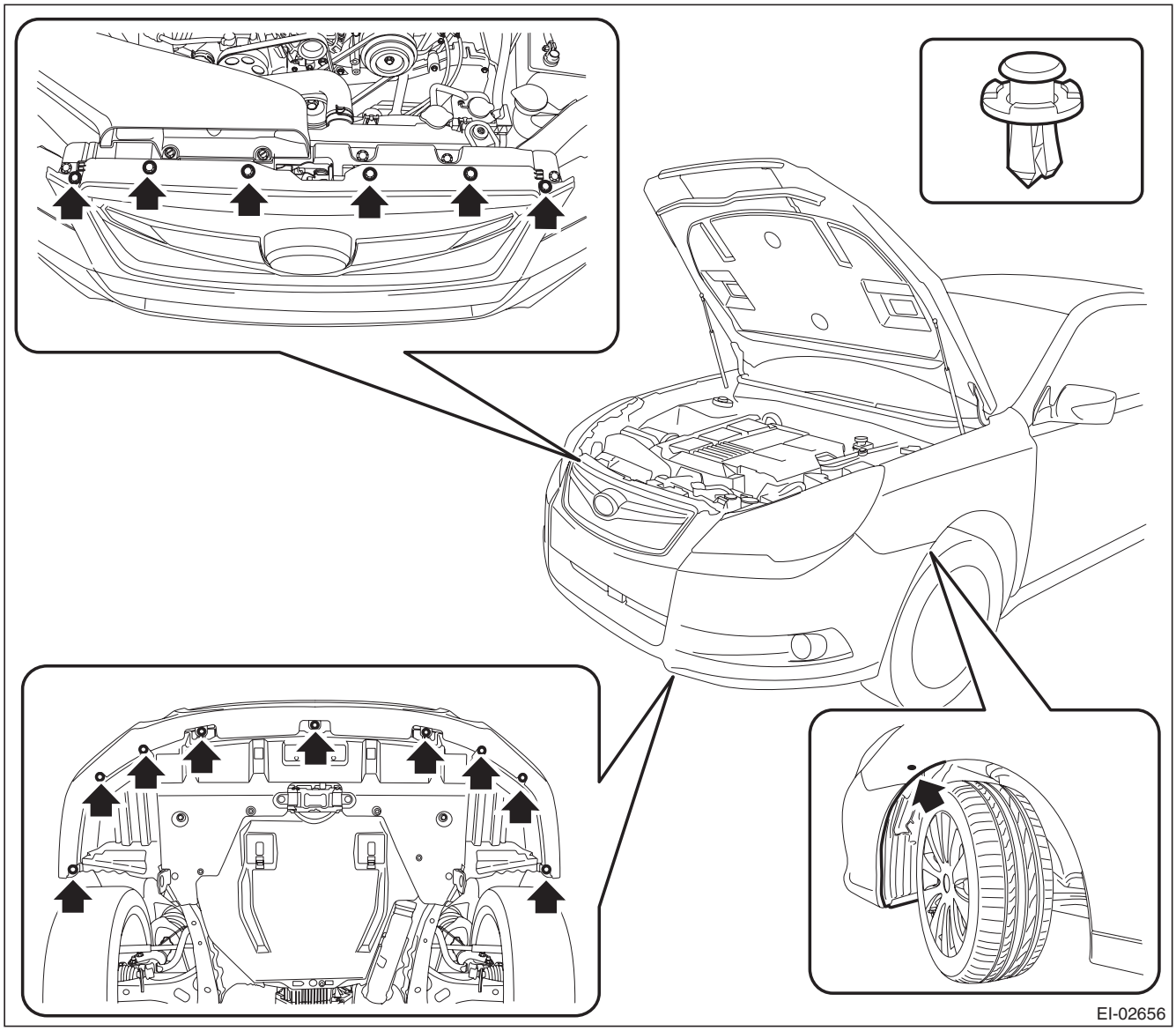

GETtheMANUALS.org

(5) Detach the flange section on the bumper face side from the bracket side front UPR.

CAUTION:
Do not pull forcibly. It may damage the flange sections of the bumper face.

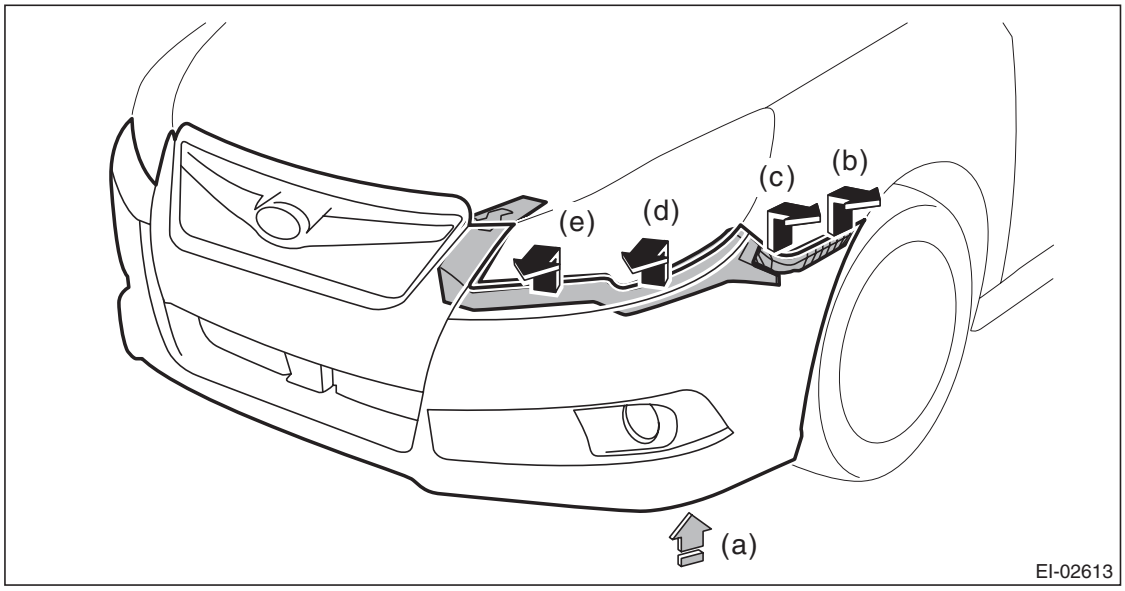

NOTE:
Pushing up the lower side (a) of the fog light, remove from (b) to (e).
Detach the opposite side in the same manner.
3) Remove the clips and remove the air intake duct.

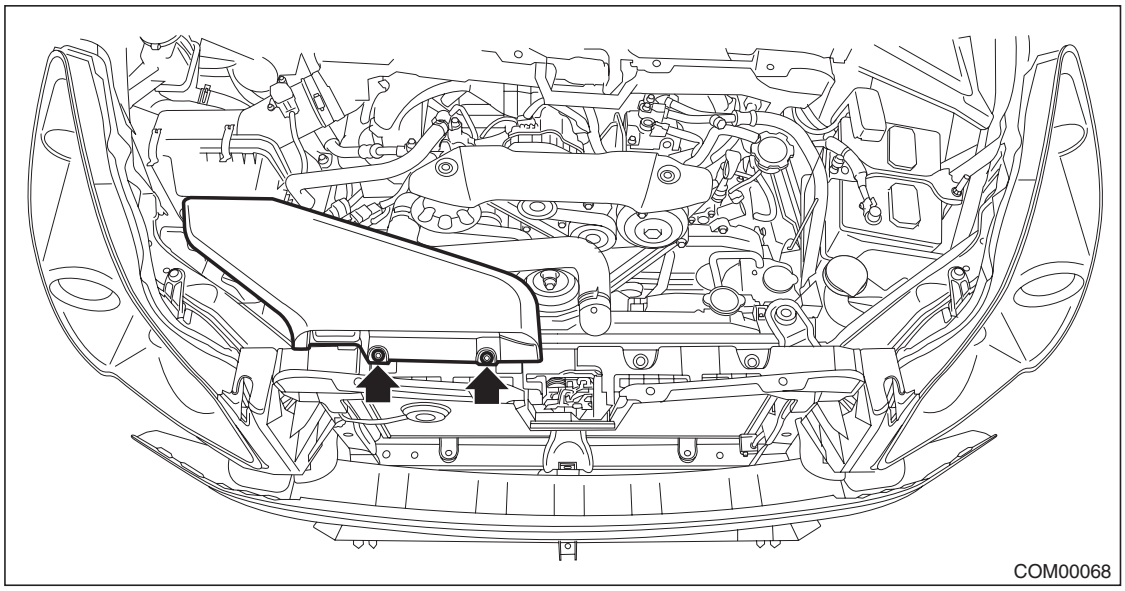

GETtheMANUALS.org

4) Remove the clips and remove the grille bracket.

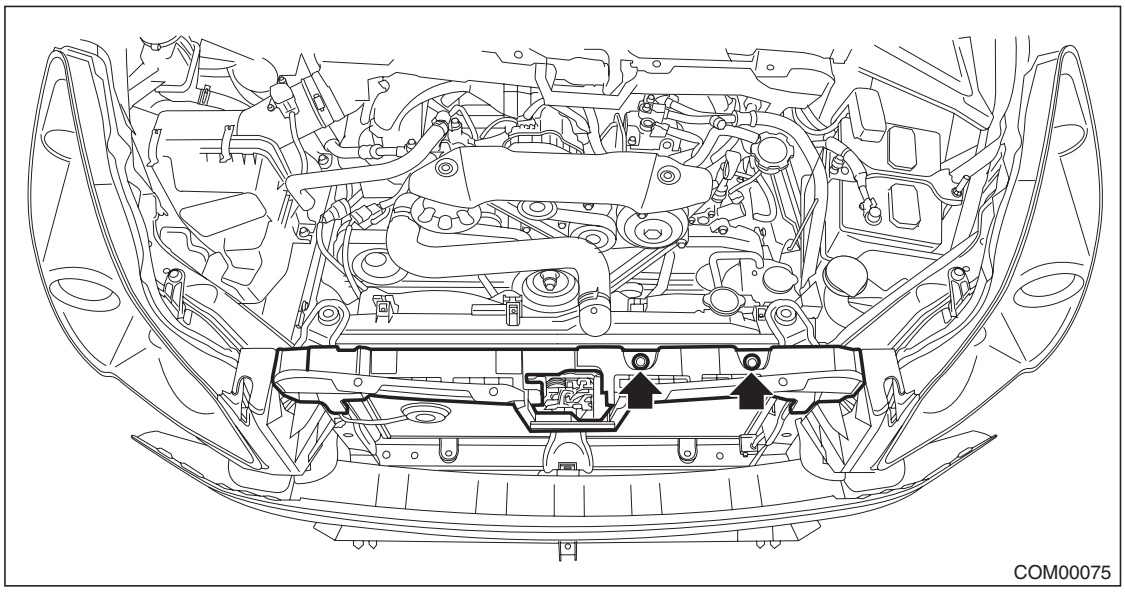

5) Remove the Lo pitch side horn.
   (1) Disconnect the connector.
   (2) Remove the horn bracket mounting bolt, and remove the Lo pitch side horn.

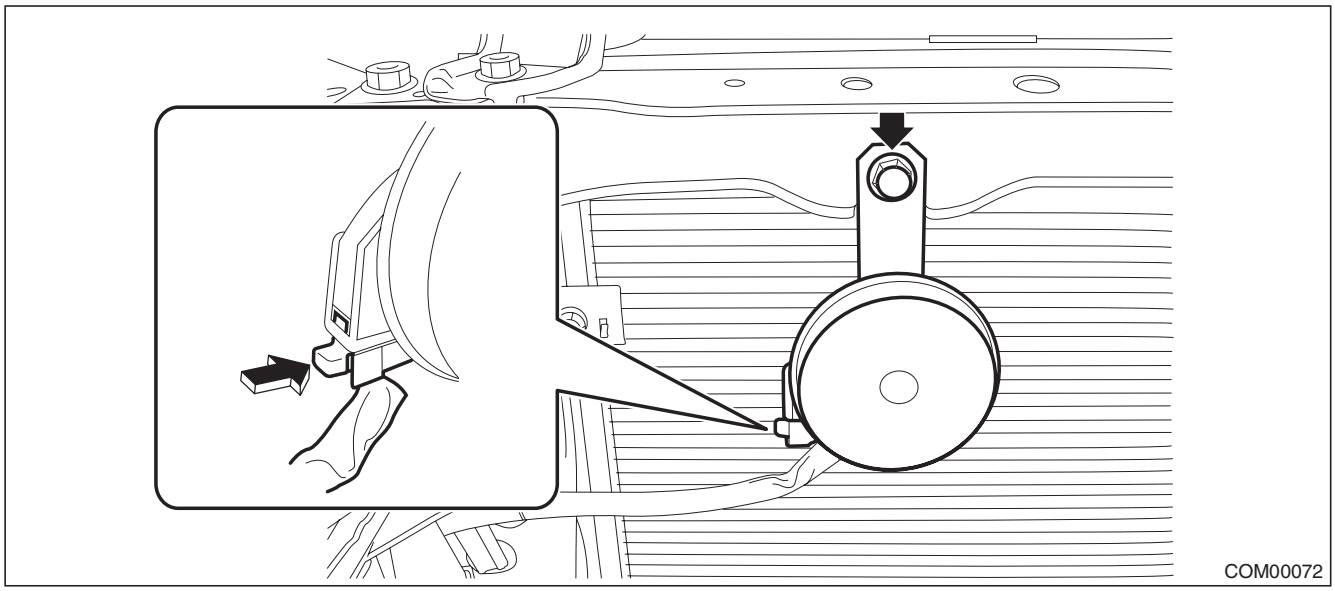

GETtheMANUALS.org

6) Remove the Hi pitch side horn.
   (1) Disconnect the connector.
   (2) Remove the horn bracket mounting bolt, and remove the Hi pitch side horn.

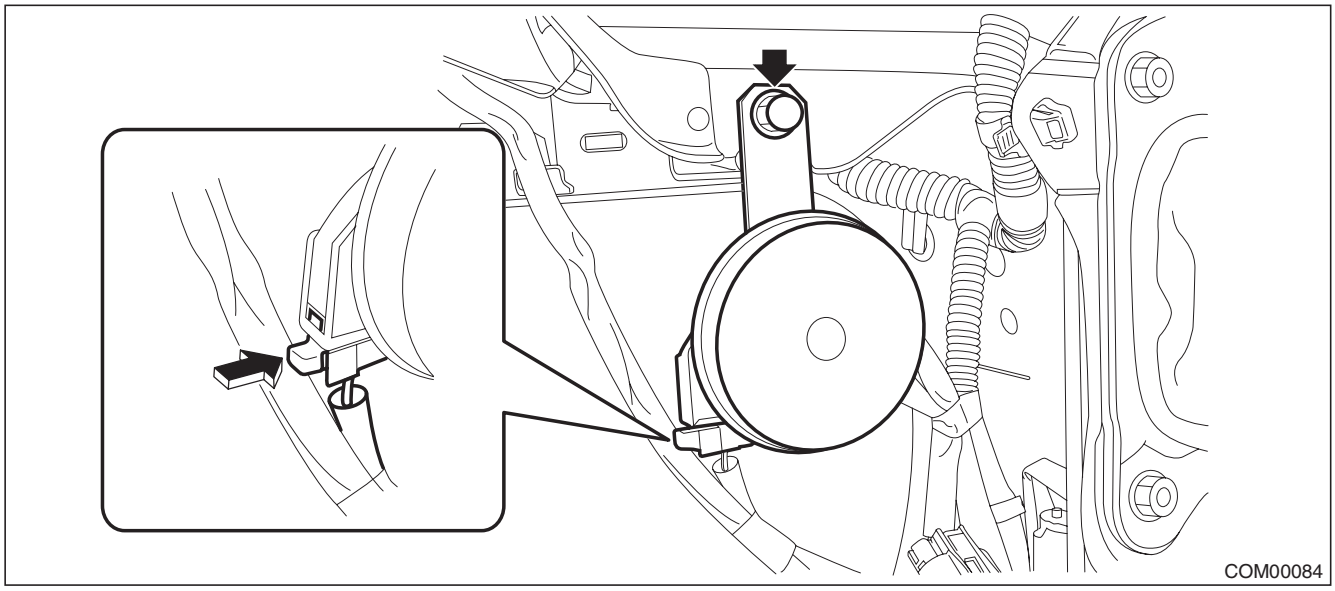

B: INSTALLATION

1) Install each part in the reverse order of removal.

CAUTION:
Install the bumper face so that the under cover front end (b) comes inside the front bumper face (a).

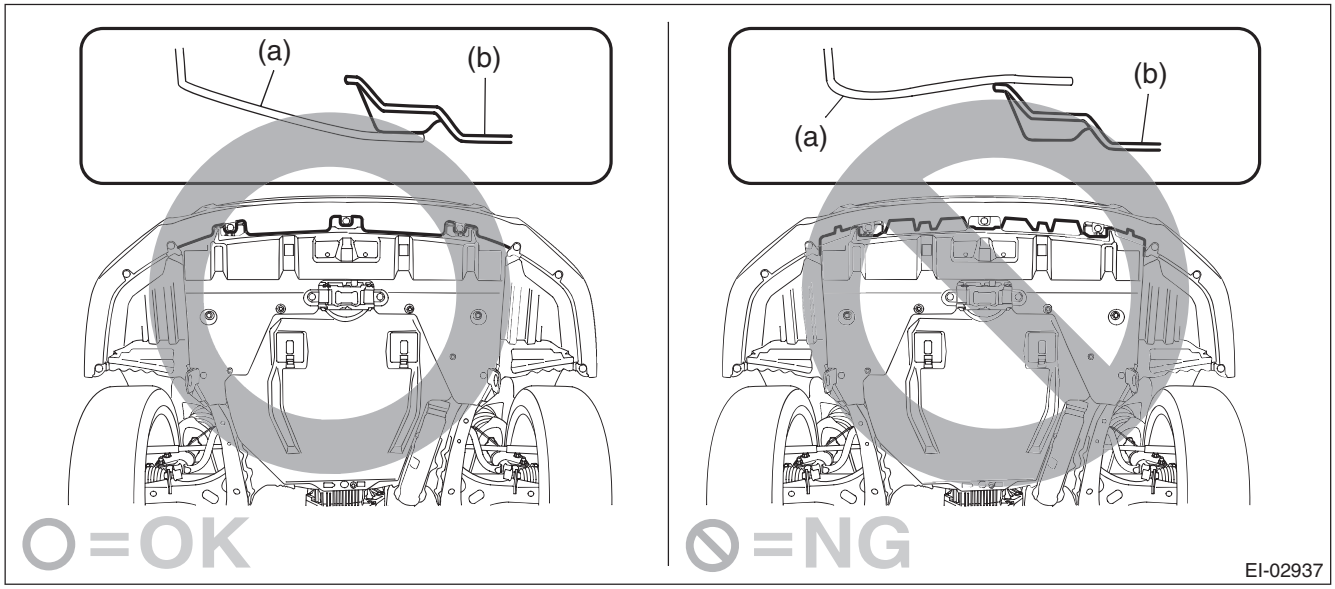

Tightening torque:
Horn assembly: 18 N·m (1.84 kgf-m, 13.3 ft-lb)

2) Adjust the fog light beam. (Model with fog light) <Ref. to LI-41, FOG LIGHT AIMING, ADJUSTMENT, Front Fog Light Assembly.>

GETtheMANUALS.org

C: INSPECTION

1. CHECK HORN ASSEMBLY.

1) Remove the horn assembly (Hi pitch side and Lo pitch side). <Ref. to COM-5, REMOVAL, Horn.>
2) Check the horn sounds when applying the battery voltage to the horn assembly.

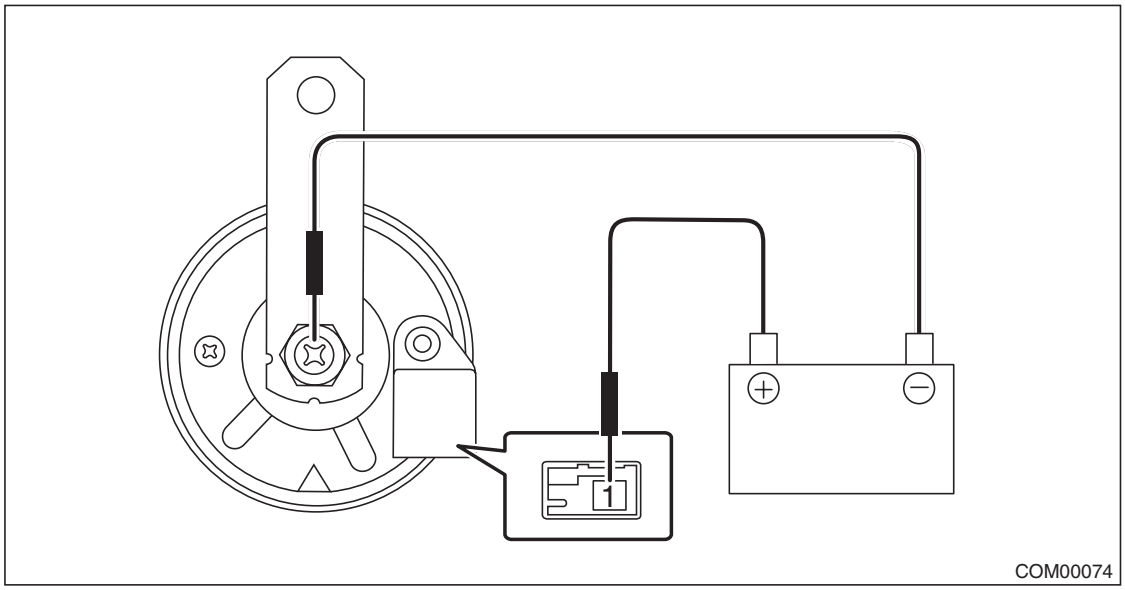

Terminal No.	Inspection conditions	Specification
1 (+) — Horn case (–)	Connect battery to the terminals	Sounds

3) If it does not operate normally, replace the horn assembly.

GETtheMANUALS.org

5. Horn Switch

A: REMOVAL

NOTE:
Horn switch is a unit with the driver's airbag module.
1) Position the front wheels straight ahead. (After moving a vehicle 5 m (16 ft) or more with front wheels positioned straight ahead, make sure that the vehicle moves straight ahead.)
2) Turn the ignition switch to OFF.
3) Disconnect the ground cable from battery and wait for at least 60 seconds before starting work.
4) Remove the driver's airbag module assembly.

CAUTION:
Before handling the airbag module, refer to "CAUTION" of "General Description" in "AIRBAG SYSTEM". <Ref. to AB-9, CAUTION, General Description.>

(1) Using a hexagon wrench etc. wrapped by protective tape, insert the snap pins and release the locks (3 locations).

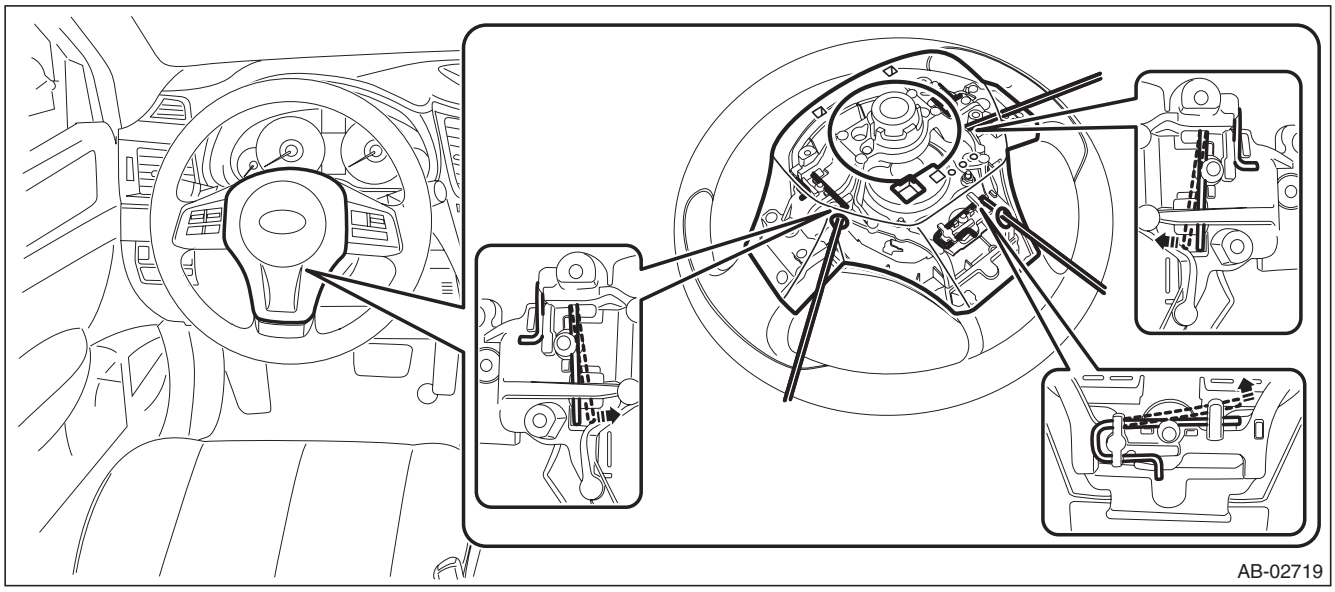

(2) Disconnect the horn harness and airbag connector and remove the airbag module assembly. <Ref. to AB-18, PROCEDURE, Airbag Connector.>

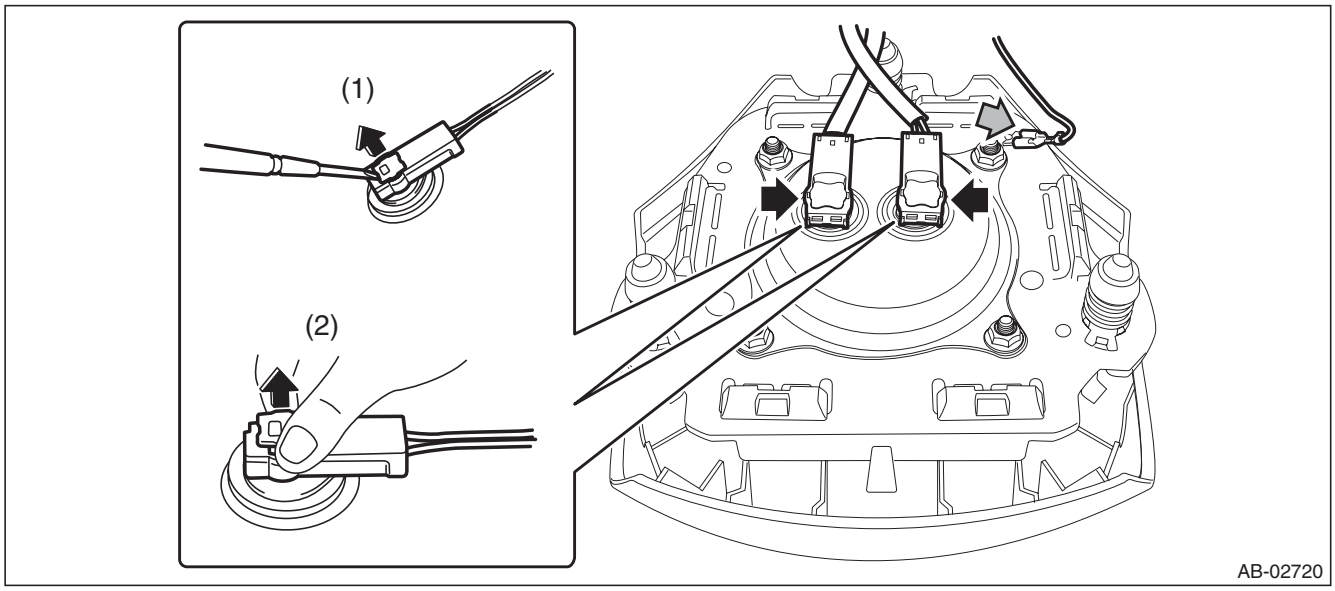

GETtheMANUALS.org

B: INSTALLATION

CAUTION:
- **Before handling the airbag module, refer to "CAUTION" of "General Description" in "AIRBAG SYSTEM". <Ref. to AB-9, CAUTION, General Description.>**
- **Do not allow harness and connectors to interfere or get tangled up with other parts.**

1) Install the driver's airbag module. <Ref. to AB-36, INSTALLATION, Driver's Airbag Module.>
2) Install each part in the reverse order of removal.

C: INSPECTION

1. CHECK HORN SWITCH.

1) Remove the horn switch. <Ref. to COM-11, REMOVAL, Horn Switch.>
2) Check that the connection of the horn switch harness connector is correct.
3) Disconnect the horn switch harness connector and check the resistance between the harness connectors.

Preparation tool: Circuit tester

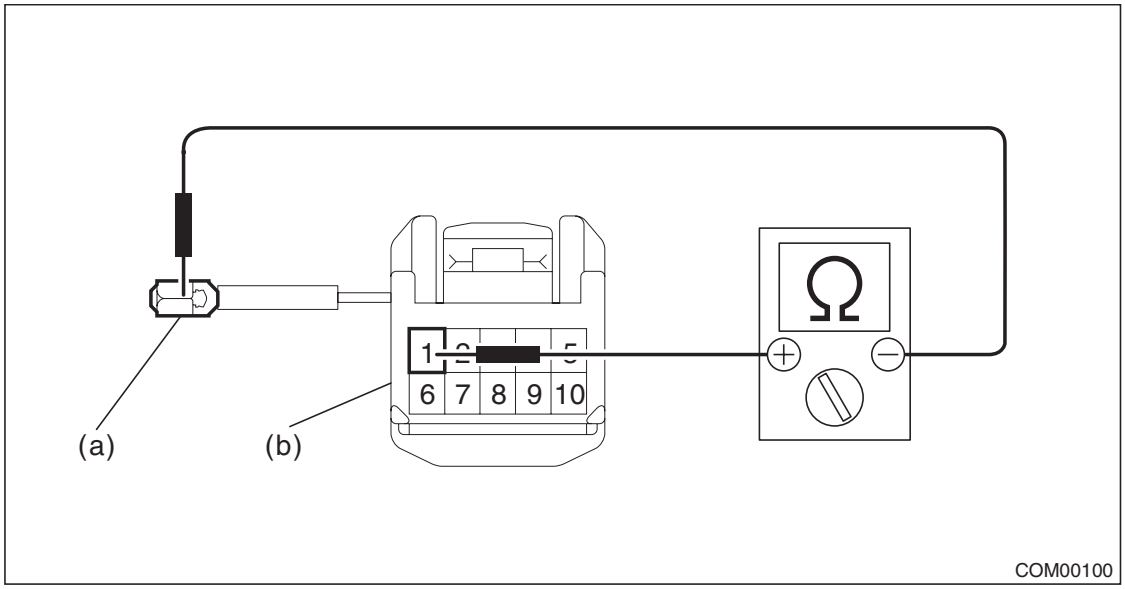

(a) Ground terminal (b) Horn switch terminal

Terminal No.	Standard
Horn switch terminal — ground terminal	Less than 1 Ω

4) Replace the driver's airbag module if the inspection result is not within the standard value.

GETtheMANUALS.org

2. CHECK ROLL CONNECTOR.

1) Remove the roll connector. <Ref. to AB-96, REMOVAL, Roll Connector.>
2) Check the resistance between roll connector terminals.

Preparation tool: Circuit tester

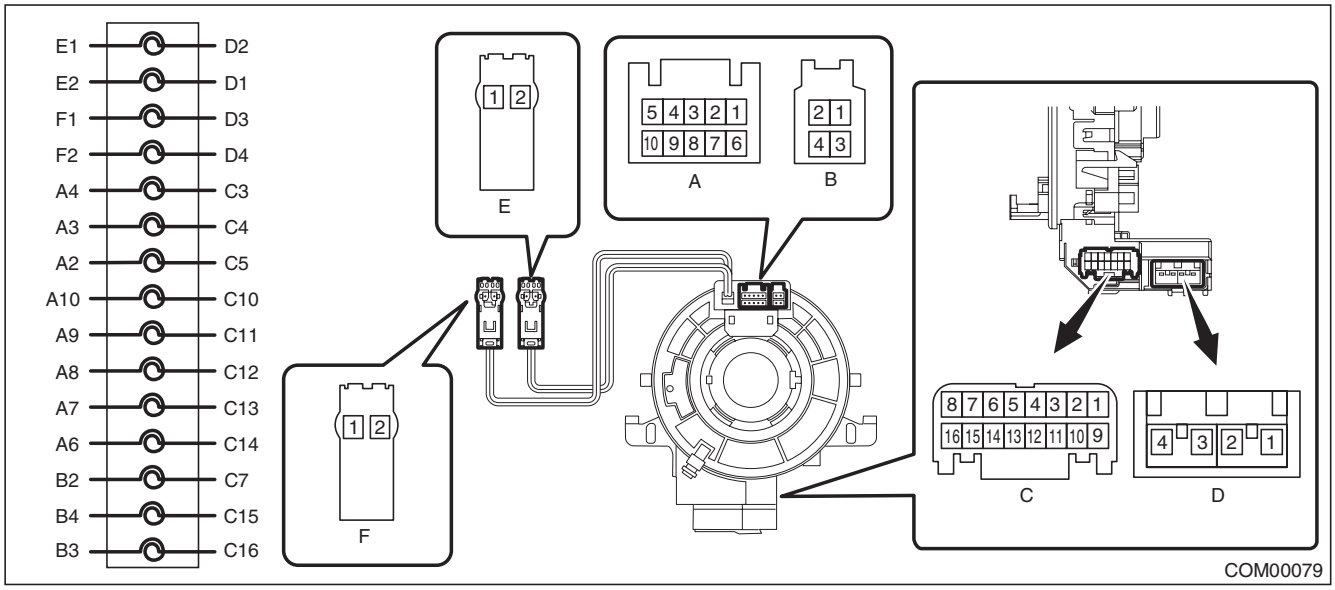

Terminal No.	Inspection conditions	Standard
A10 — C10	Always	Less than 1 Ω

3) Replace the roll connector if the inspection result is not within the standard value.

GETtheMANUALS.org

GETtheMANUALS.org

GLASS/WINDOWS/MIRRORS

GW

		Page
1.	General Description	2
2.	Relay and Fuse	8
3.	Power Window System	10
4.	Power Window Control Switch	12
5.	Front Door Glass	17
6.	Front Regulator and Motor Assembly	19
7.	Remote Control Mirror System	22
8.	Scalp Cap	23
9.	Outer Mirror Assembly	28
10.	Outer Mirror	30
11.	Remote Control Mirror Switch	32
12.	Rear Door Glass	34
13.	Rear Regulator and Motor Assembly	36
14.	Windshield Glass	40
15.	Rear Gate Glass	48
16.	Rear Window Glass	52
17.	Rear Window Defogger System	55
18.	Rear Quarter Glass	58
19.	Rearview Mirror	60
20.	Rearview Mirror (RCD Model)	61
21.	Wiper Deicer System	65

GETtheMANUALS.org

1. General Description

A: COMPONENT

1. FIXED GLASS (SEDAN MODEL)

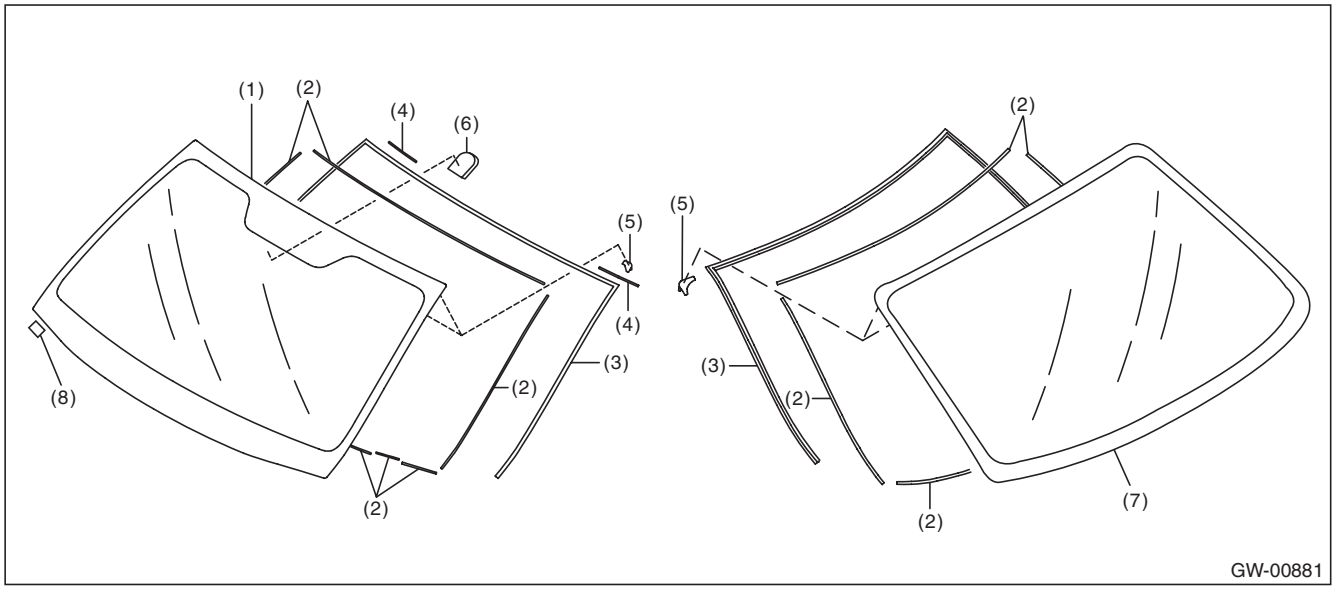

(1)	Windshield glass	(4)	Seal upper side	(7)	Rear window glass
(2)	Dam rubber	(5)	Locating pin	(8)	Seal A
(3)	Molding	(6)	Rearview mirror mount		

GETtheMANUALS.org

2. FIXED GLASS (OUTBACK MODEL)

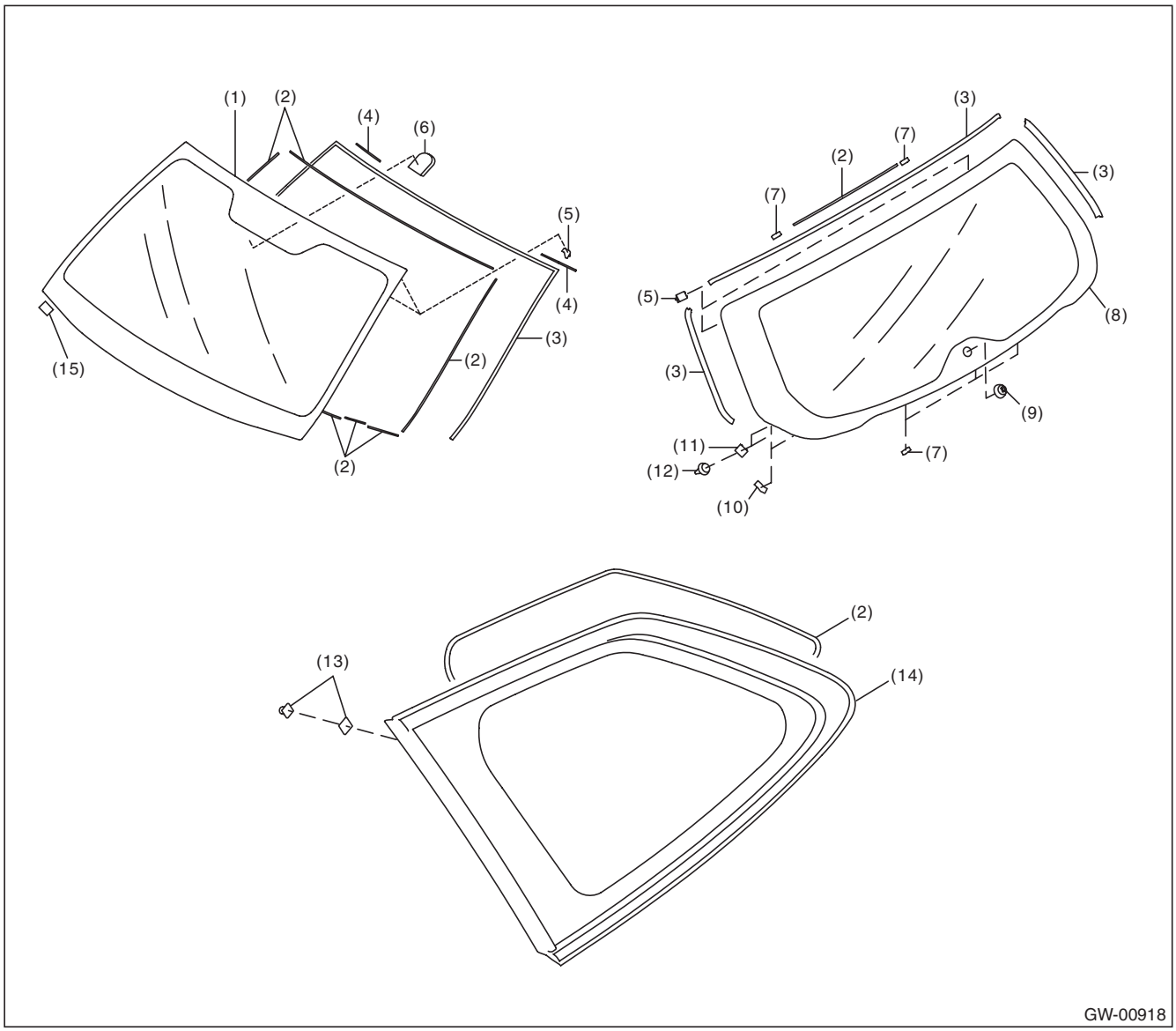

(1)	Windshield glass	(6)	Rearview mirror mount	(11)	Holder
(2)	Dam rubber	(7)	Spacer	(12)	Clip
(3)	Molding	(8)	Rear gate glass	(13)	Fastener
(4)	Seal upper side	(9)	Pivot	(14)	Rear quarter glass
(5)	Locating pin	(10)	EPT sealer	(15)	Seal A

GETtheMANUALS.org

3. FRONT DOOR GLASS

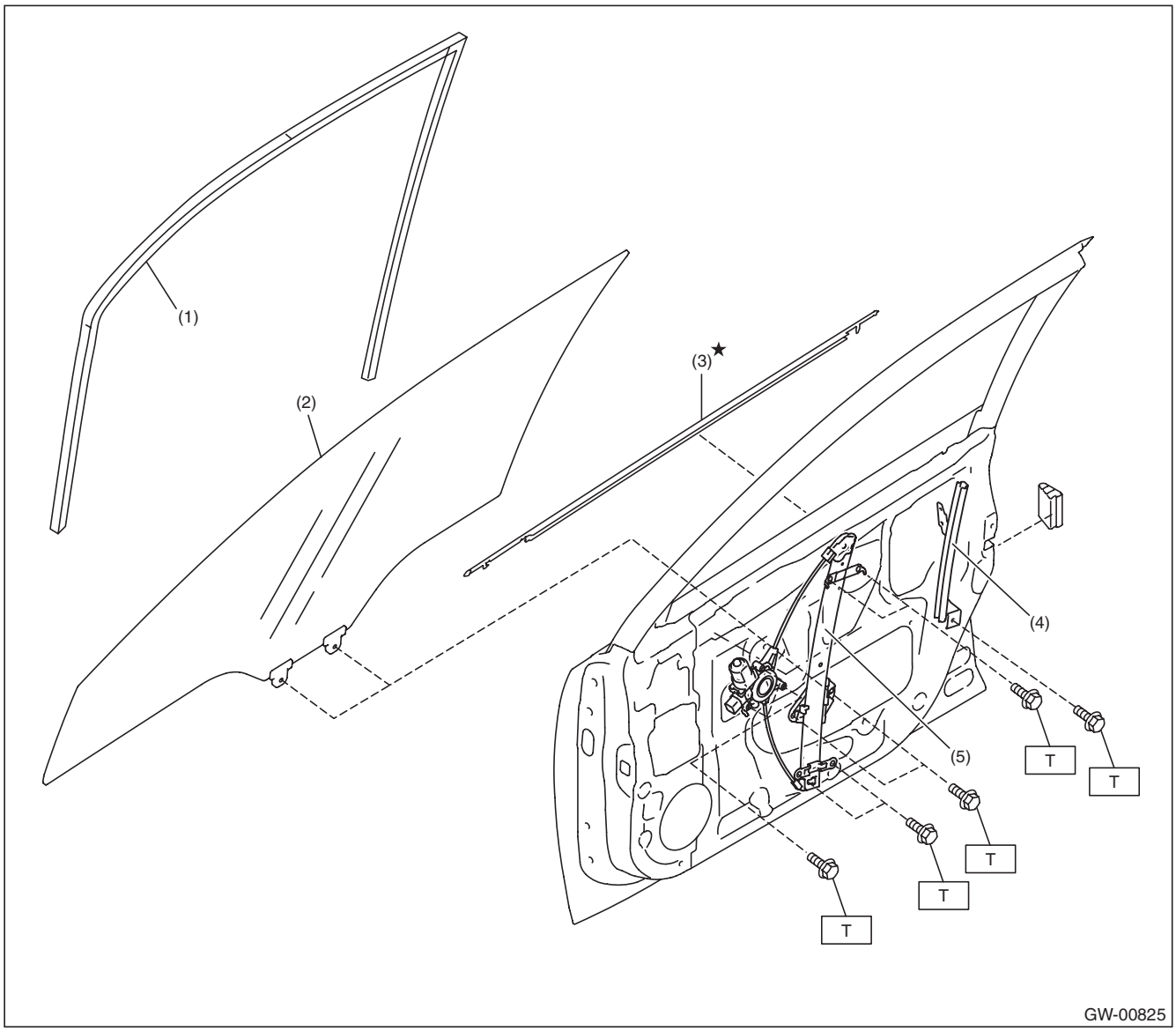

(1) Glass run rubber
(2) Front door glass
(3) Weather strip outer
(4) Door sash
(5) Regulator and motor ASSY

Tightening torque:N·m (kgf-m, ft-lb)
T: 7.5 (0.76, 5.5)

GETtheMANUALS.org

4. REAR DOOR GLASS

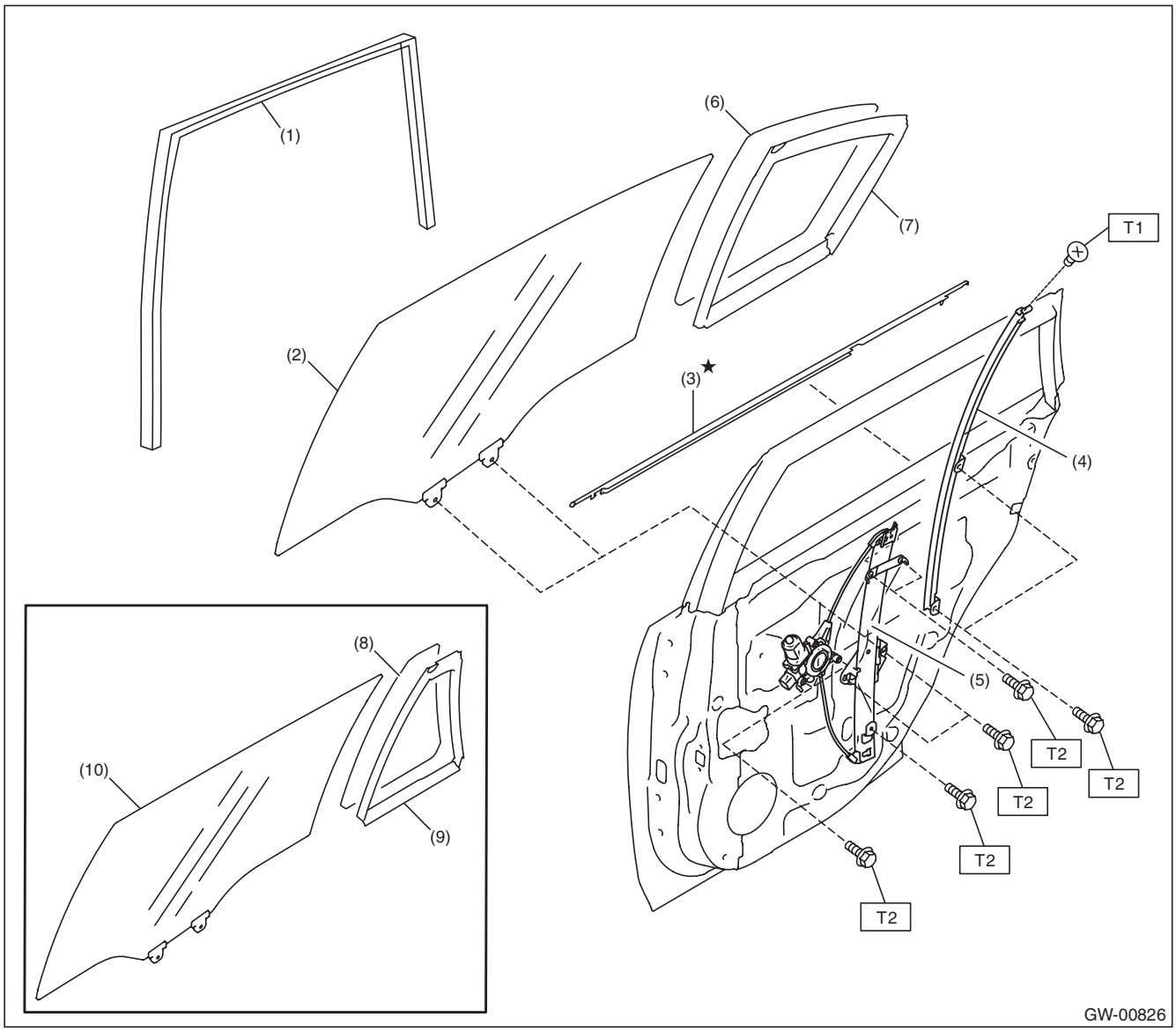

(1)	Glass run rubber	(6)	Partition glass (Sedan model)
(2)	Rear door glass (Sedan model)	(7)	Partition molding (Sedan model)
(3)	Weather strip outer	(8)	Partition glass (OUTBACK model)
(4)	Door sash	(9)	Partition molding (OUTBACK model)
(5)	Regulator and motor ASSY	(10)	Rear door glass (OUTBACK model)

Tightening torque:N·m (kgf-m, ft-lb)
T1: 2.2 (0.22, 1.6)
T2: 7.5 (0.76, 5.5)

GETtheMANUALS.org

5. MIRROR

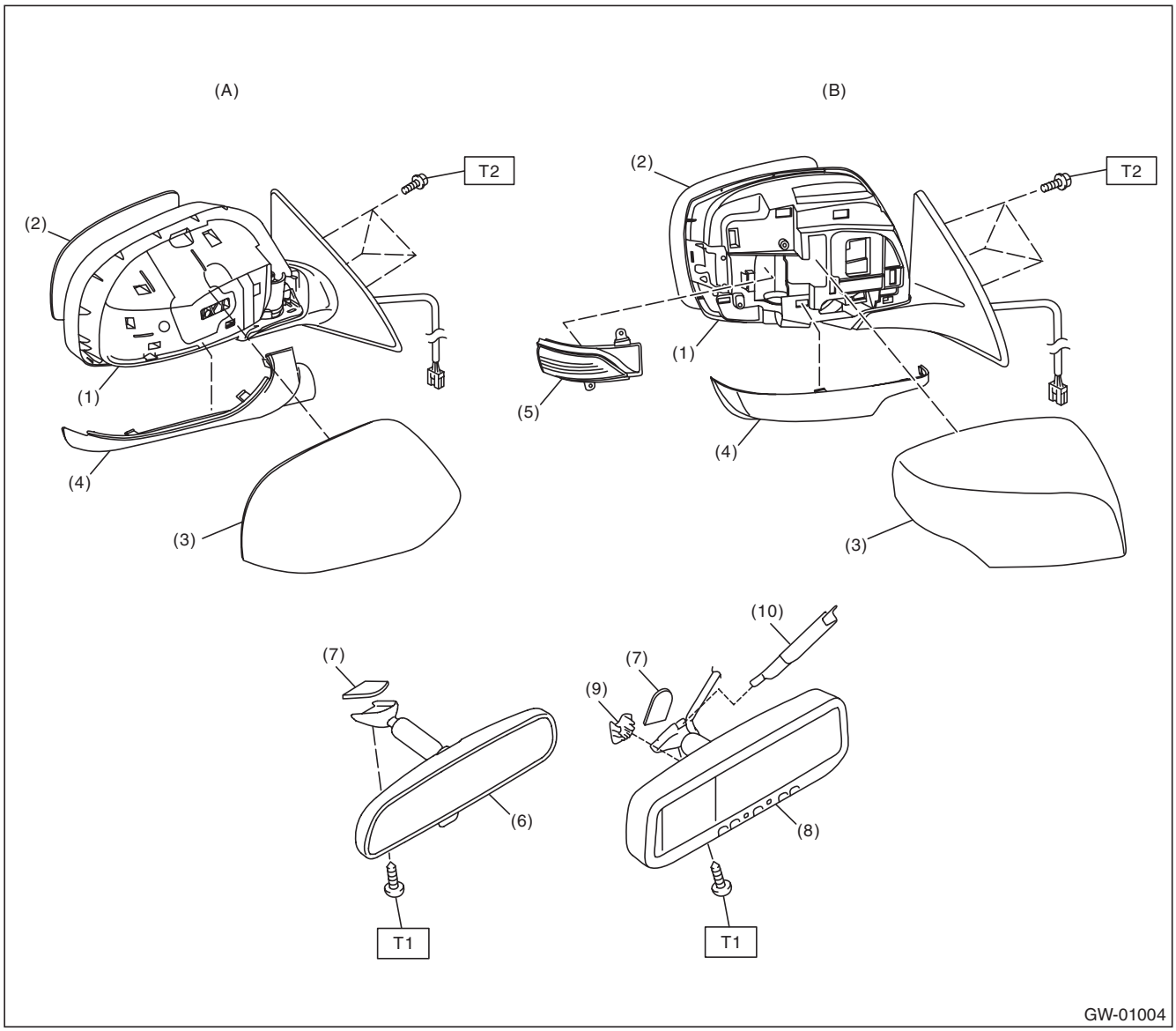

(A)	Model without electric retractable mirror (except for C6 model)	(B)	Model with electric retractable mirror (C6 model)

(1)	Outer mirror	(6)	Rear view mirror
(2)	Mirror	(7)	Mount
(3)	Scalp cap	(8)	Rearview mirror (RCD model)
(4)	Outer mirror lower cover	(9)	Connector cover
(5)	Side turn signal light	(10)	Harness cover

Tightening torque:N·m (kgf-m, ft-lb)
T1: 1.9 (0.19, 1.4)
T2: 4.5 (0.46, 3.3)

B: CAUTION

- Before disassembling or reassembling parts, always disconnect the battery ground cable from battery. When replacing the audio, control module and other parts provided with memory functions, record the memory contents before disconnecting the battery ground cable. Otherwise, the memory is cleared.
- Avoid impact and damage to the glass.
- Reassemble the parts in the reverse order of disassembly procedure unless otherwise indicated.
- Connect the connectors securely during reassembly.
- After reassembly, make sure that the functional parts operate normally.

GETtheMANUALS.org

C: PREPARATION TOOL

1. SPECIAL TOOL

ILLUSTRATION	TOOL NUMBER	DESCRIPTION	REMARKS
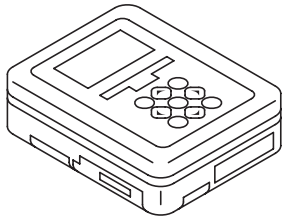 ST1B022XU0	1B022XU0	SUBARU SELECT MONITOR III KIT	Used for setting of each function and trouble-shooting for electrical system.

2. GENERAL TOOL

TOOL NAME	REMARKS
Circuit tester	Used for measuring resistance and voltage.
Piano wire	Used for removing the window glass.
Cutter knife	Used for removing the window glass.
Windshield glass knife	Used for removing the window glass.
TORX® T20	Used to remove and install the rearview mirror.

GETtheMANUALS.org

2. Relay and Fuse

A: LOCATION

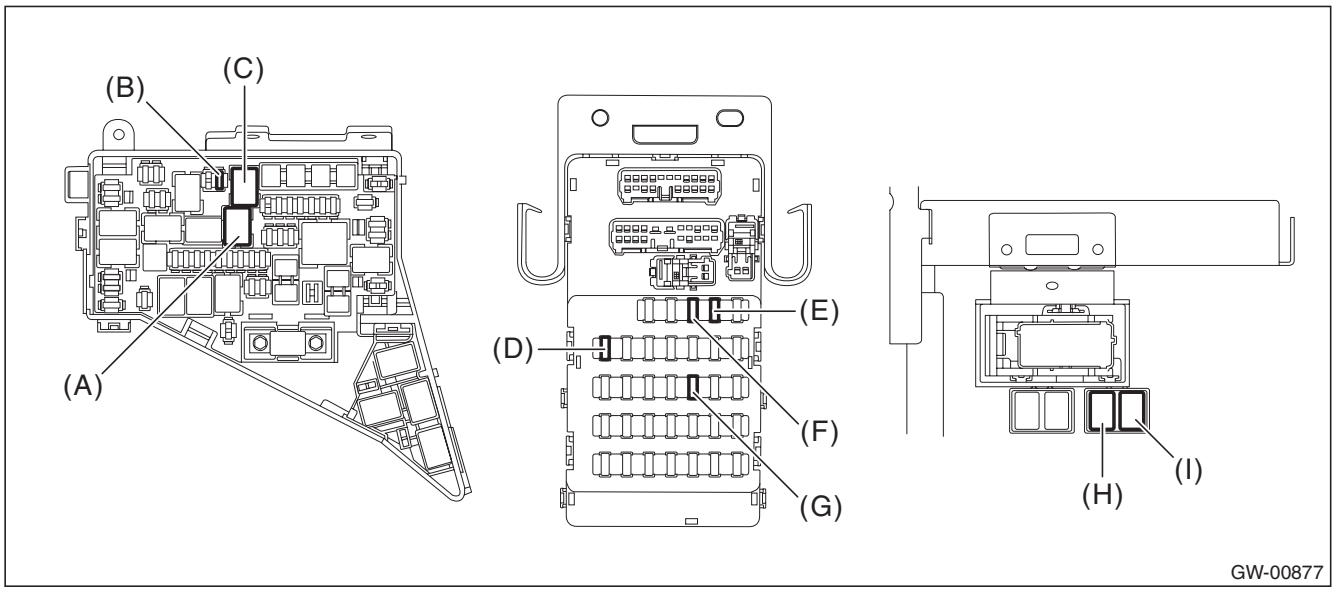

Main fuse box	Power window relay	(A)
	Fuse 25A (rear defogger)	(B)
	Rear defogger relay	(C)
Relay & fuse box	Fuse 7.5A (remote control mirror)	(D)
	Fuse 7.5A (wiper deicer)	(E)
	Fuse 20A (power window)	(F)
	Fuse 15A (wiper deicer, remote control mirror)	(G)
Relay holder	Wiper deicer relay	(H)
	Mirror heater relay	(I)

NOTE:
For other related fuses, refer to the wiring diagram. <Ref. to WI-15, Power Supply Circuit.>

GETtheMANUALS.org

B: INSPECTION

1. CHECK FUSE.

1) Remove the fuse and check visually.
2) If the fuse is blown out, replace the fuse.

2. CHECK RELAY

1) Check the resistance between relay terminals.

Terminal No.	Inspection conditions	Specification	Circuit
1 — 2	Always	1 MΩ or more	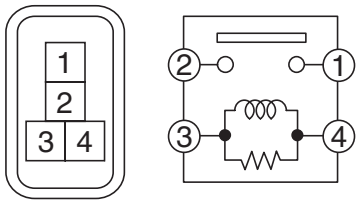 SR-00180
1 — 2	Apply battery voltage between 4 — 3 terminals.	Less than 1 Ω	

Terminal No.	Inspection conditions	Specification	Circuit
1 — 2	Always	1 MΩ or more	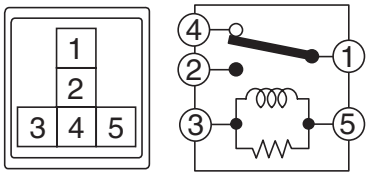 SL-01085
1 — 4	Always	Less than 1 Ω	
1 — 2	Apply battery voltage between 3 — 5 terminals.	Less than 1 Ω	

2) Replace the relay if the inspection result is not within the standard value.

GETtheMANUALS.org

3. Power Window System

A: WIRING DIAGRAM

Refer to “Power Window System” in the wiring diagram. <Ref. to WI-200, WIRING DIAGRAM, Power Window System.>

B: INSPECTION

Symptoms	Inspection order
All power windows do not operate.	1. Check the fuse. 2. Check the power window relay. 3. Check the wiring harness.
Particular window does not operate.	1. Check the fuse. 2. Check the power window main switch. 3. Check the power window sub-switch. 4. Check the power window motor. 5. Check the wiring harness.
“Window Lock” does not operate.	Check the power window main switch.
Driver’s side window moves slightly (approx. 20 mm (0.79 in)). (model with driver’s side AUTO UP function)	1. Check the power window motor. 2. Check the power window main switch. 3. Check the wiring harness.
Driver’s side window moves slightly (approx. 50 mm (1.97 in)). (model with driver’s side AUTO UP function) (This is not malfunction.)	Perform reset operation A. <Ref. to GW-10, RESET OPERATION A, OPERATION, Power Window System.>
Driver’s side window does not close completely. (model with driver’s side AUTO UP function) (After fully closed with AUTO UP, the window reverses and slightly opens.)	Perform reset operation B. <Ref. to GW-10, RESET OPERATION B, OPERATION, Power Window System.>

C: OPERATION

1. RESET OPERATION A

1) Sit in the driver’s seat and close the door.
2) Turn the ignition switch to ON.
3) Operate the power window main switch to open the window glass halfway.
4) Operate the power window main switch to “UP” direction to fully close the driver’s side window glass.
5) While the window glass is fully closed, hold down the power window switch to “UP” direction for one second.
6) Operate the power window main switch to “AUTO DOWN” direction to check whether the window fully opens properly.

NOTE:
If the window does not fully open properly, repeat steps 1) to 6).

2. RESET OPERATION B

1) Sit in the driver’s seat and close the door.
2) Turn the ignition switch to ON.
3) Perform “AUTO UP” operation for the driver’s side window glass, by fully pulling up the power window main switch to cause the reverse operation (in reverse operation, the window is repeatedly fully closed and then reversed to open it slightly.) 10 times in row.
4) Check that the “AUTO UP” does not operate.
5) Perform reset operation A.
6) Check that the window operates properly by operating the “AUTO UP” and “AUTO DOWN” switch.

NOTE:
If the window does not fully open/close properly, repeat steps 1) to 6).

GETtheMANUALS.org

D: NOTE

For operation procedures of each component of the power window system, refer to the respective sections.

- Power window control switch: <Ref. to GW-12, Power Window Control Switch.>
- Front door glass: <Ref. to GW-17, Front Door Glass.>
- Front regulator and motor assembly: <Ref. to GW-19, Front Regulator and Motor Assembly.>
- Rear door glass: <Ref. to GW-34, Rear Door Glass.>
- Rear regulator and motor assembly: <Ref. to GW-36, Rear Regulator and Motor Assembly.>

GETtheMANUALS.org

4. Power Window Control Switch

A: REMOVAL

1. MAIN SWITCH

1) Remove the front door trim. <Ref. to EI-60, FRONT DOOR, REMOVAL, Door Trim.>
2) Remove the power window switch panel.

CAUTION:
Do not damage the door trim with the switch panel.

(1) Insert a sheet of protective paper (a) between switch panel and door trim.
(2) Remove the screws and disconnect the connector.
(3) Disconnect the claws and then remove the power window switch panel.

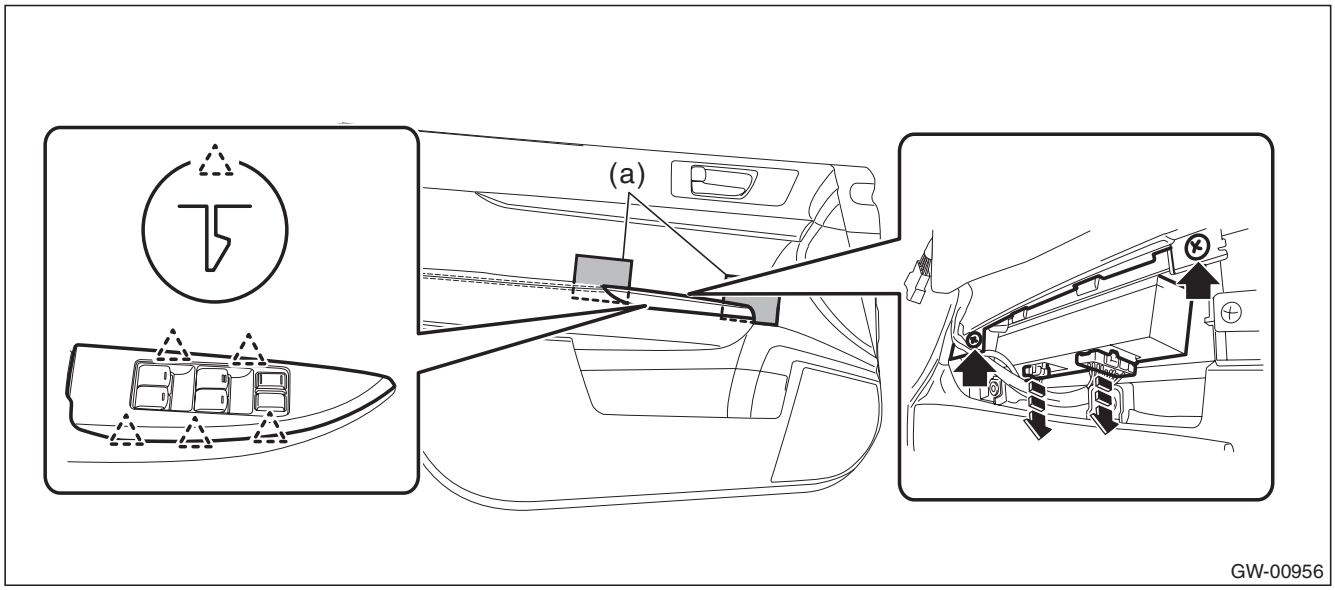

(4) Remove the screws and remove the power window main switch.

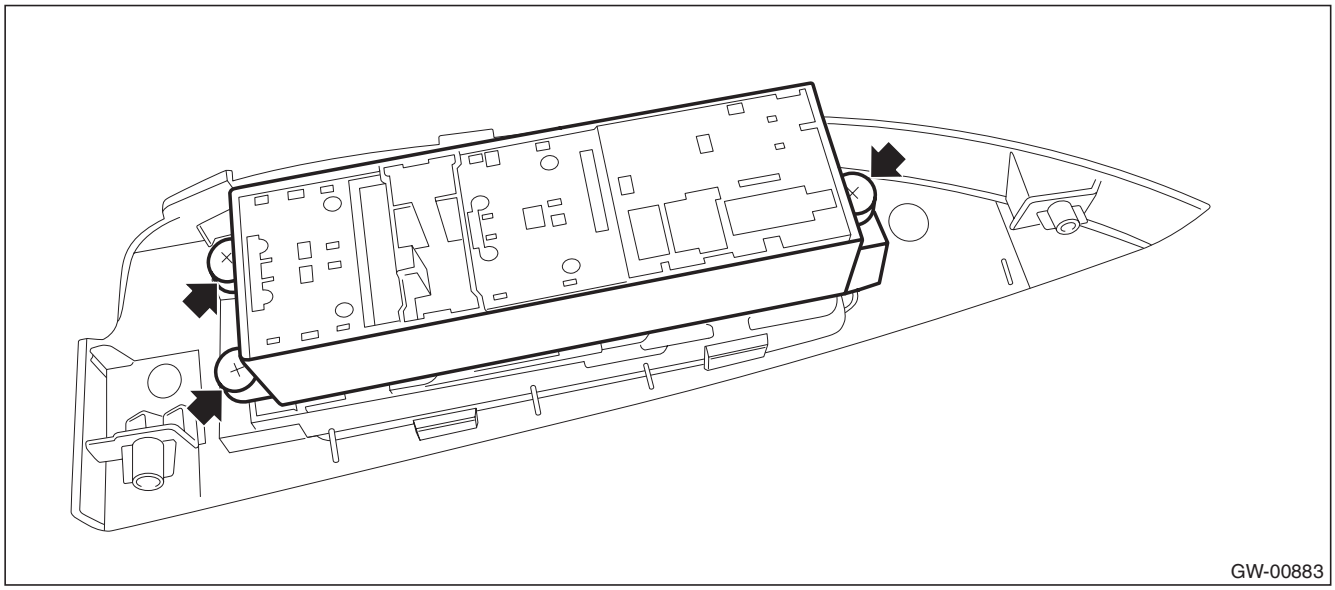

GETtheMANUALS.org

2. SUB-SWITCH

1) Remove the rear door trim. <Ref. to EI-61, REAR DOOR, REMOVAL, Door Trim.>
2) Remove the power window switch panel.

CAUTION:
Do not damage the door trim with the switch panel.

(1) Insert a sheet of protective paper (a) between switch panel and door trim.
(2) Remove the screws and disconnect the connector.
(3) Disconnect the claws and then remove the power window switch panel.

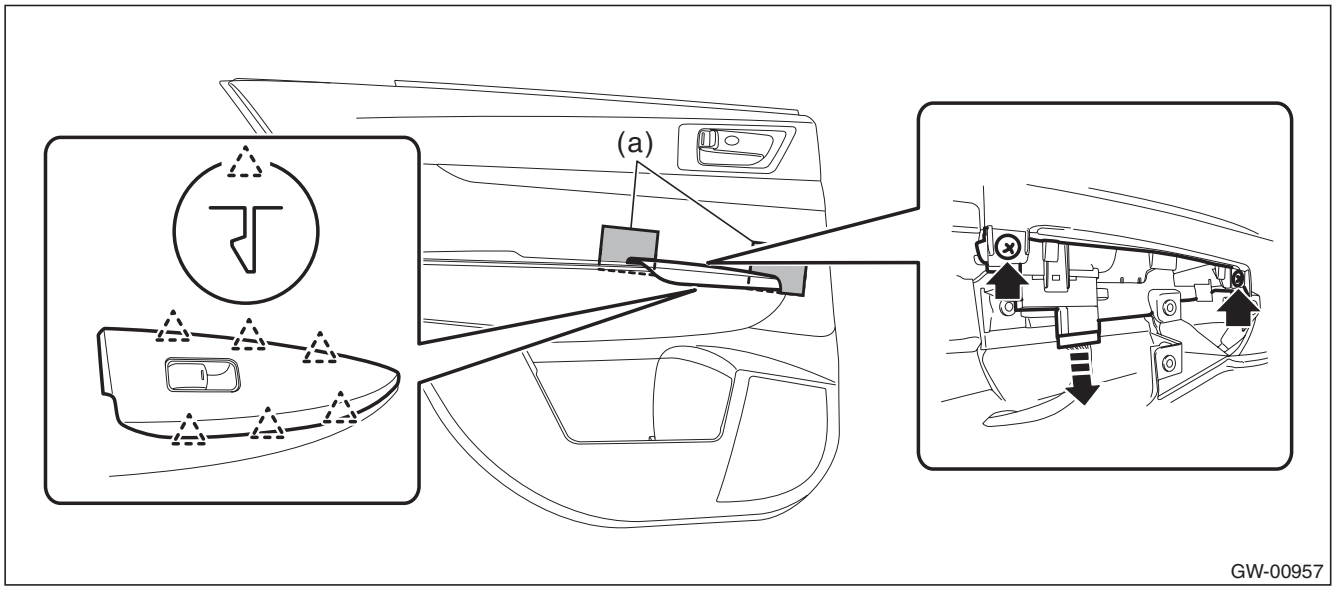

3) Disconnect the claws and then remove the power window sub-switch.

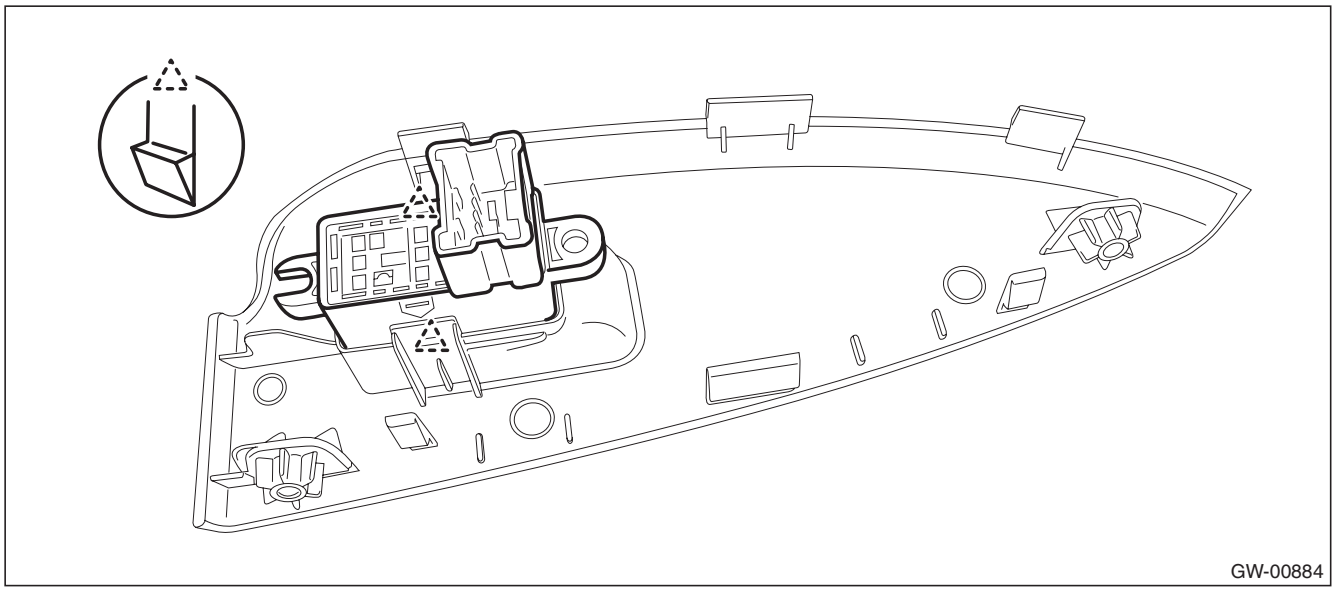

GETtheMANUALS.org

B: INSTALLATION

CAUTION:
- **After installation of main switch, always perform the initial setting. (model with driver's side AUTO UP function)**

Failure to do so may cause the improper activation of auto-reverse operation for pinching hazard prevention.
- **Use protective paper to avoid damage to the door trim.**

1) Install each part in the reverse order of removal.
2) Perform initial setting operation (reset operation A). <Ref. to GW-10, RESET OPERATION A, OPERATION, Power Window System.>

C: INSPECTION

1. MAIN SWITCH

- **Driver's seat**

CAUTION:
Since the driver's side power window switch is controlled by CPU, do not check continuity for switch alone with the circuit tester. Performing continuity check with circuit tester may damage the driver's side power window switch circuit.

Check output from the power window main switch to driver's side motor using the oscilloscope function in the Subaru Select Monitor.
1) Remove the power window main switch.
2) Connect the battery and the Subaru Select Monitor to the power window main switch terminal.

CAUTION:
Never mix up the terminals when connecting the power window main switch connector and battery. If connected to a wrong terminal, the power window main switch may be damaged.

NOTE:
- When the battery is connected to the power window main switch terminal, the letters "AUTO" on the driver's side knob illuminates.
- For detailed procedures, refer to "Subaru Select Monitor Operation Manual".

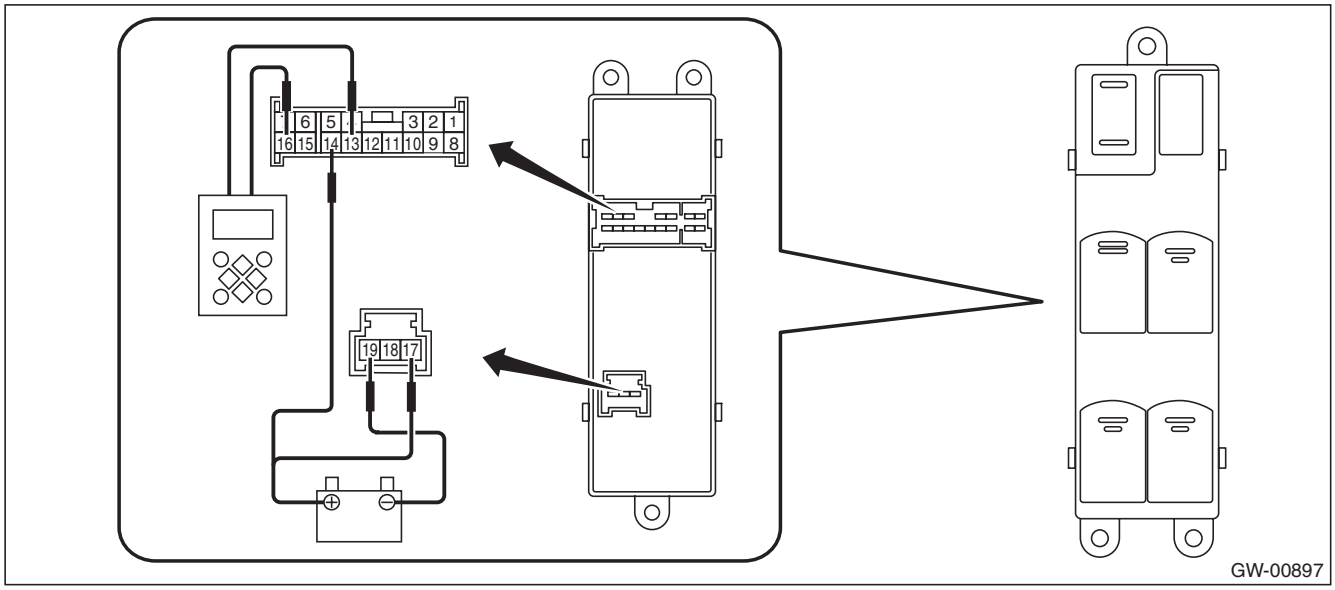

GETtheMANUALS.org

3) Operate the main switch and check the output.

NOTE:
Since output time during window UP operation is extremely short, it cannot be checked without using a measuring instrument such as oscilloscope. Output is constantly produced while the switch is operated for window DOWN operation.

Inspection conditions	Output time (model without driver's side AUTO UP function)	Output time (model with driver's side AUTO UP function)	Standard
AUTO UP	600 ms	Approx. 130 ms	Battery voltage
UP	During switch operation		
OFF	—	—	0 V
DOWN	During switch operation	During switch operation	Battery voltage
AUTO DOWN	600 ms	Approx. 300 ms	

4) Replace the power window main switch if the inspection result is not within the standard value.

- **Except for driver's seat**

1) Check the resistance between main switch terminals.

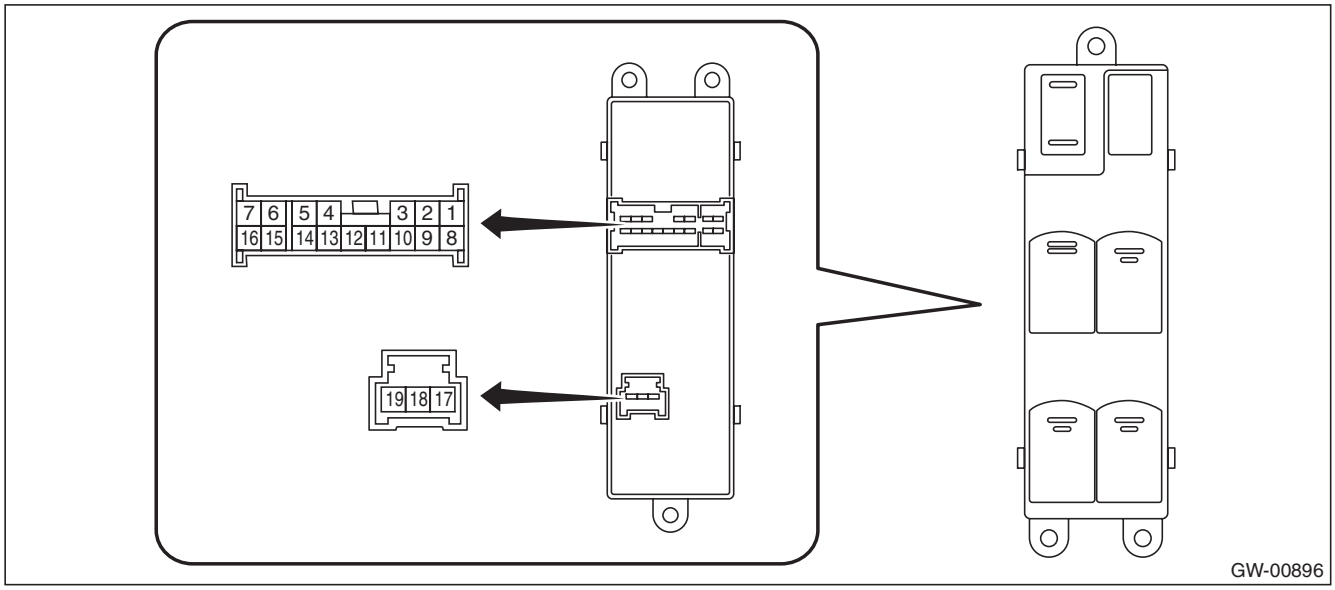

	Terminal No.	Inspection conditions	Standard
Passenger's seat	14 — 8 19 — 12	UP	Less than 1 Ω
	14 — 12 14 — 8	OFF	1 MΩ or more
	19 — 8 19 — 12 8 — 12		Less than 1 Ω
	14 — 12 19 — 8	DOWN	Less than 1 Ω

GETtheMANUALS.org

	Terminal No.	Inspection conditions	Standard
Rear LH	14 — 7 19 — 5	UP	Less than 1 Ω
	14 — 7 14 — 5	OFF	1 MΩ or more
	19 — 7 19 — 5 7 — 5		Less than 1 Ω
	14 — 5 19 — 7	DOWN	Less than 1 Ω
Rear RH	14 — 1 19 — 3	UP	Less than 1 Ω
	14 — 1 14 — 3	OFF	1 MΩ or more
	19 — 3 19 — 1 3 — 1		Less than 1 Ω
	14 — 3 19 — 1	DOWN	Less than 1 Ω

2) Replace the main switch if the inspection result is not within the standard value.

2. SUB-SWITCH

1) Remove the sub switch.
2) Check the resistance between sub switch terminals.

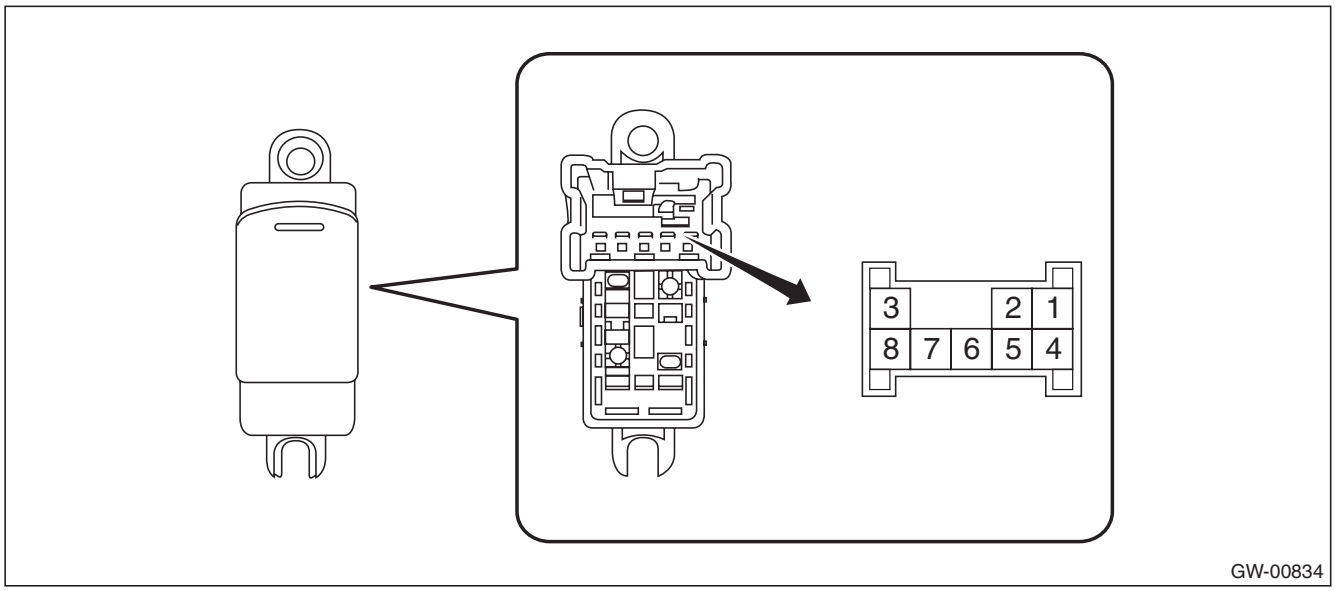

	Terminal No.	Inspection conditions	Specification
Passenger's seat, rear	4 — 5 6 — 7	UP	Less than 1 Ω
	7 — 4 8 — 4	OFF	1 MΩ or more
	5 — 8 6 — 7		Less than 1 Ω
	4 — 6 5 — 8	DOWN	Less than 1 Ω

3) Replace the sub switch if the inspection result is not within the standard value.

GETtheMANUALS.org

5. Front Door Glass

A: REMOVAL

1) Remove the front door trim. <Ref. to EI-60, FRONT DOOR, REMOVAL, Door Trim.>
2) Remove the sealing cover.

CAUTION:
- **Carefully remove the butyl tape. Excessive force will easily break the cover.**
- **If cover gets broken, replace it with a new part.**

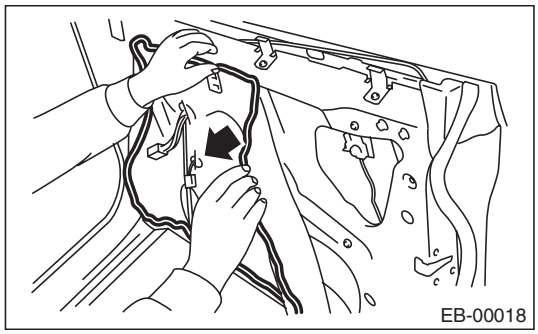

3) Remove the inner pad.
4) Attach the battery ground cable and power window switch and turn the ignition to ON.
5) Remove the front door glass.
   (1) Operate the power window switch to move the front door glass to the position where the mounting bolts can be seen.
   (2) Remove the bolt.

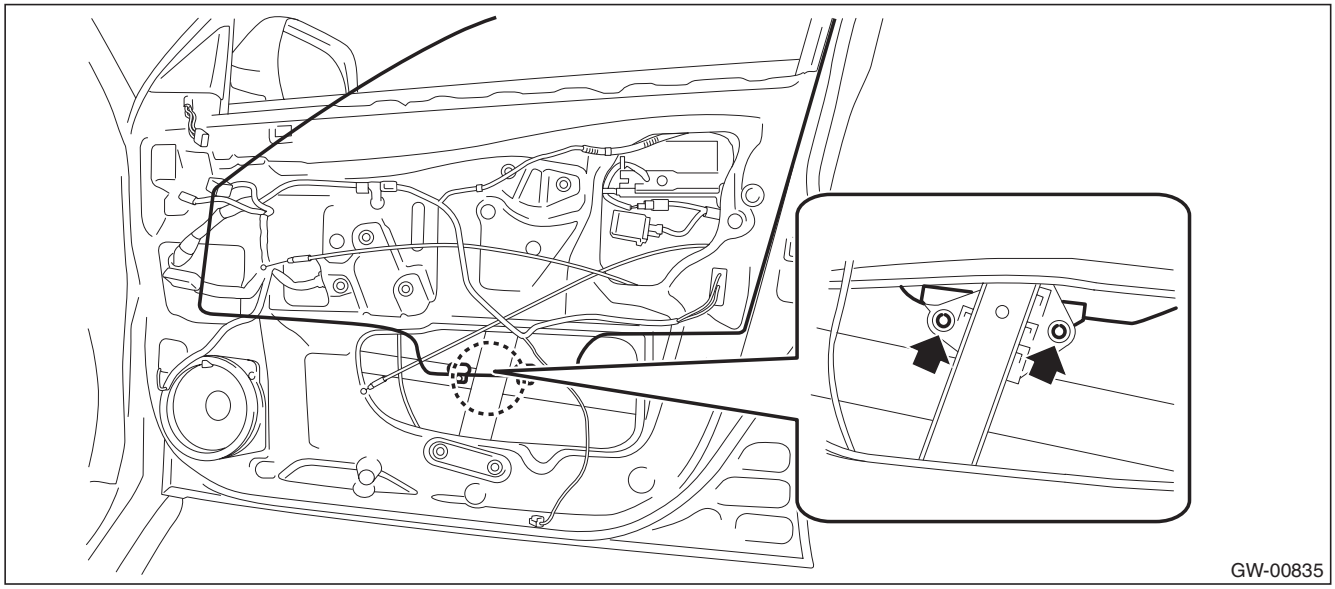

GETtheMANUALS.org

(3) While tilting the glass, remove the windshield glass.

CAUTION:
Avoid impact and damage to the glass.

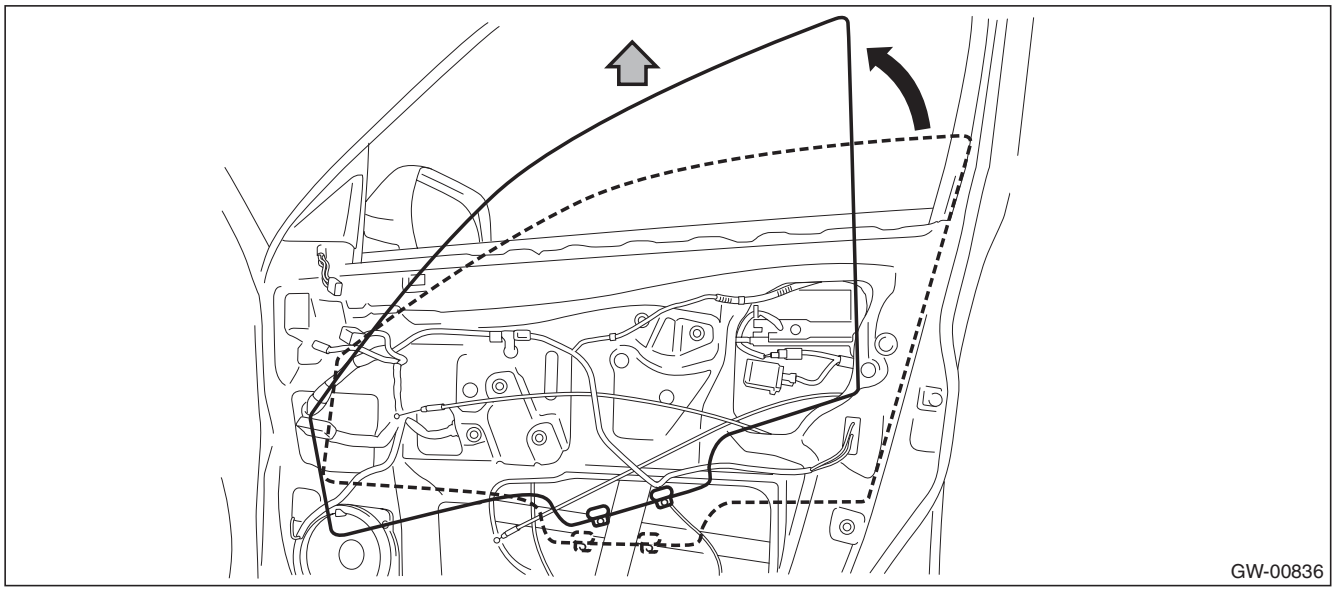

B: INSTALLATION

CAUTION:
Make sure that the glass run rubber is placed securely in the door frame and sash.
Install each part in the reverse order of removal.

Tightening torque:
Refer to "COMPONENT" of "General Description". <Ref. to GW-4, FRONT DOOR GLASS, COMPONENT, General Description.>

GETtheMANUALS.org

6. Front Regulator and Motor Assembly

A: REMOVAL

1) Remove the front door trim. <Ref. to EI-60, FRONT DOOR, REMOVAL, Door Trim.>
2) Remove the sealing cover.

CAUTION:
- **Carefully remove the butyl tape. Excessive force will easily break the cover.**
- **If cover gets broken, replace it with a new part.**

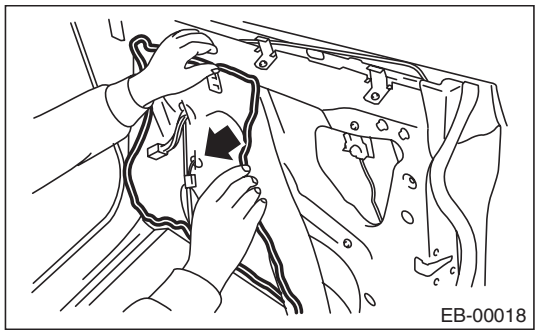

3) Remove the inner pad.
4) Attach the battery ground cable and power window switch and turn the ignition to ON.
5) Remove the front door glass.
   (1) Operate the power window switch to move the front door glass to the position where the mounting bolts can be seen.
   (2) Remove the bolt.

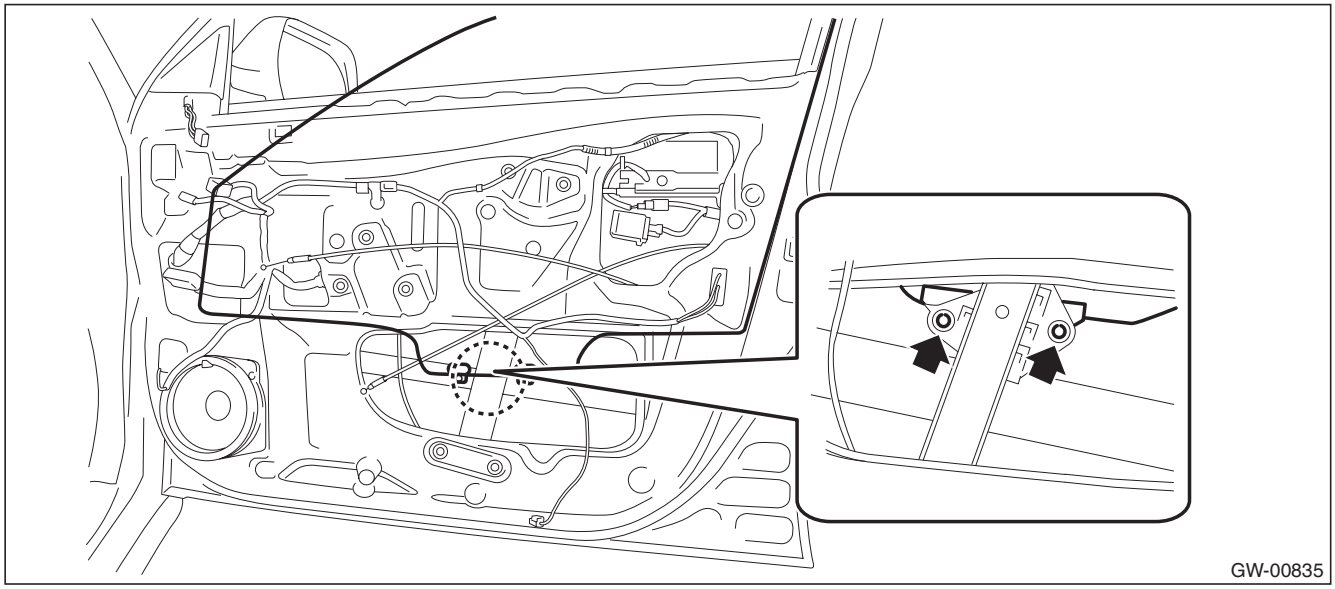

GETtheMANUALS.org

(3) While tilting the glass, remove the windshield glass.

CAUTION:
Avoid impact and damage to the glass.

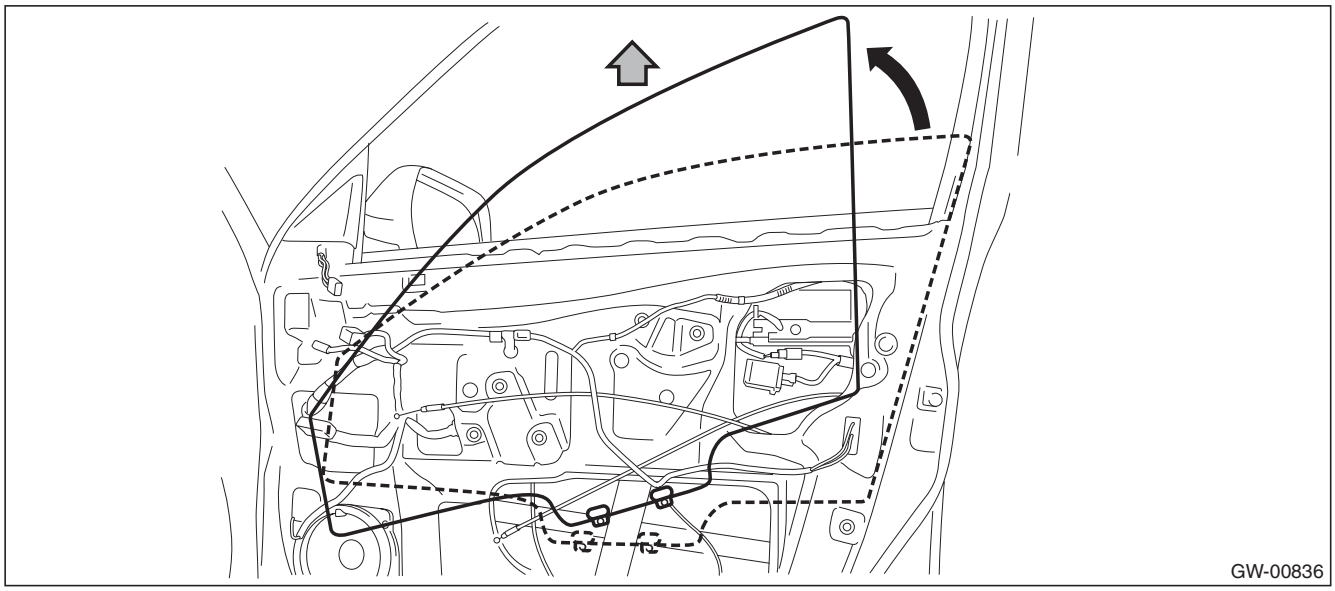

6) Remove the front regulator and motor assembly.
(1) Disconnect the connector.
(2) Remove the bolts, and then remove the front regulator and motor assembly.

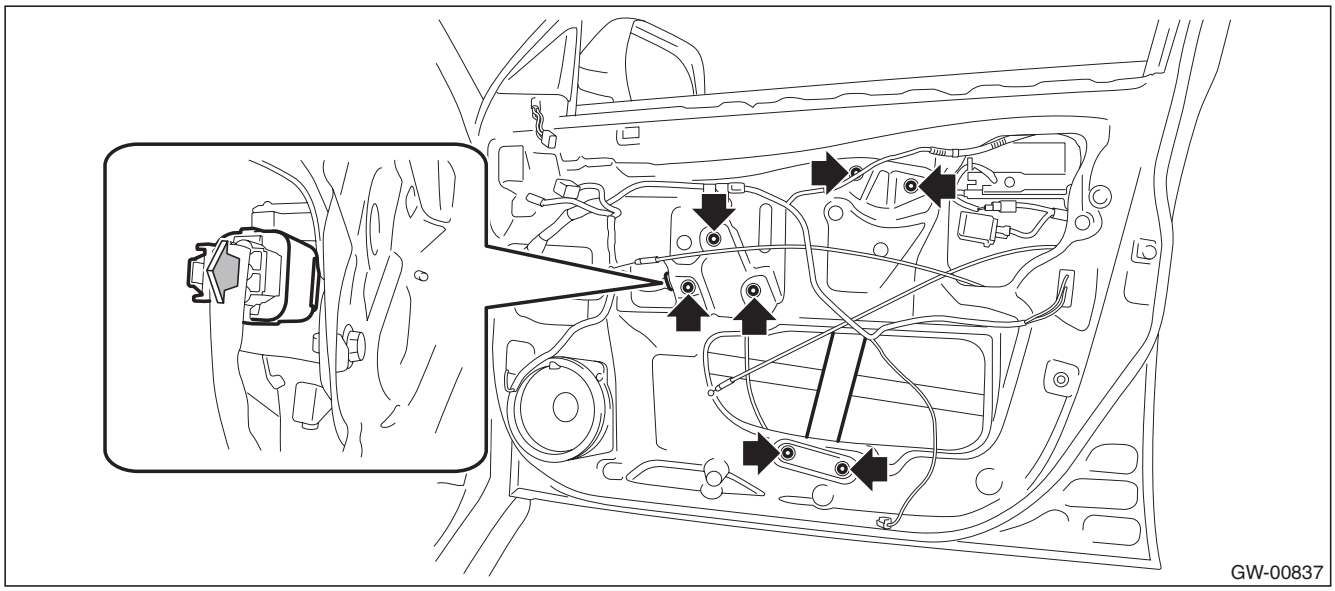

B: INSTALLATION

Install each part in the reverse order of removal.

Tightening torque:
Refer to "COMPONENT" of "General Description". <Ref. to GW-4, FRONT DOOR GLASS, COMPONENT, General Description.>

GETtheMANUALS.org

C: INSPECTION

1) Disconnect the motor connector.
2) Apply battery voltage between the motor connector terminals and check the motor operation.

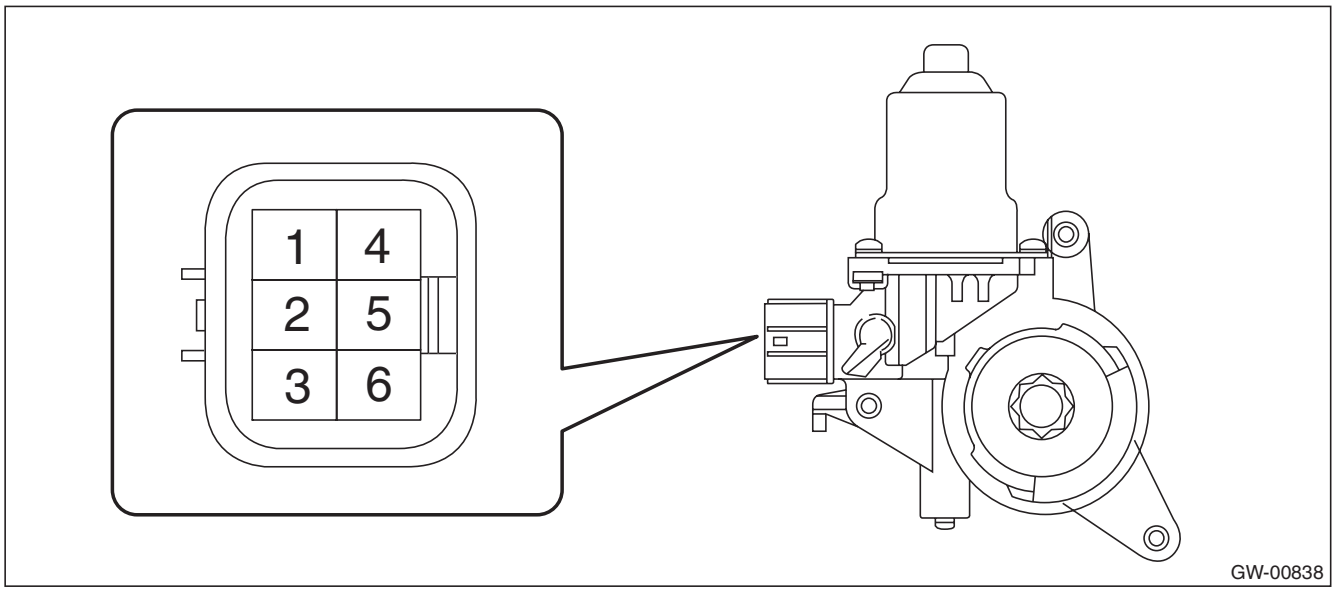

Terminal No.	Inspection conditions	Specification
1 (+) — 4 (–)	Apply battery voltage between terminals.	Increase
4 (+) — 1 (–)	Apply battery voltage between terminals.	Decrease

3) If the inspection results in improper operation, replace the front regulator and motor assembly.

GETtheMANUALS.org

7. Remote Control Mirror System

A: WIRING DIAGRAM

Refer to “Remote Control Mirror System” in the wiring diagram. <Ref. to WI-221, WIRING DIAGRAM, Remote Control Mirror System.>

B: INSPECTION

1. SYMPTOM CHART

Symptoms	Inspection order
All function does not operate.	1. Check the fuse. 2. Check the remote control mirror switch. 3. Check the wiring harness.
One side of the mirror motor does not operate.	1. Check the remote control mirror switch. 2. Check the mirror motor. 3. Check the wiring harness.
Mirror heater does not operate.	1. Check the defogger switch. 2. Check the mirror heater relay. 3. Check the mirror heater. 4. Check the wiring harness.

NOTE:
The mirror heater operates with the rear window defogger at the same time. Refer to the inspection procedure of rear window defogger system for details. <Ref. to GW-55, INSPECTION, Rear Window Defogger System.>

C: NOTE

For operation procedures of each component of the remote control mirror system, refer to the respective sections.

- Scalp cap: <Ref. to GW-23, Scalp Cap.>
- Outer mirror assembly: <Ref. to GW-28, Outer Mirror Assembly.>
- Outer mirror: <Ref. to GW-30, Outer Mirror.>
- Remote control mirror switch: <Ref. to GW-32, Remote Control Mirror Switch.>

GETtheMANUALS.org

8. Scalp Cap

A: REPLACEMENT

1. MODEL WITHOUT ELECTRIC RETRACTABLE MIRROR

CAUTION:
- **When removing the mirror, be careful not to damage the back surface of mirror with a flat tip screwdriver.**
- **When installing the mirror, insert the connector and clip securely.**

1) Operate the remote control mirror switch to face the mirror surface upward.
2) Disconnect the ground cable from battery.
3) Remove the outer mirror.
   (1) Disconnect the clips using a flat tip screwdriver.

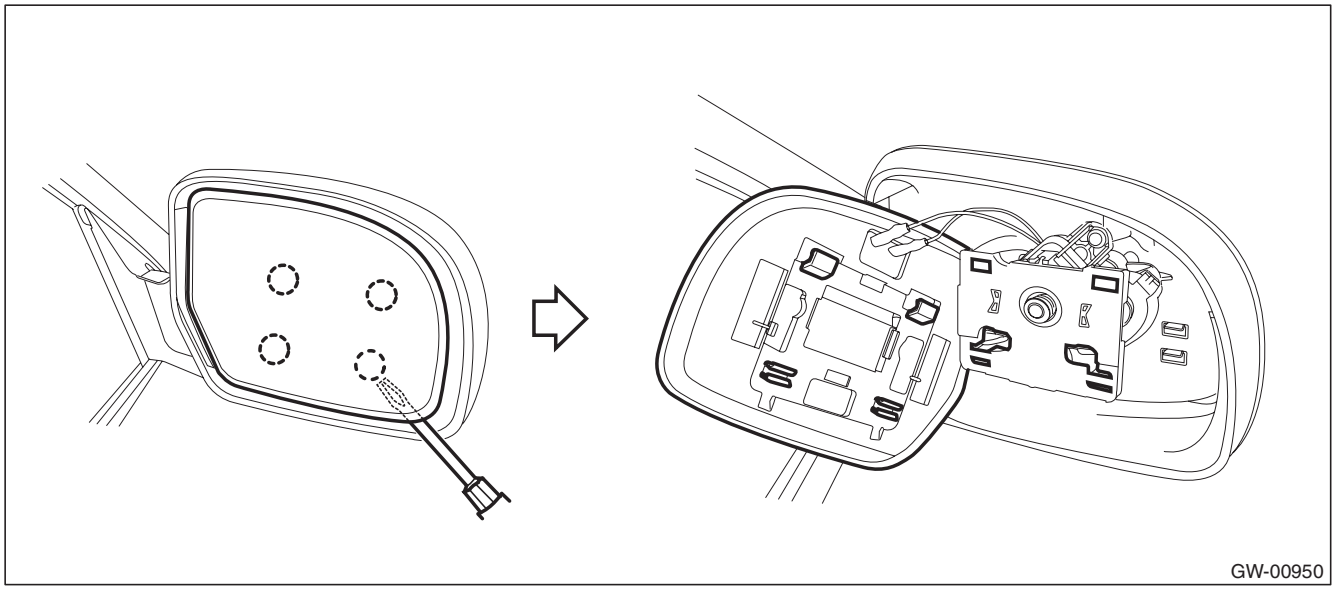

   (2) Disconnect the mirror heater connector. (Model with mirror heater)

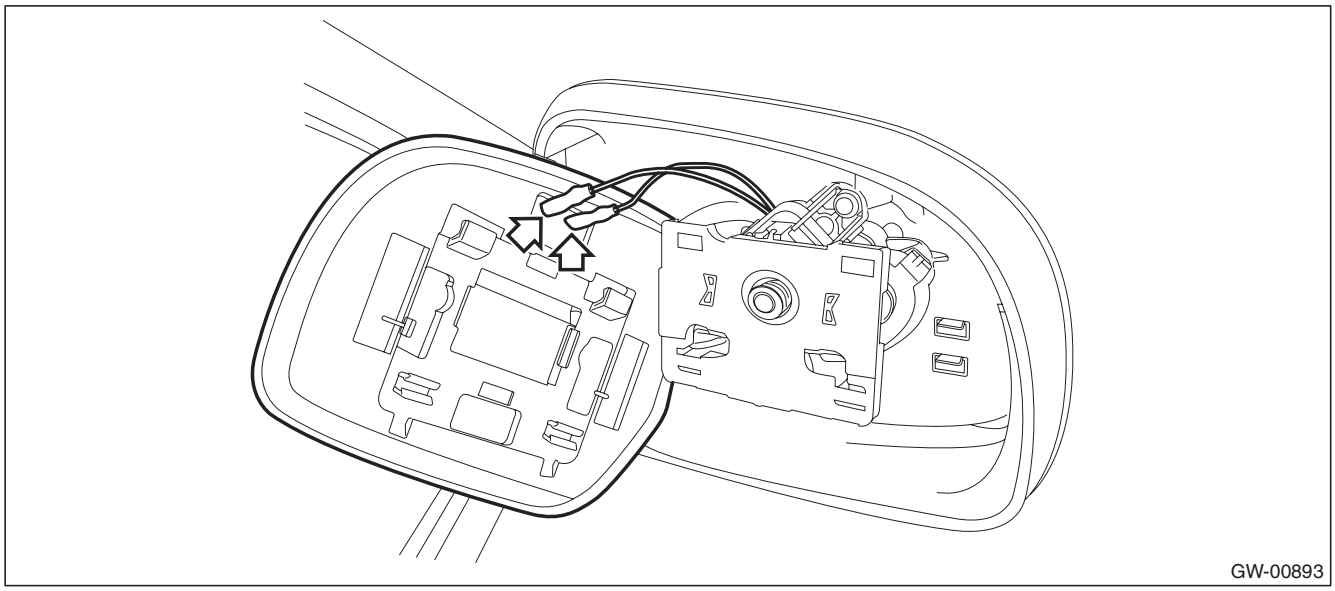

GETtheMANUALS.org

4) Disconnect the claws and then remove the scalp cap.

CAUTION:
Be careful not to apply excessive force when removing the scalp cap, as the lower hooks may become damaged.

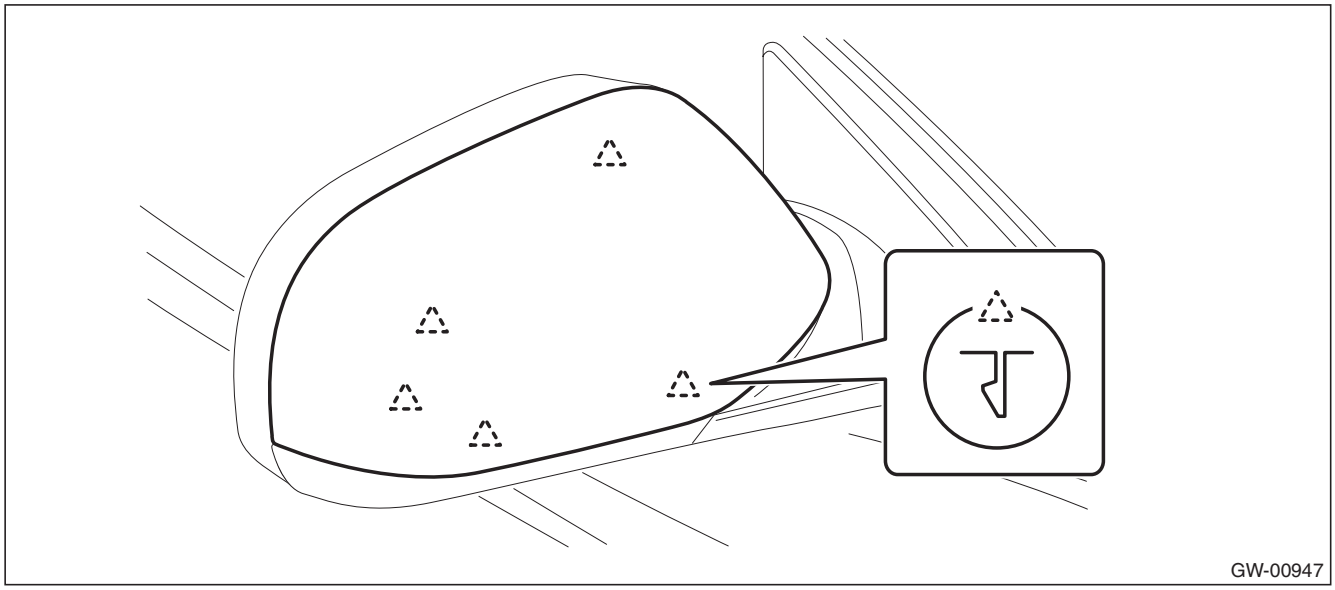

5) Engage the claws into the hole and install the scalp cap.

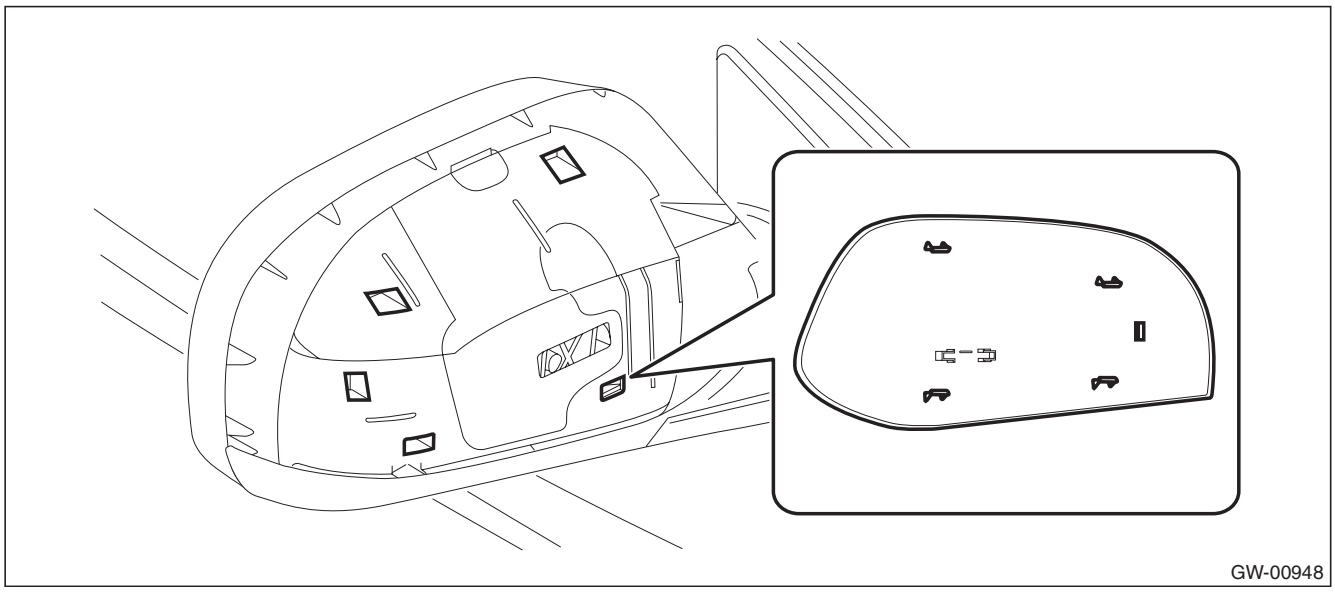

6) Check that all the claws are securely engaged.

GETtheMANUALS.org

2. MODEL WITH ELECTRIC RETRACTABLE MIRROR

CAUTION:

- **When removing the mirror, be careful not to damage the back surface of mirror with a flat tip screwdriver.**
- **When installing the mirror, insert the connector and clip securely.**

1) Operate the remote control mirror switch to face the mirror surface upward.
2) Disconnect the ground cable from battery.
3) Remove the outer mirror.
   (1) Using a flat tip screwdriver, release the clips then remove the outer mirror by sliding downward.

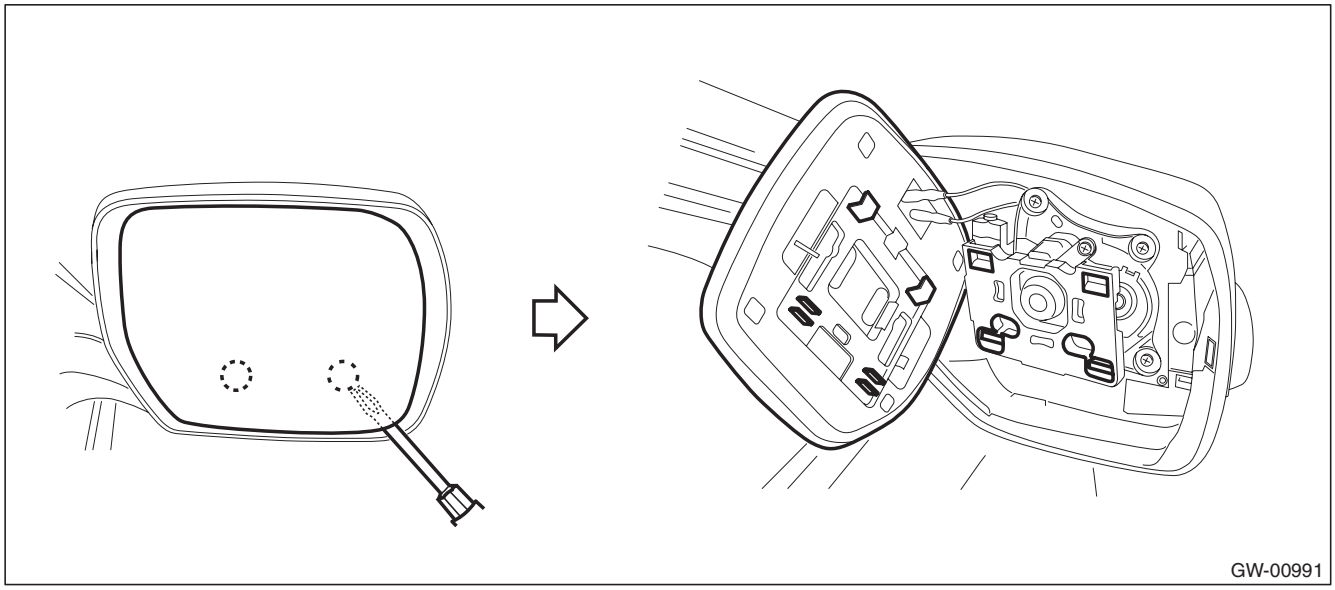

   (2) Disconnect the mirror heater connector. (Model with mirror heater)

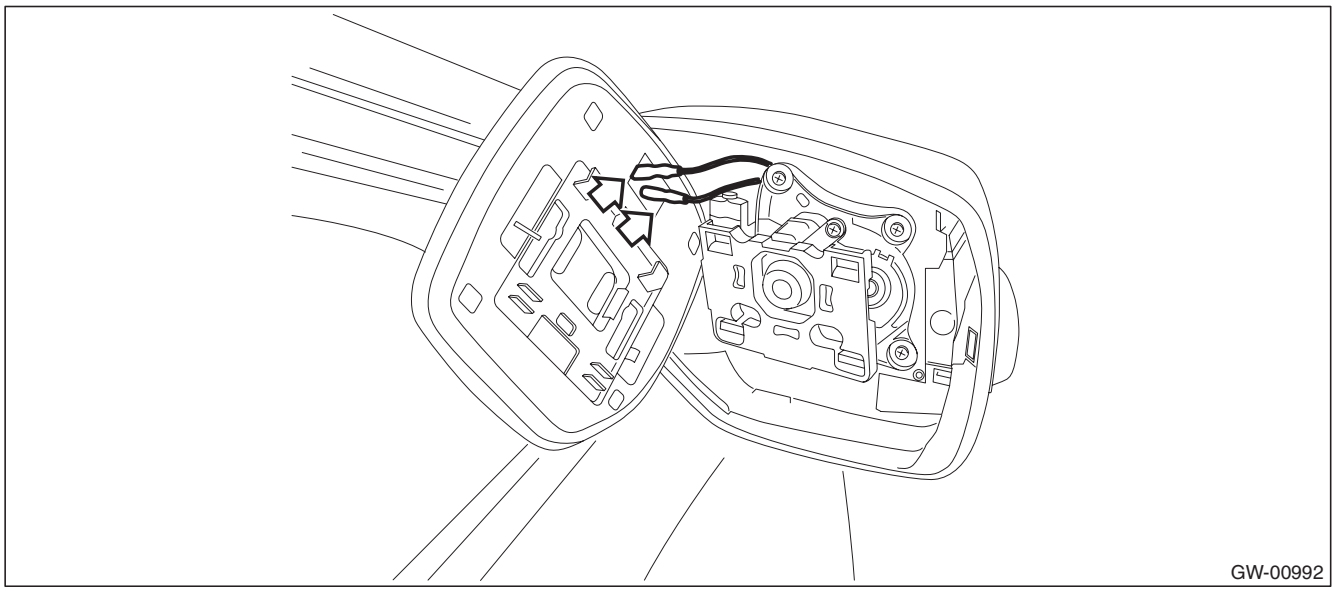

GETtheMANUALS.org

4) Disconnect the claws and then remove the outer mirror lower cover.

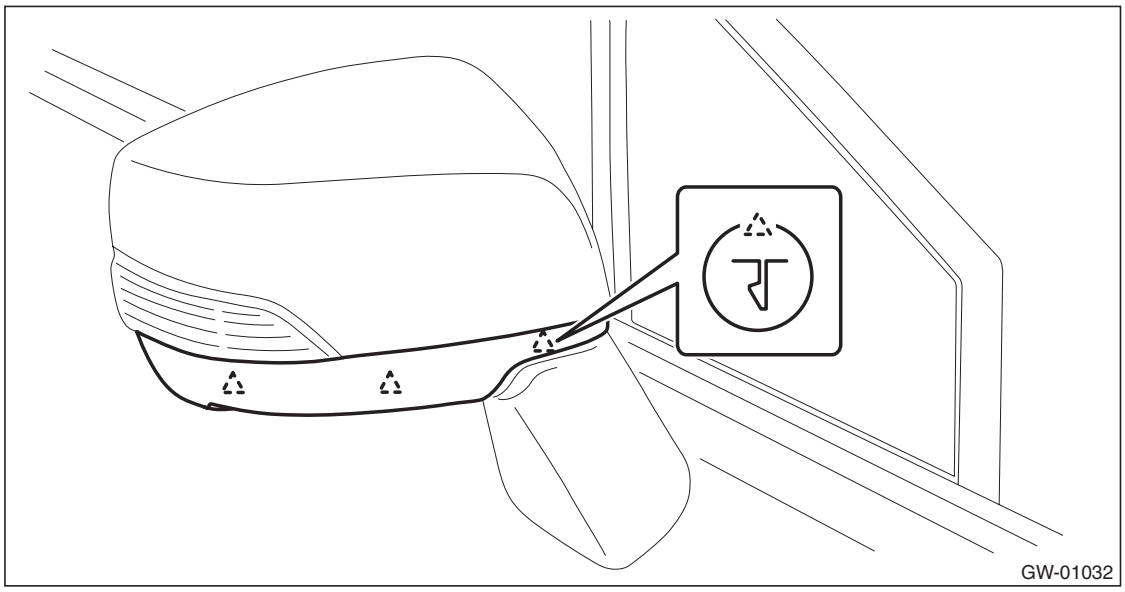

5) Disconnect the claws and then remove the scalp cap.

CAUTION:
Be careful not to apply excessive force when removing the scalp cap, as the lower hooks may become damaged.

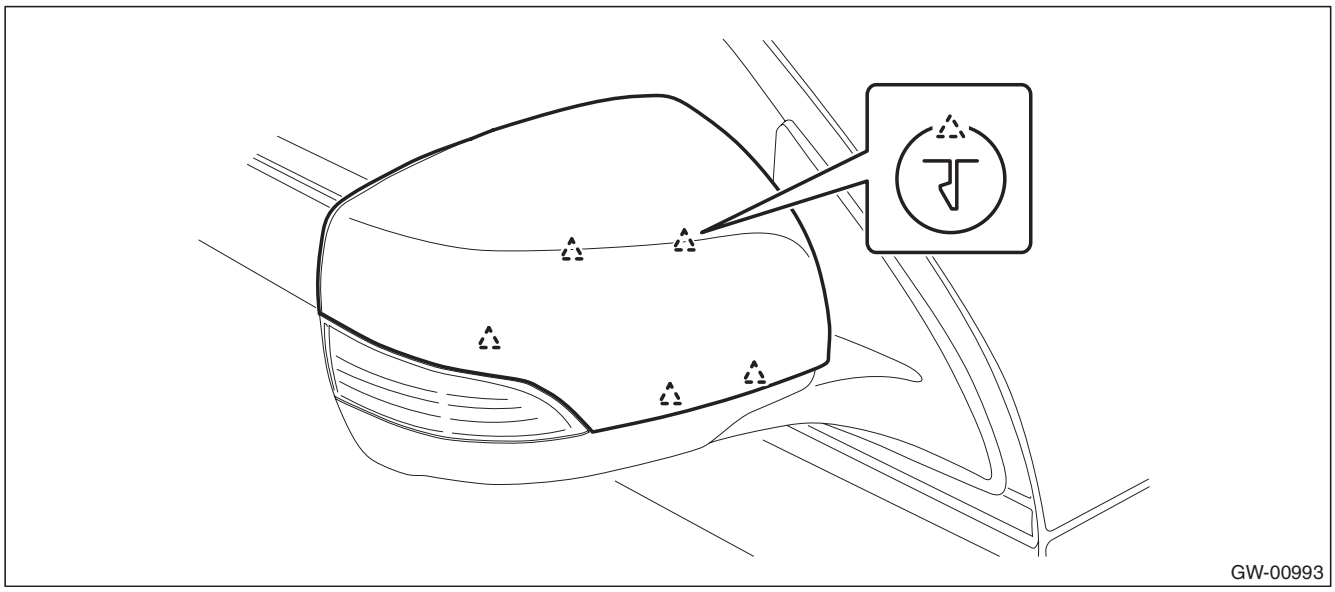

GETtheMANUALS.org

6) Engage the claws into the hole and install the scalp cap.

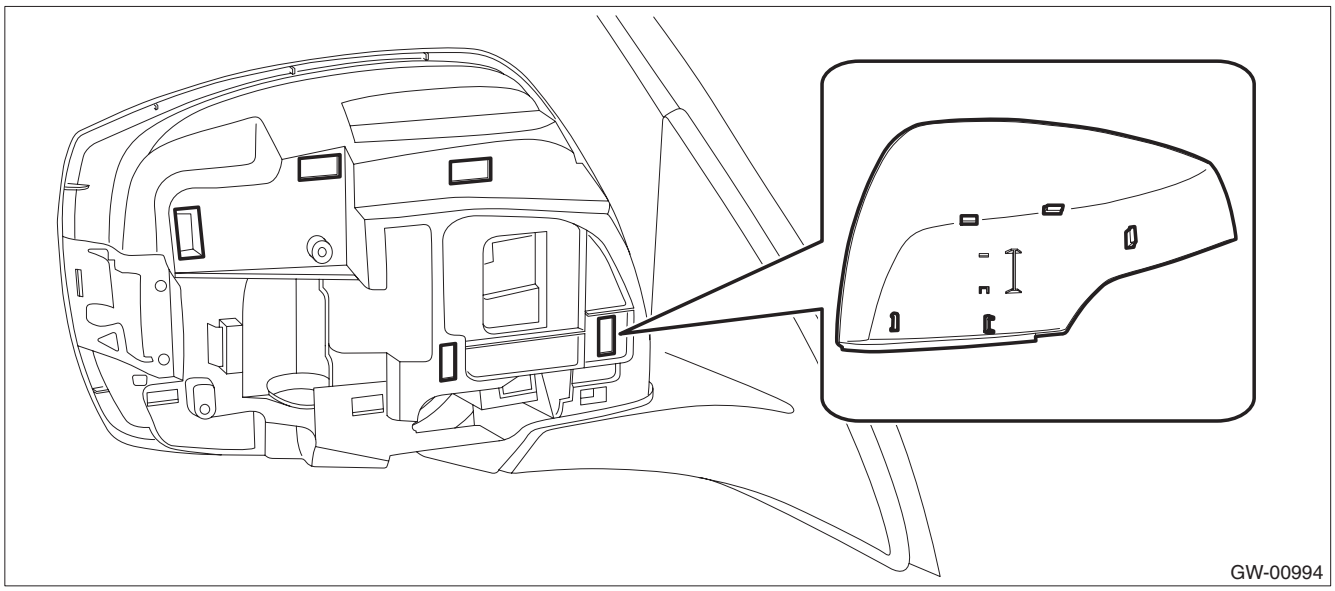

7) Engage the claws into the hole and install the outer mirror lower cover.

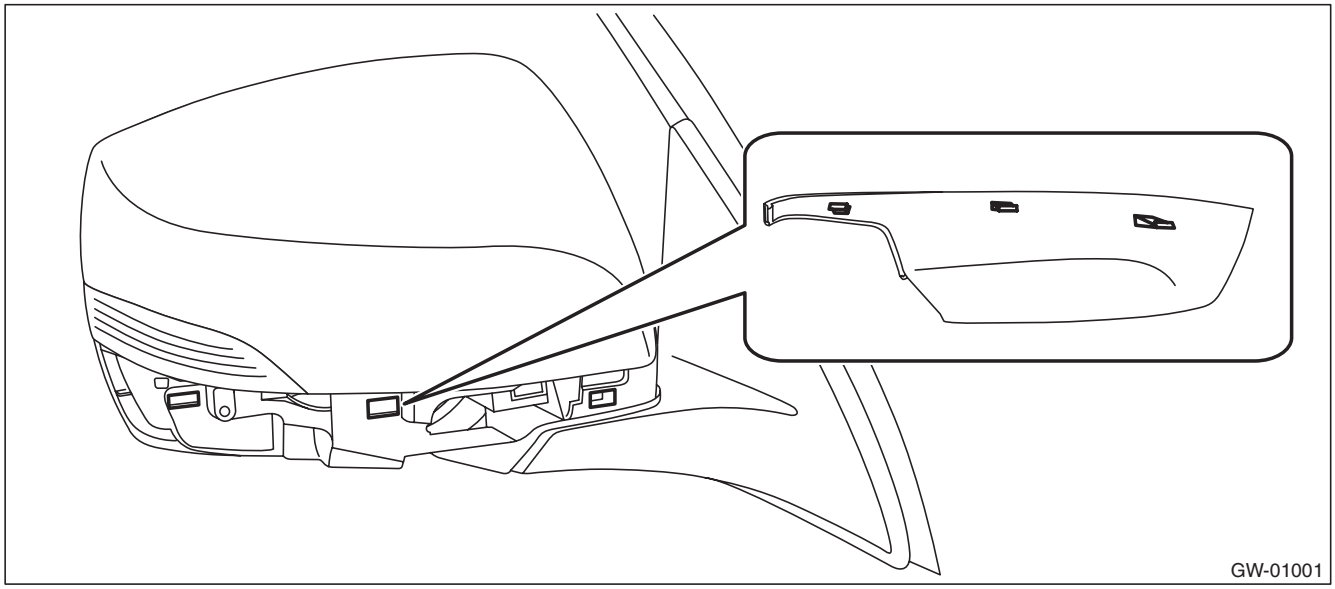

8) Check that all the claws are securely engaged.
9) Install the outer mirror in the reverse order of removal.

GETtheMANUALS.org

9. Outer Mirror Assembly

A: REMOVAL

1) Remove the front door trim. <Ref. to EI-60, FRONT DOOR, REMOVAL, Door Trim.>
2) Remove the outer mirror assembly.
   (1) Disconnect the connector.
   (2) Remove the bolts to remove outer mirror assembly.

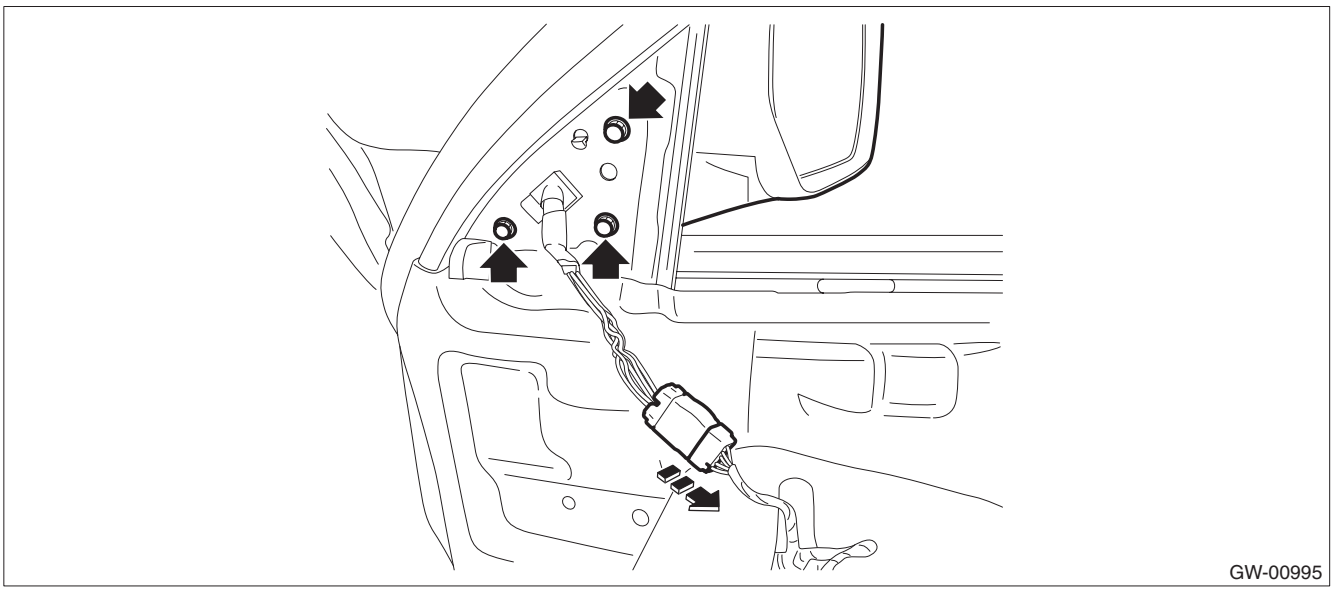

B: INSTALLATION

Install each part in the reverse order of removal.

Tightening torque:
Outer mirror assembly: 4.5 N·m (0.46 kgf-m, 3.3 ft-lb)

C: INSPECTION

1) Disconnect the outer mirror connector.
2) Apply battery voltage between the outer mirror connector terminals and check the mirror operation.

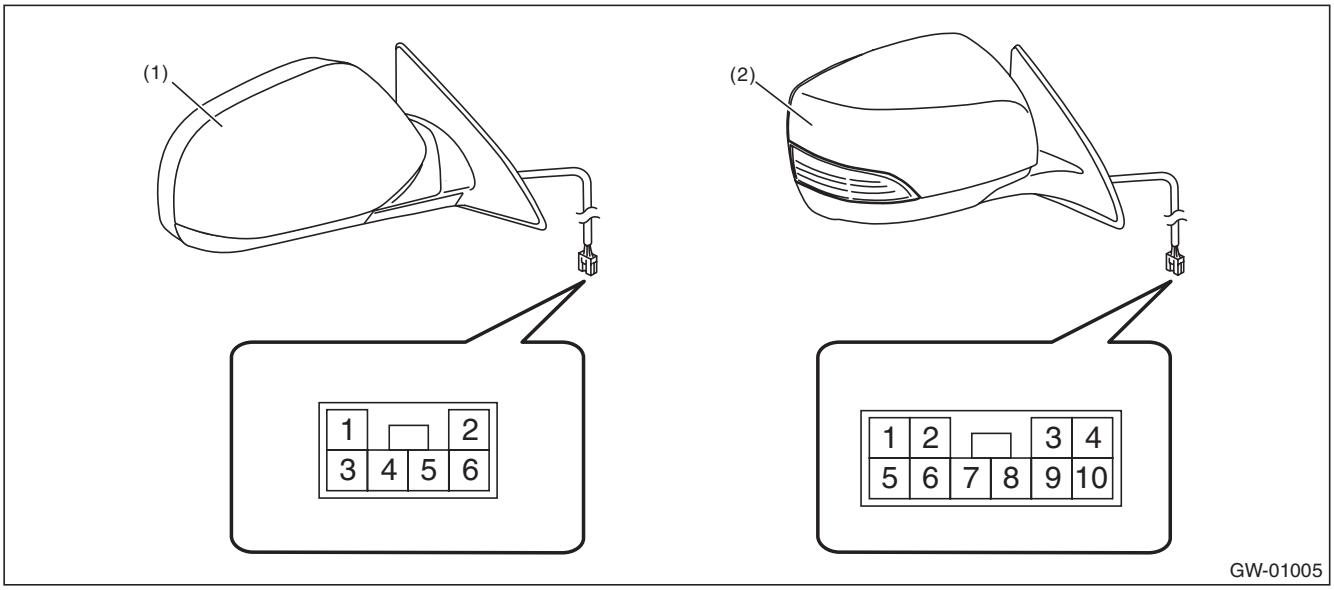

(1) Model without electric retractable mirror
(2) Model with electric retractable mirror

GETtheMANUALS.org

- Model without electric retractable mirror

Terminal No.	Inspection conditions	Switch position
—	—	OFF
2 (+) — 5 (–)	Apply battery voltage between terminals.	UP
5 (+) — 2 (–)	Apply battery voltage between terminals.	DOWN
4 (+) — 2 (–)	Apply battery voltage between terminals.	LEFT
2 (+) — 4 (–)	Apply battery voltage between terminals.	RIGHT

- Model with electric retractable mirror

Terminal No.	Inspection conditions	Switch position
—	—	OFF
3 (+) — 8 (–)	Apply battery voltage between terminals.	UP
8 (+) — 3 (–)	Apply battery voltage between terminals.	DOWN
7 (+) — 3 (–)	Apply battery voltage between terminals.	LEFT
3 (+) — 7 (–)	Apply battery voltage between terminals.	RIGHT
2 (+) — 6 (–)	Apply battery voltage between terminals.	Folding
6 (+) — 2 (–)	Apply battery voltage between terminals.	Unfolding

3) If it does not operate normally, replace the outer mirror assembly.

GETtheMANUALS.org

10. Outer Mirror

A: REPLACEMENT

1. MODEL WITHOUT ELECTRIC RETRACTABLE MIRROR

CAUTION:
- **When removing the mirror, be careful not to damage the back surface of mirror with a flat tip screwdriver.**
- **When installing the mirror, insert the connector and clip securely.**

1) Operate the remote control mirror switch to face the mirror surface upward.
2) Disconnect the ground cable from battery.
3) Remove the outer mirror.
   (1) Disconnect the clips using a flat tip screwdriver.

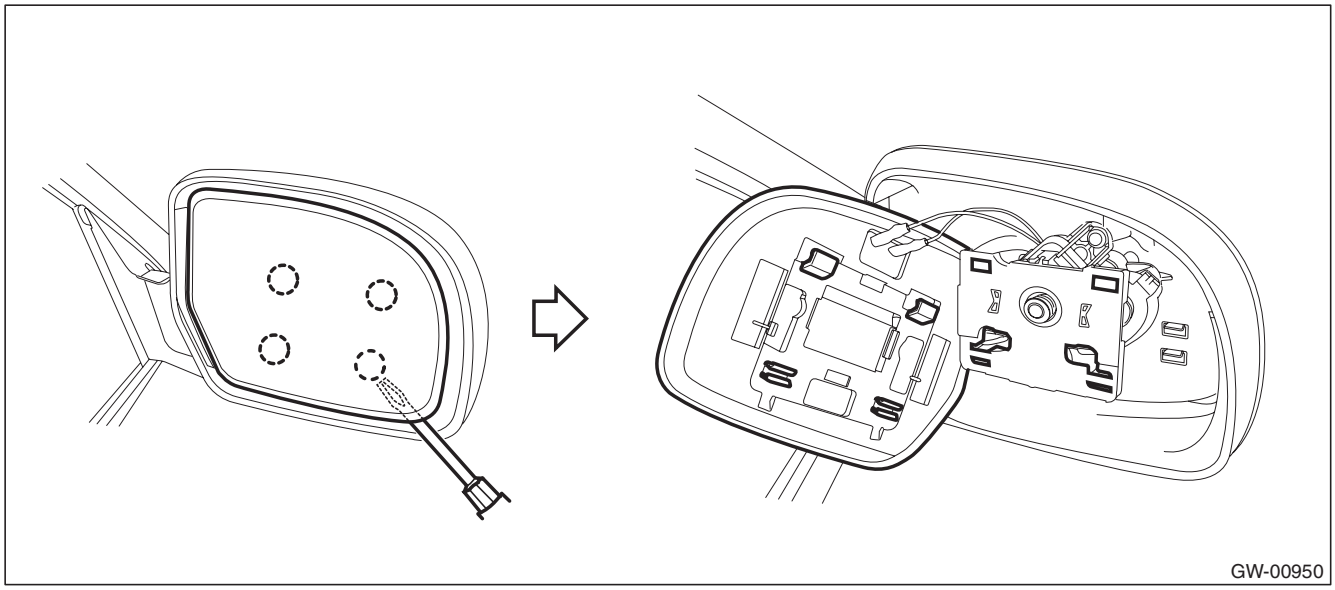

   (2) Disconnect the mirror heater connector. (Model with mirror heater)

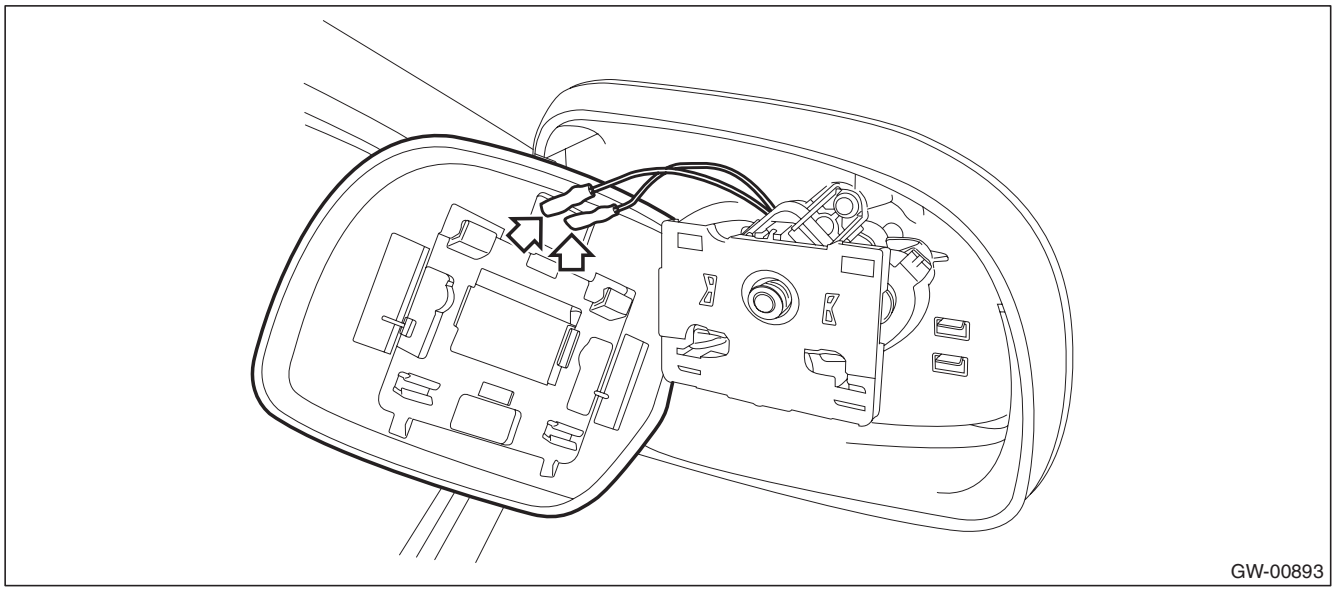

4) Install the outer mirror in the reverse order of removal.

GETtheMANUALS.org

2. MODEL WITH ELECTRIC RETRACTABLE MIRROR

CAUTION:

- **When removing the mirror, be careful not to damage the back surface of mirror with a flat tip screwdriver.**
- **When installing the mirror, insert the connector and clip securely.**

1) Operate the remote control mirror switch to face the mirror surface upward.
2) Disconnect the ground cable from battery.
3) Remove the outer mirror.
   (1) Using a flat tip screwdriver, release the clips then remove the outer mirror by sliding downward.

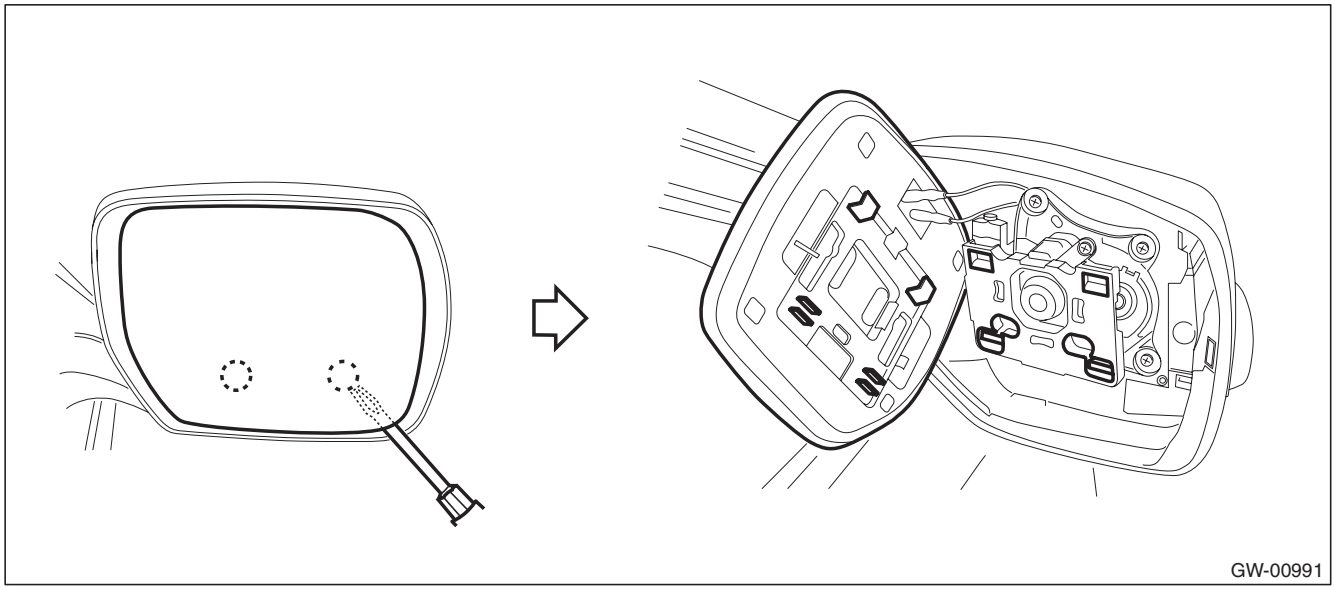

   (2) Disconnect the mirror heater connector. (Model with mirror heater)

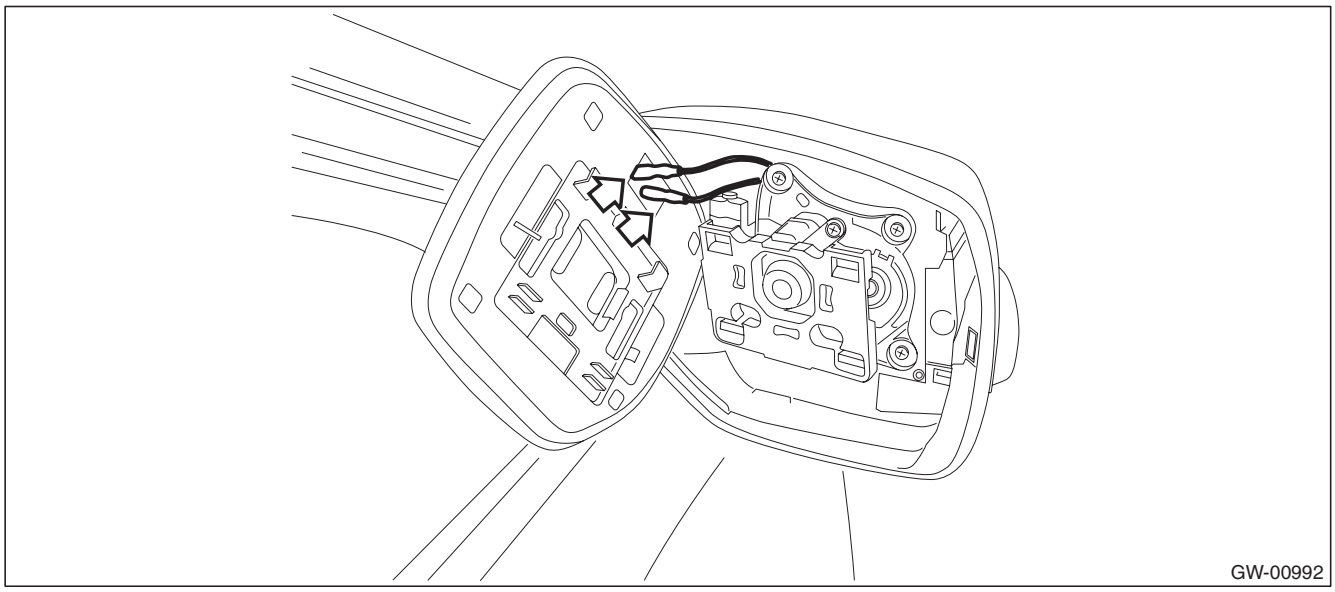

4) Install the outer mirror in the reverse order of removal.

GETtheMANUALS.org

11.Remote Control Mirror Switch

A: REMOVAL

1) Remove the instrument panel lower cover. <Ref. to EI-64, REMOVAL, Instrument Panel Lower Cover.>
2) Disconnect the claws and then remove the remote control mirror switch.

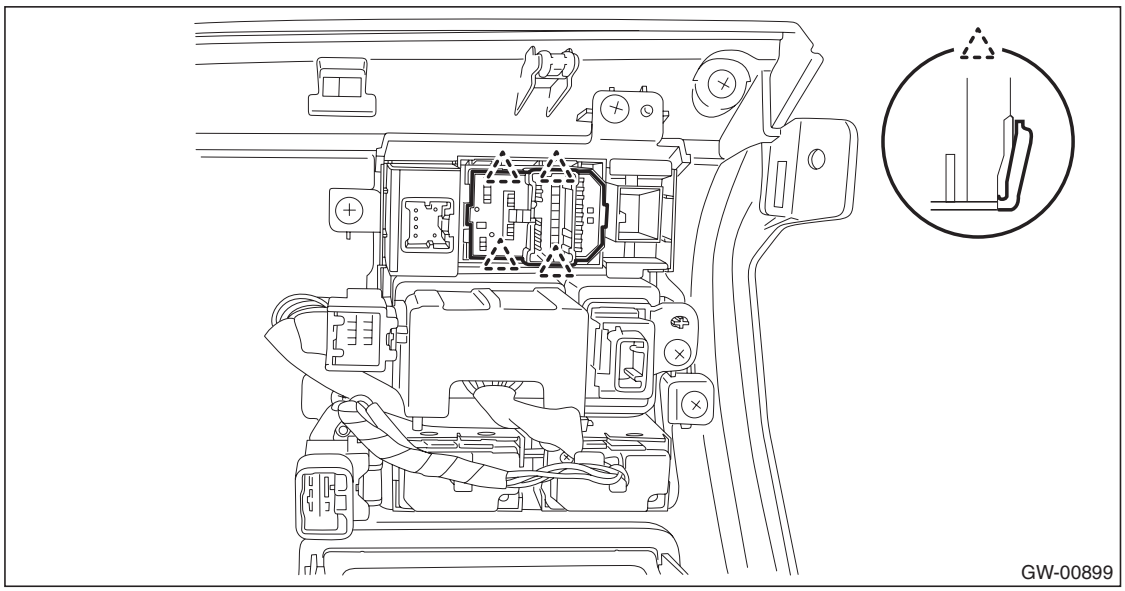

B: INSTALLATION

Install each part in the reverse order of removal.

C: INSPECTION

1) Disconnect the remote control mirror switch connector.
2) Check the resistance between remote control mirror switch terminals.

Preparation tool: Circuit tester

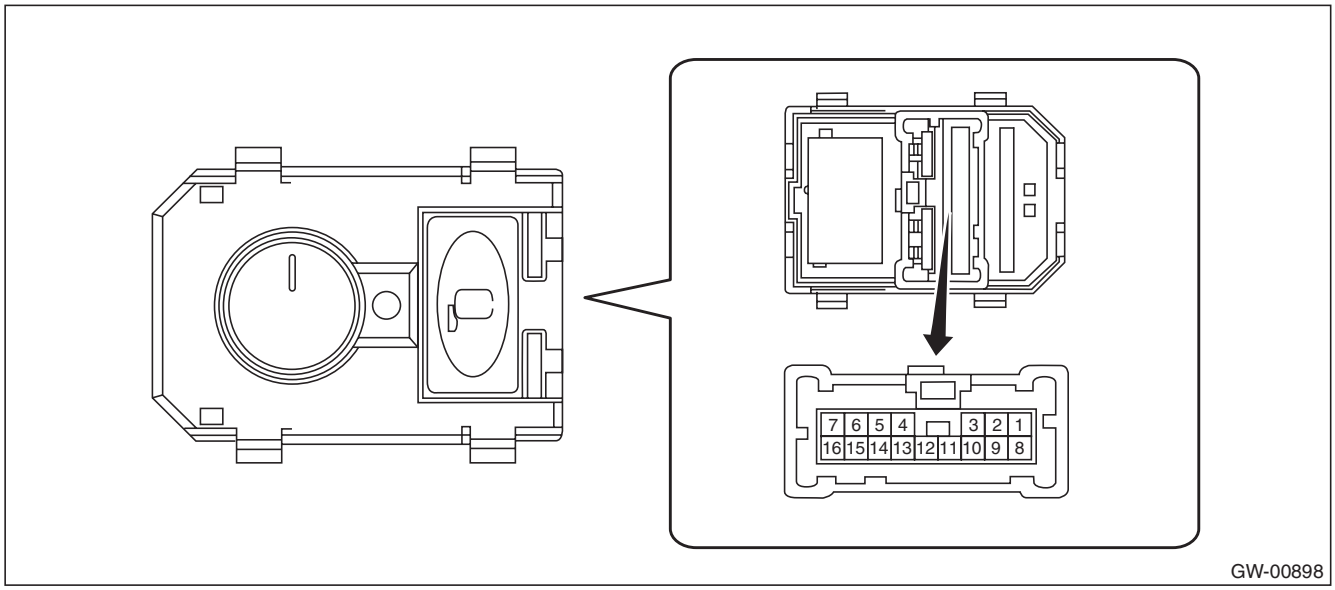

GETtheMANUALS.org

- Changeover switch RH

Terminal No.	Inspection conditions	Specification
—	OFF	1 MΩ or more
1 — 12 11 — 7	UP	Less than 1 Ω
1 — 11 12 — 7	DOWN	Less than 1 Ω
1 — 9 12 — 7	LEFT	Less than 1 Ω
1 — 12 9 — 7	RIGHT	Less than 1 Ω

- Changeover switch LH

Terminal No.	Inspection conditions	Specification
—	OFF	1 MΩ or more
1 — 14 10 — 7	UP	Less than 1 Ω
1 — 10 14 — 7	DOWN	Less than 1 Ω
1 — 8 14 — 7	LEFT	Less than 1 Ω
1 — 14 8 — 7	RIGHT	Less than 1 Ω

- Folding switch (model with electric retractable mirror)

Terminal No.	Inspection conditions	Specification
—	OFF	1 MΩ or more
1 — 5 2 — 7	Folding (LH)	Less than 1 Ω
1 — 6 3 — 7	Folding (RH)	Less than 1 Ω
1 — 2 5 — 7	Unfolding (LH)	Less than 1 Ω
1 — 3 6 — 7	Unfolding (RH)	Less than 1 Ω

3) Replace the remote control mirror switch if the inspection result is not within the standard value.

GETtheMANUALS.org

12. Rear Door Glass

A: REMOVAL

1) Remove the rear door trim. <Ref. to EI-61, REAR DOOR, REMOVAL, Door Trim.>
2) Remove the sealing cover.

CAUTION:
- **Carefully remove the butyl tape. Excessive force will easily break the cover.**
- **If cover gets broken, replace it with a new part.**

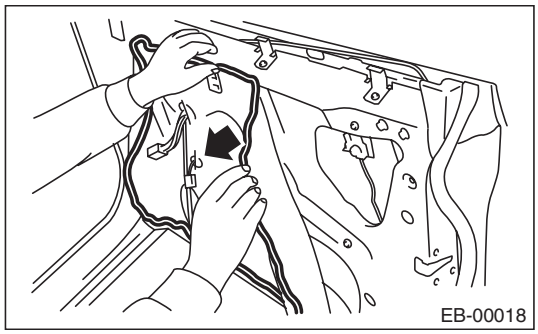

3) Attach the battery ground cable and power window switch and turn the ignition to ON.
4) Remove the rear door glass.
   (1) Operate the power window switch to move the rear door glass to the lowest position where the mounting bolts can be seen.
   (2) Remove the screw and bolt and remove the door sash.

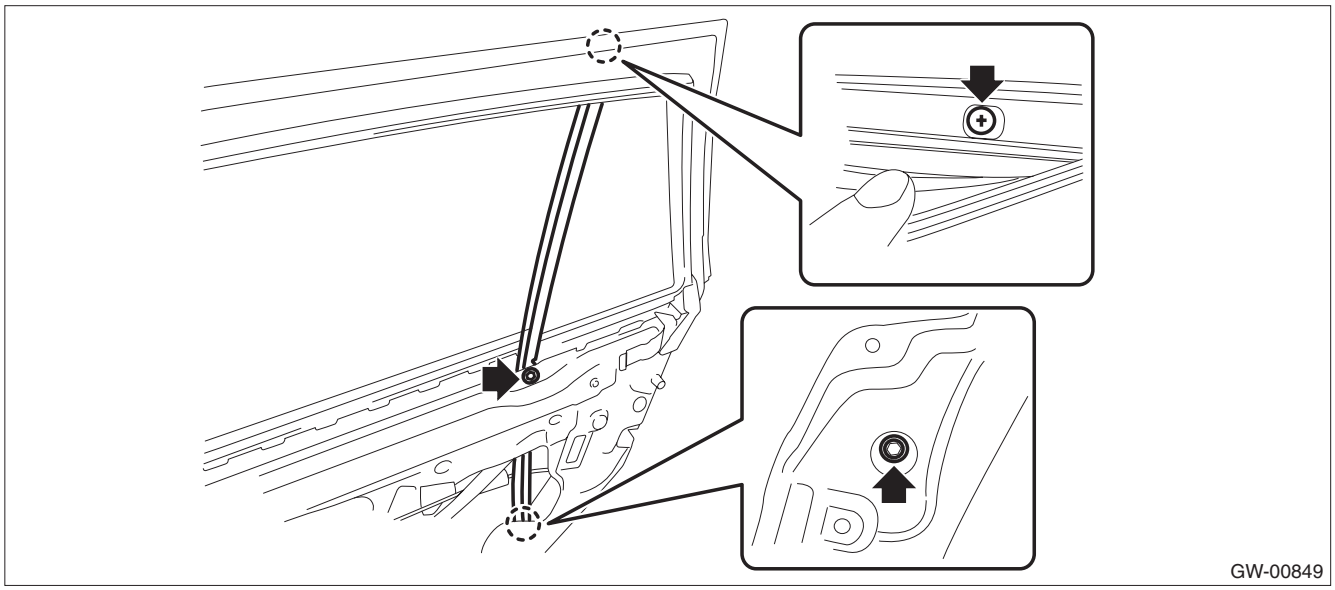

GETtheMANUALS.org

(3) Remove the bolt.

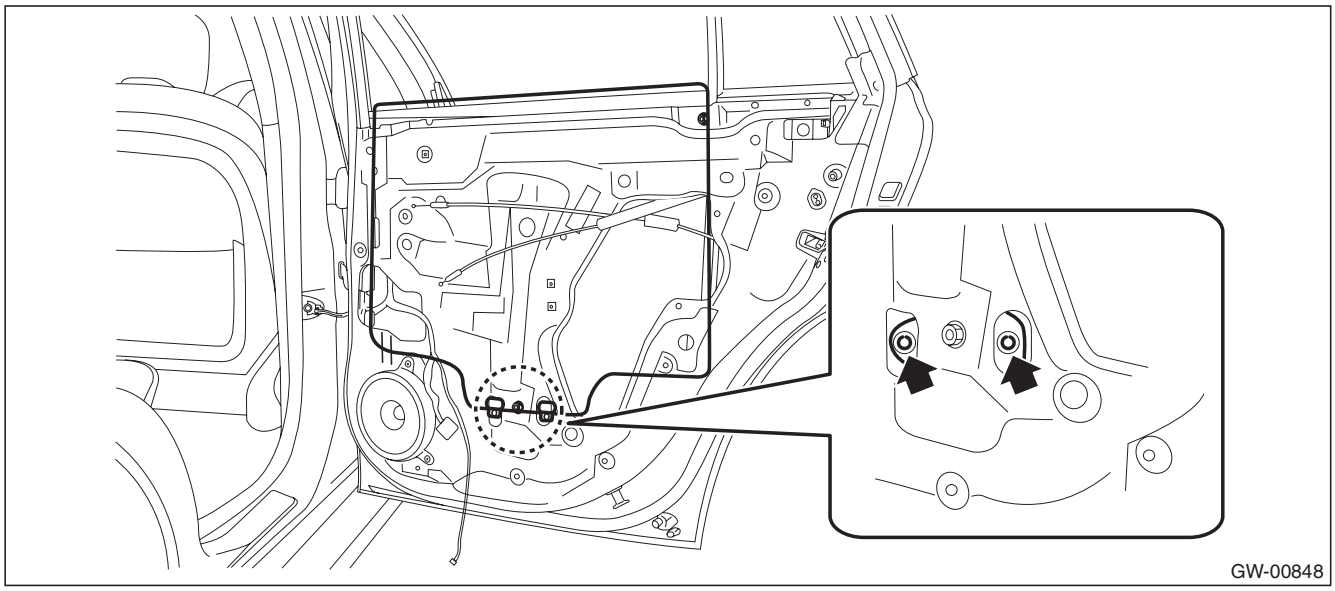

(4) Remove the rear door glass.

CAUTION:
Avoid impact and damage to the glass.

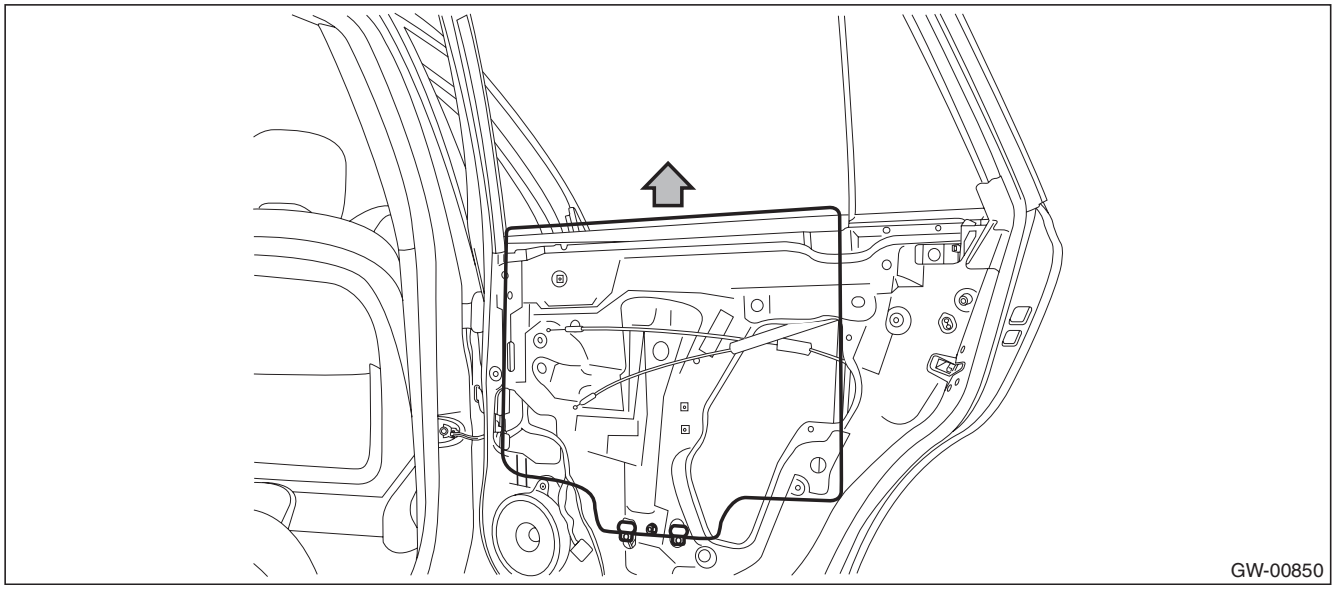

B: INSTALLATION

CAUTION:
Make sure that the glass run rubber is placed securely in the door frame and sash.
Install each part in the reverse order of removal.

Tightening torque:
Refer to "COMPONENT" of "General Description". <Ref. to GW-5, REAR DOOR GLASS, COMPONENT, General Description.>

GETtheMANUALS.org

13. Rear Regulator and Motor Assembly

A: REMOVAL

1) Remove the rear door trim. <Ref. to EI-61, REAR DOOR, REMOVAL, Door Trim.>
2) Remove the sealing cover.

CAUTION:
- **Carefully remove the butyl tape. Excessive force will easily break the cover.**
- **If cover gets broken, replace it with a new part.**

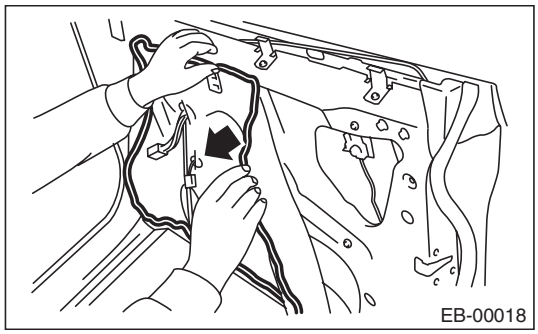

3) Attach the battery ground cable and power window switch and turn the ignition to ON.
4) Remove the rear door glass. <Ref. to GW-34, REMOVAL, Rear Door Glass.>
   (1) Operate the power window switch to move the rear door glass to the lowest position where the mounting bolts can be seen.
   (2) Remove the screw and bolt and remove the door sash.

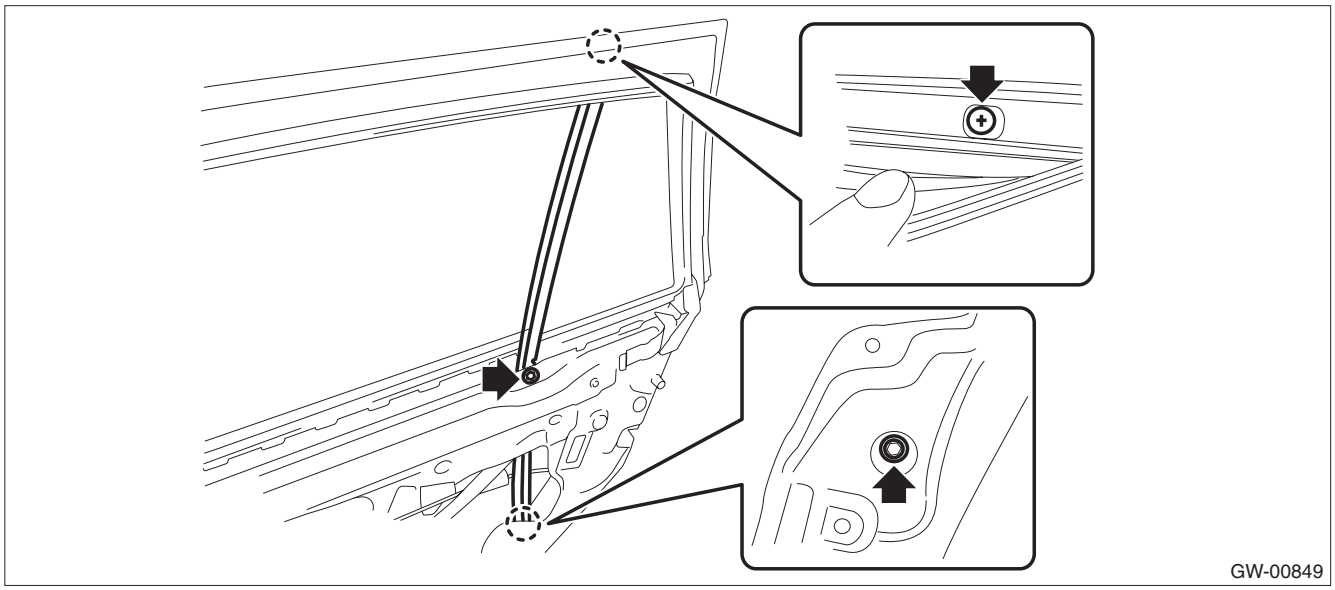

GETtheMANUALS.org

(3) Remove the bolt.

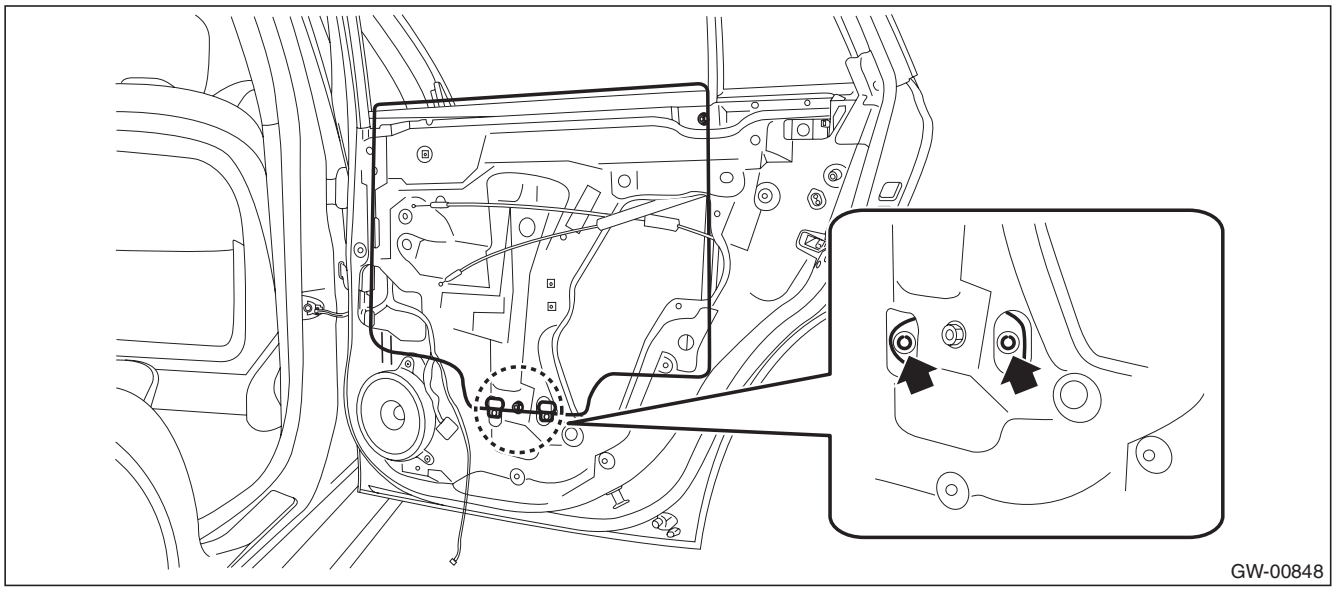

(4) Remove the rear door glass.

CAUTION:
Avoid impact and damage to the glass.

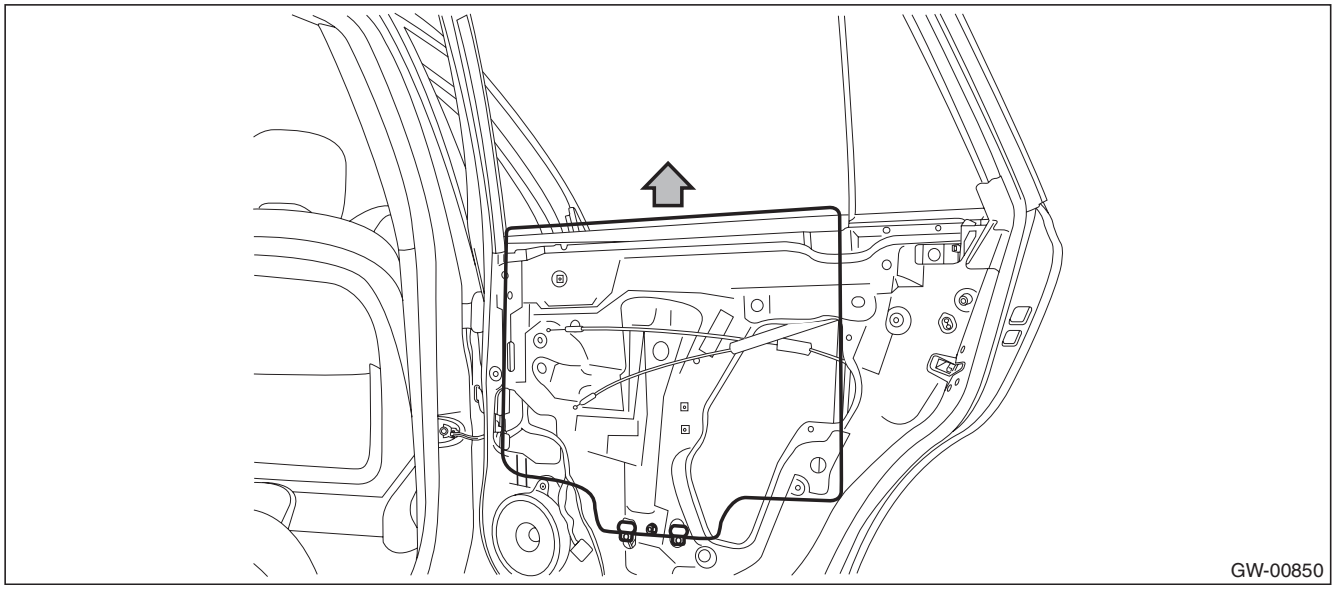

GETtheMANUALS.org

5) Remove the rear regulator and motor assembly.
   (1) Disconnect the connector.
   (2) Remove the bolts, and then remove the rear regulator and motor assembly.

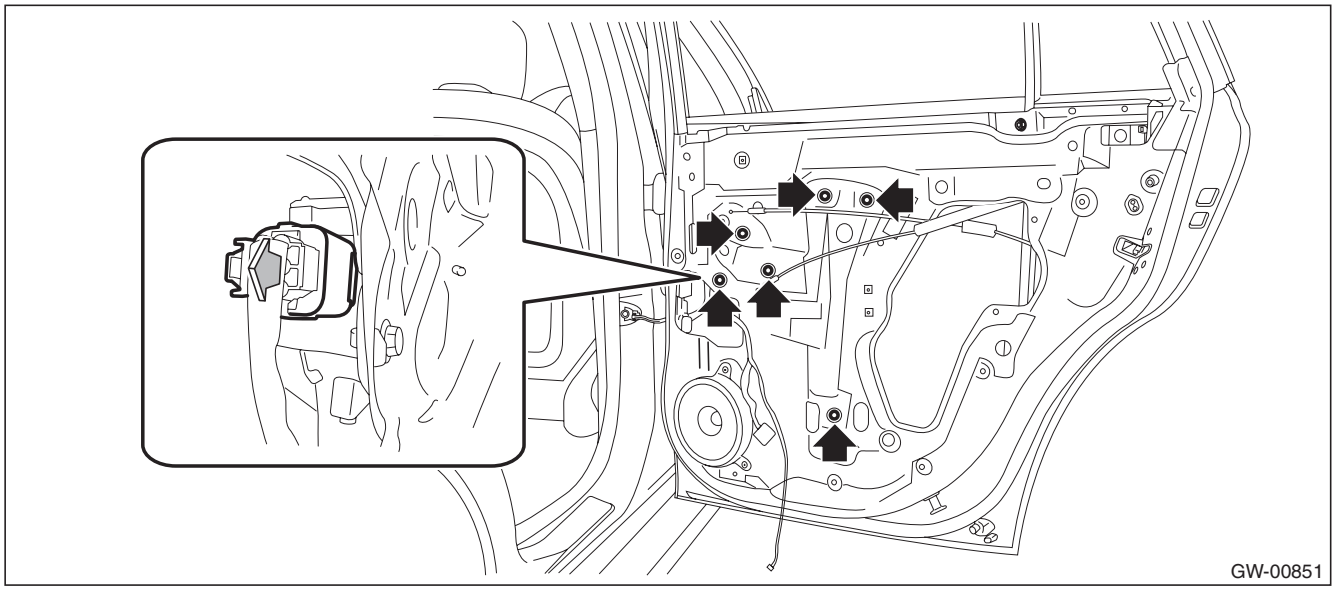

B: INSTALLATION

Install each part in the reverse order of removal.

Tightening torque:
Refer to "COMPONENT" of "General Description". <Ref. to GW-5, REAR DOOR GLASS, COMPONENT, General Description.>

GETtheMANUALS.org

C: INSPECTION

1) Disconnect the motor connector.
2) Apply battery voltage between the motor connector terminals and check the motor operation. Check to ensure that the motor rotates in reverse direction when the terminal to which battery voltage is applied is changed.

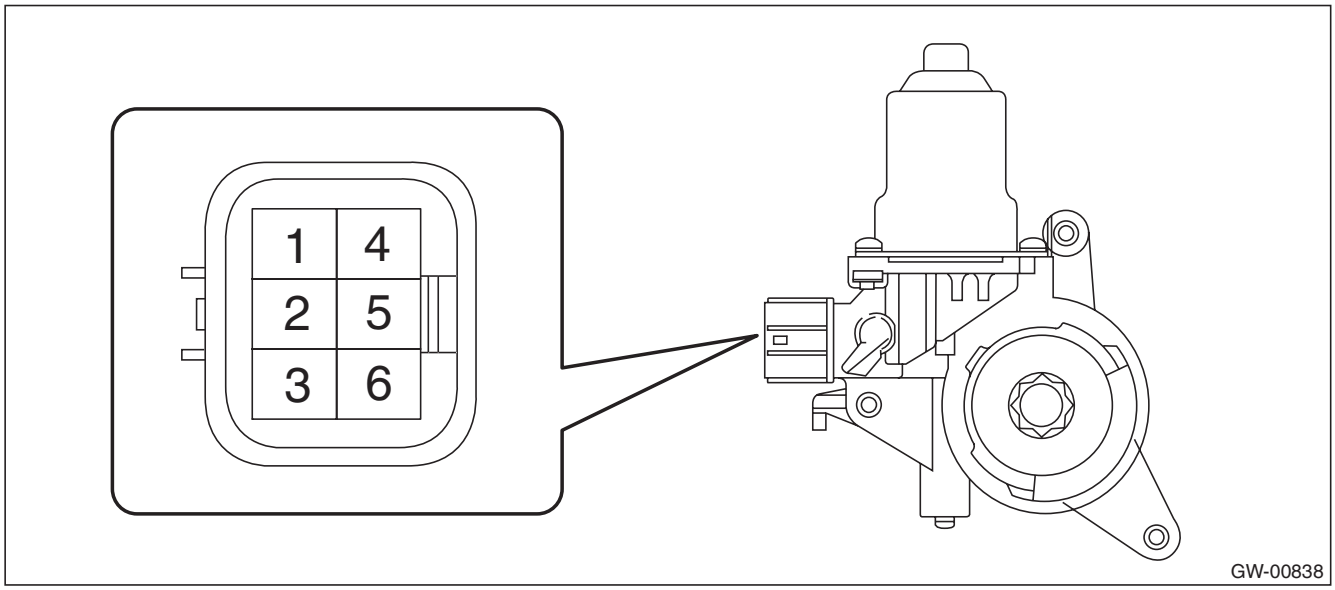

Terminal No.	Inspection conditions	Standard
1 (+) — 4 (–)	Apply battery voltage between terminals.	Increase
4 (+) — 1 (–)	Apply battery voltage between terminals.	Decrease

3) If the inspection results in improper operation, replace the rear regulator and motor assembly.

GETtheMANUALS.org

14. Windshield Glass

A: REMOVAL

1. USING WINDSHIELD GLASS KNIFE

1) Disconnect the ground cable from battery. (Models with wiper deicer)
2) Remove the front pillar trim. <Ref. to EI-102, REMOVAL, Upper Inner Trim.>
3) Disconnect the wiper deicer connector. (Models with wiper deicer)
4) Remove the cowl panel. <Ref. to EI-32, REMOVAL, Cowl Panel.>
5) Remove the molding from the glass and tape the body side of the circumference of windshield glass for protection.

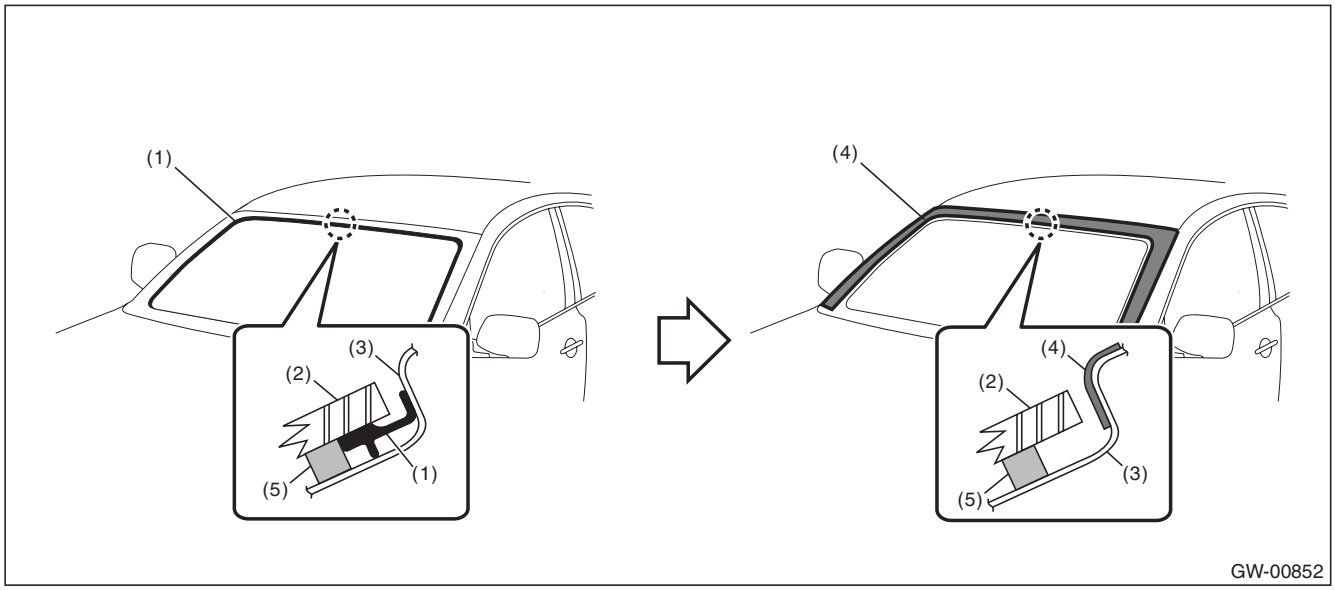

(1)	Molding	(3)	Body panel	(5)	Adhesive
(2)	Windshield glass	(4)	Protective tape		

GETtheMANUALS.org

6) Remove the windshield glass.
   (1) Apply sufficient amount of soapy water to the adhesive part and insert the windshield glass knife.
   (2) While holding the knife edge and windshield glass edge at a right angle, move the windshield glass knife parallel to the windshield glass edge along the surface and edge of windshield glass to cut the adhesive.

CAUTION:
- **Cutting of adhesive part should be started with wider gap between windshield glass and body.**
- **Never twist the windshield glass knife.**

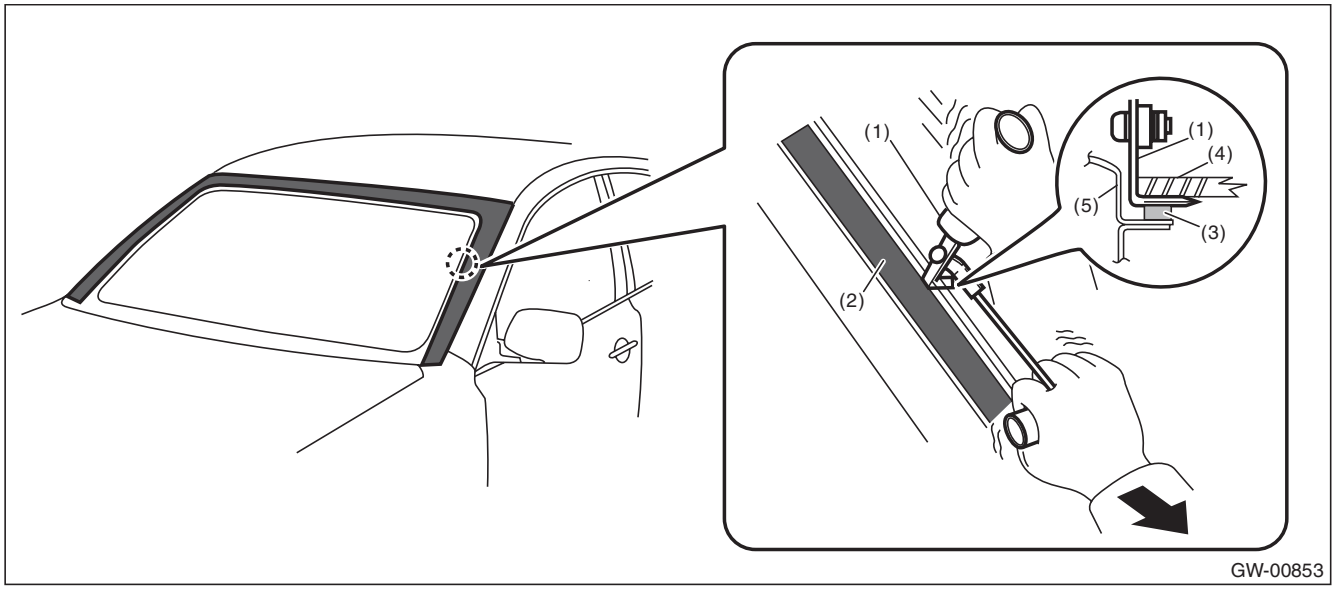

(1)	Windshield glass knife	(3)	Adhesive	(5)	Body panel
(2)	Protective tape	(4)	Windshield glass		

   (3) Disconnect the locating pin and remove the windshield glass.

NOTE:
The locating pins are bonded to the corners of glass. Use piano wire to disconnect the pins.

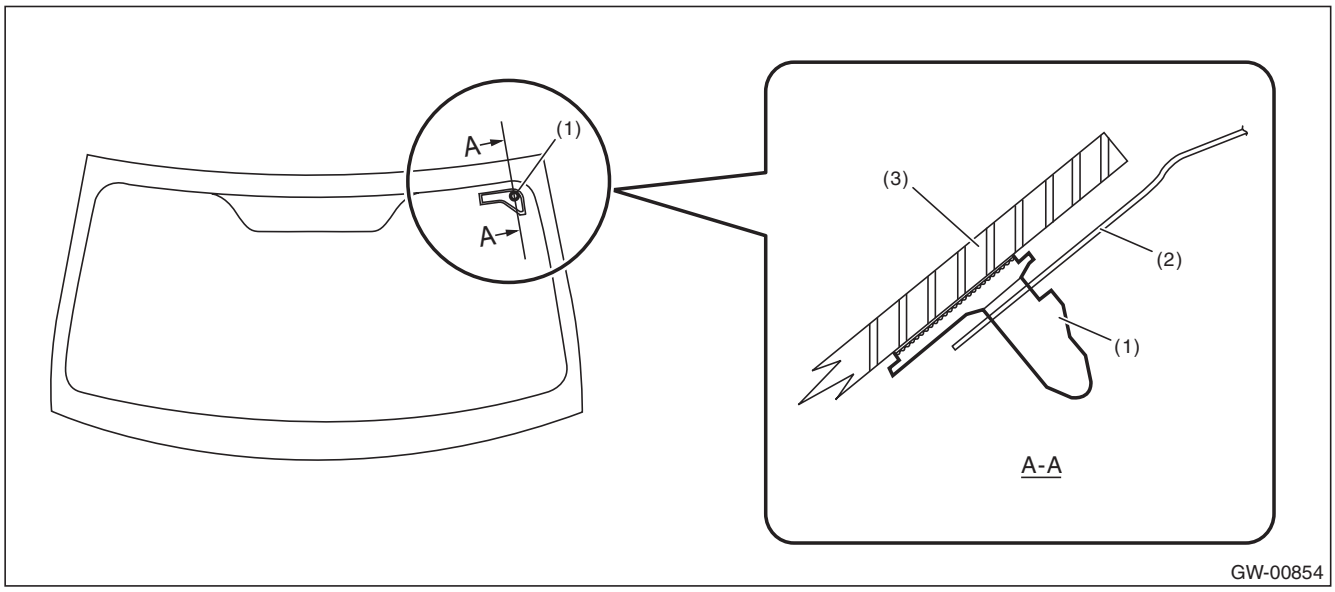

(1)	Locating pin	(2)	Body panel	(3)	Windshield glass

GETtheMANUALS.org

2. USING PIANO WIRE

CAUTION:
- **Do not tightly pull the piano wire against the windshield glass edge.**
- **Apply protective tape, etc, and be careful that the inner and outer components of the vehicle are not damaged.**
- **Do not cross piano wires. Otherwise they may be cut.**

1) Disconnect the ground cable from battery. (Models with wiper deicer)
2) Remove the front pillar trim. <Ref. to EI-102, REMOVAL, Upper Inner Trim.>
3) Disconnect the wiper deicer connector. (Models with wiper deicer)
4) Remove the cowl panel. <Ref. to EI-32, REMOVAL, Cowl Panel.>
5) Remove the molding from the glass and tape the body side of the circumference of windshield glass for protection.

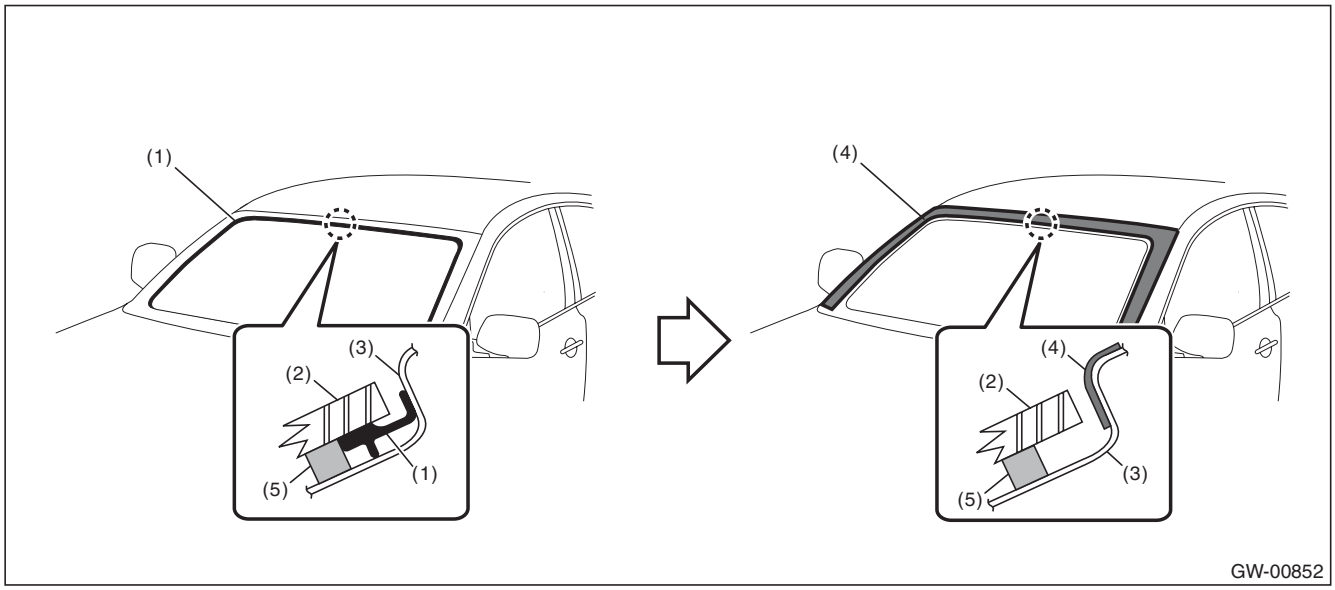

(1)	Molding	(3)	Body panel	(5)	Adhesive
(2)	Windshield glass	(4)	Protective tape		

GETtheMANUALS.org

6) Remove the windshield glass.
   (1) Using a drill, make a hole in the adhesive part.
   (2) Pass the piano wire through the hole, and pull the wire ends alternately to cut off the adhesive part and locating pin.

CAUTION:
Attach a piece of wood to both piano wire ends.

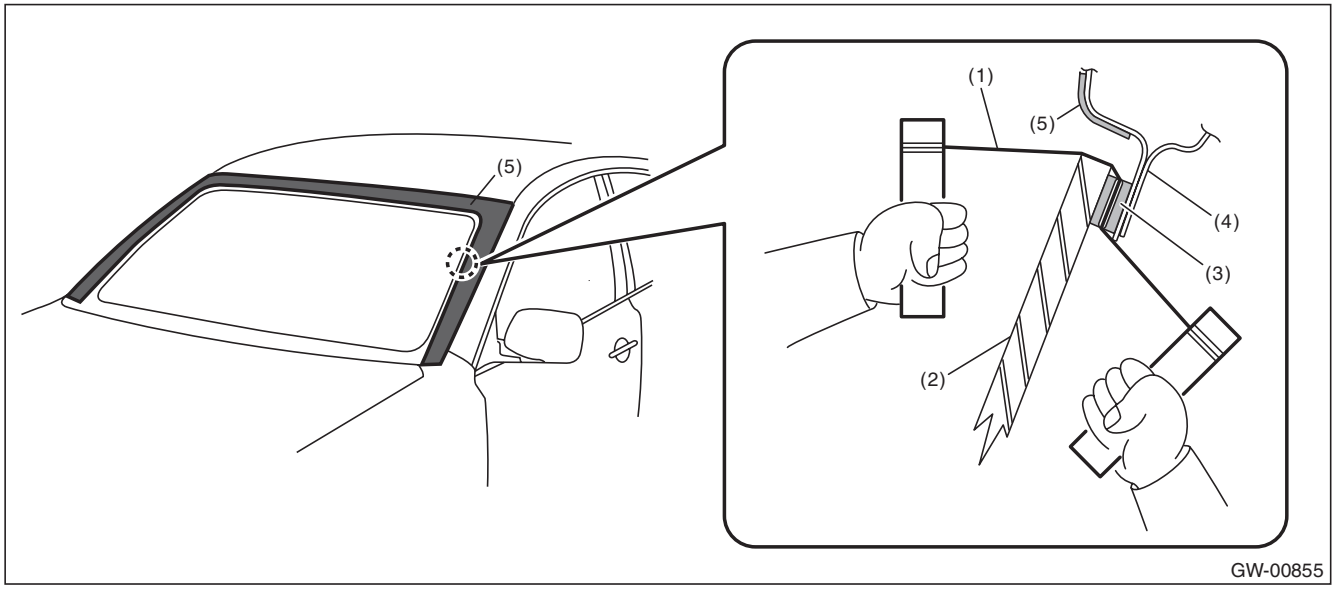

(1)	Piano wire	(3)	Adhesive	(5)	Protective tape
(2)	Windshield glass	(4)	Body panel		

B: INSTALLATION

1) Fabricate the cartridge nozzle tip as shown and set the sealant gun with the adhesive.

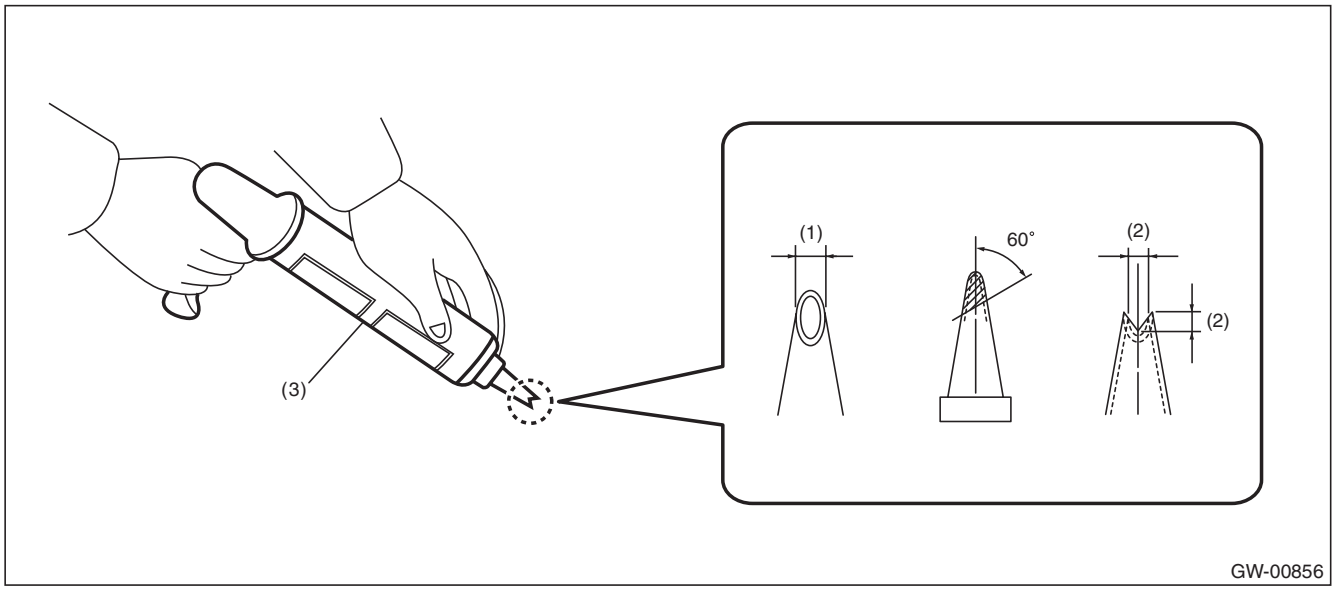

(1)	10 mm (0.39 in)	(2)	8 mm (0.31 in)	(3)	Sealant gun

GETtheMANUALS.org

2) Remove the adhesive layer on the body using cutter knife to obtain smooth face of 2 mm (0.08 in) thick.

CAUTION:
- **Be careful not to damage the body and paint surface.**
- **Be sure to keep some of old adhesive.**

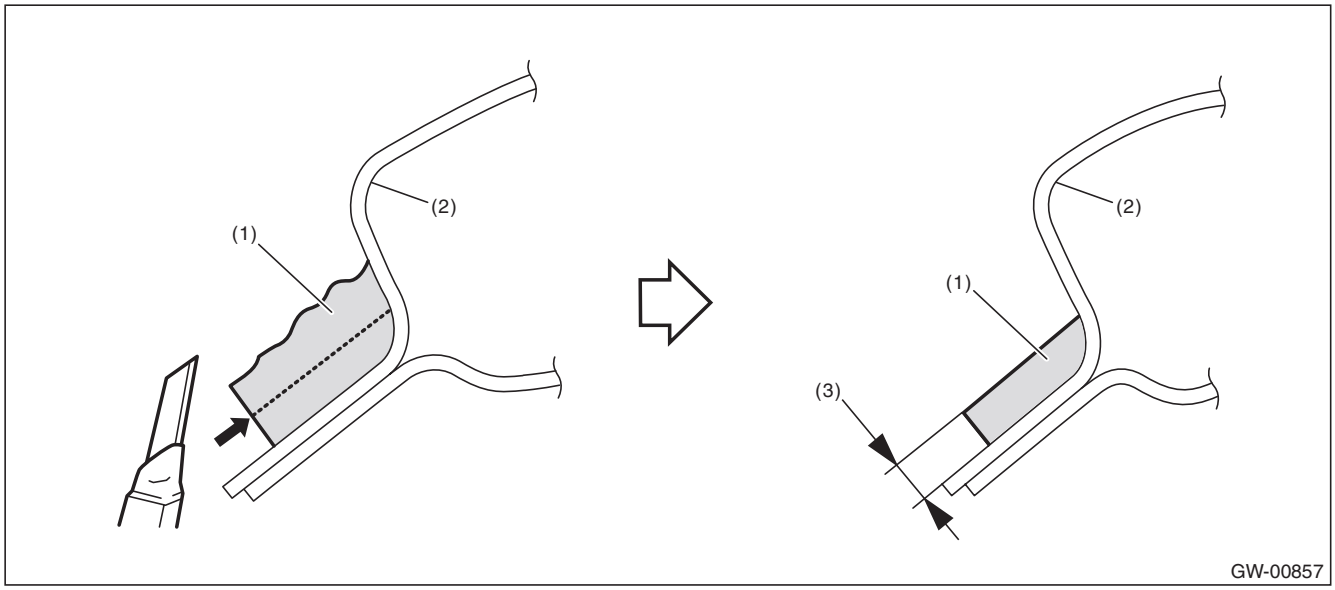

(1)	Adhesive	(2)	Body panel	(3)	2 mm (0.08 in)

3) Clean the glass and body with alcohol or white gasoline to eliminate cutting powder, dust and dirt completely.
4) Attach the dam rubber to the glass.

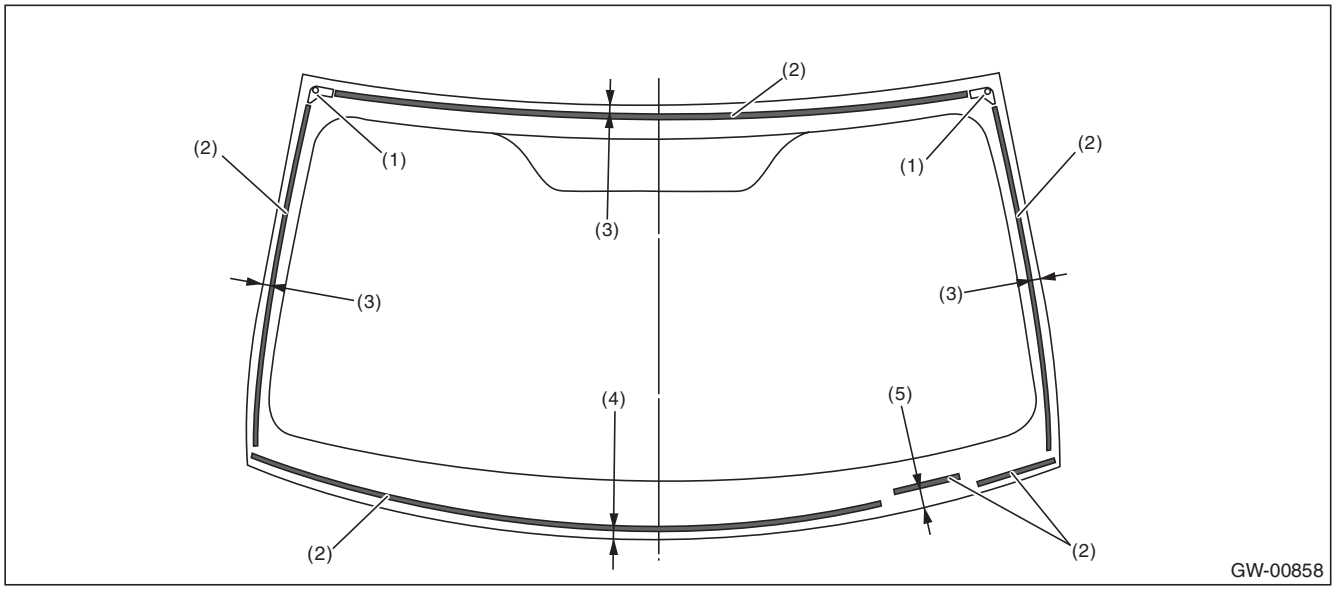

(1)	Locating pin	(3)	15 mm (0.59 in)	(5)	23.5 mm (0.92 in)
(2)	Dam rubber	(4)	13.5 mm (0.53 in)		

GETtheMANUALS.org

5) Install the molding to the glass.

CAUTION:
Be careful to attach the molding so that the molding has no loose or undulating part.

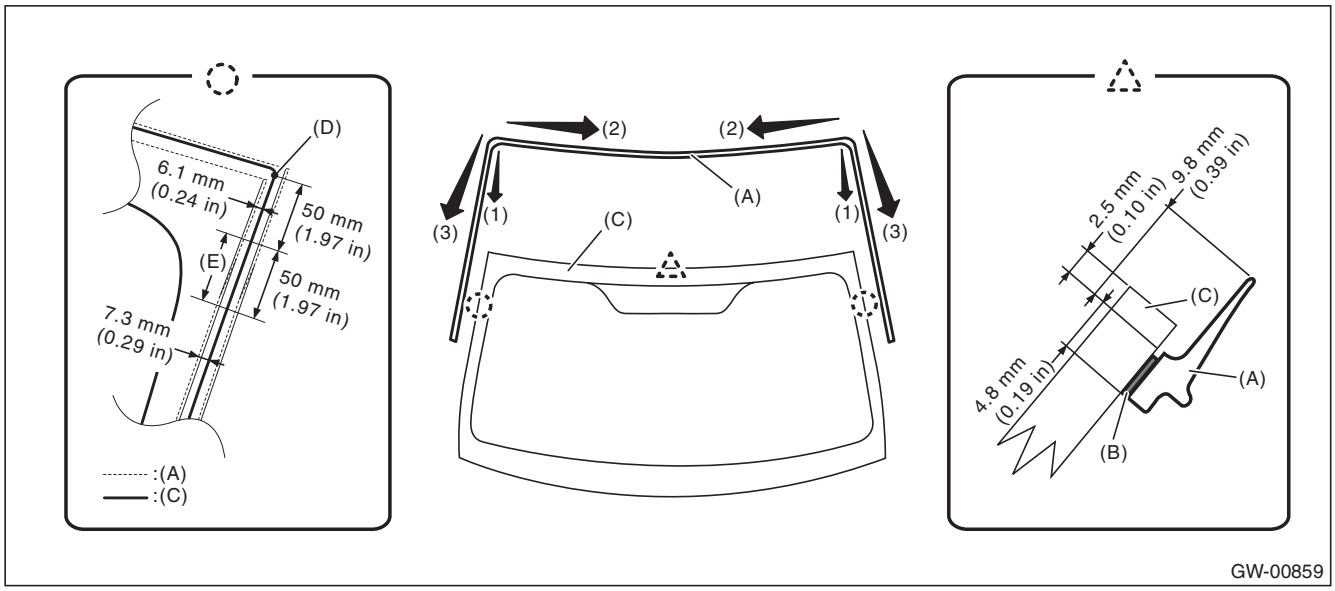

(1) Align the molding (A) with both ends of the upper edge of the windshield glass (C).
(2) Install the molding from both corners of the upper edge toward the center.
(3) Install the molding from both corners of the upper edge toward the lower side.

NOTE:
Change the molding installation width within the gradual change range (E) based on the curve end point on the upper end of side area (D).

(4) Firmly apply the double sided tape (B) of the molding evenly to the glass surface.

6) Install the windshield glass.

(1) Apply the primer to the adhesive surface of glass side and body side using sponge.

Glass primer:
Dow Automotive's
ESSEX U-401, U-402 or equivalent

Painted surface primer:
Dow Automotive's
ESSEX U-413 or equivalent

NOTE:
- Primer once attached to the painted surface of the body and internal trim is hard to wipe off. Mask the circumference of such area.
- Let primer dry for about ten minutes before installing the glass.
- Do not touch the surface coated with primer.

GETtheMANUALS.org

(2) Apply adhesive to the glass end back surface.

Adhesive:
Dow Automotive's
ESSEX U-400HV or equivalent

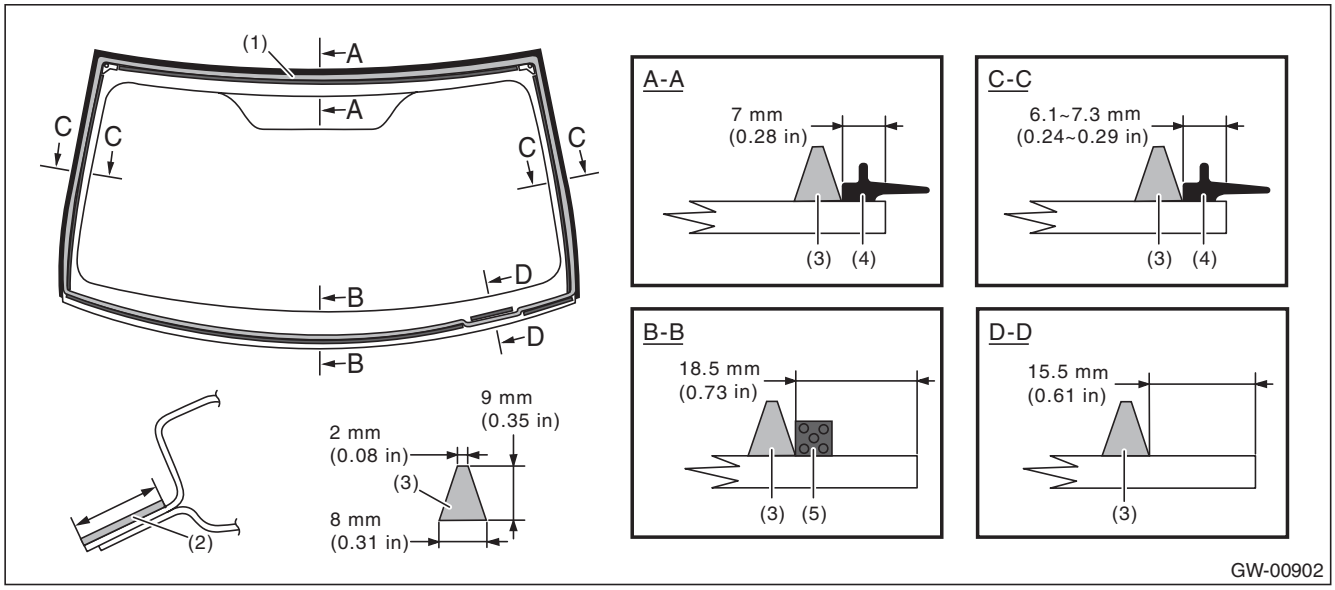

(1)	Application of primer (glass side)	(3)	Adhesive	(5)	Dam rubber
(2)	Application of primer (body side)	(4)	Molding		

(3) Fit the locating pins to vehicle body using suction rubber cup to install the windshield glass.

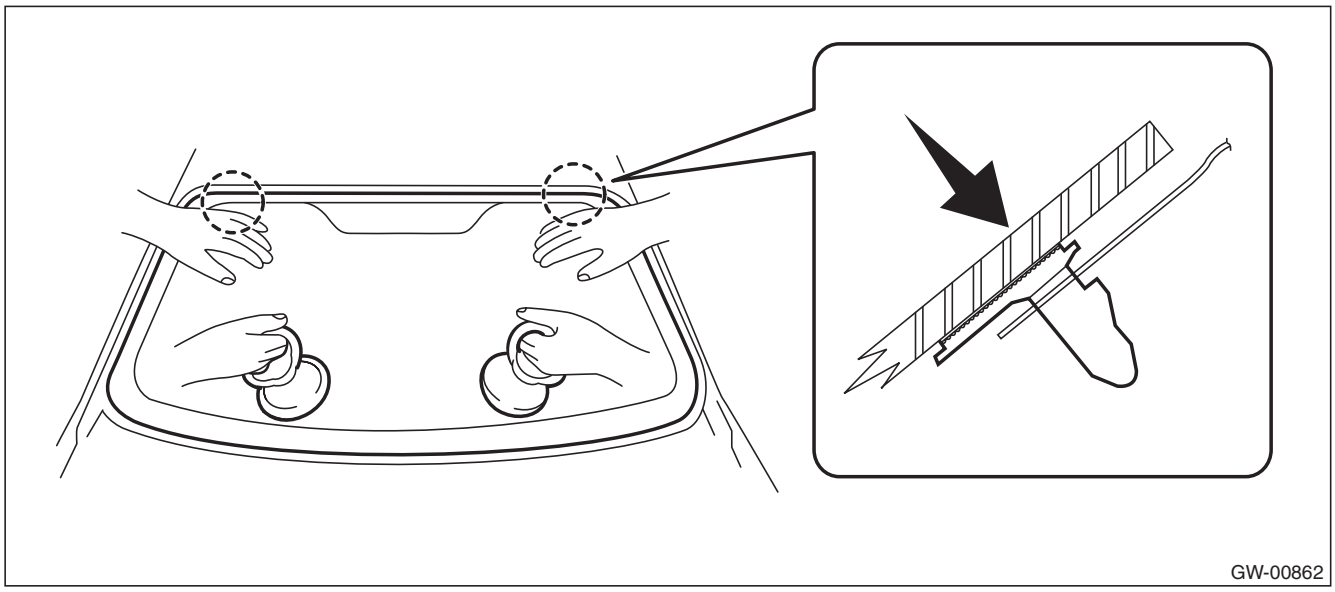

(4) Lightly press the entire perimeter of windshield glass for tight fit.
(5) Make flush the adhesive surface jutted out using spatula.

7) After completion of all work, allow the vehicle to stand for about 24 hours.

NOTE:
- When door is opened/closed after glass is bonded, always lower the door glass first, and then open/close it carefully.
- Move the vehicle slowly.
- For minimum drying time and vehicle standing time before driving after bonding, follow instructions or instruction manual from the adhesive manufacturer.

GETtheMANUALS.org

8) After curing of adhesive, pour the water on external surface of vehicle to check that there are no water leaks.

NOTE:
When a vehicle is returned to the user, tell him or her that the vehicle should not be subjected to heavy impact for at least three days.

9) Install the cowl panel. <Ref. to EI-34, INSTALLATION, Cowl Panel.>
10) Connect the wiper deicer connector. (Models with wiper deicer)
11) Install the front pillar trim. <Ref. to EI-107, INSTALLATION, Upper Inner Trim.>
12) Connect the battery ground terminal. (Models with wiper deicer)

GETtheMANUALS.org

15. Rear Gate Glass

A: REMOVAL

1) Disconnect the ground cable from battery.
2) Remove the rear gate trim. <Ref. to EI-160, REMOVAL, Rear Gate Trim.>
3) Remove the rear gate garnish. <Ref. to EI-164, REMOVAL, Rear Gate Garnish.>
4) Remove the rear wiper arm and rear wiper motor. <Ref. to WW-38, REMOVAL, Rear Wiper Motor.>
5) Disconnect the rear defogger connector and radio antenna connector.
6) Remove the rear gate glass in the same procedure as for windshield glass. <Ref. to GW-40, REMOVAL, Windshield Glass.>

B: INSTALLATION

NOTE:
When applying adhesive and installing the dam rubber and molding, refer to Ag printing as a mark.

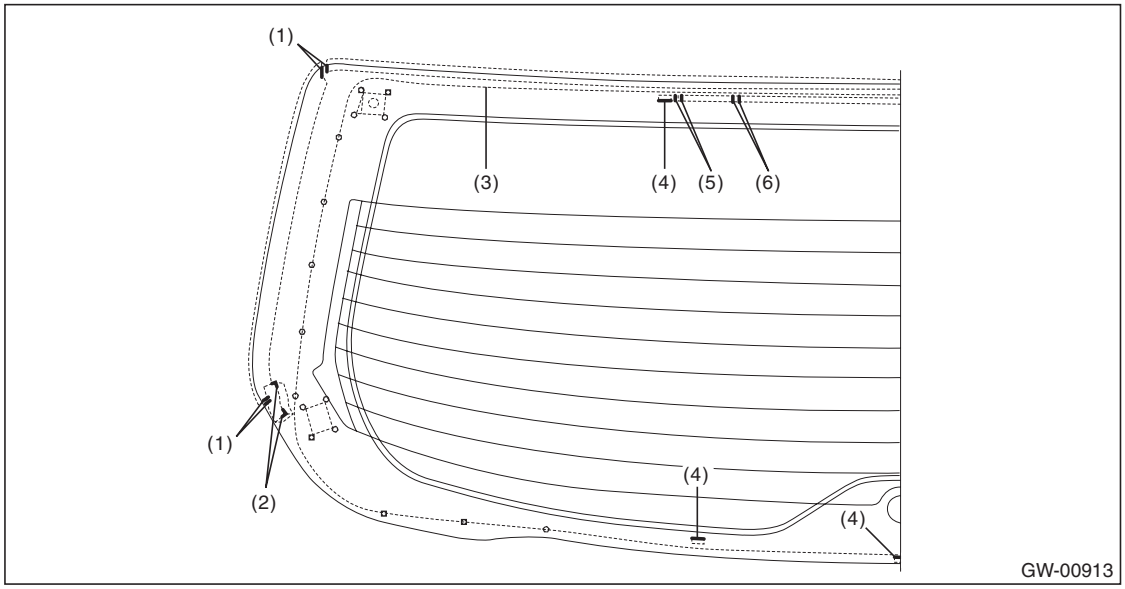

(1)	Molding edge	(3)	Adhesive line	(5)	Dam rubber edge (LH)
(2)	EPT sealer edge	(4)	Spacer edge	(6)	Dam rubber edge (RH)

GETtheMANUALS.org

1) Fabricate the cartridge nozzle tip as shown and set the sealant gun with the adhesive.

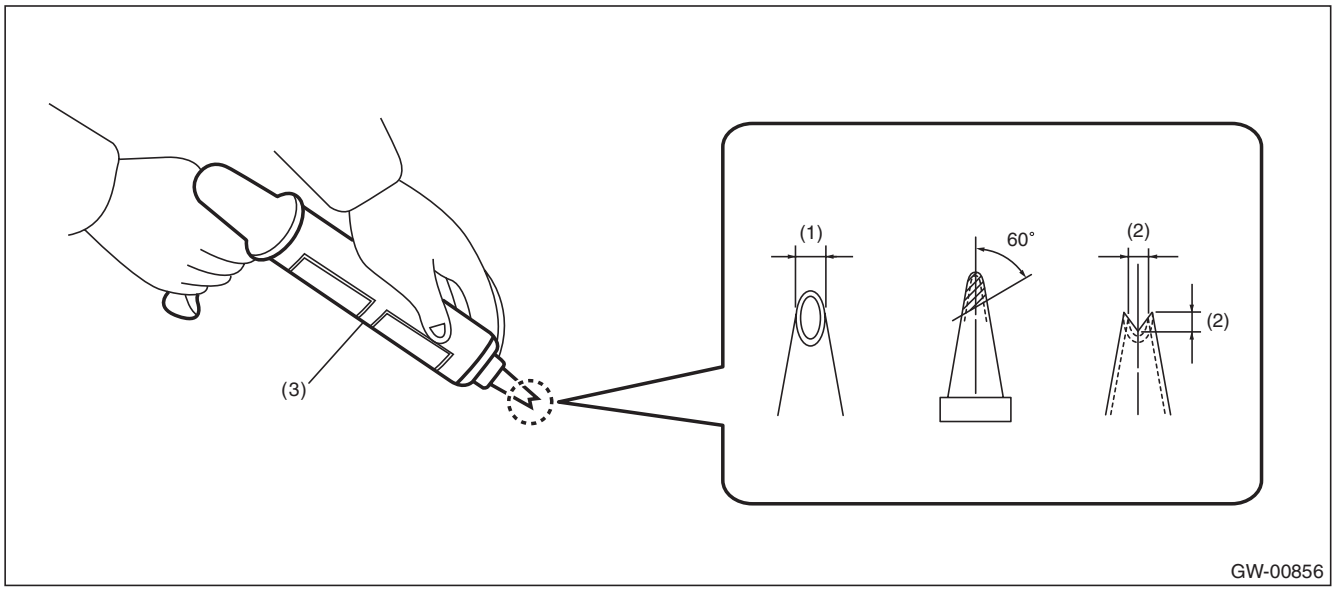

(1) 10 mm (0.39 in) (2) 8 mm (0.31 in) (3) Sealant gun

2) Prepare and clean the adhesion surfaces of the glass and body using the same procedures as for the windshield glass. <Ref. to GW-43, INSTALLATION, Windshield Glass.>
3) Attach the dam rubber to the glass.

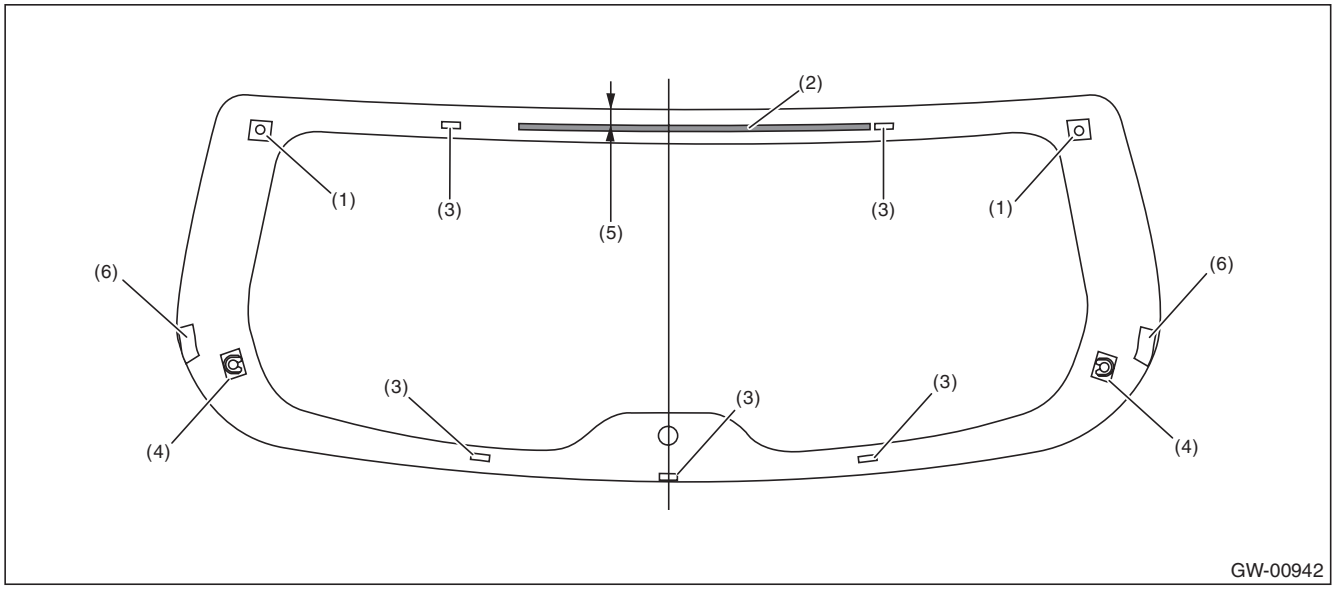

(1) Locating pin (3) Spacer (5) 15 mm (0.59 in)
(2) Dam rubber (4) Holder (6) EPT sealer

GETtheMANUALS.org

4) Install the molding to the glass.

CAUTION:
Be careful to attach the molding so that the molding has no loose or undulating part.

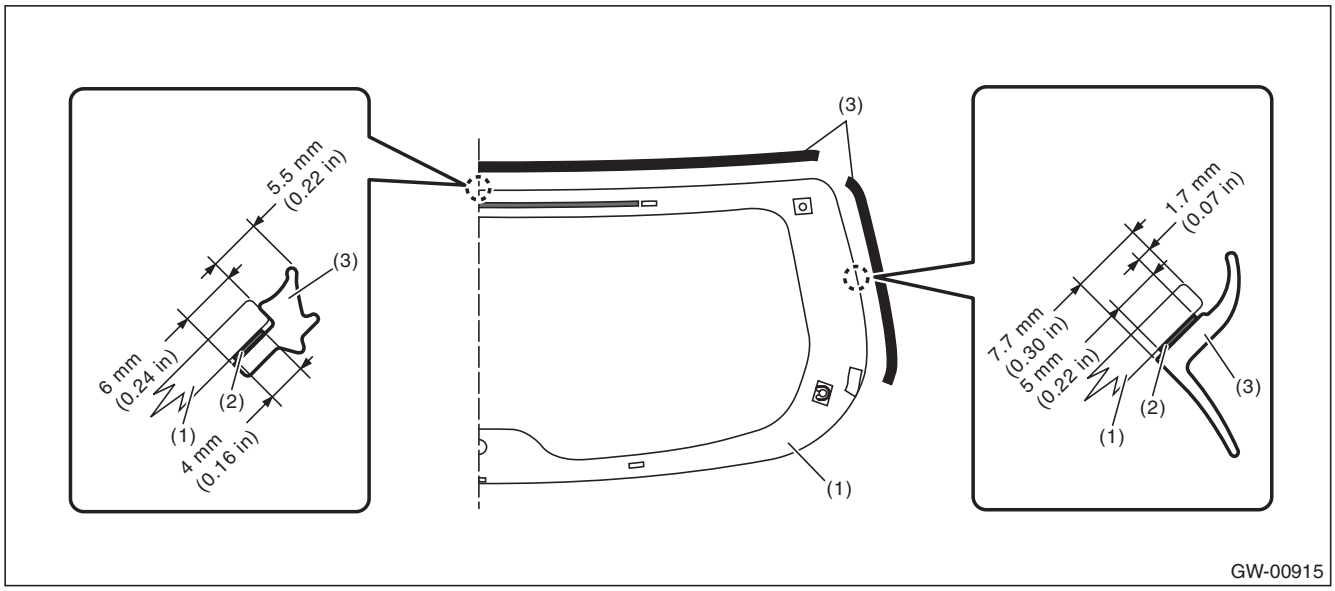

(1)	Rear gate glass	(2)	Double-sided tape	(3)	Molding

5) Install the rear gate glass in the same procedure as for windshield glass. <Ref. to GW-43, INSTALLATION, Windshield Glass.>

(1) Apply the primer to the adhesive surface of glass side and body side using sponge.
(2) Apply adhesive to the glass end back surface.

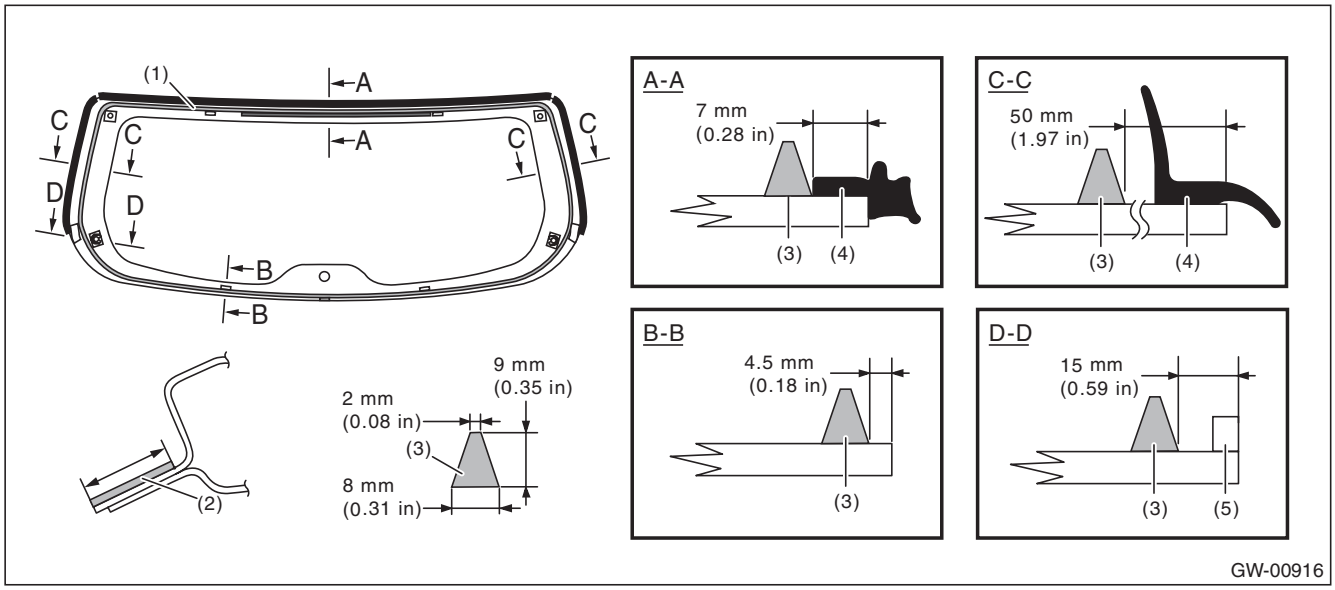

(1)	Application of primer (glass side)	(3)	Adhesive	(5)	EPT sealer
(2)	Application of primer (body side)	(4)	Molding		

(3) Attach the clip to the rear gate glass holder.
(4) Insert the glass locating pins in the rear gate panel holes and install the rear gate glass.
(5) Lightly press the entire perimeter of rear gate glass for tight fit.
(6) Make flush the adhesive surface jutted out using spatula.

GETtheMANUALS.org

6) After completion of all work, allow the vehicle to stand for about 24 hours.

NOTE:
- When door is opened/closed after glass is bonded, always lower the door glass first, and then open/close it carefully.
- Move the vehicle slowly.
- For minimum drying time and vehicle standing time before driving after bonding, follow instructions or instruction manual from the adhesive manufacturer.

7) Connect the rear defogger connector and radio antenna connector.
8) Install the rear wiper arm and rear wiper motor. <Ref. to WW-41, INSTALLATION, Rear Wiper Motor.>
9) Install the rear gate garnish. <Ref. to EI-166, INSTALLATION, Rear Gate Garnish.>
10) Install the rear gate trim. <Ref. to EI-161, INSTALLATION, Rear Gate Trim.>
11) Connect the battery ground terminal.
12) After curing of adhesive, pour the water on external surface of vehicle to check that there are no water leaks.

NOTE:
When a vehicle is returned to the user, tell him or her that the vehicle should not be subjected to heavy impact for at least three days.

GETtheMANUALS.org

16. Rear Window Glass

A: REMOVAL

1) Disconnect the ground cable from battery.
2) Disconnect the rear defogger connector and radio antenna connector.
3) Remove the rear window glass in the same procedure as for windshield glass. <Ref. to GW-40, REMOVAL, Windshield Glass.>

B: INSTALLATION

1) Fabricate the cartridge nozzle tip as shown and set the sealant gun with the adhesive.

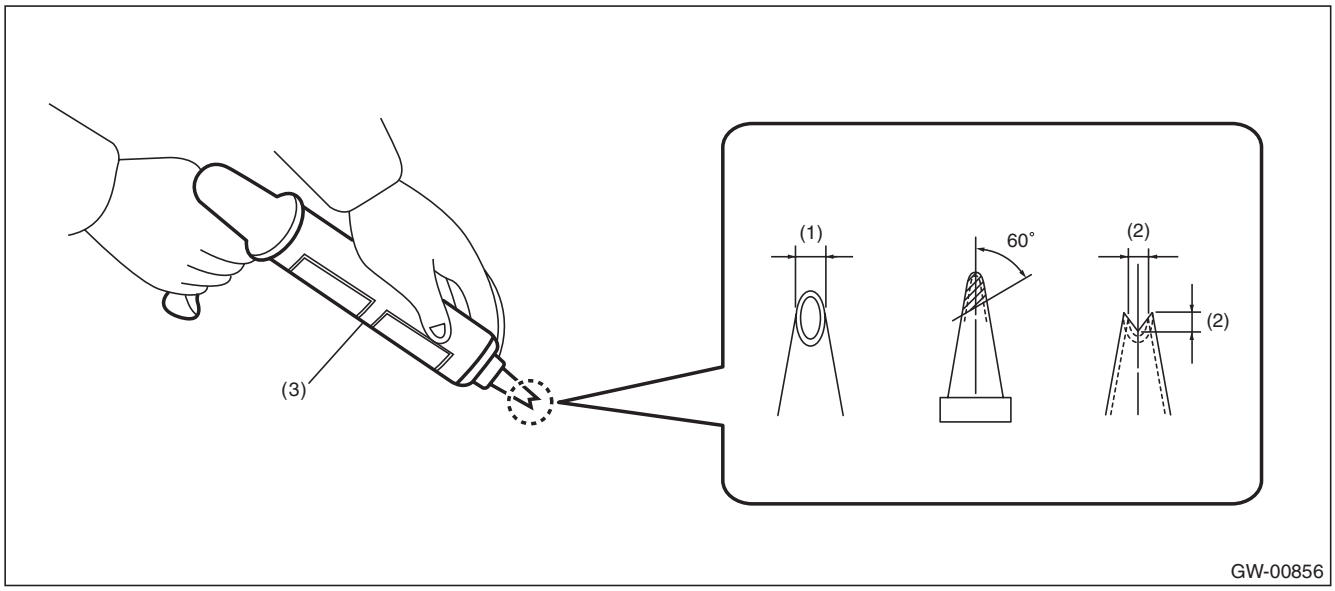

(1) 10 mm (0.39 in) (2) 8 mm (0.31 in) (3) Sealant gun

2) Prepare and clean the adhesion surfaces of the glass and body using the same procedures as for the windshield glass. <Ref. to GW-43, INSTALLATION, Windshield Glass.>
3) Attach the dam rubber to the glass.

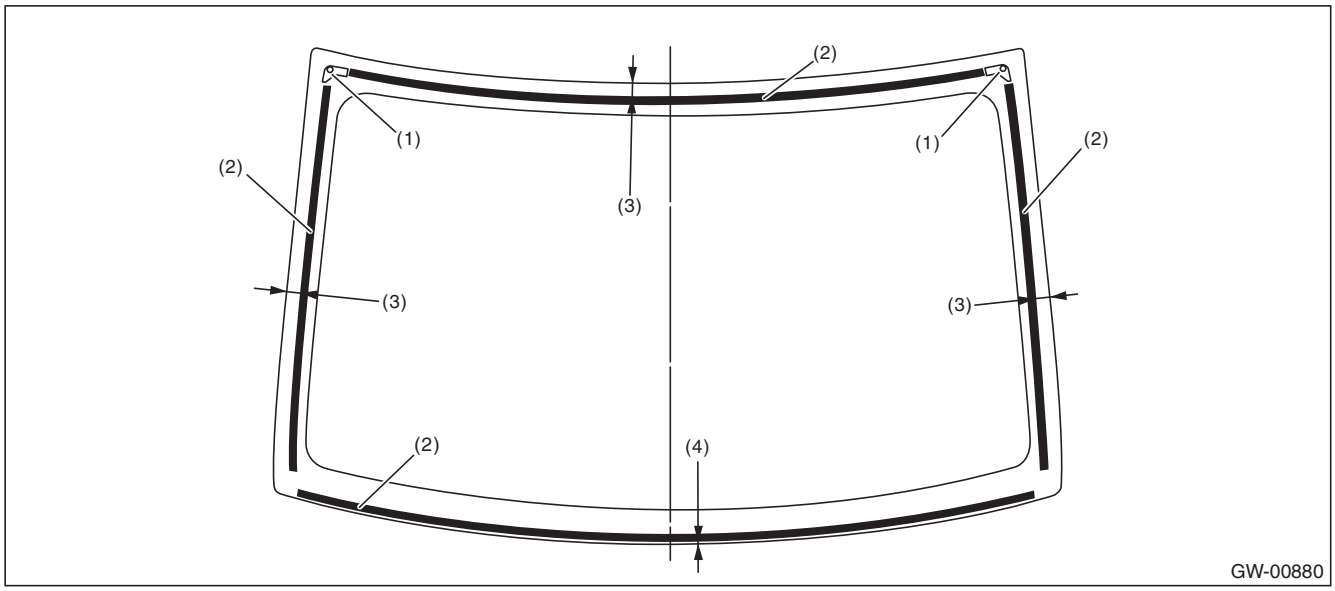

(1) Locating pin (3) 16 mm (0.63 in) (4) 1 mm (0.04 in)
(2) Dam rubber

GETtheMANUALS.org

4) Install the molding to the glass.

CAUTION:
Be careful to attach the molding so that the molding has no loose or undulating part.

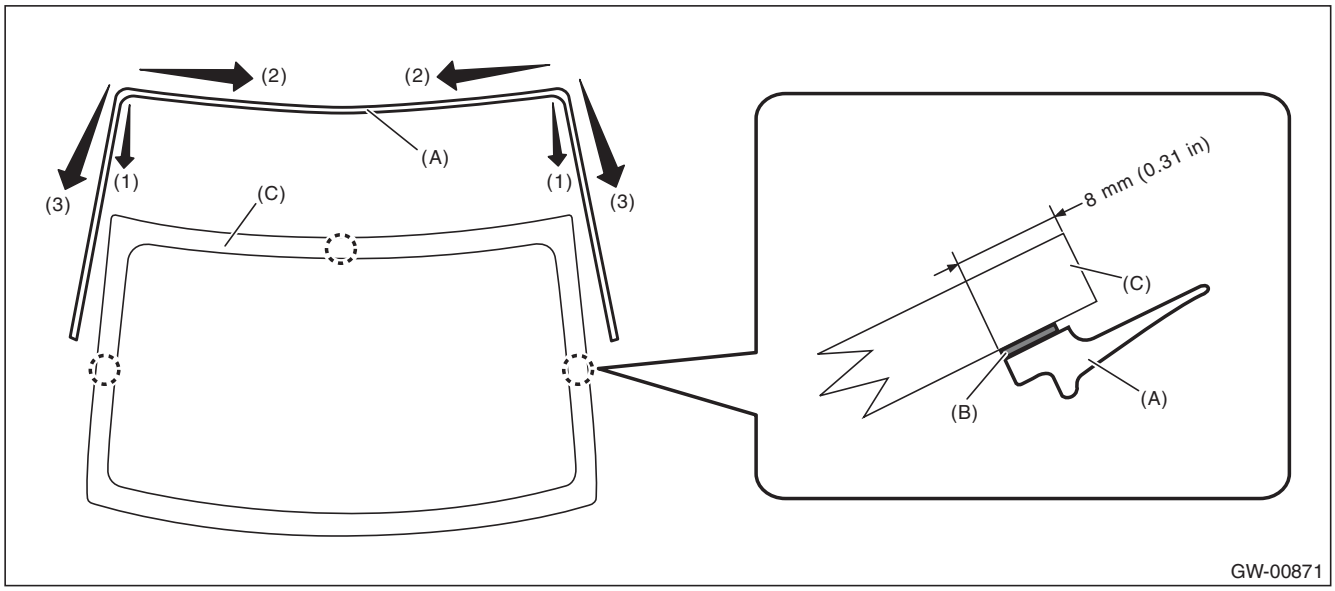

(1) Align the molding (A) to the upper ends of the glass (C).
(2) Install the molding from both corners of the upper edge toward the center.
(3) Install the molding from both corners of the upper edge toward the lower side.
(4) Firmly apply the double sided tape (B) of the molding evenly to the glass surface.

5) Install the rear glass in the same procedure as for windshield glass. <Ref. to GW-43, INSTALLATION, Windshield Glass.>

(1) Apply the primer to the adhesive surface of glass side and body side using sponge.
(2) Apply adhesive to the glass end back surface.

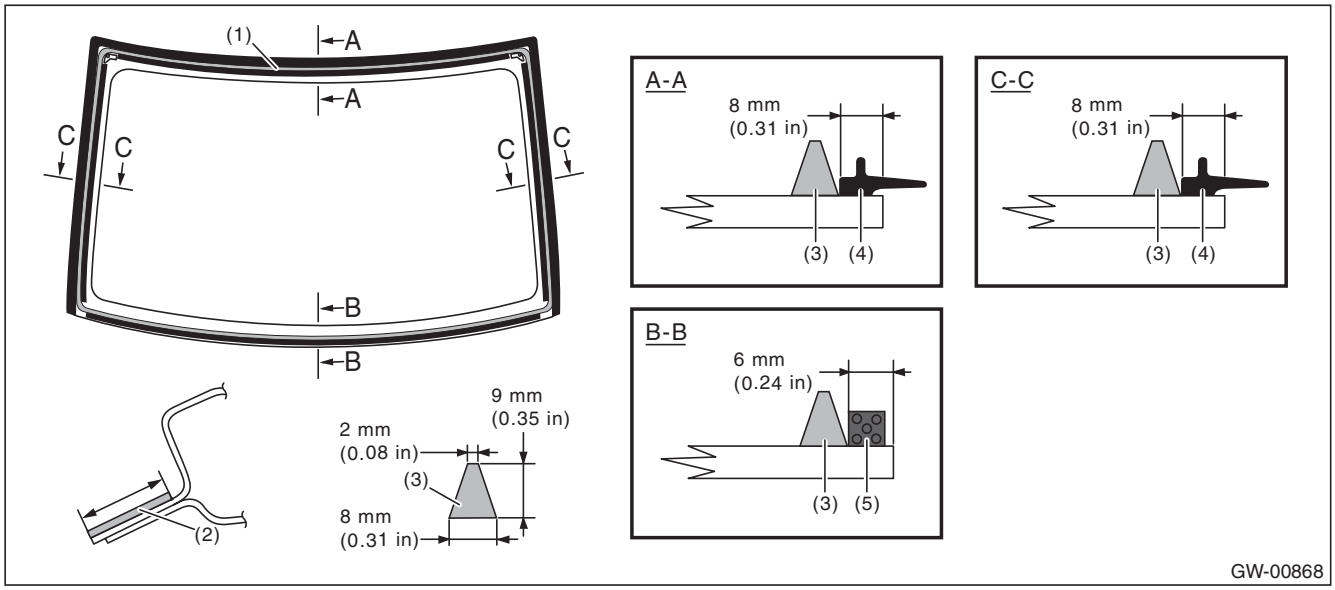

(1)	Application of primer (glass side)	(3)	Adhesive	(5)	Dam rubber
(2)	Application of primer (body side)	(4)	Molding		

(3) Insert the glass locating pins in the rear panel holes and install the rear glass.
(4) Lightly press the entire perimeter of rear glass for tight fit.
(5) Make flush the adhesive surface jutted out using spatula.

GETtheMANUALS.org

6) After completion of all work, allow the vehicle to stand for about 24 hours.

NOTE:
- When door is opened/closed after glass is bonded, always lower the door glass first, and then open/close it carefully.
- Move the vehicle slowly.
- For minimum drying time and vehicle standing time before driving after bonding, follow instructions or instruction manual from the adhesive manufacturer.

7) Connect the rear defogger connector and radio antenna connector.
8) Connect the battery ground terminal.
9) After curing of adhesive, pour the water on external surface of vehicle to check that there are no water leaks.

NOTE:
When a vehicle is returned to the user, tell him or her that the vehicle should not be subjected to heavy impact for at least three days.

GETtheMANUALS.org

17. Rear Window Defogger System

A: WIRING DIAGRAM

Refer to “Rear Defogger System” in the wiring diagram. <Ref. to WI-212, WIRING DIAGRAM, Rear Defogger System.>

B: INSPECTION

1. CHECK SYSTEM

Symptoms	Inspection order
Rear window defogger does not operate.	1. Check the fuse. 2. Check the rear defogger relay. 3. Check the rear window defogger switch. 4. Check the heat wire. 5. Check the wiring harness. 6. Check body integrated unit.

NOTE:
Rear window defogger system can be customized using the Subaru Select Monitor, when the customize setting {A/C ECM setting} of the body integrated unit is set to With.

System name	Initial setting	Customize setting
Rr Defogger op. mode	OFF after 15 min.	Repeat 15 min. operation and 2 min. stop.

2. CHECK WITH SUBARU SELECT MONITOR

CAUTION:
Check whether the rear defogger operation mode setting is in initial setting or customize setting before performing inspection.

1) Check the input signal when the rear window defogger switch is operated using Subaru Select Monitor.
   (1) Prepare the Subaru Select Monitor. <Ref. to GW-7, PREPARATION TOOL, General Description.>
   (2) Turn the ignition switch to ON (engine OFF) and run the “PC application for Subaru Select Monitor”.
   (3) On «System Selection Menu» display, select {Integ. unit mode}.
   (4) Select the {Rr defogger output} on {Current Data Display & Save}.
   (5) Check the displayed data (ON/OFF) by operating the rear window defogger switch.
2) Check the operation with rear window defogger switch ON.
• When customize setting is set as “Continuous”, it is normal if the 15-minute operation and 2-minute stop repeats.
• When customize setting is “Normal”, it is normal if the operation lasts for 15 minutes and then turns OFF.
3) When the operation in 2) above fails, replace the body integrated unit.

3. HEAT WIRE INSPECTION

CAUTION:
Use a dry soft cloth to wipe off dirt on the glass along the heat wires with care not to damage the heat wires.

1) Prepare the following checking items.
• Liquid crystal thermograph sheet (Approximate Size: 300 × 300 mm (11.8 × 11.8 in) and thermal temperature: 35 — 40°C (95 — 104°F))
• Aluminum foil
2) Turn the ignition switch to ON.
3) Turn the defogger switch to ON.

GETtheMANUALS.org

4) Push the liquid crystal thermograph sheet from the outside of the rear glass.

NOTE:
Use the liquid crystal thermograph sheet every range it is separated with the separate line.

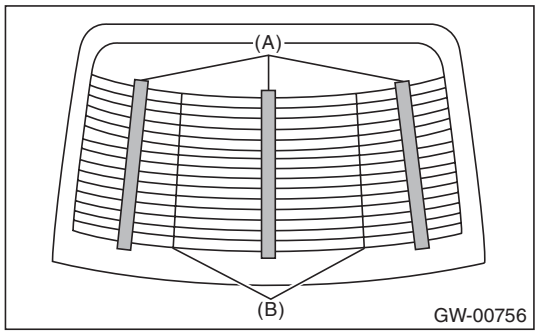

(A) Liquid crystal thermograph sheet
(B) Separate line

5) Determine the faulty heat wire by checking the color of the liquid crystal thermograph sheet.

Liquid crystal thermograph sheet	Criteria
Change occurred (red → blue)	Normal
No change (black)	Open

NOTE:
- Check from the inside of the glass if the liquid crystal thermograph sheet does not change.
- The time for the color change may differ depends on the surface temperature of the glass.

6) Wrap a piece of aluminum foil around the tip of tester probe and press it against the heat wire with your finger.

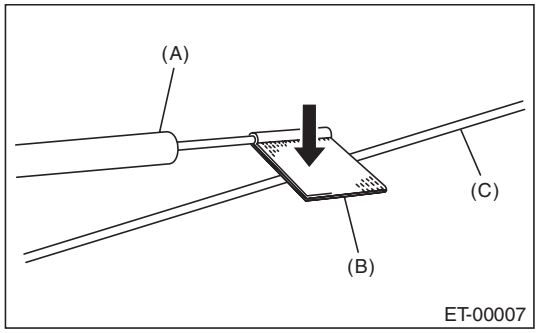

(A) Tester probe
(B) Aluminum foil
(C) Heat wire

7) To both ends of the section that has been found to include an open in the step 5), apply the tester positive (+) probe and the negative (–) probe.

GETtheMANUALS.org

8) Move the tester probe on the negative (–) side slowly along the heat wire. If voltage changes from zero while moving the tester probe, heat wire is open at the voltage change point.

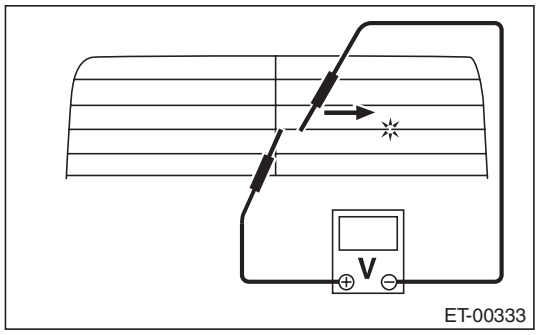

9) Repair the heat wire that determines the place of the open circuit. <Ref. to GW-57, REPAIR, Rear Window Defogger System.>

C: REPAIR

1) Clean the broken portion with alcohol or white gasoline.
2) Mask both side of wire with masking tape.
3) Apply the conductive silver composition to the broken portion.

Conductive silver composition:
by Permatex
QUICK GRID

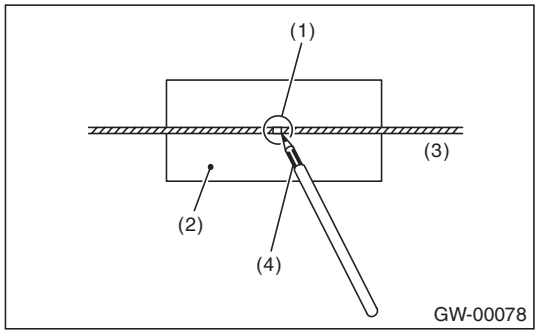

(1) Broken portion
(2) Masking tape
(3) Broken wire
(4) Conductive silver composition

4) Dry using a dryer after applying the composition.
5) After repair, check the wire.

GETtheMANUALS.org

18. Rear Quarter Glass

A: REMOVAL

1) Disconnect the ground cable from battery.
2) Remove the rear quarter trim. <Ref. to EI-114, OUTBACK MODEL, REMOVAL, Rear Quarter Trim.>
3) Remove the rear quarter glass in the same procedure as for windshield glass. <Ref. to GW-40, REMOVAL, Windshield Glass.>

B: INSTALLATION

1) Fabricate the cartridge nozzle tip as shown and set the sealant gun with the adhesive.

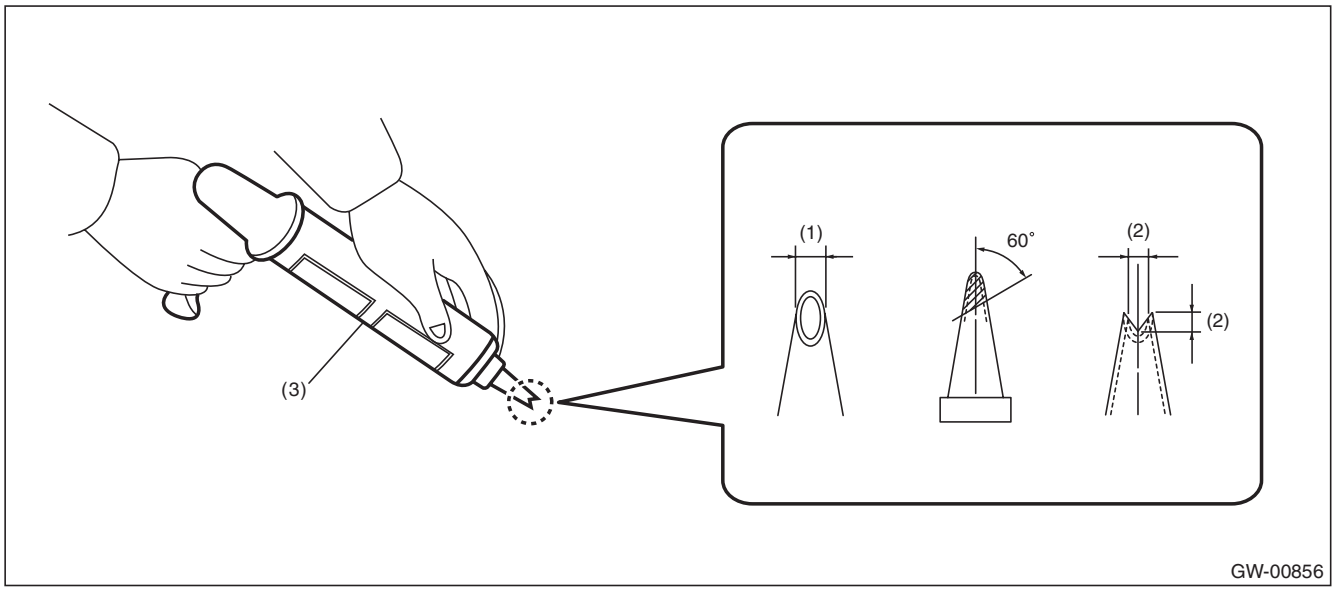

(1)	10 mm (0.39 in)	(2)	8 mm (0.31 in)	(3)	Sealant gun

2) Prepare and clean the adhesion surfaces of the glass and body using the same procedures as for the windshield glass. <Ref. to GW-43, INSTALLATION, Windshield Glass.>
3) Attach the dam rubber to the glass.

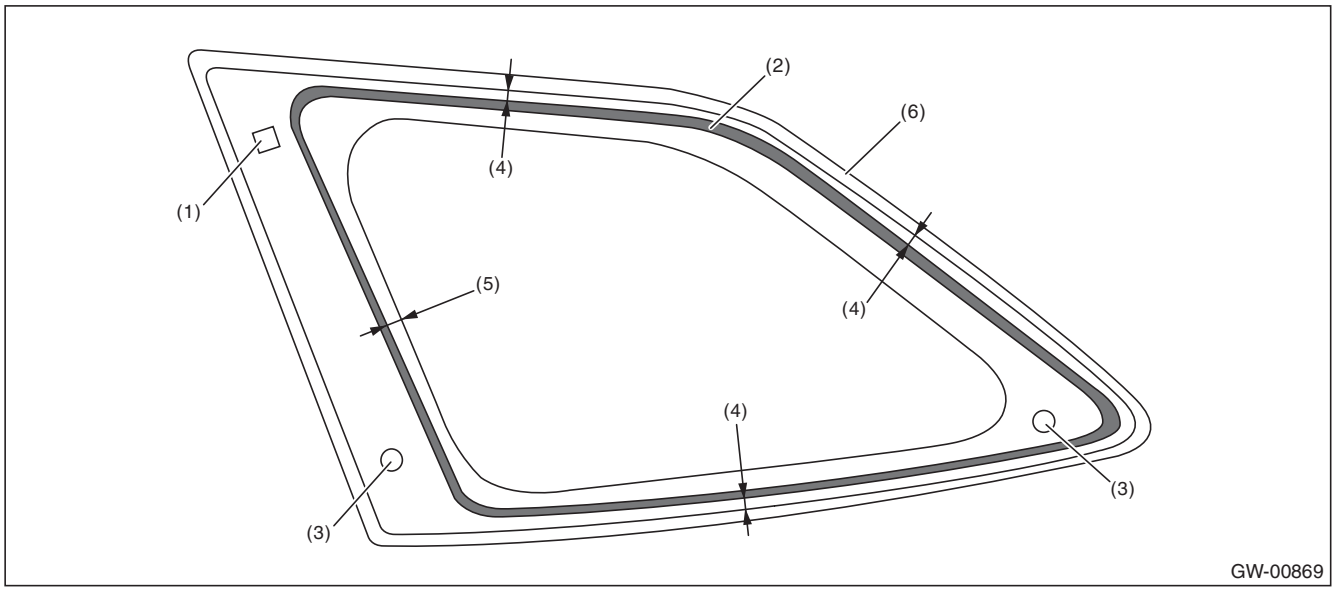

(1)	Fastener	(3)	Clip	(5)	12 mm (0.47 in)
(2)	Dam rubber	(4)	8 mm (0.31 in)	(6)	Molding

GETtheMANUALS.org

4) Install the rear quarter glass in the same procedure as for windshield glass. <Ref. to GW-43, INSTALLATION, Windshield Glass.>
   (1) Apply the primer to the adhesive surface of glass side and body side using sponge.
   (2) Apply adhesive to the glass end back surface.

NOTE:
Use the molding terminal as a reference.

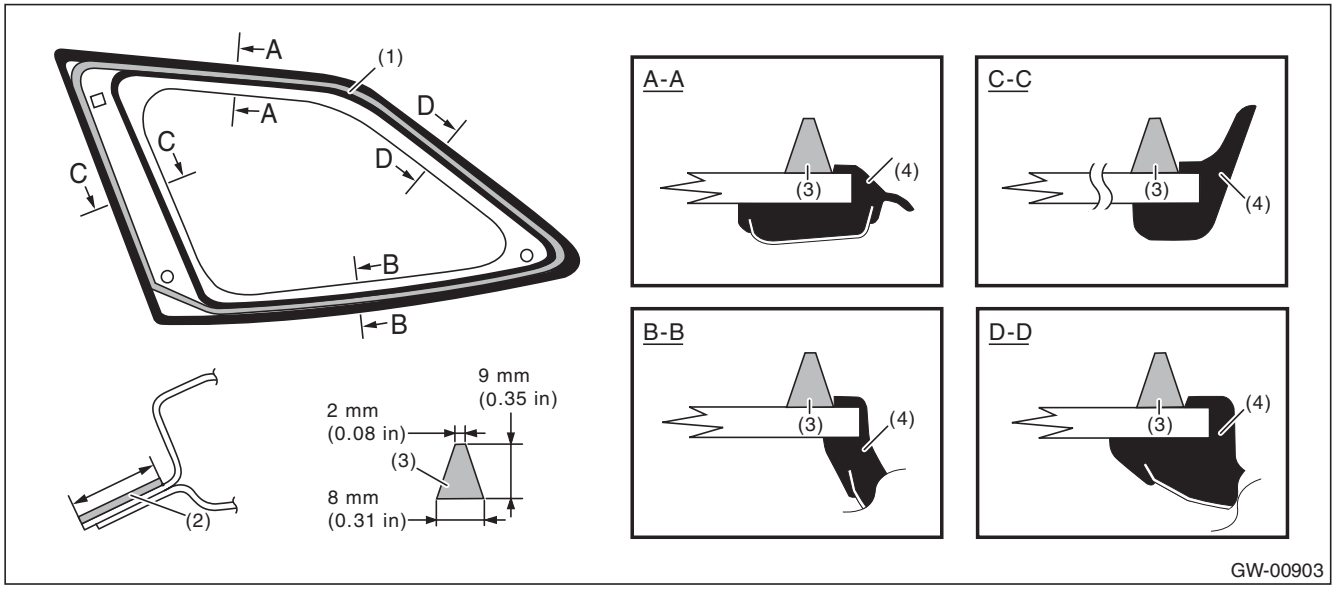

(1) Application of primer (glass side)
(2) Application of primer (body side)
(3) Adhesive
(4) Molding

   (3) Mount the fastener on the vehicle body.
   (4) Insert the clips in the side panel holes and install the rear quarter glass.
   (5) Lightly press the entire perimeter of rear quarter glass for tight fit.
   (6) Make flush the adhesive surface jutted out using spatula.

5) After completion of all work, allow the vehicle to stand for about 24 hours.

NOTE:
- When door is opened/closed after glass is bonded, always lower the door glass first, and then open/close it carefully.
- Move the vehicle slowly.
- For minimum drying time and vehicle standing time before driving after bonding, follow instructions or instruction manual from the adhesive manufacturer.

6) After curing of adhesive, pour the water on external surface of vehicle to check that there are no water leaks.

NOTE:
When a vehicle is returned to the user, tell him or her that the vehicle should not be subjected to heavy impact for at least three days.

7) Install the rear quarter trim. <Ref. to EI-119, INSTALLATION, Rear Quarter Trim.>
8) Connect the battery ground terminal.

GETtheMANUALS.org

19. Rearview Mirror

A: REMOVAL

CAUTION:
Be careful not to damage the mirror surface and windshield glass.
1) Remove the TORX® bolt, and then slide the rear view mirror to remove.

Preparation tool: TORX® T20

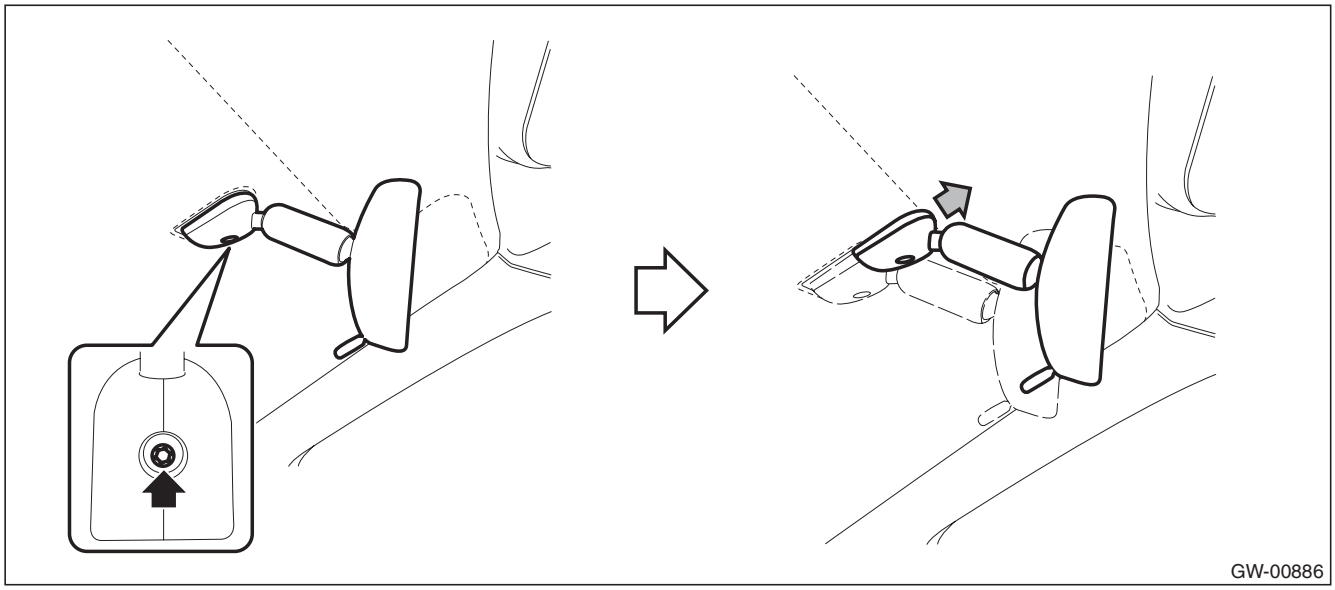

2) When the mirror mount is damaged, use something like piano wire or a spatula to remove.

B: INSTALLATION

CAUTION:
When tightening the mounting TORX® screw, be sure to observe the tightening torque. Otherwise, the mount may be damaged in over-torque conditions.
Install each part in the reverse order of removal.

Tightening torque:
Refer to "COMPONENT" of "General Description". <Ref. to GW-6, MIRROR, COMPONENT, General Description.>

NOTE:
If the mirror mount is removed, it is attached according to the following procedures.
1. Remove the old adhesive completely.
2. Attach the mirror mount by matching with the mark on the windshield glass.
3. Make sure that the mirror mount is firmly adhered.

Adhesive:
REPAIR KIT IN MR (Part No. 65029FC000) or equivalent

C: INSPECTION

Check the mirror and mirror mount for damage.

GETtheMANUALS.org

20. Rearview Mirror (RCD Model)

A: REMOVAL

CAUTION:
Be careful not to damage the mirror surface and windshield glass.

1) Disconnect the ground cable from battery.
2) Remove the rearview mirror.
   (1) Slide the upper section of the cover, and release the claws in the lower section, then remove the harness cover (a).
   (2) Disconnect the rearview mirror connector (b).

CAUTION:
- **Be careful not to pull the harness.**
- **In order to prevent damaging the mirror and harness, remove the connector with the cap as a unit. When removing the cap, disconnect the connector first.**

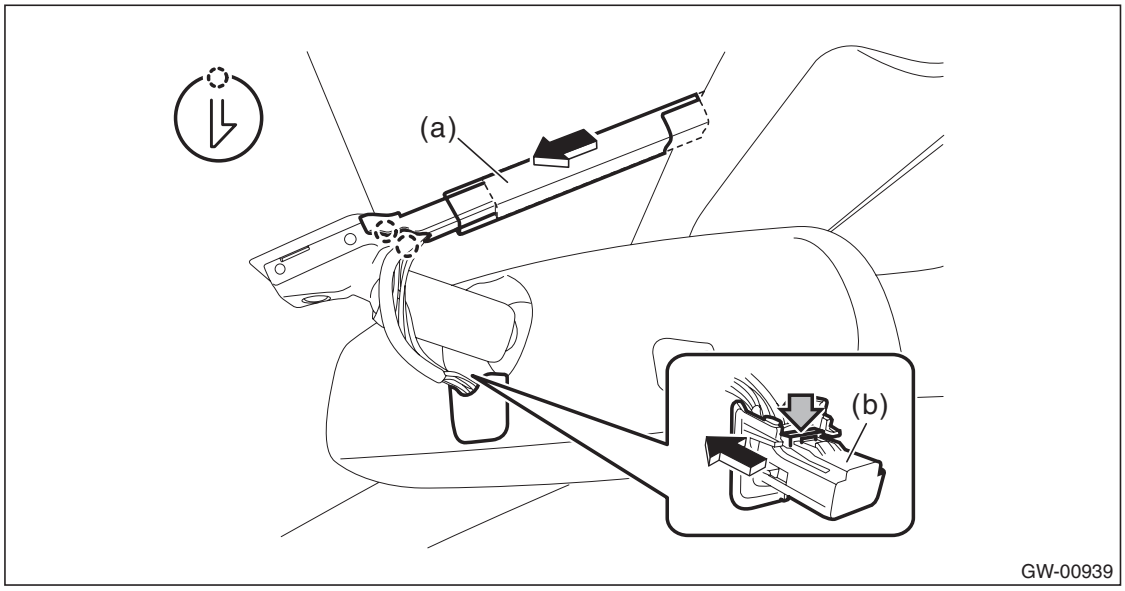

   (3) Remove the TORX® bolt, and then slide the rear view mirror to remove.

Preparation tool: TORX® T20

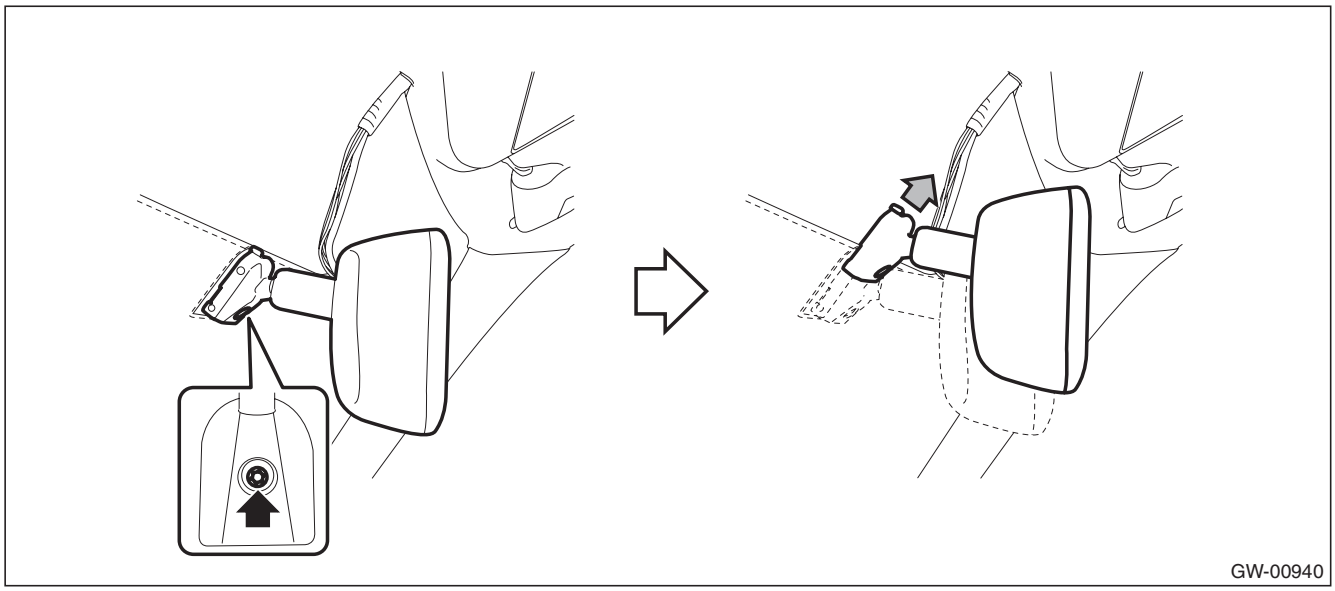

3) When the mirror mount is damaged, use something like piano wire or a spatula to remove.

GETtheMANUALS.org

B: INSTALLATION

CAUTION:
When tightening the mounting TORX® bolt, be sure to observe the specified torque. Otherwise, the mount may be damaged in over-torque conditions.

1) Install each part in the reverse order of removal.
2) Perform calibration and zone setting of the rearview mirror (RCD). <Ref. to GW-62, ADJUSTMENT, Rearview Mirror (RCD Model).>

Tightening torque:
Refer to "COMPONENT" of "General Description". <Ref. to GW-6, MIRROR, COMPONENT, General Description.>

C: ADJUSTMENT

CAUTION:
- **When the rearview mirror (RCD) is removed or replaced, perform calibration and zone setting by following the procedures below.**
- **The zone setting of the vehicle is set to zone "8" at factory setting.**

1. CALIBRATION

1) Before performing calibration, check the following items.
- There is a sufficient distance from a big metal object or a building.
- Vehicle is parked on a level surface.
- The switch of unnecessary accessories (A/C system, audio system and lighting system) is turned to "OFF".
- All doors are closed.

2) Start the engine.
3) Hold down the multi-function button (a) for six to nine seconds. Once calibration mode starts, "C" is displayed on the screen (b).

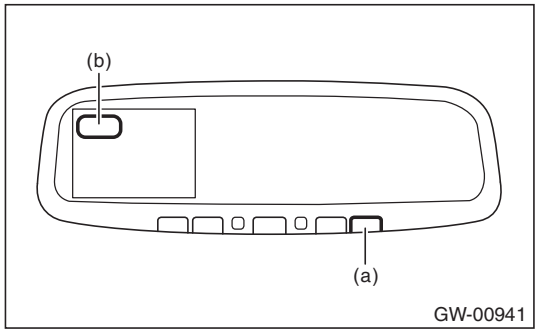

4) Drive the vehicle in a circle until the display of "C" on the screen goes off. (Approx. two or three times)
5) Display the compass to check the operation.

CAUTION:
The mirror may not be able to perform the reading correctly. Therefore, when the compass operates only to the specific direction, repeat steps 3) to 5).

GETtheMANUALS.org

2. ZONE SETTING

1) Refer to the compass zone map to check the zone number of area you use the vehicle.

Compass zone map

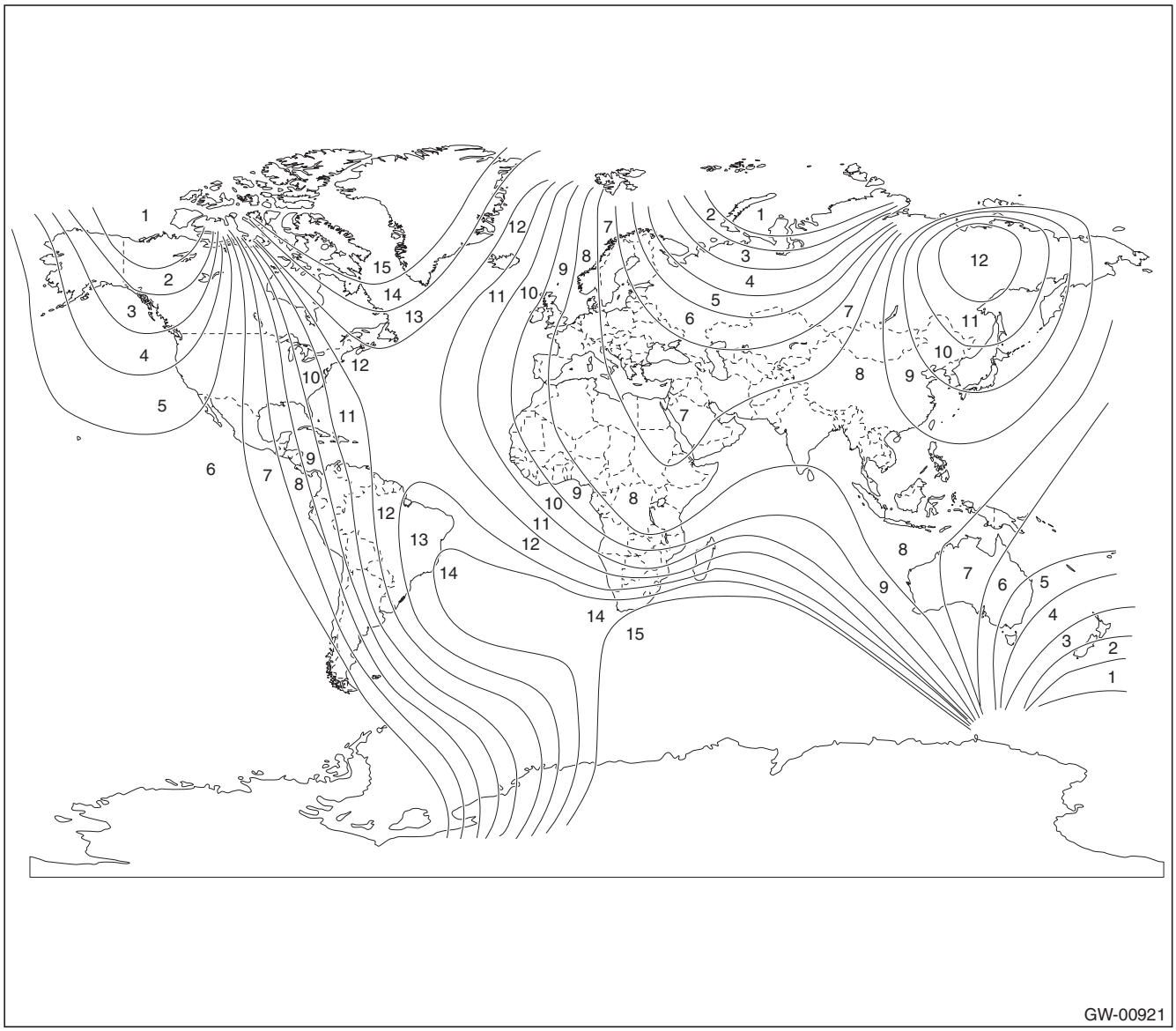

2) Turn the ignition switch to ON.

3) Hold down the multi-function button (a) for three to six seconds. Once zone setting mode starts, the zone number that is already set is displayed on the screen (b).

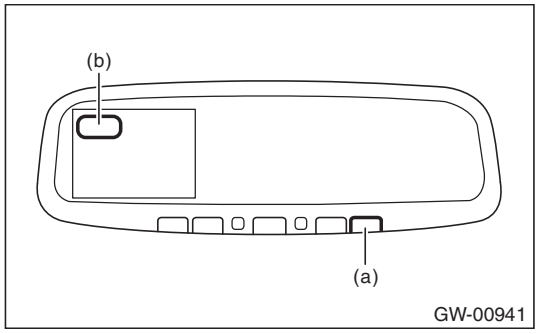

GETtheMANUALS.org

4) Push the multi-function button repeatedly until the zone number you want to set is displayed.

NOTE:
If you leave the multi-function button for three seconds, the zone setting mode is completed.

GETtheMANUALS.org

21. Wiper Deicer System

A: WIRING DIAGRAM

Refer to “Wiper Deicer System” in the wiring diagram. <Ref. to WI-255, Wiper Deicer System.>

B: INSPECTION

1. CHECK SYSTEM

NOTE:
- The wiper deicer does not operate when the ambient temperature becomes 5°C (41°F) or more.
- The wiper deicer operates with the rear window defogger at the same time.
- It is possible to perform a forced operation if you keep holding the rear window defogger switch for 3 seconds or more.

Symptoms	Inspection order
Wiper deicer does not operate.	1. Check the fuse. 2. Check the wiper deicer relay. 3. Check the rear window defogger switch. 4. Check the heat wire. 5. Check the wiring harness. 6. Check body integrated unit.

NOTE:
- Wiper deicer system can be customized using the Subaru Select Monitor, when the customize setting {A/C ECM setting} of the body integrated unit is set to With.
- Set the system using the Rr Defogger op. mode, and setting will be the same as rear defogger system setting.

System name	Initial setting	Customize setting
Rr Defogger op. mode	OFF after 15 min.	Continuous operation*

*: When one of the following conditions occurs, continuous operation is suspended and turned off after 15 minutes.
- Ambient temperature at 5°C (41°F) or more continues for 10 seconds.
- Malfunction occurs on ambient sensor.
- Vehicle speed of 15 km/h (9 MPH) or less continues 15 minutes (OFF when conditions are met)
- Battery voltage remains at 10 V or less for 30 seconds.
- Malfunction occurs in CAN communication.

2. CHECK WITH SUBARU SELECT MONITOR

CAUTION:
Before performing the inspection, check the following settings.
- **Wiper deicer setting → “support”. If “no support”, set to “support” using customize setting.**
- **Rr defogger op. mode setting → Initial setting or customize setting.**

1) Check the input signal when the rear window defogger switch is operated using Subaru Select Monitor.
   (1) Prepare the Subaru Select Monitor. <Ref. to GW-7, PREPARATION TOOL, General Description.>
   (2) Turn the ignition switch to ON (engine OFF) and run the “PC application for Subaru Select Monitor”.
   (3) On «System Selection Menu» display, select {Integ. unit mode}.
   (4) Select the {wiper deicer output} on {Current Data Display & Save}.
   (5) Check the displayed data (ON/OFF) by operating the rear window defogger switch.
2) Check the operation with rear window defogger switch ON.
- When customize setting is set as “Continuous”, it is normal if the 15-minute operation and 2-minute stop repeats.
- When customize setting is “Normal”, it is normal if the operation lasts for 15 minutes and then turns OFF.

3) When the operation in 2) above fails, replace the body integrated unit.

GETtheMANUALS.org

3. HEAT WIRE INSPECTION

Refer to “HEAT WIRE INSPECTION” of “Rear Window Defogger System”. <Ref. to GW-55, HEAT WIRE INSPECTION, INSPECTION, Rear Window Defogger System.>

NOTE:
Heat wire inspection needs removing/installing procedure of instrument panel assembly.

C: REPAIR

Refer to “REPAIR” of “Rear Window Defogger System”. <Ref. to GW-57, REPAIR, Rear Window Defogger System.>

NOTE:
Heat wire repair needs removing/installing procedure of instrument panel assembly.

GETtheMANUALS.org

BODY STRUCTURE

BS

Page
1. General Description 2

GETtheMANUALS.org

1. General Description

A: SPECIFICATION

Refer to “Body Repair Manual” for general description of body structure, reference points and reference dimensions.

GETtheMANUALS.org

INSTRUMENTATION/DRIVER INFO

IDI

		Page
1.	General Description	2
2.	Relay and Fuse	4
3.	Combination Meter System	5
4.	Clock System	17
5.	Combination Meter	21
6.	Speedometer	27
7.	Tachometer	28
8.	Fuel Gauge	29
9.	ECO Gauge	30
10.	Multi Display	31

GETtheMANUALS.org

1. General Description

A: SPECIFICATION

- Combination meter

Meter, display	Operation method, display method	Drive control	When checking the indicator needle operation/ needle reading operation
Speedometer	Stepping motor type	Combination meter	—
Tachometer			
ECO gauge			
Fuel gauge			
CVT/ATF temperature warning light	LED	Combination meter	On/Off
ABS warning light			
Seat belt warning light			
AWD warning light (Except for MT model)			
EPB warning light (C6 model)			
Low washer warning light			
Low engine oil warning light			
Tire air pressure warning light (except for C5 and C6 models)			
Hill hold ON indicator light (MT model)			
VDC warning light/VDC operation indicator light			
VDC OFF indicator light			
HI-beam indicator light			
Lighting indicator light			
Front fog light indicator light			
Malfunction indicator light (except for C6 model)			
Meter illumination back light			Light ON
LCD back light			Light ON
Engine coolant temperature warning light (red)			On (red)/Off
Engine coolant temperature indicator light (blue)			Off/On (blue)
Fuel level warning light			On/Off (Turns on near E.)
Malfunction indicator light (C6 model)		ECM	Turns on or off according to module control
Oil pressure warning light		Oil pressure switch	
Airbag warning light		Airbag CM	
Charge warning light		Generator	
Turn signal indicator light		Turn signal and hazard unit	
Security/immobilizer indicator light		Body integrated unit	
Parking brake/brake fluid level warning light (C6 model)		Combination meter/brake fluid level switch	On/Turns on or off according to module control
Parking brake/brake fluid level /EPB warning light (except for C6 model)			
Odo/Trip indicator	LCD	Combination meter	—
Shift indicator			
Select lever position indicator (except for MT model)			
Door open/vehicle frame indicator			
CRUISE mode indicator			

GETtheMANUALS.org

- Clock

Display	Display method
Cruising distance, average fuel economy, instantaneous fuel economy, ambient temperature, current time	VFD
Passenger's airbag ON indicator	LED
Passenger's airbag OFF indicator	
Passenger' seat belt warning light	

B: CAUTION

- Before disassembling or reassembling parts, always disconnect the battery ground cable from battery. When replacing the audio, control module and other parts provided with memory functions, record the memory contents before disconnecting the battery ground cable. Otherwise, the memory is cleared.
- Reassemble the parts in the reverse order of disassembly procedure unless otherwise indicated.
- Use gloves to avoid damage and getting fingerprints on the glass surface and meter surfaces.
- Do not apply an excessive force on the printed circuit.
- Do not drop or otherwise apply impact.
- Connect the connectors securely during reassembly.
- After reassembly, make sure that the functional parts operate normally.
- When the combination meter of model with immobilizer or with keyless access has been replaced, be sure to perform the registration of immobilizer.

C: PREPARATION TOOL

1. SPECIAL TOOL

ILLUSTRATION	TOOL NUMBER	DESCRIPTION	REMARKS
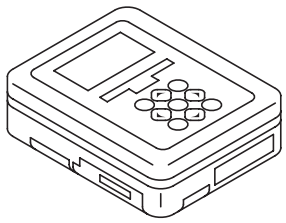 ST1B022XU0	1B022XU0	SUBARU SELECT MONITOR III KIT	Used for troubleshooting the electrical system.

2. GENERAL TOOL

TOOL NAME	REMARKS
Circuit tester	Used for measuring resistance and voltage.

GETtheMANUALS.org

2. Relay and Fuse

A: LOCATION

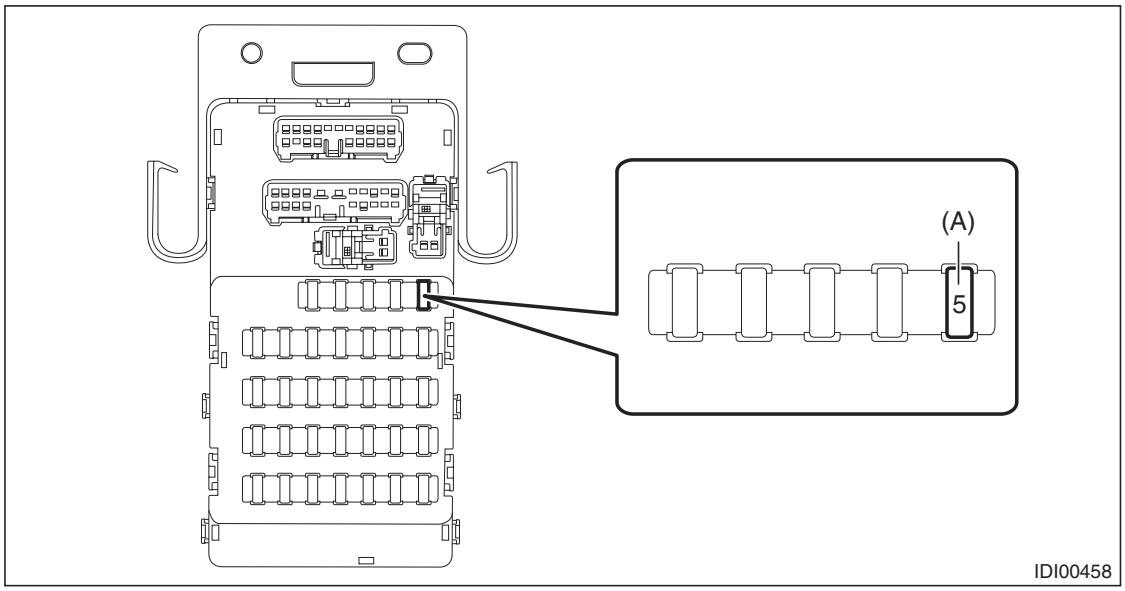

Relay & fuse box	Fuse 7.5A (combination meter, clock)	(A)

NOTE:
For other related fuses, refer to the wiring diagram. <Ref. to WI-15, Power Supply Circuit.>

B: INSPECTION

1. CHECK FUSE.

1) Remove the fuse and inspect visually.
2) If the fuse is blown out, replace the fuse.

NOTE:
If the fuse is blown again, check the system wiring harness.

GETtheMANUALS.org

3. Combination Meter System

A: WIRING DIAGRAM

Refer to “Combination Meter System” in the wiring diagram. <Ref. to WI-98, WIRING DIAGRAM, Combination Meter System.>

B: ELECTRICAL SPECIFICATION

1. COMBINATION METER TERMINAL ARRANGEMENT

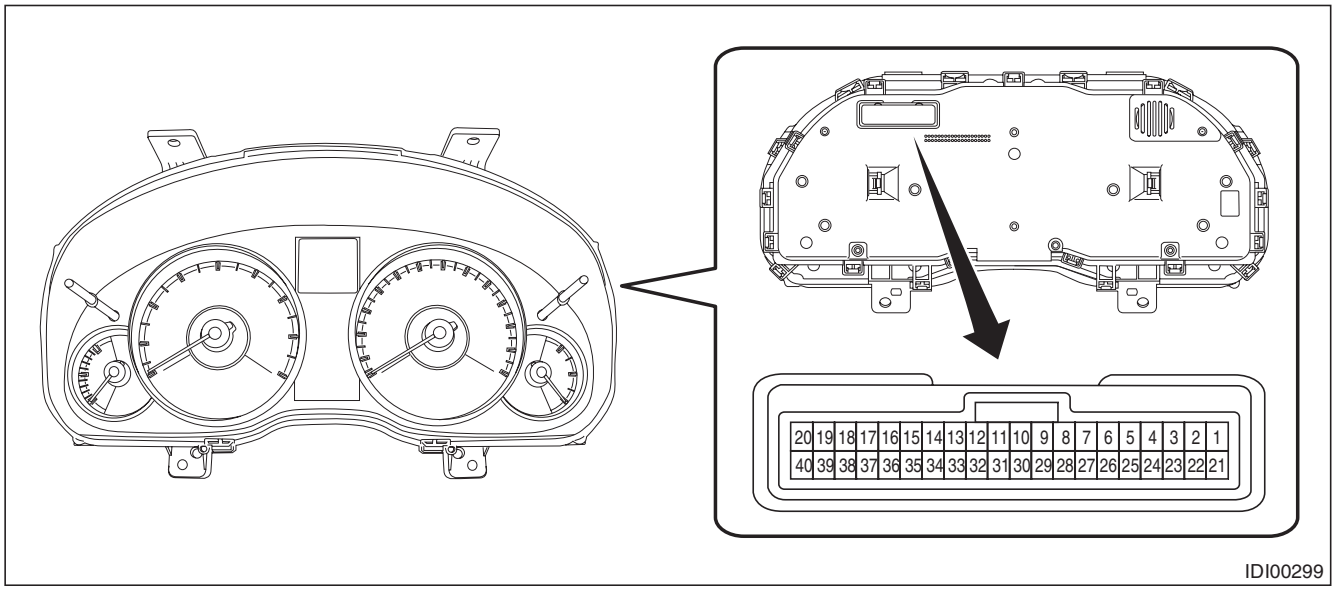

Connector

Terminal No.	Item	Measuring condition	Standard
3 (U-ART com.)	—	Cannot be measured	—
6 ← → Chassis ground	Voltage	Malfunction indicator light off → on	0 V → 10 — 14 V
7 ← → Chassis ground	Voltage	Charge warning light off → on	0 V → 10 — 14 V
8 ← → Chassis ground	Voltage	Oil pressure warning light off → on	0 V → 10 — 14 V
10 ← → Chassis ground	Voltage	LH turn indicator off → on	0 V → 10 — 14 V
11 ← → Chassis ground	Voltage	RH turn indicator off → on	0 V → 10 — 14 V
12 ← → Chassis ground	Voltage	Airbag warning light on → off	10 — 14 V → 0 V
14 ← → Chassis ground	Voltage	Auto headlight beam leveler warning light off → on	0 V → 10 — 14 V
15 ← → Chassis ground	Voltage	Security/immobilizer indicator light off → on	0 V → 10 — 14 V
19 (IG) ←→ Chassis ground	Voltage	IG OFF → ON	0 V → 10 — 14 V
20 (+B) ←→ Chassis ground	Voltage	Always	10 — 14 V
24 ← → Chassis ground	Voltage	Brake fluid/parking brake warning light off → on	0 V → 10 — 14 V
29 ← → Chassis ground	Waveform	Speedometer	Pulse generation
30 ← → Chassis ground	Waveform	Tachometer	Pulse generation
32 (CAN–) ←→ Chassis ground	—	Cannot be measured	—
33 (CAN+) ←→ Chassis ground	—	Cannot be measured	—
35 ← → Chassis ground	—	Cannot be measured	—
36 ← → Chassis ground	Voltage	Ambient sensor	0 V → 0.1 — 5 V
37 ← → Chassis ground	Resistance	Always	Less than 1 Ω
38 ← → Chassis ground	Resistance	Always	Less than 1 Ω
39 (GND) ←→ Chassis ground	Resistance	Always	Less than 1 Ω

GETtheMANUALS.org

C: OPERATION

1. SELF-DIAGNOSIS DISPLAY MODE

The self-diagnosis (checking of each meter, warning light, indicator light, illumination, LCD) of combination meter can be performed in the following procedure.

CAUTION:
Perform the steps described in 1) through 4) within 10 seconds.
1) Within 3 seconds after turning the ignition switch to ON, set the lighting switch to tail light or headlight position.
2) Press the trip meter knob three times.
3) Turn the lighting switch to OFF, and press the trip meter knob three times.
4) Set the lighting switch to tail light or headlight position again, and press the trip meter knob three times.

NOTE:
- When pressing the trip meter knob four times, the display changes to DTC display mode. <Ref. to IDI-9, DTC DISPLAY MODE, OPERATION, Combination Meter System.>
- When pressing the trip meter knob five times, the display changes to dealer customize mode. <Ref. to IDI-10, DEALER CUSTOMIZE MODE, OPERATION, Combination Meter System.>
- When the self-diagnosis function operates, the warning light, indicator light, and LCD display checks are performed. After this, the buzzer will sound for 0.5 seconds every time the trip meter knob is pressed, and operation checks are performed in the order of meter indicator needle operation, meter indicator needle indication, and LCD. Turn the ignition switch to OFF to cancel the self-diagnosis function.
- When the engine starts during diagnosis, the self-diagnosis function is not cancelled, however, once the vehicle starts driving, the self-diagnosis function is deactivated automatically.

5) Go to “Check meter indicator operation”.
Check meter operation, warning light, indicator light, illumination and LCD.

NOTE:
- After “_S_1” is displayed on the LCD, the meter indicator operation check mode is initiated.
- Each of the meter indicator operation display and LCD display switches every 6 seconds.

Meter indicator	LCD display, illumination	Warning light, indicator light
MIN indication ↓ MAX indication	ILL1 (Min. brightness) ↓*4 ILL6 (Max. brightness)	*1, *2, *3
MAX indication ↓ MIN indication	ILL6 (Max. brightness) ↓*4 ILL1 (Min. brightness)	

*1: Warning lights and indicator lights controlled by the meter drive circuit are illuminated. <Ref. to IDI-2, SPECIFICATION, General Description.>
*2: Warning lights and indicator lights controlled by other module are turned on/off according to the module control. <Ref. to IDI-2, SPECIFICATION, General Description.>
*3: Engine coolant temperature warning light illuminates in red.
*4: Display for one second for each level

6) Press the trip meter knob once.

GETtheMANUALS.org

7) Go to “Meter Indicator Needle Indication Check”.
Check meter operation, warning light, indicator light, and LCD.

NOTE:
- Meter indicator switches every 1.5 seconds for each indication.
- ILL indication illuminates at the same brightness as when entering “Meter Indicator Needle Indication Check”.
- During operation, “_S_2” is displayed on the LCD.

Speedometer (km/h)	Tachometer (rpm)	Fuel gauge	ECO gauge	Fuel level warning light	Warning light, indicator light
0	0	Lowest point	Lowest point	Light ON	*1, *2, *3
0	0	E	–Max	Light ON	
40	1000	1/2	0	Light OFF	
100	4000	F	+Max	Light OFF	
40	1000	1/2	0	Light OFF	
0	0	E	–Max	Light ON	

*1: Warning lights and indicator lights controlled by the meter drive circuit turn off. <Ref. to IDI-2, SPECIFICATION, General Description.>
*2: Warning lights and indicator lights controlled by other module are turned on/off according to the module control. <Ref. to IDI-2, SPECIFICATION, General Description.>
*3: Engine coolant temperature indicator light illuminates in blue.
8) Press the trip meter knob once.
9) Go to “Check LCD display”.
Check the LCD display.

NOTE:
- After “_S_3” is displayed on the LCD, the LCD display check mode is initiated.
- LCD display switches every 1 second.
- Warning lights and indicator lights controlled by the meter drive circuit turn off. <Ref. to IDI-2, SPECIFICATION, General Description.>
- Warning lights and indicator lights controlled by other module are turned on/off according to the module control. <Ref. to IDI-2, SPECIFICATION, General Description.>
- The meter indication remains at the same level as “Meter Indicator Needle Indication Check”.
- ILL indication illuminates at ILL6 level (max. brightness).

GETtheMANUALS.org

- After No. 14 is displayed in the illumination order, display is repeated from No. 1 again.

ORDER	AT/SS	CRUISE/SET	TRIP/UNIT/ODO/ S/I/S#	DOOR/ REAR GATE/ TRUNK OPEN
1	▲ ▼	CRUISE SET	A 888.8 B 888888 [S] [I] S#	
2		OFF	111.1 111111	OFF
3	▲	CRUISE	A 222.2 222222 [S]	
4		OFF	333.3 333333	OFF
5	▼	SET	B 444.4 444444 [I]	
6		OFF	555.5 555555	OFF
7	▲	CRUISE	A 666.6 666666 S#	
8		OFF	777.7 777777	OFF
9	▼	SET	B 888.8 888888 [S]	
10		OFF	999.9 999999	OFF
11	▲	CRUISE	A 000.0 000000 [I]	
12		OFF	888.8 888888	OFF
13	▼	SET	B 888.8 888888 S#	
14		OFF	888.8 888888	OFF

IDI00366

GETtheMANUALS.org

2. DTC DISPLAY MODE

The combination meter DTC can be displayed according to the following procedure.

CAUTION:
Perform the steps described in 1) through 4) within 10 seconds.
1) Within 3 seconds after turning the ignition switch to ON, set the lighting switch to tail light or headlight position.
2) Press the trip meter knob four times.
3) Turn the lighting switch to OFF, and press the trip meter knob four times.
4) Set the lighting switch to tail light or headlight position again, and press the trip meter knob four times.
5) Go to “DTC display mode”.

NOTE:
- If a diagnostic trouble code (DTC) is detected, an input error to meters exists. Check the harness on the body side and related parts.
- Detected diagnostic trouble code (DTC) cannot be cleared.
- When the engine starts during diagnosis, the self-diagnosis function is not cancelled, however, once ignition switch is turned OFF or the vehicle is driven, the DTC display mode is cancelled automatically.

(1) When the DTC display mode operates, the LCD displays whether diagnostic trouble code (DTC) exists.

DTC display	Item	Condition
“--”	-	Normal
“Er”	-	System error (meter error)
B900	Power supply system	When IG OFF is detected while driving
B901	Speedometer	Abnormal speed pulse value and CAN data value with engine ON
B902	Speedometer	Inconsistency between speed pulse value and CAN data value with engine ON
U116	Tachometer	Abnormal input data with engine ON
U140	Fuel meter	Abnormal input data with engine ON
U155	CAN communication	CAN communication error
U167	Immobilizer collation	Collation with body integrated unit failed
U422	Fuel meter	Abnormal input data with IG ON
U431	Fuel meter	When input data out of range is detected with engine ON

(2) If the diagnostic trouble code (DTC) is stored, ODO value at occurrence of trouble is displayed.

NOTE:
- Diagnostic trouble code (DTC) is stored for up to four cases. If diagnostic trouble code (DTC) is input exceeding four cases, the code is deleted in order starting with the oldest one.
- When there are more than one diagnostic trouble code (DTC), the code is displayed according to the following conditions and switches every time when the trip meter knob is pressed.

GETtheMANUALS.org

1. Displayed in the descending order of ODO value.
2. If the ODO value is the same, displayed in the ascending order of diagnostic trouble code (DTC) value.

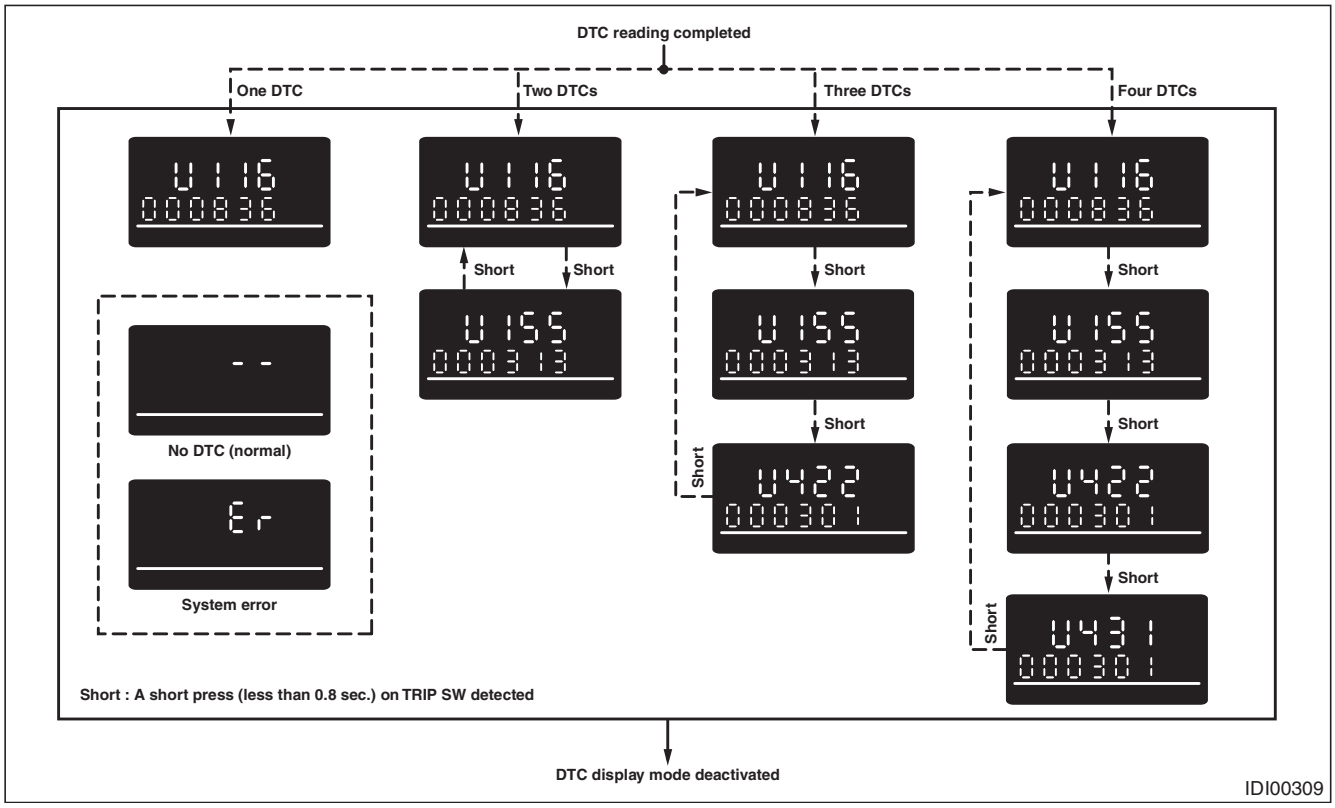

3. DEALER CUSTOMIZE MODE

The combination meter can be customized with dealer customize according to the following procedure.

CAUTION:
Perform the steps described in 1) through 4) within 10 seconds.

1) Within 3 seconds after turning the ignition switch to ON, set the lighting switch to tail light or headlight position.
2) Press the trip meter knob five times.
3) Turn the lighting switch to OFF, and press the trip meter knob five times.
4) Set the lighting switch to tail light or headlight position again, and press the trip meter knob five times.
5) Move on to the “DEALER CUSTOMIZE MODE”.

- When the dealer customize mode operates, the LCD displays each adjustment screen.
- The dealer customize mode consists of three setting screens. {Avg.F/E Correction Screen}, {Ambient Temp. Correction Screen} and {Clock Adjust. Screen} is displayed cyclically in this order every time the trip meter knob is tapped.
- Holding down the trip meter knob while each setting screen is displayed can change the setting value.

NOTE:
When ignition switch is turned OFF or the vehicle is driven, the customize mode is cancelled automatically.

No.	Customize mode	Initial value	Correction range
1	Avg.F/E Correction Screen	±0%	±10%
2	Ambient Temp. Correction Screen	±0°C (°F)	±3°C (°F)
3	Clock Adjust. Screen	on	on or off

GETtheMANUALS.org

D: INSPECTION

1. SYMPTOM CHART

CAUTION:
When measuring the voltage and resistance of each control module or sensor, use a tapered pin with a diameter of less than 0.64 mm (0.03 in) in order to avoid poor contact. Do not insert the pin more than 2 mm (0.08 in).

Symptoms	Repair order	Note
Combination meter assembly does not operate.	1. Power supply 2. Ground circuit 3. Combination meter	<Ref. to IDI-11, CHECK POWER SUPPLY AND GROUND CIRCUIT, INSPECTION, Combination Meter System.>
Speedometer does not operate.	1. VDC C/M 2. Harness 3. Combination meter	<Ref. to IDI-12, CHECK VDC CONTROL MODULE, INSPECTION, Combination Meter System.>
Tachometer does not operate.	1. ECM 2. Harness 3. Combination meter	<Ref. to IDI-12, CHECK ENGINE CONTROL MODULE (ECM), INSPECTION, Combination Meter System.>
Fuel gauge does not operate.	1. Communication circuit 2. Harness 3. Body integrated unit 4. Fuel level sensor 5. Combination meter	<Ref. to IDI-13, CHECK FUEL LEVEL SENSOR, INSPECTION, Combination Meter System.>
ECO gauge does not operate.	1. Communication circuit 2. Combination meter	<Ref. to IDI-15, CHECK ECO GAUGE, INSPECTION, Combination Meter System.> NOTE: The ECO gauge does not operate unless the vehicle is driven at least 1 km (0.6 mile) after the trip meter is reset.
Warning buzzer for key left in ignition does not sound.	1. Communication circuit 2. Combination meter	<Ref. to IDI-15, CHECK WARNING BUZZER FOR KEY LEFT IN IGNITION., INSPECTION, Combination Meter System.>

2. CHECK POWER SUPPLY AND GROUND CIRCUIT

	Step	Check	Yes	No
1	**CHECK POWER SUPPLY FOR COMBINATION METER.** 1) Remove the combination meter. 2) Measure the voltage between combination meter connector and chassis ground. ***Connector & terminal*** ***(i10) No. 20 (+) — Chassis ground (–):***	Is the voltage 10 V or more?	Go to step **2**.	Check the harness for open or short between the fuse and combination meter.
2	**CHECK POWER SUPPLY FOR COMBINATION METER.** 1) Turn the ignition switch to ON. 2) Measure the voltage between combination meter connector and chassis ground. ***Connector & terminal*** ***(i10) No. 19 (+) — Chassis ground (–):***	Is the voltage 10 V or more?	Go to step **3**.	Check the harness for open or short between the ignition switch and combination meter.
3	**CHECK GROUND CIRCUIT OF COMBINATION METER.** 1) Turn the ignition switch to OFF. 2) Measure the resistance between combination meter connector and chassis ground. ***Connector & terminal*** ***(i10) No. 39 — Chassis ground:***	Is the resistance less than 10 Ω?	Replace the meter case assembly.	Repair or replace the harness.

GETtheMANUALS.org

3. CHECK VDC CONTROL MODULE

	Step	Check	Yes	No
1	**CHECK VEHICLE SPEED SIGNAL.** 1) Remove the combination meter mounting screws. 2) Lift up the vehicle and support it with rigid racks. 3) Drive the vehicle faster than 10 km/h (6 MPH). **WARNING:** **Be careful not to get caught in the running wheels.** 4) Measure the voltage between combination meter connector and chassis ground. ***Connector & terminal*** ***(i10) No. 29 (+) — Chassis ground (–):***	Is the voltage less than 1 V ←→ 5 V or more?	Replace the meter case assembly.	Go to step **2**.
2	**CHECK HARNESS BETWEEN VDC CONTROL MODULE AND COMBINATION METER.** 1) Turn the ignition switch to OFF. 2) Disconnect the VDC control unit connector and the combination meter connector. 3) Measure the resistance between the VDC control module connector and the combination meter connector. ***Connector & terminal*** ***(B310) No. 11 — (i10) No. 29:***	Is the resistance less than 10 Ω?	Check VDC control module. <Ref. to VDC(diag)-2, Basic Diagnostic Procedure.>	Repair or replace the harness.

4. CHECK ENGINE CONTROL MODULE (ECM)

	Step	Check	Yes	No
1	**CHECK ECM SIGNAL.** 1) Start the engine. 2) Measure the voltage between ECM connector and chassis ground. ***Connector & terminal*** ***(B135) No. 15 (+) — Chassis ground (–):***	Is the voltage 0 ←→ 14 V or more?	Go to step **2**.	Inspect the ECM. • H4 non-turbo model: <Ref. to EN(H4SO)(diag)-2, Basic Diagnostic Procedure.> • H4 turbo model: <Ref. to EN(H4DOTC)(diag)-2, Basic Diagnostic Procedure.> • H6 model: <Ref. to EN(H6DO)(diag)-2, Basic Diagnostic Procedure.>
2	**CHECK HARNESS BETWEEN COMBINATION METER AND ECM.** 1) Turn the ignition switch to OFF. 2) Disconnect the ECM connector and combination meter connector. 3) Measure the resistance between the ECM connector and the combination meter connector. ***Connector & terminal*** ***(B135) No. 15 — (i10) No. 30:***	Is the resistance less than 10 Ω?	Replace the meter case assembly.	Repair or replace the harness.

GETtheMANUALS.org

5. CHECK FUEL LEVEL SENSOR

	Step	Check	Yes	No
1	**CHECK COMBINATION METER.** 1) Drain fuel. 2) Check the fuel indication status in the combination meter.	Does the fuel gauge needle indicate EMPTY and is the fuel level warning light blinking?	Go to step **4**.	Go to step **2**.
2	**CHECK COMBINATION METER.** Perform the self-diagnosis of combination meter. <Ref. to IDI-6, SELF-DIAGNOSIS DISPLAY MODE, OPERATION, Combination Meter System.>	Is it operating normally?	Go to step **3**.	Replace the meter case assembly. <Ref. to IDI-21, Combination Meter.>
3	**CHECK DIAGNOSTIC TROUBLE CODE (DTC).** 1) Prepare the Subaru Select Monitor kit. 2) Turn the ignition switch to ON (engine OFF) and run the “PC application for Subaru Select Monitor”. 3) On «System Selection Menu» display, select {Integ. unit mode}. 4) Select {Diagnostic Code(s) Display}.	Is DTC being displayed?	Perform the diagnosis according to DTC. <Ref. to LAN(diag)-32, LIST, List of Diagnostic Trouble Code (DTC).>	Go to step **4**.
4	**CHECK HARNESS.** 1) Disconnect the body integrated unit connector. 2) Measure the resistance between body integrated unit connector and chassis ground. ***Connector & terminal*** ***(i84) No. 17 — Chassis ground:***	Is the resistance 15.4 — 416 Ω?	Go to step **5**. Go to step **9**. (If the step 1 is “Yes”)	Repair or replace the harness.
5	**CHECK COMMUNICATION BETWEEN BODY INTEGRATED UNIT AND COMBINATION METERS.** 1) Remove the fuel sub level sensor. • H4 non-turbo model: <Ref. to FU(H4SO)-69, REMOVAL, Fuel Sub Level Sensor.> • H4 turbo model: <Ref. to FU(H4DOTC)-83, REMOVAL, Fuel Sub Level Sensor.> • H6 model: <Ref. to FU(H6DO)-75, REMOVAL, Fuel Sub Level Sensor.> 2) Short the fuel sub level sensor connector terminal to the chassis ground with 266.9 — 274.9 Ω resistance. 3) Turn the ignition switch to ON. ***Connector & terminal*** ***(R59) No. 1 — Chassis ground:***	Does the meter needle indicate EMPTY?	Go to step **7**.	Go to step **6**.
6	**CHECK BODY INTEGRATED UNIT.** 1) Retain the condition in step 5. 2) On {Integ. unit mode}, select {Fuel level resistance output value} using the Subaru Select Monitor.	Is 266.9 — 274.9 Ω displayed in the data?	Go to step **11**.	Replace the body integrated unit. <Ref. to SL-71, Body Integrated Unit.>

GETtheMANUALS.org

	Step	Check	Yes	No
7	**CHECK COMMUNICATION BETWEEN BODY INTEGRATED UNIT AND COMBINATION METERS.** 1) Remove the fuel sub level sensor. • H4 non-turbo model: <Ref. to FU(H4SO)-69, REMOVAL, Fuel Sub Level Sensor.> • H4 turbo model: <Ref. to FU(H4DOTC)-83, REMOVAL, Fuel Sub Level Sensor.> • H6 model: <Ref. to FU(H6DO)-75, REMOVAL, Fuel Sub Level Sensor.> 2) Short the fuel sub level sensor connector terminal to the chassis ground with approx. 7.7 — 9.7 Ω resistance. 3) Turn the ignition switch to ON. ***Connector & terminal*** ***(R59) No. 1 — Chassis ground:***	Does the meter needle indicate FULL?	Go to step **9**.	Go to step **8**.
8	**CHECK BODY INTEGRATED UNIT.** 1) Retain the condition in step 7. 2) On {Integ. unit mode}, select {Fuel level resistance output value} using the Subaru Select Monitor.	Is the resistance 7.7 — 9.7 Ω?	Go to step **11**.	Replace the body integrated unit. <Ref. to SL-71, Body Integrated Unit.>
9	**CHECK FUEL SUB LEVEL SENSOR.** 1) Remove the fuel sub level sensor. • H4 non-turbo model: <Ref. to FU(H4SO)-69, REMOVAL, Fuel Sub Level Sensor.> • H4 turbo model: <Ref. to FU(H4DOTC)-83, REMOVAL, Fuel Sub Level Sensor.> • H6 model: <Ref. to FU(H6DO)-75, REMOVAL, Fuel Sub Level Sensor.> 2) Measure the resistance between the fuel sub level sensor connectors when the float is in FULL and EMPTY position. ***Connector & terminal*** ***(R59) No. 1 — No. 2:***	Is the resistance 7.7 — 9.7 Ω (FULL) and 266.9 — 274.9 Ω (EMPTY)?	Go to step **10**.	Replace the fuel sub level sensor.
10	**CHECK FUEL LEVEL SENSOR.** 1) Remove the fuel level sensor. • H4 non-turbo model: <Ref. to FU(H4SO)-67, REMOVAL, Fuel Level Sensor.> • H4 turbo model: <Ref. to FU(H4DOTC)-81, REMOVAL, Fuel Level Sensor.> • H6 model: <Ref. to FU(H6DO)-73, REMOVAL, Fuel Level Sensor.> 2) Measure the resistance between the fuel level sensor connectors when the float is in FULL and EMPTY position. ***Connector & terminal*** ***(R58) No. 1 — No. 4:***	Is the resistance 7.7 — 9.7 Ω (FULL) and 137.1 — 141.1 Ω (EMPTY)?	Check the connection status of the harness and connector that may have a temporary poor contact.	Replace the fuel level sensor.
11	**CHECK COMBINATION METER OPERATION.** 1) Remove the combination meter. 2) Attach the combination meter to another vehicle on which the fuel gauge operates normally to check its operation.	Is the fuel gauge normal?	Replace the body integrated unit. <Ref. to SL-71, Body Integrated Unit.>	Replace the meter case assembly.

GETtheMANUALS.org

6. CHECK ECO GAUGE

Step		Check	Yes	No
1	**CHECK DIAGNOSTIC TROUBLE CODE (DTC).** 1) Prepare the Subaru Select Monitor kit. 2) Turn the ignition switch to ON (engine OFF) and run the “PC application for Subaru Select Monitor”. 3) On «System Selection Menu» display, select {Integ. unit mode}. 4) Select the {Diagnostic Code(s) Display}.	Is a DTC of high-speed CAN detected?	Perform the diagnosis according to DTC. <Ref. to LAN(diag)-32, LIST, List of Diagnostic Trouble Code (DTC).>	Go to step **2**.
2	**CHECK ECO GAUGE.** Perform the self-diagnosis of combination meter. <Ref. to IDI-6, SELF-DIAGNOSIS DISPLAY MODE, OPERATION, Combination Meter System.>	Does ECO gauge operate properly?	Check the connection status of the harness and connector that may have a temporary poor contact.	Replace the meter case assembly. <Ref. to IDI-21, Combination Meter.>

7. CHECK WARNING BUZZER FOR KEY LEFT IN IGNITION

Step		Check	Yes	No
1	**CHECK KEY WARNING SWITCH ALARM.** 1) Insert the key into ignition key lock. 2) Open the driver’s side door.	Does the buzzer sound from the meter?	Normal	Go to step **2**.
2	**CHECK COMMUNICATION STATUS.** 1) Prepare the Subaru Select Monitor. 2) On «System Selection Menu» display, select {Integ. unit mode}. 3) On {Current Data Display & Save}, select {key-lock warning SW}. 4) Insert and remove the key.	Does the display change between ON ←→ OFF?	Go to step **3**.	Check the ignition circuit. <Ref. to SL-59, INSPECTION, Ignition Key Lock.>
3	**CHECK COMMUNICATION STATUS.** 1) On {Current Data Display & Save}, select {Driver’s door SW input}. 2) Open and close the door.	Does the display change between ON ←→ OFF?	Go to step **4**.	Check the door switch circuit. <Ref. to SL-10, CHECK DOOR LOCK SWITCH, INSPECTION, Door Lock Control System.>
4	**CHECK COMMUNICATION STATUS.** 1) Turn the ignition switch to ON (engine OFF) and run the “PC application for Subaru Select Monitor”. 2) On «System Selection Menu» display, select {Integ. unit mode}. 3) Select {Diagnostic Code(s) Display}.	Is DTC being displayed?	Perform the diagnosis according to DTC. <Ref. to LAN(diag)-32, LIST, List of Diagnostic Trouble Code (DTC).>	Go to step **5**.
5	**CHECK COMBINATION METER.** Perform the self-diagnosis of combination meter. <Ref. to IDI-6, SELF-DIAGNOSIS DISPLAY MODE, OPERATION, Combination Meter System.>	Did the buzzer sound?	Go to step **6**.	Replace the meter case assembly.
6	**CHECK COMBINATION METER.** 1) Remove the combination meter. 2) Attach the buzzer to another vehicle on which the buzzer operates normally to check its operation.	Did the buzzer sound?	Replace the body integrated unit. <Ref. to SL-71, Body Integrated Unit.>	Replace the meter case assembly.

GETtheMANUALS.org

E: NOTE

For operation procedures of each component of the combination meter system, refer to the respective section.

- Combination meter: <Ref. to IDI-21, Combination Meter.>
- Speedometer: <Ref. to IDI-27, Speedometer.>
- Tachometer: <Ref. to IDI-28, Tachometer.>
- Fuel gauge: <Ref. to IDI-29, Fuel Gauge.>
- ECO gauge: <Ref. to IDI-30, ECO Gauge.>

GETtheMANUALS.org

4. Clock System

A: WIRING DIAGRAM

Refer to “Clock System” in the wiring diagram. <Ref. to WI-96, WIRING DIAGRAM, Clock System.>

B: ELECTRICAL SPECIFICATION

1. MULTI DISPLAY TERMINAL ARRANGEMENT

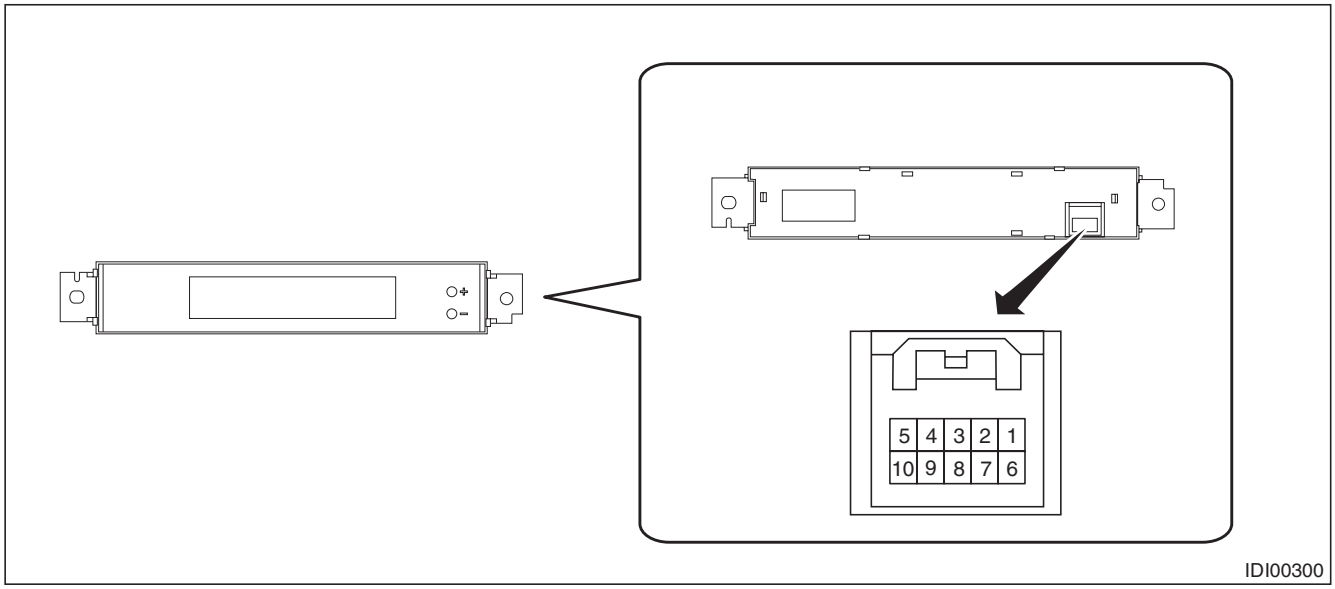

Connector

Terminal No.	Item	Measuring condition	Standard
5 (U-ART com.)	—	Cannot be measured	—
6 (GND) ←→ Chassis ground	Resistance	Always	Less than 1 Ω
8 (IG) ←→ Chassis ground	Voltage	IG OFF → ON	0 V → 10 — 14 V
10 (+B) ←→ Chassis ground	Voltage	Always	10 — 14 V

C: INSPECTION

1. SYMPTOM CHART

Symptoms	Repair order	Note
No display is shown.	1. Power supply 2. Ground circuit 3. Communication circuit harness 4. Multi display	<Ref. to IDI-18, CHECK POWER SUPPLY AND GROUND CIRCUIT., INSPECTION, Clock System.>
Ambient air temperature/fuel economy displays do not appear.	1. Power supply 2. Ground circuit 3. Communication circuit harness 4. Multi display	<Ref. to IDI-18, CHECK CLOCK SYSTEM COMMUNICATION CIRCUIT, INSPECTION, Clock System.>
Only ambient air temperature display is not displayed.	1. Power supply 2. Harness 3. Ambient sensor 4. Communication circuit 5. Multi display	<Ref. to IDI-19, CHECK AMBIENT TEMPERATURE SYSTEM COMMUNICATION CIRCUIT, INSPECTION, Clock System.>
Only fuel economy display is not displayed.	1. Setting 2. Communication circuit 3. Multi display	<Ref. to IDI-20, CHECK FUEL ECONOMY SYSTEM COMMUNICATION CIRCUIT., INSPECTION, Clock System.>

GETtheMANUALS.org

2. CHECK POWER SUPPLY AND GROUND CIRCUIT

	Step	Check	Yes	No
1	**CHECK POWER SUPPLY.** 1) Disconnect the multi display connector. 2) Measure the voltage between multi display connector and chassis ground. ***Connector & terminal*** ***(i59) No. 10 (+) — Chassis ground (–):***	Is the voltage 10 V or more?	Go to step **2**.	Check the harness for open or short between the fuse and multi display.
2	**CHECK GROUND CIRCUIT.** Measure the resistance between multi display connector and chassis ground. ***Connector & terminal*** ***(i59) No. 6 — Chassis ground:***	Is the resistance less than 10 Ω?	Go to step **3**.	Repair or replace the harness.
3	**CHECK HARNESS BETWEEN MULTI DISPLAY AND COMBINATION METER.** 1) Disconnect the combination meter connector. 2) Measure the resistance between multi display connector and combination meter connector. ***Connector & terminal*** ***(i59) No. 5 — (i10) No. 3:***	Is the resistance less than 10 Ω?	Go to step **4**.	Repair or replace the harness.
4	**CHECK MULTI DISPLAY.** 1) Remove the multi display. 2) Attach the clock to another vehicle on which the clock display operates normally, and check its operation.	Is the multi display normal?	Replace the meter case assembly.	Replace the multi display.

3. CHECK CLOCK SYSTEM COMMUNICATION CIRCUIT

	Step	Check	Yes	No
1	**CHECK POWER SUPPLY.** 1) Disconnect the multi display connector. 2) Measure the voltage between multi display connector and chassis ground. ***Connector & terminal*** ***(i59) No. 8 (+) — Chassis ground (–):***	Is the voltage 10 V or more?	Go to step **2**.	Repair or replace the harness.
2	**CHECK GROUND CIRCUIT.** Measure the resistance between multi display connector and chassis ground. ***Connector & terminal*** ***(i59) No. 6 — Chassis ground:***	Is the resistance less than 10 Ω?	Go to step **3**.	Repair or replace the harness.
3	**CHECK HARNESS BETWEEN MULTI DISPLAY AND COMBINATION METER.** 1) Disconnect the combination meter connector. 2) Measure the resistance between multi display connector and combination meter connector. ***Connector & terminal*** ***(i59) No. 5 — (i10) No. 3:***	Is the resistance less than 10 Ω?	Go to step **4**.	Repair or replace the harness.
4	**CHECK MULTI DISPLAY.** 1) Remove the multi display. 2) Attach the clock to another vehicle on which the clock display operates normally, and check its operation.	Is the multi display normal?	Replace the meter case assembly.	Replace the multi display.

GETtheMANUALS.org

4. CHECK AMBIENT TEMPERATURE SYSTEM COMMUNICATION CIRCUIT

Step		Check	Yes	No
1	**CHECK AMBIENT SENSOR POWER SUPPLY.** 1) Disconnect the ambient sensor connector. 2) Turn the ignition switch to ON. 3) Measure the voltage between the ambient sensor connector and chassis ground. ***Connector & terminal*** ***(B480) No. 2 (+) — Chassis ground (–):***	Is the voltage 4 V or more?	Go to step **2**.	Check the harness for open or short between the fuse and multi display.
2	**CHECK HARNESS BETWEEN AMBIENT SENSOR AND COMBINATION METER.** 1) Disconnect the combination meter connector. 2) Measure the resistance between the ambient sensor connector and the combination meter connector. ***Connector & terminal*** ***(B480) No. 1 — (i10) No. 37:*** ***(B480) No. 2 — (i10) No. 36:***	Is the resistance less than 10 Ω?	Go to step **3**.	Repair or replace the harness.
3	**CHECK AMBIENT SENSOR.** 1) Remove the ambient sensor. <Ref. to AC-78, REMOVAL, Ambient Sensor (Auto A/C Model).> 2) Check the ambient sensor. <Ref. to AC(diag)-44, AMBIENT SENSOR, Diagnostic Procedure for Sensors.>	Is the ambient sensor operating properly?	Go to step **4**.	Replace the ambient sensor.
4	**CHECK AMBIENT TEMPERATURE DISPLAY.** 1) Connect the combination meter connector. 2) Install the 3 Ω resistance to ambient sensor connector terminal. 3) Turn the ignition switch to ON. ***Connector & terminal*** ***(B480) No. 1 — No. 2:***	Does the ambient temperature display 25°C (77°F)?	Repair the poor contact between the ambient sensor and harness connector.	Go to step **5**.
5	**CHECK AMBIENT TEMPERATURE OUTPUT DATA.** 1) Prepare the Subaru Select Monitor kit. 2) Turn the ignition switch to ON (engine OFF) and run the “PC application for Subaru Select Monitor”. 3) On «System Selection Menu» display, select {Integ. unit mode}. 4) Select {Ambient Temperature}.	Does the ambient temperature display 25°C (77°F)?	Go to step **6**.	Replace the meter case assembly. <Ref. to IDI-21, Combination Meter.>
6	**CHECK MULTI DISPLAY.** 1) Remove the multi display. 2) Attach the ambient temperature display to another vehicle on which the ambient temperature display operates normally to check its operation.	Does the ambient temperature display 25°C (77°F)?	Replace the multi display.	Replace the meter case assembly. <Ref. to IDI-21, Combination Meter.>

GETtheMANUALS.org

5. CHECK FUEL ECONOMY SYSTEM COMMUNICATION CIRCUIT

Step		Check	Yes	No
1	**CHECK FUEL ECONOMY DISPLAY OFF MODE.** Check that the mode display changes when the MFD changeover knob is operated. (Display changes in the following order: Cruising Distance → Average Fuel Economy → Instantaneous Fuel Economy → blank display)	Is fuel economy displayed?	Multi display is normal.	Go to step **2**.
2	**CHECK DIAGNOSTIC TROUBLE CODE (DTC).** 1) Prepare the Subaru Select Monitor kit. 2) Turn the ignition switch to ON (engine OFF) and run the “PC application for Subaru Select Monitor”. 3) On «System Selection Menu» display, select {Integ. unit mode}. 4) Select the {Diagnostic Code(s) Display}.	Is DTC detected?	Go to step **3**.	Replace the meter case assembly. <Ref. to IDI-21, Combination Meter.>
3	**CHECK MULTI DISPLAY.** 1) Remove the multi display. 2) Attach the fuel economy display to another vehicle on which the fuel economy display operates normally to check its operation.	Is the fuel economy display correct?	Replace the multi display.	Replace the meter case assembly. <Ref. to IDI-21, Combination Meter.>

D: NOTE

For operation procedures of each component of the clock system, refer to the following section:

- Multi display: <Ref. to IDI-31, Multi Display.>

GETtheMANUALS.org

5. Combination Meter

A: REMOVAL

1) Disconnect the ground cable from battery.
2) Remove the center panel assembly.

CAUTION:
Do not put your finger on the fin of the air vent grille. Doing so may damage the fin.

(1) Attach the protective tape (a) to the meter visor.

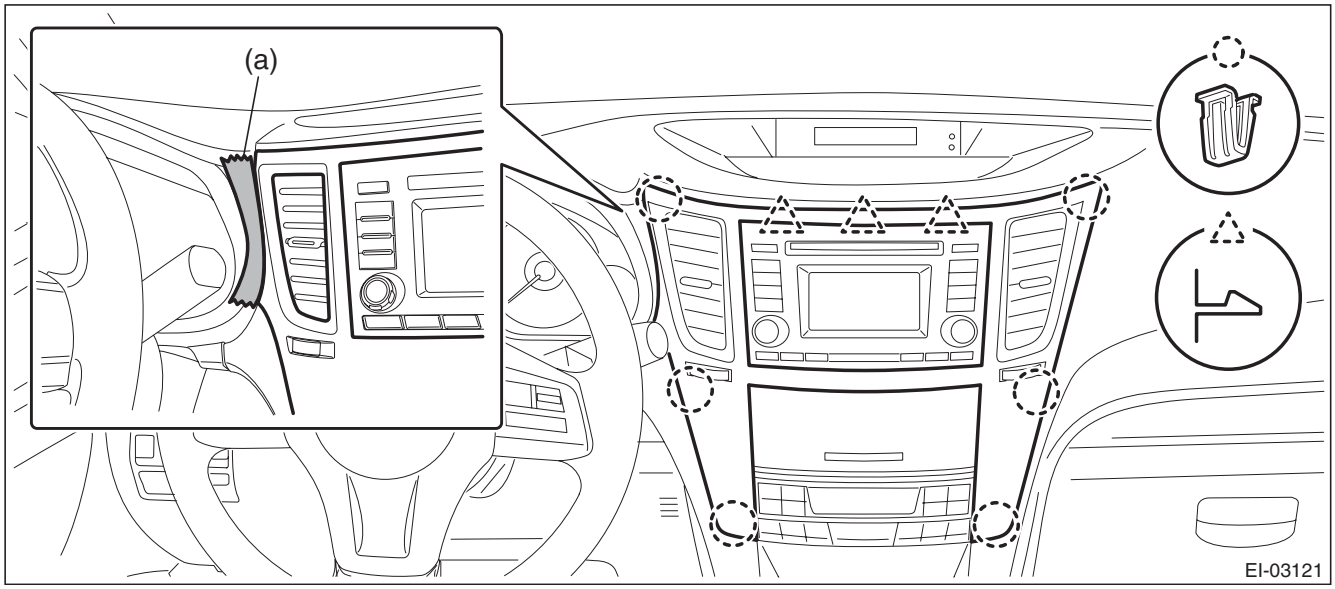

(2) Insert a finger into the air vent grille and release the left and right clips at the top of the center panel. (A), (B)
(3) Insert a finger into the air vent grille and release the left and right clips at the center of the center panel. (C), (D)

GETtheMANUALS.org

(4) Release the clips at the bottom of the center panel and remove the center panel assembly.

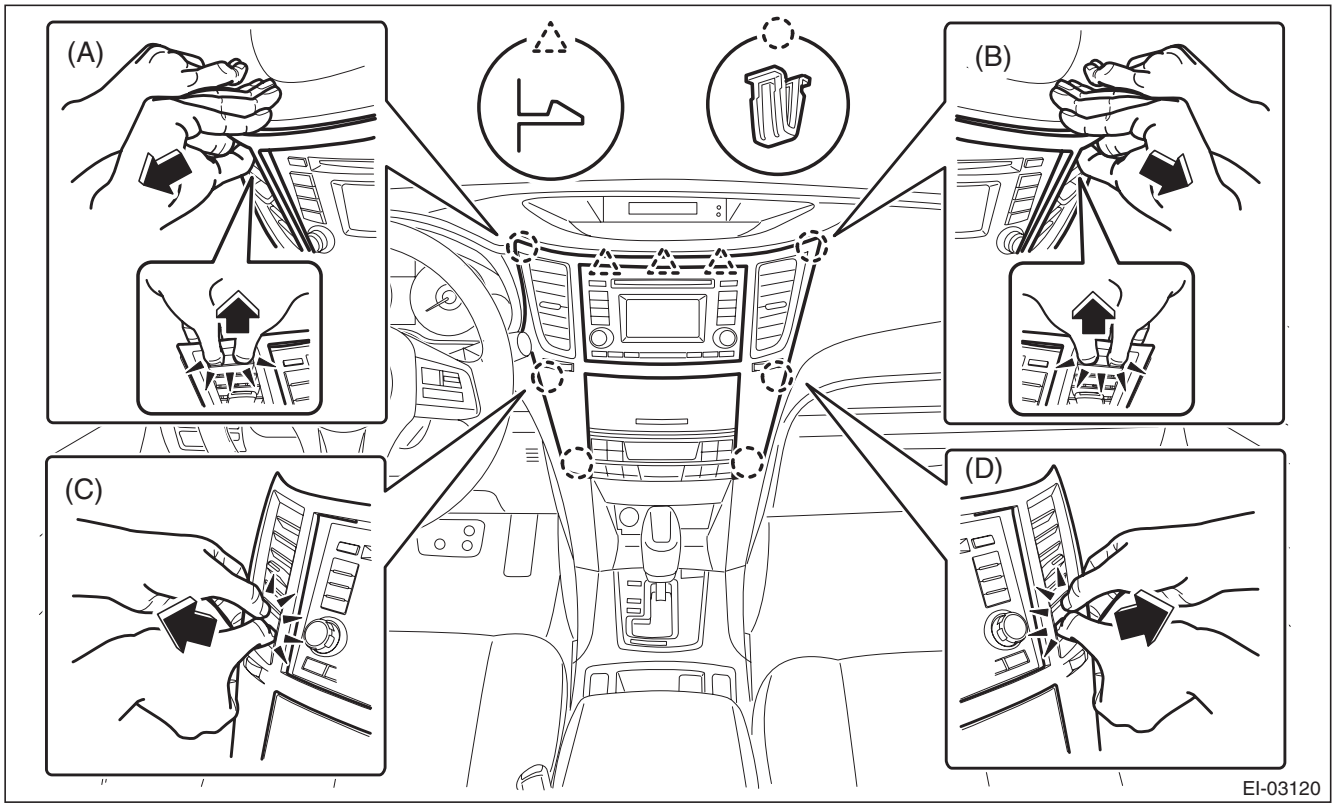

3) Remove the screws and release the claws, then detach the starter cover assembly.

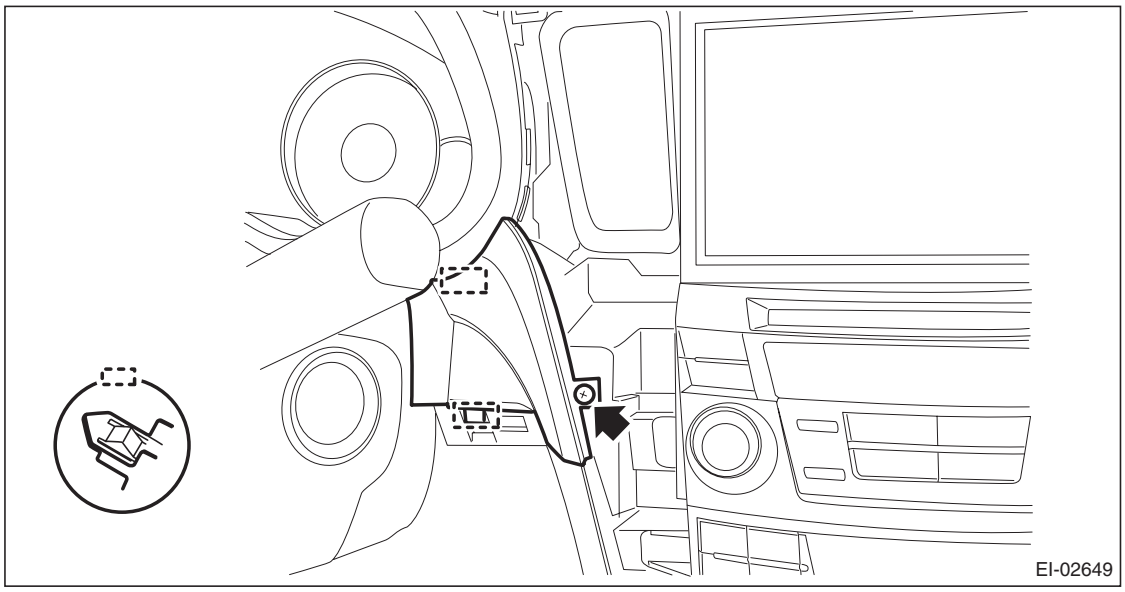

GETtheMANUALS.org

4) Release the lock, tilt the steering column to the lowest end and fully extend the column by the telescopic system.

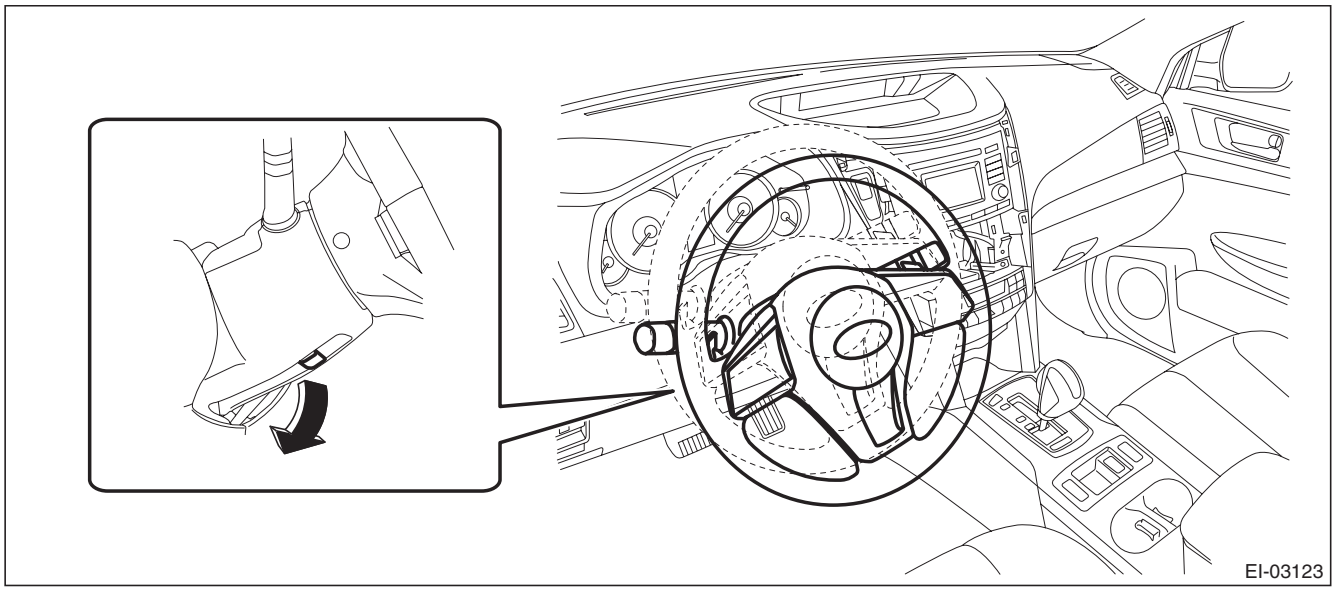

5) Release the screws and clips, then detach the meter visor assembly.

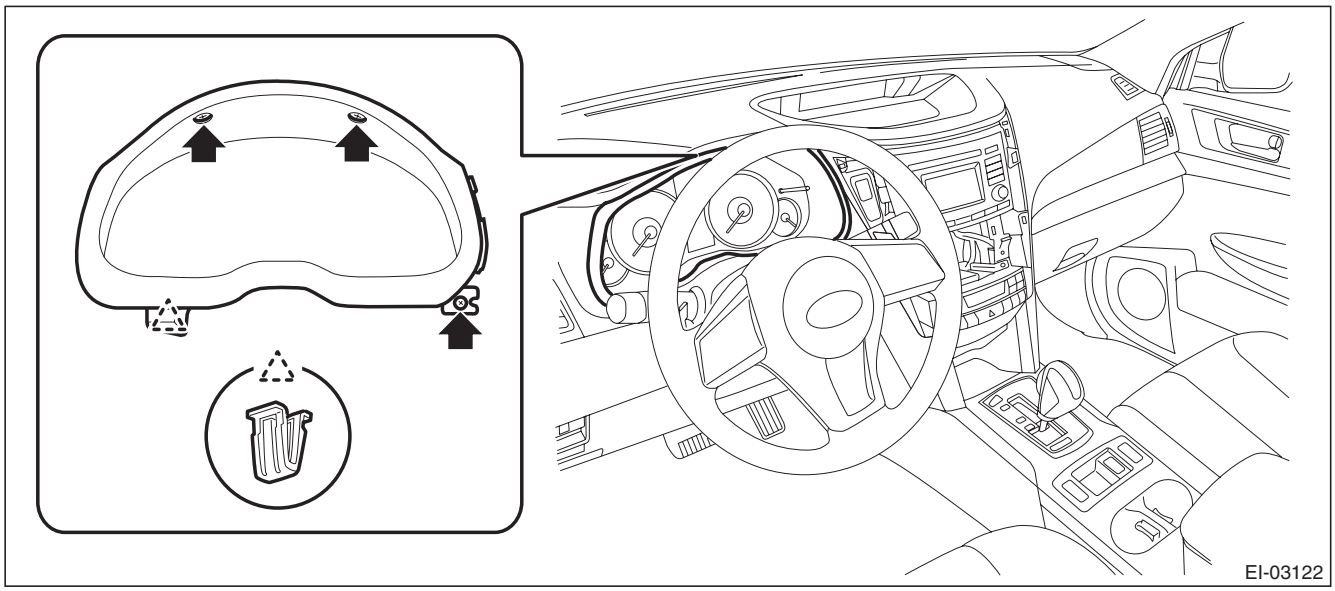

GETtheMANUALS.org

6) Remove the combination meter assembly.

CAUTION:
- **Be careful not to damage the meter or instrument panel.**
- **Pay particular attention to avoid damaging the meter glass.**

(1) Remove the screws and move the steering COMPL upper cover toward you.

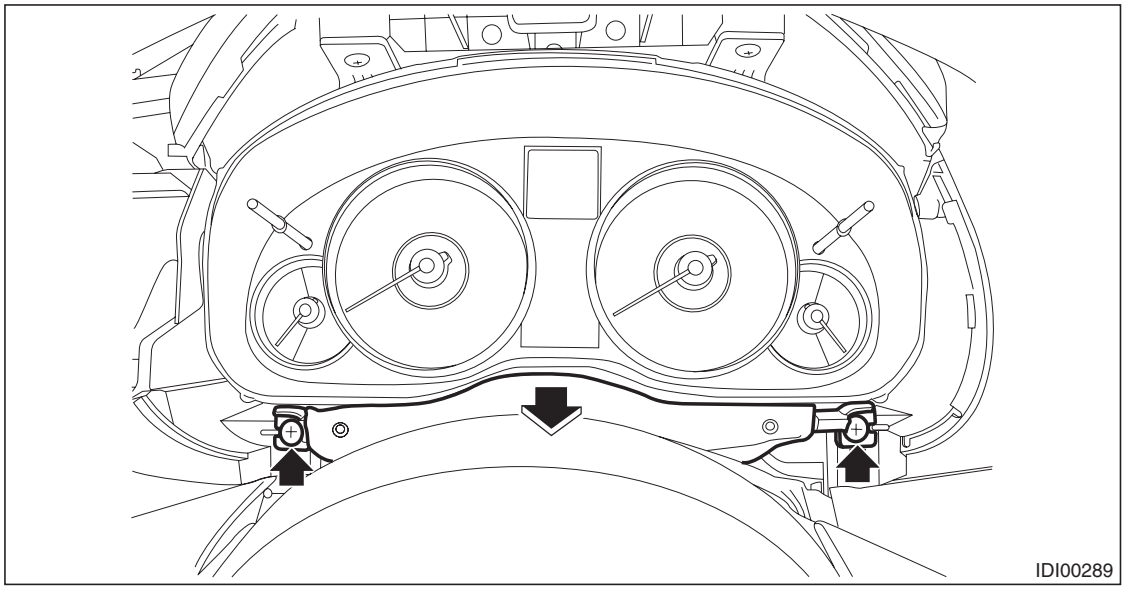

(2) Remove the screws.

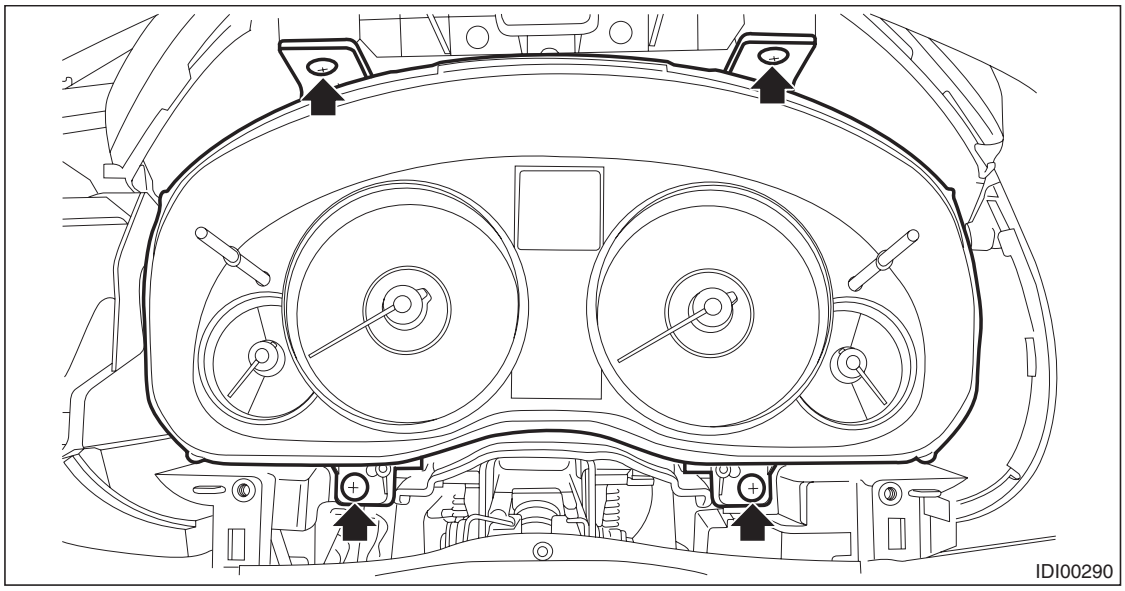

GETtheMANUALS.org

(3) Pull the combination meter toward you and disconnect the connector.

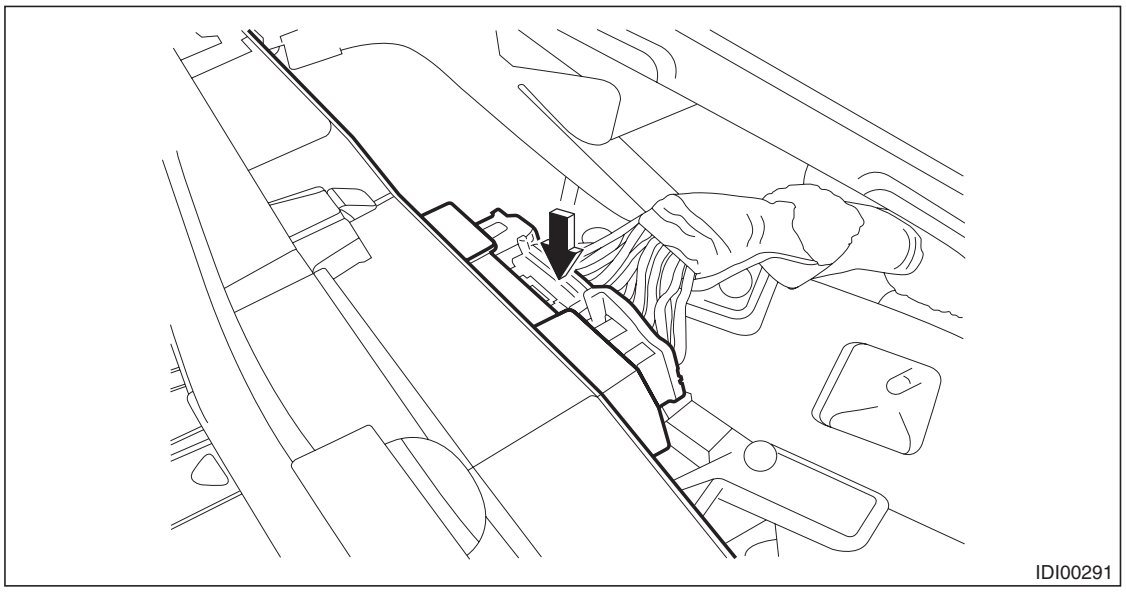

(4) Remove the combination meter assembly as shown in the figure.

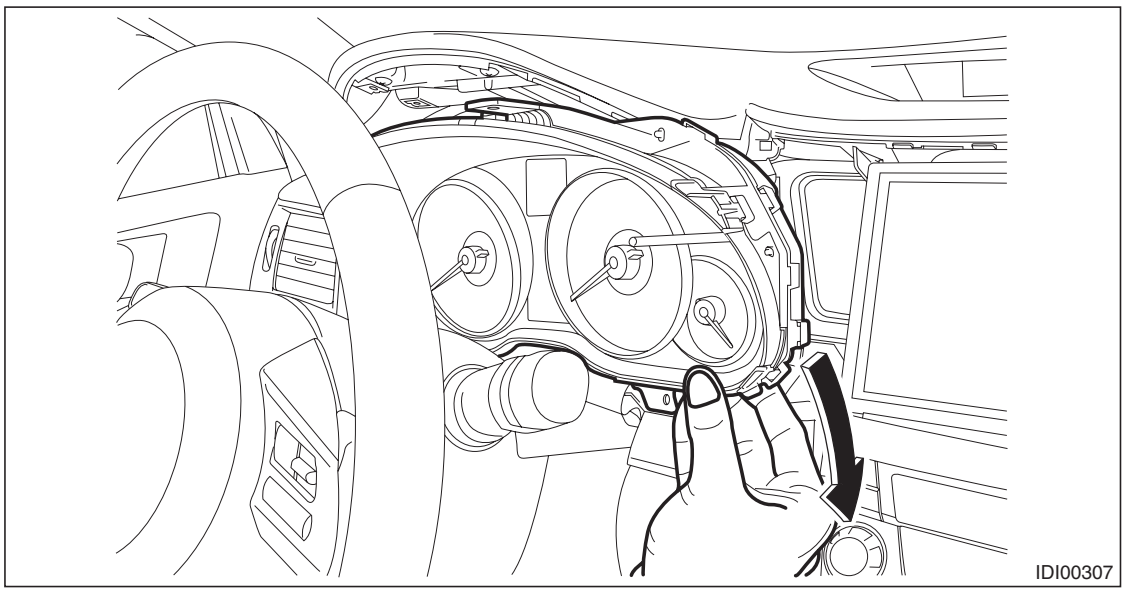

B: INSTALLATION

CAUTION:
- **Make sure the electrical connector is connected securely.**
- **Make sure that each meter operates normally.**
- **When the combination meter of model with immobilizer has been replaced, be sure to perform the registration of immobilizer.**

Install each part in the reverse order of removal.

GETtheMANUALS.org

C: DISASSEMBLY

1. DISASSEMBLY OF COMBINATION METER ASSEMBLY

CAUTION:
- **Use gloves to avoid damage and getting fingerprints on the glass surface and meter surfaces.**
- **Be careful not to apply excessive force to the trip knob.**
- **Be sure not to touch the meter indicator needle.**

Disengage the claw, and remove the meter glass (A) and meter visor (B) from the meter case assembly (C).

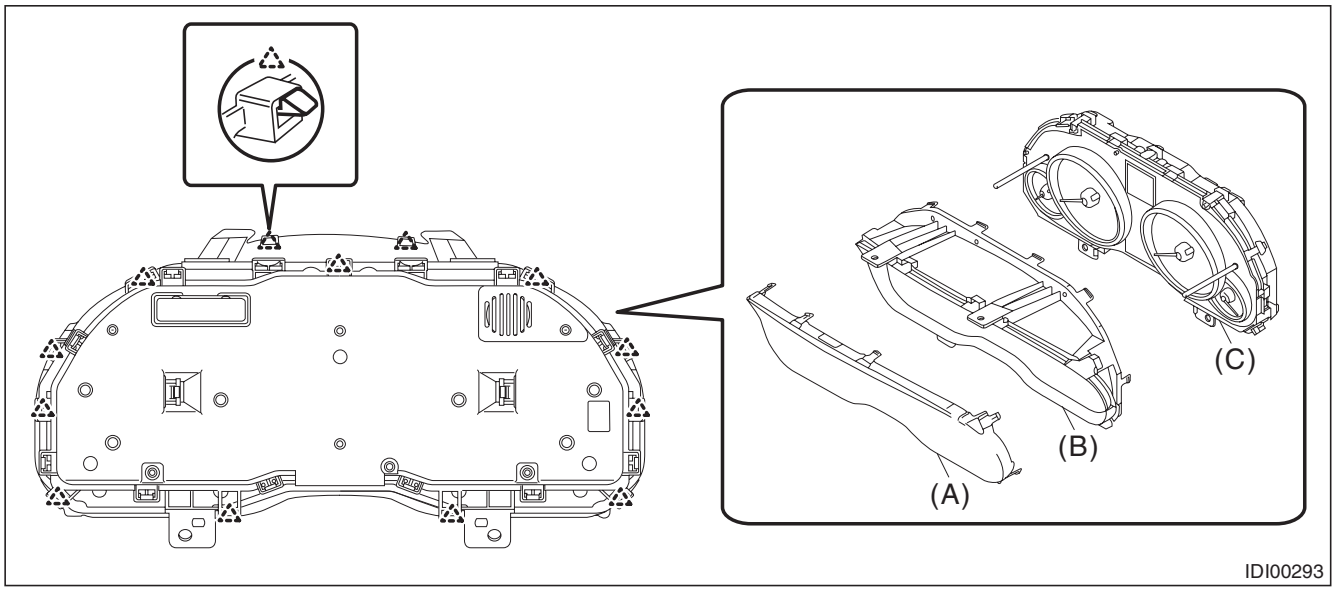

2. BULB REPLACEMENT

LEDs are used for all of warning lights and indicator lights of combination meters, replace the meter case assembly if faulty.

D: ASSEMBLY

Assemble each part in the reverse order of disassembly.

GETtheMANUALS.org

6. Speedometer

A: SPECIFICATION

Since the meter case assembly cannot be disassembled, do not remove or inspect the speedometer alone. (Do not remove the cover on the back surface.)

GETtheMANUALS.org

7. Tachometer

A: SPECIFICATION

Since the meter case assembly cannot be disassembled, do not remove or inspect the tachometer alone. (Do not remove the cover on the back surface.)

GETtheMANUALS.org

8. Fuel Gauge

A: SPECIFICATION

Since the meter case assembly cannot be disassembled, do not remove or inspect the fuel gauge alone. (Do not remove the cover on the back surface.)

GETtheMANUALS.org

9. ECO Gauge

A: SPECIFICATION

Since the meter case assembly cannot be disassembled, do not remove or inspect the ECO gauge alone. (Do not remove the cover on the back surface.)

GETtheMANUALS.org

10.Multi Display

A: REMOVAL

1) Disconnect the ground cable from battery.
2) Remove the center panel assembly.

CAUTION:
Do not put your finger on the fin of the air vent grille. Doing so may damage the fin.

(1) Attach the protective tape (a) to the meter visor.

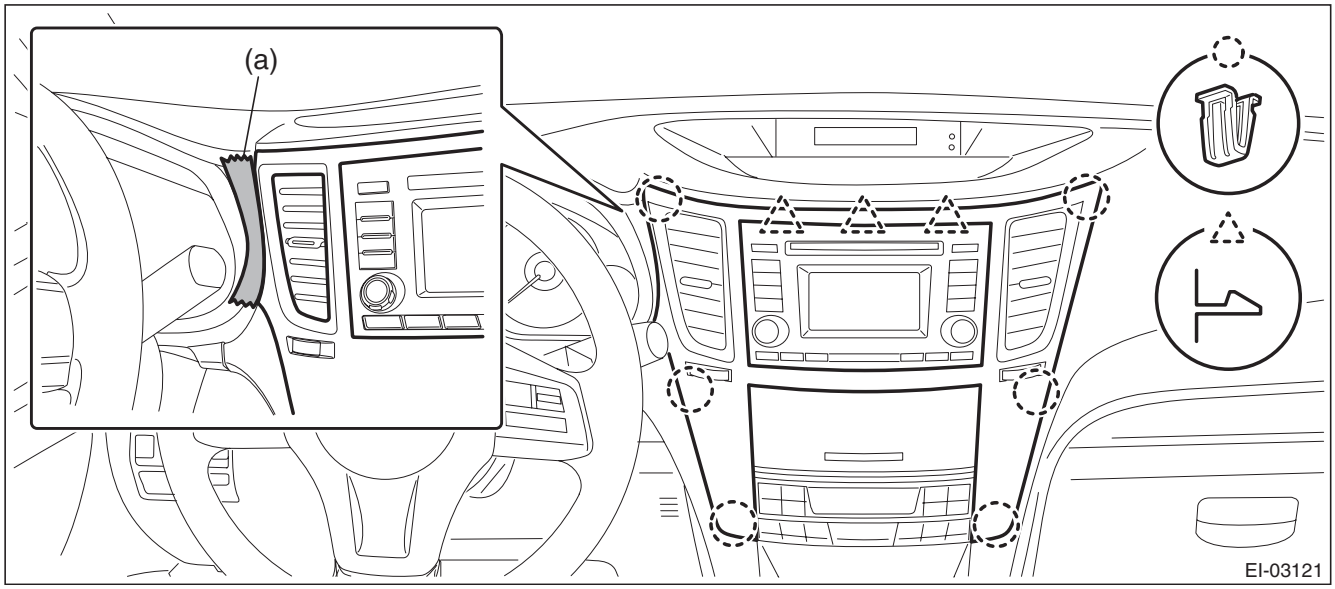

(2) Insert a finger into the air vent grille and release the left and right clips at the top of the center panel. (A), (B)
(3) Insert a finger into the air vent grille and release the left and right clips at the center of the center panel. (C), (D)

GETtheMANUALS.org

(4) Release the clips at the bottom of the center panel and remove the center panel assembly.

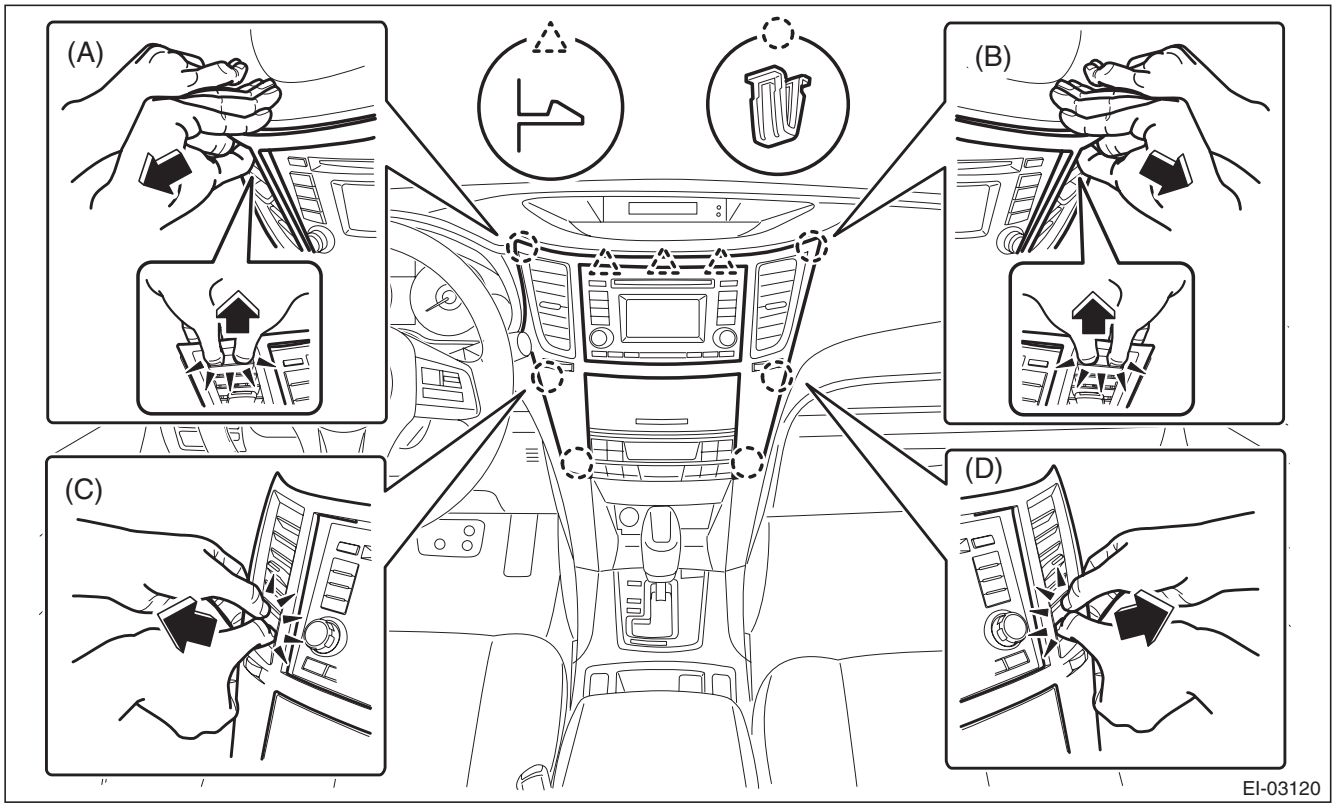

3) Remove the audio assembly.
(1) Remove the left and right screws, and partially pull the audio out from center console.
(2) Disconnect the connectors, and remove the audio assembly.

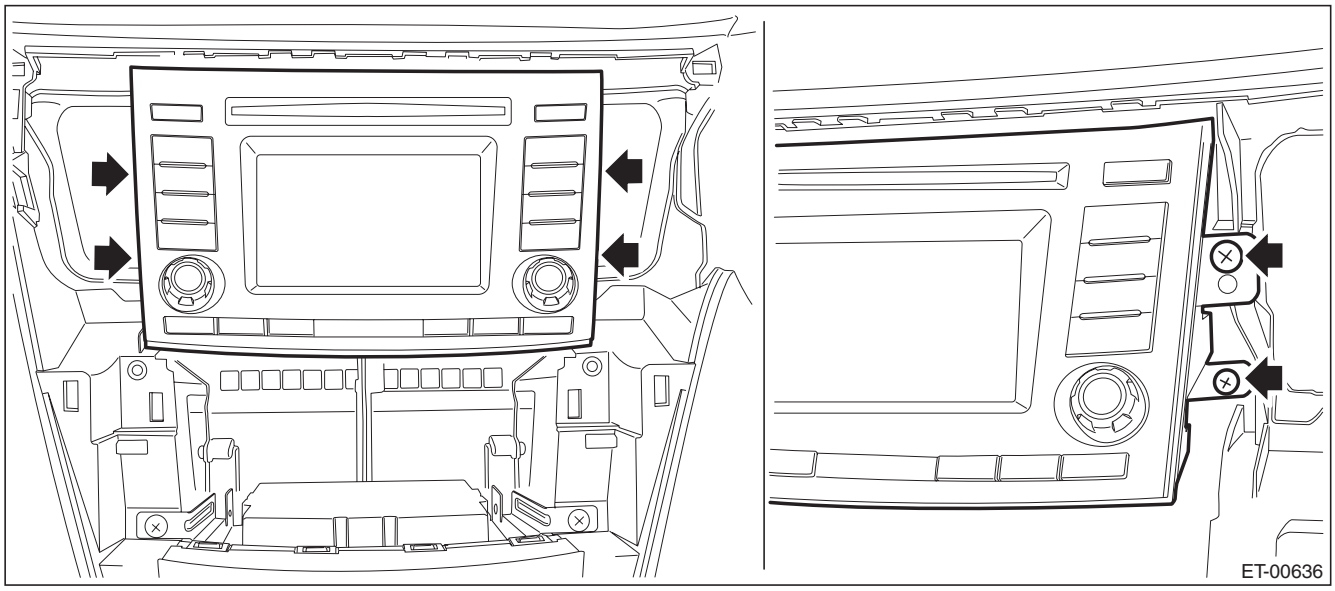

GETtheMANUALS.org

4) Remove the navigation assembly. (model with navigation)
   (1) Remove the left and right screws.
   (2) Disconnect the connectors, and remove the navigation assembly.

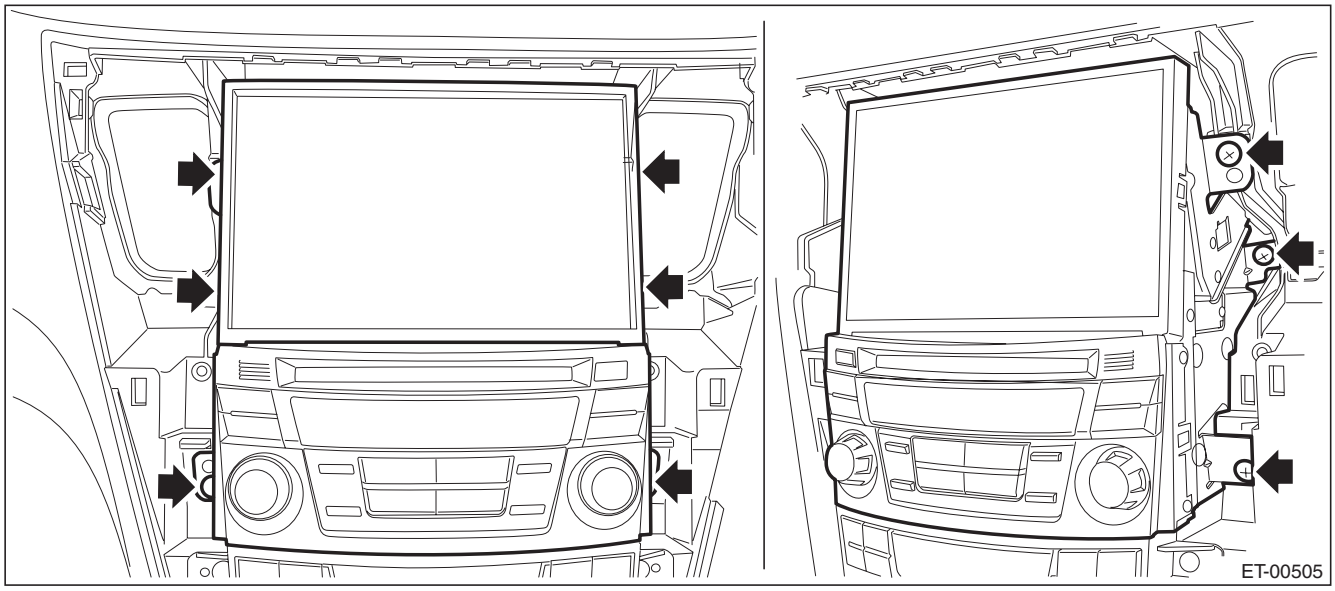

5) Remove the center speaker cover.
   (1) Push up the center speaker cover from the audio space.
   (2) Disconnect the claws and hooks and remove the center speaker cover.

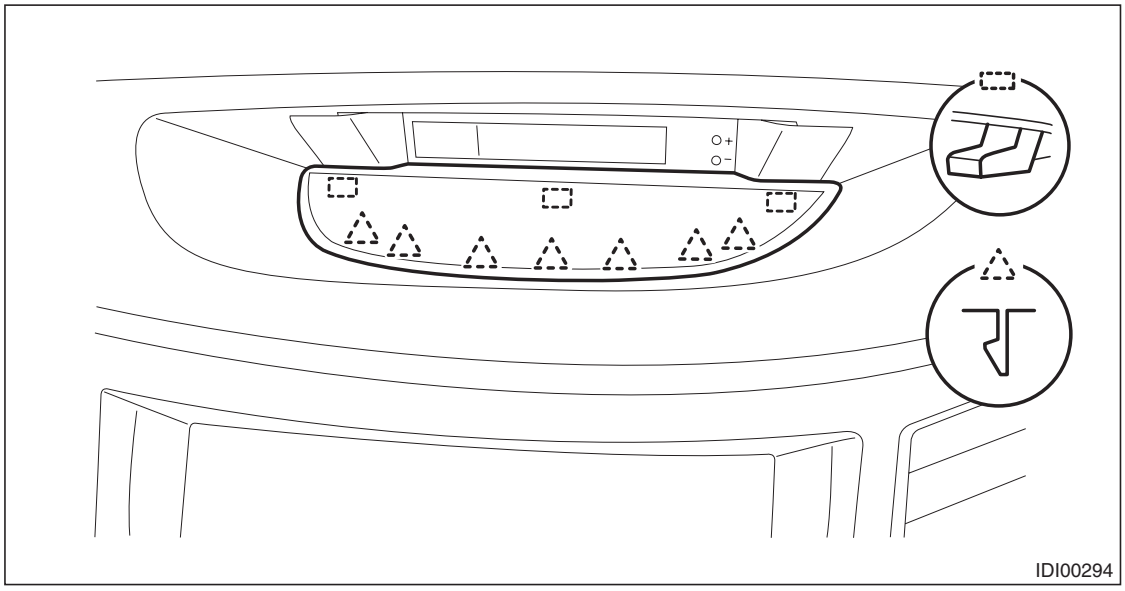

GETtheMANUALS.org

6) Remove the multi display.

CAUTION:
Be careful not to damage the multi display or instrument panel.

(1) Release the clips and claws, detach the multi display panel LWR.
(2) Remove the screws and pull out the multi display toward you to disconnect the connectors.

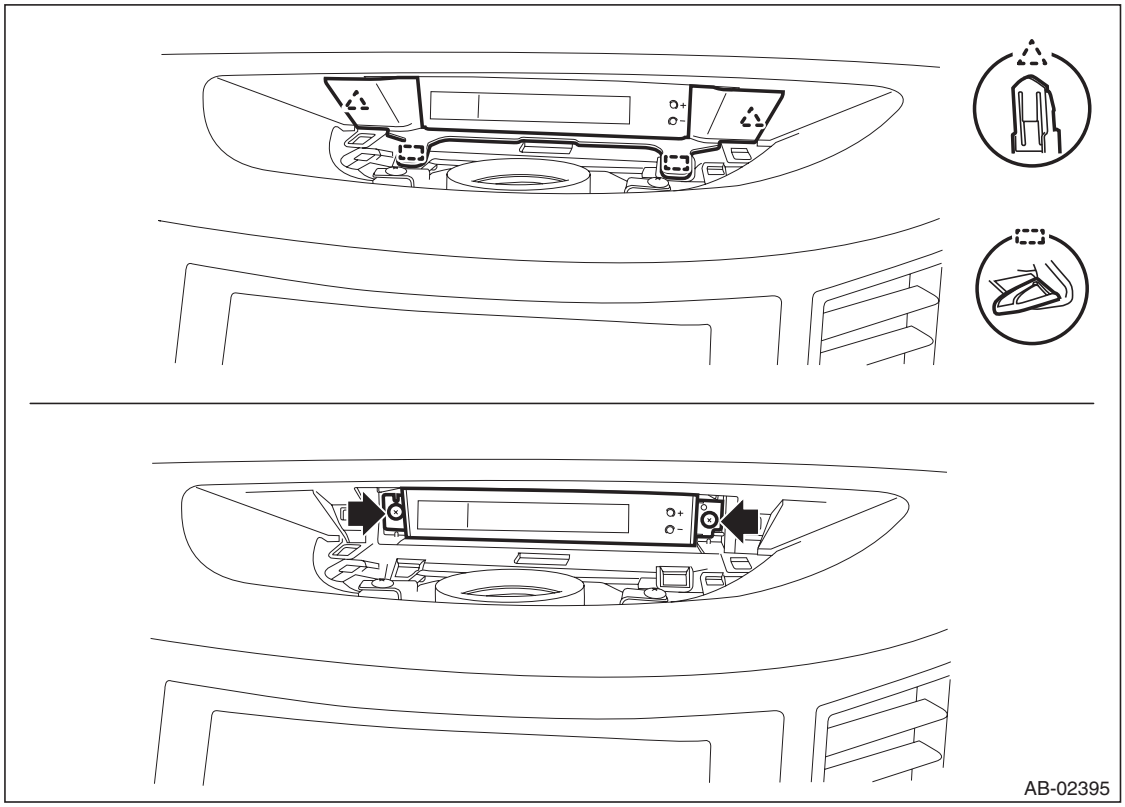

B: INSTALLATION

CAUTION:
- **Make sure the electrical connector is connected securely.**
- **Make sure that the multi display operates normally.**

Install each part in the reverse order of removal.

GETtheMANUALS.org

SEATS

SE

		Page
1.	General Description	2
2.	Front Seat	10
3.	Rear Seat	34
4.	Power Seat System	57
5.	Seat Heater System	66

GETtheMANUALS.org

1. General Description

A: COMPONENT

1. FRONT SEAT

- Manual seat LH

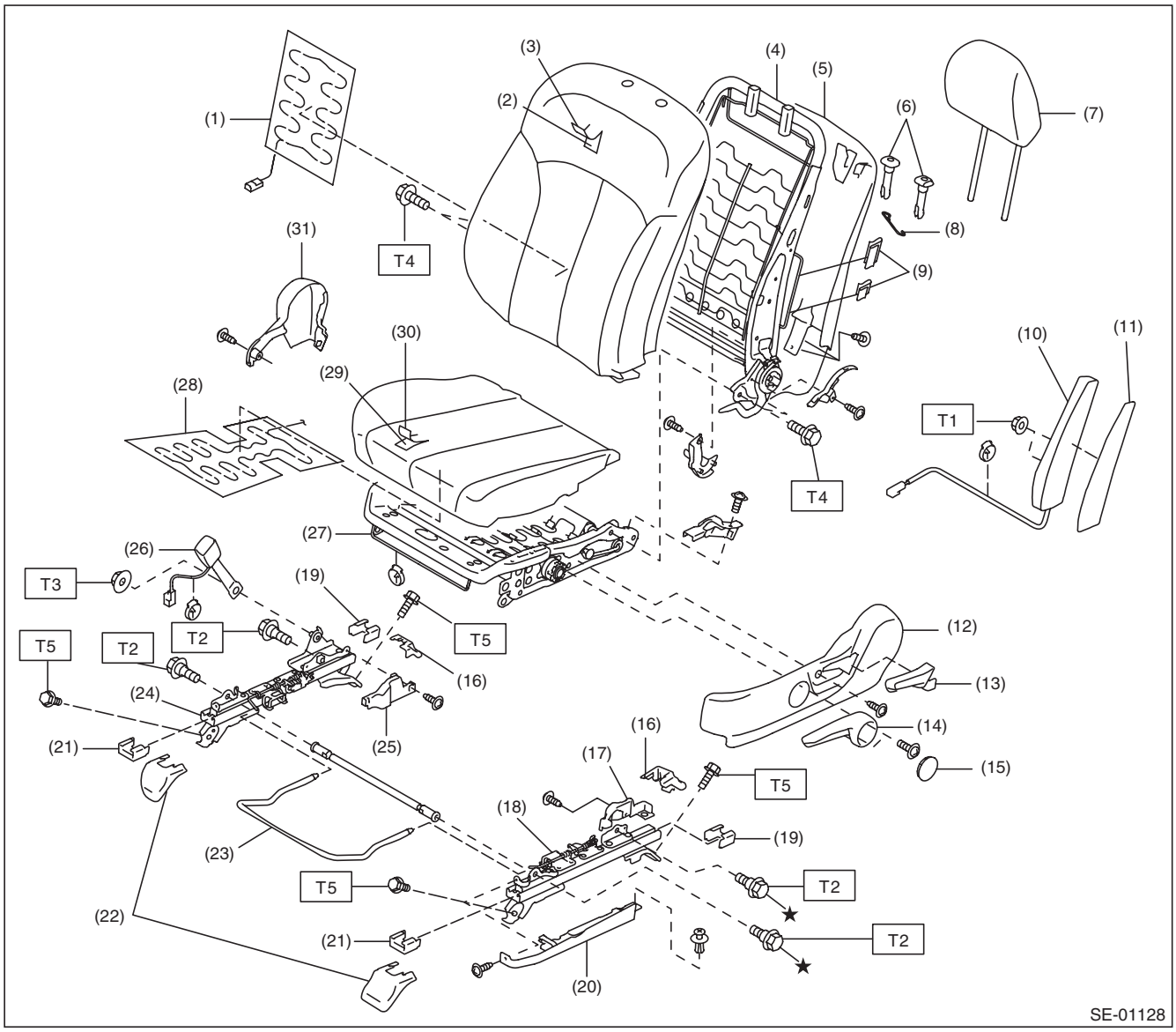

GETtheMANUALS.org

General Description

(1) Backrest heater ASSY
(2) Backrest pad
(3) Backrest cover
(4) Backrest frame ASSY
(5) Backrest back cover
(6) Headrest bushing
(7) Headrest ASSY
(8) Flat mat hook
(9) S hook
(10) Side airbag module ASSY
(11) Side airbag tape
(12) Seat side cover OUT
(13) Reclining lever
(14) Lifter lever
(15) Lifter lever cap
(16) Rear bolt cover
(17) Riser cover INN LH
(18) Slide rail ASSY LH
(19) Rail end cap rear
(20) Riser cover OUT
(21) Rail end cap front
(22) Front bolt cover
(23) Sliding adjust bar
(24) Slide rail ASSY RH
(25) Riser cover INN RH
(26) Inner seat belt ASSY
(27) Cushion frame ASSY
(28) Cushion heater ASSY
(29) Cushion pad
(30) Cushion cover
(31) Seat side cover IN

Tightening torque:N·m (kgf-m, ft-lb)	
T1:	***6 (0.61, 4.4)***
T2:	***18 (1.84, 13.3)***
T3:	***38 (3.87, 28.0)***
T4:	***52 (5.3, 38.4)***
T5:	***53 (5.4, 39.1)***

GETtheMANUALS.org

- Power seat LH

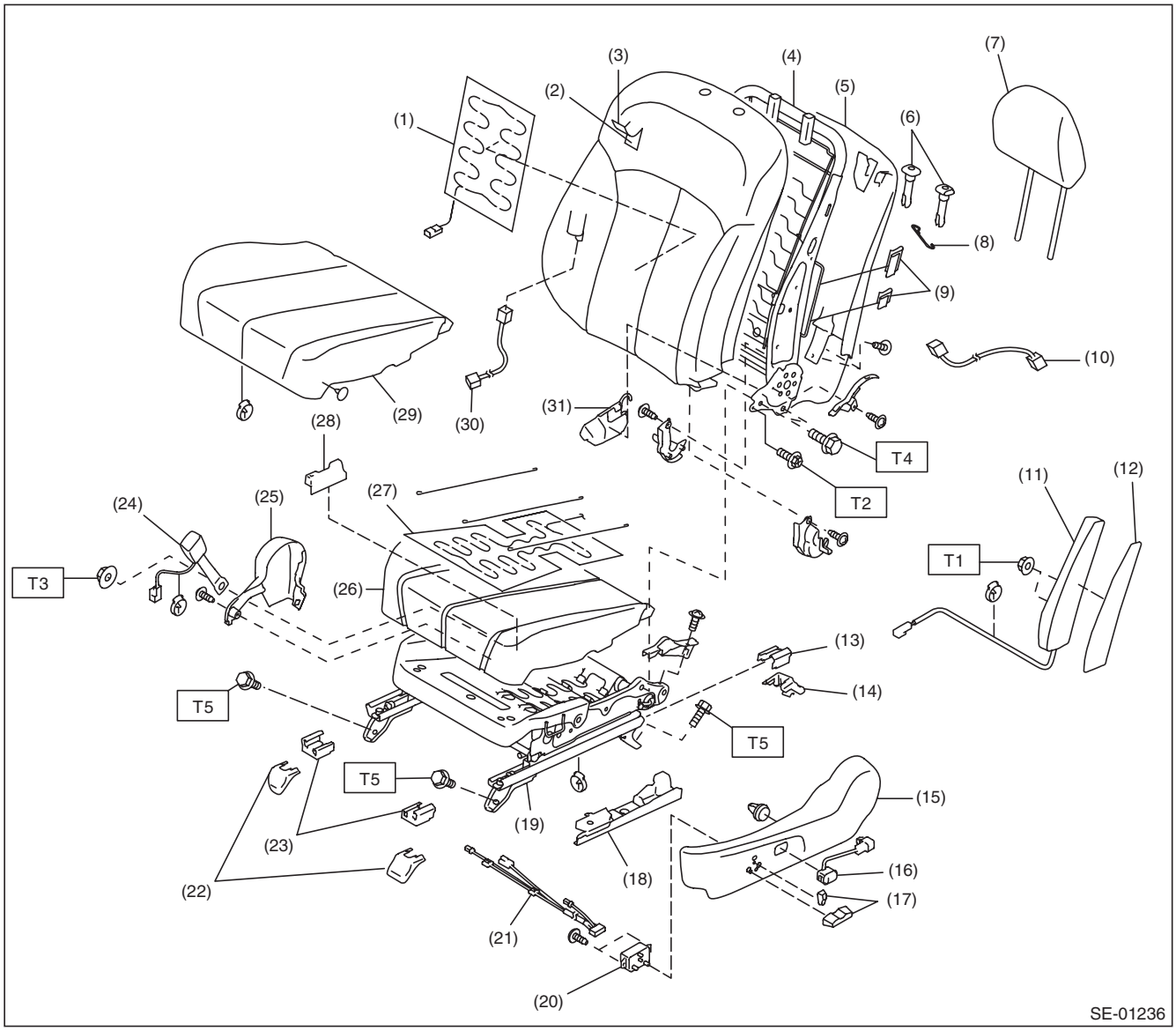

(1) Backrest heater ASSY
(2) Backrest pad
(3) Backrest cover
(4) Backrest frame ASSY
(5) Backrest back cover
(6) Headrest bushing
(7) Headrest ASSY
(8) Flat mat hook
(9) S hook
(10) Reclining motor harness
(11) Side airbag module ASSY
(12) Side airbag tape
(13) Rail end cap rear
(14) Rear bolt cover
(15) Seat side cover OUT
(16) Lumber switch ASSY
(17) Power seat switch knob
(18) Riser cover OUT LH
(19) Seat cushion frame ASSY
(20) Power seat switch ASSY
(21) Power seat switch harness
(22) Front bolt cover
(23) Rail end cap front
(24) Inner seat belt ASSY
(25) Seat side cover IN
(26) Cushion pad
(27) Cushion heater ASSY
(28) Riser cover INN RH
(29) Cushion cover
(30) Lumber motor harness
(31) Backrest inner cover

Tightening torque:N·m (kgf-m, ft-lb)

T1: 6 (0.61, 4.4)
T2: 18 (1.84, 13.3)
T3: 38 (3.87, 28.0)
T4: 52 (5.3, 38.4)
T5: 53 (5.4, 39.1)

GETtheMANUALS.org

- Manual seat RH

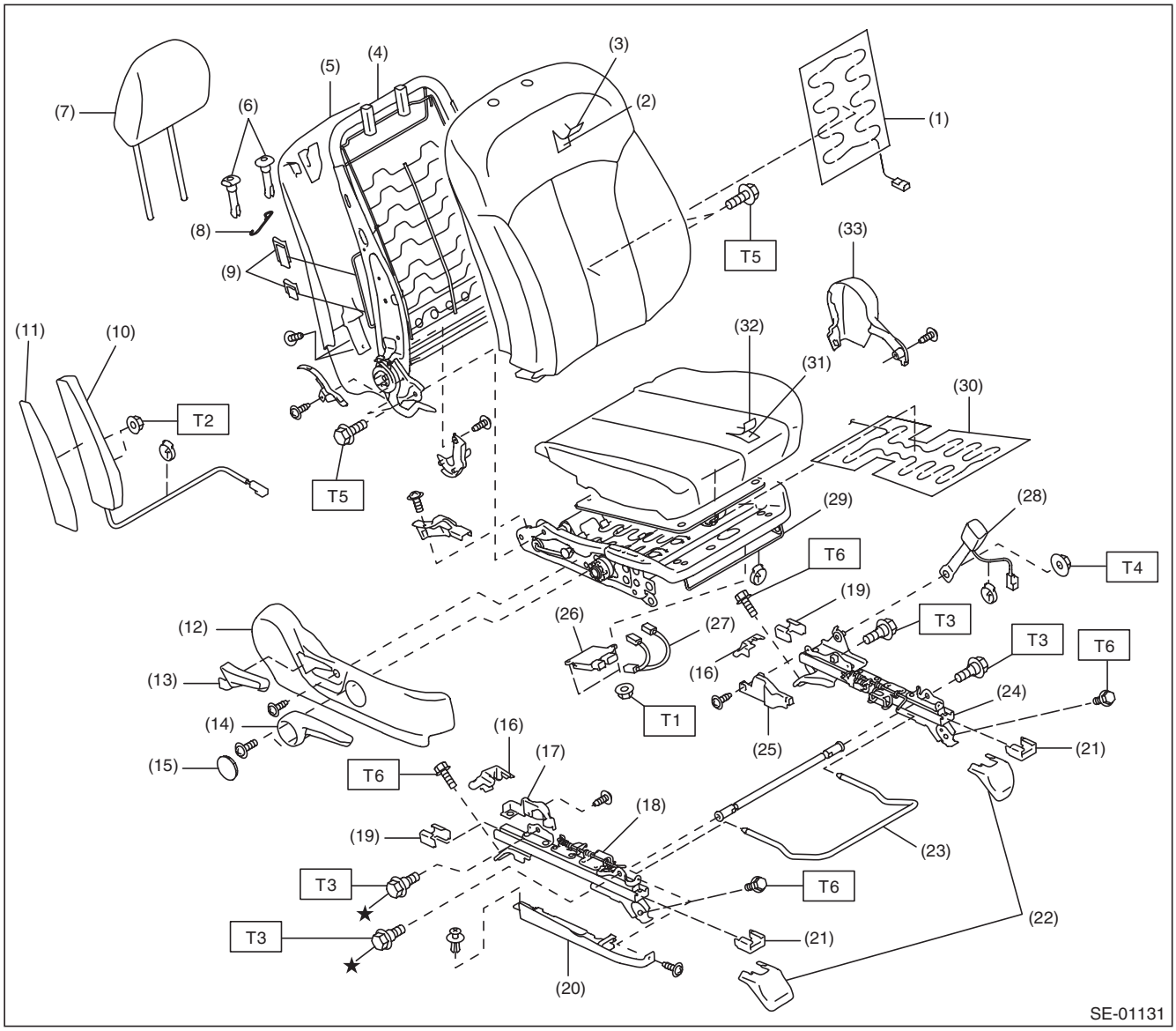

(1)	Backrest heater ASSY	(15)	Lifter lever cap	(29)	Cushion frame ASSY
(2)	Backrest pad	(16)	Rear bolt cover	(30)	Cushion heater ASSY
(3)	Backrest cover	(17)	Riser cover INN RH	(31)	Cushion pad
(4)	Backrest frame ASSY	(18)	Slide rail ASSY RH	(32)	Cushion cover
(5)	Backrest back cover	(19)	Rail end cap rear	(33)	Seat side cover IN
(6)	Headrest bushing	(20)	Riser cover OUT		
(7)	Headrest ASSY	(21)	Rail end cap front		
(8)	Flat mat hook	(22)	Front bolt cover		
(9)	S hook	(23)	Sliding adjust bar		
(10)	Side airbag module ASSY	(24)	Slide rail ASSY LH		
(11)	Side airbag tape	(25)	Riser cover INN LH		
(12)	Seat side cover OUT	(26)	Occupant detection control module		
(13)	Reclining lever	(27)	Occupant detection control module harness		
(14)	Lifter lever	(28)	Inner seat belt ASSY		

Tightening torque:N·m (kgf-m, ft-lb)

T1: 5.9 (0.6, 4.4)
T2: 6 (0.61, 4.4)
T3: 18 (1.84, 13.3)
T4: 38 (3.87, 28.0)
T5: 52 (5.3, 38.4)
T6: 53 (5.4, 39.1)

GETtheMANUALS.org

- Power seat RH

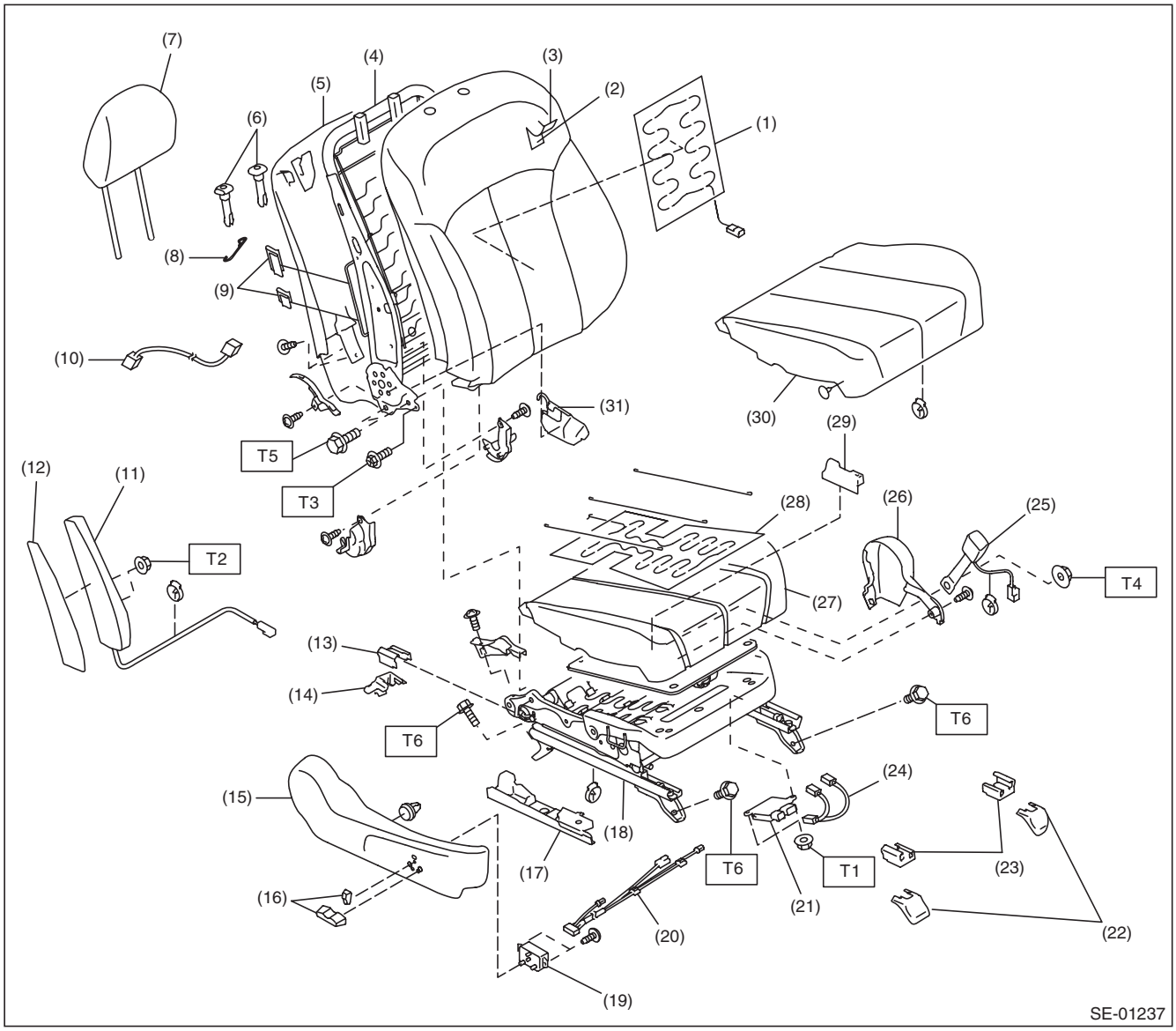

(1)	Backrest heater ASSY	(14)	Rear bolt cover	(27)	Cushion pad
(2)	Backrest pad	(15)	Seat side cover OUT	(28)	Cushion heater ASSY
(3)	Backrest cover	(16)	Power seat switch knob	(29)	Riser cover INN RH
(4)	Backrest frame ASSY	(17)	Riser cover OUT LH	(30)	Cushion cover
(5)	Backrest back cover	(18)	Seat cushion frame ASSY	(31)	Backrest inner cover
(6)	Headrest bushing	(19)	Power seat switch ASSY		
(7)	Headrest ASSY	(20)	Power seat harness		
(8)	Flat mat hook	(21)	Occupant detection control module		
(9)	S hook	(22)	Front bolt cover		
(10)	Reclining motor harness	(23)	Rail end cap front		
(11)	Side airbag module ASSY	(24)	Occupant detection control module harness		
(12)	Side airbag tape	(25)	Inner seat belt ASSY		
(13)	Rail end cap rear	(26)	Seat side cover IN		

Tightening torque:N·m (kgf-m, ft-lb)

T1: 5.9 (0.6, 4.4)

T2: 6 (0.61, 4.4)

T3: 18 (1.84, 13.3)

T4: 38 (3.87, 28.0)

T5: 52 (5.3, 38.4)

T6: 53 (5.4, 39.1)

GETtheMANUALS.org

2. REAR SEAT (SEDAN MODEL)

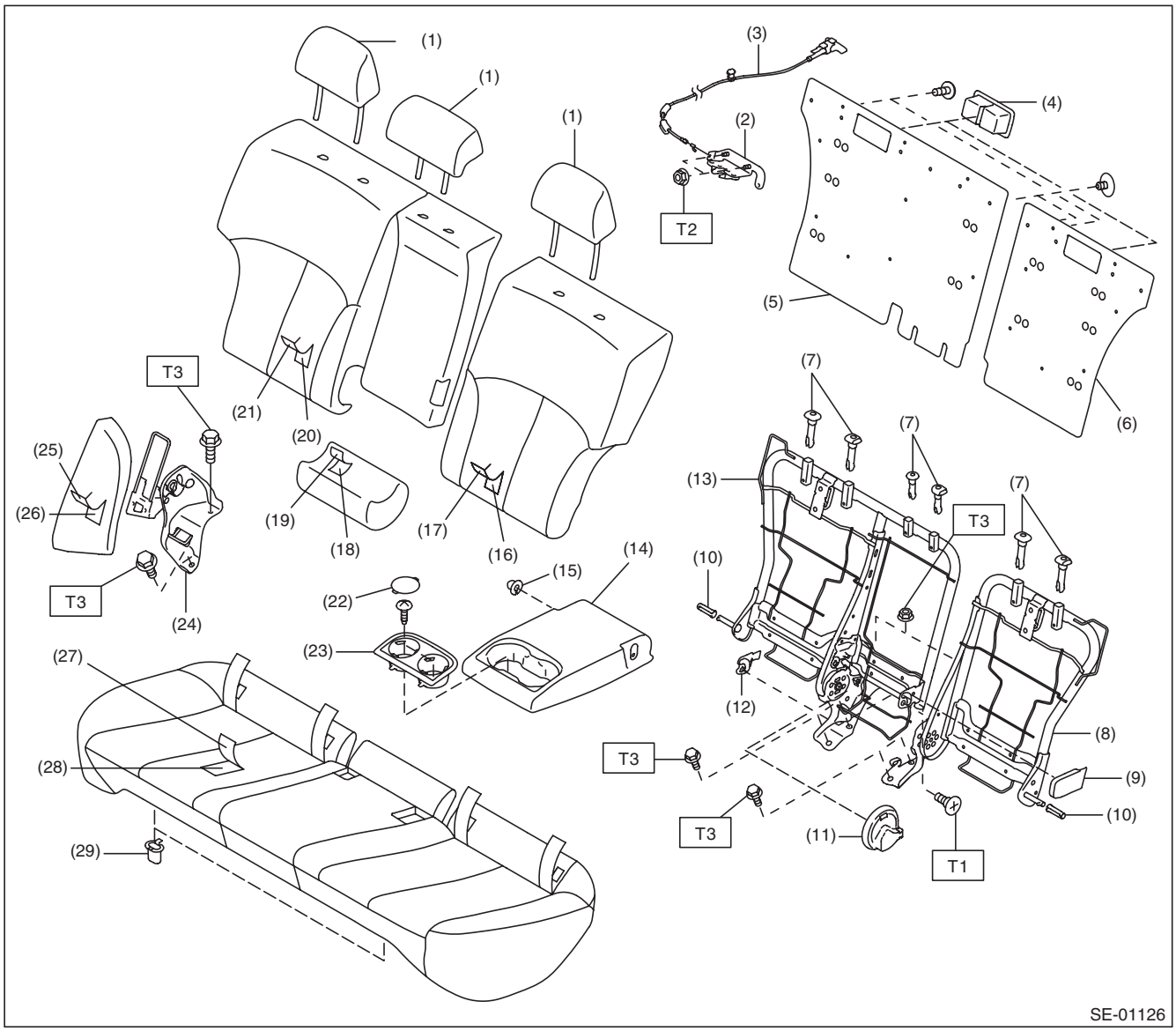

SE-01126

(1)	Headrest ASSY	(13)	Backrest frame ASSY RH	(25)	Backrest side cover
(2)	Backrest lock ASSY	(14)	Armrest ASSY	(26)	Backrest side pad
(3)	Release lever ASSY	(15)	Armrest bushing	(27)	Seat cushion cover
(4)	Backrest back board RH	(16)	Backrest pad LH	(28)	Seat cushion pad
(5)	Backrest striker cover	(17)	Backrest cover LH	(29)	Hook
(6)	Backrest back board LH	(18)	Seat center pad		
(7)	Headrest lock bushing	(19)	Seat center cover		
(8)	Backrest frame ASSY LH	(20)	Backrest pad RH		
(9)	Armrest hinge cover	(21)	Backrest cover RH		
(10)	Backrest hinge bushing	(22)	Cup holder rubber		
(11)	Reclining hinge cover RH	(23)	Cup holder ASSY		
(12)	Armrest hinge bushing	(24)	Hinge ASSY		

Tightening torque:N·m (kgf-m, ft-lb)

T1: 9.8 (1.0, 7.2)

T2: 24.5 (2.5, 18.1)

T3: 53 (5.4, 39.1)

GETtheMANUALS.org

3. REAR SEAT (OUTBACK MODEL)

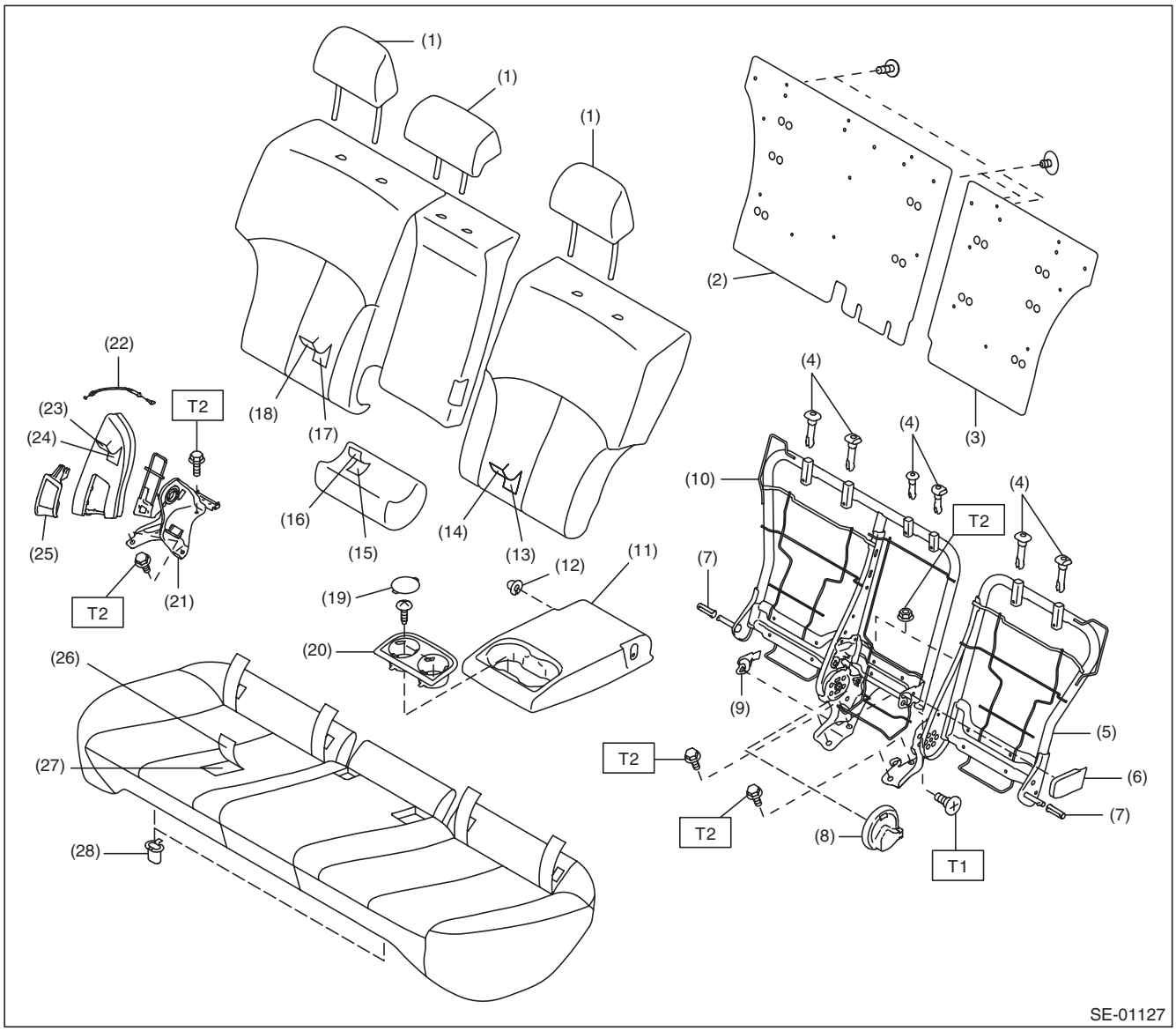

(1)	Headrest ASSY	(12)	Armrest bushing	(23)	Backrest side cover
(2)	Backrest back board RH	(13)	Backrest pad LH	(24)	Backrest side pad
(3)	Backrest back board LH	(14)	Backrest cover LH	(25)	Reclining lever ASSY
(4)	Headrest lock bushing	(15)	Seat center pad	(26)	Seat cushion cover
(5)	Backrest frame ASSY LH	(16)	Seat center cover	(27)	Seat cushion pad
(6)	Armrest hinge cover	(17)	Backrest pad RH	(28)	Hook
(7)	Backrest hinge bushing	(18)	Backrest cover RH		
(8)	Reclining hinge cover RH	(19)	Cup holder rubber		
(9)	Armrest hinge bushing	(20)	Cup holder ASSY		
(10)	Backrest frame ASSY RH	(21)	Hinge ASSY		
(11)	Armrest ASSY	(22)	Reclining cable		

Tightening torque:N·m (kgf-m, ft-lb)
T1: 24.5 (2.5, 18.1)
T2: 53 (5.4, 39.1)

GETtheMANUALS.org

B: CAUTION

When removing the front seat from a vehicle, follow the safety instructions given in the airbag section.

C: PREPARATION TOOL

1. GENERAL TOOL

TOOL NAME	Remarks
Long nose plier	Used for removing the hog ring.
Hog ring pliers	Used for installing the hog ring.
Circuit tester	Used for checking voltage and continuity.

GETtheMANUALS.org

2. Front Seat

A: REMOVAL

CAUTION:
The airbag system is fitted with a backup power supply. After disconnecting the battery ground cable, the airbag may operate if you do not wait for 60 seconds before starting the service of airbag system.

1) Remove the headrest.

NOTE:
For models with headrest monitor, remove the headrest in the following procedures.
1. Fold the backrest all the way backward, and then remove the headrest.
2. Place the headrest on the seating face.
3. Return the backrest to the original position.

2) Disconnect the ground cable from battery and wait for at least 60 seconds before starting work.

NOTE:
For the power seat, remove the slide rail installing bolt before removing the battery ground.

3) Remove the slide rail installing bolt.
   (1) Tilt the backrest forward and move the seat to the front most position.
   (2) Remove the rear bolt cover (A) and remove the two bolts.
   (3) Move the seat to the rearmost position.
   (4) Remove the front bolt cover (B) and remove the two bolts.

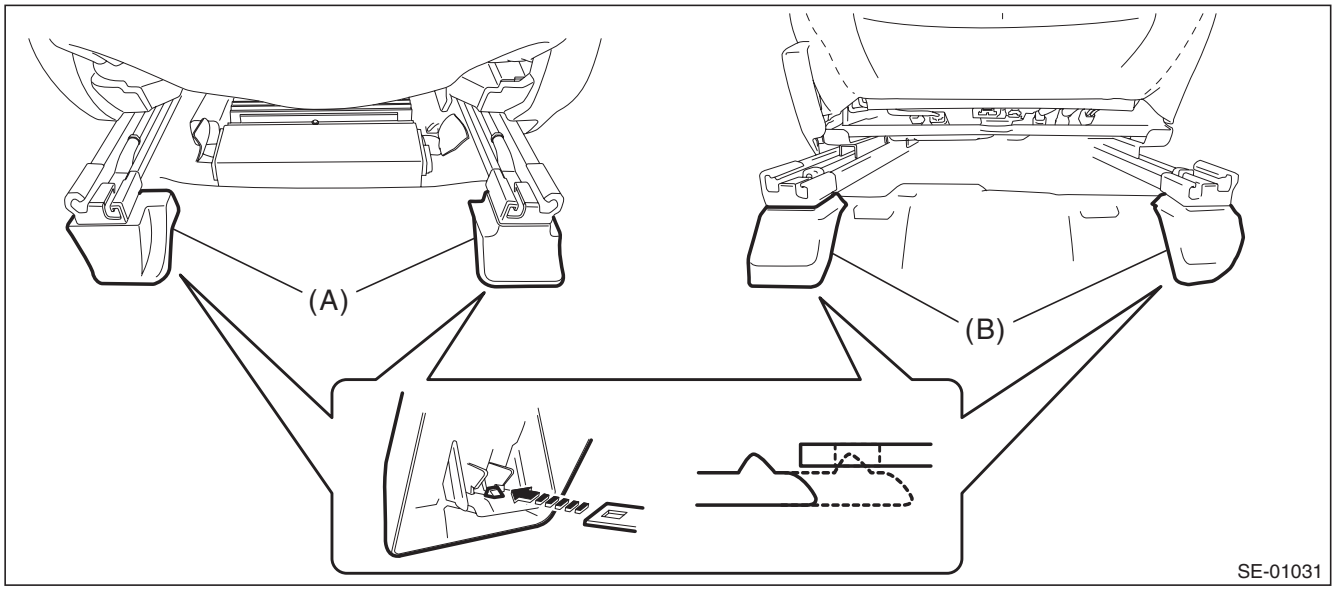

4) Disconnect the connector under the seat.

CAUTION:
Disconnect the ground cable from battery, and wait 60 seconds before disconnecting the connector.
- Seat belt warning light connector (driver's seat)
- Occupant detection system harness connector (passenger's seat)
- Side airbag connector
- Seat heater connector (model with seat heater)
- Power seat connector (model with power seats)
- Headrest monitor connector (model with headrest monitor)

5) Take out the front seat from the vehicle.

CAUTION:
Be careful not to damage the body.

GETtheMANUALS.org

B: INSTALLATION

Install each part in the reverse order of removal.

CAUTION:

- **The seat mounting bolts differ between the front mounting points and the rear mounting points. Make sure that you are using correct bolts at correct positions.**
- **Tighten the slide rail installing bolt gradually in several steps to the specified torque in the order as shown in the figure.**

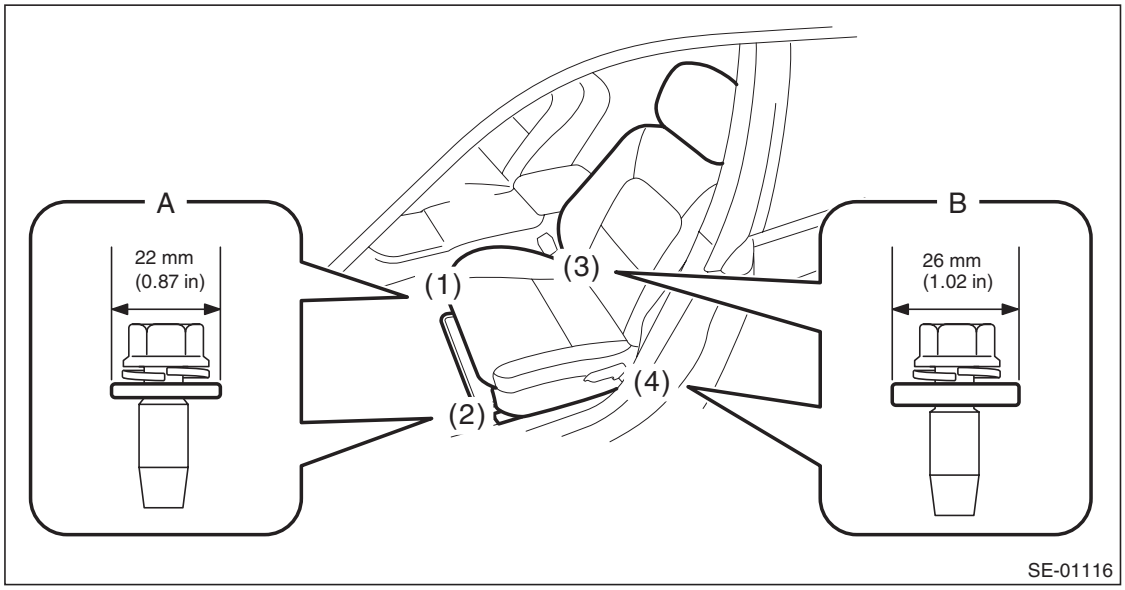

- **Front (bolt A): Washer diameter 22 mm (0.87 in)**
- **Rear (bolt B): Washer diameter 26 mm (1.02 in)**

Tightening torque:

Front seat assembly: 53 N·m (5.4 kgf-m, 39.1 ft-lb)

GETtheMANUALS.org

C: DISASSEMBLY

1. DRIVER SEAT (MANUAL SEAT)

CAUTION:
Before assembling, make sure how the harnesses of the side airbag and inner seat belt are routed in order to avoid misarranging. Assembling with harnesses improperly routed may cause the harness to get caught and short out.

1) Remove the seat from vehicle. <Ref. to SE-10, REMOVAL, Front Seat.>
2) Remove the seat lifter lever.
   (1) Using a flat tip screwdriver, remove the seat lifter lever cover (a).
   (2) Remove the screw and remove the seat lifter lever.

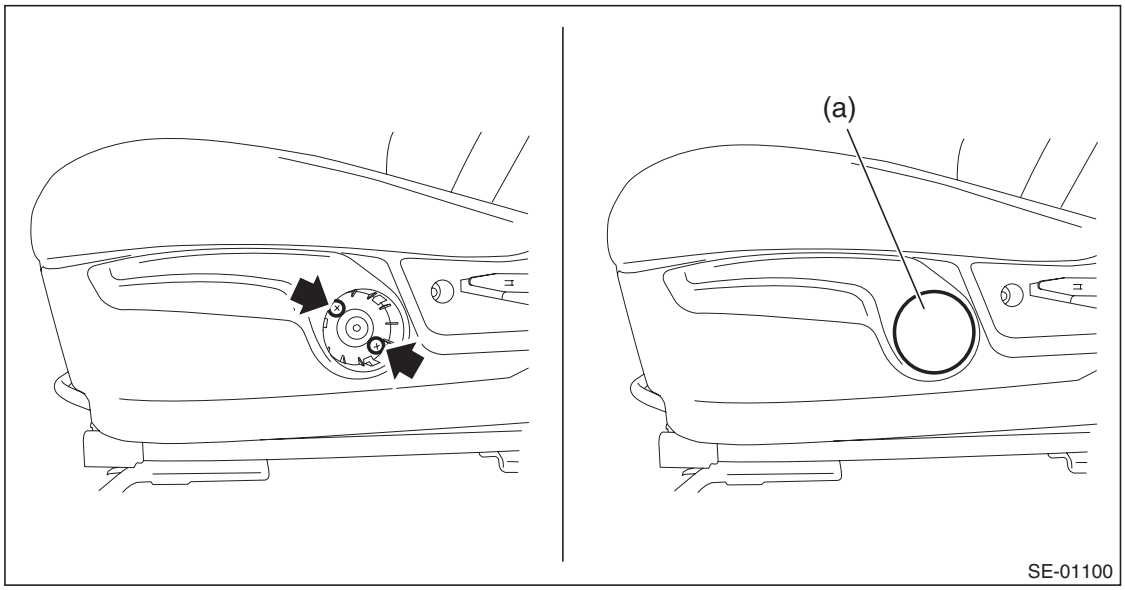

3) Remove the reclining lever cover.
   (1) Pull up the reclining lever and release the claws on the back.
   (2) Pull out the reclining lever cover.

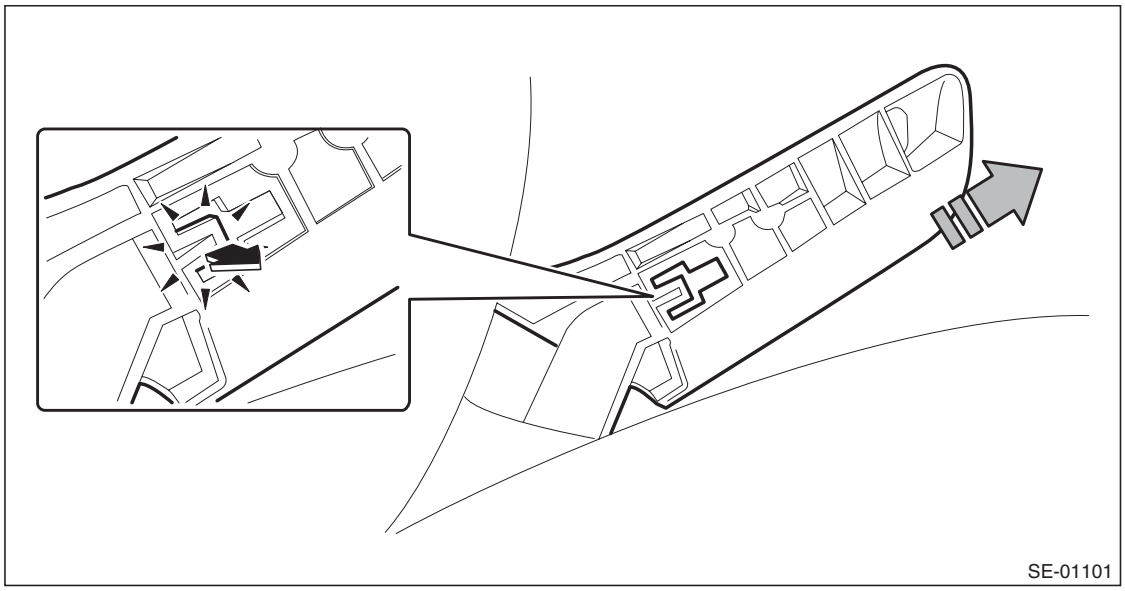

4) Remove the seat side cover OUT.
   (1) Remove the screws.
   (2) Release the claw in the upper section of the seat side cover.
   (3) Release the claw in the rear section of the seat side cover.

GETtheMANUALS.org

(4) Release the claw in the front section of the seat side cover, then remove the seat side cover OUT.

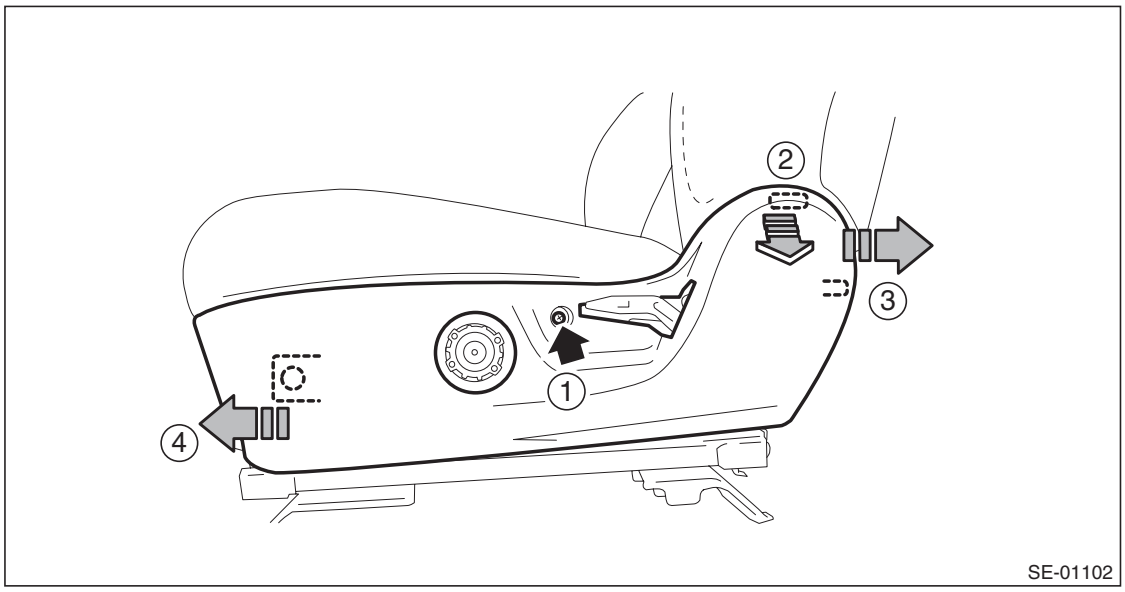

5) Remove the inner seat belt assembly.
   (1) Remove the nut and remove the inner seat belt assembly.
   (2) Remove the clip for the inner seat belt harness located under the seat cushion.

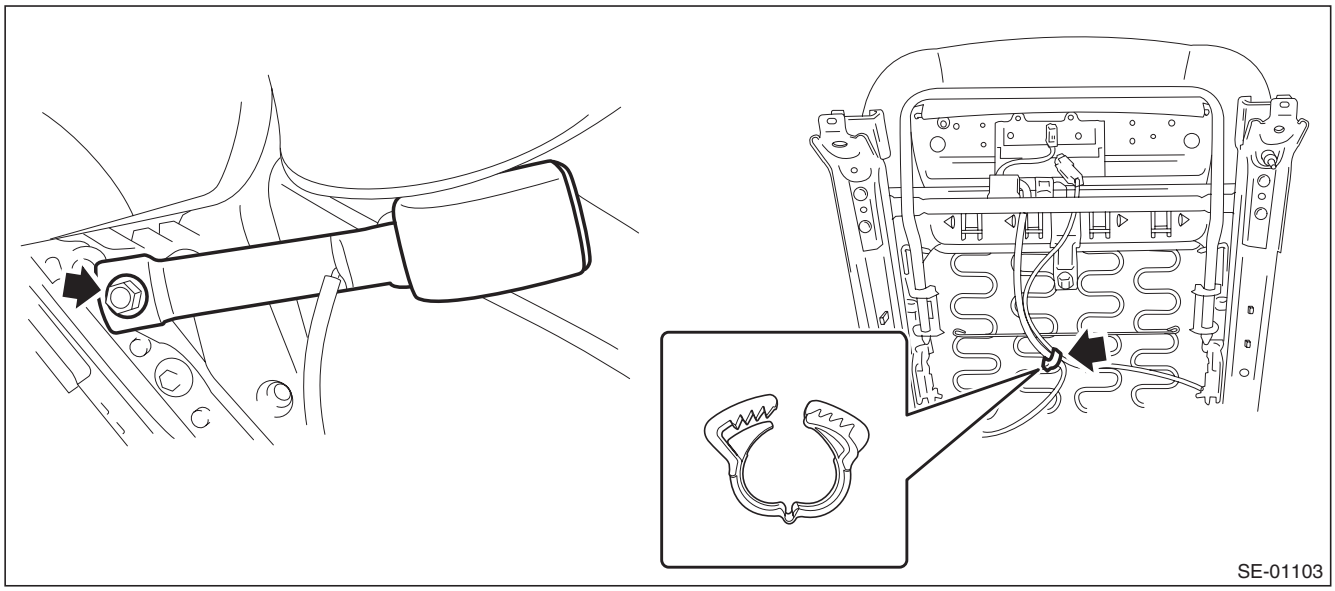

GETtheMANUALS.org

6) Remove the seat side cover IN.
   (1) Remove the screws.
   (2) Release the claw in the upper section of the seat side cover.
   (3) Release the claw in the rear section of the seat side cover, then remove the seat side cover IN.

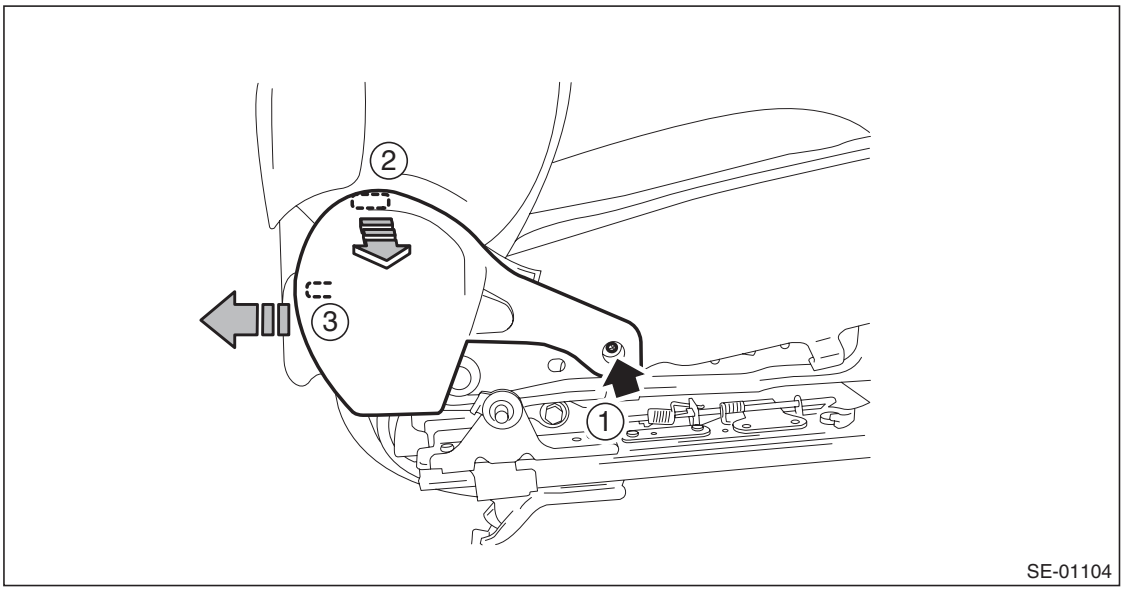

7) Separate the backrest assembly and the seat cushion assembly.
   (1) Remove the clip for the side airbag harness located under the seat cushion. (seat with side airbag)
   (2) Remove the bolts from reclining hinge of both sides.
   (3) While taking care not to damage the airbag harness, separate the backrest assembly and the seat cushion assembly.

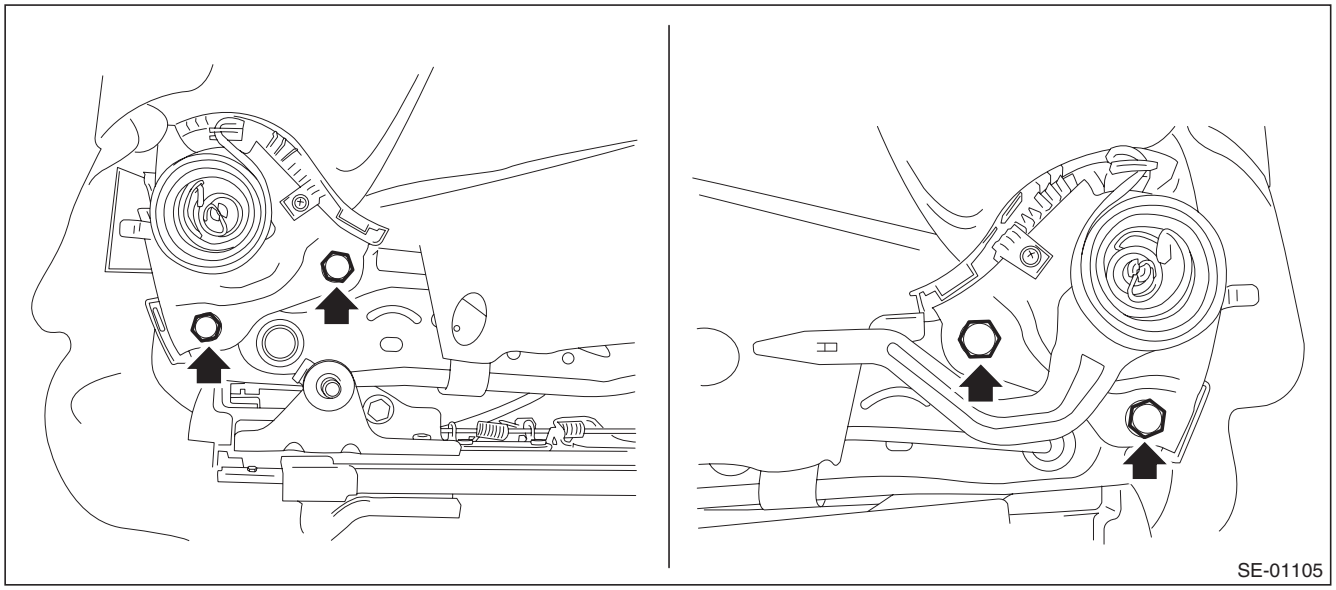

GETtheMANUALS.org

8) Remove the sliding adjuster bar.
   (1) Remove the left and right spring locks.
   (2) Pull out the sliding adjust bar.

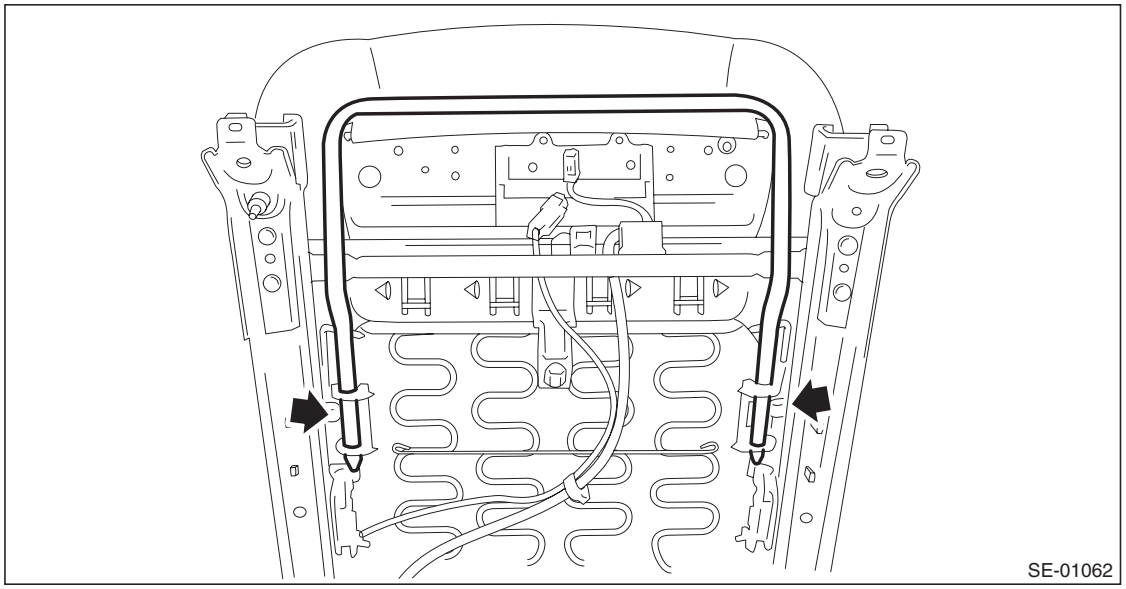

9) Remove the riser cover OUT.
   (1) Remove the clip.
   (2) Remove the hook, and detach the riser cover OUT.

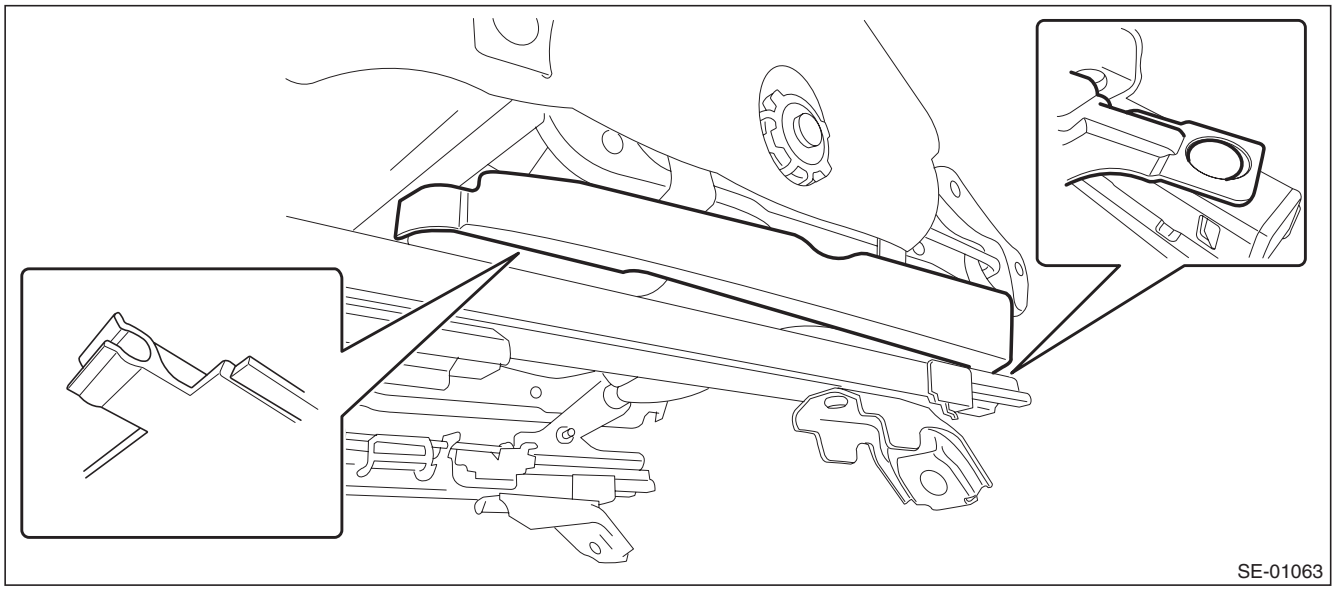

GETtheMANUALS.org

10) Remove the screws and remove the riser cover INN LH and RH.

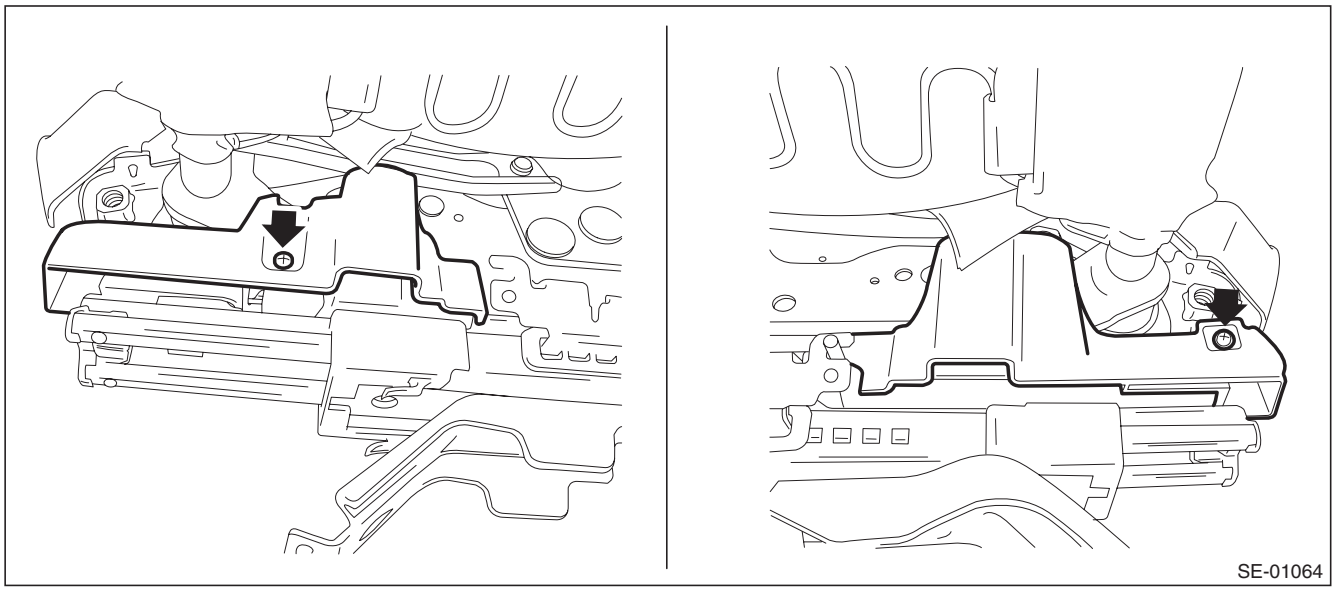

11) Remove the bolts and bushings on the seat cushion assembly (left and right) sides, and remove the slide rail assembly.

CAUTION:
Do not reuse the removed bolts because they are coated with the thread lock material. Always use new bolts during assembly.

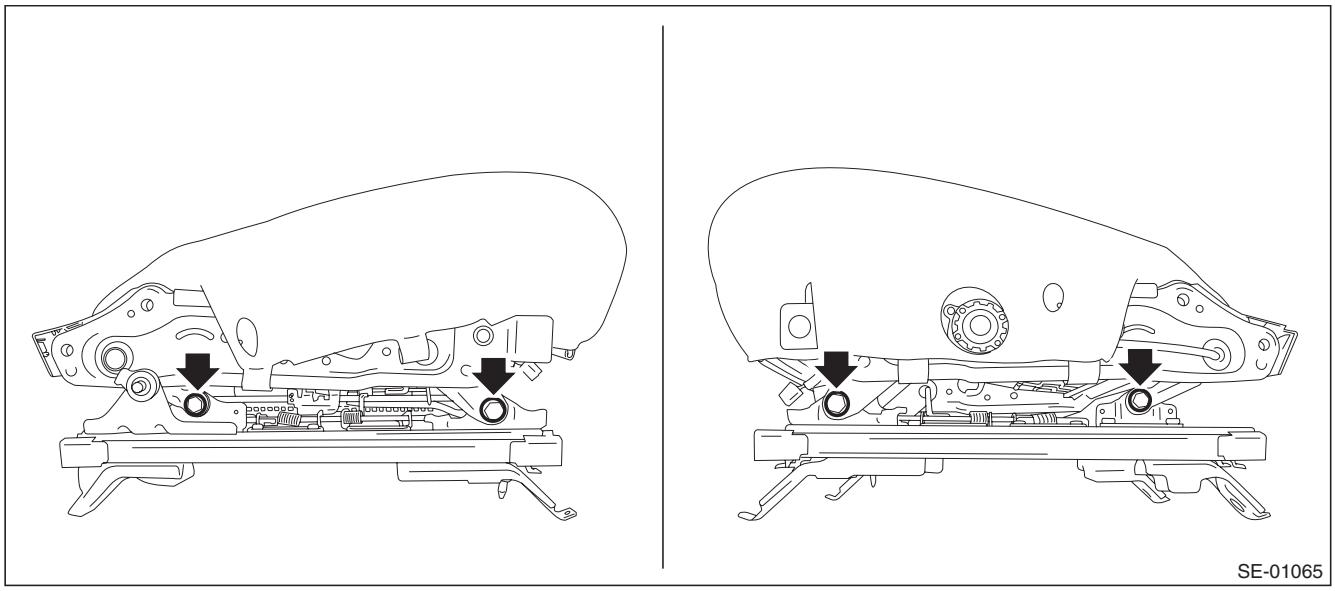

GETtheMANUALS.org

NOTE:
To remove the front bolt, use a spanner.

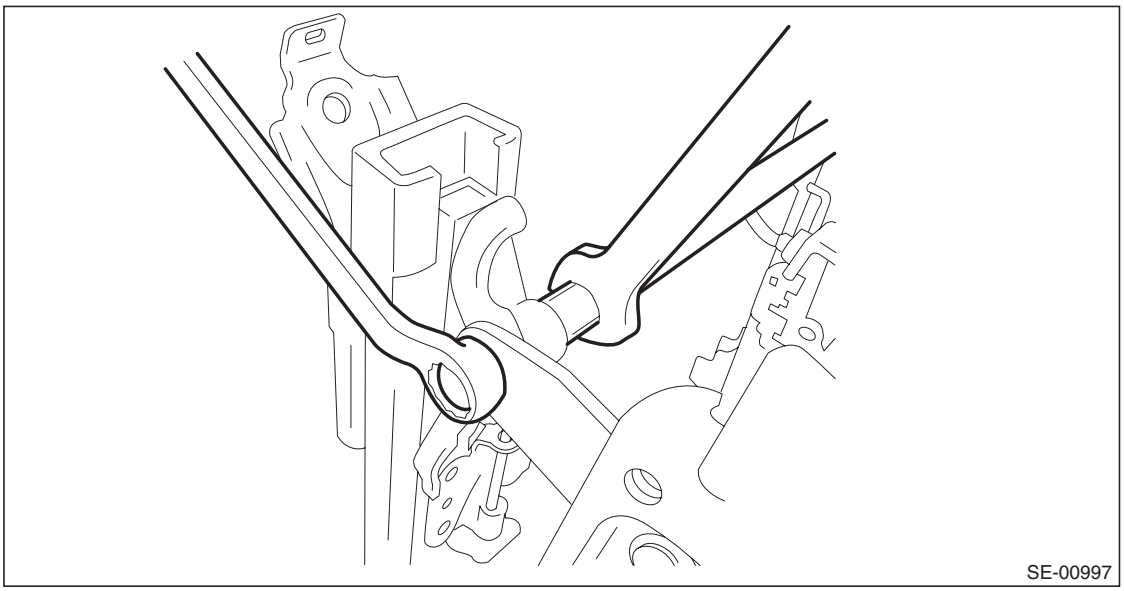

12) Remove the seat cushion pad & cover.
    (1) Remove the hooks and hog rings.
    (2) Remove the seat cushion pad & cover from seat cushion assembly.

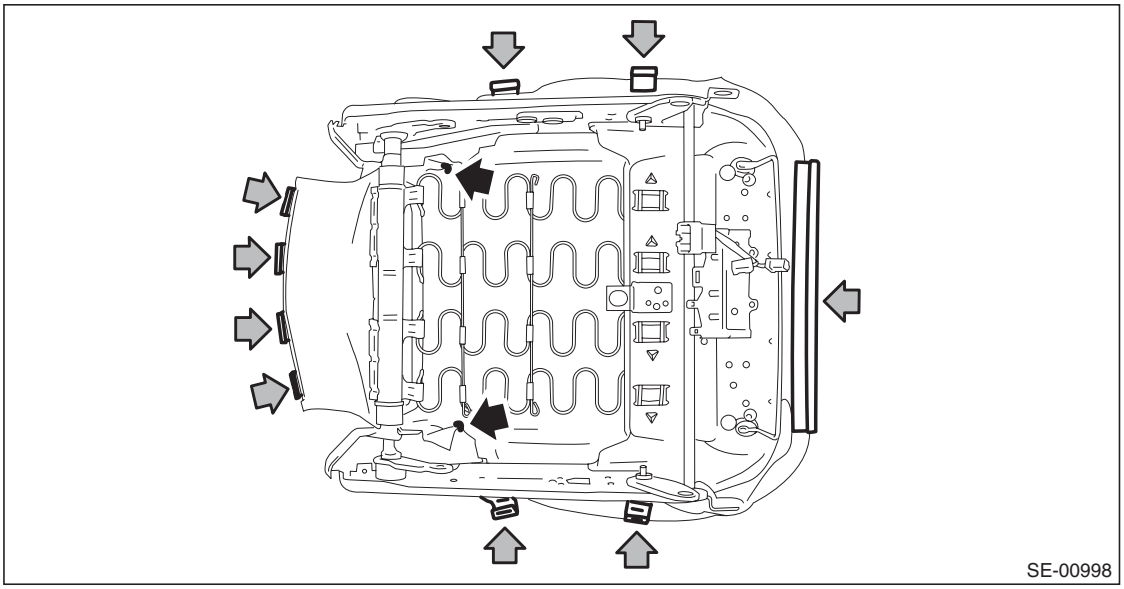

GETtheMANUALS.org

13) Remove the seat cushion cover.
    (1) Remove the hog ring (A).
    (2) Pull out the seat cushion pad from the seat cushion cover.

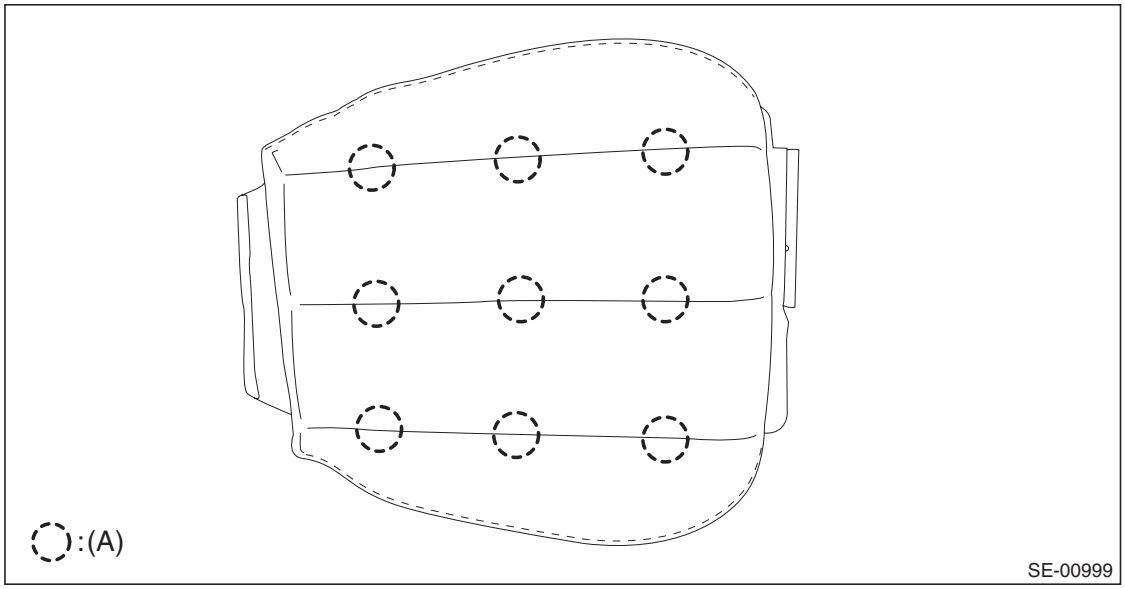

14) Remove the backrest back cover.
    (1) Remove the screws.
    (2) Release the hooks by pulling down the back cover and remove the backrest back cover.

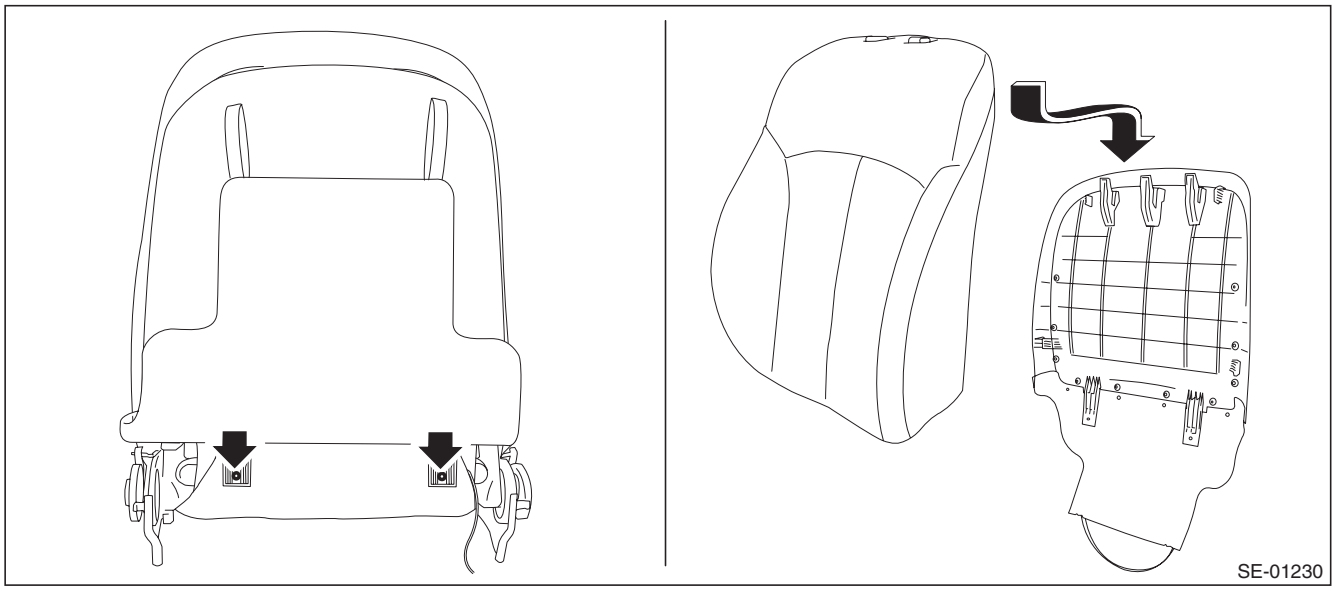

GETtheMANUALS.org

15) Remove the backrest pad & cover.

CAUTION:
Be careful not to tear the vinyl inside the seat when removing the hog rings.
If torn, replace with a new part.

(1) Remove the hooks and hog rings.
(2) Remove the backrest pad & cover from backrest assembly.

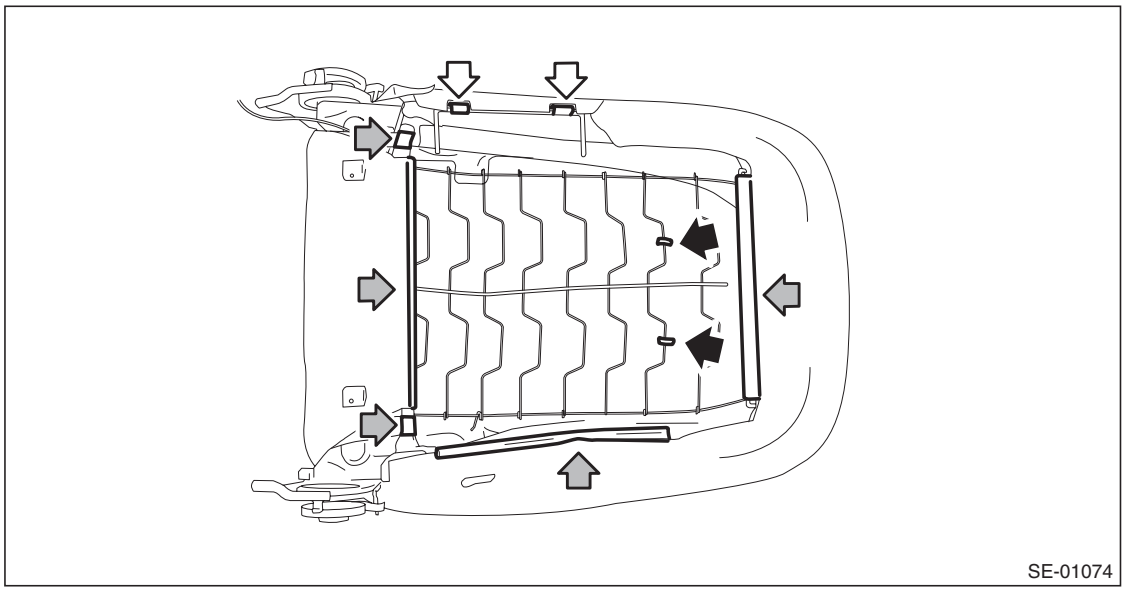

16) Remove the side airbag module assembly.

CAUTION:
Do not open the side airbag module case (plastic) of the airbag. If any damage is present in the side airbag module case (such as airbag module cloth coming out), replace the side airbag module assembly with a new one.

(1) Remove the hooks, hog rings, and S hooks.
(2) Remove the mounting nuts of the side airbag module.

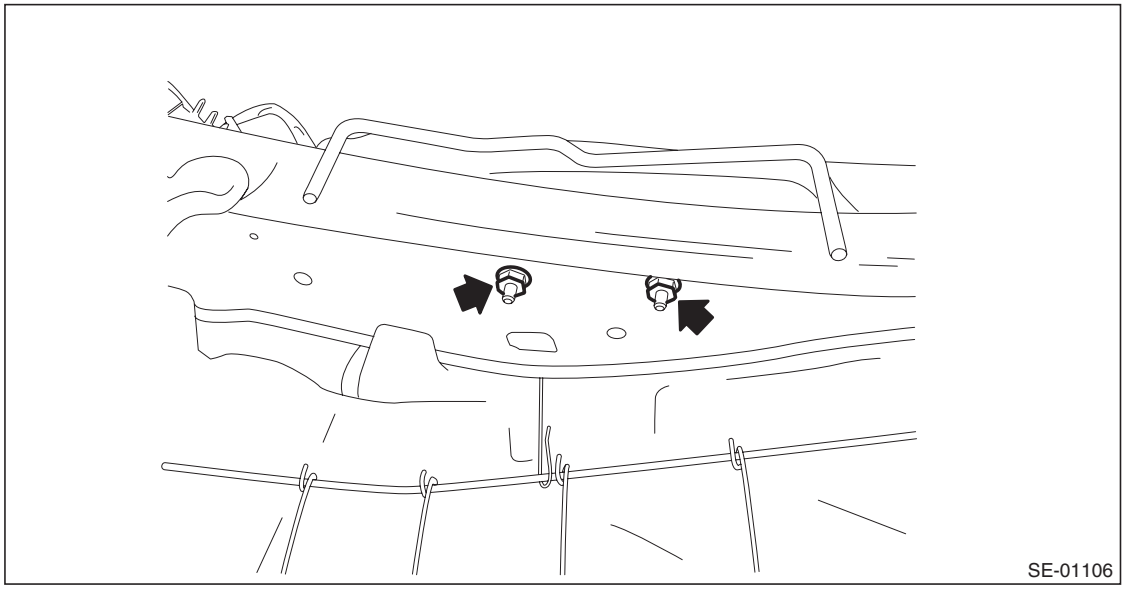

(3) Remove the side airbag harness from backrest frame assembly.
(4) While taking care not to damage the side airbag module case (plastic) of the airbag, remove the side airbag module assembly.

GETtheMANUALS.org

17) Remove the headrest bushing.

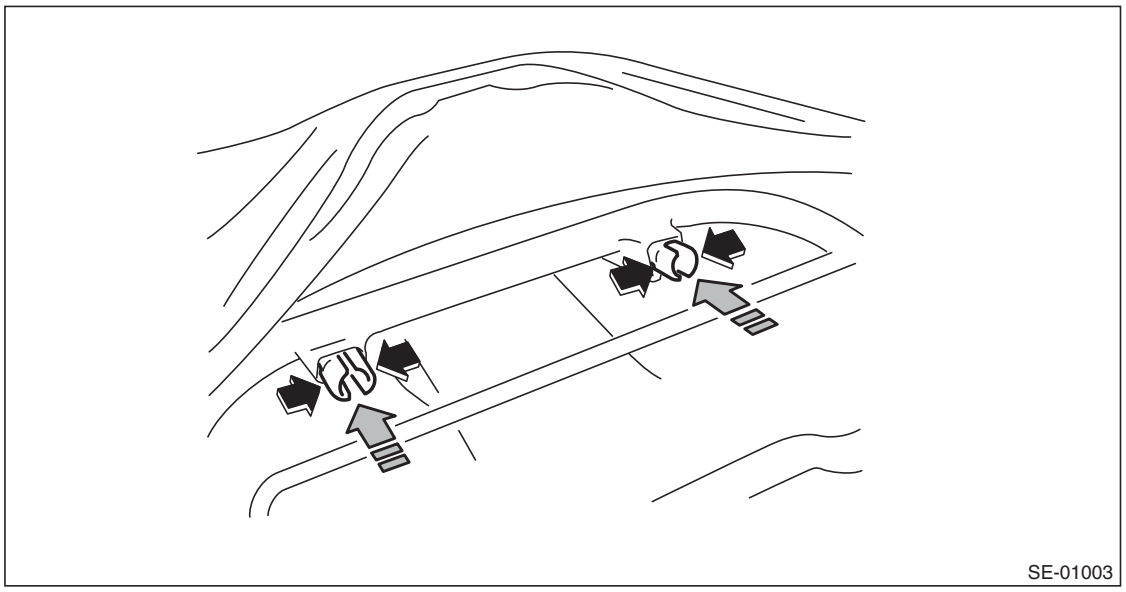

NOTE:
Catch the tip of headrest bushing with pliers and push it from inside seat to outside to remove it.
18) Pull out the backrest frame.
19) Remove the backrest cover.
(1) Remove the hog ring (A).
(2) Pull out the backrest pad from the backrest cover.

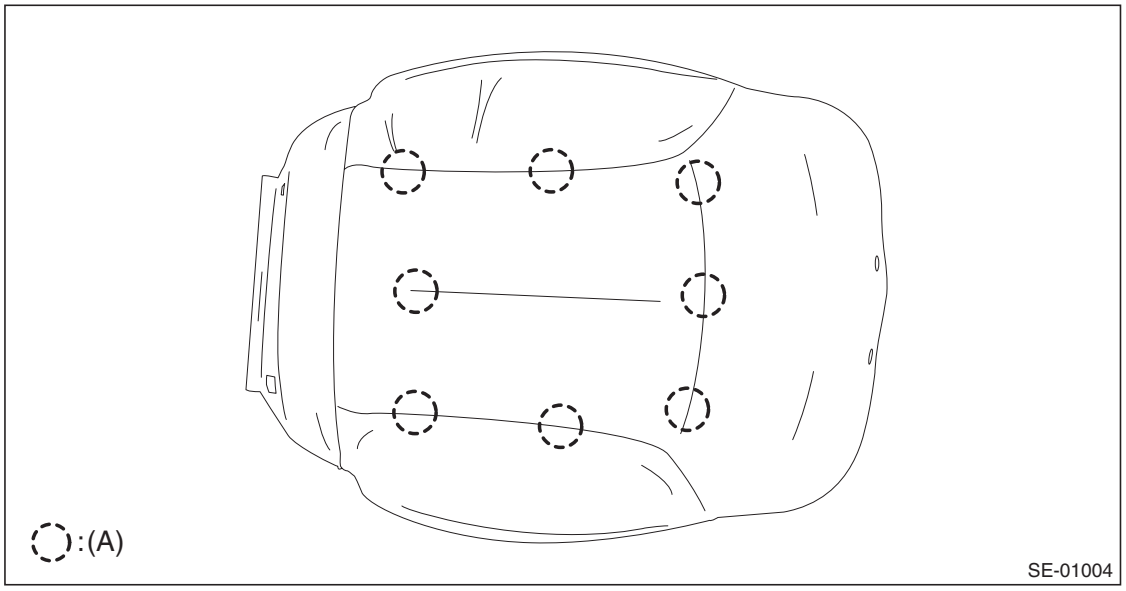

GETtheMANUALS.org

2. DRIVER SEAT (POWER SEAT)

CAUTION:

- **Before assembling, make sure how the harnesses of the side airbag and inner seat belt are routed in order to avoid misarranging. Assembling with harnesses improperly routed may cause the harness to get caught and short out.**
- **Do not disassemble the backrest assembly and seat cushion frame and slide rail assembly.**

1) Remove the seat from vehicle. <Ref. to SE-10, REMOVAL, Front Seat.>

NOTE:
Before removing the seat, lift the seating face.

2) Disconnect the connector for reclining motor from the backside of seat cushion.

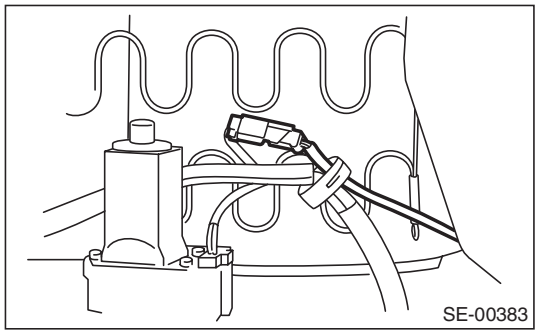

3) Remove the seat side cover OUT.
   (1) Release the claw in the rear section of the seat side cover.
   (2) Release the claw in the upper section of the seat side cover.
   (3) Remove the clip and release the claw in the front section of the seat side cover
   (4) Disconnect the power seat switch and lumber switch connector and remove the seat side cover OUT.

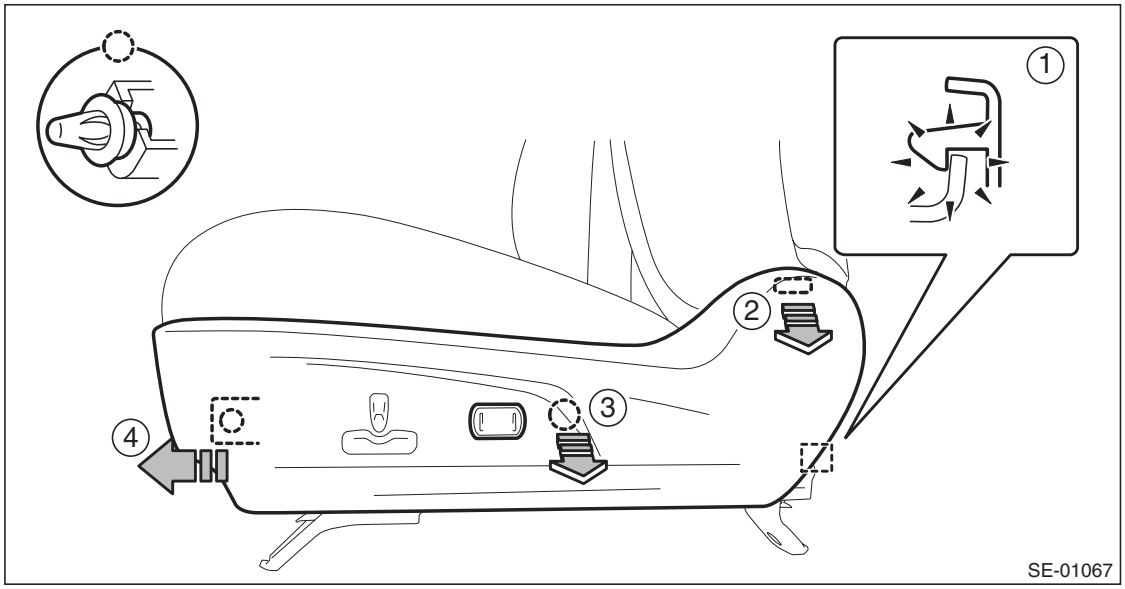

GETtheMANUALS.org

4) Remove the inner seat belt assembly.
   (1) Remove the nut and remove the inner seat belt assembly.
   (2) Disconnect the connector of the inner seat belt harness located under the seat cushion.

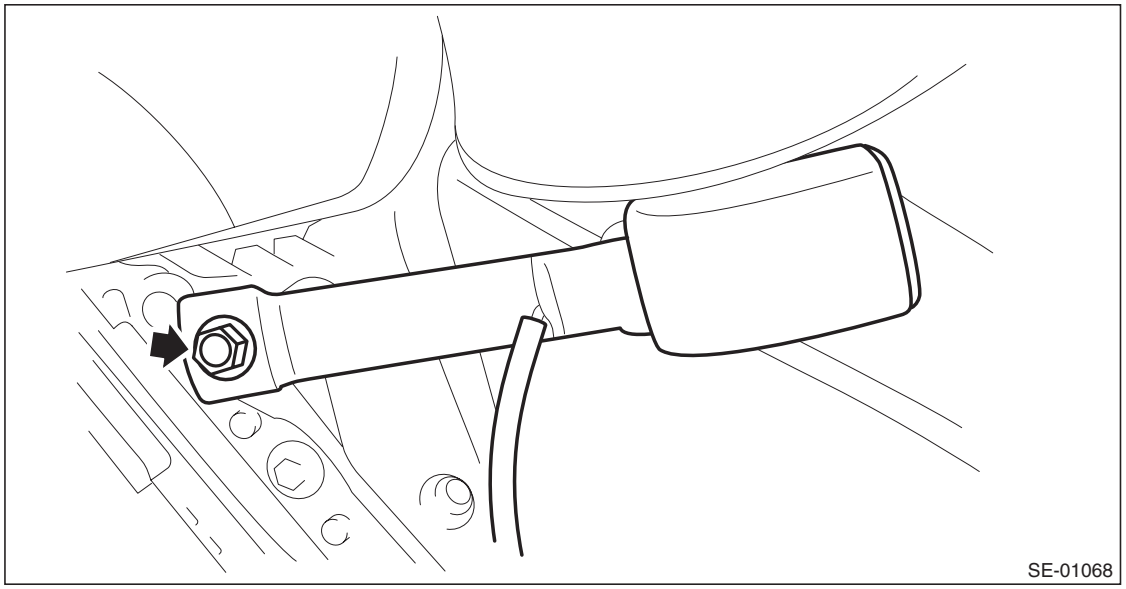

5) Remove the seat side cover IN.
   (1) Remove the screws.
   (2) Release the claw in the rear section of the seat side cover.
   (3) Release the claw in the upper section of the seat side cover, then remove the seat side cover IN.

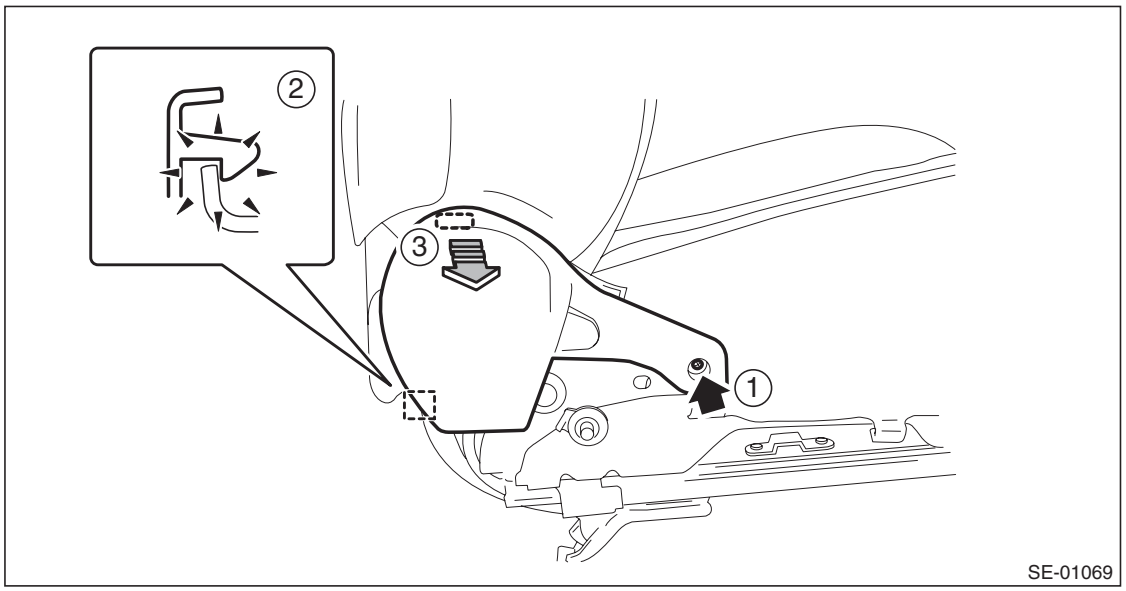

GETtheMANUALS.org

6) Separate the backrest assembly and the seat cushion assembly.
   (1) Remove the clip for the side airbag harness located under the seat cushion.
   (2) Remove the bolts from reclining hinge of both sides.
   (3) While taking care not to damage the airbag harness, separate the backrest assembly and the seat cushion assembly.

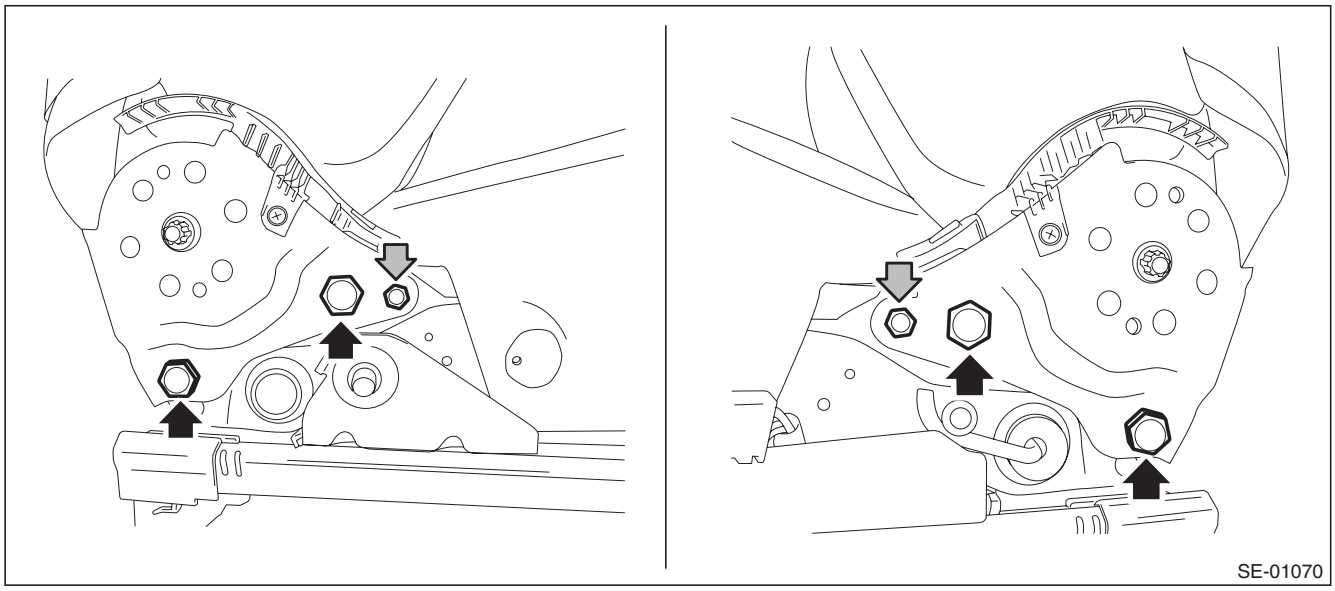

7) Remove the riser covers LH and RH as well as slide rail end cover.
   (1) Remove the clips and remove the riser covers LH and RH.
   (2) Remove the hook, and then remove the slide rail end cover.

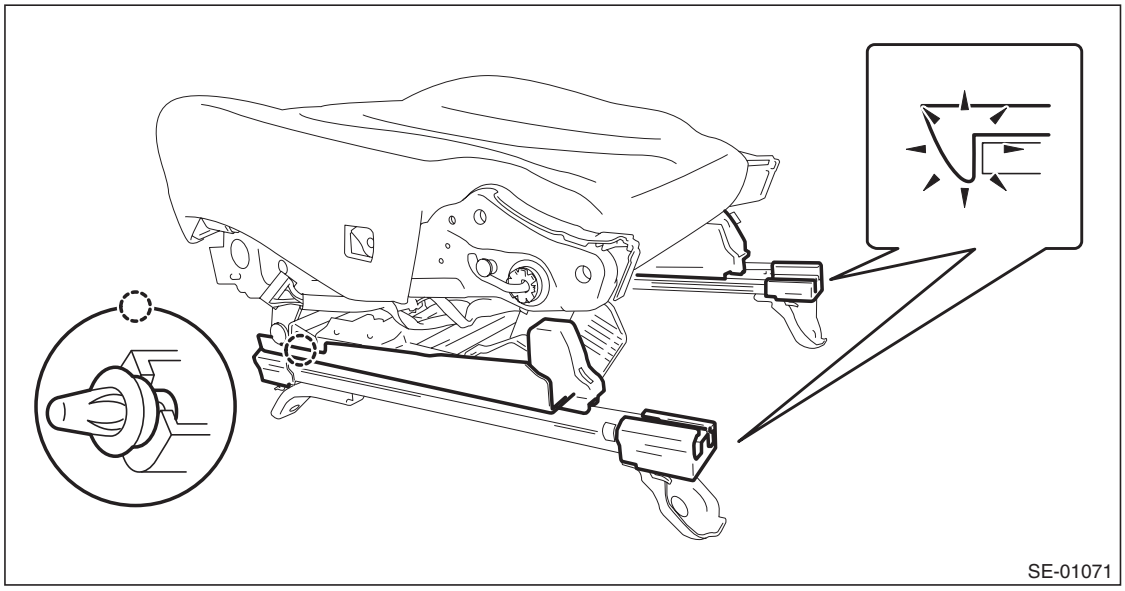

GETtheMANUALS.org

8) Remove the seat cushion pad & cover.
   (1) Remove the hooks and hog rings.
   (2) Remove the seat cushion pad & cover from seat cushion assembly.

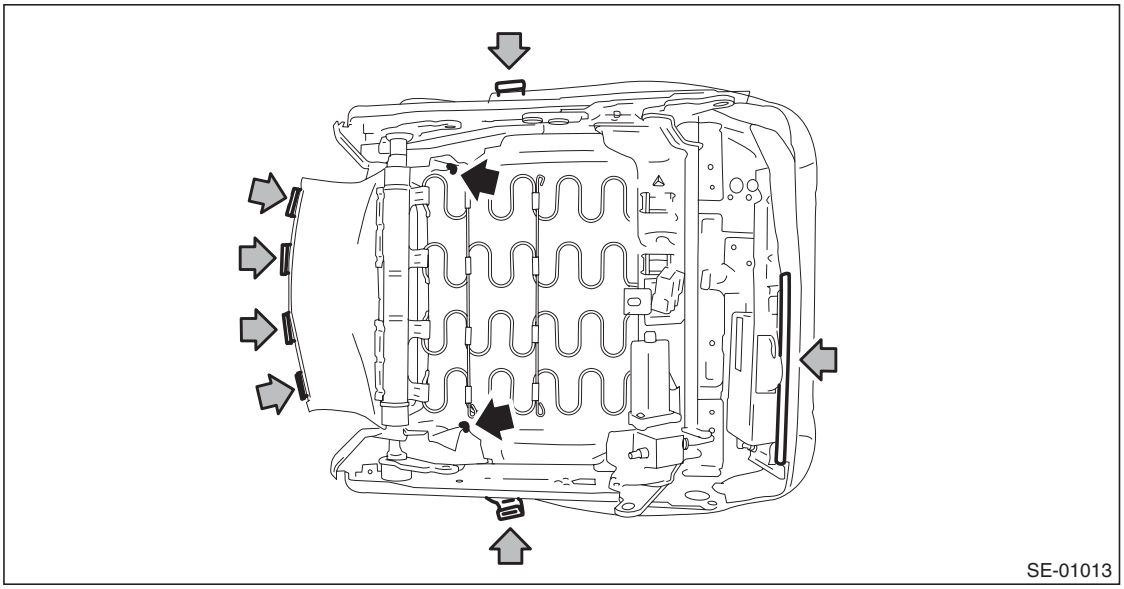

9) Remove the seat cushion cover.
   (1) Remove the hog ring (A).
   (2) Pull out the seat cushion pad from the seat cushion cover.

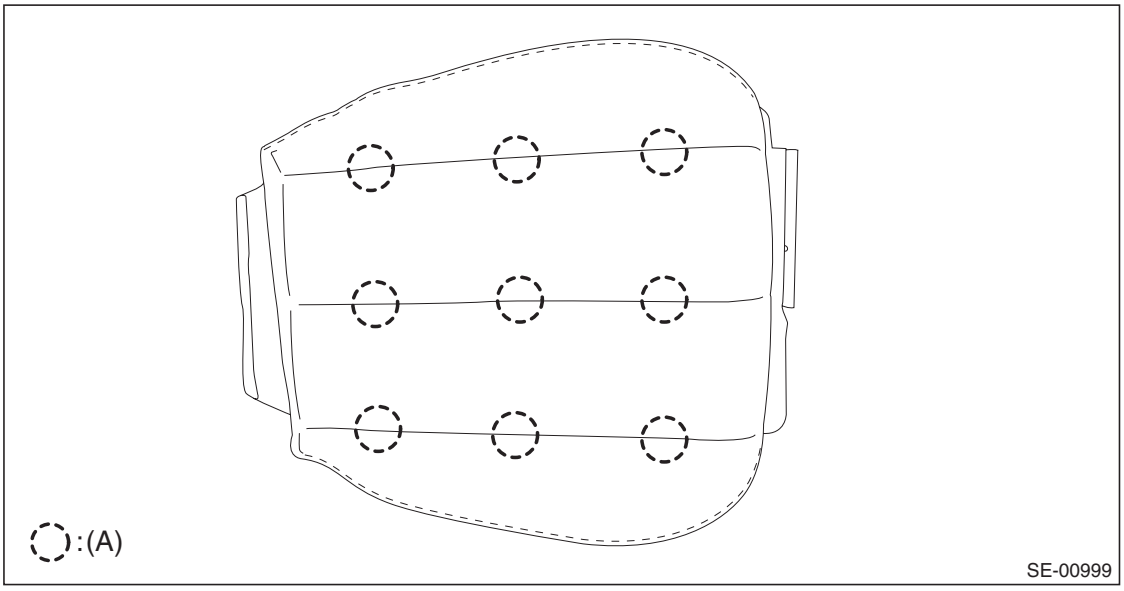

GETtheMANUALS.org

10) Remove the backrest back cover.
    (1) Remove the screws.
    (2) Release the hooks by pulling down the back cover and remove the backrest back cover.

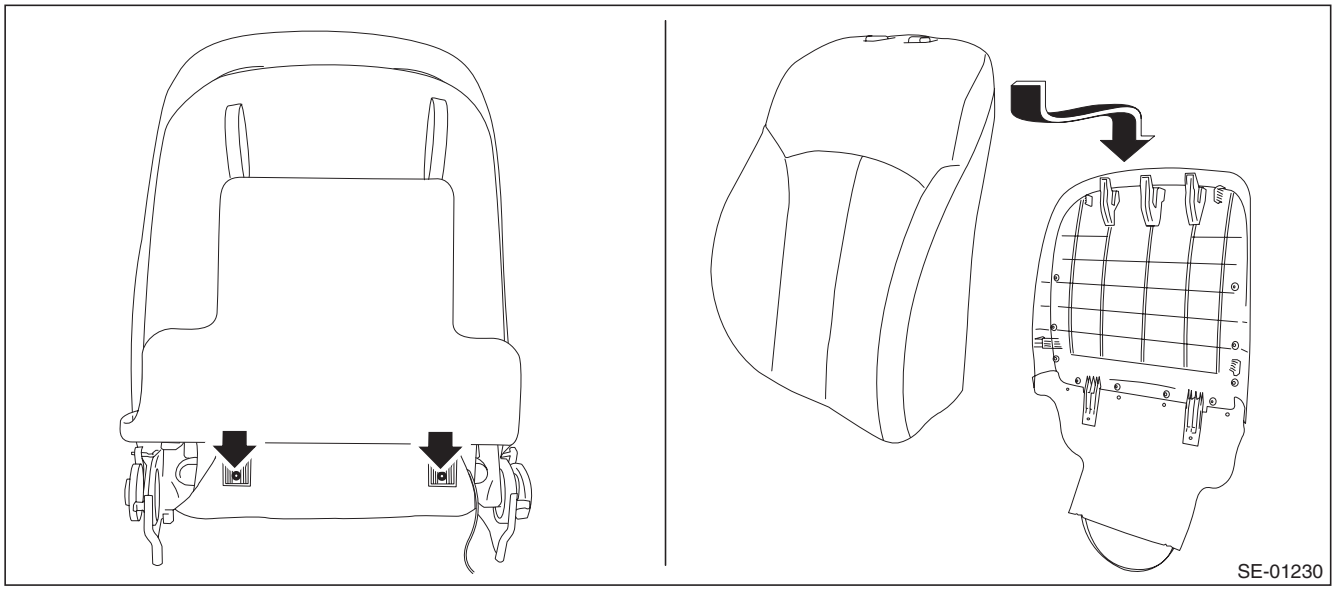

11) Remove the backrest pad & cover.
    (1) Remove the hooks, hog rings, and metal clips.
    (2) Remove the backrest pad & cover from backrest assembly.

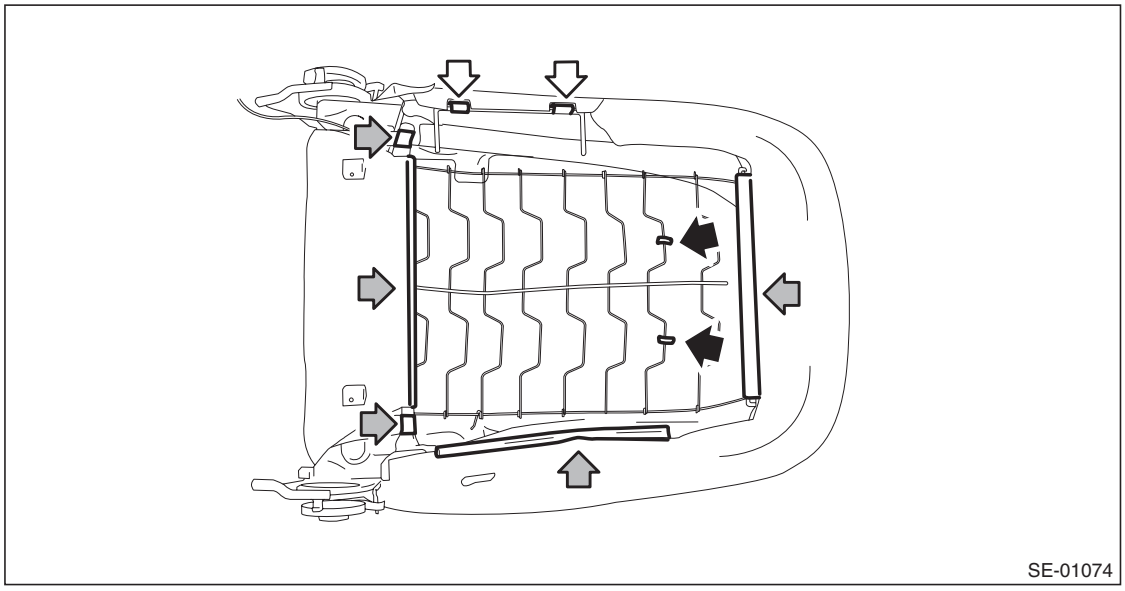

GETtheMANUALS.org

12) Remove the side airbag module assembly.

CAUTION:
Do not open the side airbag module case (plastic) of the airbag. If any damage is present in the side airbag module case (such as airbag module cloth coming out), replace the side airbag module assembly with a new one.

(1) Remove the S hook.
(2) Remove the mounting nuts of the side airbag module.

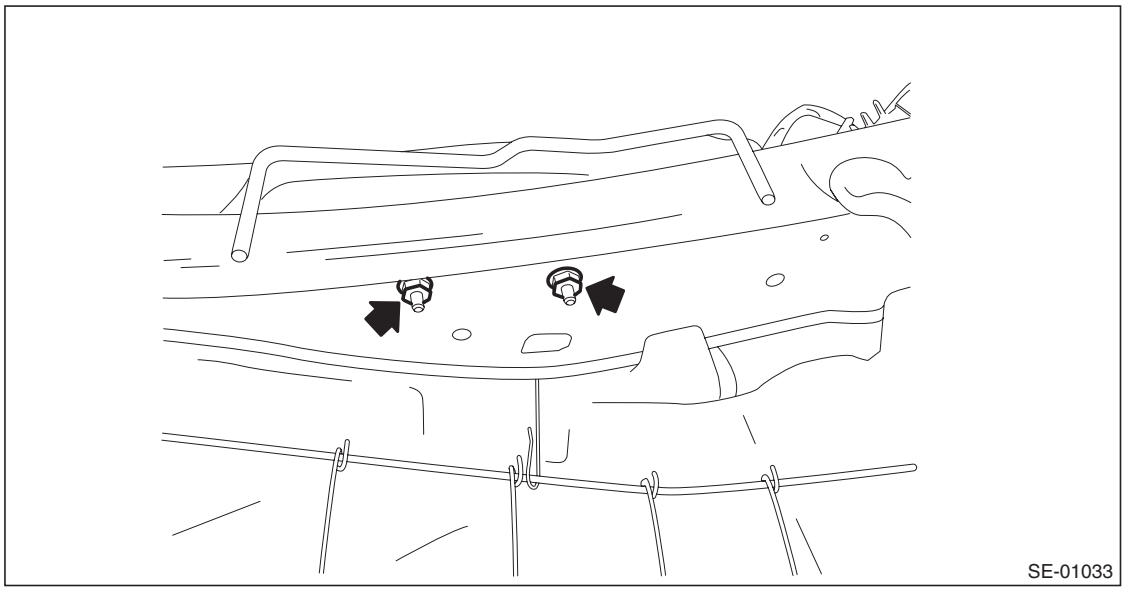

(3) Remove the side airbag harness from backrest frame assembly.
(4) While taking care not to damage the side airbag module case (plastic) of the airbag, remove the side airbag module assembly.

13) Remove the headrest bushing.

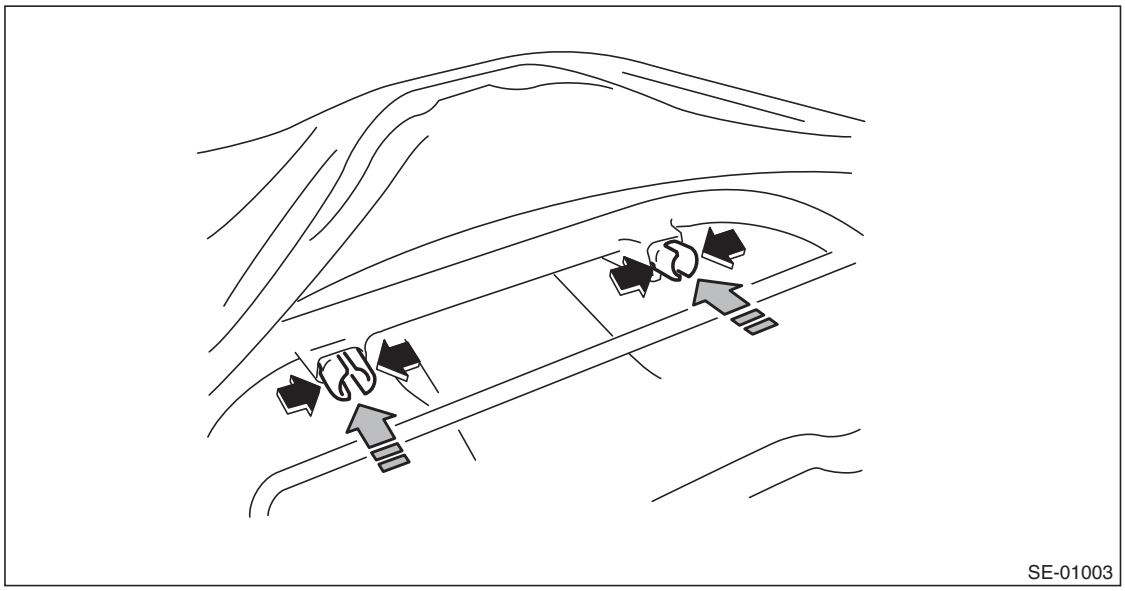

NOTE:
Catch the tip of headrest bushing with pliers and push it from inside seat to outside to remove it.

14) Pull out the backrest frame.

GETtheMANUALS.org

15) Remove the backrest cover.
(1) Remove the hog ring (A).
(2) Pull out the backrest pad from the backrest cover.

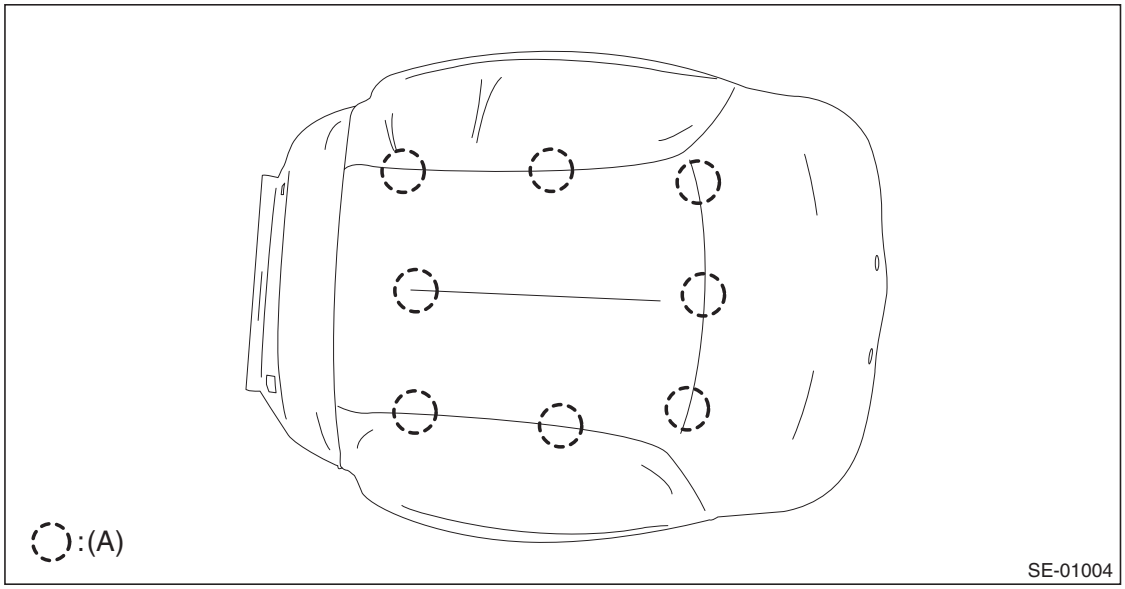

3. PASSENGER'S SEAT

CAUTION:
- **If the seat cushion cover is removed or replaced, make sure to perform occupant detection system adjustment after installing the seat. <Ref. to OD(diag)-15, OPERATION, System Calibration (Rezeroing).>**

Failure to do so may prevent the passenger's airbag from operating properly.
- **The occupant detection system (passenger seat only) control module, occupant detection sensor, seat cushion pad and seat cushion frame are considered as a single seat cushion pad and frame assembly. Never remove the occupant detection control module or the occupant detection sensor from the seat cushion frame.**
- **If the seat cushion cover is removed, make sure to replace the hang wire on the seat cushion side with a new wire.**

1) Remove the seat from vehicle. <Ref. to SE-10, REMOVAL, Front Seat.>

NOTE:
For power seat, lift the seating face before removing the seat.

2) Refer to the disassembly procedures for the driver's seat.
- Manual seat <Ref. to SE-12, DRIVER SEAT (MANUAL SEAT), DISASSEMBLY, Front Seat.>
- Power seat <Ref. to SE-21, DRIVER SEAT (POWER SEAT), DISASSEMBLY, Front Seat.>

GETtheMANUALS.org

D: ASSEMBLY

CAUTION:

- **The slide rail mounting bolts for the manual seat are coated with the thread lock material. Therefore, do not reuse the removed bolts. Always use new bolts during assembly.**

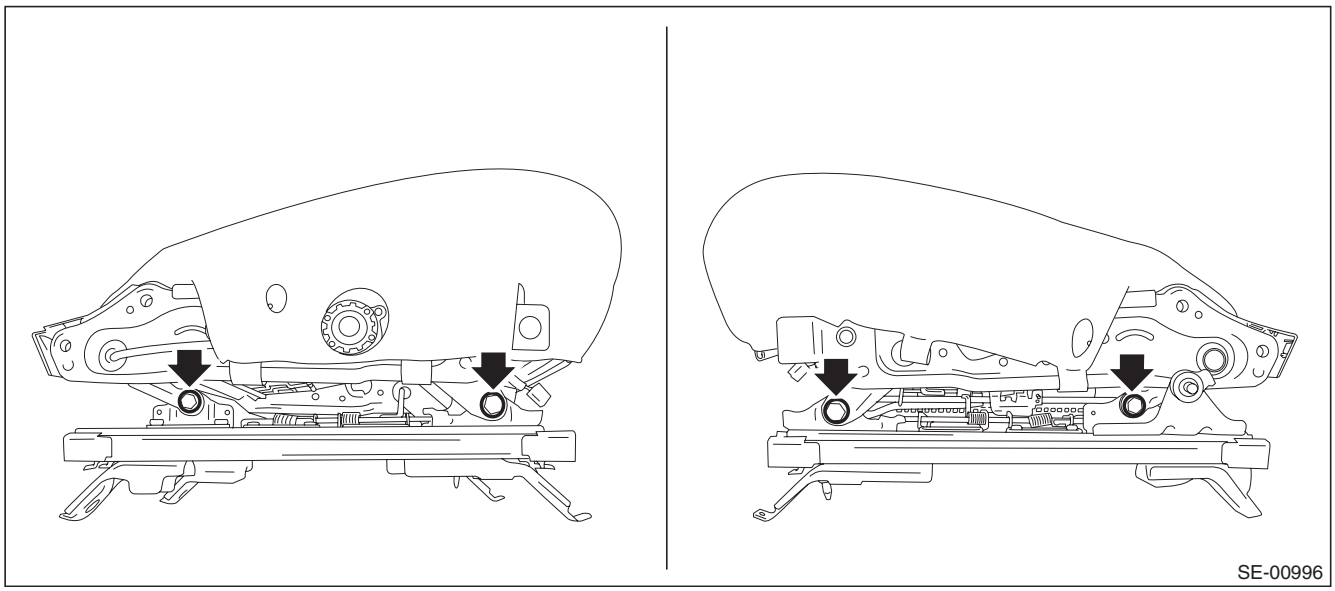

- **Do not confuse the harness routing of the side airbag and inner seat belt etc. Assembling with harnesses improperly routed may cause the harness to get caught and short out.**
- **If the flat mat hook of the backrest frame assembly is deformed or comes off due to the deformation, replace the hook with a new part.**

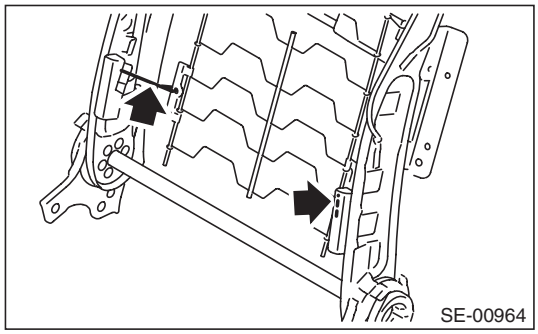

GETtheMANUALS.org

- **Make sure that the side airbag module assembly is installed as shown in the figure.**

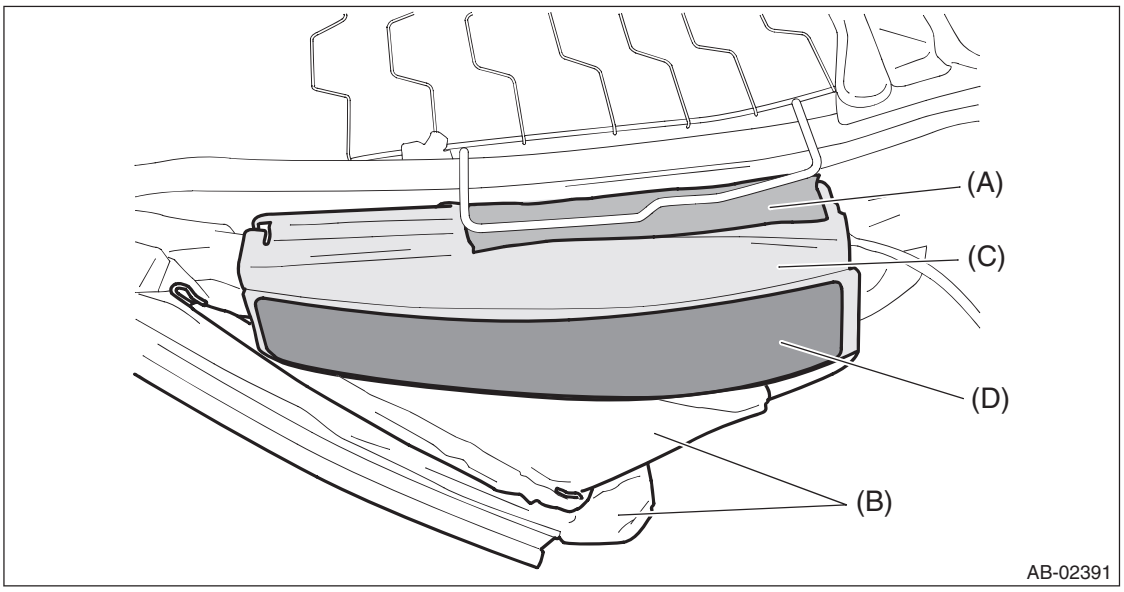

(A) Side airbag guide cloth
(B) Backrest cover
(C) Side airbag module ASSY
(D) Side airbag tape

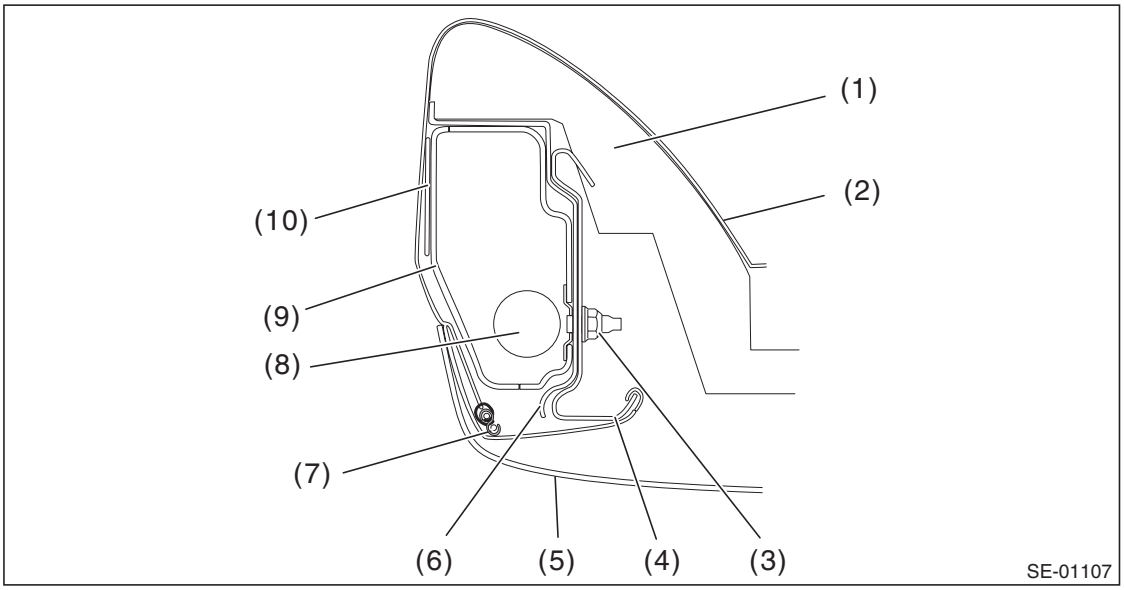

(1) Backrest pad
(2) Backrest cover
(3) Nut
(4) Backrest frame
(5) Backrest back cover
(6) Side airbag guide cloth
(7) S hook
(8) Side airbag module inflator
(9) Side airbag module case
(10) Side airbag tape

Besides, if the backrest cover is not installed securely, the side airbag module may not be activated properly, therefore keep strictly to the following procedures.

- **When replacing the side airbag assembly with new one, be sure to attach the side airbag tape.**
- **Be careful not to stain or damage the backrest cover during assembly.**
- **Do not reuse hog rings and S hooks.**
- **Secure the hog ring using hog ring pliers.**
- **Install the hog rings to the specified points securely and make sure that there is no wrinkle or twisting on backrest cover.**

GETtheMANUALS.org

1) Make sure that there is no foreign matter on side airbag module.
2) Assemble the seat cover.
   (1) Adjust so that the left and right clearances between wire and seat pad become equal, and mark the seat pad.

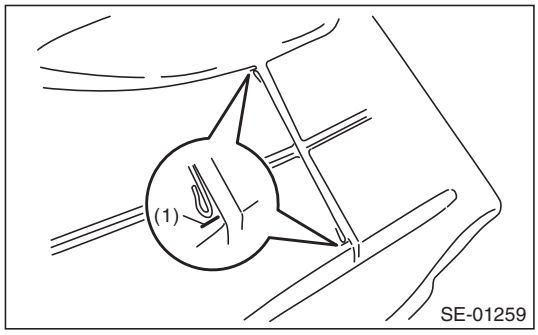

(1) Marking

   (2) Mark the center of the wire on the pad side to which the hog ring is attached.

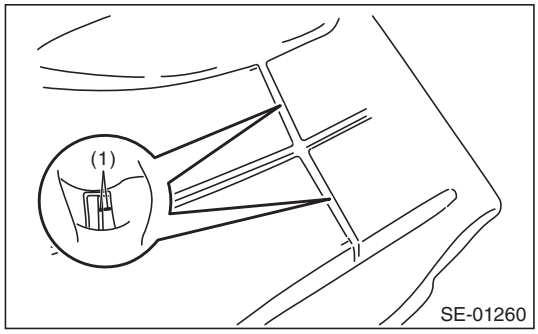

(1) Marking

   (3) Insert the wire into the seat cover, and align the wire with the position marked in Step 1).

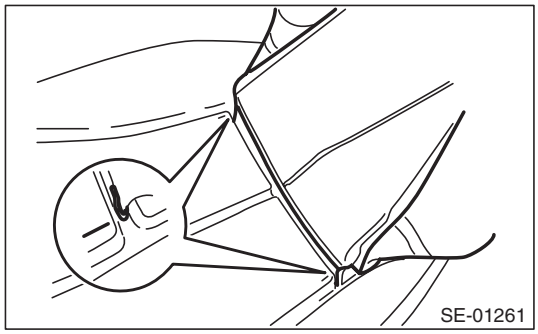

   (4) Mark the wire on the seat cover side according to the markings on the seat pad.

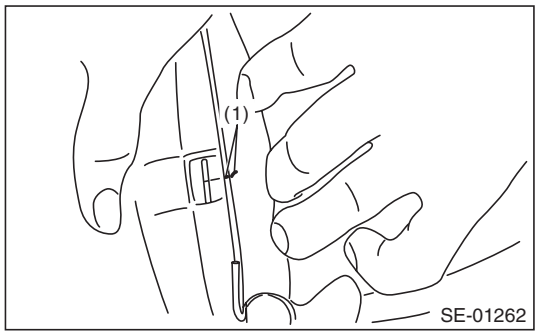

(1) Marking

GETtheMANUALS.org

(5) Perform Steps 1) — 4) to all sections to which the hog rings are attached.
(6) Make sure that all hog rings (A) are attached securely.

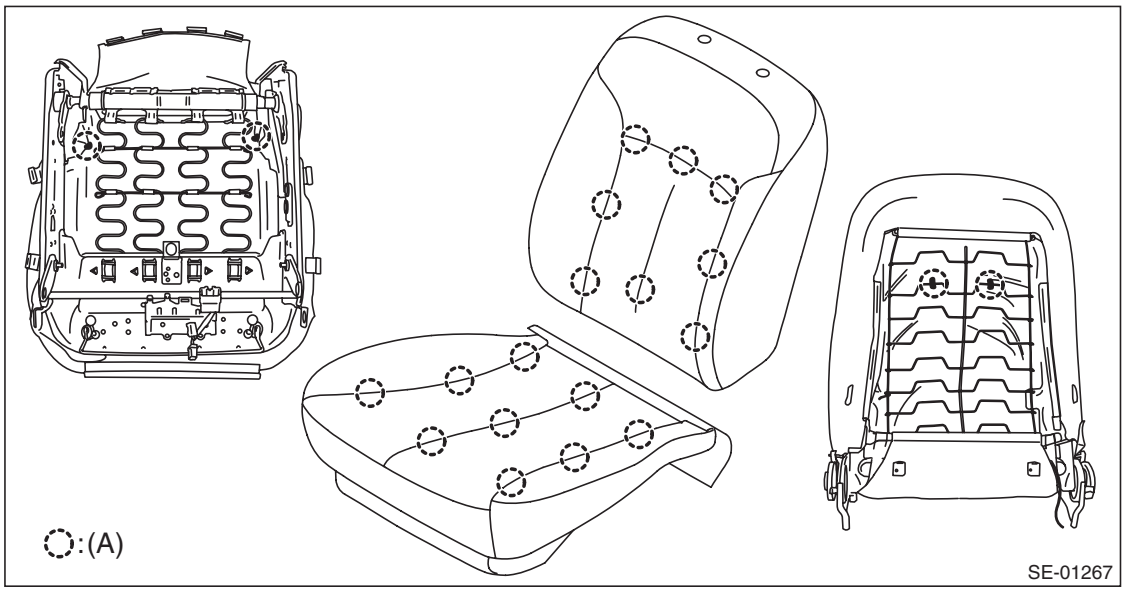

3) Assemble remaining parts in the reverse order of disassemble.

NOTE:
- When installing the inner seat belt assembly, follow the procedures described in the seat belt section. <Ref. to SB-25, INSTALLATION, Front Seat Belt.>
- Install the backrest assembly and seat cushion assembly in the following procedure.
  1. Temporarily tighten the four reclining hinge bolts.
  2. Place the backrest in the most upright position.
  3. Tighten the reclining hinge bolts in order from (1) to (4) two or three times, until they reach the specified torque.

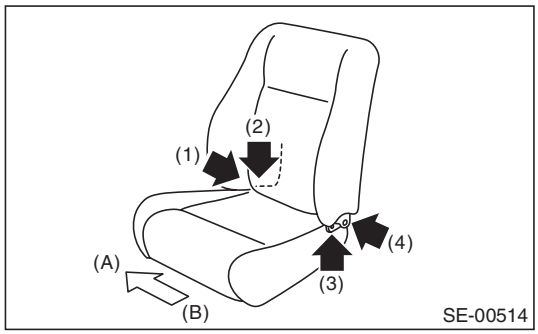

(A) Vehicle inside
(B) Vehicle outside

Tightening torque:
Refer to "COMPONENT" of "General Description". <Ref. to SE-2, FRONT SEAT, COMPONENT, General Description.>

Tightening torque: <Ref. to SE-2, FRONT SEAT, COMPONENT, General Description.>

GETtheMANUALS.org

4) If any wrinkles are found after the assembly of the seat cover, finish the seat cover with iron.
   (1) Place the wet towel on wrinkles.

   (2) Touch up with warm iron.

CAUTION:
Keep moving the iron, otherwise the seat cover surface can be damaged.

NOTE:
This method is available for genuine leather, synthetic leather, cloth, etc.

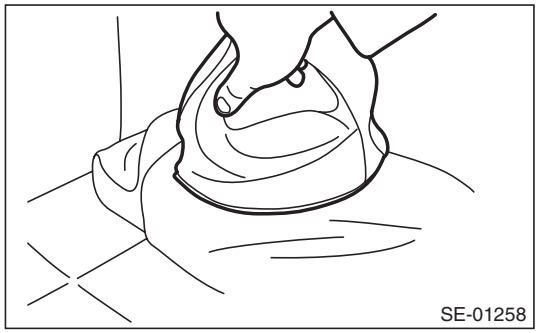

5) Install the seat assembly.

CAUTION:
- **The seat mounting bolts differ between the front mounting points and the rear mounting points. Make sure that you are using correct bolts at correct positions.**
- **Tighten the slide rail installing bolts in the order as shown in the figure, in several steps by gradually increasing the torque until they reach the specified torque.**

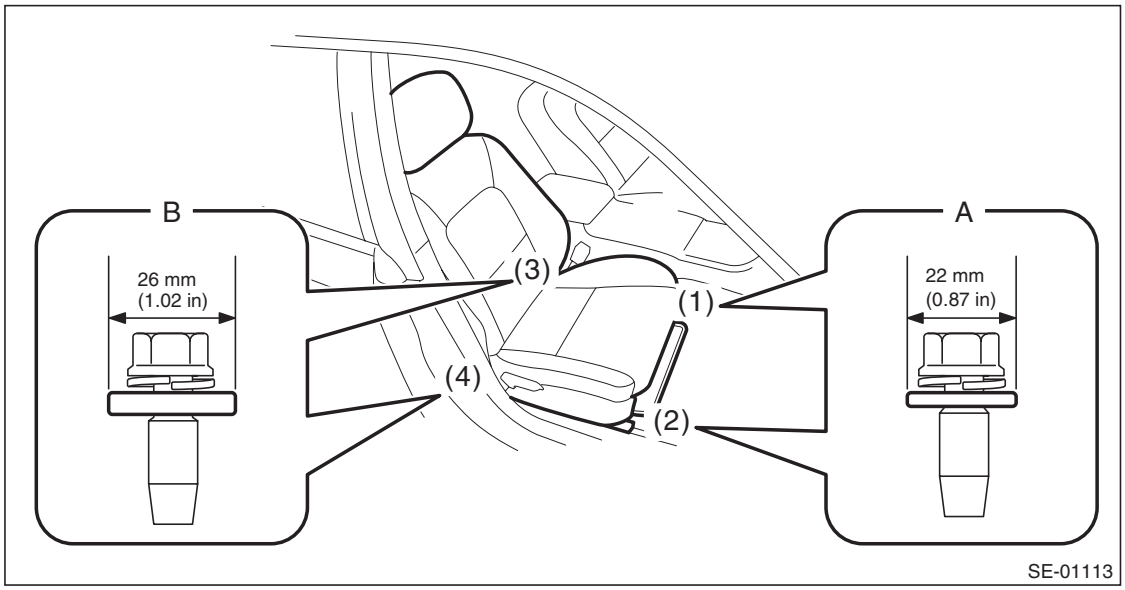

GETtheMANUALS.org

- **Front (bolt A): Washer diameter 22 mm (0.87 in)**
- **Rear (bolt B): Washer diameter 26 mm (1.02 in)**

Tightening torque: 53 N·m (5.4 kgf-m, 39.1 ft-lb)

E: INSPECTION

1. SEAT COVER

Check that no tear or fray on the backrest cover and seat cushion cover.

NOTE:
For model with side airbag, if the door side of the backrest cover is torn or frayed, the side airbag may not be deployed properly. In this case, replace the backrest cover.

2. FLAT MAT HOOK

Apply load to the backrest and check the flat mat hook.

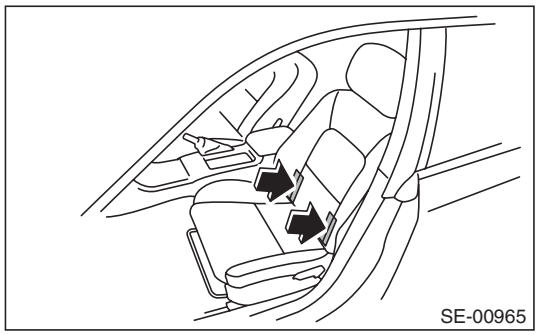

NOTE:
If the backrest does not keep sufficient tension when subject to load, some hooks may be detached.
If any hook is deformed and detached, replace it with a new hook.

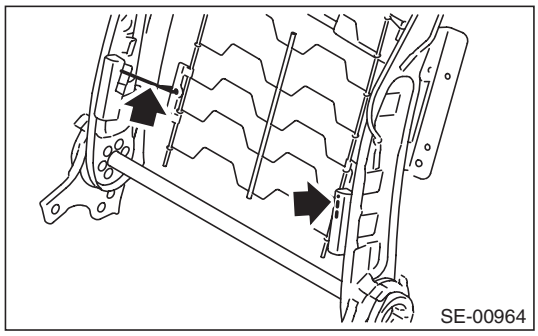

GETtheMANUALS.org

3. Rear Seat

A: REMOVAL

1. SEDAN MODEL

1) Remove the rear seat cushion.
   (1) Pull up the seat cushion and release the hook.

CAUTION:
If the hook is removed from vehicle body, replace the hook with the new part to avoid the deterioration of seat securing.

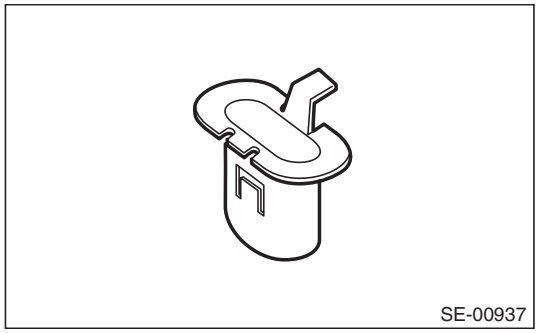

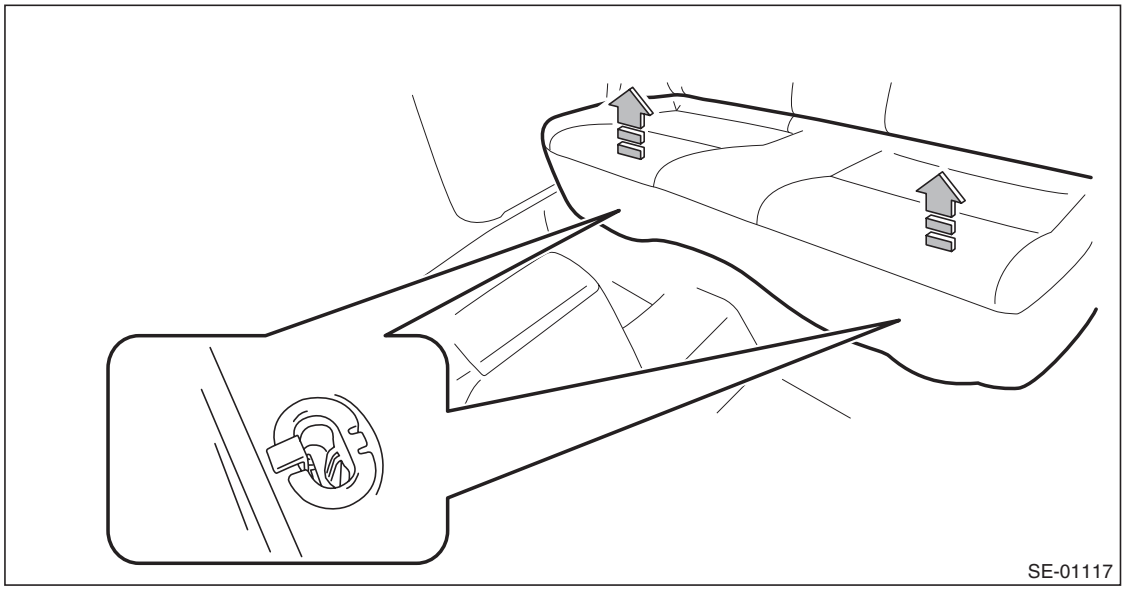

GETtheMANUALS.org

(2) Remove the hook (A) by pushing it back while lifting the front side of the seat cushion, and remove the seat cushion.

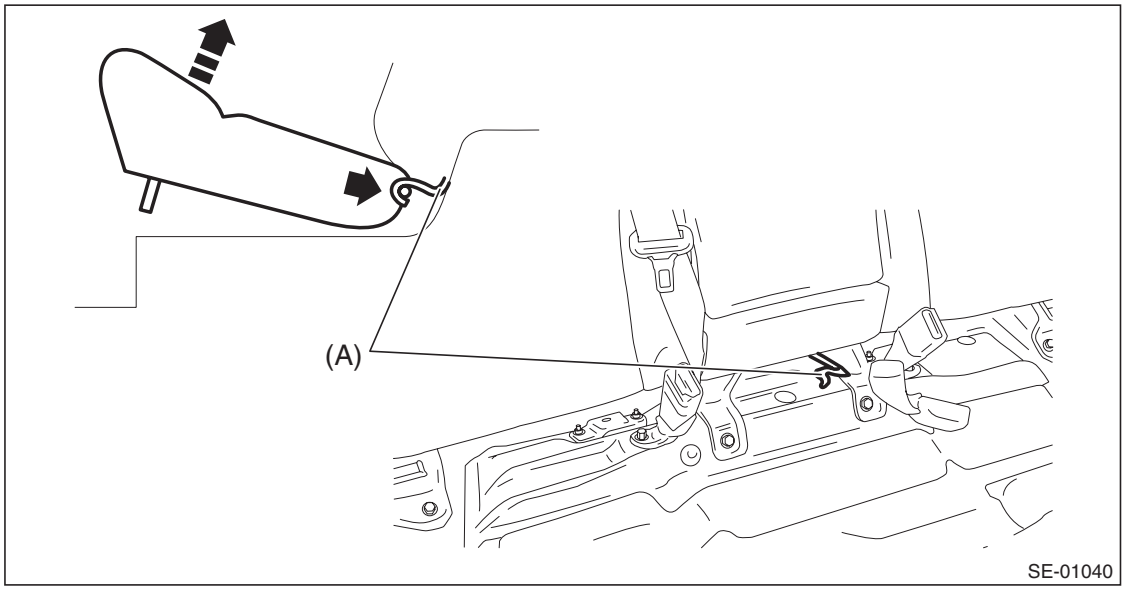

2) Remove the backrest assembly.
(1) Remove the bolts at the front of backrest hinge.

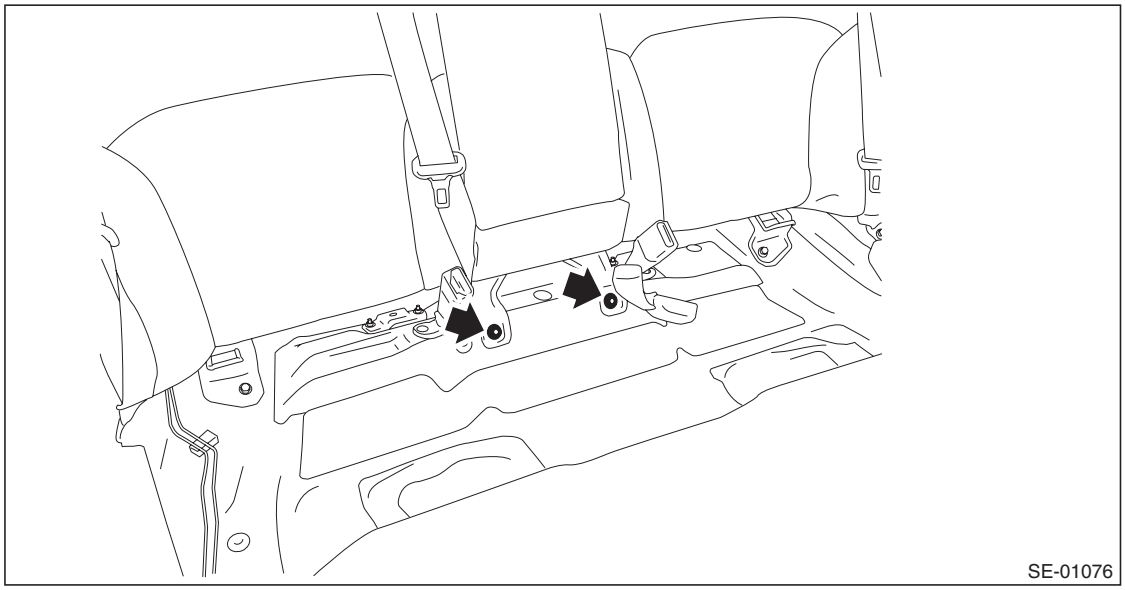

GETtheMANUALS.org

(2) Pull the release lever in the trunk room, and then tilt the backrest forward.

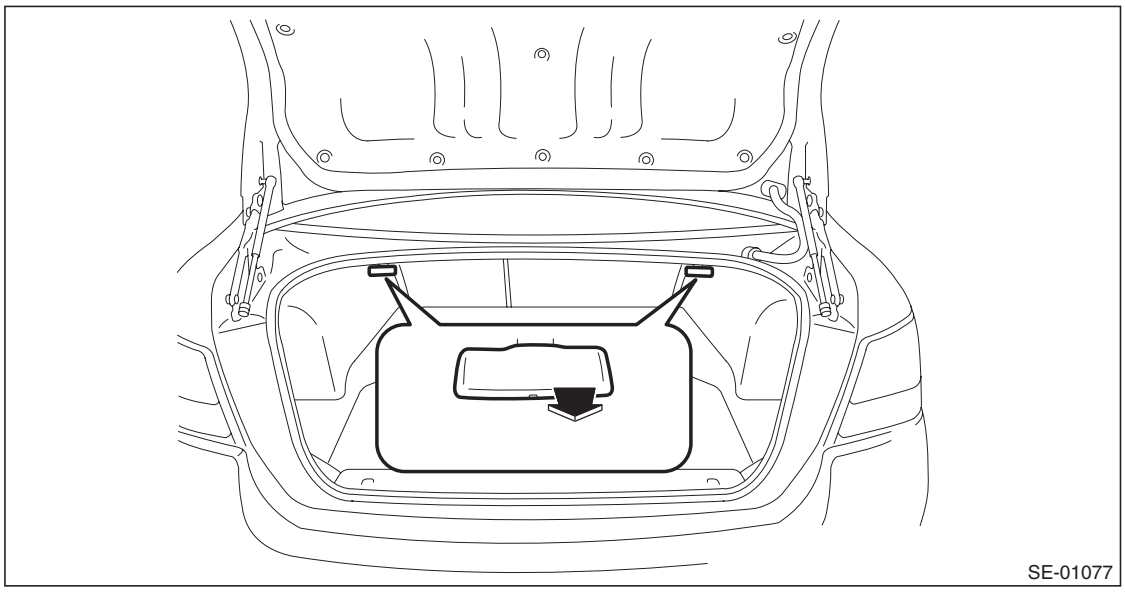

(3) Remove the nuts at the rear of backrest hinge.

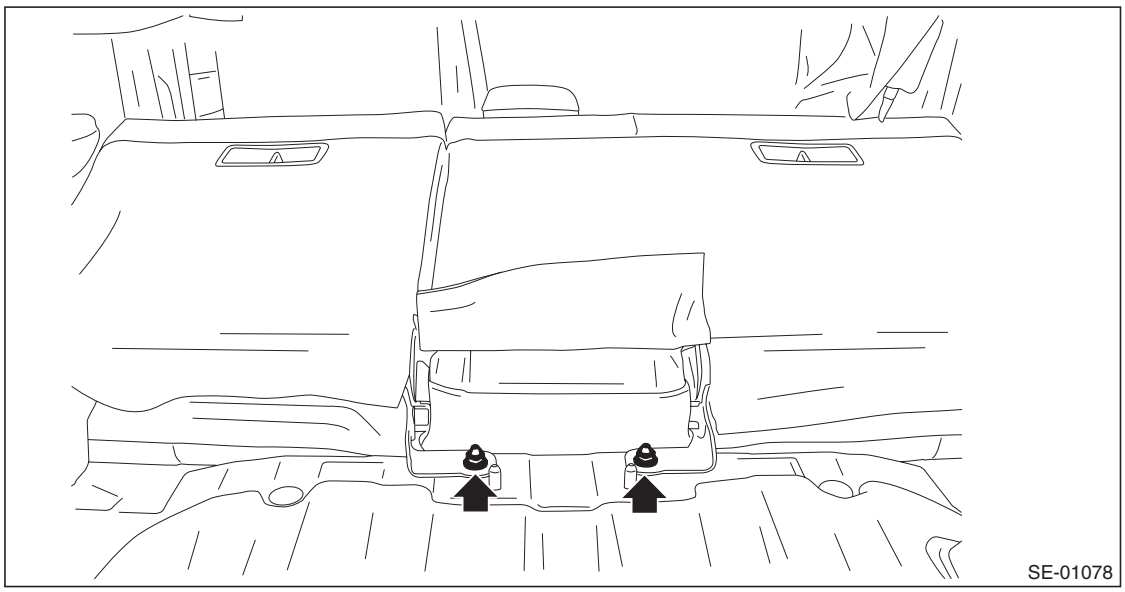

GETtheMANUALS.org

(4) Remove the backrest assembly RH from the hinge assembly RH.

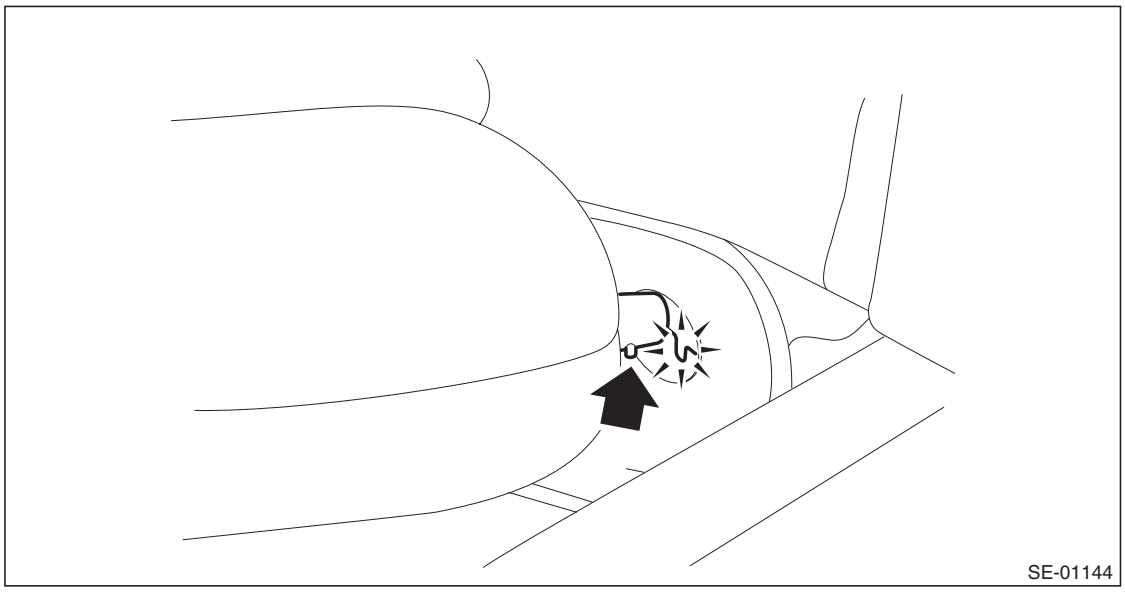

NOTE:
The backrest cannot be detached unless the backrest pin is aligned to the hinge assembly.

3) Referring to the above steps, remove the backrest assembly LH.

4) Remove the backrest side pad.

(1) Remove the bolts, and remove the backrest side pad assembly RH.

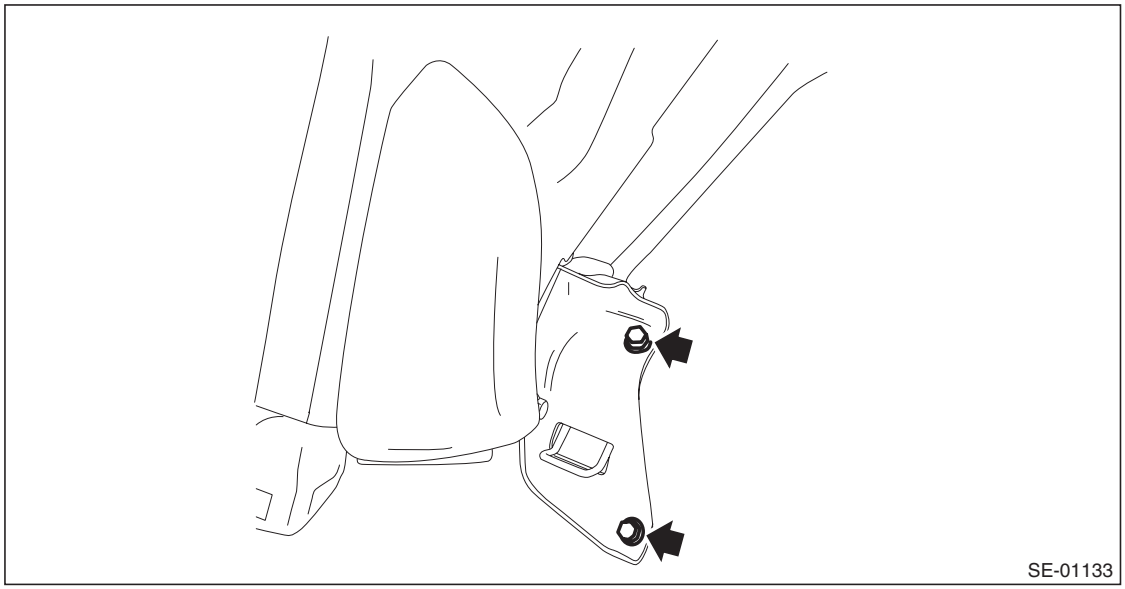

(2) Remove the screws.

(3) Turn over the bottom end of the backrest side pad in the forward direction so that the claws are released.

GETtheMANUALS.org

(4) Remove the backrest side pad by pulling it up.

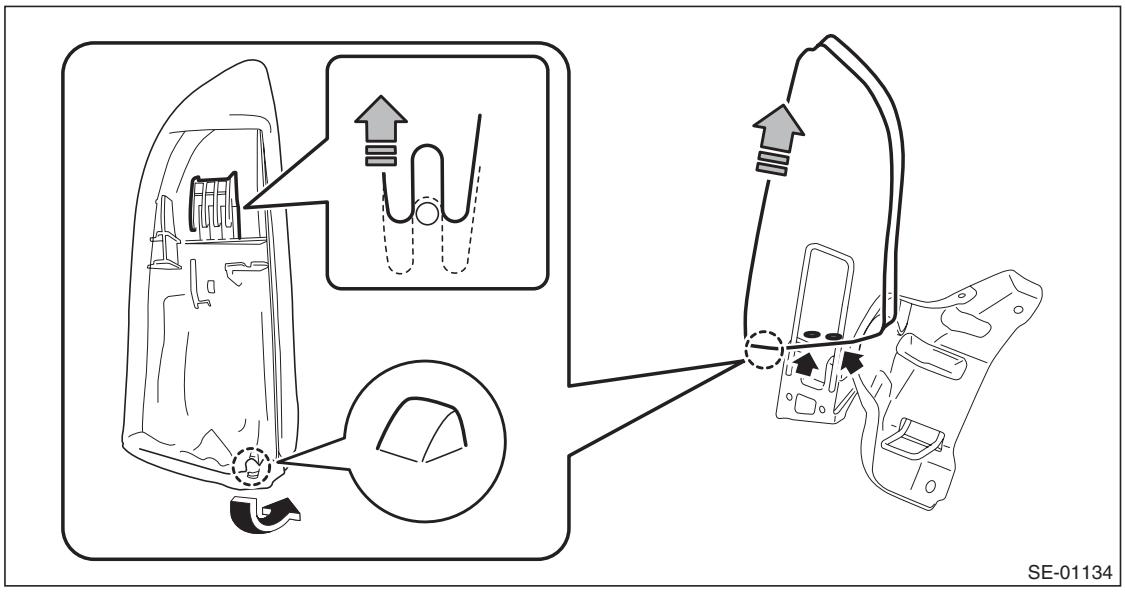

5) Referring to the above steps, remove the backrest side pad assembly LH.

GETtheMANUALS.org

2. OUTBACK MODEL

1) Disconnect the ground cable from battery.
2) Remove the rear seat cushion.
   (1) Pull up the seat cushion and release the hook.

CAUTION:
If the hook is removed from vehicle body, replace the hook with the new part to avoid the deterioration of seat securing.

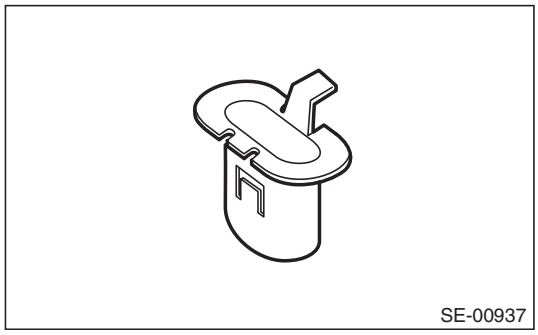

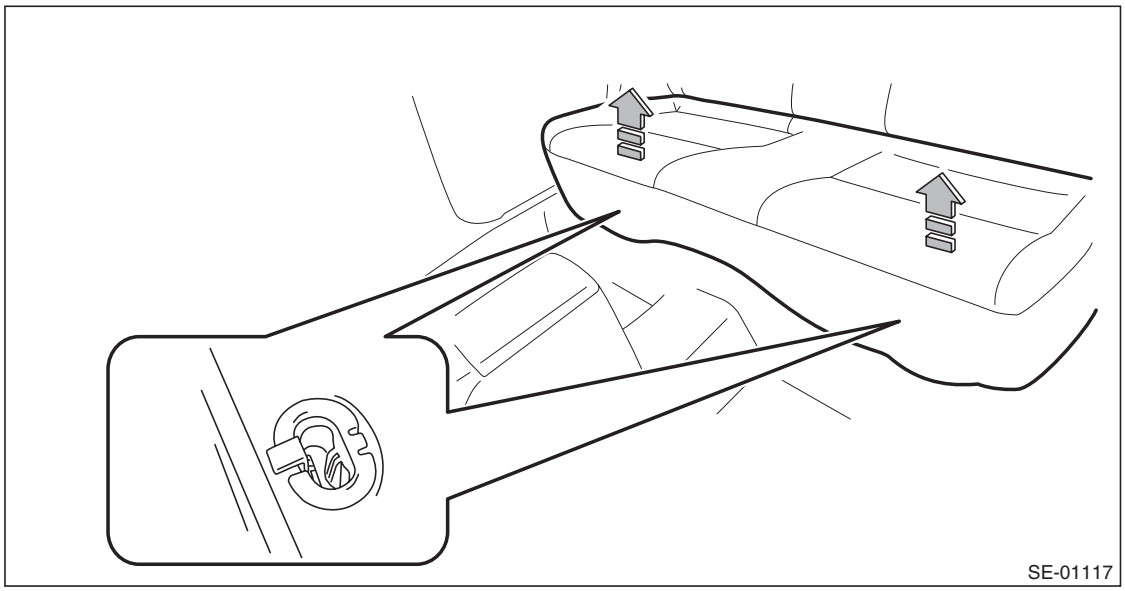

GETtheMANUALS.org

(2) Remove the hook (A) by pushing it back while lifting the front side of the seat cushion, and remove the seat cushion.

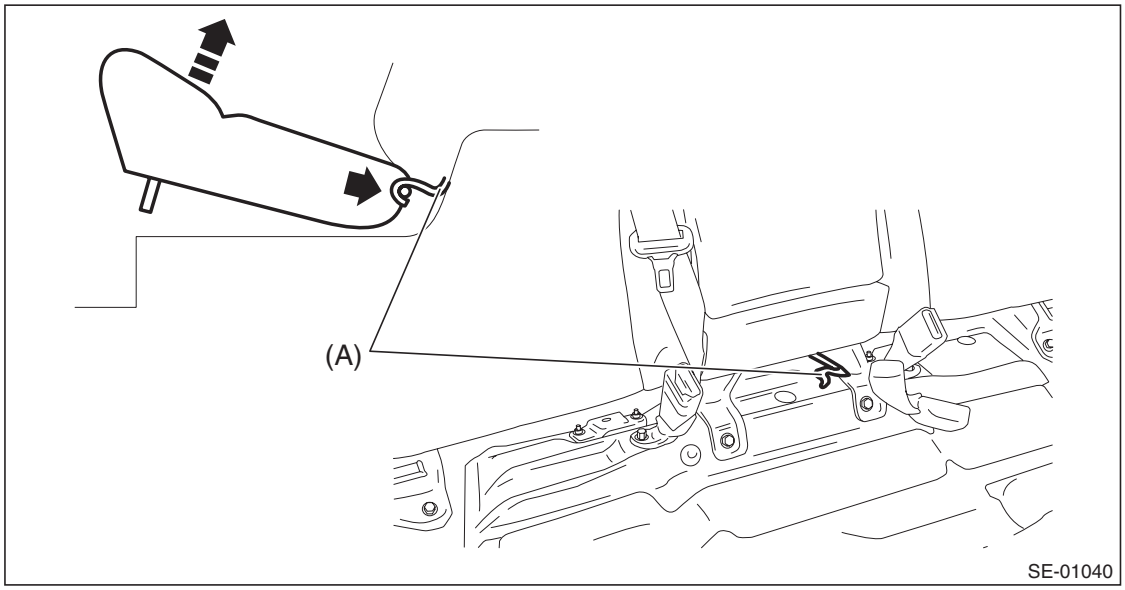

3) Remove the headrest.
4) Remove the backrest assembly RH.
(1) Remove the hinge bolts at the front of the backrest assembly RH.

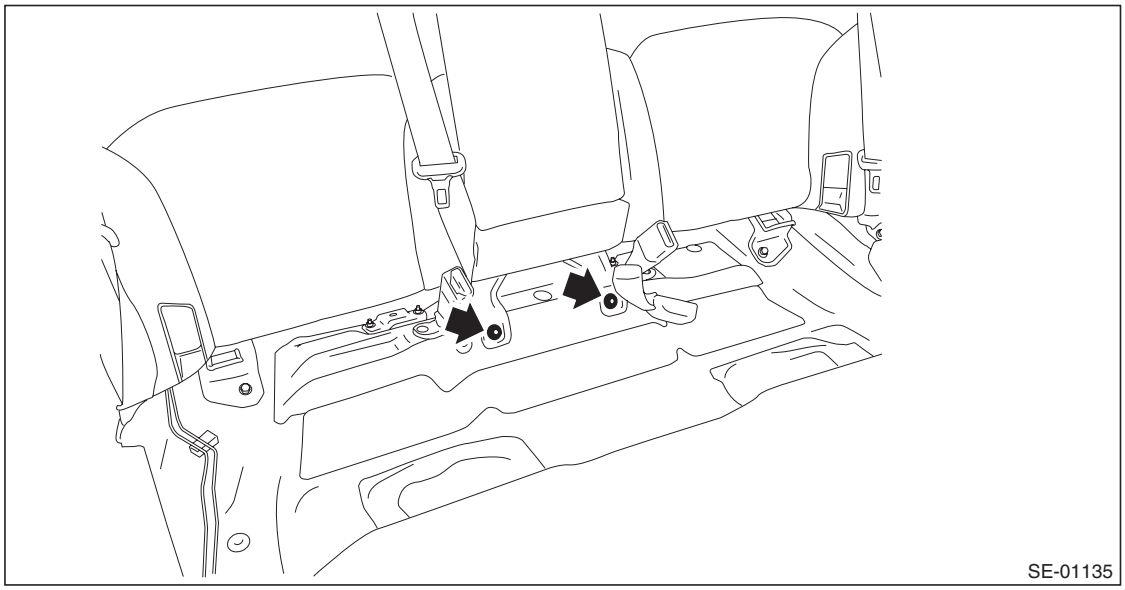

GETtheMANUALS.org

(2) Tilt the backrest forward, and then turn over the backrest backside mat.

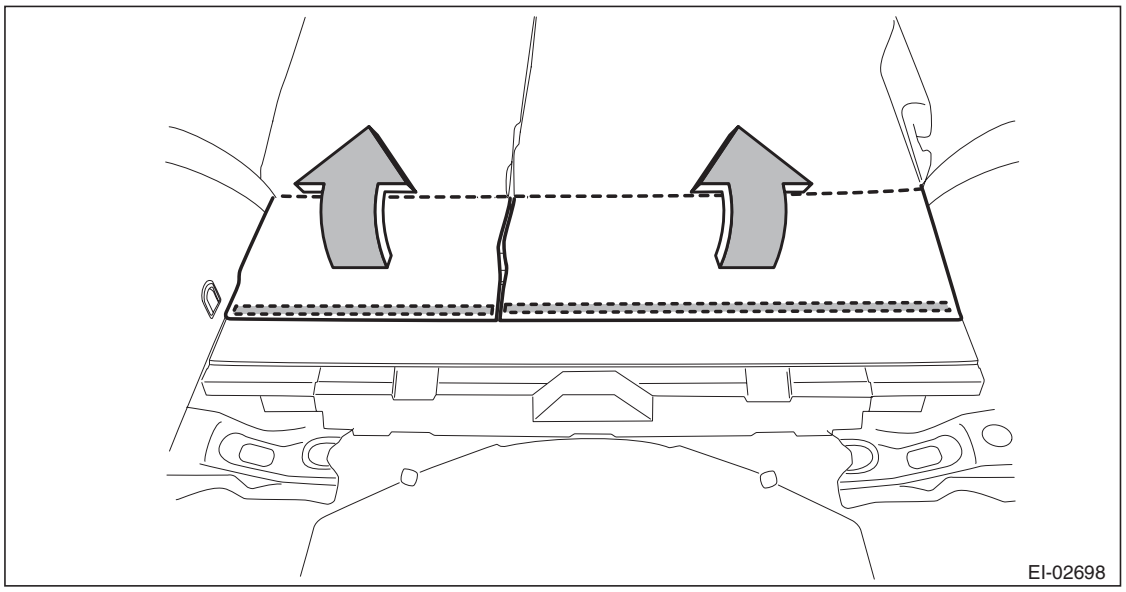

(3) Remove the clips, and remove the rear floor mat-front.

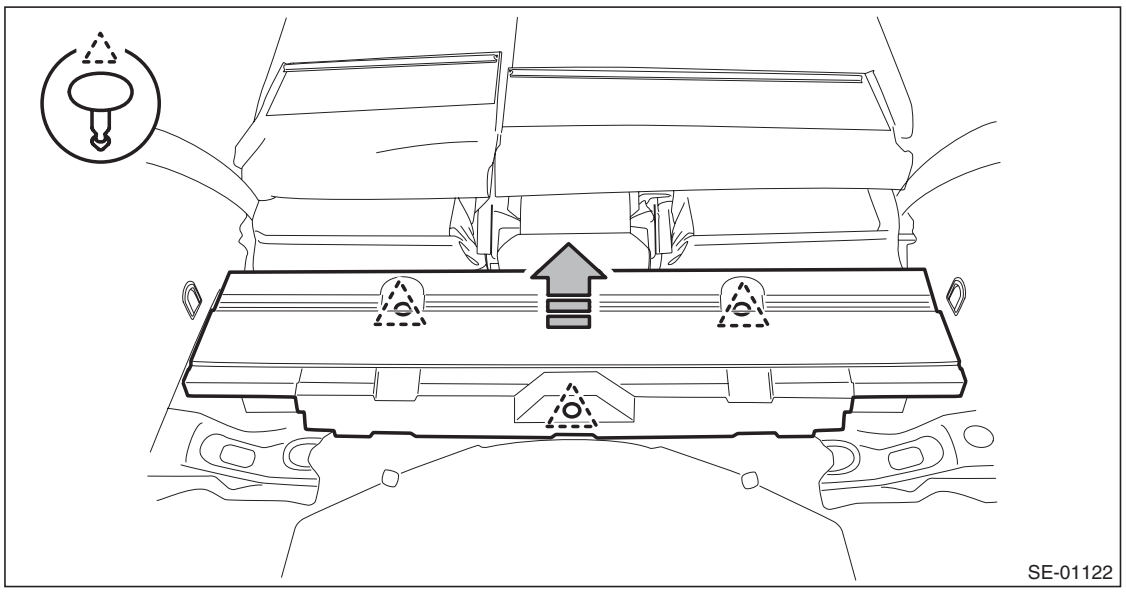

GETtheMANUALS.org

(4) Remove the nuts at the rear of backrest hinge.

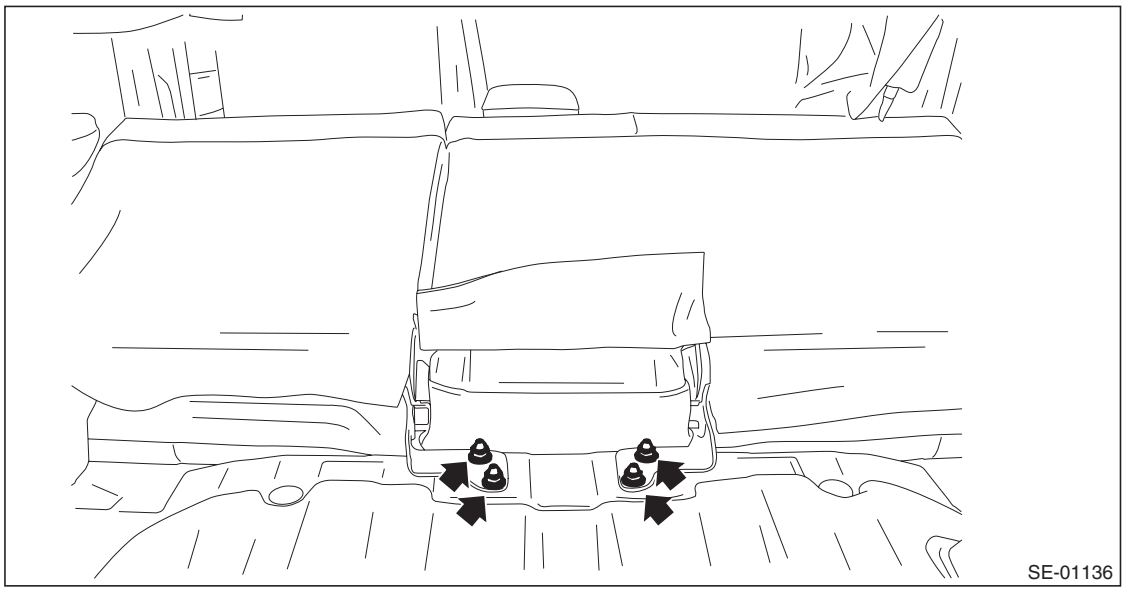

(5) Disconnect the backrest cable and reclining cable.

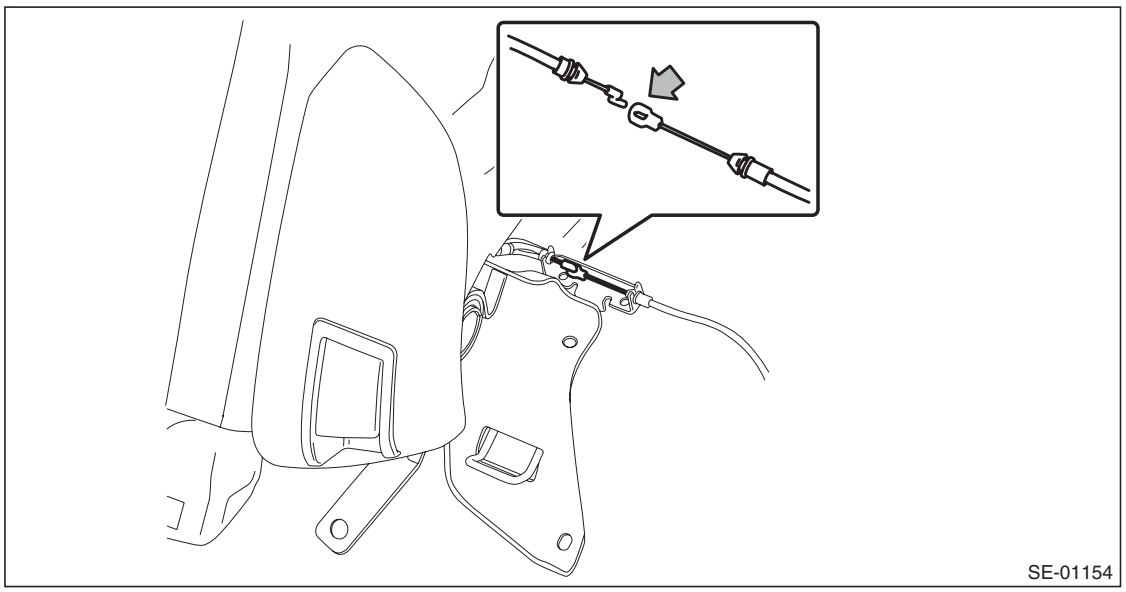

NOTE:
The backrest cannot be detached unless the backrest pin is aligned to the hinge assembly.

GETtheMANUALS.org

(6) Remove the backrest assembly RH from the hinge assembly RH.

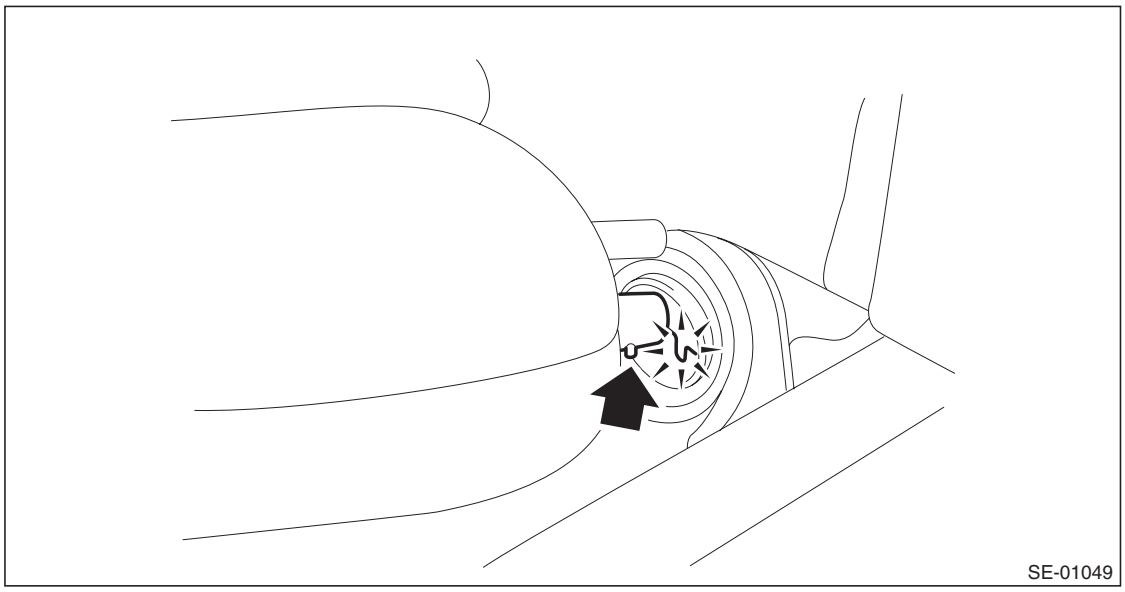

NOTE:
The backrest cannot be detached unless the backrest pin is aligned to the hinge assembly.

(7) Take out the part outside the vehicle so that the body is not damaged by the hinges.

5) Referring to the above steps, remove the backrest assembly LH.

6) Remove the bolts, and remove the backrest side pad assembly RH.

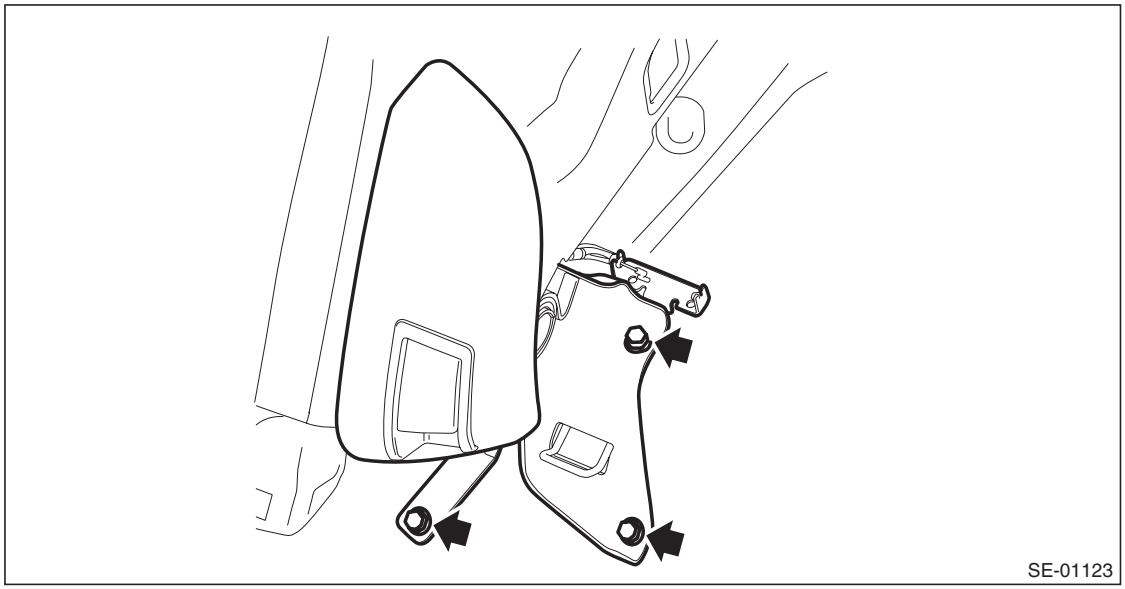

GETtheMANUALS.org

7) Remove the reclining lever assembly RH.
(1) Remove the screws and remove the reclining lever assembly by pulling it downward.

Preparation tool: Stubby screwdriver

(2) By pressing the wire cable claws, remove the relining cable from the reclining lever assembly.

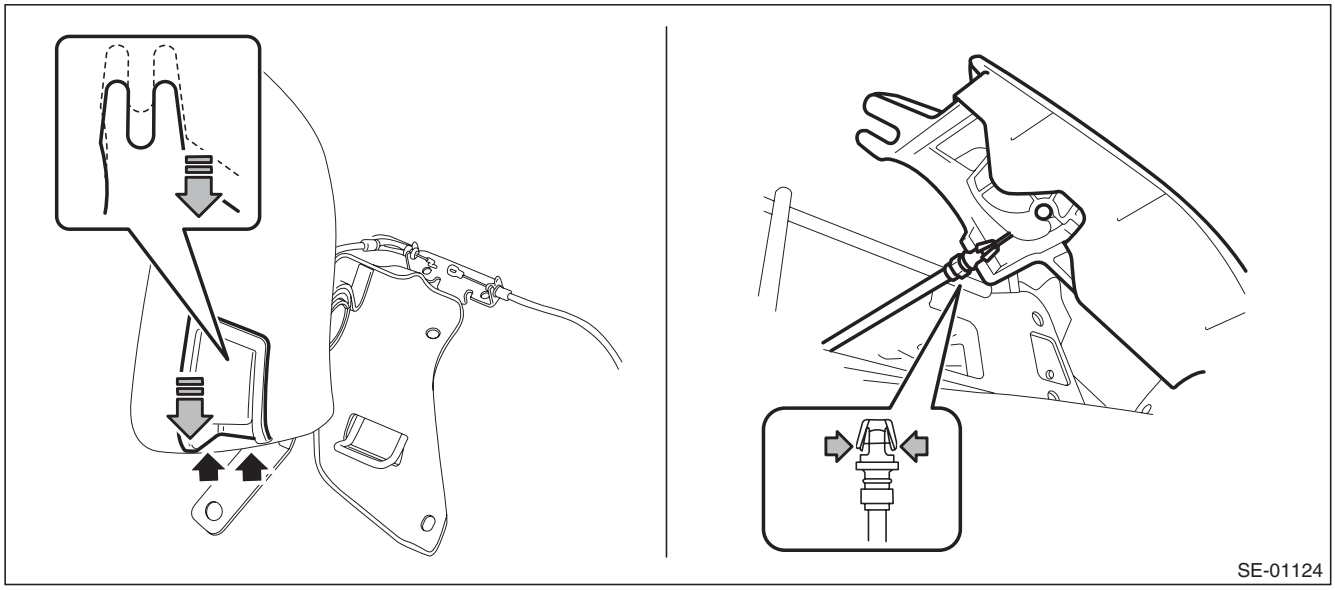

(3) Turn over the bottom end of the backrest side pad in the forward direction so that the claws are released.
(4) Remove the backrest side pad by pulling it up.

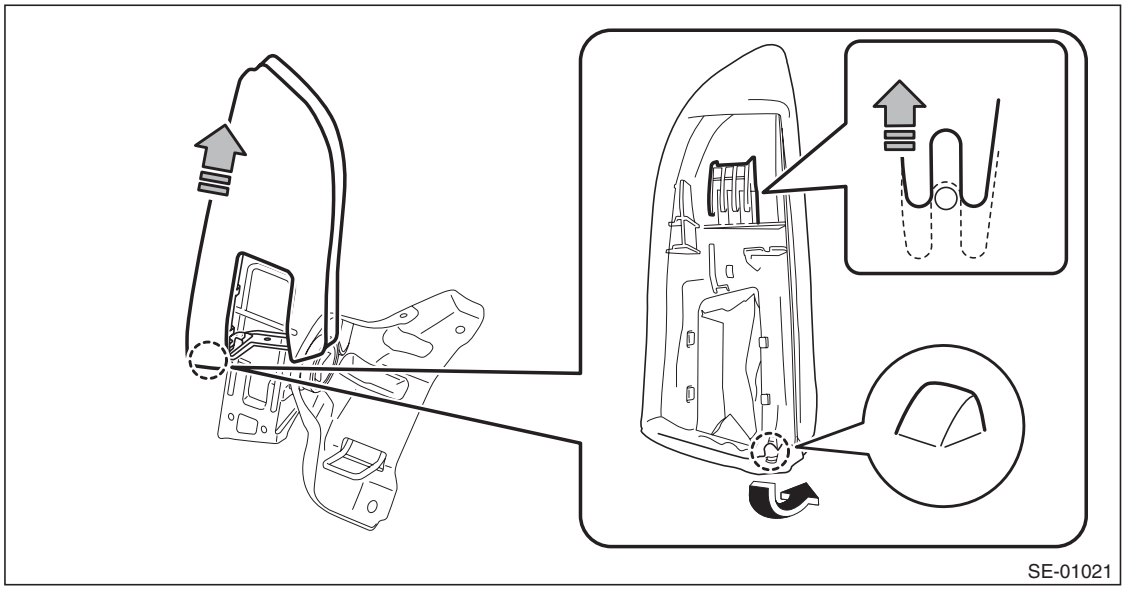

GETtheMANUALS.org

3. WIRE CABLE

Release lever cable (sedan model)

1) Pull the release lever in the trunk room, and then tilt the backrest forward.

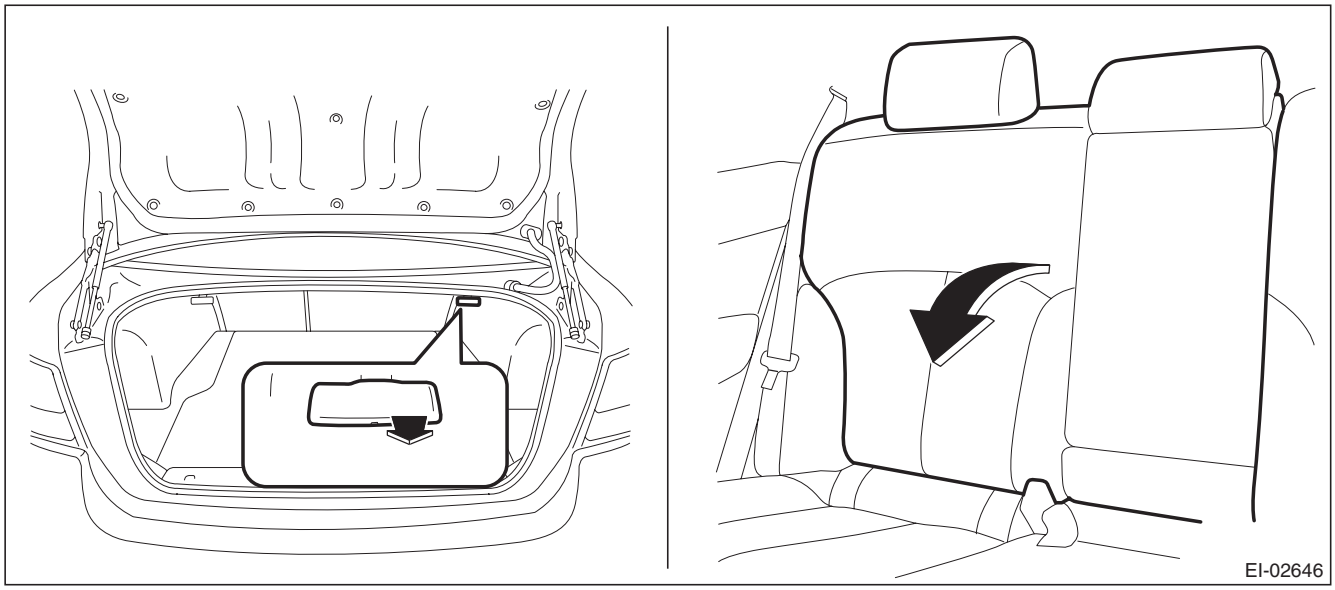

2) Remove the release lever assembly.
   (1) Remove the wire cable from lock assembly.
   (2) Remove the nuts, and then remove the lock assembly.
   (3) Remove the wire cable holder.
   (4) Press the stopper portion (a), and remove the release lever assembly while sliding it forward.

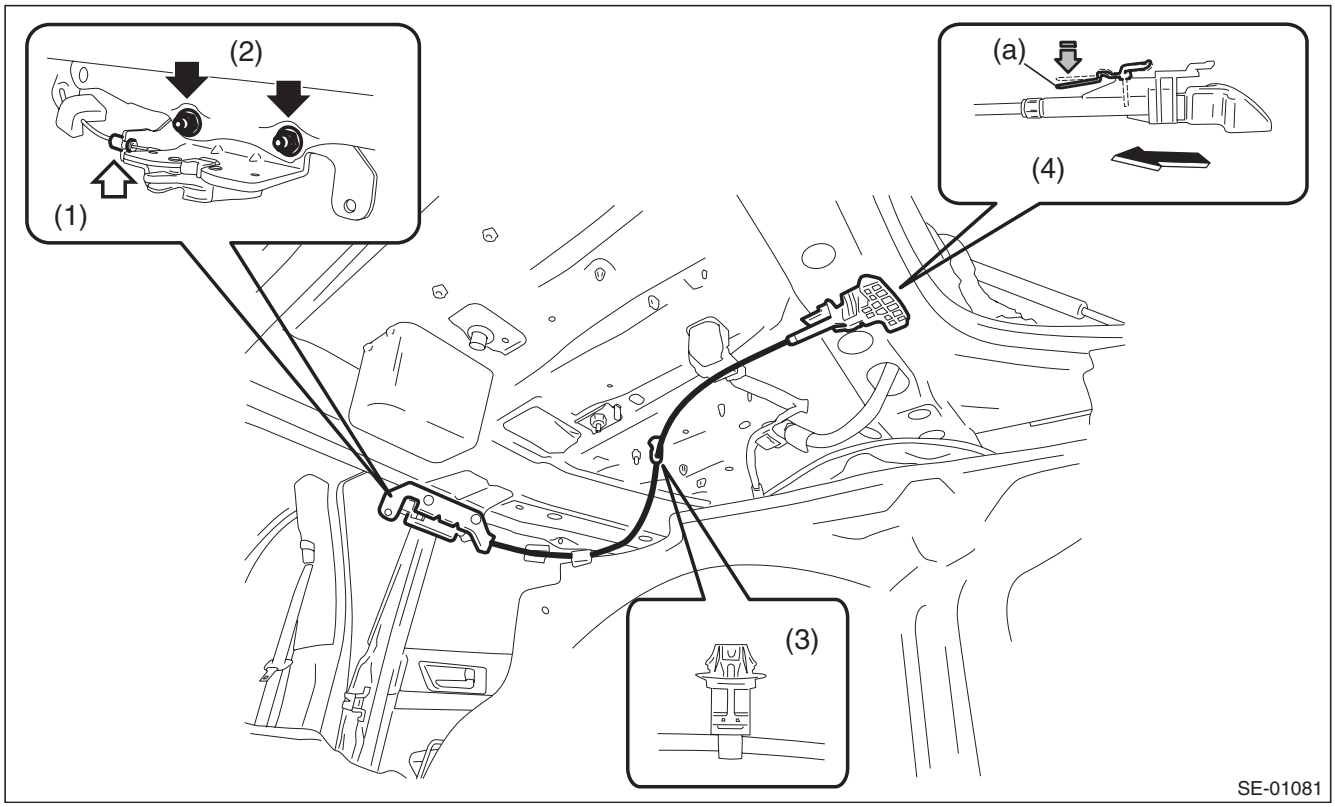

GETtheMANUALS.org

Reclining cable (OUTBACK model)

1) Remove the rear seat cushion.
   (1) Pull up the seat cushion and release the hook.

CAUTION:
If the hook is removed from vehicle body, replace the hook with the new part to avoid the deterioration of seat securing.

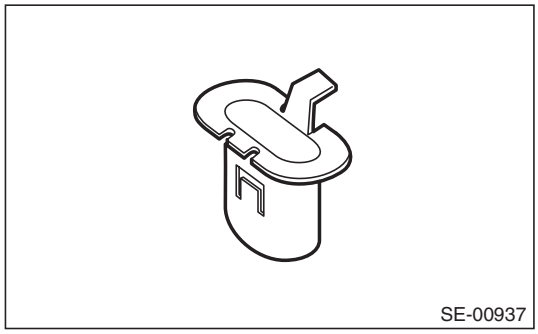

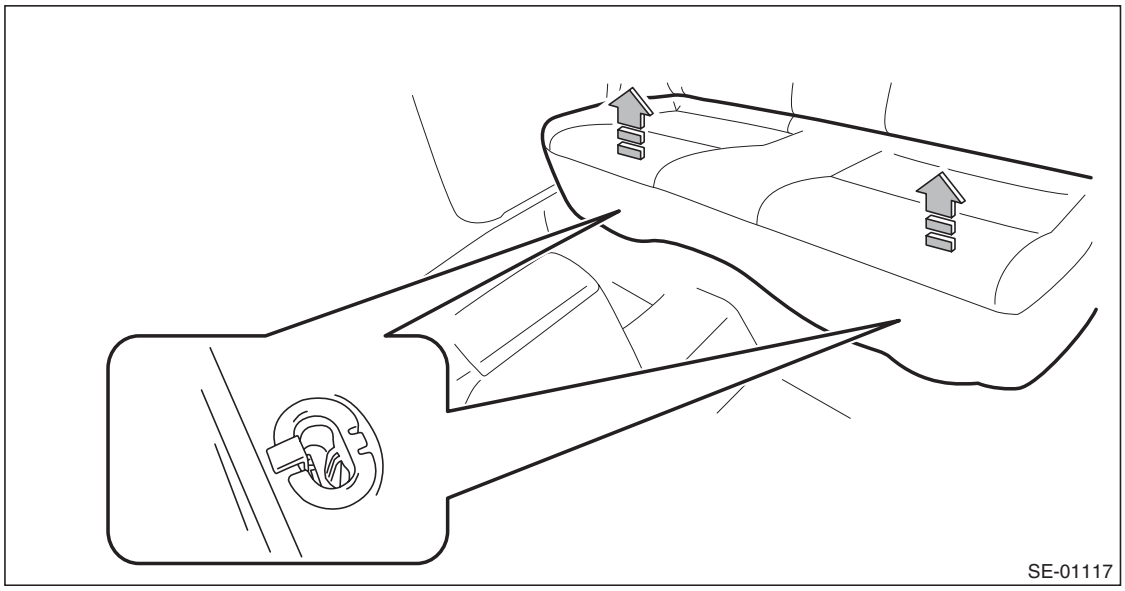

GETtheMANUALS.org

(2) Remove the hook (A) by pushing it back while lifting the front side of the seat cushion, and remove the seat cushion.

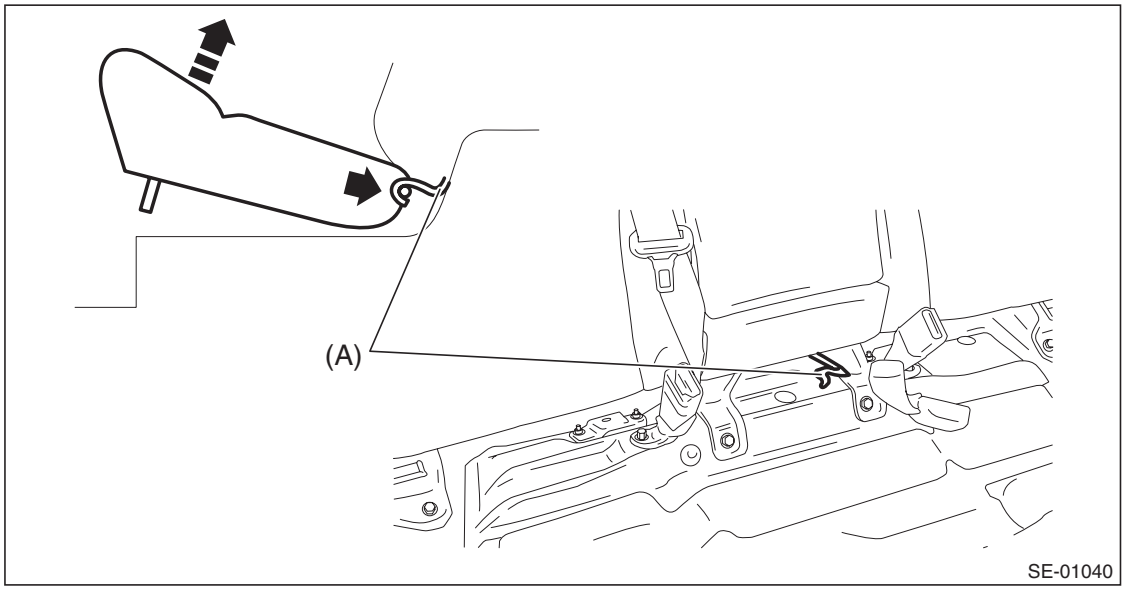

2) Tilt the backrest and turn over the seat backrest cover.

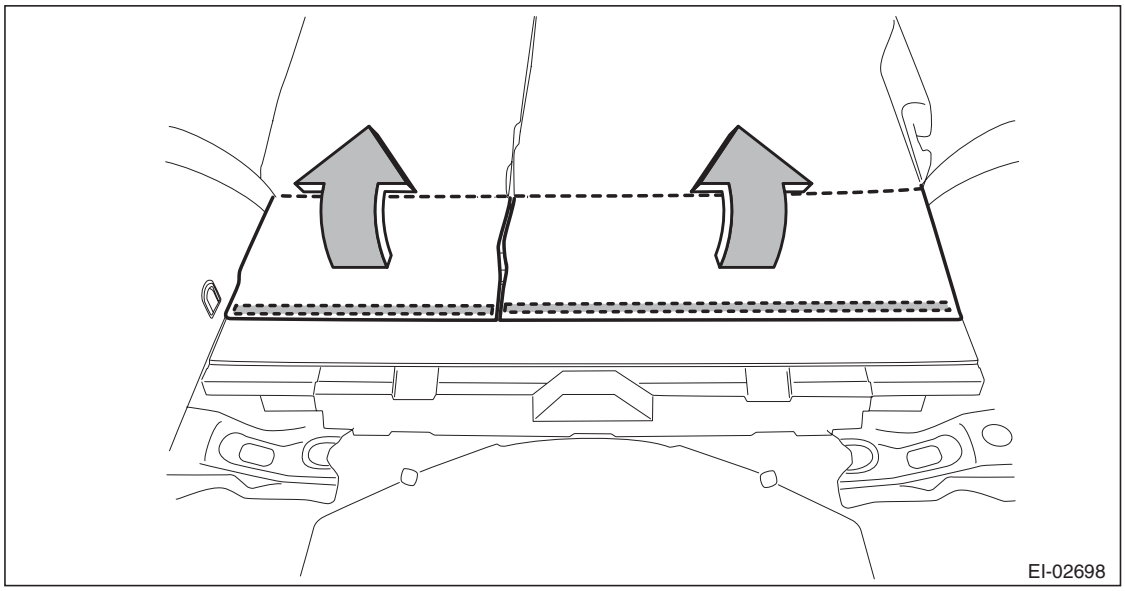

GETtheMANUALS.org

3) Remove the clips, and remove the rear floor mat-front.

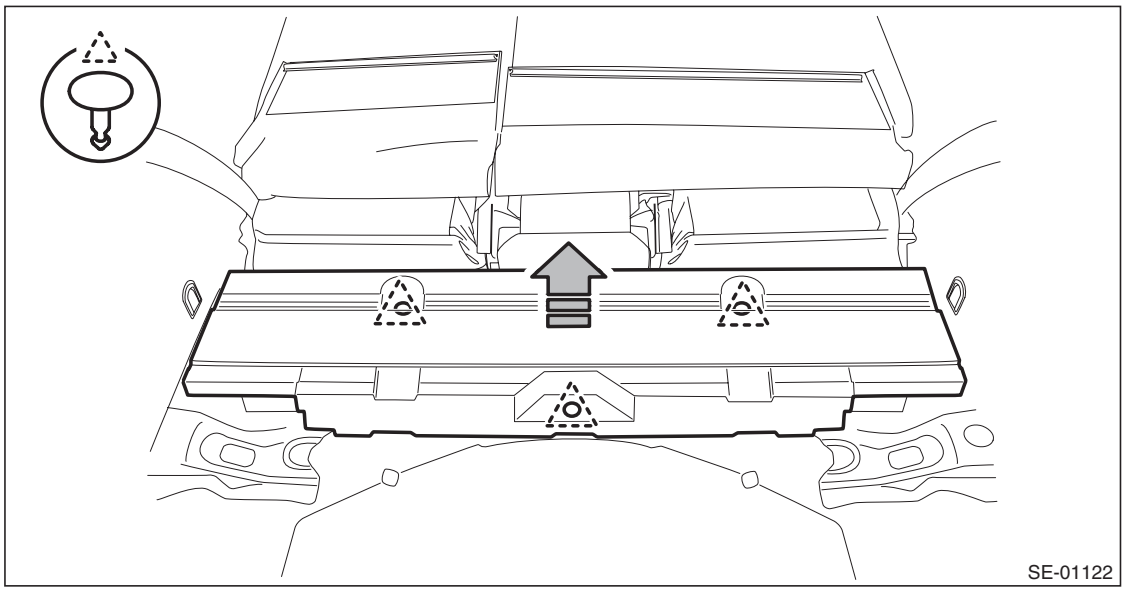

4) Remove the reclining lever assembly.
   (1) Disconnect the backrest cable and reclining lever cable.

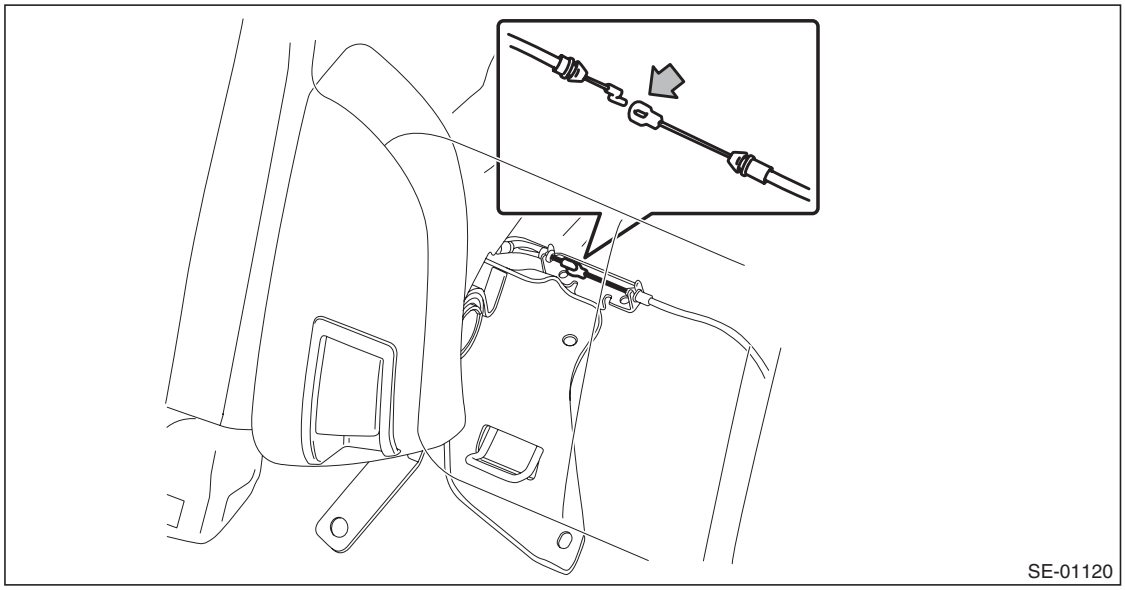

   (2) Remove the screws and remove the reclining lever assembly by pulling it downward.

Preparation tool: Stubby screwdriver

GETtheMANUALS.org

(3) By pressing the wire cable claws, remove the relining cable from the reclining lever assembly.

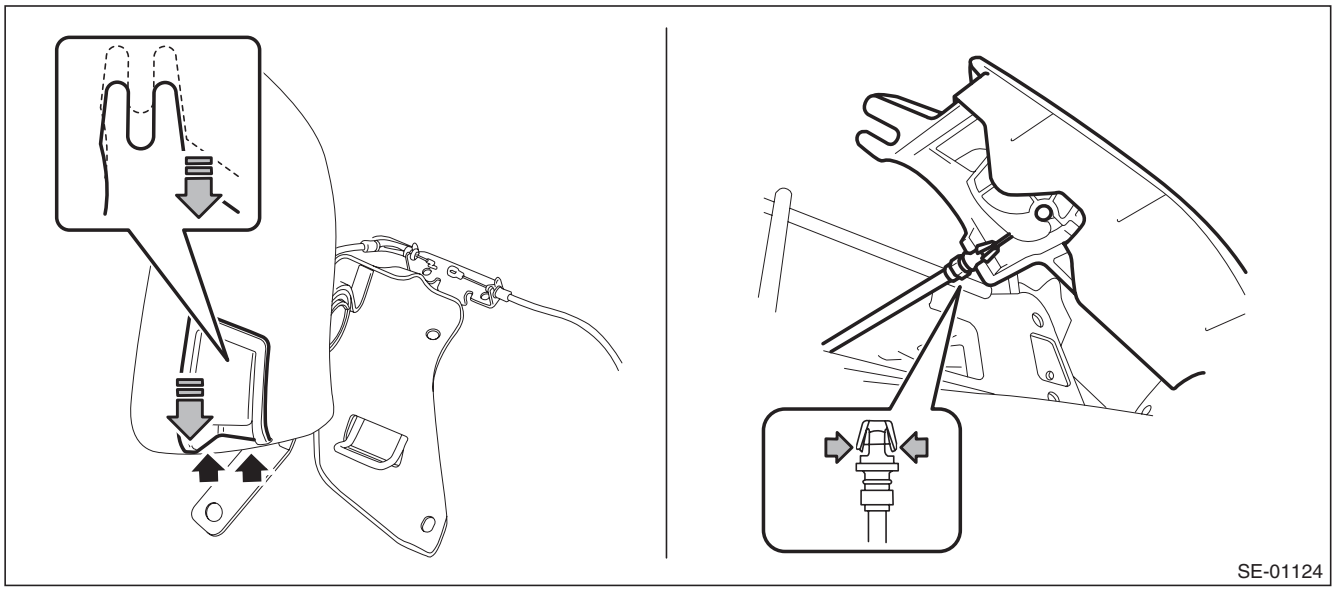

Backrest cable (OUTBACK model)

1) Remove the rear seat backrest assembly. <Ref. to SE-39, OUTBACK MODEL, REMOVAL, Rear Seat.>
2) Disassemble the backrest assembly and remove the backrest cable. <Ref. to SE-50, DISASSEMBLY, Rear Seat.>

B: INSTALLATION

Install each part in the reverse order of removal.

CAUTION:
If the hook is removed from vehicle body, replace the hook with the new part to avoid the deterioration of seat securing.

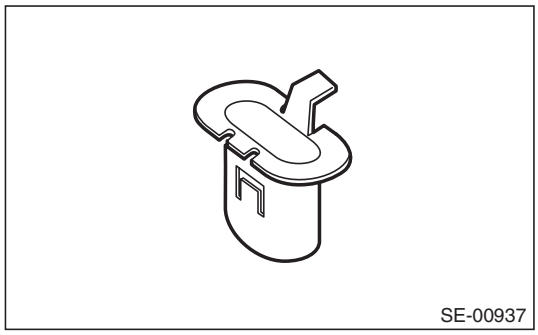

NOTE:
- After installing the backrest, make sure that each seat belt operates normally.
- Check that the remote lever and reclining lever operate normally.
- Make sure that they are properly secured on each hook on the vehicle side.

Tightening torque:
Refer to "COMPONENT" of "General Description".
Sedan model: <Ref. to SE-7, REAR SEAT (SEDAN MODEL), COMPONENT, General Description.>
OUTBACK model <Ref. to SE-8, REAR SEAT (OUTBACK MODEL), COMPONENT, General Description.>

GETtheMANUALS.org

C: DISASSEMBLY

1) Remove the rear seat.
- Sedan model: <Ref. to SE-34, SEDAN MODEL, REMOVAL, Rear Seat.>
- OUTBACK model <Ref. to SE-39, OUTBACK MODEL, REMOVAL, Rear Seat.>

2) Remove the headrest.
3) Remove the backrest back board.
   (1) Remove the plastic fastener at the lower part of backrest assembly, and open the fastener at both side to turn over the backrest cover.
   (2) Remove the backrest striker cover. (Sedan model)
   (3) Remove the screws (A) and clips (B).
   (4) Remove the hog rings (C) and remove the backrest backboard.

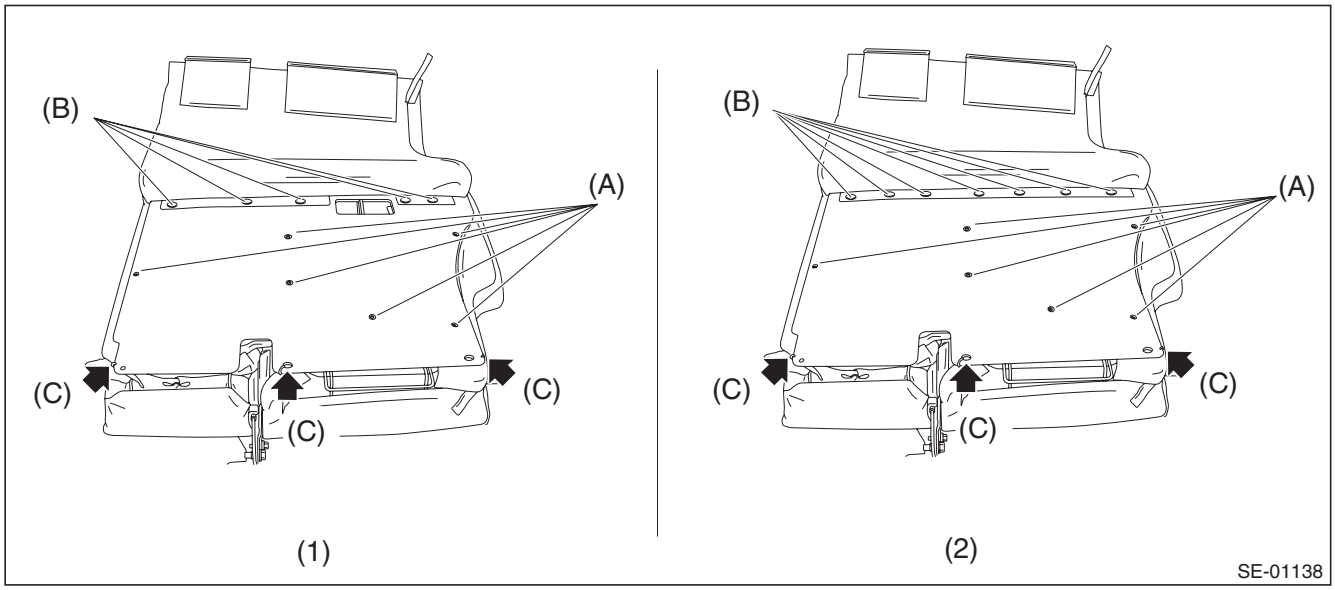

(1) Sedan model (2) OUTBACK model

4) Remove the headrest bushing.

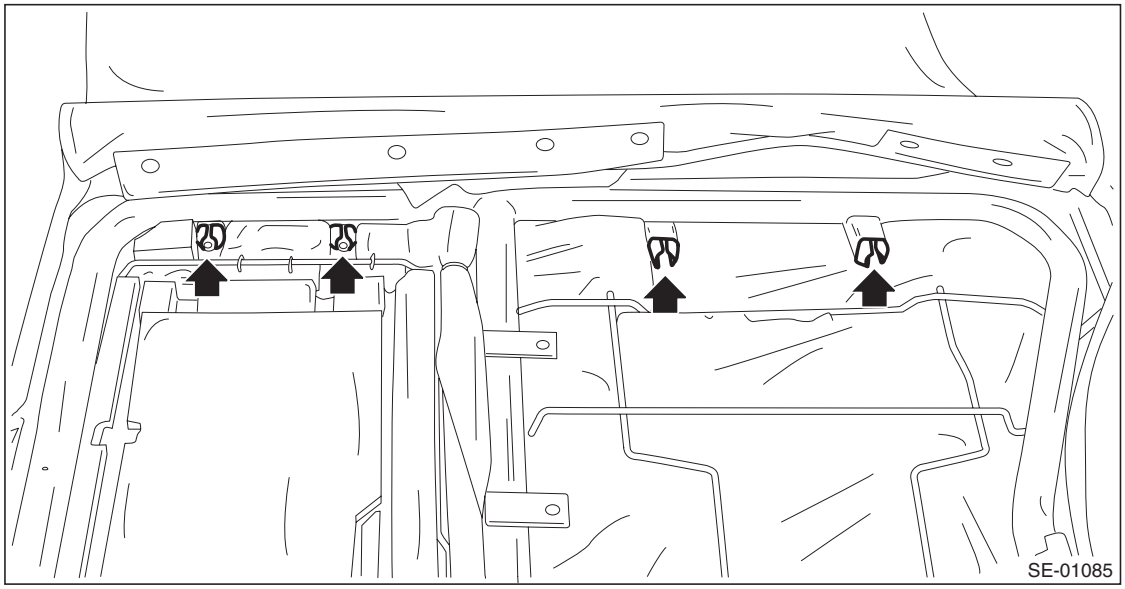

NOTE:
Catch the tip of headrest bushing with pliers and push it from inside seat to outside to remove it.

GETtheMANUALS.org

5) Remove the armrest assembly.
   (1) Remove the armrest hinge cover by pulling it in the direction of arrow (black).
   (2) Remove the screws, and remove the armrest.

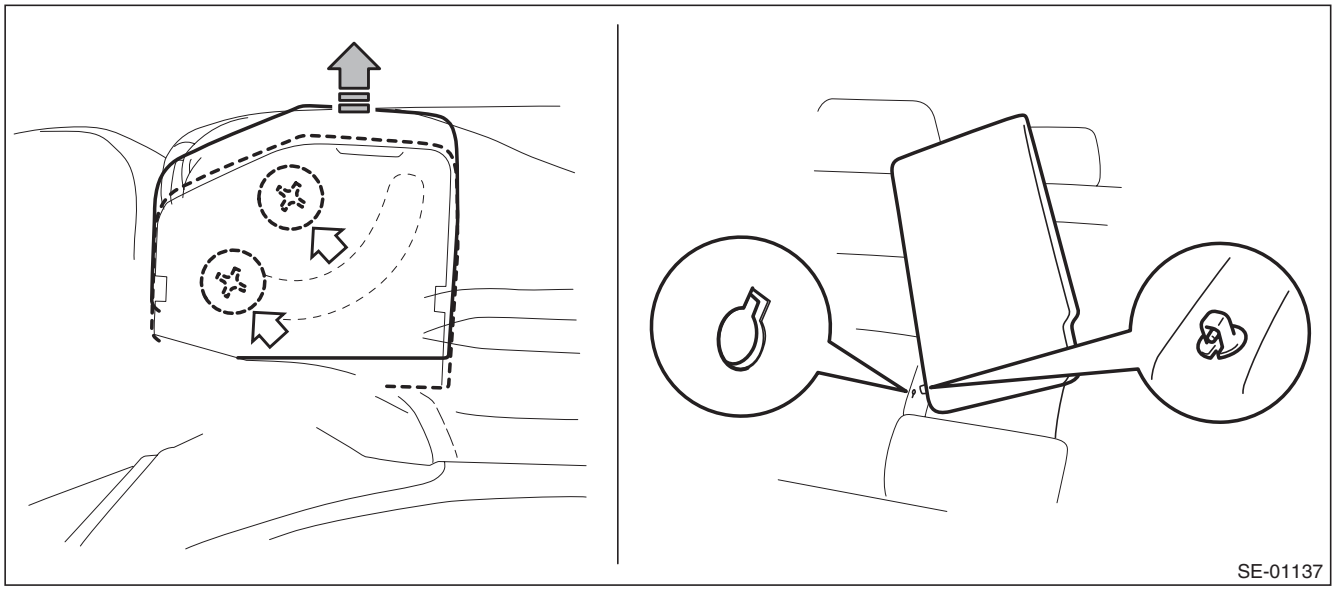

NOTE:
The armrests cannot be detached while the backrest assembly RH and armrest side pin positions are not aligned.

6) Remove the plastic hooks and hog rings, and remove the pad at lower side of armrest.

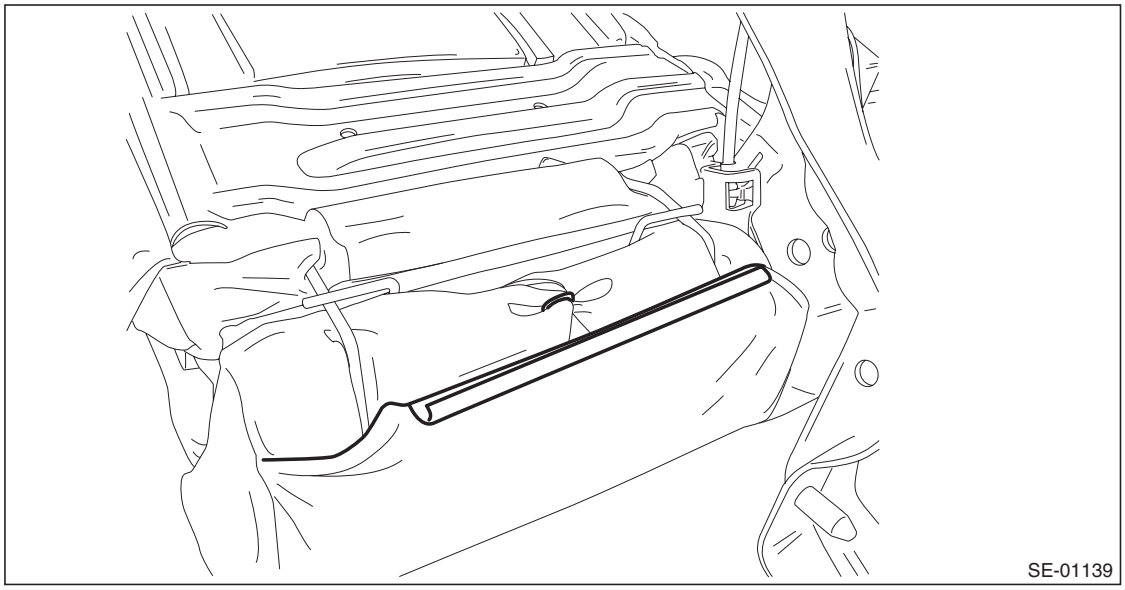

GETtheMANUALS.org

7) Remove the hog rings (A) and remove the backrest pad & frame assembly from the backrest assembly.

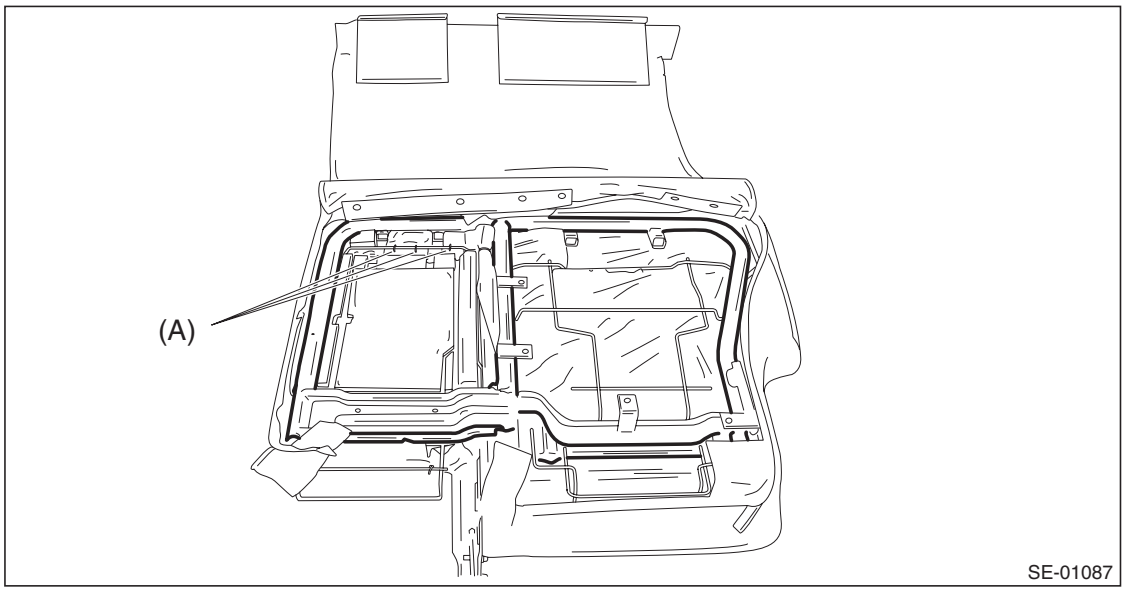

8) Remove the hog rings (A) on the front side of backrest, and then remove the backrest cover.

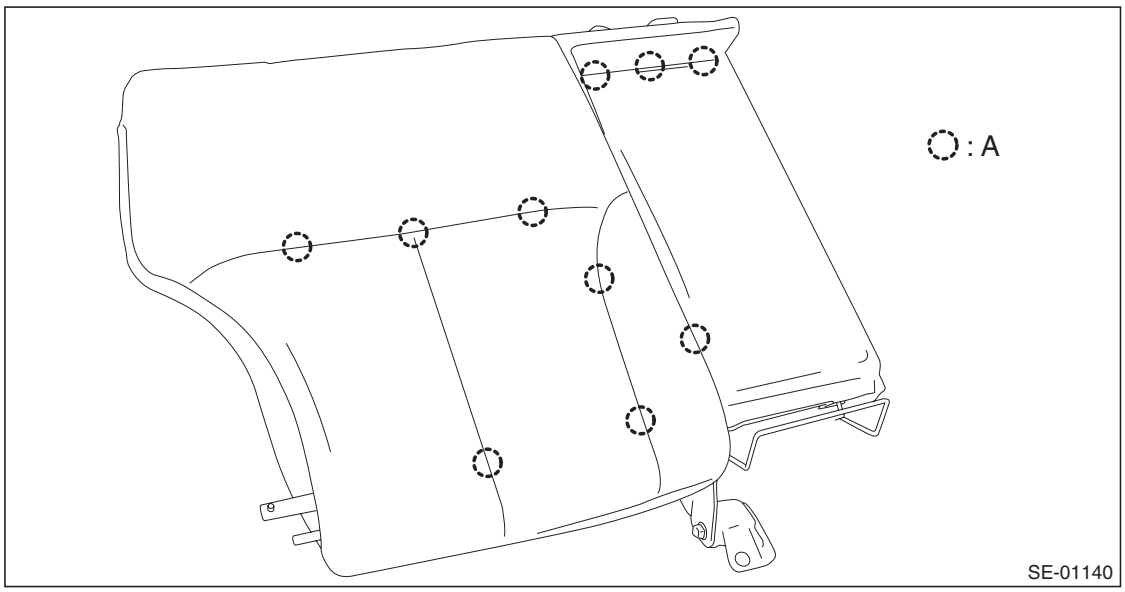

9) Referring to the step 2), disassemble the backrest assembly LH.

GETtheMANUALS.org

10) Remove the armrest cover.
   (1) Take out the bottom sheets (a) from the cup holder and remove the screws (b).
   (2) Remove the cup holder assembly (c).
   (3) Detach the plastic fastener (d) and remove the armrest cover.

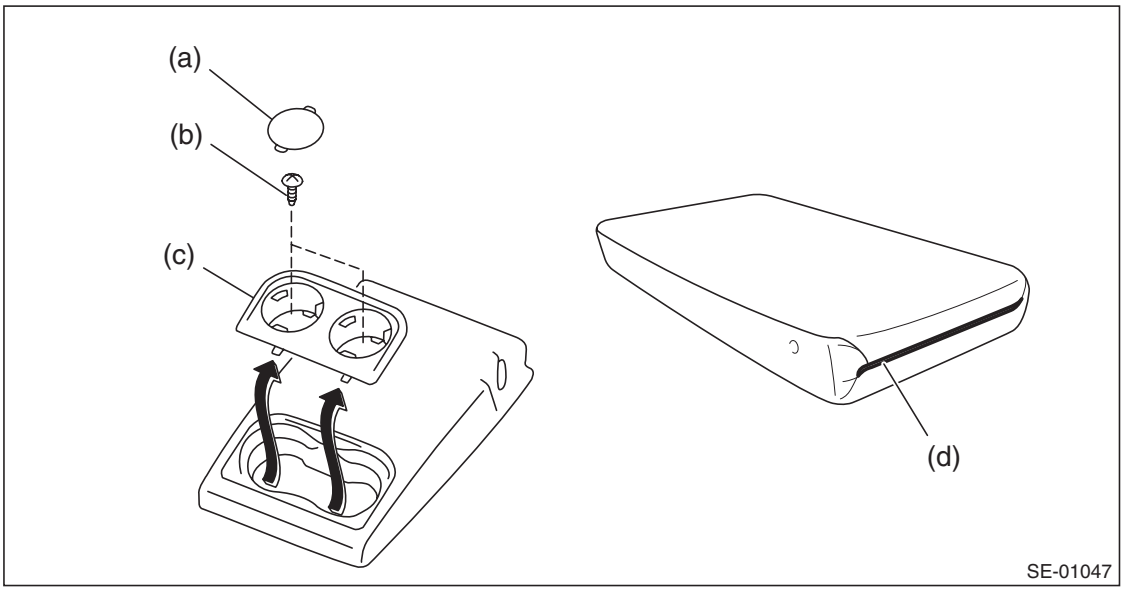

11) Detach the plastic fastener and hog ring, and then remove the headrest cover.

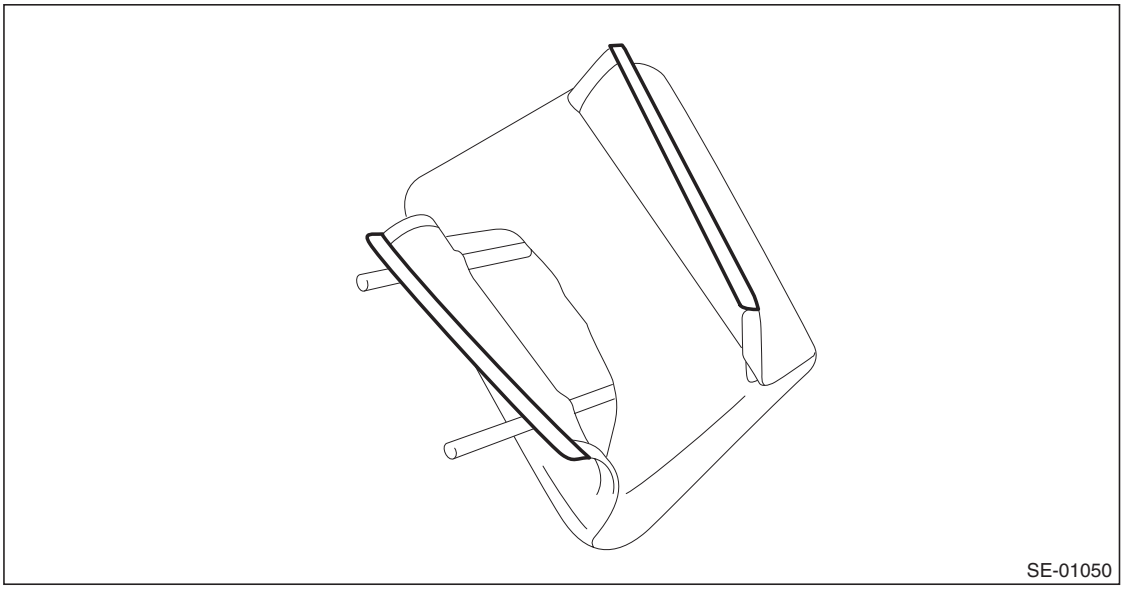

GETtheMANUALS.org

12) Remove the hog rings (A) on the rear side of the seat cushion.

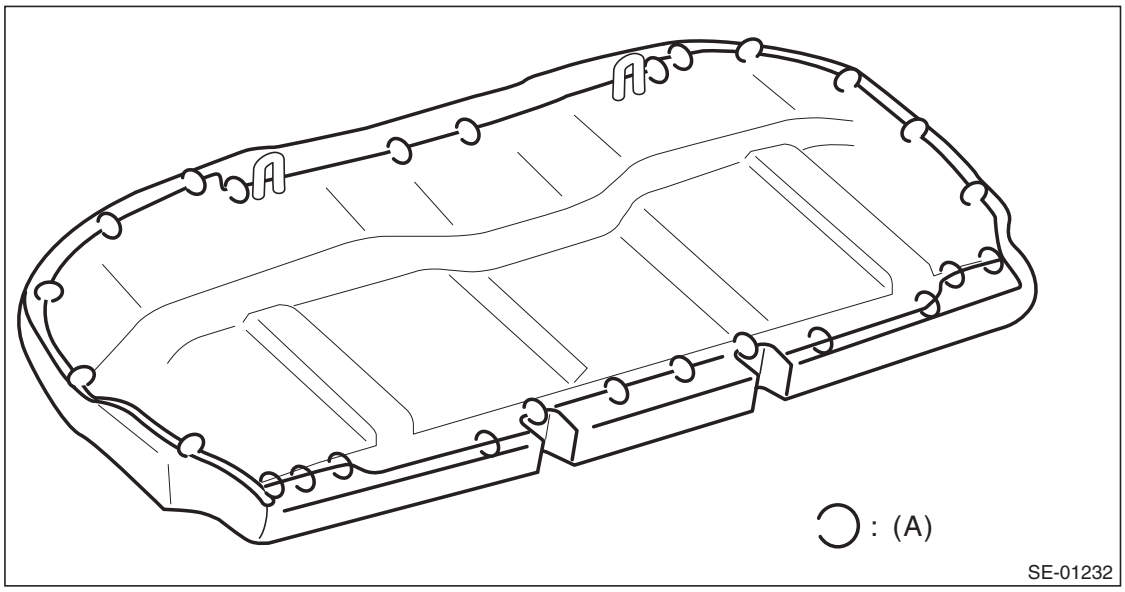

13) Remove the hog rings (A), then remove the seat cushion cover.

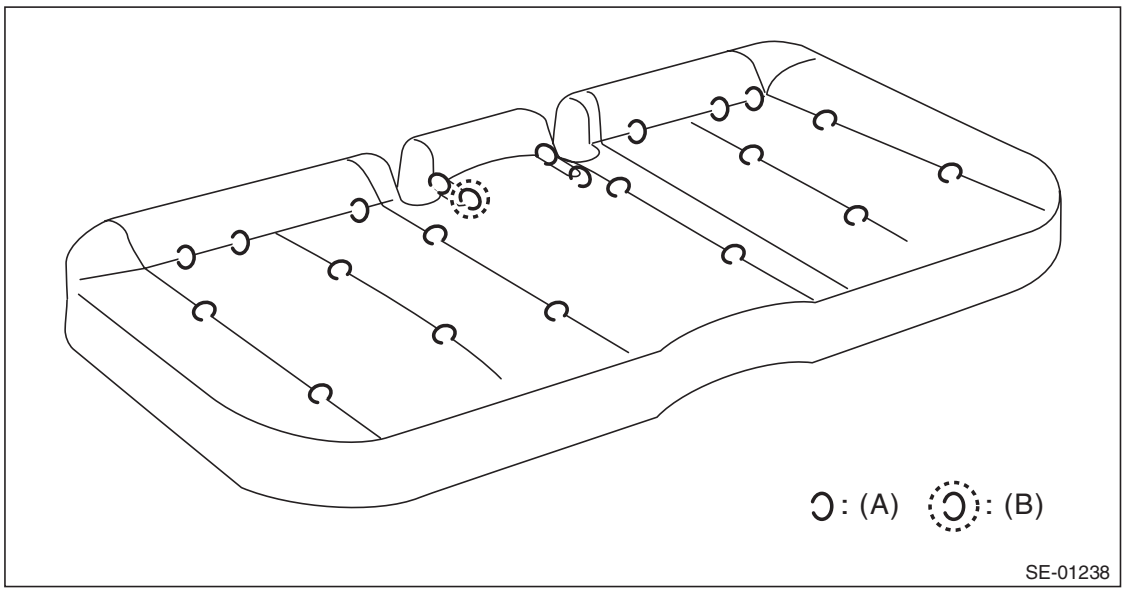

(A) Hog ring

(B) OUTBACK model only

GETtheMANUALS.org

D: ASSEMBLY

CAUTION:
- **Do not reuse hog rings.**
- **Secure the hog ring using hog ring pliers.**
- **Install the hog rings to the specified points securely and make sure that there is no wrinkle or twisting on backrest cover.**

1) Assemble the seat cover in the same manner as the front seat. <Ref. to SE-28, ASSEMBLY, Front Seat.>
2) Make sure that all hog rings (A) are attached securely.
- Sedan model

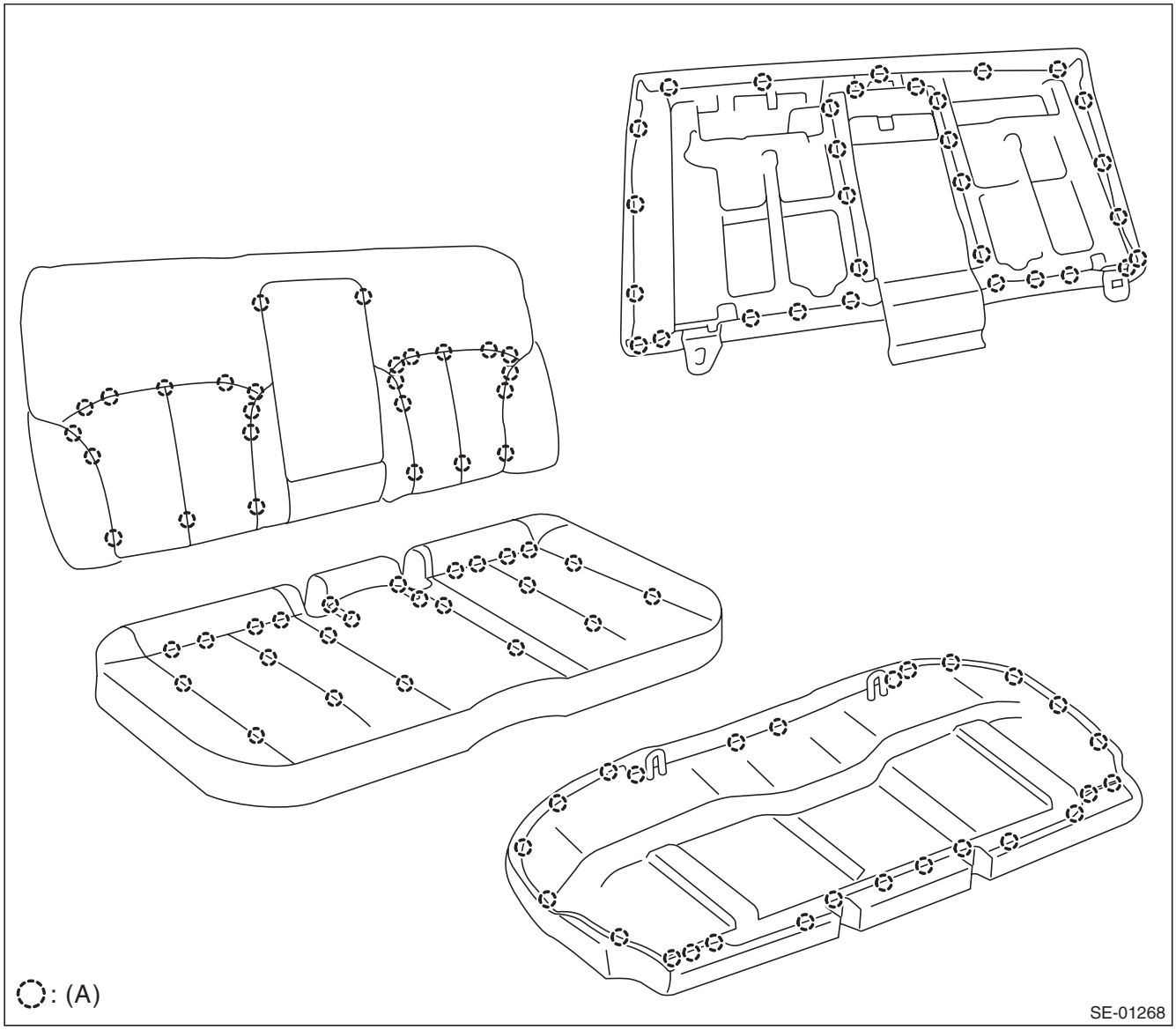

GETtheMANUALS.org

- OUTBACK model

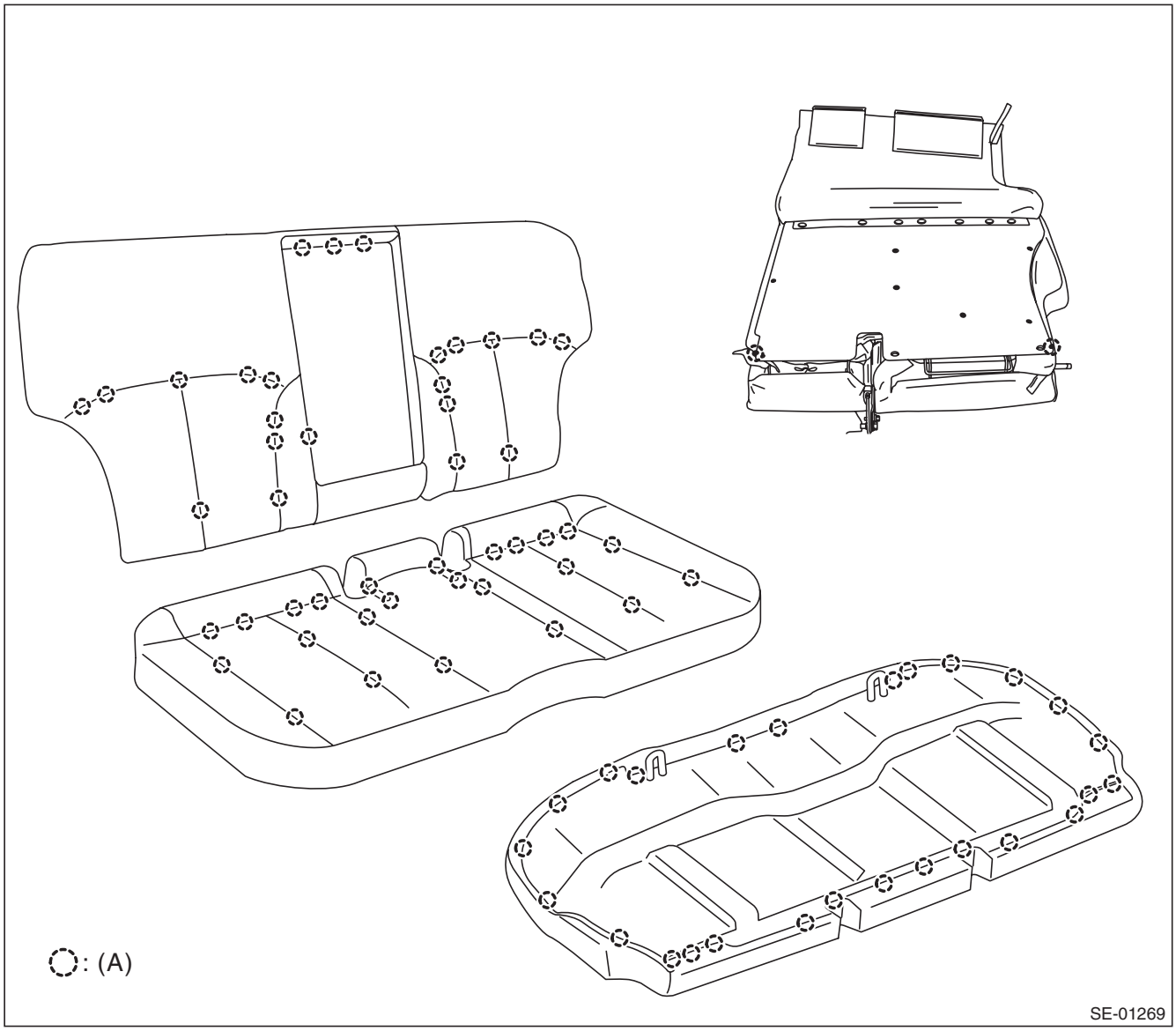

3) Assemble each part in the reverse order of disassembly.

NOTE:
- Do not contaminate or damage the cover.
- While installing the hog rings, prevent the seat from getting wrinkled.

Tightening torque:
Refer to "COMPONENT" of "General Description".
Sedan model: <Ref. to SE-7, REAR SEAT (SEDAN MODEL), COMPONENT, General Description.>
OUTBACK model: <Ref. to SE-8, REAR SEAT (OUTBACK MODEL), COMPONENT, General Description.>

4) Before installation, check the following items.
- No break and fray on seat cover.
- No fray or deformation on each wire cable.

5) Install each part in the reverse order of removal.

GETtheMANUALS.org

4. Power Seat System

A: REMOVAL

CAUTION:
When removing the front seat, Disconnect the ground cable from battery before disconnecting the side airbag module harness connector, and wait for 60 seconds before starting the operation.

1. POWER SEAT SWITCH

1) Remove the seat from vehicle. <Ref. to SE-10, REMOVAL, Front Seat.>
2) Remove the seat side cover OUT.
   (1) Release the claw in the rear section of the seat side cover.
   (2) Release the claw in the upper section of the seat side cover.
   (3) Remove the clip and release the claw in the front section of the seat side cover
   (4) Disconnect the power seat switch and lumber switch connectors and remove the seat side cover OUT.

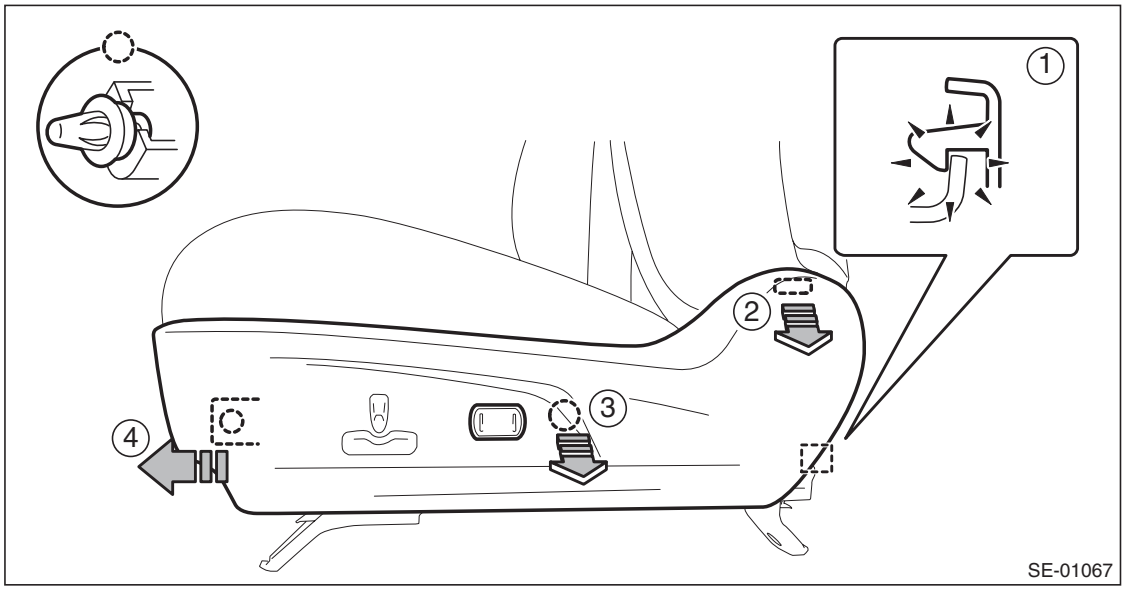

3) Remove the screws to remove the power seat switch assembly.

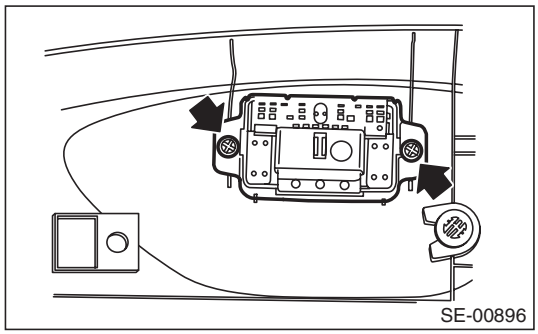

2. LUMBAR SWITCH

1) Remove the seat from vehicle. <Ref. to SE-10, REMOVAL, Front Seat.>
2) Remove the seat side cover OUT.
   (1) Release the claw in the rear section of the seat side cover.
   (2) Release the claw in the upper section of the seat side cover.
   (3) Remove the clip and release the claw in the front section of the seat side cover

GETtheMANUALS.org

(4) Disconnect the power seat switch and lumber switch connectors and remove the seat side cover OUT.

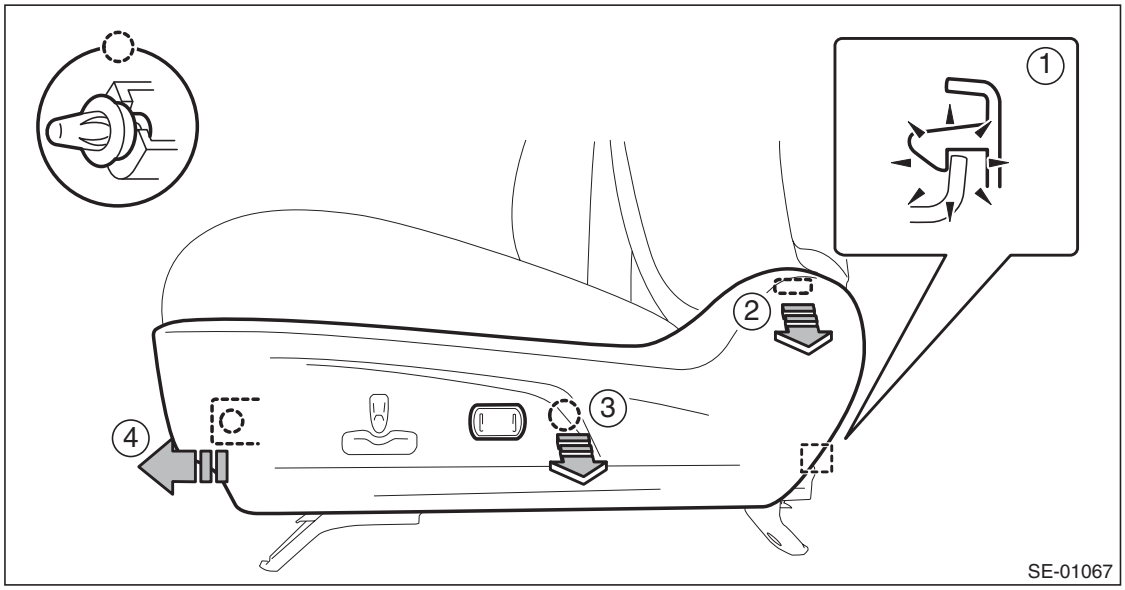

3) Disconnect the connector and remove the lumbar switch assembly.

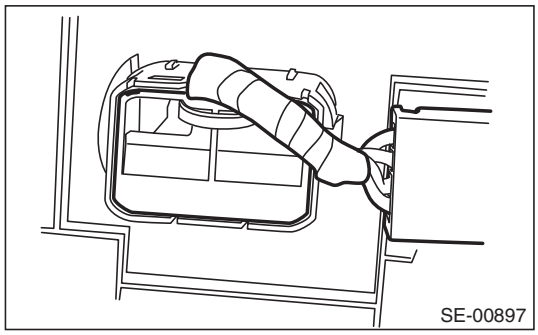

B: INSTALLATION

Install each part in the reverse order of removal.

C: INSPECTION

1. WIRING DIAGRAM

Refer to “Power Seat System” in the wiring diagram. <Ref. to WI-198, WIRING DIAGRAM, Power Seat System.>

2. TROUBLE SYMPTOM

Symptoms	Criteria
All functions do not operate. <Ref. to SE-61, ALL FUNCTIONS DO NOT OPERATE., INSPECTION, Power Seat System.>	• POWER SEAT SWITCH • LUMBAR SWITCH • Power seat harness • Body harness
A part of function does not operate. <Ref. to SE-62, SOME MOTORS DO NOT OPERATE., INSPECTION, Power Seat System.>	• POWER SEAT SWITCH • LUMBAR SWITCH • Power seat harness • Relevant motor

GETtheMANUALS.org

3. CHECK POWER SEAT SWITCH

Measure resistance between terminals while operating each switch.

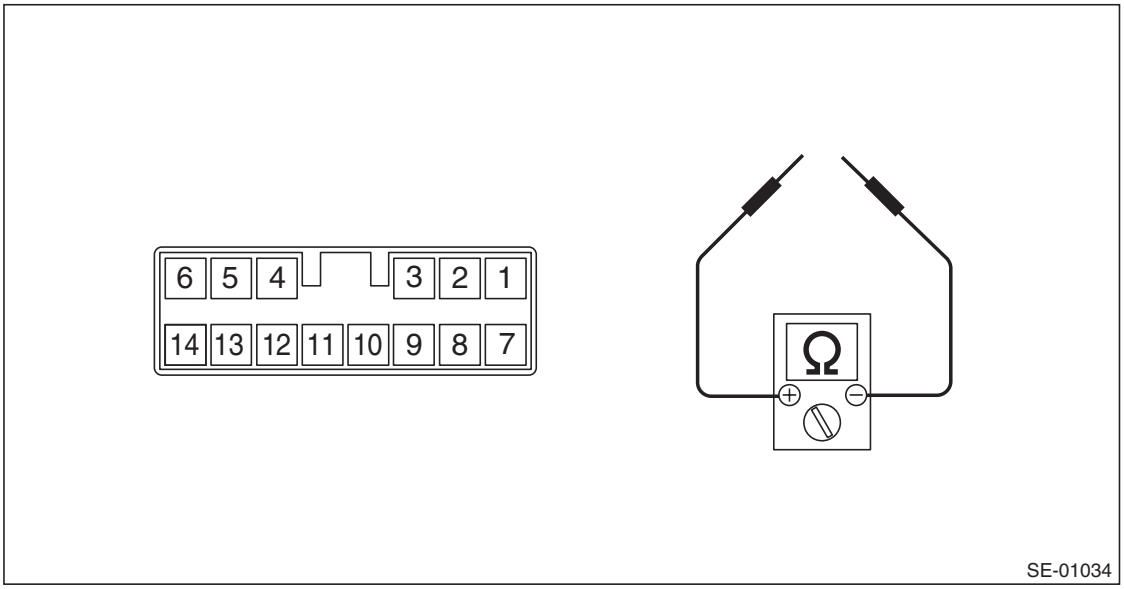

- Driver's seat

Switch position	Terminal No.	Standard
Slide forward	7 and 14 8 and 13	Less than 10 Ω
Slide rearward	7 and 13 8 and 14	Less than 10 Ω
Tilt up	7 and 2 8 and 1	Less than 10 Ω
Tilt down	7 and 1 8 and 2	Less than 10 Ω
Lifter up	7 and 5 8 and 6	Less than 10 Ω
Lifter down	7 and 6 8 and 5	Less than 10 Ω
Reclining forward	7 and 3 8 and 4	Less than 10 Ω
Reclining rearward	7 and 4 8 and 3	Less than 10 Ω

- Passenger's seat

Switch position	Terminal No.	Standard
Slide forward	7 and 13 8 and 14	Less than 10 Ω
Slide rearward	7 and 14 8 and 13	Less than 10 Ω
Reclining forward	7 and 4 8 and 3	Less than 10 Ω
Reclining rearward	7 and 3 8 and 4	Less than 10 Ω

Replace the switch if the inspection result is not within the standard value.

GETtheMANUALS.org

4. CHECK LUMBAR SWITCH

Measure resistance between terminals while operating each switch.

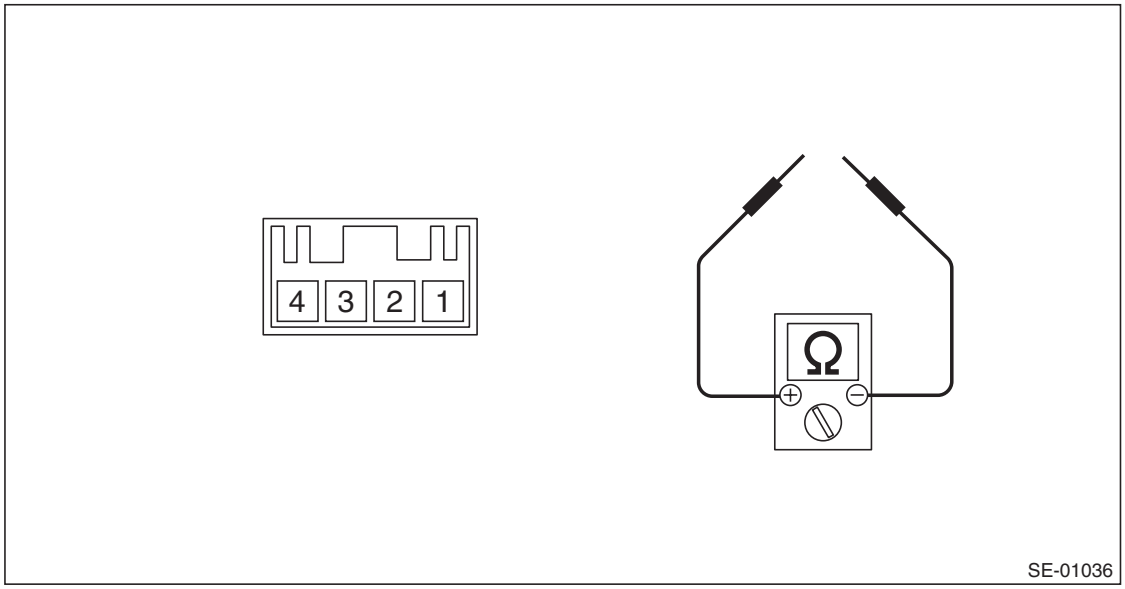

Switch position	Terminal No.	Standard
Lumbar forward	1 and 4 2 and 3	Less than 10 Ω
Lumbar backward	1 and 3 2 and 4	Less than 10 Ω

Replace the switch if the inspection result is not within the standard value.

GETtheMANUALS.org

5. ALL FUNCTIONS DO NOT OPERATE

Step		Check	Yes	No
1	**CHECK SEAT FUNCTIONS.** Operate each power seat switch and check that each power seat function operates normally.	Does all function fails to operate?	Go to step **2**.	Check the motor which does not operate. <Ref. to SE-62, SOME MOTORS DO NOT OPERATE., INSPECTION, Power Seat System.>
2	**CHECK FUSE.** Check the power seat fuse inside the fuse box.	Is the fuse blown out?	Replace the appropriate fuse.	Go to step **3**.
3	**CHECK POWER SUPPLY CIRCUIT.** 1) Disconnect the connector of power seat switch assembly. 2) Measure the voltage between harness connector and chassis ground. ***Connector & terminal*** ***Driver's seat*** ***(R369) No. 7 (+) — Chassis ground (–):*** ***Passenger's seat*** ***(R190) No. 7 (+) — Chassis ground (–):***	Is the voltage 10 V or more?	Go to step **4**.	Check body harness.
4	**CHECK POWER SUPPLY CIRCUIT.** Measure the resistance between power seat switch harness connector and chassis ground. ***Connector & terminal*** ***Driver's seat*** ***(R369) No. 8 — Chassis ground:*** ***Passenger's seat*** ***(R190) No. 8 — Chassis ground:***	Is the resistance less than 10 Ω?	Replace the power seat switch assembly.	Check body harness.

GETtheMANUALS.org

6. SOME MOTORS DO NOT OPERATE

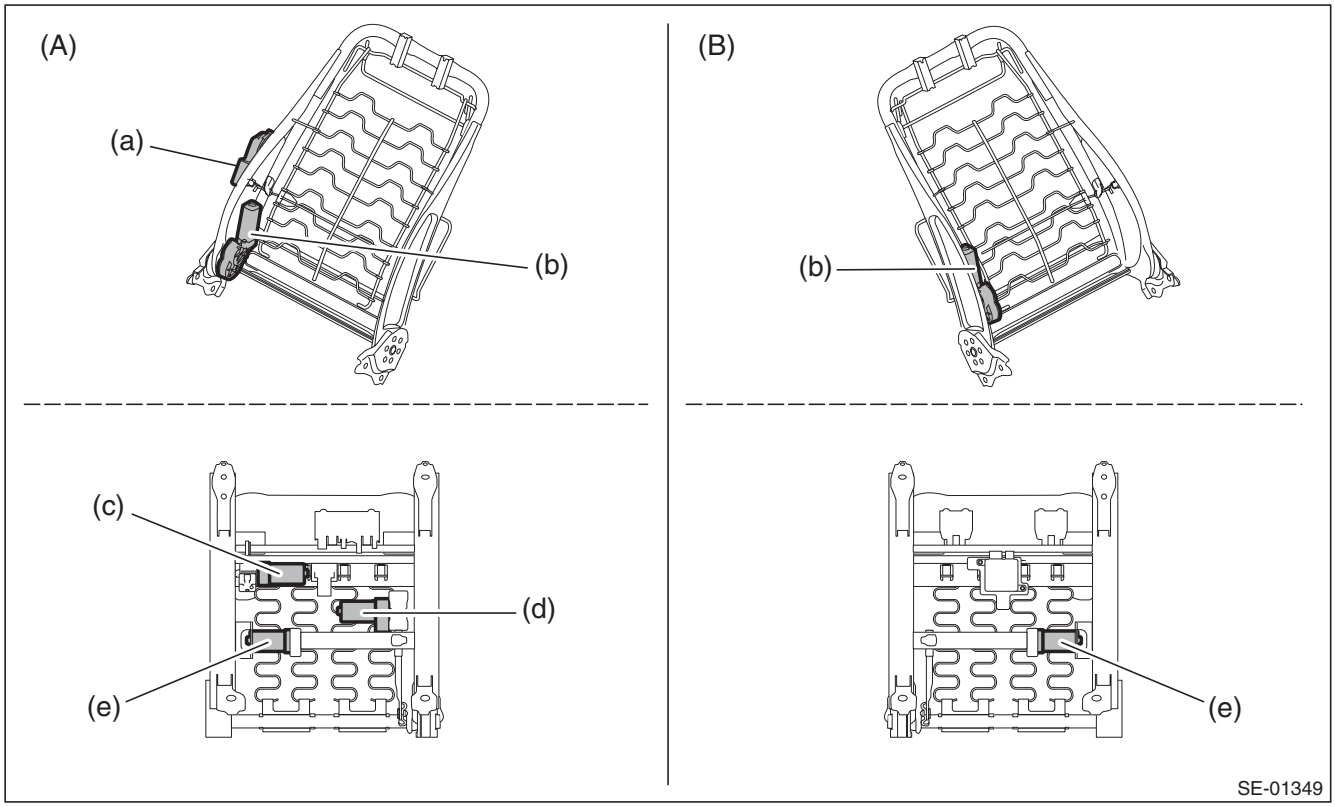

(A) Driver's seat
(B) Passenger's seat

(a) Lumber motor
(b) Reclining motor
(c) Tilt motor
(d) Lifter motor
(e) Slide motor

- Slide operation failure

Step		Check	Yes	No
1	**CHECK SWITCH.** 1) Disconnect the connector of power seat switch assembly. 2) Measure the resistance between connector terminals when moving the switch to slide forward and slide backward. <Ref. to SE-59, CHECK POWER SEAT SWITCH, INSPECTION, Power Seat System.>	Is there any problem on the inspection result?	Go to step **2**.	Replace the power seat switch assembly.
2	**CHECK HARNESS.** 1) Disconnect the power seat switch connector and slide motor connector. 2) Measure the resistance between power seat switch connector and slide motor connector. ***Connector & terminal*** ***Driver's seat*** ***(R370) No. 2 — (R369) No. 13:*** ***(R370) No. 1 — (R369) No. 14:*** ***Passenger's seat*** ***(R192) No. 2 — (R190) No. 13:*** ***(R192) No. 1 — (R190) No. 14:***	Is the resistance less than 10 Ω?	Go to step **3**.	Check power seat harness.

GETtheMANUALS.org

Step		Check	Yes	No
3	**CHECK SLIDE MOTOR.** 1) Connect the power seat switch connector and slide motor connector. 2) Apply 12 V to the slide motor and check the motor rotation. ***Connector & terminal*** ***Driver's seat*** ***(R369) No. 13 (+) — (R369) No. 14 (–):*** ***(R369) No. 14 (+) — (R369) No. 13 (–):*** ***Passenger's seat*** ***(R190) No. 13 (+) — (R190) No. 14 (–):*** ***(R190) No. 14 (+) — (R190) No. 13 (–):***	Does the motor rotate normally?	Check for temporary poor contact or mechanical trouble in slide rail.	Slide motor problem. Replace the seat cushion frame assembly.

- Malfunction of tilt operation

Step		Check	Yes	No
1	**CHECK SWITCH.** 1) Disconnect the connector of power seat switch assembly. 2) Measure the resistance between connector terminals when moving the switch to tilt up and tilt down. <Ref. to SE-59, CHECK POWER SEAT SWITCH, INSPECTION, Power Seat System.>	Is there any problem on the inspection result?	Go to step **2**.	Replace the power seat switch assembly.
2	**CHECK HARNESS.** 1) Disconnect the power seat switch connector and tilt motor connector. 2) Measure the resistance between power seat switch connector and tilt motor connector. ***Connector & terminal*** ***Driver's seat*** ***(R372) No. 2 — (R369) No. 1:*** ***(R372) No. 1 — (R369) No. 2:***	Is the resistance less than 10 Ω?	Go to step **3**.	Check power seat harness.
3	**CHECK TILT MOTOR.** 1) Connect the power seat switch connector and tilt motor connector. 2) Apply 12 V to the tilt motor and check the motor rotation. ***Connector & terminal*** ***Driver's seat*** ***(R369) No. 1 (+) — (R369) No. 2 (–):*** ***(R369) No. 2 (+) — (R369) No. 1 (–):***	Does the motor rotate normally?	Check for temporary poor contact or mechanical trouble in tilt mechanism.	Tilt motor problem. Replace the seat cushion frame assembly.

- Malfunction of lifter operation

Step		Check	Yes	No
1	**CHECK SWITCH.** 1) Disconnect the connector of power seat switch assembly. 2) Measure the resistance between connector terminals when moving the switch to lifter up and lifter down. <Ref. to SE-59, CHECK POWER SEAT SWITCH, INSPECTION, Power Seat System.>	Is there any problem on the inspection result?	Go to step **2**.	Replace the power seat switch assembly.

GETtheMANUALS.org

	Step	Check	Yes	No
2	**CHECK HARNESS.** 1) Disconnect the power seat switch connector and lifter motor connector. 2) Measure the resistance between power seat switch connector and lifter motor connector. ***Connector & terminal*** ***Driver's seat*** ***(R371) No. 2 — (R369) No. 6:*** ***(R371) No. 1 — (R369) No. 5:***	Is the resistance less than 10 Ω?	Go to step **3**.	Check power seat harness.
3	**CHECK LIFTER MOTOR.** 1) Connect the power seat switch connector and lifter motor connector. 2) Apply 12 V voltage to the lifter motor and check the motor rotation. ***Connector & terminal*** ***Driver's seat*** ***(R369) No. 6 (+) — (R369) No. 5 (–):*** ***(R369) No. 5 (+) — (R369) No. 6 (–):***	Does the motor rotate normally?	Check for temporary poor contact or mechanical trouble in lifter mechanism.	Lifter motor problem. Replace the seat cushion frame assembly.

- Malfunction of reclining operation

	Step	Check	Yes	No
1	**CHECK SWITCH.** 1) Disconnect the connector of power seat switch assembly. 2) Measure the resistance between connector terminals when moving the switch to reclining forward and reclining backward. <Ref. to SE-59, CHECK POWER SEAT SWITCH, INSPECTION, Power Seat System.>	Is there any problem on the inspection result?	Go to step **2**.	Replace the power seat switch assembly.
2	**CHECK HARNESS.** 1) Disconnect the power seat switch connector and reclining motor connector. 2) Measure the resistance between power seat switch connector and reclining motor connector. ***Connector & terminal*** ***Driver's seat*** ***(R375) No. 2 — (R369) No. 4:*** ***(R375) No. 1 — (R369) No. 3:*** ***Passenger's seat*** ***(R368) No. 2 — (R190) No. 3:*** ***(R368) No. 1 — (R190) No. 4:***	Is the resistance less than 10 Ω?	Go to step **3**.	Check power seat harness.
3	**CHECK RECLINING MOTOR.** 1) Connect the power seat switch connector and reclining motor connector. 2) Apply 12 V voltage to the reclining motor and check the motor rotation. ***Connector & terminal*** ***Driver's seat*** ***(R369) No. 4 (+) — (R369) No. 3 (–):*** ***(R369) No. 3 (+) — (R369) No. 4 (–):*** ***Passenger's seat*** ***(R190) No. 4 (+) — (R190) No. 3 (–):*** ***(R190) No. 3 (+) — (R190) No. 4 (–):***	Does the motor rotate normally?	Check for temporary poor contact or mechanical trouble in reclining hinge.	Reclining motor problem. Replace the backrest frame assembly.

GETtheMANUALS.org

- Malfunction of lumbar operation

Step		Check	Yes	No
1	**CHECK SWITCH.** 1) Disconnect the connector of lumbar switch assembly. 2) Measure the resistance between connector terminals when moving the switch to lumbar forward and lumbar backward. <Ref. to SE-60, CHECK LUMBAR SWITCH, INSPECTION, Power Seat System.>	Is there any problem on the inspection result?	Go to step **2**.	Replace the lumbar switch assembly.
2	**CHECK HARNESS.** 1) Disconnect the lumbar switch connector and lumbar motor connector. 2) Measure the resistance between lumbar switch connector and lumbar motor connector. ***Connector & terminal*** ***Driver's seat*** ***(R379) No. 1 — (R376) No. 4:*** ***(R379) No. 2 — (R376) No. 3:***	Is the resistance less than 10 Ω?	Go to step **3**.	Check power seat harness.
3	**CHECK LUMBAR MOTOR.** 1) Connect the lumbar switch connector and lumbar motor connector. 2) Apply 12 V voltage to the lumbar motor and check the motor rotation. ***Connector & terminal*** ***Driver's seat*** ***(R376) No. 4 (+) — (R376) No. 3 (–):*** ***(R376) No. 3 (+) — (R376) No. 4 (–):***	Does the motor rotate normally?	Check for temporary poor contact or mechanical trouble in lumbar mechanism.	Lumbar motor problem. Replace the backrest frame assembly.

GETtheMANUALS.org

5. Seat Heater System

A: REMOVAL

1. SEAT HEATER UNIT

1) Remove the front seats. <Ref. to SE-10, REMOVAL, Front Seat.>
2) Remove the backrest cover of front seat and seat cushion cover. <Ref. to SE-12, DISASSEMBLY, Front Seat.>
3) Remove the seat heater unit.

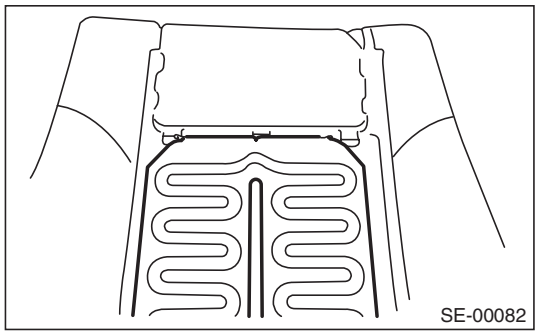

2. SEAT HEATER SWITCH

1) Disconnect the ground cable from battery.
2) Remove the console front cover assembly.

- MT model
  1. Remove the shift knob.
  2. Release the clips and claws, then pull up the console front cover assembly.

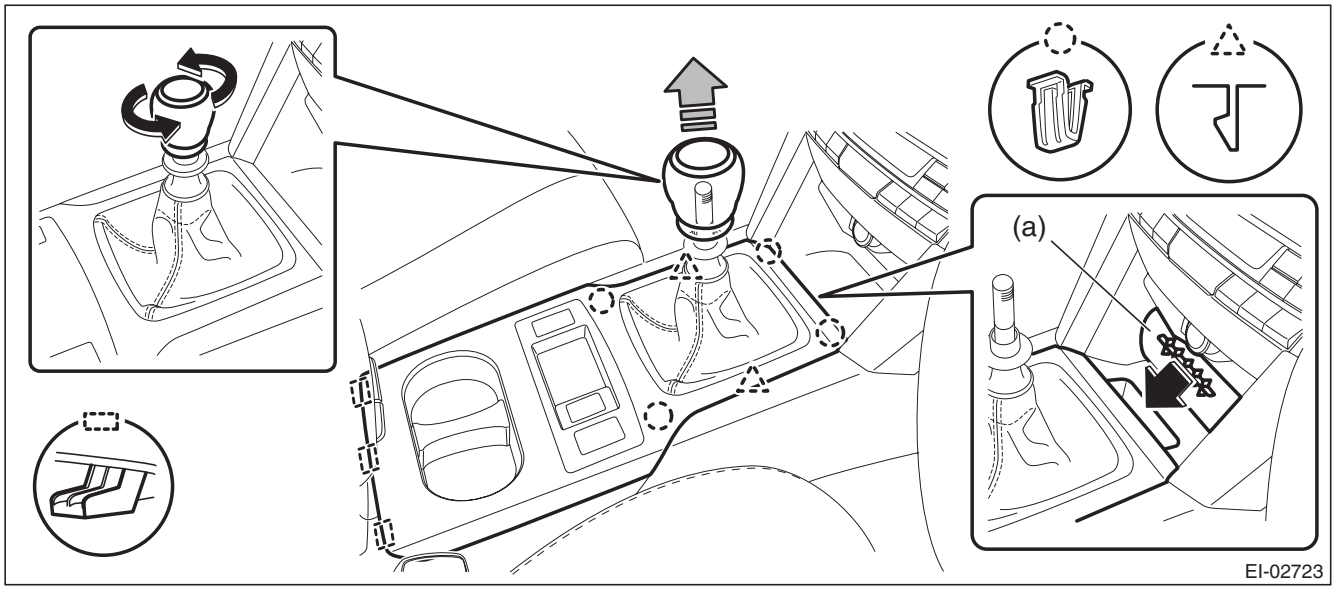

NOTE:
Turn over the front center pocket mat (a) and pull up the console front cover from the slit.

3. Disconnect the harness connector and remove the console front cover assembly.

GETtheMANUALS.org

- AT model
  1. Remove the select lever knob.
     a. Lower the cover grip AT.
     b. Remove the clamp grip pin, then remove the select lever knob.
  2. Release the clips and claws, then pull up the console front cover assembly.

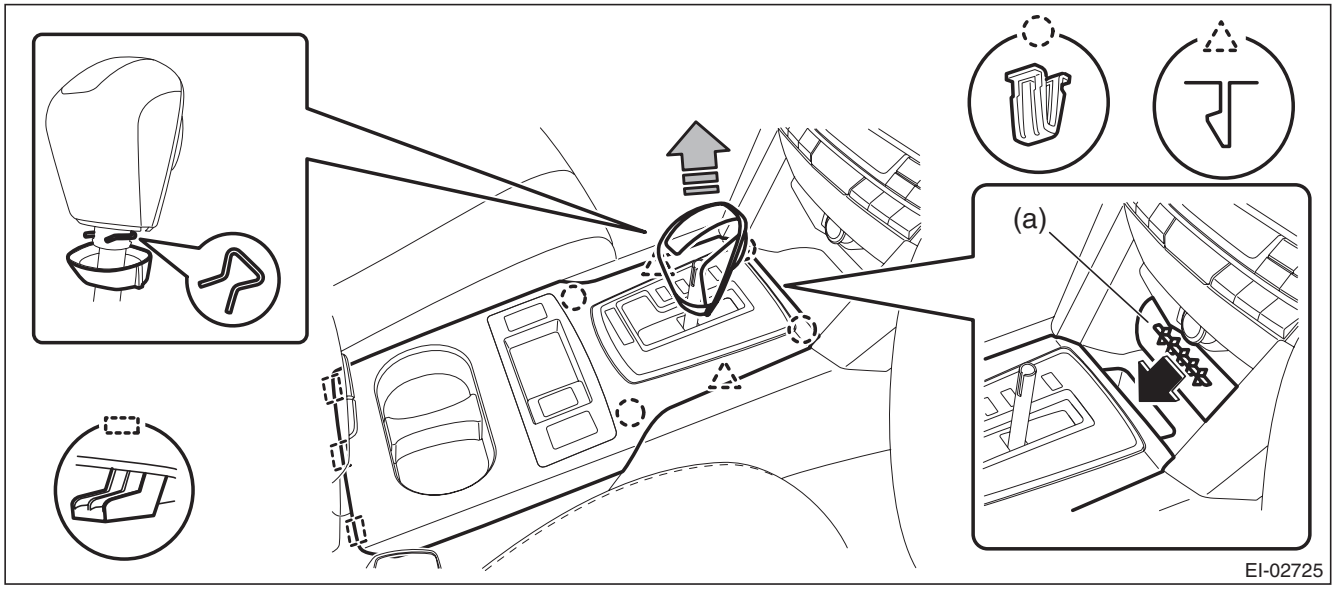

NOTE:
Turn over the front center pocket mat (a) and pull up the console front cover from the slit.

3. Disconnect the harness connector and remove the console front cover assembly.

3) Release the claws and remove the seat heater switch from the back of console front cover.

3. SEAT HEATER RELAY AND FUSE

1) Disconnect the ground cable from battery.
2) Remove the instrument panel lower cover.
   (1) Remove the clips, and remove the instrument panel side cover LH.

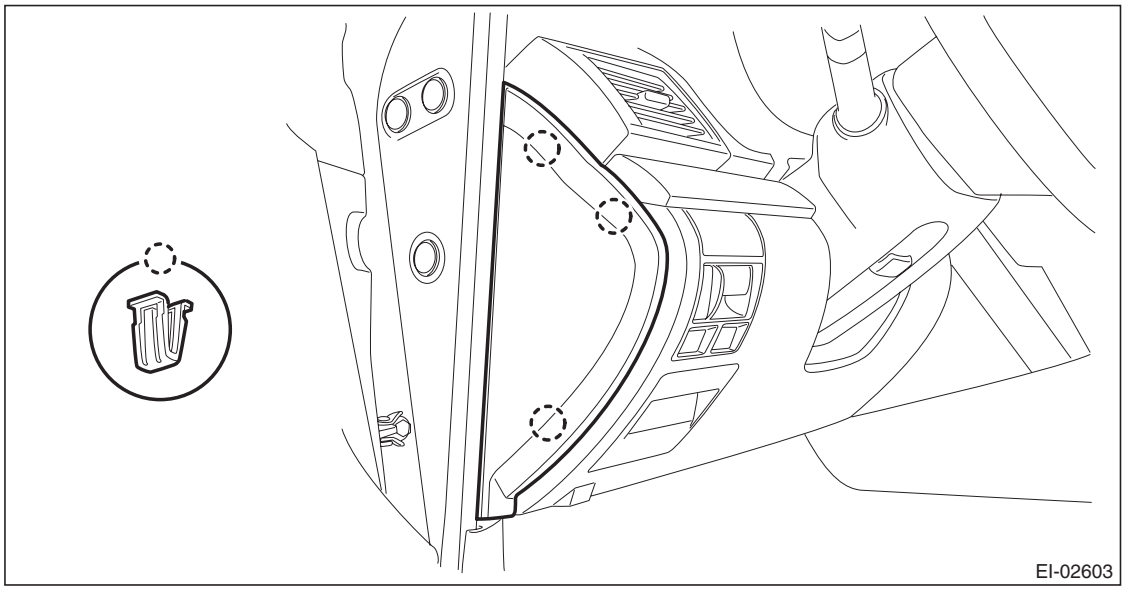

GETtheMANUALS.org

(2) Remove the clips and data link connector, and remove the instrument panel lower cover under.

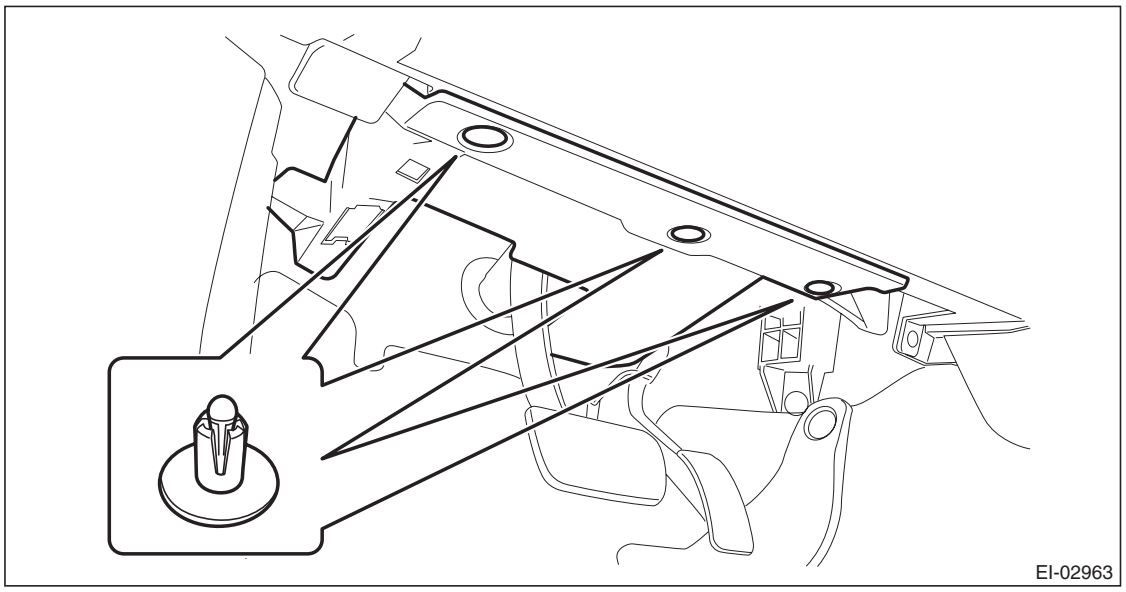

(3) Remove the screws and clips and release the claws, and remove the instrument panel lower cover while disconnecting the harness connectors.

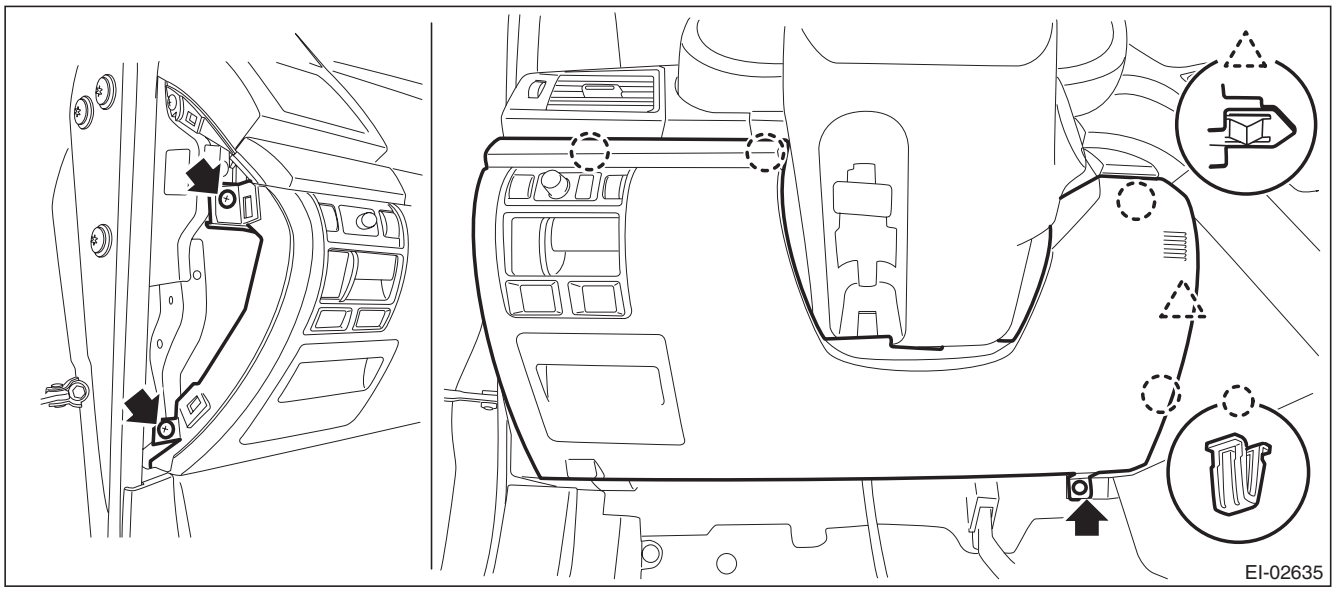

GETtheMANUALS.org

3) Remove the seat heater relay and fuse.
   (1) Remove the joint box bolts.
   (2) Remove the seat heater relay

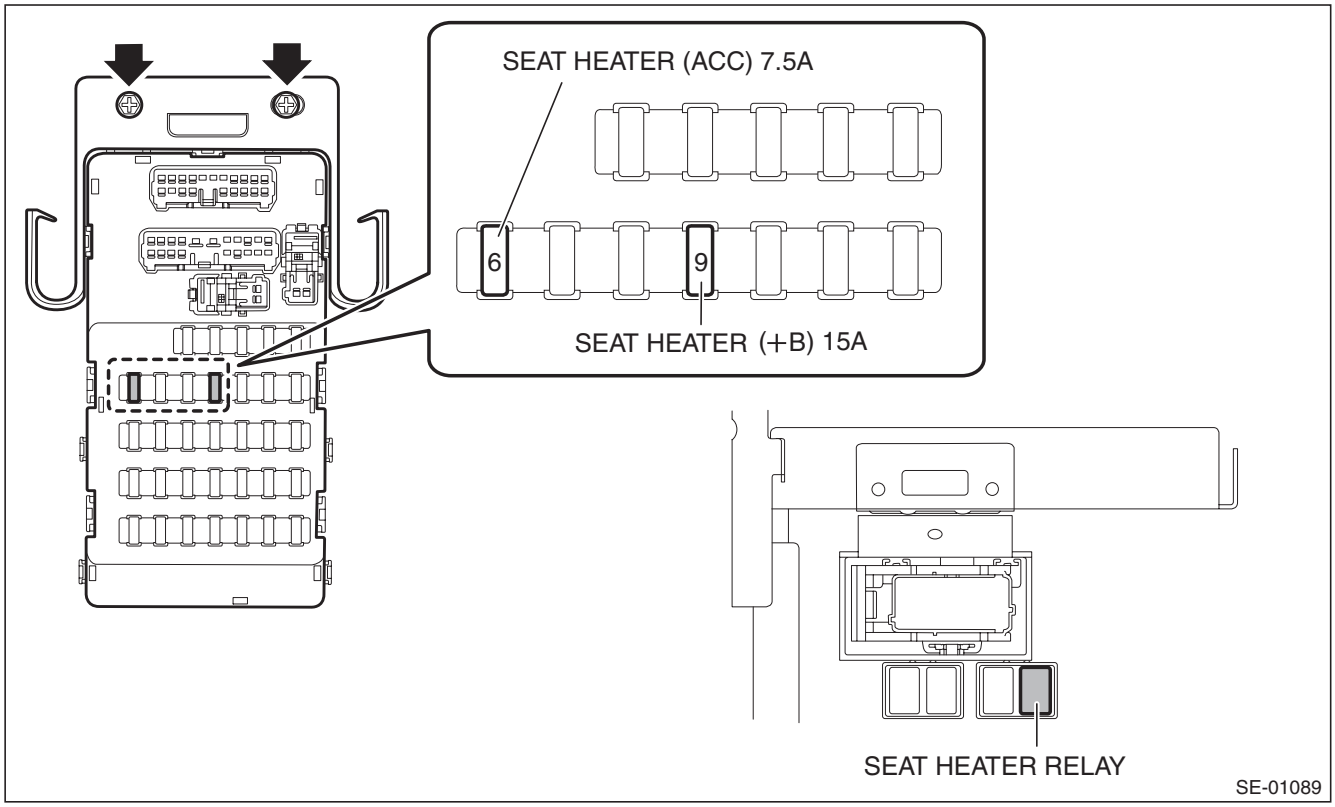

B: INSTALLATION

Install each part in the reverse order of removal.

C: INSPECTION

1. WIRING DIAGRAM

Refer to “Seat Heater System” in the wiring diagram. <Ref. to WI-234, WIRING DIAGRAM, Seat Heater System.>

2. DIAGNOSTIC CHART

Symptoms	Repair order
Seat heater does not operate.	1. Check the fuse. <Ref. to SE-69, CHECK SEAT HEATER FUSE, INSPECTION, Seat Heater System.>
	2. Check the seat heater relay. <Ref. to SE-70, CHECK SEAT HEATER RELAY, INSPECTION, Seat Heater System.>
	3. Check the seat heater switch. <Ref. to SE-70, CHECK SEAT HEATER SWITCH, INSPECTION, Seat Heater System.>
	4. Check the power supply and ground circuit for the seat heater system. <Ref. to SE-70, CHECK POWER SUPPLY AND GROUND CIRCUIT, INSPECTION, Seat Heater System.>

3. CHECK SEAT HEATER FUSE

Remove the seat heater fuse and inspect visually.
Is the fuse blown out?
- **Yes** → Replace the fuse.
- **No** → Check the power supply and ground circuits.

GETtheMANUALS.org

4. CHECK SEAT HEATER RELAY

1) Remove the seat heater relay from the relay holder.
2) Measure the resistance between seat heater relay terminals.

Preparation tool: Circuit tester

Terminal No.	Inspection conditions	Specification	Circuit
11 — 10	Always	1 MΩ or more	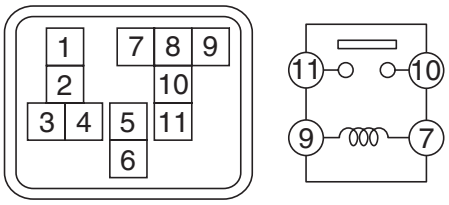
11 — 10	Apply battery voltage between terminals 9 — 7.	Less than 1 Ω	

3) Replace the seat heater relay if the inspection result is not within the standard value.

5. CHECK SEAT HEATER SWITCH

1) CHECK SEAT HEATER SWITCH
   (1) Turn the ignition switch to ON.
   (2) Measure the voltage between the seat heater switch and chassis ground when turning the switch to a position other than OFF.

Connector & terminal
LHD side seat
(R42) No. 4 (+) — Chassis ground (–):
RHD side seat
(R45) No. 4 (+) — Chassis ground (–):
Does the voltage fluctuate between 12 V ←→ 0 V?
- **Yes** → Harness faulty, open circuit of heater or thermostat faulty.
- **No** → Replace the seat heater switch.

6. CHECK POWER SUPPLY AND GROUND CIRCUIT

1) CHECK POWER SUPPLY CIRCUIT.
   (1) Disconnect the seat heater switch.
   (2) Turn the ignition switch to ON.
   (3) Measure the voltage between harness connector terminal and chassis ground.

Connector & terminal
Driver's seat
(R42) No. 4 (+) — Chassis ground (–):
Passenger's seat
(R45) No. 4 (+) — Chassis ground (–):
Is the voltage 12 V or more?
- **Yes** → Go to step 2.
- **No** → Check the harness between the seat heater switch and fuse.

GETtheMANUALS.org

2) CHECK GROUND CIRCUIT.
Measure the resistance between harness connector terminal and chassis ground.

Connector & terminal
- ***Driver seat (manual seat)***
  - ***(R42) No. 6 — Chassis ground:***
  - ***(R41) No. 1 — Chassis ground:***
- ***Passenger seat (manual seat)***
  - ***(R45) No. 6 — Chassis ground:***
  - ***(R44) No. 1 — Chassis ground:***
- ***Driver seat (power seat)***
  - ***(R42) No. 6 — Chassis ground:***
  - ***(R380) No. 1 — Chassis ground:***
- ***Passenger seat (power seat)***
  - ***(R45) No. 6 — Chassis ground:***
  - ***(R363) No. 1 — Chassis ground:***

Is the resistance less than 10 Ω?
- **Yes** → The power supply and ground circuits are normal.
- **No** → Repair the harness.

GETtheMANUALS.org

GETtheMANUALS.org

SECURITY AND LOCKS

SL

		Page
1.	General Description	2
2.	Relay and Fuse	8
3.	Door Lock Control System	9
4.	Keyless Entry System	14
5.	Security System	26
6.	Front Inner Remote	30
7.	Front Outer Handle	31
8.	Front Door Latch and Door Lock Actuator Assembly	34
9.	Rear Inner Remote	37
10.	Rear Outer Handle	38
11.	Rear Door Latch and Door Lock Actuator Assembly	41
12.	Rear Gate Opener Button	43
13.	Trunk Opener Switch	45
14.	Rear Gate Latch and Actuator Assembly	47
15.	Trunk Lid Latch and Actuator Assembly	49
16.	Front Hood Lock Assembly	51
17.	Remote Openers	54
18.	Ignition Key Lock	58
19.	Key Lock Cylinders	60
20.	Security Control Module	65
21.	Impact Sensor	66
22.	Keyless Entry Control Module	68
23.	Keyless Buzzer	70
24.	Body Integrated Unit	71
25.	Keyless Transmitter	72
26.	Transmitter	75
27.	Immobilizer Control Module	78
28.	Immobilizer Antenna	79

GETtheMANUALS.org

1. General Description

A: COMPONENT

1. DOOR LOCK ASSEMBLY

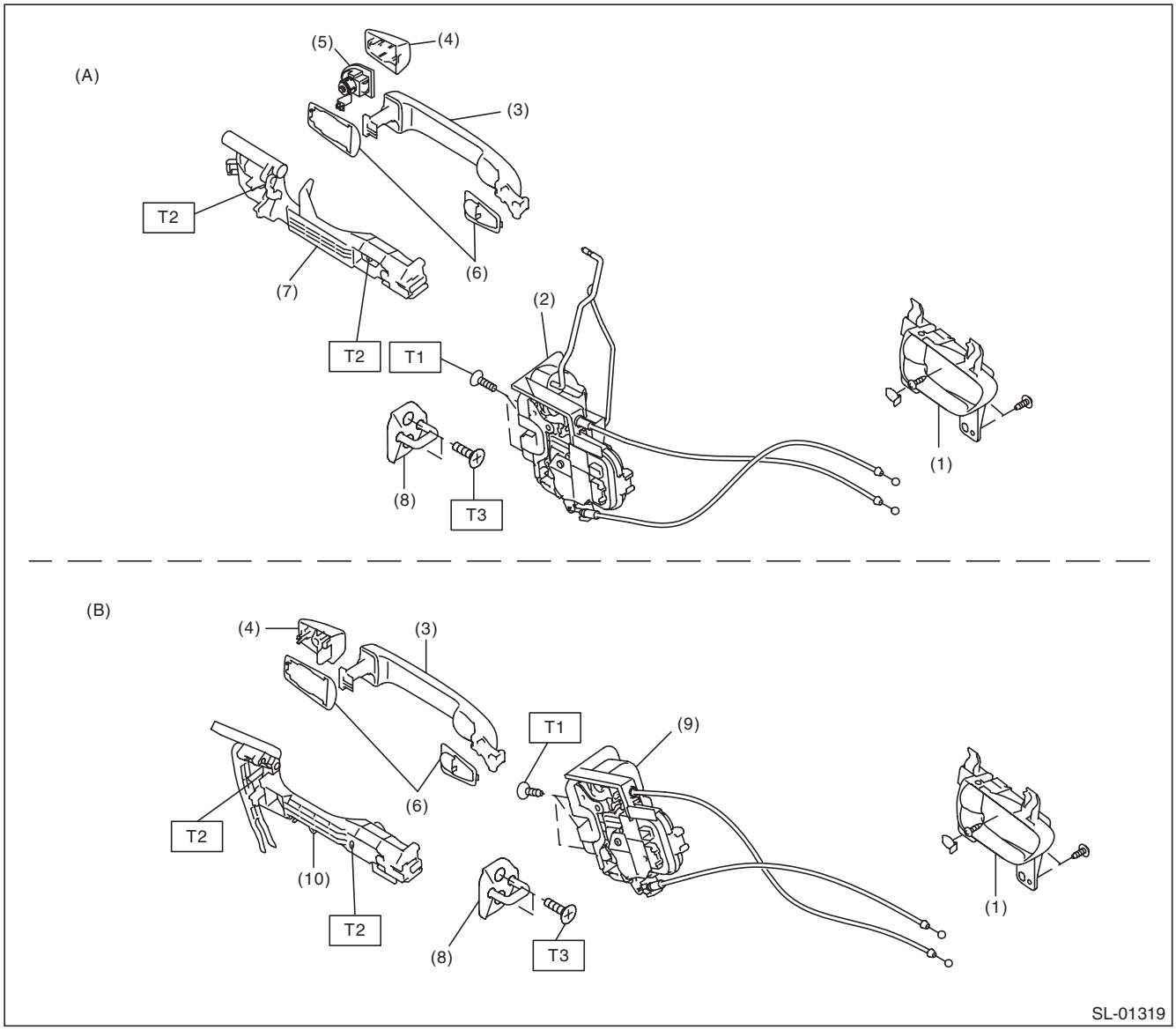

(A)	Front	(B)	Rear
(1)	Inner remote ASSY	(6)	Door outer handle spacer
(2)	Front door latch and door lock actuator ASSY	(7)	Front door outer handle frame ASSY
(3)	Door outer handle	(8)	Striker
(4)	Door outer handle cover	(9)	Rear door latch and door lock actuator ASSY
(5)	Key cylinder (driver's side only)	(10)	Rear door outer handle frame ASSY

Tightening torque:N·m (kgf-m, ft-lb)

T1: 6.5 (0.66, 4.8)

T2: 7.5 (0.76, 5.5)

T3: 18 (1.84, 13.3)

GETtheMANUALS.org

2. REAR GATE LOCK AND TRUNK LID LOCK

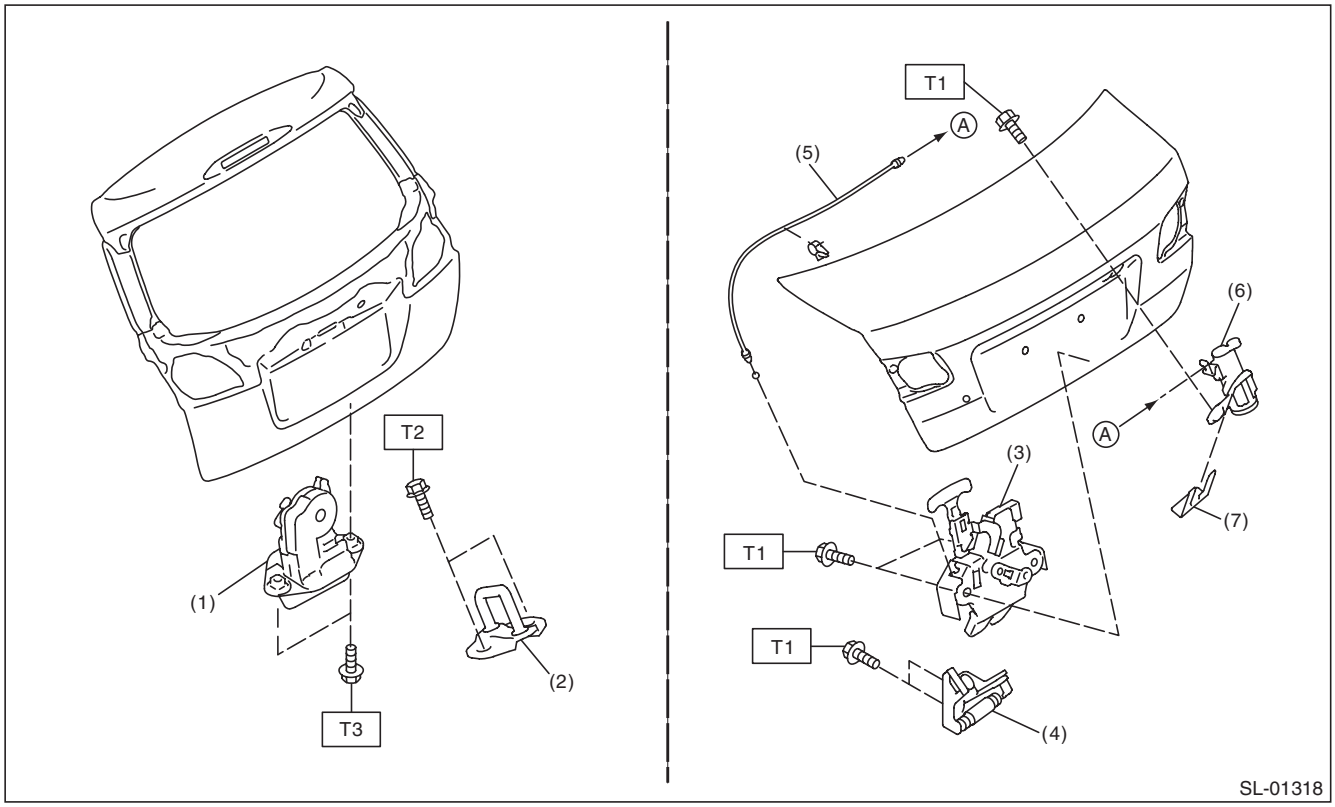

(1)	Rear gate latch and actuator ASSY	(5)	Cable	***Tightening torque:N·m (kgf-m, ft-lb)***
(2)	Rear gate striker	(6)	Key cylinder (trunk lid only)	***T1: 7.5 (0.76, 5.5)***
(3)	Trunk lid latch and actuator ASSY	(7)	Clip	***T2: 25 (2.55, 18.4)***
(4)	Trunk lid striker			***T3: 28 (2.86, 20.7)***

GETtheMANUALS.org

3. FRONT HOOD LOCK AND REMOTE OPENERS

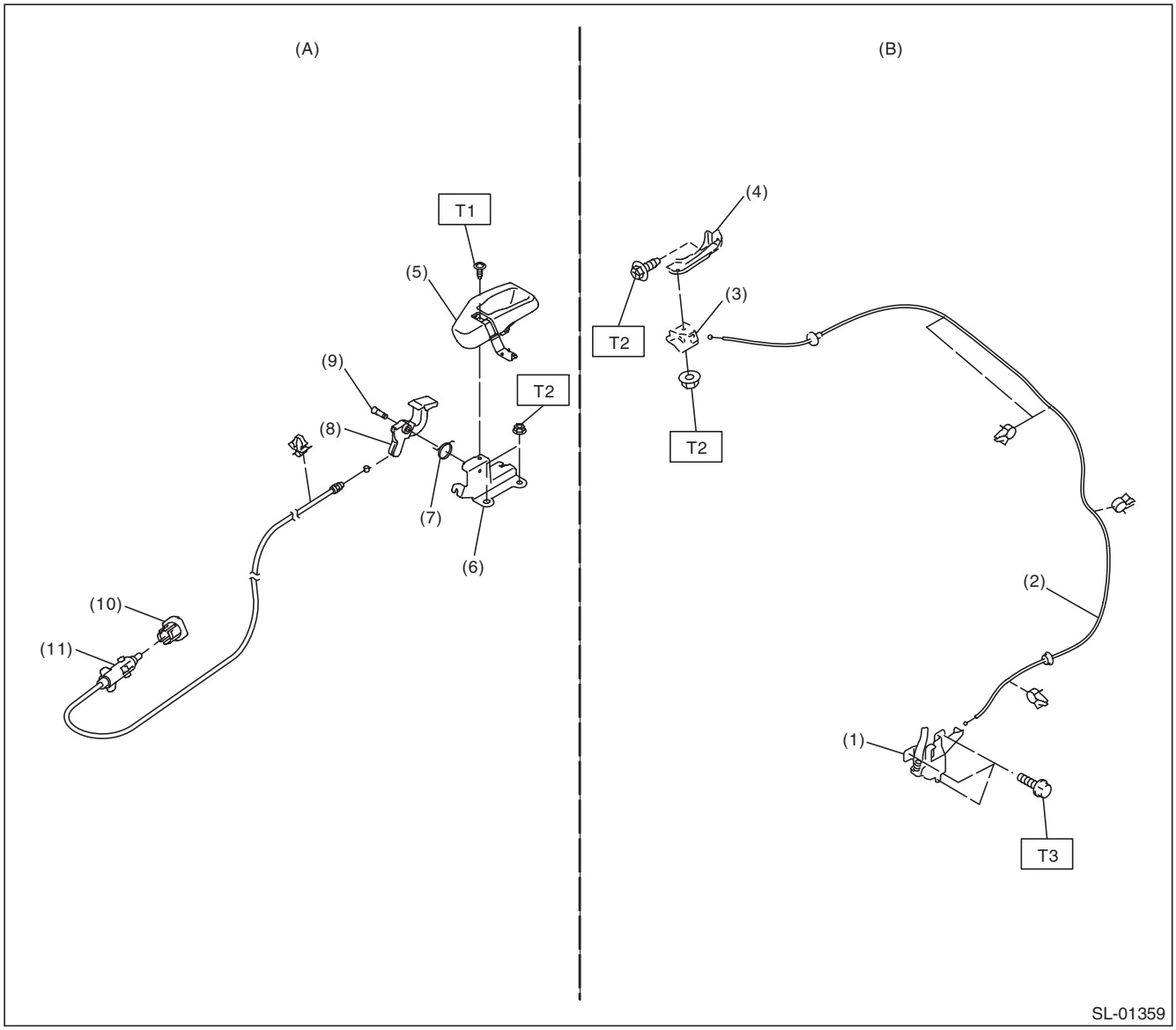

(A)	Fuel lock release	(B)	Hood lock release
(1)	Front hood lock ASSY	(7)	Spring
(2)	Cable	(8)	Pull handle ASSY
(3)	Lever ASSY	(9)	Pin
(4)	Bracket	(10)	Holder
(5)	Cover	(11)	Fuel lock
(6)	Bracket		

Tightening torque:N·m (kgf-m, ft-lb)
T1: 4.5 (0.46, 3.3)
T2: 7.5 (0.76, 5.5)
T3: 33 (3.36, 24.3)

GETtheMANUALS.org

4. KEYLESS ENTRY SYSTEM

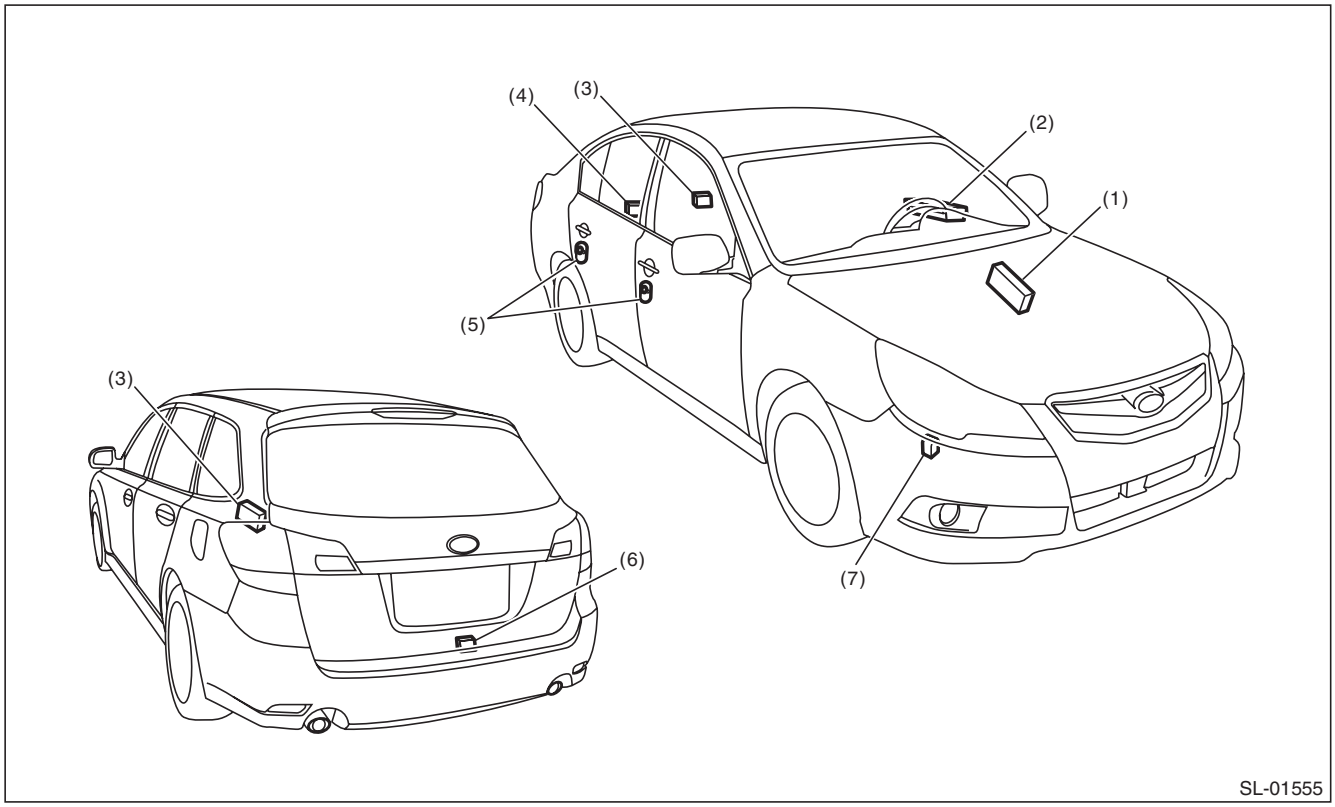

(1) Body integrated unit
(2) Power window main switch
(3) Keyless entry control module
(4) Trunk lid latch switch (sedan model)
(5) Door switch
(6) Rear gate latch switch (OUTBACK model)
(7) Keyless buzzer

GETtheMANUALS.org

5. SECURITY SYSTEM

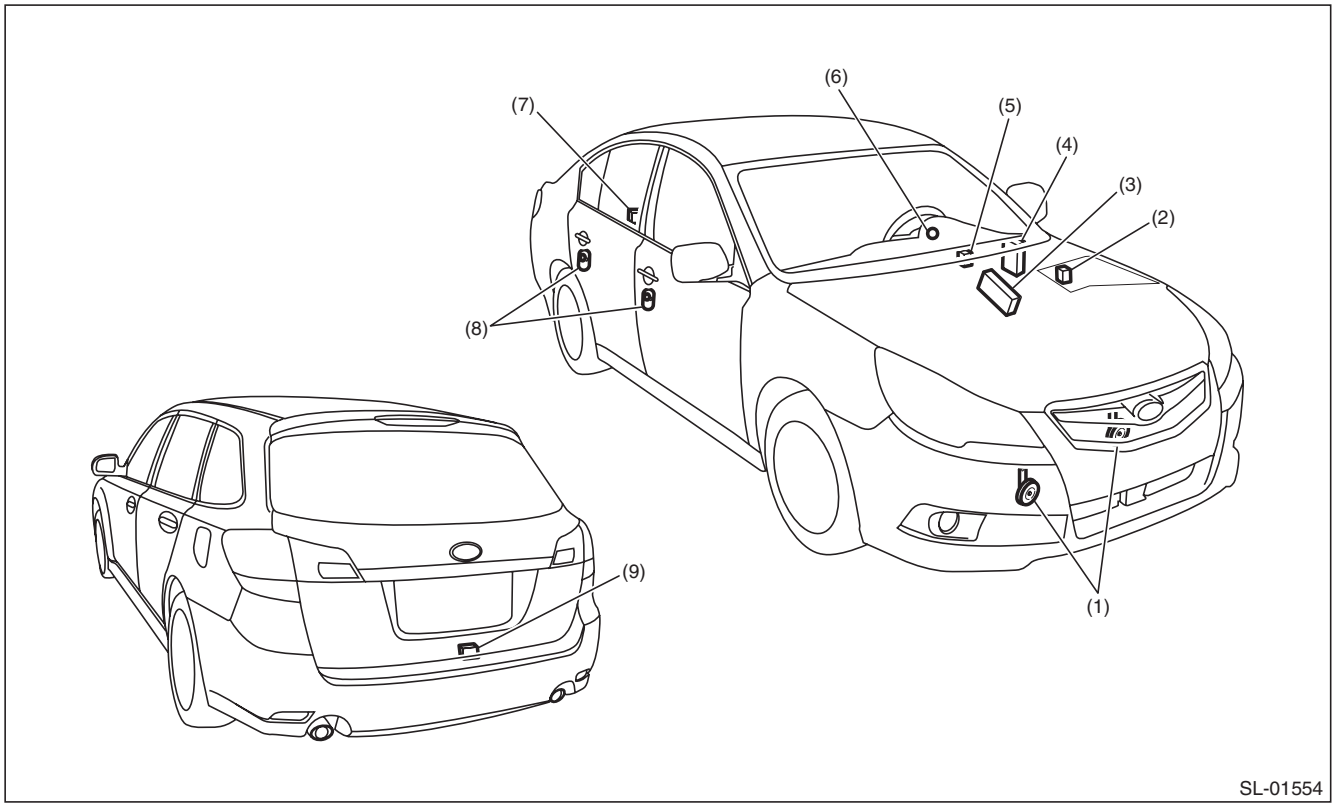

(1)	Horn	(4)	Impact sensor (driver's seat instrument panel side) (dealer option)	(7)	Trunk lid latch switch (sedan model)
(2)	Horn relay (in main fuse box)	(5)	Turn signal and hazard module	(8)	Door switch
(3)	Body integrated unit	(6)	Security indicator light (in combination meter)	(9)	Rear gate latch switch (OUTBACK model)

B: CAUTION

- Before disassembling or reassembling parts, always disconnect the battery ground cable from battery. When replacing the audio, control module and other parts provided with memory functions, record the memory contents before disconnecting the battery ground cable. Otherwise, the memory is cleared.
- Reassemble the parts in the reverse order of disassembly procedure unless otherwise indicated.
- Connect the connectors securely during reassembly.
- After reassembly, make sure that the functional parts operate normally.
- If any immobilizer related part has been replaced, make sure to register the immobilizer.
- Do not use any electrical test equipment on the airbag system wiring harnesses and connector circuits.
- Be careful not to damage the airbag system wiring harness when servicing the ignition key cylinder.

GETtheMANUALS.org

C: PREPARATION TOOL

1. SPECIAL TOOL

ILLUSTRATION	TOOL NUMBER	DESCRIPTION	REMARKS
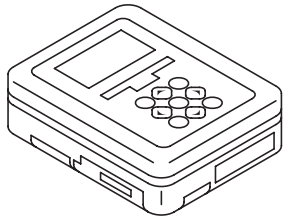 ST1B022XU0	1B022XU0	SUBARU SELECT MONITOR III KIT	Used for troubleshooting the electrical system.

2. GENERAL TOOL

TOOL NAME	REMARKS
Circuit tester	Used for measuring resistance and voltage.
Drill	Used for replacing ignition key lock.
TORX® T30	Used for removing and installing the door outer handle.
Clip remover	Used for removing trim clip.

GETtheMANUALS.org

2. Relay and Fuse

A: LOCATION

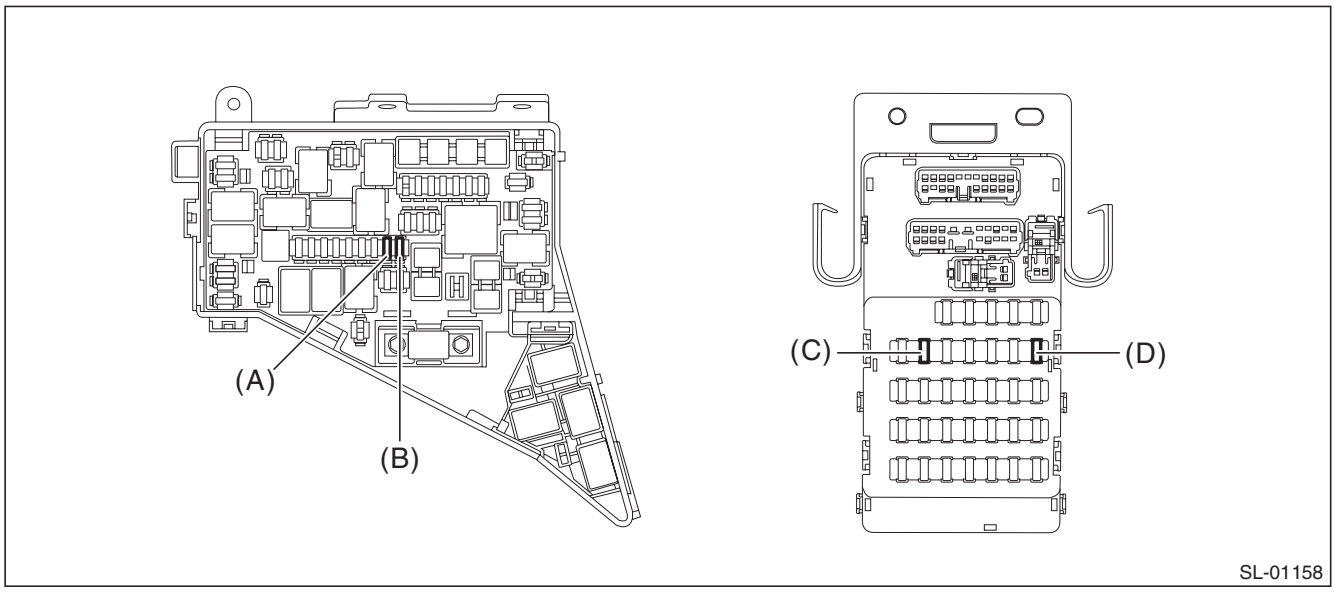

Main fuse box	Fuse 15A (K/L)	(A)
	Fuse 20A (K/L, SEC)	(B)
Relay & fuse box	Fuse 7.5A (SEC)	(C)
	Fuse 15A (SEC)	(D)

NOTE:
For other related fuses, refer to the wiring diagram. <Ref. to WI-15, Power Supply Circuit.>

B: INSPECTION

1. CHECK FUSE.

1) Remove the fuse and inspect visually.
2) If the fuse is blown out, replace the fuse.

NOTE:
If the fuse is blown again, check the system wiring harness.

GETtheMANUALS.org

3. Door Lock Control System

A: WIRING DIAGRAM

Refer to “Keyless Entry System” in the wiring diagram. <Ref. to WI-181, WIRING DIAGRAM, Keyless Entry System.>

B: ELECTRICAL SPECIFICATION

1. BODY INTEGRATED UNIT

Refer to “Control Module I/O Signal” of “BODY CONTROL SYSTEM (DIAGNOSTICS)” section. <Ref. to BC(diag)-7, ELECTRICAL SPECIFICATION, Control Module I/O Signal.>

C: INSPECTION

1. SYMPTOM CHART

Symptoms	Repair order	Reference
The door lock control system does not operate.	1. Remove and visually check the following fuses. • No. 7 (in fuse & relay box) • No. 10 (in main fuse box) • No. 19 (in main fuse box)	If the fuse is blown out, replace the fuse with a new part. When there is no defective with the fuse, check the power supply and ground circuit. <Ref. to SL-9, CHECK POWER SUPPLY AND GROUND CIRCUIT, INSPECTION, Door Lock Control System.>
	2. Check the power supply and ground circuit for body integrated unit.	<Ref. to SL-9, CHECK POWER SUPPLY AND GROUND CIRCUIT, INSPECTION, Door Lock Control System.>
	3. Check the door lock switch and the circuit.	<Ref. to SL-10, CHECK DOOR LOCK SWITCH, INSPECTION, Door Lock Control System.>
	4. Check the rear gate/trunk opener button and the circuit.	<Ref. to SL-11, CHECK REAR GATE/TRUNK OPENER BUTTON SWITCH CIRCUIT, INSPECTION, Door Lock Control System.>
	5. Check the door lock actuator and the circuit.	<Ref. to SL-12, CHECK DOOR LOCK ACTUATOR AND CIRCUIT., INSPECTION, Door Lock Control System.>
A specific door lock actuator does not operate.	Check the door lock actuator and circuit.	<Ref. to SL-12, CHECK DOOR LOCK ACTUATOR AND CIRCUIT., INSPECTION, Door Lock Control System.>

2. CHECK POWER SUPPLY AND GROUND CIRCUIT

Step		Check	Yes	No
1	**CHECK POWER SUPPLY.** 1) Disconnect the connector of body integrated unit. 2) Measure the voltage between body integrated unit connector and chassis ground. ***Connector & terminal*** ***(i84) No. 6 (+) — Chassis ground (–):*** ***(i171) No. 1 (+) — Chassis ground (–):*** ***(B281) No. 7 (+) — Chassis ground (–):***	Is the voltage 10 V or more?	Go to step **2**.	Check the harness for open or short circuit between body integrated unit and fuse.

GETtheMANUALS.org

	Step	Check	Yes	No
2	**CHECK GROUND CIRCUIT.** Measure the resistance between body integrated unit connector and chassis ground. ***Connector & terminal*** ***(i84) No. 1 — Chassis ground:*** ***(i171) No. 29 — Chassis ground:*** ***(B280) No. 1 — Chassis ground:*** ***(B281) No. 31 — Chassis ground:***	Is the resistance less than 10 Ω?	The power supply and ground circuit are OK.	Repair or replace the harness.

3. CHECK DOOR LOCK SWITCH

	Step	Check	Yes	No
1	**CHECK DOOR LOCK SWITCH.** 1) Prepare the Subaru Select Monitor kit. 2) Turn the ignition switch to ON (engine OFF) and run the "PC application for Subaru Select Monitor". 3) On «System Selection Menu» display, select {Integ. unit mode}. 4) Select {Current Data Display & Save}. 5) Select {Manual lock SW input}.	Does the display switch between OFF ←→ ON when each door lock switch is moved to LOCK?	Go to step **2**.	Go to step **3**.
2	**CHECK DOOR LOCK SWITCH.** From the condition in step 1), operate each door lock switch (driver's and passenger's) in the UNLOCK direction.	Does the display switch between OFF ←→ ON?	The door lock switch is OK.	Go to step **4**.
3	**CHECK DOOR LOCK SWITCH.** 1) Disconnect the door lock switch connector. 2) Check the continuity when the door lock switch is operated to the LOCK direction. ***Connector & terminal*** ***Driver's side (model without AUTO UP function)*** ***(D7) No. 2 — (D7) No. 3:*** ***Driver's side (model with AUTO UP function)*** ***(D95) No. 10 — (D7) No. 3:*** ***Passenger's side*** ***(D125) No. 4 — (D125) No. 5:***	Did the indicator change from "No continuity" (1 MΩ or more) to "Continuity exists" (less than 10 Ω)?	Go to step **4**.	Replace the power window main switch or door lock switch.
4	**CHECK DOOR LOCK SWITCH.** Check the continuity when the door lock switch is operated to the UNLOCK direction. ***Connector & terminal*** ***Driver's side (model without AUTO UP function)*** ***(D7) No. 1 — (D7) No. 3:*** ***Driver's side (model with AUTO UP function)*** ***(D95) No. 2 — (D7) No. 3:*** ***Passenger's side*** ***(D125) No. 2 — (D125) No. 5:***	Did the indicator change from "No continuity" (1 MΩ or more) to "Continuity exists" (less than 10 Ω)?	Go to step **5**.	Replace the power window main switch or door lock switch.
5	**CHECK HARNESS.** Measure the resistance between the door lock switch connector and chassis ground. ***Connector & terminal*** ***Driver's side*** ***(D7) No. 3 — Chassis ground:*** ***Passenger's side*** ***(D125) No. 5 — Chassis ground:***	Is the resistance less than 10 Ω?	Go to step **6**.	Repair or replace the harness.

GETtheMANUALS.org

Step		Check	Yes	No
6	**CHECK HARNESS.** 1) Disconnect the body integrated unit connector. 2) Measure the resistance between body integrated unit connector and door lock switch connector. ***Connector & terminal*** ***Driver's side (model without AUTO UP function)*** ***(D7) No. 2 — (i84) No. 9:*** ***(D7) No. 1 — (i84) No. 20:*** ***Driver's side (model with AUTO UP function)*** ***(D95) No. 10 — (i84) No. 9:*** ***(D95) No. 2 — (i84) No. 20:*** ***Passenger's side*** ***(D125) No. 4 — (i84) No. 9:*** ***(D125) No. 2 — (i84) No. 20:***	Is the resistance less than 10 Ω?	Replace the body integrated unit. <Ref. to SL-71, Body Integrated Unit.>	Repair or replace the harness.

4. CHECK REAR GATE/TRUNK OPENER BUTTON SWITCH CIRCUIT

Step		Check	Yes	No
1	**CHECK REAR GATE/TRUNK OPENER BUTTON.** 1) Prepare the Subaru Select Monitor kit. 2) Turn the ignition switch to ON (engine OFF) and run the "PC application for Subaru Select Monitor". 3) On «System Selection Menu» display, select {Integ. unit mode}. 4) Select {Current Data Display & Save}. 5) Select the {Rear gate/Trunk release switch}.	Does the display switch between OFF ←→ ON when the rear gate/trunk opener button is operated?	The rear gate/trunk opener button is normal.	Go to step **2**.
2	**CHECK HARNESS.** 1) Disconnect the body integrated unit connector and rear gate/trunk opener button connector. 2) Check the harness between body integrated unit connector and rear gate/trunk opener button connector. ***Connector & terminal*** ***Sedan model*** ***(i84) No. 10 — (i162) No. 4:*** ***OUTBACK model*** ***(i84) No. 10 — (D77) No. 5:***	Is harness normal?	Go to step **3**.	Repair or replace the harness.
3	**CHECK HARNESS.** Measure the resistance between the rear gate/trunk opener button connector and chassis ground. ***Connector & terminal*** ***Sedan model*** ***(i162) No. 2 — Chassis ground:*** ***OUTBACK model*** ***(D77) No. 6 — Chassis ground:***	Is the resistance less than 10 Ω?	Go to step **4**.	Repair or replace the harness.

GETtheMANUALS.org

Step		Check	Yes	No
4	**CHECK REAR GATE/TRUNK OPENER BUTTON.** Measure the resistance between connector terminals both when the rear gate/trunk opener button is pressed and when not pressed. ***Connector & terminal*** ***Sedan model*** ***(i162) No. 4 — (i162) No. 2:*** ***OUTBACK model*** ***(D77) No. 5 — (D77) No. 6:***	Is the resistance less than 10 Ω when the switch is pressed and 1 MΩ or more when not pressed?	Replace the body integrated unit. <Ref. to SL-71, Body Integrated Unit.>	Replace the rear gate/trunk opener button.

5. CHECK DOOR LOCK ACTUATOR AND CIRCUIT

Step		Check	Yes	No
1	**CHECK HARNESS (DOOR LOCK).** 1) Disconnect the body integrated unit connector and each door lock actuator. 2) Check the harness between body integrated unit connector and each door lock actuator connector. ***Connector & terminal*** ***Front door RH*** ***(i171) No. 2 — (D72) No. 1:*** ***Front door LH*** ***(i171) No. 2 — (D18) No. 1:*** ***Rear door RH*** ***(i171) No. 2 — (D32) No. 1:*** ***Rear door LH*** ***(i171) No. 2 — (D26) No. 1:***	Is harness normal?	Go to step **2**.	Repair or replace the harness.
2	**CHECK HARNESS (DOOR UNLOCK).** Check the harness between body integrated unit connector and each door lock actuator connector. ***Connector & terminal*** ***Front door RH*** ***(i171) No. 3 — (D72) No. 2:*** ***Front door LH*** ***(i171) No. 4 — (D18) No. 2:*** ***Rear door RH*** ***(i171) No. 3 — (D32) No. 2:*** ***Rear door LH*** ***(i171) No. 3 — (D26) No. 2:***	Is harness normal?	OUTBACK model Go to step **3**. Sedan model: Go to step **5**.	Repair or replace the harness.
3	**CHECK HARNESS (REAR GATE UNLOCK).** Check the harness between body integrated unit connector and rear gate lock actuator connector. ***Connector & terminal*** ***(i171) No. 7 — (D47) No. 1:***	Is harness normal?	Go to step **4**.	Repair or replace the harness.
4	**CHECK HARNESS (REAR GATE UNLOCK).** Measure the resistance between the rear gate lock actuator connector and chassis ground. ***Connector & terminal*** ***(D47) No. 2 — Chassis ground:***	Is the resistance less than 10 Ω?	Go to step **7**.	Repair or replace the harness.
5	**CHECK HARNESS (TRUNK UNLOCK).** Check the harness between body integrated unit connector and trunk lid lock actuator connector. ***Connector & terminal*** ***(i171) No. 7 — (R186) No. 1:***	Is harness normal?	Go to step **6**.	Repair or replace the harness.

GETtheMANUALS.org

	Step	Check	Yes	No
6	**CHECK HARNESS (TRUNK UNLOCK).** Measure the resistance between the trunk lid lock actuator connector and chassis ground. ***Connector & terminal*** ***(R186) No. 2 — Chassis ground:***	Is the resistance less than 10 Ω?	Go to step **7**.	Repair or replace the harness.
7	**CHECK BODY INTEGRATED UNIT OUTPUT SIGNAL.** 1) Connect the body integrated unit connector. 2) Measure the voltage between the terminals of the body integrated unit connector when operating the door lock switch to LOCK direction. ***Connector & terminal*** ***Except for front door LH*** ***(i171) No. 2 (+) — (i171) No. 3 (–):*** ***Front door LH*** ***(i171) No. 2 (+) — (i171) No. 4 (–):***	Does the voltage change from less than 1 V → 9 V or more? (During lock output)	Go to step **8**.	Replace the body integrated unit. <Ref. to SL-71, Body Integrated Unit.>
8	**CHECK BODY INTEGRATED UNIT OUTPUT SIGNAL.** Measure the voltage between the terminals of the body integrated unit connector when operating the door lock switch to UNLOCK direction. ***Connector & terminal*** ***Except for front door LH*** ***(i171) No. 3 (+) — (i171) No. 2 (–):*** ***Front door LH*** ***(i171) No. 4 (+) — (i171) No. 2 (–):***	Does the voltage change from less than 1 V → 9 V or more? (During unlock output)	Go to step **9**.	Replace the body integrated unit. <Ref. to SL-71, Body Integrated Unit.>
9	**CHECK BODY INTEGRATED UNIT OUTPUT SIGNAL.** Measure the voltage between body integrated unit connector and chassis ground when operating the rear gate/trunk opener button. ***Connector & terminal*** ***(i171) No. 7 (+) — Chassis ground (–):***	Does the voltage change from less than 1 V → 9 V or more? (During unlock output)	Go to step **10**.	Replace the body integrated unit. <Ref. to SL-71, Body Integrated Unit.>
10	**CHECK DOOR LOCK ACTUATOR.** Check the door lock actuator. • Front door lock actuator: <Ref. to SL-36, INSPECTION, Front Door Latch and Door Lock Actuator Assembly.> • Rear door lock actuator: <Ref. to SL-42, INSPECTION, Rear Door Latch and Door Lock Actuator Assembly.>	Is the door lock actuator OK?	OUTBACK model Go to step **11**. Sedan model: Go to step **12**.	Replace the door latch and door lock actuator assembly.
11	**CHECK REAR GATE LOCK ACTUATOR.** Check the rear gate lock actuator. <Ref. to SL-47, Rear Gate Latch and Actuator Assembly.>	Is the rear gate lock actuator normal?	Check the connection status of the harness and connector that may have a temporary poor contact.	Replace the rear gate latch and actuator assembly.
12	**CHECK TRUNK LID LOCK ACTUATOR.** Check the trunk lid lock actuator. <Ref. to SL-49, Trunk Lid Latch and Actuator Assembly.>	Is trunk lid lock actuator normal?	Check the connection status of the harness and connector that may have a temporary poor contact.	Replace the trunk lid latch & actuator assembly.

GETtheMANUALS.org

4. Keyless Entry System

A: WIRING DIAGRAM

Refer to “Keyless Entry System” in the wiring diagram. <Ref. to WI-181, WIRING DIAGRAM, Keyless Entry System.>

B: ELECTRICAL SPECIFICATION

1. KEYLESS ENTRY CONTROL MODULE

- Model without tire pressure monitoring system

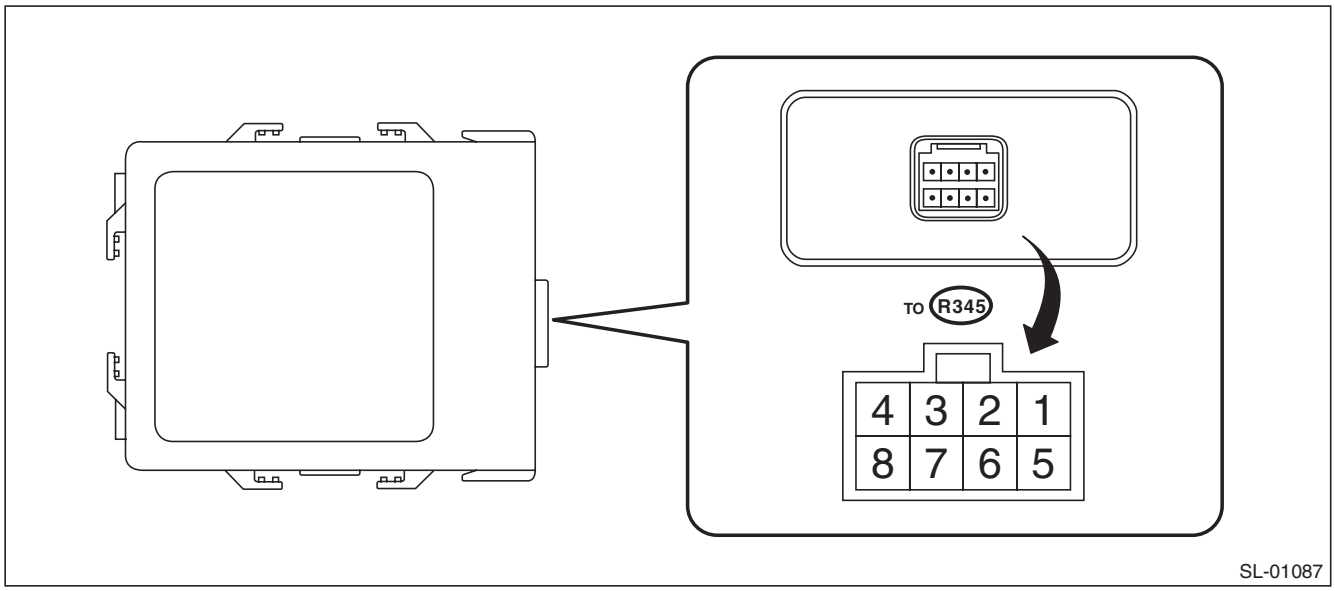

Terminal No.	Item	Measuring condition	Standard
3 (U-ART com.)	—	Cannot be measured	—
4 (+B) ←→ Chassis ground	Voltage	Always	10 — 14 V
7 (GND) ←→ Chassis ground	Resistance	Always	Less than 1 Ω

GETtheMANUALS.org

- Model with tire pressure monitoring system

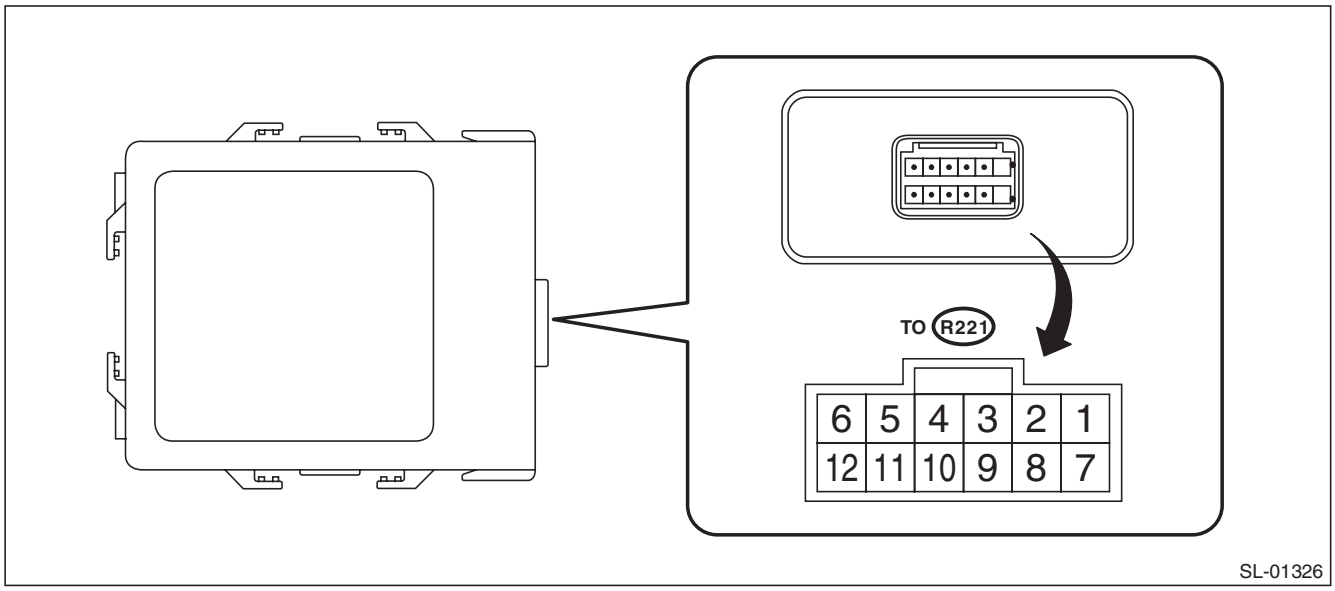

Terminal No.	Item	Measuring condition	Standard
2 ← → Chassis ground	Voltage	Tire pressure warning light: Not illuminated → Illuminated	0 V → 10 — 14 V
3 ← → Chassis ground	Waveform	Speedometer	Pulse generation
4 (IG) ←→ Chassis ground	Resistance	IG OFF → ON	0 V → 10 — 14 V
5 (GND) ←→ Chassis ground	Resistance	Always	Less than 1 Ω
6 (+B) ←→ Chassis ground	Voltage	Always	10 — 14 V
11 (U-ART com.)	—	Cannot be measured	—
12 (SSM communication)	—	Cannot be measured	—

2. BODY INTEGRATED UNIT

Refer to “Control Module I/O Signal” of “BODY CONTROL SYSTEM (DIAGNOSTICS)” section. <Ref. to BC(diag)-7, ELECTRICAL SPECIFICATION, Control Module I/O Signal.>

GETtheMANUALS.org

C: INSPECTION

1. SYMPTOM CHART

Symptoms	Repair order	Reference
None of the functions of the keyless entry system operate.	1. Check the keyless transmitter or transmitter battery.	<Ref. to SL-18, CHECK KEYLESS TRANSMITTER OR TRANSMITTER BATTERY AND FUNCTION, INSPECTION, Keyless Entry System.>
	2. Remove and visually inspect the following fuses. • No. 7 (in fuse & relay box) • No. 10 (in main fuse box) • No. 19 (in main fuse box)	If the fuse is blown out, replace the fuse with a new part. When there is no defective with the fuse, check the power supply and ground circuit. <Ref. to SL-9, CHECK POWER SUPPLY AND GROUND CIRCUIT, INSPECTION, Door Lock Control System.>
	3. Check the keyless entry control module.	<Ref. to SL-19, CHECK KEYLESS ENTRY CONTROL MODULE, INSPECTION, Keyless Entry System.>
	4. Check the power supply and ground circuit for body integrated unit.	<Ref. to SL-20, CHECK BODY INTEGRATED UNIT POWER SUPPLY AND GROUND CIRCUIT, INSPECTION, Keyless Entry System.>
	5. Check the key warning switch.	<Ref. to SL-21, CHECK KEY WARNING SWITCH., INSPECTION, Keyless Entry System.>
	6. Check the door switch signal.	<Ref. to SL-20, CHECK DOOR SWITCH, INSPECTION, Keyless Entry System.>
	7. Check the body integrated unit.	<Ref. to BC(diag)-2, Basic Diagnostic Procedure.>
The keyless transmitter cannot be registered.	1. Check the keyless transmitter or transmitter battery.	<Ref. to SL-18, CHECK KEYLESS TRANSMITTER OR TRANSMITTER BATTERY AND FUNCTION, INSPECTION, Keyless Entry System.>
	2. Check the key warning switch.	<Ref. to SL-21, CHECK KEY WARNING SWITCH., INSPECTION, Keyless Entry System.>
	3. Check the door lock switch signal.	<Ref. to SL-25, CHECK DOOR LOCK SWITCH, INSPECTION, Keyless Entry System.>
	4. Check the body integrated unit.	<Ref. to BC(diag)-2, Basic Diagnostic Procedure.>

GETtheMANUALS.org

Symptoms	Repair order	Reference
Door lock or unlock does not operate. NOTE: If the door lock control system does not operate when using the door lock switch, check the door lock control system. <Ref. to SL-9, INSPECTION, Door Lock Control System.>	1. Check the keyless transmitter or transmitter battery.	<Ref. to SL-18, CHECK KEYLESS TRANSMITTER OR TRANSMITTER BATTERY AND FUNCTION, INSPECTION, Keyless Entry System.>
	2. Check the keyless entry control module.	<Ref. to SL-19, CHECK KEYLESS ENTRY CONTROL MODULE, INSPECTION, Keyless Entry System.>
	3. Check the key warning switch.	<Ref. to SL-21, CHECK KEY WARNING SWITCH., INSPECTION, Keyless Entry System.>
	4. Check the door switch signal.	<Ref. to SL-20, CHECK DOOR SWITCH, INSPECTION, Keyless Entry System.>
	5. Check the body integrated unit.	<Ref. to BC(diag)-2, Basic Diagnostic Procedure.>
The keyless buzzer and hazard light do not operate.	1. Check the keyless buzzer operation.	<Ref. to SL-24, CHECK KEYLESS BUZZER, INSPECTION, Keyless Entry System.>
	2. Check the hazard light operation.	<Ref. to SL-23, CHECK HAZARD LIGHT OPERATION, INSPECTION, Keyless Entry System.>
	3. Check the body integrated unit.	<Ref. to BC(diag)-2, Basic Diagnostic Procedure.>
Room light does not operate.	1. Check the room light operation.	<Ref. to SL-22, CHECK ROOM LIGHT OPERATION, INSPECTION, Keyless Entry System.>
	2. Check the body integrated unit.	<Ref. to BC(diag)-2, Basic Diagnostic Procedure.>
Ignition switch illumination does not operate.	1. Check the ignition switch illumination.	<Ref. to SL-25, CHECK IGNITION SWITCH ILLUMINATION, INSPECTION, Keyless Entry System.>
	2. Check the body integrated unit.	<Ref. to BC(diag)-2, Basic Diagnostic Procedure.>

GETtheMANUALS.org

2. CHECK KEYLESS TRANSMITTER OR TRANSMITTER BATTERY AND FUNCTION

CAUTION:
Be sure to reset keyless transmitter or transmitter of other vehicles registered to the inspection target vehicle, and vehicles to which keyless transmitters or transmitter were registered for inspection, to the condition before performing the inspection. (Re-register the keyless transmitters or transmitter.)

Step		Check	Yes	No
1	**CHECK BATTERY OF THE KEYLESS TRANSMITTER OR TRANSMITTER.** 1) Remove the battery from the keyless transmitter or transmitter. • Keyless transmitter: <Ref. to SL-72, REMOVAL, Keyless Transmitter.> • Transmitter: <Ref. to SL-75, REMOVAL, Transmitter.> 2) Check the battery voltage. • Keyless transmitter: <Ref. to SL-73, INSPECTION, Keyless Transmitter.> • Transmitter: <Ref. to SL-75, INSPECTION, Transmitter.>	Is the voltage 2.5 V or more?	Go to step **2**.	Replace the battery of keyless transmitter or transmitter.
2	**CHECK KEYLESS TRANSMITTER OR TRANSMITTER.** Register the keyless transmitter or transmitter which operates normally on other vehicles to the inspection target vehicle. • Keyless transmitter: <Ref. to SL-73, REGISTRATION OF KEYLESS TRANSMITTER WITH SUBARU SELECT MONITOR, REPLACEMENT, Keyless Transmitter.> • Transmitter: <Ref. to SL-76, REGISTRATION OF KEYLESS TRANSMITTER WITH SUBARU SELECT MONITOR, REPLACEMENT, Transmitter.> 1) Close all the doors and rear gate (OUTBACK model) or trunk lid (sedan model) of inspection target vehicle. 2) Using the keyless transmitter, lock and unlock the doors and rear gate of vehicle. For the 4 door model, unlock the trunk lid.	Can the check vehicle be locked and unlocked properly?	Go to step **3**.	Due to vehicle malfunction, continue the keyless entry system diagnosis.
3	**CHECK KEYLESS TRANSMITTER OR TRANSMITTER.** Register the keyless transmitter of the inspected vehicle to another vehicle whose keyless system operates normally. • Keyless transmitter: <Ref. to SL-73, REGISTRATION OF KEYLESS TRANSMITTER WITH SUBARU SELECT MONITOR, REPLACEMENT, Keyless Transmitter.> • Transmitter: <Ref. to SL-76, REGISTRATION OF KEYLESS TRANSMITTER WITH SUBARU SELECT MONITOR, REPLACEMENT, Transmitter.>	Is the keyless transmitter registered correctly?	Go to step **4**.	Replace the keyless transmitter or transmitter and perform registration.

GETtheMANUALS.org

	Step	Check	Yes	No
4	**CHECK KEYLESS TRANSMITTER OR TRANSMITTER.** Check the registered keyless transmitter or transmitter. 1) Close all the doors and rear gate of the vehicle which keyless system operates normally. 2) Using the keyless transmitter, lock and unlock the doors and rear gate of vehicle. For the 4 door model, unlock the trunk lid.	Does the vehicle operate lock and unlock normally?	Keyless transmitter or transmitter is OK.	Replace the keyless transmitter or transmitter and perform registration.

3. CHECK KEYLESS ENTRY CONTROL MODULE

	Step	Check	Yes	No
1	**CHECK DIAGNOSTIC TROUBLE CODE (DTC).** 1) Prepare the Subaru Select Monitor kit. 2) Turn the ignition switch to ON (engine OFF) and run the “PC application for Subaru Select Monitor”. 3) On «System Selection Menu» display, select {Integ. unit mode}. 4) Select {Diagnostic Code(s) Display}.	Is DTC B1500 “Keyless UART com. Malfunction” displayed?	Go to step **2**.	Keyless entry control module is normal.
2	**CHECK POWER SUPPLY.** 1) Disconnect the keyless entry control module connector. 2) Measure the voltage between keyless entry control module connector and chassis ground. ***Connector & terminal*** ***Model without tire pressure monitoring system*** ***(R345) No. 4 (+) — Chassis ground (–):*** ***Model with tire pressure monitoring system*** ***(R221) No. 6 (+) — Chassis ground (–):***	Is the voltage 10 V or more?	Go to step **3**.	Check the harness for open or short circuits between the keyless entry control module and the fuse.
3	**CHECK GROUND CIRCUIT.** Measure the resistance between keyless entry control module connector and chassis ground. ***Connector & terminal*** ***Model without tire pressure monitoring system*** ***(R345) No. 7 — Chassis ground:*** ***Model with tire pressure monitoring system*** ***(R221) No. 5 — Chassis ground:***	Is the resistance less than 10 Ω?	Go to step **4**.	Repair or replace the harness.
4	**CHECK KEYLESS ENTRY CONTROL MODULE CIRCUIT.** 1) Disconnect the body integrated unit connector. 2) Measure the resistance between keyless entry control module connector and body integrated unit connector. ***Connector & terminal*** ***Model without tire pressure monitoring system*** ***(i171) No. 11 — (R345) No. 3:*** ***Model with tire pressure monitoring system*** ***(i171) No. 11 — (R221) No. 11:***	Is the resistance less than 10 Ω?	Replace the keyless entry control module.	Repair or replace the harness.

GETtheMANUALS.org

4. CHECK BODY INTEGRATED UNIT POWER SUPPLY AND GROUND CIRCUIT

Refer to the “INSPECTION of POWER SUPPLY AND GROUND CIRCUIT” of “Door Lock Control System” for detailed procedures. <Ref. to SL-9, CHECK POWER SUPPLY AND GROUND CIRCUIT, INSPECTION, Door Lock Control System.>

5. CHECK DOOR SWITCH

	Step	Check	Yes	No
1	**CHECK INPUT CIRCUIT.** 1) Prepare the Subaru Select Monitor kit. 2) Turn the ignition switch to ON (engine OFF) and run the “PC application for Subaru Select Monitor”. 3) On «System Selection Menu» display, select {Integ. unit mode}. 4) Select {Current Data Display & Save}. 5) Select the {Driver’s door SW input}, {P-door SW input}, {Rear right door SW input}, {Rear left door SW input}, and {R Gate SW input}.	Does the display switch between OFF ←→ ON when each door, rear gate, or trunk lid is opened/closed?	The door switches, trunk lid latch switch or rear gate latch switch are normal.	Go to step **2**.
2	**CHECK HARNESS.** 1) Disconnect the body integrated unit connector. 2) Disconnect the door switch connector that the display does not change. 3) Check the harness between body integrated unit connector and defective door switch connector. ***Connector & terminal*** ***Front door RH*** ***(i84) No. 13 — (R12) No. 2:*** ***Front door LH*** ***(i84) No. 14 — (R9) No. 2:*** ***Rear door RH*** ***(i84) No. 25 — (R16) No. 2:*** ***Rear door LH*** ***(i84) No. 24 — (R22) No. 2:*** ***Trunk lid*** ***(i84) No. 33 — (R186) No. 3:*** ***Rear gate*** ***(i84) No. 33 — (D46) No. 3:***	Is harness normal?	Go to step **3**.	Repair or replace the harness.
3	**CHECK HARNESS.** Measure the resistance between the faulty door switch connector and chassis ground. ***Connector & terminal*** ***Front door RH*** ***(R12) No. 3 — Chassis ground:*** ***Front door LH*** ***(R9) No. 3 — Chassis ground:*** ***Rear door RH*** ***(R16) No. 3 — Chassis ground:*** ***Rear door LH*** ***(R22) No. 3 — Chassis ground:*** ***Trunk lid*** ***(R186) No. 2 — Chassis ground:*** ***Rear gate*** ***(D47) No. 4 — Chassis ground:***	Is the resistance less than 10 Ω?	Go to step **4**.	Repair or replace the harness.

GETtheMANUALS.org

	Step	Check	Yes	No
4	**CHECK DOOR SWITCH.** Measure the resistance between terminals of faulty door switch, trunk lid switch or rear gate latch switch. ***Connector & terminal*** ***Front RH door switch*** ***(R12) No. 2 — No. 3:*** ***Front LH door switch*** ***(R9) No. 2 — No. 3:*** ***Rear RH door switch*** ***(R16) No. 2 — No. 3:*** ***Rear LH door switch*** ***(R22) No. 2 — No. 3:*** ***Trunk lid latch switch*** ***(R186) No. 3 — No. 2:*** ***Rear gate latch switch*** ***(D47) No. 3 — No. 4:***	Is the resistance 1 MΩ or more when the door switch is pushed, or the trunk lid or rear gate is closed?	Go to step **5**.	Replace the faulty parts. • Door switch • Trunk lid latch and actuator ASSY • Rear gate latch and actuator ASSY
5	**CHECK DOOR SWITCH.** Measure the resistance between terminals of faulty door switch, trunk lid switch or rear gate latch switch. ***Connector & terminal*** ***Front RH door switch*** ***(R12) No. 2 — No. 3:*** ***Front LH door switch*** ***(R9) No. 2 — No. 3:*** ***Rear RH door switch*** ***(R16) No. 2 — No. 3:*** ***Rear LH door switch*** ***(R22) No. 2 — No. 3:*** ***Trunk lid latch switch*** ***(R186) No. 3 — No. 2:*** ***Rear gate latch switch*** ***(D47) No. 3 — No. 4:***	Is the resistance less than 10 Ω when switch is released?	Replace the body integrated unit. <Ref. to SL-71, Body Integrated Unit.>	Replace the faulty parts. • Door switch • Trunk lid latch and actuator ASSY • Rear gate latch and actuator ASSY

6. CHECK KEY WARNING SWITCH

	Step	Check	Yes	No
1	**CHECK KEY WARNING SWITCH.** 1) Prepare the Subaru Select Monitor kit. 2) On «System Selection Menu» display, select {Integ. unit mode}. 3) Select {Current Data Display & Save}. 4) Select the {key-lock warning SW}.	Is the normal input signal displayed when the key is inserted in/removed from the ignition switch?	The key warning switch is OK.	Go to step **2**.
2	**CHECK FUSE.** Remove and visually check fuse No. 18 (in the main fuse box).	Is the fuse blown out?	Replace the fuse with a new part.	Go to step **3**.
3	**CHECK KEY WARNING SWITCH CIRCUIT.** 1) Disconnect the body integrated unit connector. 2) Insert the key into ignition switch. (LOCK position) 3) Measure the voltage between body integrated unit connector and chassis ground. ***Connector & terminal*** ***(B280) No. 4 (+) — Chassis ground (–):***	Is the voltage 10 V or more?	Go to step **4**.	Go to step **5**.

GETtheMANUALS.org

	Step	Check	Yes	No
4	**CHECK KEY WARNING SWITCH CIRCUIT.** 1) Remove the key from ignition switch. 2) Measure the voltage between body integrated unit connector and chassis ground. ***Connector & terminal*** ***(B280) No. 4 (+) — Chassis ground (–):***	Is the voltage less than 1.5 V?	The key warning switch is OK.	Go to step **5**.
5	**CHECK KEY WARNING SWITCH.** 1) Disconnect the key warning switch connector. 2) Insert the key into ignition switch. (LOCK position) 3) Measure the resistance between key warning switch terminals. ***Connector & terminal*** ***(B350) No. 3 — No. 4:***	Is the resistance less than 1 Ω?	Go to step **6**.	Replace the key warning switch.
6	**CHECK KEY WARNING SWITCH.** 1) Remove the key from ignition switch. 2) Measure the resistance between key warning switch terminals. ***Connector & terminal*** ***(B350) No. 3 — No. 4:***	Is the resistance 1 MΩ or more?	Check the following: • Harness for open circuits and shorts between the key warning switch and fuse. • Harness for open or short between the body integrated unit and key warning switch	Replace the key warning switch.

7. CHECK ROOM LIGHT OPERATION

	Step	Check	Yes	No
1	**CHECK ROOM LIGHT OPERATION.** Make sure the room light illuminates when the room light switch is ON, and goes off when the switch is OFF.	Does the room light illuminate or go off?	Go to step **2**.	Check the room light circuit. <Ref. to LI-65, INSPECTION, Room Light.>
2	**CHECK ROOM LIGHT OPERATION.** 1) Turn the room light switch to the “DOOR” position. 2) Open and close any door.	Does the room light illuminate ←→ go off (including off delay) when the door is opened and closed?	Go to step **3**.	Go to step **4**.
3	**CHECK KEYLESS ENTRY OPERATION.** Press the LOCK/UNLOCK button of the keyless transmitter.	Does it operate properly?	Room light is normal.	Check keyless entry system. <Ref. to SL-16, SYMPTOM CHART, INSPECTION, Keyless Entry System.>
4	**CHECK ROOM LIGHT.** 1) Disconnect the room light connector. 2) Check the room light. <Ref. to LI-65, INSPECTION, Room Light.>	Is room light normal?	Go to step **5**.	Replace the bulb or room light assembly.
5	**CHECK HARNESS.** 1) Disconnect the body integrated unit connector. 2) Check the harness between body integrated unit connector and room light connector. ***Connector & terminal*** ***(i84) No. 4 — (R52) No. 2:***	Is harness normal?	Go to step **6**.	Repair or replace the harness.

GETtheMANUALS.org

	Step	Check	Yes	No
6	**CHECK HARNESS.** Measure the voltage between room light connector and chassis ground. ***Connector & terminal*** ***(R52) No. 3 (+) — Chassis ground (–):***	Is the voltage 10 V or more?	Replace the body integrated unit. <Ref. to SL-71, Body Integrated Unit.>	Repair or replace the harness.

8. CHECK HAZARD LIGHT OPERATION

	Step	Check	Yes	No
1	**CHECK HAZARD LIGHT OPERATION.** Make sure the hazard light blinks when hazard switch is turned to ON.	Does the hazard light blink?	Go to step **2**.	Check the hazard light circuit.
2	**CHECK BODY INTEGRATED UNIT.** 1) Prepare the Subaru Select Monitor kit. 2) Turn the ignition switch to ON (engine OFF) and run the “PC application for Subaru Select Monitor”. 3) On «System Selection Menu» display, select {Integ. unit mode}. 4) Select {Hazard answer-back setup} from {Unit customizing}.	Is the setting ON?	Go to step **3**.	Turn the setting to ON.
3	**CHECK OUTPUT TO HAZARD LIGHT.** 1) Remove the key from ignition switch. 2) Prepare the Subaru Select Monitor kit. 3) On «System Selection Menu» display, select {Integ. unit mode}. 4) From {Current Data Display & Save}, select {Hazard Output}.	Is output signal present when operating the transmitter LOCK/UNLOCK button?	Go to step **4**.	Go to step **5**.
4	**CHECK KEYLESS ENTRY OPERATION.** Press the LOCK/UNLOCK button of the keyless transmitter.	Does it operate properly?	Replace the body integrated unit. <Ref. to SL-71, Body Integrated Unit.>	Check keyless entry system. <Ref. to SL-16, SYMPTOM CHART, INSPECTION, Keyless Entry System.>
5	**CHECK HAZARD LIGHT CIRCUIT.** 1) Disconnect the body integrated unit connector. 2) Disconnect the turn signal & hazard unit connector. 3) Measure the resistance between body integrated unit connector and turn signal & hazard unit connector. ***Connector & terminal*** ***(i171) No. 18 — (i170) No. 8:***	Is the resistance less than 10 Ω?	Check body integrated unit. <Ref. to BC(diag)-2, Basic Diagnostic Procedure.>	Repair or replace the harness.

GETtheMANUALS.org

9. CHECK KEYLESS BUZZER

	Step	Check	Yes	No
1	**CHECK KEYLESS BUZZER SETTING.** 1) Prepare the Subaru Select Monitor kit. 2) Turn the ignition switch to ON (engine OFF) and run the “PC application for Subaru Select Monitor”. 3) On «System Selection Menu» display, select {Integ. unit mode}. 4) Select {Answer-back buzzer setup} from {Unit customizing}.	Is the setting ON?	Go to step **2**.	Turn the setting to ON.
2	**CHECK BODY INTEGRATED UNIT.** 1) Select the {Function check} from {Integ. unit mode}. 2) Select the {Keyless Buzzer Output} and execute it.	Does the keyless buzzer sound?	Check the keyless control module.	Go to step **3**.
3	**CHECK KEYLESS BUZZER CIRCUIT.** 1) Turn the ignition switch to OFF. 2) Disconnect the body integrated unit connector and keyless buzzer connector. 3) Measure the resistance between body integrated unit connector and keyless buzzer connector. ***Connector & terminal*** ***(B280) No. 20 — (B490) No. 1:***	Is the resistance less than 10 Ω?	Go to step **4**.	Repair or replace the harness.
4	**CHECK KEYLESS BUZZER CIRCUIT.** Measure the resistance between keyless buzzer connector and chassis ground. ***Connector & terminal*** ***(B490) No. 2 — Chassis ground:***	Is the resistance less than 10 Ω?	Go to step **5**.	Repair or replace the harness.
5	**CHECK KEYLESS BUZZER.** 1) Remove the keyless buzzer. 2) Connect the battery positive (+) terminal to terminal No. 1 of the keyless buzzer, and the negative (–) terminal to terminal No. 2, and check whether or not the buzzer will sound. <Ref. to SL-70, INSPECTION, Keyless Buzzer.>	Does the keyless buzzer sound?	Go to step **6**.	Replace the keyless buzzer.
6	**CHECK BODY INTEGRATED UNIT.** 1) Select the {Function check} from {Integ. unit mode}. 2) Select the {Keyless Buzzer Output} and execute it. 3) Measure the voltage between body integrated unit connector and chassis ground.	Is the voltage 9 V or more?	Go to step **7**.	Replace the body integrated unit. <Ref. to SL-71, Body Integrated Unit.>

GETtheMANUALS.org

	Step	Check	Yes	No
7	**CHECK OUTPUT OF BODY INTEGRATED UNIT.** 1) Select the {Current Data Display & Save} from {Integ. unit mode}. 2) Select the {Keyless Buzzer Output}. 3) Press the LOCK/UNLOCK button of the keyless transmitter.	Is output signal present when operating the LOCK/UNLOCK button?	System is normal.	Inspect the keyless entry system. If there are no problems, replace the body integrated unit. • Inspection: <Ref. to SL-16, SYMPTOM CHART, INSPECTION, Keyless Entry System.> • Replacement: <Ref. to SL-71, Body Integrated Unit.>

10.CHECK DOOR LOCK SWITCH

For procedures, refer to the “INSPECTION OF DOOR LOCK SWITCH” of the “Door Lock Control System”. <Ref. to SL-10, CHECK DOOR LOCK SWITCH, INSPECTION, Door Lock Control System.>

11.CHECK IGNITION SWITCH ILLUMINATION

	Step	Check	Yes	No
1	**CHECK IGNITION CIRCUIT.** Check the ignition circuit.	Is the circuit normal?	Go to step **2**.	Repair or replace.
2	**CHECK DOOR SWITCH CIRCUIT.** Inspect door switch circuit.	Is the circuit normal?	Go to step **3**.	Repair or replace.
3	**CHECK FUSE.** Remove and visually check fuse No. 18 (in the main fuse box).	Is the fuse blown out?	Replace the fuse with a new part.	Go to step **4**.
4	**CHECK HARNESS.** 1) Disconnect the ignition switch illumination connector. 2) Measure the voltage between ignition switch illumination connector and chassis ground. ***Connector & terminal*** ***(B350) No. 1 (+) — Chassis ground (–):***	Is the voltage 10 V or more?	Go to step **5**.	Check the harness for open or short circuits between the ignition switch illumination and fuse.
5	**CHECK IGNITION SWITCH ILLUMINATION CIRCUIT.** 1) Disconnect the body integrated unit connector. 2) Check the harness between body integrated unit connector and ignition switch illumination connector. ***Connector & terminal*** ***(B280) No. 25 — (B350) No. 2:***	Is harness normal?	Go to step **6**.	Check the harness for open circuits and shorts between the body integrated unit and ignition switch illumination.
6	**CHECK IGNITION SWITCH ILLUMINATION BULB.** Apply battery voltage to the bulb.	Does the bulb illuminate?	Replace the body integrated unit. <Ref. to SL-71, Body Integrated Unit.>	Replace the ignition switch illumination bulb. <Ref. to LI-71, REMOVAL, Ignition Switch Illumination.>

GETtheMANUALS.org

5. Security System

A: WIRING DIAGRAM

Refer to “Security System” in the wiring diagram. <Ref. to WI-236, WIRING DIAGRAM, Security System.>

B: ELECTRICAL SPECIFICATION

Refer to “Control Module I/O Signal” of “BODY CONTROL SYSTEM (DIAGNOSTICS)” section. <Ref. to BC(diag)-7, ELECTRICAL SPECIFICATION, Control Module I/O Signal.>

C: INSPECTION

1. BASIC DIAGNOSTIC PROCEDURE

Step		Check	Yes	No
1	**INITIAL CHECK.** Check keyless entry system.	Does the keyless entry system operate normally?	Go to step **2**.	Check keyless entry system. <Ref. to SL-16, INSPECTION, Keyless Entry System.>
2	**CHECK SECURITY ON/OFF SETTING.** 1) Press the LOCK button of the keyless transmitter or transmitter. 2) Check the security indicator light blinking patterns.	Is the security indicator light blinking patterns as follows? / When monitor delay is set to 0 second: Blinks twice in 0.5 seconds at 2 second intervals/ When monitor delay is set to 30 seconds: Repeat blinking once in 0.4 seconds at 30 second intervals	Go to step **5**.	Go to step **3**.
3	**CHANGE SETTING OF SECURITY SYSTEM.** Change the setting of security system to ON. <Ref. to SL-28, SECURITY SYSTEM ON/OFF SETTING, INSPECTION, Security System.>	Is setting change completed correctly?	Go to step **4**.	• Check the ignition switch circuit. <Ref. to SL-29, CHECK IGNITION SWITCH CIRCUIT, INSPECTION, Security System.> • Check the door lock switch circuit. <Ref. to SL-25, CHECK DOOR LOCK SWITCH, INSPECTION, Keyless Entry System.>
4	**CHECK SETTING CHANGE OF SECURITY SYSTEM.** 1) Remove the key from ignition switch, and then close all doors. 2) Press the LOCK button of the keyless transmitter or transmitter. 3) Check the security indicator light blinking patterns.	Is the security indicator light blinking patterns as follows? / When monitor delay is set to 0 second: Blinks twice in 0.5 seconds at 2 second intervals/ When monitor delay is set to 30 seconds: Repeat blinking once in 0.4 seconds at 30 second intervals	Go to step **5**.	Check the security indicator light. <Ref. to SL-28, CHECK SECURITY INDICATOR LIGHT CIRCUIT, INSPECTION, Security System.>
5	**CHECK SECURITY SYSTEM OPERATION.** Press the LOCK button on the keyless transmitter or transmitter, then wait for 30 seconds.	Does the security indicator light blink twice within 0.5 seconds in 2 second intervals?	Go to step **6**.	Replace the body integrated unit. <Ref. to SL-71, Body Integrated Unit.>

GETtheMANUALS.org

Step		Check	Yes	No
6	**CHECK SECURITY ALARM OPERATION.** 1) Unlock all doors using the door lock switch on driver's door. 2) Open any door, trunk or rear gate.	Does the security alarm operate when opening any door, trunk or rear gate?	Go to step **7**.	Check the door switch, trunk lid switch or rear gate latch switch. <Ref. to SL-20, CHECK DOOR SWITCH, INSPECTION, Keyless Entry System.>
7	**CHECK SECURITY ALARM OPERATION.** Check the security alarm operation.	Do all security alarms operate? / Horn sound / Hazard lights flash / Security indicator light illuminates	Go to step **8**.	• Check the horn. <Ref. to SL-29, CHECK HORN, INSPECTION, Security System.> • Check the hazard light. <Ref. to SL-29, CHECK HAZARD LIGHT OPERATION, INSPECTION, Security System.>
8	**CHECK SECURITY ALARM CANCEL OPERATION.** Press any button of transmitter while the security alarm is operating. Or turn the ignition switch to ON.	Do all security alarms stop? / Horn / Hazard lights	Go to step **9**.	Check the ignition switch circuit. <Ref. to SL-29, CHECK IGNITION SWITCH CIRCUIT, INSPECTION, Security System.>
9	**CHECK SECURITY SYSTEM CONDITION MEMORY.** Check that the system functions properly even when the battery is not connected temporarily. <Ref. to SL-28, CHECK SECURITY SYSTEM CONDITION MEMORY, INSPECTION, Security System.>	Does the system function properly when the battery is not connected temporarily?	Go to step **10**.	Replace the body integrated unit. <Ref. to SL-71, Body Integrated Unit.>
10	**CHECK IMPACT SENSOR (DEALER OPTION).** Check the sensibility of impact sensor. <Ref. to SL-66, CHECK IMPACT SENSOR, ADJUSTMENT, Impact Sensor.>	Is the sensibility set properly?	Press the UNLOCK button on the keyless transmitter or transmitter to finish the diagnosis.	Adjust the sensitivity. <Ref. to SL-66, IMPACT SENSITIVITY ADJUSTMENT, ADJUSTMENT, Impact Sensor.>

NOTE:
If the horn sounds when the security is turned on (monitor condition) using the keyless transmitter, check the function setting of the body integrated unit. As a cause, it is possible that the impact sensor present (ON) / not present (OFF) setting is set to ON in the customization function though there is no impact sensor. <Ref. to BC(diag)-16, User Customizing.>

GETtheMANUALS.org

2. CHECK SECURITY SYSTEM CONDITION MEMORY

1) Pull out the key from the ignition switch, or turn the ignition to OFF.
2) Close all the doors, trunk lid and rear gate.
3) Open the front hood.
4) Press the LOCK button of the keyless transmitter or transmitter.

NOTE:
Wait until the security indicator light blinks twice within 0.5 seconds at 2 second intervals.
If the 30 second monitoring lag has been set, wait for 30 seconds.
5) Disconnect the ground cable from battery.
6) Connect the battery ground terminal.
7) Check that the security indicator light blinks twice within 0.5 seconds at 2 second intervals. When it does not blink, replace the body integrated unit.

3. SECURITY SYSTEM ON/OFF SETTING

1) Close all doors, trunk lid and rear gate, and sit down on the driver seat. Press the UNLOCK button of the keyless transmitter or transmitter.
2) Turn the ignition switch to ON.
3) Press the central door lock switch and open the driver's door simultaneously. (Keep the central door lock switch pressed down.)
4) When the condition in step 3) continues for 10 seconds, the system switches to a mode reverse to the current mode.

Setting	Horn activation	Meter display
ON → OFF	Twice	[AL_OFF]
OFF → ON	Once	[AL_ON]

4. CHECK DOOR SWITCH

For operation procedure, refer to "CHECK DOOR SWITCH" of "Keyless Entry System". <Ref. to SL-20, CHECK DOOR SWITCH, INSPECTION, Keyless Entry System.>

5. CHECK SECURITY INDICATOR LIGHT CIRCUIT

For operation procedures, refer to "CHECK SECURITY INDICATOR LIGHT CIRCUIT" of "IMMOBILIZER (DIAGNOSTICS)" section. <Ref. to IM(diag)-11, CHECK SECURITY INDICATOR LIGHT CIRCUIT, INSPECTION, Diagnostics Chart for Security Indicator Light.>

GETtheMANUALS.org

6. CHECK HORN

Step		Check	Yes	No
1	**CHECK HORN OPERATION.** Check the horn sounds when the horn switch is pushed.	Does the horn sound?	Go to step **2**.	Check the horn circuit.
2	**CHECK OUTPUT TO HORN RELAY.** 1) Connect the Subaru Select Monitor Kit. 2) Turn the ignition switch to ON (engine OFF) and run the “PC application for Subaru Select Monitor”. 3) On «System Selection Menu» display, select {Integ. unit mode}. 4) Select {Function check}. 5) Select {Horn Output} and execute.	Does the horn sound?	Horn circuit is OK.	Go to step **3**.
3	**CHECK HORN RELAY CIRCUIT.** 1) Turn the ignition switch to OFF. 2) Disconnect the body integrated unit connector. 3) Remove the horn relay. 4) Measure the resistance between body integrated unit connector and horn relay. ***Connector & terminal*** ***(B280) No. 24 — Horn relay No. 4:***	Is the resistance less than 10 Ω?	Check body integrated unit. <Ref. to BC(diag)-2, Basic Diagnostic Procedure.>	Repair or replace the harness.

7. CHECK HAZARD LIGHT OPERATION

For operation procedure, refer to “CHECK HAZARD LIGHT OPERATION” of “Keyless Entry System”. <Ref. to SL-23, CHECK HAZARD LIGHT OPERATION, INSPECTION, Keyless Entry System.>

8. CHECK IGNITION SWITCH CIRCUIT

Step		Check	Yes	No
1	**CHECK IGNITION SWITCH VOLTAGE.** 1) Prepare the Subaru Select Monitor kit. 2) Turn the ignition switch to ON (engine OFF) and run the “PC application for Subaru Select Monitor”. 3) On «System Selection Menu» display, select {Integ. unit mode}. 4) Select the {Current Data Display & Save}. 5) Select the {BATT voltage} and {IG power supply voltage}.	Does the {IG power supply voltage} indicates 0 V when ignition is OFF or a value in a range of ±1 V from the {BATT voltage} when ignition is ON.	The ignition switch input circuit is OK.	Go to step **2**.
2	**CHECK IGNITION SWITCH CIRCUIT.** 1) Turn the ignition switch to OFF. 2) Disconnect the body integrated unit connector. 3) Turn the ignition switch to ON. 4) Measure the voltage between body integrated unit connector and chassis ground. ***Connector & terminal*** ***(i171) No. 17 (+) — Chassis ground (–):***	Is the voltage 10 V or more?	Check body integrated unit. <Ref. to BC(diag)-2, Basic Diagnostic Procedure.>	Check the harness for open or short circuit between body integrated unit and fuse.

GETtheMANUALS.org

6. Front Inner Remote

A: REMOVAL

1) Remove the door trim. <Ref. to EI-60, REMOVAL, Door Trim.>
2) Remove the screws to detach the front inner remote handle.

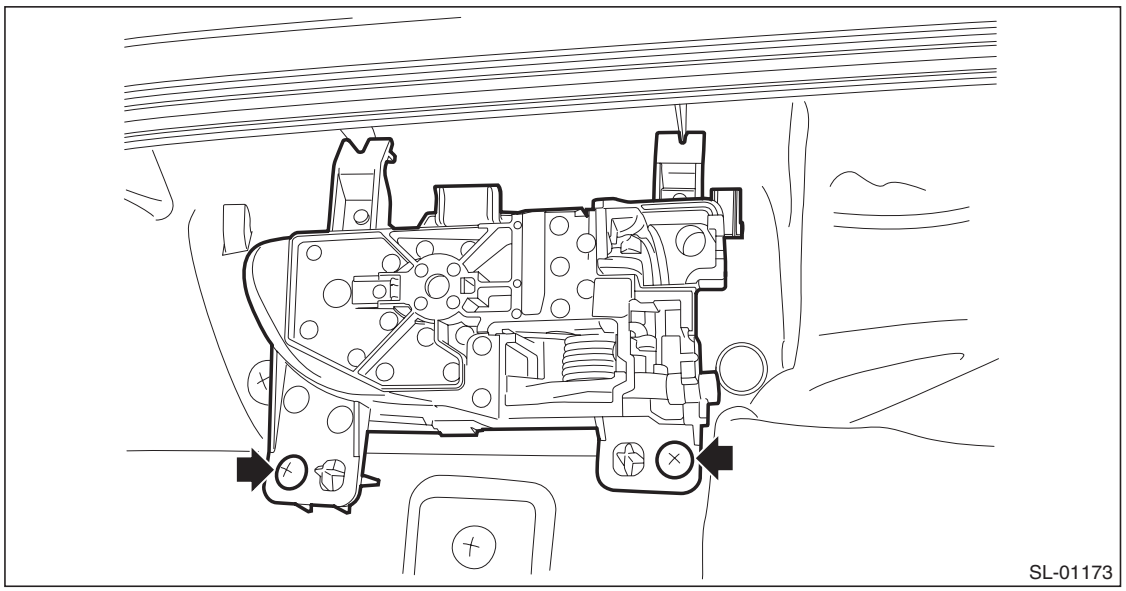

B: INSTALLATION

1) Before installation, check the following items.
- Cable is free from deformation such as fray.
- Grease is applied sufficiently to cable joints.

If grease is insufficient, add it as necessary before assembling the cable.
2) Install each part in the reverse order of removal.

C: INSPECTION

Check if the front remote handle operates normally.
- If the lever is faulty, replace the front inner remote handle.
- If the cable is deformed, replace the front door latch & door lock actuator assembly.

GETtheMANUALS.org

7. Front Outer Handle

A: REMOVAL

1) Raise the front door glass to the top position.
2) Remove the door trim. <Ref. to EI-60, REMOVAL, Door Trim.>
3) Remove the sealing cover.

CAUTION:
- **Carefully remove the butyl tape. Excessive force will easily break the cover.**
- **If the sealing cover gets broken, replace it with a new part.**

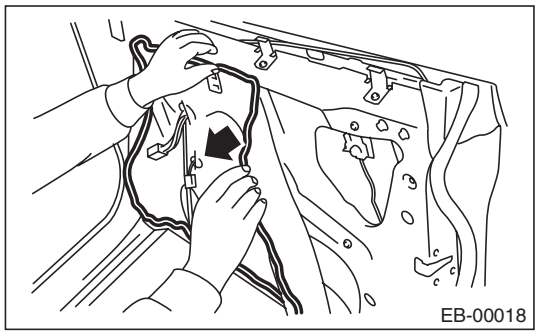

4) Release the rod from the rod clamp of outer handle.

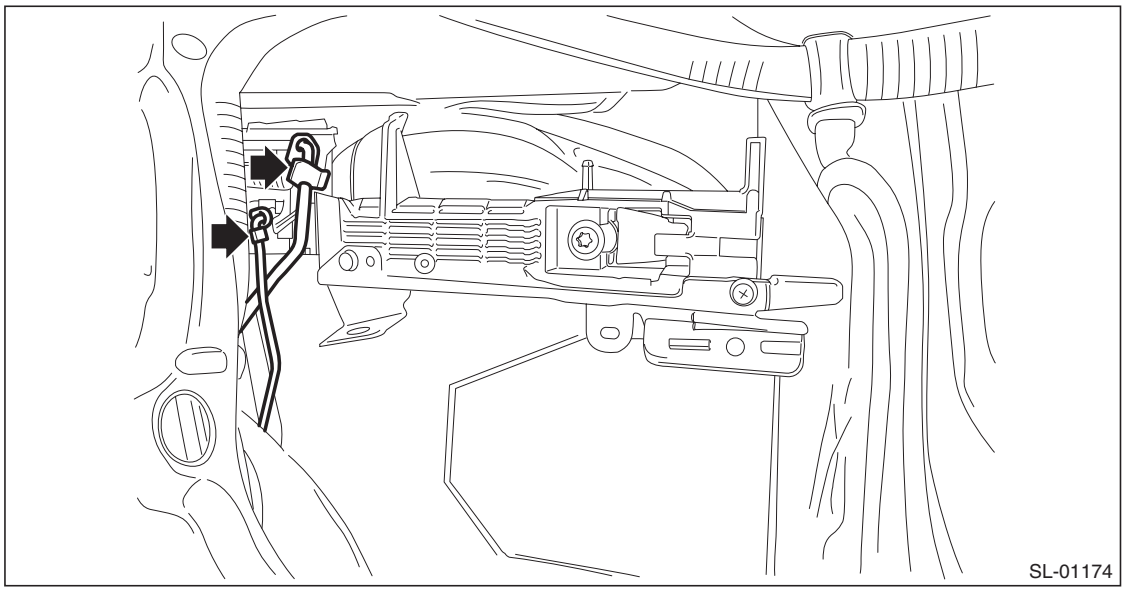

GETtheMANUALS.org

5) Remove the door outer handle cover.

Preparation tool: TORX® T30

(1) Remove the plug to the rear of the door panel.
(2) Loosen the TORX® bolt and remove the door outer handle cover.

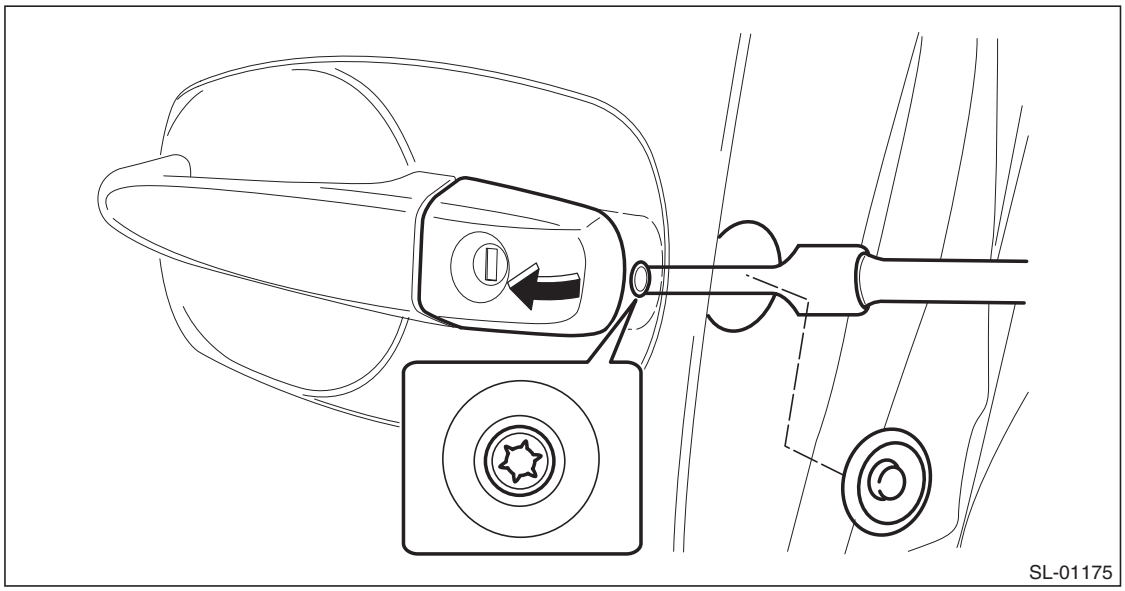

6) Move the front outer handle to the rear and remove the front outer handle.

CAUTION:
Do not apply excessive force to remove the handle from the door panel. The door panel may become deformed.

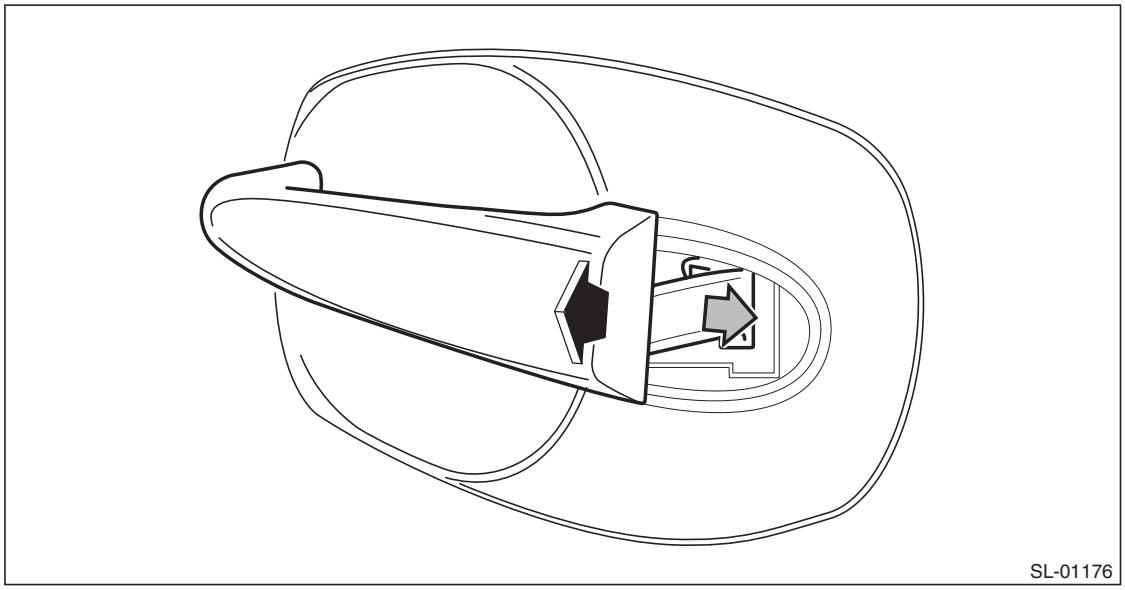

GETtheMANUALS.org

7) Remove the frame assembly.

Preparation tool: TORX® T30

(1) Remove the outer spacer.

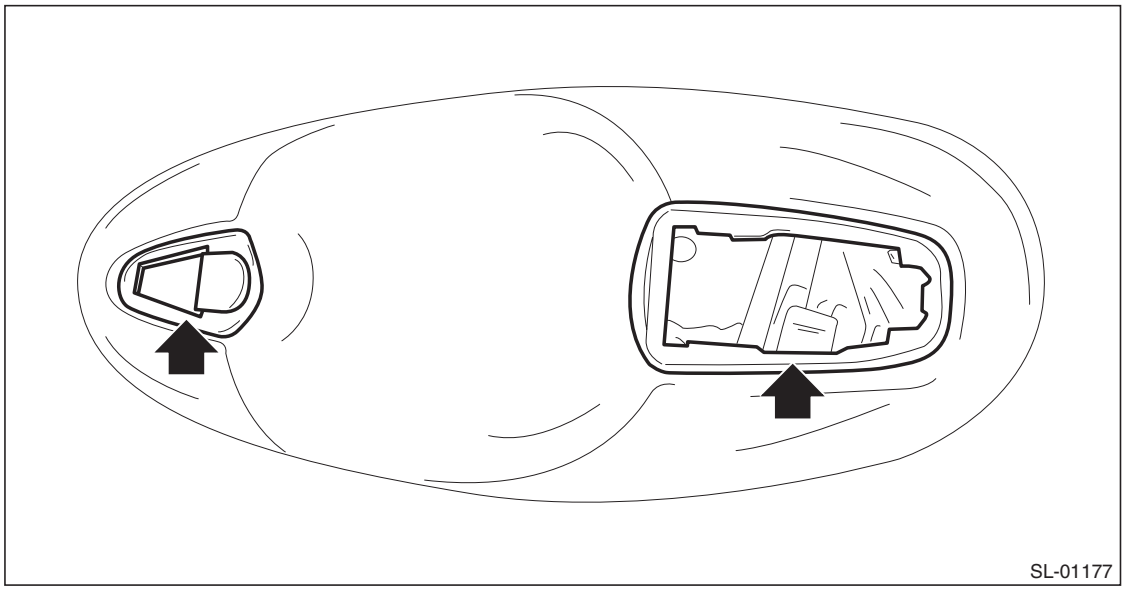

(2) Loosen the TORX® bolt and remove the frame assembly from the door panel.

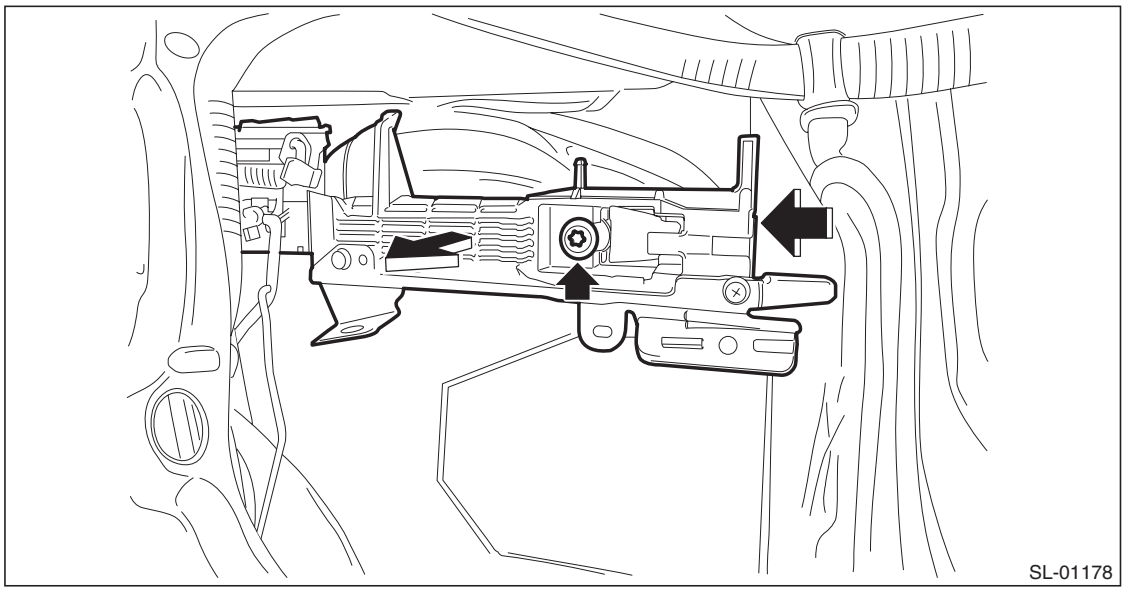

B: INSTALLATION

1) Before installation, check the following items.
- Rod is free from deformation.
- Grease is applied sufficiently to rod joints.

If grease is insufficient, add it as necessary before assembling the rod.

2) Install each part in the reverse order of removal.

Tightening torque:

Refer to "COMPONENT" of "General Description". <Ref. to SL-2, DOOR LOCK ASSEMBLY, COMPONENT, General Description.>

C: INSPECTION

Check if the front outer handle operates normally.
- If the lever is faulty, replace the front outer handle.
- If the rod is deformed, replace the front door latch & door lock actuator assembly.

GETtheMANUALS.org

8. Front Door Latch and Door Lock Actuator Assembly

A: REMOVAL

1) Raise the front door glass to the top position.
2) Remove the front door trim. <Ref. to EI-60, REMOVAL, Door Trim.>
3) Remove the sealing cover.

CAUTION:
- **Carefully remove the butyl tape. Excessive force will easily break the cover.**
- **If the sealing cover gets broken, replace it with a new part.**

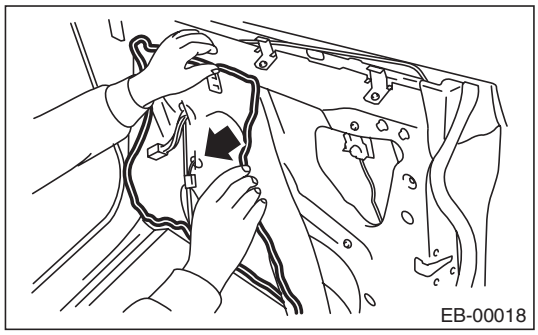

4) Remove the inner pad.
5) Remove the rod from the outer handle rod clamp.

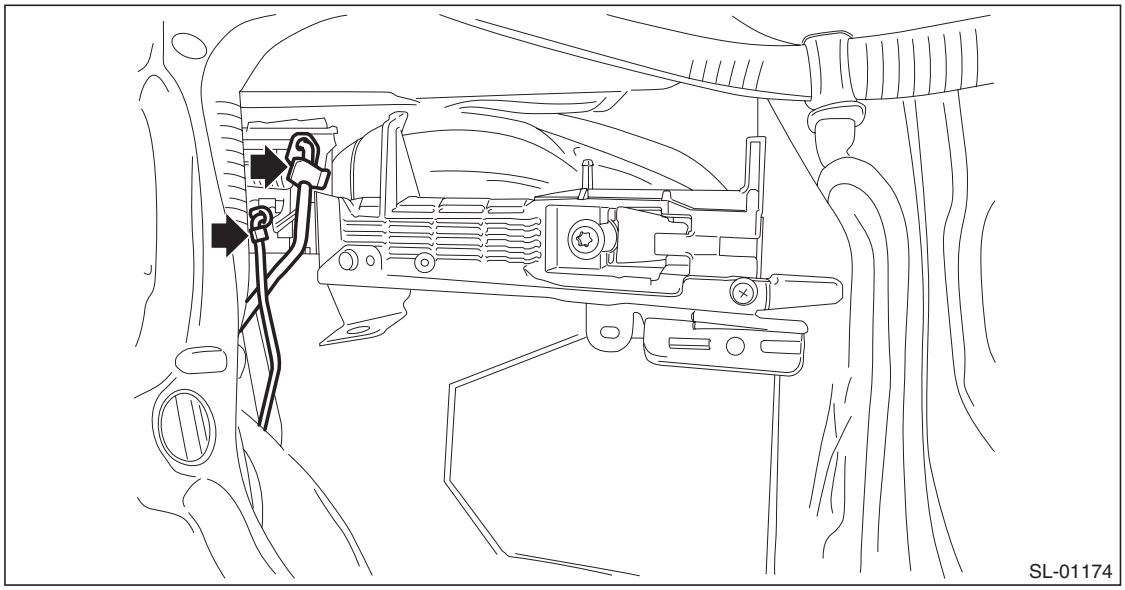

GETtheMANUALS.org

6) Remove the door sash lower.
   (1) Remove the lower side of the glass run rubber.
   (2) Remove the bolts, and then remove the door sash lower.

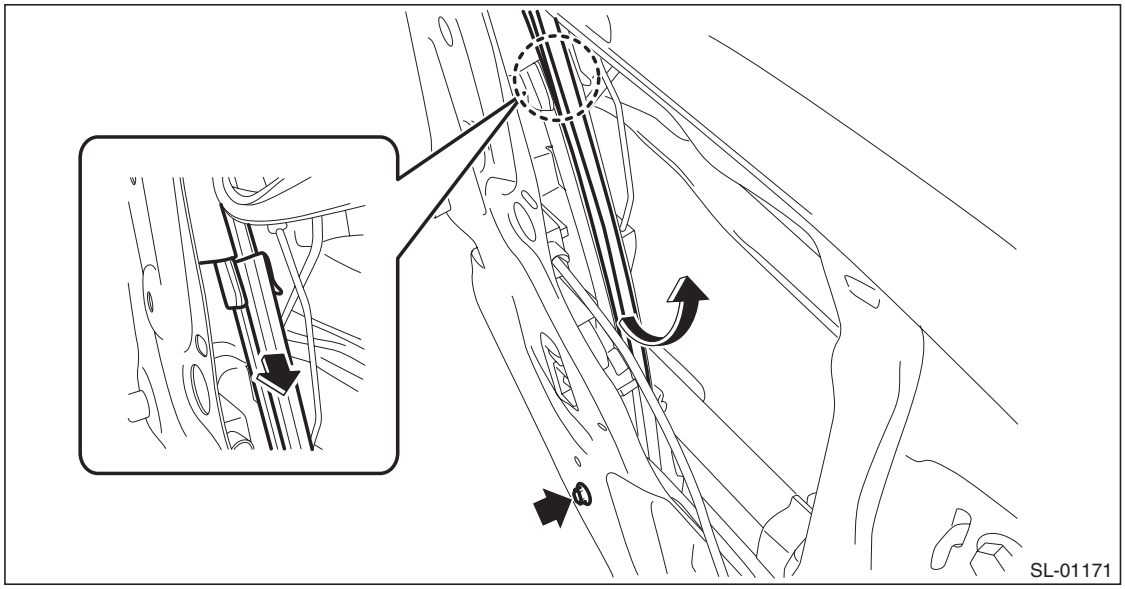

7) Remove the front door latch and door lock actuator assembly.
   (1) Disconnect the connector.
   (2) Remove the screws, and remove the front door latch & door lock actuator assembly.

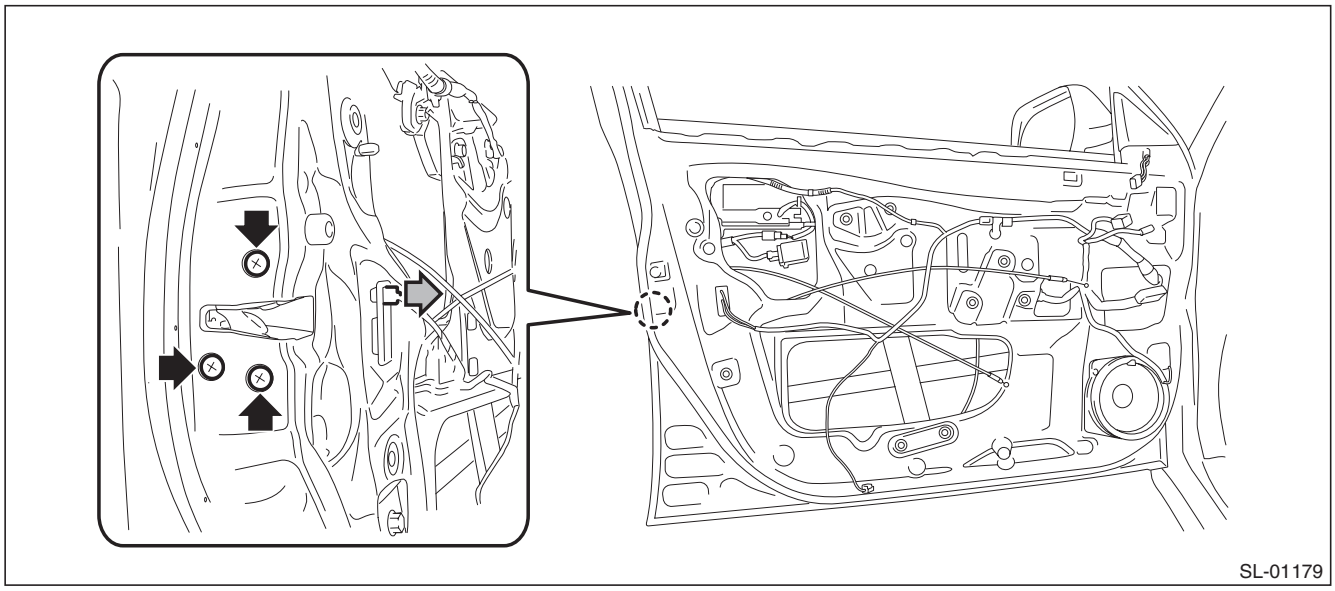

B: INSTALLATION

1) Before installation, check the following items.
- Cable and rod are free from deformation.
- Grease is applied sufficiently to rod joints.

If grease is insufficient, add it as necessary before assembling the rod.
2) Install each part in the reverse order of removal.

Tightening torque:
Refer to "COMPONENT" of "General Description". <Ref. to SL-2, DOOR LOCK ASSEMBLY, COMPONENT, General Description.>

GETtheMANUALS.org

C: INSPECTION

1. FRONT DOOR LATCH

Check if the front door latch operates normally.
If the cable or rod is faulty, replace the front door latch & door lock actuator assembly.

2. FRONT DOOR LOCK ACTUATOR

1) Disconnect the front door lock actuator connector.
2) Check the door lock operation by applying battery voltage between the terminals of front door lock actuator.

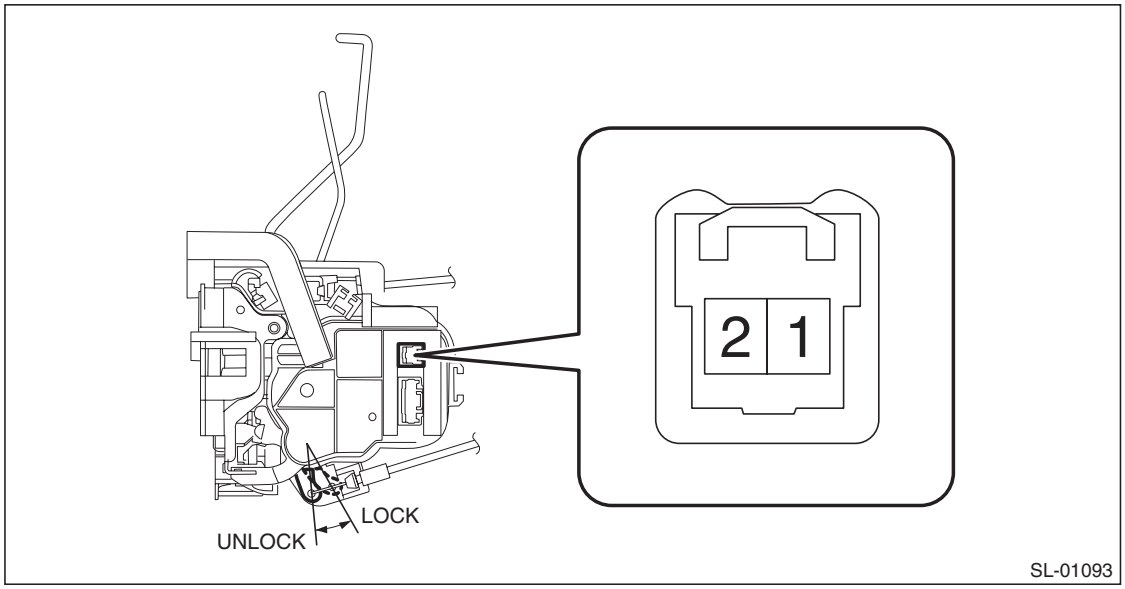

Inspection conditions	Terminal No.	
	1	2
LOCK → UNLOCK	–	+
UNLOCK → LOCK	+	–

3) If the actuator does not operate normally, replace the front door latch & door lock actuator assembly.

GETtheMANUALS.org

9. Rear Inner Remote

A: REMOVAL

1) Remove the door trim. <Ref. to EI-60, REMOVAL, Door Trim.>
2) Remove the screws and detach the rear inner remote handle.

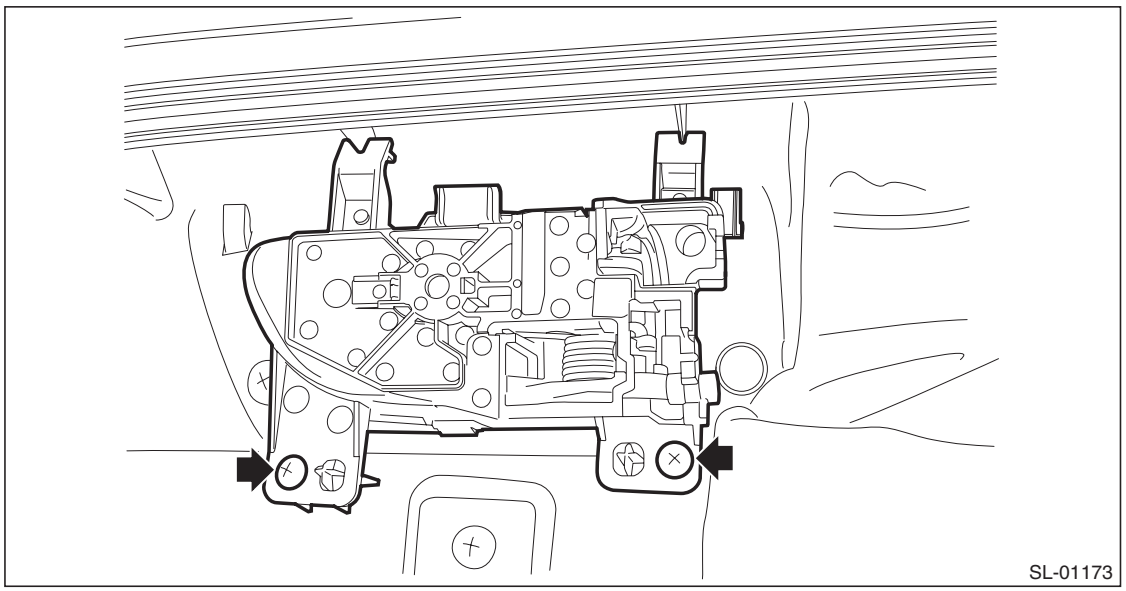

B: INSTALLATION

1) Before installation, check the following items.
- Cable is free from deformation such as fray.
- Grease is applied sufficiently to cable joints.

If grease is insufficient, add it as necessary before assembling the cable.
2) Install each part in the reverse order of removal.

C: INSPECTION

Check if the rear remote handle operates normally.
- If the lever is faulty, replace the rear inner remote handle.
- If the cable is deformed, replace the rear door latch & door lock actuator assembly.

GETtheMANUALS.org

10. Rear Outer Handle

A: REMOVAL

1) Raise the rear door glass to the top position.
2) Remove the door trim. <Ref. to EI-60, REMOVAL, Door Trim.>
3) Remove the sealing cover.

CAUTION:
- **Carefully remove the butyl tape. Excessive force will easily break the cover.**
- **If the sealing cover gets broken, replace it with a new part.**

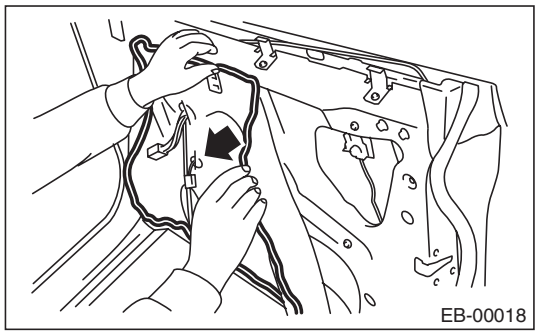

4) Move downward the rear door latch & door lock actuator assembly.
   (1) Disconnect the connector.
   (2) Remove the screws and move downward the rear door latch & door lock actuator assembly.

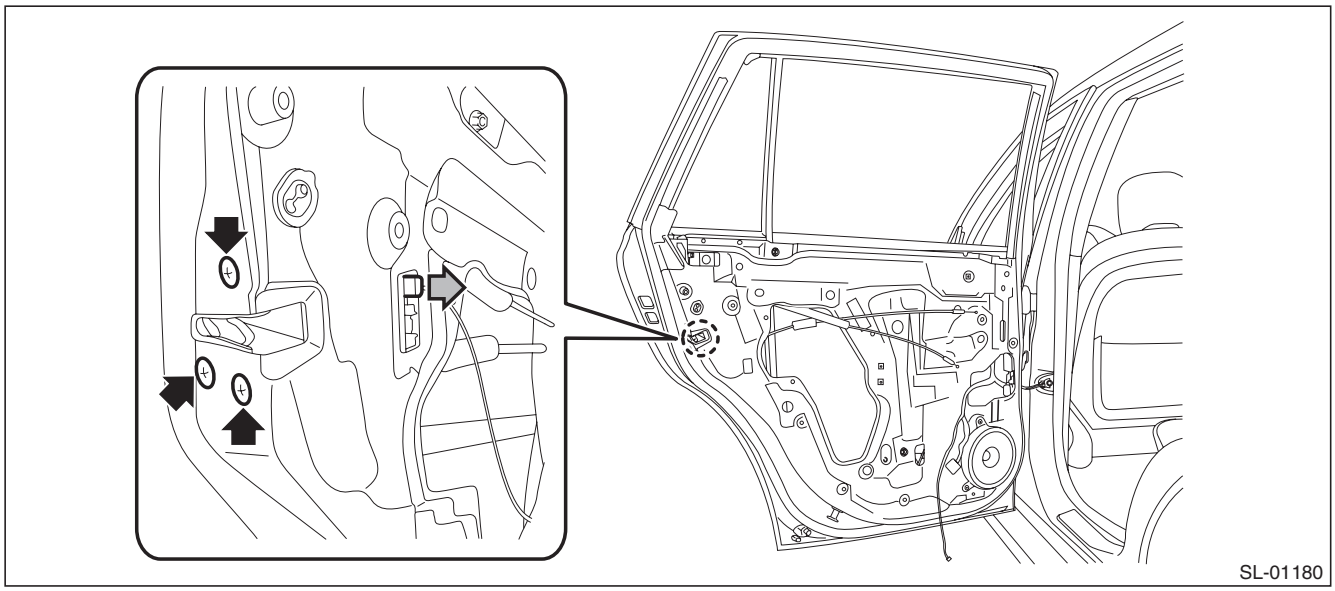

GETtheMANUALS.org

5) Remove the door outer handle cover.

Preparation tool: TORX® T30

(1) Remove the child protector cover.
(2) Loosen the TORX® bolt and remove the door outer handle cover.

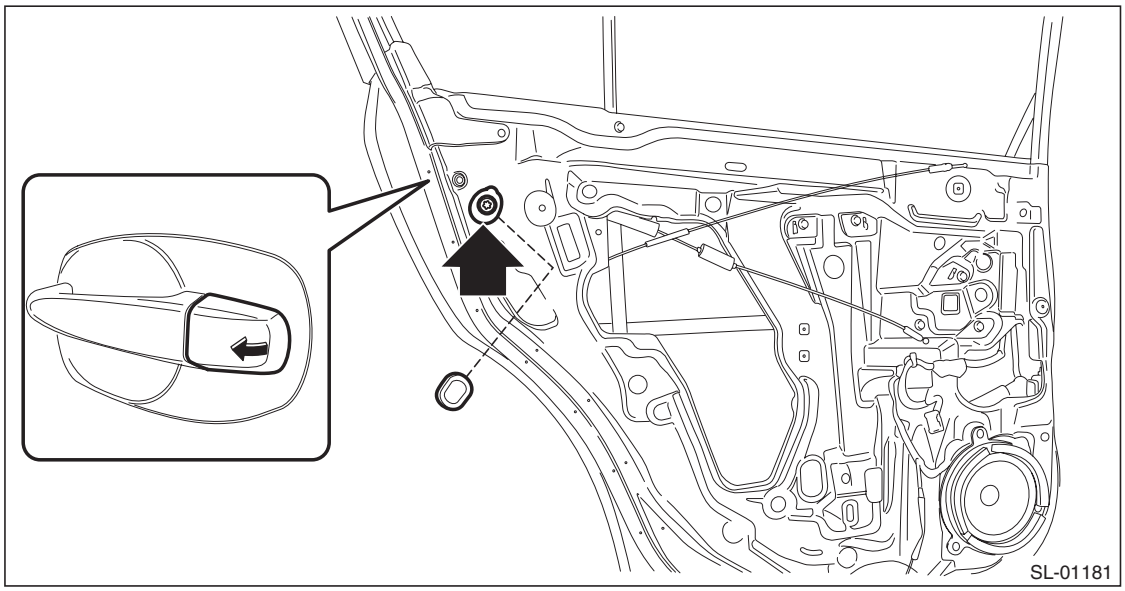

6) Remove the rear outer handle by moving it rearward.

CAUTION:
Do not apply excessive force to remove the handle from the door panel. The door panel may become deformed.

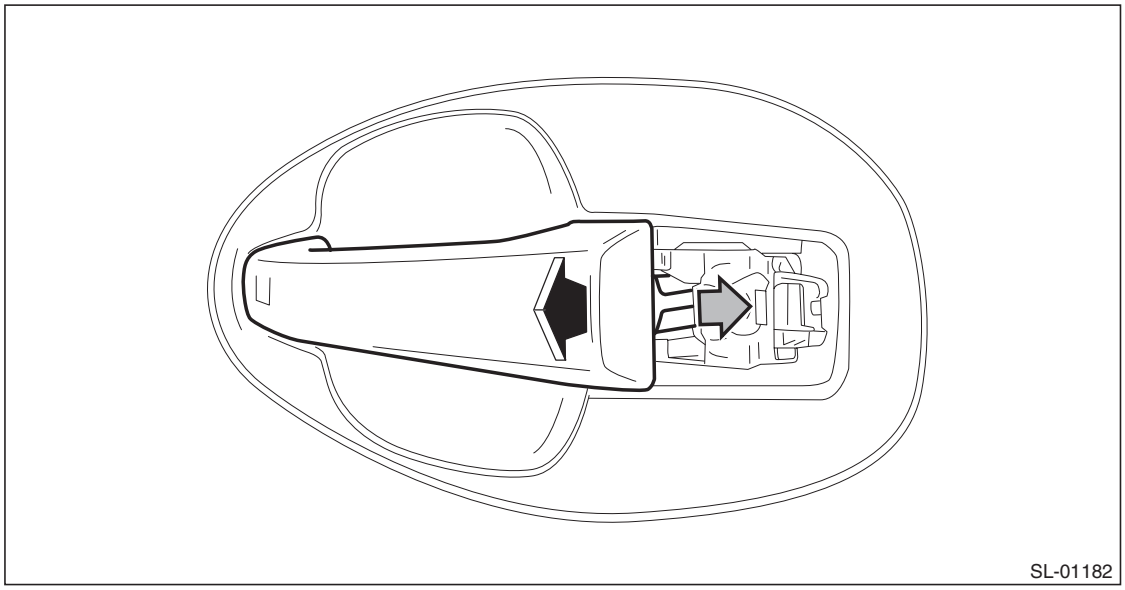

GETtheMANUALS.org

7) Remove the frame assembly.

Preparation tool: TORX® T30

(1) Remove the outer spacer.

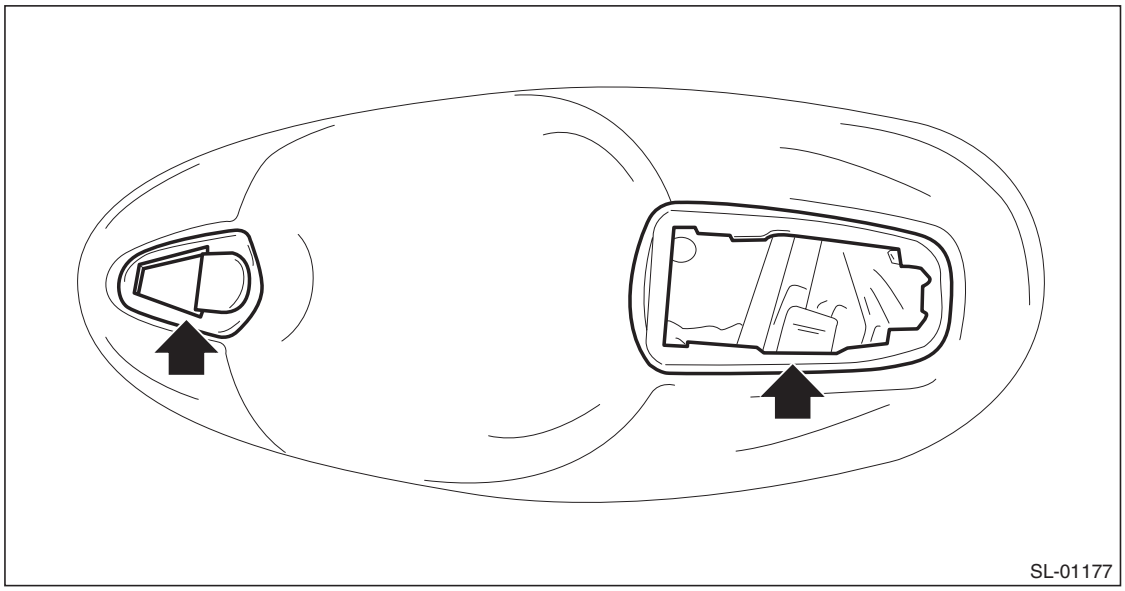

(2) Remove the TORX® bolt and remove the frame assembly from the door panel.

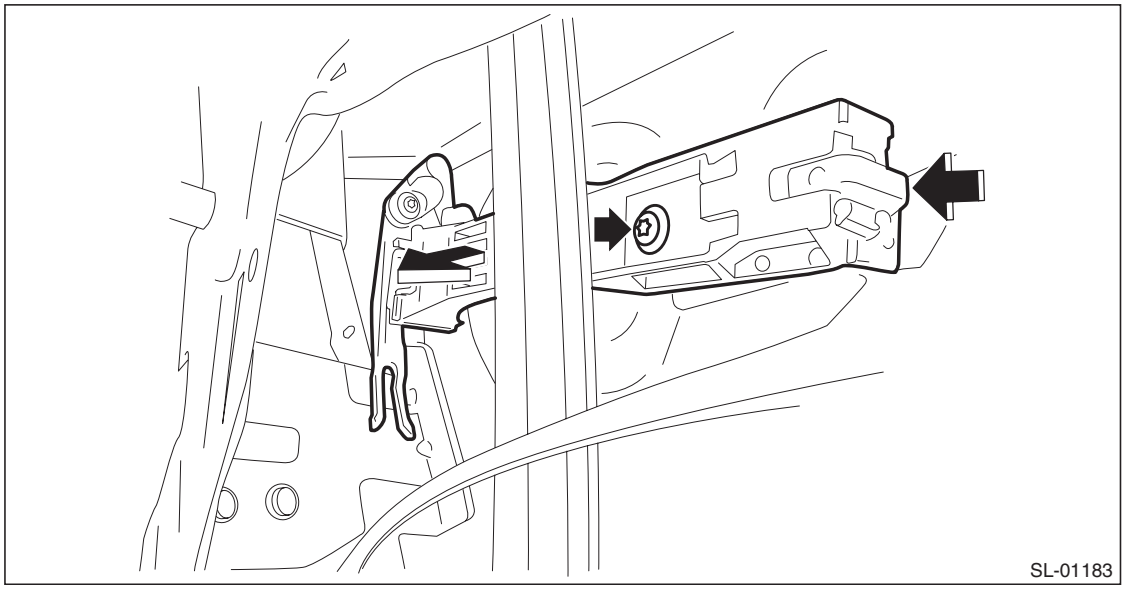

B: INSTALLATION

1) Before installation, check the following items.
- Lever is free from deformation.
- Grease is applied sufficiently to lever joints.

If grease is insufficient, add it as necessary before assembling.
2) Install each part in the reverse order of removal.

Tightening torque:
Refer to "COMPONENT" of "General Description". <Ref. to SL-2, DOOR LOCK ASSEMBLY, COMPONENT, General Description.>

C: INSPECTION

Check if the rear outer handle operates normally.
If the lever is faulty, replace the rear outer handle.

GETtheMANUALS.org

11. Rear Door Latch and Door Lock Actuator Assembly

A: REMOVAL

1) Disconnect the ground cable from battery.
2) Remove the rear door trim. <Ref. to EI-60, REMOVAL, Door Trim.>
3) Remove the sealing cover.

CAUTION:
- **Carefully remove the butyl tape. Excessive force will easily break the cover.**
- **If the sealing cover gets broken, replace it with a new part.**

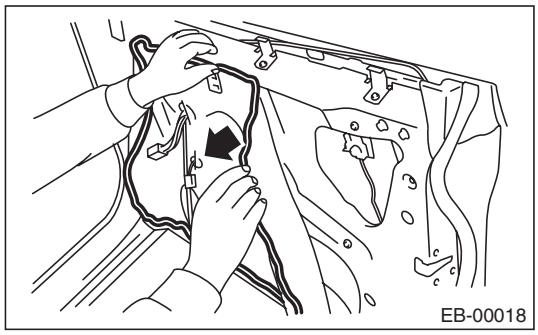

4) Remove the rear door glass. <Ref. to GW-34, REMOVAL, Rear Door Glass.>
5) Remove the rear door latch and door lock actuator assembly.
   (1) Disconnect the connector.
   (2) Remove the screws, and remove the rear door latch & door lock actuator assembly.

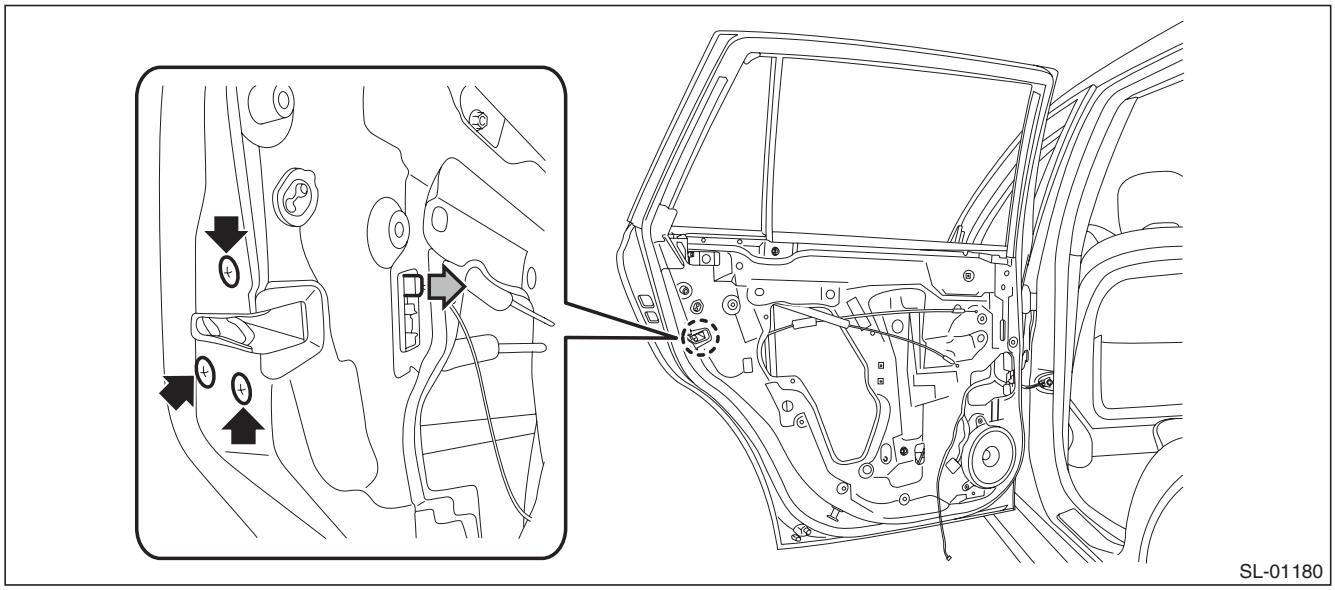

B: INSTALLATION

1) Before installation, check the following items.
- Cable is free from deformation.
- Grease is applied sufficiently to lever joints.

If grease is insufficient, add it as necessary before assembling.
2) Install each part in the reverse order of removal.

Tightening torque:
Refer to "COMPONENT" of "General Description". <Ref. to SL-2, DOOR LOCK ASSEMBLY, COMPONENT, General Description.>

NOTE:
Make sure the child safety lock works correctly after installation.

GETtheMANUALS.org

C: INSPECTION

1. REAR DOOR LATCH

Check if the rear door latch operates normally.
If the cable is faulty, replace the rear door latch & door lock actuator assembly.

2. REAR DOOR LOCK ACTUATOR

1) Disconnect the rear door lock actuator connector.
2) Check the door lock operation by applying battery voltage between the terminals of rear door lock actuator.

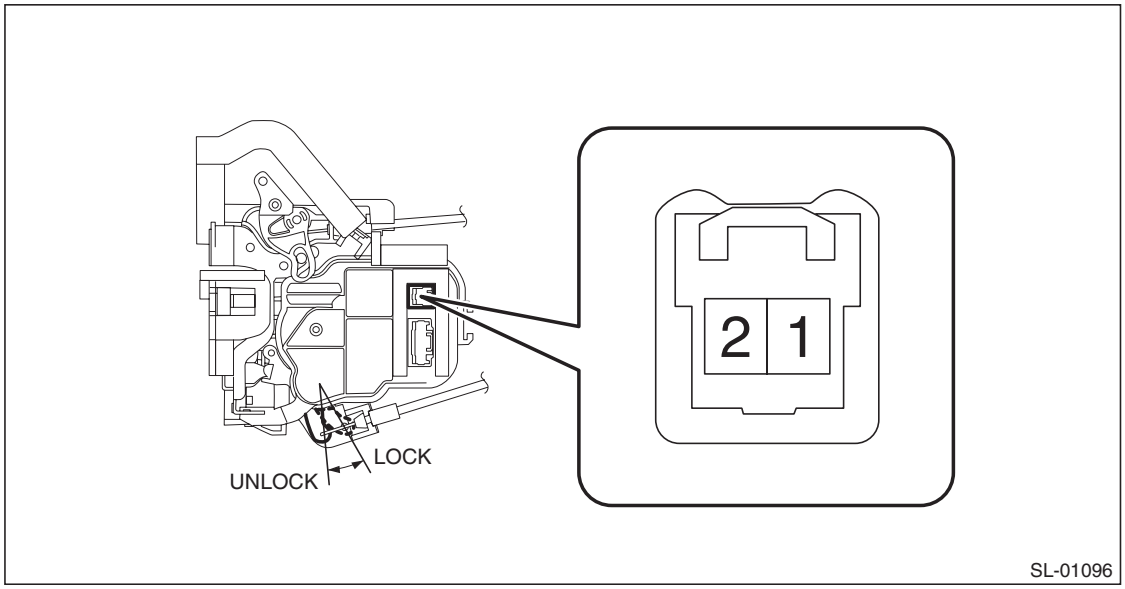

Inspection conditions	Terminal No.	
	1	2
LOCK → UNLOCK	–	+
UNLOCK → LOCK	+	–

3) If the actuator does not operate normally, replace the rear door latch & door lock actuator assembly.

GETtheMANUALS.org

12. Rear Gate Opener Button

A: REMOVAL

NOTE:
The rear gate opener button is integrated into the license plate light assembly harness.
1) Remove the rear gate trim. <Ref. to EI-160, REMOVAL, Rear Gate Trim.>
2) Remove the rear gate garnish. <Ref. to EI-164, REMOVAL, Rear Gate Garnish.>
3) Remove the rear gate opener button.
   (1) Release the locks at both ends of the rear gate opener button by pushing with a flat tip screwdriver.

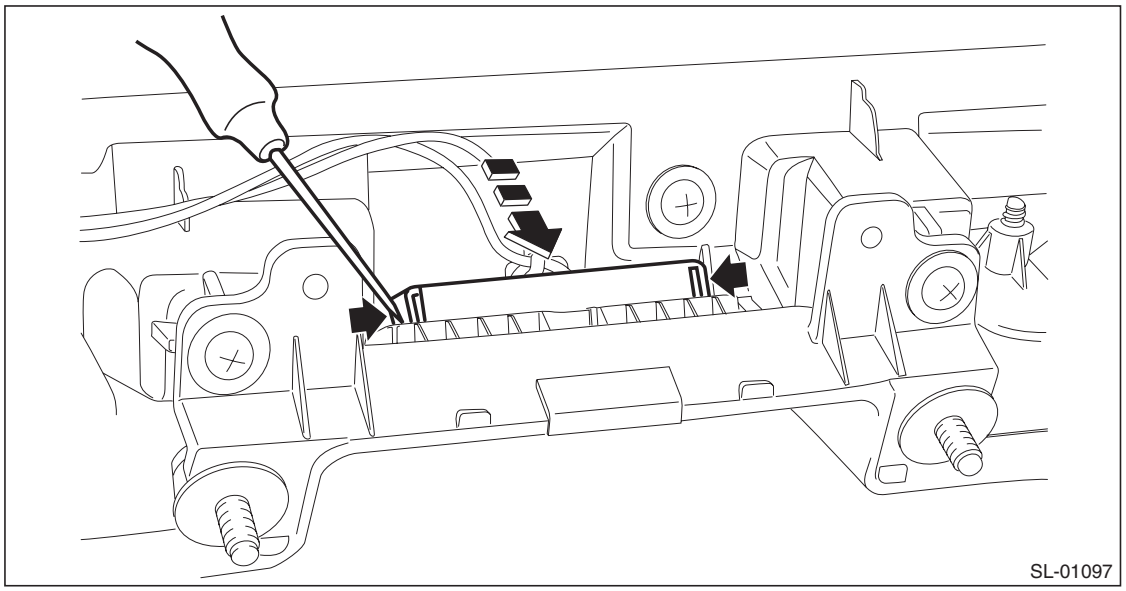

   (2) Remove the screws and remove the license plate light.

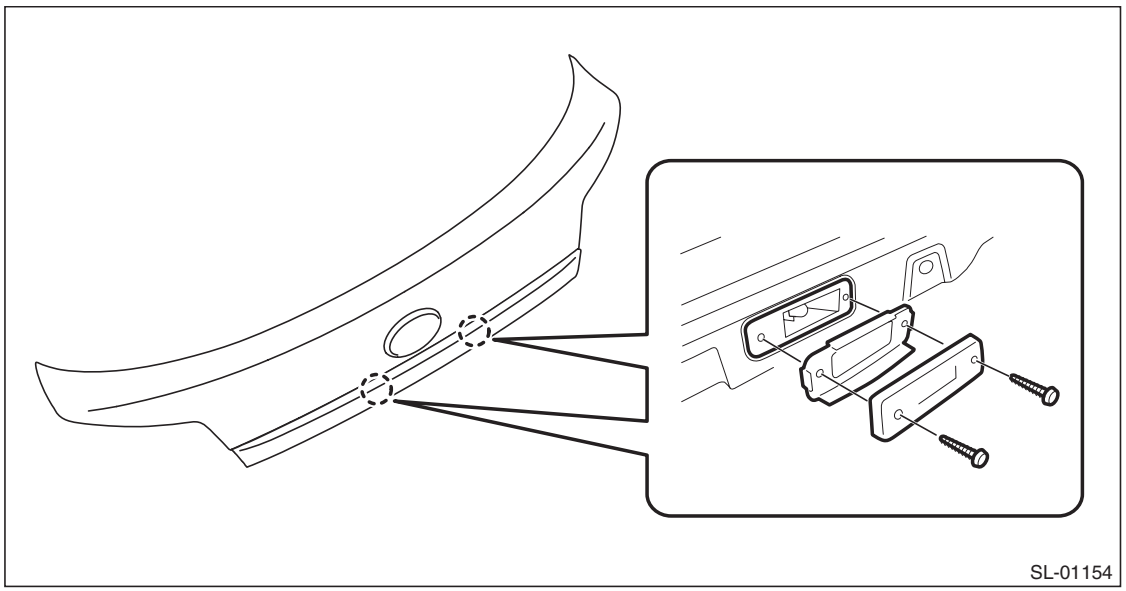

GETtheMANUALS.org

(3) Remove the license plate light assembly harness from the rear gate garnish.

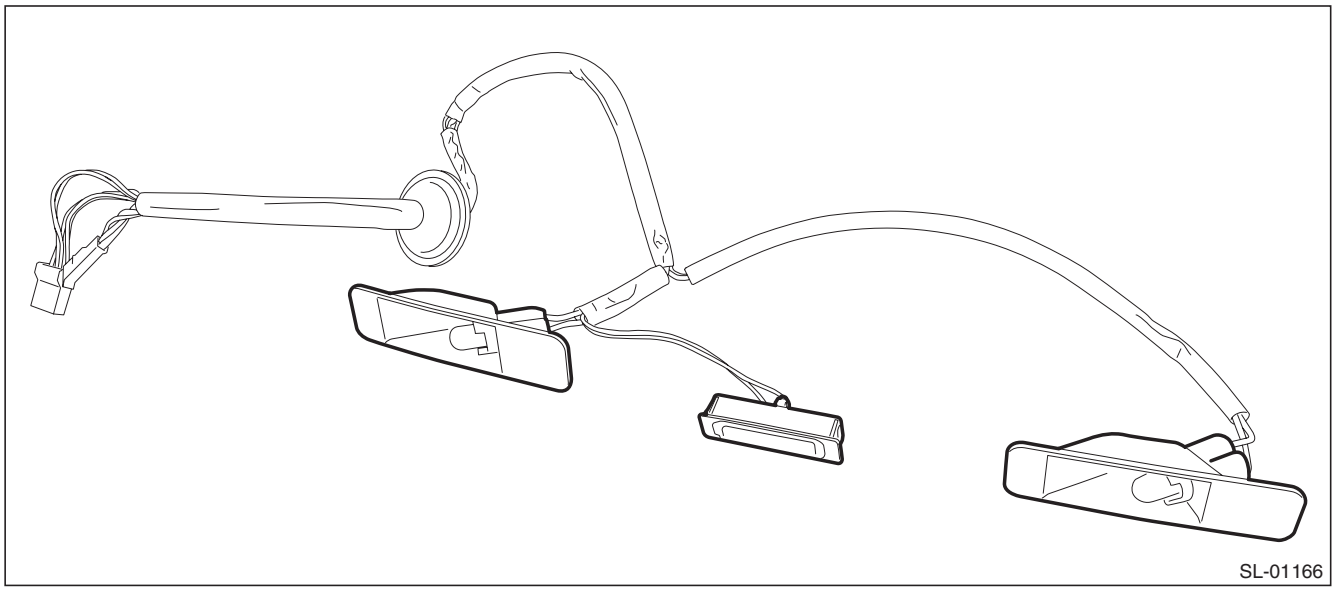

B: INSTALLATION

CAUTION:
Make sure that the harness grommet is installed securely.
Incomplete installation causes water leak.
Install each part in the reverse order of removal.

C: INSPECTION

1) Disconnect the rear gate opener button connector.
2) Measure the resistance between rear gate opener button terminals.

Preparation tool: Circuit tester

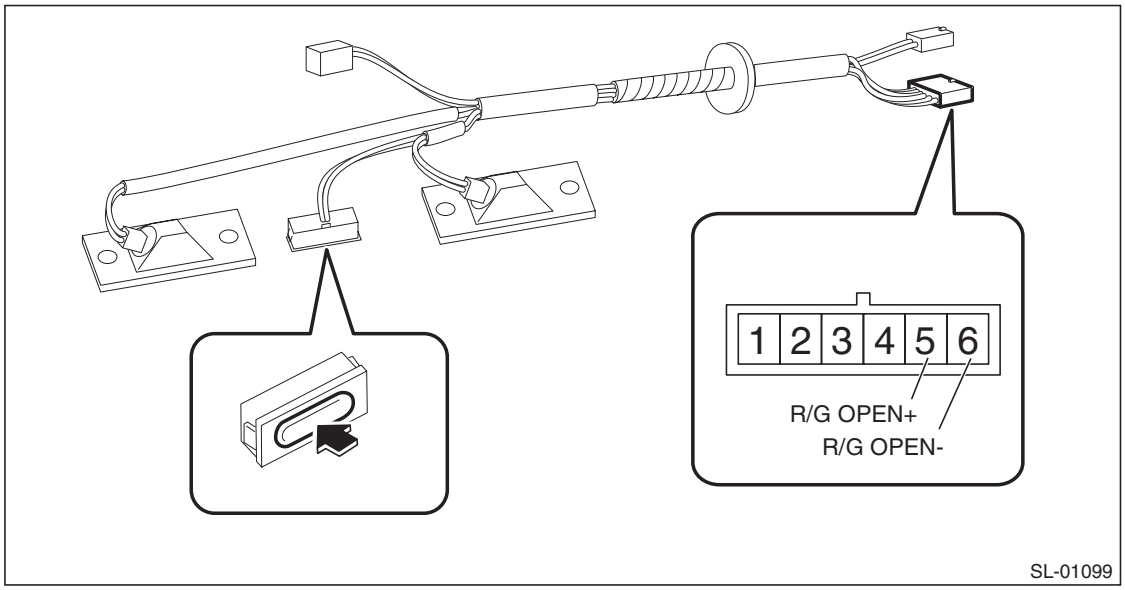

Terminal No.	Inspection conditions	Specification
5 — 6	Open	Less than 1 Ω
	Close	1 MΩ or more

3) Replace the rear gate opener button if the inspection result is not within the standard value.

GETtheMANUALS.org

13. Trunk Opener Switch

A: REMOVAL

1. TRUNK OPENER SWITCH

NOTE:
The trunk opener button is integrated with the VDC OFF switch.
1) Remove the instrument panel lower cover. <Ref. to EI-64, REMOVAL, Instrument Panel Lower Cover.>
2) Release the claws and remove the trunk opener button.

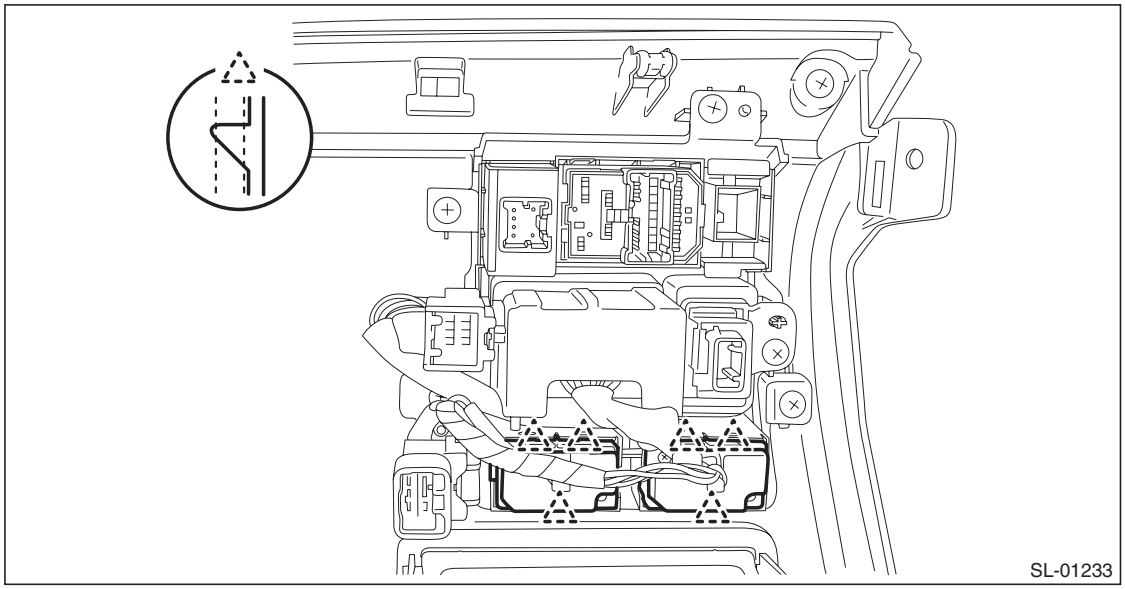

2. TRUNK OPENER CANCEL BUTTON

1) Remove the glove box. <Ref. to EI-66, REMOVAL, Glove Box.>
2) Release the claws and remove the trunk opener cancel button.

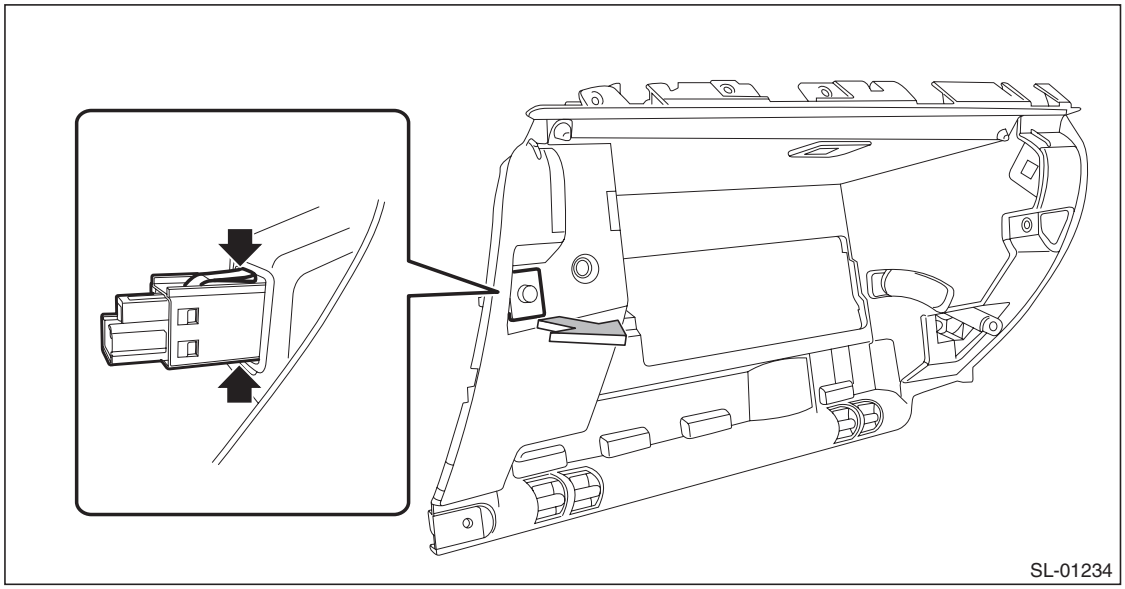

B: INSTALLATION

Install each part in the reverse order of removal.

GETtheMANUALS.org

C: INSPECTION

1. TRUNK OPENER SWITCH

1) Disconnect the trunk opener button connector.
2) Measure the resistance between trunk opener button terminals.

Preparation tool: Circuit tester

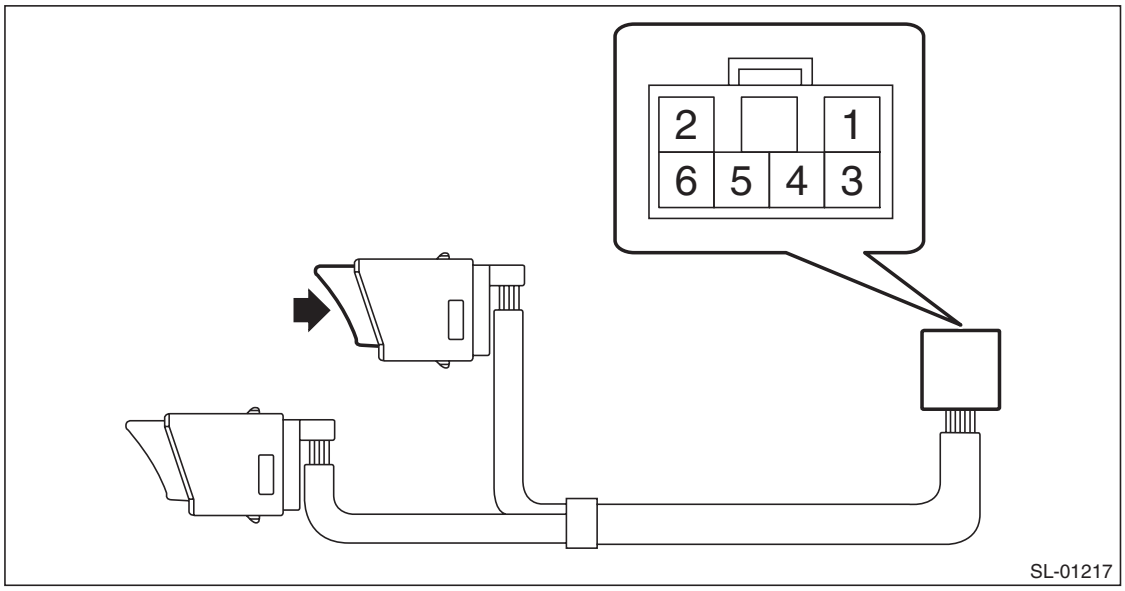

Terminal No.	Inspection conditions	Specification
4 — 2	Open	Less than 1 Ω
	Close	1 MΩ or more

3) Replace the trunk opener button if the inspection result is not within the standard value.

2. TRUNK OPENER CANCEL BUTTON

1) Disconnect the trunk opener cancel button connector.
2) Measure the resistance between trunk opener cancel button terminals.

Preparation tool: Circuit tester

Terminal No.	Inspection conditions	Specification
1 — 2	Switch ON	Less than 1 Ω
	Switch OFF	1 MΩ or more

3) Replace the trunk opener button if the inspection result is not within the standard value.

GETtheMANUALS.org

14. Rear Gate Latch and Actuator Assembly

A: REMOVAL

1) Disconnect the ground cable from battery.
2) Remove the rear gate trim. <Ref. to EI-160, REMOVAL, Rear Gate Trim.>
3) Remove the rear gate latch & actuator assembly.
   (1) Remove the bolts and pull out the rear gate latch & actuator assembly to the vehicle front.
   (2) Disconnect the connectors, and then remove the rear gate latch & actuator assembly.

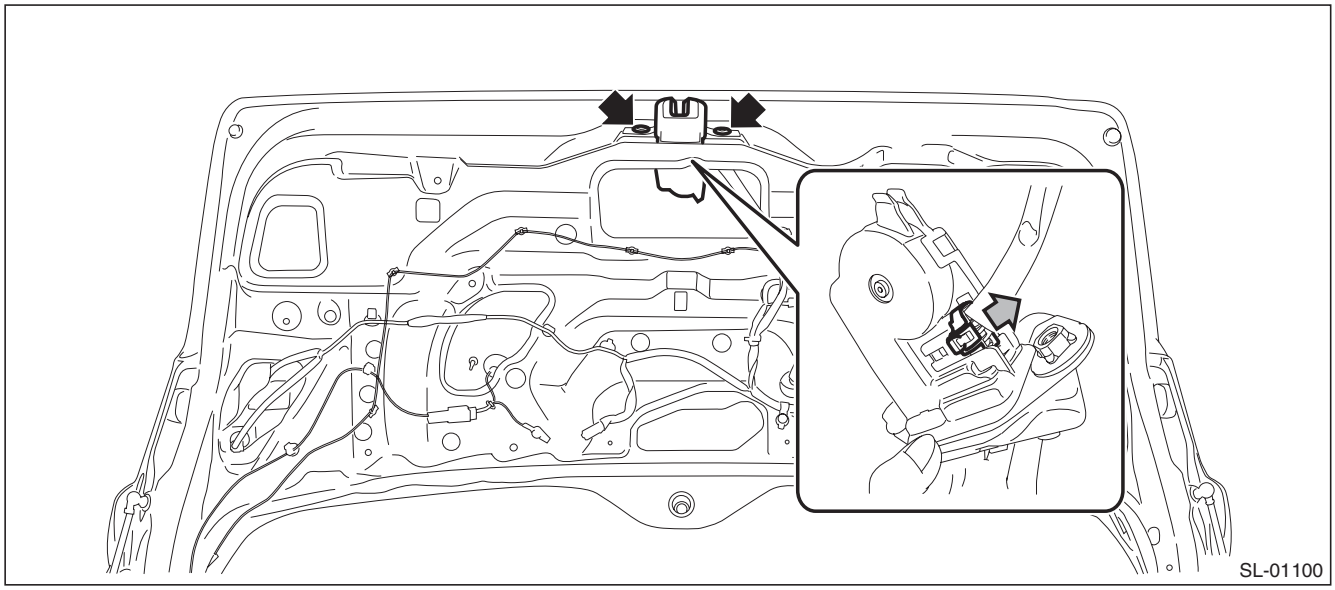

B: INSTALLATION

Install each part in the reverse order of removal.

Tightening torque:
Refer to "COMPONENT" of "General Description". <Ref. to SL-3, REAR GATE LOCK AND TRUNK LID LOCK, COMPONENT, General Description.>

C: INSPECTION

1. REAR GATE LATCH

Check if the rear gate latch operates normally.
If latch deformation, abnormal wear, or unsmooth lock operation is observed, replace the rear gate latch & actuator assembly.

GETtheMANUALS.org

2. LOCK ACTUATOR

1) Disconnect the rear gate latch & actuator assembly connector.
2) Check the door lock operation by applying battery voltage between the terminals of rear gate latch & actuator.

Preparation tool: Circuit tester

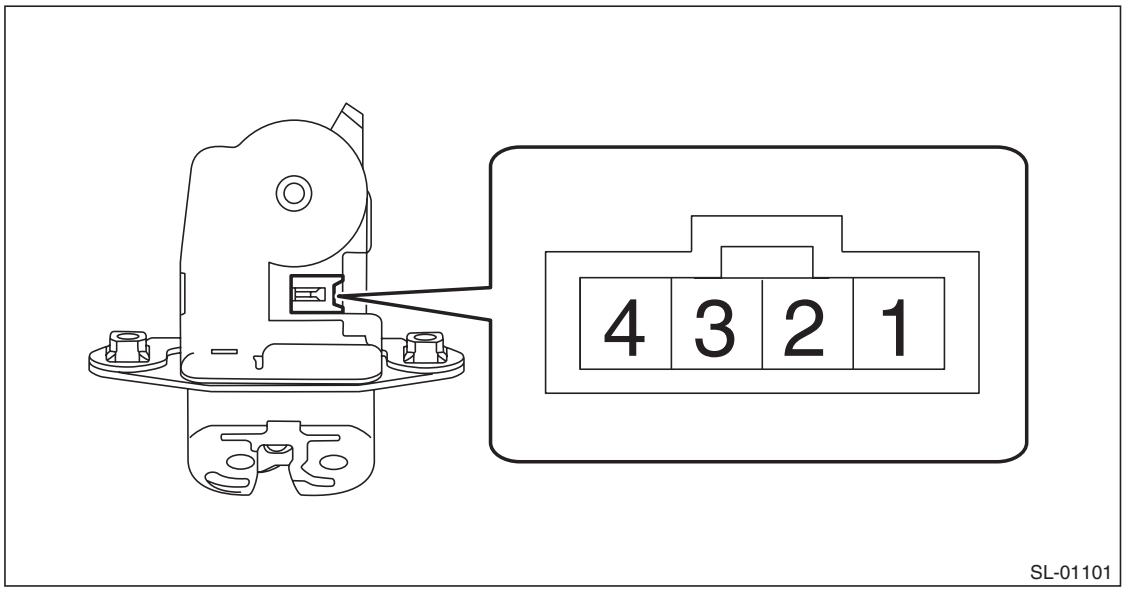

Inspection conditions	Terminal No.	
	1	2
LOCK → UNLOCK	+	–

3) If the actuator does not operate normally, replace the rear gate latch & actuator assembly.

GETtheMANUALS.org

15.Trunk Lid Latch and Actuator Assembly

A: REMOVAL

1) Disconnect the ground cable from battery.
2) Remove the trunk lid trim. <Ref. to EI-127, TRUNK LID TRIM, REMOVAL, Trunk Room Trim.>
3) Remove the trunk lid latch and actuator assembly.
   (1) Disconnect the connector.
   (2) Remove the bolts, and remove the trunk lid latch & actuator assembly.

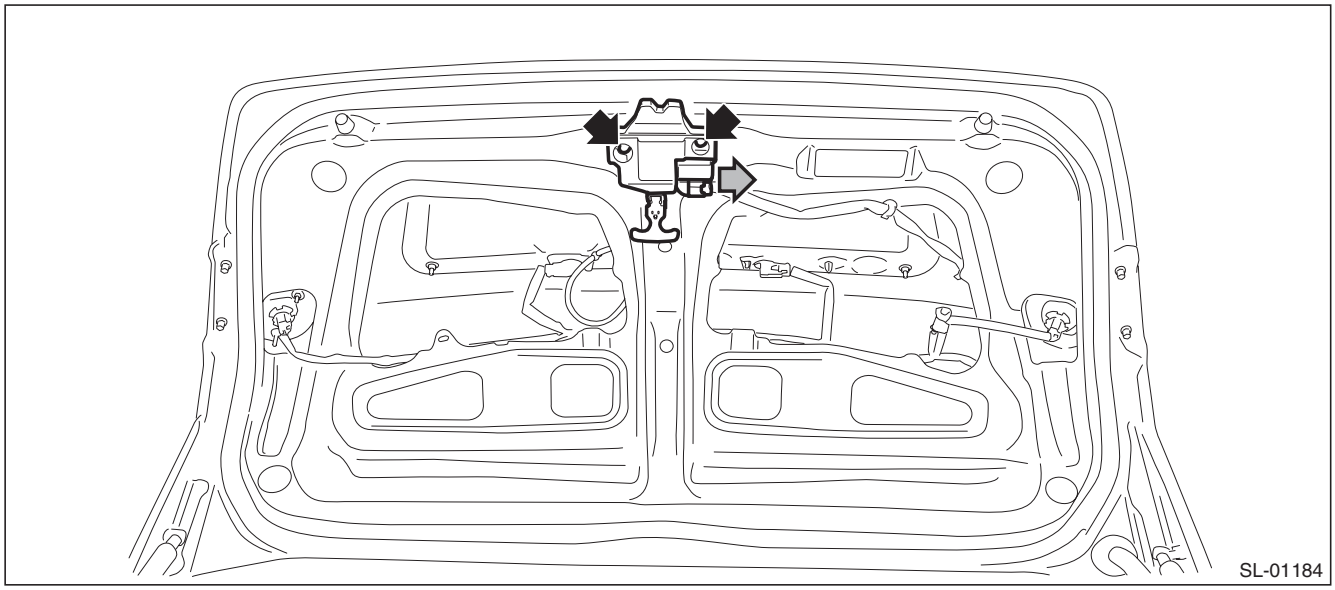

B: INSTALLATION

Install each part in the reverse order of removal.

Tightening torque:
Refer to "COMPONENT" of "General Description". <Ref. to SL-3, REAR GATE LOCK AND TRUNK LID LOCK, COMPONENT, General Description.>

C: INSPECTION

1. TRUNK LID LATCH

Check if the trunk lid latch operates normally.
If latch deformation, abnormal wear, or unsmooth lock operation is observed, replace the rear gate latch & actuator assembly.

GETtheMANUALS.org

2. LOCK ACTUATOR

1) Disconnect the trunk lid latch & actuator assembly connector.
2) Check the door lock operation by applying battery voltage between the terminals of trunk lid latch & actuator.

Preparation tool: Circuit tester

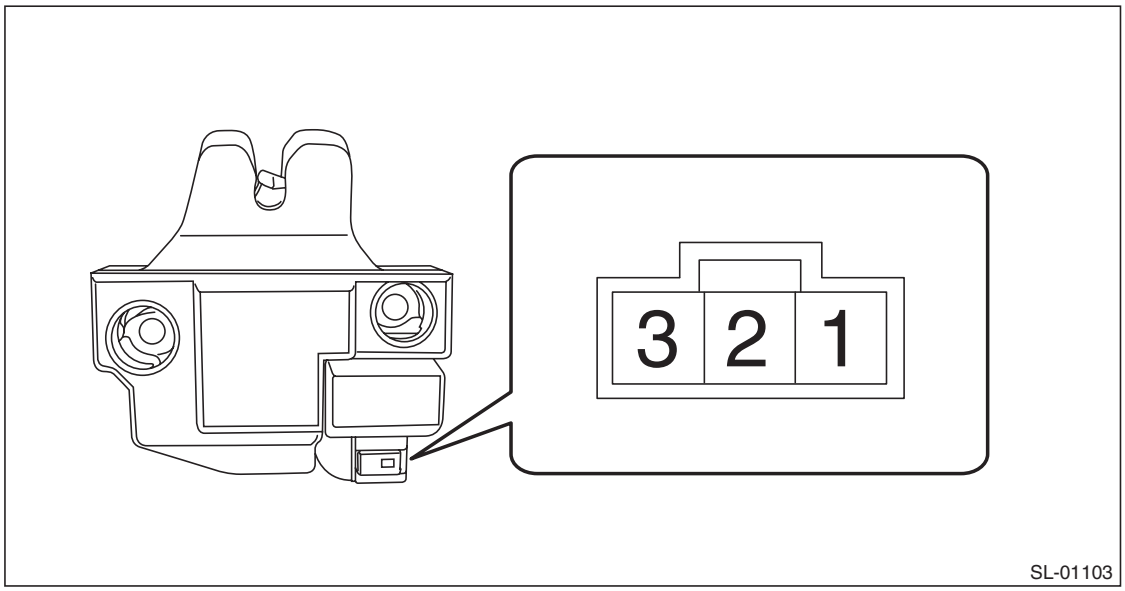

Inspection conditions	Terminal No.	
	1	2
LOCK → UNLOCK	+	–

3) If the actuator does not operate normally, replace the trunk lid latch & actuator assembly

GETtheMANUALS.org

16. Front Hood Lock Assembly

A: REMOVAL

1) Open the front hood.
2) Remove the front bumper face. <Ref. to EI-39, REMOVAL, Front Bumper.>
3) Remove the clips and remove the air intake duct.

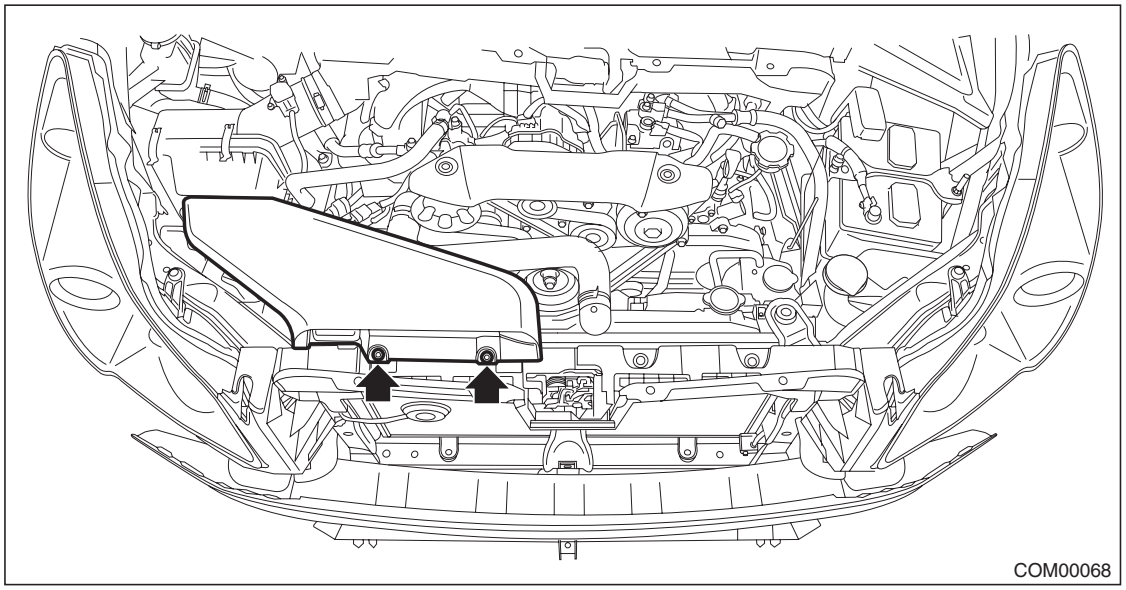

4) Remove the clips and remove the grille bracket.

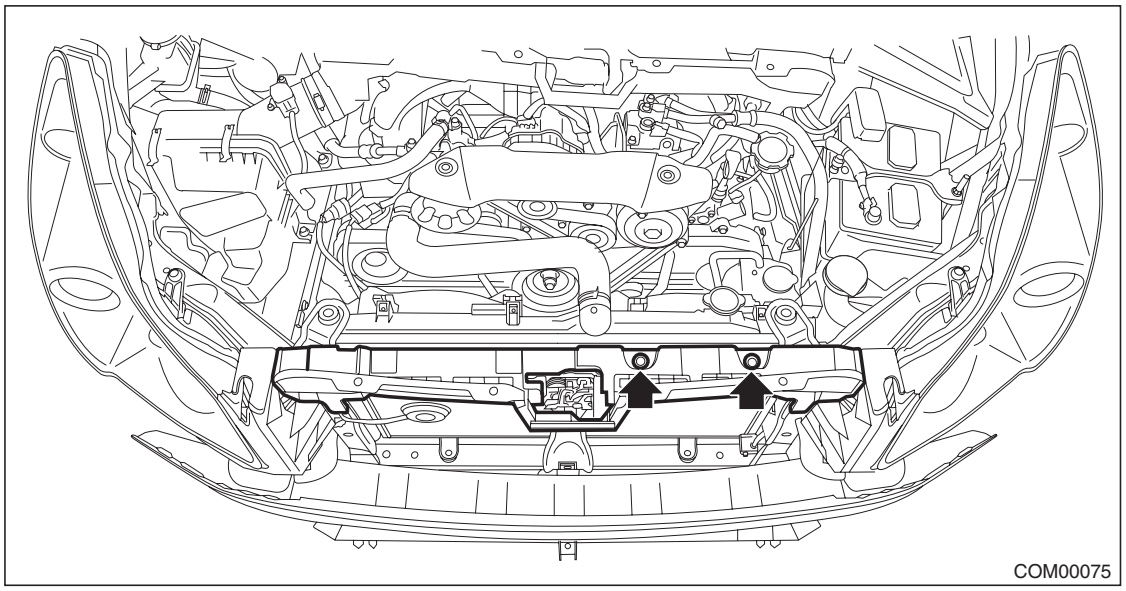

GETtheMANUALS.org

5) Remove the front hood lock assembly.
(1) Remove the bolt.

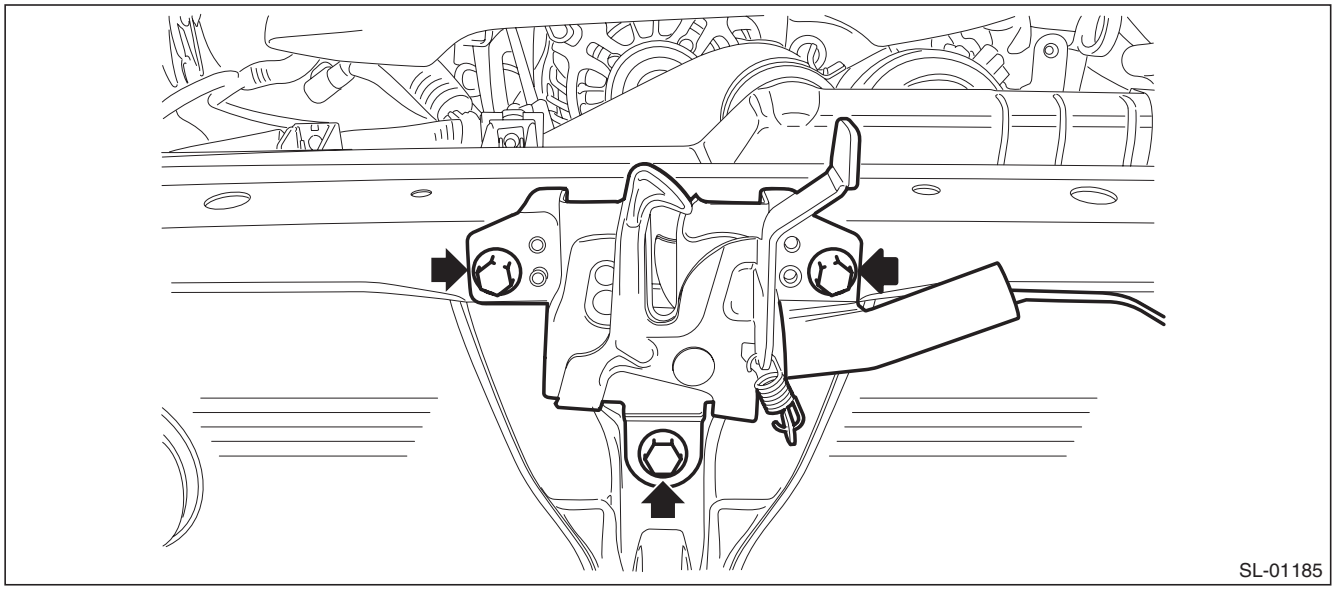

(2) Remove the release cable, and detach the front hood lock assembly.

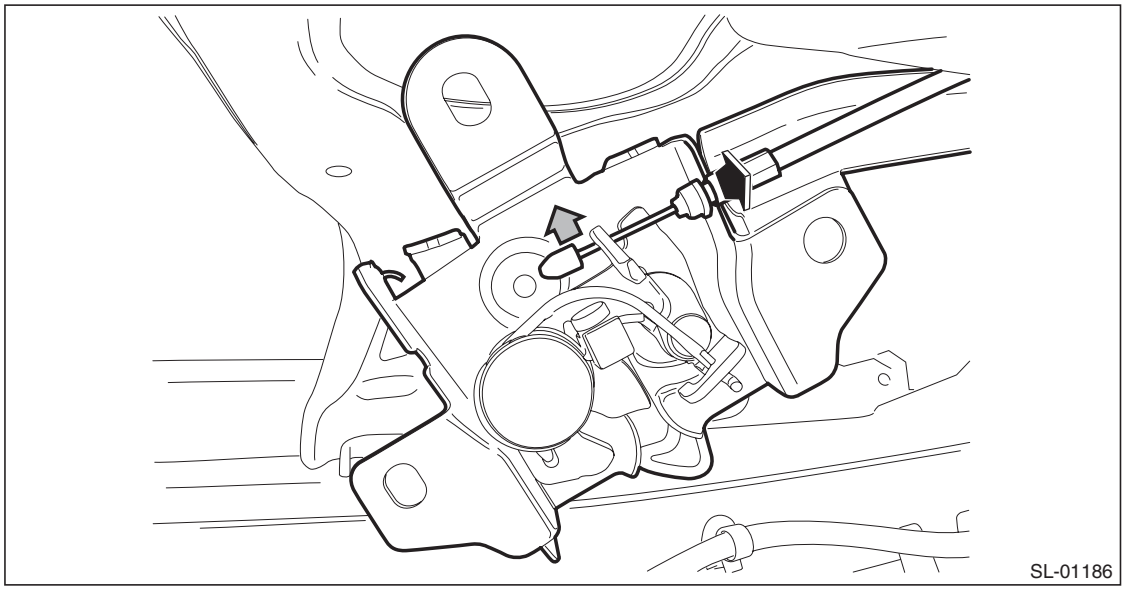

B: INSTALLATION

1) Before installation, check the following items.
- Grease is applied sufficiently to cable joints.

If grease is insufficient, add it as necessary before assembling the cable.
2) Install each part in the reverse order of removal.

Tightening torque:
Refer to "COMPONENT" of "General Description". <Ref. to SL-4, FRONT HOOD LOCK AND REMOTE OPENERS, COMPONENT, General Description.>

3) Adjust the fog light beam. (Model with fog light) <Ref. to LI-41, FOG LIGHT AIMING, ADJUSTMENT, Front Fog Light Assembly.>

GETtheMANUALS.org

C: ADJUSTMENT

1) Loosen the bolt, and adjust the lock assembly while moving it up and down.

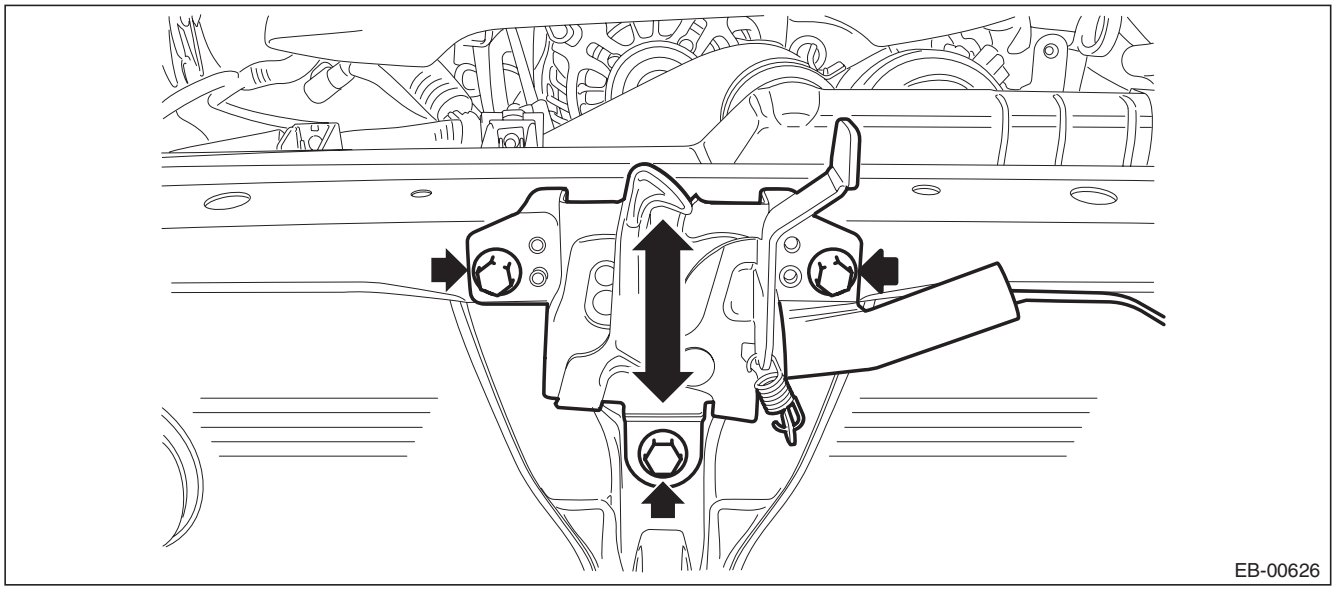

2) After adjustment, tighten the bolts securely.

Tightening torque:
Refer to "COMPONENT" of "General Description". <Ref. to SL-4, FRONT HOOD LOCK AND REMOTE OPENERS, COMPONENT, General Description.>

D: INSPECTION

Check if the front hood lock ASSY operates normally.
If latch deformation, abnormal wear, or unsmooth lock operation is observed, replace the front hood lock assembly.

GETtheMANUALS.org

17. Remote Openers

A: REMOVAL

1. FRONT HOOD OPENER

1) Remove the opener lever.
   (1) Remove the cable.
   (2) Remove the nut, and detach the opener lever.

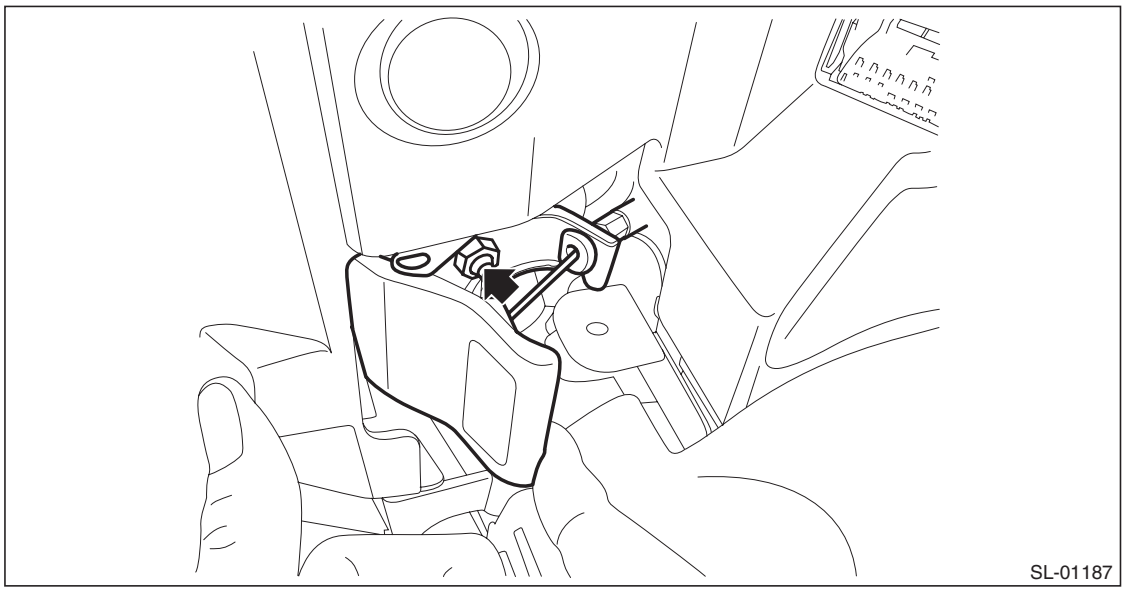

2) Remove the following parts and remove the cable clip and cable.
- Front hood lock ASSY: <Ref. to SL-51, REMOVAL, Front Hood Lock Assembly.>
- Instrument panel lower cover: <Ref. to EI-64, REMOVAL, Instrument Panel Lower Cover.>

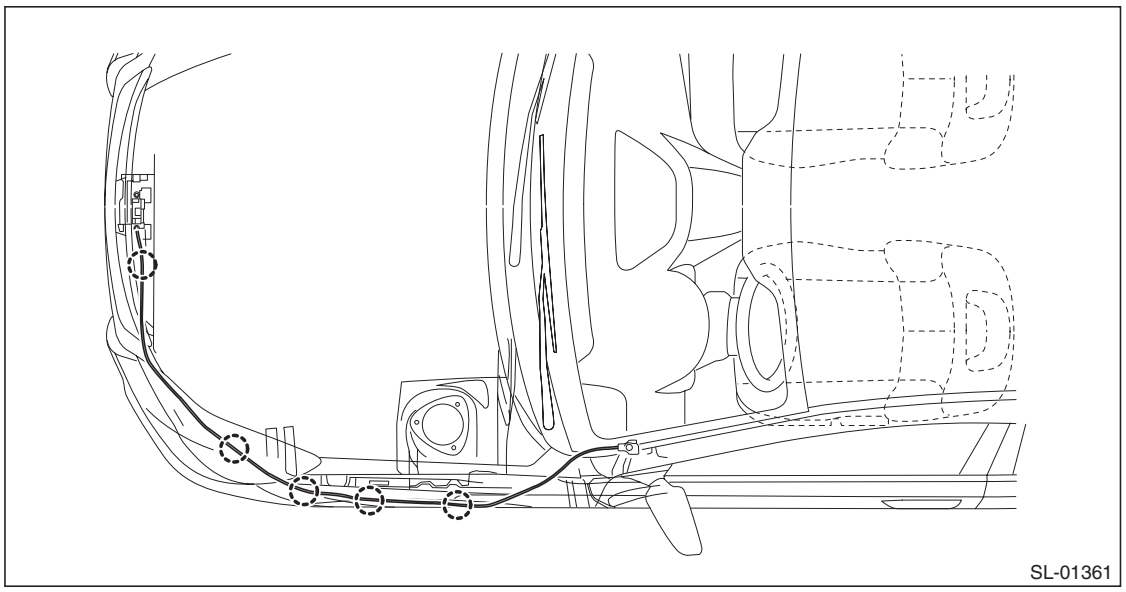

GETtheMANUALS.org

2. FUEL FLAP OPENER

1) Remove the pull handle cover.
   (1) Open the cover by using a flat tip screwdriver.
   (2) Remove the screw and remove the pull handle cover.

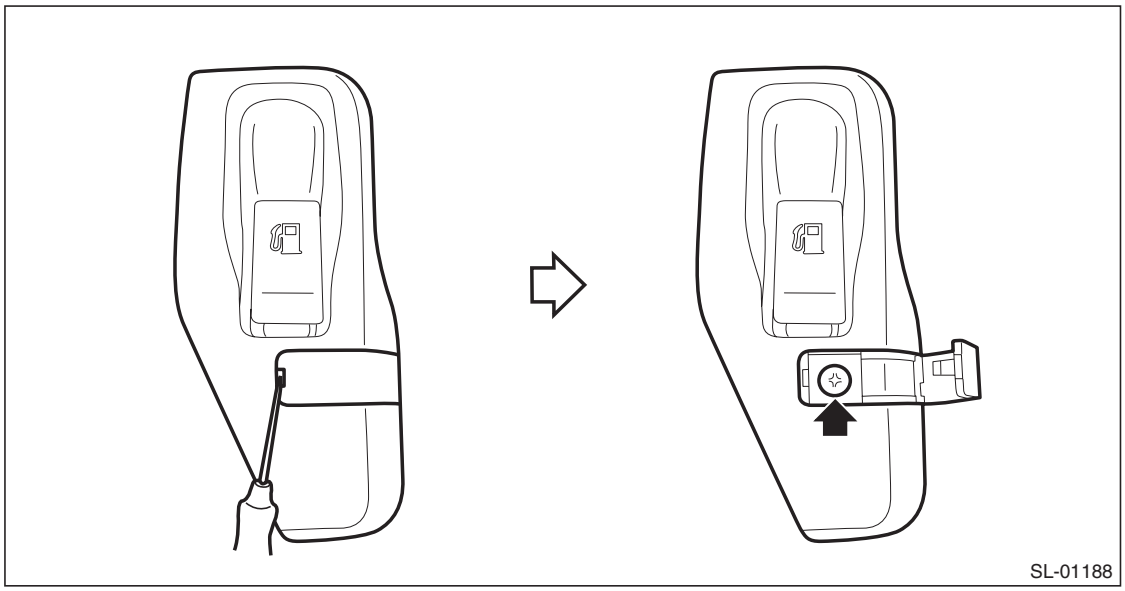

2) Remove the opener handle.
   (1) Remove the nut.
   (2) Remove the cable from opener pull handle.

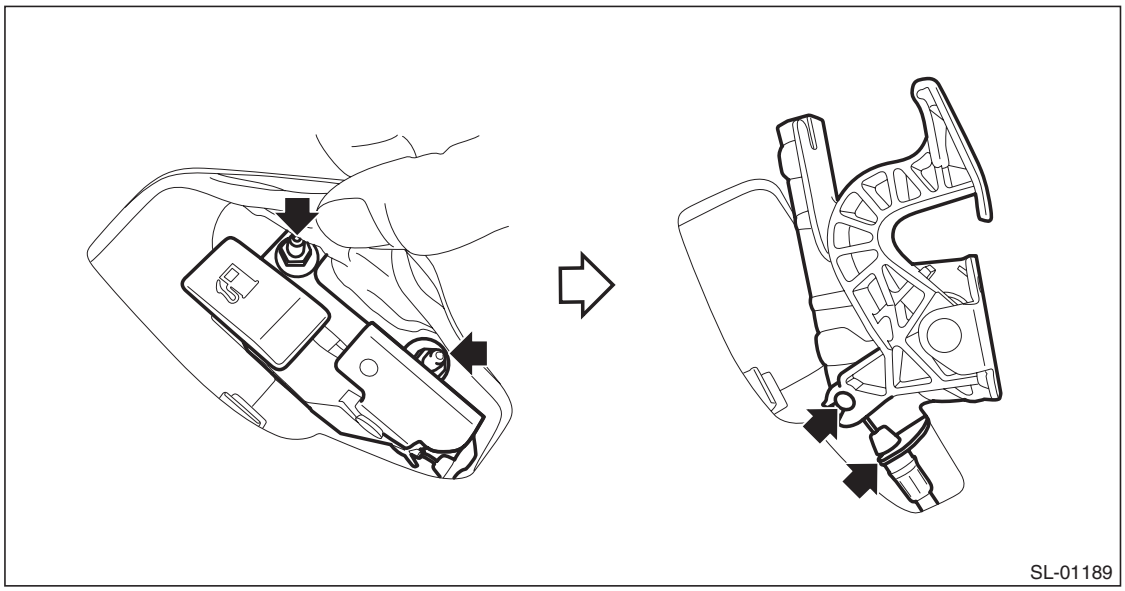

3) Remove the rear quarter trim RH. (OUTBACK model) <Ref. to EI-114, OUTBACK MODEL, REMOVAL, Rear Quarter Trim.>
4) Remove the trunk room trim (RH). (Sedan model) <Ref. to EI-127, TRUNK ROOM TRIM, REMOVAL, Trunk Room Trim.>

GETtheMANUALS.org

5) Remove the fuel lock inside the quarter panel.
   (1) Press the claws of the fuel lock.
   (2) While keeping the condition in step (1), pull the fuel lock to the rearward of the vehicle.

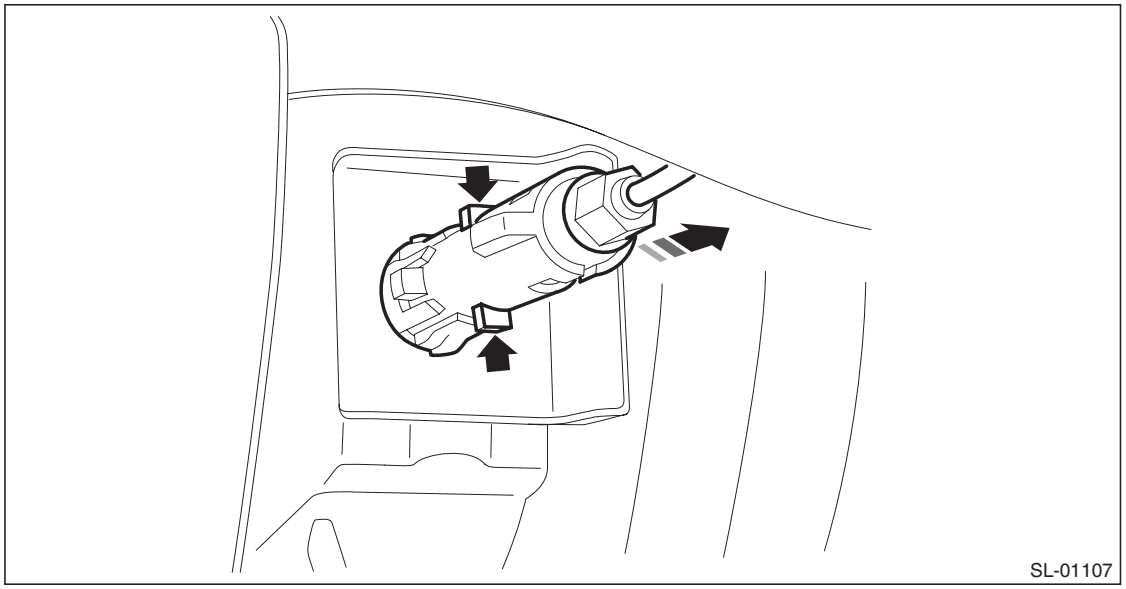

6) Remove the lower inner trim. <Ref. to EI-96, REMOVAL, Lower Inner Trim.>
7) Remove the cable from the clip.
- Sedan model

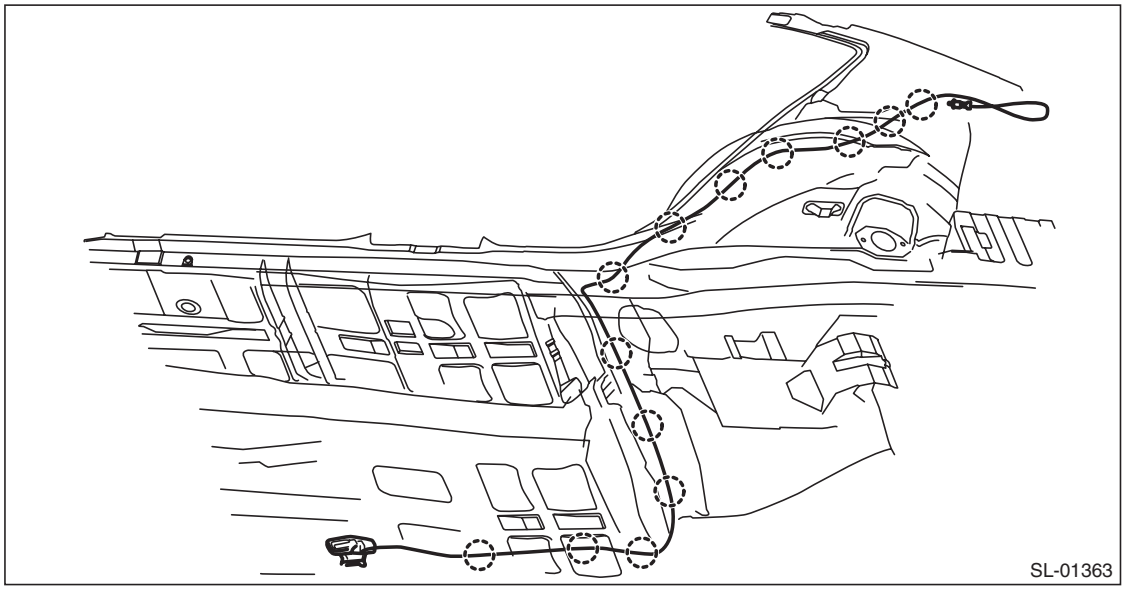

GETtheMANUALS.org

- OUTBACK model

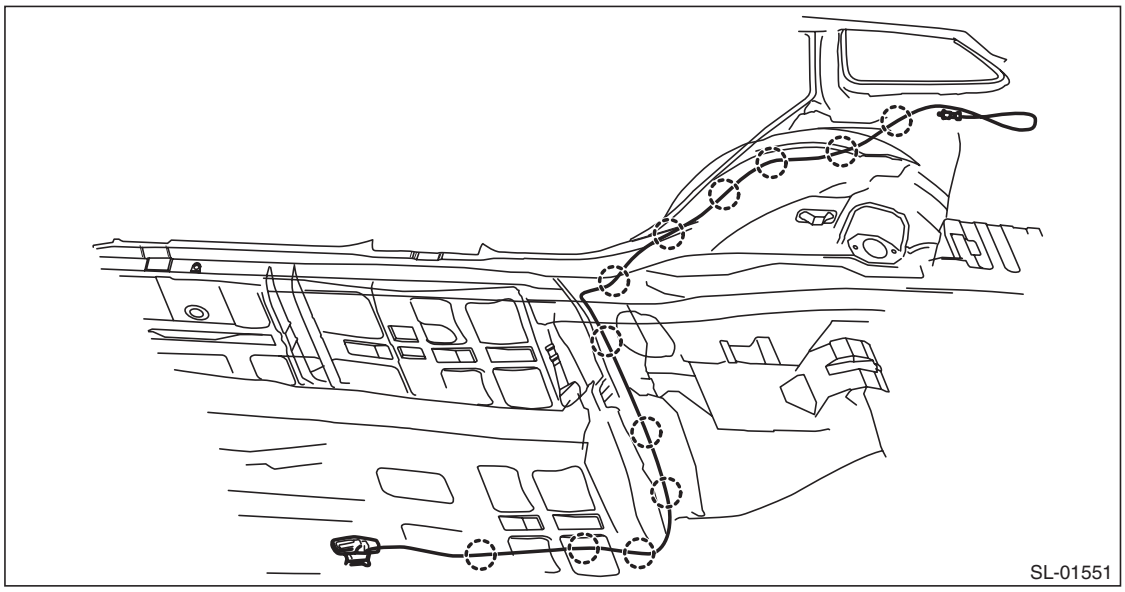

B: INSTALLATION

1) Before installation, check the following items.
- Cable is free from deformation such as fray.

2) Install each part in the reverse order of removal.

Tightening torque:
Refer to "COMPONENT" of "General Description". <Ref. to SL-4, FRONT HOOD LOCK AND REMOTE OPENERS, COMPONENT, General Description.>

C: INSPECTION

Check if the front hood and fuel flap operate normally.

GETtheMANUALS.org

18.Ignition Key Lock

A: REPLACEMENT

1) Disconnect the ground cable from battery.
2) Remove the steering column. <Ref. to PS-26, REMOVAL, Steering Column.>
3) Remove the ignition key lock.
   (1) Secure the steering column in a vise.
   (2) Drill out the bolts and remove the ignition key lock.

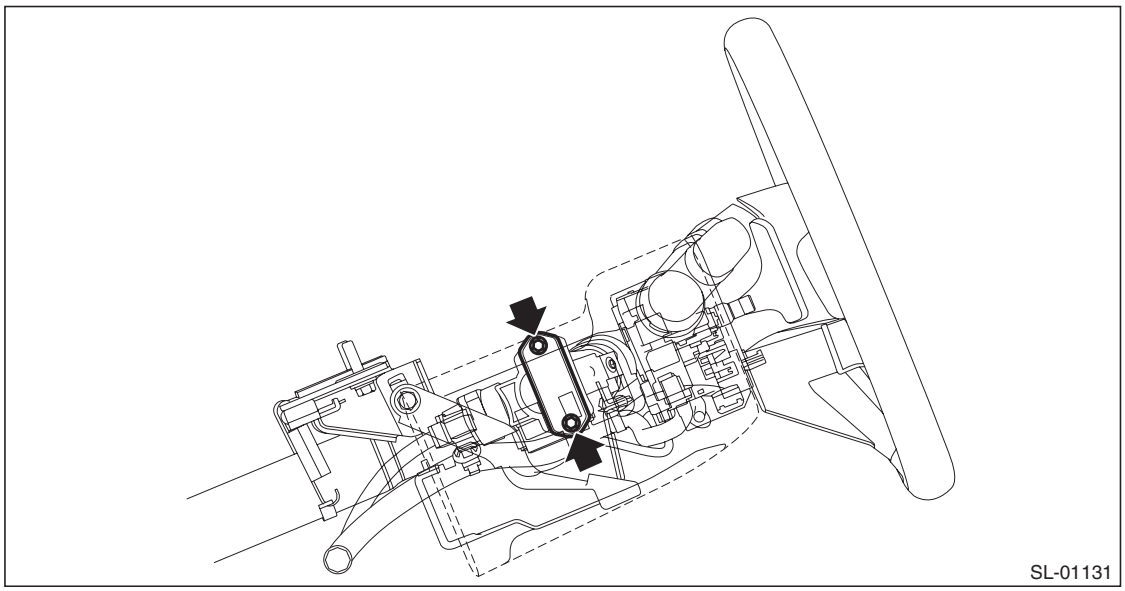

4) Install the ignition key lock.
   (1) Secure the ignition key lock to the steering column.
   (2) Use new bolts. Tighten the bolt until the bolt head is broken (bolt head wrenched off).

GETtheMANUALS.org

B: INSPECTION

1) Disconnect the ignition switch connector.
2) Measure the resistance between ignition switch terminals.

Preparation tool: Circuit tester

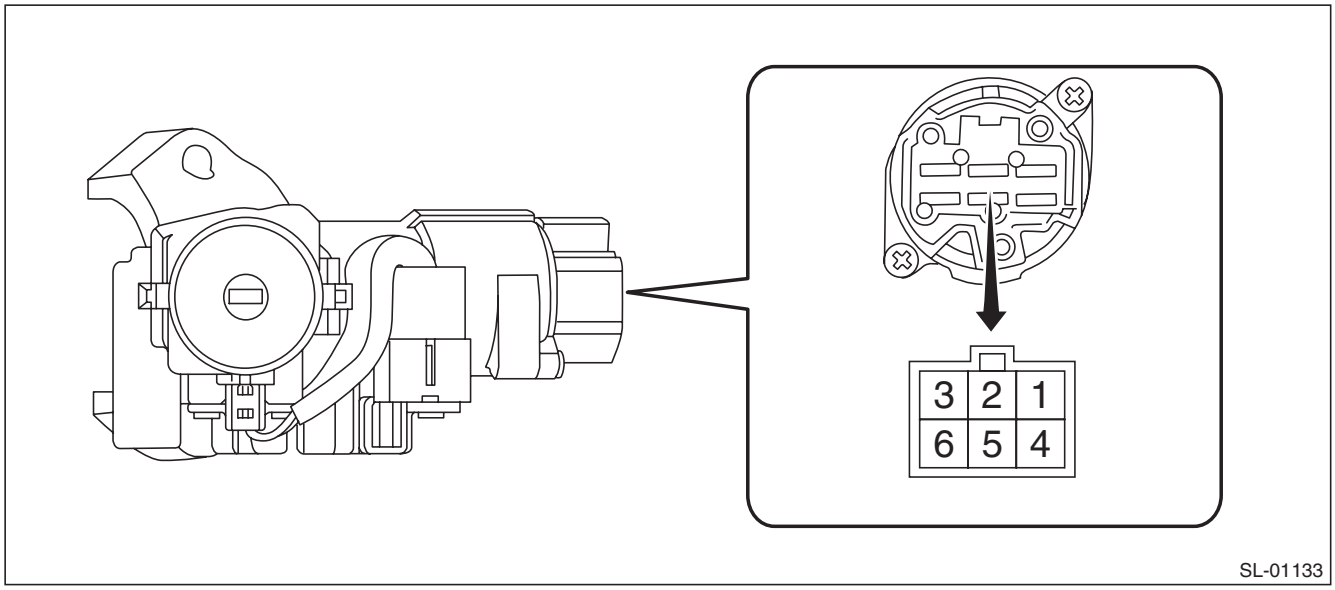

Terminal No.	Inspection Conditions	Specification
—	LOCK	—
3 — 5	ACC	Less than 1 Ω
3 — 1, 4 3 — 5	ON	Less than 1 Ω
3 — 2, 6 3 — 1, 4	ST	Less than 1 Ω

3) Replace the ignition switch if the inspection result is not within the standard value.

GETtheMANUALS.org

19. Key Lock Cylinders

A: REPLACEMENT

1. FRONT DOOR

1) Raise the front door glass to the top position.
2) Remove the door trim. <Ref. to EI-60, FRONT DOOR, REMOVAL, Door Trim.>
3) Remove the sealing cover.

CAUTION:
- **Carefully remove the butyl tape. Excessive force will easily break the cover.**
- **If the sealing cover gets broken, replace it with a new part.**

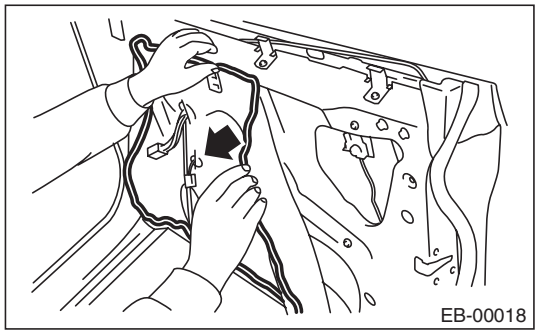

4) Remove the rod from the outer handle rod clamp.

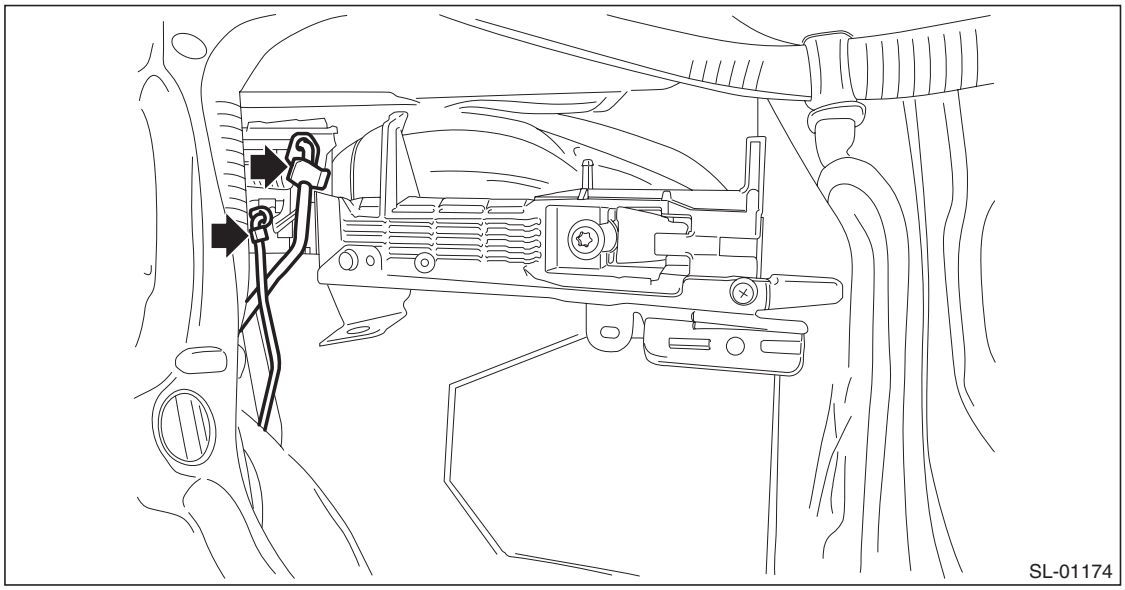

GETtheMANUALS.org

5) Remove the door outer handle cover.

Preparation tool: TORX® T30

(1) Remove the plug to the rear of the door panel.
(2) Loosen the TORX® bolt and remove the door outer handle cover.

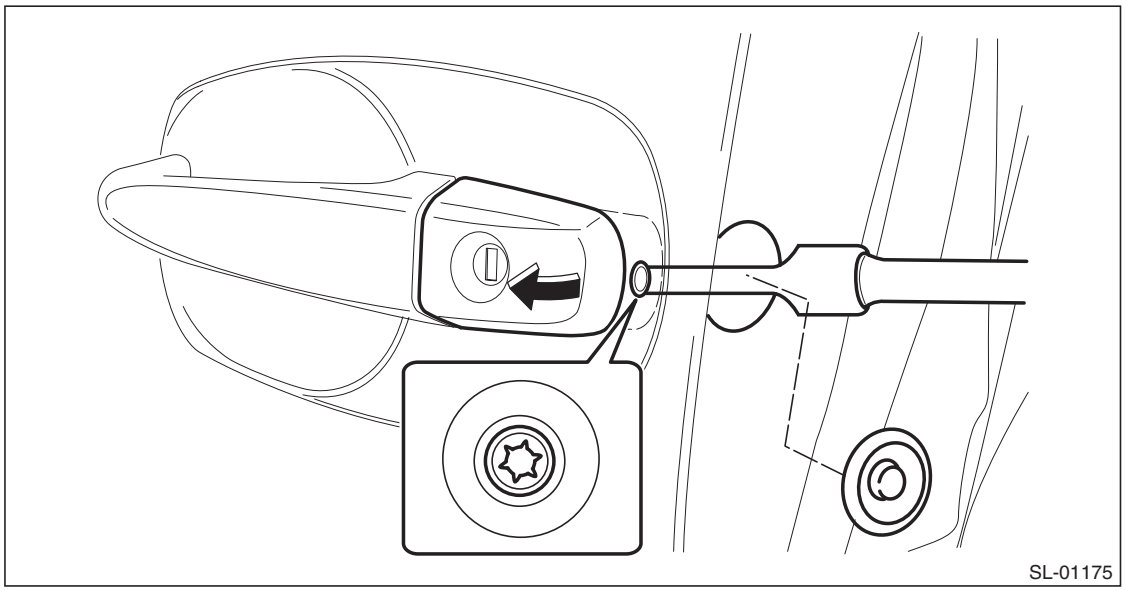

6) Remove the key cylinder from the door outer handle cover, and replace the key cylinder.

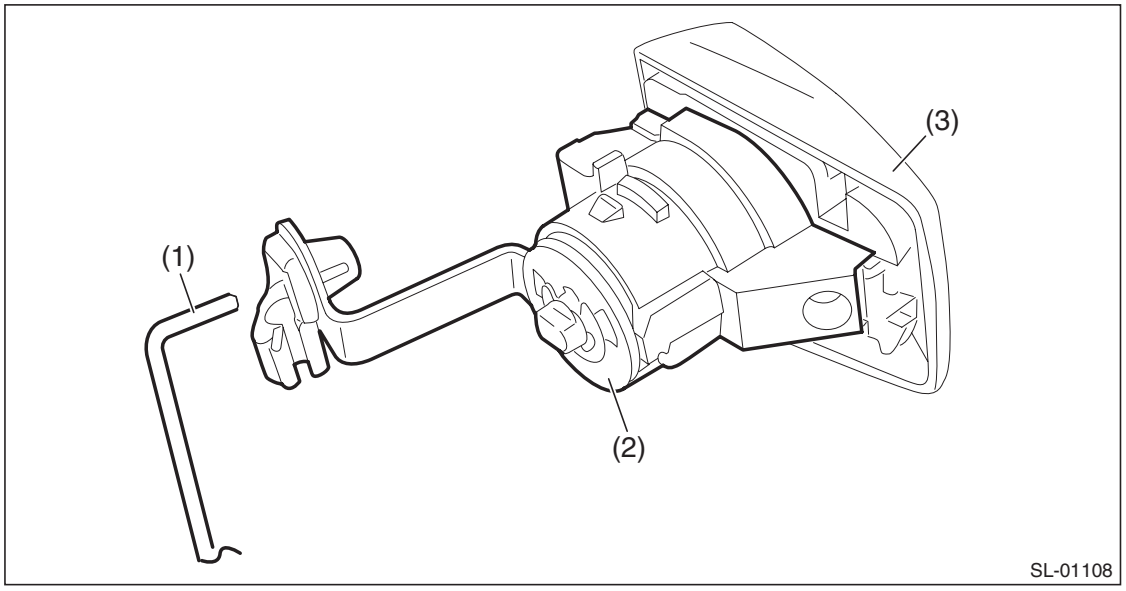

(1)	Latch connection rod	(2)	Key cylinder	(3)	Door outer handle cover (driver's seat only)

Tightening torque:

Refer to "COMPONENT" of "General Description". <Ref. to SL-2, DOOR LOCK ASSEMBLY, COMPONENT, General Description.>

GETtheMANUALS.org

2. TRUNK LID

1) Remove the trunk lid trim. <Ref. to EI-127, TRUNK LID TRIM, REMOVAL, Trunk Room Trim.>
2) Remove the key cylinder.
   (1) Remove the cable (1), clip (2) and bolt (3).

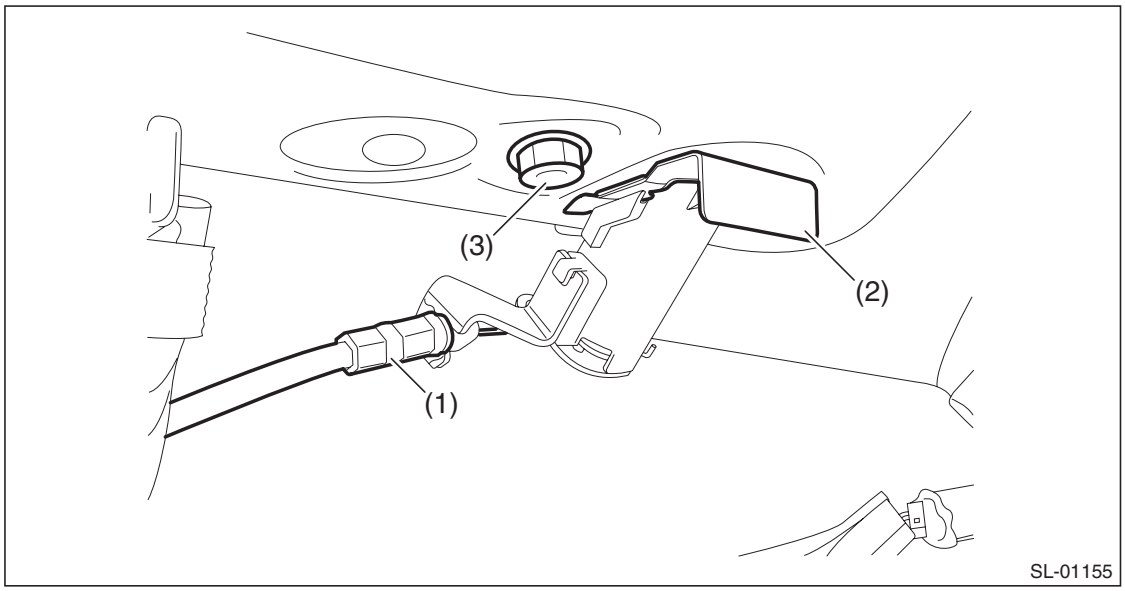

   (2) Remove the key cylinder from the trunk lid, and replace the key cylinder.

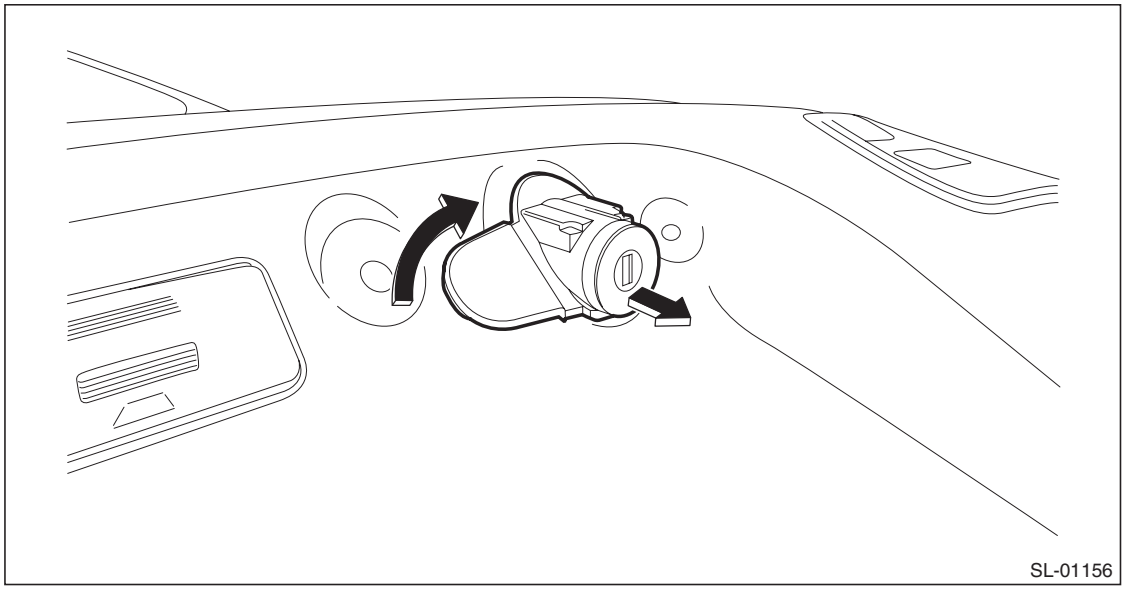

Tightening torque:
Key cylinder: 7.5 N·m (0.76 kgf-m, 5.5 ft-lb)

GETtheMANUALS.org

3. GLOVE BOX LID

1) Remove the glove box lid assembly.
   (1) Remove the glove box damper.
   (2) Release the stoppers and remove the glove box lid assembly by pulling it toward you.

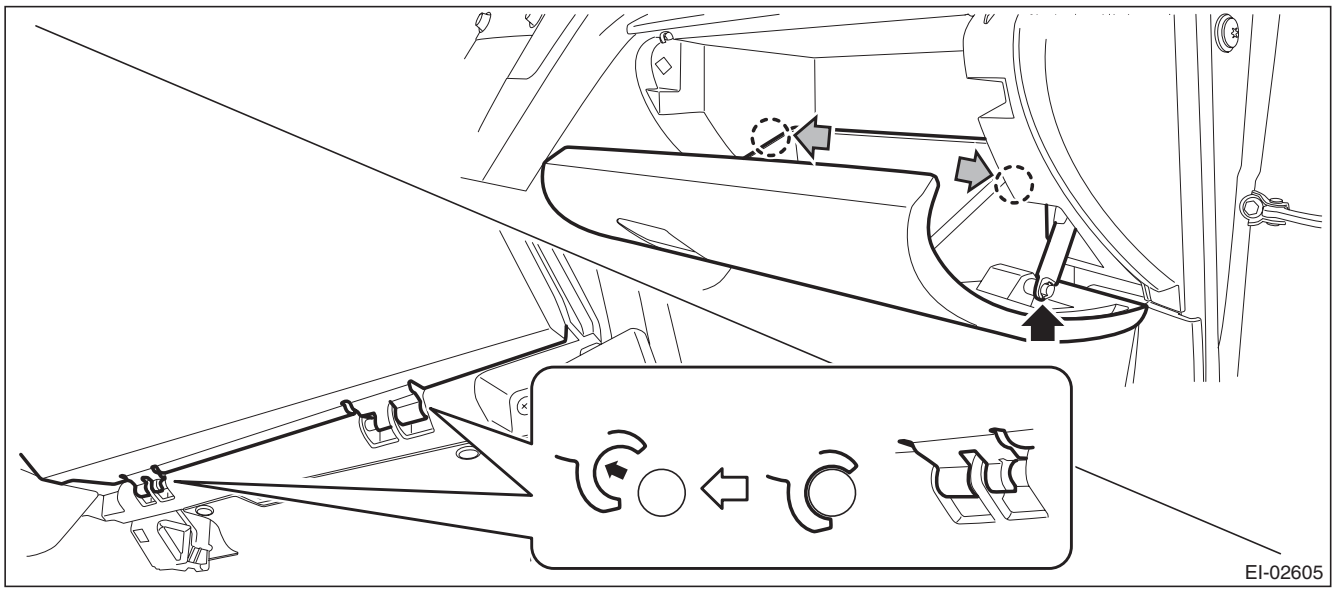

2) Remove the key cylinder.
   (1) UNLOCK the key cylinder, and pull up the lock knob.
   (2) While maintaining the condition (1), insert the key to set LOCK condition.

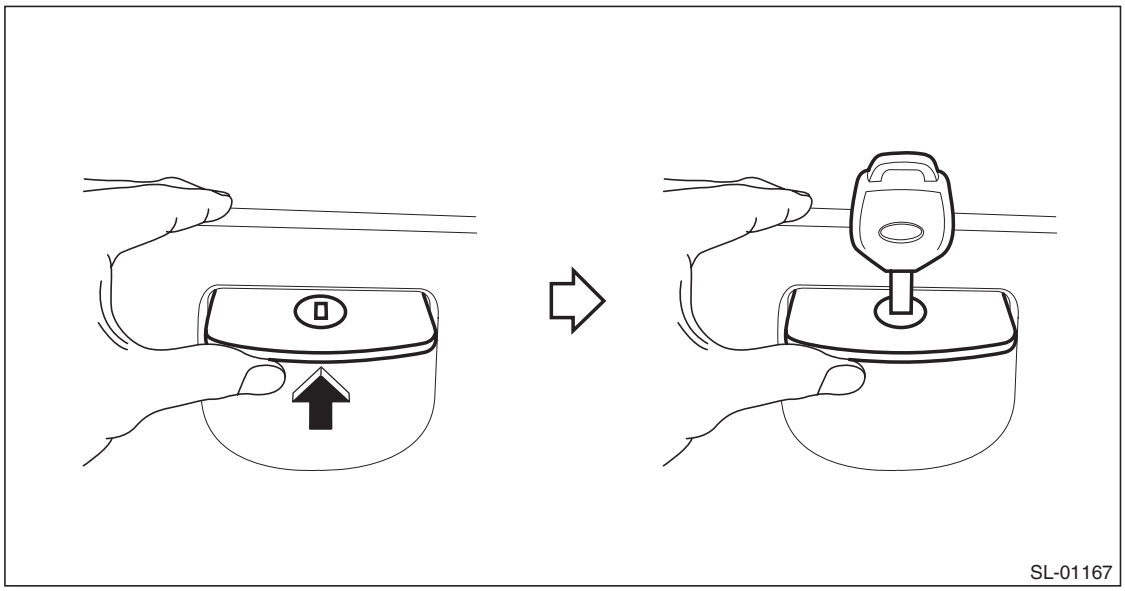

   (3) Push out the key cylinder, while pressing in the metal plate.

GETtheMANUALS.org

(4) Remove the key cylinder from lock knob, and replace the key cylinder.

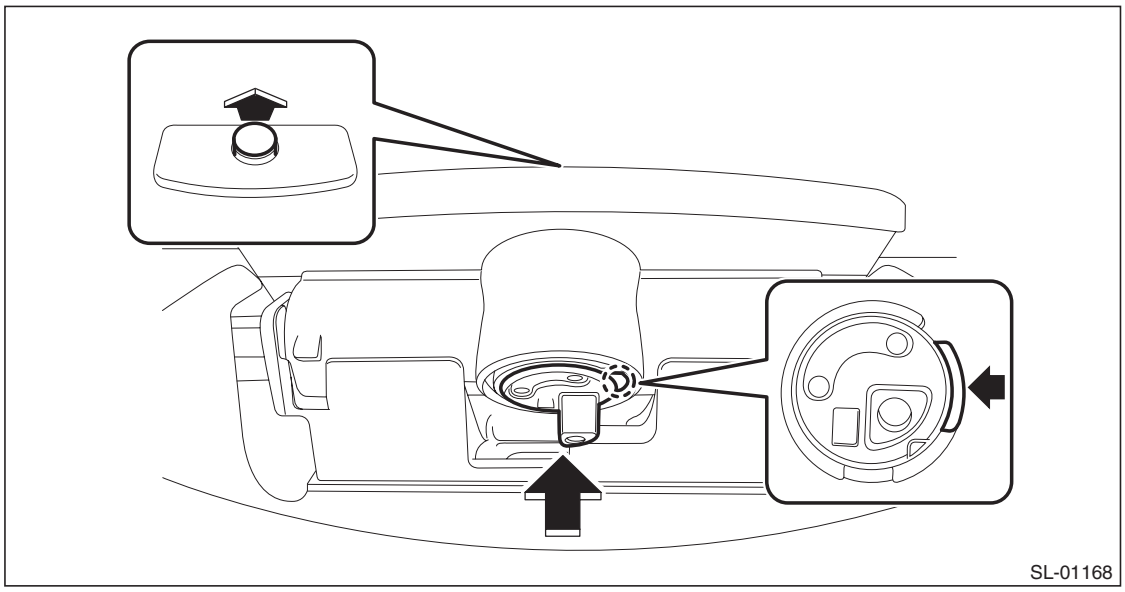

GETtheMANUALS.org

20.Security Control Module

A: REMOVAL

1) Remove the heater and cooling unit. <Ref. to AC-62, REMOVAL, Heater and Cooling Unit.>
2) Remove the security control module.
   (1) Disconnect the connector.
   (2) Remove the nuts, and remove the security control module.

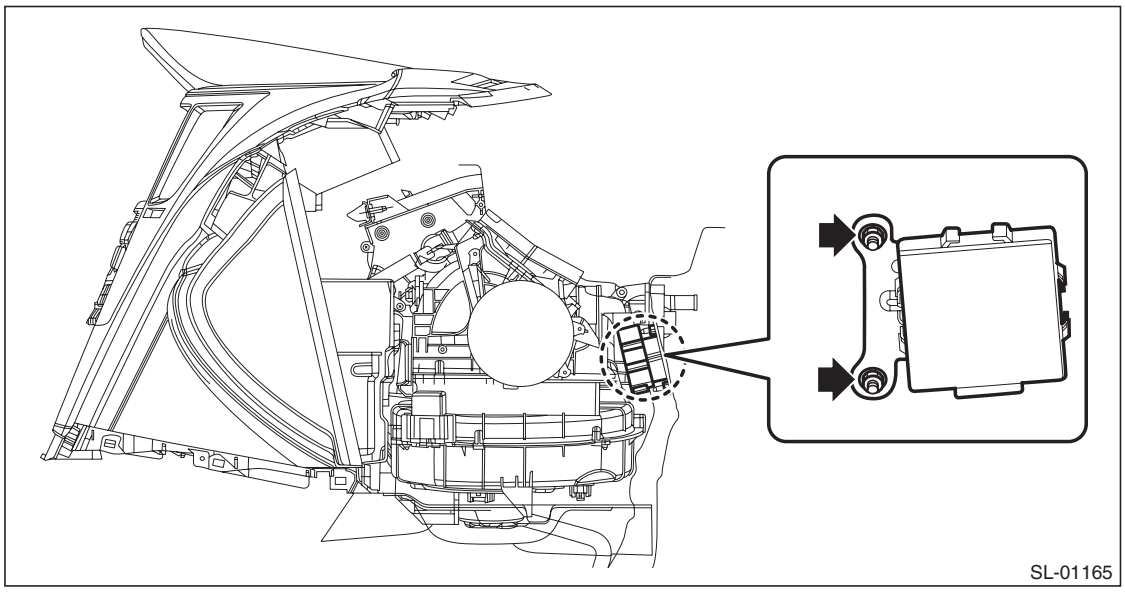

B: INSTALLATION

CAUTION:
You must register the immobilizer when a immobilizer-related control module has been replaced. For procedures, refer to the "PC application help for Subaru Select Monitor".
Install each part in the reverse order of removal.

Tightening torque:
Security control module: 7.5 N·m (0.76 kgf-m, 5.5 ft-lb)

GETtheMANUALS.org

21.Impact Sensor

A: REMOVAL

1) Remove the key from ignition switch.
2) Close all the doors and rear gate.
3) Press the UNLOCK button of the keyless transmitter.
4) Disconnect the ground cable from battery.
5) Remove the impact sensor.
6) Change the impact sensor setting using the Subaru Select Monitor.

B: INSTALLATION

1) Remove the key from ignition switch.
2) Close all the doors and rear gate.
3) Press the UNLOCK button of the keyless transmitter.
4) Disconnect the ground cable from battery.
5) Install the impact sensor.
6) Change the impact sensor setting using the Subaru Select Monitor.

C: OPERATION

1. IMPACT SENSOR SETTING USING SUBARU SELECT MONITOR

1) Prepare the Subaru Select Monitor kit.
2) Turn the ignition switch to ON (engine OFF) and run the “PC application for Subaru Select Monitor”.
3) On «System Selection Menu» display, select {Integ. unit mode}.
4) Select {ECM customizing}.
5) Perform impact sensor ON/OFF setting.
- Installed: ON
- Removed: OFF

6) Perform impact sensor ON/OFF setting.
- Installed: ON
- Removed: OFF

7) Turn the ignition switch to OFF and remove the Subaru Select Monitor.

D: ADJUSTMENT

1. CHECK IMPACT SENSOR

1) Remove the key from ignition switch.
2) Close all windows.
3) Close all the doors and rear gate. Leave the front hood open.
4) Press the LOCK button of the keyless transmitter from outside the vehicle.
5) After 30 seconds, check if the security indicator light blinks twice in 0.5 second at 2 seconds intervals.
6) For all glasses, hit the glass strongly and consecutively to see if the security alarm operates. In addition, lift the front hood by approximately 12 cm (4.7 in) or more and let it drop by its weight to see if the security alarm operates.
7) If it does not operate, adjust the impact sensitivity.

2. IMPACT SENSITIVITY ADJUSTMENT

1) Prepare the Subaru Select Monitor kit.
2) Turn the ignition switch to ON (engine OFF) and run the “PC application for Subaru Select Monitor”.
3) On «System Selection Menu» display, select {Impact Sensor}.
4) Execute the {Sensitivity Adjustment Mode}.
- The sensitivity can be adjusted in 11 levels from 0 to 10.
- The initial value is 5.
- A smaller number indicates a higher sensitivity.
- A larger number indicates a lower sensitivity.

GETtheMANUALS.org

5) Turn the ignition switch to OFF and remove the Subaru Select Monitor.

NOTE:
- Make sure that the sensitivity is set to an appropriate level so that any minor vibration typically experienced on a daily basis, such as a person leaning over a door or a ball hitting vehicle lightly, will not activate the alarm.
- The alarm should respond to significant vibrations that suggest a violence by a theft such as window glasses or doors being hit strongly and consecutively.
- The alarm may respond to substantial vibrations even though they do not mean any theft behavior, for example, road construction, multi-story parking space, train passing, vehicle getting on a ferry. Therefore, when adjusting the sensitivity, consult the customer to confirm the parking environment or other external conditions.
- If the sensitivity adjustment fails, the buzzer sounds four times. At that time, check the following points.
  - Error in CAN communication
  - Harness for open between body integrated unit and impact sensor
  - Body integrated unit, or impact sensor failure

GETtheMANUALS.org

22. Keyless Entry Control Module

A: REMOVAL

1. SEDAN MODEL

1) Disconnect the ground cable from battery.
2) Remove the rear shelf trim. <Ref. to EI-120, REMOVAL, Rear Shelf Trim.>
3) Remove the keyless entry control module.
   (1) Disconnect the connector.
   (2) Remove the bolt and remove the keyless entry control module.

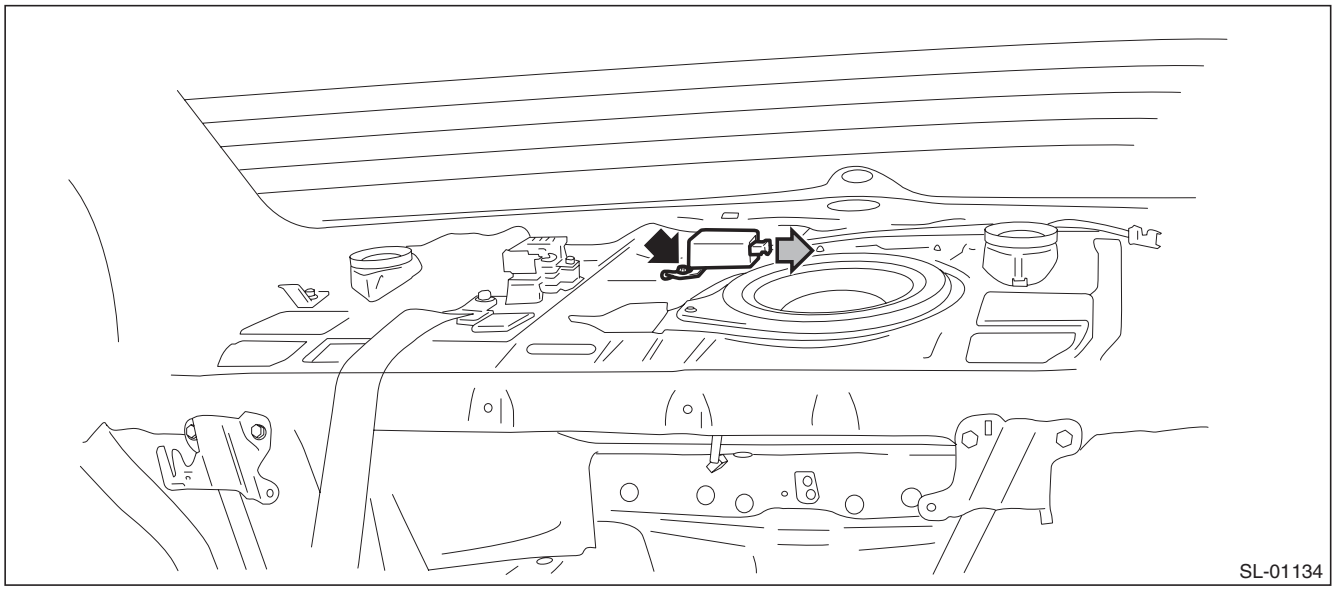

2. OUTBACK MODEL

1) Disconnect the ground cable from battery.
2) Remove the rear quarter trim LH. <Ref. to EI-110, REMOVAL, Rear Quarter Trim.>
3) Remove the keyless entry control module.
   (1) Disconnect the connector.
   (2) Remove the bolt and remove the keyless entry control module.

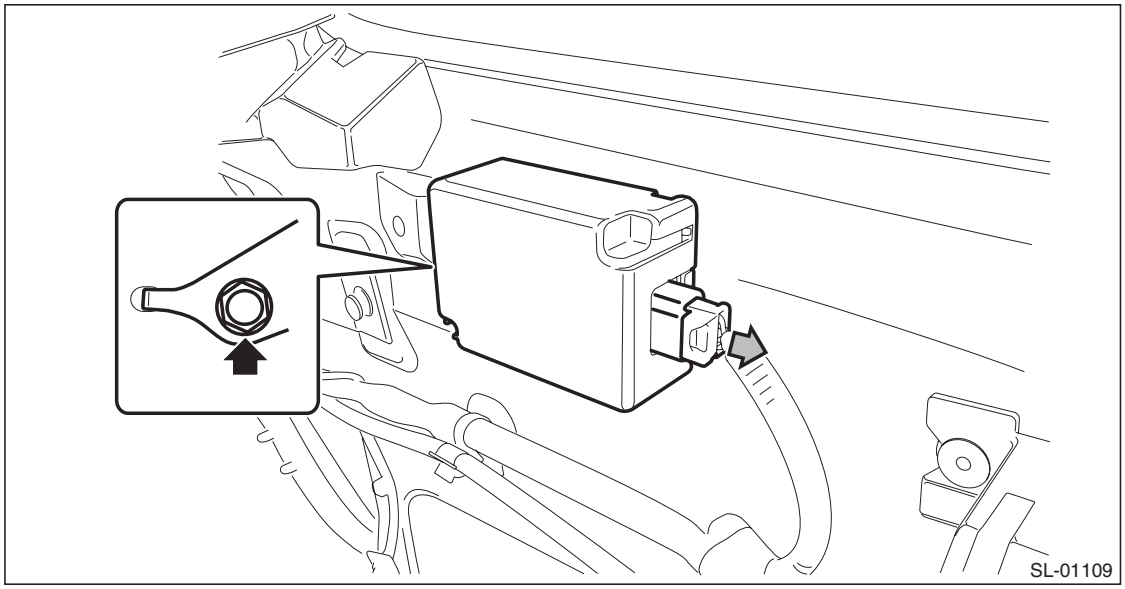

GETtheMANUALS.org

B: INSTALLATION

Install each part in the reverse order of removal.

Tightening torque:

Keyless entry control module: 7.5 N·m (0.76 kgf-m, 5.5 ft-lb)

GETtheMANUALS.org

23. Keyless Buzzer

A: REMOVAL

1) Disconnect the ground cable from battery.
2) Remove the front bumper face. <Ref. to EI-39, REMOVAL, Front Bumper.>
3) Remove the keyless buzzer.
   (1) Disconnect the connector.
   (2) Remove the clip, and remove the keyless buzzer.

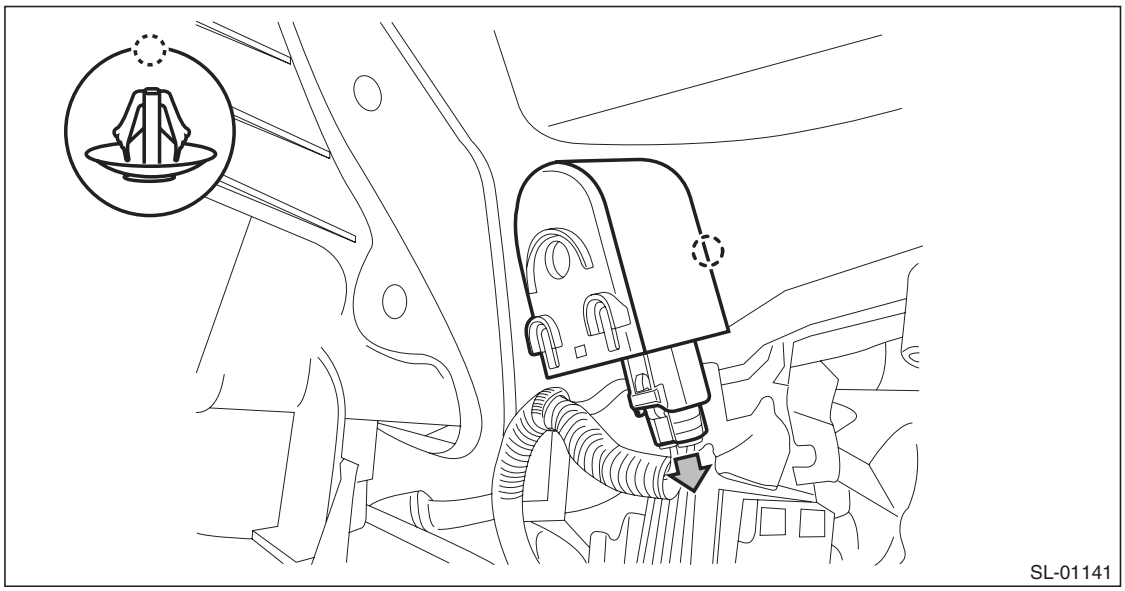

B: INSTALLATION

1) Install each part in the reverse order of removal.
2) Adjust the fog light beam. (Model with fog light) <Ref. to LI-41, FOG LIGHT AIMING, ADJUSTMENT, Front Fog Light Assembly.>

C: INSPECTION

1) Using the Subaru Select Monitor, perform forced operation of the keyless buzzer. <Ref. to BC(diag)-16, OPERATION, User Customizing.>
2) If the buzzer does not sound, replace the keyless buzzer.

GETtheMANUALS.org

24. Body Integrated Unit

A: NOTE

1. WHEN REPLACING THE BODY INTEGRATED UNIT

1) Check and record the current setting. <Ref. to BC(diag)-18, CONFIRM CURRENT SETTING., OPERATION, Registration Body Integrated Unit.>
2) Prepare the following.
- Security ID plate
- Required number of registered immobilizer keys or new (not registered) immobilizer keys.

2. AFTER REPLACING THE BODY INTEGRATED UNIT

1) Register the immobilizer. For detailed operation procedures, refer to “PC application help for Subaru Select Monitor”.
2) Set the current settings as recorded.

B: REMOVAL

1) Disconnect the ground cable from battery.
2) Remove the instrument panel lower cover. <Ref. to EI-64, REMOVAL, Instrument Panel Lower Cover.>
3) Remove the body integrated unit.

CAUTION:
Be careful to keep water and other foreign materials away from body integrated unit.
(1) Remove the harness clip and connector.
(2) Remove the bolts, and remove the body integrated unit.

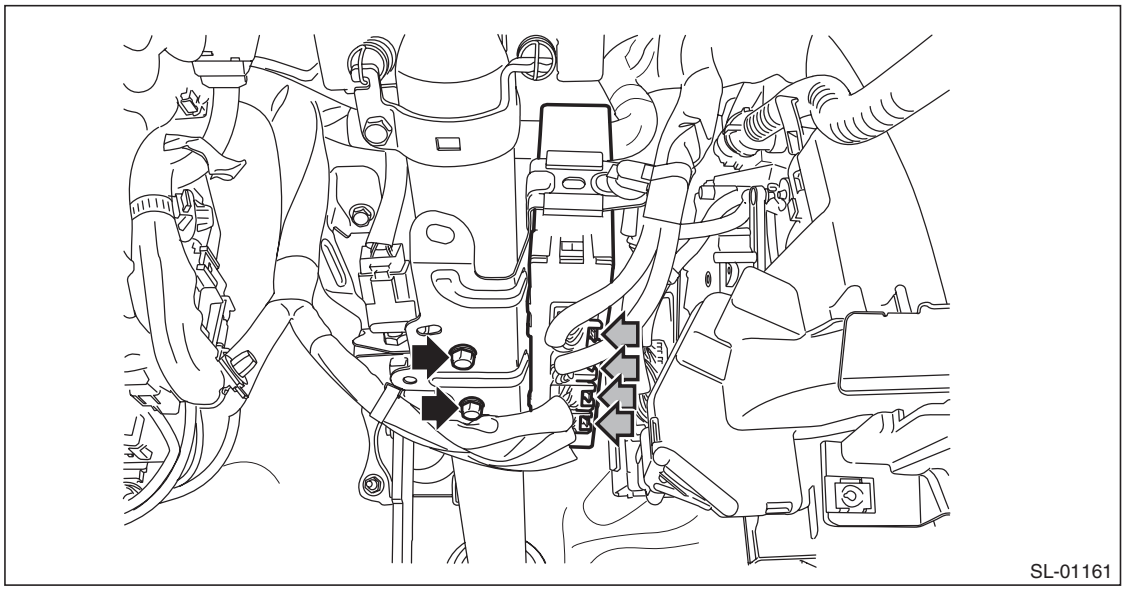

C: INSTALLATION

Install each part in the reverse order of removal.

Tightening torque:
Body integrated unit: 7.5 N·m (0.76 kgf-m, 5.5 ft-lb)

NOTE:
Make sure that there are no differences from the contents of the current settings after installation. <Ref. to BC(diag)-12, LIST, Read Current Data.>

GETtheMANUALS.org

25. Keyless Transmitter

A: REMOVAL

NOTE:
For C6 model, refer to Transmitter. <Ref. to SL-75, REMOVAL, Transmitter.>

1. KEYLESS TRANSMITTER BATTERY

CAUTION:
To prevent static electricity damage to the keyless transmitter printed circuit board, touch the steel area of building with hand to discharge static electricity carried on body or clothes before disassembling the keyless transmitter.

1) Disassemble the keyless transmitter, and take out the transmitter case (1).

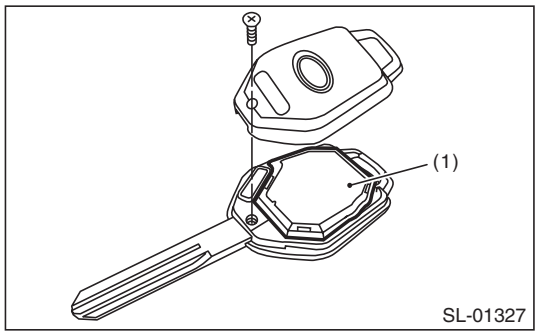

2) Release the claws, and open the transmitter case.

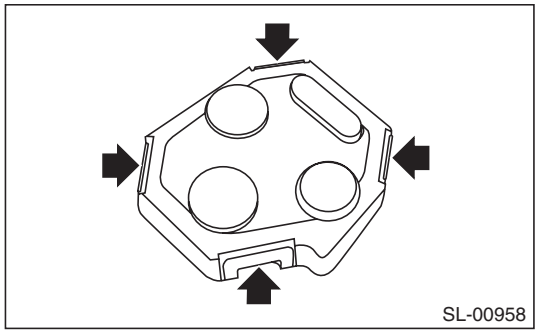

3) Remove the battery (1) from the transmitter.

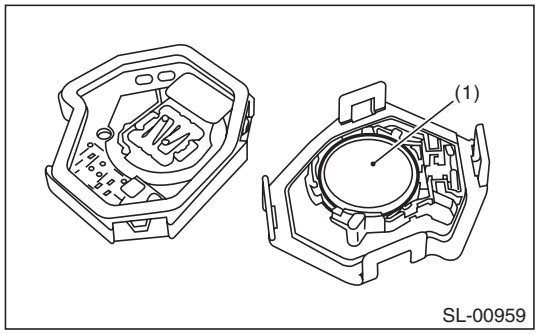

B: INSTALLATION

1. KEYLESS TRANSMITTER BATTERY

Install each part in the reverse order of removal.

GETtheMANUALS.org

C: INSPECTION

1. KEYLESS TRANSMITTER BATTERY

1) Check the keyless transmitter battery voltage.

Preparation tool: Circuit tester

NOTE:
Complete the measurement within 5 seconds because the battery discharges during measurement.

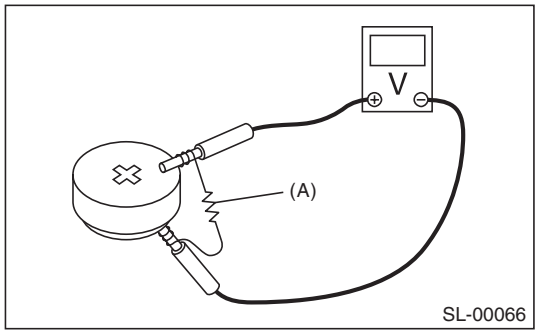

Battery terminal	Inspection Conditions	Specification
(+) — (–)	Connect resistor (A) 47 Ω	2.5 — 3.0 V

2) Replace the battery if the inspection result is not within the standard value. (Use CR1620 or equivalent.)

D: REPLACEMENT

1. REGISTRATION OF KEYLESS TRANSMITTER WITH SUBARU SELECT MONITOR

NOTE:
- A maximum of four keyless transmitter can be registered for each individual vehicle.
- When replacing or adding the keyless transmitter, new registration of transmitter is necessary.

1) Prepare the Subaru Select Monitor kit. <Ref. to SL-7, SPECIAL TOOL, PREPARATION TOOL, General Description.>

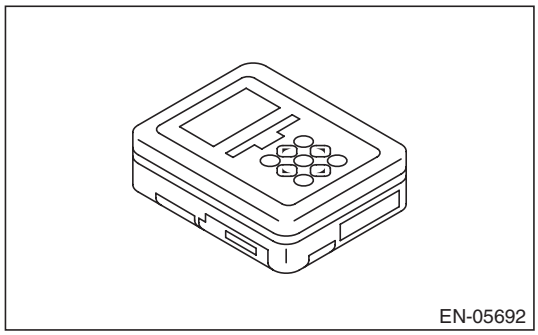

2) Prepare PC with Subaru Select Monitor installed.
3) Connect the USB cable to SDI (Subaru Diagnosis Interface) and USB port on the personal computer (dedicated port for the Subaru Select Monitor).

NOTE:
The dedicated port for the Subaru Select Monitor means the USB port which was used to install the Subaru Select Monitor.

4) Connect the diagnosis cable to SDI.

GETtheMANUALS.org

5) Connect SDI to data link connector located in the lower portion of the instrument panel (on the driver's side).

CAUTION:
Do not connect scan tools other than the Subaru Select Monitor.

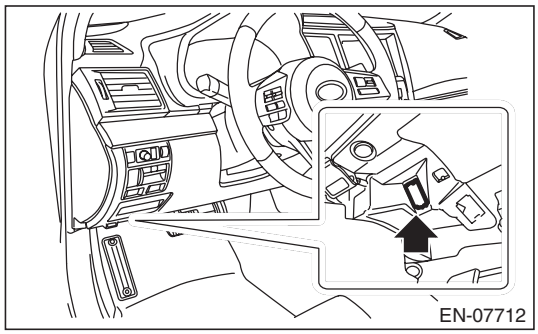

6) Start the PC.
7) Turn the ignition switch to ON (engine OFF) and run the "PC application for Subaru Select Monitor".
8) On the «Main Menu» of the Subaru Select Monitor, select the {Each System Check} → {Integ. unit mode} → {Keyless ID registration}.
9) Input the 8-digit ID number attached to the tag plate of the transmitter or inside the transmitter, from left to right. Press the [OK] key.
10) The ID number you have entered will be shown. Make sure that the ID number shown is the same as that of plastic bag or inside of transmitter.
11) Press the [OK] key if the ID number is correct. Press the [EXIT] key if incorrect, to return to the step 3) and enter the ID number again.
12) «ID is being registered...» is displayed and registration starts.
13) «ID registration completed » will be displayed when the registration process is done.
14) To exit, select «Quit: NO» to return to {Keyless ID registration}. If there are additional keyless transmitters to be registered, select «The following are registered: OK» to return to the step 4).

NOTE:
- If the registration fails, «ID cannot register Please try again» will be shown. Select the [OK] key to return to the {Keyless ID registration}. Retry starting from the step 3).
- «Quit: NO» is shown on the Subaru Select Monitor when fourth keyless transmitter has been registered. Select the [NO] key to return to {Keyless ID registration}.

GETtheMANUALS.org

26. Transmitter

A: REMOVAL

NOTE:
For models except for C6, refer to Keyless Transmitter. <Ref. to SL-72, REMOVAL, Keyless Transmitter.>

1. TRANSMITTER BATTERY

NOTE:
To prevent static electricity damage to the transmitter printed circuit board, touch the steel area of building with hand to discharge static electricity carried on body or clothes before disassembling the transmitter.
Remove the battery (1) from the transmitter.

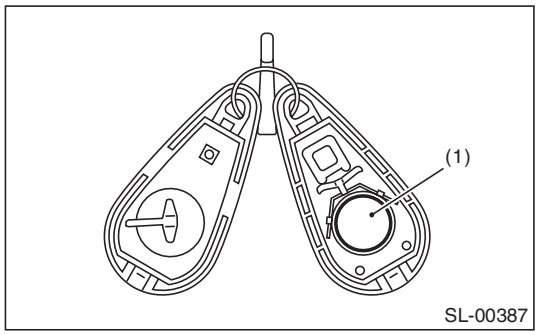

B: INSTALLATION

1. TRANSMITTER BATTERY

Install each part in the reverse order of removal.

C: INSPECTION

1. TRANSMITTER BATTERY

1) Check the transmitter battery voltage.

Preparation tool: Circuit tester

NOTE:
Complete the measurement within 5 seconds because the battery discharges during measurement.

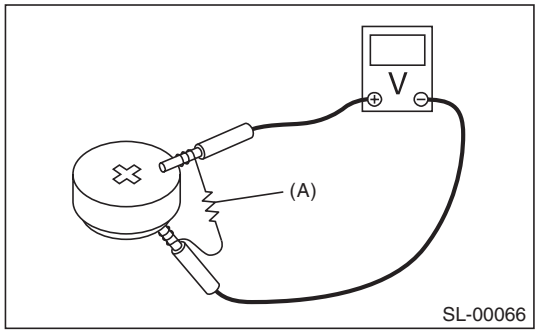

Battery terminal	Inspection conditions	Specification
(+) — (–)	Connect resistor (A) 47 Ω	2.5 — 3.0 V

2) Replace the battery if the inspection result is not within the standard value. (Use CR1620 or equivalent.)

GETtheMANUALS.org

D: REPLACEMENT

1. REGISTRATION OF KEYLESS TRANSMITTER WITH SUBARU SELECT MONITOR

NOTE:
- A maximum of four keyless transmitter can be registered for each individual vehicle.
- When replacing or adding the keyless transmitter, new registration of transmitter is necessary.

1) Prepare the Subaru Select Monitor kit. <Ref. to SL-7, SPECIAL TOOL, PREPARATION TOOL, General Description.>

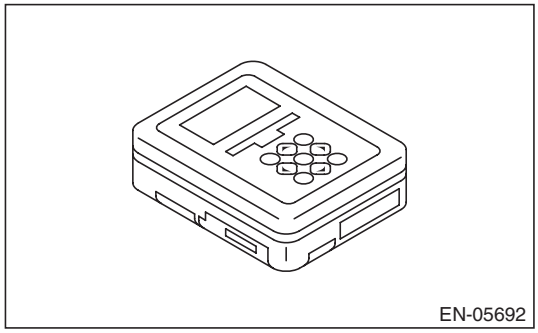

2) Prepare PC with Subaru Select Monitor installed.
3) Connect the USB cable to SDI (Subaru Diagnosis Interface) and USB port on the personal computer (dedicated port for the Subaru Select Monitor).

NOTE:
The dedicated port for the Subaru Select Monitor means the USB port which was used to install the Subaru Select Monitor.

4) Connect the diagnosis cable to SDI.
5) Connect SDI to data link connector located in the lower portion of the instrument panel (on the driver's side).

CAUTION:
Do not connect scan tools other than the Subaru Select Monitor.

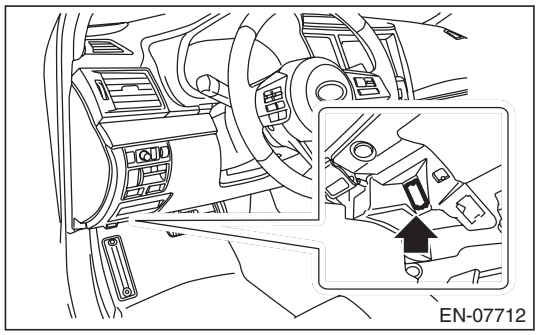

6) Start the PC.
7) Turn the ignition switch to ON (engine OFF) and run the "PC application for Subaru Select Monitor".
8) On the «Main Menu» of the Subaru Select Monitor, select the {Each System Check} → {Integ. unit mode} → {Keyless ID registration}.
9) Input the 8-digit ID number attached to the tag plate of the transmitter or inside the transmitter, from left to right. Press the [OK] key.
10) The ID number you have entered will be shown. Make sure that the ID number shown is the same as that of plastic bag or inside of transmitter.
11) Press the [OK] key if the ID number is correct. Press the [EXIT] key if incorrect, to return to the step 3) and enter the ID number again.
12) «ID is being registered...» is displayed and registration starts.
13) «ID registration completed » will be displayed when the registration process is done.

GETtheMANUALS.org

14) To exit, select «Quit: NO» to return to {Keyless ID registration}. If there are additional keyless transmitters to be registered, select «The following are registered: OK» to return to the step 4).

NOTE:
- If the registration fails, «ID cannot register Please try again» will be shown. Select the [OK] key to return to the {Keyless ID registration}. Retry starting from the step 3).
- «Quit: NO» is shown on the Subaru Select Monitor when fourth keyless transmitter has been registered. Select the [NO] key to return to {Keyless ID registration}.

GETtheMANUALS.org

27.Immobilizer Control Module

A: NOTE

The control of immobilizer system is carried out in body integrated unit. For operation procedures, refer to “Body Integrated Unit”.

- Removal: <Ref. to SL-71, REMOVAL, Body Integrated Unit.>
- Installation: <Ref. to SL-71, INSTALLATION, Body Integrated Unit.>

GETtheMANUALS.org

28.Immobilizer Antenna

A: REMOVAL

1) Disconnect the ground cable from battery.
2) Remove the steering column cover.
   (1) Remove the screws by turning the steering wheel to right and left.

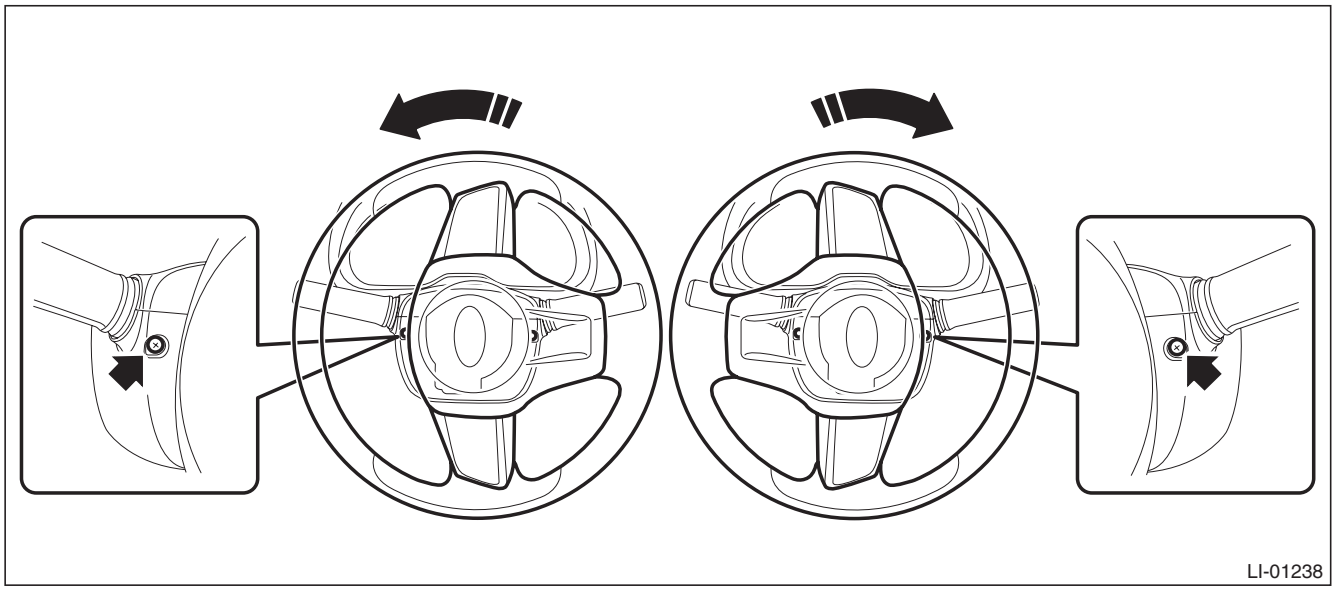

   (2) Release the claws and remove the steering column lower cover.

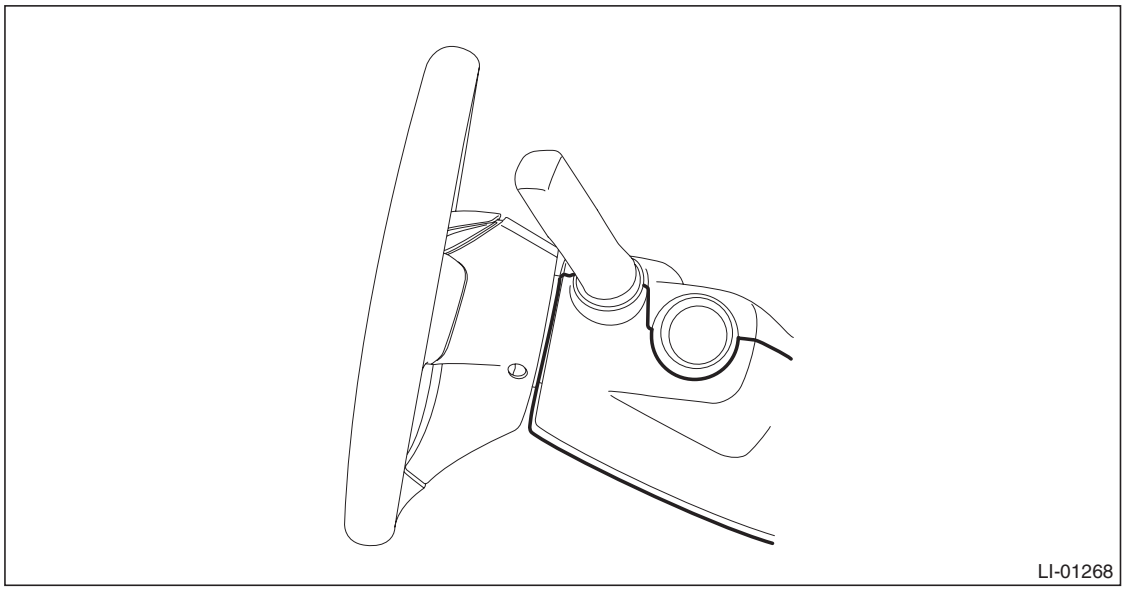

GETtheMANUALS.org

(3) Separate the steering column upper cover and steering upper cover, and remove the steering column upper cover.

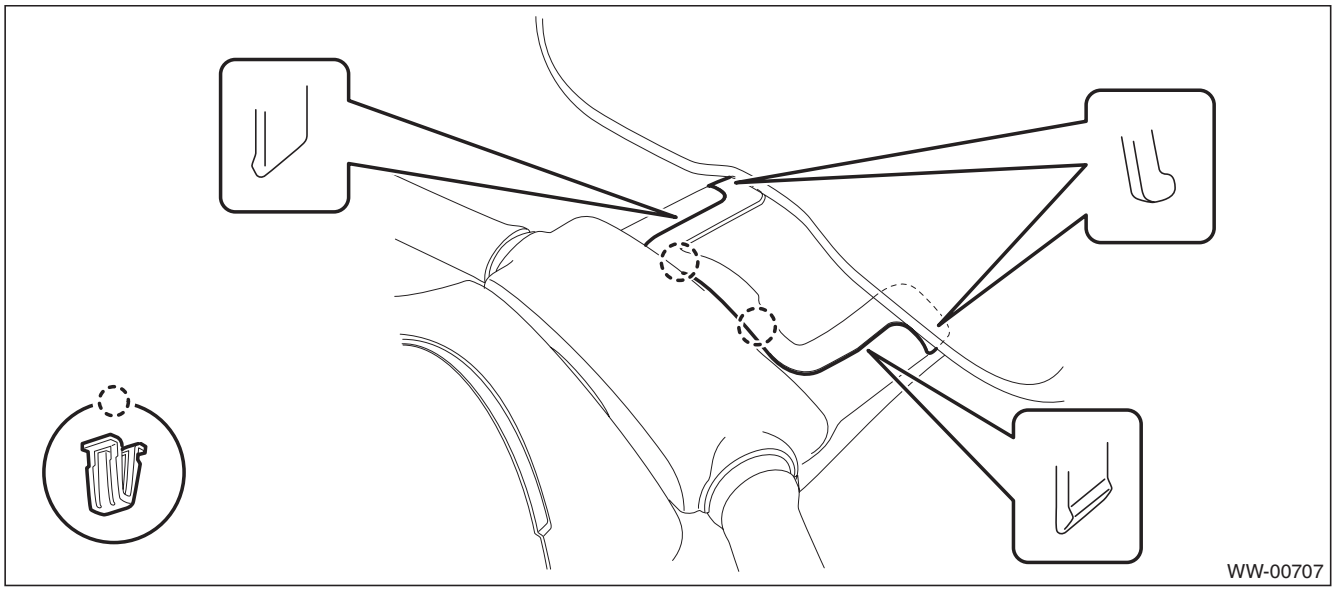

3) Remove the immobilizer antenna.

CAUTION:
Do not apply excessive force to remove the immobilizer antenna and lock. Otherwise they may be broken because those parts are the products made of a plastic.

(1) Disconnect the connector and remove the screw.
(2) Remove the ignition illumination light and release the claws, then detach the immobilizer antenna.

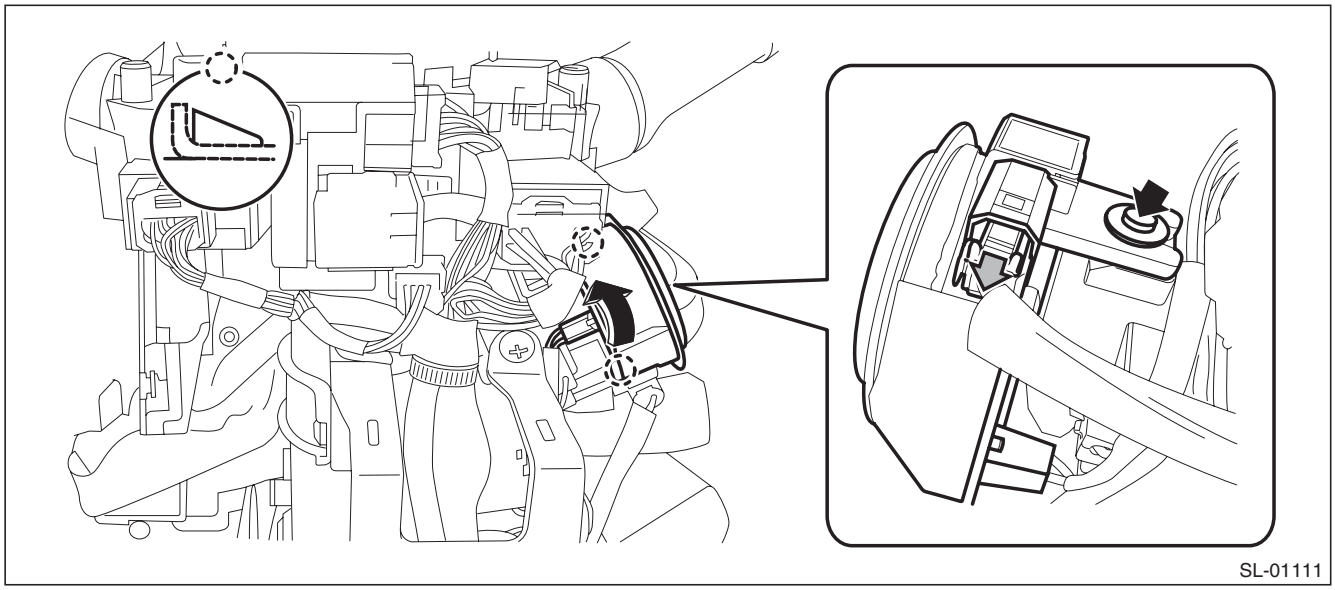

B: INSTALLATION

Install each part in the reverse order of removal.

GETtheMANUALS.org

SUNROOF/T-TOP/CONVERTIBLE TOP (SUNROOF)

SR

		Page
1.	General Description	2
2.	Relay and Fuse	4
3.	Sunroof Control System	5
4.	Glass Lid	6
5.	Sunroof Assembly	9
6.	Sunroof Motor	15
7.	Sunroof Switch	17
8.	Sunshade	19

GETtheMANUALS.org

1. General Description

A: COMPONENT

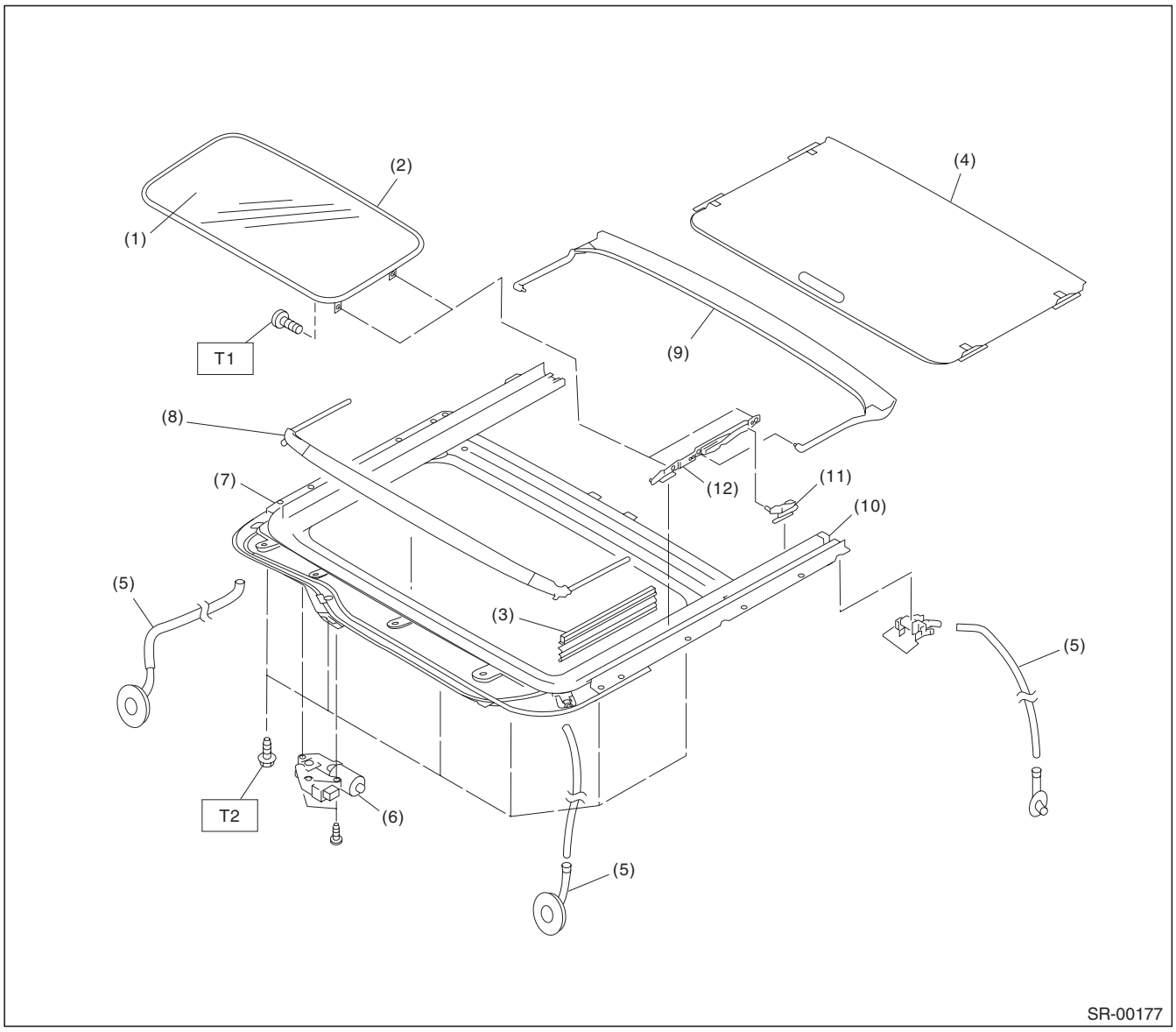

(1)	Glass lid	(7)	Frame ASSY
(2)	Weather strip	(8)	Deflector
(3)	Lid cover	(9)	Drain plate
(4)	Sunshade	(10)	Stopper rubber
(5)	Drain tube	(11)	Link ASSY
(6)	Motor ASSY	(12)	Lid bracket

Tightening torque:N·m (kgf-m, ft-lb)
T1: 4.5 (0.46, 3.3)
T2: 6.0 (0.61, 4.4)

GETtheMANUALS.org

B: CAUTION

- Before disassembling or reassembling parts, always disconnect the battery ground cable from battery. When replacing the audio, control module and other parts provided with memory functions, record the memory contents before disconnecting the battery ground cable. Otherwise, the memory is cleared.
- Reassemble the parts in the reverse order of disassembly unless otherwise indicated.
- Adjust parts to the given specifications.
- Connect the connectors securely during reassembly.
- After reassembly, make sure that the functional parts operate normally.

C: PREPARATION TOOL

1. GENERAL TOOL

TOOL NAME	REMARKS
Circuit tester	Used for measuring resistance and voltage.
Hexagon wrench	Used for forcedly driving the sunroof motor.

GETtheMANUALS.org

2. Relay and Fuse

A: LOCATION

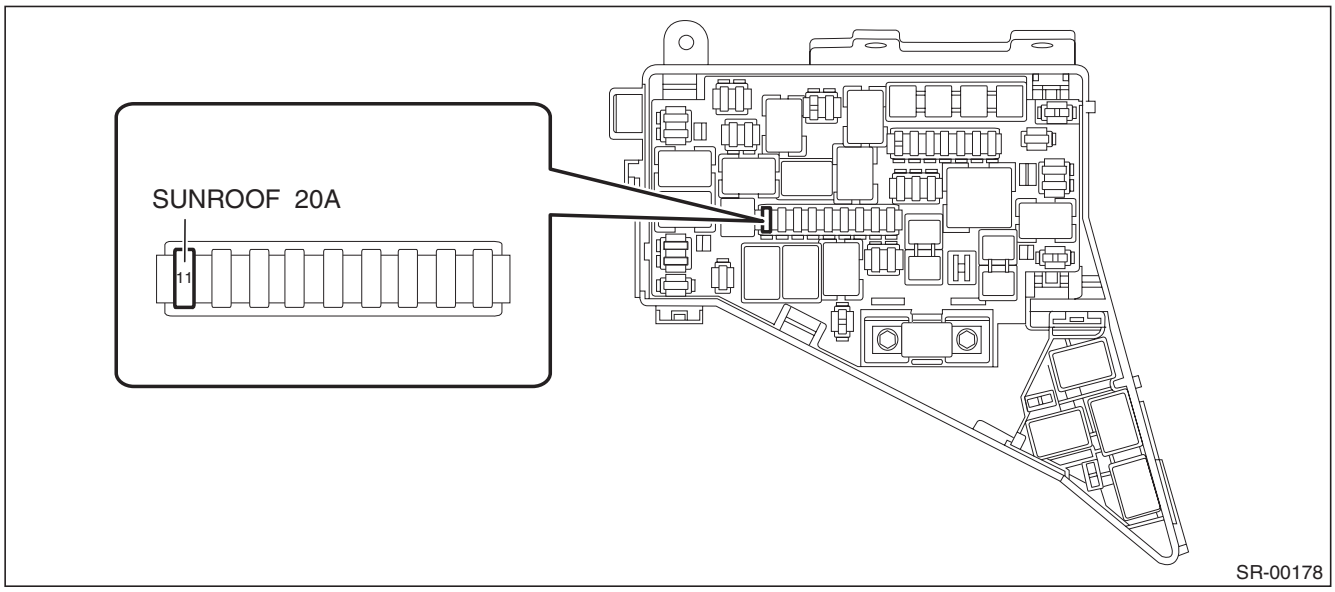

NOTE:
For other related fuses, refer to the wiring diagram. <Ref. to WI-15, Power Supply Circuit.>

B: INSPECTION

1. CHECK FUSE.

1) Remove the fuse and check visually.
2) If the fuse is blown out, replace the fuse.

GETtheMANUALS.org

3. Sunroof Control System

A: WIRING DIAGRAM

Refer to “Sunroof Control System” in the wiring diagram. <Ref. to WI-247, WIRING DIAGRAM, Sunroof Control System.>

B: INSPECTION

Symptoms	Inspection steps
Water leakage	1. Check roof panel and glass lid for improper or poor sealing. 2. Check drain tube for clogging. 3. Check sunroof frame seal and body for improper fit.
Booming noise, wind noise and other noise	1. Check glass lid and roof panel for improper clearance. 2. Check sunshade and roof trim for improper clearance.
Abnormal motor noise	1. Check installing part of motor for looseness. 2. Check gears and bearings for wear. 3. Check cable for wear. 4. Check cable pipe for deformities.
Failure of sunroof (Motor operates properly.)	1. Check guide rail for foreign particles. 2. Check guide rail for improper installation. 3. Check parts for mutual interference. 4. Check cable slider for improper clinching. 5. Check cable for improper installation.
Motor does not rotate or rotate improperly.	1. Check fuse for blown out. 2. Check switch for improper function. 3. Check motor for incorrect terminal voltage. 4. Check the relay for improper operation. 5. Check harness for open or short and terminals for poor connections.
Failure turn of glass lid	Check guide rail for foreign particles.

- Failure turn of glass lid while driving rough road.

Glass lid has auto-reverse function. When specified or more force is applied to the glass lid, the lid turns back and stops. When operating the glass lid (open or close) while driving the rough road, the lid judges vibration as a force and may causes failure turns. When the failure turn is occurred, need to perform the initialize operation with following procedure.

C: OPERATION

1. INITIALIZE OPERATION

NOTE:
When initialize operation is performed, it is necessary to press the switch repeatedly as it operates for only at the moment when the switch is pressed, even when the switch is held down.
1) Press the slide switch to close the glass lid completely.
2) Press the slide switch again and tilt up the glass lid to lock.
3) Press the slide switch for more than 0.3 seconds.
4) Initialize operation is completed.

D: NOTE

For operation procedures of each component of the sunroof control system, refer to the respective section.
- Glass lid: <Ref. to SR-6, Glass Lid.>
- Sunroof assembly: <Ref. to SR-9, Sunroof Assembly.>
- Sunroof motor: <Ref. to SR-15, Sunroof Motor.>
- Sunroof switch: <Ref. to SR-17, Sunroof Switch.>
- Sunshade: <Ref. to SR-19, Sunshade.>

GETtheMANUALS.org

4. Glass Lid

A: REMOVAL

1) Completely close the glass lid, and then open the sunshade.
2) Disconnect the claws and then remove the lid cover.

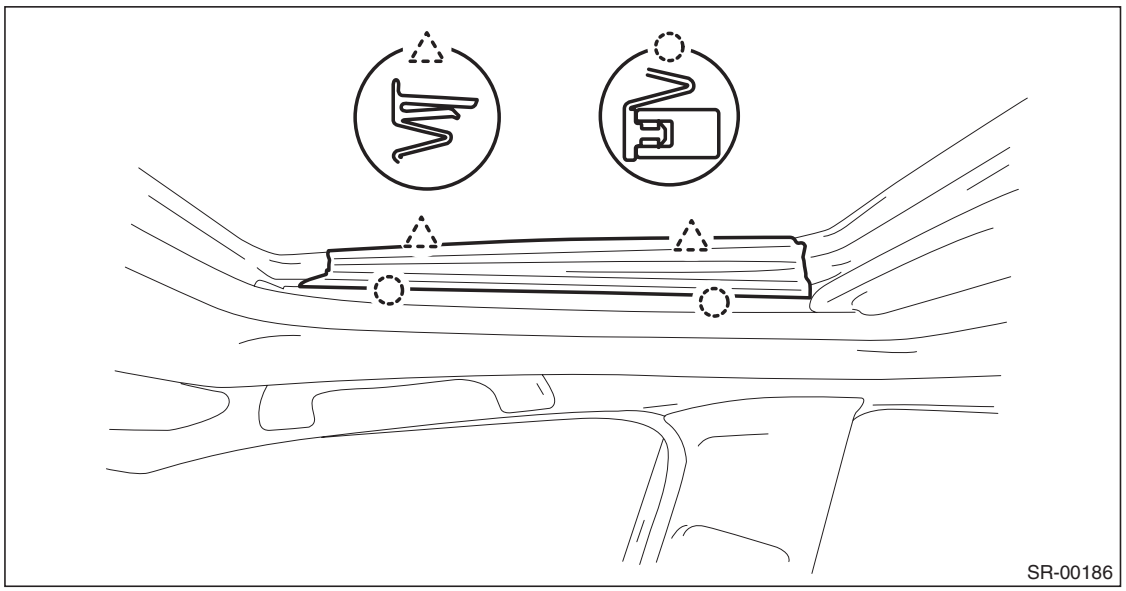

3) Remove the bolts, then remove the glass lid.

CAUTION:
Be careful not to damage the glass lid.

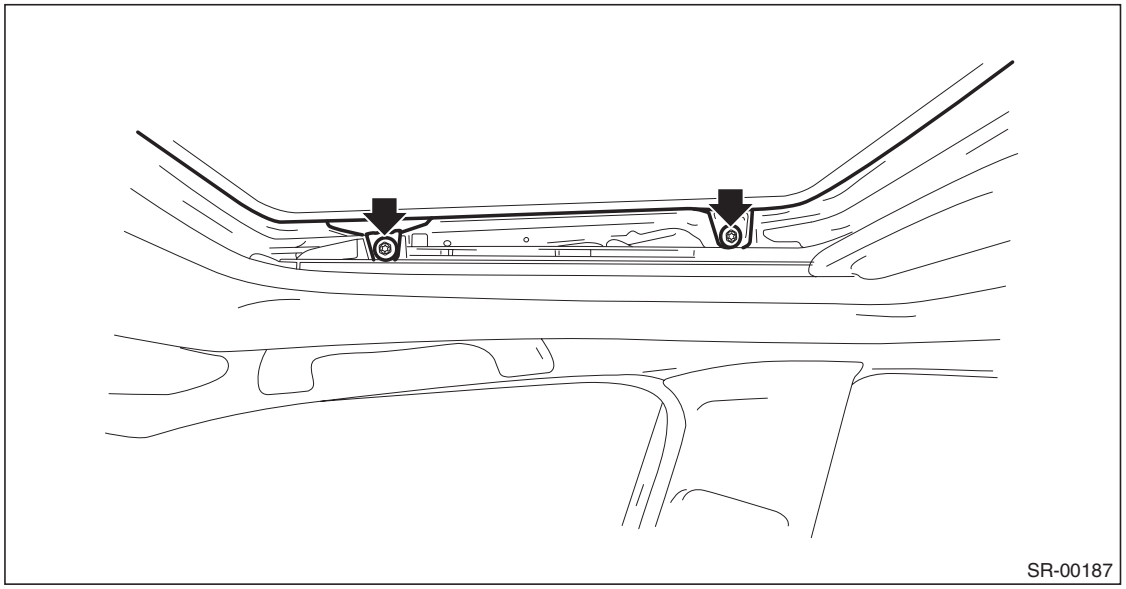

GETtheMANUALS.org

B: INSTALLATION

Install each part in the reverse order of removal.

Tightening torque:
Refer to "COMPONENT" of "General Description". <Ref. to SR-2, COMPONENT, General Description.>

C: ADJUSTMENT

Adjust the height of the glass lid and roof panel.

- Loosen the glass lid mounting bolts (A), and then adjust the height with moving the lid side.

Difference in height between weather strip and roof panel L:
0±1.0 mm (0±0.04 in)

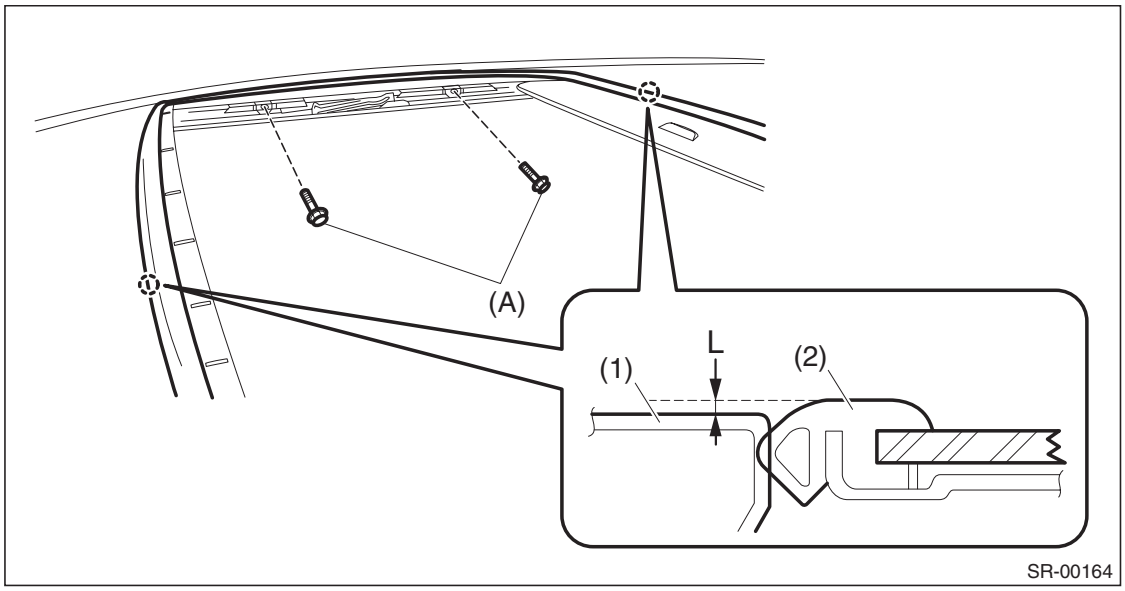

(1) Roof panel
(2) Weather strip

GETtheMANUALS.org

D: FORCED DRIVE

If the glass lid does not operate or the sunroof motor is not supplied with power, move the glass lid using the hexagon wrench.

Width across flat 5 mm (0.20 in)

CAUTION:
After a forced operation, make sure to perform an initialize operation. <Ref. to SR-5, INITIALIZE OPERATION, OPERATION, Sunroof Control System.>

1) Remove the spot map light. <Ref. to LI-62, REMOVAL, Spot Map Light.>
2) Insert the hexagon wrench securely until it touches the motor shaft edge.
3) Turn the hexagon wrench, and move the glass lid.
- Turning right, the glass lid open.
- Turning left, the glass lid close.

CAUTION:
Be careful not to damage the adjacent parts with the rod end when moving the glass lid with the hexagon wrench.

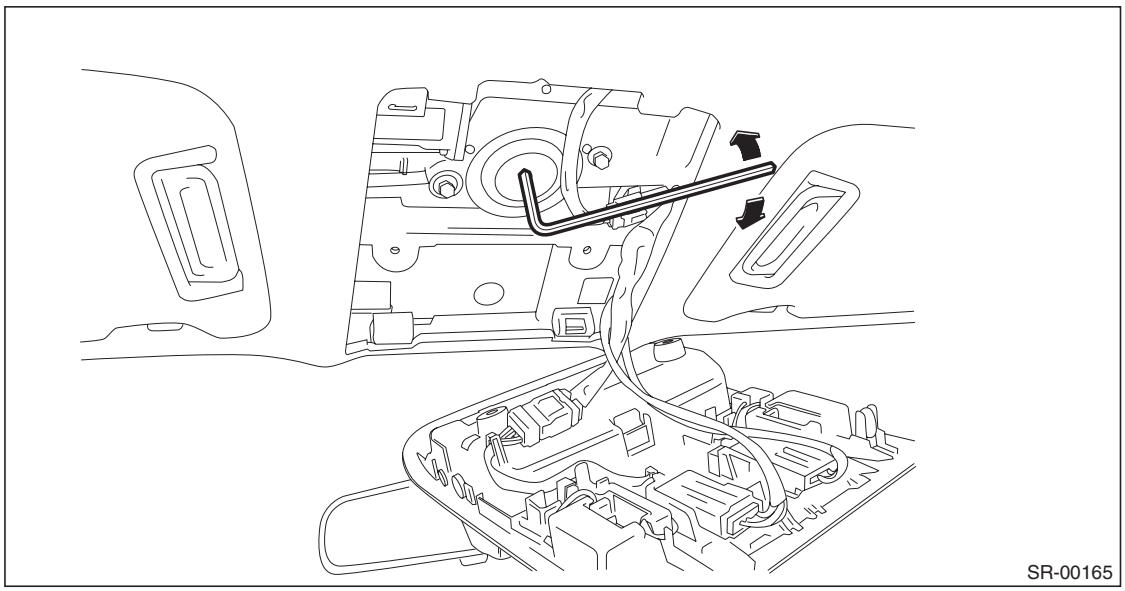

GETtheMANUALS.org

5. Sunroof Assembly

A: REMOVAL

CAUTION:
When removing the clip, use great care not to damage the roof trim.

1) Remove the glass lid.
   (1) Completely close the glass lid, and then open the sunshade.
   (2) Disconnect the claws and then remove the lid cover.

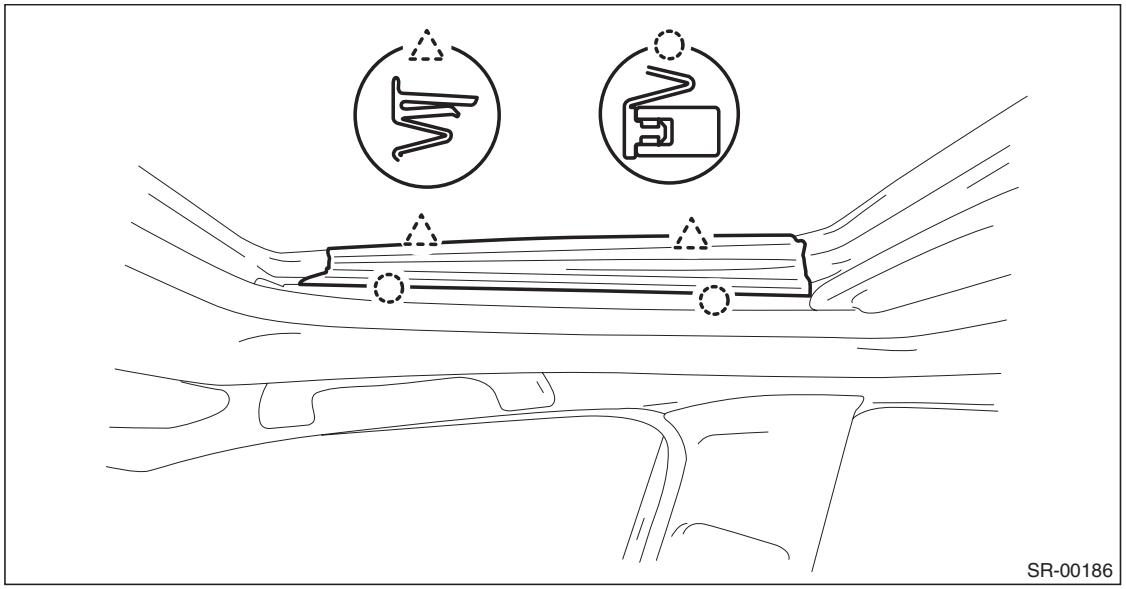

   (3) Remove the bolts, then remove the glass lid.

CAUTION:
Be careful not to damage the glass lid.

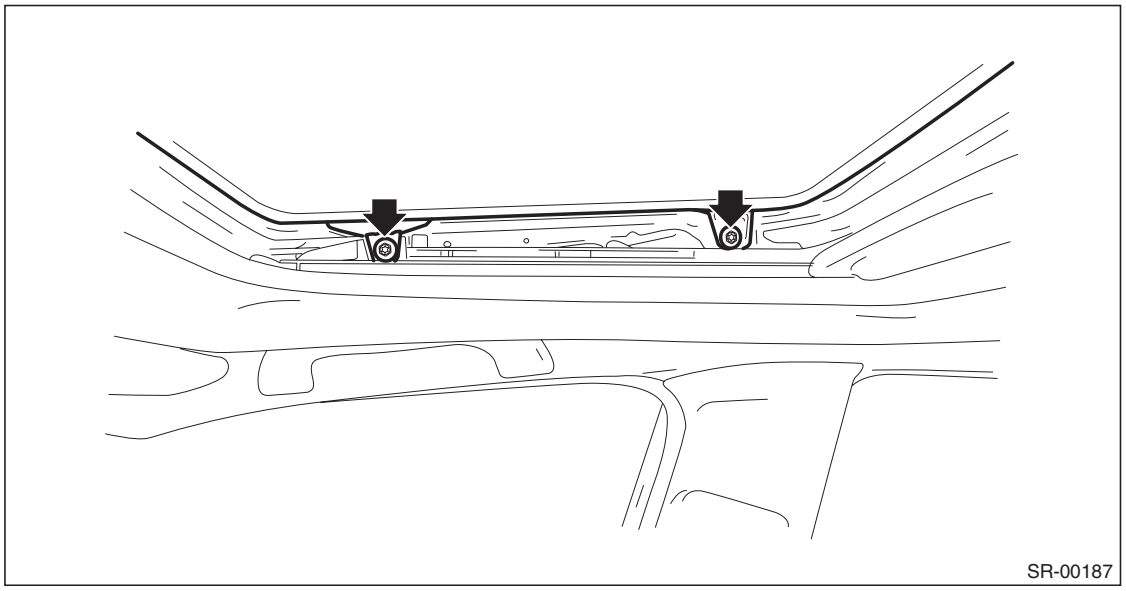

2) Remove the roof trim. <Ref. to EI-131, REMOVAL, Roof Trim.>
3) Disconnect the sunroof motor connector.

GETtheMANUALS.org

4) Remove the frame assembly.
   (1) Remove the drain tube.

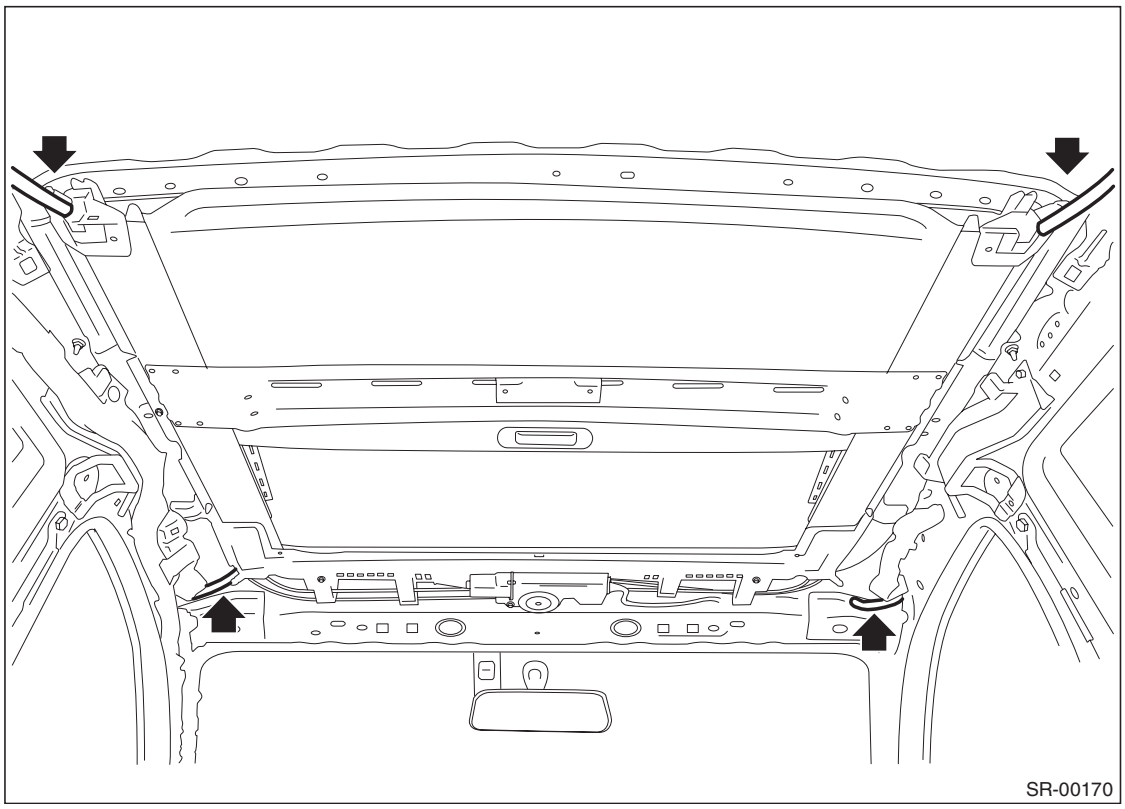

   (2) Remove the bolts and then remove the sunroof bracket.

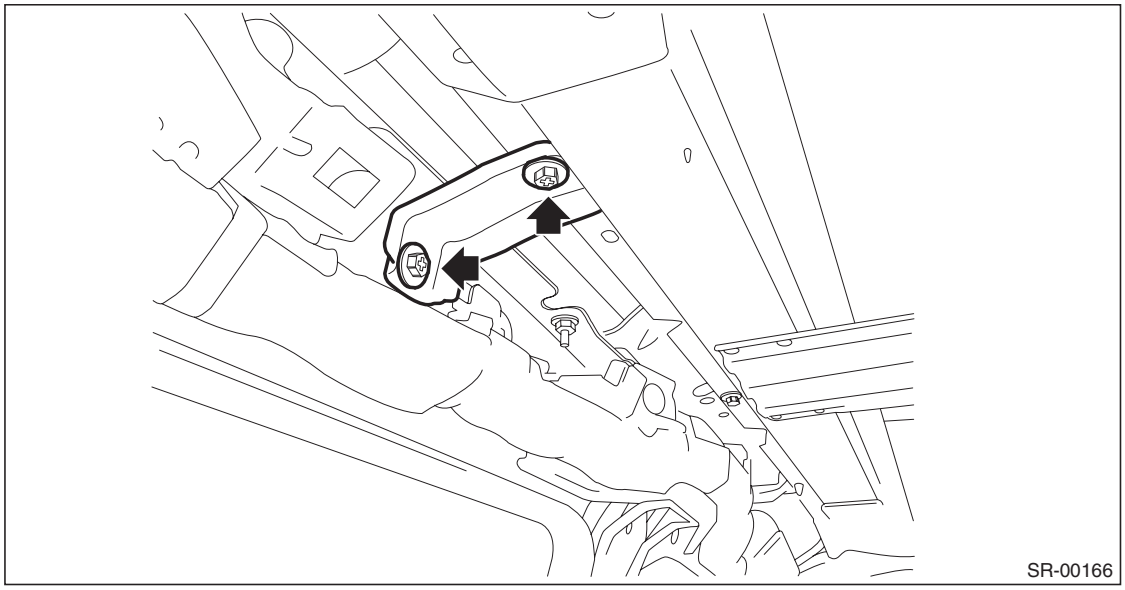

GETtheMANUALS.org

(3) Remove the bolts, then remove the frame assembly.

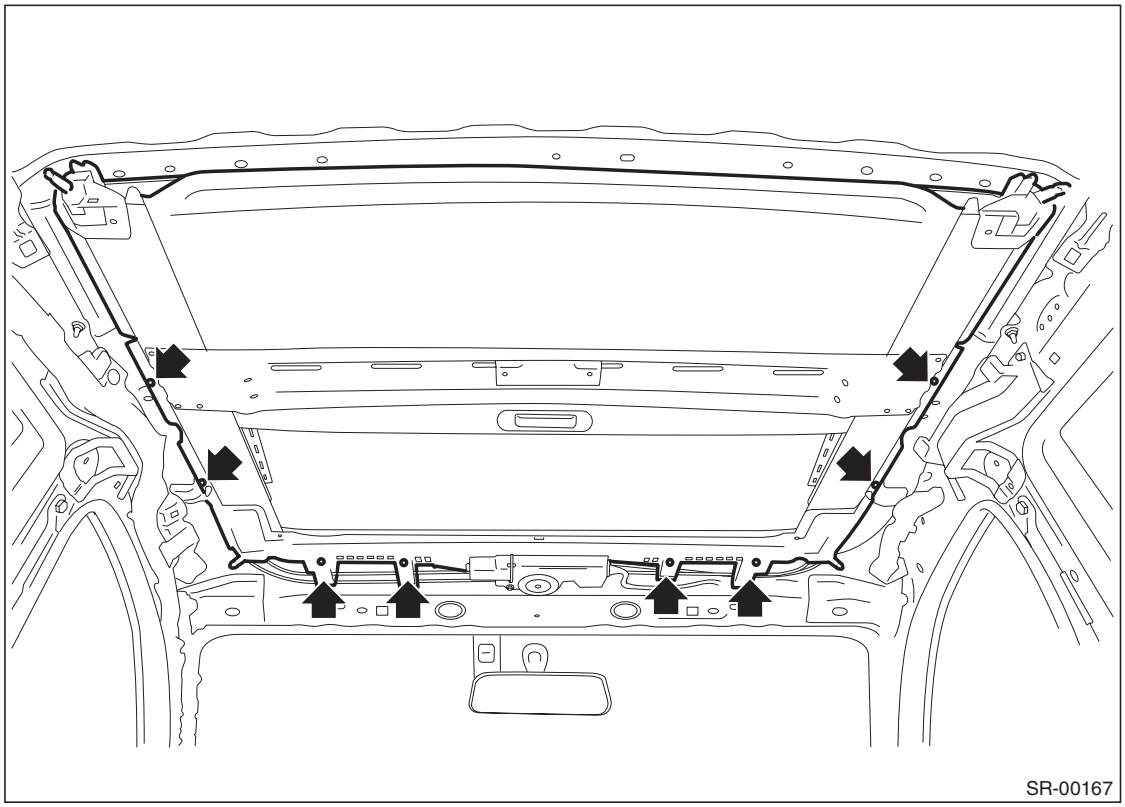

GETtheMANUALS.org

B: INSTALLATION

CAUTION:
Be careful not to snag the harness.
Install each part in the reverse order of removal.

Tightening torque:
Refer to "COMPONENT" of "General Description". <Ref. to SR-2, COMPONENT, General Description.>

NOTE:
- Be sure to connect the harness connector.
- When installing the drain tube, insert it securely into drain pipe.

Length A:
15 mm (0.59 in) or more

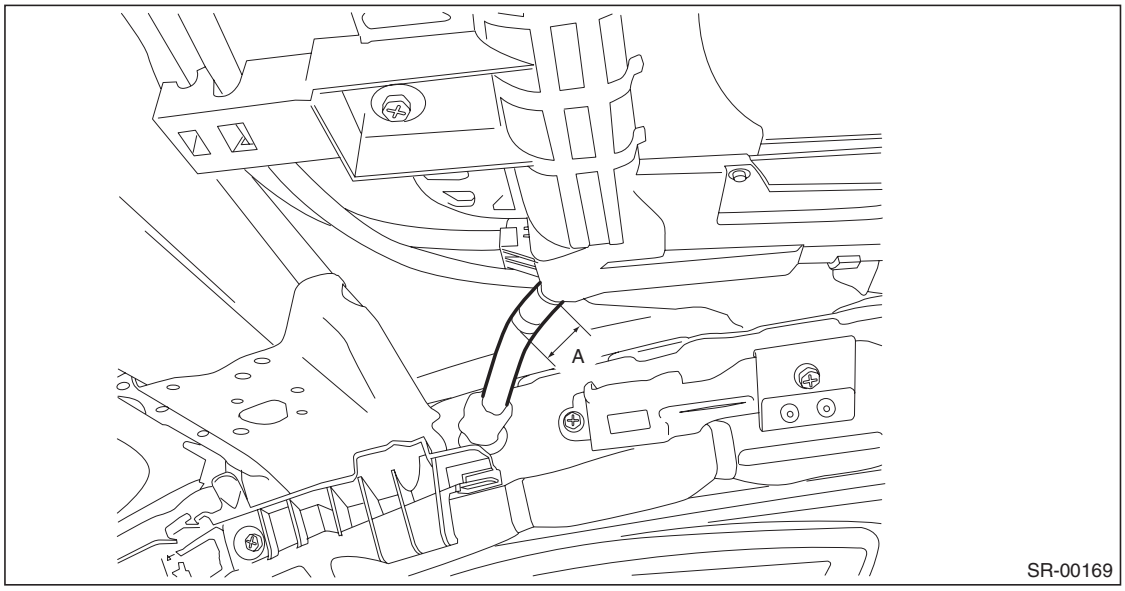

C: DISASSEMBLY

1) Remove the bolts and then remove the sunroof motor.

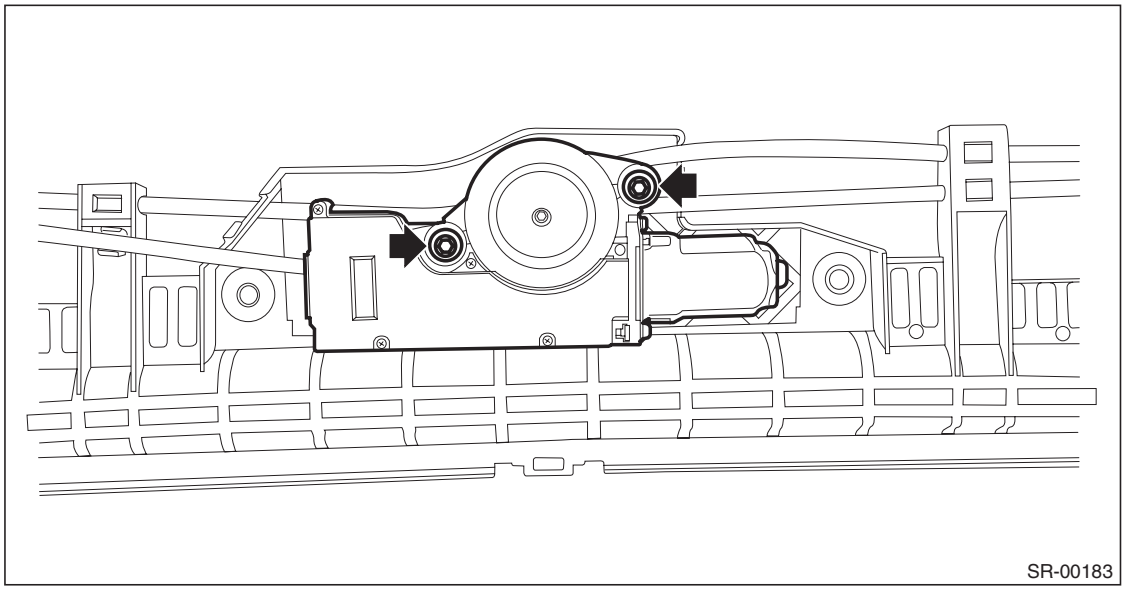

GETtheMANUALS.org

2) Remove the stopper rubber and pull out the sunshade from sunroof frame.

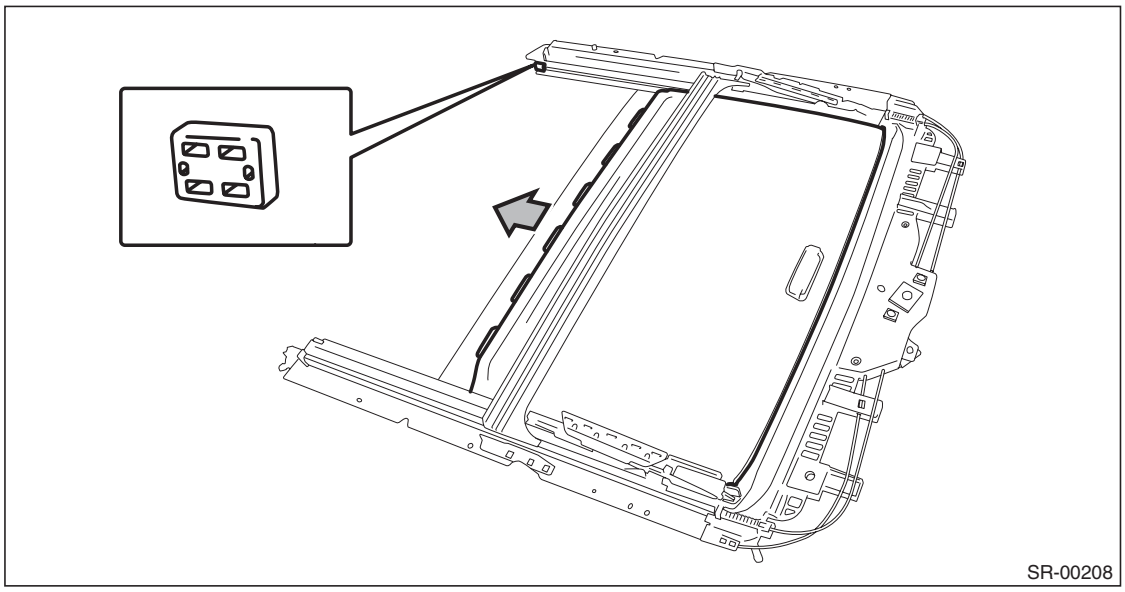

3) Remove the sunroof cable assembly.
   (1) Remove the screw and remove the drain holder.

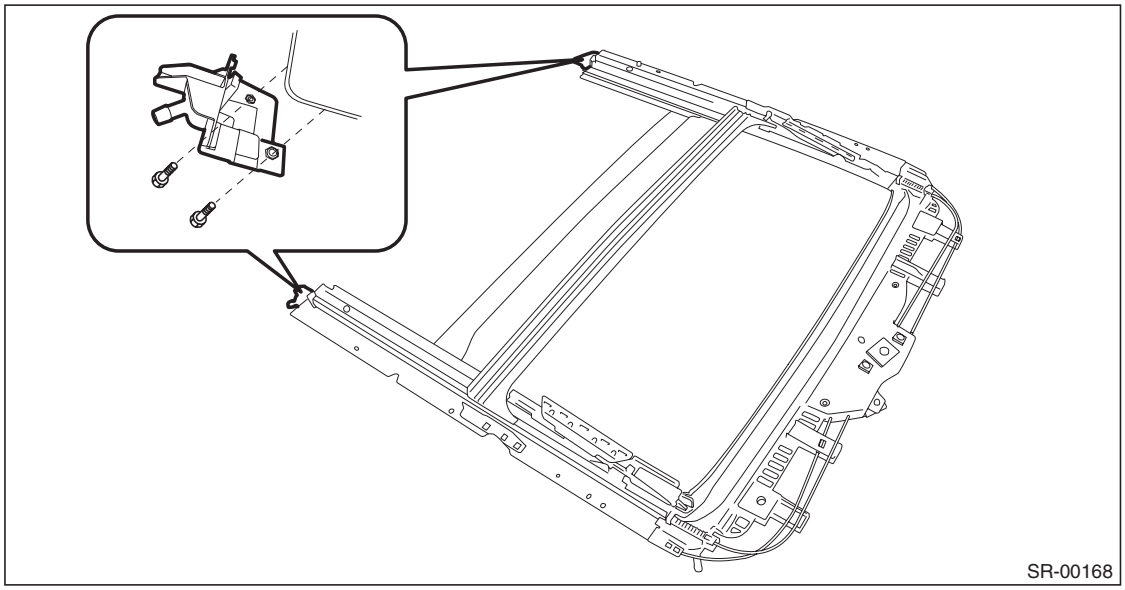

GETtheMANUALS.org

(2) Remove the screw and pull out the sunroof cable assembly from the frame roof assembly.

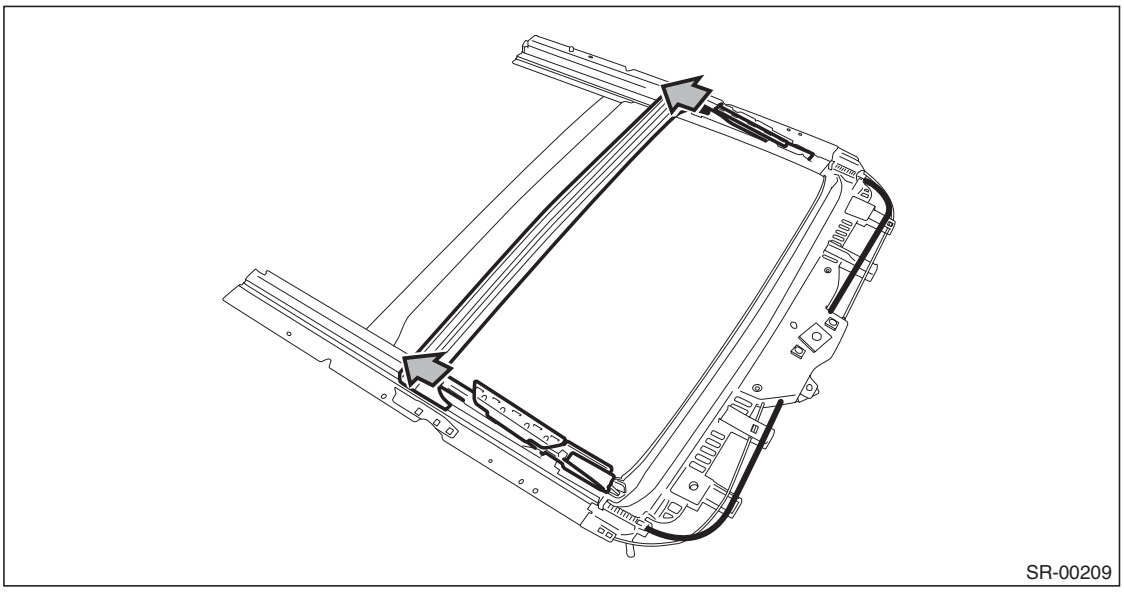

D: ASSEMBLY

Install each part in the reverse order of removal.

GETtheMANUALS.org

6. Sunroof Motor

A: REMOVAL

1) Completely close the glass lid.
2) Disconnect the ground cable from battery.
3) Remove the overhead console.
   (1) Push and open the rear end of the overhead console lid, and remove the screws.
   (2) Remove the clips and pull out the overhead console to disconnect the connectors.

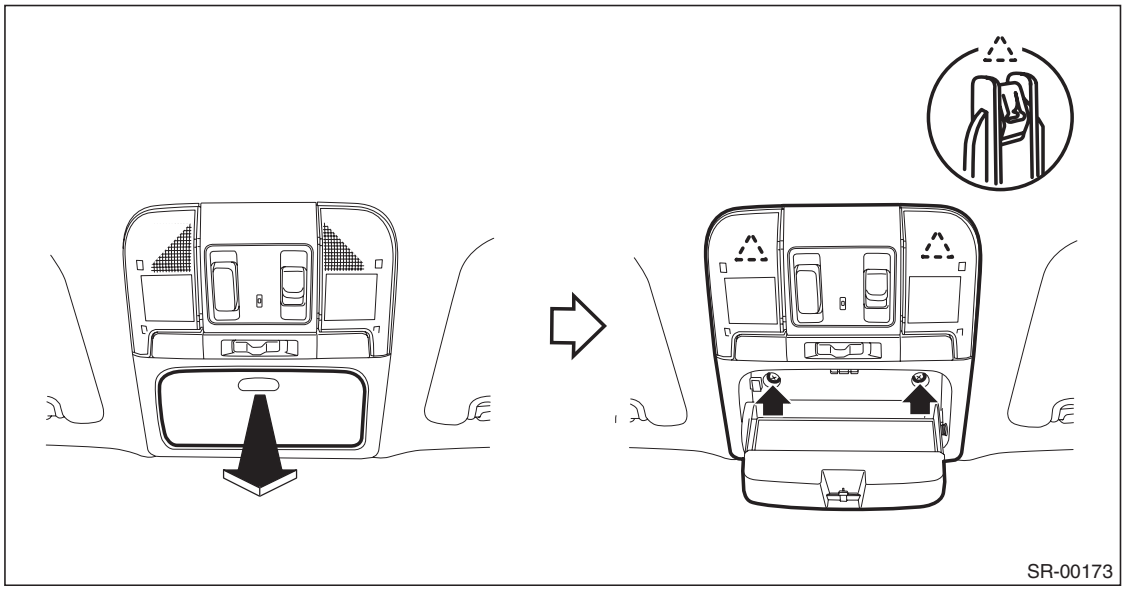

4) Remove the sunroof motor assembly.
   (1) Disconnect the connector.
   (2) Remove the bolts and remove the sunroof motor assembly.

CAUTION:
When removing the motor assembly, secure the cable wires so that it does not move.

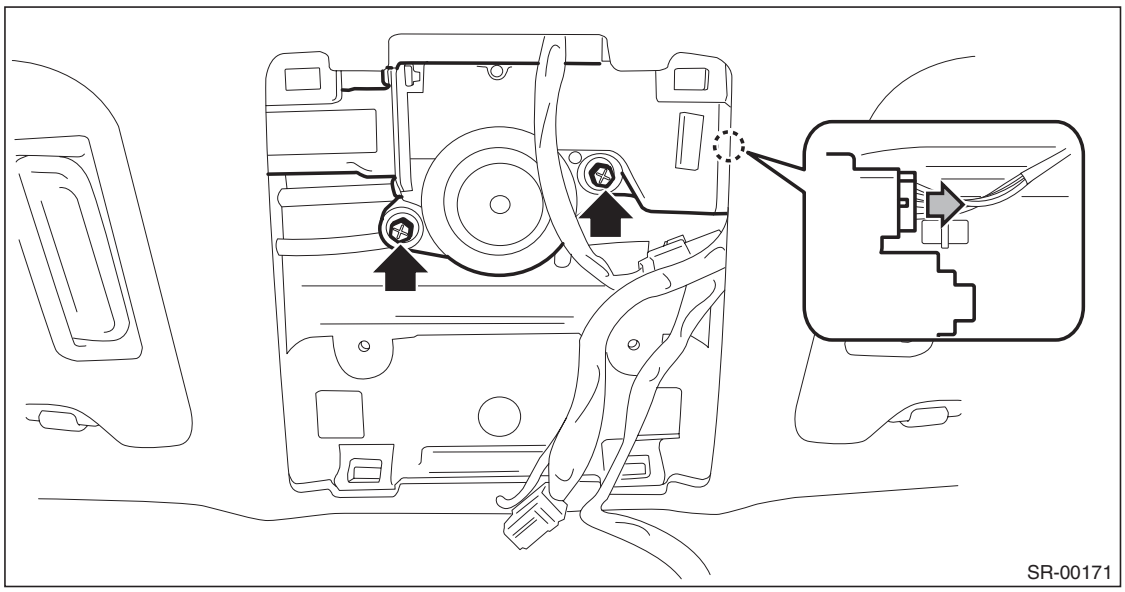

GETtheMANUALS.org

B: INSTALLATION

CAUTION:
When installing the motor assembly, be careful not to move the sunroof cable.
1) Align the lid bracket and link assembly in the same position.

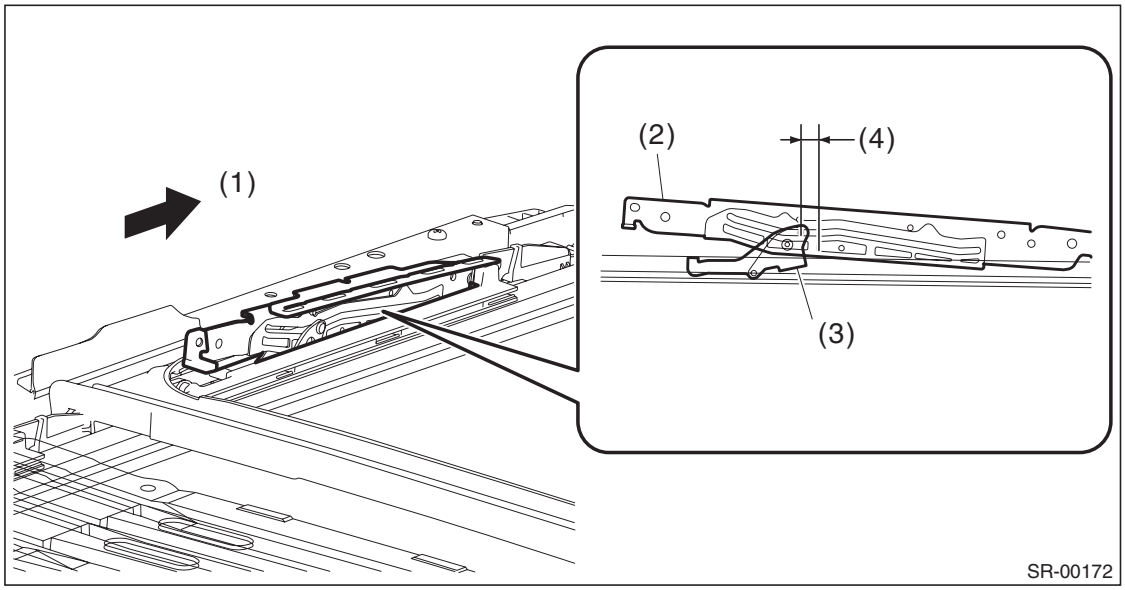

(1) Front
(2) Lid bracket
(3) Link ASSY
(4) 8.9 mm (0.35 in)

2) Install the sunroof motor assembly.
3) Install the spot map light, and connect the ground cable to the battery.
4) Perform the initialize operation. <Ref. to SR-5, INITIALIZE OPERATION, OPERATION, Sunroof Control System.>
5) Check the operation of sunroof with following table below.

Operation	Switch position
(1) Glass lid closes completely.	Close
(2) Glass lid tilt up to the top position.	Tilt up
(3) Glass lid closes completely.	Tilt down
(4) Glass lid opens 291 mm (11.46 in) away from completely closed position. (OUTBACK model)	Open
(5) Glass lid opens completely.	Open
(6) Glass lid closes completely.	Close

C: INSPECTION

Check the auto-reverse mechanism.

CAUTION:
Do not place objects in the way to check the auto-reverse mechanism.
1) Open the glass lid.
2) Forcefully push the glass lid in the opening direction while auto-closing, to check whether the window auto-reverse mechanism functions.

NOTE:
- The auto-function is cancelled when the window auto-reverse mechanism is activated more than five times.
- If the auto function is cancelled, reset it. <Ref. to SR-5, OPERATION, Sunroof Control System.>

GETtheMANUALS.org

7. Sunroof Switch

A: REMOVAL

1) Disconnect the ground cable from battery.
2) Remove the overhead console.
   (1) Push and open the rear end of the overhead console lid, and remove the screws.
   (2) Remove the clips and pull out the overhead console to disconnect the connectors.

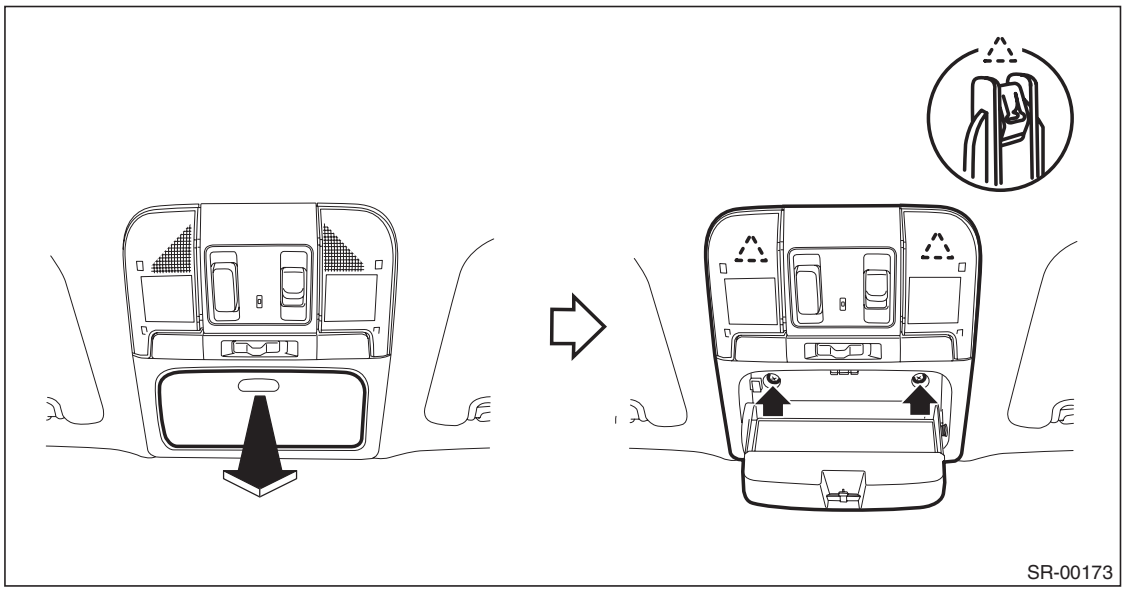

3) Release the claws and remove the sunroof switch from the overhead console.

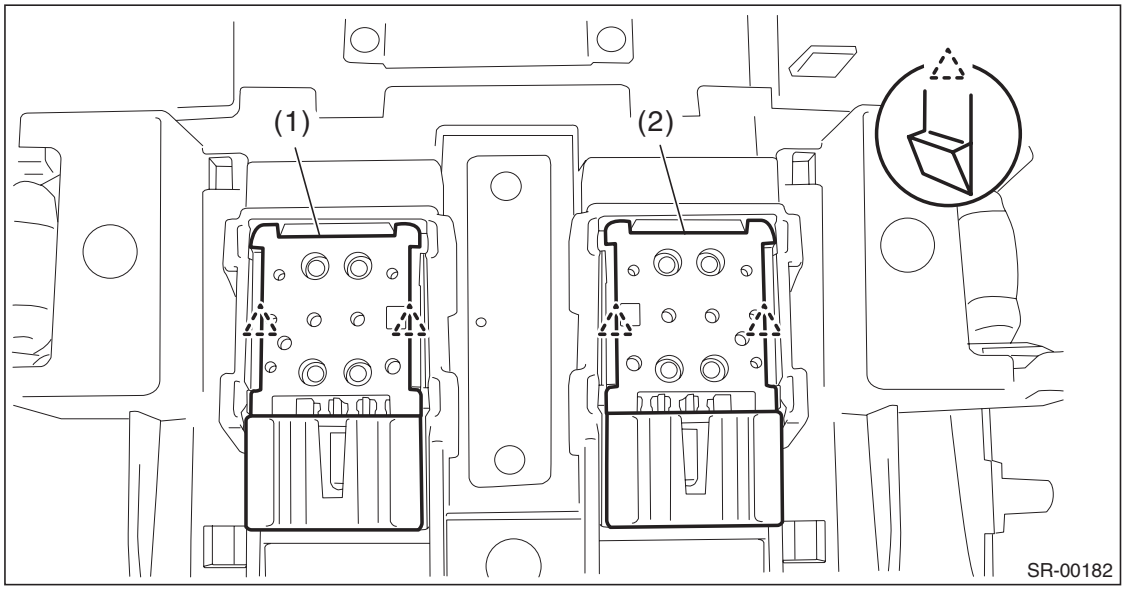

(1) Sunroof switch (tilt)
(2) Sunroof switch (slide)

B: INSTALLATION

Install each part in the reverse order of removal.

GETtheMANUALS.org

C: INSPECTION

1) Remove the overhead console.
2) Check the resistance between sunroof switch terminals.

Preparation tool: Circuit tester

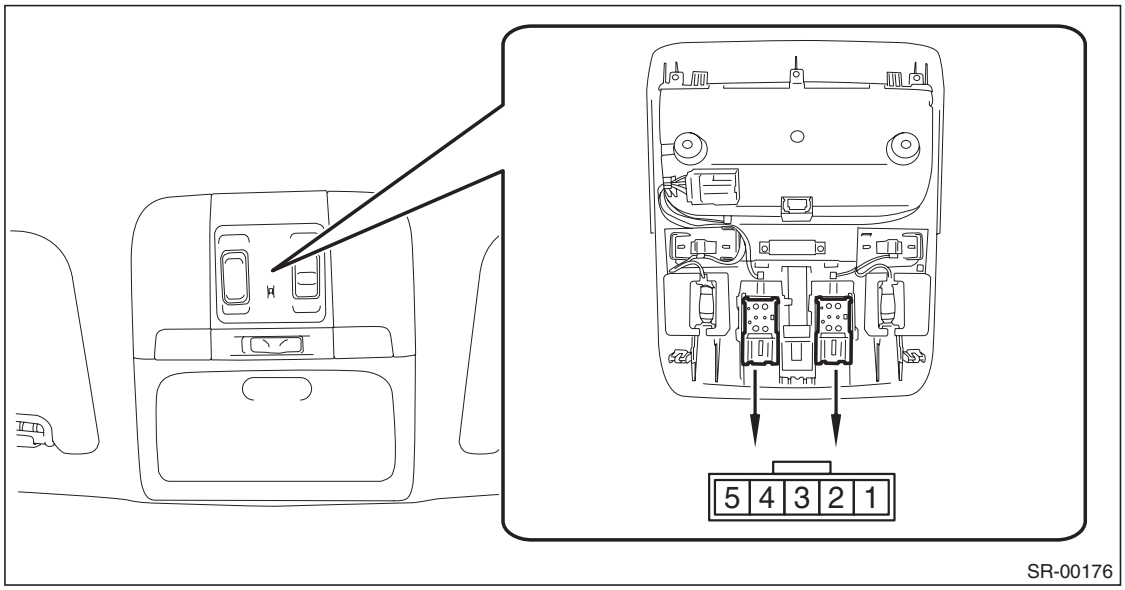

Terminal No.	Inspection conditions	Standard	Connector No.
1 — 3	Open	Less than 1 Ω	R128
4 — 3	Close	Less than 1 Ω	
1 — 3	Tilt up	Less than 1 Ω	R187
4 — 3	Tilt down	Less than 1 Ω	

3) Replace the sunroof switch if the inspection result is not within the standard value.

GETtheMANUALS.org

8. Sunshade

A: REMOVAL

CAUTION:
When removing the clip, use great care not to damage the roof trim.

1) Remove the glass lid.
   (1) Completely close the glass lid, and then open the sunshade.
   (2) Disconnect the claws and then remove the lid cover.

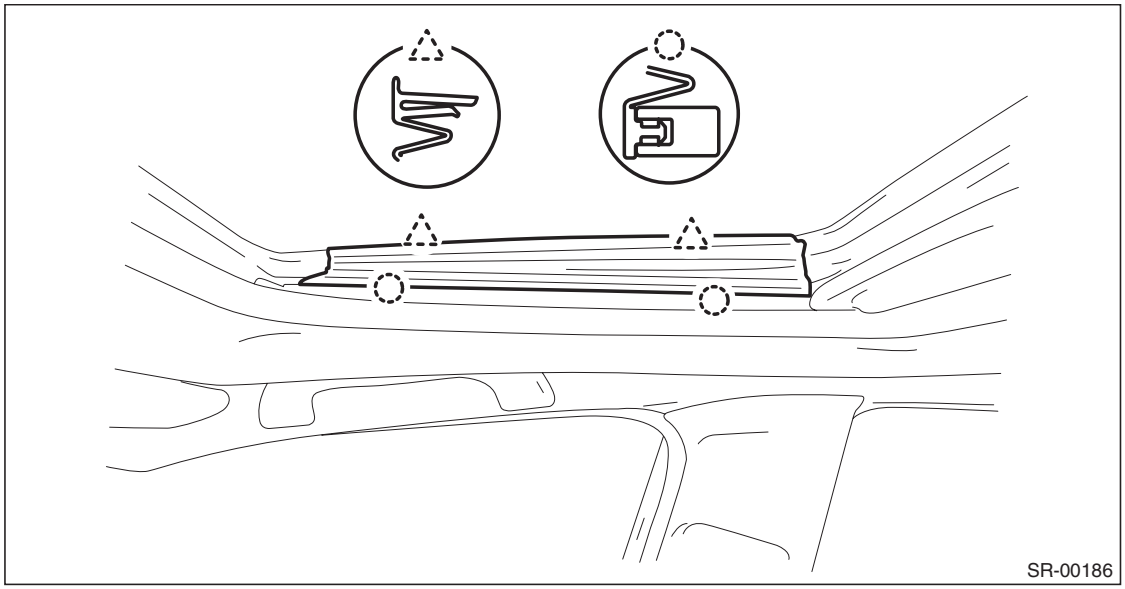

   (3) Remove the bolts, then remove the glass lid.

CAUTION:
Be careful not to damage the glass lid.

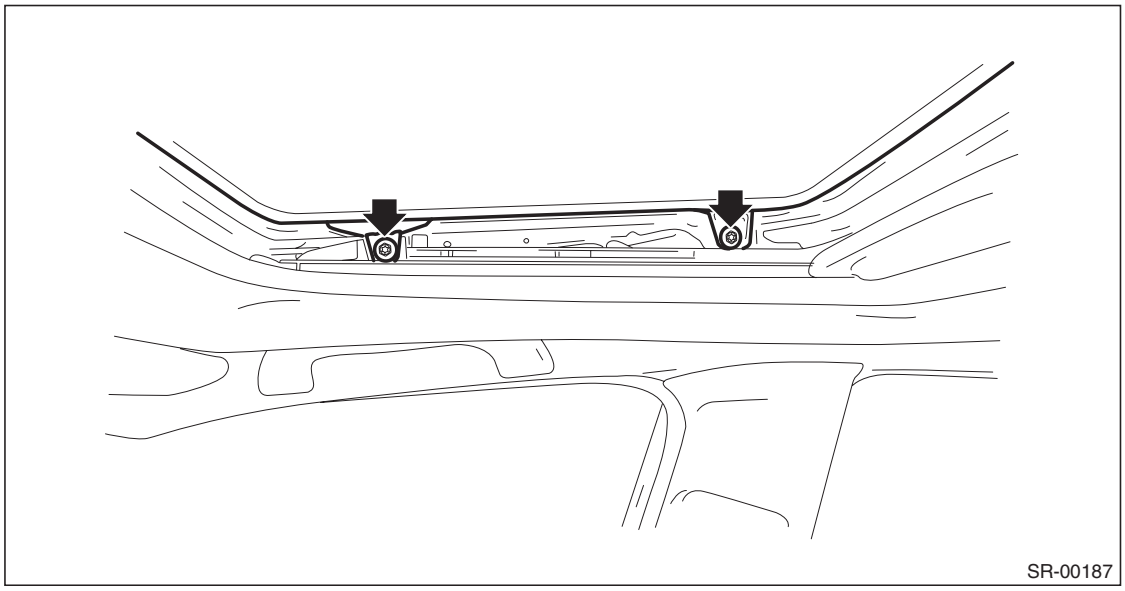

2) Remove the roof trim. <Ref. to EI-131, REMOVAL, Roof Trim.>
3) Disconnect the sunroof motor connector.

GETtheMANUALS.org

4) Remove the frame assembly.
   (1) Remove the drain tube.

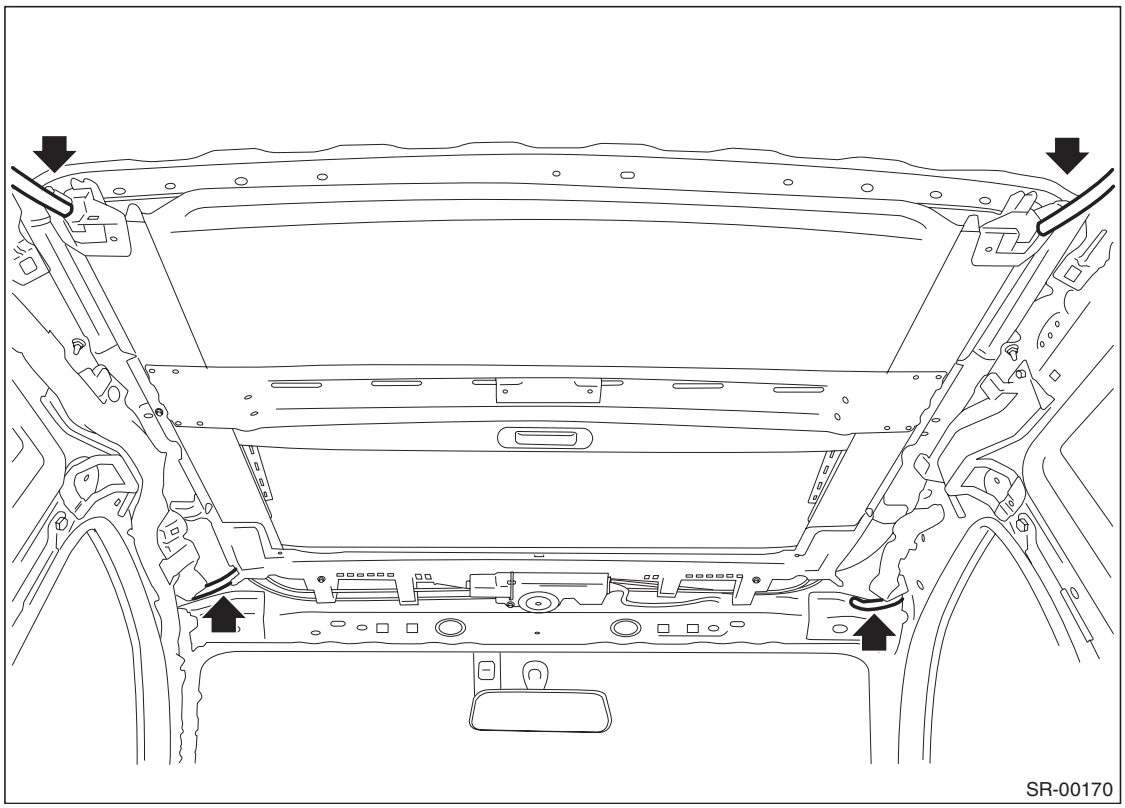

   (2) Remove the bolts and then remove the sunroof bracket.

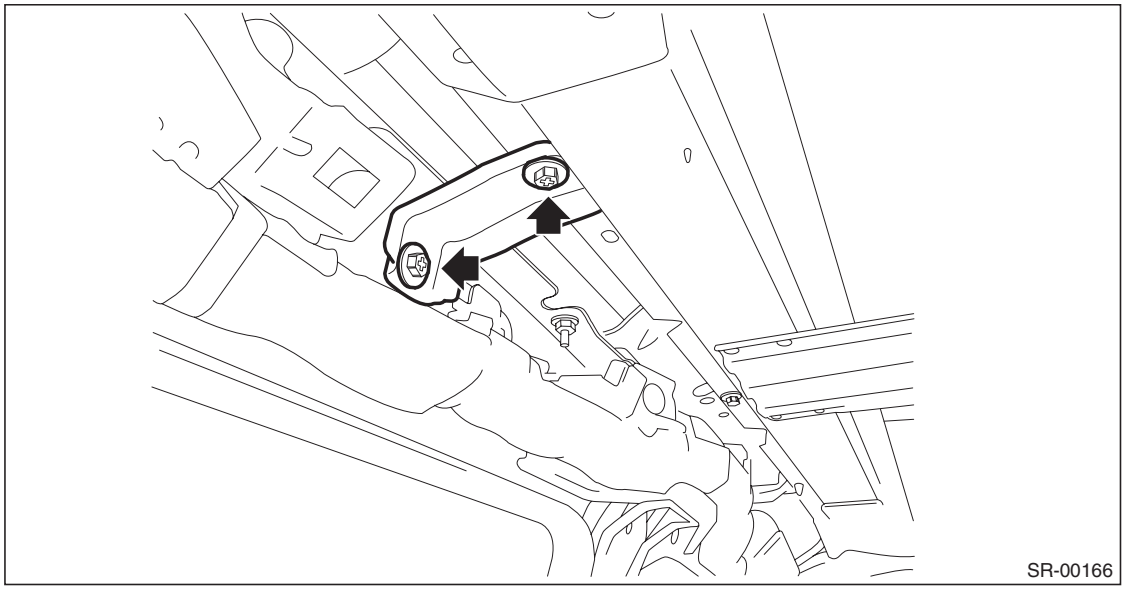

GETtheMANUALS.org

(3) Remove the bolts, then remove the frame assembly.

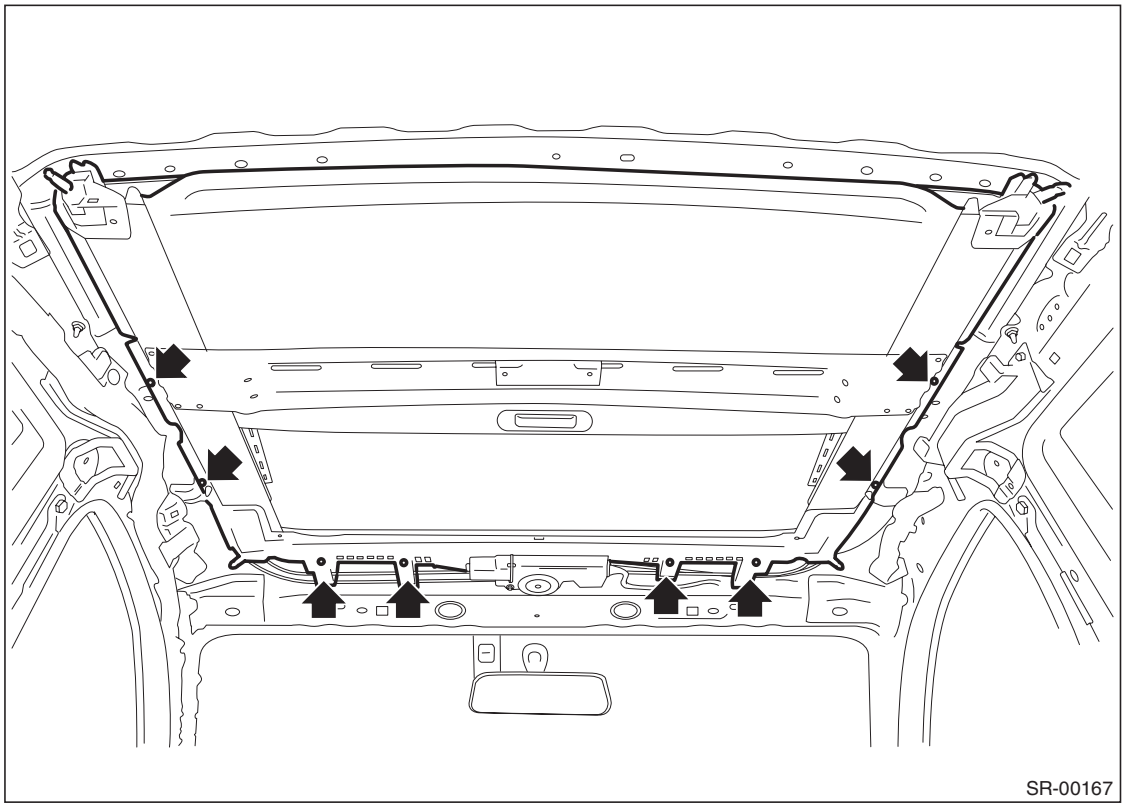

5) Remove the stopper rubber and pull out the sunshade from sunroof frame.

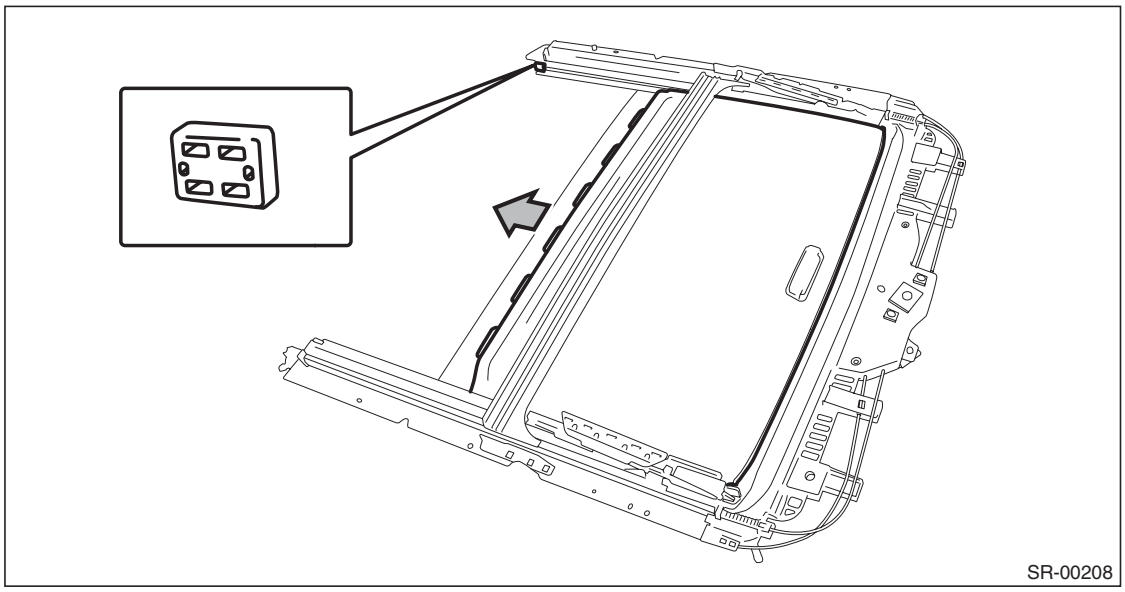

B: INSTALLATION

Install each part in the reverse order of removal.

Tightening torque:

Refer to "COMPONENT" of "General Description". <Ref. to SR-2, COMPONENT, General Description.>

GETtheMANUALS.org

C: INSPECTION

1. CHECK FOR MOVING LOAD OF SUNSHADE

1) Attach a spring scale to sunshade edge using a cloth.
2) Pull the spring scale to check the moving load of the sunshade.

Moving load of sunshade:
14±6 N (1.43 kgf, 3.1 lbf±0.61 kgf, 1.3 lbf)

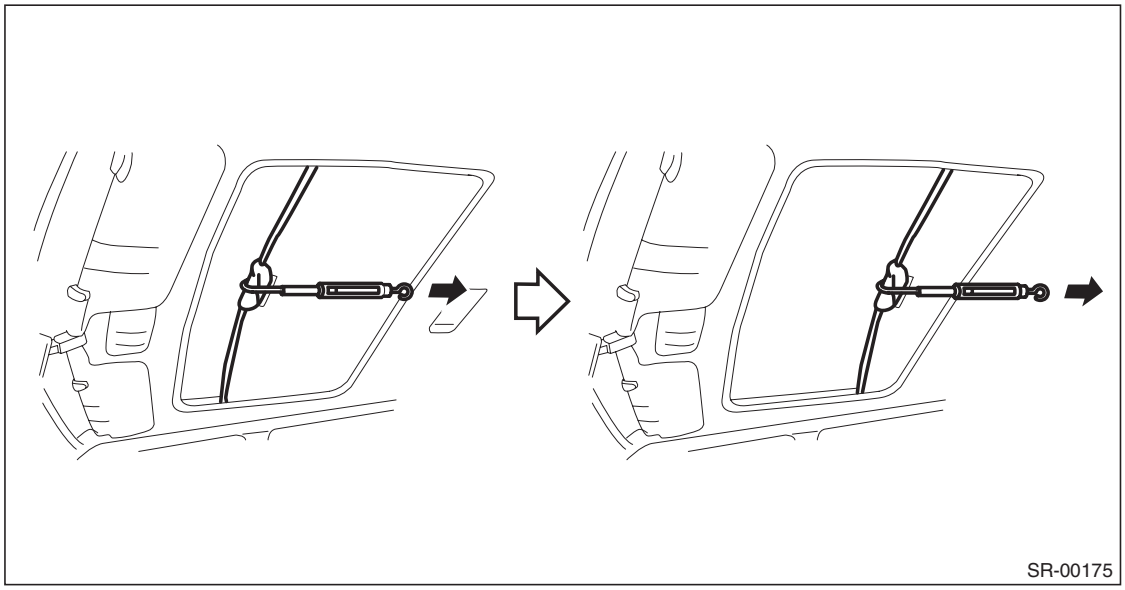

NOTE:
Moving load is larger at the beginning of pulling a spring scale, so take a spring scale reading while sunshade sliding smoothly.
3) If the inspection result exceeds the standard value, check if the installation to sunshade or frame assembly is sufficient, and replace if necessary.

GETtheMANUALS.org

EXTERIOR/INTERIOR TRIM

EI

		Page
1.	General Description	2
2.	Front Grille	26
3.	Front Hood Grille	30
4.	Cowl Panel	32
5.	Front Under Cover	35
6.	Floor Under Protector	36
7.	Fuel Tank Protector	37
8.	Mud Guard	38
9.	Front Bumper	39
10.	Rear Bumper	50
11.	Side Sill Spoiler	55
12.	Roof Molding	56
13.	Roof Rail	59
14.	Door Trim	60
15.	Instrument Panel Lower Cover	64
16.	Glove Box	66
17.	Center Console	69
18.	Console Box	73
19.	Instrument Panel Assembly	76
20.	Lower Inner Trim	96
21.	Upper Inner Trim	102
22.	Rear Quarter Trim	110
23.	Rear Shelf Trim	120
24.	Trunk Room Trim	127
25.	Sun Visor	129
26.	Assist Grip	130
27.	Roof Trim	131
28.	Rear Gate Trim	160
29.	Floor Mat	162
30.	Trunk Lid Garnish	163
31.	Rear Gate Garnish	164
32.	Heat Shield Cover	167
33.	Ornament	169

GETtheMANUALS.org

1. General Description

A: COMPONENT

1. FRONT UNDER COVER

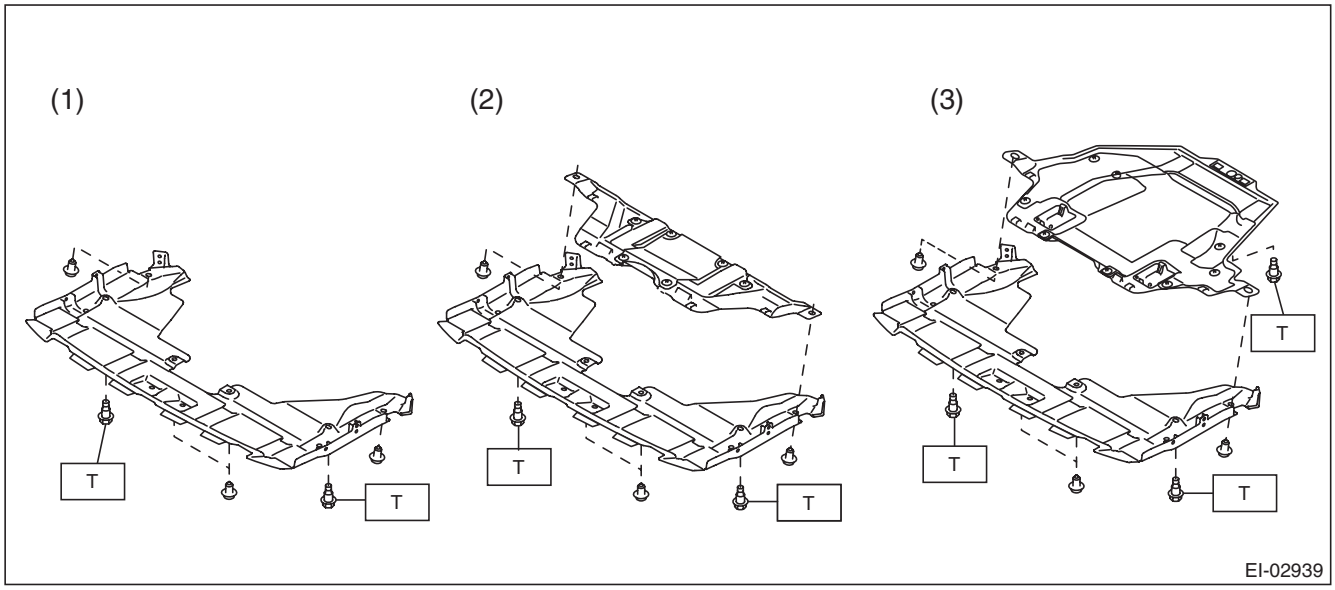

(1) Small type
(2) Medium type
(3) Large type

Tightening torque:N·m (kgf-m, ft-lb)
T: 17.5 (1.78, 12.9)

2. FLOOR UNDER PROTECTOR

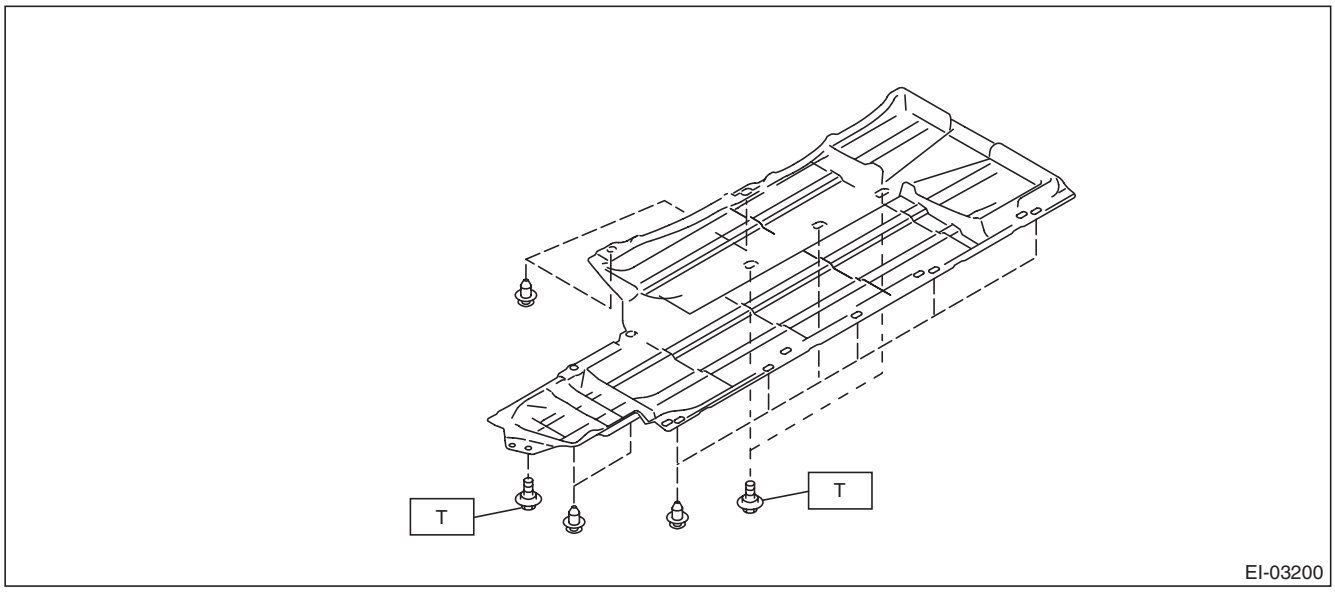

Tightening torque:N·m (kgf-m, ft-lb)
T: 7.5 (0.76, 5.5)

GETtheMANUALS.org

3. FUEL TANK PROTECTOR

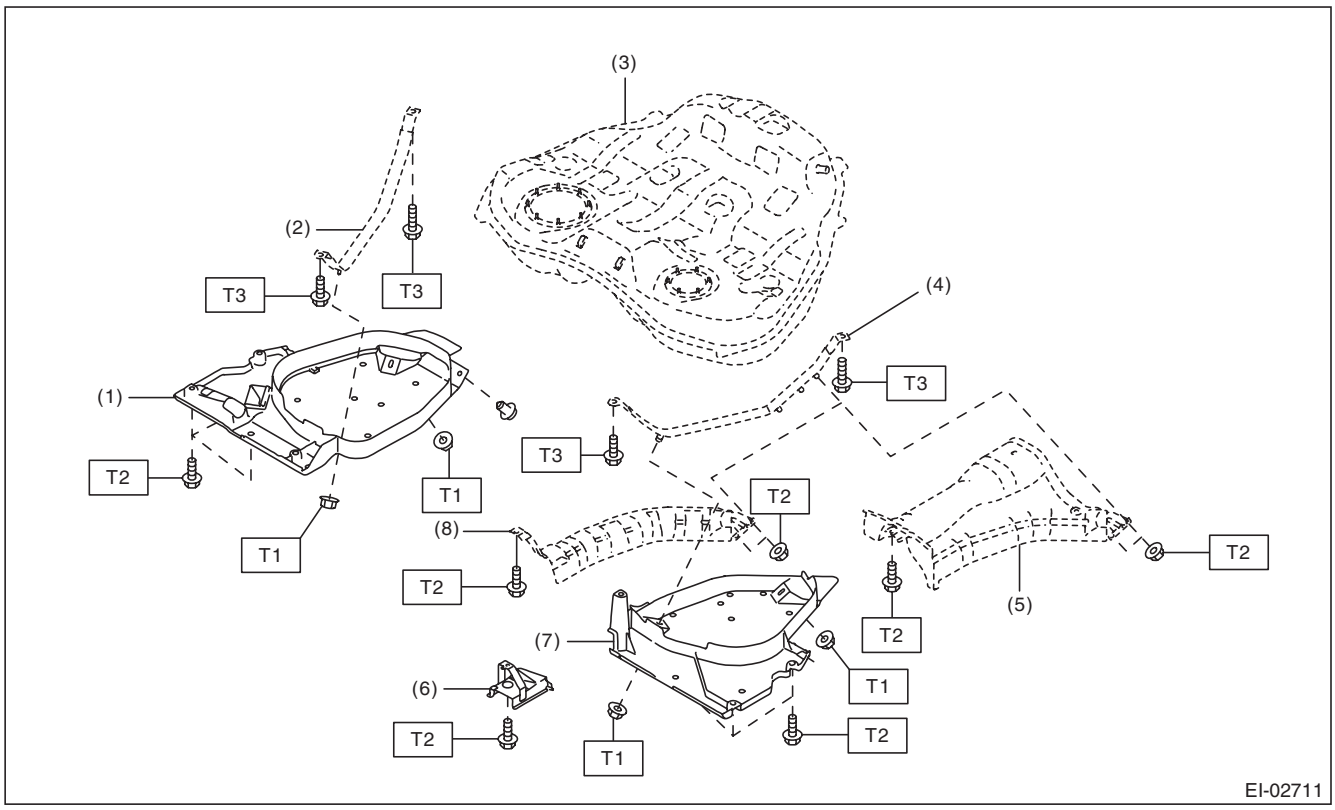

(1)	Fuel tank protector RH	(5)	Center heat shield cover (DOHC model)	***Tightening torque:N·m (kgf-m, ft-lb)***
(2)	Fuel tank band ASSY RH	(6)	Fuel tank bracket	***T1: 9 (0.92, 6.6)***
(3)	Fuel tank ASSY	(7)	Fuel tank protector LH	***T2: 18 (1.84, 13.3)***
(4)	Fuel tank band ASSY LH	(8)	Center heat shield cover (SOHC model)	***T3: 33 (3.36, 24.3)***

GETtheMANUALS.org

4. FRONT HOOD GRILLE

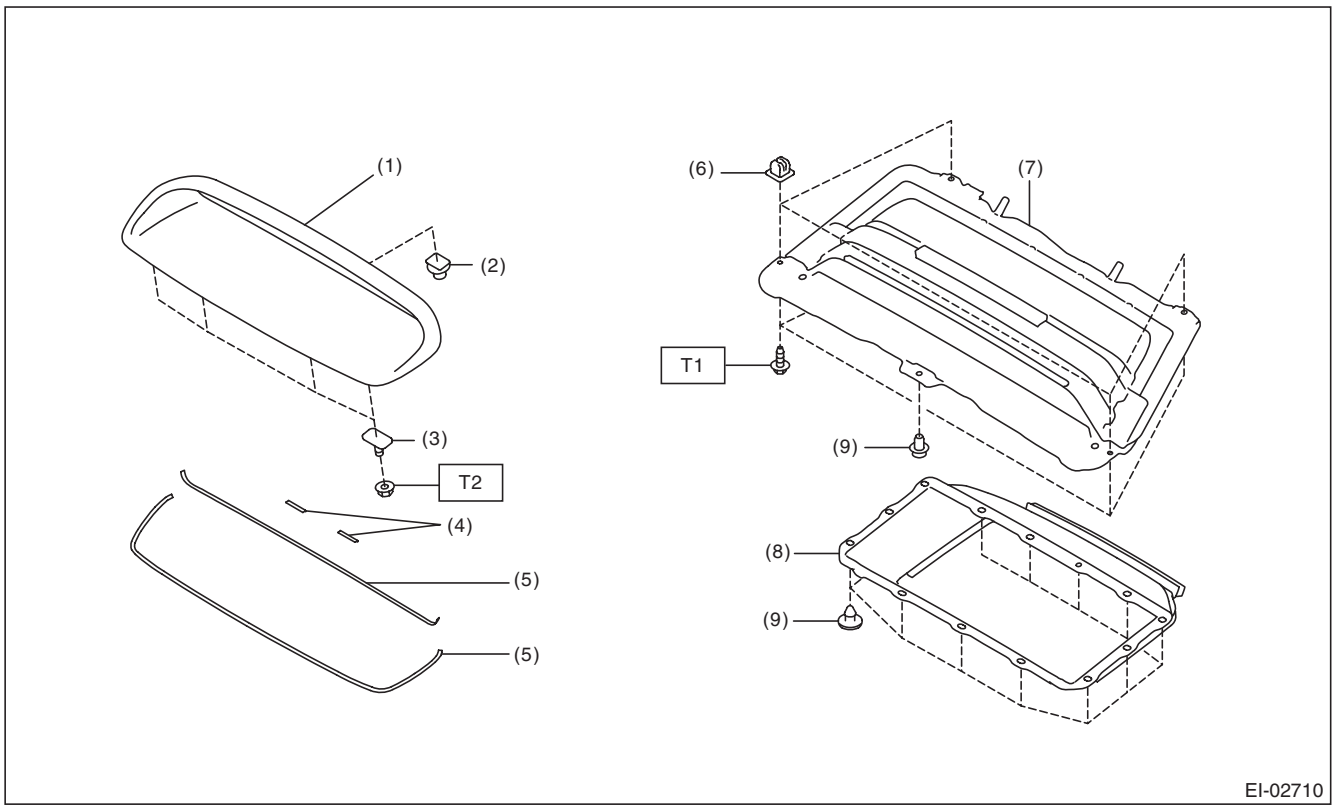

(1)	Front hood grille	(6)	Grommet
(2)	Clip anchor	(7)	Hood duct
(3)	Bolt	(8)	Hood duct inner
(4)	Protector	(9)	Clip
(5)	Gasket		

Tightening torque:N·m (kgf-m, ft-lb)
T1: 1.0 (0.1, 0.7)
T2: 4.5 (0.46, 3.3)

GETtheMANUALS.org

5. FRONT BUMPER

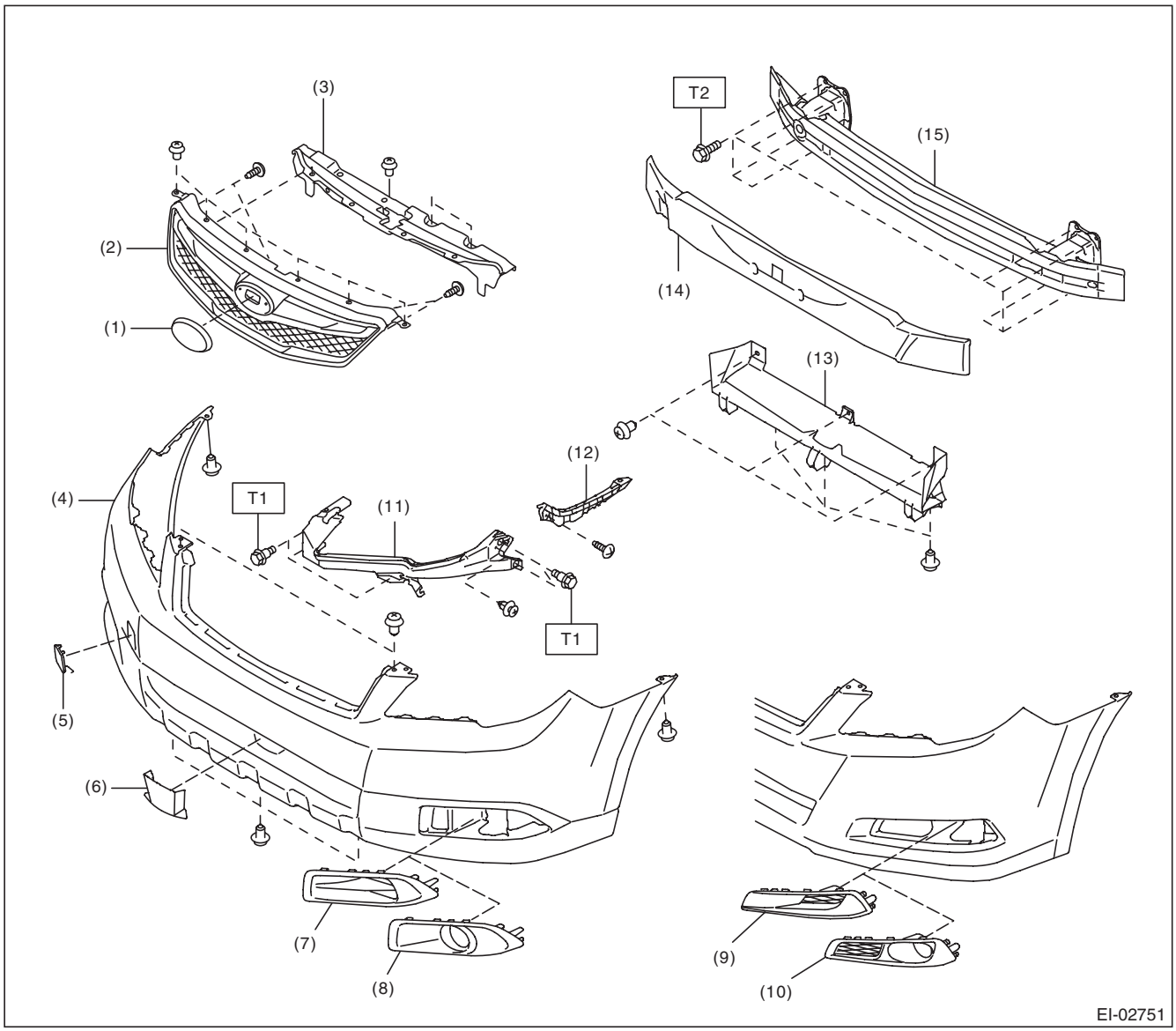

(1) Floor ornament
(2) Front grille ASSY
(3) Grille bracket
(4) Front bumper face
(5) Front hook cover
(6) Bumper cover CTR (sedan model only)
(7) Bumper cover (OUTBACK model)
(8) Fog light cover (OUTBACK model)
(9) Bumper cover (sedan model)
(10) Fog light cover (sedan model)
(11) Bracket corner front
(12) Bracket side front UPR
(13) Bracket center LWR front
(14) Energy absorber foam front
(15) Beam COMPL front

Tightening torque:N·m (kgf-m, ft-lb)
T1: 7.5 (0.76, 5.5)
T2: 32 (3.26, 23.6)

GETtheMANUALS.org

6. REAR BUMPER

- Sedan model

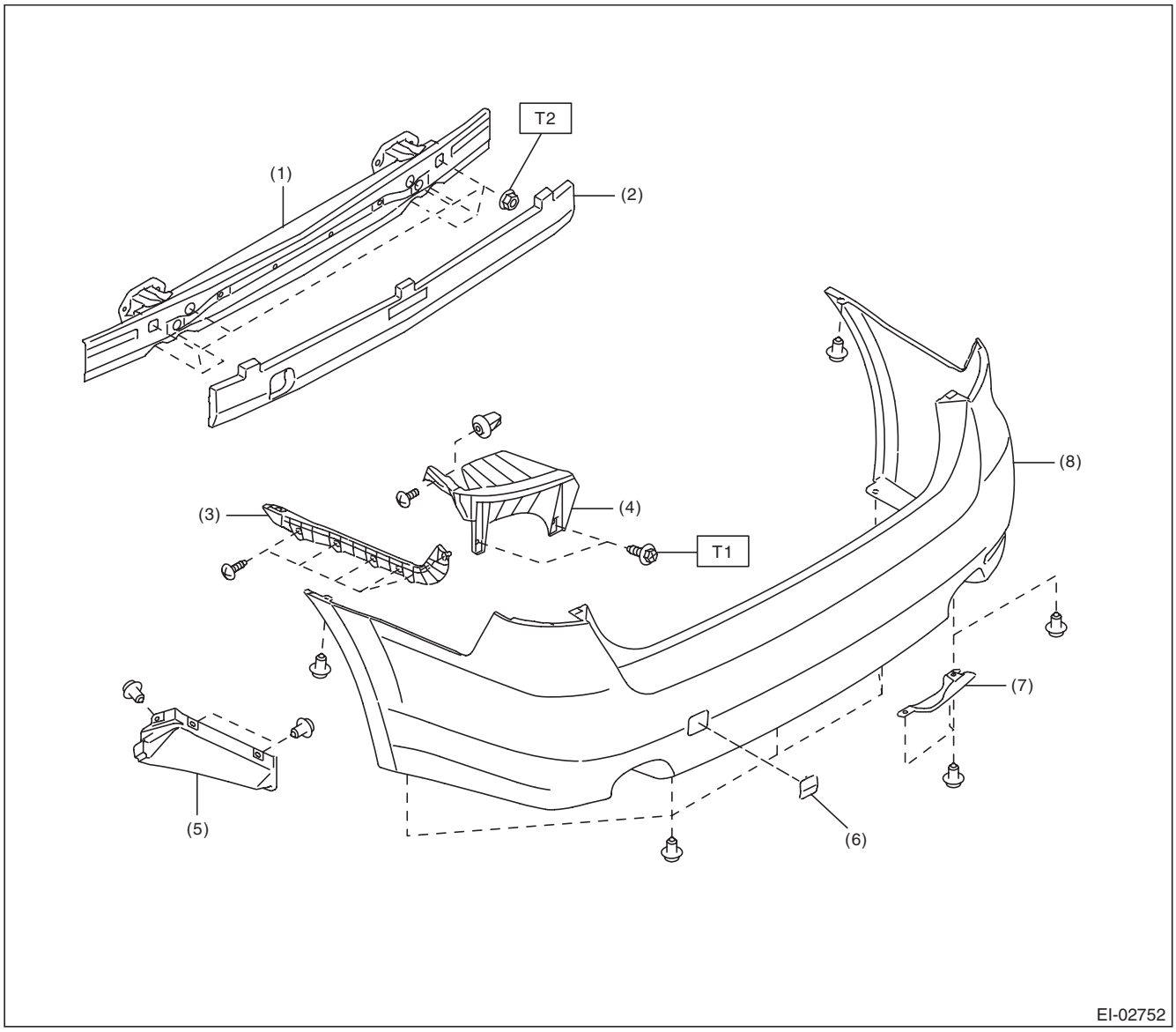

(1)	Beam COMPL rear	(5)	Bracket side rear LWR
(2)	Energy absorber foam rear	(6)	Rear hook cover
(3)	Bracket side rear UPR	(7)	Bumper cover rear
(4)	Bracket corner rear	(8)	Rear bumper face

Tightening torque:N·m (kgf-m, ft-lb)
T1: 7.5 (0.76, 5.5)
T2: 45 (4.59, 33.2)

GETtheMANUALS.org

- OUTBACK model

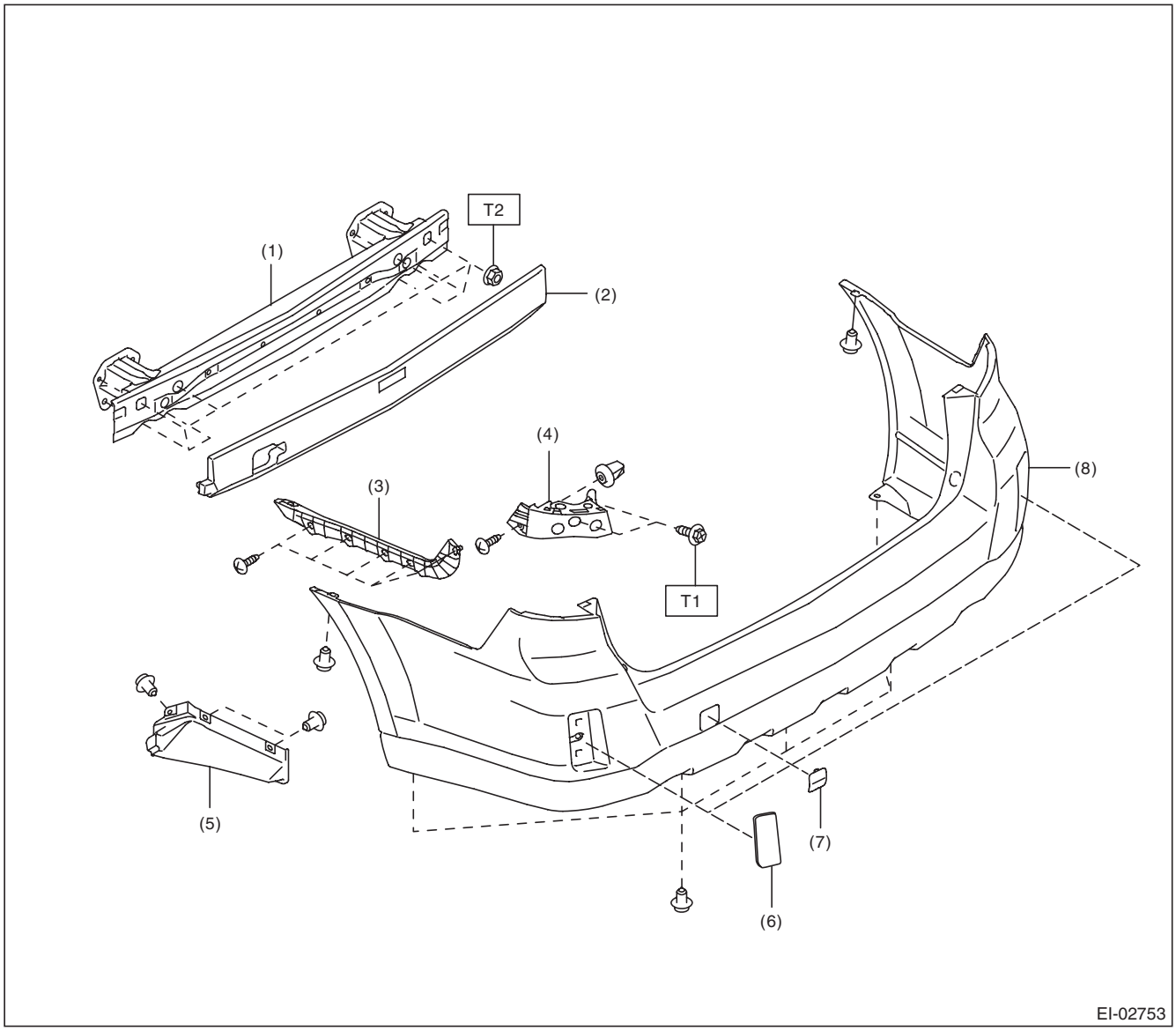

(1)	Beam COMPL rear	(5)	Bracket side rear LWR
(2)	Energy absorber foam rear	(6)	Reflex reflector
(3)	Bracket side rear UPR	(7)	Rear hook cover
(4)	Bracket corner rear	(8)	Rear bumper face

Tightening torque:N·m (kgf-m, ft-lb)
T1: 7.5 (0.76, 5.5)
T2: 45 (4.59, 33.2)

GETtheMANUALS.org

7. MUD GUARD

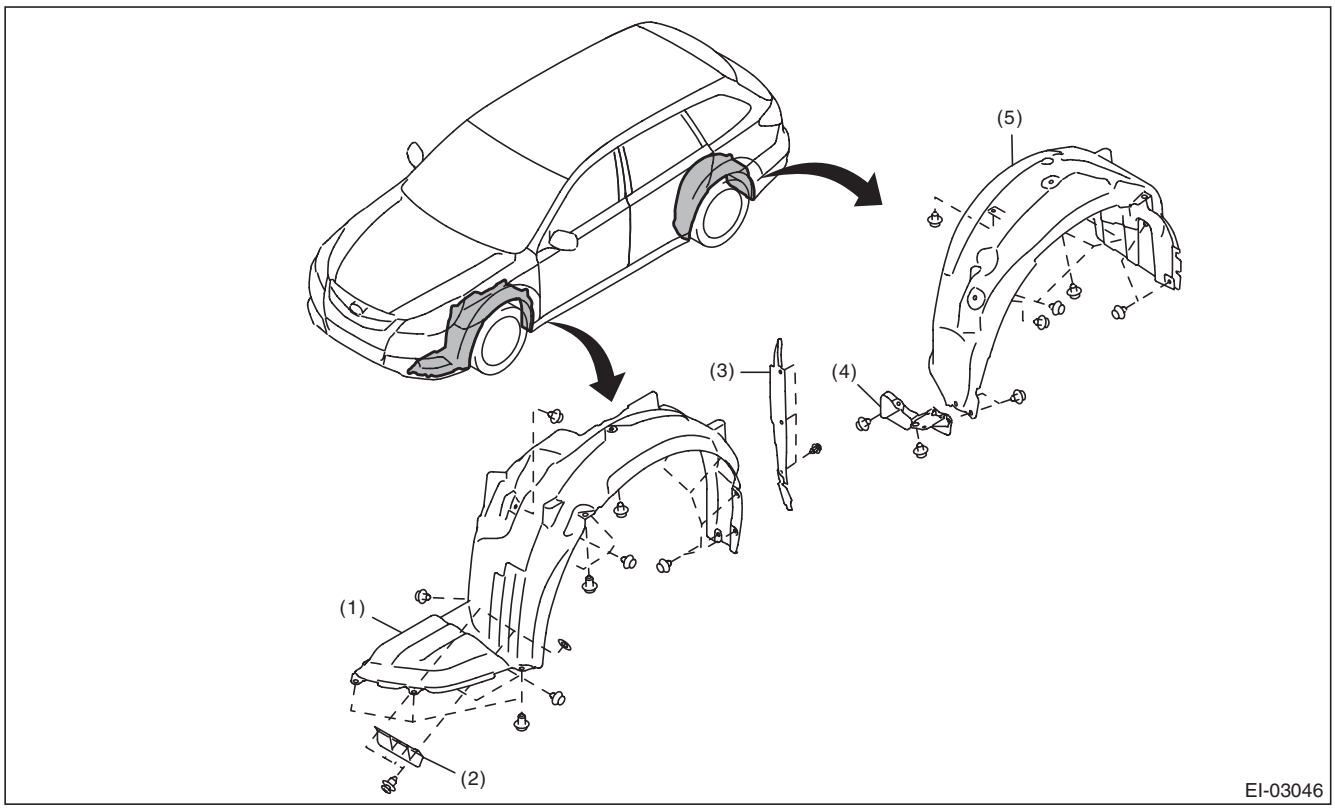

(1)	Front mud guard	(3)	Fender cover lower	(5)	Rear mud guard
(2)	Front air flap plate	(4)	Rear air flap plate		

8. COWL PANEL

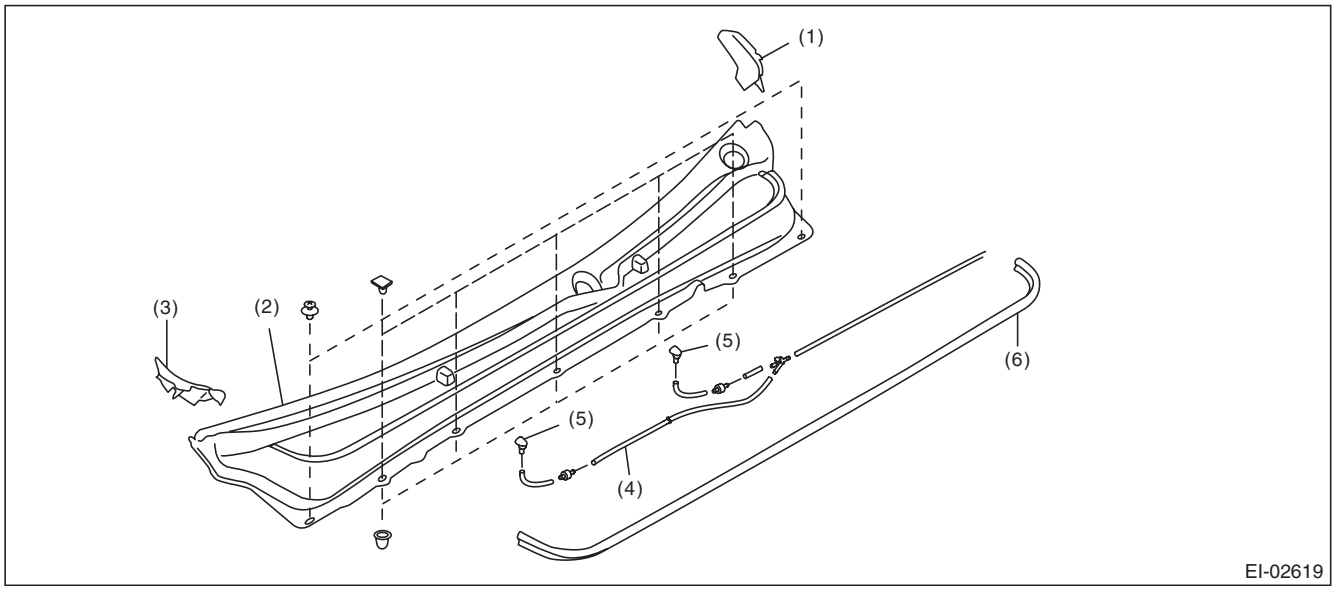

(1)	Cowl panel side LH	(3)	Cowl panel side RH	(5)	Washer nozzle
(2)	Cowl panel	(4)	Washer hose	(6)	Cowl panel seal

GETtheMANUALS.org

9. SIDE SILL SPOILER

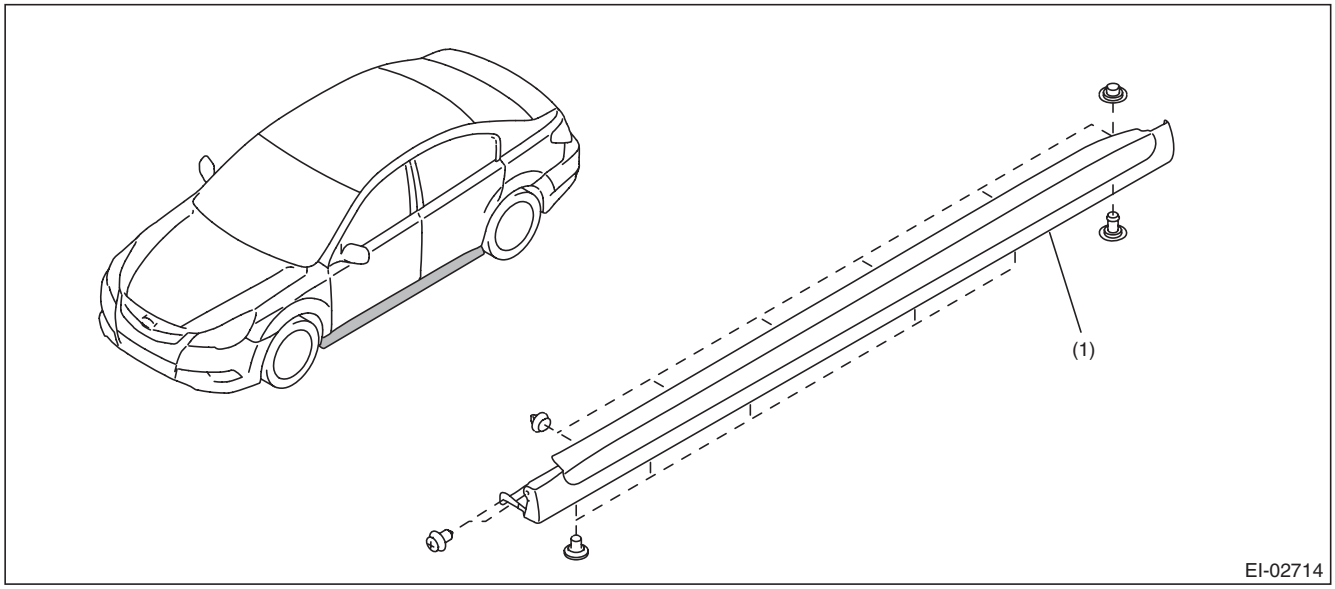

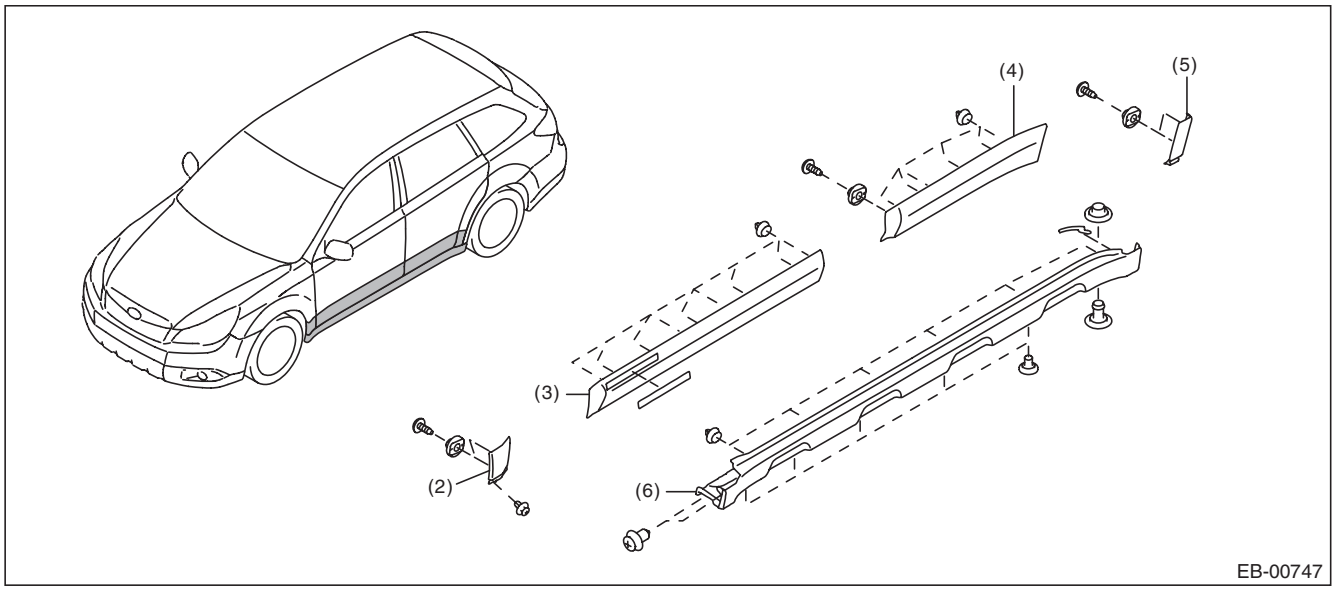

(1) Side sill garnish ASSY (sedan model)
(2) Garnish ASSY front fender (OUTBACK model)
(3) Garnish ASSY front door (OUTBACK model)
(4) Garnish ASSY rear door (OUTBACK model)
(5) Garnish ASSY rear quarter (OUTBACK model)
(6) Side sill garnish ASSY (OUTBACK model)

GETtheMANUALS.org

10.ROOF MOLDING

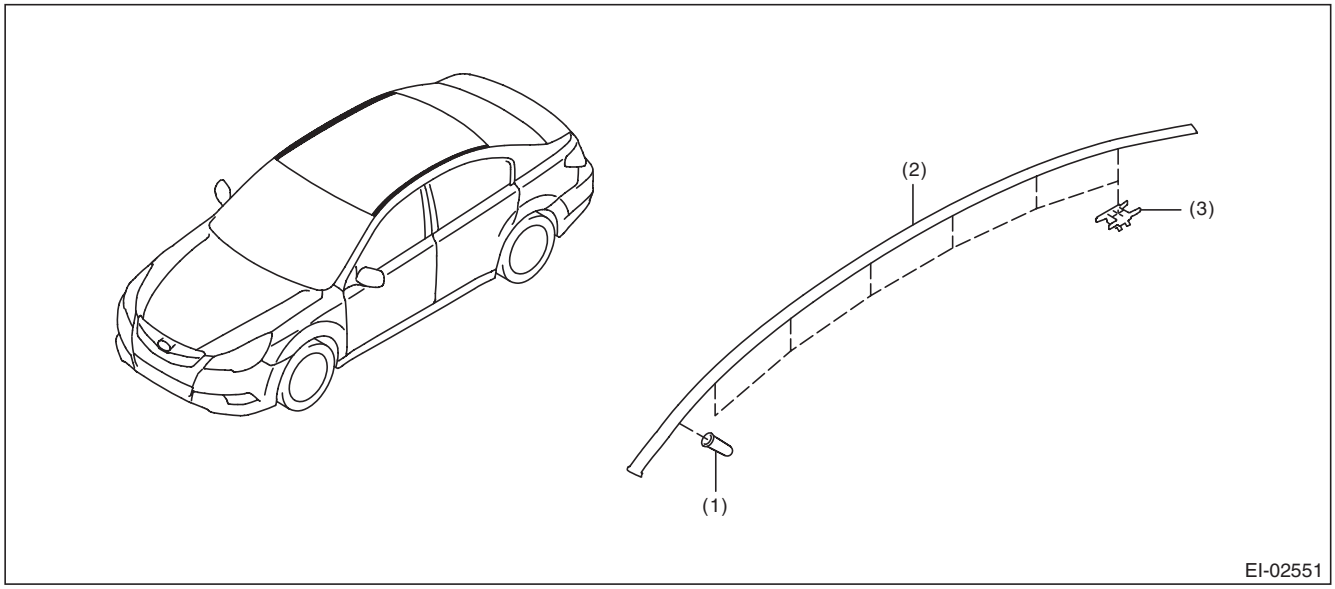

(1) Rivet
(2) Roof molding
(3) Clip

11.ROOF RAIL

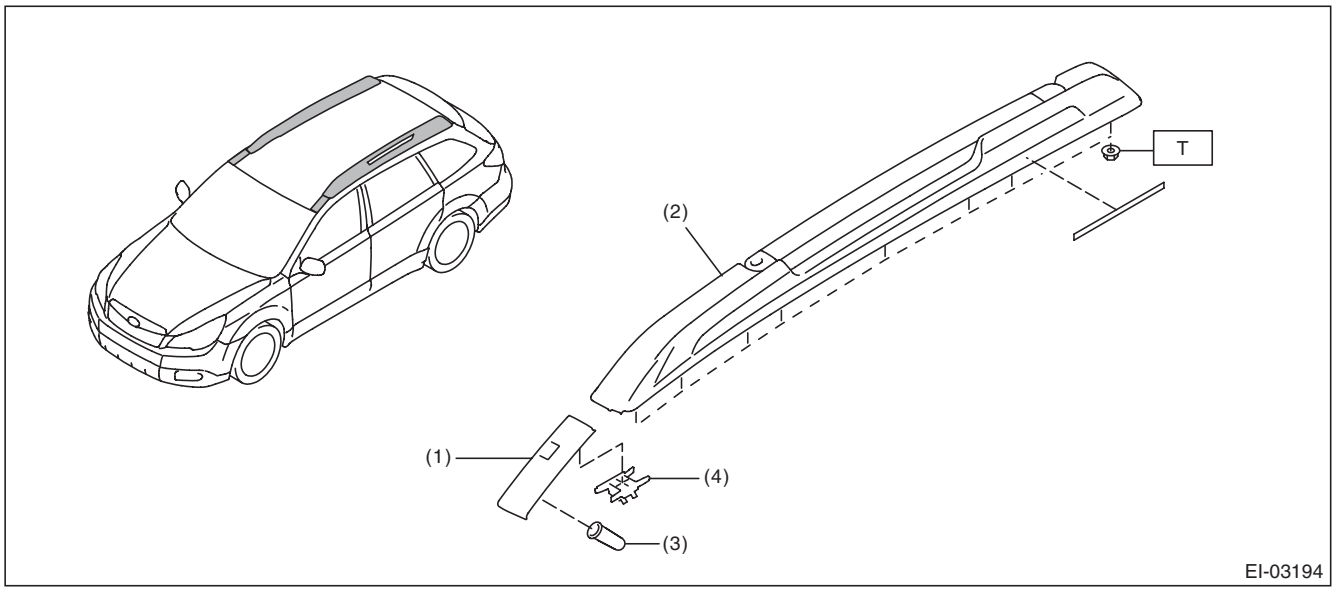

(1) Roof molding
(2) Roof rail ASSY
(3) Rivet
(4) Clip

Tightening torque:N·m (kgf-m, ft-lb)
T: 7.5 (0.76, 5.5)

GETtheMANUALS.org

12.TRUNK LID GARNISH

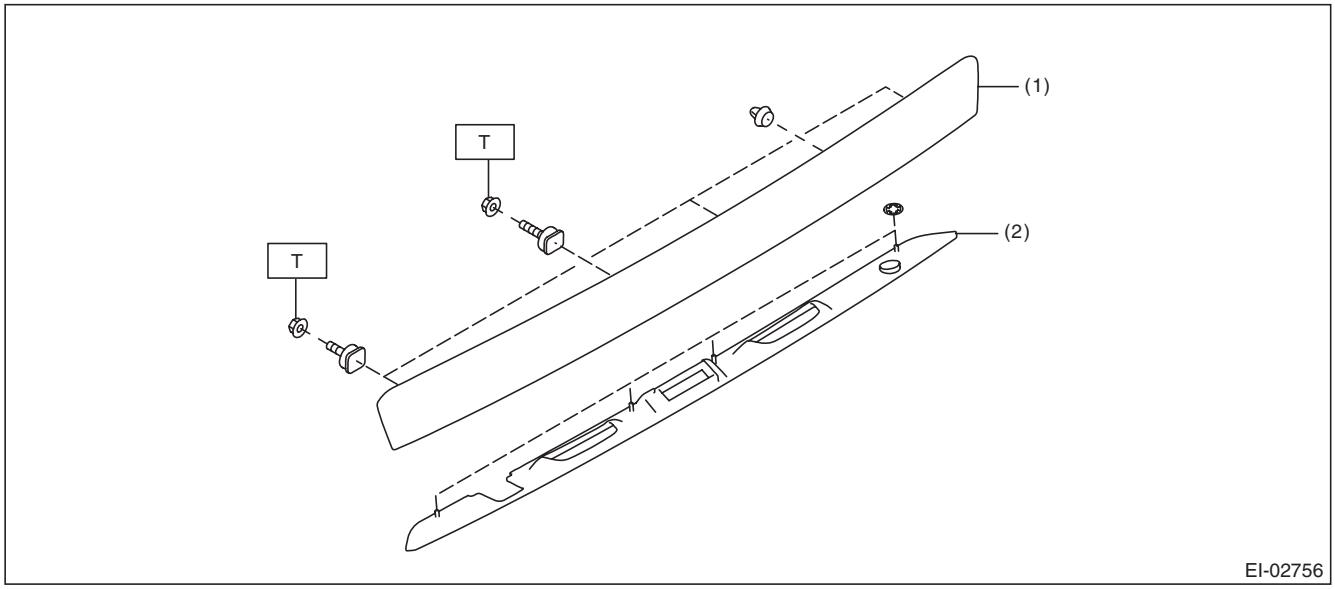

(1) Trunk lid garnish
(2) Undercover-trunk lid garnish

Tightening torque:N·m (kgf-m, ft-lb)
T: 4.5 (0.46, 3.3)

13.REAR GATE GARNISH

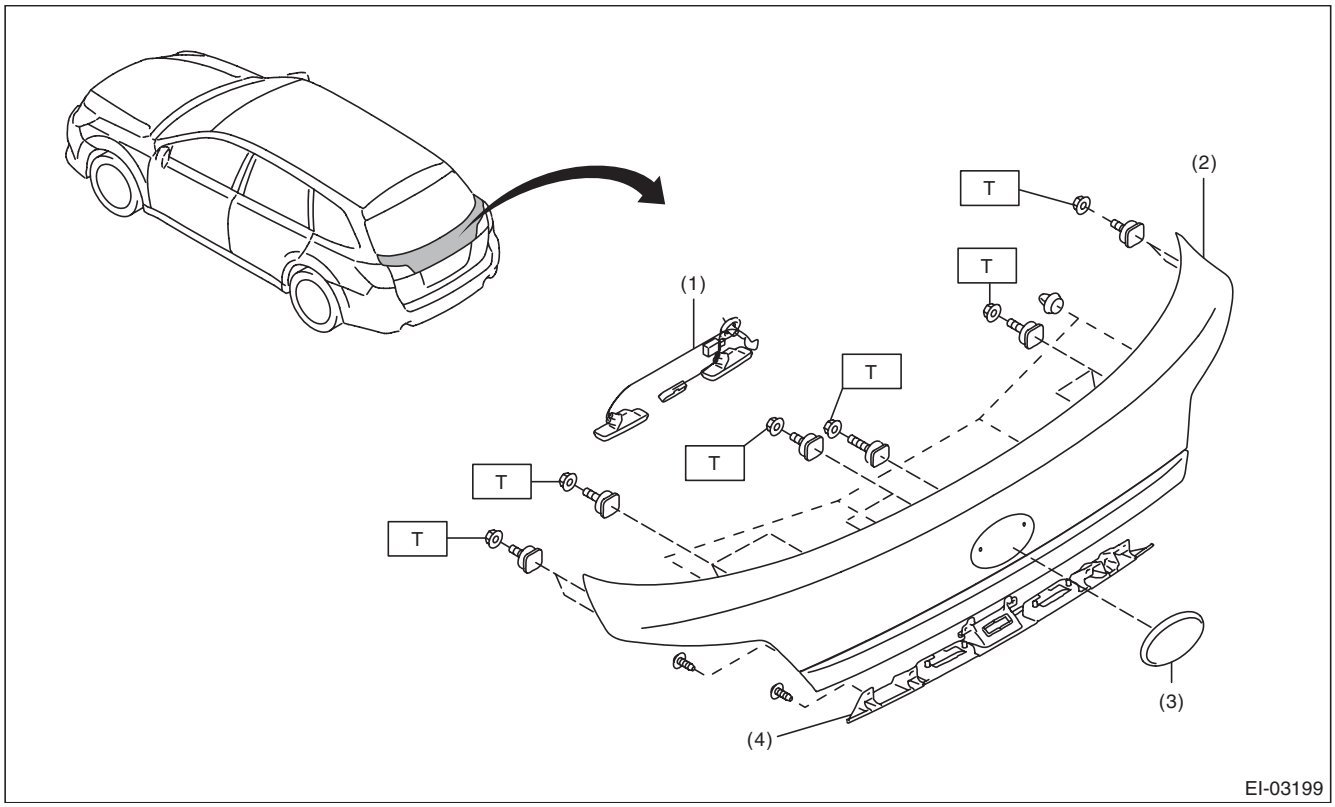

(1) License light ASSY and rear gate opener ASSY harness.
(2) Rear gate garnish
(3) Ornament
(4) Garnish LWR

Tightening torque:N·m (kgf-m, ft-lb)
T: 4.5 (0.46, 3.3)

GETtheMANUALS.org

14.DOOR TRIM

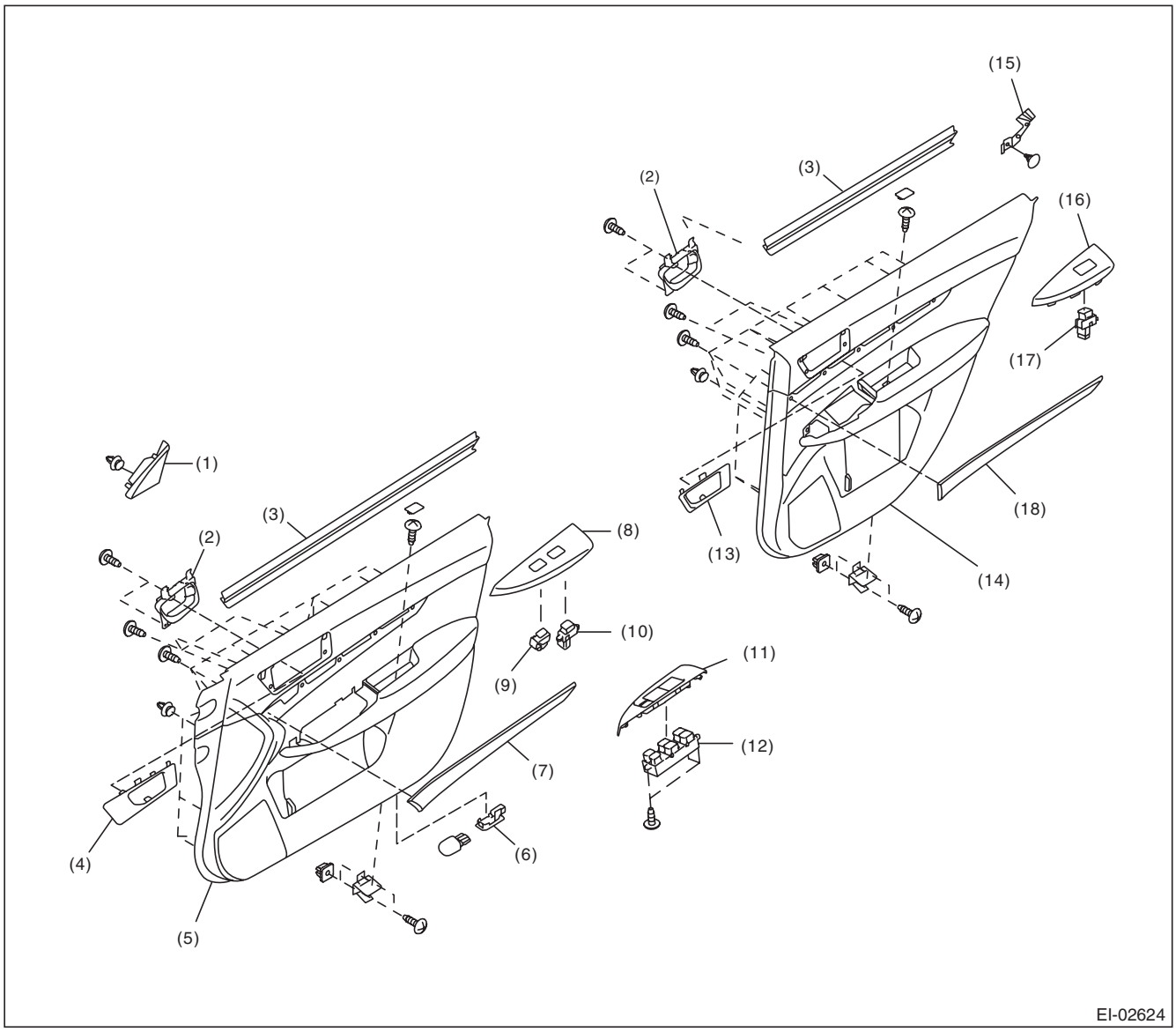

(1)	Gusset cover front	(7)	Front door ornament panel	(13)	Rear door inner remote cover
(2)	Inner remote ASSY	(8)	Power window switch panel front RH	(14)	Rear door trim
(3)	Weather strip inner	(9)	Door lock switch ASSY	(15)	Rear door cover upper
(4)	Front door inner remote cover	(10)	Power window sub-switch ASSY front	(16)	Power window switch panel rear
(5)	Front door trim ASSY	(11)	Power window switch panel front LH	(17)	Power window sub-switch ASSY rear
(6)	Door step light	(12)	Power window main switch ASSY	(18)	Rear door ornament panel

GETtheMANUALS.org

15.CONSOLE BOX

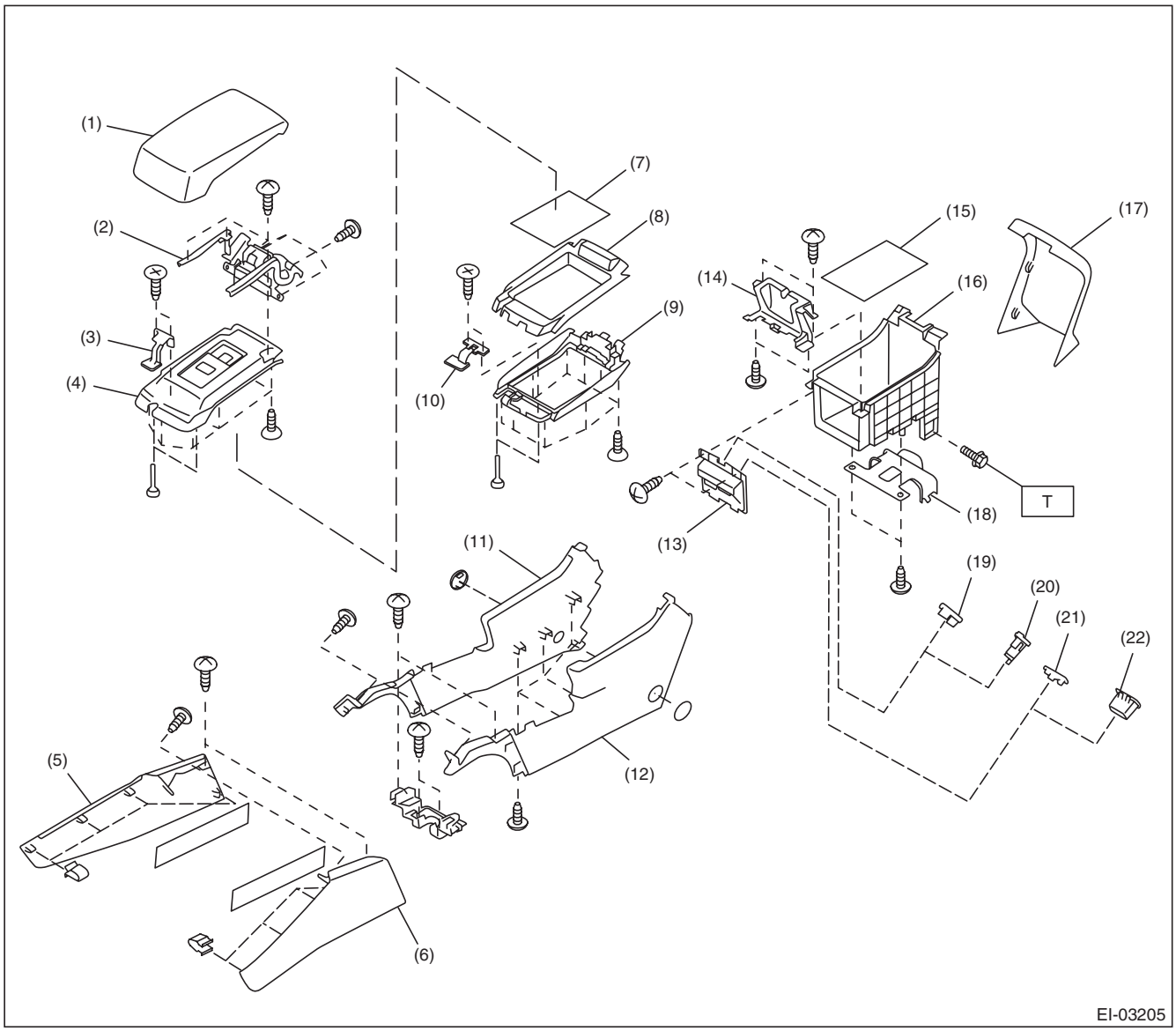

(1)	Console lid COMPL	(9)	Lid outer LWR	(18)	Console bracket
(2)	Console lid hinge COMPL	(10)	Lid lock LWR	(19)	Cover A
(3)	Lid lock UPR	(11)	Console box LWR RH	(20)	Accessory socket
(4)	Lid inner UPR	(12)	Console box LWR LH	(21)	Cover B
(5)	Console front side cover ASSY RH	(13)	Pocket case	(22)	AUX unit
		(14)	Cover center		
(6)	Console front side cover ASSY LH	(15)	Mat (pocket)		
(7)	Mat (lid LWR)	(16)	Console pocket		
(8)	Lid inner LWR	(17)	Console rear cover		

Tightening torque:N·m (kgf-m, ft-lb)
T: 6.5 (0.66, 4.8)

GETtheMANUALS.org

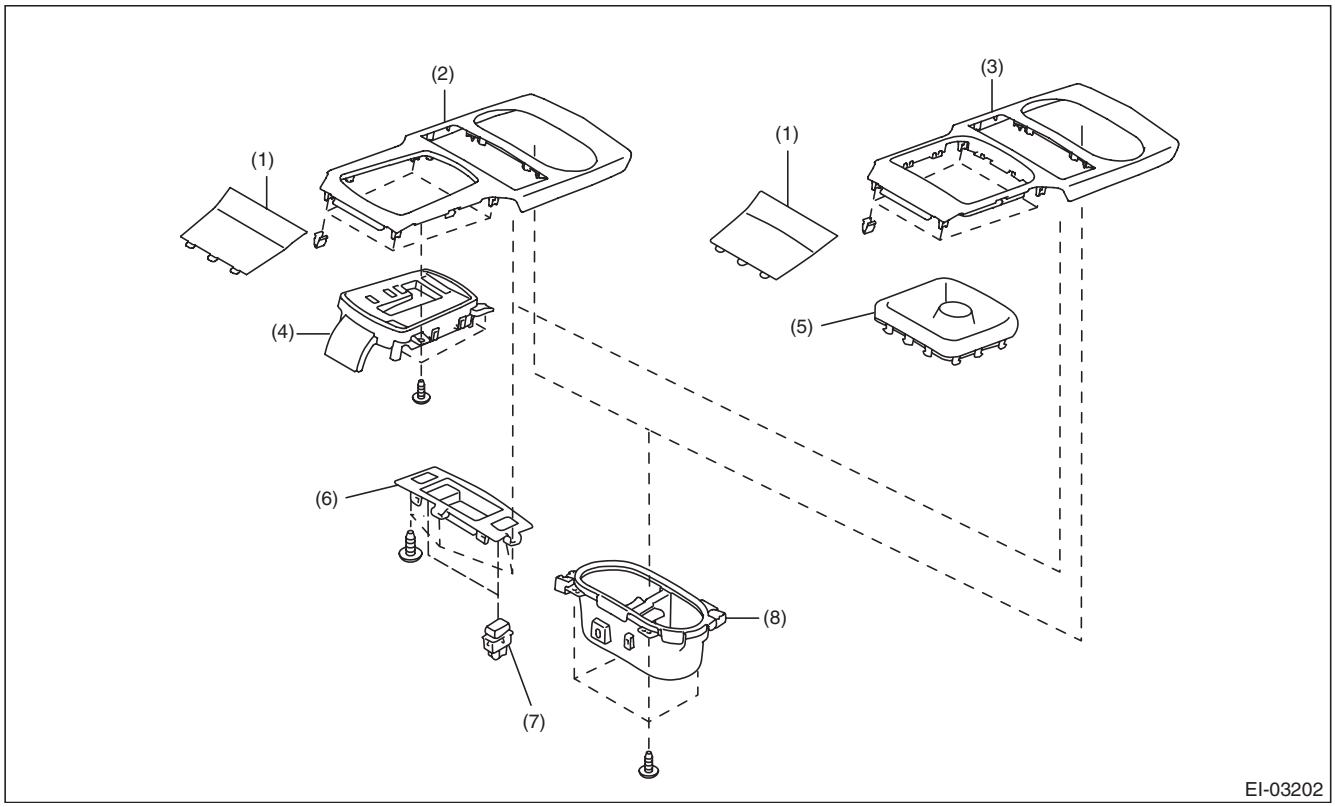

(1)	Center pocket mat	(4)	Indicator ASSY AT	(7)	Seat heater switch
(2)	Front cover AT	(5)	Shift boot (MT model)	(8)	Cup holder ASSY
(3)	Front cover MT	(6)	Switch case		

GETtheMANUALS.org

16.INSTRUMENT PANEL

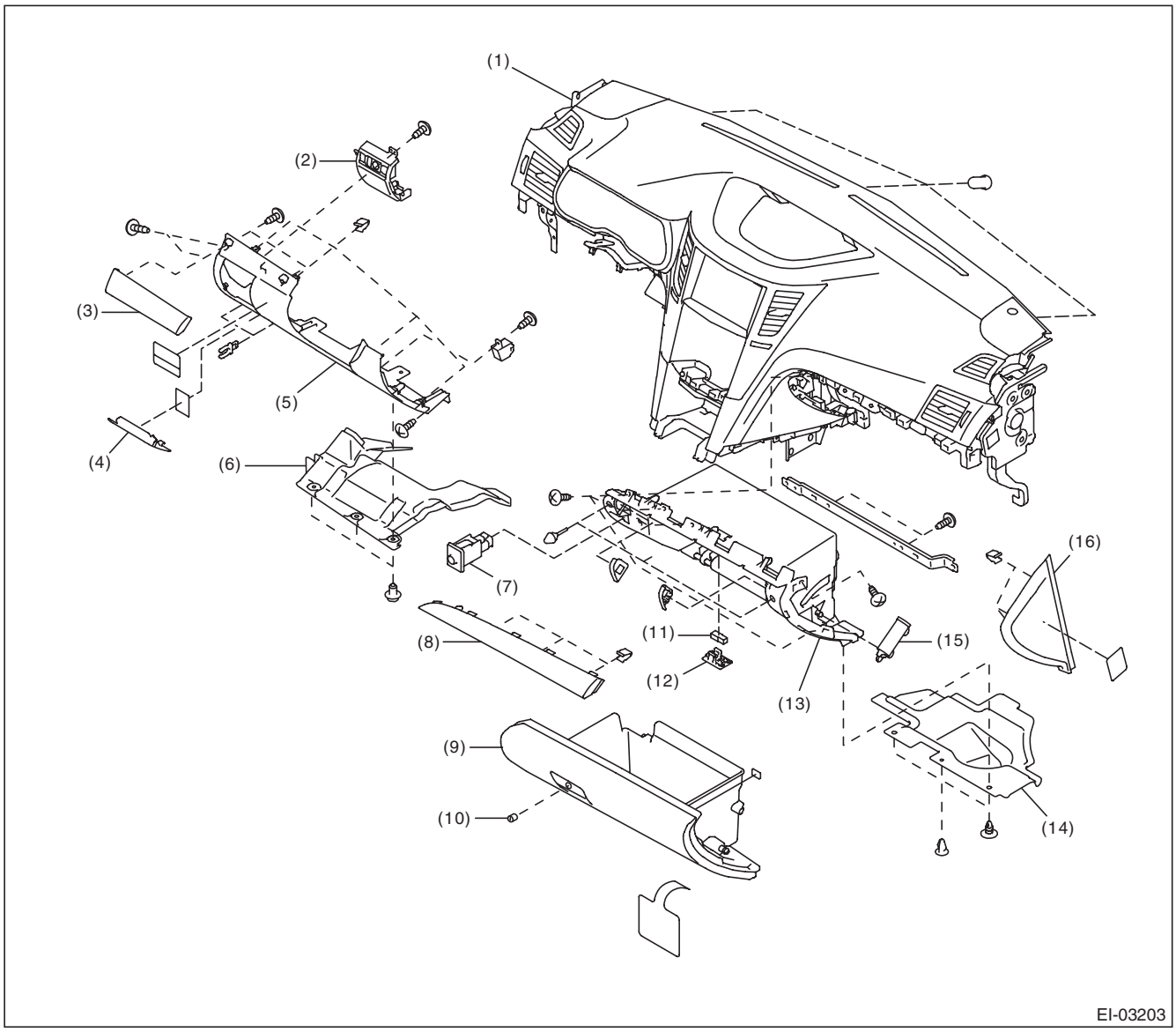

(1)	Instrument panel ASSY	(7)	Trunk opener cancel button	(12)	Illumination bracket
(2)	Switch panel ASSY	(8)	Ornament panel ASSY P	(13)	Glove box back panel
(3)	Ornament panel ASSY D OUT	(9)	Glove box lid ASSY	(14)	Glove box under cover
(4)	Fuse lid	(10)	Key cylinder - glove box	(15)	Glove box damper
(5)	Instrument panel lower cover	(11)	Illumination LED ASSY	(16)	Instrument panel side cover
(6)	Instrument panel lower cover under				

GETtheMANUALS.org

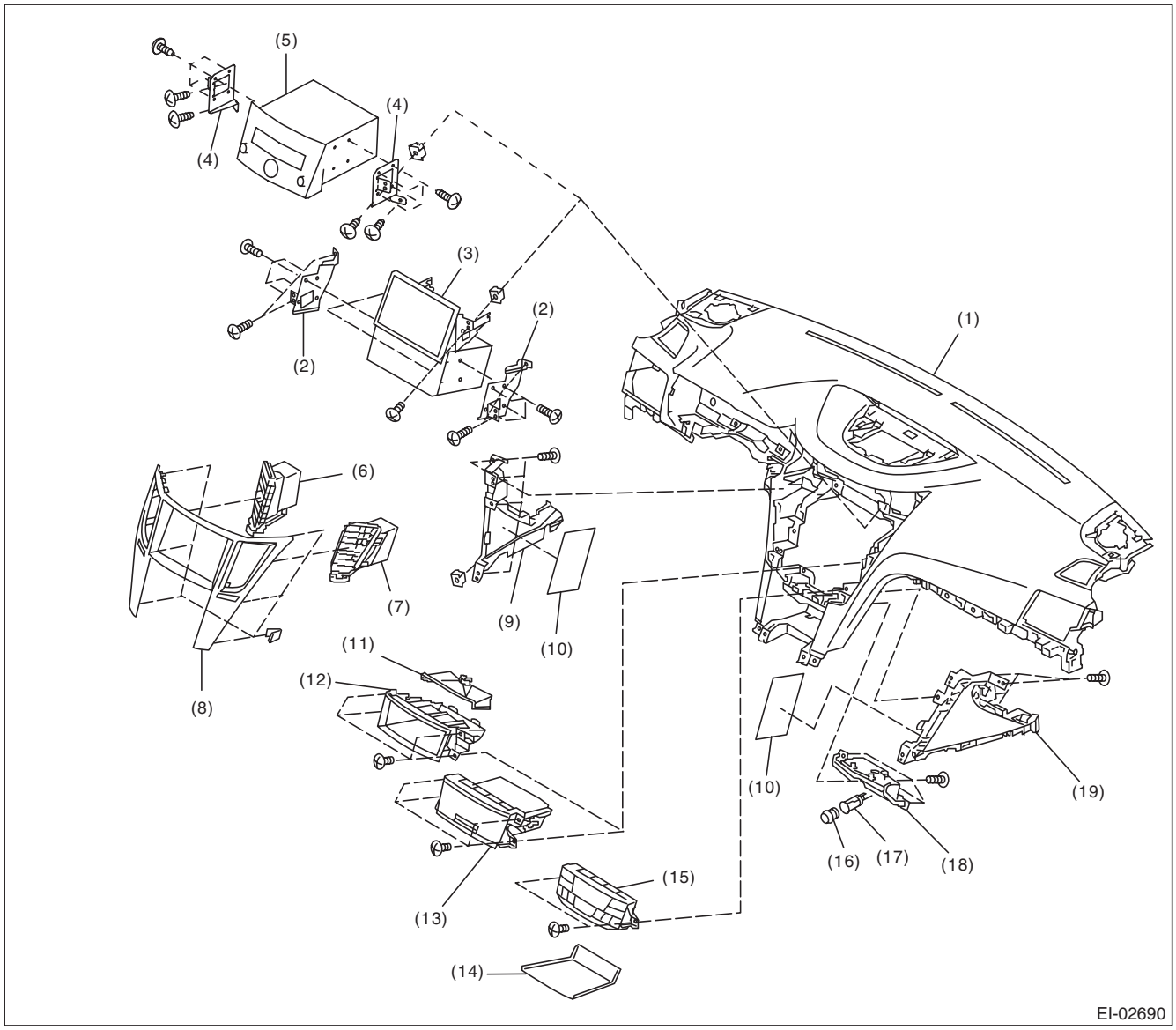

(1) Instrument panel pad and frame ASSY
(2) Navigation bracket
(3) Navigation ASSY
(4) Audio bracket
(5) Audio ASSY
(6) Center grille ASSY LH
(7) Center grille ASSY RH
(8) Center panel ASSY
(9) Center cover side RH
(10) Insulator
(11) Pocket center light
(12) Pocket ASSY (without lid)
(13) Pocket ASSY (with lid)
(14) Center pocket mat
(15) Control panel ASSY
(16) Plug
(17) Accessory socket ASSY
(18) Center pocket back panel
(19) Center cover side LH

GETtheMANUALS.org

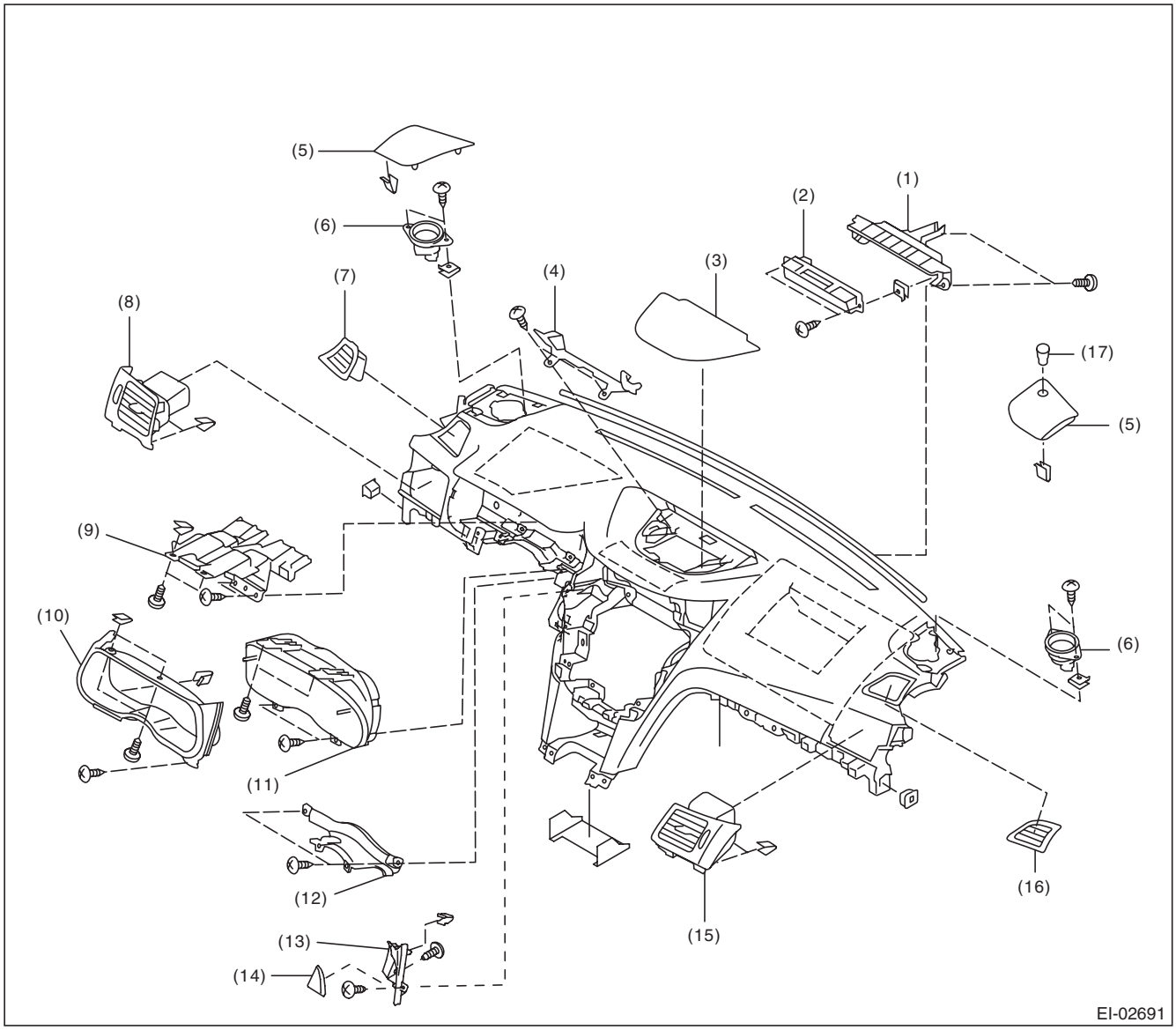

(1)	Multi display panel UPR	(7)	Defroster side grille RH	(13)	Starter switch cover
(2)	Multi display ASSY	(8)	Side vent grille ASSY RH	(14)	Ornament panel ASSY D INN
(3)	Center speaker cover	(9)	Meter reinforcement panel	(15)	Side vent grille ASSY LH
(4)	Multi display panel LWR	(10)	Meter visor ASSY	(16)	Defroster side grille LH
(5)	Side speaker cover	(11)	Combination meter ASSY	(17)	Sunload sensor
(6)	Front side speaker ASSY	(12)	Steering upper cover		

GETtheMANUALS.org

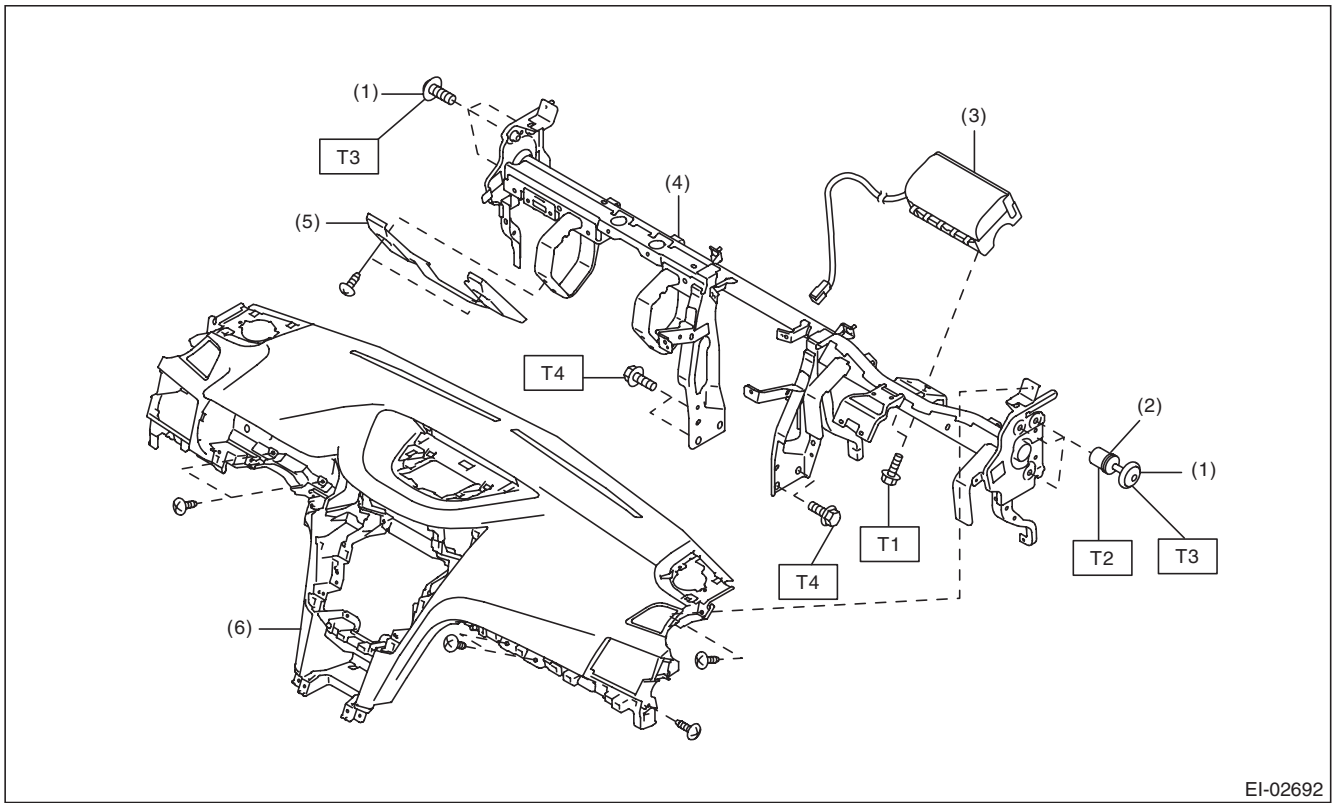

(1) TORX® bolt
(2) Adjuster bolt
(3) Passenger's airbag module ASSY
(4) Steering support beam ASSY
(5) Knee guard panel COMPL
(6) Instrument panel pad and frame ASSY

Tightening torque:N·m (kgf-m, ft-lb)
T1: 7.5 (0.76, 5.5)
T2: 3 (0.31, 2.2)
T3: 18 (1.84, 13.3)
T4: 25 (2.55, 18.4)

GETtheMANUALS.org

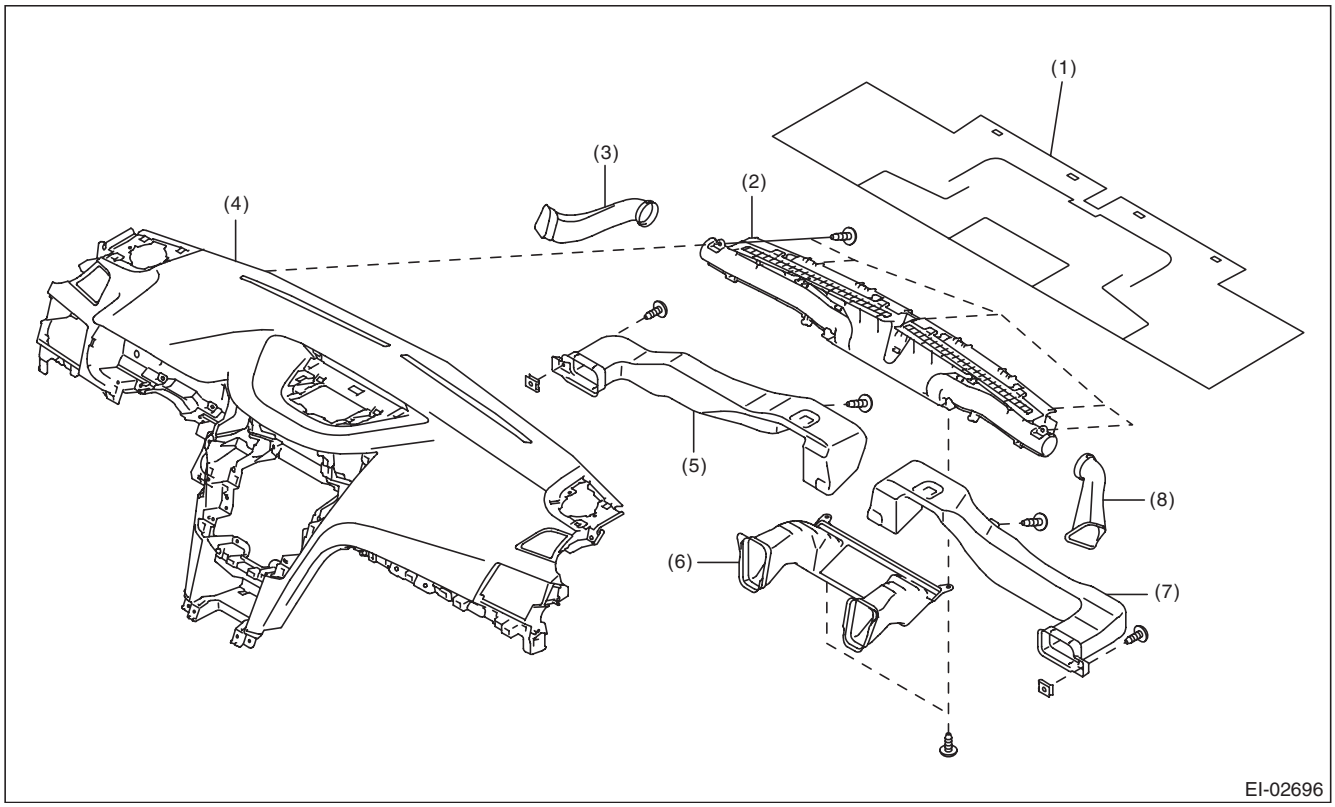

(1)	Insulator	(4)	Instrument panel pad and frame ASSY	(6)	Center vent duct
(2)	Front defroster nozzle ASSY			(7)	Side vent duct RH
(3)	Side defroster duct RH	(5)	Side vent duct LH	(8)	Side defroster duct LH

GETtheMANUALS.org

17.INNER TRIM

- Sedan model

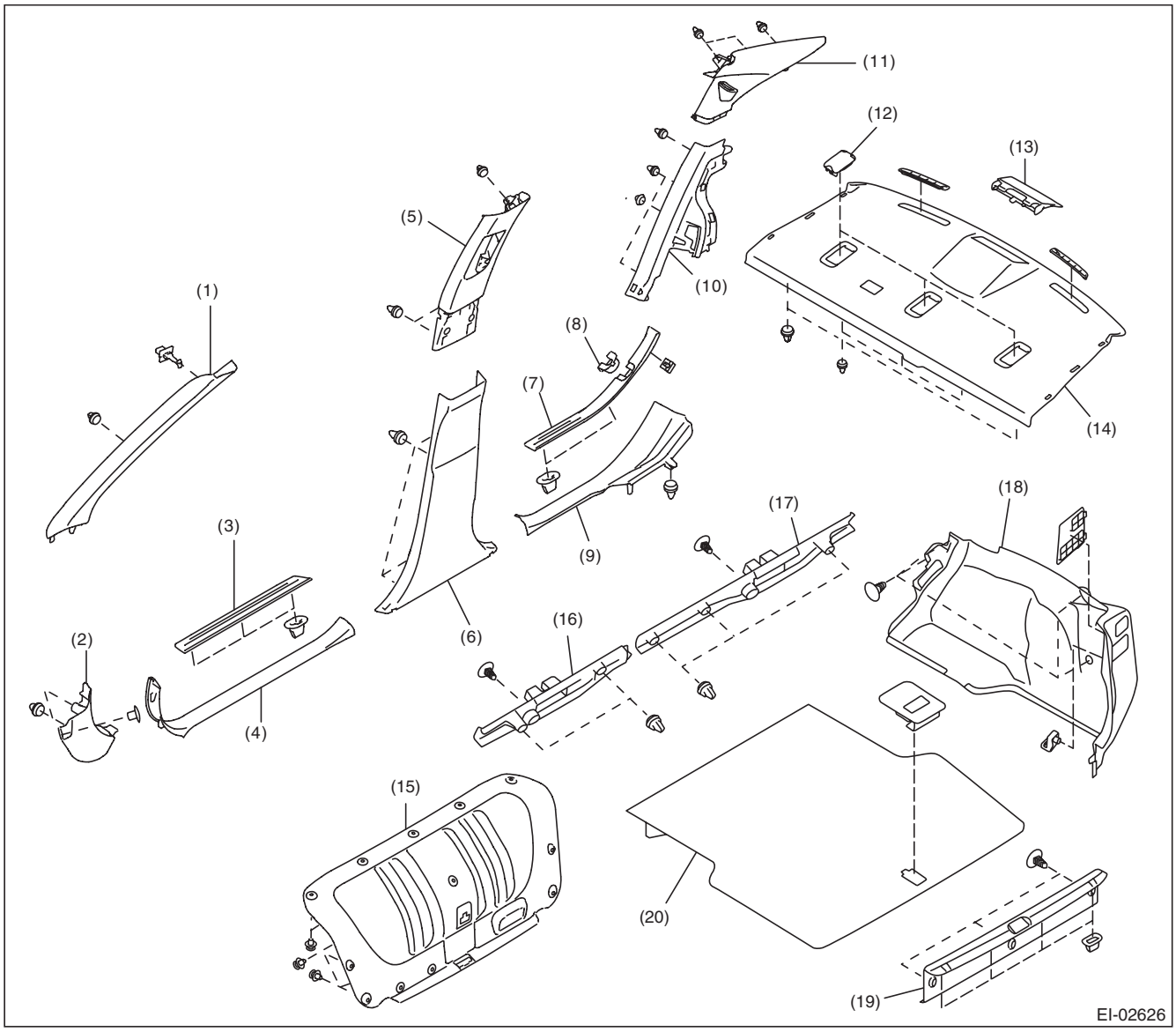

(1)	Front pillar trim	(8)	Catcher cover	(15)	Trunk lid trim
(2)	Side sill cover front	(9)	Side sill cover-rear INN	(16)	Trunk trim panel ASSY-front LH
(3)	Side sill cover-front OUT	(10)	Rear quarter trim LWR	(17)	Trunk trim panel ASSY-front RH
(4)	Side sill cover-front INN	(11)	Rear quarter trim UPR	(18)	Trunk trim panel ASSY-side
(5)	Center pillar trim UPR	(12)	Child anchor cap	(19)	Trunk trim panel ASSY-rear
(6)	Center pillar trim LWR	(13)	High-mounted stop light ASSY	(20)	Trunk mat
(7)	Side sill cover-rear OUT	(14)	Rear shelf panel		

GETtheMANUALS.org

- OUTBACK model

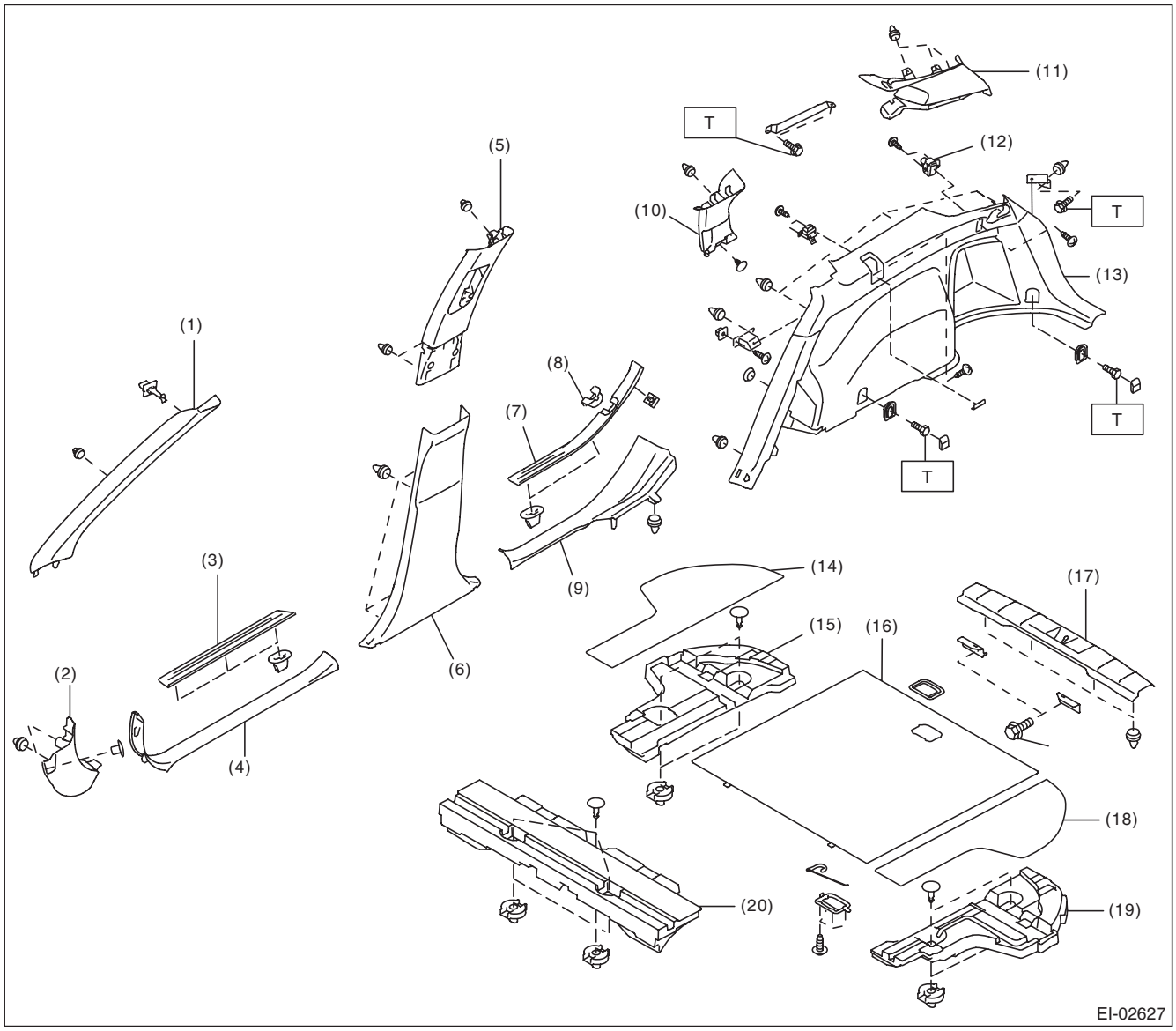

(1) Front pillar trim
(2) Side sill cover front
(3) Side sill cover-front OUT
(4) Side sill cover-front INN
(5) Center pillar trim UPR
(6) Center pillar trim LWR
(7) Side sill cover-rear OUT
(8) Catcher cover
(9) Side sill cover-rear INN
(10) Rear quarter trim UPR-front
(11) Rear quarter trim UPR-rear
(12) Hook
(13) Rear quarter trim LWR
(14) Rear floor mat RH
(15) Rear floor spacer RH
(16) Rear floor mat CTR
(17) Rear floor edge cover
(18) Rear floor mat LH
(19) Rear floor spacer LH
(20) Rear floor spacer CTR-front

Tightening torque:N·m (kgf-m, ft-lb)
T: 7.5 (0.76, 5.5)

GETtheMANUALS.org

18.REAR GATE TRIM

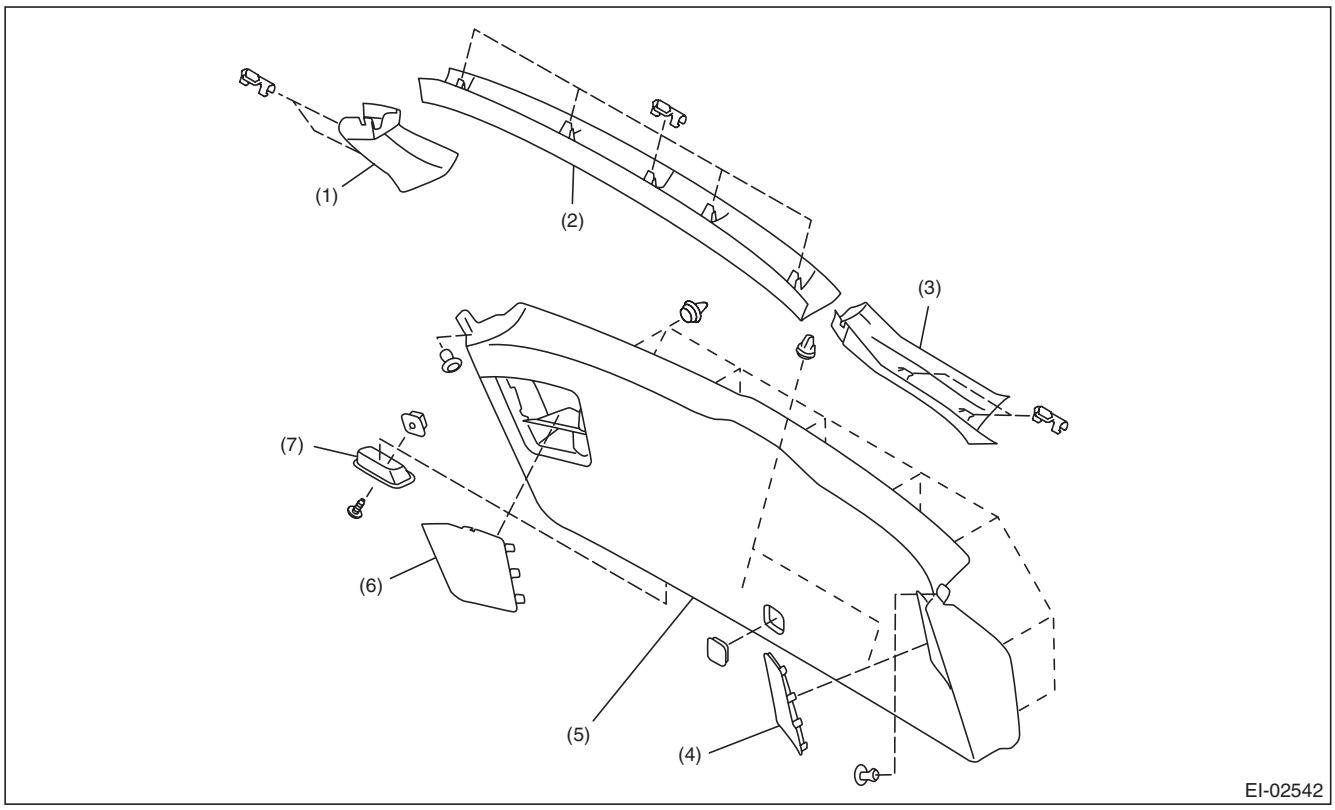

(1)	Rear gate pillar trim RH	(4)	Rear gate lower cap LH	(7)	Rear gate handle
(2)	Rear gate upper trim	(5)	Rear gate lower trim		
(3)	Rear gate pillar trim LH	(6)	Rear gate lower cap RH		

GETtheMANUALS.org

19.ROOF TRIM

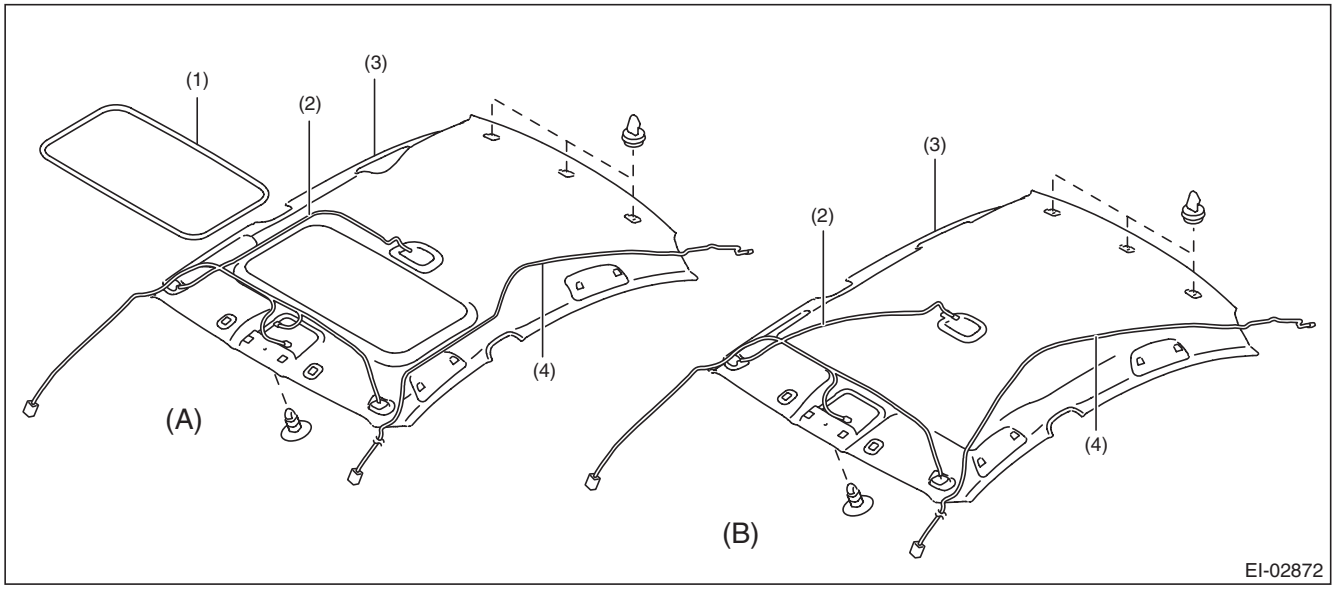

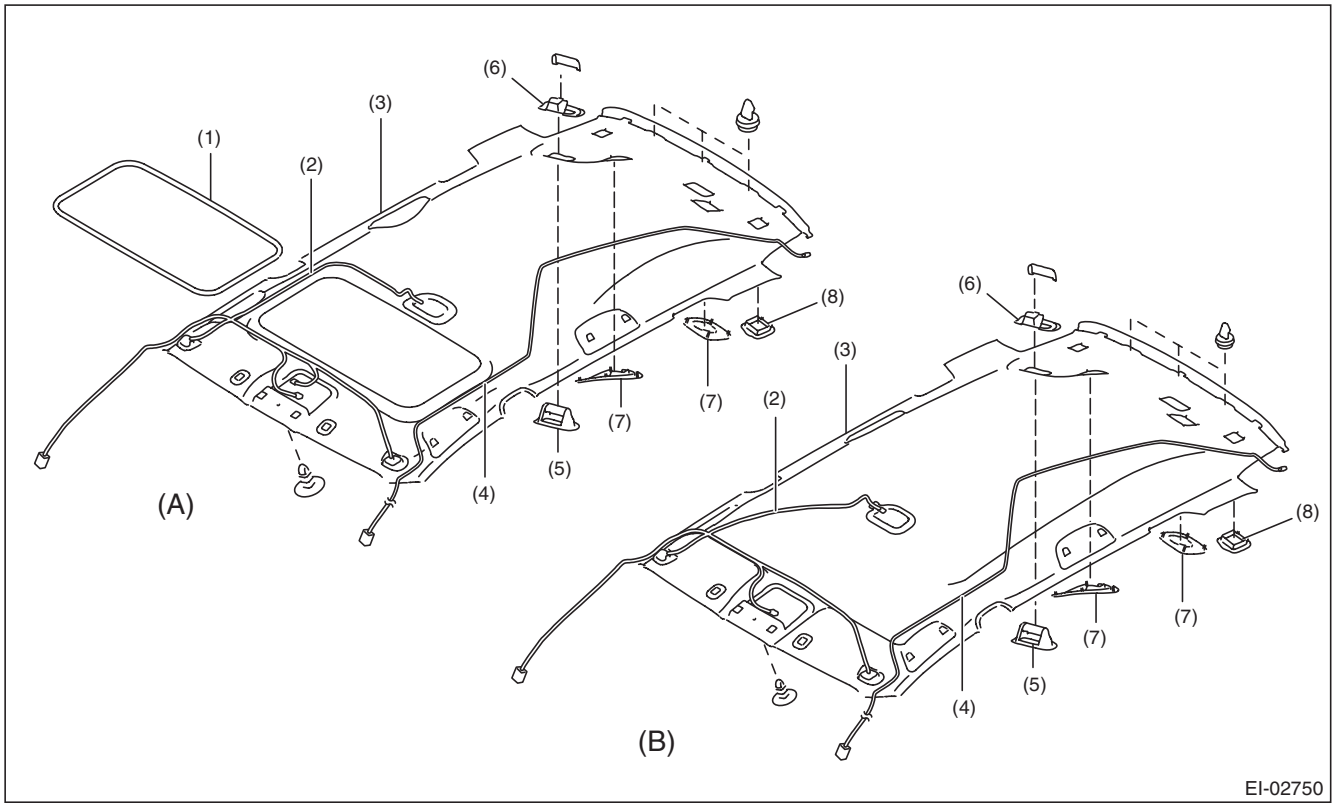

(A)	Model with sunroof	(B)	Normal roof model		
(1)	Sun roof garnish	(4)	Feeder cord ASSY	(7)	Speaker cover
(2)	Roof cord ASSY	(5)	Seat belt holder cover	(8)	Child anchor cover
(3)	Roof trim	(6)	Seat belt holder base		

GETtheMANUALS.org

20.ROOM INNER PARTS

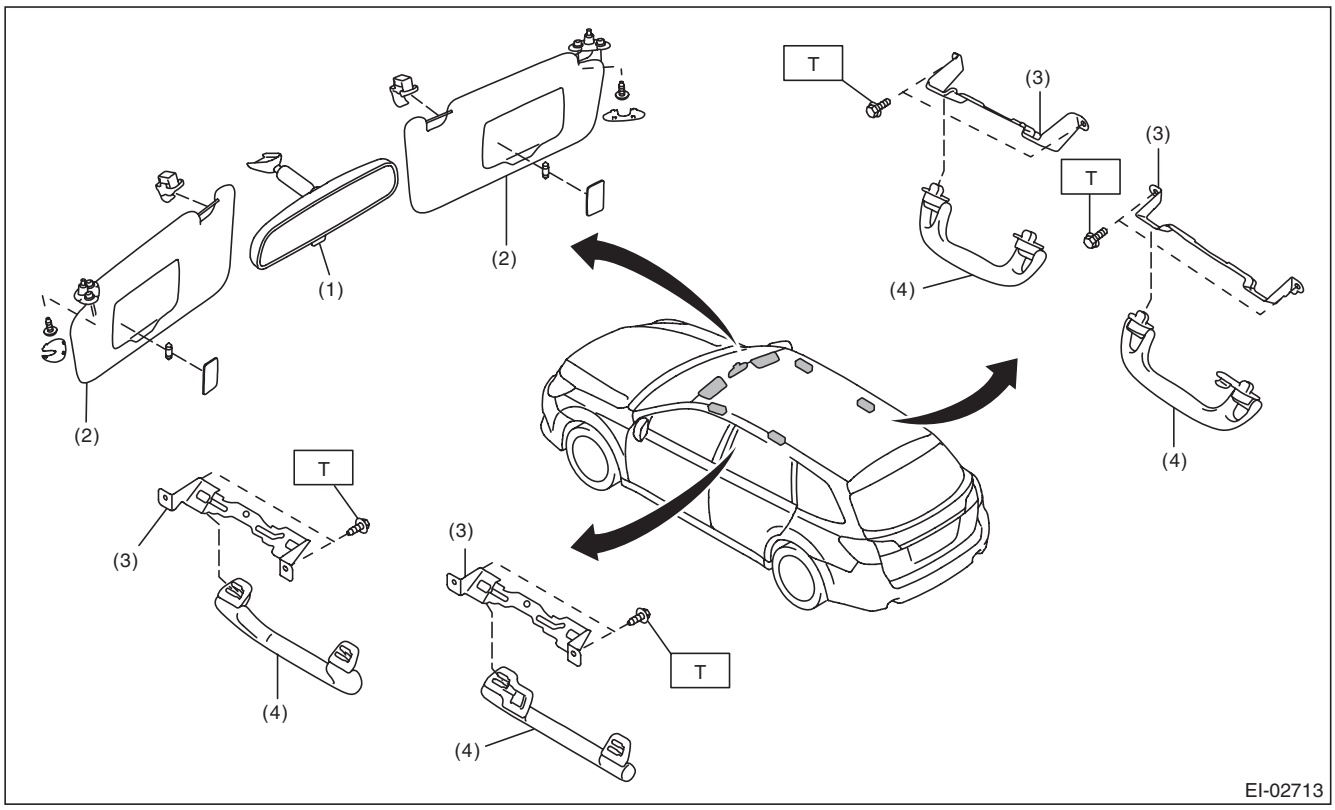

(1)	Room mirror	(3)	Assist grip bracket	***Tightening torque:N·m (kgf-m, ft-lb)***
(2)	Sun visor	(4)	Assist grip	***T: 7.5 (0.76, 5.5)***

GETtheMANUALS.org

21.HEAT SHIELD COVER

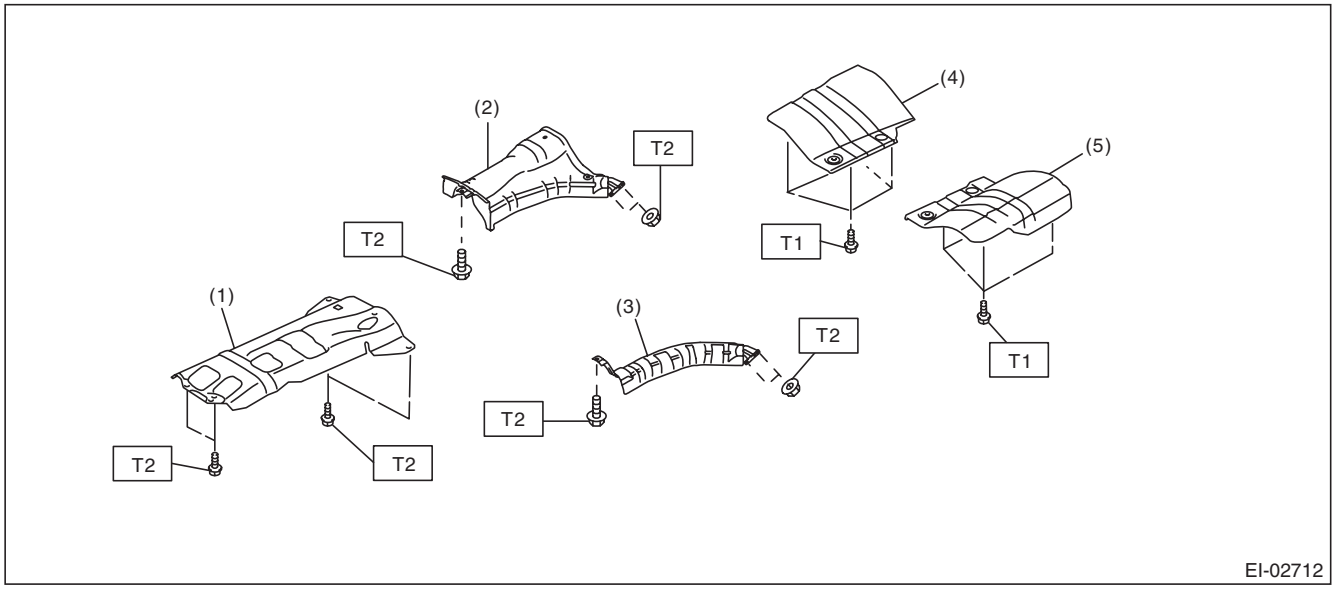

(1)	Front heat shield cover	(4)	Rear heat shield cover RH (only DOHC model)	***Tightening torque:N·m (kgf-m, ft-lb)***
(2)	Center heat shield cover (DOHC model)	(5)	Rear heat shield cover LH	***T1: 10 (1.02, 7.4)***
(3)	Center heat shield cover (SOHC model)			***T2: 18 (1.84, 13.3)***

B: PREPARATION TOOL

TOOL NAME	REMARKS
Clip remover	Used for removing trim. • KTC AP201-10A • KTC AP201-N • KTC AP203-10A • KTC AP20L-10B or equivalent
Clip clamp pliers	Used for removal of various clips and clamps. • KTC CCP-190 or equivalent

GETtheMANUALS.org

2. Front Grille

A: REMOVAL

1) Remove the front bumper face assembly.
   (1) Remove the clips, turn over the front mud guard, and disconnect the fog light connector. (Model with fog light)

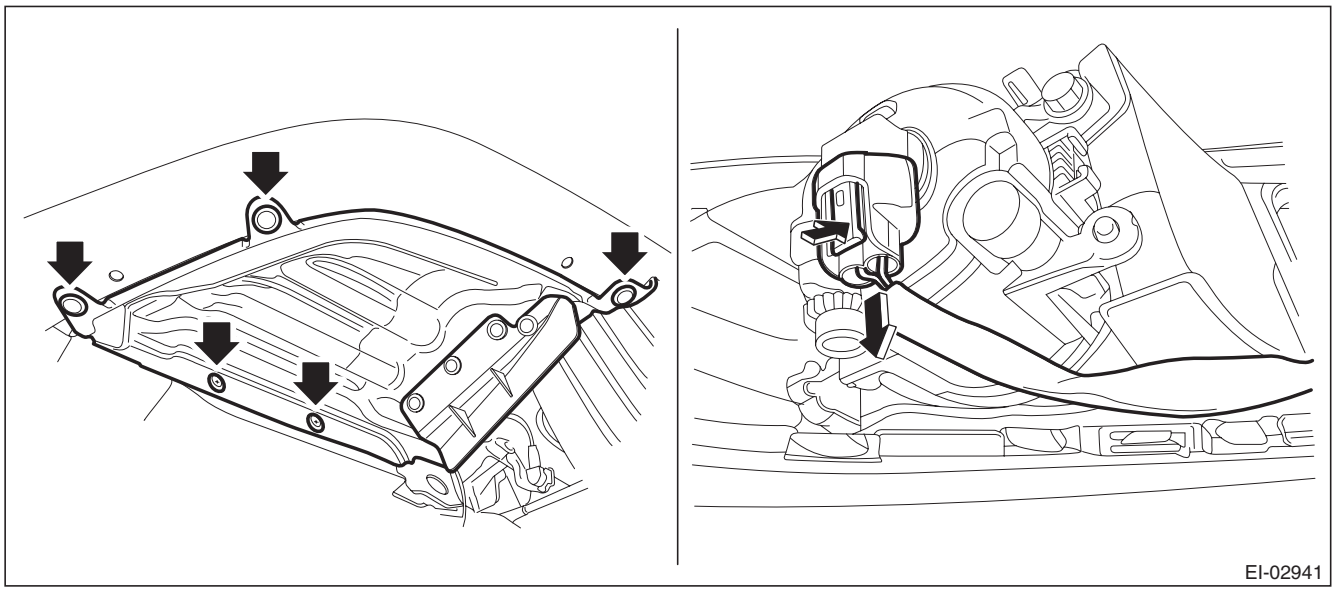

   (2) Remove the clips at the upper side of the bumper.
   (3) Remove the clips from the fender.

GETtheMANUALS.org

(4) Remove the clips at the lower side of bumper.

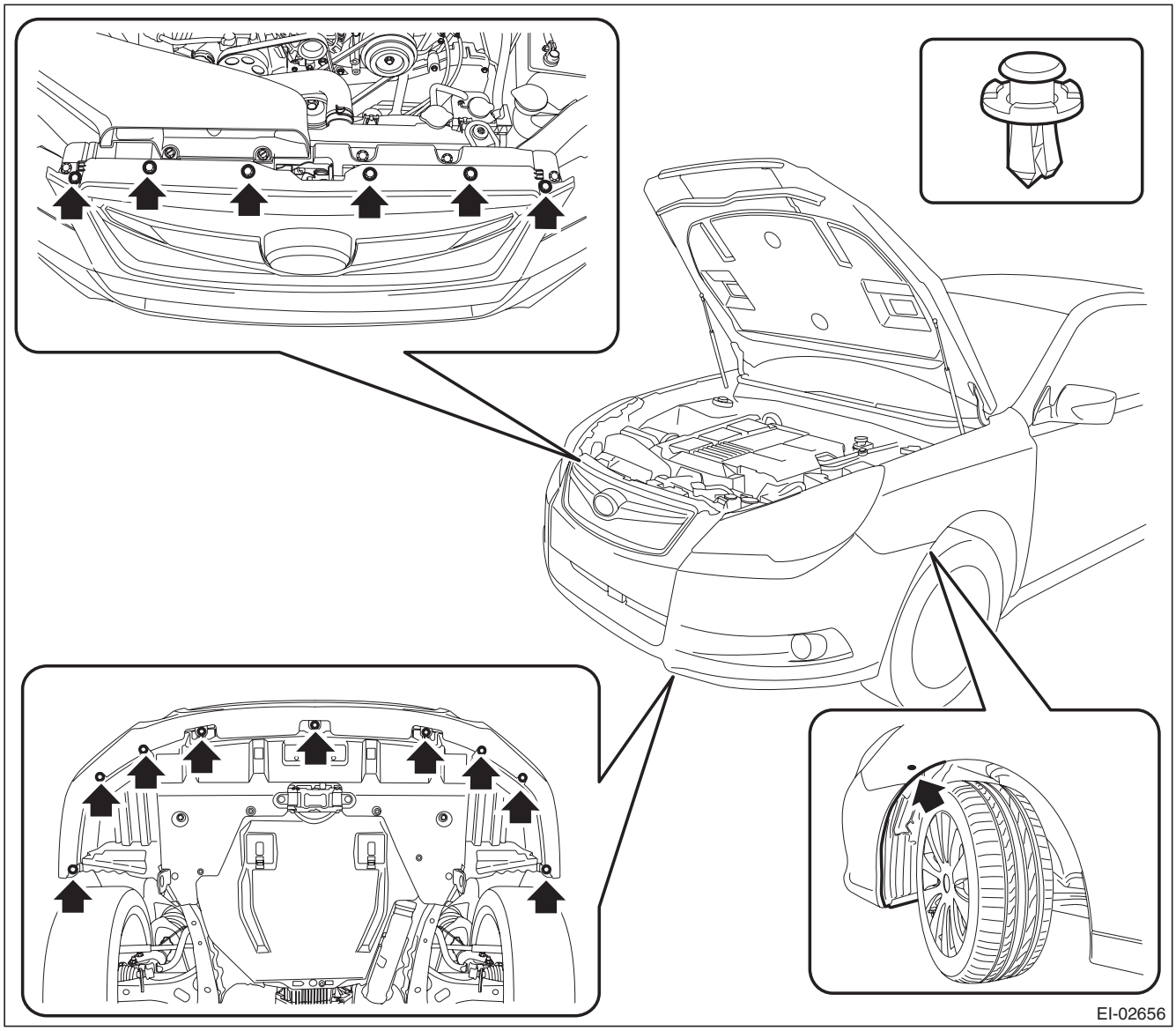

GETtheMANUALS.org

(5) Detach the flange section on the bumper face side from the bracket side front UPR.

CAUTION:
Do not pull forcibly. It may damage the flange sections of the bumper face.

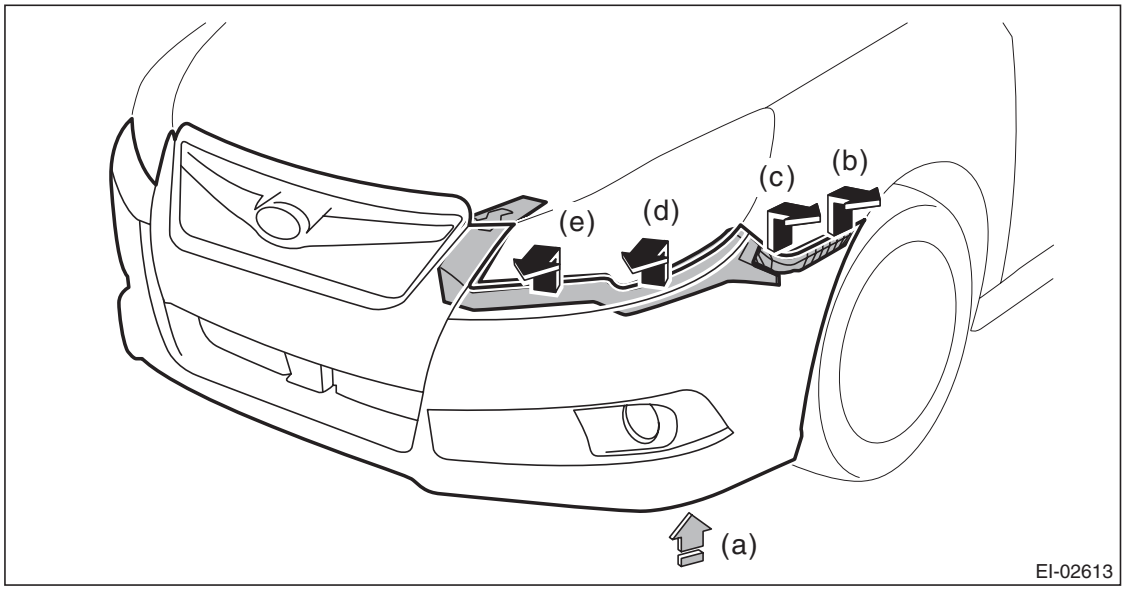

NOTE:
Pushing up the lower side (a) of the fog light, remove from (b) to (e).
Detach the opposite side in the same manner.

2) Remove the front grille assembly.
(1) Remove the screws from the back side of bumper face.
(2) Release the claws, and remove the front grille assembly.

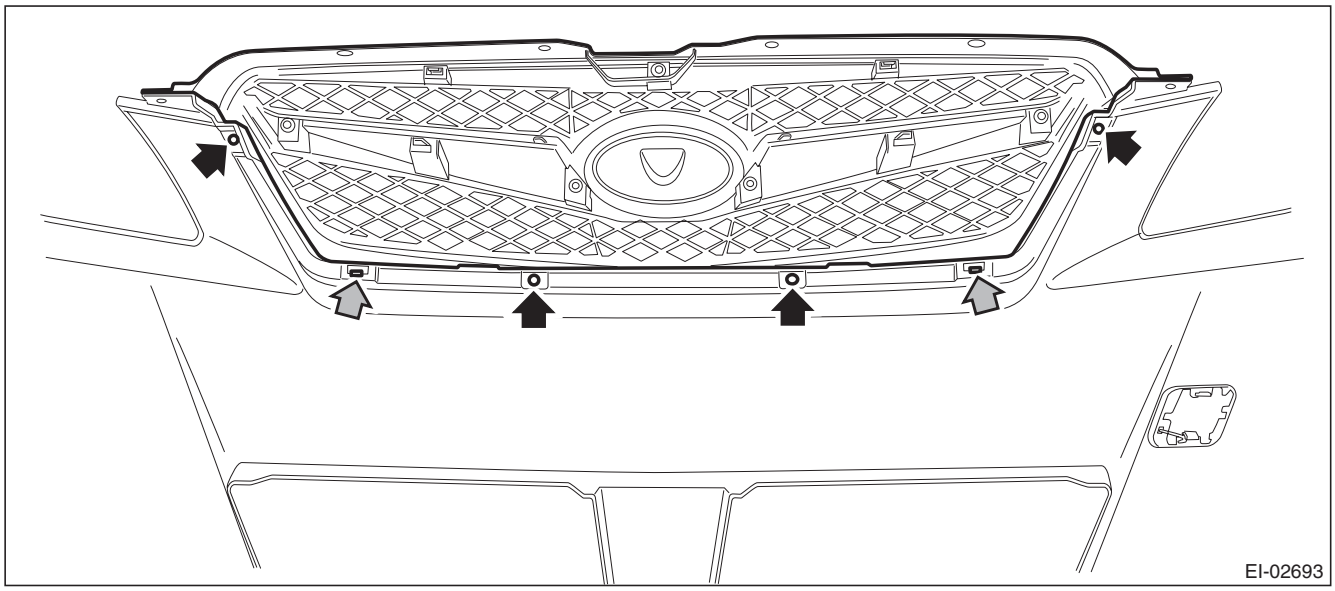

GETtheMANUALS.org

B: INSTALLATION

CAUTION:
Install the bumper face so that the under cover front end (b) comes inside the front bumper face (a).

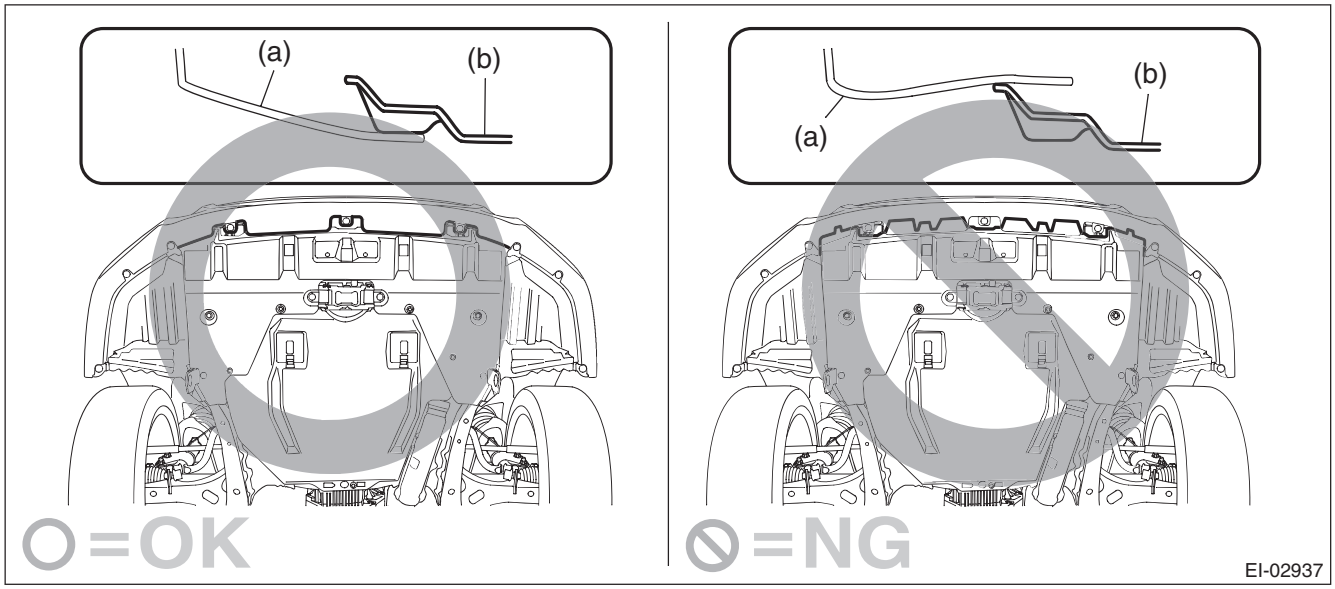

1) Install each part in the reverse order of removal.
2) Adjust the fog light beam. (Model with fog light) <Ref. to LI-41, FOG LIGHT AIMING, ADJUSTMENT, Front Fog Light Assembly.>

GETtheMANUALS.org

3. Front Hood Grille

A: REMOVAL

1) Open the front hood.
2) Remove the hood duct assembly.
   (1) Remove the screws.
   (2) Remove the clips and remove the hood duct assembly.

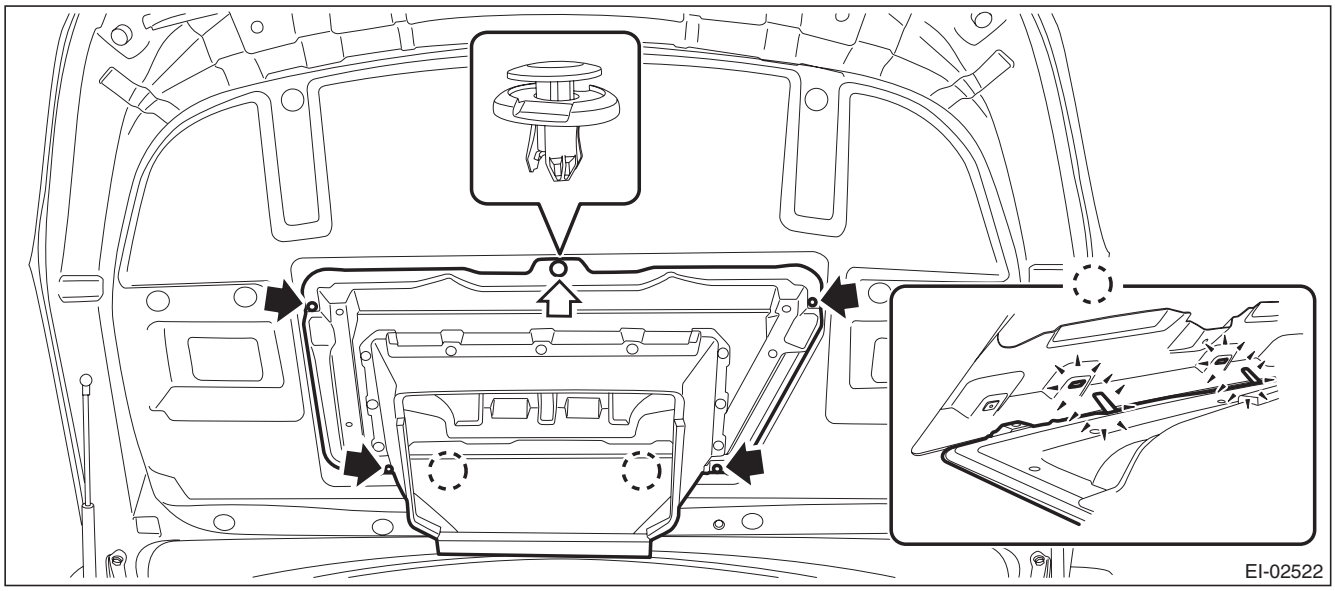

3) Release the clips to remove the front hood insulator.

CAUTION:
Do not reuse any clips damaged during removal. The damaged clip cannot fix the insulator securely. Therefore, always replace with a new part.

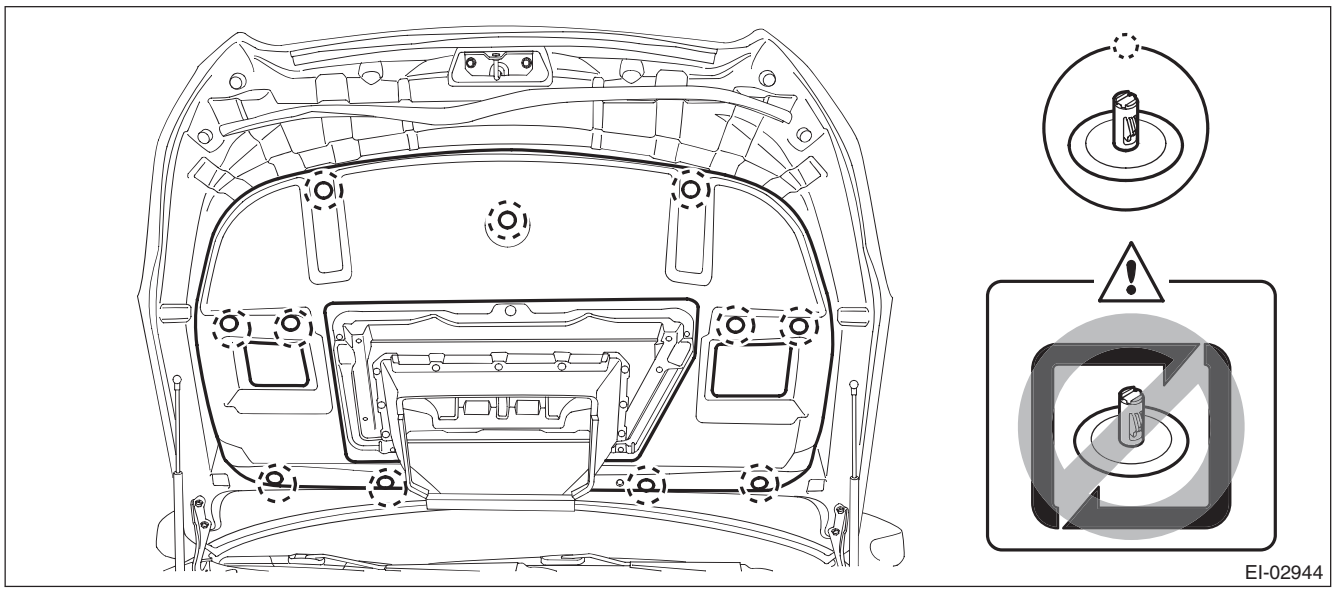

GETtheMANUALS.org

4) Remove the front hood grille.
   (1) Remove the nuts (A).
   (2) Remove clip (B), and remove the front hood grille.

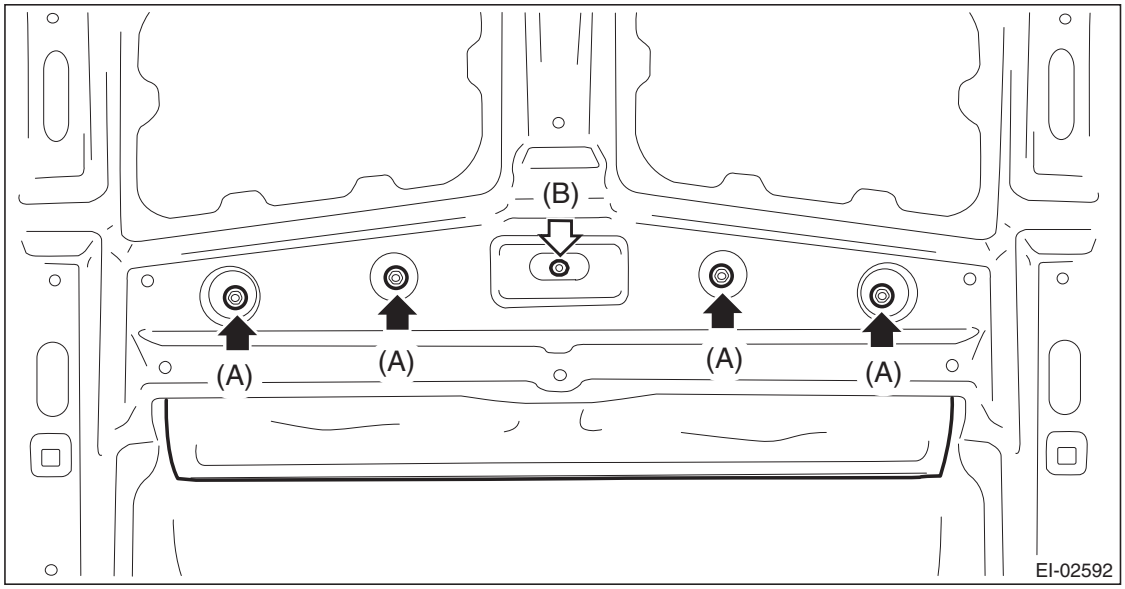

B: INSTALLATION

Install each part in the reverse order of removal.

Tightening torque:
Refer to "COMPONENT" of "General Description". <Ref. to EI-4, FRONT HOOD GRILLE, COMPONENT, General Description.>

NOTE:
Make sure that the front hood duct claws are inserted in the holes on the front hood.

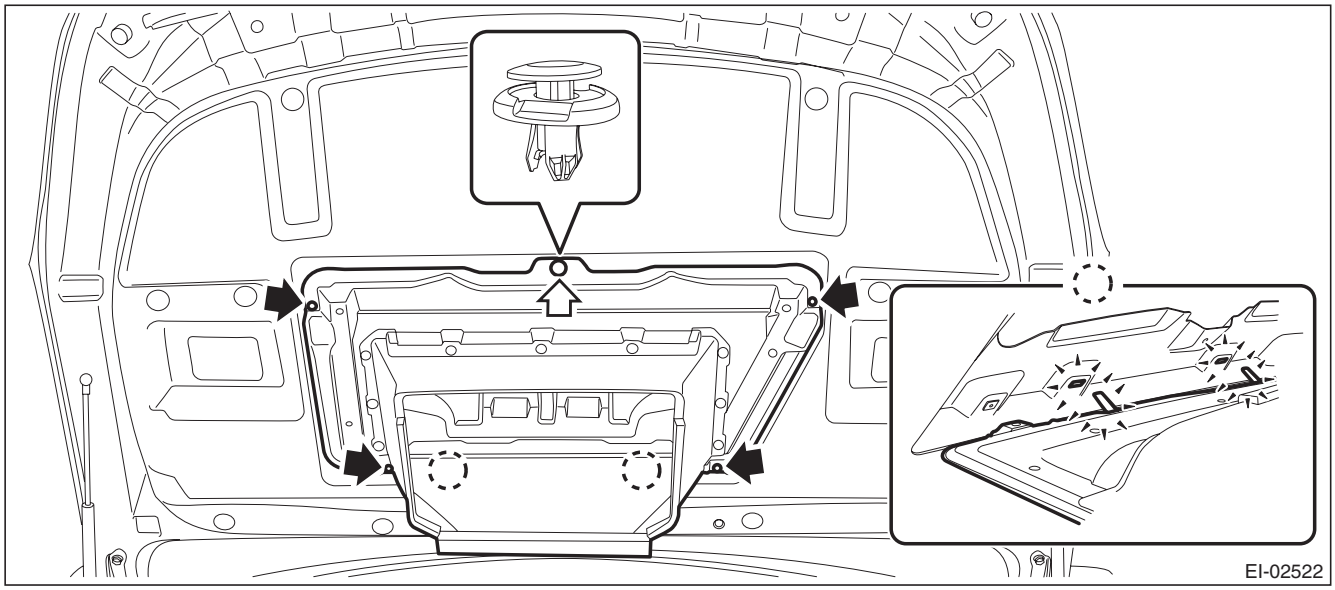

GETtheMANUALS.org

4. Cowl Panel

A: REMOVAL

1) Open the front hood.
2) Remove the front wiper arm assembly.

CAUTION:
Follow the steps below when standing up the wiper arm. Not following the steps may cause contacting of wiper arms and damages of wiper arms.
1. Stand up the driver's side wiper arm.
2. Stand up the passenger's side wiper arm.
Fold the wiper arms in the reverse order.

(1) Remove the cap.
(2) Remove the nuts, and remove the front wiper arm assembly.

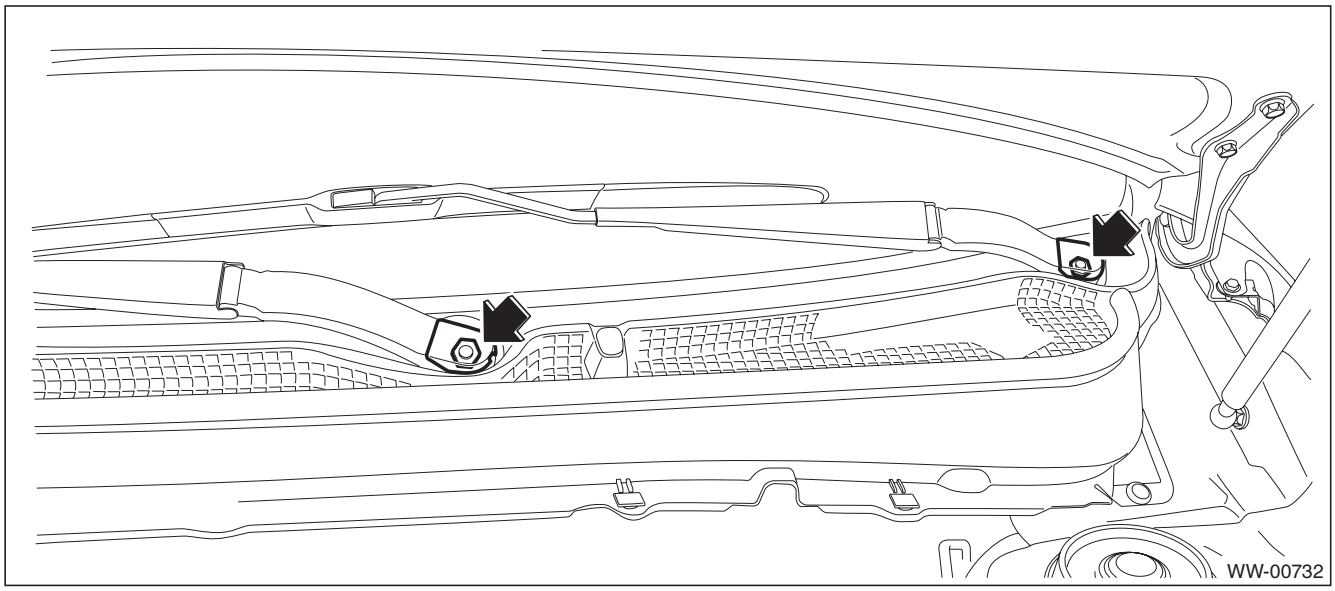

GETtheMANUALS.org

3) Remove the cowl panel side.
   (1) Detach the pins of the cowl panel side.
   (2) Remove the cowl panel side from inside the fender panel by pulling it.

CAUTION:
Applying excessive pulling force may damage the cowl panel side. If it is difficult to remove, use a plastic remover or equivalent tool.

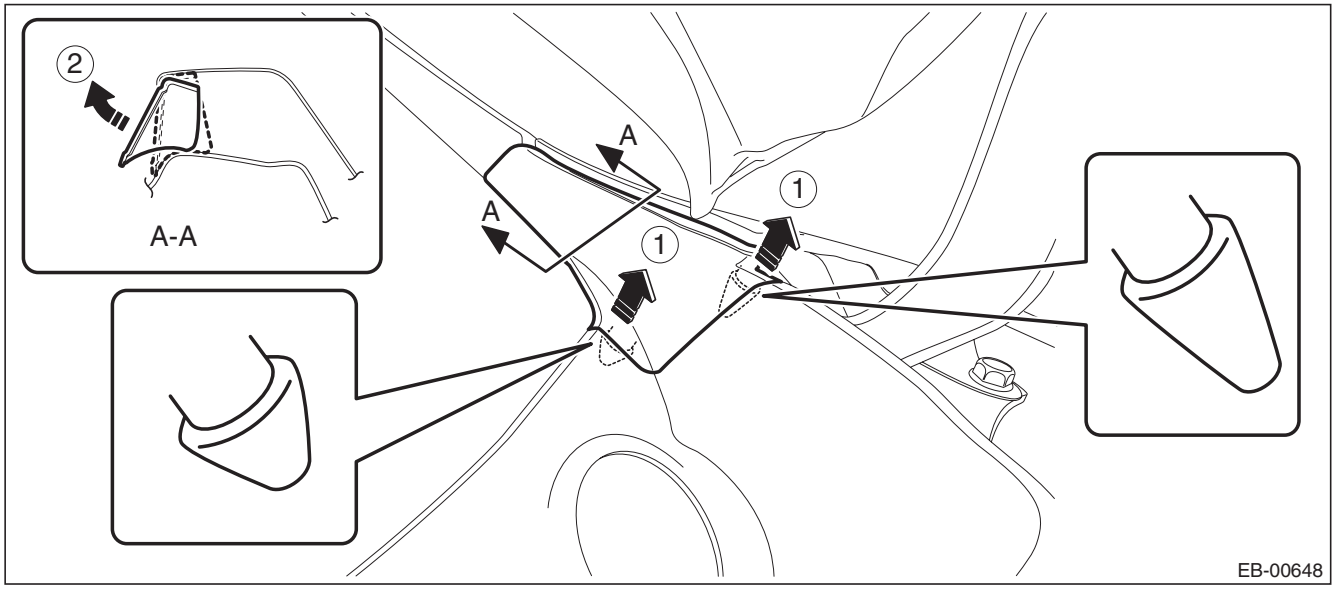

4) Remove the cowl panel.
   (1) Release the clip (A).
   (2) Push the claw of the clip (B) from both sides to remove it.

CAUTION:
When removing the clip (B), push the claw of the clip from both sides.
The clip may be damaged if forcibly pulled.

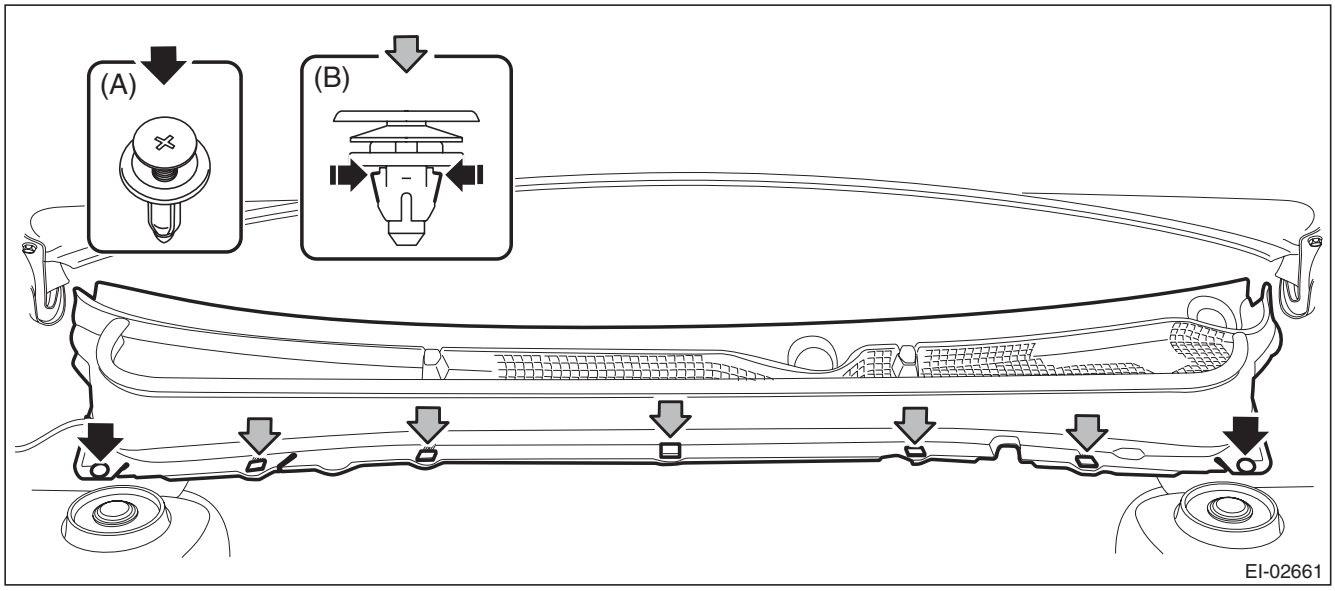

GETtheMANUALS.org

(3) Disconnect the washer hose.

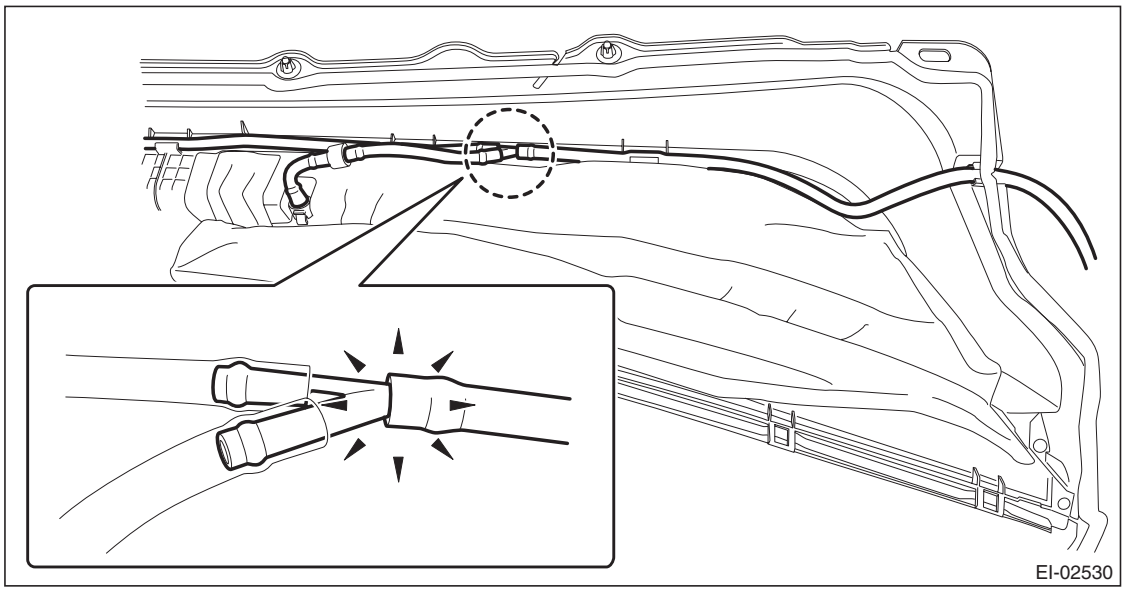

B: INSTALLATION

Install each part in the reverse order of removal.

NOTE:

- Attach the claws of cowl panel to the bottom end of windshield.

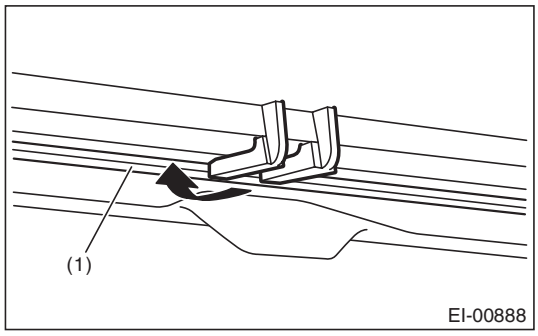

(1) Cross section of windshield

- If the washer nozzles have been removed from the cowl panel, adjust the washer spray positions. <Ref. to WW-34, ADJUSTMENT, Front Washer Nozzle.>

Tightening torque:

Front wiper arm: <Ref. to WW-3, FRONT WIPER, COMPONENT, General Description.>

GETtheMANUALS.org

5. Front Under Cover

A: REMOVAL

1) Lift up the vehicle.
2) Remove the bolts and clips, and remove the front under cover.

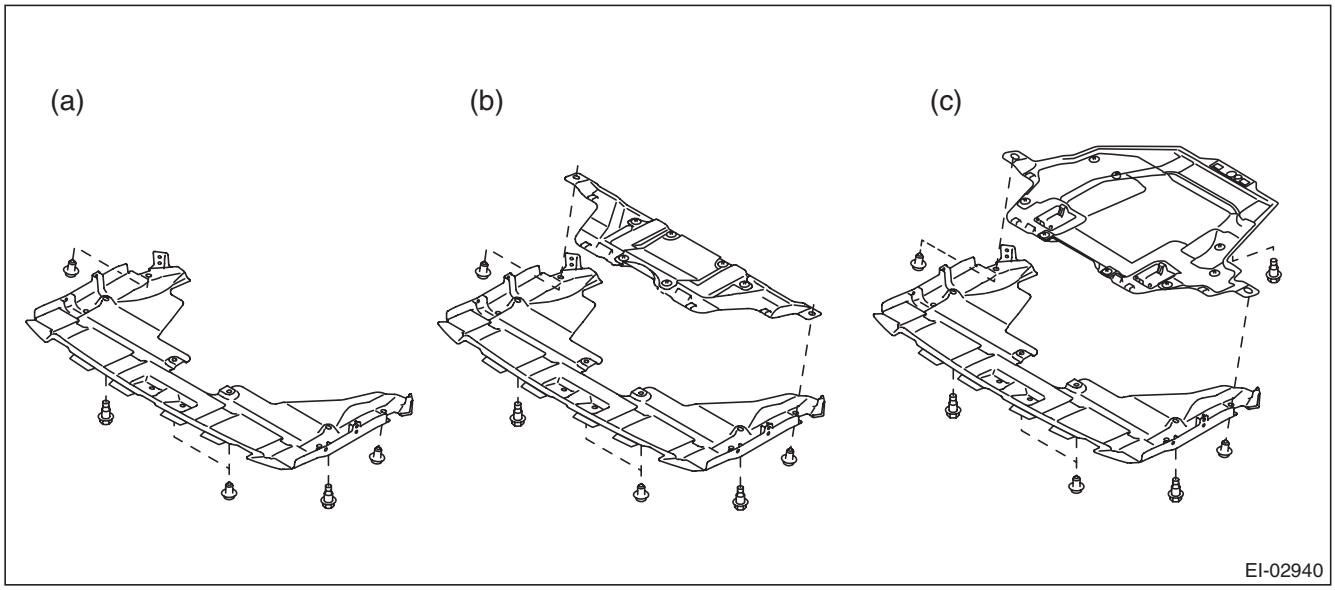

(a) Small type (b) Medium type (c) Large type

B: INSTALLATION

CAUTION:
Install the under cover so that the under cover front end (b) comes inside of the front bumper face (a).

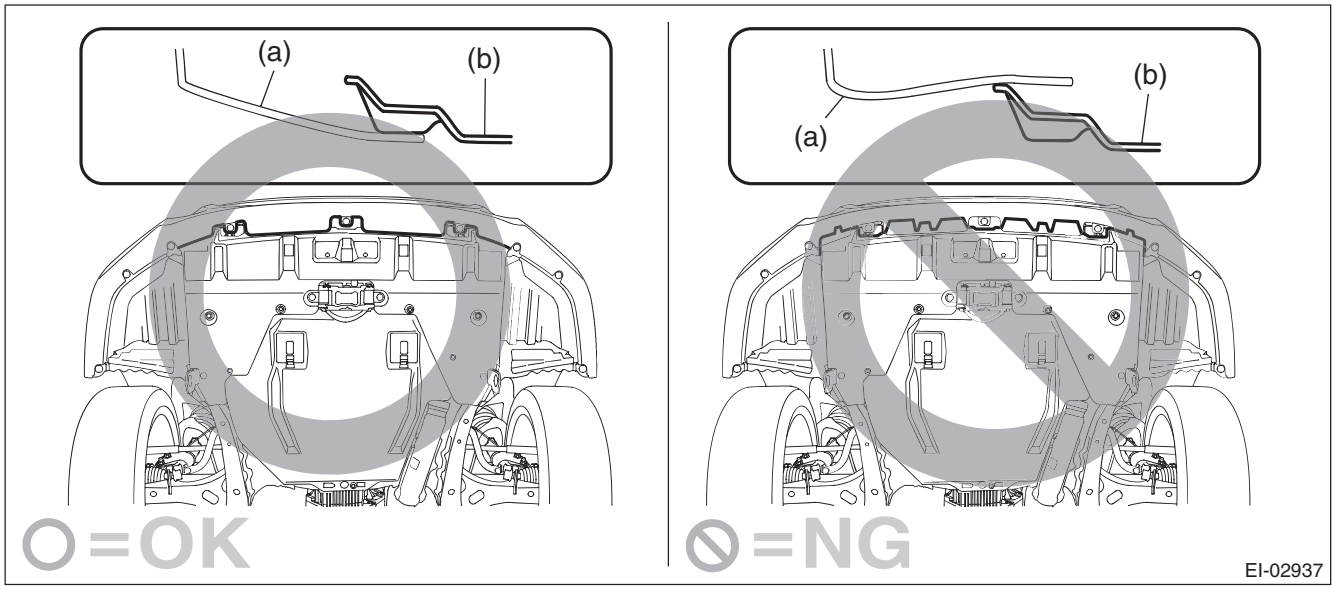

Install each part in the reverse order of removal.

Tightening torque:
17.5 N·m (1.78 kgf-m, 12.9 ft-lb)

GETtheMANUALS.org

6. Floor Under Protector

A: REMOVAL

1) Lift up the vehicle.

NOTE:
A plate type lift cannot be used.
2) Remove the bolts and clips, and remove the front under protector.

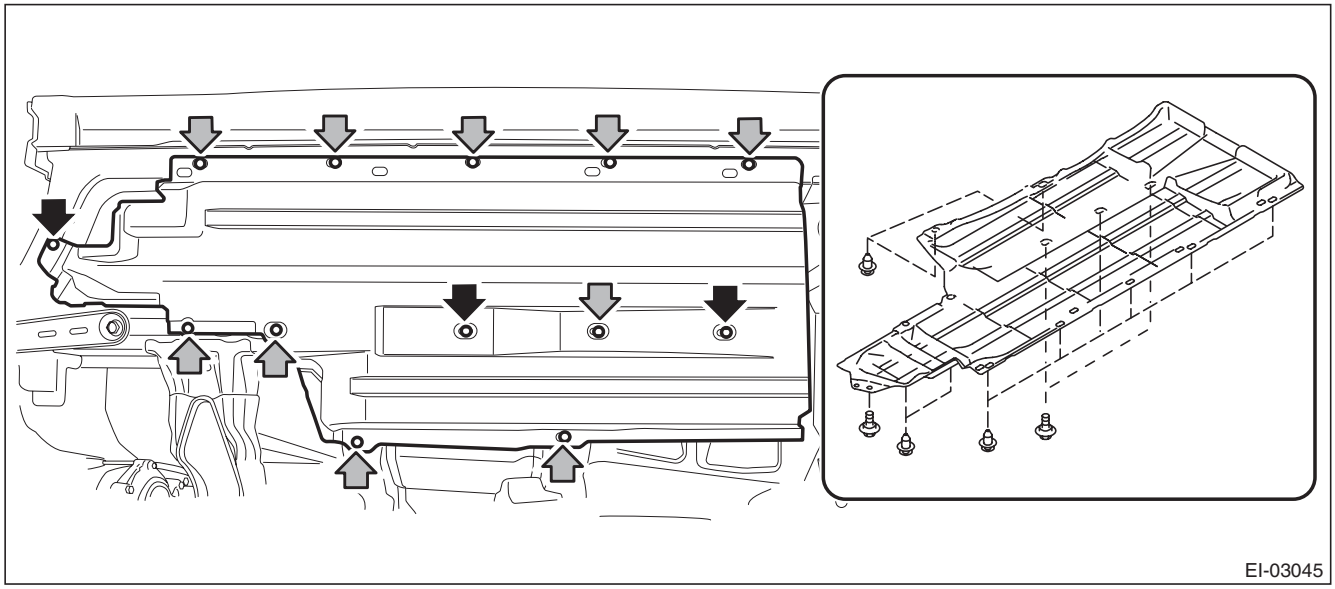

B: INSTALLATION

Install each part in the reverse order of removal.

Tightening torque:
Refer to "COMPONENT" of "General Description". <Ref. to EI-2, FLOOR UNDER PROTECTOR, COMPONENT, General Description.>

GETtheMANUALS.org

7. Fuel Tank Protector

A: REMOVAL

1) Lift up the vehicle.
2) Remove the fuel tank protector.
   (1) Remove the bolt and nuts and remove the fuel tank protector.
   (2) Remove the clip.

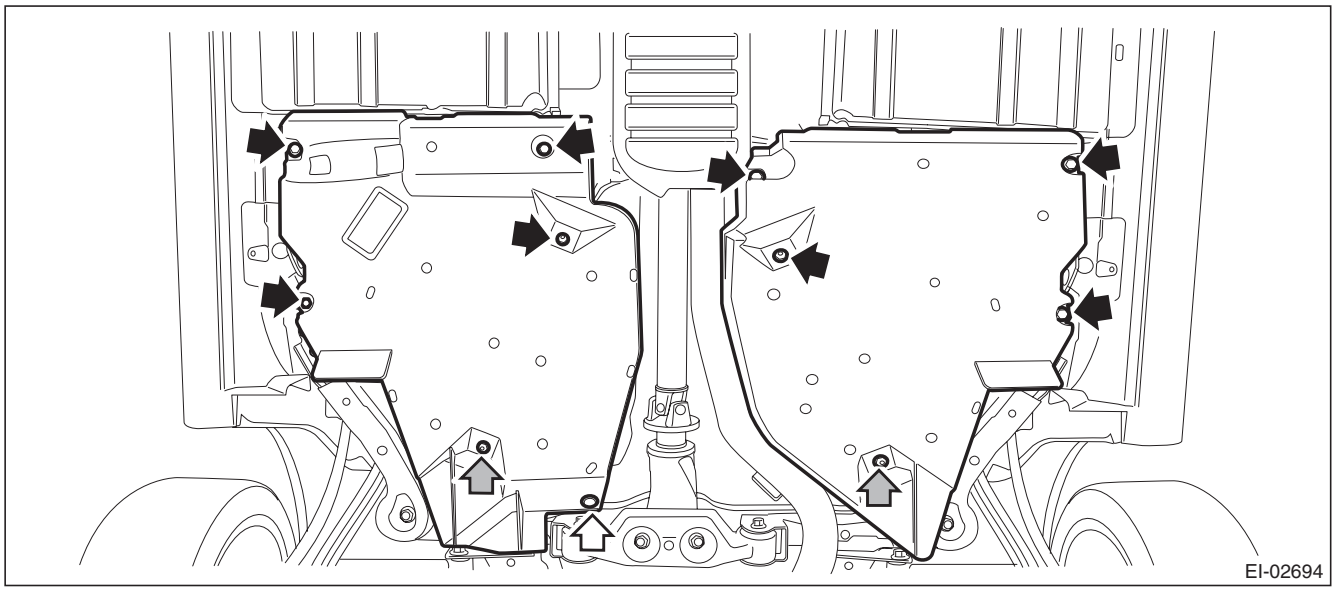

B: INSTALLATION

CAUTION:
Do not reuse the nut (self locking nut). Always replace with a new part.
Install each part in the reverse order of removal.

Tightening torque:
Refer to "COMPONENT" of "General Description". <Ref. to EI-3, FUEL TANK PROTECTOR, COMPONENT, General Description.>

GETtheMANUALS.org

8. Mud Guard

A: REMOVAL

1) Lift up the vehicle.
2) Remove the wheels.
3) Remove the clips, then remove the mud guard.

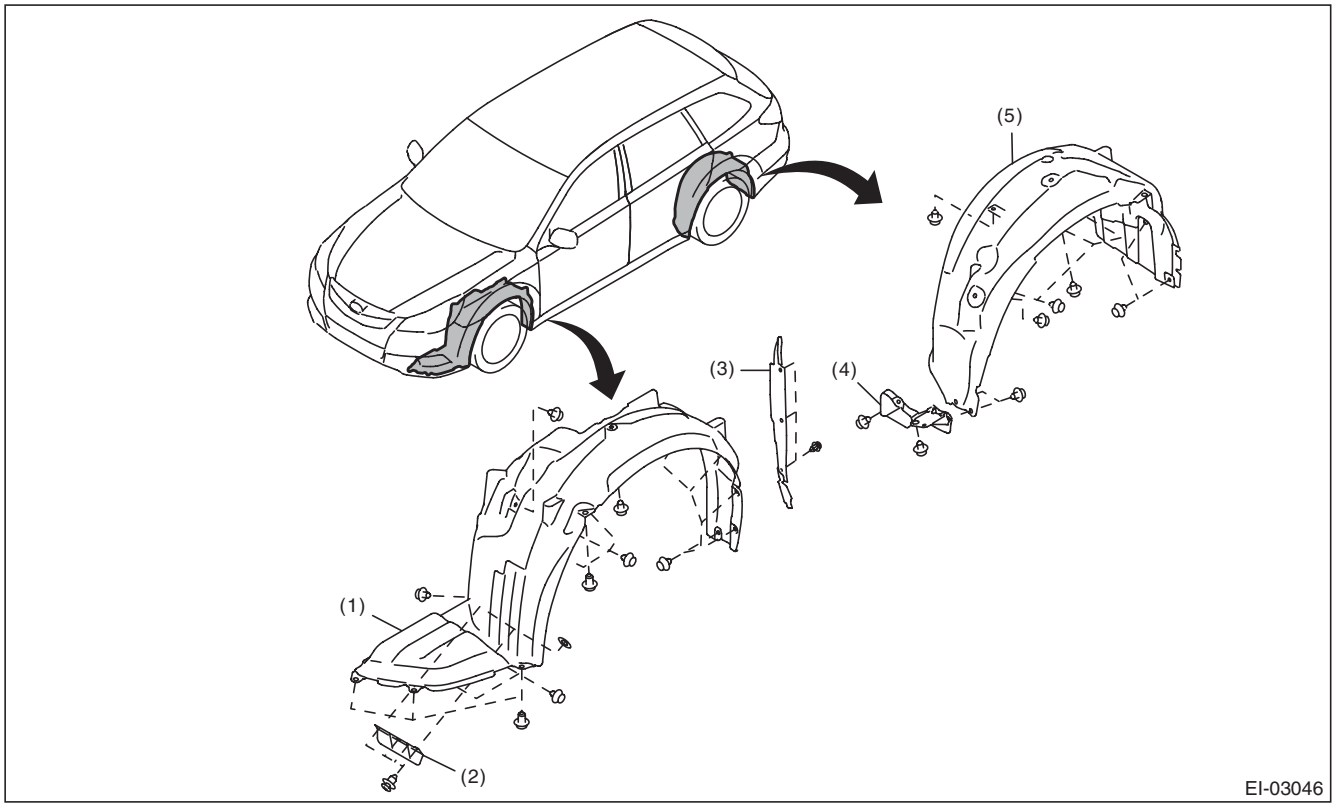

(1)	Front mud guard	(3)	Fender cover lower	(5)	Rear mud guard
(2)	Front air flap plate	(4)	Rear air flap plate		

B: INSTALLATION

Install each part in the reverse order of removal.

Tightening torque:
Wheel nut: 120 N·m (12.24 kgf-m, 88.5 ft-lb)

GETtheMANUALS.org

9. Front Bumper

A: REMOVAL

1) Disconnect the ground cable from battery.
2) Remove the front bumper face assembly.
   (1) Remove the clips, turn over the front mud guard, and disconnect the fog light connector. (Model with fog light)

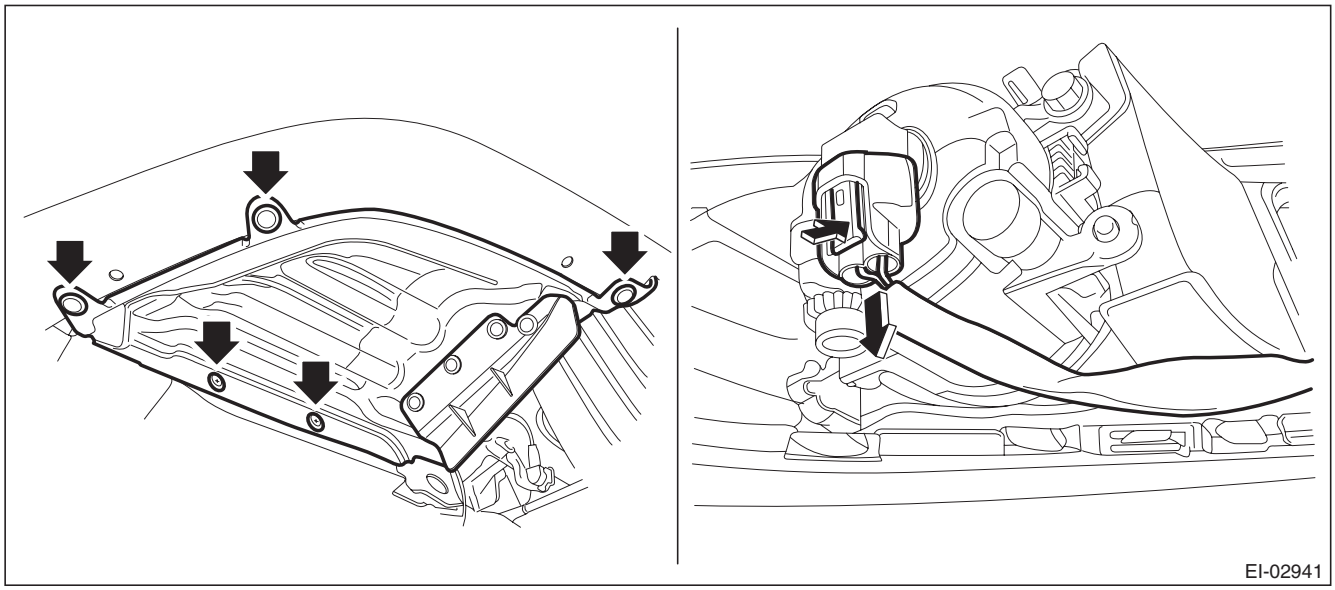

   (2) Remove the clips at the upper side of the bumper.
   (3) Remove the clips from the fender.

GETtheMANUALS.org

(4) Remove the clips at the lower side of bumper.

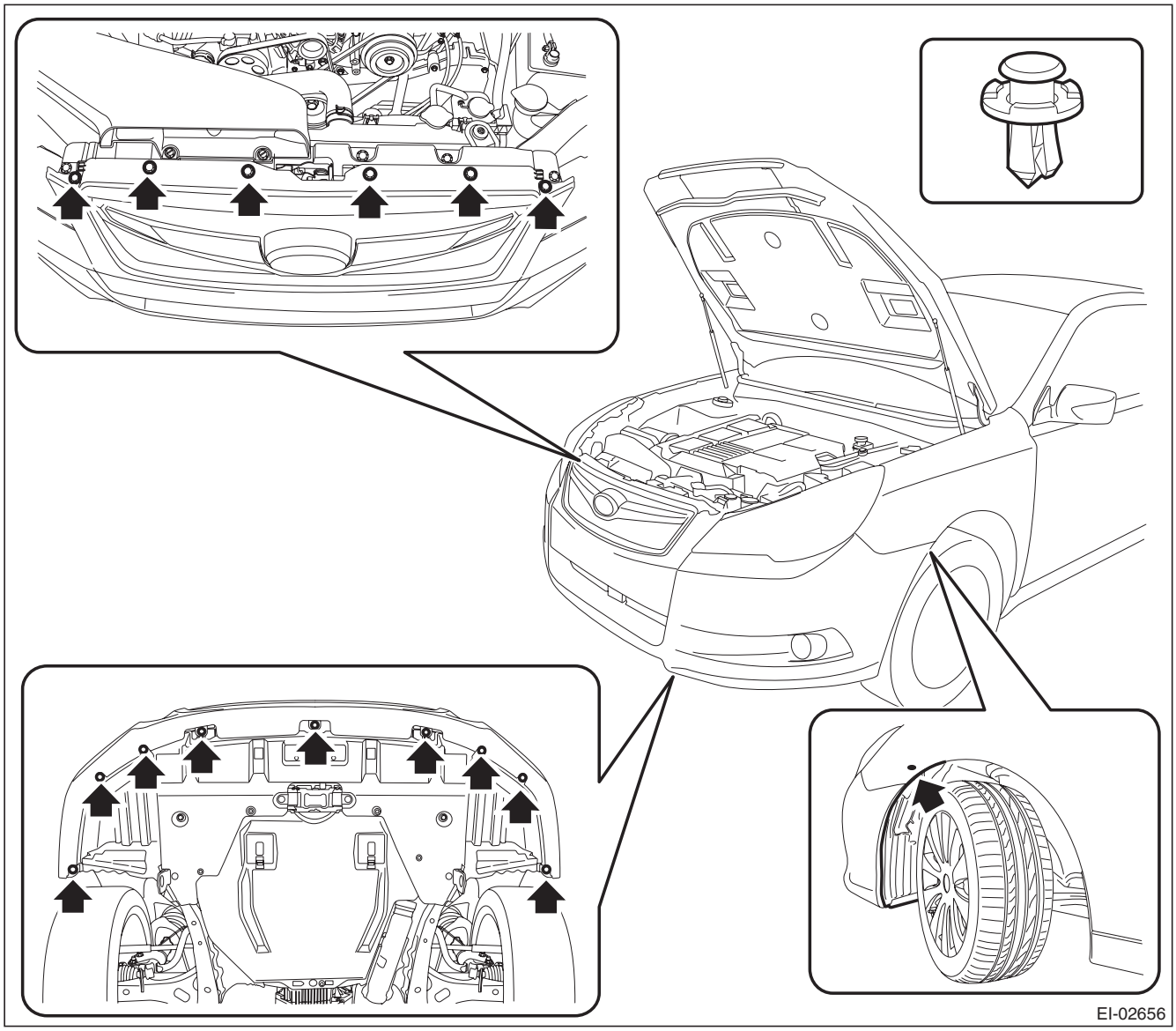

GETtheMANUALS.org

(5) Detach the flange section on the bumper face side from the bracket side front UPR.

CAUTION:
Do not pull forcibly. It may damage the flange sections of the bumper face.

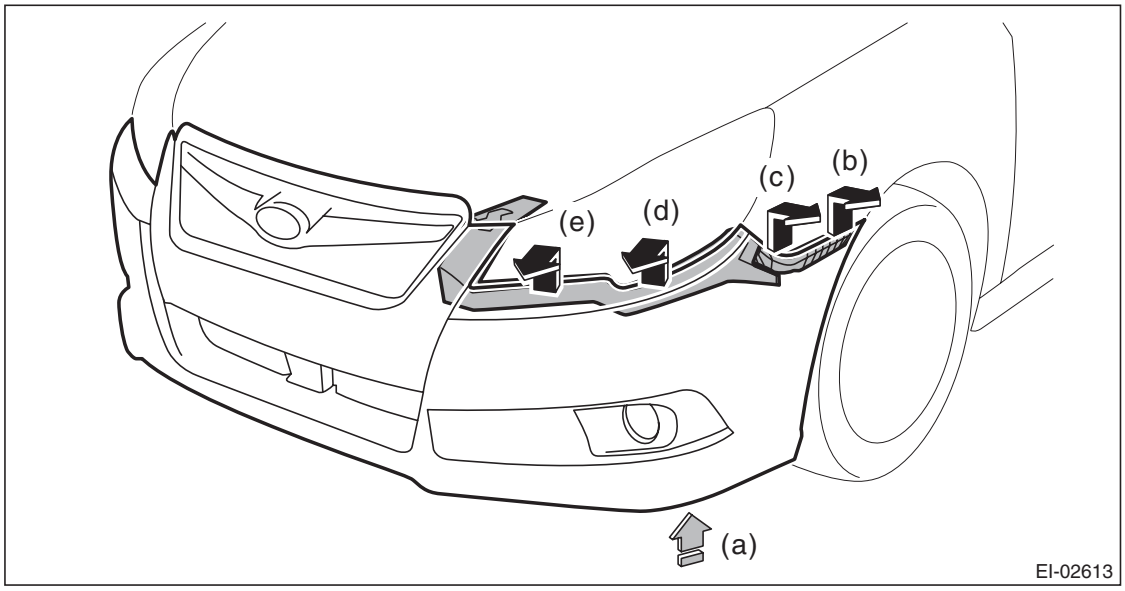

NOTE:
Pushing up the lower side (a) of the fog light, remove from (b) to (e).
Detach the opposite side in the same manner.

3) Remove the beam COMPL front ASSY.
(1) Remove the energy absorber foam.
(2) Remove the bolts, and remove the beam COMPL front from vehicle body.

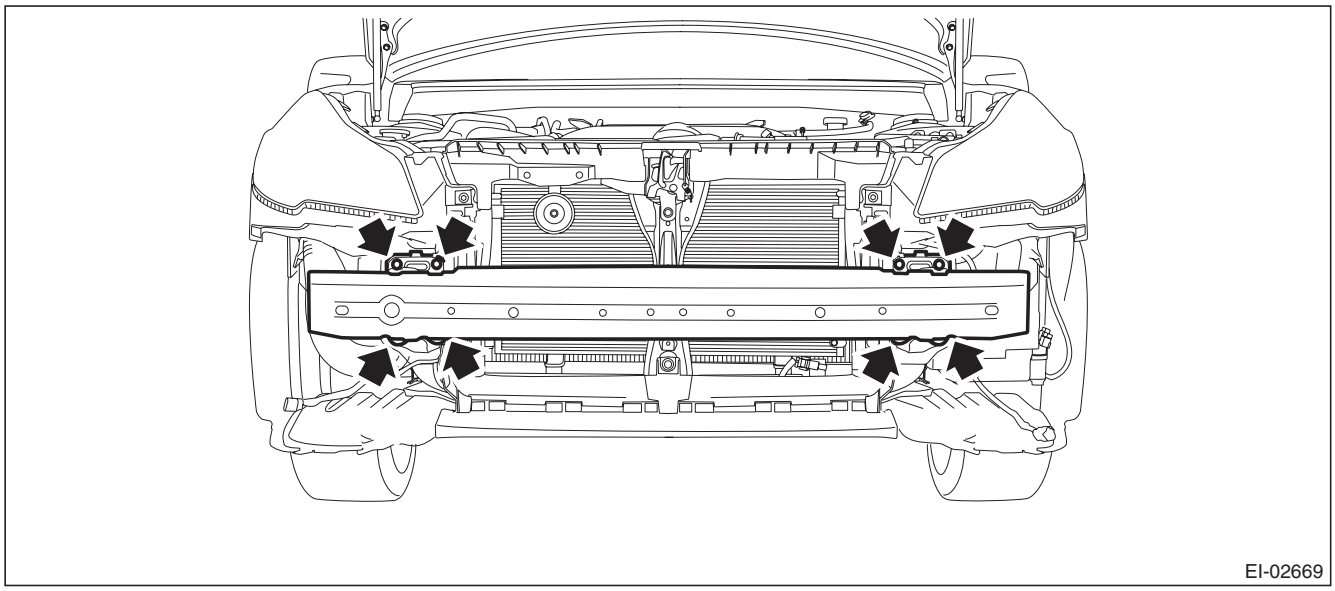

NOTE:
After all bolts are removed, raise the whole beam COMPL front a little to remove it from vehicle body.

GETtheMANUALS.org

4) Remove the bracket center LWR-front.
   (1) Release the clips to remove the front under cover.

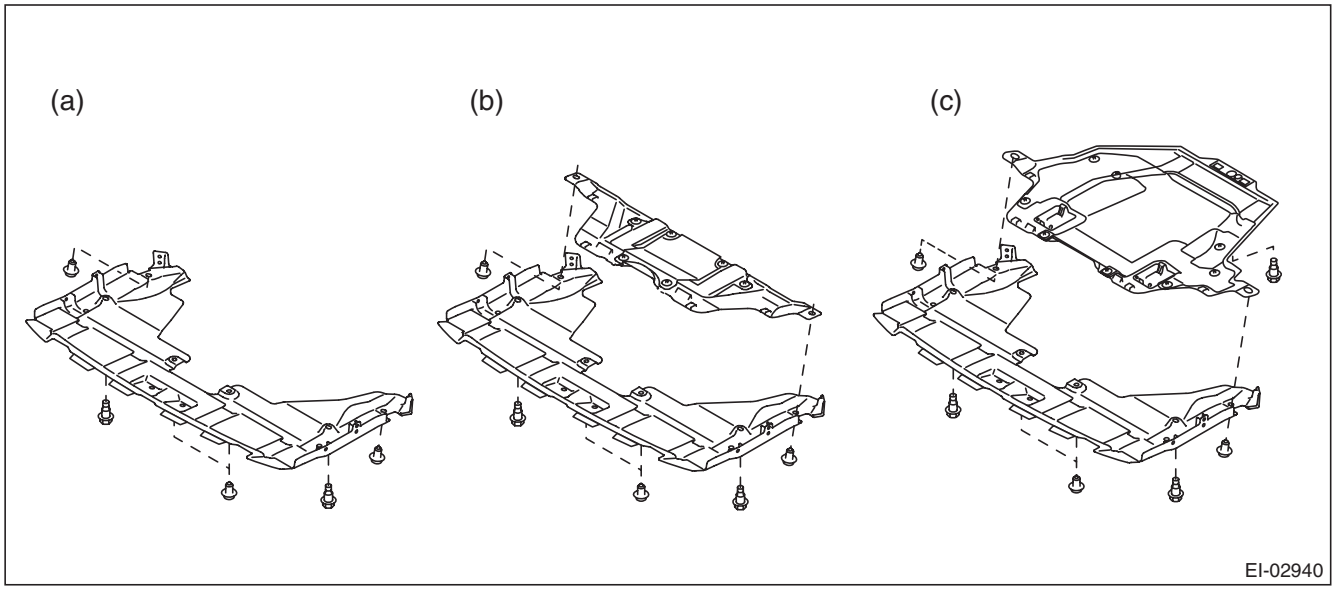

(a) Small type (b) Medium type (c) Large type

   (2) Remove the clip, and remove the bracket center LWR-front.

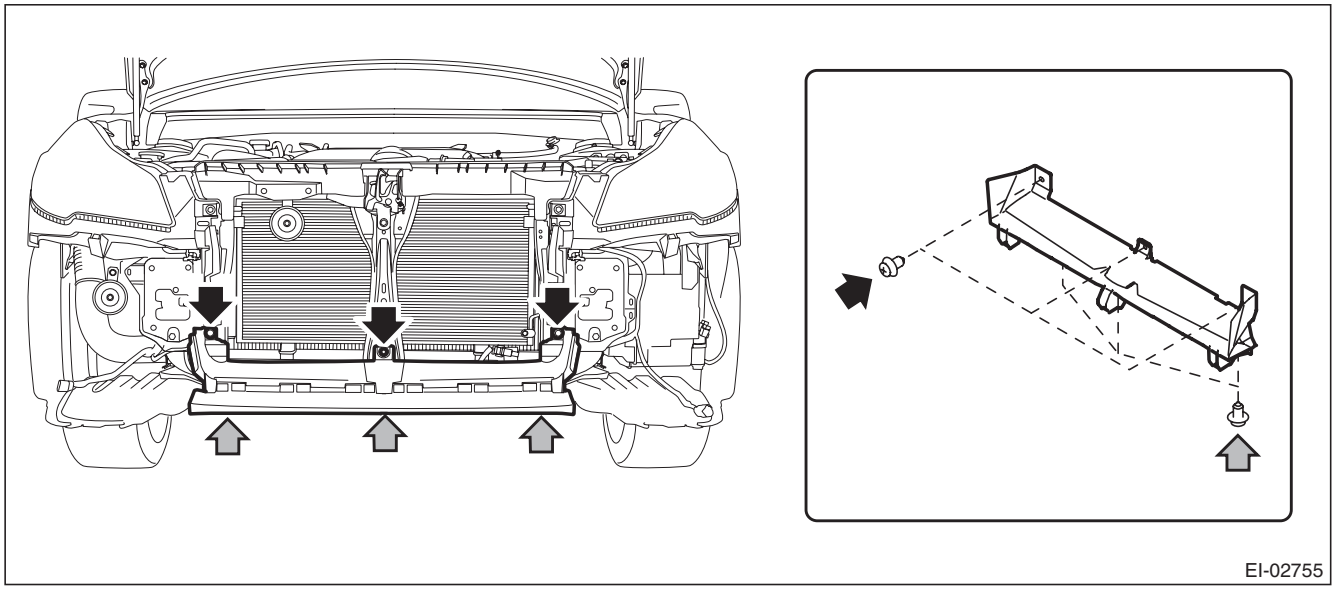

GETtheMANUALS.org

5) Remove the bracket side front UPR.
   (1) Remove the screws.
   (2) Release the claws and remove the bracket side front UPR.

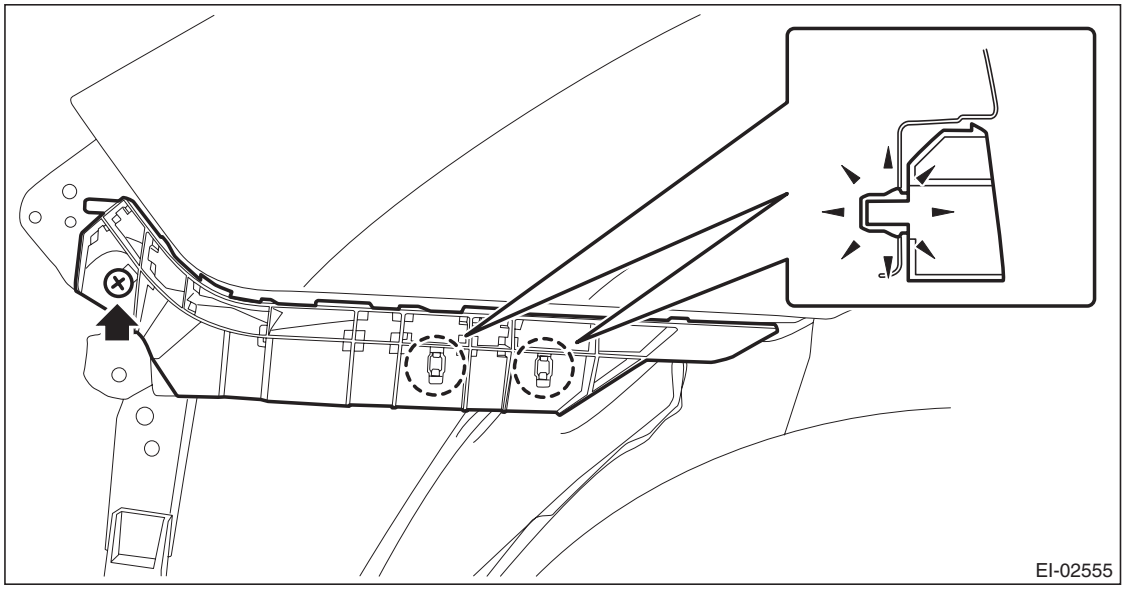

6) Remove the bolts and pins, and remove the front fog light assembly.

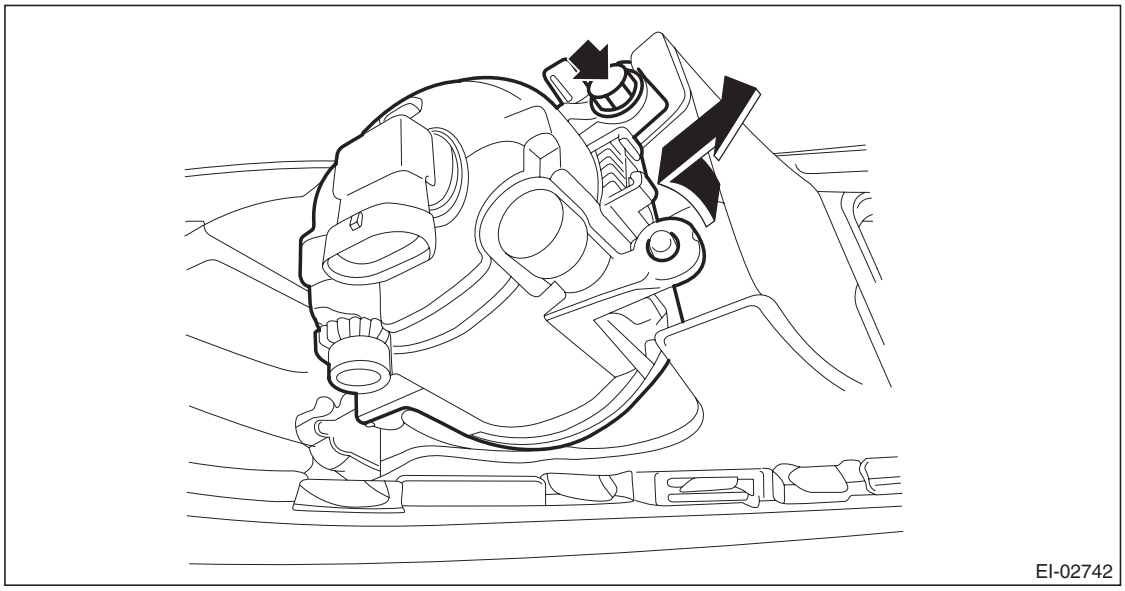

GETtheMANUALS.org

B: INSTALLATION

1) Install each part in the reverse order of removal.
2) Make sure that the bumper flanges are secured to the bracket side front UPR.

CAUTION:
Install the bumper face so that the under cover front end (b) comes inside the front bumper face (a).

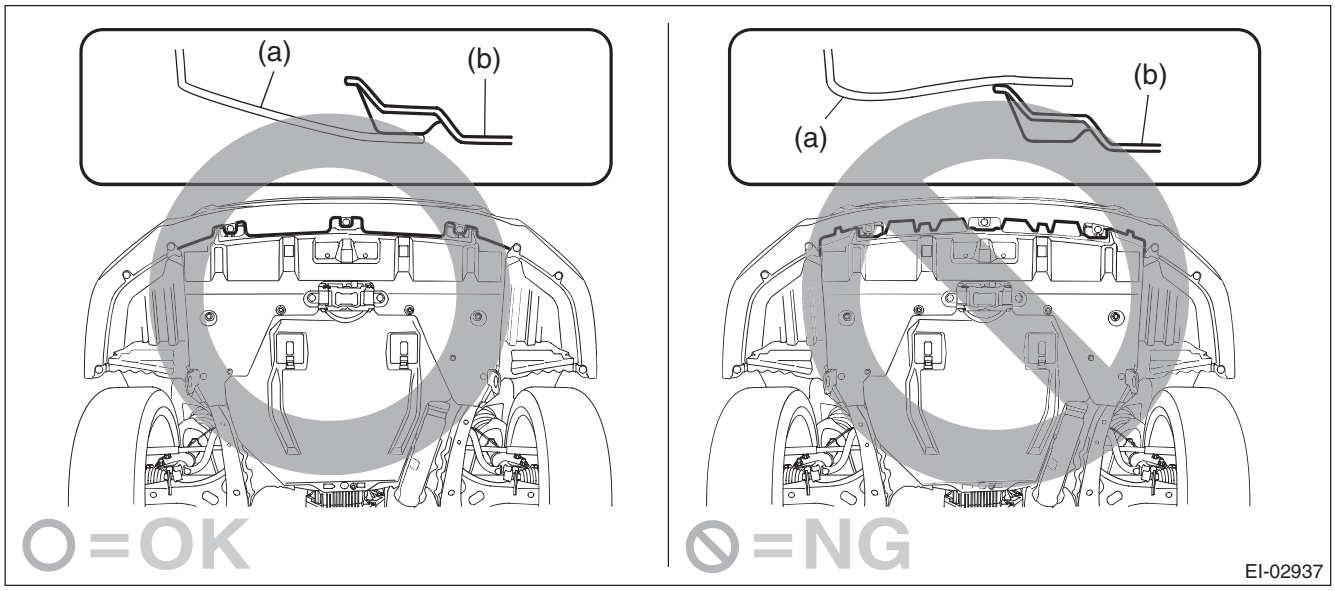

Tightening torque:
Refer to "COMPONENT" of "General Description". <Ref. to EI-5, FRONT BUMPER, COMPONENT, General Description.>

3) Adjust the fog light beam. (Model with fog light) <Ref. to LI-41, FOG LIGHT AIMING, ADJUSTMENT, Front Fog Light Assembly.>

GETtheMANUALS.org

C: REPAIR

1. COATING METHOD FOR PP BUMPER

Process No.	Process name	Job contents	
1	Bumper installation	Place the bumper on a paint worktable as required. Use the paint worktable conforming to inner shape of bumper if possible.	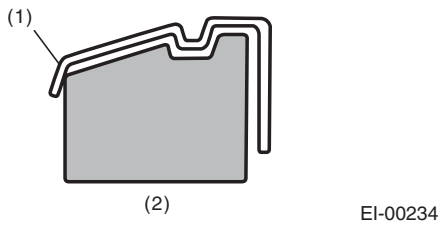 (1) Bumper (2) Set bumper section
2	Masking	Mask specified part (black base) with masking tape. Use masking tape for PP.	
3	Degreasing/cleaning	Clean all parts to be painted with white gasoline, normal alcohol, etc. to remove dirt, oil, fat, etc.	
4	Primer paint	Apply primer to all parts to be painted, using spray gun. Use primer (clear).	
5	Drying	Dry at normal temperature. [10 — 15 min. at 20°C (68°F)] In half-dried condition, PP primer paint is dissolved by solvent, e.g. thinner, etc. Therefore, if dust or dirt must be removed, use ordinary alcohol etc.	
6	Top coat paint (I)	Non-colored	Metallic paint
		Use section (block) paint for top coat. For paint/hardener mixture, observe the specifications recommended by the manufacturers. • Viscosity: 10 — 13 sec./20°C (68°F) • Film thickness: 35 — 45 μ • Spraying pressure: 245 — 343 kPa (2.5 — 3.5 kgf/cm^2, 36 — 50 psi)	Use section (block) paint for top coat. For paint/hardener mixture, observe the specifications recommended by the manufacturers. • Viscosity: 10 — 13 sec./20°C (68°F) • Film thickness: 15 — 20 μ • Spraying pressure: 245 — 343 kPa (2.5 — 3.5 kgf/cm^2, 36 — 50 psi)
7	Drying	Not required.	Dry at normal temperature [at least 10 min. at 20°C (68°F)]. In half-dried condition, avoid dust, dirt.
8	Top coat paint (II)	Not required.	Apply a clear coat to parts with top coat paint (I), three times at 5 — 7 minute intervals. For paint/hardener mixture, observe the specifications recommended by the manufacturers. • Viscosity: 14 — 16 sec./20°C (68°F) • Film thickness: 25 — 30 μ • Spraying pressure: 245 — 343 kPa (2.5 — 3.5 kgf/cm^2, 36 — 50 psi)
9	Drying	60°C (140°F), 60 min. or 80°C (176°F), 30 min. If the temperature is higher than 80°C (176°F), PP may be deformed. Keep maximum temperature at 80°C (176°F) or less.	
10	Inspection	Check paint.	
11	Removal of masking	Remove the masking tape applied in procedure 2.	

GETtheMANUALS.org

2. REPAIR INSTRUCTIONS FOR COLORED PP BUMPER

NOTE:
All PP bumpers are provided with a grained surface, and if the surface is damaged, it cannot normally be restored to its former condition. Damages limited to the shallow scratches that cause only a change in the luster of the base material or coating, can be almost fully restored. Before repairing a damaged area, explain this point to the customer and obtain an understanding about the matter.
Repair methods are outlined below, based on a classification of the extent of damage.
1) Minor damage causing only a change in the luster of the bumper due to a light touch
Almost restorable.

Process No.	Process name	Job contents	
1	Cleaning	Clean the area to be repaired using water.	
2	Sanding	Grind the repairing area with #500 sand paper in a “feathering” motion.	
3	Finish	Resin section	Coated section
		Repeatedly apply wax to the affected area using soft cloth (such as flannel). Recommended wax: Tire wax or equivalent	Perform either the same procedures as for the resin section or process No. 18 and subsequent in section 3), depending on the degree and nature of damage.
		Polish the waxed area with clean cloth after 5 — 10 minutes.	

2) Deep damage caused by scratching with fences etc.
A dent cannot be repaired but a whitened or swelled part can be removed.

Process No.	Process name	Job contents	
1	Cleaning	Clean the damaged area with water.	
2	Removal of damaged area	Cut off protruding area, if any, due to collision, using a putty knife.	
3	Sanding	Grind the affected area with #100 — #500 sand paper.	
4	Finish	Resin section	Coated section
		Same as process No. 3 in section “1)”.	Perform process No. 12 and subsequent operations in section “3)”.

3) Deep damage such as a break or hole that requires filling
Much of the peripheral grained surface must be sacrificed for repair. The degree of restoration is not really worth the expense. (The surface, however, will become almost flush with adjacent areas.)

Process No.	Process name	Job contents	
1	Bumper removal	Remove the bumper as required.	
2	Removal of parts	Remove the parts built into bumper as required.	
3	Bumper placement	Place the bumper on a paint worktable as required. It is recommended to use the paint worktable conforming to internal shape of bumper.	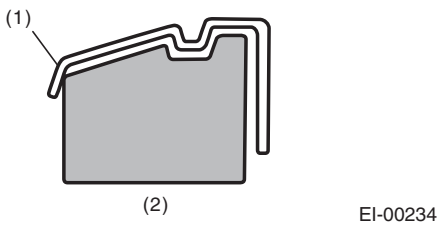 (1) Bumper (2) Set bumper section
4	Surface preparation	Remove dust, oil, etc. from areas to be repaired and surrounding areas, using a suitable solvent (white gasoline or alcohol, etc.).	

GETtheMANUALS.org

Process No.	Process name	Job contents	
5	Cutting	If the damage is a crack or a hole, cut a guide slit of 20 to 30 mm (0.79 to 1.18 in) in length along the crack or hole up to the bumper base surface. Next, use a knife or grinder to carve a V-shaped groove in the area for repair.	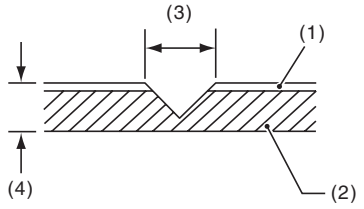 EI-00235 (1) Paint surface (2) PP base surface (3) 20 — 30 mm (0.79 — 1.18 in) (4) 3 mm (0.12 in)
6	Sanding (I)	Grind beveled surface with sand paper (#40 — #60) to smooth finish.	
7	Cleaning	Clean the sanded surface with the same solvent as used in process No. 4.	
8	Temporary welding	Grind the side just opposite the beveled area with sand paper (#40 — #60) and clean using a solvent. Temporarily spot-weld the side, using PP welding rod and heater gun.	
		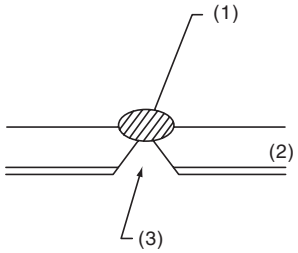 EI-00236 (1) Welded point (Use heater gun and PP welding rod) (2) PP base surface (3) Beveled section NOTE: • Do not melt welding rod until it flows out. This results in reduced strength. • Leave the welded spot unattended until it cools completely.	
9	Welding	Using a heater gun and PP welding rod, weld the beveled spot while melting both the rod and damaged area.	
		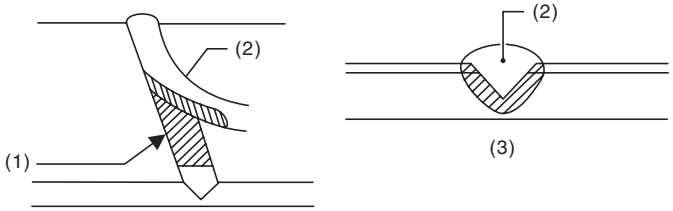 EI-00237 (1) Welding rod (2) Melt hatched area (3) Section NOTE: • Melt the sections indicated by hatched area. • Do not melt the welding rod until it flows out, in order to provide strength. • Always keep the heater gun 1 to 2 cm (0.4 to 0.8 in) away from the welding spot. • Leave the welded spot unattended until it cools completely.	

GETtheMANUALS.org

Process No.	Process name	Job contents	
10	Sanding (II)	Remove excess part of weld with a putty knife. If a drill or disc wheel is used instead of the knife, operate it at a rate less than 1,500 rpm and grind the excess part little by little. A higher rpm will cause the PP substrate to melt from the heat.	
		EI-00042	
		Sand the welded spot smooth with #240 sand paper.	
11	Masking	Mask the black substrate section using masking tape.	
12	Cleaning/degreasing	Completely clean the entire coated area, using solvent similar to that used in process No. 4.	
13	Primer coating	Apply a coat of primer for bumpers to the repaired surface and its surrounding areas. Mask these areas, if necessary. NOTE: Be sure to apply a coat of primer using a spray gun at a pressure of 245 — 343 kPa (2.5 — 3.5 kgf/cm^2, 36 — 50 psi).	
14	Leave unattended	Leave the repaired area unattended at 20°C (68°F) for 10 to 15 minutes until primer is half-dry. NOTE: If dirt or dust comes in contact with the coated area, wipe it off with a cloth dampened with alcohol. (Do not use thinner since the coated area tends to melt.)	
15	Surfacer coating	Apply a coat of surfacer for PP bumpers to the repaired area two or three times at an interval of 3 — 5 minutes. For surfacer/hardener mixture, viscosity and paint thickness, observe the specifications of the surfacers to be used.	
16	Drying	Allow the coated surface to dry for 20 minutes at 20°C (68°F) [or 30 minutes at 60°C (140°F)].	
17	Sanding (III)	Sand the coated surface and its surrounding areas using #400 sand paper and water.	
18	Cleaning/degreasing	Same as process No. 12.	
19	Top coat (I)	Non-colored	Metallic paint
		Use a “block” coating method. For paint/hardener mixture, observe the specifications recommended by the manufacturers. • Viscosity: 11 — 13 sec./20°C (68°F) • Coating film thickness: 40 — 50 μ • Spraying pressure: 245 — 343 kPa (2.5 — 3.5 kgf/cm^2, 36 — 50 psi)	Use a “block” coating method. For paint/hardener mixture, observe the specifications recommended by the manufacturers. • Viscosity: 11 — 13 sec./20°C (68°F) • Coating film thickness: 20 — 30 μ • Spraying pressure: 245 — 343 kPa (2.5 — 3.5 kgf/cm^2, 36 — 50 psi)
20	Leave unattended	Not required.	Leave unattended at 20°C (68°F) for at least 10 minutes until the topcoated area is half-dry. NOTE: Be careful to keep dust or dirt from coming in contact with the affected area.
21	Top coat (II)	Not required.	Apply a clear coat three times at an interval of 3 to 5 minutes. For paint/hardener mixture, observe the specifications recommended by the manufacturers. • Viscosity: 10 — 13 sec./20°C (68°F) • Coating film thickness: 20 — 30 μ • Spraying pressure: 245 — 343 kPa (2.5 — 3.5 kgf/cm^2, 36 — 50 psi)
22	Drying	Allow the coated surface to dry for two hours at 20°C (68°F) or 30 minutes at 60°C (140°F). NOTE: Do not allow the temperature to exceed 80°C (176°F) since this will deform the PP substrate.	
23	Inspection	Carefully check the condition of the repaired area.	

GETtheMANUALS.org

Process No.	Process name	Job contents
24	Removal of masking	Remove the masking tape applied in process No. 11 and 13.
25	Parts installation	Install parts on the bumper in reverse order of removal.
26	Bumper installation	Install the bumper.

GETtheMANUALS.org

10. Rear Bumper

A: REMOVAL

1) Remove the rear combination light assembly.

- Sedan model
  1. Remove the trunk room trim. <Ref. to EI-127, REMOVAL, Trunk Room Trim.>
  2. Disconnect the connector.
  3. Release the nuts and clips, then remove the rear combination light assembly.

CAUTION:
Be careful not to damage the clips.

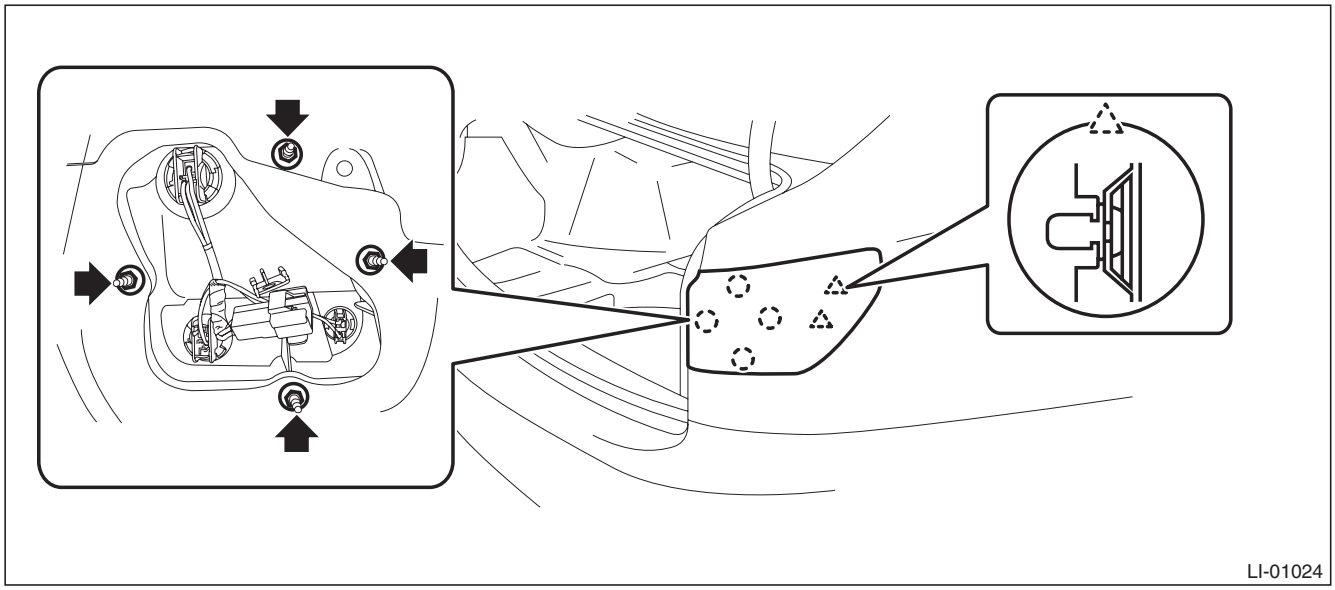

- OUTBACK model
  1. Remove the clips and detach the rear combination light covers.

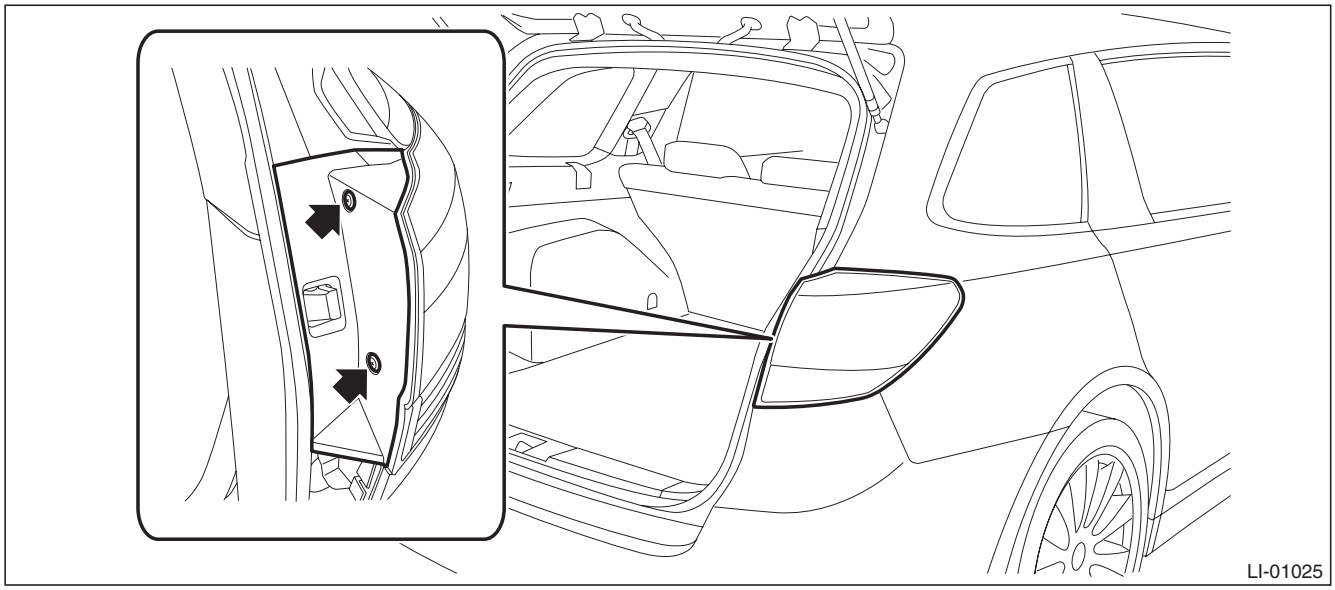

  2. Release the bolts and clips, then pull out the rear combination light assembly to the vehicle rear.
  3. Disconnect the connector and remove the rear combination light assembly.

GETtheMANUALS.org

CAUTION:
Be careful not to damage the clips.

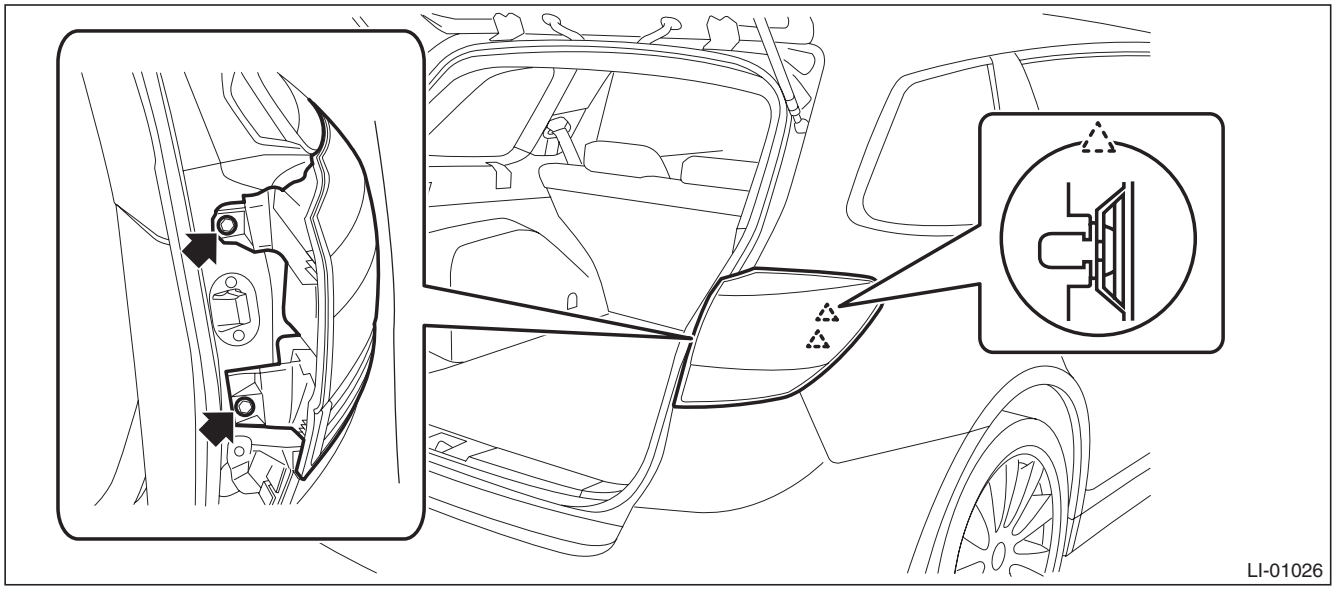

2) Remove the rear bumper face assembly.
   (1) Remove the clips inside the wheel housing.
   (2) Remove the clips at the lower side of rear bumper.

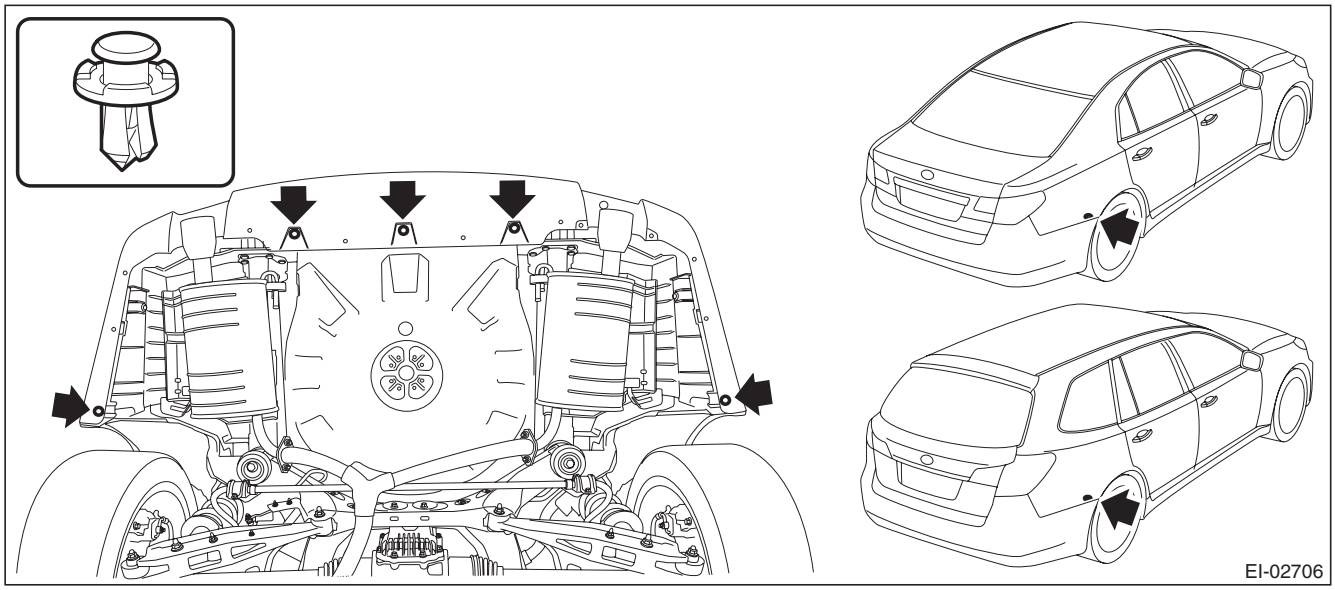

   (3) Detach the (b) and (c) while pulling up (a) of the bumper.
   (4) Detach (e) while pulling up the bumper (d).
   (5) Detach the opposite side in the same manner.
   (6) Detach in order from (f) to (h) while pulling up center part of the bumper face.

GETtheMANUALS.org

CAUTION:
Do not pull with a excessive force. Otherwise the bracket installation area may be damaged.

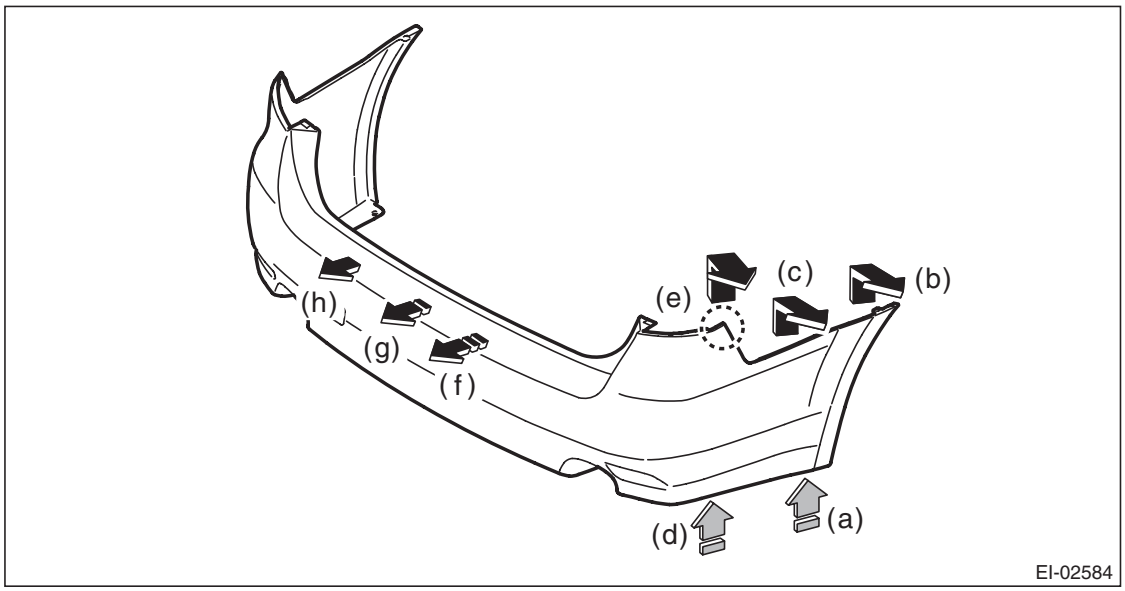

3) Remove the rear bumper beam assembly.
   (1) Remove the energy absorber foam.
   (2) Remove the nuts, and remove the rear bumper beam assembly from vehicle body.

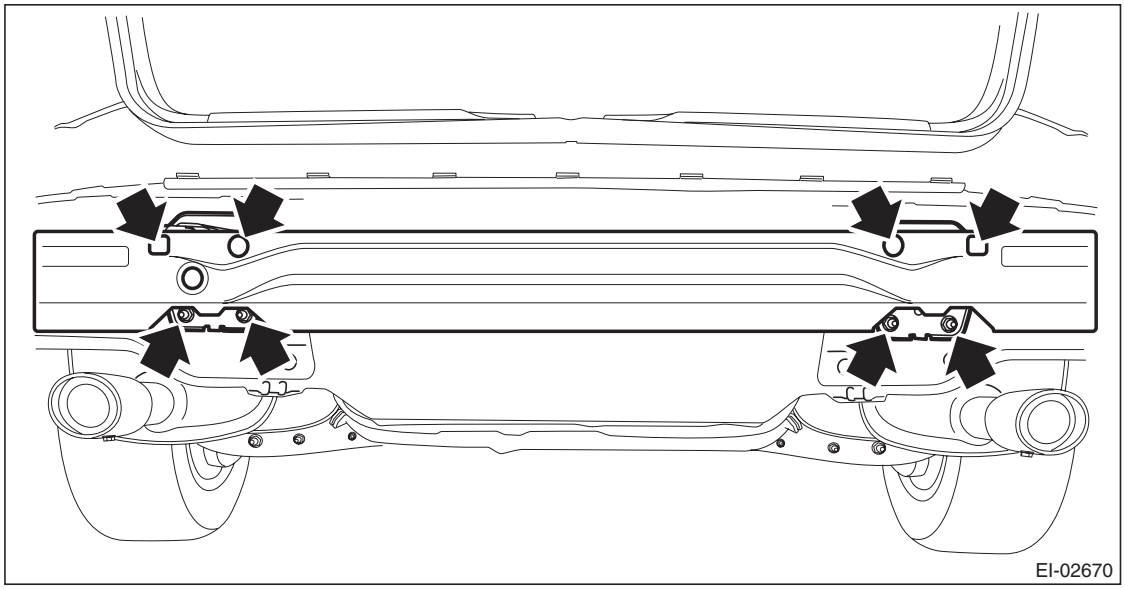

NOTE:
After all nuts are removed, raise the rear bumper beam assembly a little to remove it from vehicle body.

GETtheMANUALS.org

4) Remove bumper brackets.

- Sedan model

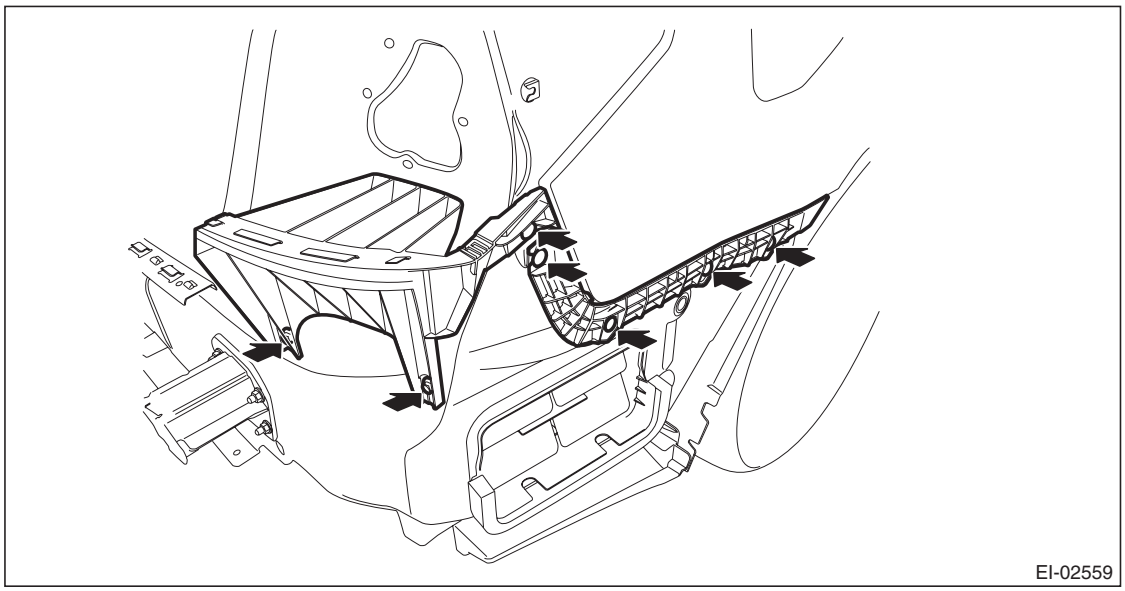

- OUTBACK model

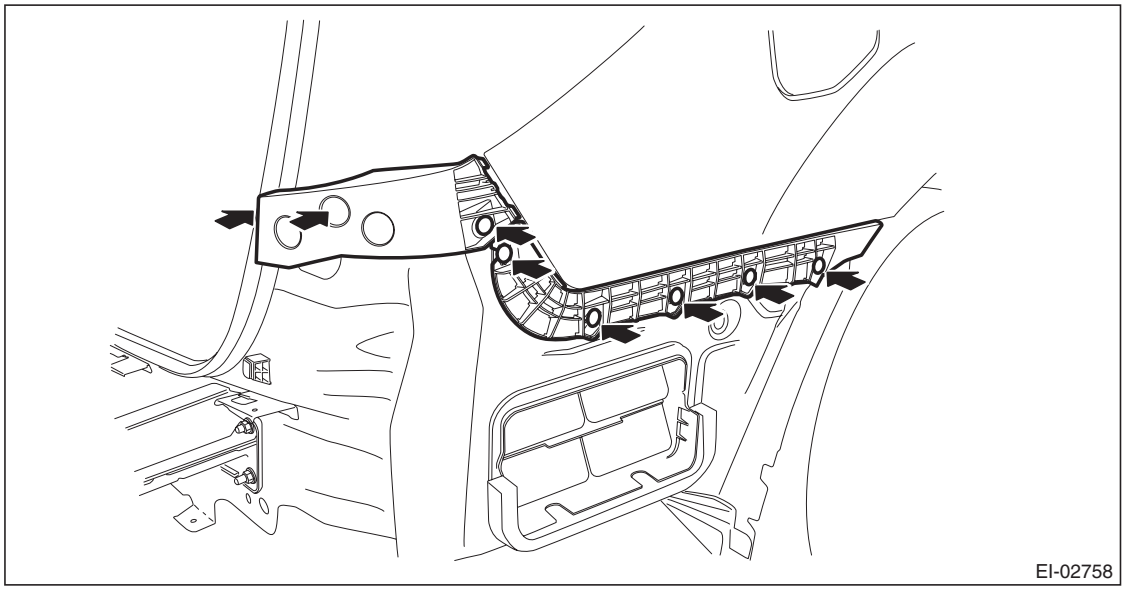

GETtheMANUALS.org

5) Remove the reflex reflector. (OUTBACK model)

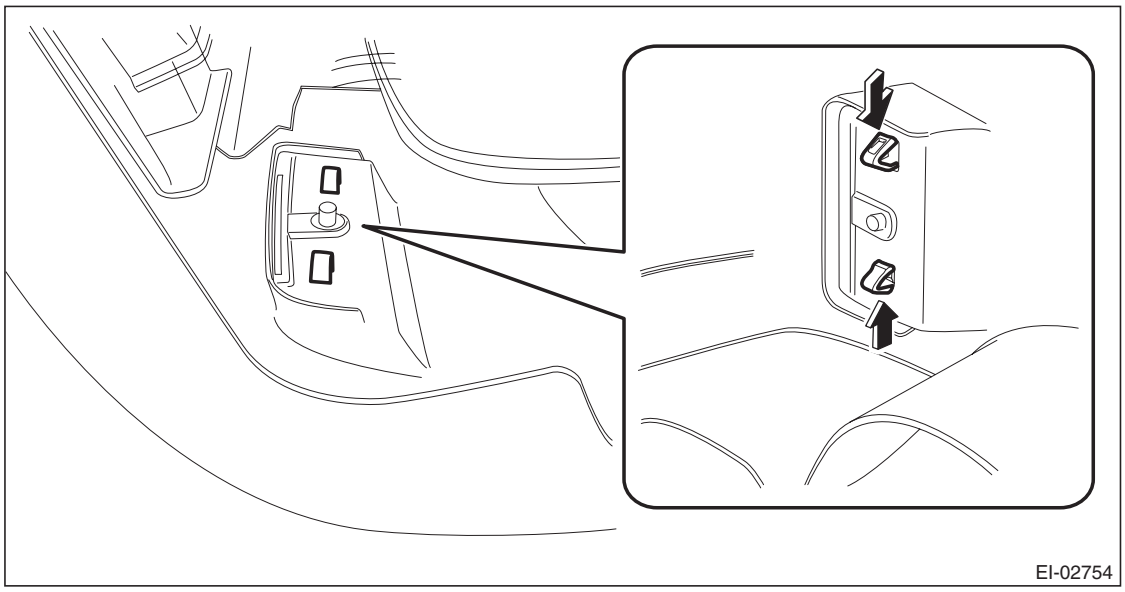

(1) Press the claws of reflex reflector from the back of the bumper face.
(2) Remove the reflex reflector.

B: INSTALLATION

Install each part in the reverse order of removal.

NOTE:
If the bumper face comes off too easily, adjust the hook of the bracket side.

Tightening torque:
Refer to "COMPONENT" of "General Description". <Ref. to EI-6, REAR BUMPER, COMPONENT, General Description.>

C: REPAIR

Refer to the front bumper repair. <Ref. to EI-45, REPAIR, Front Bumper.>

GETtheMANUALS.org

11.Side Sill Spoiler

A: REMOVAL

Remove the clips and detach the side spoiler.

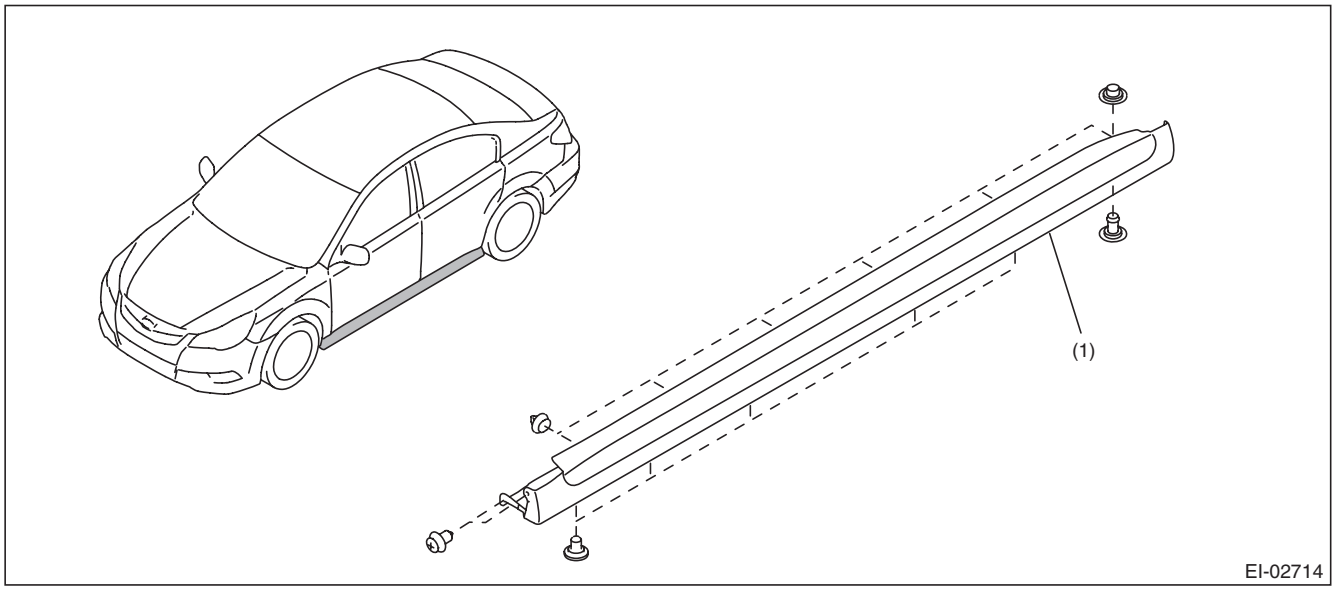

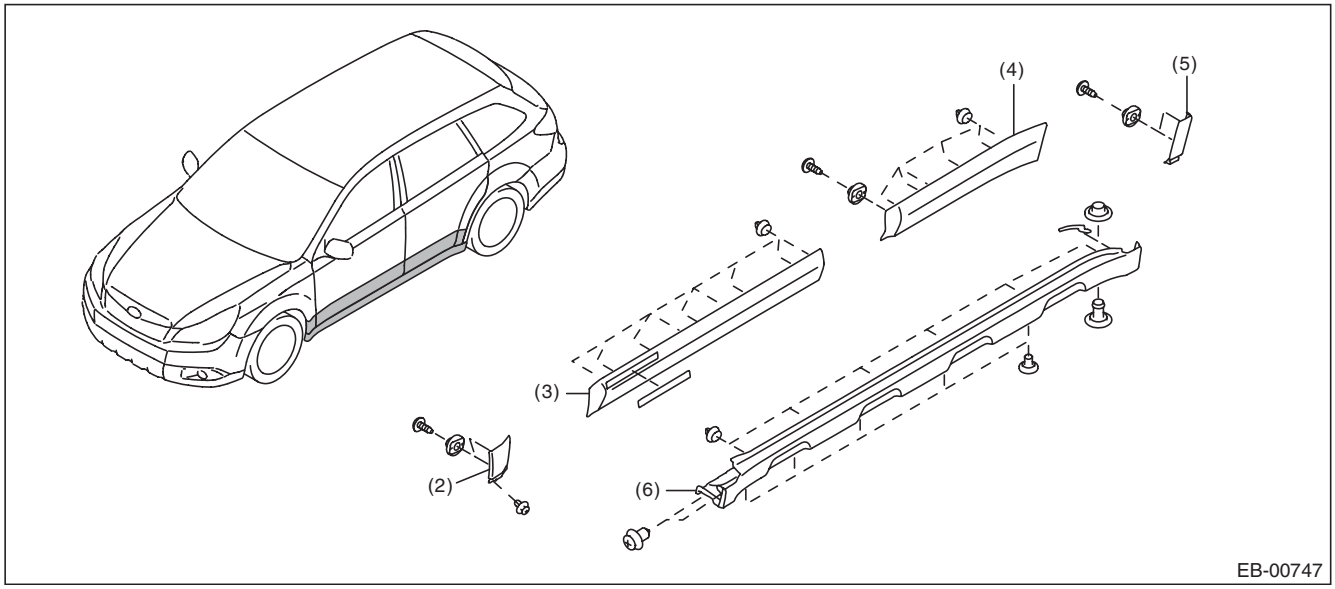

(1)	Side sill garnish ASSY (sedan model)	(3)	Garnish ASSY front door (OUT-BACK model)	(5)	Garnish ASSY rear quarter (OUT-BACK model)
(2)	Garnish ASSY front fender (OUT-BACK model)	(4)	Garnish ASSY rear door (OUT-BACK model)	(6)	Side sill garnish ASSY (OUT-BACK model)

B: INSTALLATION

Install each part in the reverse order of removal.

GETtheMANUALS.org

12. Roof Molding

A: REMOVAL

CAUTION:
Be careful not to damage the body.

1) Remove the roof rail assembly. (OUTBACK model) <Ref. to EI-59, REMOVAL, Roof Rail.>
2) Turn over the front end of roof molding.
3) Using a flat tip screwdriver, slide the internal clip in the direction of arrow.

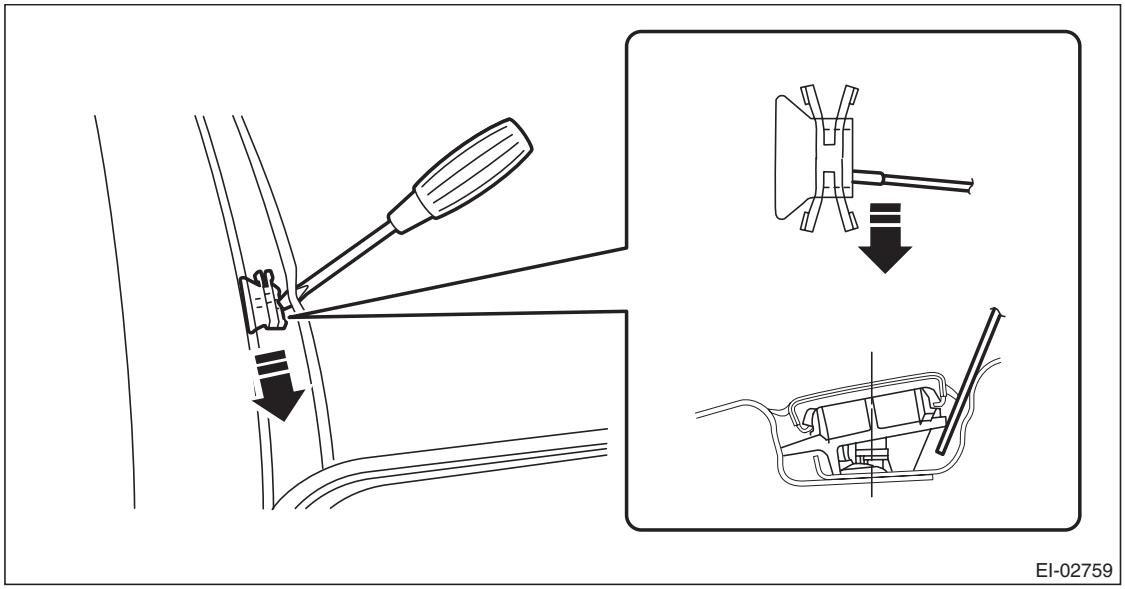

Right: Slide toward vehicle front.
Left: Slide toward vehicle rear.
4) Remove the clip from the stud on the body by sliding it.
- Sedan model: 6 clips per side

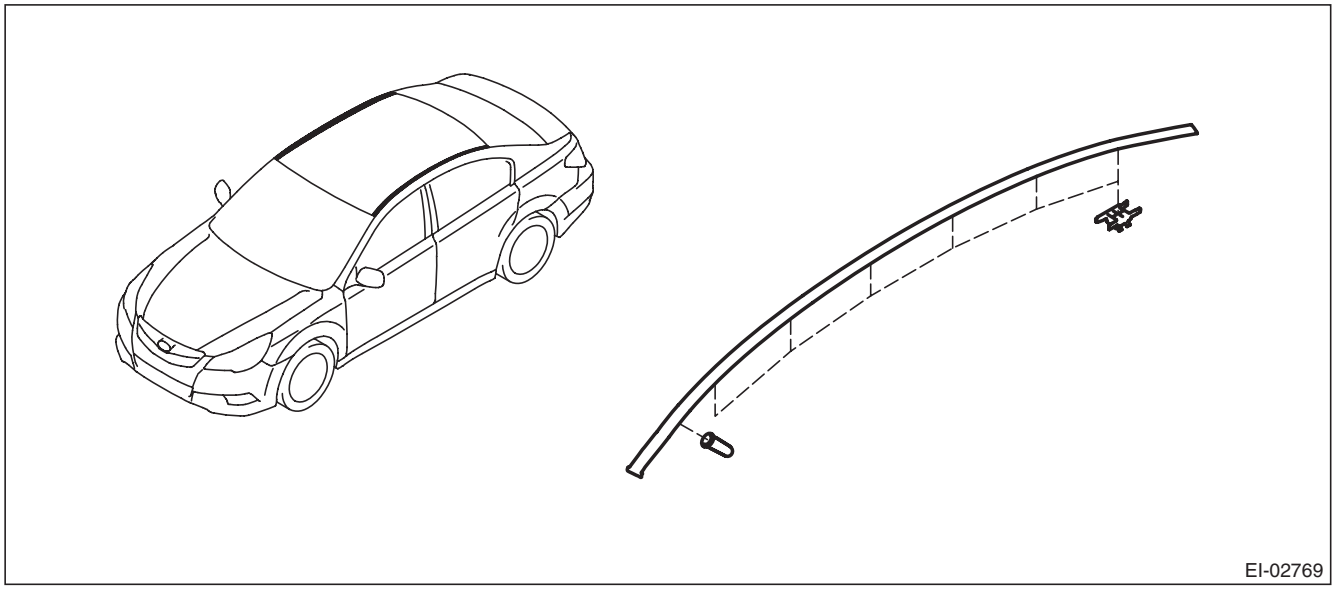

GETtheMANUALS.org

- OUTBACK model: 1 clip per side

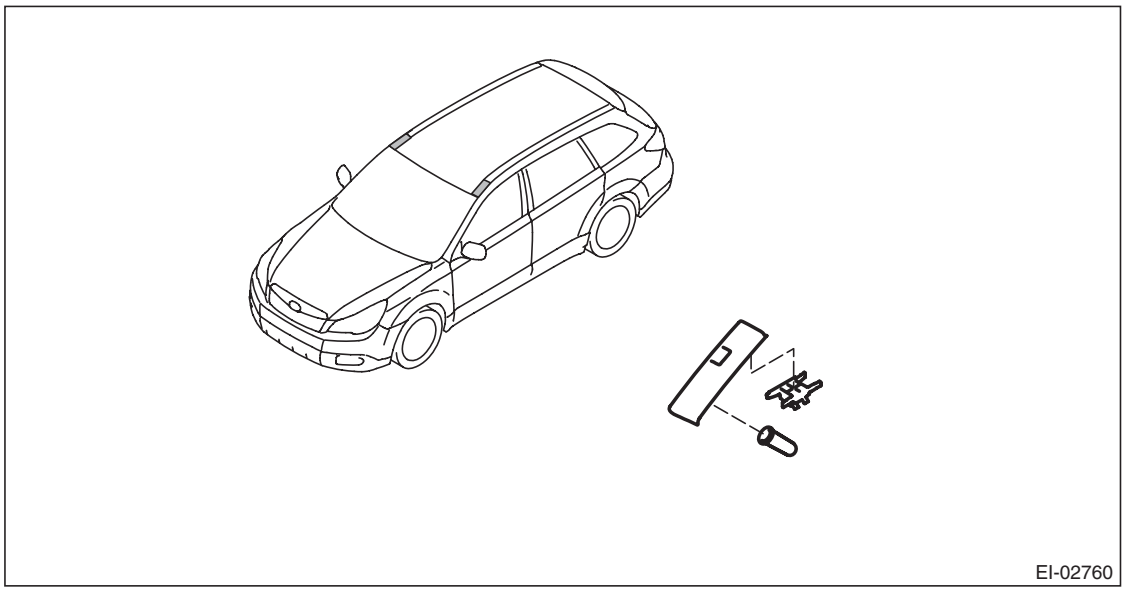

5) Remove the roof molding from the vehicle body by pulling it upward.

B: INSTALLATION

1) Remove the clips from the roof molding and attach them on the stud on body.

CAUTION:
- **Any clips damaged during roof molding removal must be replaced with new parts.**
- **While installing the roof molding, be careful not to catch the glass molding with the tip of the front side and rear side.**

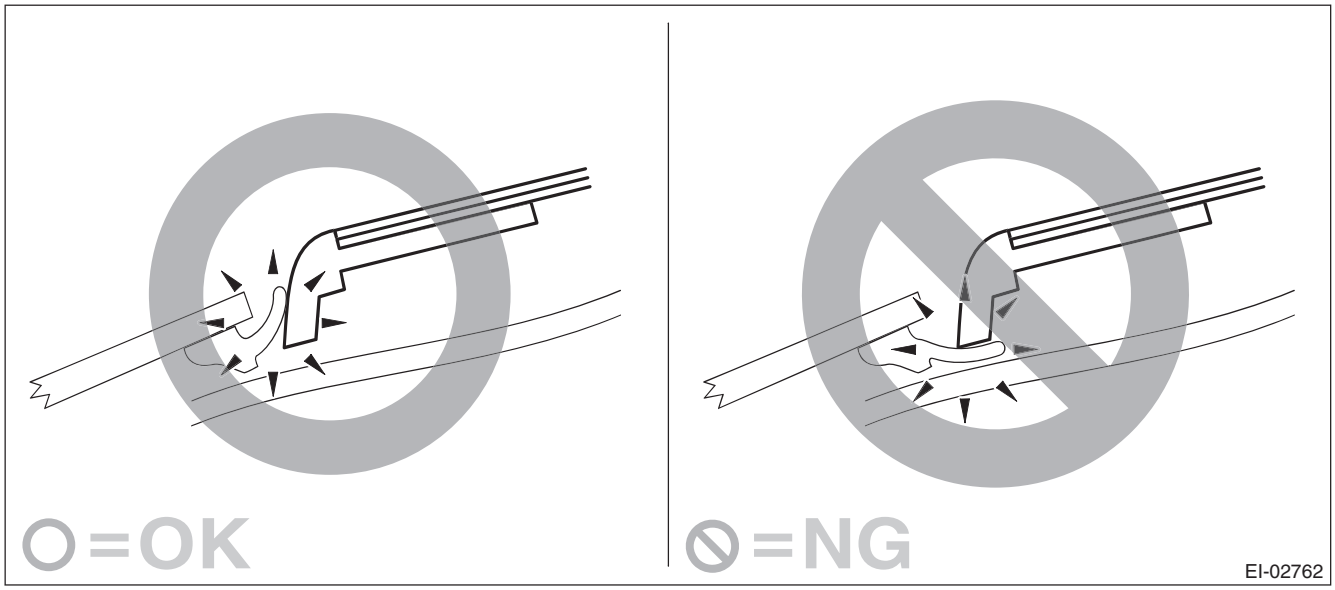

GETtheMANUALS.org

2) Apply the front end of roof molding to the front window, and attach the front positioning clip to the rivet on body.

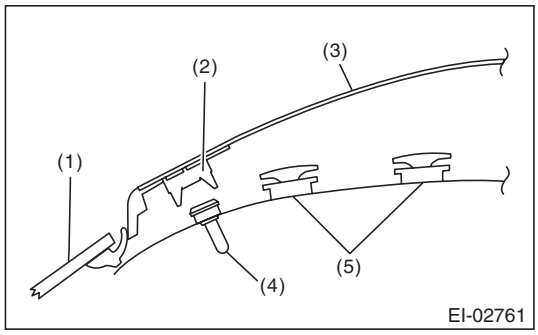

(1) Windshield
(2) Positioning clip
(3) Roof molding
(4) Rivet
(5) Clip

3) While pressing the roof molding from above, connect the roof molding with clips.

GETtheMANUALS.org

13. Roof Rail

A: REMOVAL

1) Remove the roof trim. <Ref. to EI-145, OUTBACK MODEL, REMOVAL, Roof Trim.>
2) Remove the curtain airbag module. <Ref. to AB-66, OUTBACK MODEL, REMOVAL, Curtain Airbag Module.>

CAUTION:
- **Refer to "CAUTION" of "General Description" before handling the airbag module. <Ref. to AB-9, CAUTION, General Description.>**
- **Be careful not to damage the curtain airbag module during removal.**

3) Remove the eight installing nuts.

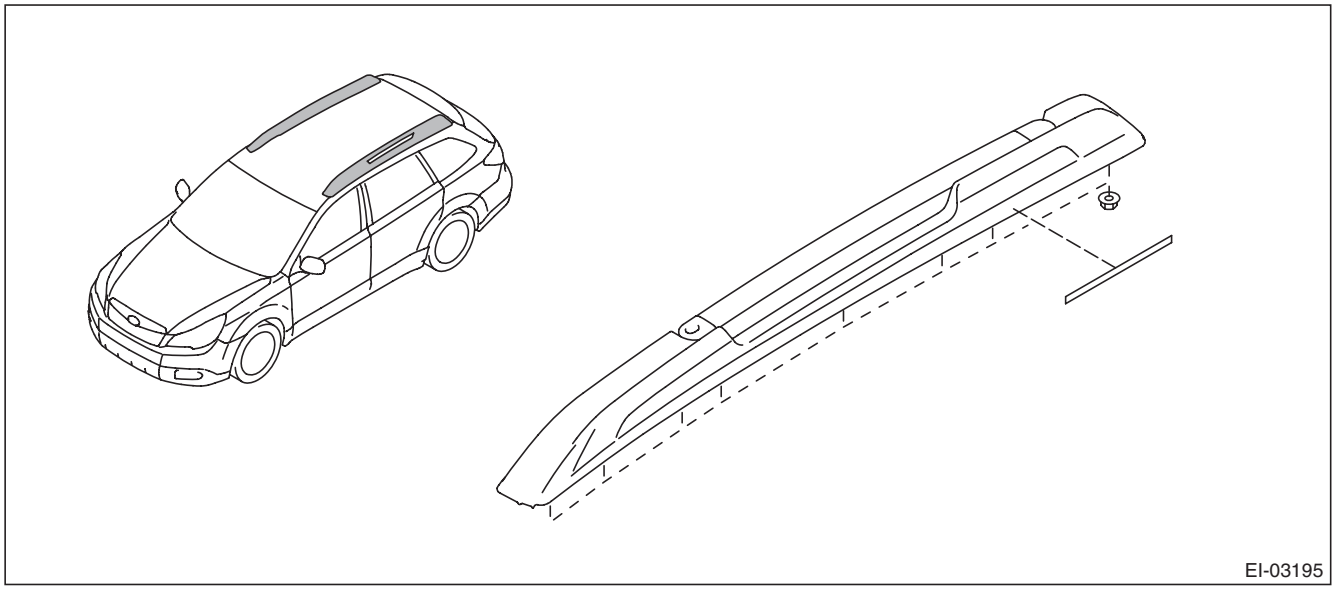

B: INSTALLATION

CAUTION:
When removing or installing the roof rail, be careful not to scratch the body panel with the stud bolt of roof rail.
Install each part in the reverse order of removal.

Tightening torque:
7.5 N·m (0.76 kgf-m, 5.5 ft-lb)

GETtheMANUALS.org

14. Door Trim

A: REMOVAL

1. FRONT DOOR

1) Disconnect the ground cable from battery.
2) Remove the gusset cover.
   (1) Attach the protective tape (a) to the door trim.
   (2) Release the clips and claws, then detach the gusset cover.

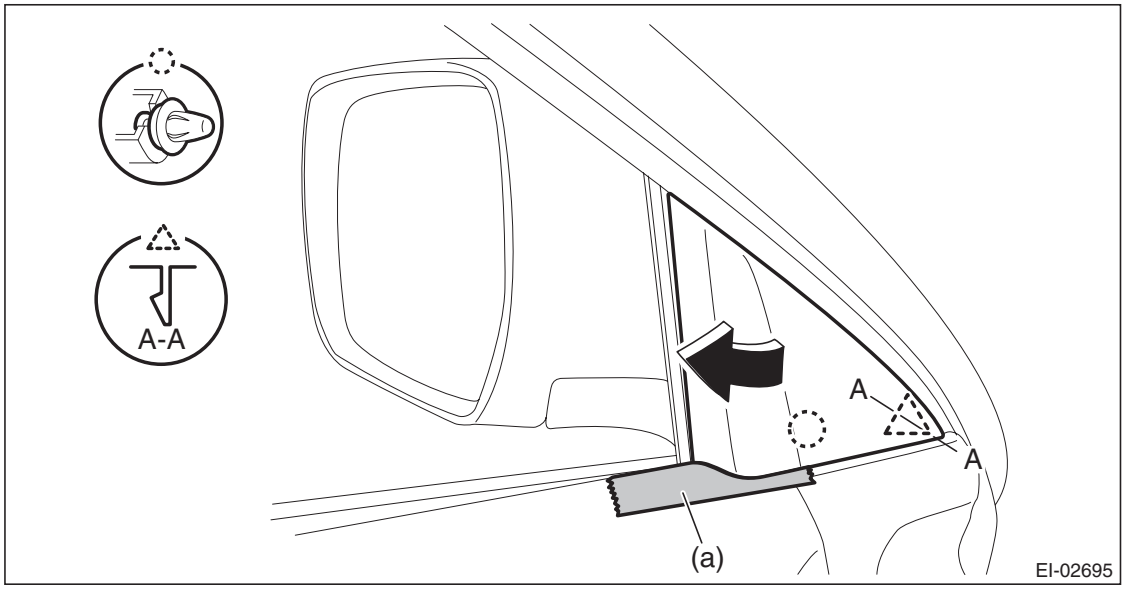

3) Remove the front door trim assembly.
   (1) Open the cover and remove the screw.
   (2) Remove the clips in the order of (A) to (J) and remove the front door trim assembly from the door panel.

CAUTION:
When removing the door trim, be sure to remove the clips in the correct order. Forcibly removing clips may damage the door panel assembly.

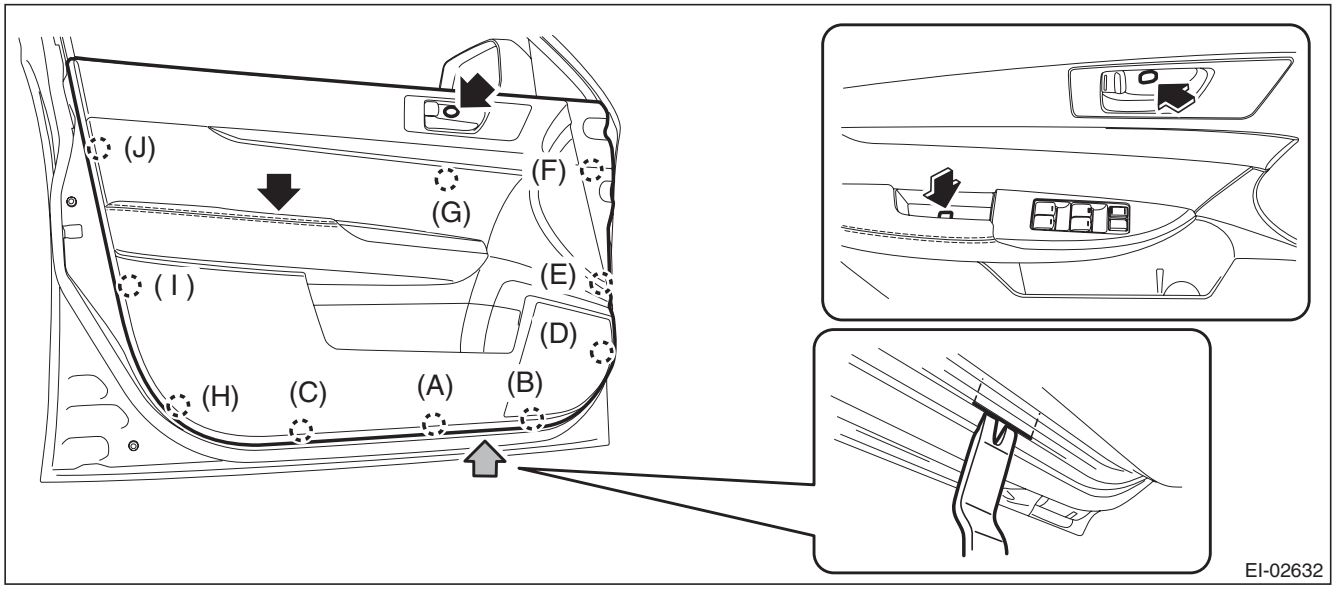

NOTE:
Insert a plastic clip remover into the slit at the bottom of the door trim, to lift the door trim.

GETtheMANUALS.org

(3) Remove the cables (a) and (b) from the cable holder of inner remote.

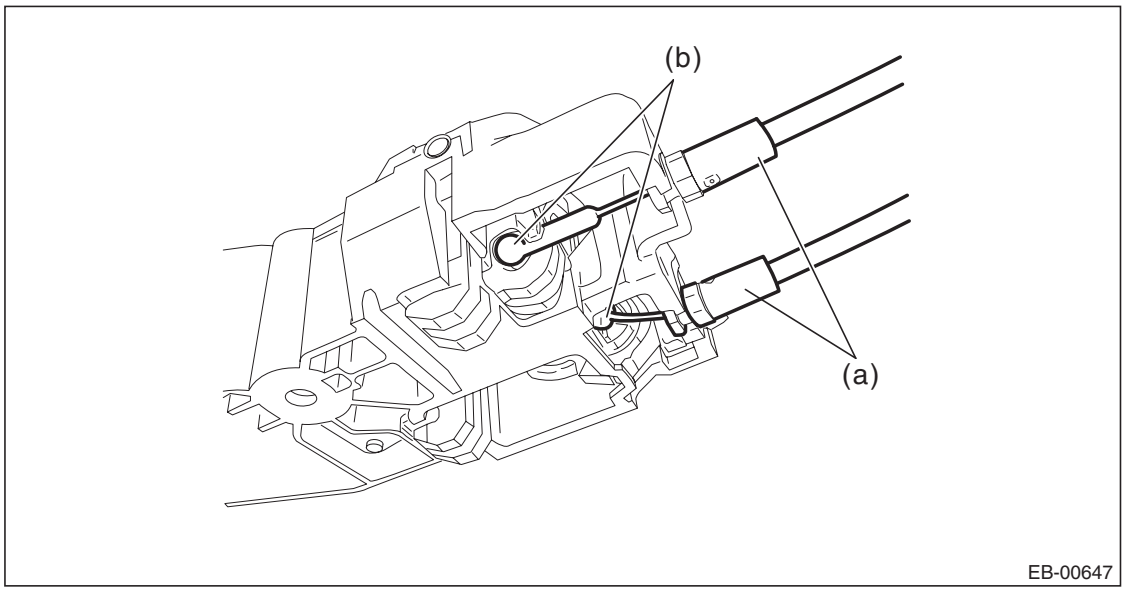

(4) Disconnect the harness connector and remove the door trim assembly.

4) Remove each part as required.

- Inner remote handle: <Ref. to SL-30, REMOVAL, Front Inner Remote.>
- Power window control switch: <Ref. to GW-12, MAIN SWITCH, REMOVAL, Power Window Control Switch.>
- Weather strip inner: <Ref. to EI-62, DISASSEMBLY, Door Trim.>

2. REAR DOOR

1) Disconnect the ground cable from battery.
2) Remove the rear door trim assembly.
   (1) Open the cover and remove the screw.
   (2) Remove the clips in the order of (A) to (H) and remove the rear door trim assembly from the door panel.

CAUTION:
When removing the door trim, be sure to remove the clips in the correct order. Forcibly removing clips may damage the door panel assembly.

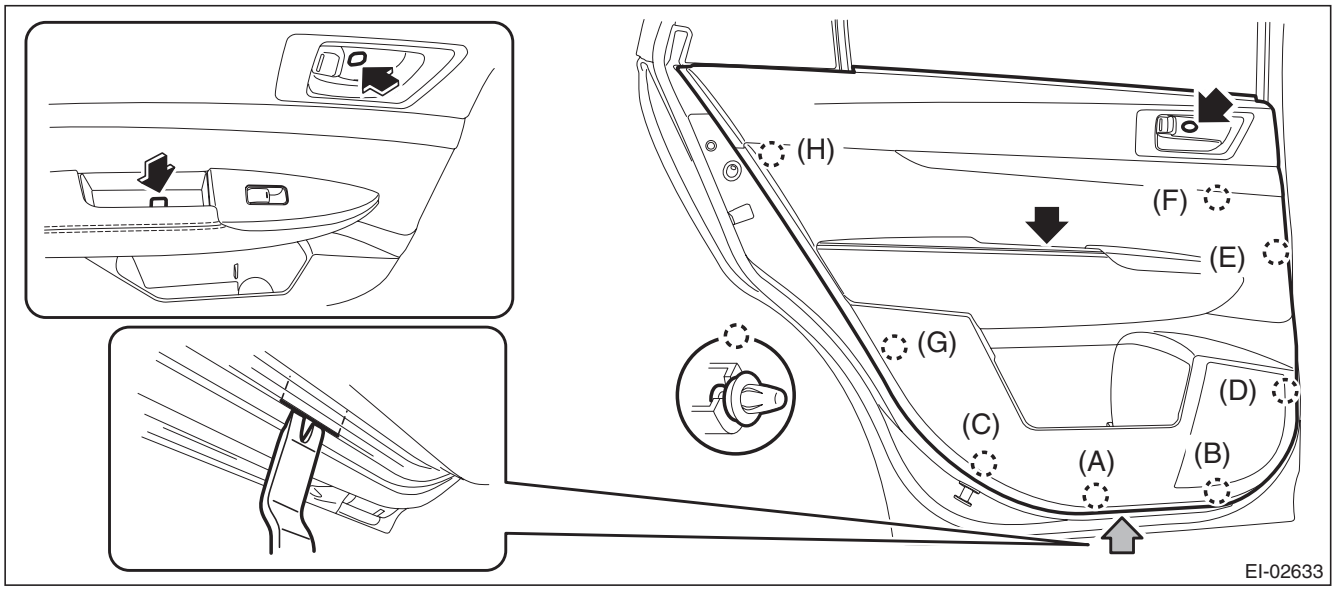

GETtheMANUALS.org

NOTE:
Insert a plastic clip remover into the slit at the bottom of the door trim, to lift the door trim.

(3) Remove the cables (a) and (b) from the cable holder of inner remote.

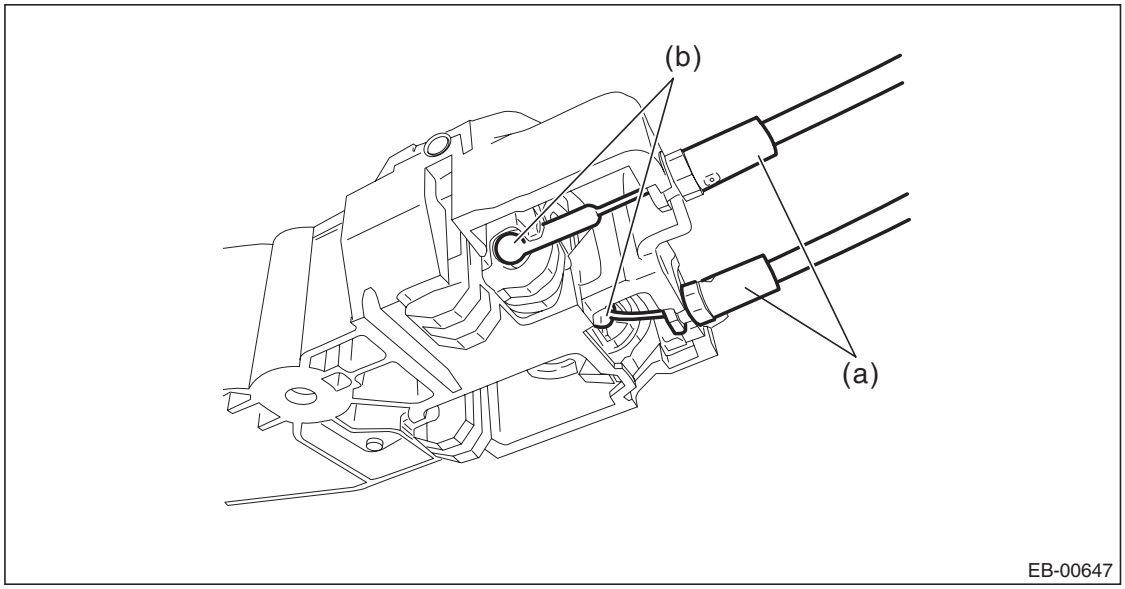

(4) Disconnect the harness connector and remove the door trim.

3) Remove each part as required.

- Inner remote handle: <Ref. to SL-37, REMOVAL, Rear Inner Remote.>
- Power window control switch: <Ref. to GW-13, SUB-SWITCH, REMOVAL, Power Window Control Switch.>
- Weather strip inner: <Ref. to EI-62, DISASSEMBLY, Door Trim.>

B: INSTALLATION

Install each part in the reverse order of removal.

C: DISASSEMBLY

1) Remove the door trim.

2) Remove the rivets and detach the claws, then remove the weather strip inner from the door trim.

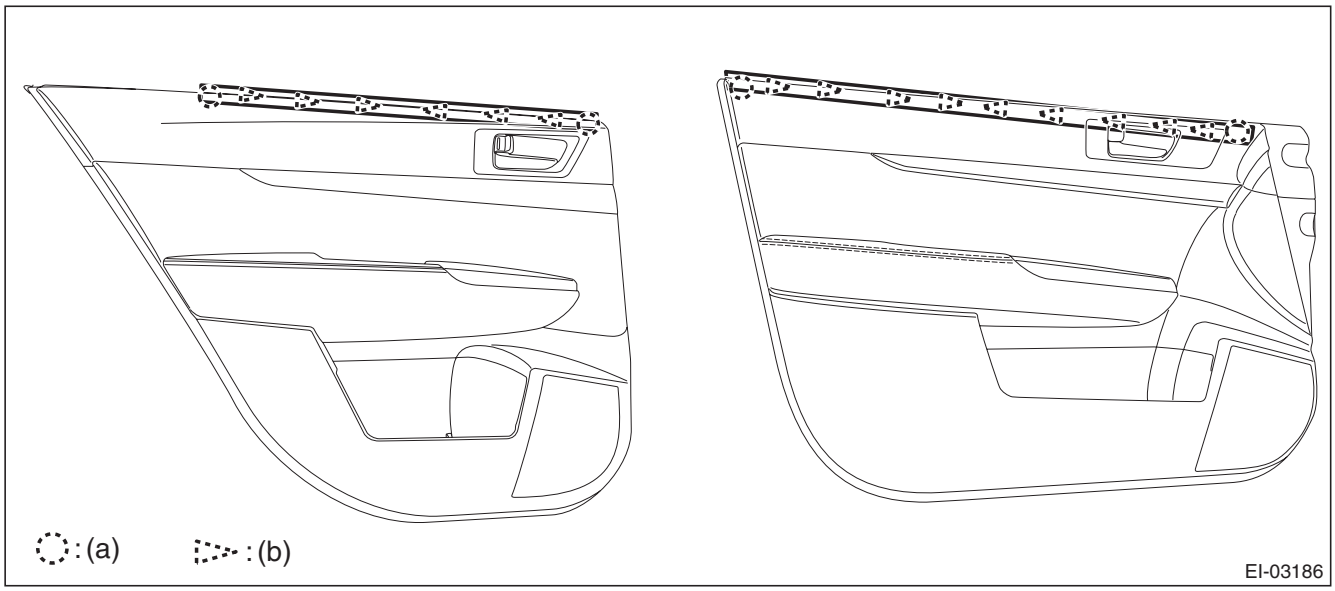

(a) Rivet (b) Claw

GETtheMANUALS.org

NOTE:
Remove the rivets with a rivet cutter or nipper, etc.

D: ASSEMBLY

1) Fold the claws while pressing the weather strip inner to the door trim.

CAUTION:
Beware of the direction of folding the claws.

2) Install the rivets and apply unwoven cloth.

CAUTION:
Set the height of rivet crimped section as 3 mm (0.12 in). If the crimp is not sufficient, press them with pliers, etc. in order not to interfere the door trim.

Preparation tool and item:
Hand riveter (corresponding to ϕ3.2 mm (0.13 in))
Rivet
Unwoven cloth (cut into 15 x 15 mm (0.59 x 0.59 in))

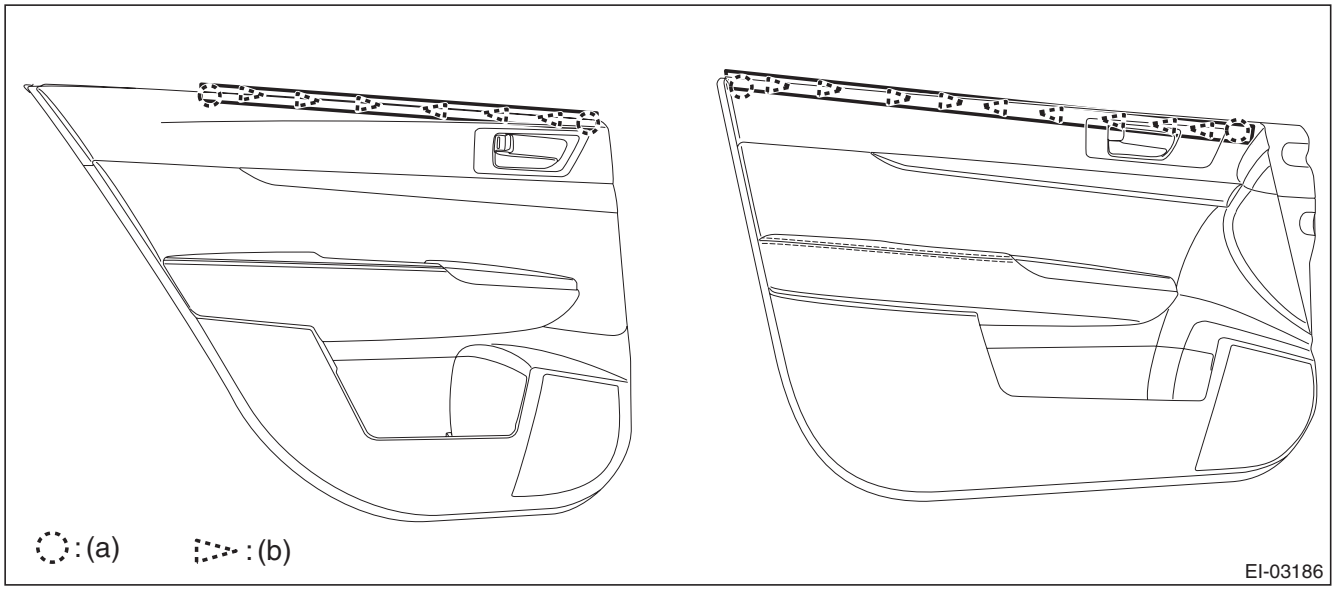

(a) Rivet
(b) Direction of folding claws

3) After installing the weather strip inner, perform the following inspections.
- There is no clearance between the weather strip inner and the door trim.
- No loose fit is found when pulling the weather strip inner lightly.

GETtheMANUALS.org

15.Instrument Panel Lower Cover

A: REMOVAL

1) Disconnect the ground cable from battery.
2) Remove the clips, and remove the instrument panel side cover LH.

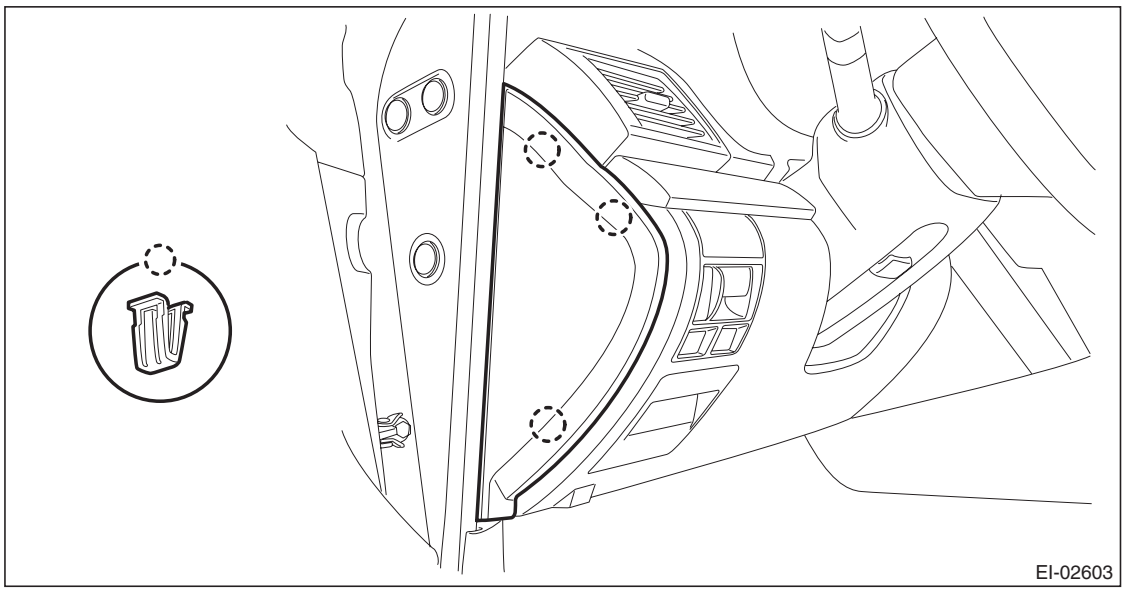

3) Remove the instrument panel lower cover.
   (1) Remove the clips and data link connector, and remove the instrument panel lower cover under.

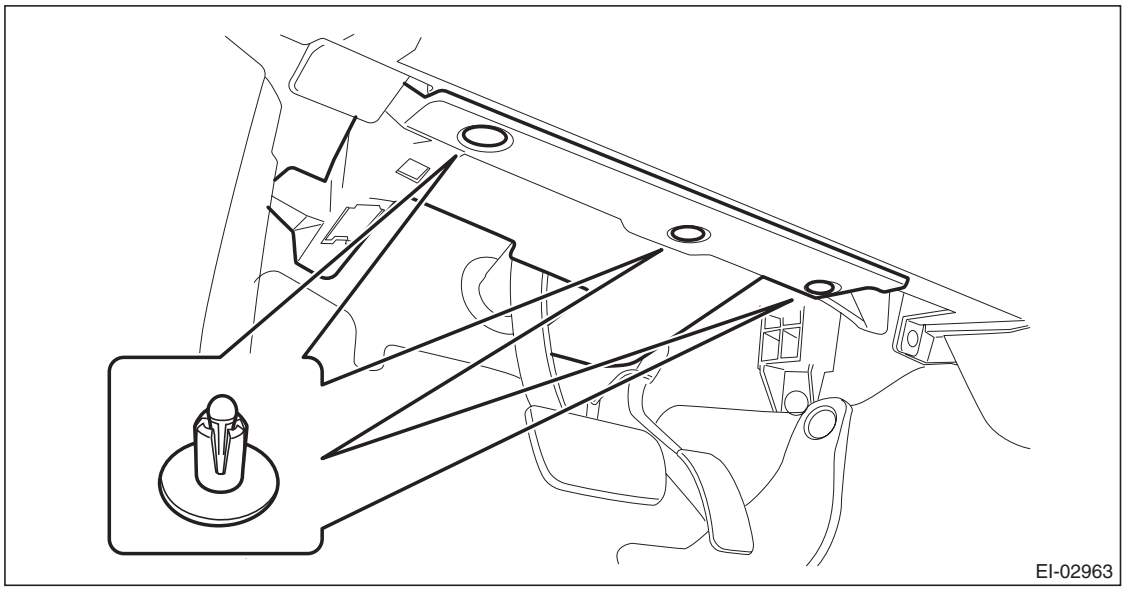

GETtheMANUALS.org

(2) Remove the screws and clips and release the claws, and remove the instrument panel lower cover while disconnecting the harness connectors.

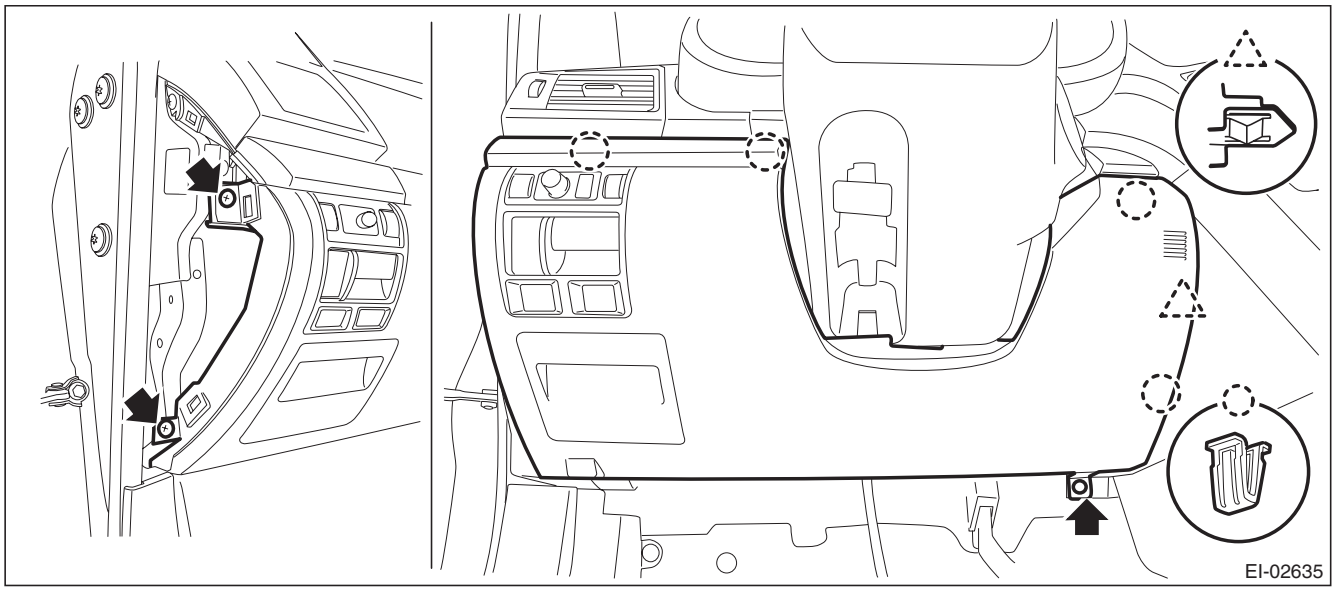

B: INSTALLATION

Install each part in the reverse order of removal.

GETtheMANUALS.org

16. Glove Box

A: REMOVAL

NOTE:
Refer to “Security and Locks” section for key cylinder replacement. <Ref. to SL-63, GLOVE BOX LID, REPLACEMENT, Key Lock Cylinders.>

1) Remove the glove box lid assembly.
   (1) Remove the glove box damper.
   (2) Release the stoppers and remove the glove box lid assembly by pulling it toward you.

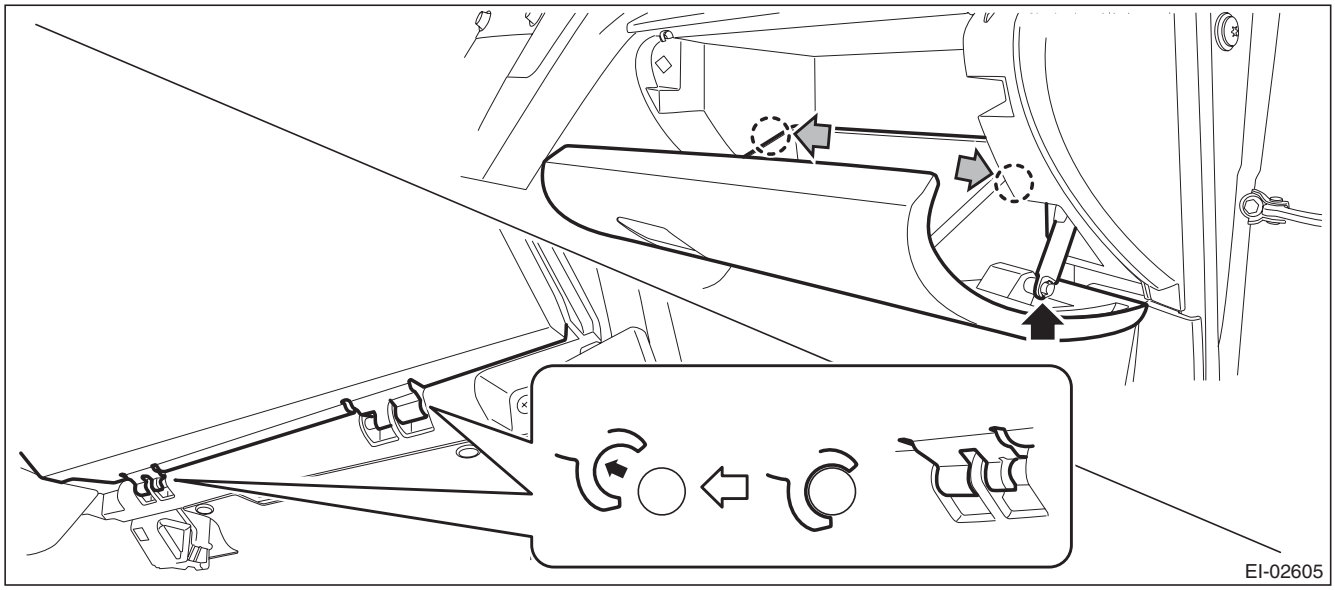

2) Release the clips, and remove the instrument panel side cover RH.

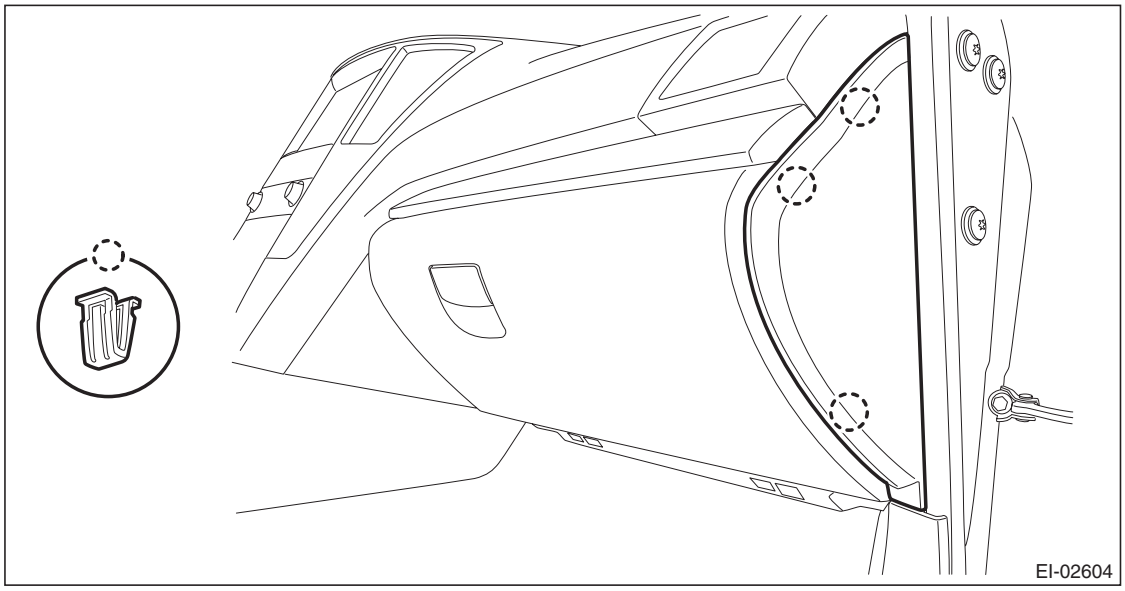

GETtheMANUALS.org

3) Remove the glove box back panel.
   (1) Release the clips, and remove the glove box under cover.

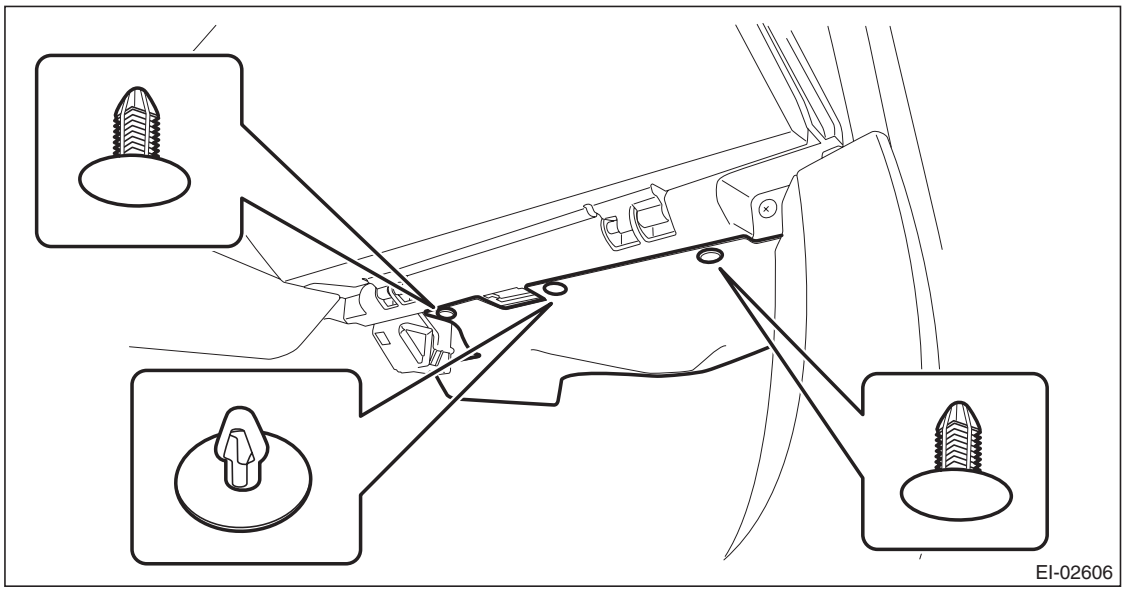

   (2) Release the clips and claws, and remove the ornament panel assembly P.

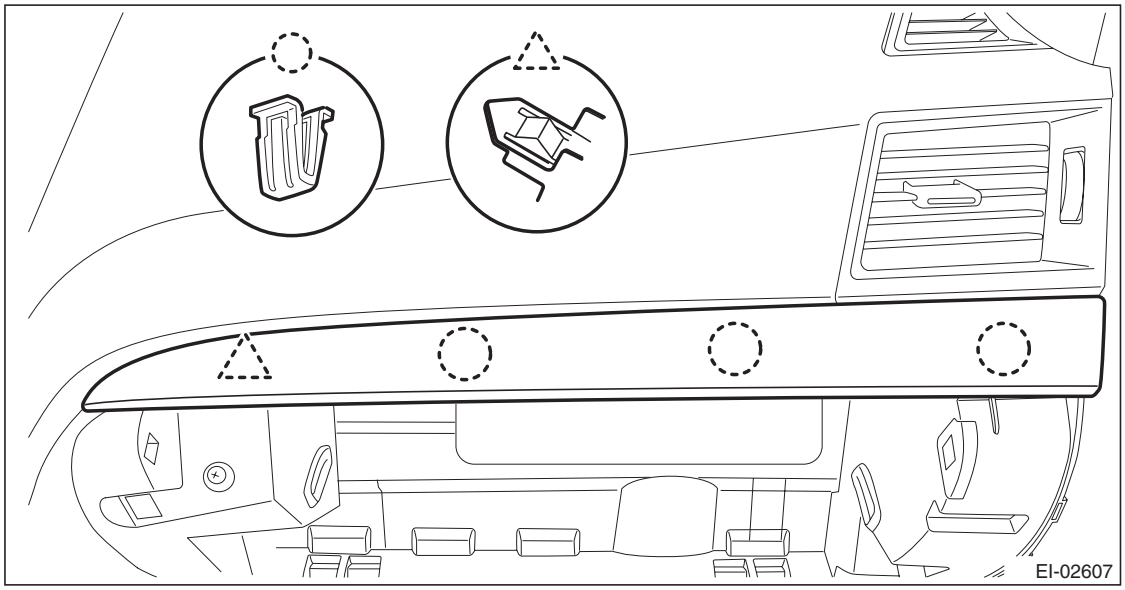

GETtheMANUALS.org

(3) Remove the screws and release the claws, then detach the glove box back panel.

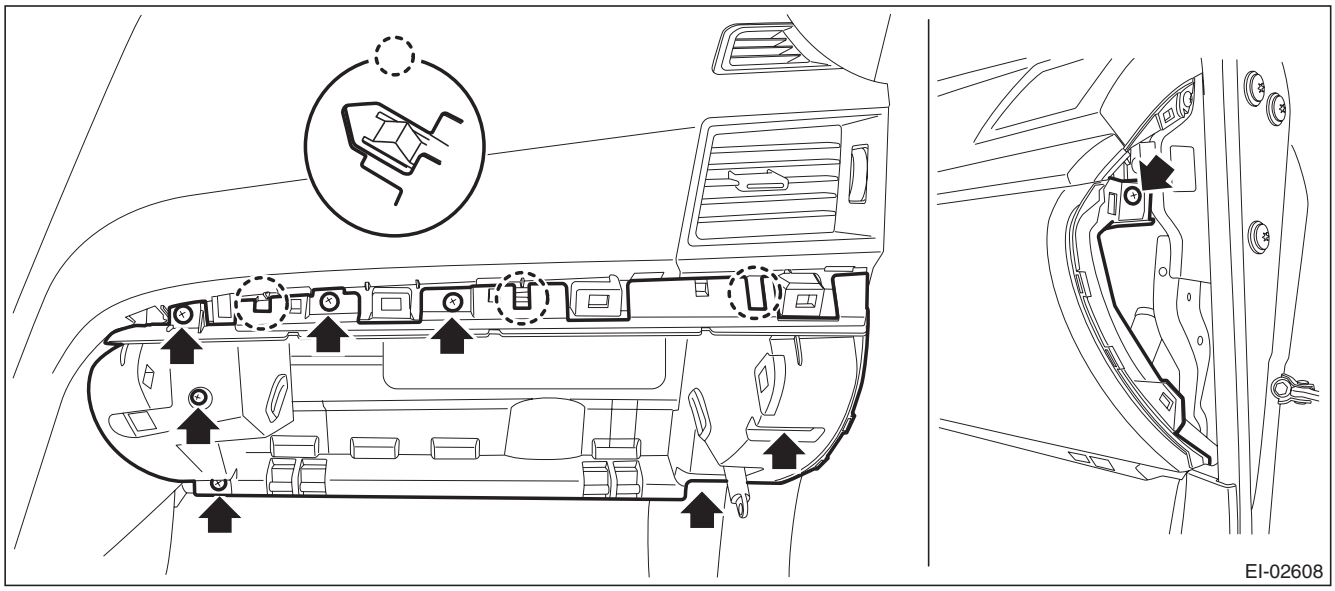

(4) Disconnect the glove box light LED connector.

B: INSTALLATION

Install each part in the reverse order of removal.

GETtheMANUALS.org

17. Center Console

A: REMOVAL

1. CENTER PANEL ASSY

1) Attach the protective tape (a) to the meter visor.
2) Remove the center panel assembly.

CAUTION:
Do not put your finger on the fin of the air vent grille. Doing so may damage the fin.

(1) Attach the protective tape (a) to the meter visor.

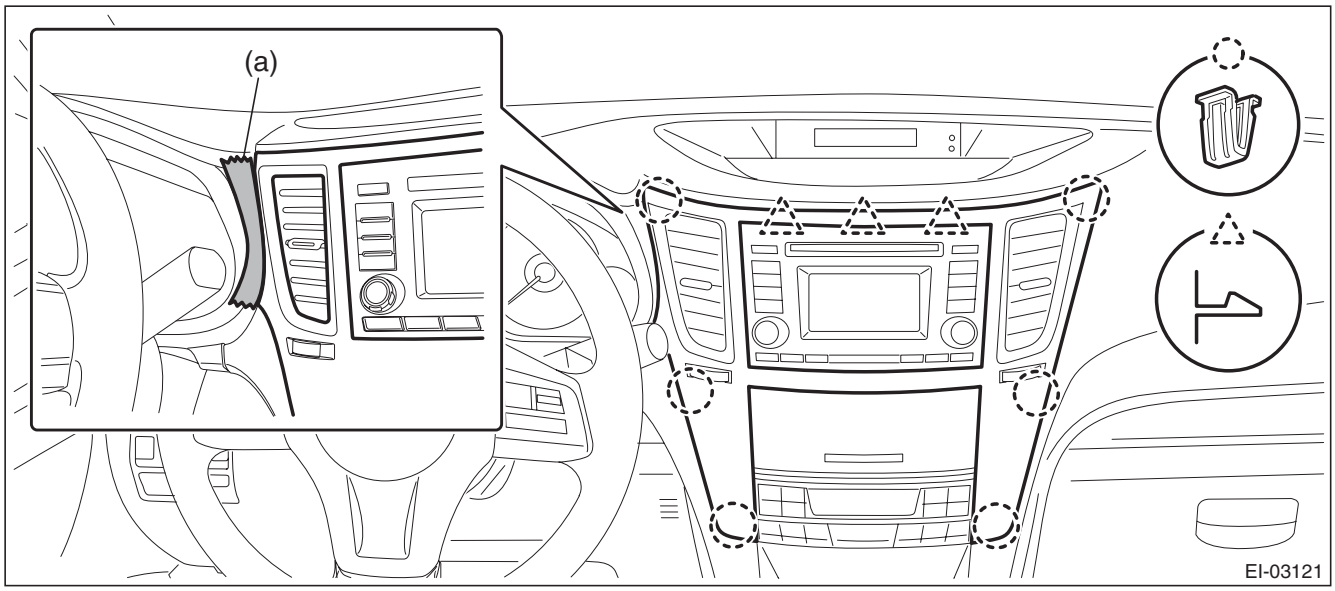

(2) Insert a finger into the air vent grille and release the left and right clips at the top of the center panel. (A), (B)
(3) Insert a finger into the air vent grille and release the left and right clips at the center of the center panel. (C), (D)

GETtheMANUALS.org

(4) Release the clips at the bottom of the center panel and remove the center panel assembly.

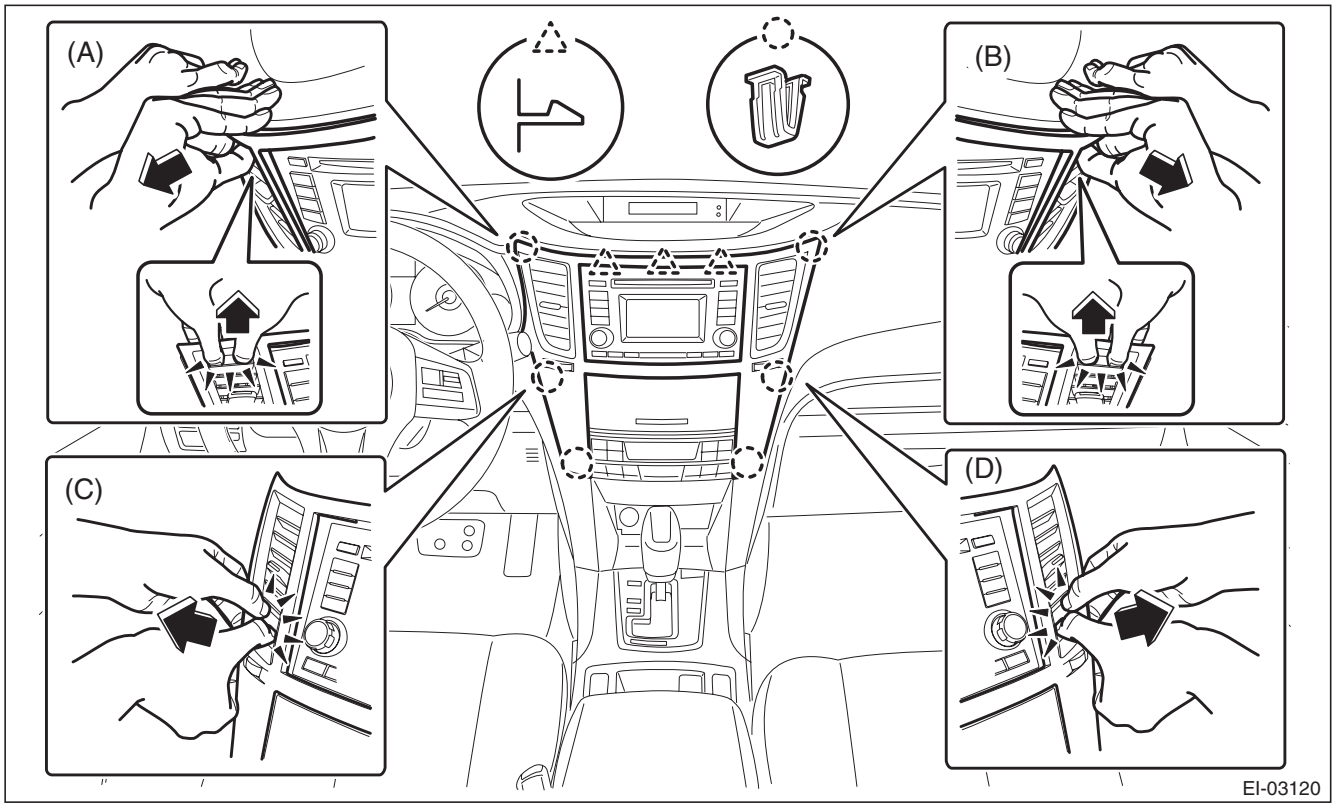

2. CONSOLE FRONT COVER

MT model

1) Remove the console front cover assembly.
   (1) Remove the shift knob.

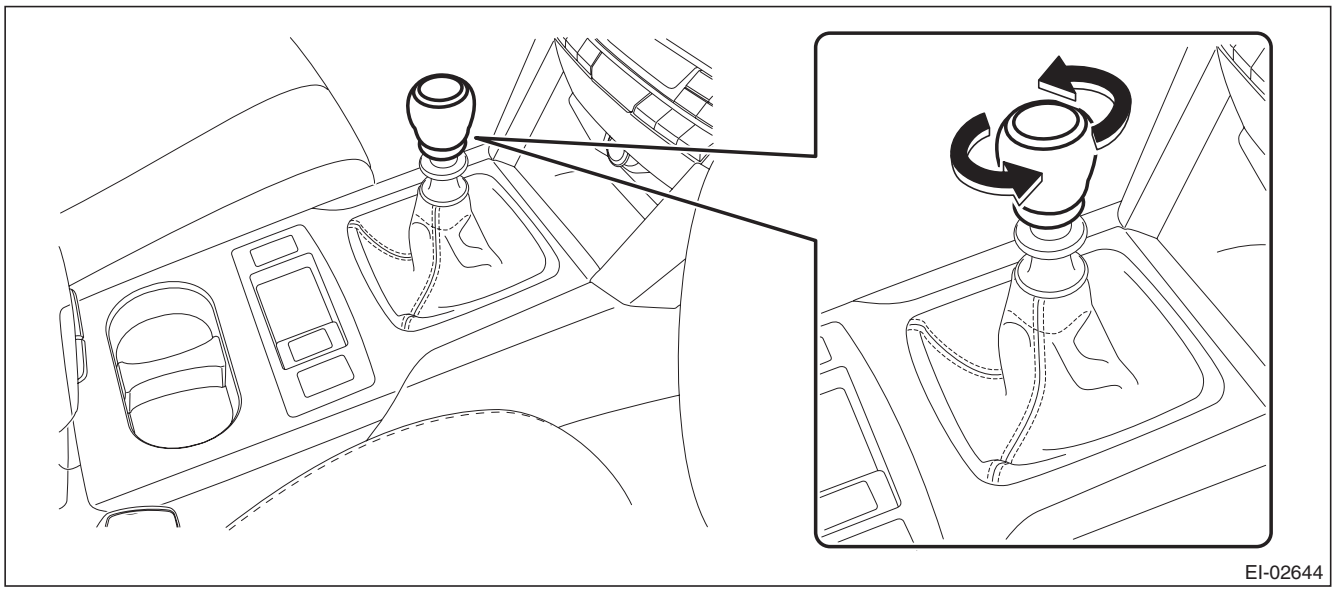

GETtheMANUALS.org

(2) Release the clips and claws, then pull up the console front cover assembly.

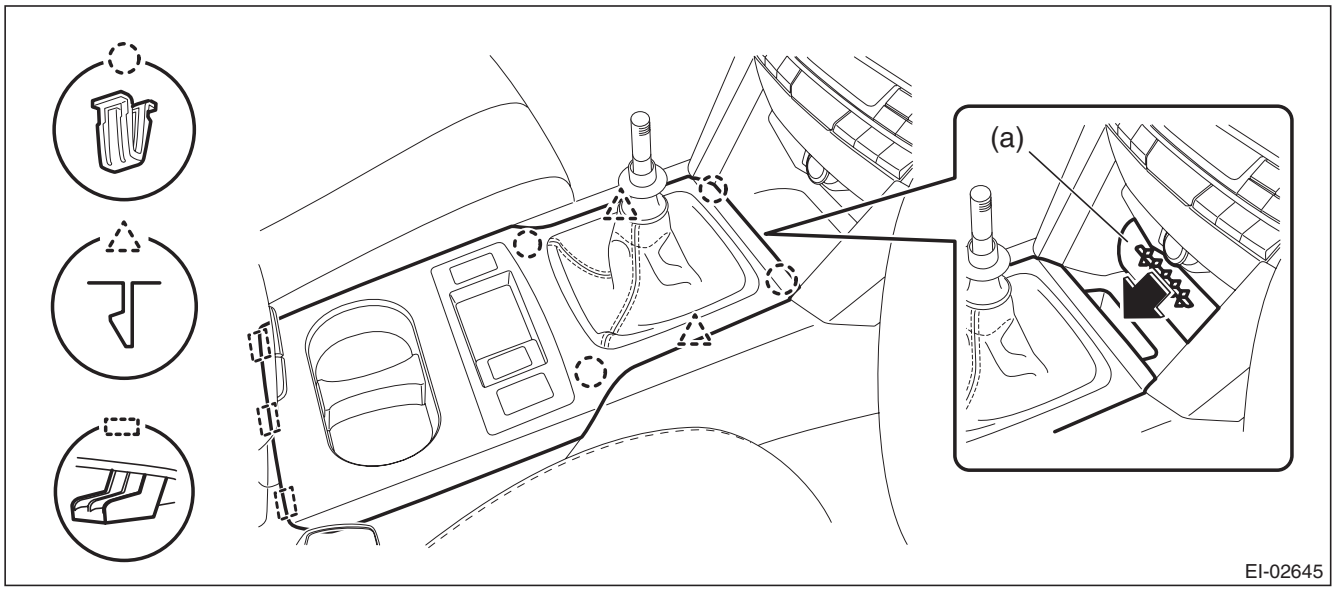

NOTE:
Turn over the front center pocket mat (a) and pull up the console front cover from the slit.

(3) Disconnect the harness connector and remove the console front cover assembly.

AT model

1) Remove the console front cover assembly.
   (1) Remove the select lever knob.
      a) Lower the cover grip AT.
      b) Remove the clamp grip pin, then remove the select lever knob.

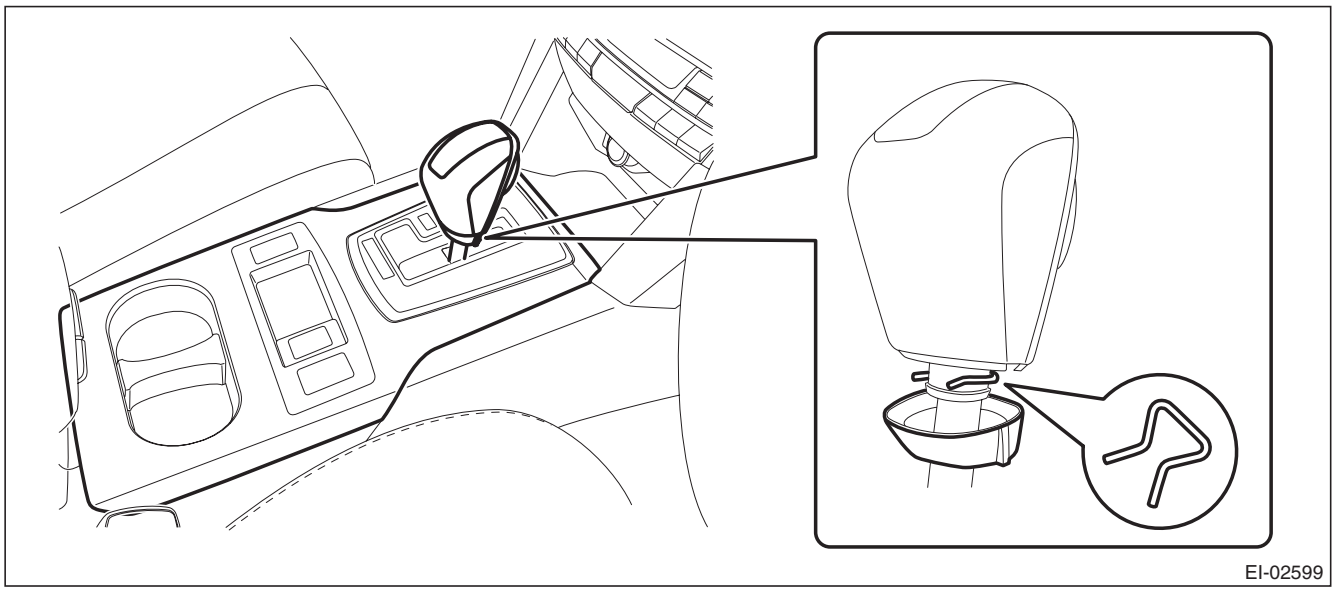

GETtheMANUALS.org

(2) Release the clips and claws, then pull up the console front cover assembly.

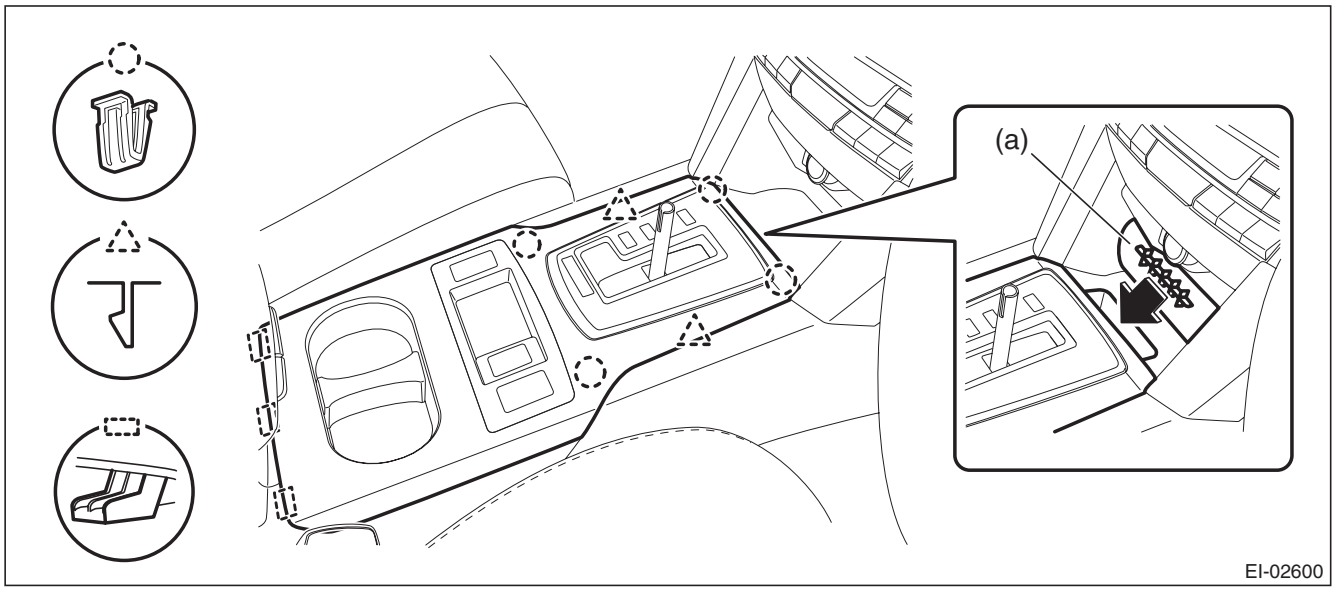

NOTE:
Turn over the front center pocket mat (a) and pull up the console front cover from the slit.

(3) Disconnect the harness connector and remove the console front cover assembly.

B: INSTALLATION

Install each part in the reverse order of removal.

GETtheMANUALS.org

18. Console Box

A: REMOVAL

1) Remove the console front cover assembly.

- MT model
  1. Remove the shift knob.
  2. Release the clips and claws, then pull up the console front cover assembly.

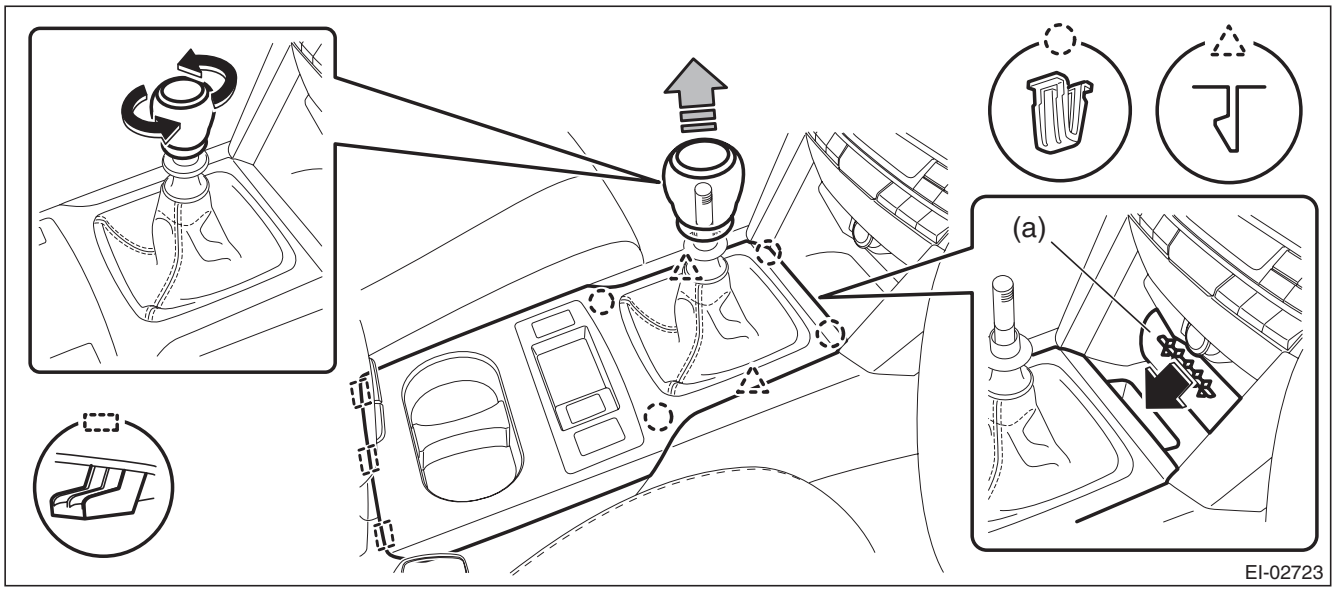

NOTE:
Turn over the front center pocket mat (a) and pull up the console front cover from the slit.

  3. Disconnect the harness connector and remove the console front cover assembly.

- AT model
  1. Remove the select lever knob.
     a. Lower the cover grip AT.
     b. Remove the clamp grip pin, then remove the select lever knob.
  2. Release the clips and claws, then pull up the console front cover assembly.

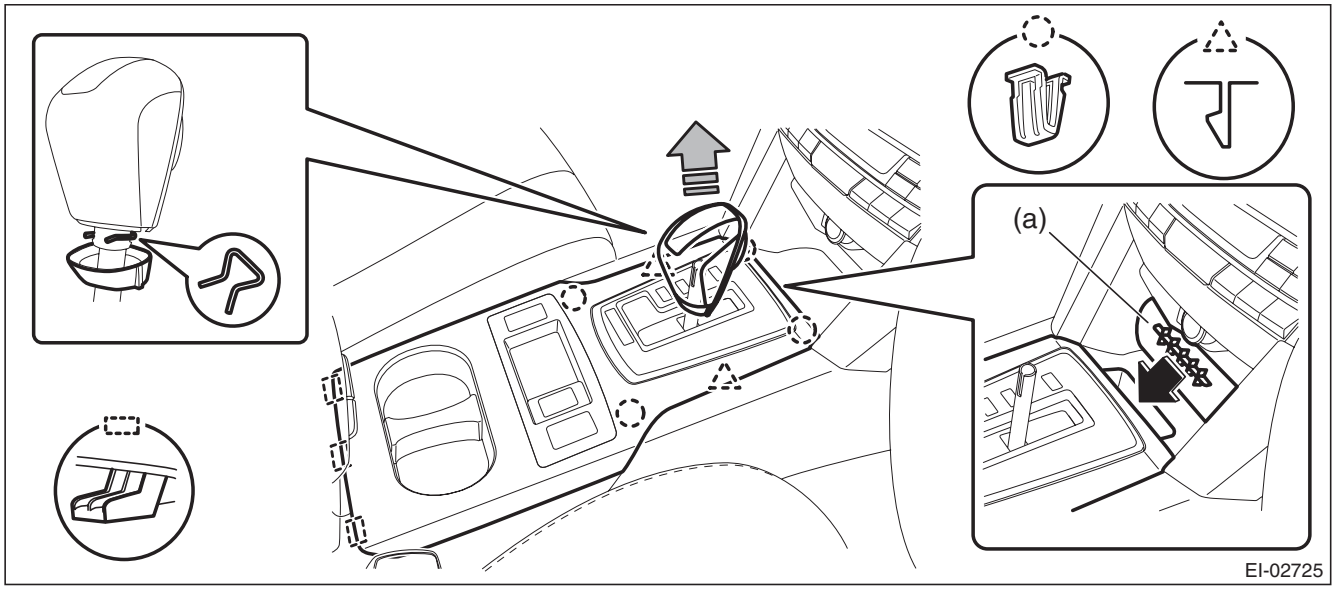

NOTE:
Turn over the front center pocket mat (a) and pull up the console front cover from the slit.

  3. Disconnect the harness connector and remove the console front cover assembly.

GETtheMANUALS.org

2) Remove the left and right console front side cover assembly.
   (1) Remove the screws and release the clip engagings (A) to (D) in order.
   (2) Remove the console front side cover assembly by pulling it up.

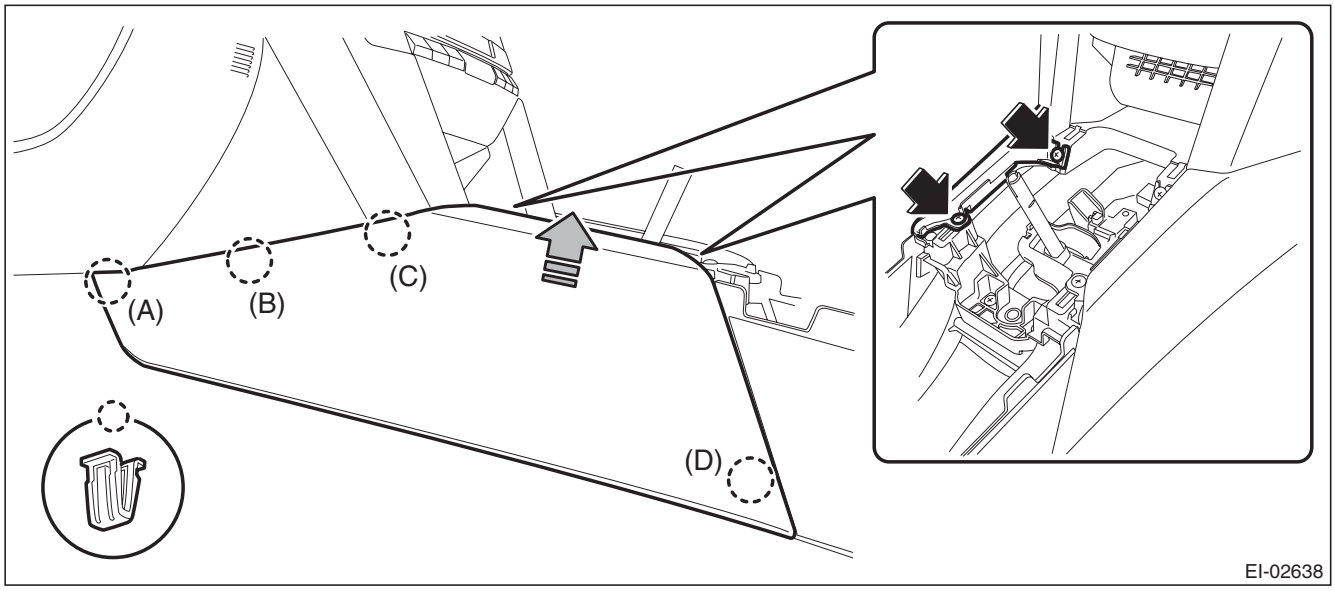

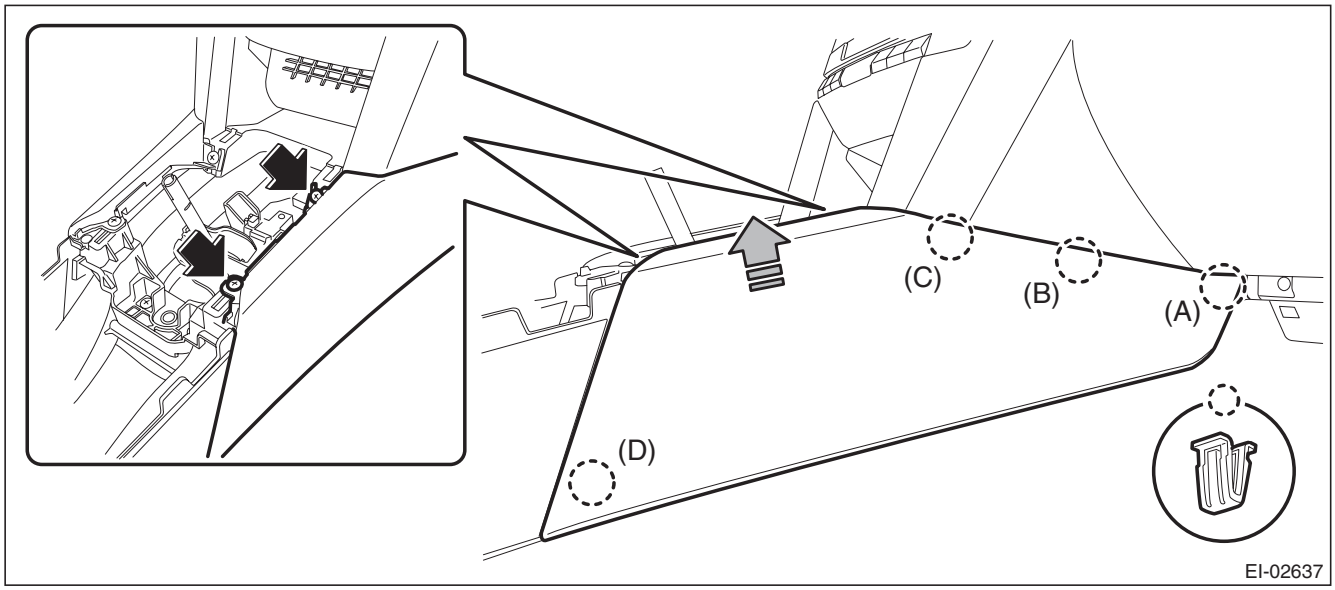

GETtheMANUALS.org

3) Remove the console box assembly.
(1) Move the seat forward, and remove the bolts after detaching the left and right caps.

NOTE:
For a model with power seat, connect the battery ground cable and move the seat. Then, disconnect the battery ground cable again and wait for 60 seconds at least before restarting the work.

(2) Remove the screws, disconnect the harness connector and remove the console box assembly.

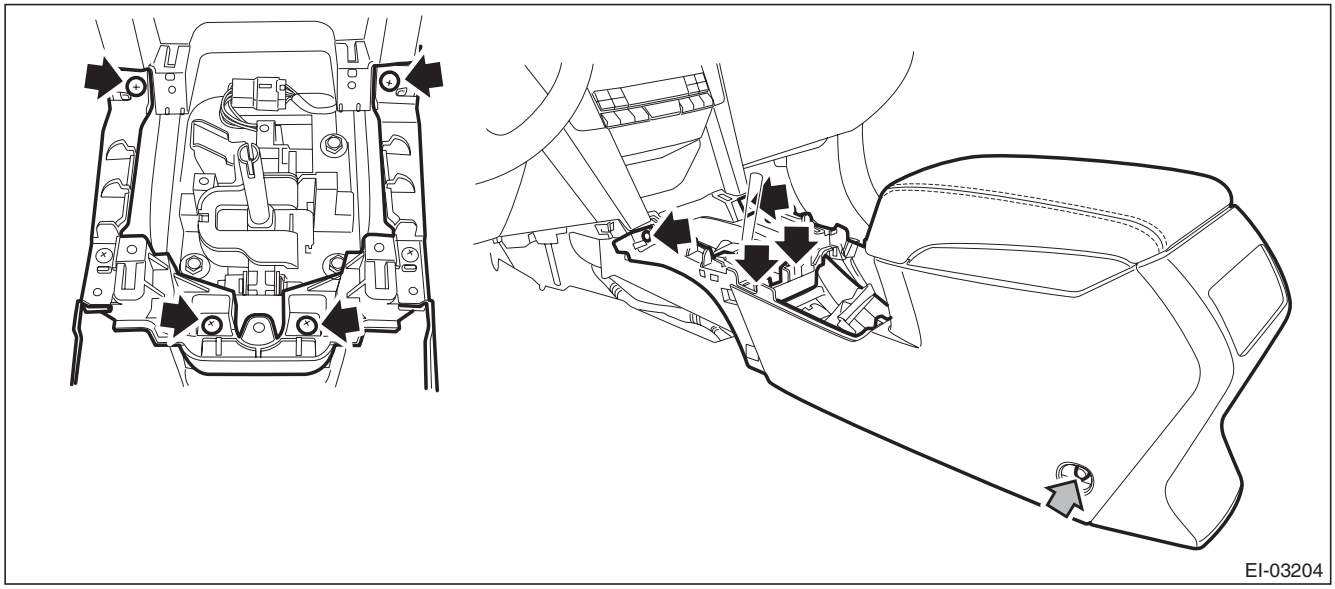

B: INSTALLATION

Install each part in the reverse order of removal.

Tightening torque:
6.5 N·m (0.66 kgf-m, 4.8 ft-lb)

GETtheMANUALS.org

19.Instrument Panel Assembly

A: REMOVAL

CAUTION:
Be careful not to damage the airbag system harness when servicing the instrument panel. Damage may cause the system to malfunction.

1) Disconnect the ground cable from battery.
2) Remove the console front cover assembly.

- MT model
  1. Remove the shift knob.
  2. Release the clips and claws, then pull up the console front cover assembly.

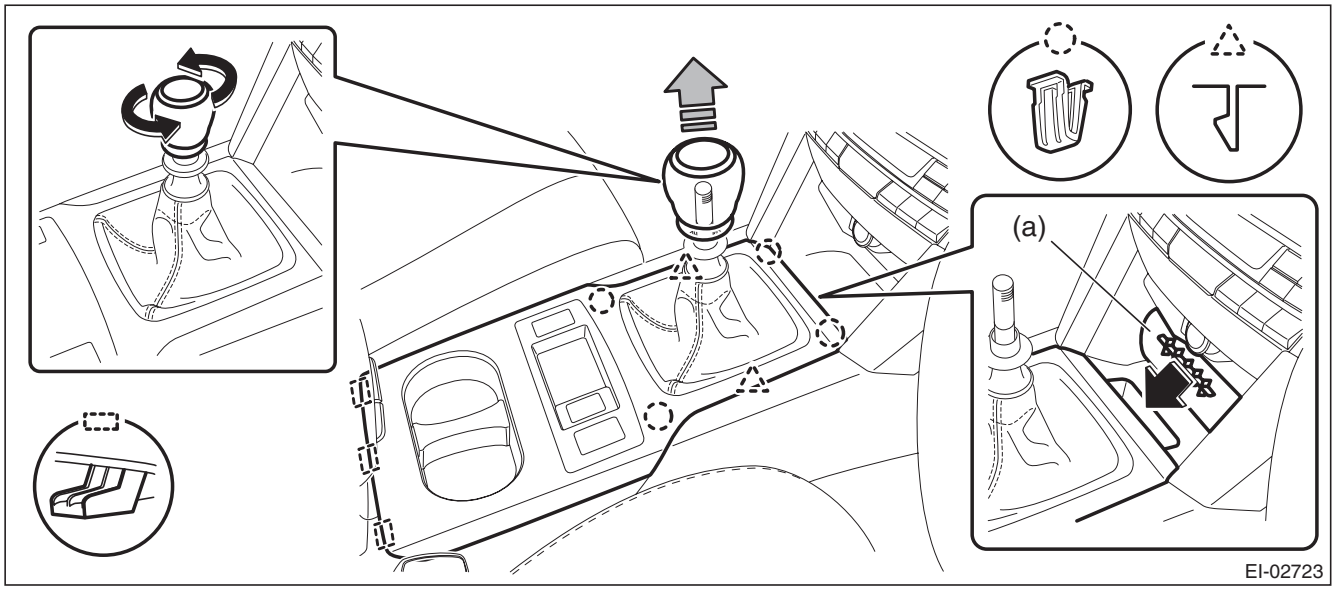

NOTE:
Turn over the front center pocket mat (a) and pull up the console front cover from the slit.

  3. Disconnect the harness connector and remove the console front cover assembly.

GETtheMANUALS.org

- AT model
  1. Remove the select lever knob.
     a. Lower the cover grip AT.
     b. Remove the clamp grip pin, then remove the select lever knob.
  2. Release the clips and claws, then pull up the console front cover assembly.

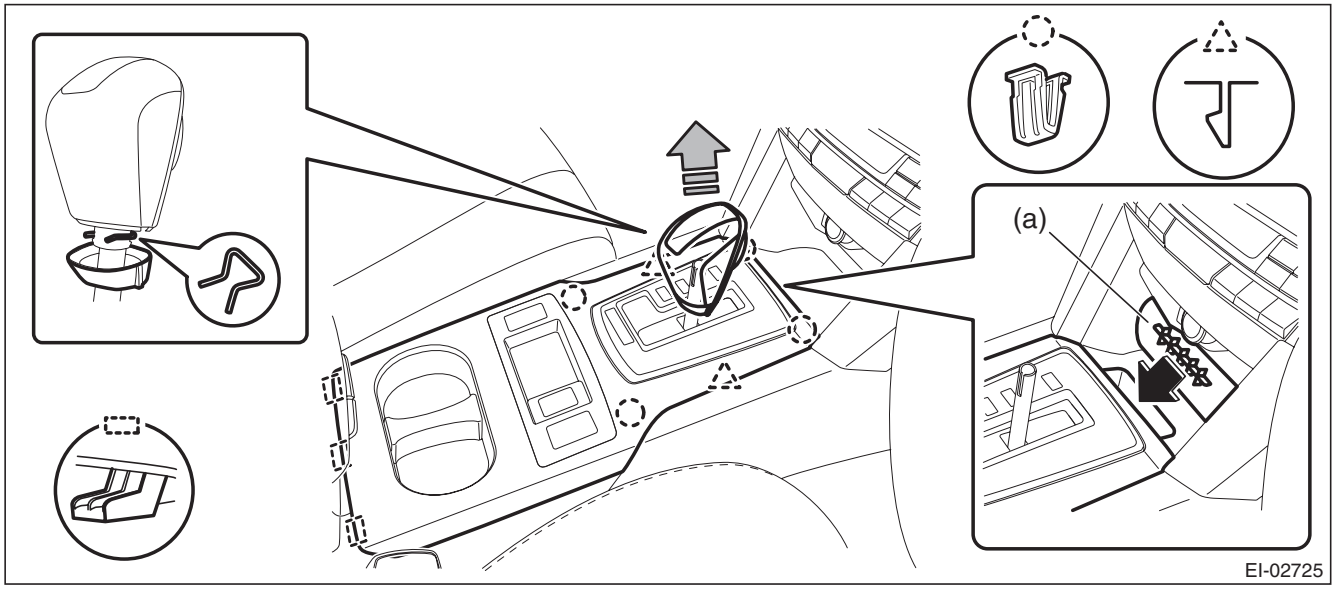

NOTE:
Turn over the front center pocket mat (a) and pull up the console front cover from the slit.

  3. Disconnect the harness connector and remove the console front cover assembly.

3) Remove the left and right console front side cover assembly.
   (1) Remove the screws and release the clips (A) to (D) in order.
   (2) Remove the console front side cover assembly by pulling it up.

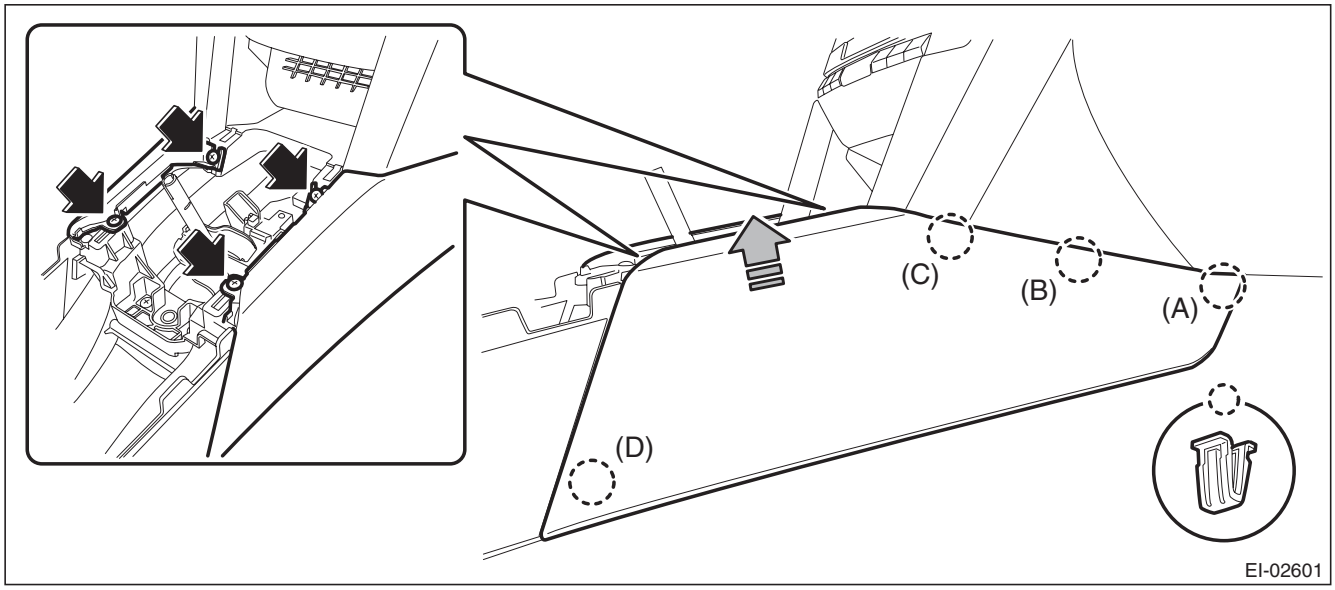

GETtheMANUALS.org

4) Remove the console box assembly.
(1) Move the seat forward, and remove the bolts after detaching the left and right caps.

NOTE:
For a model with power seat, connect the battery ground cable and move the seat. Then, disconnect the battery ground cable again and wait for 60 seconds at least before restarting the work.

(2) Remove the screws, disconnect the harness connector and remove the console box assembly.

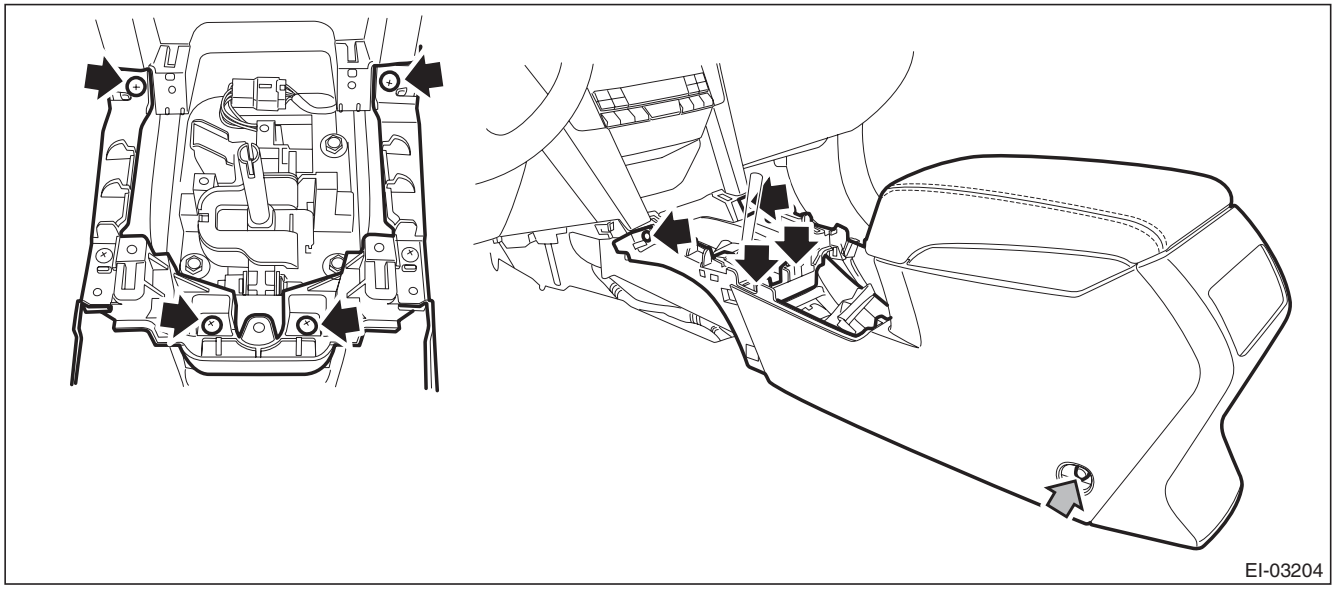

5) Remove the instrument panel lower cover.
(1) Remove the clips, and remove the instrument panel side cover LH.

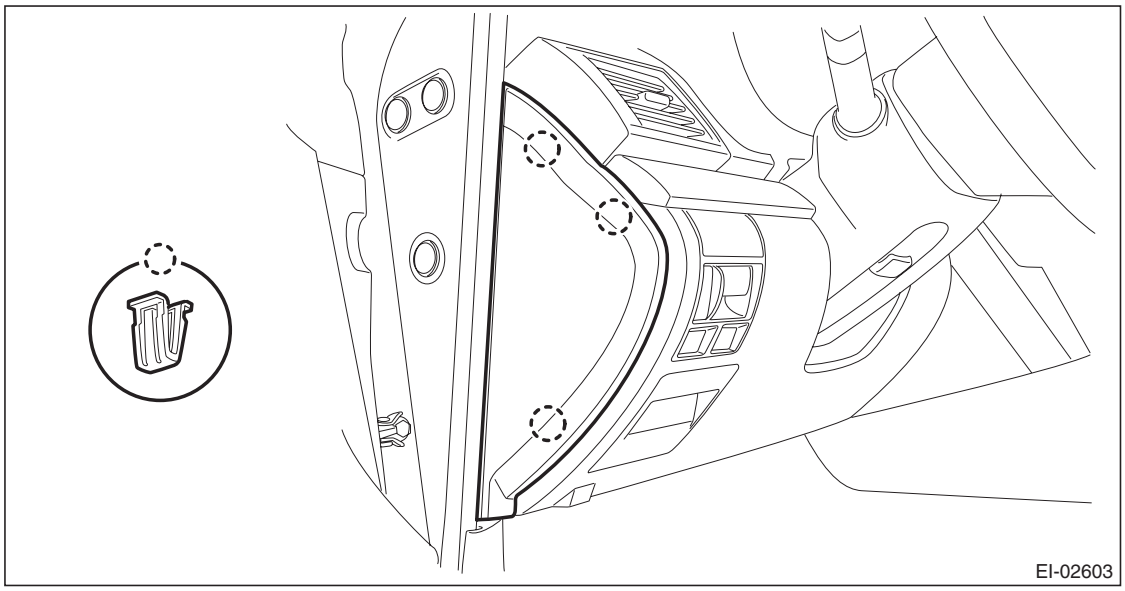

GETtheMANUALS.org

(2) Remove the clips and data link connector, and remove the instrument panel lower cover under.

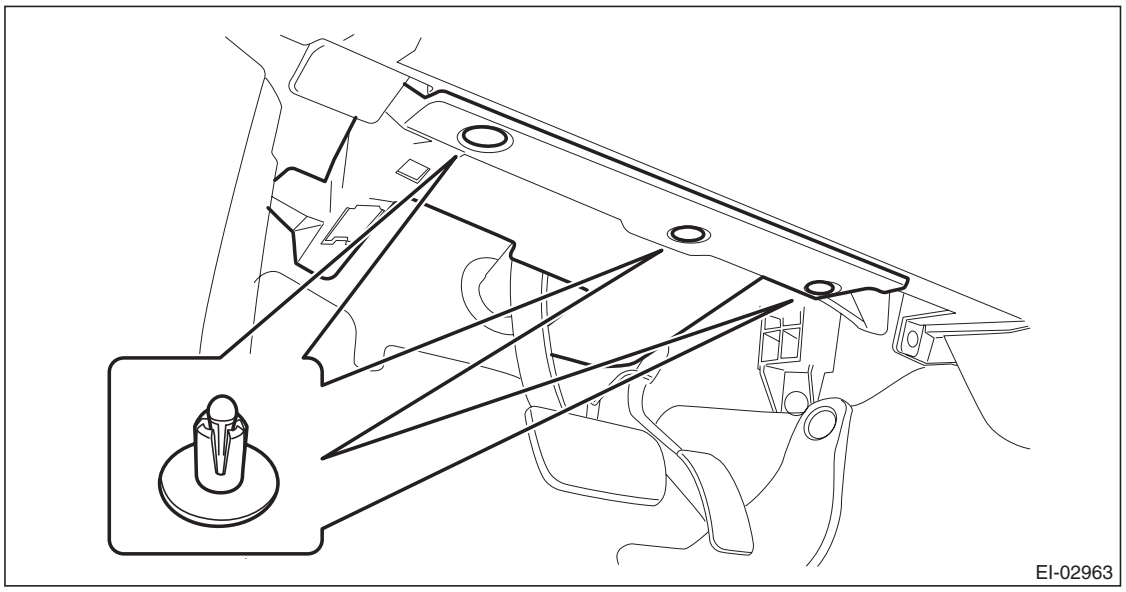

(3) Remove the screws and clips and release the claws, and remove the instrument panel lower cover while disconnecting the harness connectors.

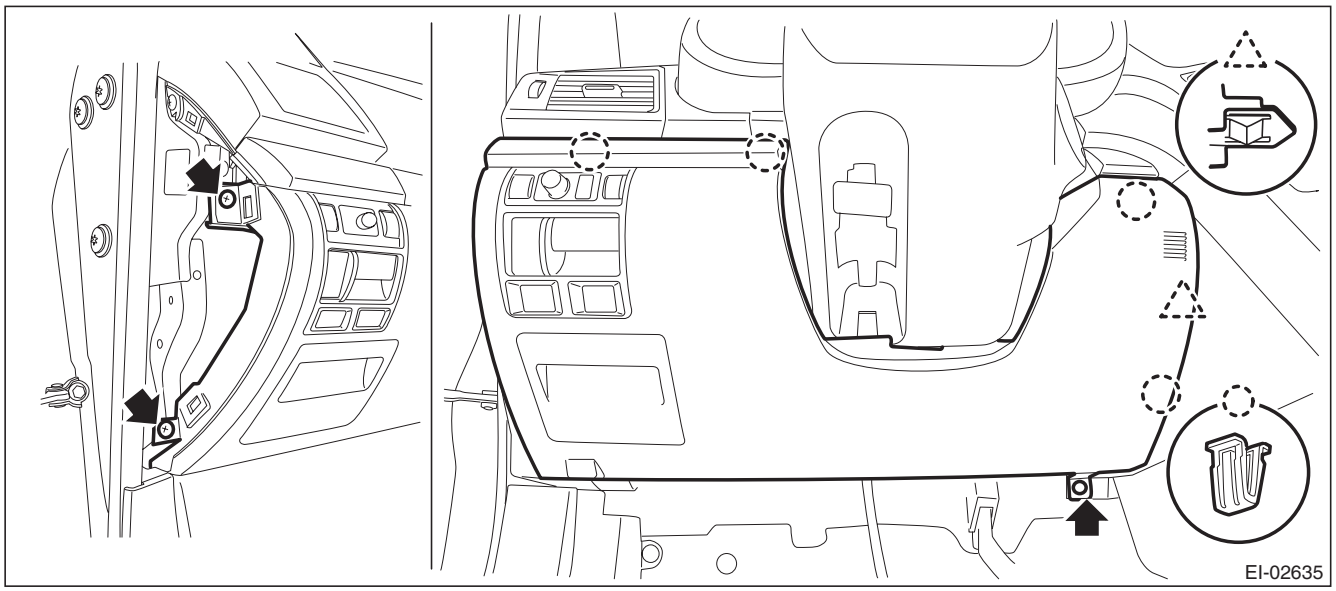

GETtheMANUALS.org

6) Remove the center panel assembly.

CAUTION:
Do not put your finger on the fin of the air vent grille. Doing so may damage the fin.

(1) Attach the protective tape (a) to the meter visor.

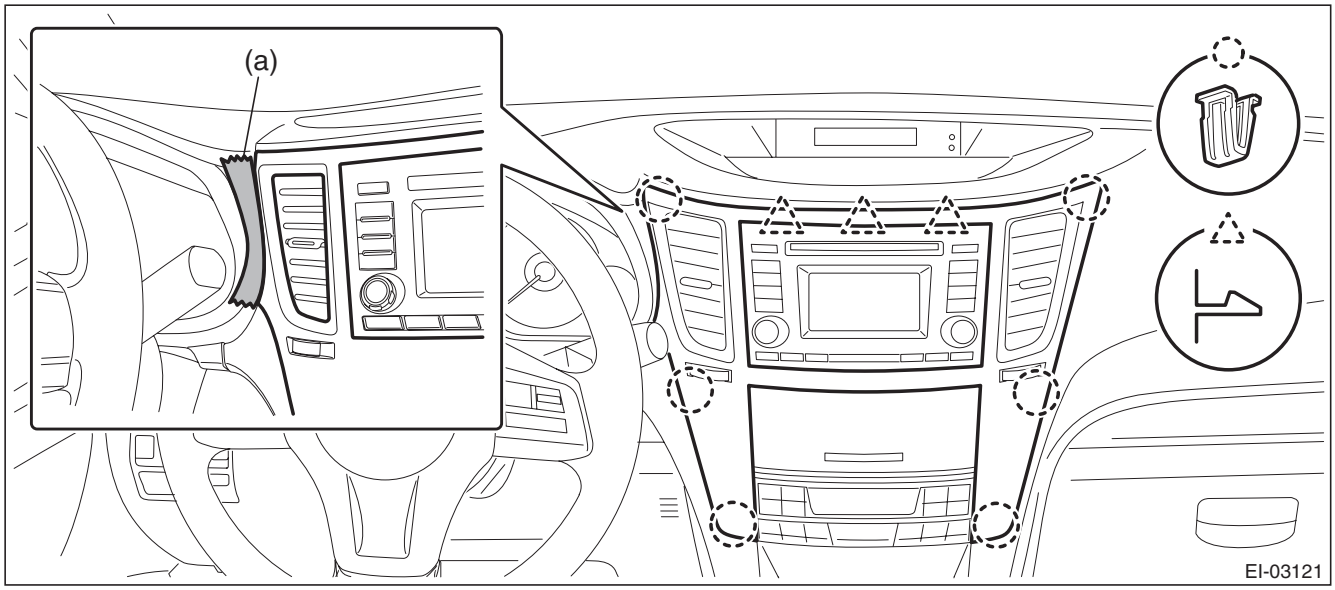

(2) Insert a finger into the air vent grille and release the left and right clips at the top of the center panel. (A), (B)

(3) Insert a finger into the air vent grille and release the left and right clips at the center of the center panel. (C), (D)

(4) Release the clips at the bottom of the center panel and remove the center panel assembly.

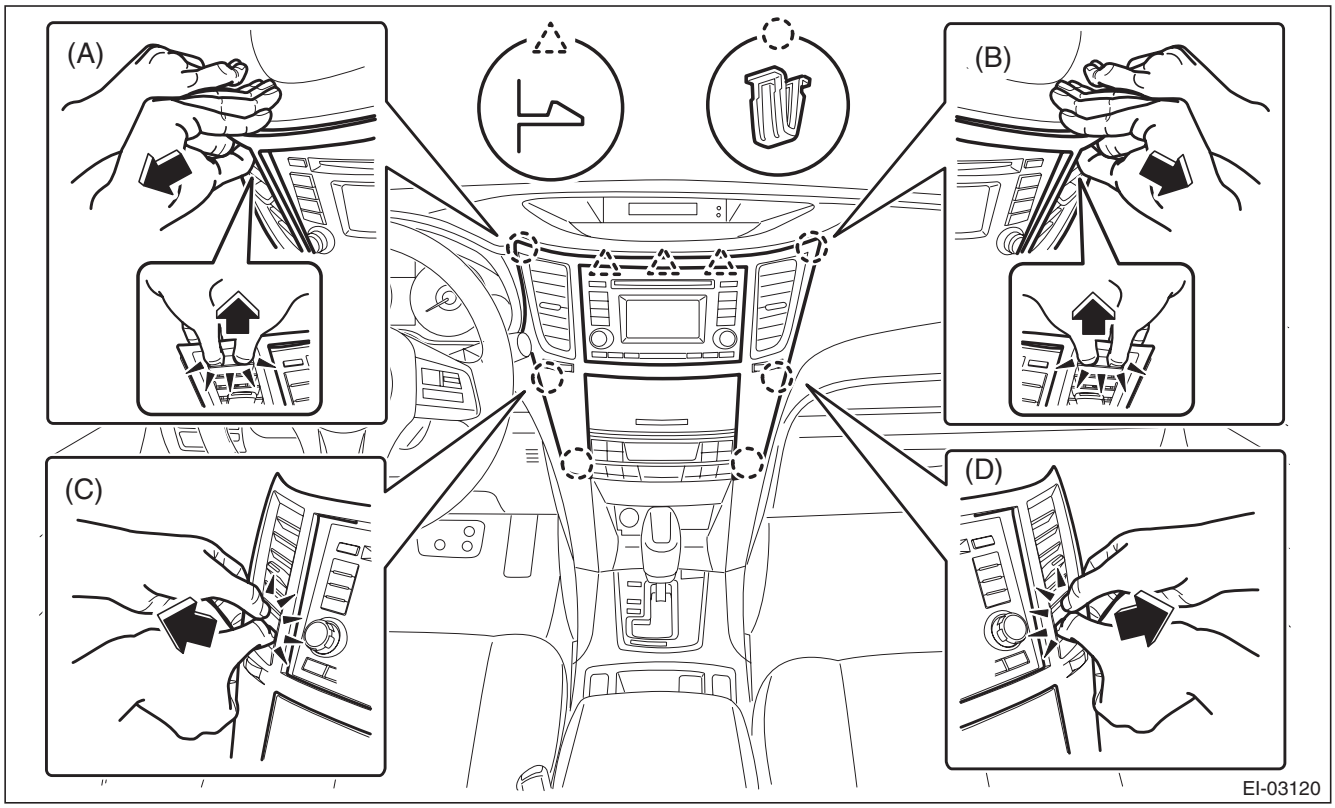

GETtheMANUALS.org

7) Remove the combination meter assembly.

CAUTION:
- **Be careful not to damage the meter or instrument panel.**
- **Pay particular attention to avoid damaging the meter glass.**

(1) Remove the screws and release the claws, then detach the starter cover assembly.

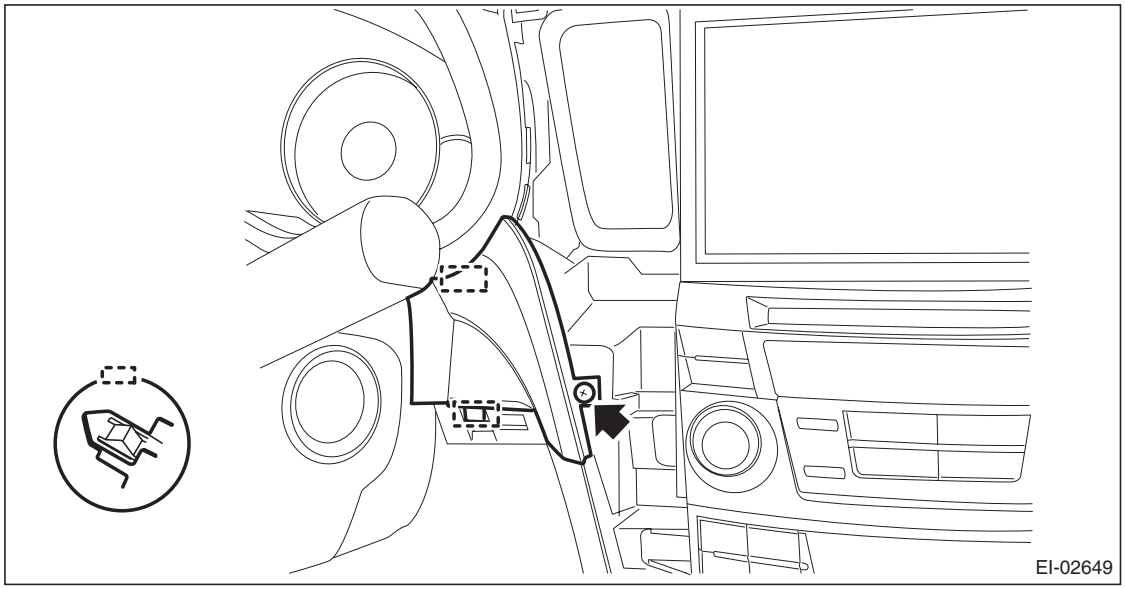

(2) Release the lock, tilt the steering column to the lowest end and fully extend the column by the telescopic system.

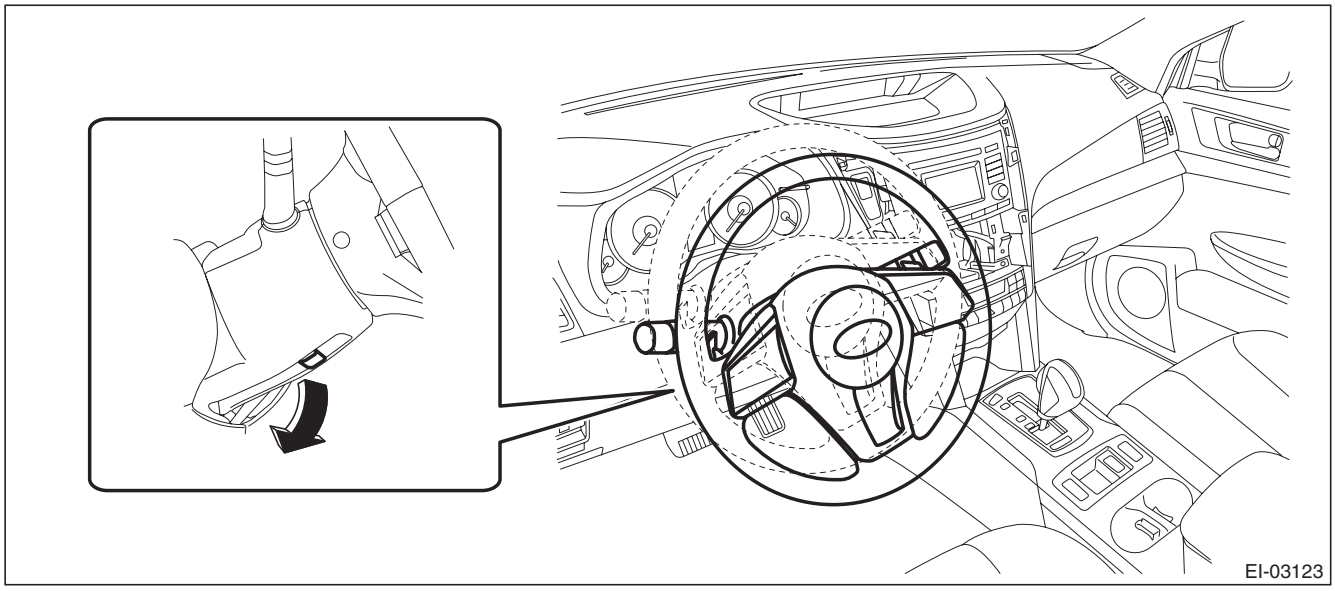

GETtheMANUALS.org

(3) Release the screws and clips, then detach the meter visor assembly.

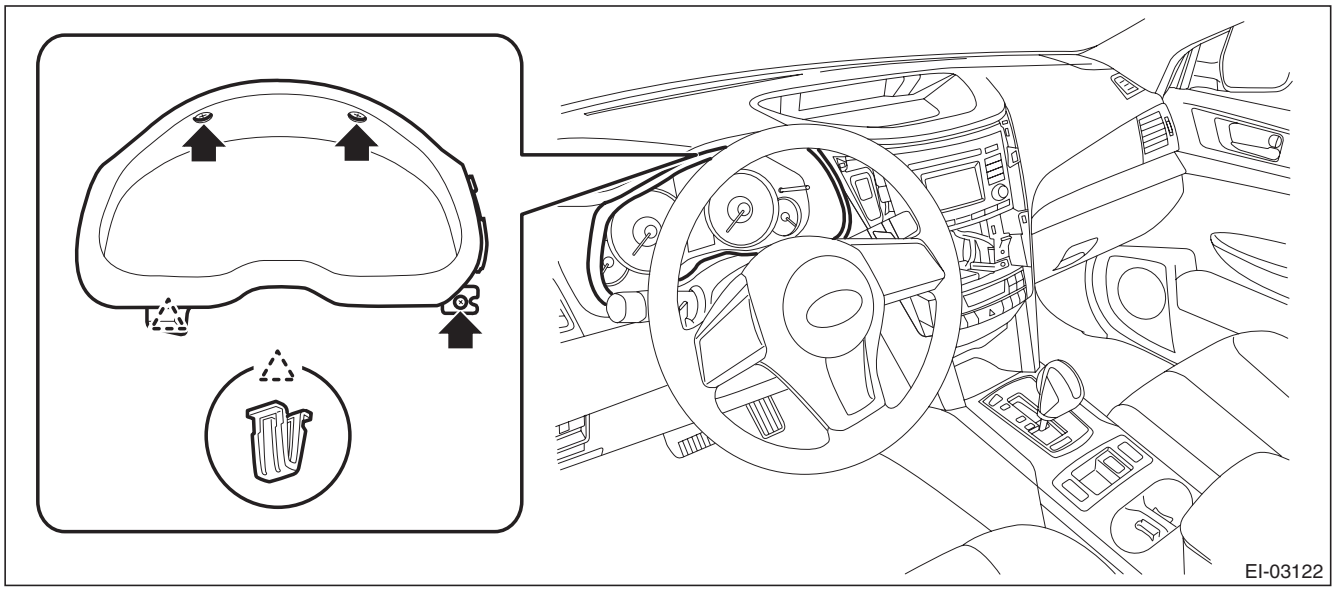

(4) Remove the screws and pull the steering COMPL upper cover toward you.

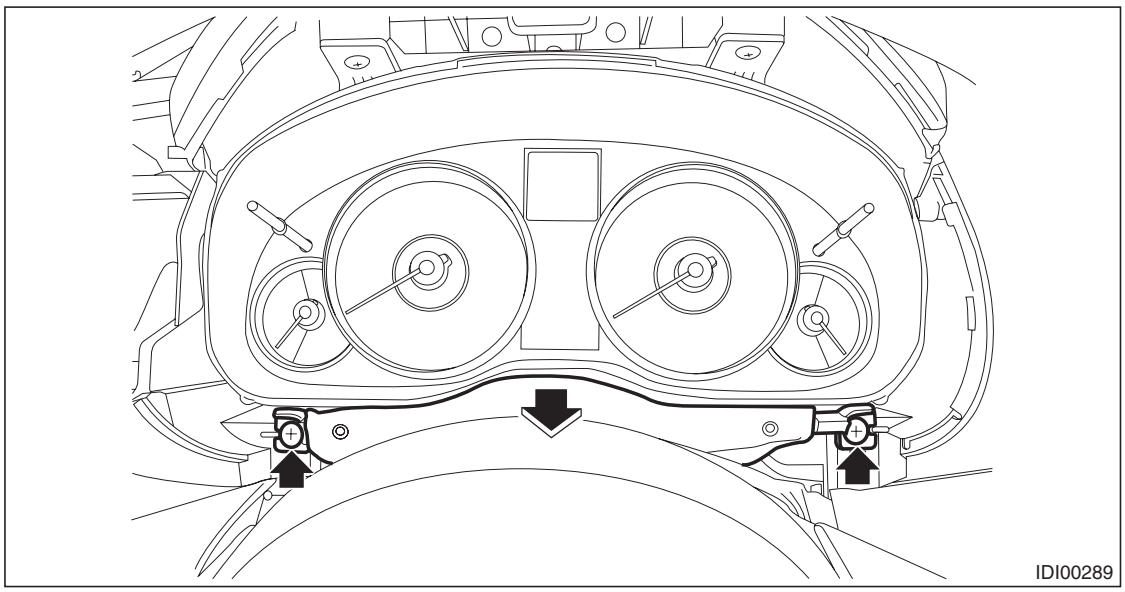

GETtheMANUALS.org

(5) Remove the four screws and pull out the combination meter toward you to disconnect the connectors.

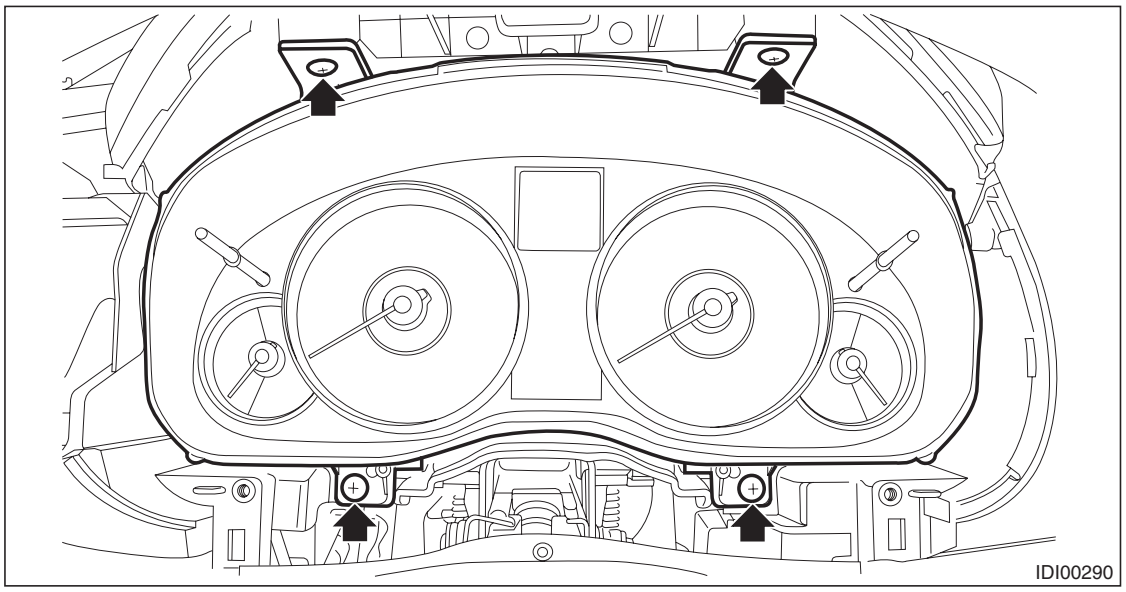

(6) Remove the combination meter assembly as shown in the figure.

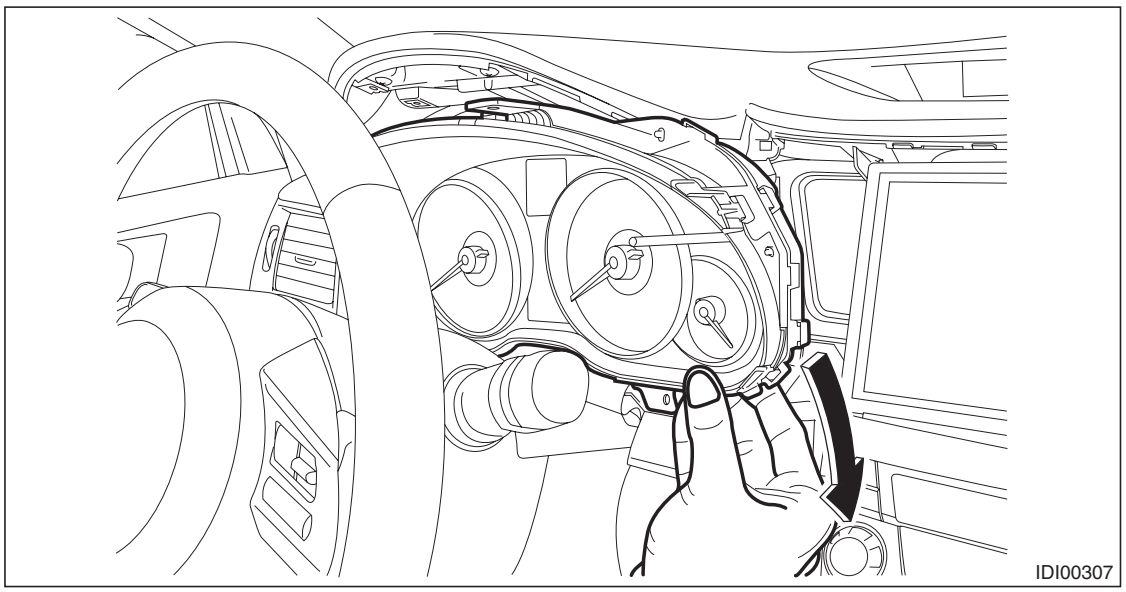

GETtheMANUALS.org

8) Remove the audio assembly.
   (1) Remove the left and right screws, and partially pull the audio out from center console.
   (2) Disconnect the connectors, and remove the audio assembly.

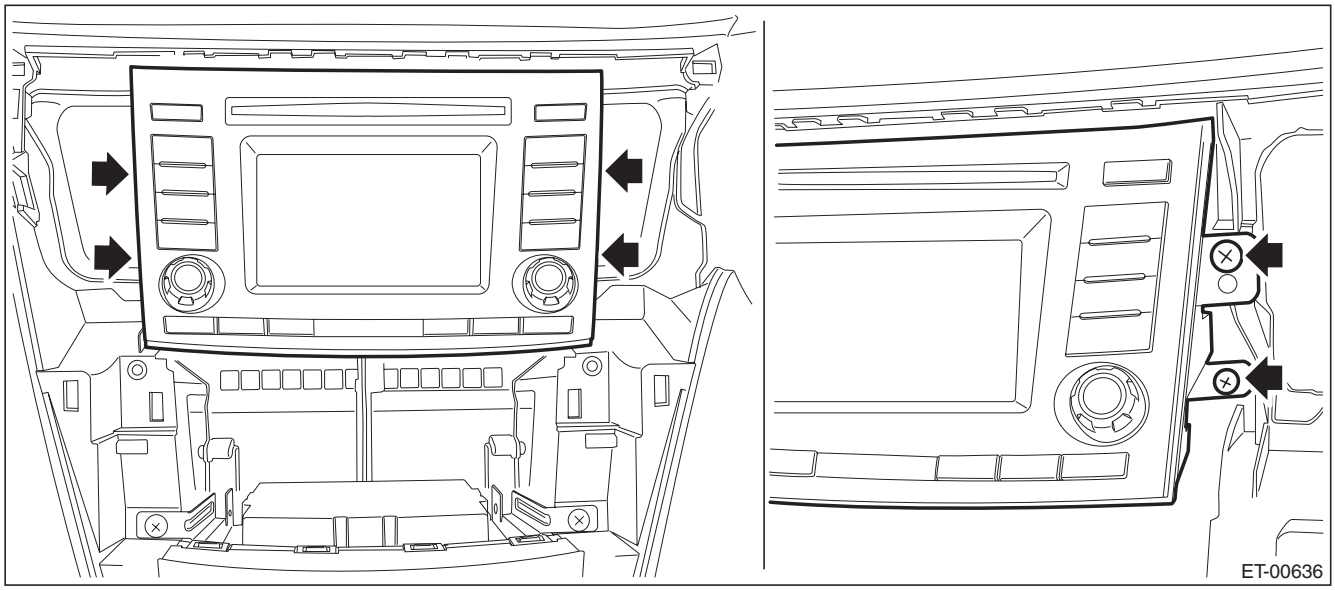

9) Remove the navigation assembly. (model with navigation)
   (1) Remove the left and right screws.
   (2) Disconnect the connectors, and remove the navigation assembly.

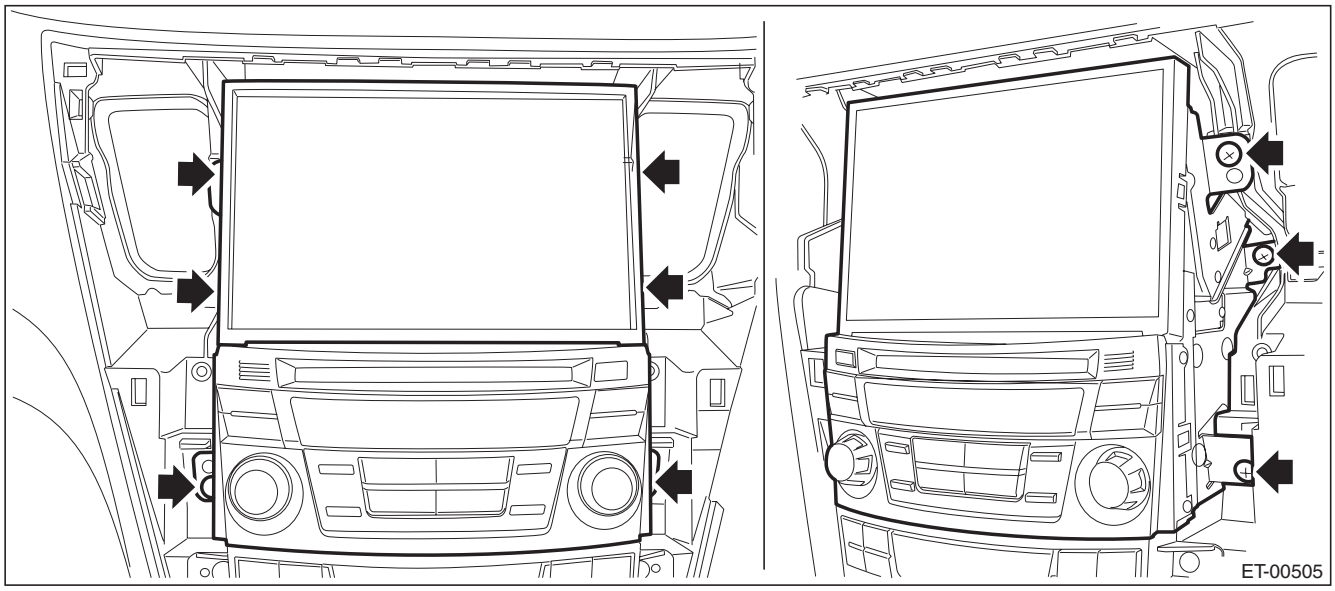

GETtheMANUALS.org

10) Remove the control panel assembly.
(1) Remove the screws, and pull out the control panel assembly toward you.
(2) Disconnect the connector, and remove the control panel assembly.

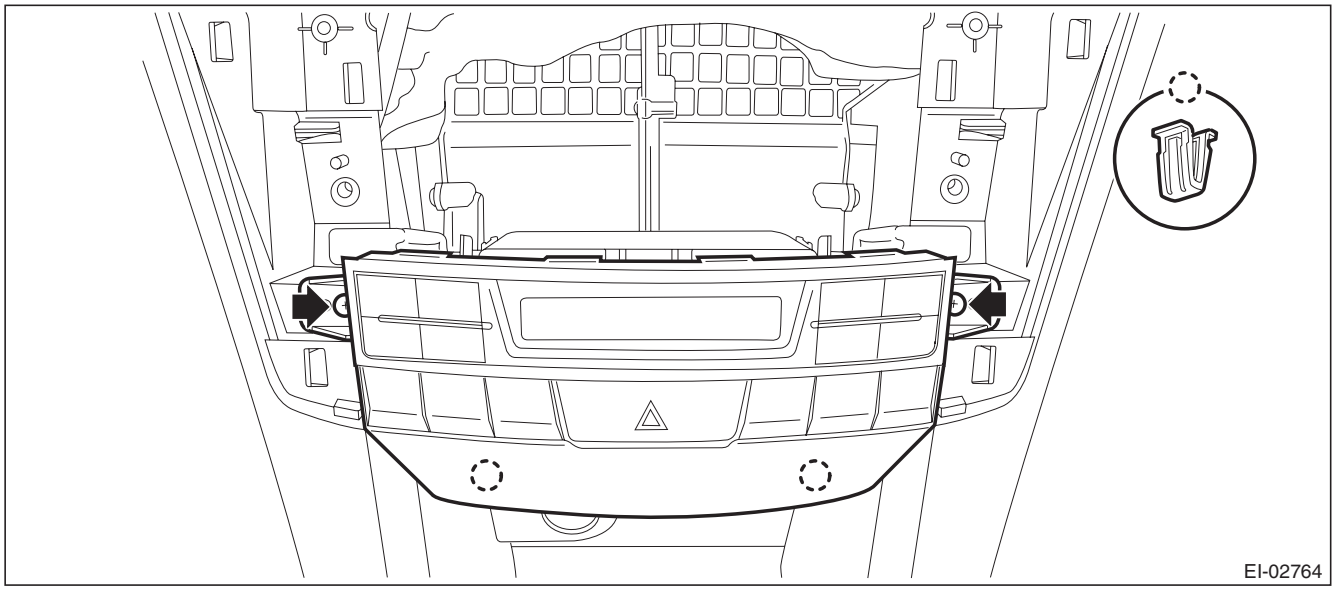

11) Remove the multi display assembly.

CAUTION:
Be careful not to damage the multi display or instrument panel.
(1) Detach the center speaker cover by releasing the claws and hooks.

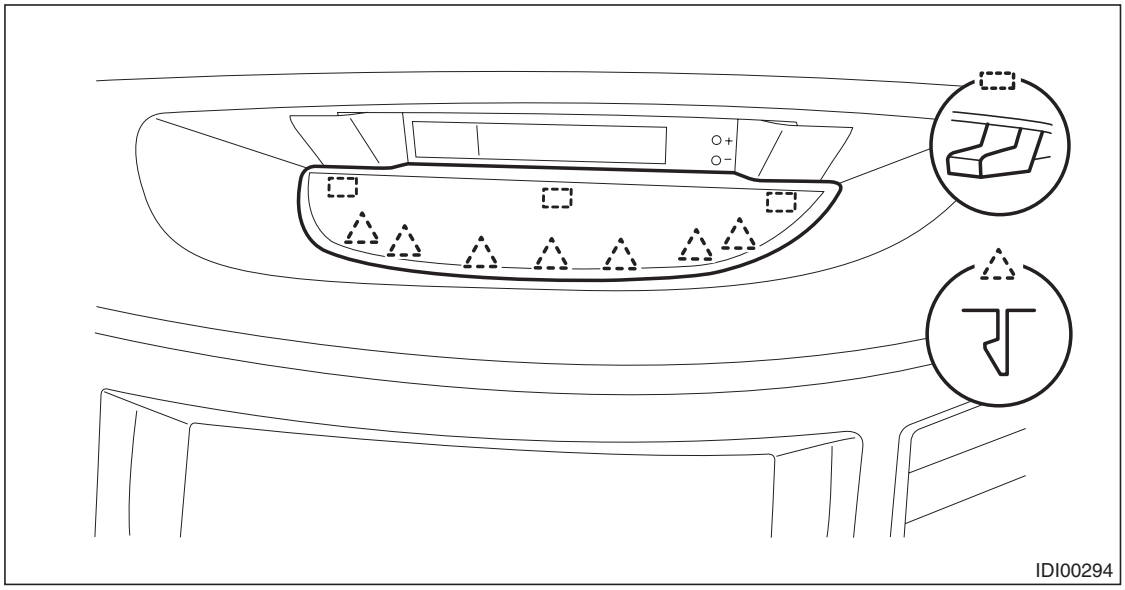

NOTE:
An easy way of removal is to first remove the audio assembly or navigation assembly and push up the cover from the backside.
(2) Release the clips and claws, detach the multi display panel LWR.

GETtheMANUALS.org

(3) Remove the screws and pull out the multi display toward you to disconnect the connectors.

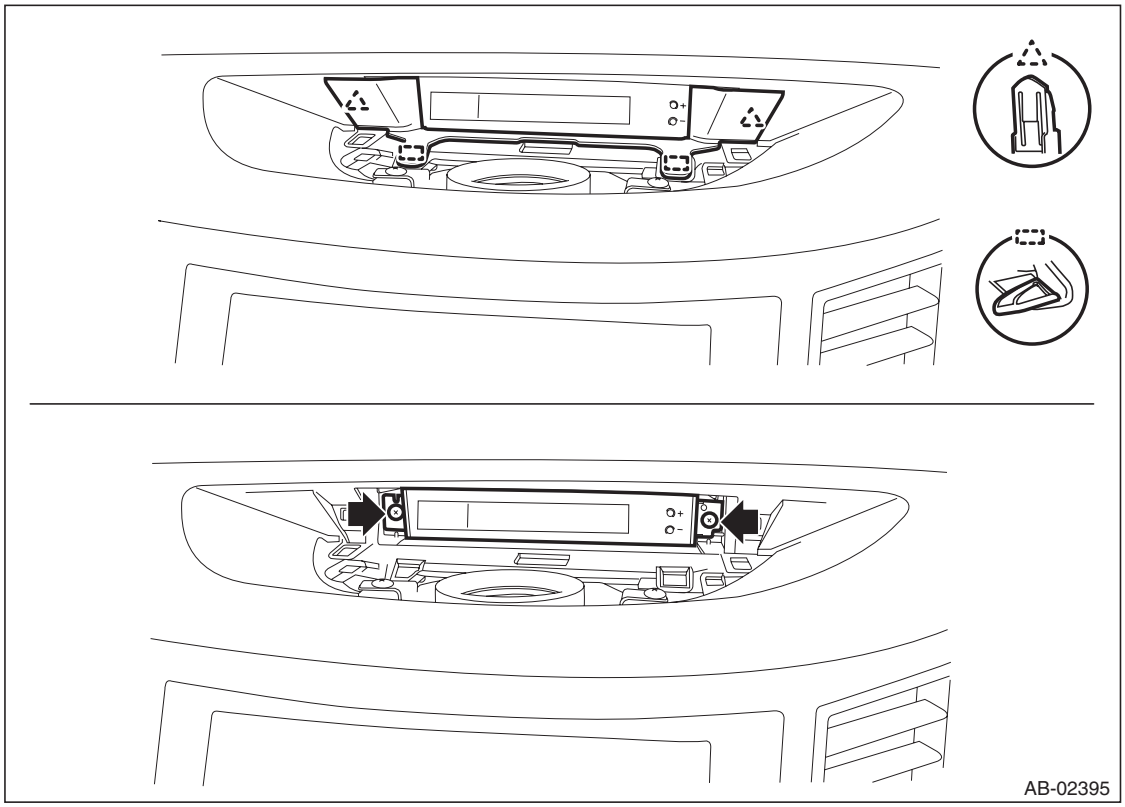

12) Remove the left and right front side speaker assembly. (Models with front side speaker)

(1) Release the clips and claws, then detach the side speaker cover.

CAUTION:
To remove the cover, use a plastic clip remover or equivalent tool.

(2) Remove the screws.

Preparation tool: Stubby screwdriver

(3) Disconnect the connector and remove the front side speaker assembly.

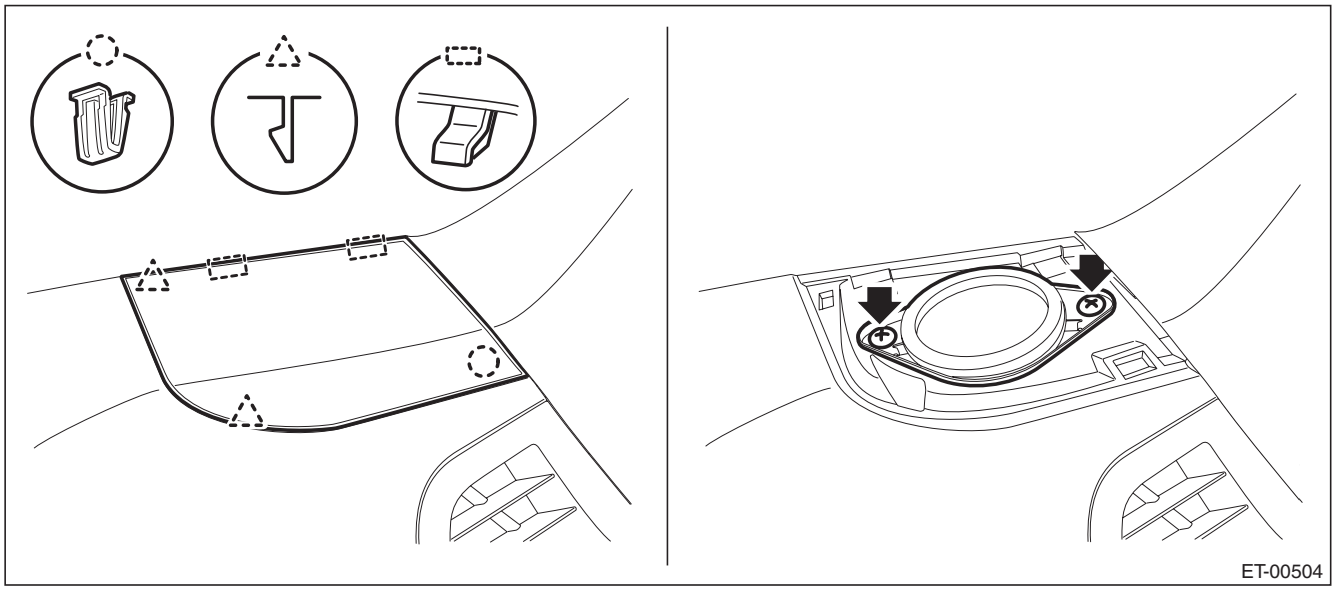

NOTE:
On the passenger's side, also disconnect the sunload sensor connector.

GETtheMANUALS.org

13) Remove the left and right front pillar trims.
(1) Pull the upper part of the front pillar trim towards the center of the vehicle.
(2) Insert long-nose pliers into the top part of the trim, grip the clip with the pliers and twist 90° in that position.

CAUTION:
Be careful not to damage the pillar trim surface and curtain airbag module when inserting the pliers.
(3) Holding the clip twisted as in the previous step, remove the front pillar trim from the clip.
(4) Remove the clip and the front pillar trim.

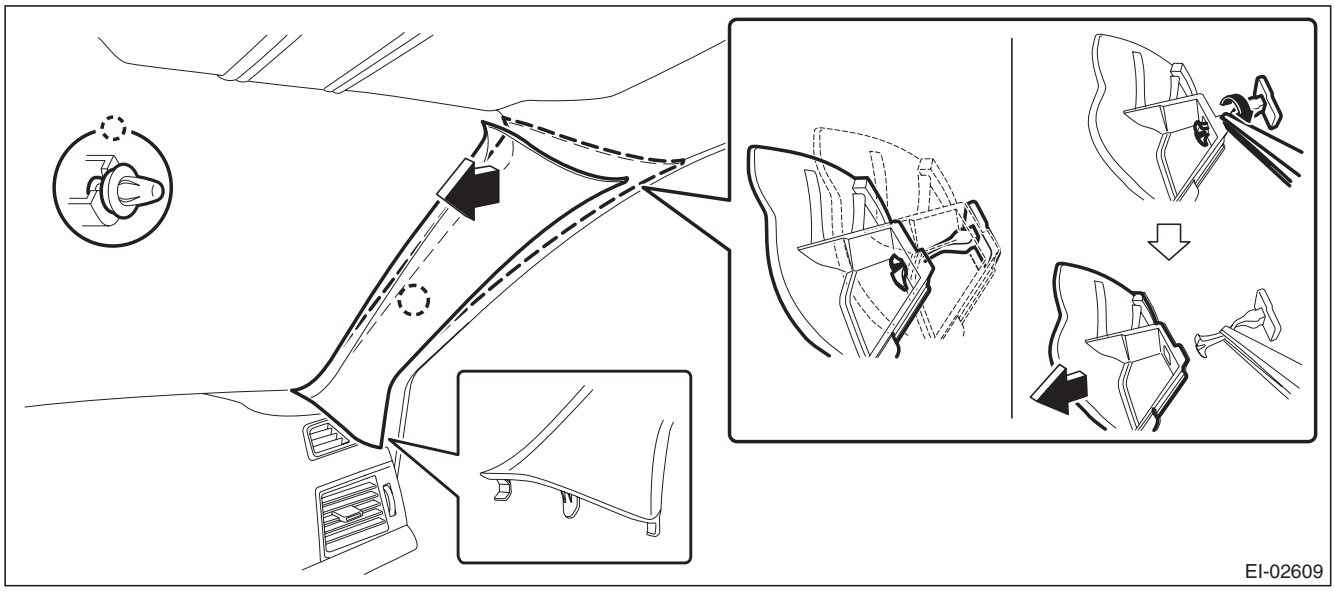

14) Remove the glove box lid assembly.
(1) Remove the glove box damper.
(2) Release the stoppers and remove the glove box lid assembly by pulling it toward you.

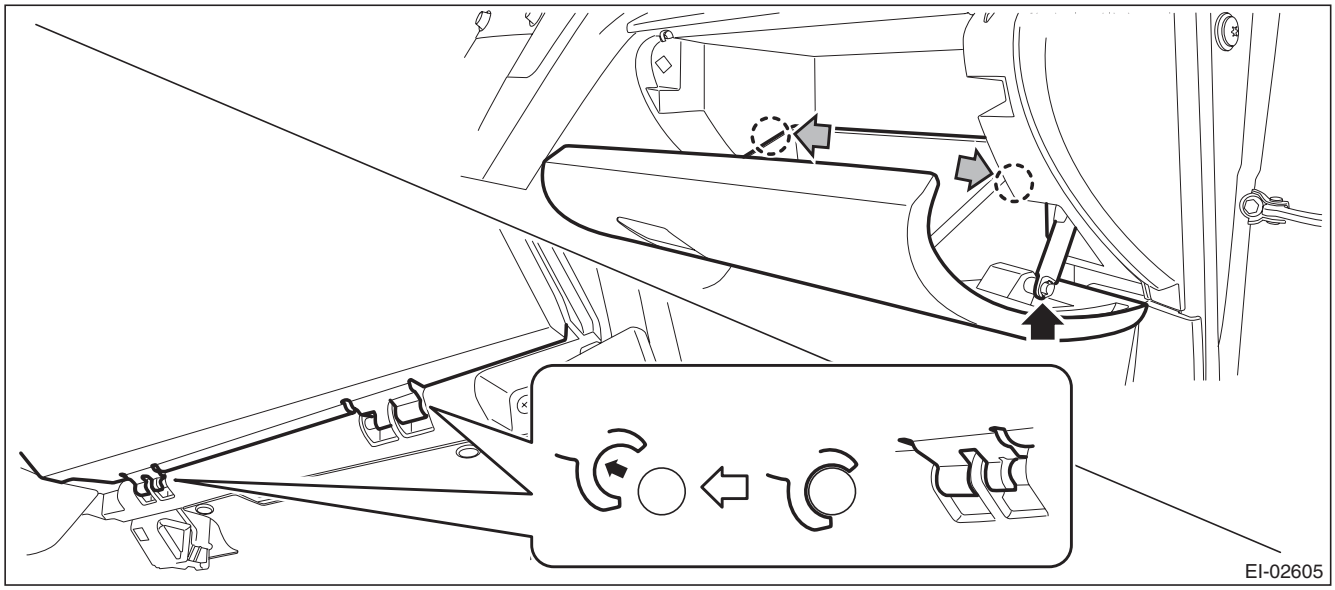

GETtheMANUALS.org

15) Remove the glove box back panel.
(1) Release the clips, and remove the instrument panel side cover RH.

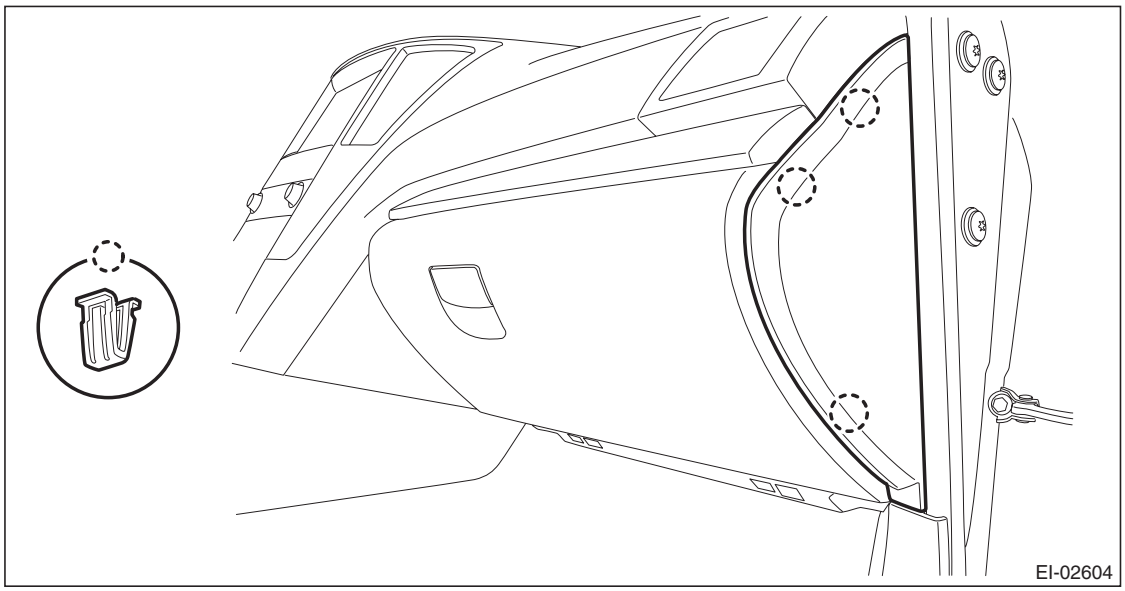

(2) Release the clips, and remove the glove box under cover.

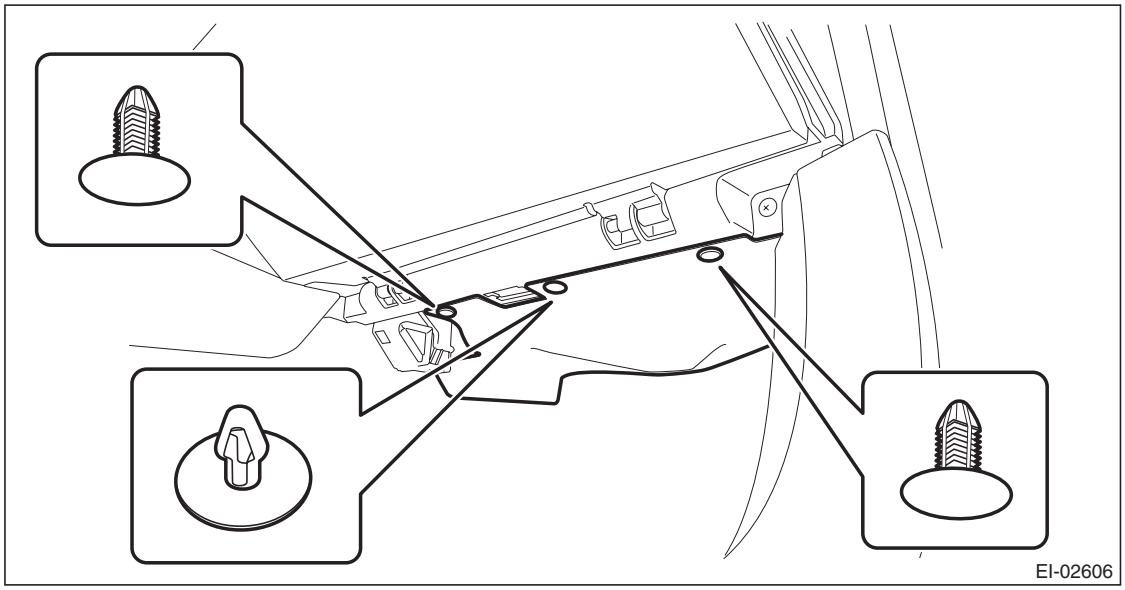

GETtheMANUALS.org

(3) Release the clips and claws, and remove the ornament panel assembly P.

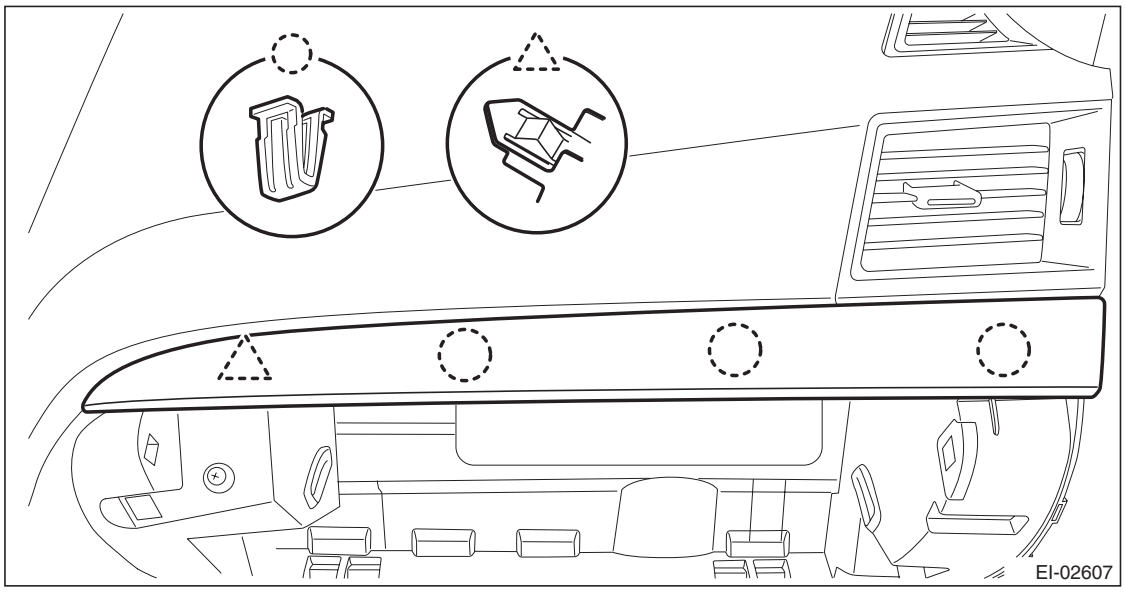

(4) Remove the screws and release the claws, then detach the glove box back panel.

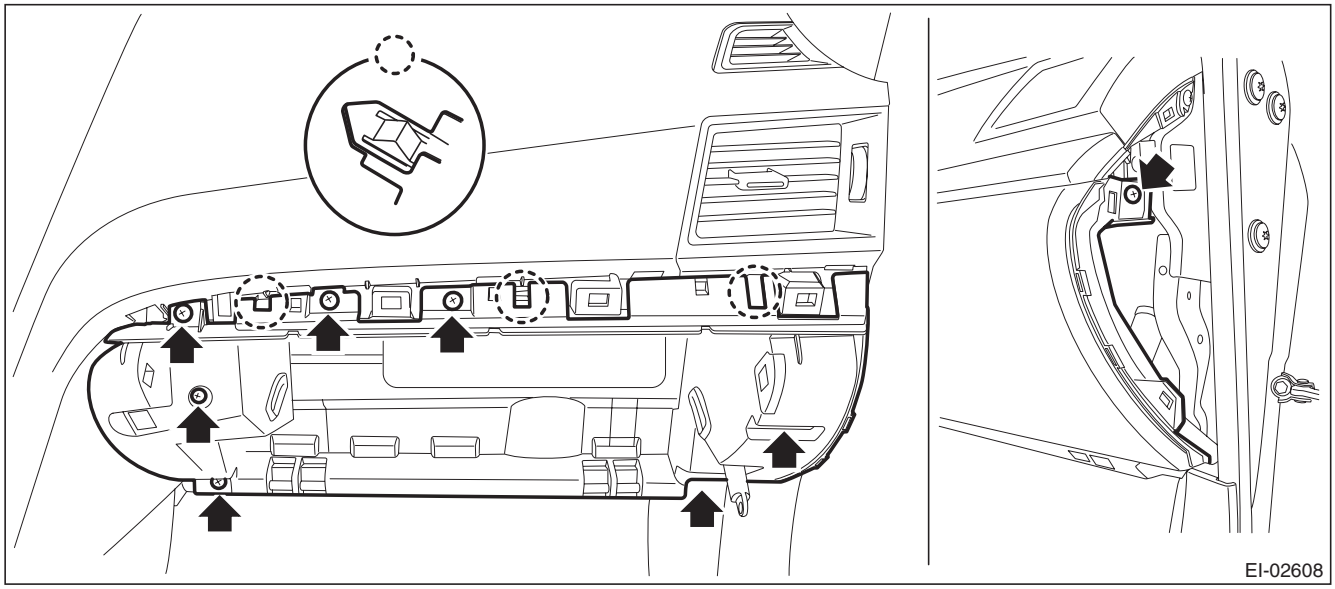

(5) Disconnect the glove box light LED connector.

GETtheMANUALS.org

16) Disconnect the connector from the passenger's airbag module assembly and remove the bolt.
(1) Release the connector and harness clamps and disconnect the airbag connector.

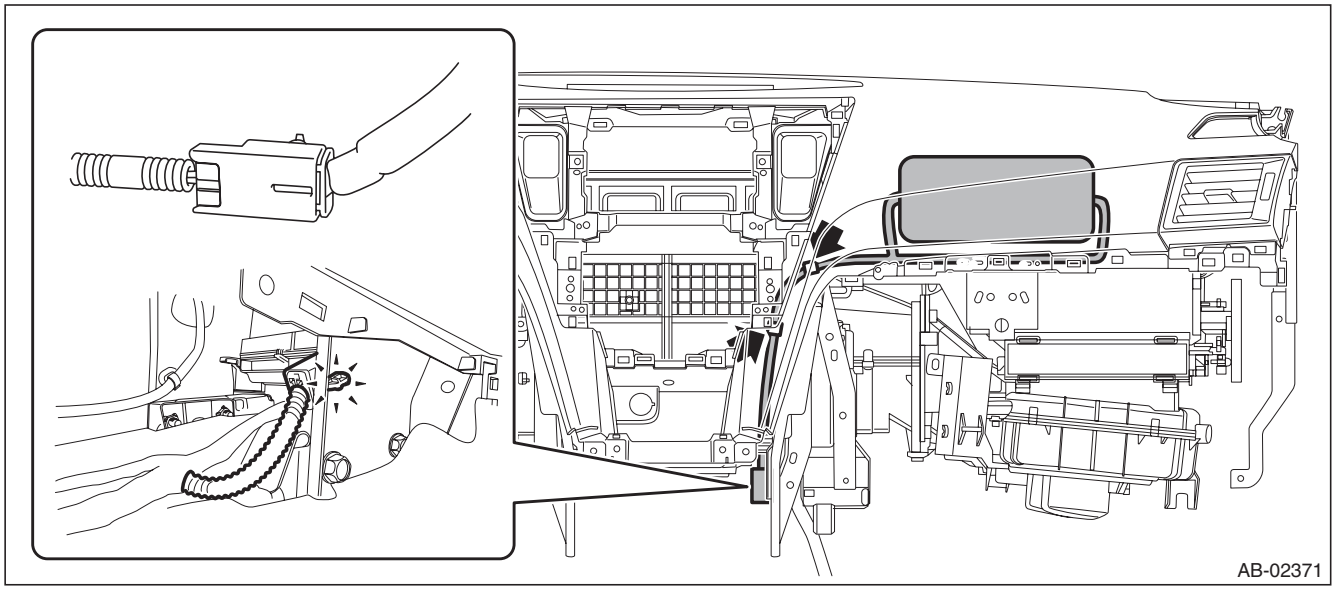

(2) Remove passenger's airbag module assembly bolts.

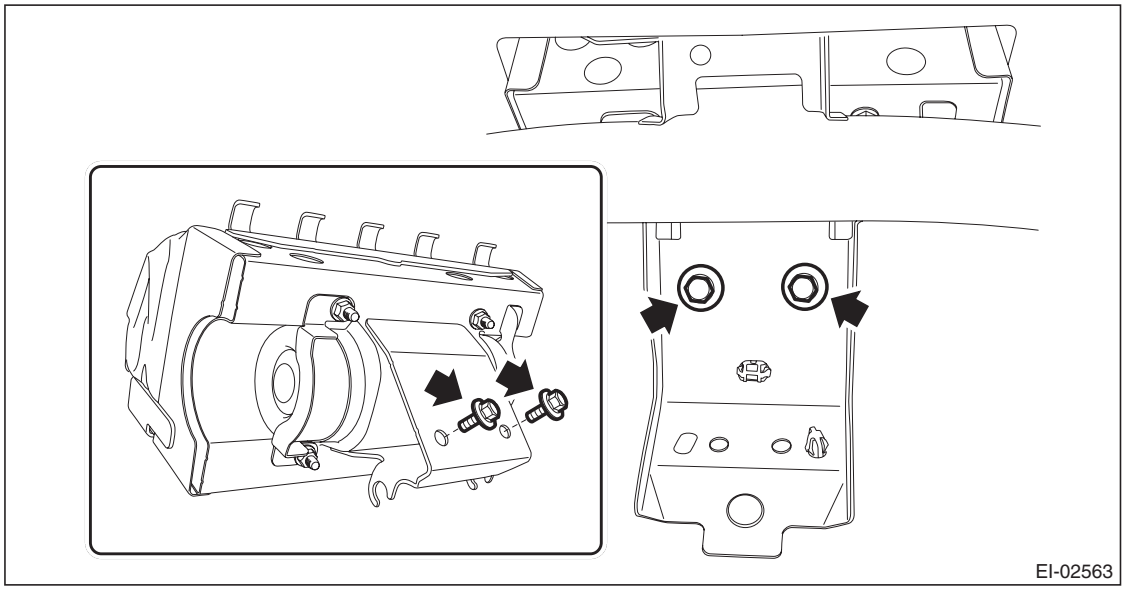

17) Remove the steering shaft assembly. <Ref. to PS-26, REMOVAL, Steering Column.>

GETtheMANUALS.org

18) Remove the instrument panel assembly.
(1) Remove the screws. (A), (B), (C), (D), (E), (F), (G), (H), (I)

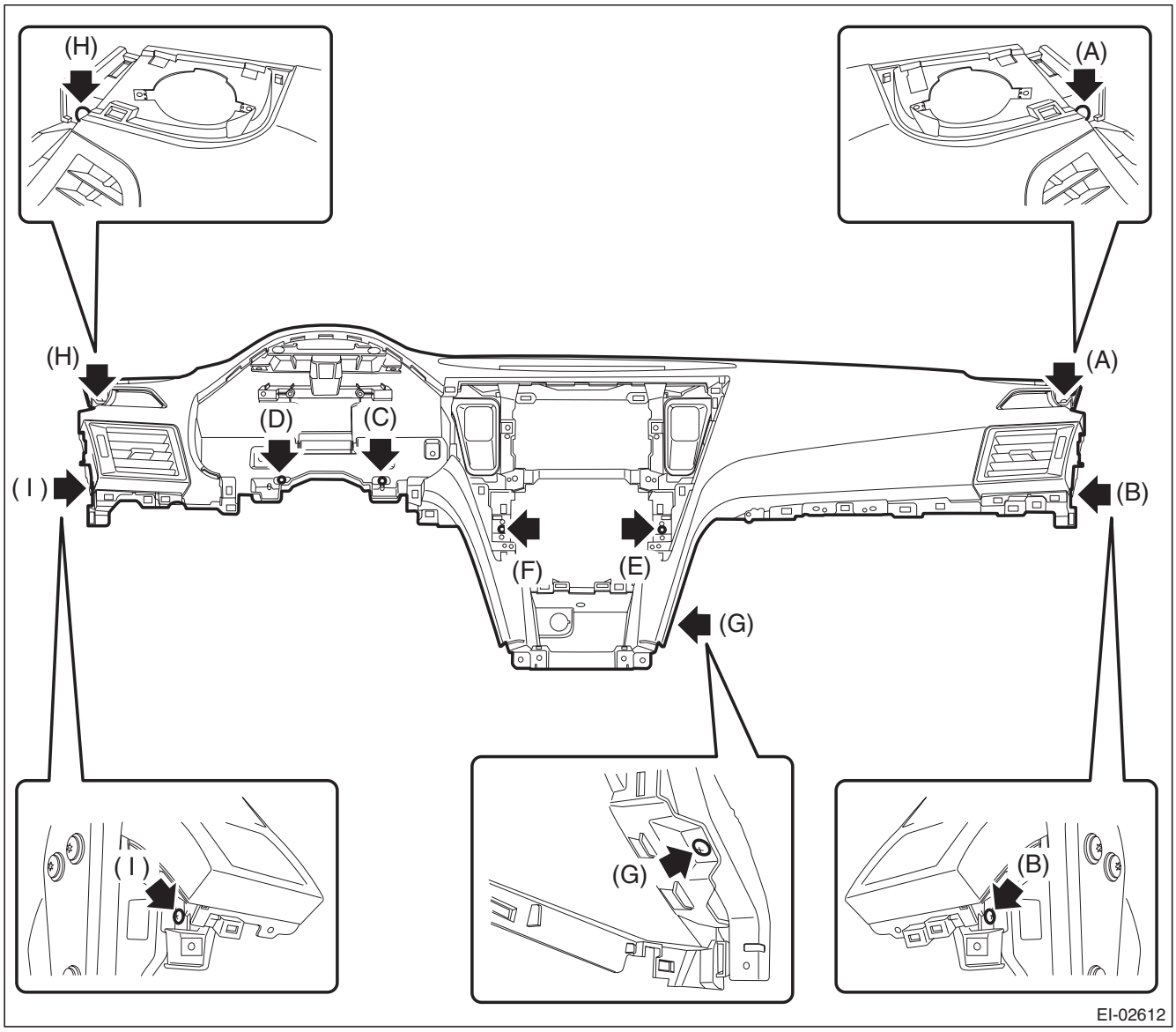

GETtheMANUALS.org

(2) Pull out the instrument panel assembly toward you and release the clamps of the left and right front side speakers.

Preparation tool: Stubby screwdriver

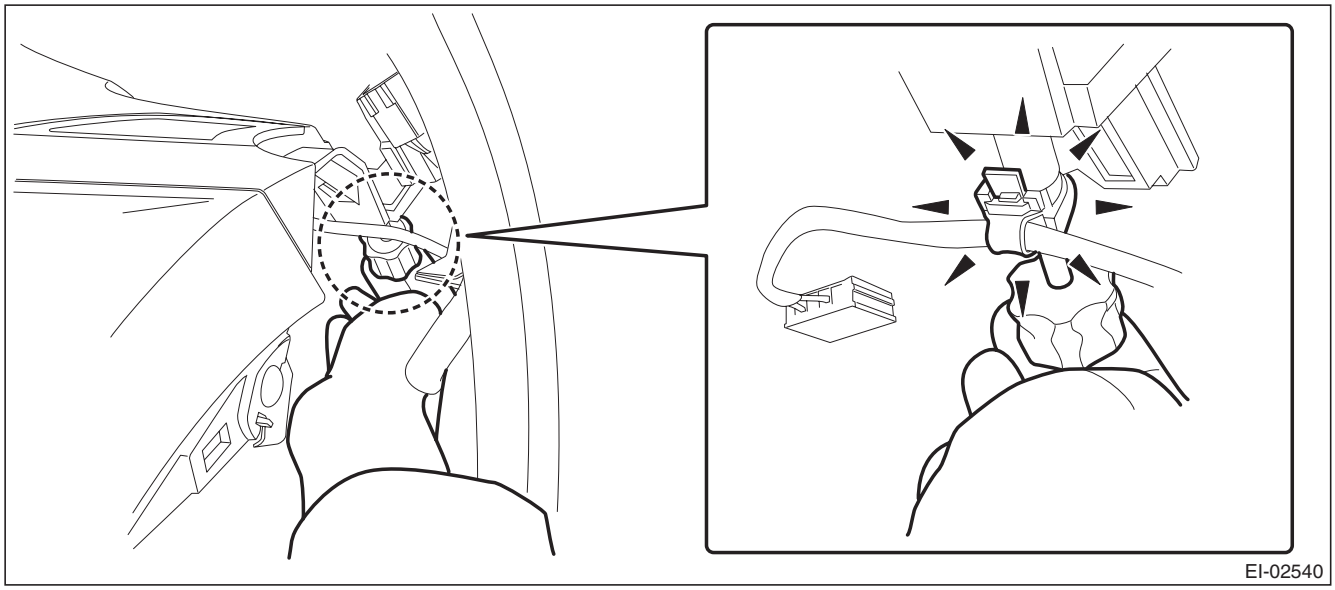

(3) After checking that all harness clamps and connectors are released and disconnected, remove the instrument panel assembly.

CAUTION:
Be careful not to damage the instrument panel surface and interior trims.

19) Release the claws, and then remove the side sill cover - front INN on the left and right sides.

CAUTION:
Do not pull with excessive force. Doing so may damage the claws of the side sill cover INN.

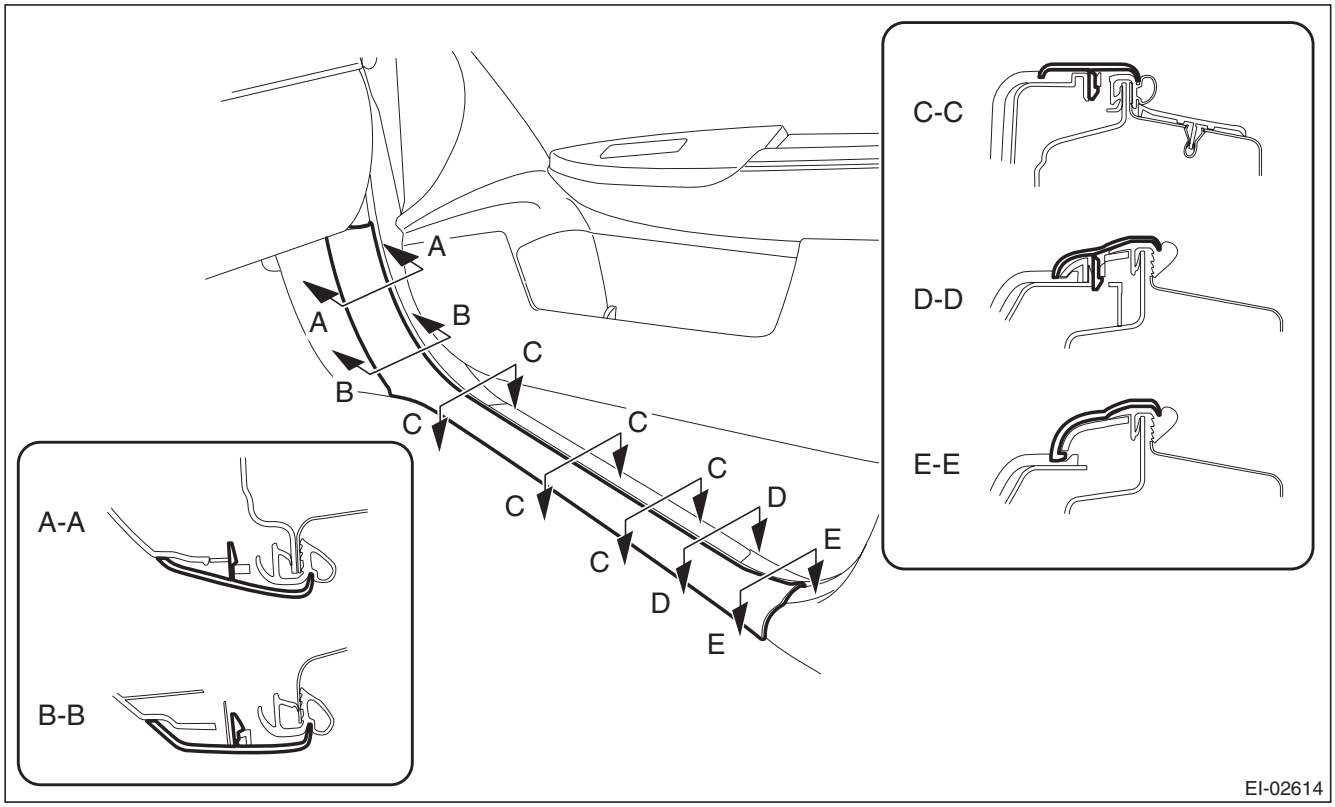

GETtheMANUALS.org

NOTE:
To release the claws of the side sill cover INN, the following steps are recommended.
1. Take out the weather strip from under the side sill cover INN.
2. Turn over the floor mat and release the claw (C-C) by accessing from behind the side sill cover INN.

20) Remove the clip, and remove the left and right side sill cover front.

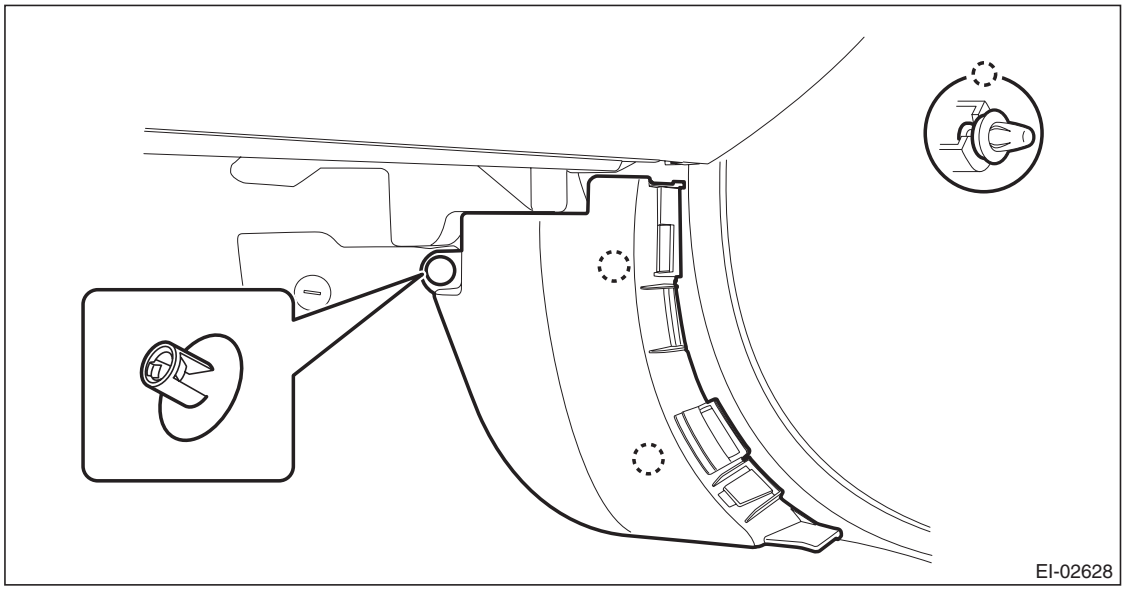

21) Remove the steering support beam assembly.
   (1) Remove the fuse box and relay box.
   (2) Remove the screws. (E)
   (3) Disconnect all harness clamps and connectors of the instrument panel harness.
   (4) Remove the TORX® bolt and adjuster bolt (a) (only passenger's side). (A), (B)

Preparation tool:

TORX® T40

Hexagon wrench (12 mm)

   (5) Remove the bolts at the floor center. (C), (D)
   (6) Remove the nut (F) and (G) behind the cooling unit.

GETtheMANUALS.org

(7) Remove the nut (H) behind the blower unit.

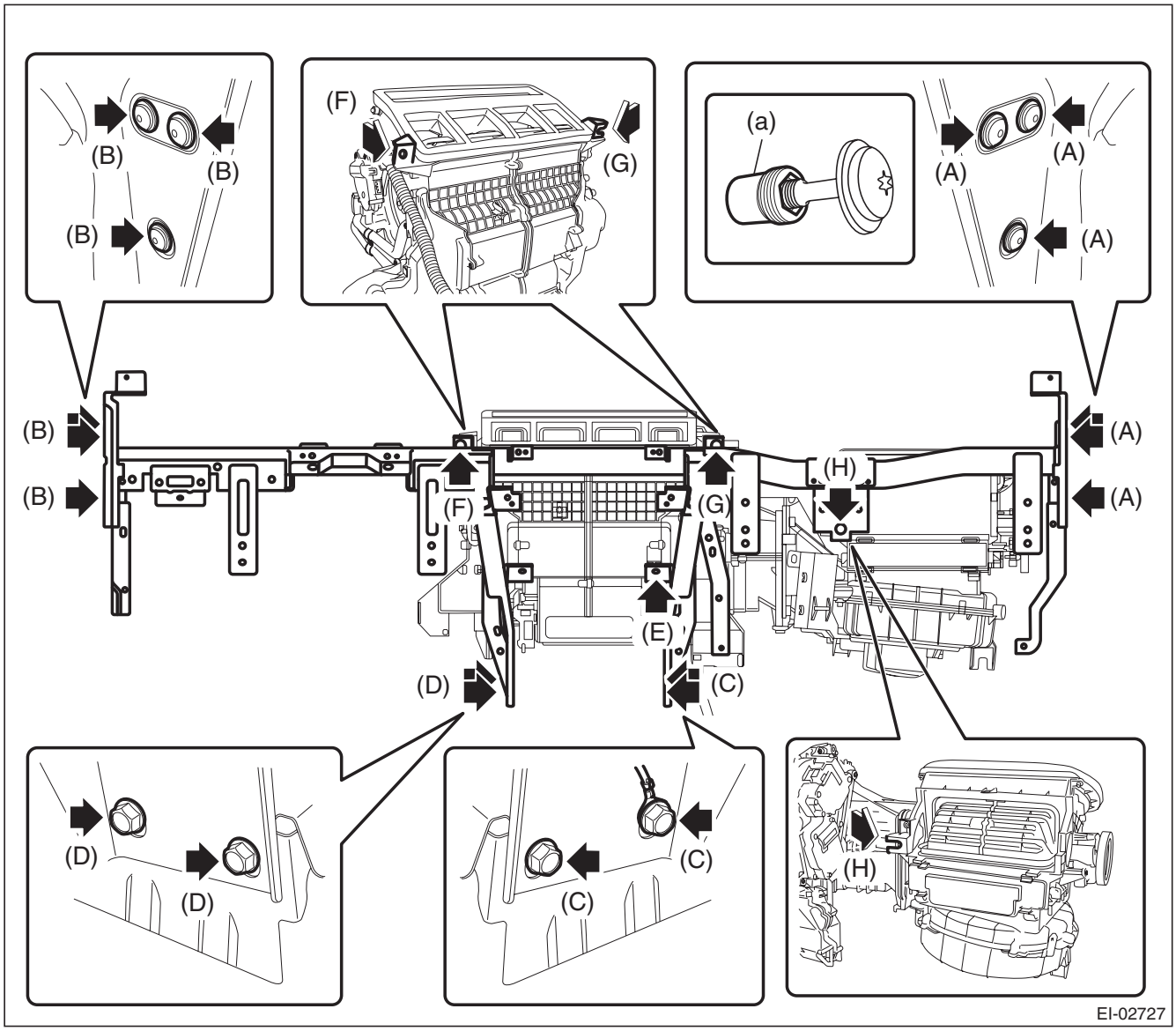

GETtheMANUALS.org

(8) Slightly lift the steering support beam assembly to detach the left and right pins. Then pull it toward you to remove the assembly.

CAUTION:
- **Check that all harness clamps and connectors are detached.**
- **Be careful not to damage interior trims.**

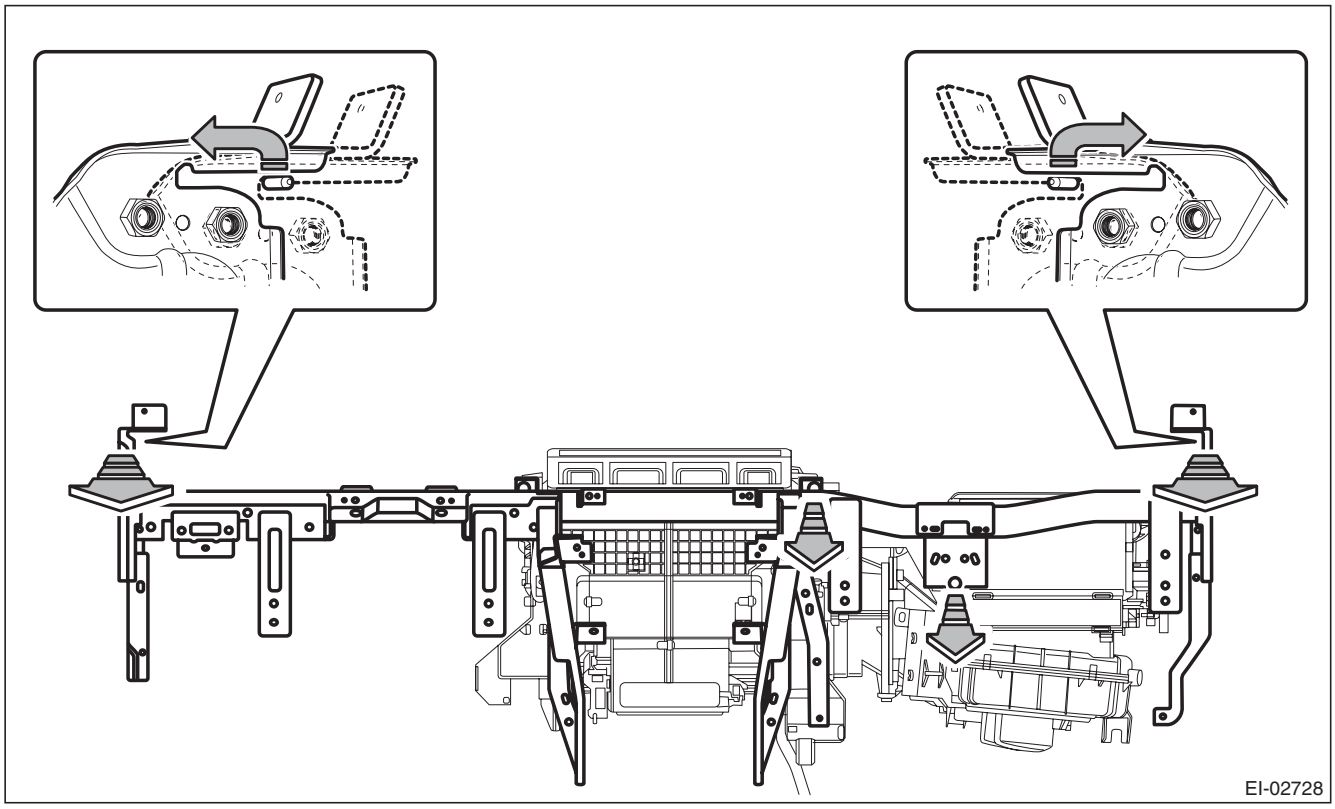

B: INSTALLATION

1) Install parts in the reverse order of removal to restore the instrument panel assembly.

NOTE:
How to install insulators
- Adhesive

Use polyurethane adhesive. When assembling the instrument panel assembly, wait until the adhesive has evaporated to prevent filling of the smell in the compartment.
- Double-sided tape

Use commercial double-sided tape. (Use strong double-sided adhesive tape.)

2) Insert the three matching pins on body into the instrument panel assembly.
3) Check that the matching pins are inserted securely, and then route the harness.
4) Install each part in the reverse order of removal.

Tightening torque:
Steering support beam: <Ref. to EI-15, INSTRUMENT PANEL, COMPONENT, General Description.>
Passenger's airbag module ASSY: 7.5 N·m (0.76 kgf-m, 5.5 ft-lb)
Steering shaft: <Ref. to PS-4, STEERING WHEEL AND COLUMN, COMPONENT, General Description.>
Console box: 6.5 N·m (0.66 kgf-m, 4.8 ft-lb)

GETtheMANUALS.org

20. Lower Inner Trim

A: REMOVAL

1) Release the claws, and then remove the side sill cover-front INN.

CAUTION:
Do not pull with excessive force. Doing so may damage the claws of the side sill cover INN.

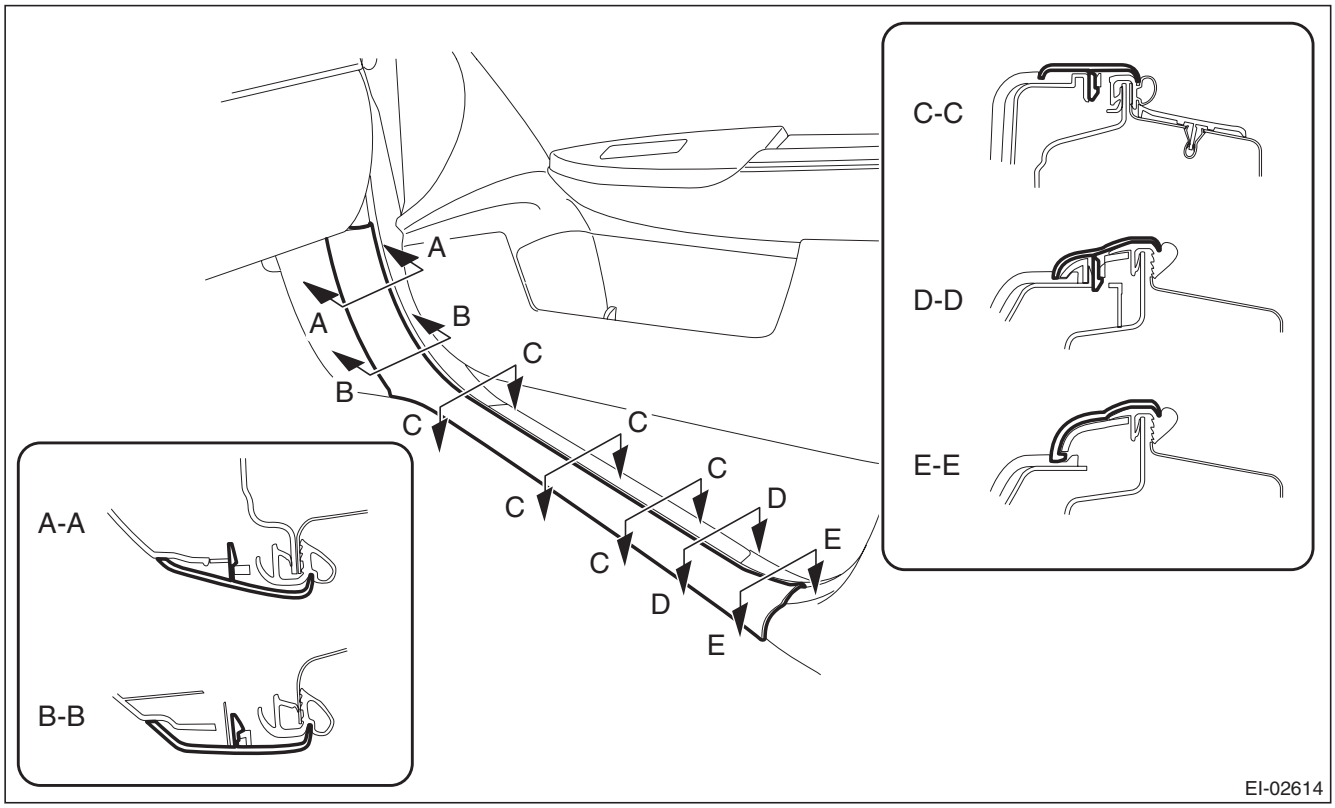

NOTE:
To release the claws of the side sill cover INN, the following steps are recommended.
1. Take out the weather strip from under the side sill cover INN.
2. Turn over the floor mat and release the claw (C-C) by accessing from behind the side sill cover INN.

2) Remove the clip, and remove the side sill cover front.

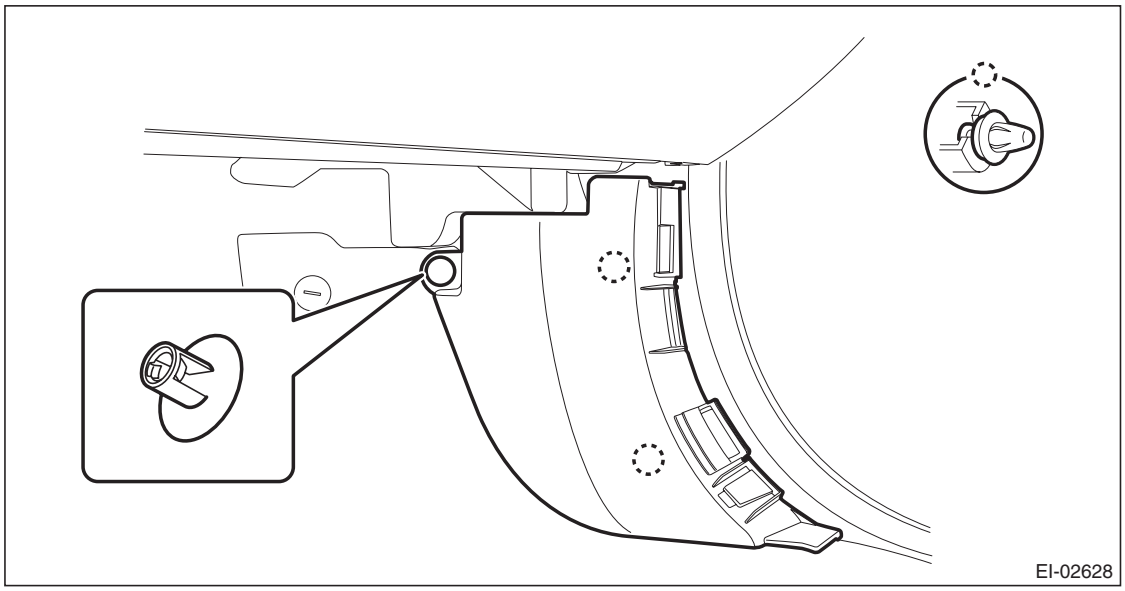

GETtheMANUALS.org

3) Remove the rear seat cushion assembly.
   (1) Pull up the seat cushion and release the hook.

CAUTION:
If the hook is disconnected from the vehicle body, replace the hook with the new part to prevent the decline of the fixed force of the seat.

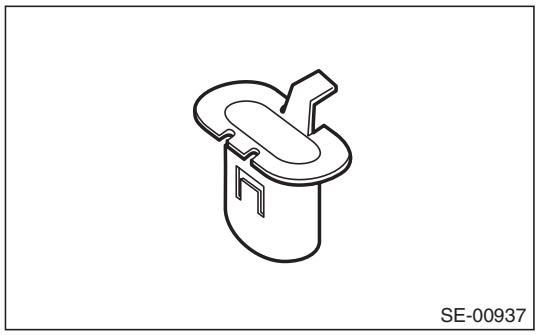

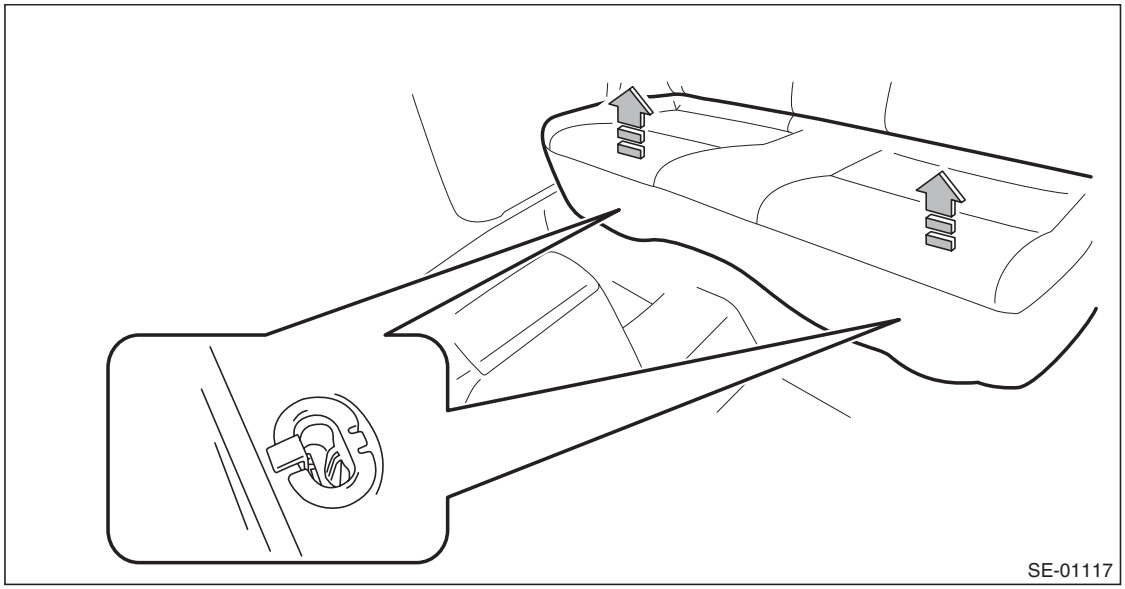

(2) Remove the hook (A) by pushing it back while lifting the front side of the seat cushion, and remove the seat cushion.

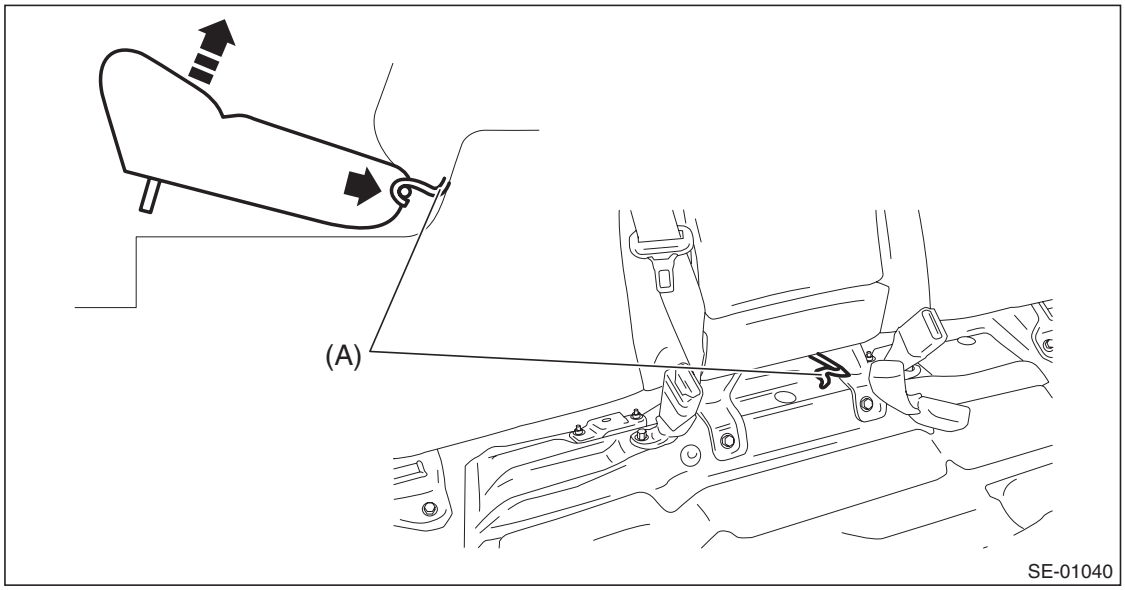

GETtheMANUALS.org

4) Release the clips and claws, and then remove the side sill cover - rear INN.

CAUTION:
Do not pull with excessive force. Doing so may damage the claws of the side sill cover INN.

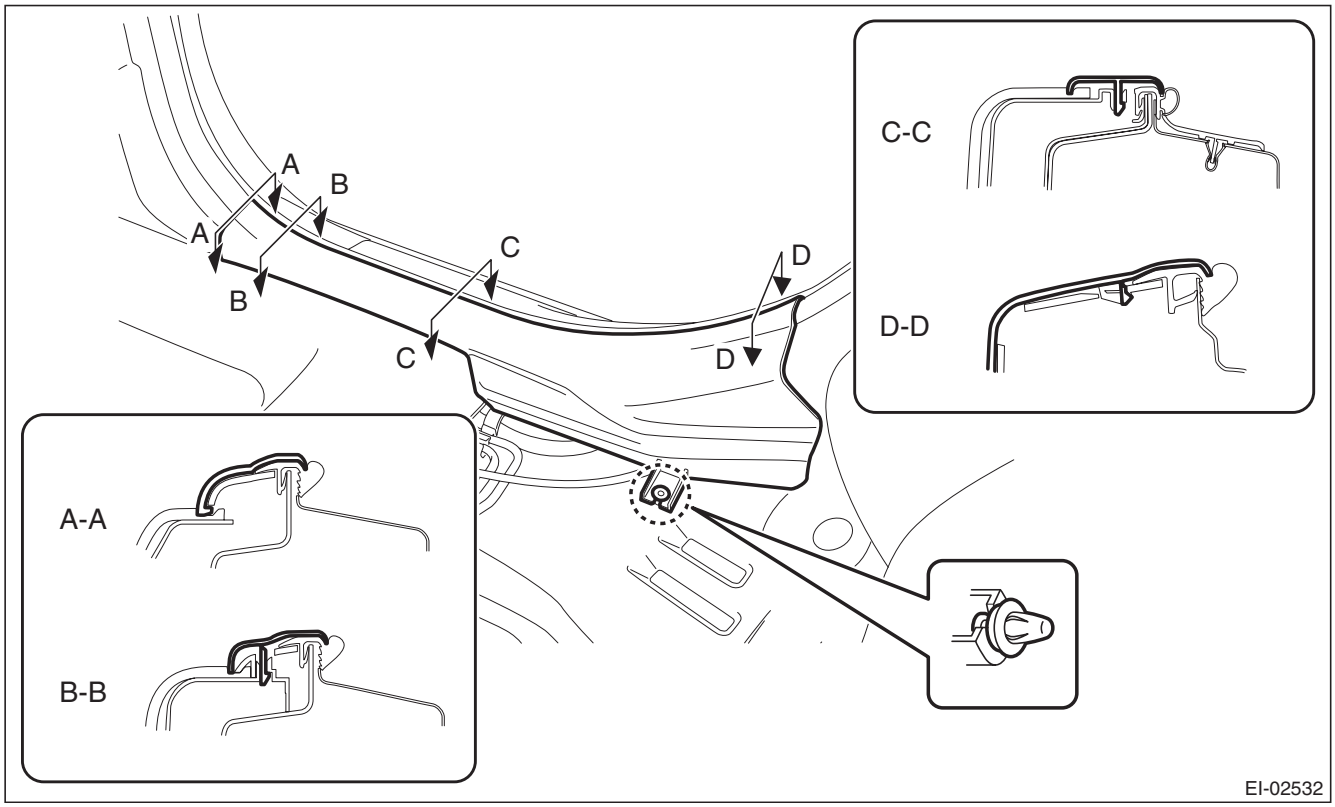

NOTE:
To release the claws of the side sill cover INN, the following steps are recommended.
1. Take out the weather strip from under the side sill cover INN.
2. Turn over the floor mat and release the claw (C-C and D-D) by accessing from behind the side sill cover INN.

GETtheMANUALS.org

5) Remove the center pillar trim LWR.
   (1) Release the clip by pulling the center pillar trim LWR toward you.
   (2) Expand the claws of center pillar trim LWR outward and remove it from the center pillar trim UPR.

CAUTION:
Do not expand the center pillar trim LWR excessively. Doing so may damage the trim.

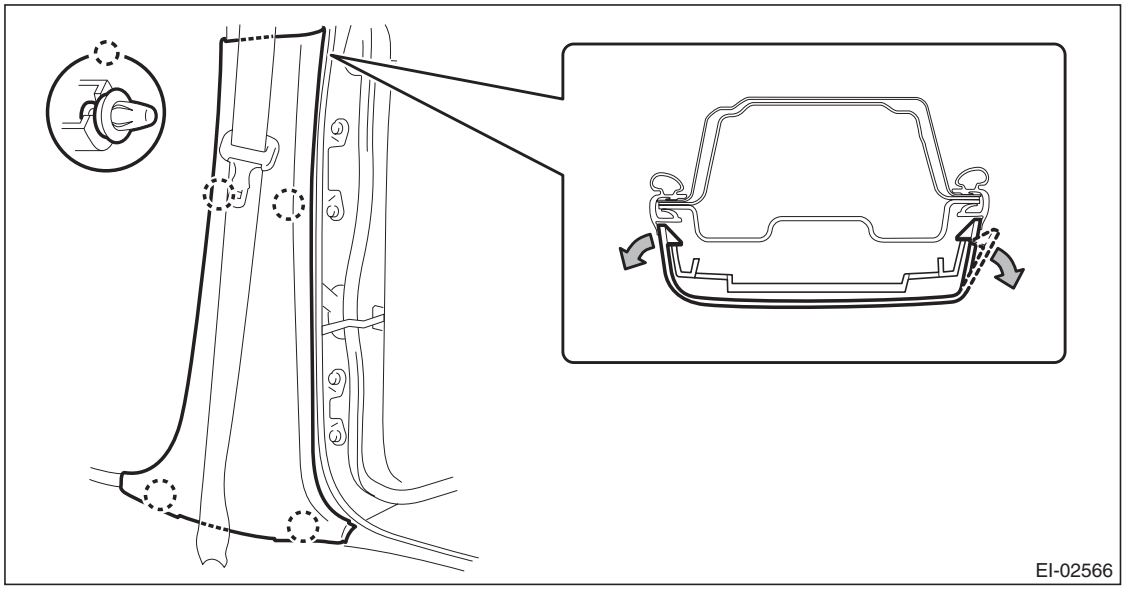

NOTE:
First release the claw located to the rear of the vehicle.
6) Release the claws, and then remove the side sill cover-front OUT.

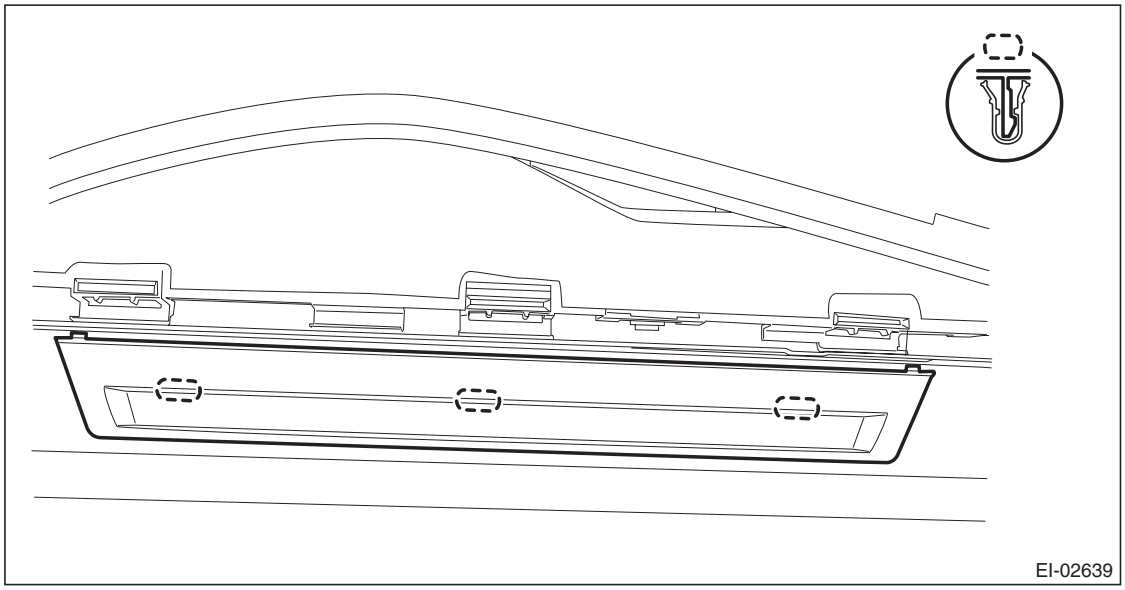

GETtheMANUALS.org

7) Release the claws and metal clips, and then remove the side sill cover-rear OUT.

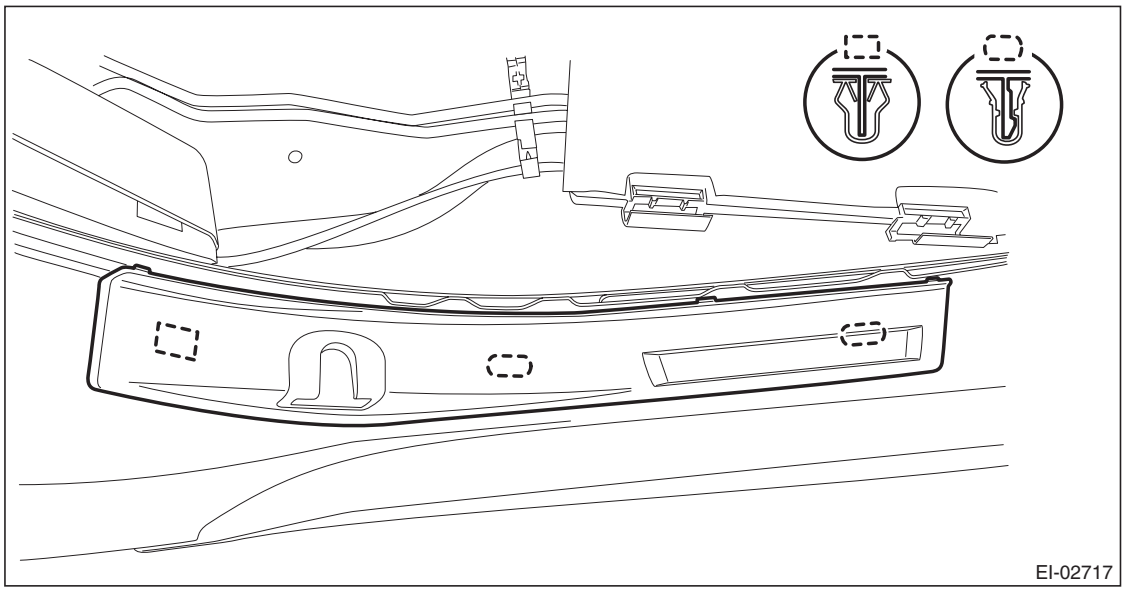

GETtheMANUALS.org

B: INSTALLATION

CAUTION:
If the hook is disconnected from the vehicle body, replace the hook with the new part to prevent the decline of the fixed force of the seat.

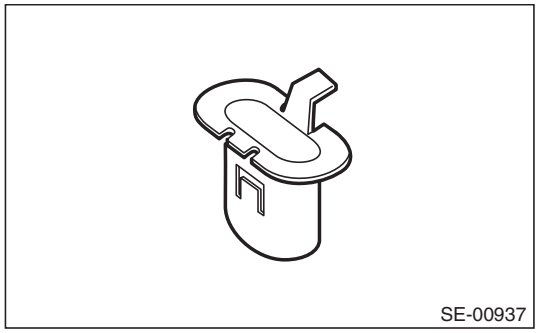

Install each part in the reverse order of removal.

NOTE:
Assemble the center pillar trim LWR to the center pillar trim UPR securely.

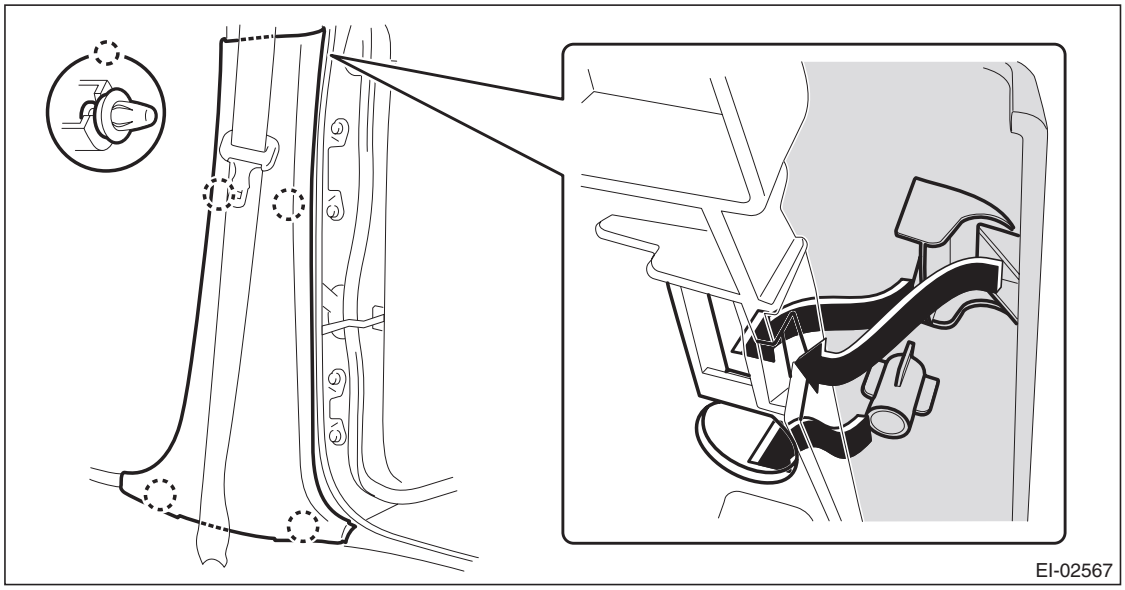

GETtheMANUALS.org

21. Upper Inner Trim

A: REMOVAL

1) Remove the front pillar trim.
   (1) Pull the upper part of the front pillar trim towards the center of the vehicle.
   (2) Insert long-nose pliers into the top part of the trim, grip the clip with the pliers and twist 90° in that position.

CAUTION:
Be careful not to damage the pillar trim surface and curtain airbag module when inserting the pliers.
   (3) Holding the clip twisted as in the previous step, remove the front pillar trim from the clip.
   (4) Remove the clip and the front pillar trim.

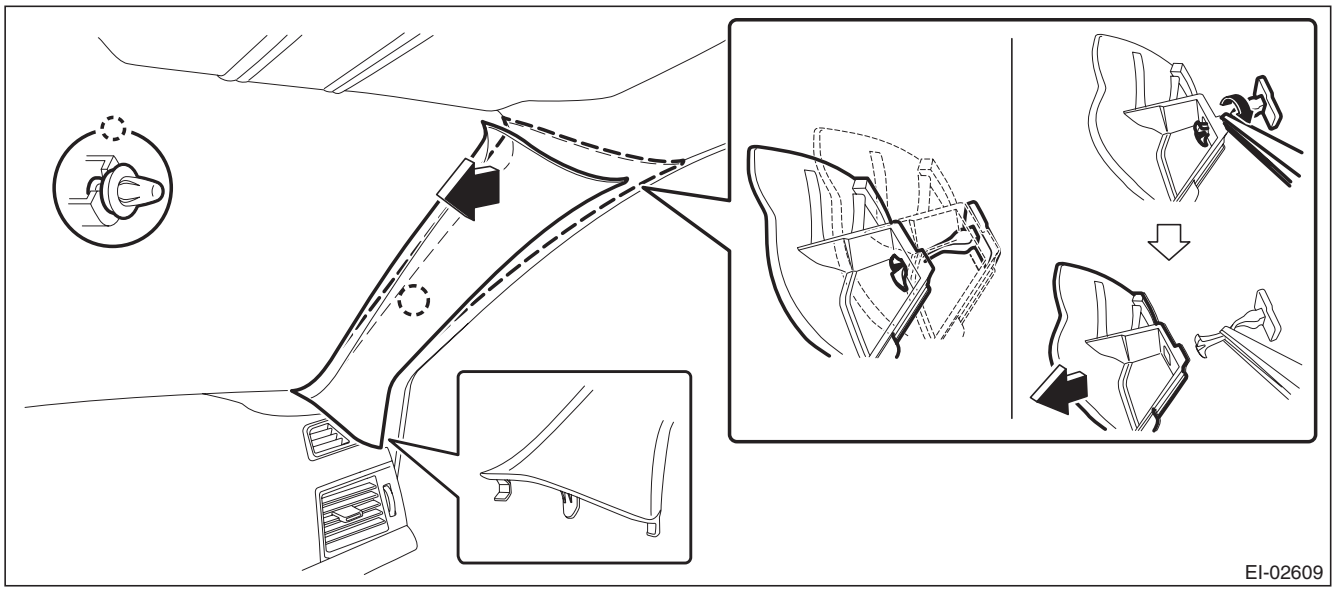

GETtheMANUALS.org

2) Release the claws, and then remove the side sill cover-front INN.

CAUTION:
Do not pull with excessive force. Doing so may damage the claws of the side sill cover INN.

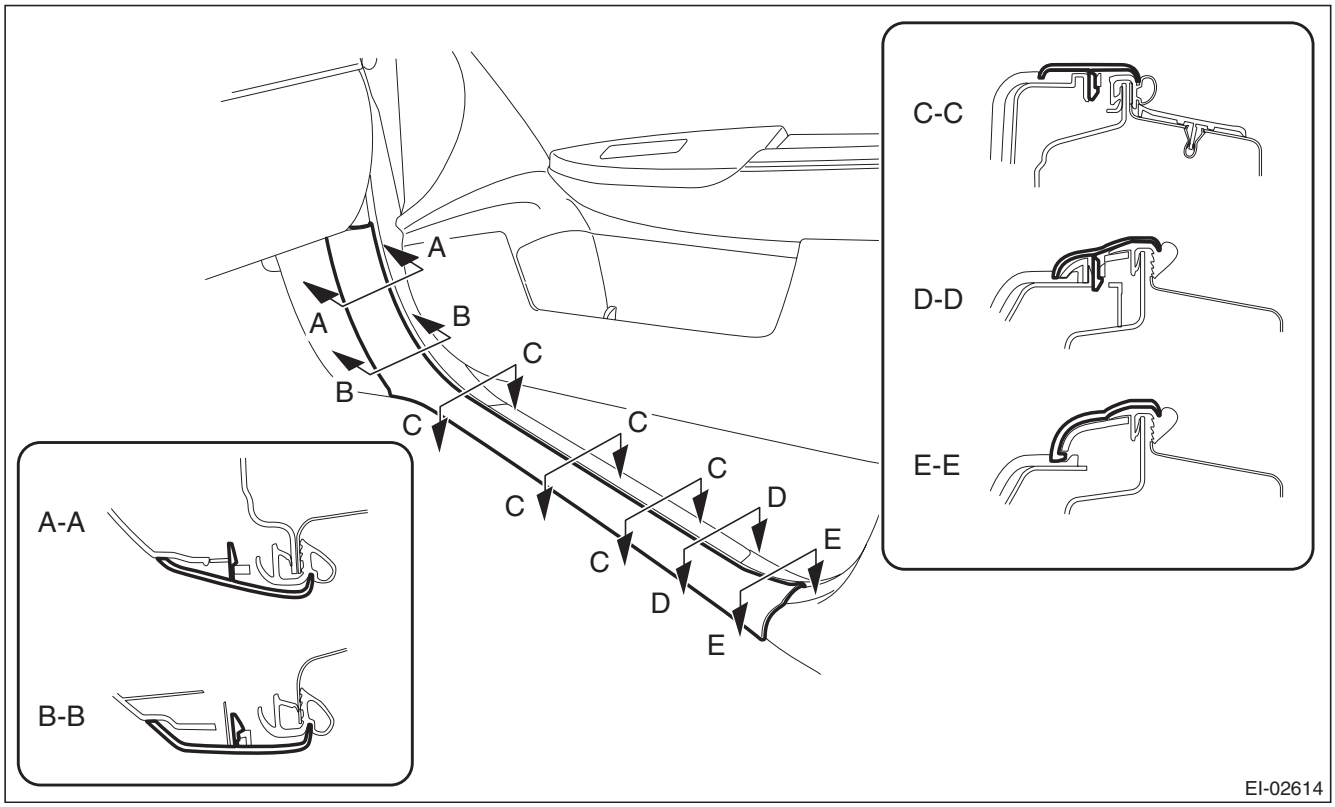

NOTE:
To release the claws of the side sill cover INN, the following steps are recommended.
1. Take out the weather strip from under the side sill cover INN.
2. Turn over the floor mat and release the claw (C-C) by accessing from behind the side sill cover INN.

GETtheMANUALS.org

3) Remove the rear seat cushion assembly.
   (1) Pull up the seat cushion and release the hook.

CAUTION:
If the hook is disconnected from the vehicle body, replace the hook with the new part to prevent the decline of the fixed force of the seat.

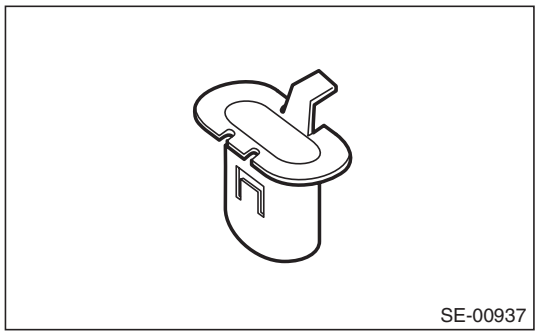

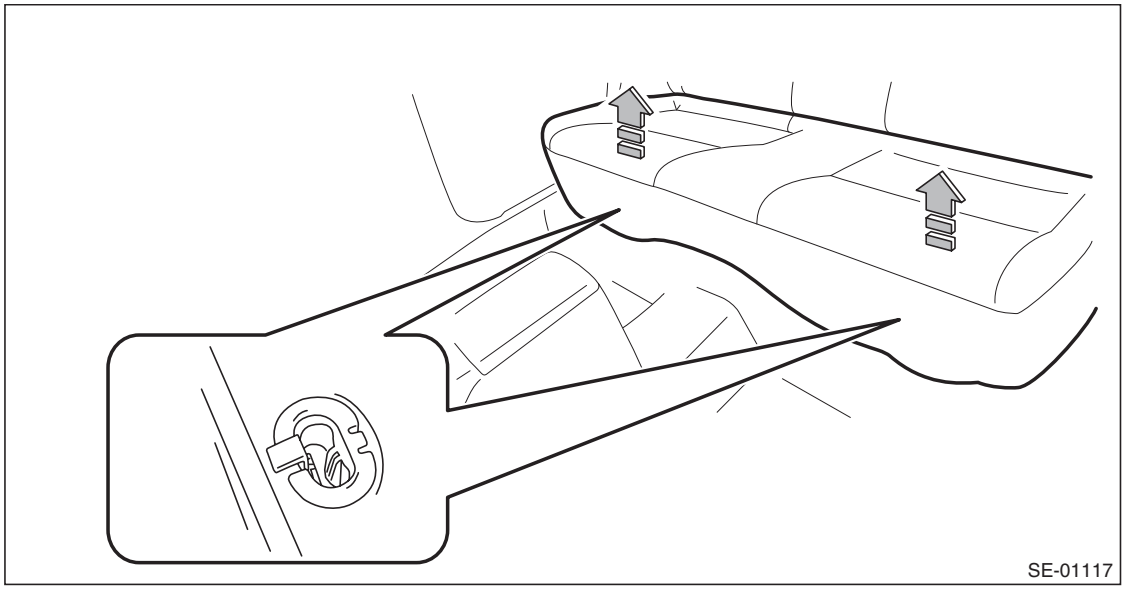

(2) Remove the hook (A) by pushing it back while lifting the front side of the seat cushion, and remove the seat cushion.

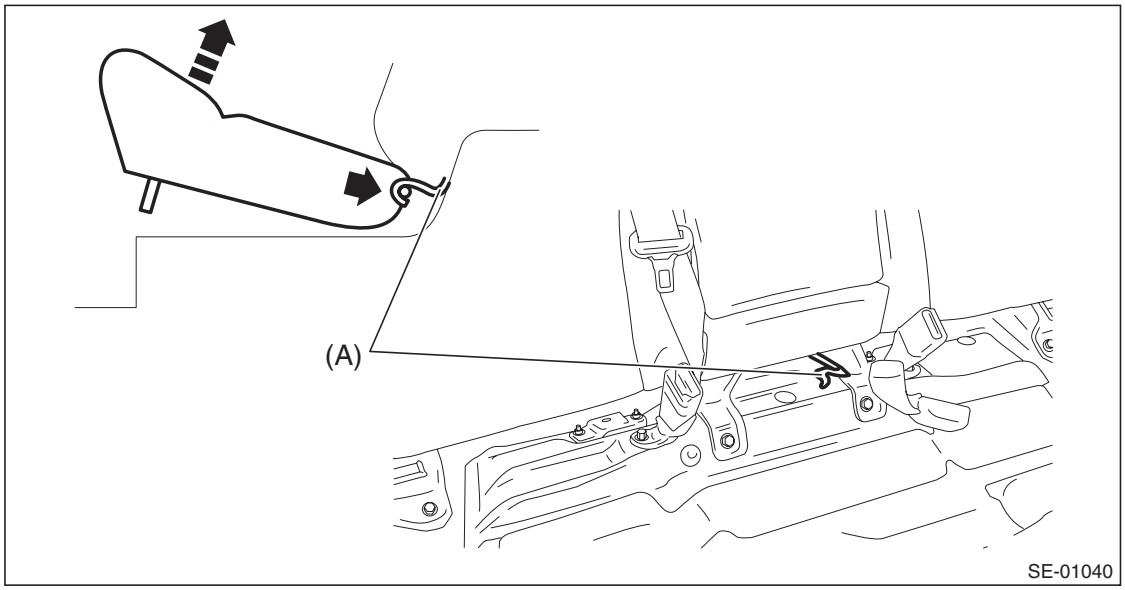

GETtheMANUALS.org

4) Release the clips and claws, and then remove the side sill cover - rear INN.

CAUTION:
Do not pull with excessive force. Doing so may damage the claws of the side sill cover INN.

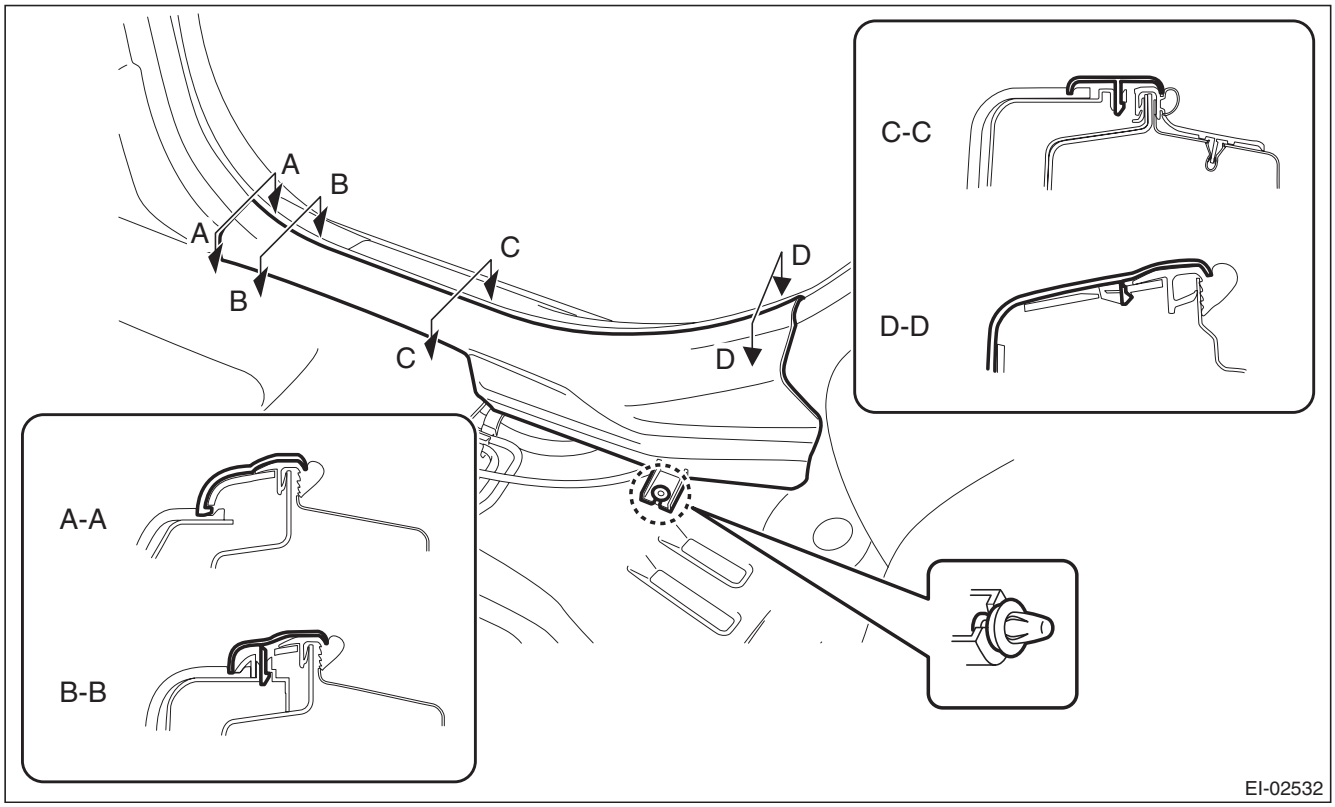

NOTE:
To release the claws of the side sill cover INN, the following steps are recommended.
1. Take out the weather strip from under the side sill cover INN.
2. Turn over the floor mat and release the claw (C-C and D-D) by accessing from behind the side sill cover INN.

GETtheMANUALS.org

5) Remove the center pillar trim LWR.
   (1) Release the clip by pulling the center pillar trim LWR toward you.
   (2) Expand the claws of center pillar trim LWR outward and remove it from the center pillar trim UPR.

CAUTION:
Do not expand the center pillar trim LWR excessively. Doing so may damage the trim.

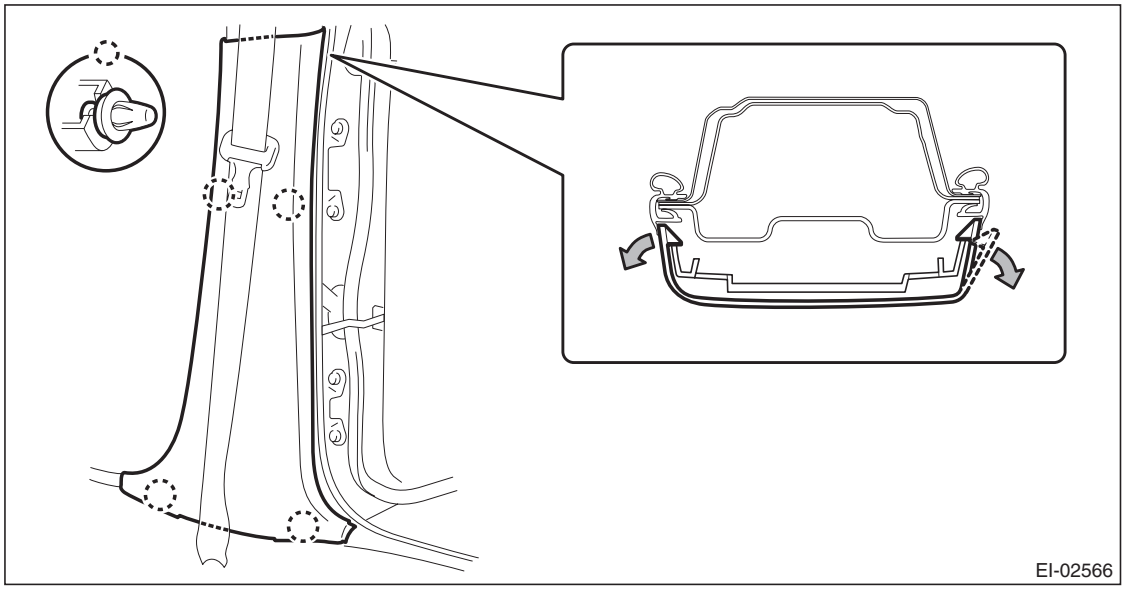

NOTE:
First release the claw located to the rear of the vehicle.

6) Remove the center pillar trim UPR.
   (1) Remove the seat belt lower anchor bolt.

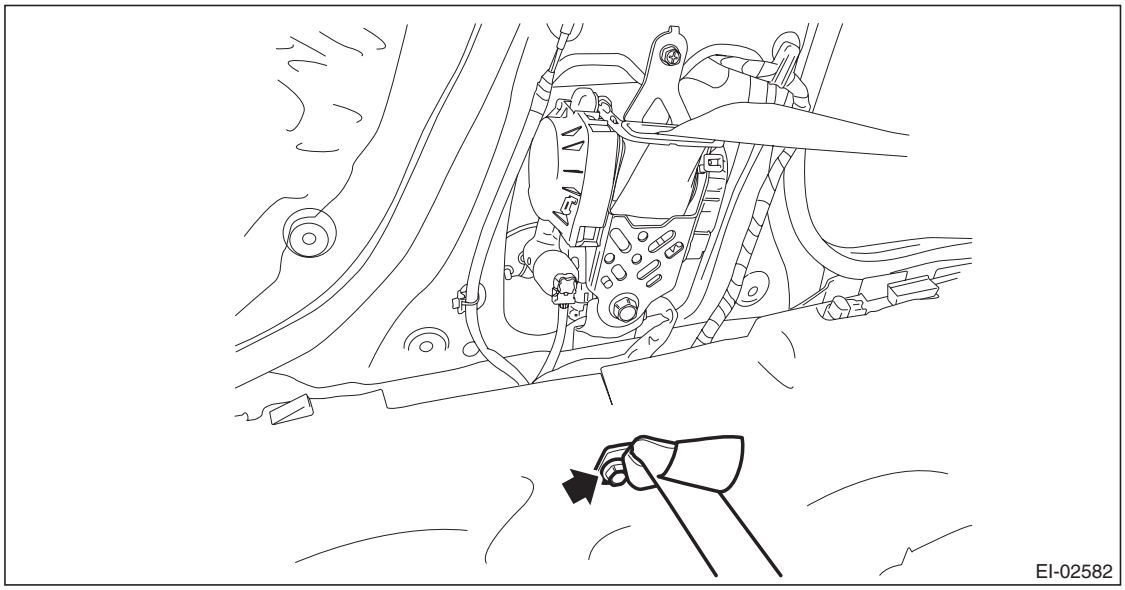

   (2) Release the clip by pulling the center pillar trim UPR toward you.

GETtheMANUALS.org

(3) Remove the center pillar trim UPR by lowering the entire trim.

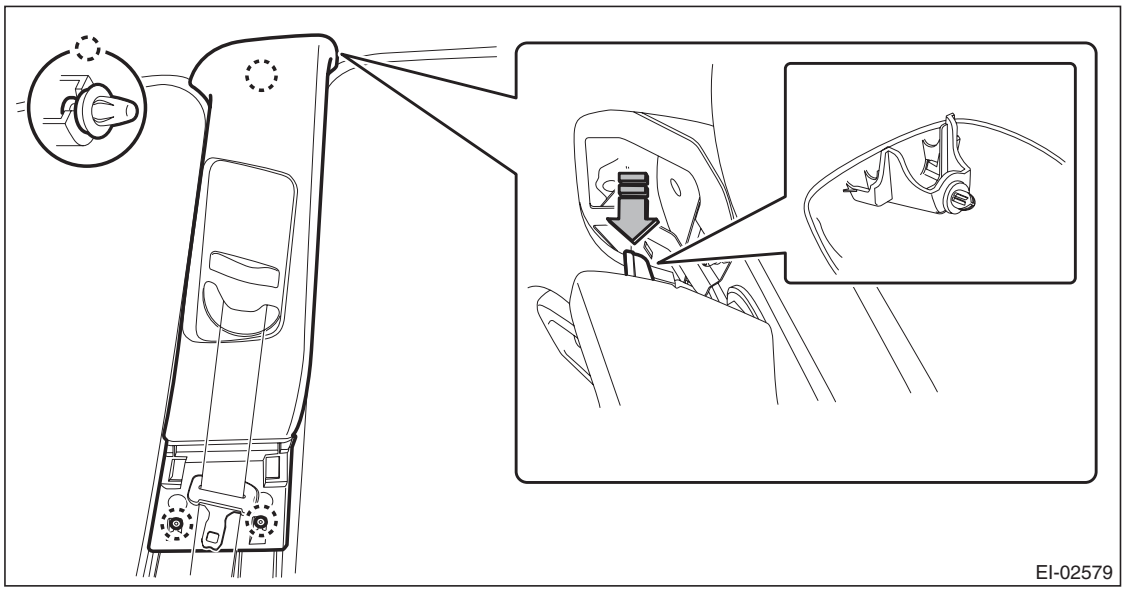

(4) Pull out the seat belt and remove the center pillar trim UPR.

B: INSTALLATION

CAUTION:

- **Do not reuse the clips in the upper section of the front pillar trim. Always replace them with new ones.**

Once removed from the pillar trim, the clip retention power deteriorates and the front pillar trim may come off.

- **Do not reuse the clips in the upper section of the center pillar trim. Always replace them with new ones.**

Once the pillar trim is removed, the clip retention power deteriorates and the center pillar trim may come off.

- **Before installing the front pillar trim, check the condition of (white) protective unwoven cloth of curtain airbag. If it is damaged (airbag module cloth is exposed), replace the curtain airbag module assembly with a new part.**

1) Remove any clips remaining on body.
2) Prepare new clips and attach them to the front pillar trim.

GETtheMANUALS.org

3) Install the front pillar trim.

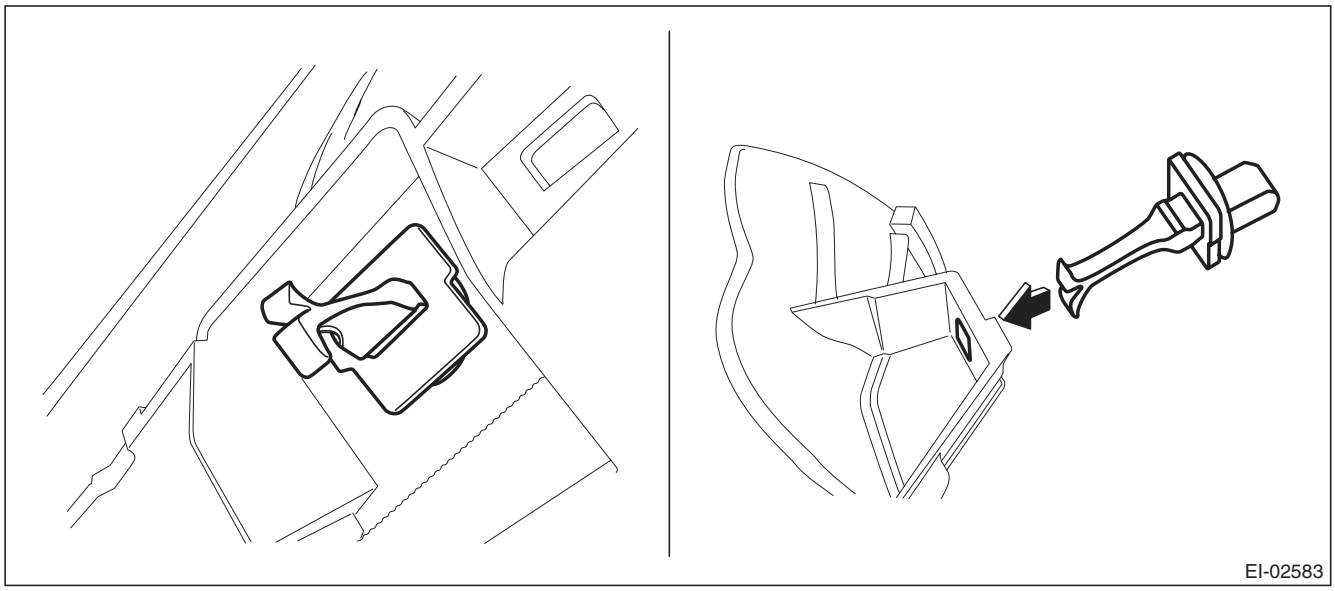

4) Assemble the center pillar trim LWR to the center pillar trim UPR securely.

CAUTION:
Do not forget to install the seat belt.

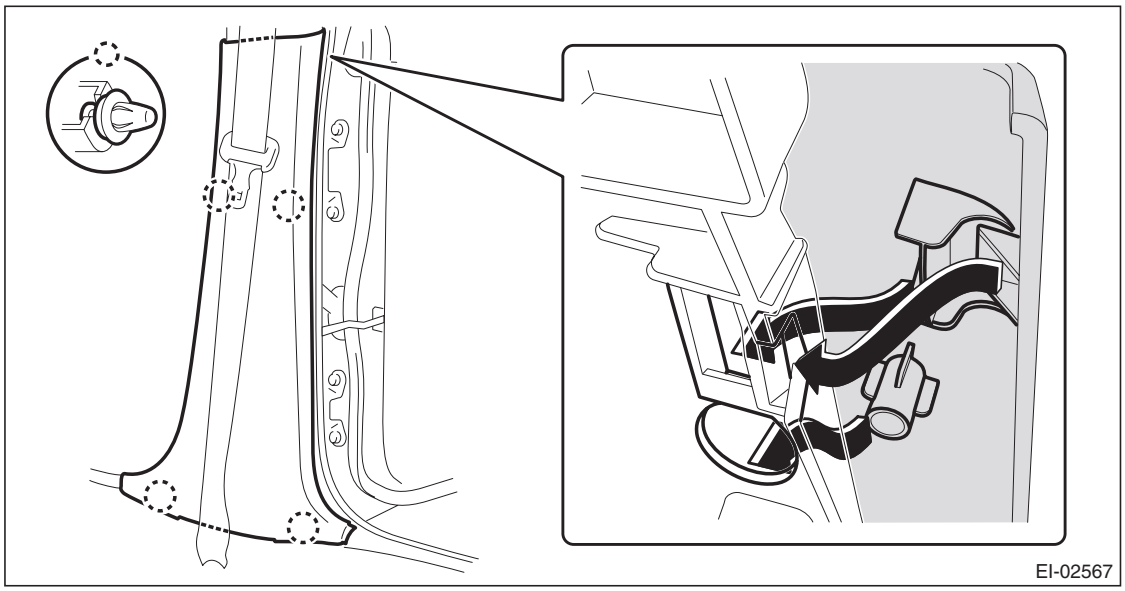

GETtheMANUALS.org

5) Assemble the center pillar trim LWR and center pillar trim UPR to the body.

CAUTION:
Do not reuse the clips in the upper section of the pillar trim. Always replace them with new ones.

(1) Guide the seat belt through the center pillar trim UPR.
(2) Insert the upper claws of the pillar trim.
(3) Attach the pillar trim by fitting the lower clips to the body.

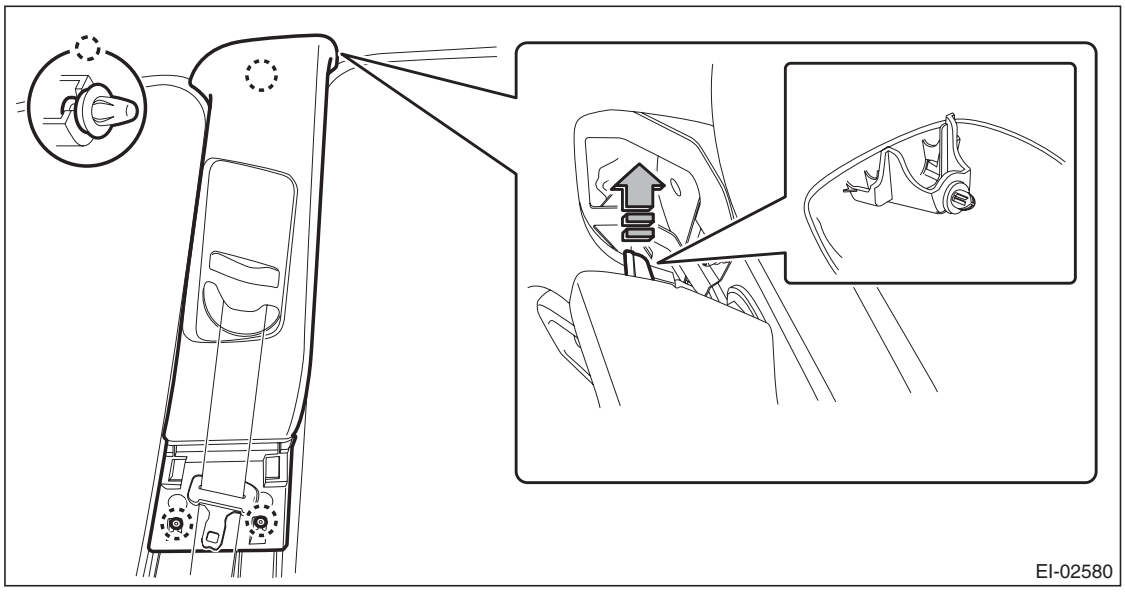

6) Install each part in the reverse order of removal.

CAUTION:
If the hook is removed from vehicle body, replace the hook with the new part to avoid the deterioration of seat securing.

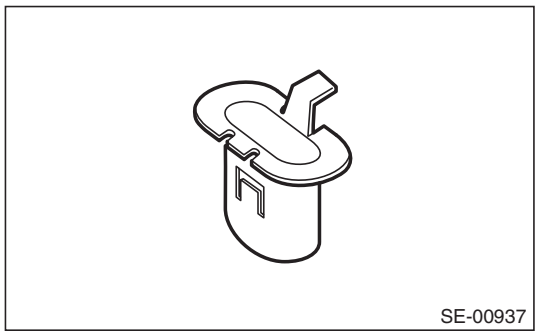

Tightening torque
Front seat belt: <Ref. to SB-2, FRONT SEAT BELT, COMPONENT, General Description.>

GETtheMANUALS.org

22. Rear Quarter Trim

A: REMOVAL

1. SEDAN MODEL

1) Disconnect the ground cable from battery and wait for at least 60 seconds before starting work.

CAUTION:
The airbag system is fitted with a backup power supply. After disconnecting the battery ground cable, the airbag may operate if you do not wait for 60 seconds before starting the service of airbag system.

2) Remove the rear seat cushion assembly.
   (1) Pull up the seat cushion and release the hook.

CAUTION:
If the hook is disconnected from the vehicle body, replace the hook with the new part to prevent the decline of the fixed force of the seat.

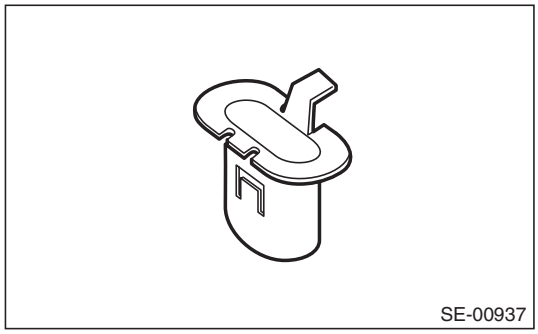

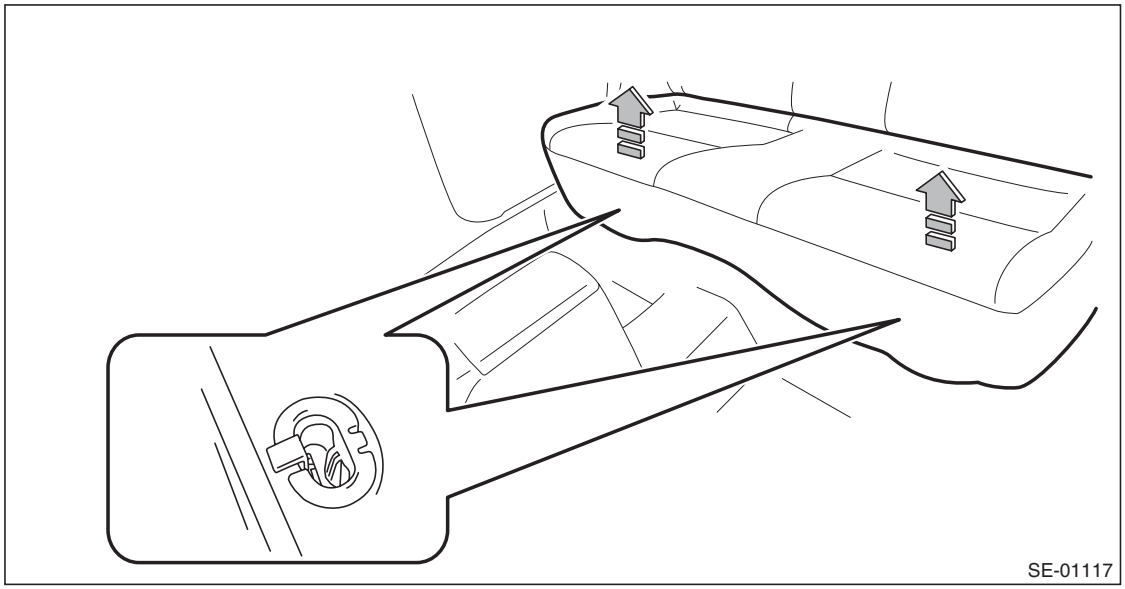

GETtheMANUALS.org

(2) Remove the hook (A) by pushing it back while lifting the front side of the seat cushion, and remove the seat cushion.

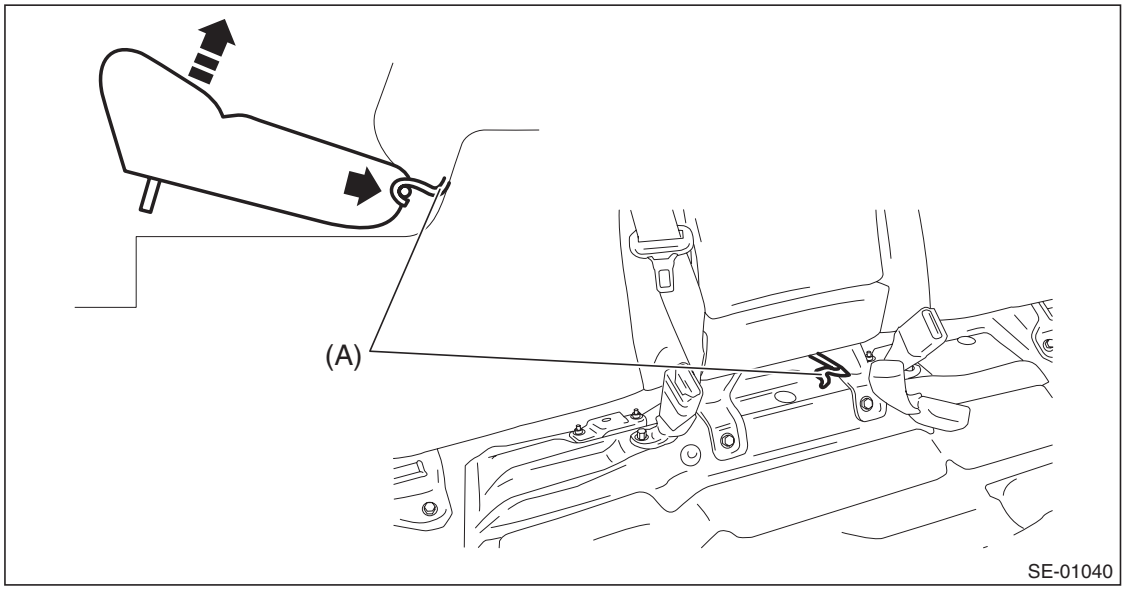

3) Release the clips and claws, and then remove the side sill cover - rear INN.

CAUTION:
Do not pull with excessive force. Doing so may damage the claws of the side sill cover INN.

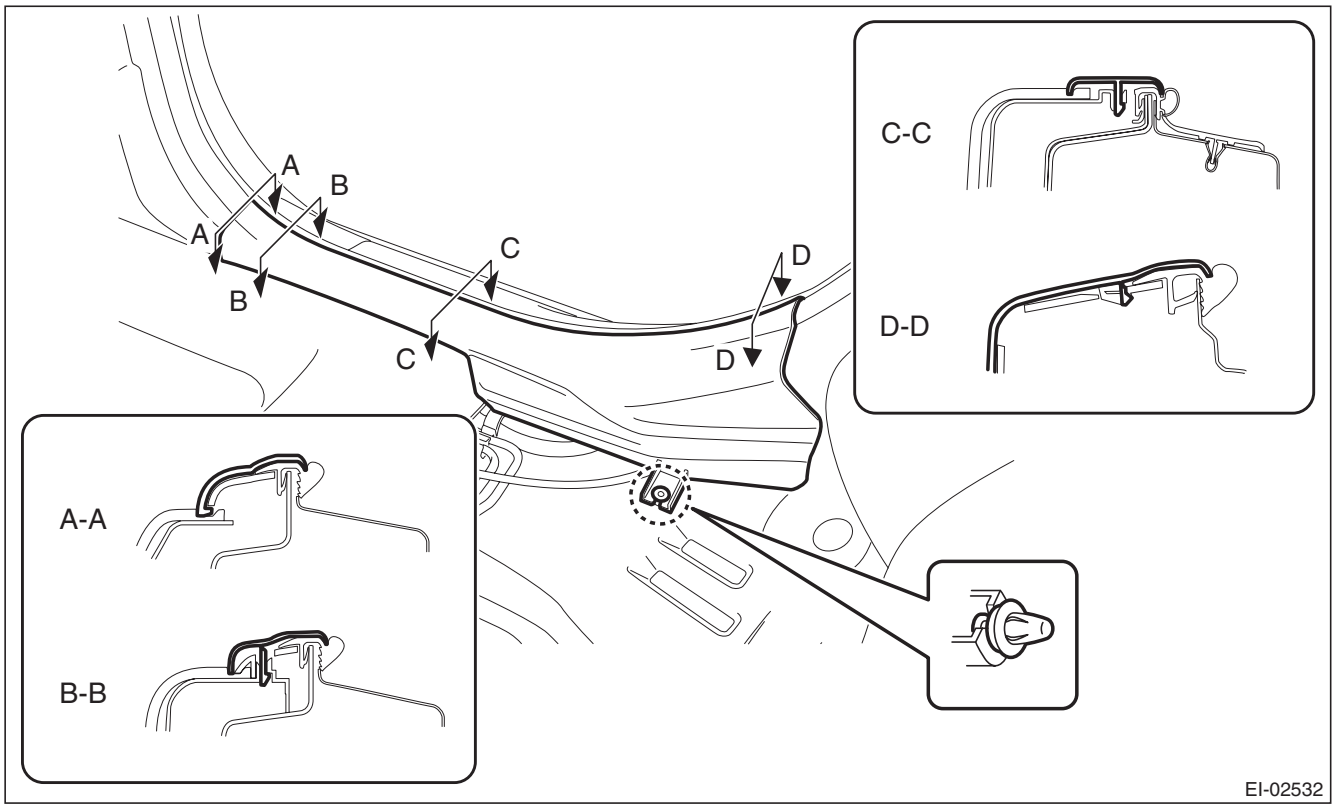

NOTE:
To release the claws of the side sill cover INN, the following steps are recommended.
1. Take out the weather strip from under the side sill cover INN.
2. Turn over the floor mat and release the claw (C-C and D-D) by accessing from behind the side sill cover INN.

GETtheMANUALS.org

4) Remove the rear quarter trim LWR.
   (1) Remove the backrest side pad.
      a) Remove the screws.

Preparation tool: Stubby screwdriver

      b) Turn over the bottom end of the backrest side pad in the forward direction so that the claws are released.
      c) Remove the backrest side pad by pulling it up.

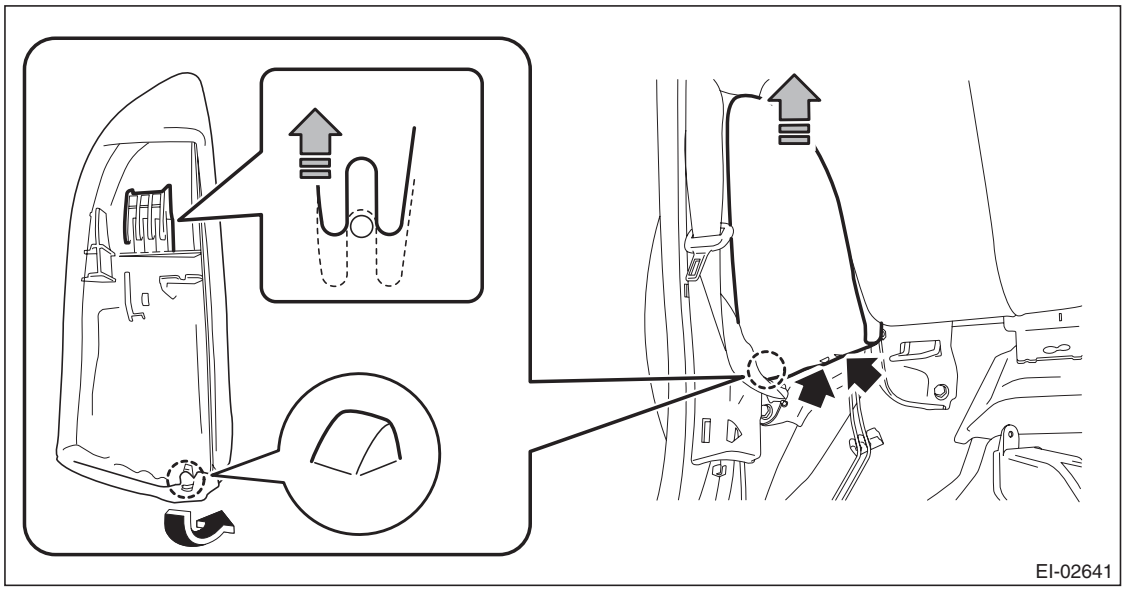

   (2) Pull the release lever in the trunk room, and then tilt the backrest forward.

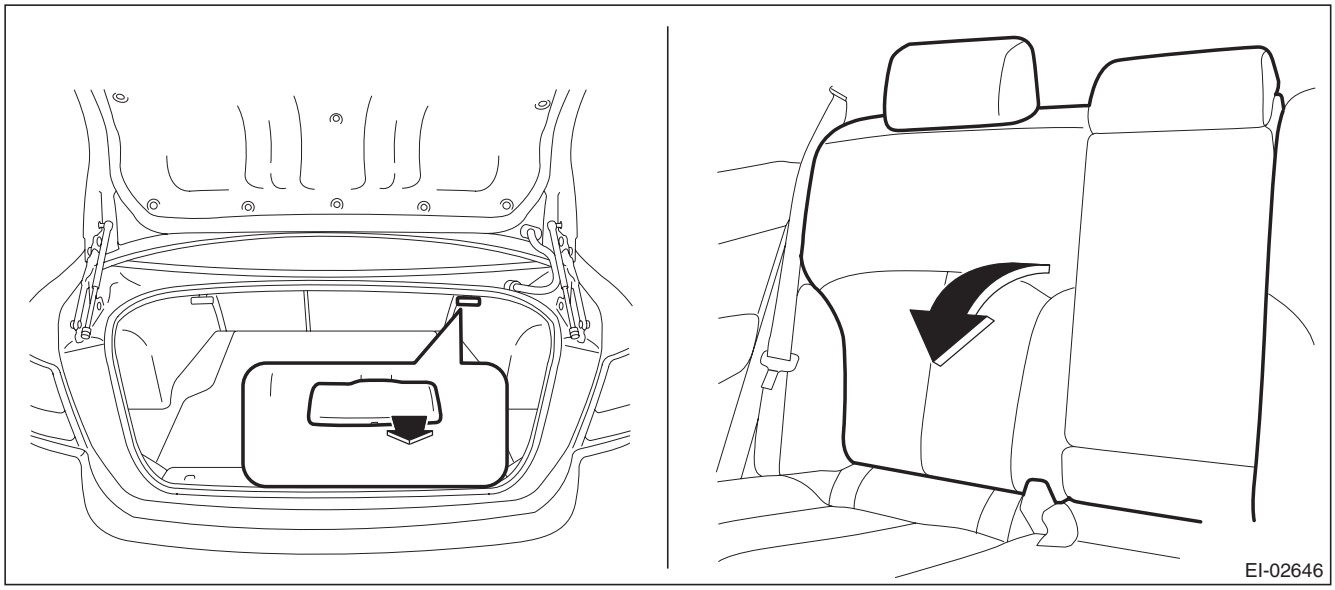

   (3) Release the clips of the trunk trim panel assembly-side.

GETtheMANUALS.org

(4) Remove the clips, and remove the rear quarter trim LWR.

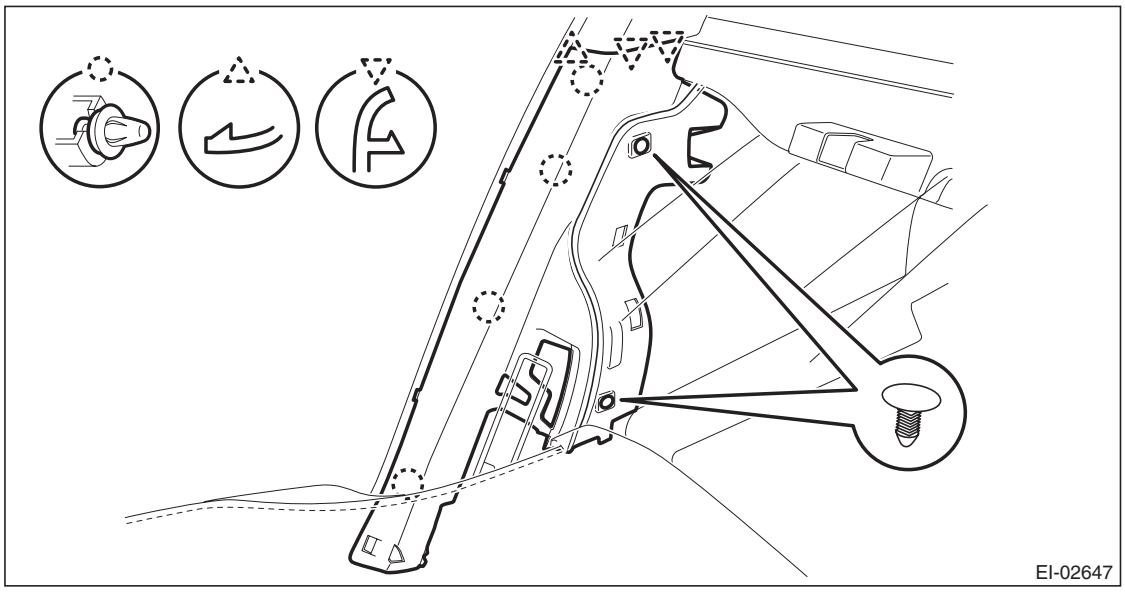

5) Remove the rear quarter trim UPR.

(1) Remove the lower anchor bolt of the outer belt assembly.

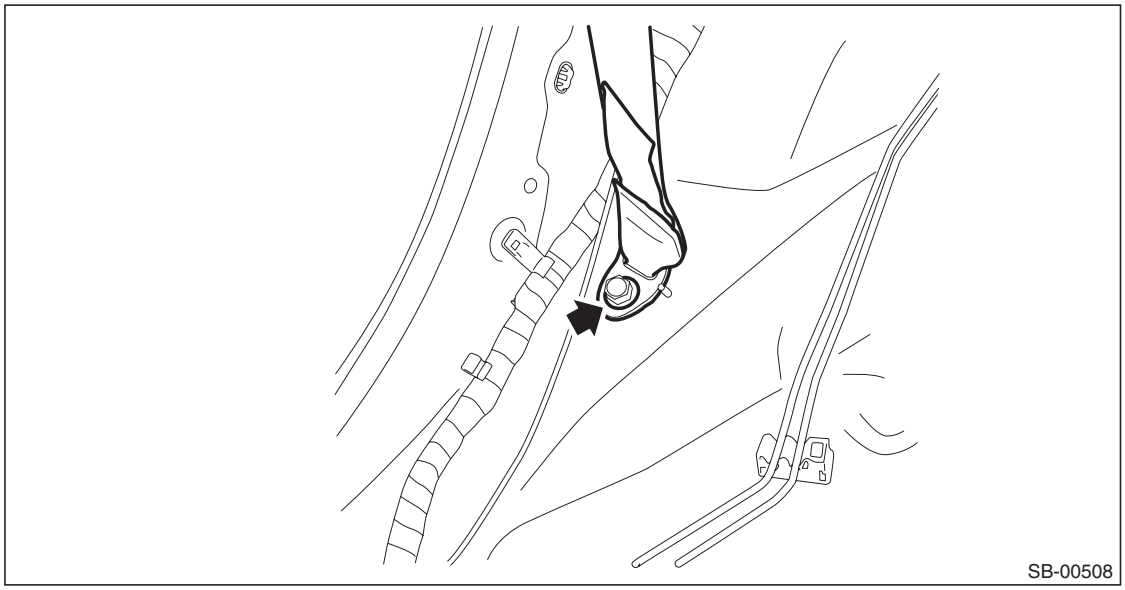

GETtheMANUALS.org

(2) Release the clips, and remove the rear quarter trim UPR.

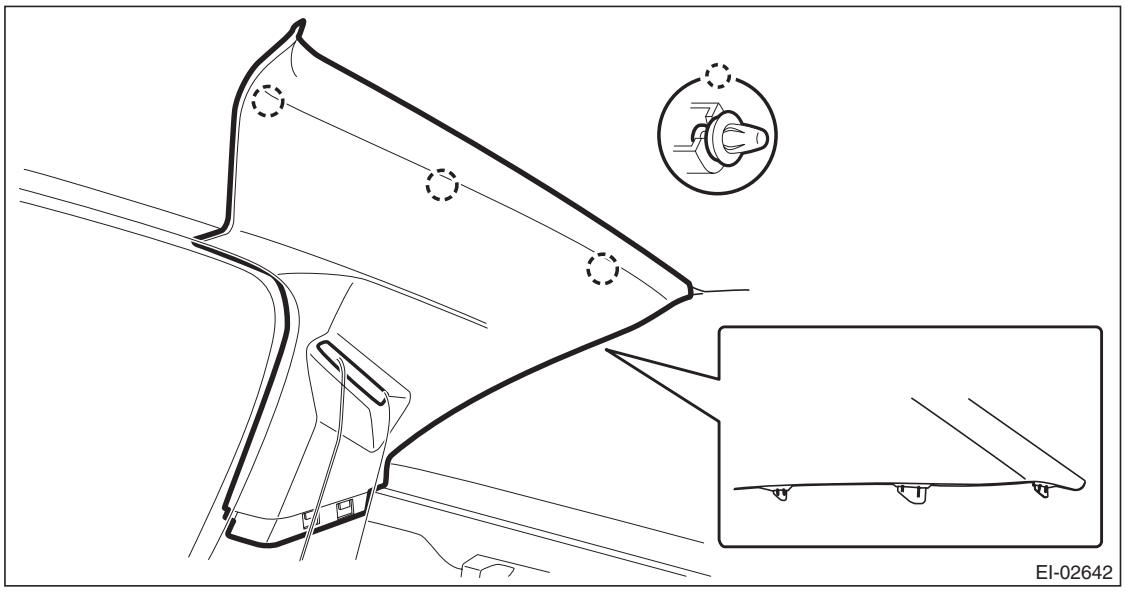

(3) Pull out the seat belt and remove the rear quarter trim UPR.

2. OUTBACK MODEL

1) Disconnect the ground cable from battery and wait for at least 60 seconds before starting work.

CAUTION:
The airbag system is fitted with a backup power supply. After disconnecting the battery ground cable, the airbag may operate if you do not wait for 60 seconds before starting the service of airbag system.

GETtheMANUALS.org

2) Remove the rear seat cushion assembly.
   (1) Pull up the seat cushion and release the hook.

CAUTION:
If the hook is disconnected from the vehicle body, replace the hook with the new part to prevent the decline of the fixed force of the seat.

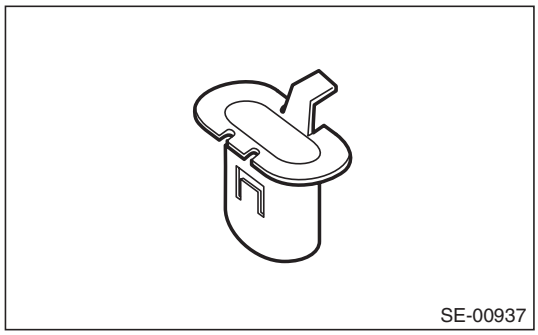

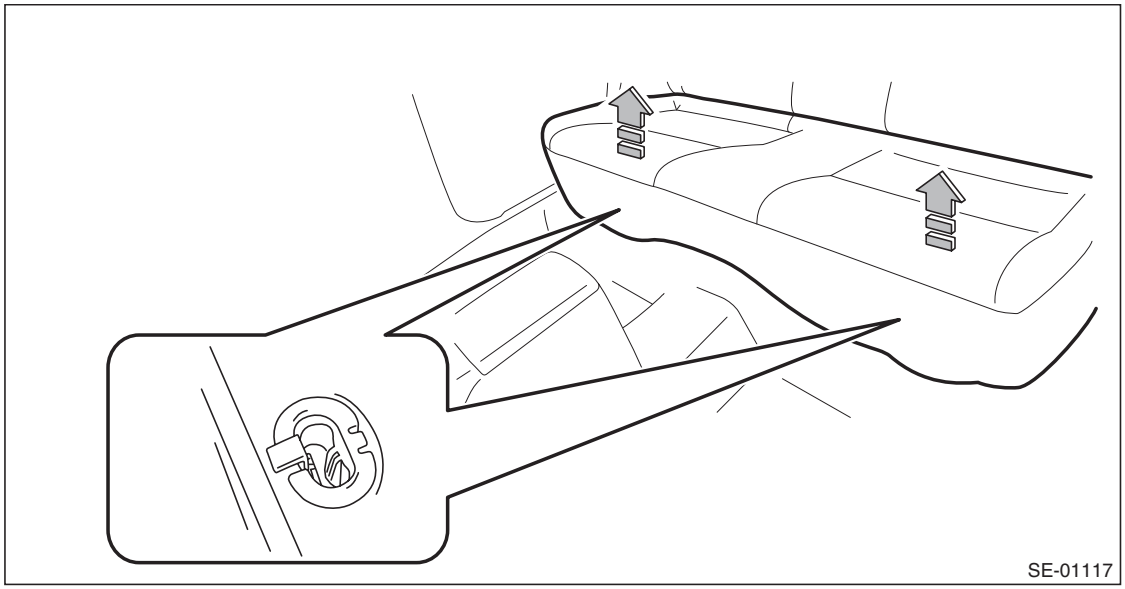

(2) Remove the hook (A) by pushing it back while lifting the front side of the seat cushion, and remove the seat cushion.

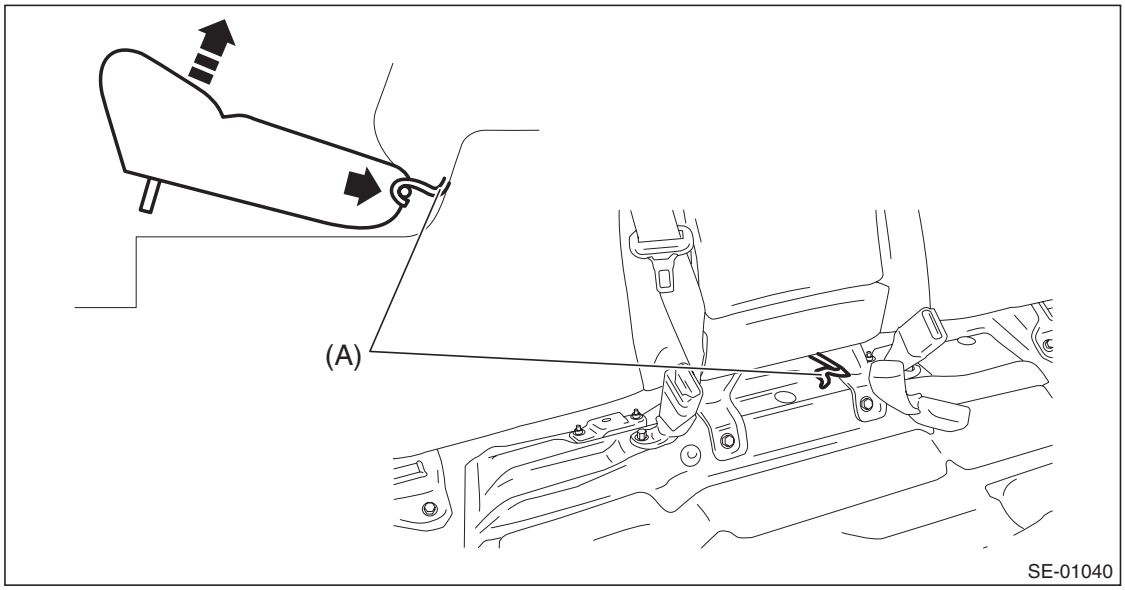

GETtheMANUALS.org

3) Release the clips and claws, and then remove the side sill cover - rear INN.

CAUTION:
Do not pull with excessive force. Doing so may damage the claws of the side sill cover INN.

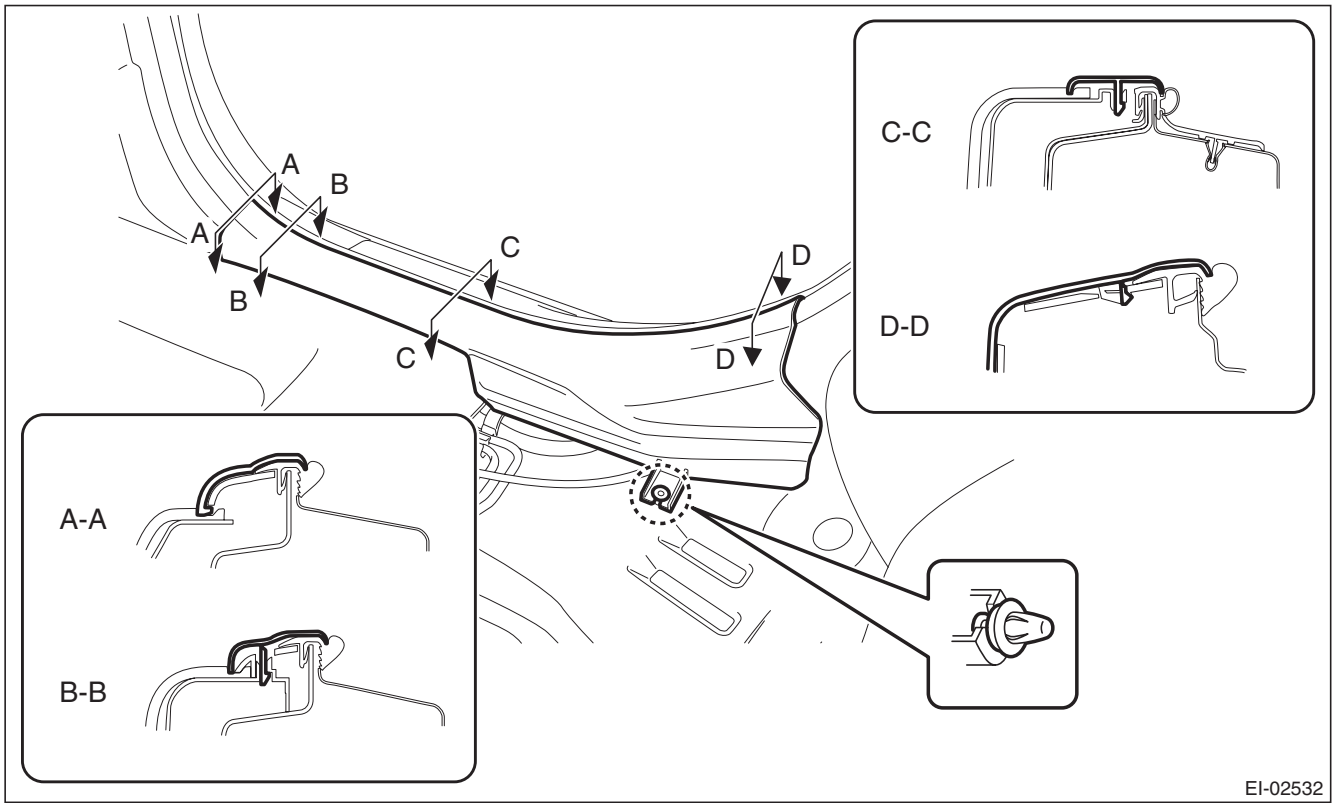

NOTE:
To release the claws of the side sill cover INN, the following steps are recommended.
1. Take out the weather strip from under the side sill cover INN.
2. Turn over the floor mat and release the claw (C-C and D-D) by accessing from behind the side sill cover INN.

4) Tilt the backrest forward, and then turn over the backrest backside mat.

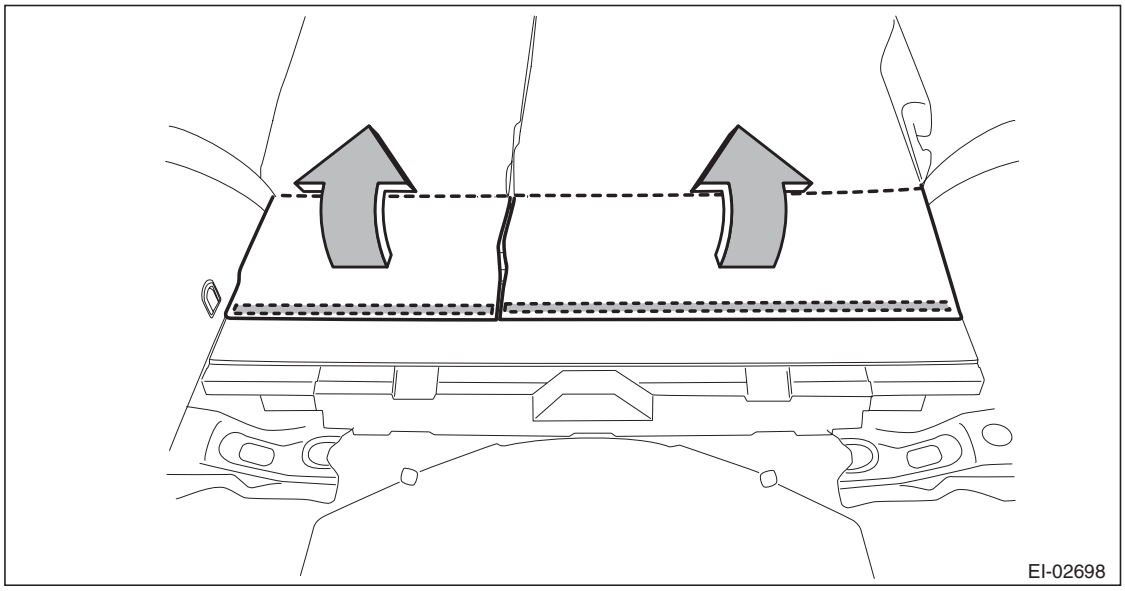

GETtheMANUALS.org

5) Remove the backrest side pad assembly.
   (1) Disconnect the backrest cable and reclining lever cable.
   (2) Remove the screws and remove the reclining lever assembly by pulling it downward.

Preparation tool: Stubby screwdriver

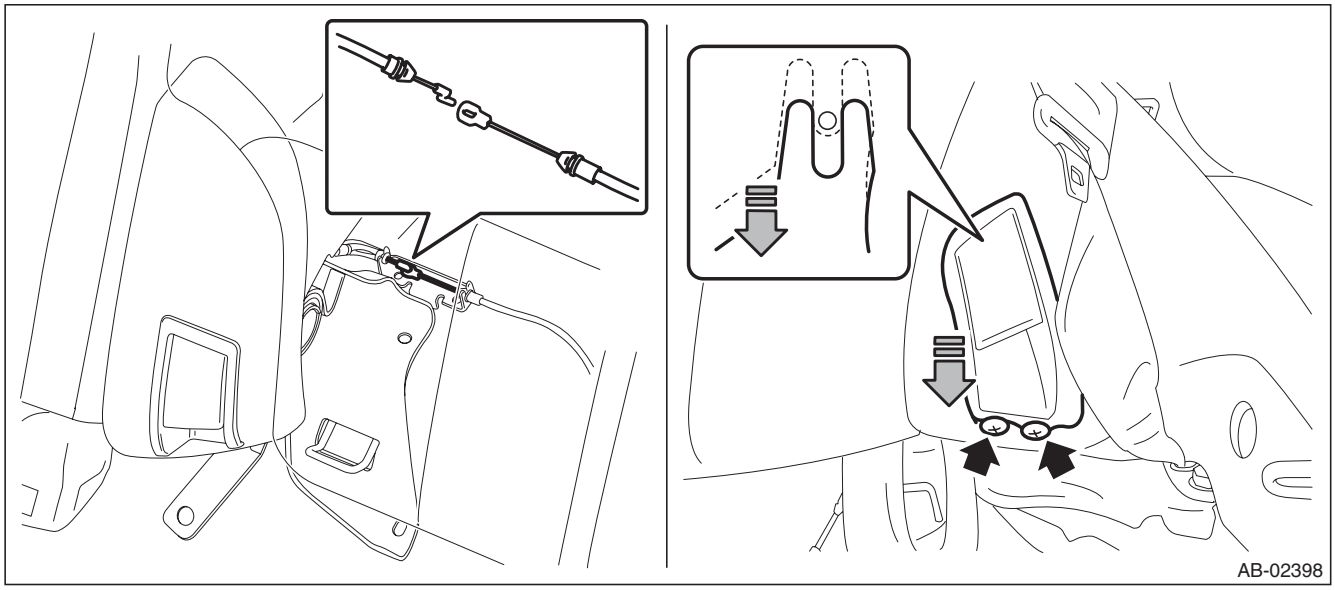

   (3) Turn over the bottom end of the backrest side pad in the forward direction so that the claws are released.
   (4) Remove the backrest side pad by pulling it up.

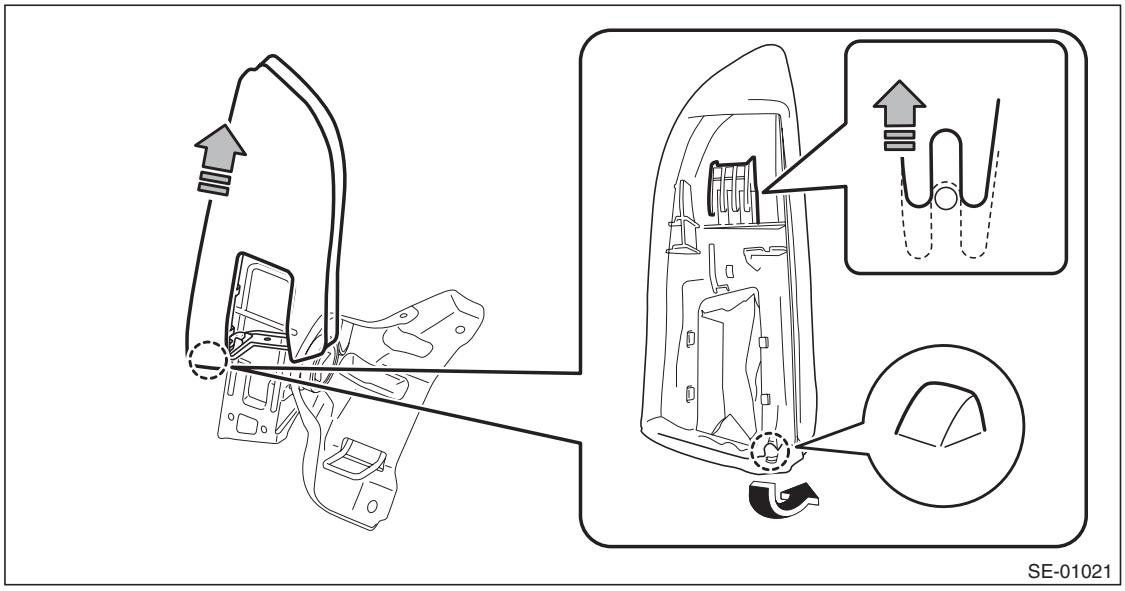

GETtheMANUALS.org

6) Remove the clips, and remove the luggage floor box and rear floor edge cover.

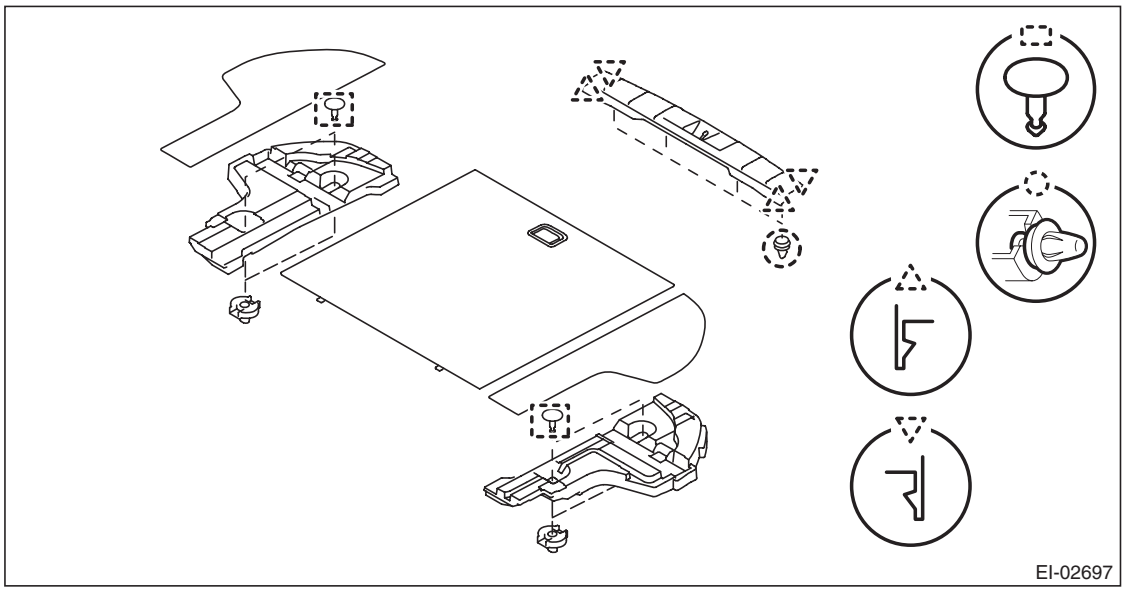

7) Remove the rear quarter trim LWR.
   (1) Remove the caps, screws, and bolts. (A), (C)
   (2) Take out the hook and remove the screw inside. (B)
   (3) Remove the clips, and remove the rear quarter trim LWR.

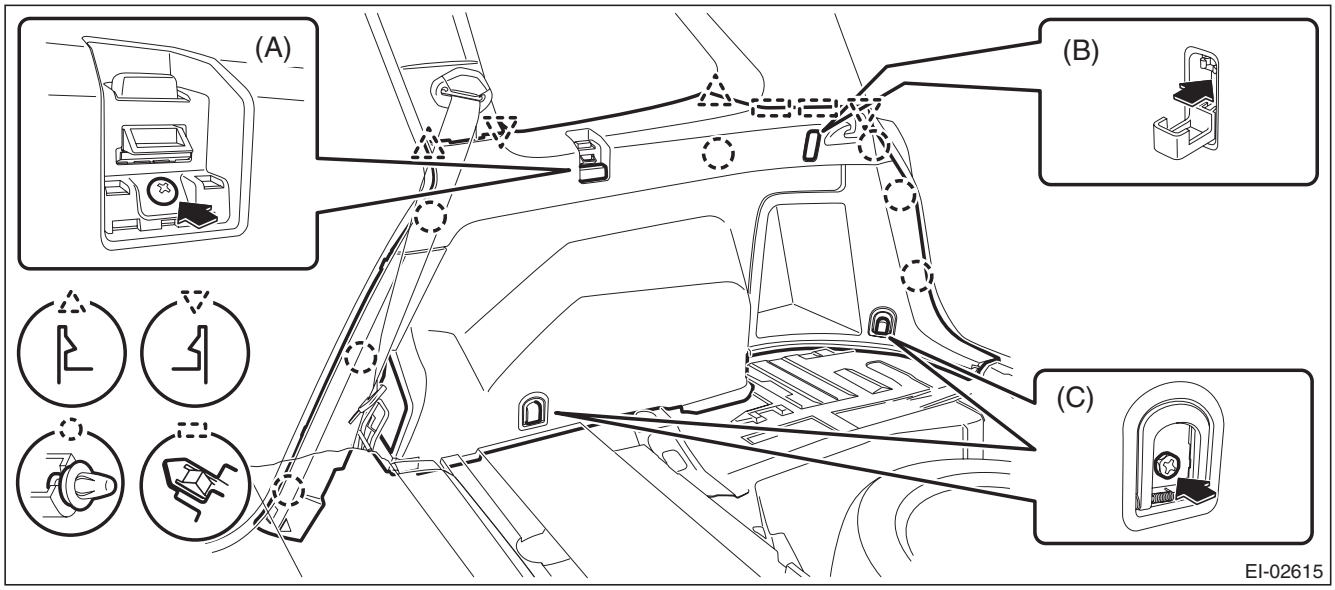

GETtheMANUALS.org

8) Remove the rear quarter trim UPR.
   (1) Open the cap and remove the bolt to remove the seat belt anchor.
   (2) Remove the clips, and remove the rear quarter trim UPR-front.
   (3) Remove the clips, and remove the rear quarter trim UPR-rear.

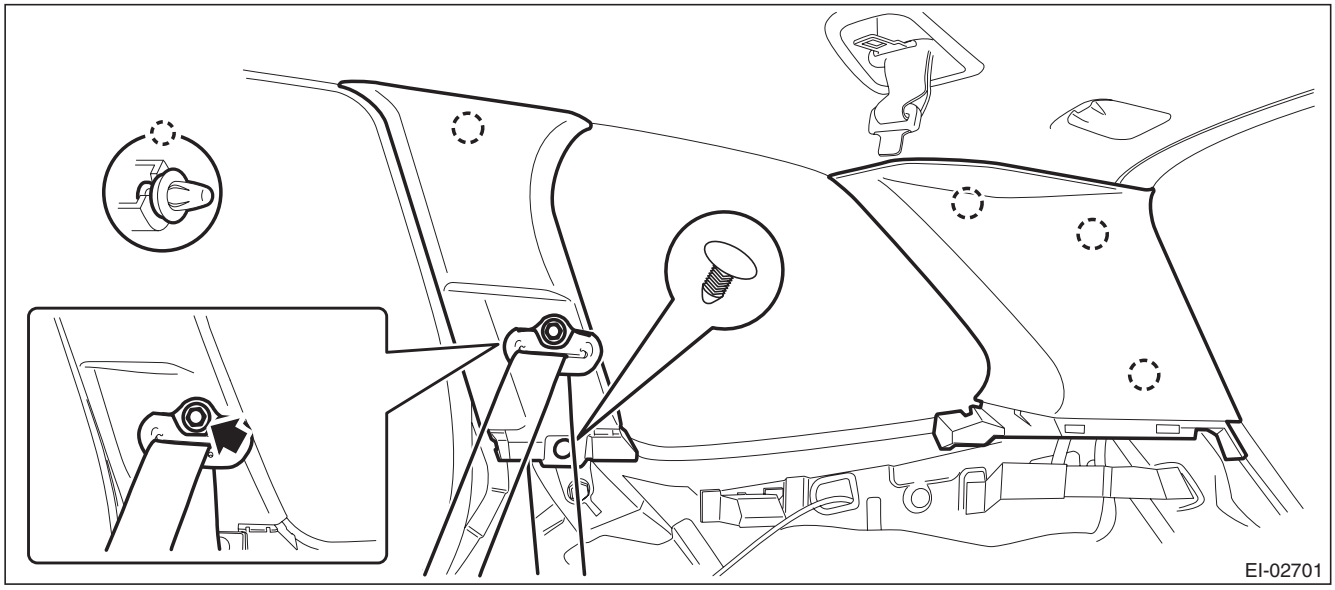

B: INSTALLATION

CAUTION:
If the hook is disconnected from the vehicle body, replace the hook with the new part to prevent the decline of the fixed force of the seat.

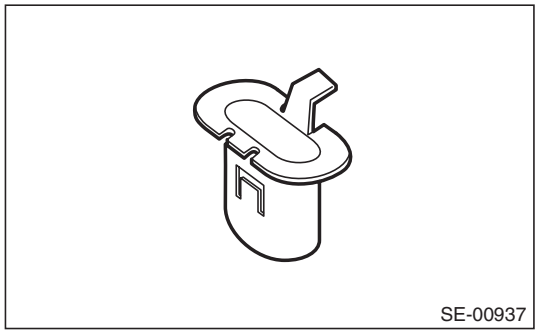

Install each part in the reverse order of removal.

Tightening torque:
Sedan model
Rear seat belt: <Ref. to SB-3, REAR SEAT BELT (SEDAN MODEL), COMPONENT, General Description.>
OUTBACK model
Rear seat belt: <Ref. to SB-4, REAR SEAT BELT (OUTBACK MODEL), COMPONENT, General Description.>

GETtheMANUALS.org

23. Rear Shelf Trim

A: REMOVAL

1) Disconnect the ground cable from battery and wait for at least 60 seconds before starting work.

CAUTION:
The airbag system is fitted with a backup power supply. After disconnecting the battery ground cable, the airbag may operate if you do not wait for 60 seconds before starting the service of airbag system.

2) Remove the rear seat cushion assembly.
   (1) Pull up the seat cushion and release the hook.

CAUTION:
If the hook is disconnected from the vehicle body, replace the hook with the new part to prevent the decline of the fixed force of the seat.

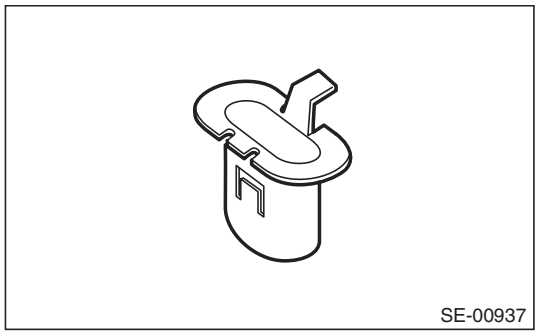

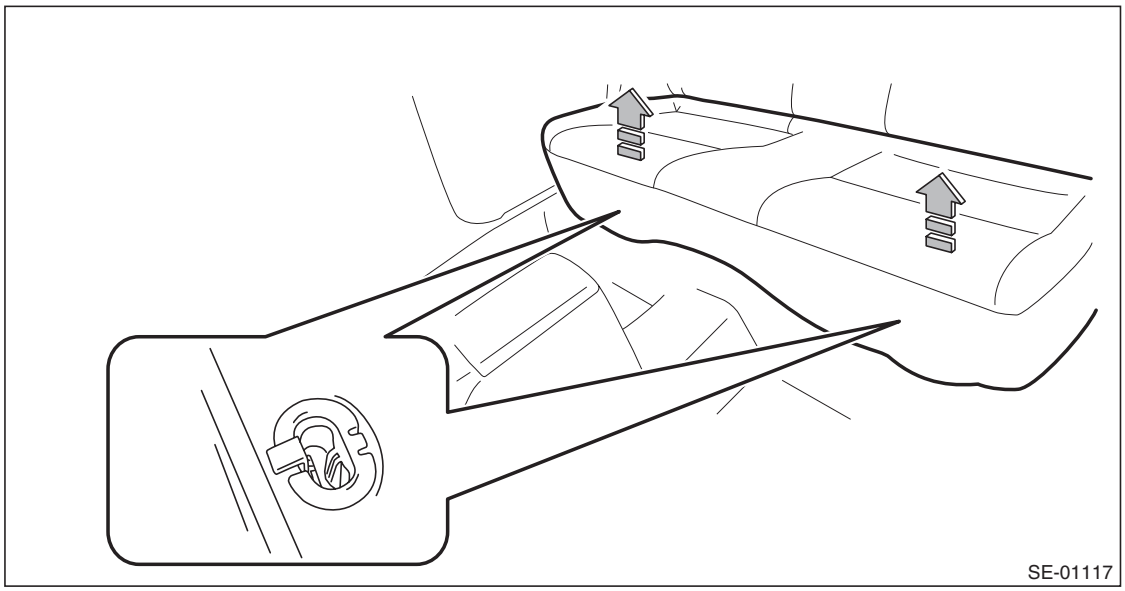

GETtheMANUALS.org

(2) Remove the hook (A) by pushing it back while lifting the front side of the seat cushion, and remove the seat cushion.

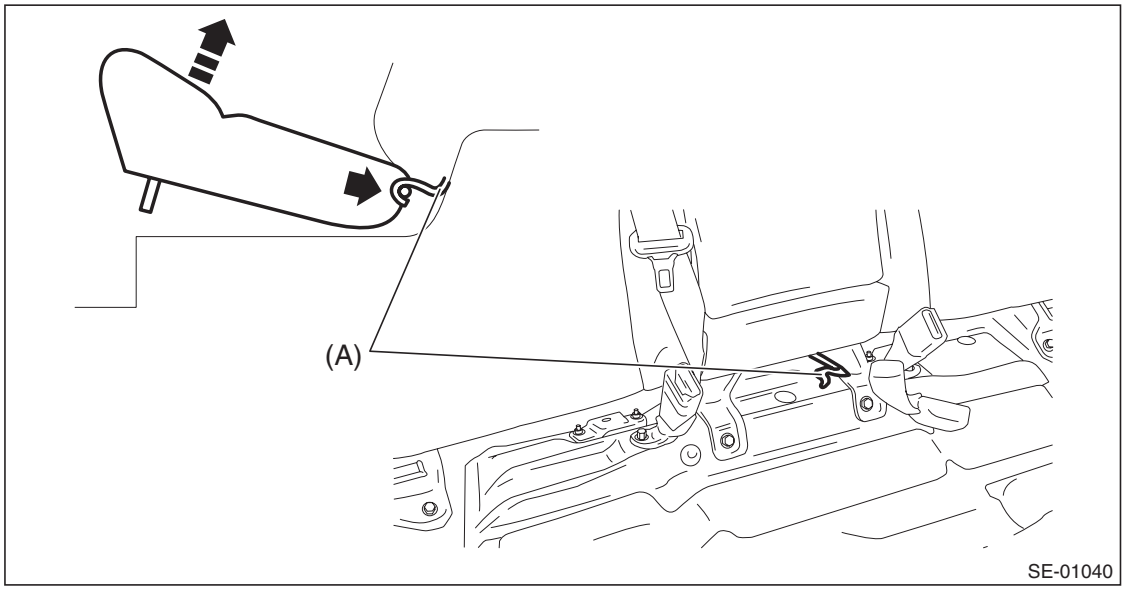

3) Release the clips and claws, and then remove the left and right side sill covers-rear INN.

CAUTION:
Do not pull with excessive force. Doing so may damage the claws of the side sill cover INN.

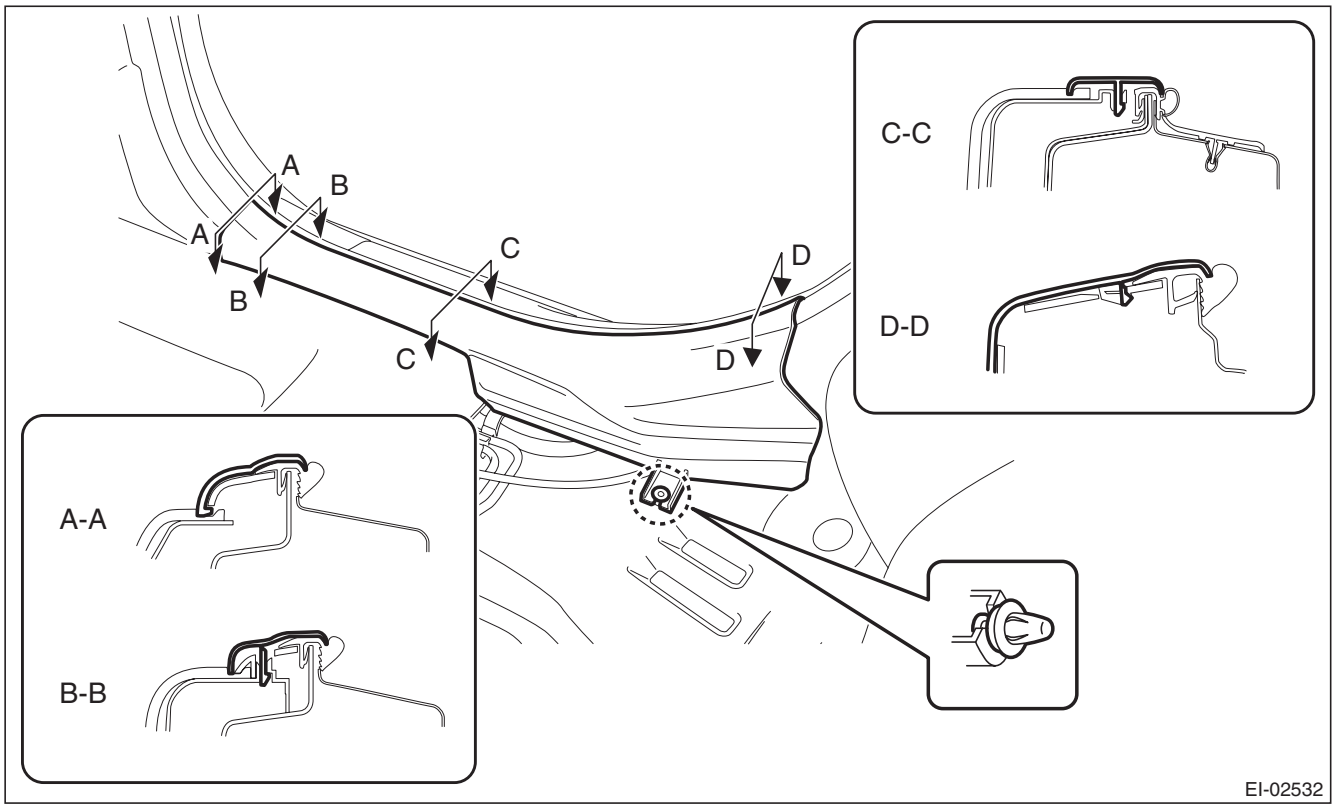

NOTE:
To release the claws of the side sill cover INN, the following steps are recommended.
1. Take out the weather strip from under the side sill cover INN.
2. Turn over the floor mat and release the claw (C-C and D-D) by accessing from behind the side sill cover INN.

GETtheMANUALS.org

4) Remove the left and right rear quarter trim LWR.
   (1) Remove the backrest side pad.
      a) Remove the screws.

Preparation tool: Stubby screwdriver

      b) Turn over the bottom end of the backrest side pad in the forward direction so that the claws are released.
      c) Remove the backrest side pad by pulling it up.

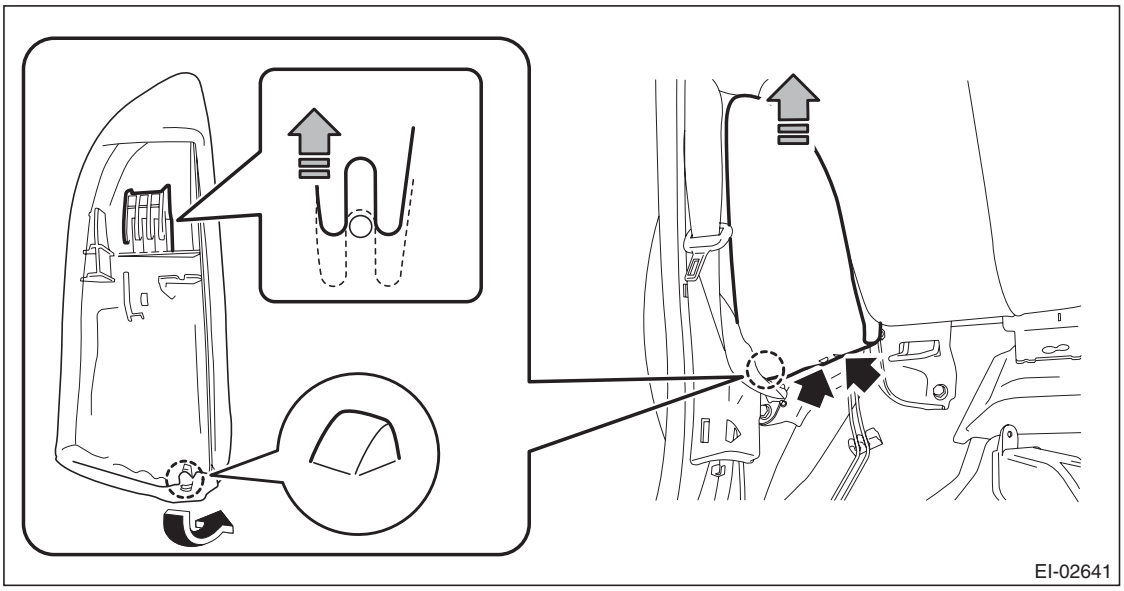

   (2) Pull the release lever in the trunk room, and then tilt the backrest forward.

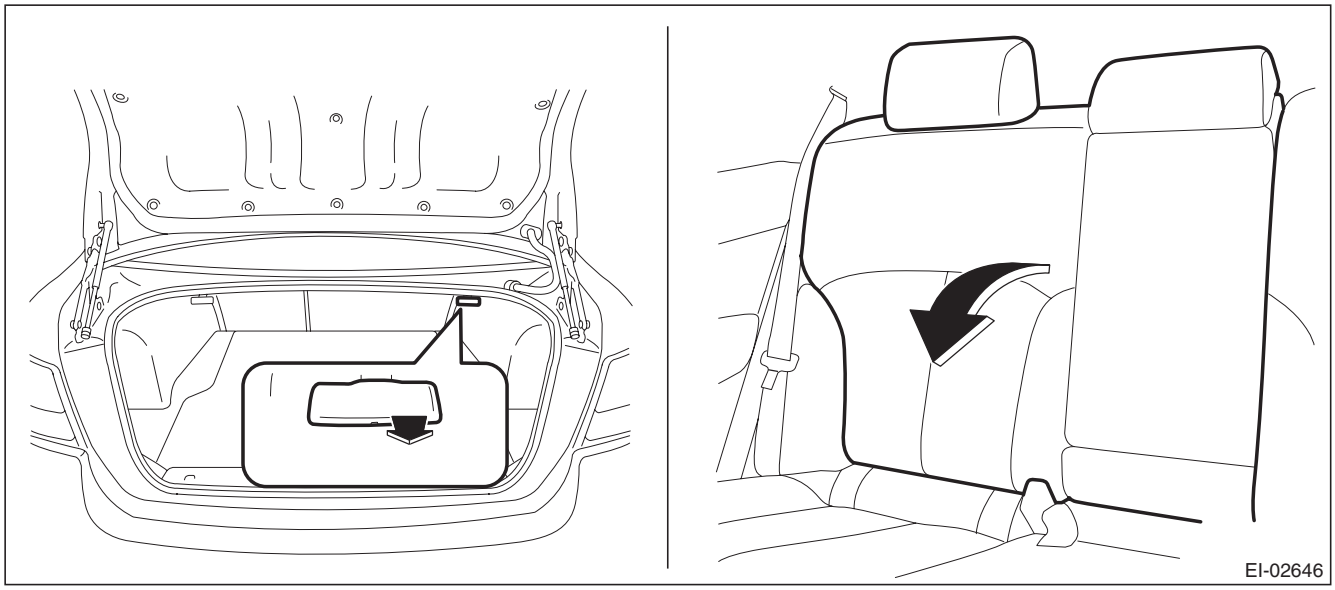

   (3) Release the clips of the trunk trim panel assembly-side.

GETtheMANUALS.org

(4) Remove the clips, and remove the rear quarter trim LWR.

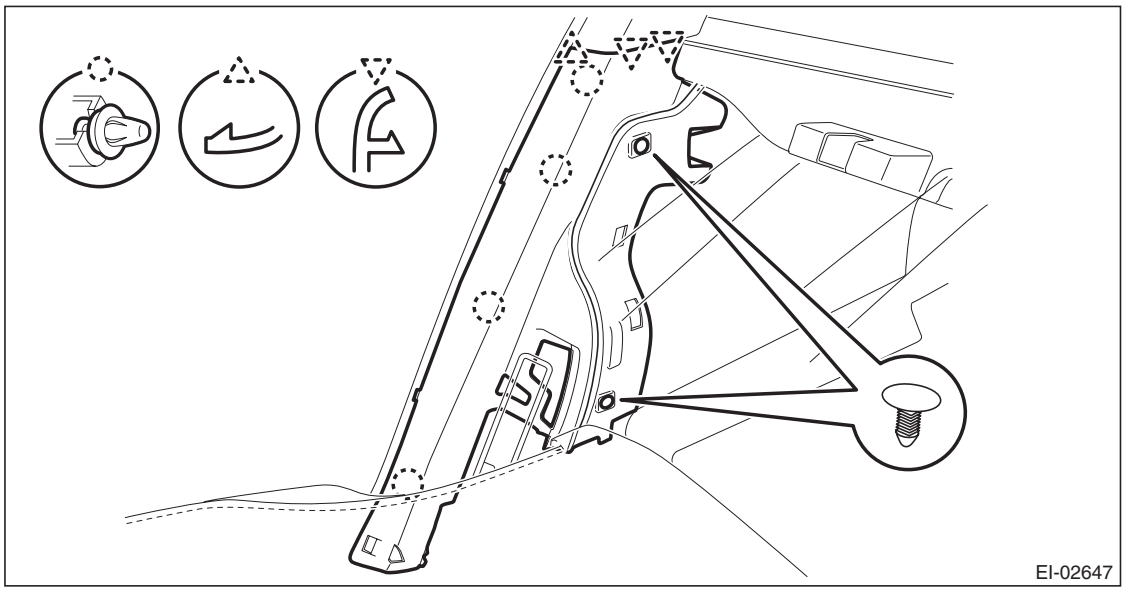

5) Remove the left and right rear quarter trim UPR.
(1) Remove the lower anchor bolt of the outer belt assembly.

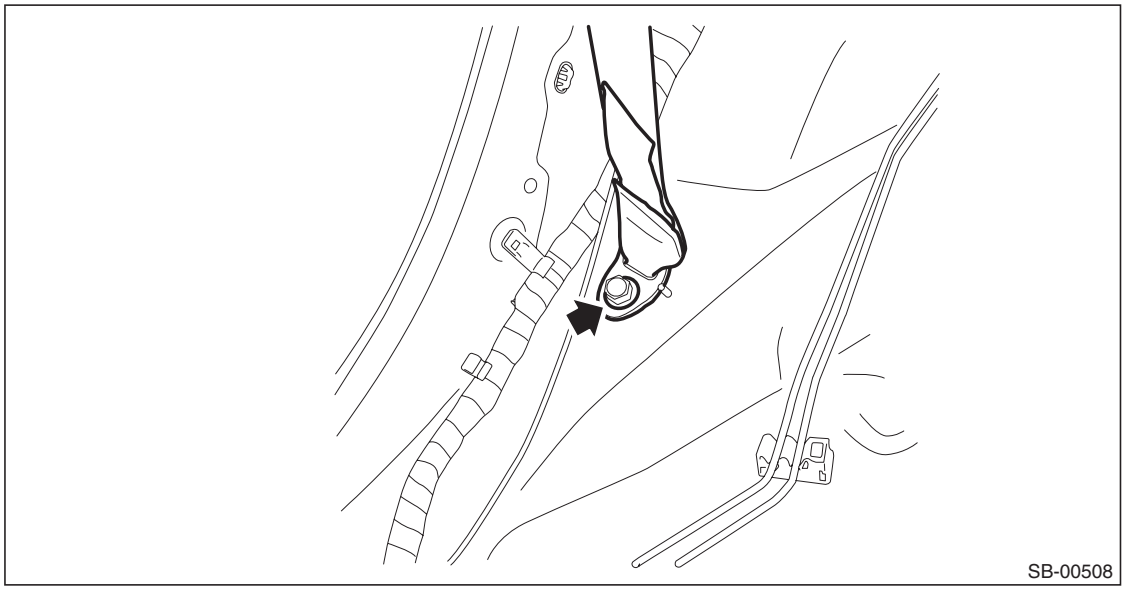

GETtheMANUALS.org

(2) Release the clips, and remove the rear quarter trim UPR.

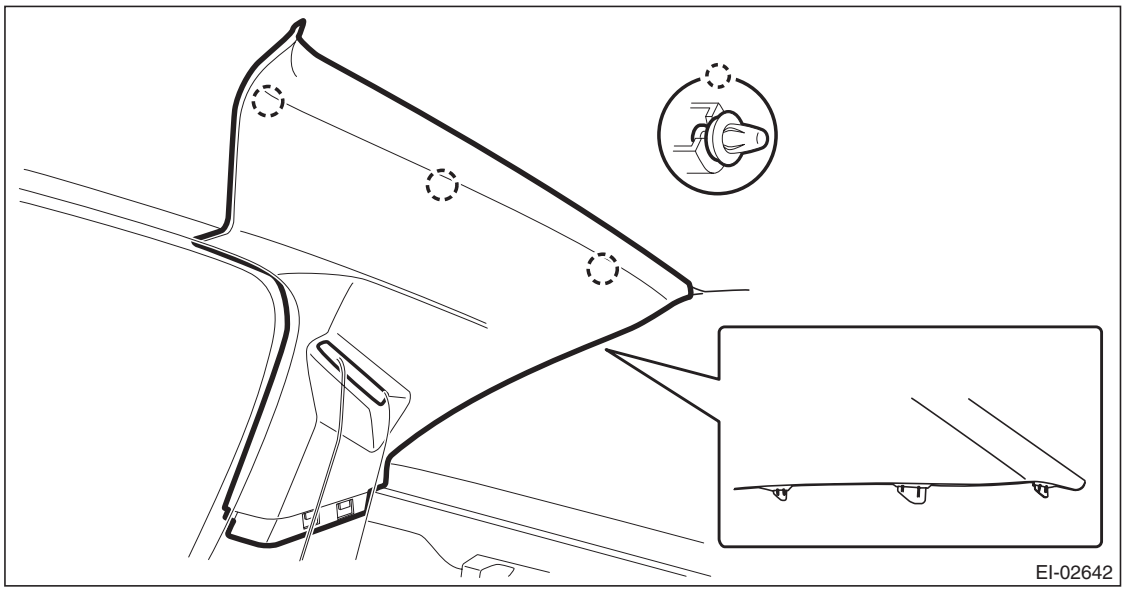

(3) Pull out the seat belt and remove the rear quarter trim UPR.

6) Release the clips and remove the left and right trunk trim panel assembly-front.

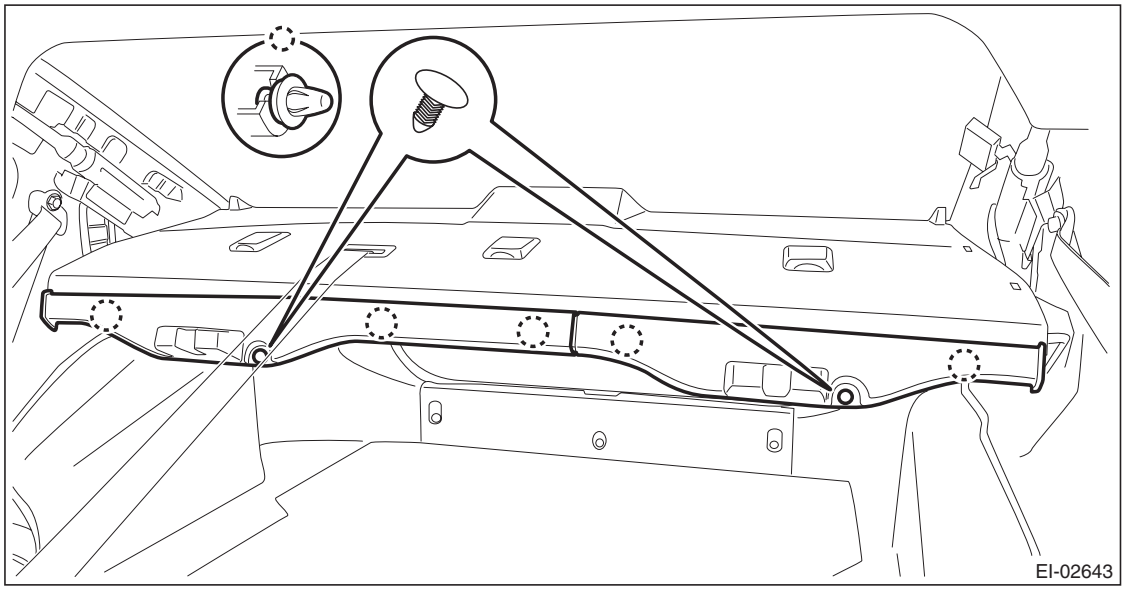

GETtheMANUALS.org

7) Remove the lower anchor of the shoulder belt assembly CTR.
   (1) Remove the nuts and remove the ISO-FIX anchor.
   (2) Remove the bolts, and remove the lower anchor of shoulder belt assembly CTR.

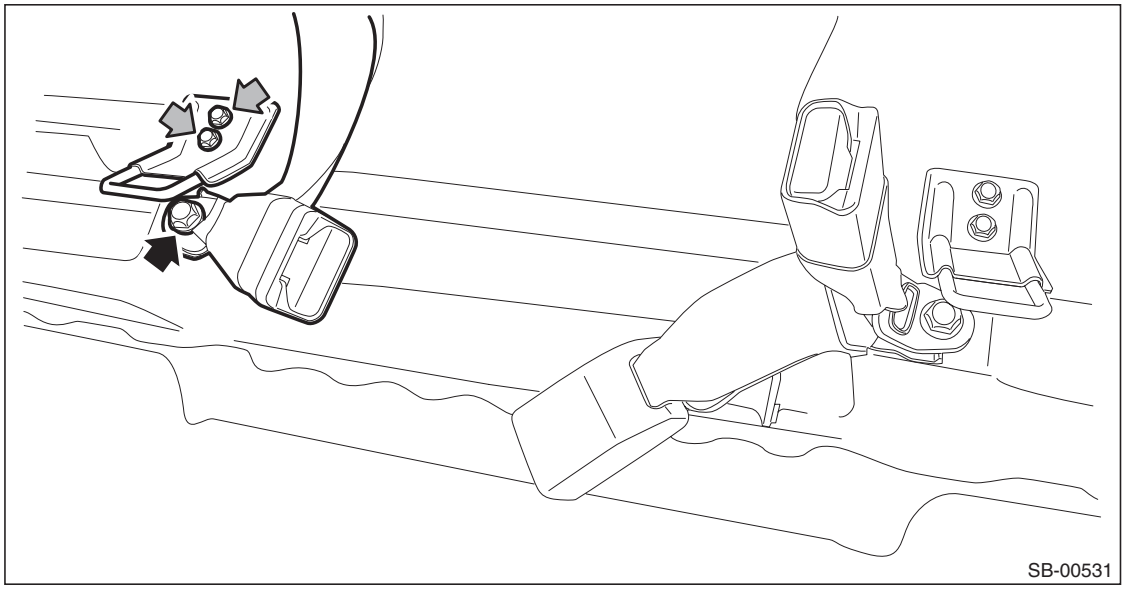

8) Remove the rear shelf panel assembly.
   (1) Release the clips to float the rear shelf panel assembly.
   (2) Release the belt guide and guide the anchor of rear center seat belt to behind the shelf panel.
   (3) Disconnect the connector of high-mounted stop light.
   (4) Remove the rear shelf panel assembly.

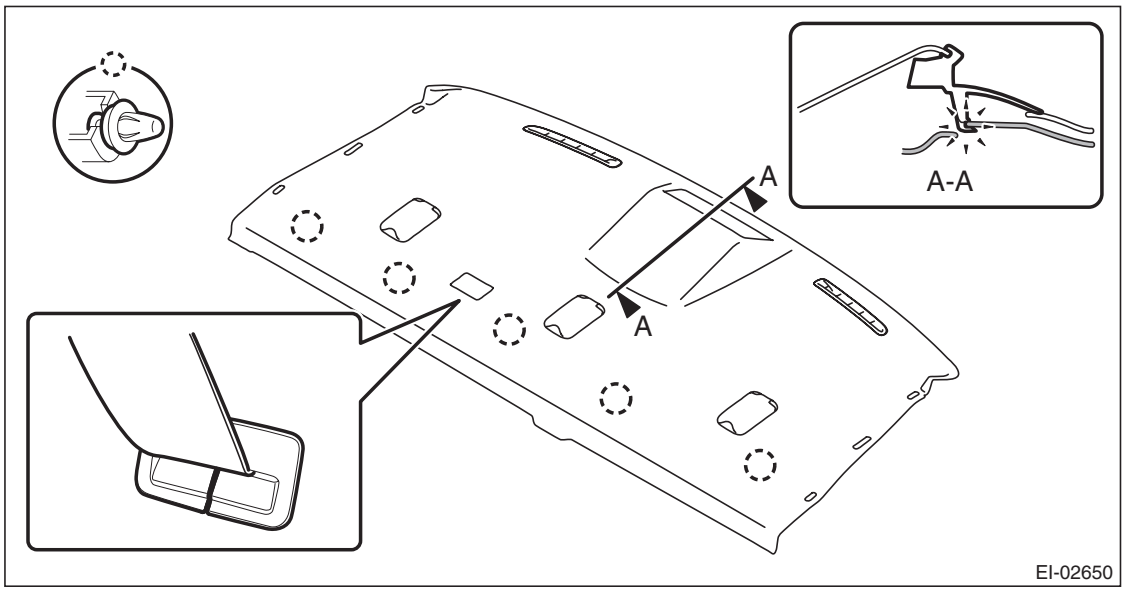

GETtheMANUALS.org

B: INSTALLATION

CAUTION:
- **Make sure to insert the claws on the back of high-mounted stop light into the rear shelf panel.**
- **If the hook is disconnected from the vehicle body, replace the hook with the new part to prevent the decline of the fixed force of the seat.**

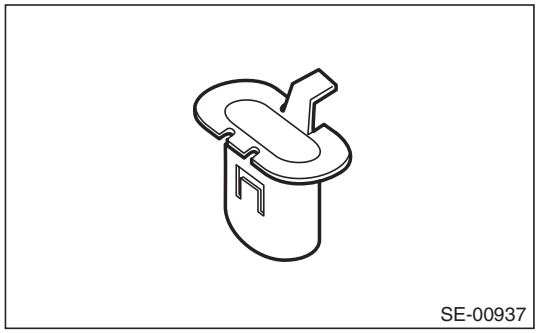

- **Make sure to insert the claws on the back of high-mounted stop light into the rear shelf panel.**

Install each part in the reverse order of removal.

Tightening torque:
ISO-FIX anchor:25 N·m (2.55 kgf-m, 18.4 ft-lb)
Rear seat belt: <Ref. to SB-3, REAR SEAT BELT (SEDAN MODEL), COMPONENT, General Description.>

GETtheMANUALS.org

24. Trunk Room Trim

A: REMOVAL

1. TRUNK LID TRIM

1) Open the trunk lid.
2) Remove the trunk handle.
3) Remove the clips and the trunk lid trim.

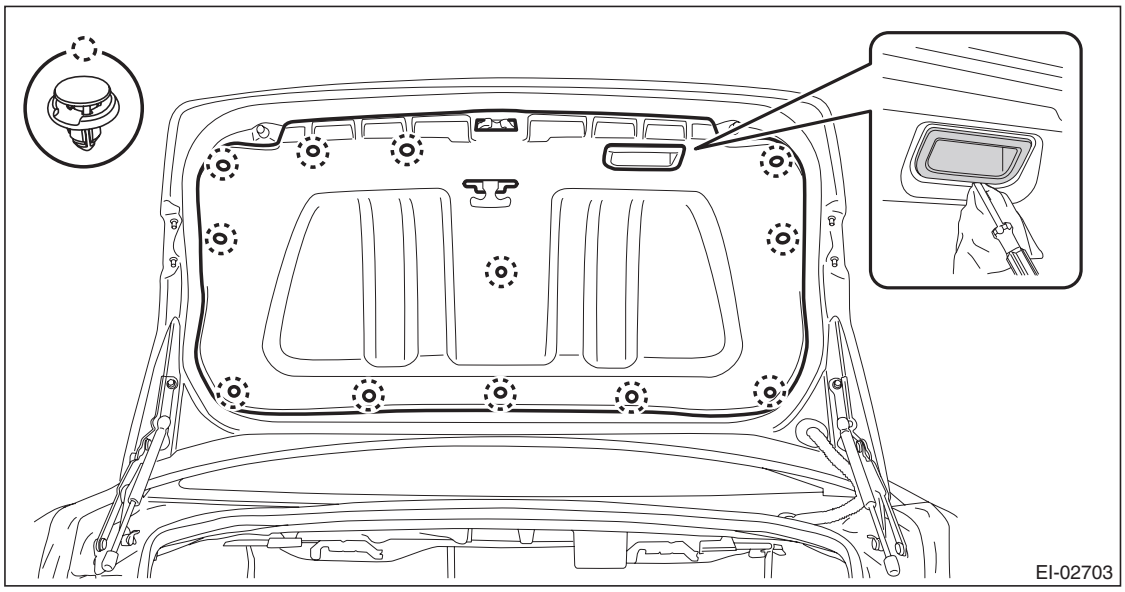

2. TRUNK ROOM TRIM

1) Pull the release lever in the trunk room, and then tilt the backrest forward.

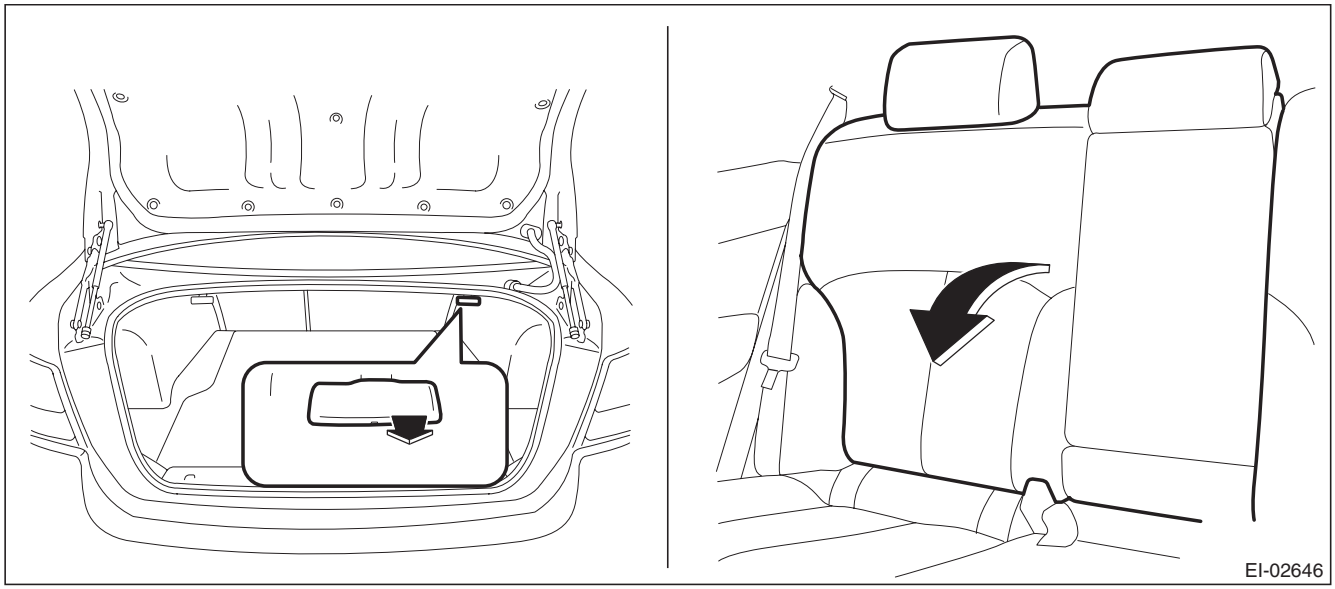

2) Remove the trunk room mat.

GETtheMANUALS.org

3) Remove the trunk trim assembly-rear.
   (1) Remove the clip.
   (2) Release the claws, and remove the trunk trim assembly-rear.

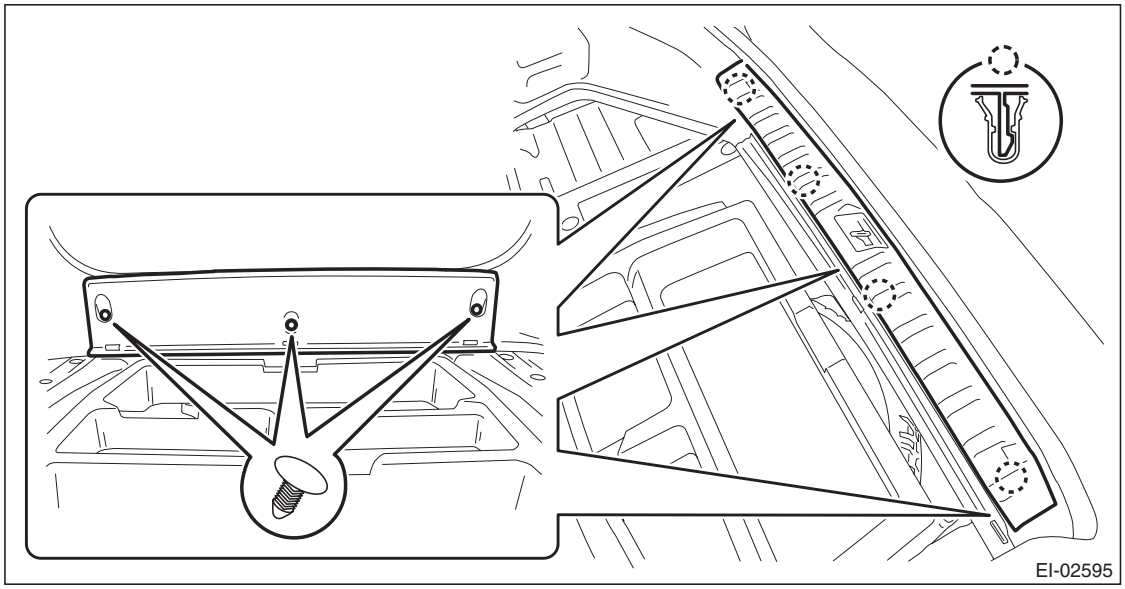

4) Remove the trunk trim panel assembly-side.
   (1) Remove the hook.
      a) Turn the hook to 90°.
      b) Press the claw using a screwdriver to detach the hook.
   (2) Release the clips and remove the trunk trim panel assembly-side.

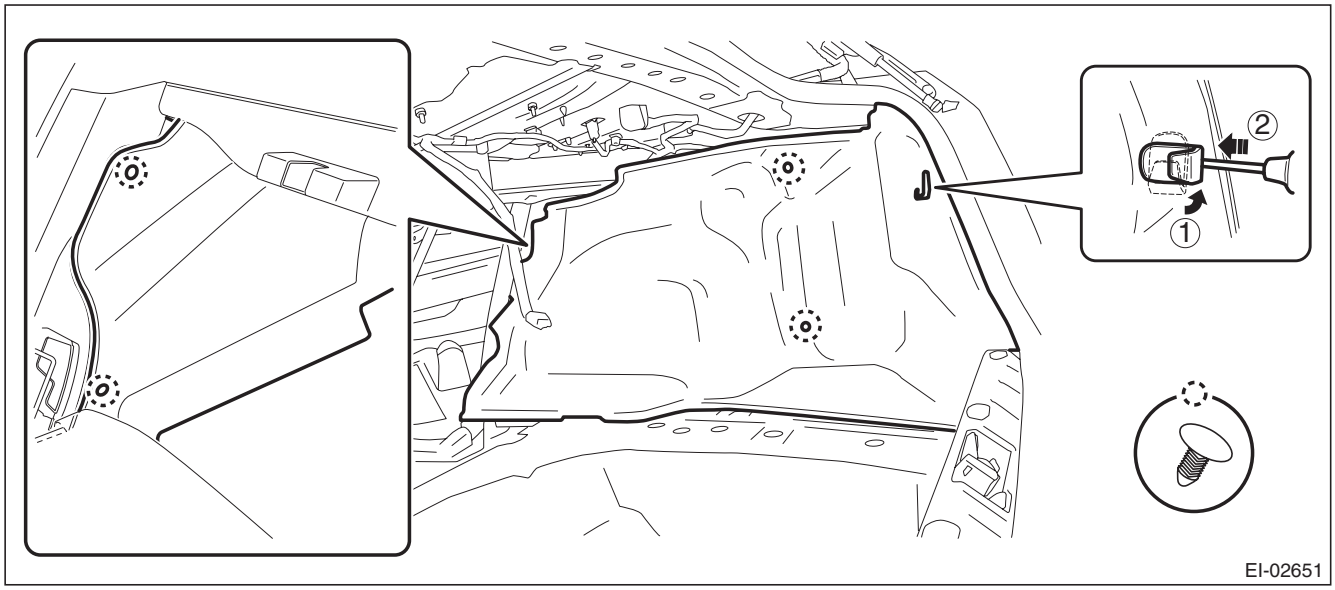

B: INSTALLATION

Install each part in the reverse order of removal.

GETtheMANUALS.org

25.Sun Visor

A: REMOVAL

1) Remove the cover, loosen the screws, and remove the sun visor assembly.
2) Remove the sun visor hook.
   (1) Press both sides using a flat tip screwdriver.
   (2) Remove the sun visor hook by pulling toward you.

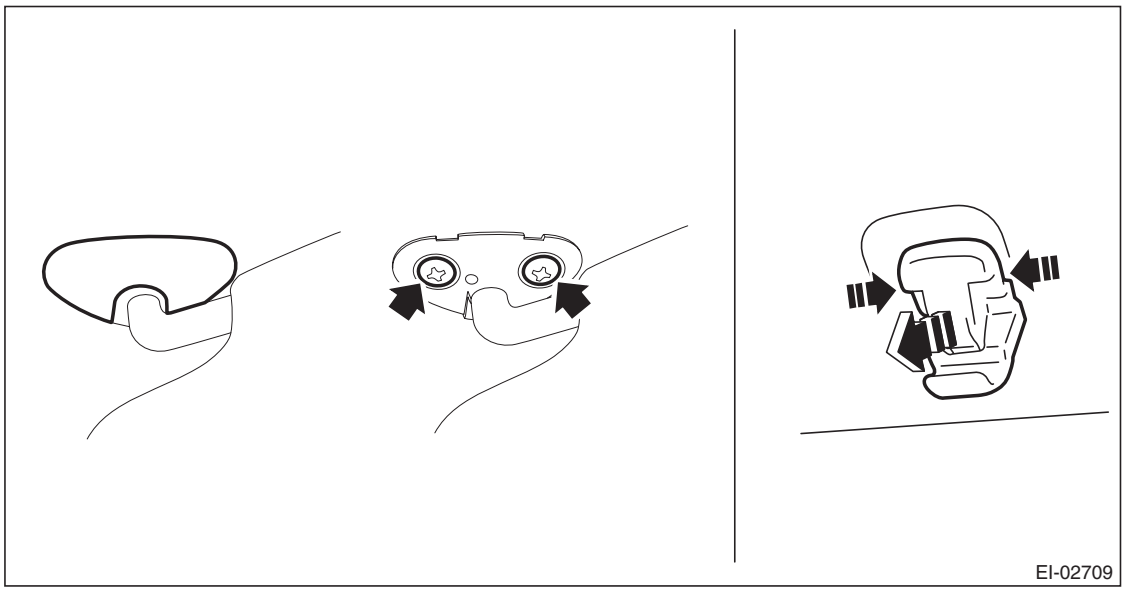

B: INSTALLATION

Install each part in the reverse order of removal.

GETtheMANUALS.org

26. Assist Grip

A: REMOVAL

Remove the assist grip assembly.
1) Remove the cap (a).
2) Pull the assist grip toward you (to the vehicle center) and remove the metal clip from the bracket.

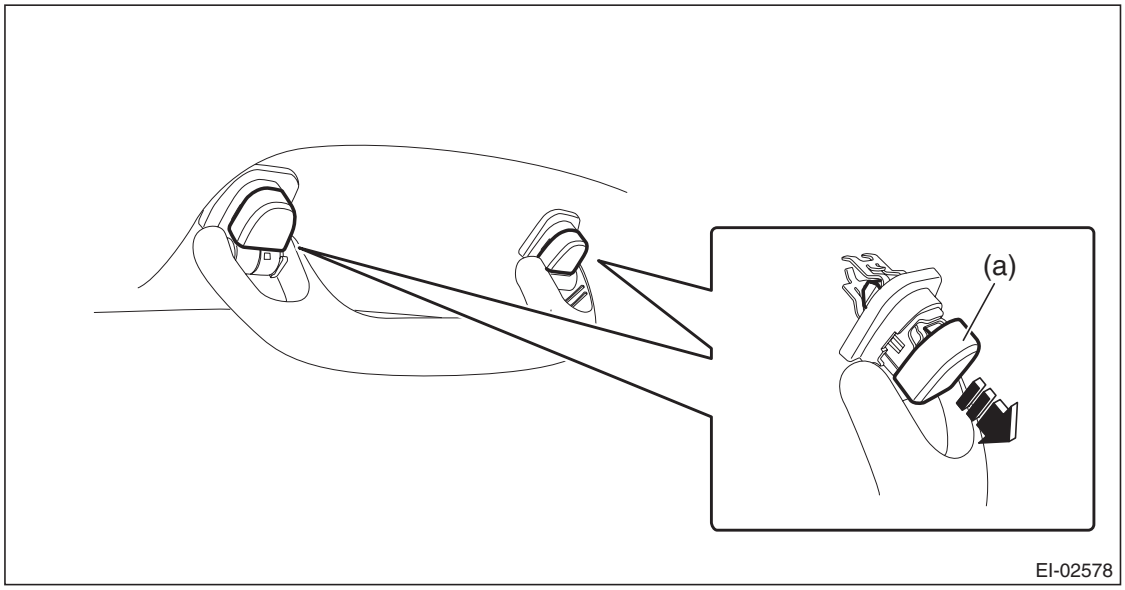

B: INSTALLATION

Install each part in the reverse order of removal.

GETtheMANUALS.org

27. Roof Trim

A: REMOVAL

1. SEDAN MODEL

1) Remove the rear seat cushion assembly.
   (1) Pull up the seat cushion and release the hook.

CAUTION:
If the hook is disconnected from the vehicle body, replace the hook with the new part to prevent the decline of the fixed force of the seat.

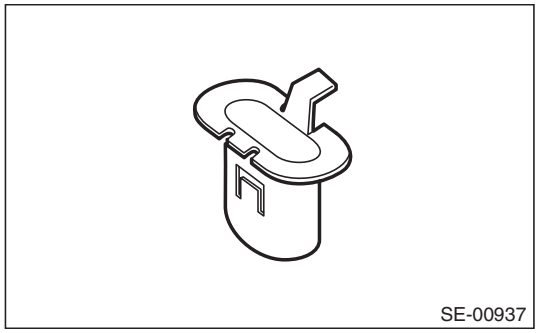

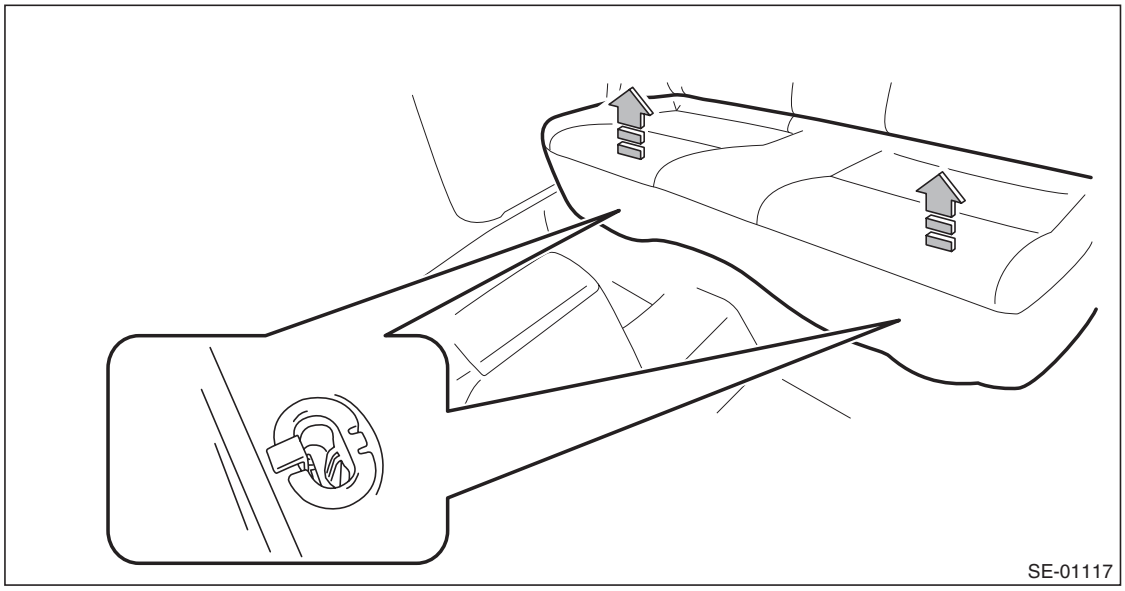

GETtheMANUALS.org

(2) Remove the hook (A) by pushing it back while lifting the front side of the seat cushion, and remove the seat cushion.

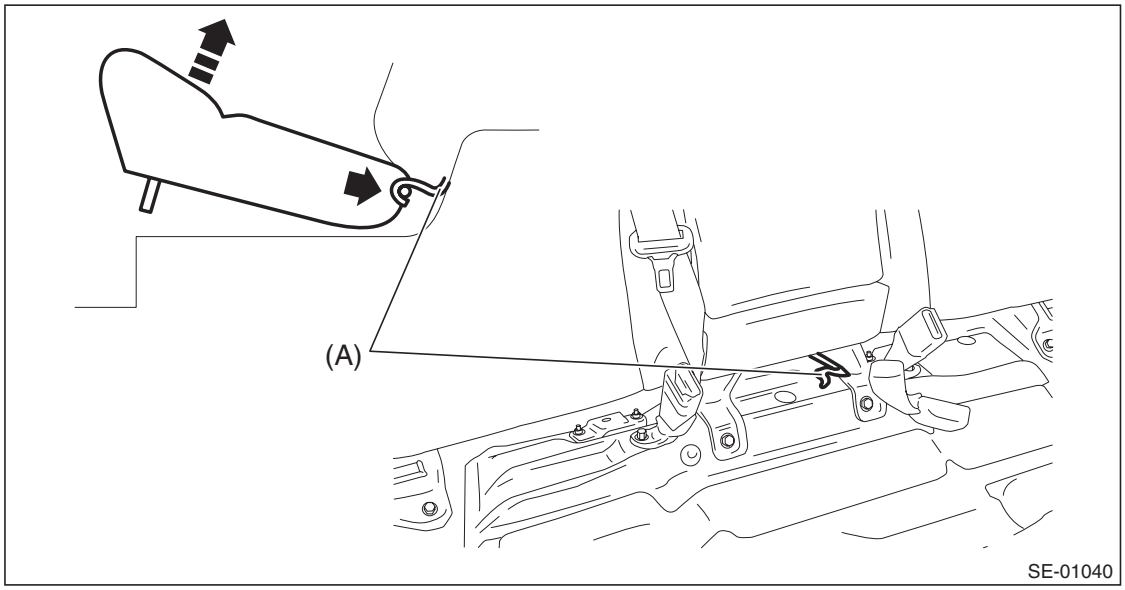

2) Release the clips and claws, and remove the side sill covers - rear INN on the left and right sides.

CAUTION:
Do not pull with excessive force. Doing so may damage the claws of the side sill cover INN.

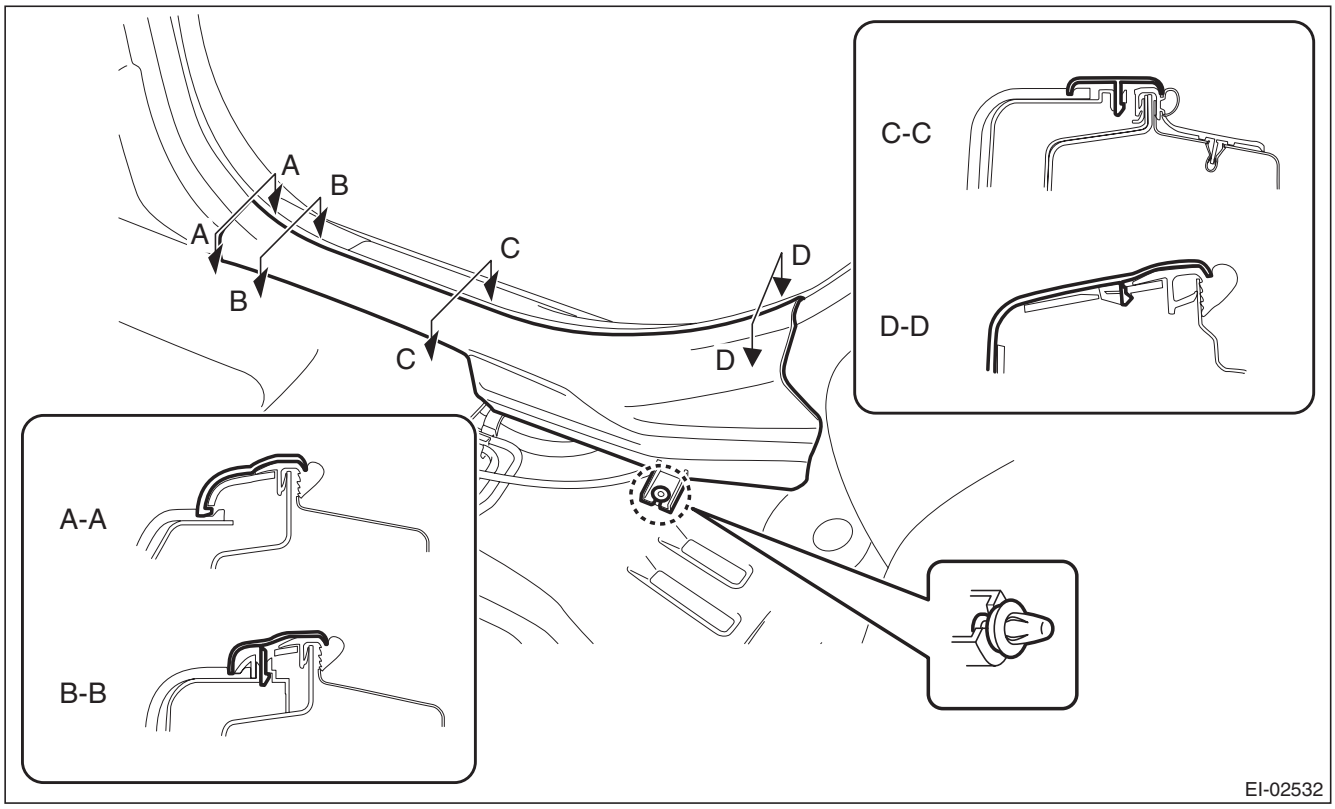

NOTE:
To release the claws of the side sill cover INN, the following steps are recommended.
1. Take out the weather strip from under the side sill cover INN.
2. Turn over the floor mat and release the claw (C-C and D-D) by accessing from behind the side sill cover INN.

GETtheMANUALS.org

3) Release the claws, and then remove the side sill cover - front INN on the left and right sides.

CAUTION:
Do not pull with excessive force. Doing so may damage the claws of the side sill cover INN.

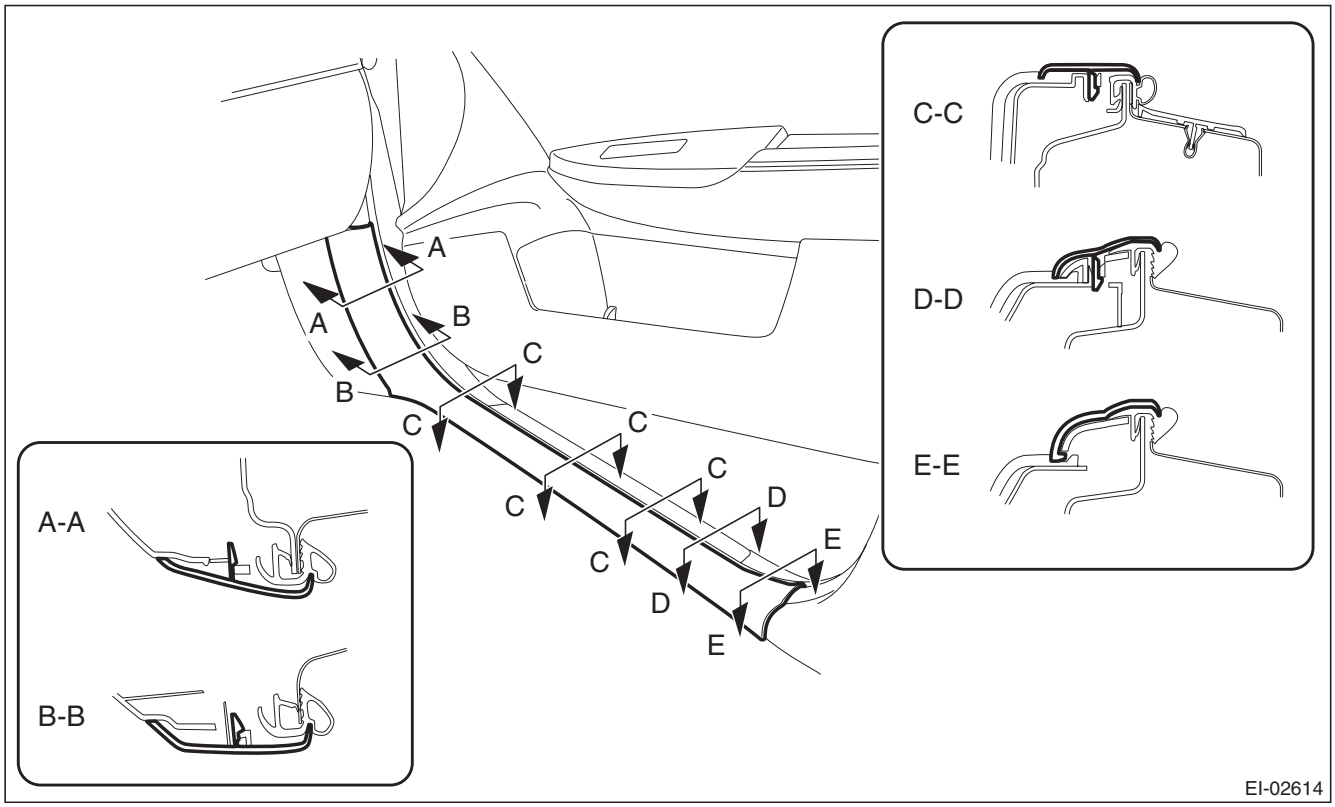

NOTE:
To release the claws of the side sill cover INN, the following steps are recommended.
1. Take out the weather strip from under the side sill cover INN.
2. Turn over the floor mat and release the claw (C-C) by accessing from behind the side sill cover INN.

GETtheMANUALS.org

4) Remove the left and right center pillar trim LWR.
   (1) Release the clip by pulling the center pillar trim LWR toward you.
   (2) Expand the claws of center pillar trim LWR outward and remove it from the center pillar trim UPR.

CAUTION:
Do not expand the center pillar trim LWR excessively. Doing so may damage the trim.

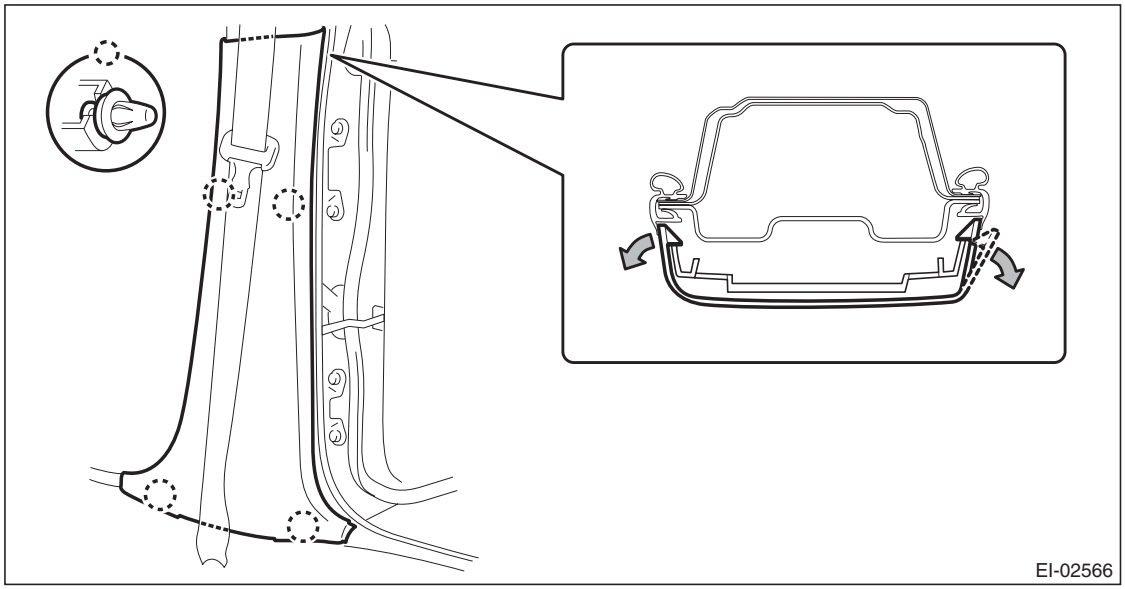

NOTE:
First release the claw located to the rear of the vehicle.
5) Disconnect the ground cable from battery and wait for at least 60 seconds before starting work.

CAUTION:
The airbag system is fitted with a backup power supply. After disconnecting the battery ground cable, the airbag may operate if you do not wait for 60 seconds before starting the service of airbag system.

NOTE:
For the power seat, adjust the front seat position before removing the battery ground.
6) Adjust the front seat position.
   (1) Remove the driver's seat and passenger's seat headrests.

NOTE:
For models with headrest monitor, remove the headrest in the following procedures.
1. Fold the backrest all the way backward, and then remove the headrest.
2. Place the headrest on the seating face.
3. Return the backrest to the original position.
   (2) Tilt the driver's seat backrest forward and move the seat to the front most position. (a)

GETtheMANUALS.org

(3) Tilt the passenger's seat backrest rearward and move the seat to the rearmost position. (b)

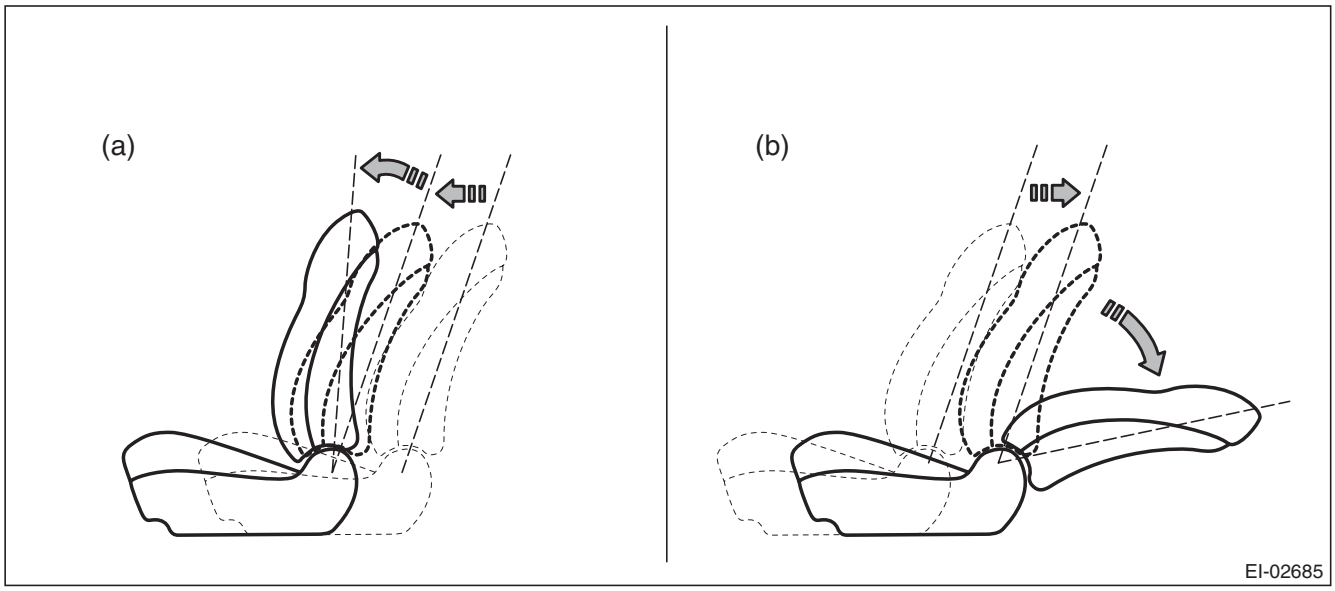

7) Cover the following areas to protect from damage.
- Steering wheel
- Instrument panel surface
- Glove box surface

8) Remove the console front cover assembly.
- MT model
  1. Remove the shift knob.
  2. Release the clips and claws, then pull up the console front cover assembly.

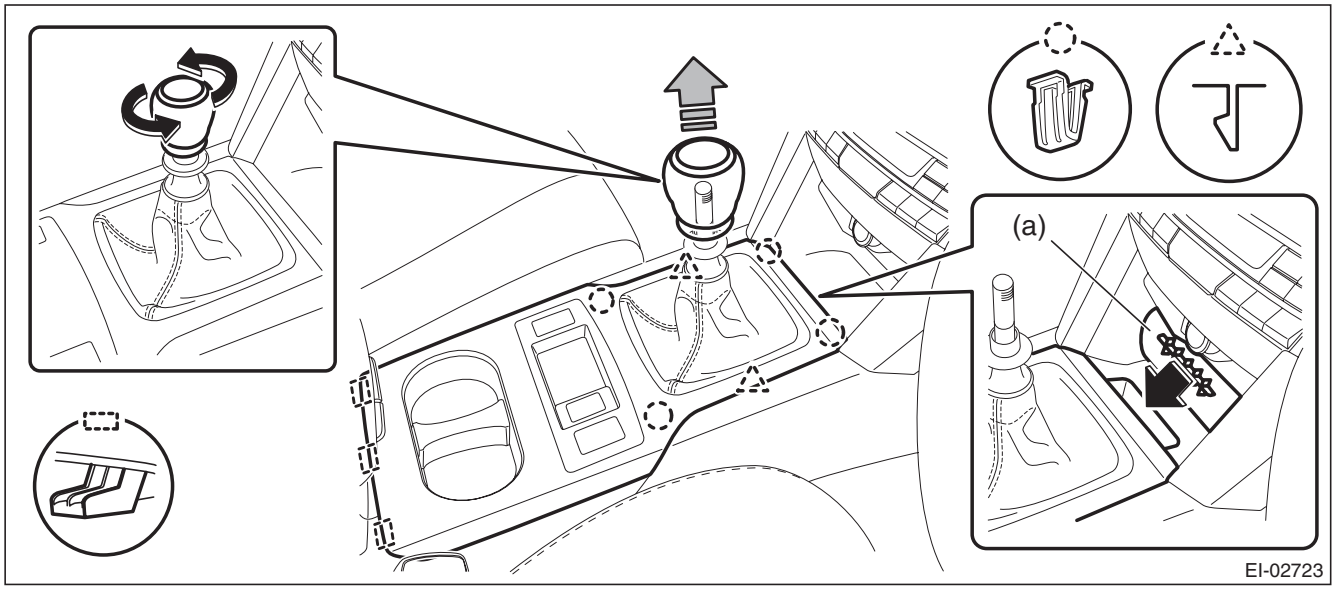

NOTE:
Turn over the front center pocket mat (a) and pull up the console front cover from the slit.

3. Disconnect the harness connector and remove the console front cover assembly.

GETtheMANUALS.org

- AT model
  1. Remove the select lever knob.
     a. Lower the cover grip AT.
     b. Remove the clamp grip pin, then remove the select lever knob.
  2. Release the clips and claws, then pull up the console front cover assembly.

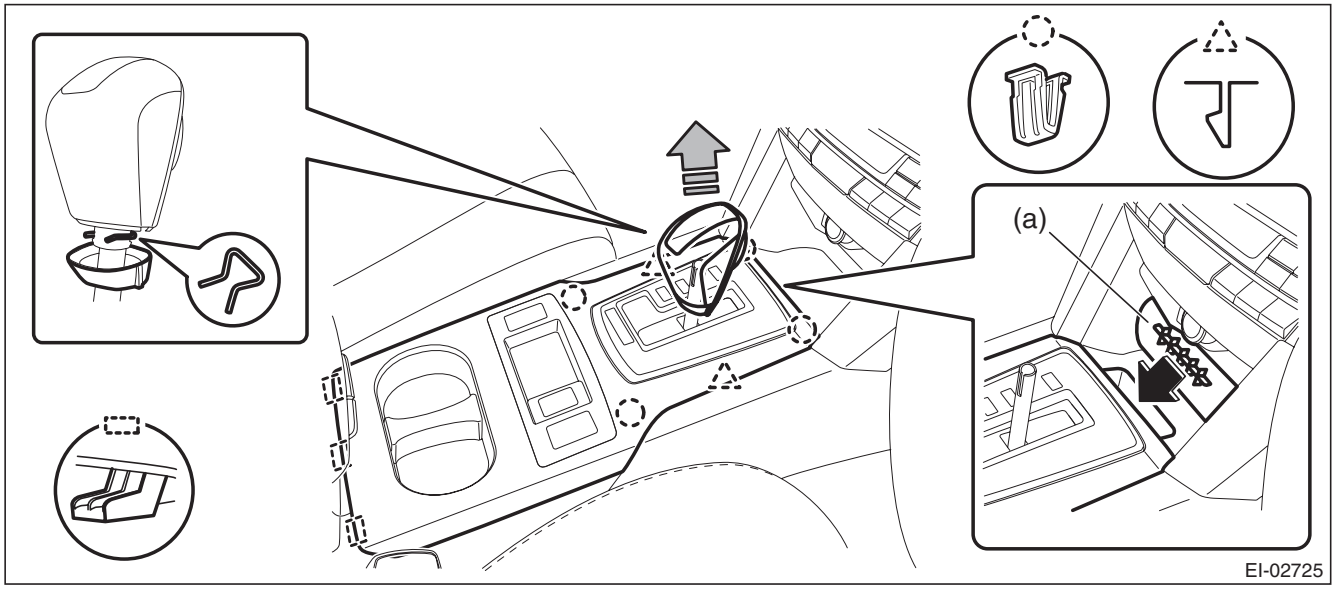

NOTE:
Turn over the front center pocket mat (a) and pull up the console front cover from the slit.

  3. Disconnect the harness connector and remove the console front cover assembly.

9) Remove the left and right console front side cover assembly.
   (1) Remove the screws and release the clips (A) to (D) in order.
   (2) Remove the console front side cover assembly by pulling it up.

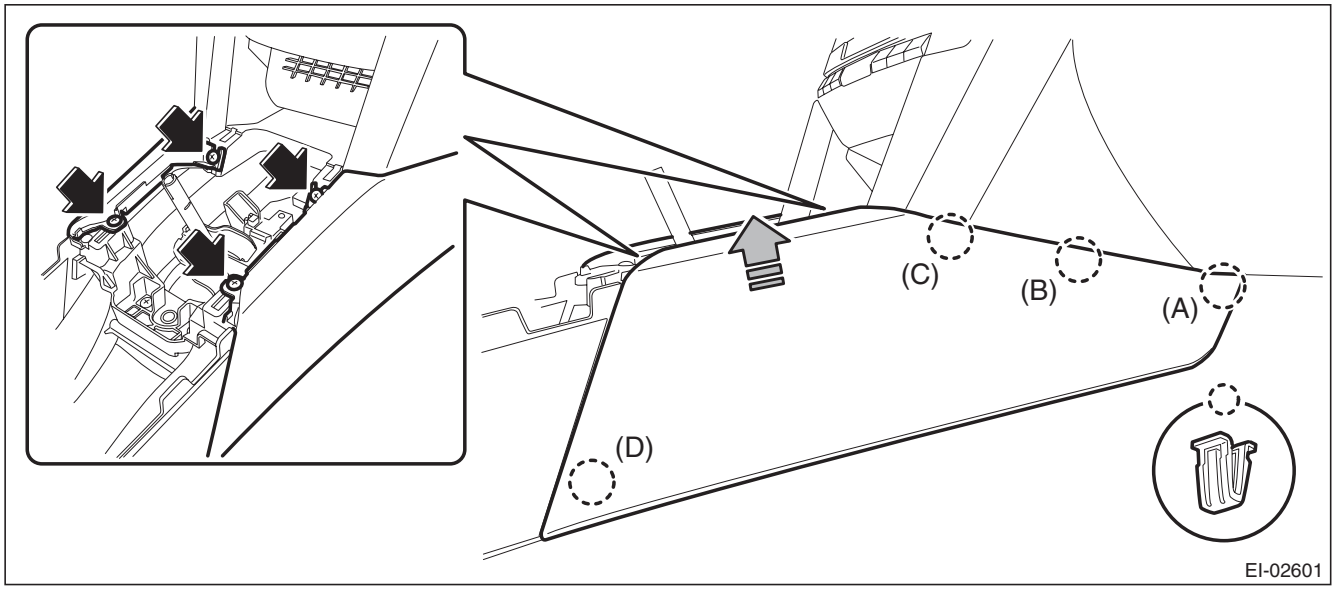

GETtheMANUALS.org

10) Remove the console box assembly.
(1) Move the seat, and remove the bolts after detaching the left and right caps.

NOTE:
For a model with power seat, connect the battery ground cable and move the seat. Then, disconnect the battery ground cable again and wait for 60 seconds at least before restarting the work.

(2) Remove the screws, disconnect the harness connector and remove the console box assembly.

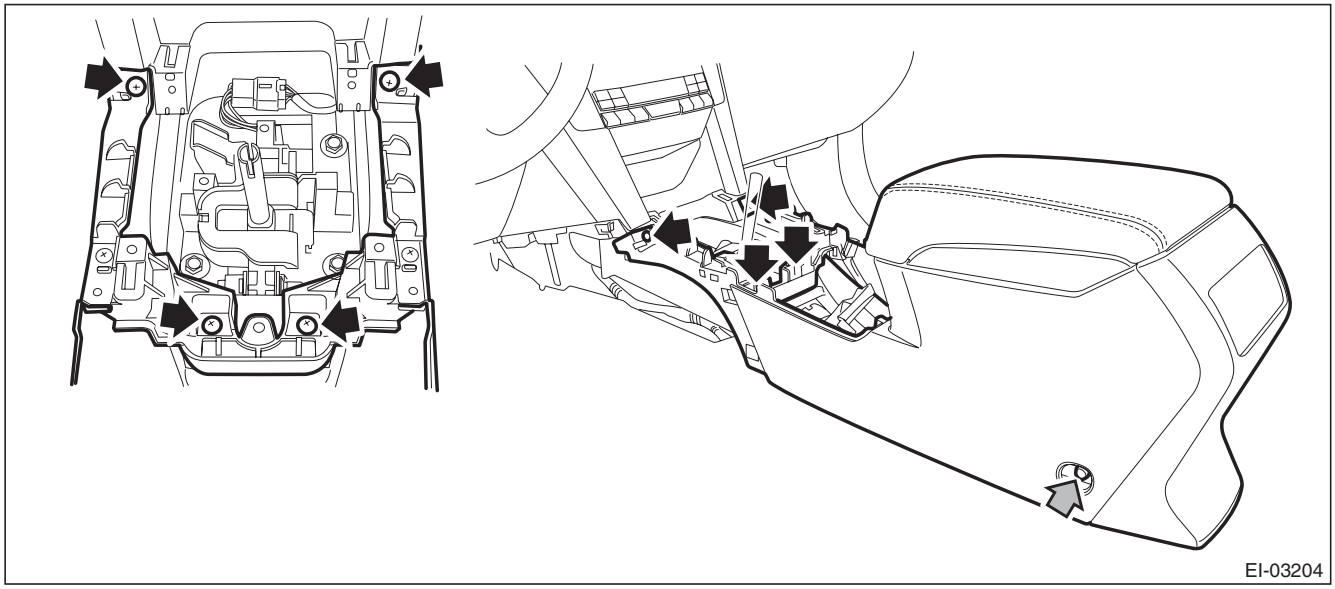

11) Remove the left and right rear quarter trim LWR.
(1) Remove the backrest side pad.
a) Remove the screws.

Preparation tool: Stubby screwdriver

b) Turn over the bottom end of the backrest side pad in the forward direction so that the claws are released.
c) Remove the backrest side pad by pulling it up.

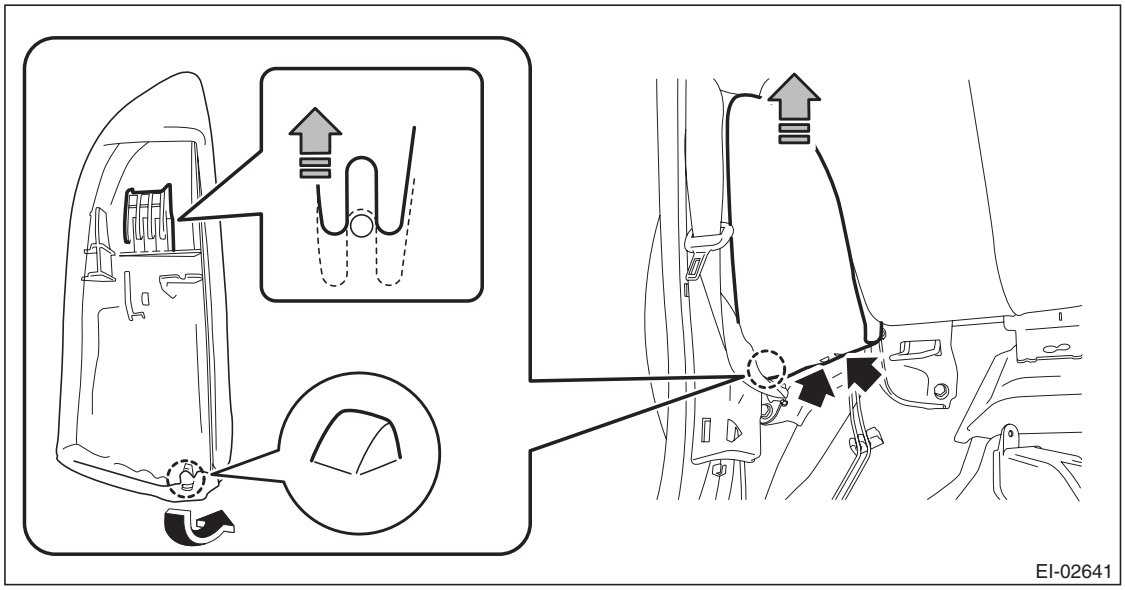

GETtheMANUALS.org

(2) Pull the release lever in the trunk room, and then tilt the backrest forward.

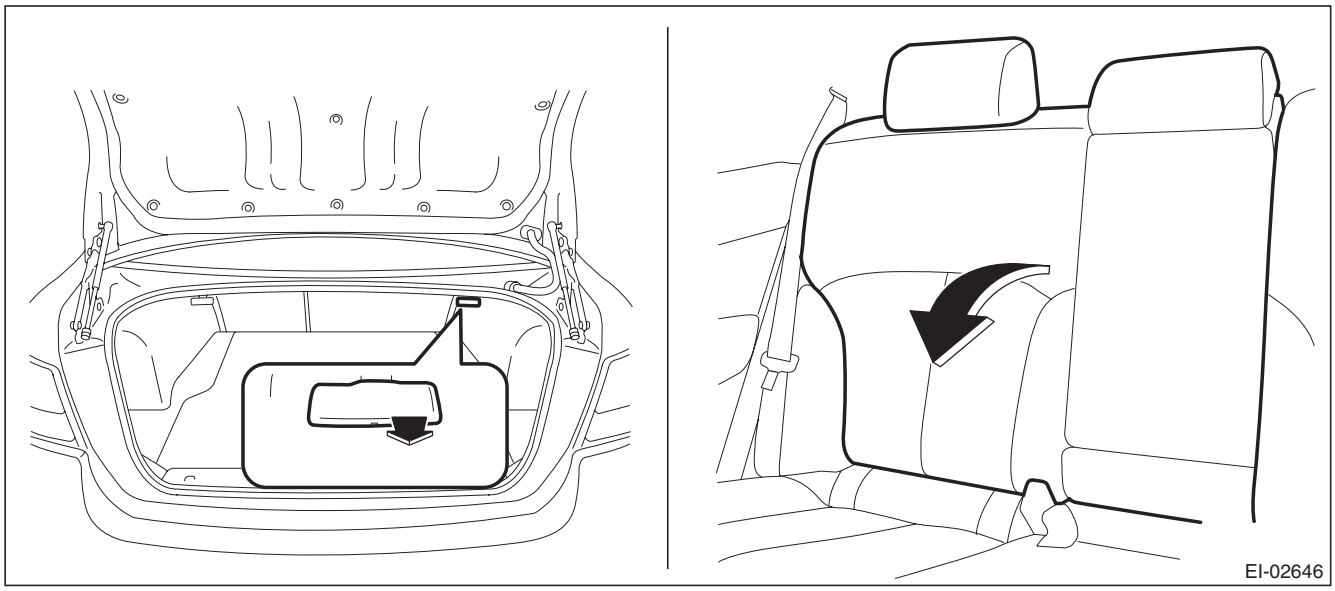

(3) Release the clips of the trunk trim panel assembly - side.
(4) Remove the clips, and remove the rear quarter trim LWR.

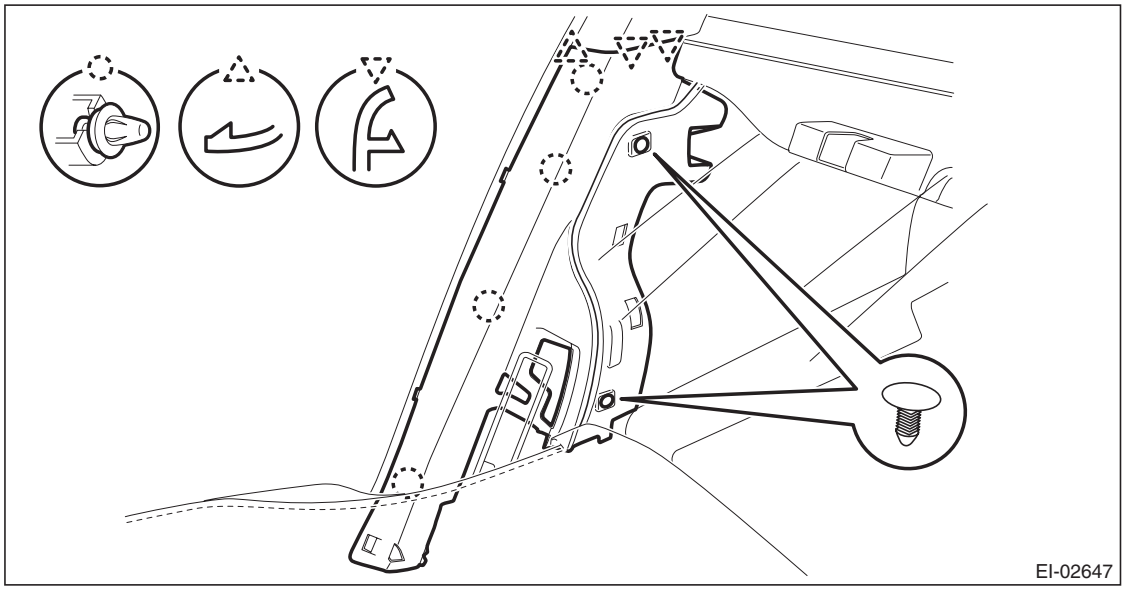

GETtheMANUALS.org

12) Remove the left and right rear quarter trim UPR.
(1) Remove the lower anchor bolt of the outer belt assembly.

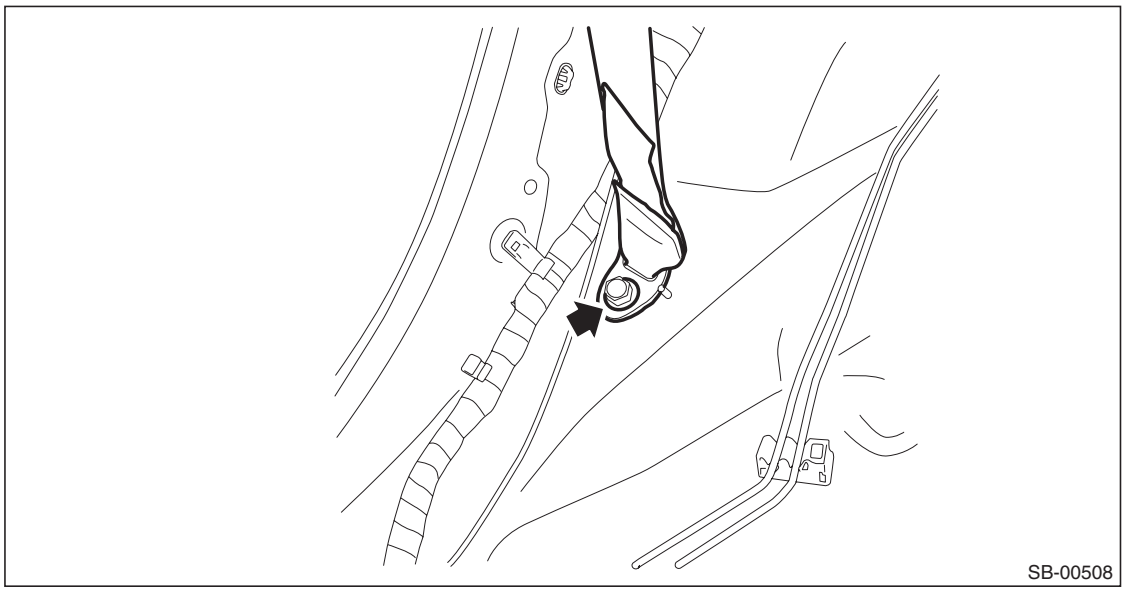

(2) Release the clips, and remove the rear quarter trim UPR.

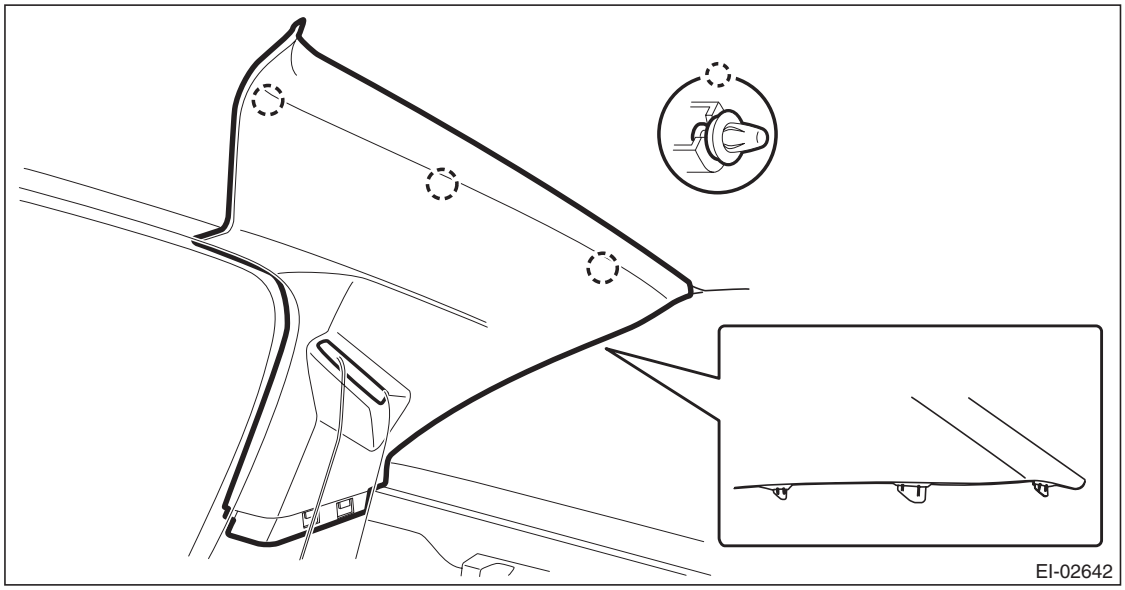

(3) Pull out the seat belt and remove the rear quarter trim UPR.

GETtheMANUALS.org

13) Remove the left and right front pillar trims.
(1) Pull the upper part of the front pillar trim towards the center of the vehicle.
(2) Insert long-nose pliers into the top part of the trim, grip the clip with the pliers and twist 90° in that position.

CAUTION:
Be careful not to damage the pillar trim surface and curtain airbag module when inserting the pliers.
(3) Holding the clip twisted as in the previous step, remove the front pillar trim from the clip.
(4) Remove the clip and the front pillar trim.

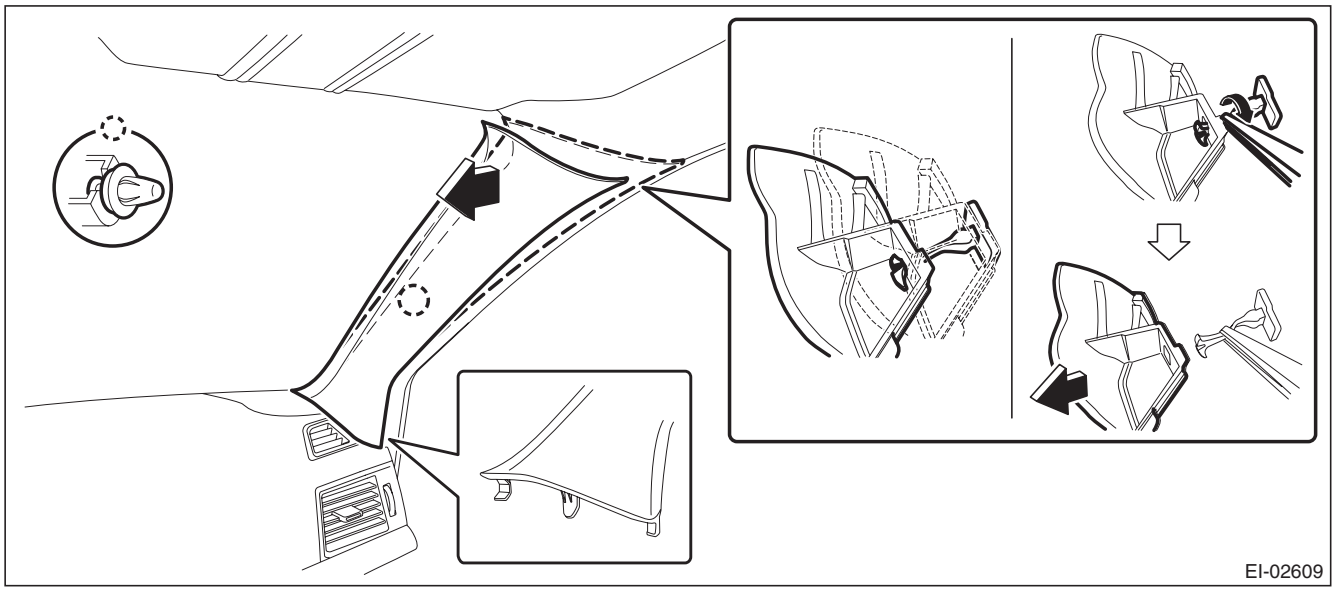

14) Remove the center pillar trim UPR.
(1) Remove the seat belt lower anchor bolt.

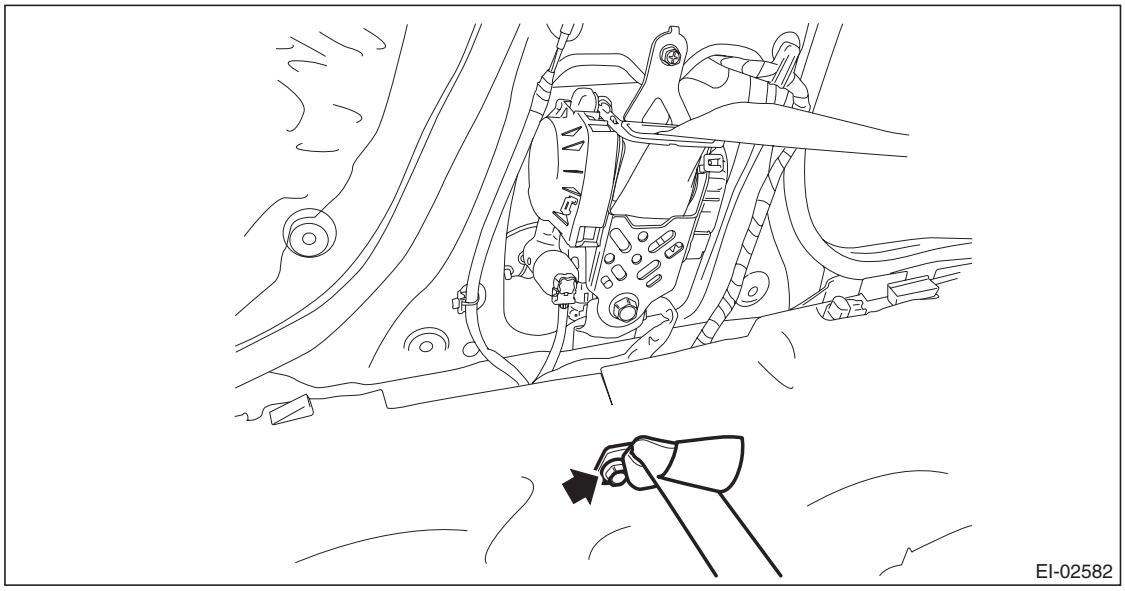

NOTE:
On passenger's side, disconnect the connector of the seat belt tension sensor.
(2) Release the clip by pulling the center pillar trim UPR toward you.

GETtheMANUALS.org

(3) Remove the center pillar trim UPR by lowering the entire trim.

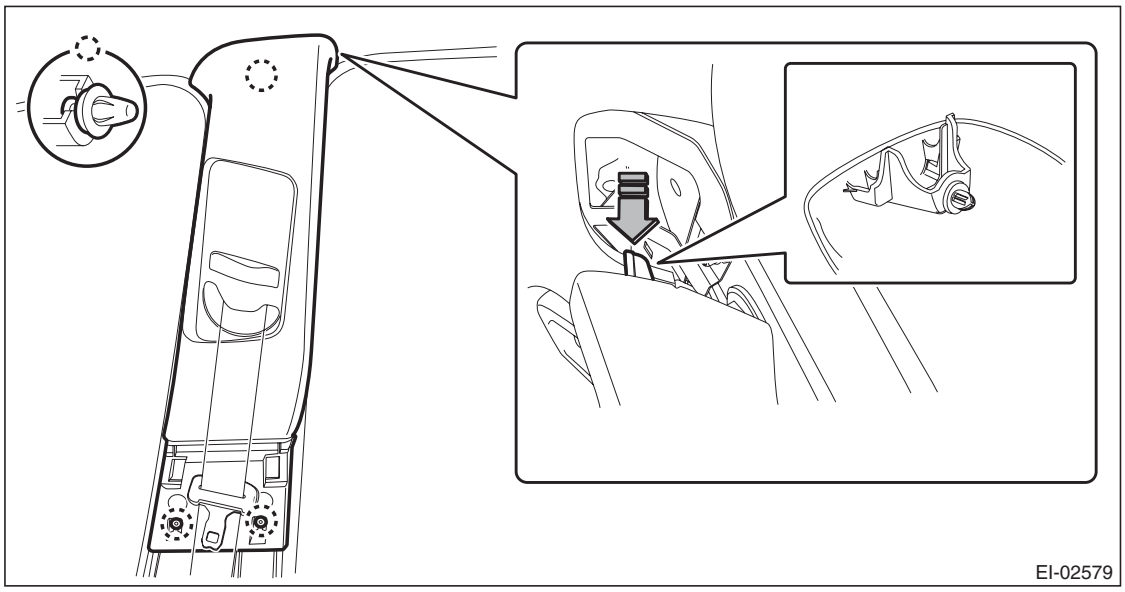

(4) Pull out the seat belt and remove the center pillar trim UPR.

15) Remove the rear door trim assembly on driver's side.
(1) Open the cover and remove the screw.
(2) Remove the clips in the order of (A) to (H) and remove the door trim from the door panel.

CAUTION:
When removing the door trim, be sure to remove the clips in the correct order. Forcibly removing clips may damage the door panel assembly.

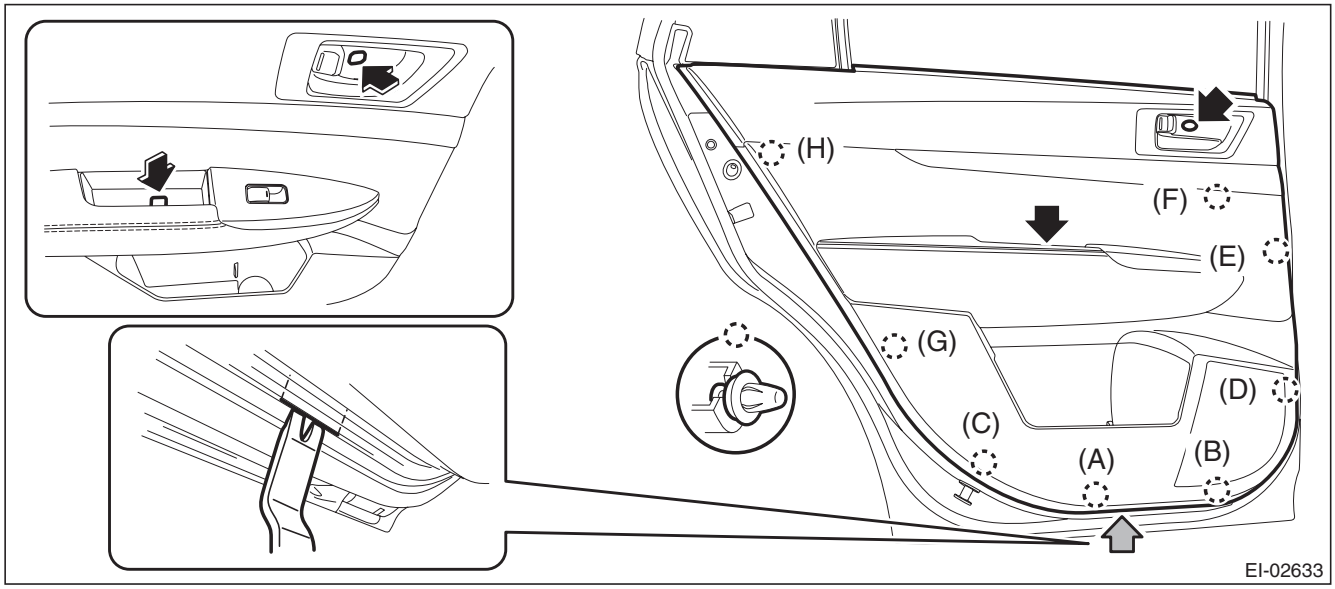

NOTE:
Insert a plastic clip remover into the slit at the bottom of the door trim, to lift the door trim.

GETtheMANUALS.org

(3) Remove the cables (a) and (b) from the cable holder of inner remote.

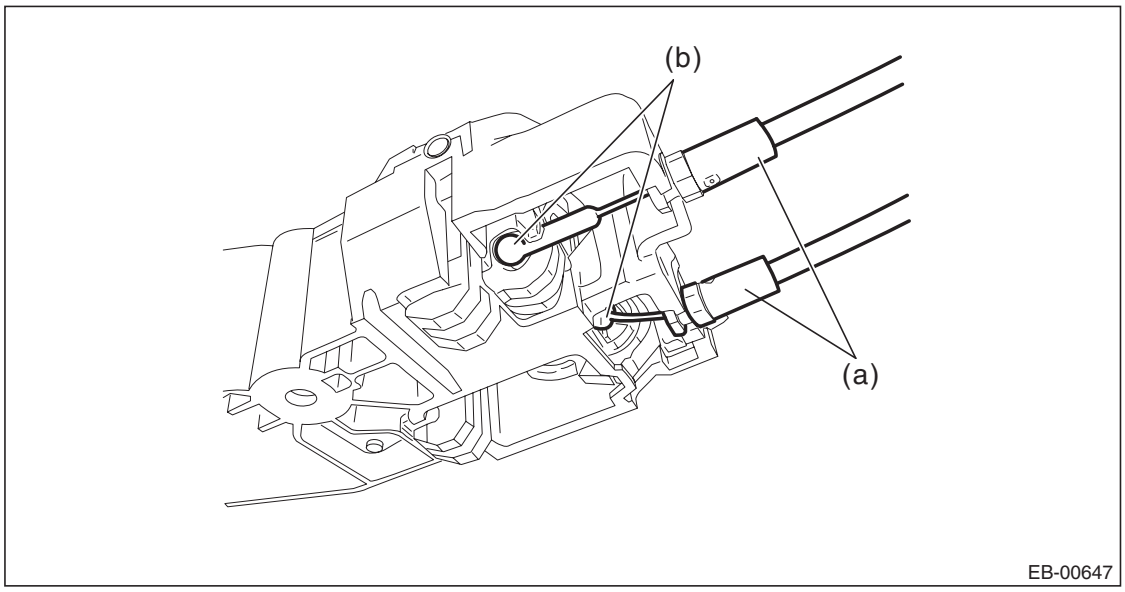

(4) Disconnect the harness connector and remove the door trim.

16) Remove the rear speaker assembly on driver's side.
(1) Remove the screws.
(2) Disconnect the harness connector and remove the rear door speaker.

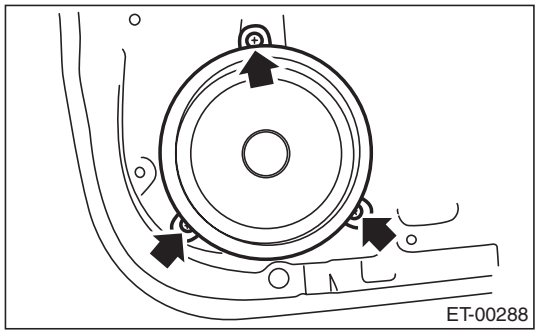

17) Remove the overhead console assembly.
(1) Push and open the rear end of the overhead console lid, and remove the screws.
(2) Disconnect the connector and remove the overhead console assembly.

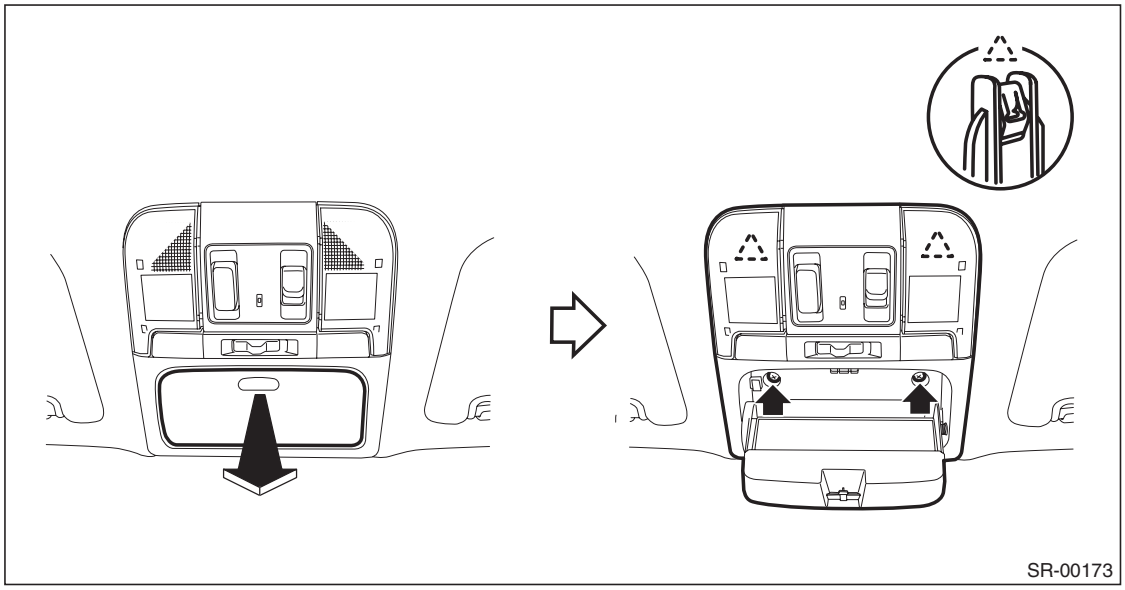

GETtheMANUALS.org

18) Remove the left and right sun visor assembly.
   (1) Remove the cover, loosen the screws, and remove the sun visor assembly.
   (2) Press the both sides of the sun visor hook using a flat tip screwdriver.
   (3) Remove the sun visor hook by pulling toward you.

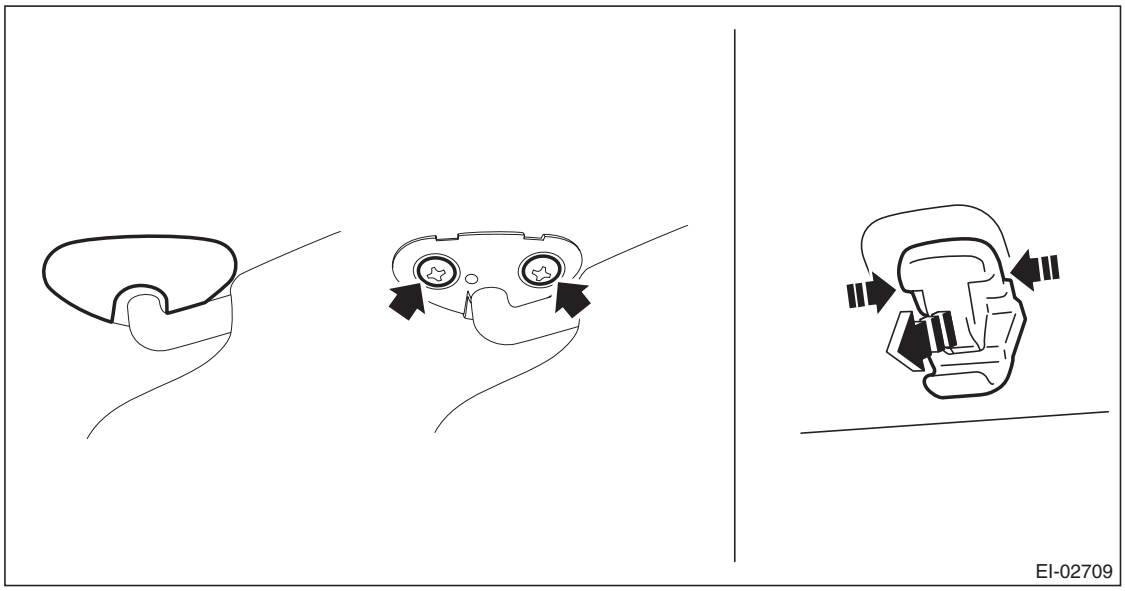

19) Remove the room light assembly.
   (1) Release the claws and remove the cover.
   (2) Remove the two screws.

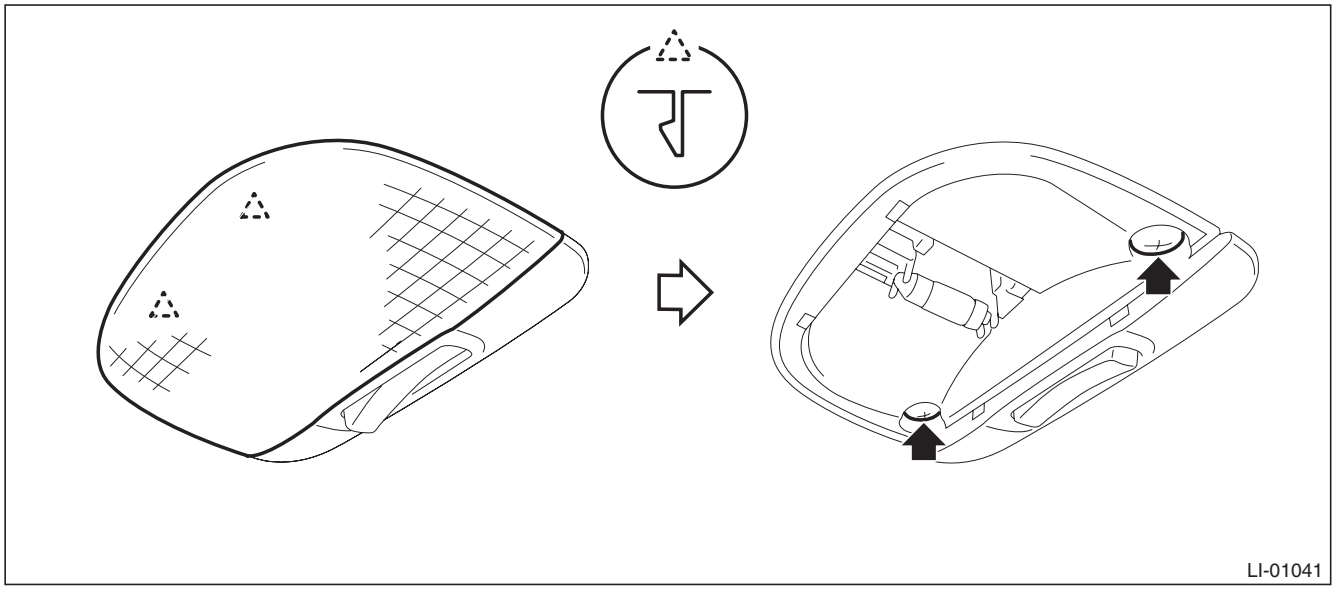

   (3) Disconnect the connector and remove the room light assembly.

GETtheMANUALS.org

20) Remove all assist grip assembly.
    (1) Remove the cap (a).
    (2) Pull the assist grip toward you (to the vehicle center) and remove the metal clip from the bracket.

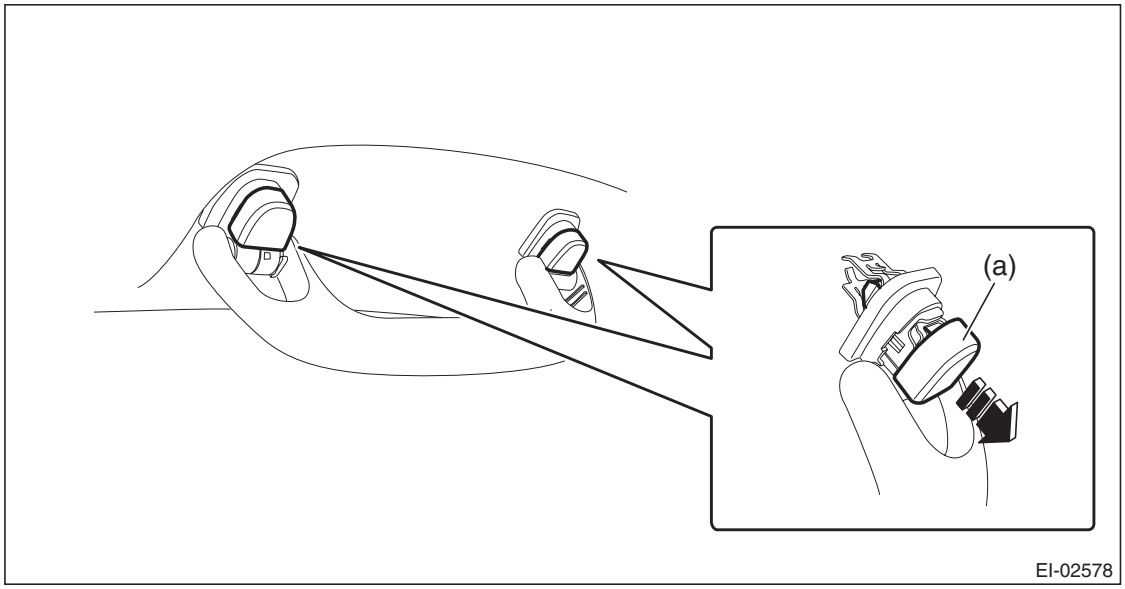

21) Remove the sun roof garnish. (model with sunroof)

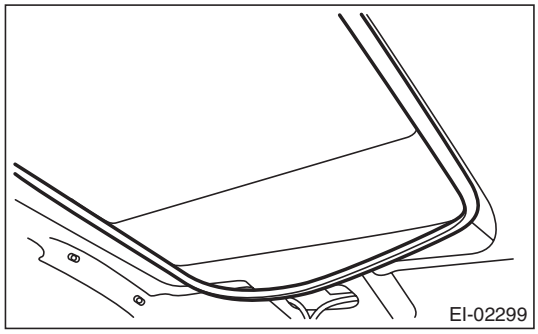

22) Disconnect the roof harness connector at the front pillar RH.
23) Remove the roof trim assembly.
    (1) Remove the clips, and then remove the roof trim.
    (2) Remove the feeder cord and roof cord from the roof trim.

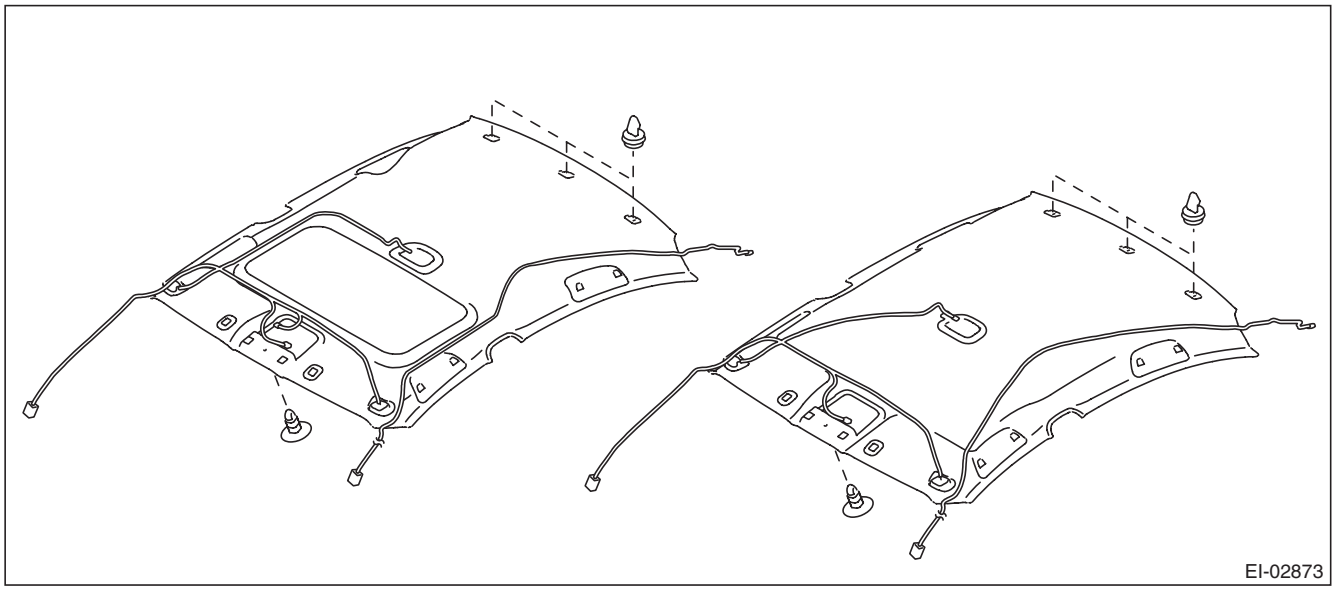

GETtheMANUALS.org

(3) Take out the roof trim assembly from inside the vehicle.
a) Align the center pillar (A) of roof trim with a corner (B) of the driver's seat and turn the roof trim obliquely.

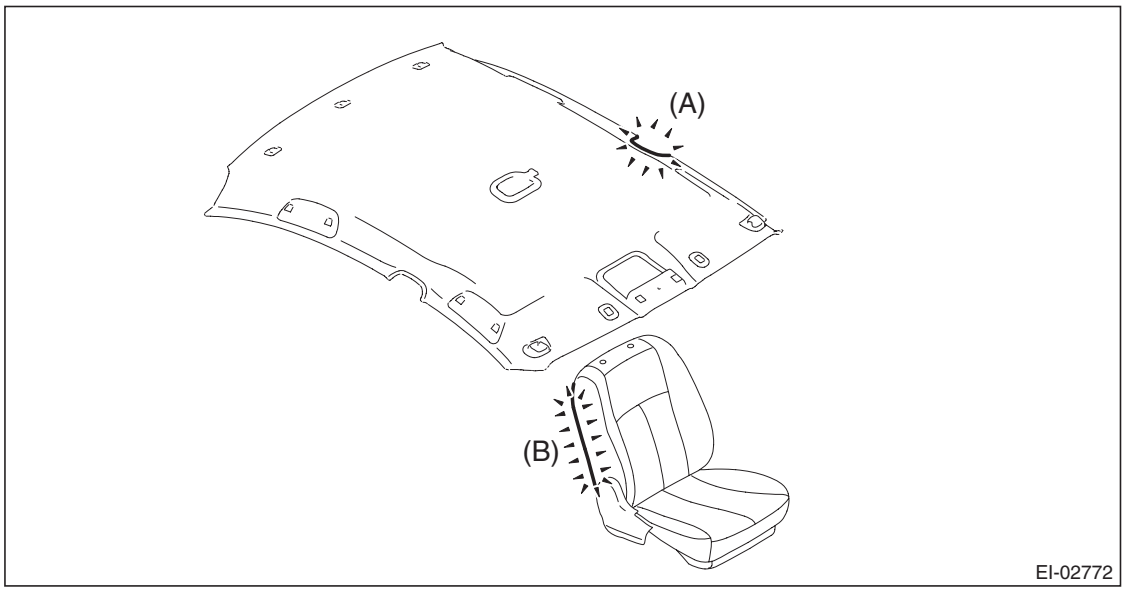

b) While holding the roof trim assembly in the condition in step a), take it out from the driver's side rear door opening.

2. OUTBACK MODEL

1) Disconnect the ground cable from battery and wait for at least 60 seconds before starting work.

CAUTION:
The airbag system is fitted with a backup power supply. After disconnecting the battery ground cable, the airbag may operate if you do not wait for 60 seconds before starting the service of airbag system.

GETtheMANUALS.org

2) Remove the rear seat cushion assembly.
   (1) Pull up the seat cushion and release the hook.

CAUTION:
If the hook is disconnected from the vehicle body, replace the hook with the new part to prevent the decline of the fixed force of the seat.

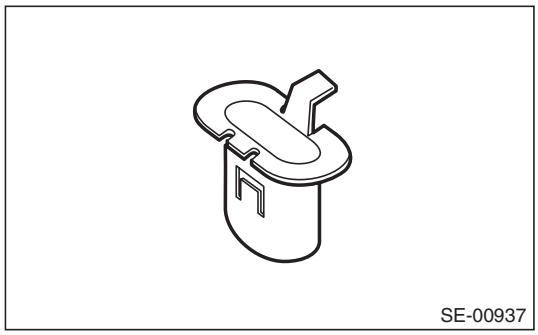

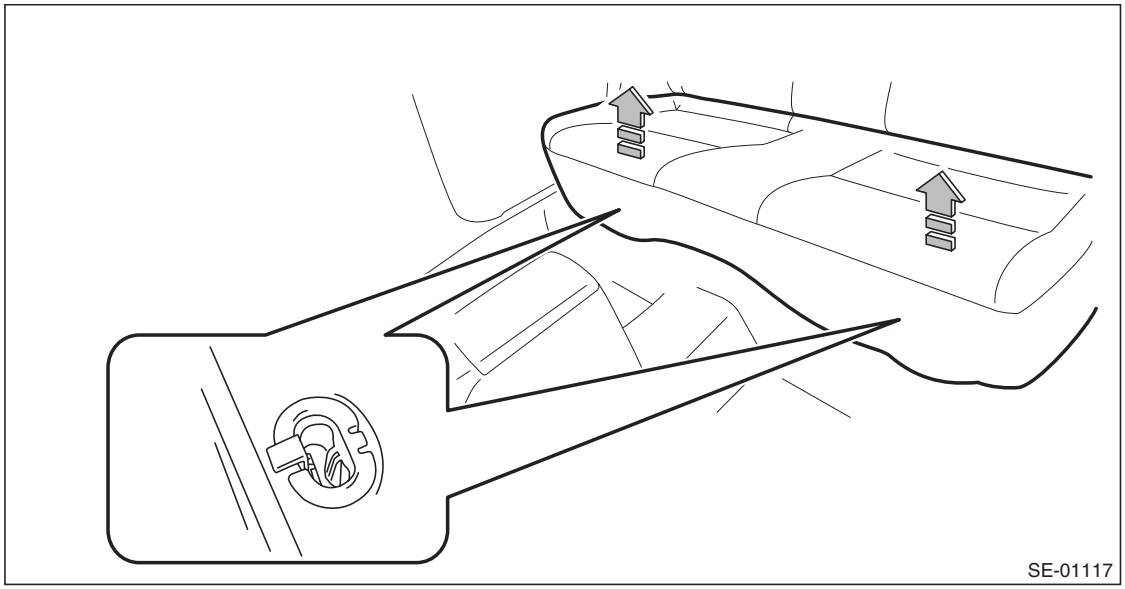

(2) Remove the hook (A) by pushing it back while lifting the front side of the seat cushion, and remove the seat cushion.

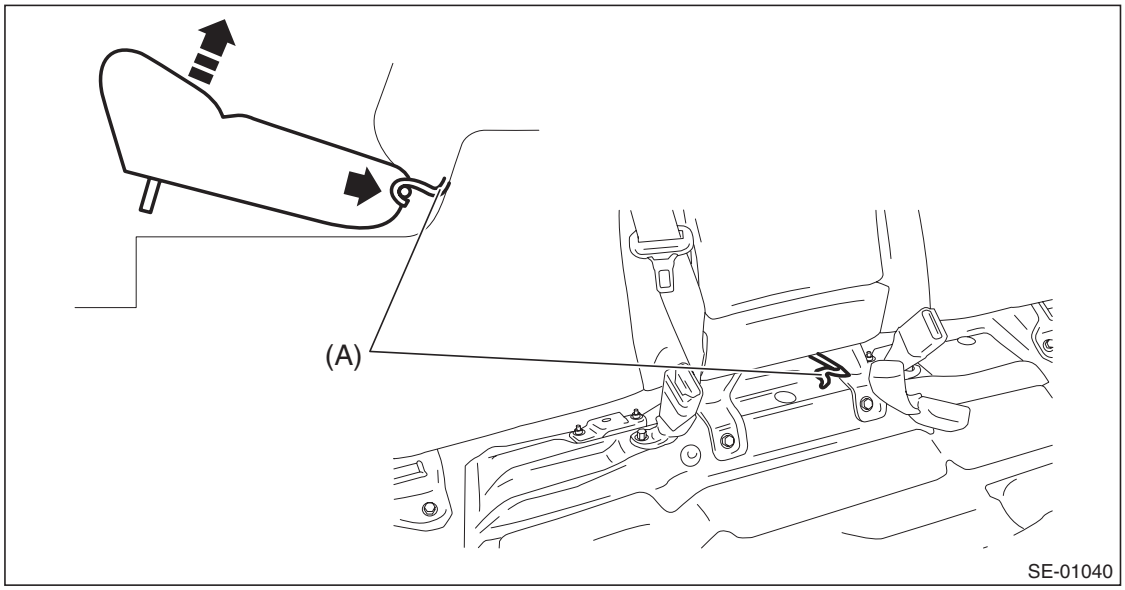

GETtheMANUALS.org

3) Release the clips and claws, and then remove the left and right side sill covers-rear INN.

CAUTION:
Do not pull with excessive force. Doing so may damage the claws of the side sill cover INN.

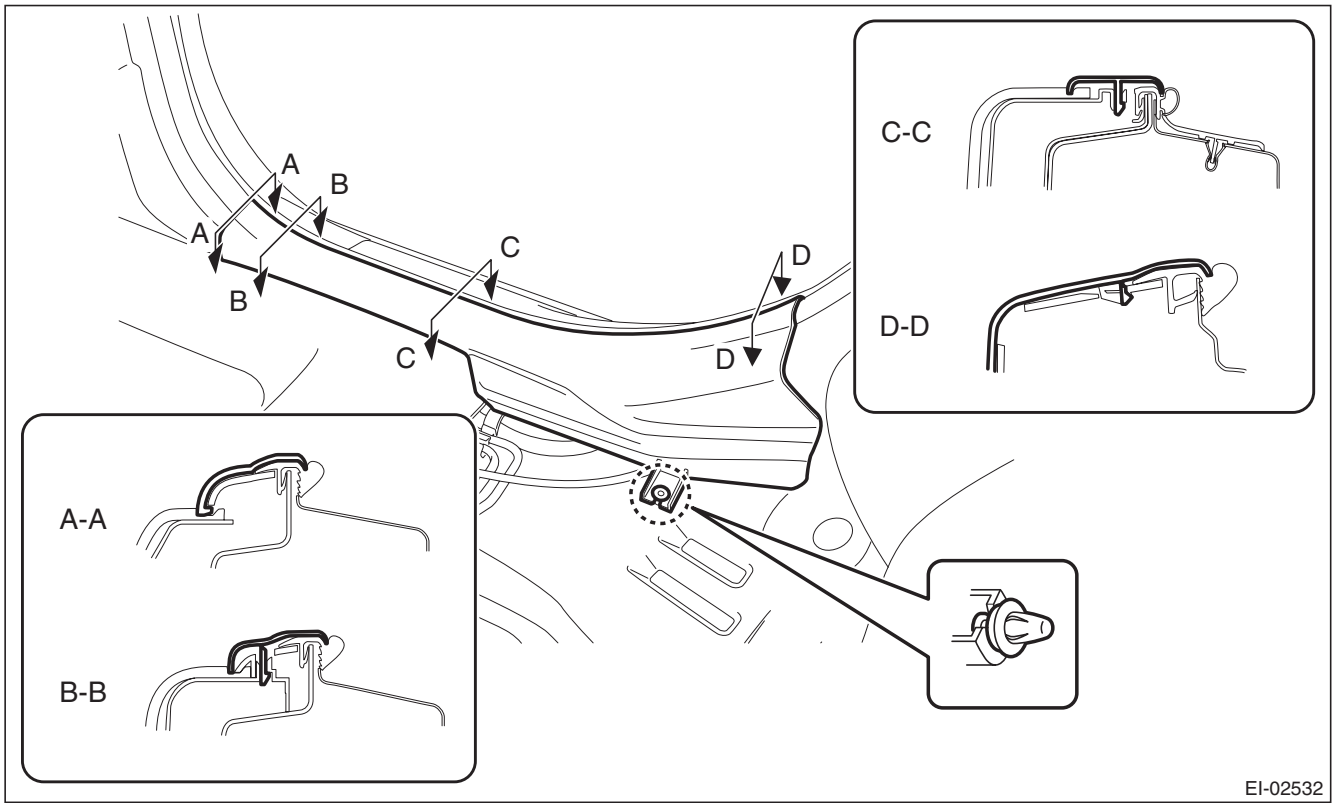

NOTE:
To release the claws of the side sill cover INN, the following steps are recommended.
1. Take out the weather strip from under the side sill cover INN.
2. Turn over the floor mat and release the claw (C-C and D-D) by accessing from behind the side sill cover INN.

4) Tilt the backrest forward and release the clips of the backrest backside mat.

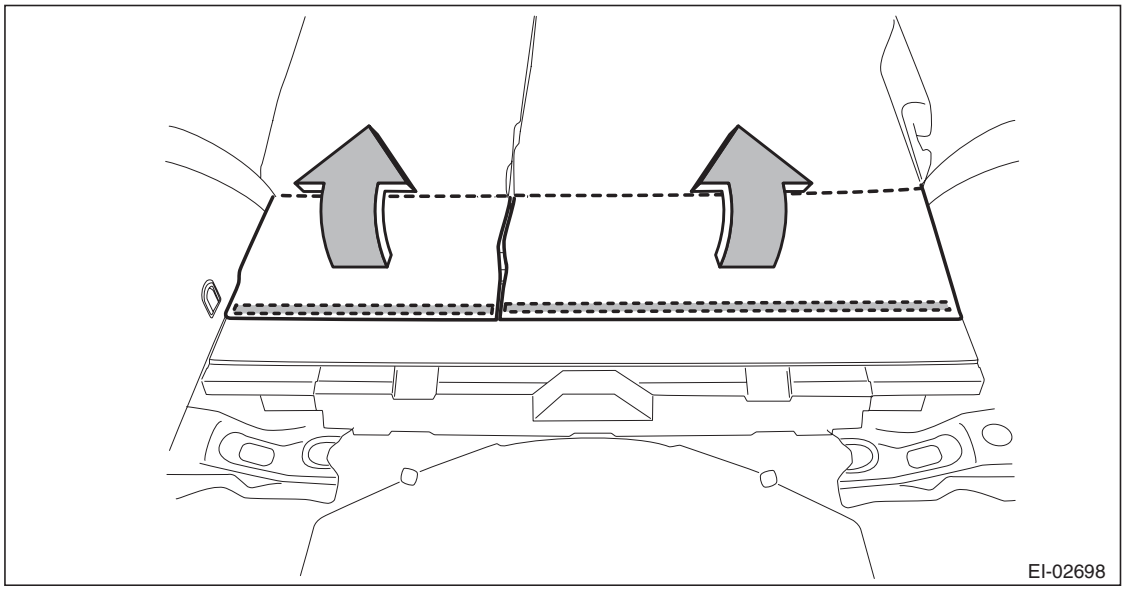

GETtheMANUALS.org

5) Remove the left and right backrest side pad assembly. (On the side where airbag sensor is removed)
   (1) Disconnect the backrest cable and reclining lever cable.
   (2) Remove the screws and remove the reclining lever assembly by pulling it downward.

Preparation tool: Stubby screwdriver

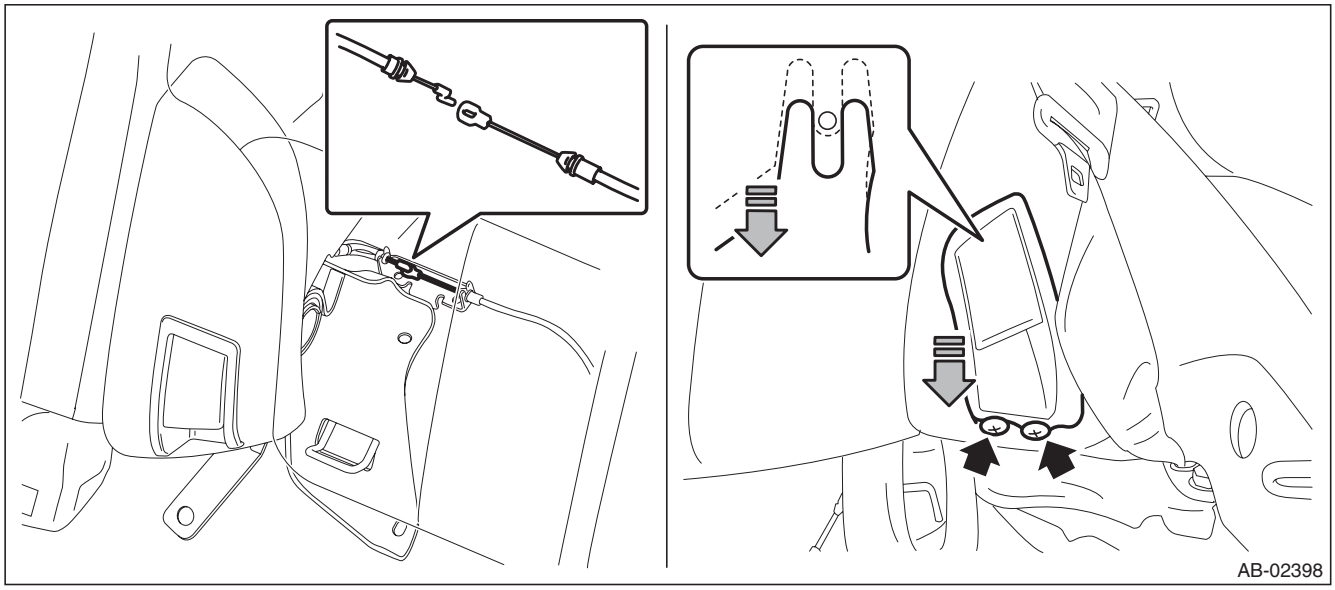

   (3) Turn over the bottom end of the backrest side pad in the forward direction so that the claws are released.
   (4) Remove the backrest side pad by pulling it up.

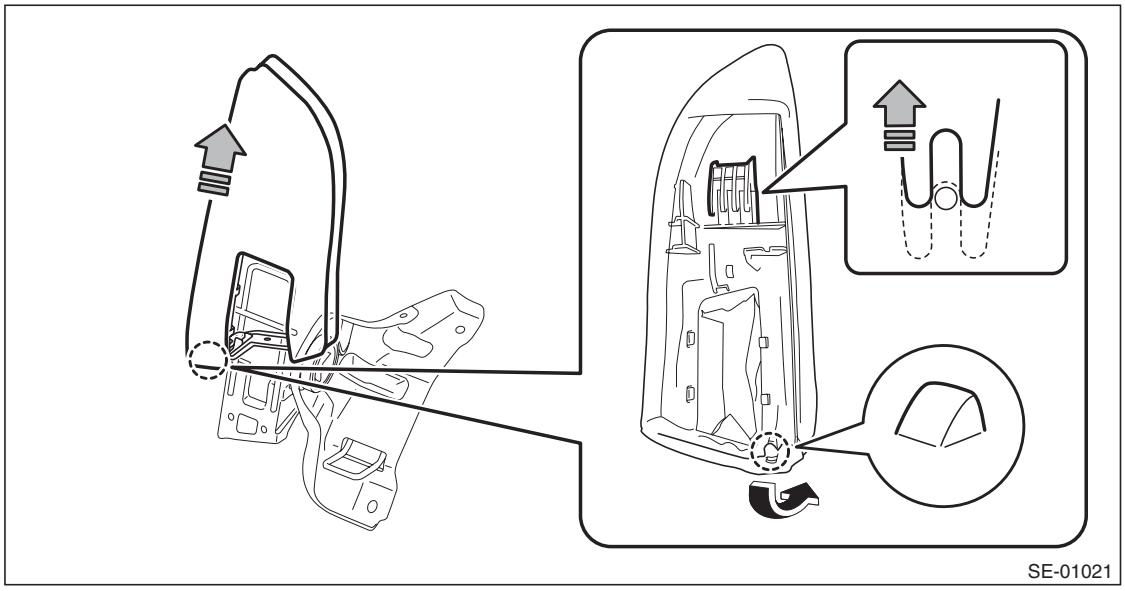

GETtheMANUALS.org

6) Remove the clips, and remove the luggage floor box and rear floor edge cover.

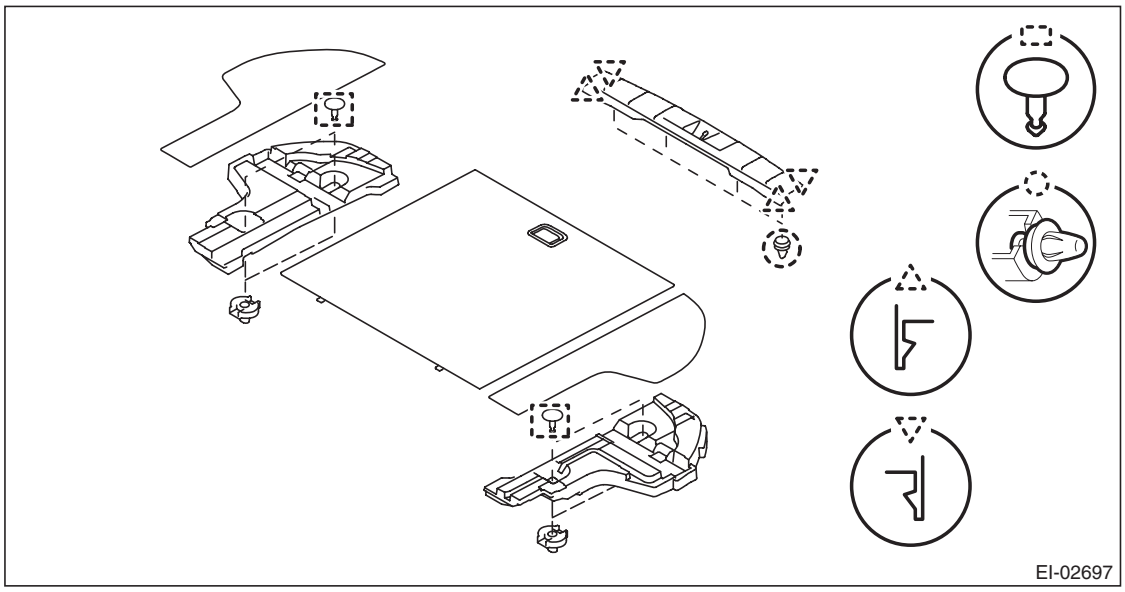

7) Remove the left and right rear quarter trim LWR.
   (1) Remove the caps, screws, and bolts. (A), (C)
   (2) Take out the hook and remove the screw inside. (B)
   (3) Remove the clips, and remove the rear quarter trim LWR.

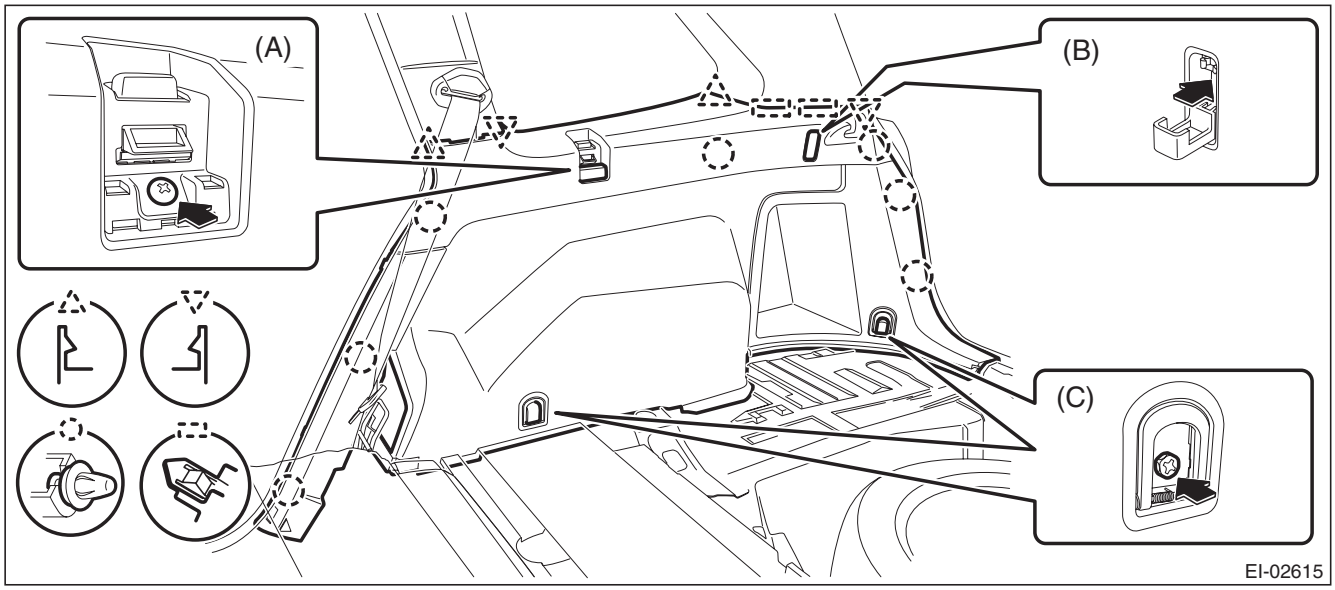

GETtheMANUALS.org

8) Remove the left and right rear quarter trim UPR.
   (1) Open the cap and remove the bolt to remove the seat belt anchor.
   (2) Remove the clips, and remove the rear quarter trim UPR-front.
   (3) Remove the clips, and remove the rear quarter trim UPR-rear.

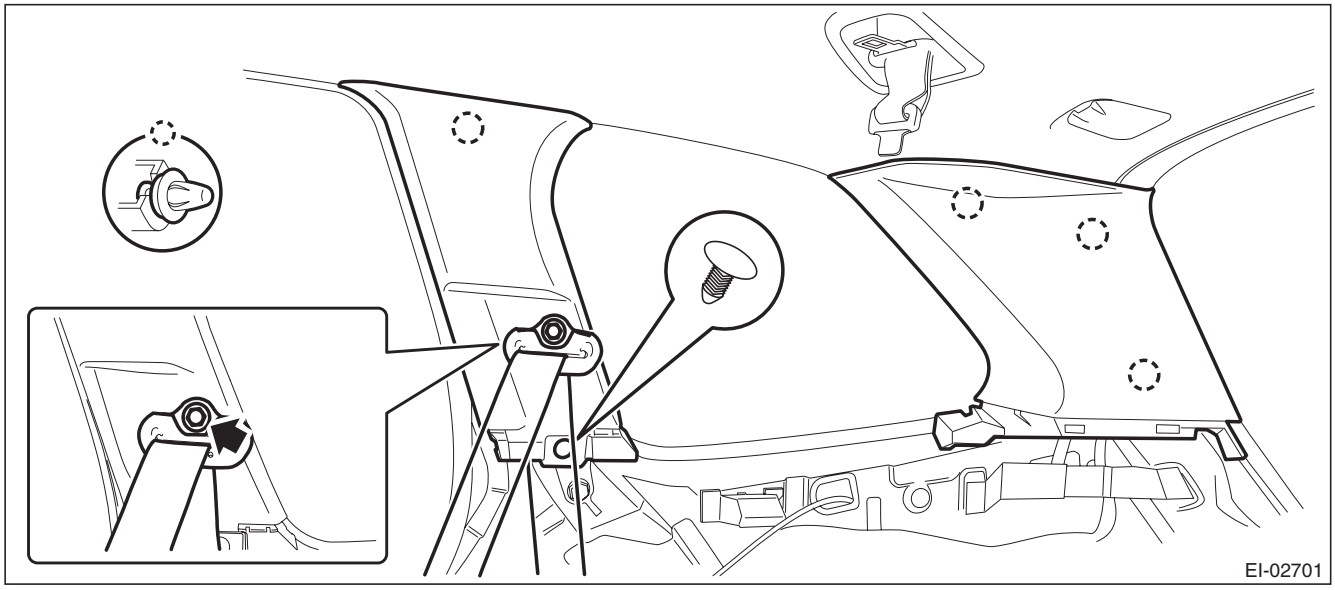

9) Remove the left and right front pillar trims.
   (1) Pull the upper part of the front pillar trim towards the center of the vehicle.
   (2) Insert long-nose pliers into the top part of the trim, grip the clip with the pliers and twist 90° in that position.

CAUTION:
Be careful not to damage the pillar trim surface and curtain airbag module when inserting the pliers.
   (3) Holding the clip twisted as in the previous step, remove the front pillar trim from the clip.
   (4) Remove the clip and the front pillar trim.

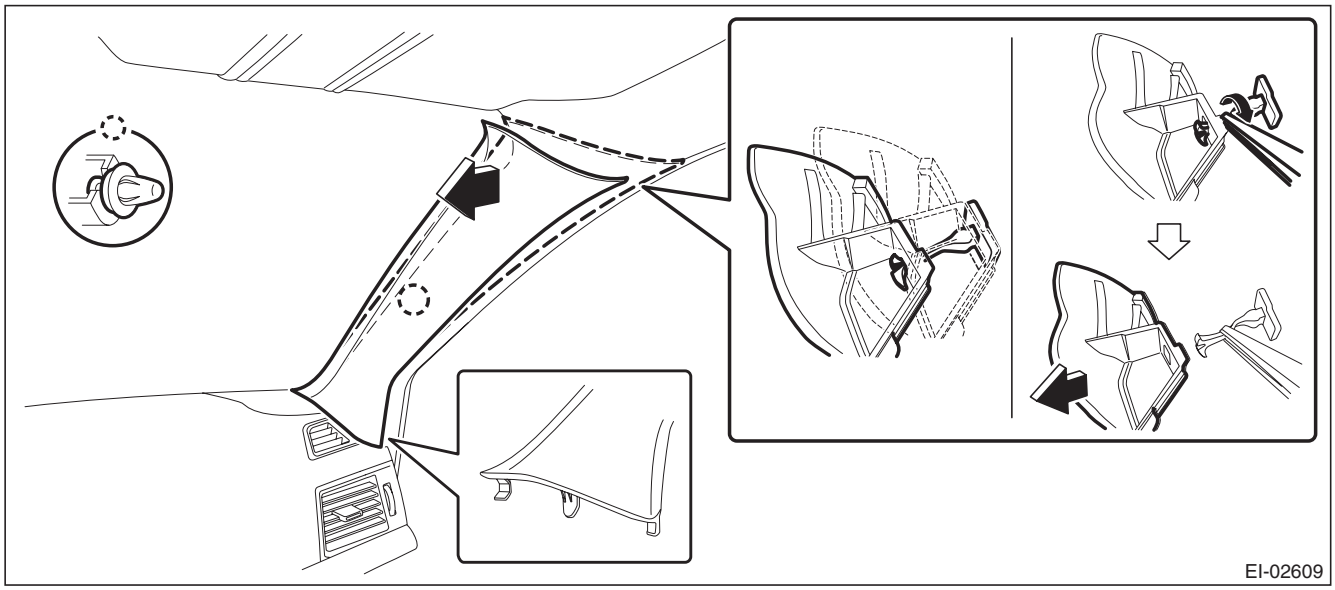

GETtheMANUALS.org

10) Release the claws, and then remove the left and right side sill cover-front INN.

CAUTION:
Do not pull with excessive force. Doing so may damage the claws of the side sill cover INN.

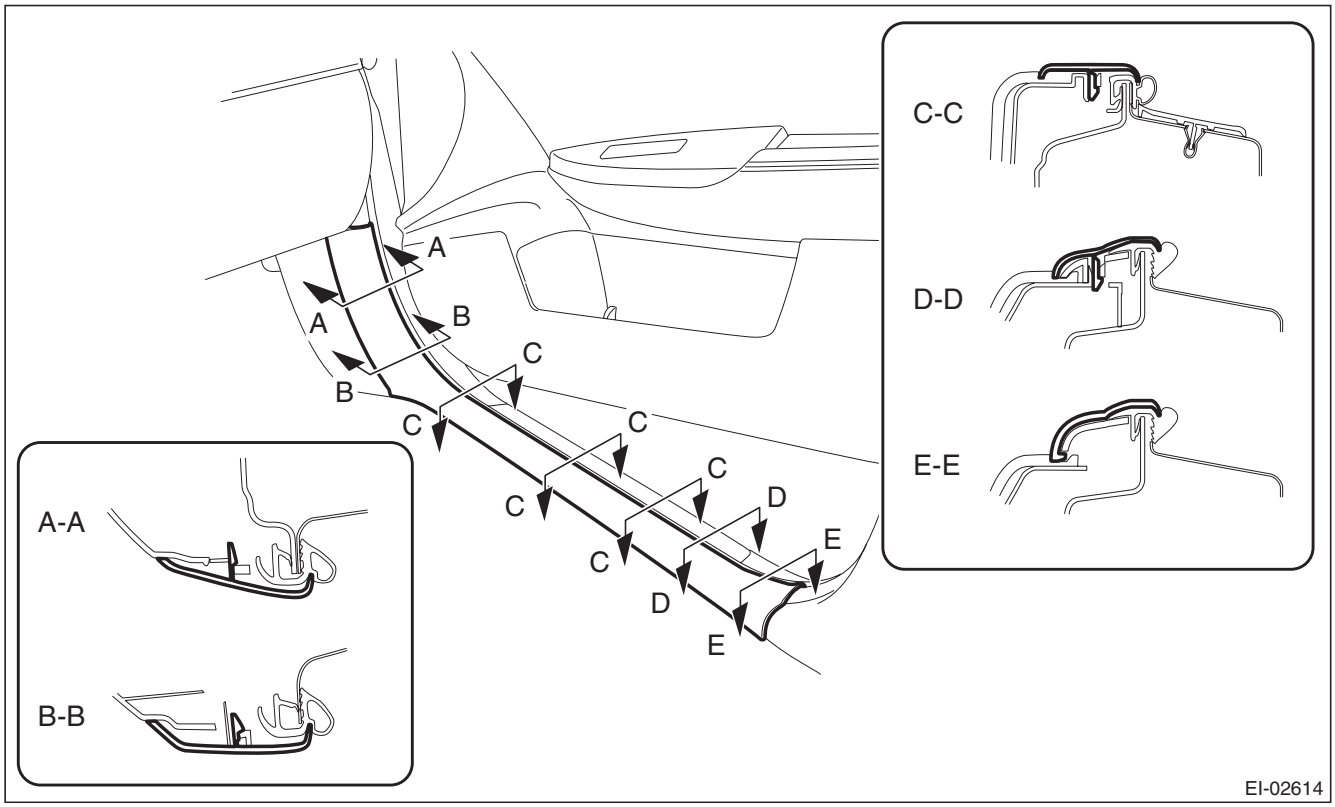

NOTE:
To release the claws of the side sill cover INN, the following steps are recommended.
1. Take out the weather strip from under the side sill cover INN.
2. Turn over the floor mat and release the claw (C-C) by accessing from behind the side sill cover INN.

GETtheMANUALS.org

11) Remove the left and right center pillar trim LWR.
   (1) Release the clip by pulling the center pillar trim LWR toward you.
   (2) Expand the claws of center pillar trim LWR outward and remove it from the center pillar trim UPR.

CAUTION:
Do not expand the center pillar trim LWR excessively. Doing so may damage the trim.

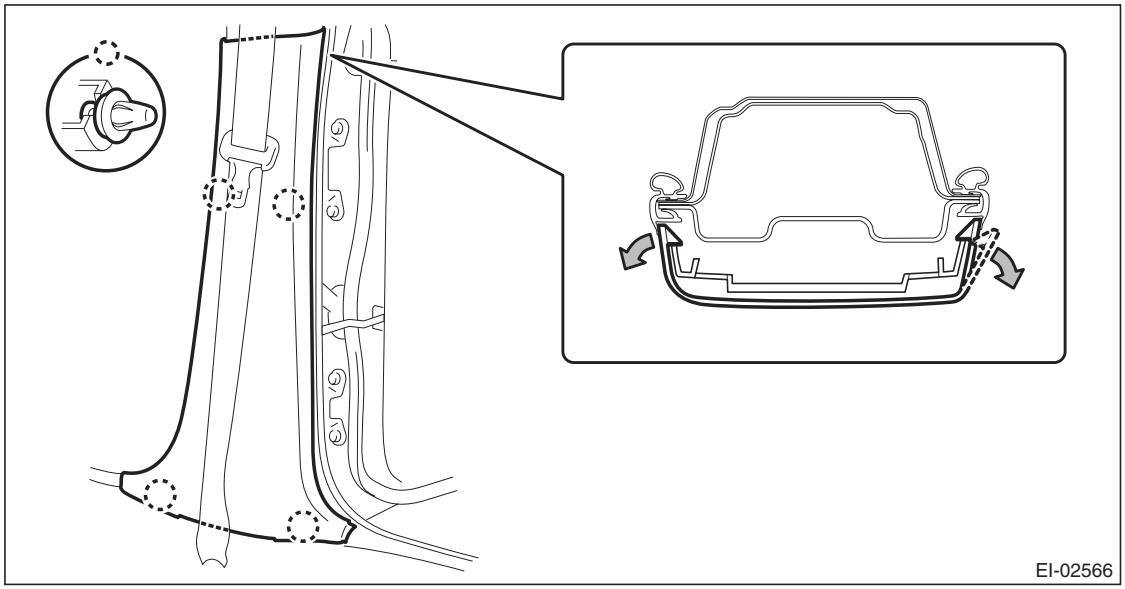

NOTE:
First release the claw located to the rear of the vehicle.

12) Remove the center pillar trim UPR.
   (1) Remove the seat belt lower anchor bolt.

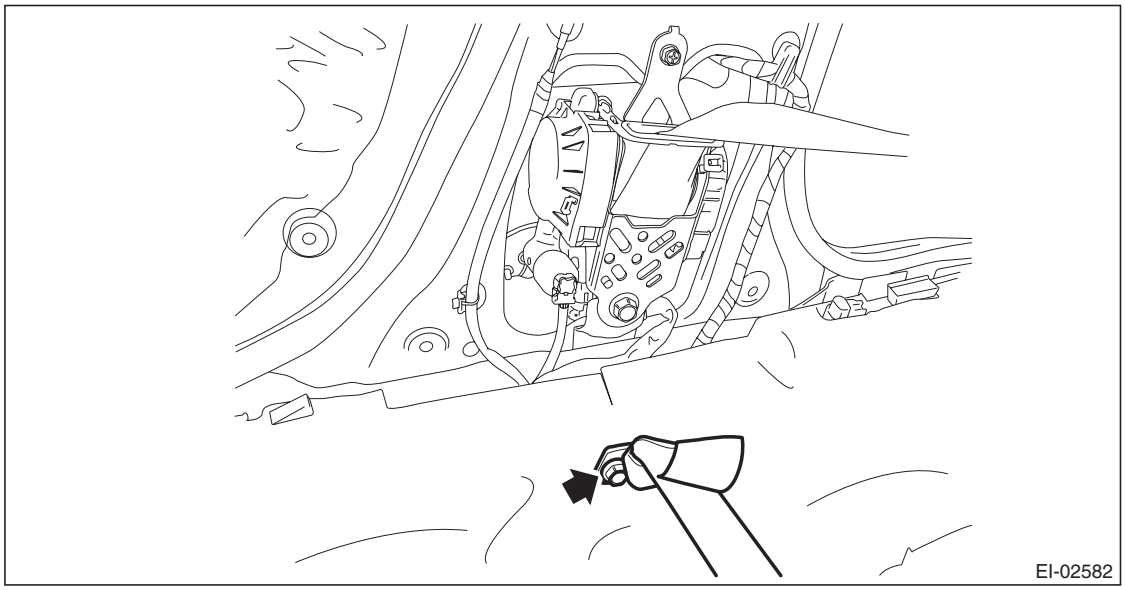

   (2) Release the clip by pulling the center pillar trim UPR toward you.

GETtheMANUALS.org

(3) Remove the center pillar trim UPR by lowering the entire trim.

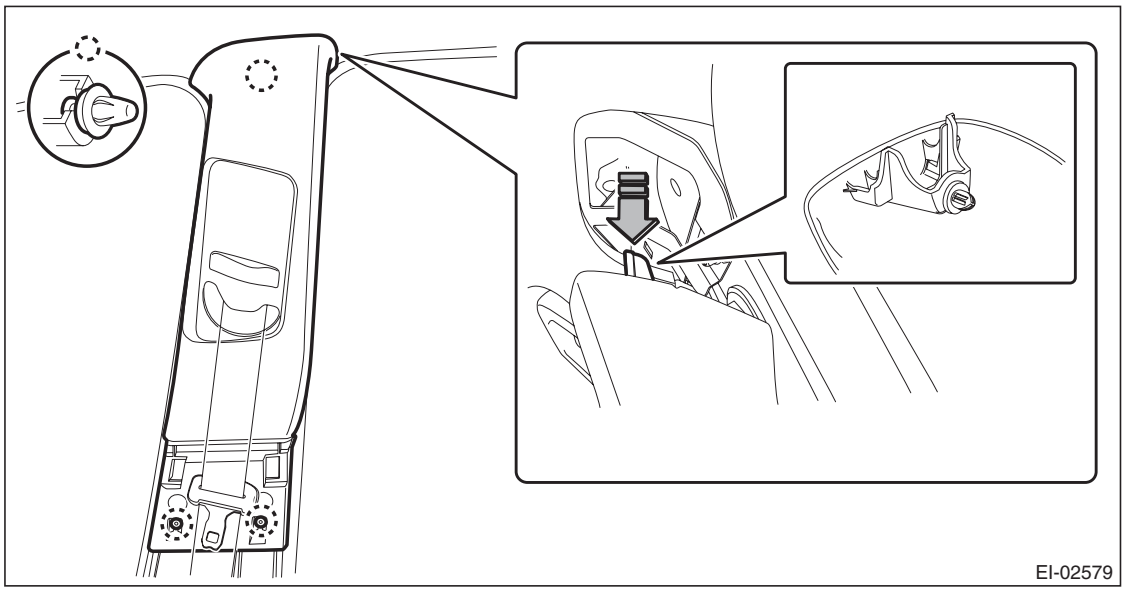

(4) Pull out the seat belt and remove the center pillar trim UPR.

13) Remove the overhead console assembly.

(1) Push and open the rear end of the overhead console lid, and remove the screws.

(2) Disconnect the connector and remove the overhead console assembly.

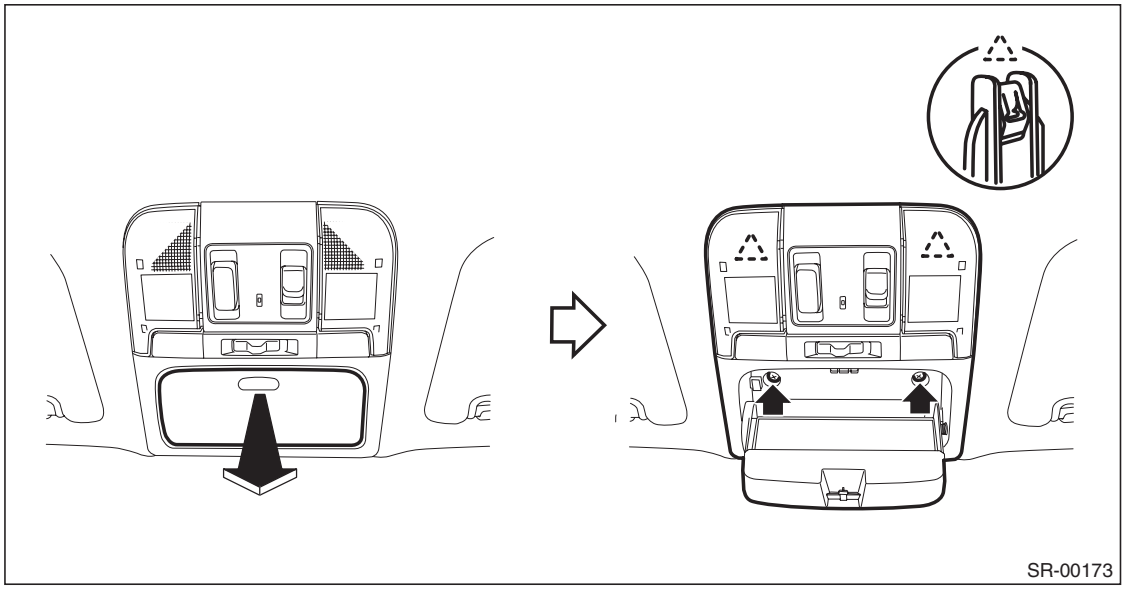

GETtheMANUALS.org

14) Remove the left and right sun visor assembly.
   (1) Remove the cover, loosen the screws, and remove the sun visor assembly.
   (2) Press the both sides of the sun visor hook using a flat tip screwdriver.
   (3) Remove the sun visor hook by pulling toward you.

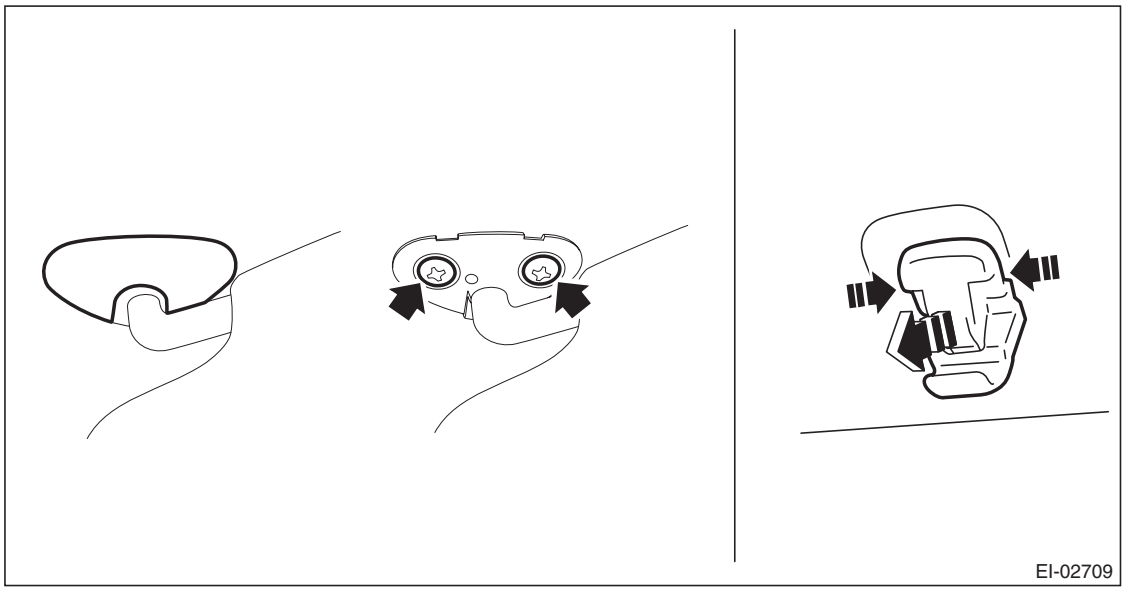

15) Remove the room light assembly.
   (1) Release the claws and remove the cover.
   (2) Remove the two screws.

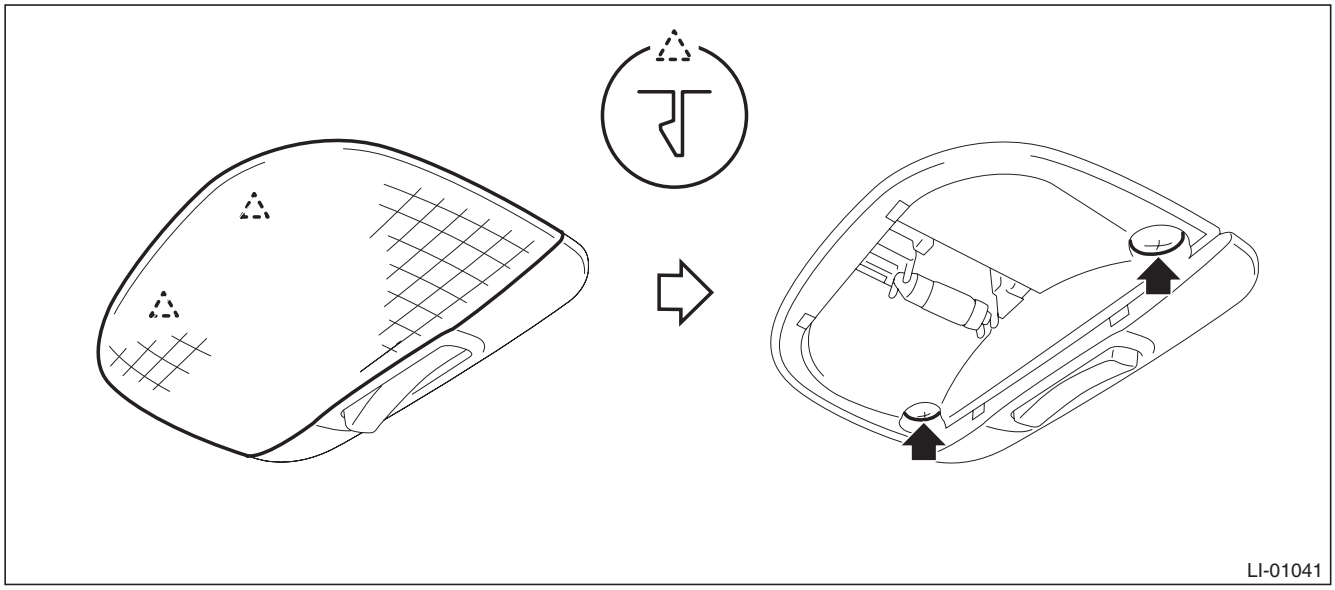

   (3) Disconnect the connector and remove the room light assembly.

GETtheMANUALS.org

16) Remove the luggage light.
   (1) Release the claws and remove the luggage room light main body.
   (2) Disconnect the connector and remove the luggage room light.

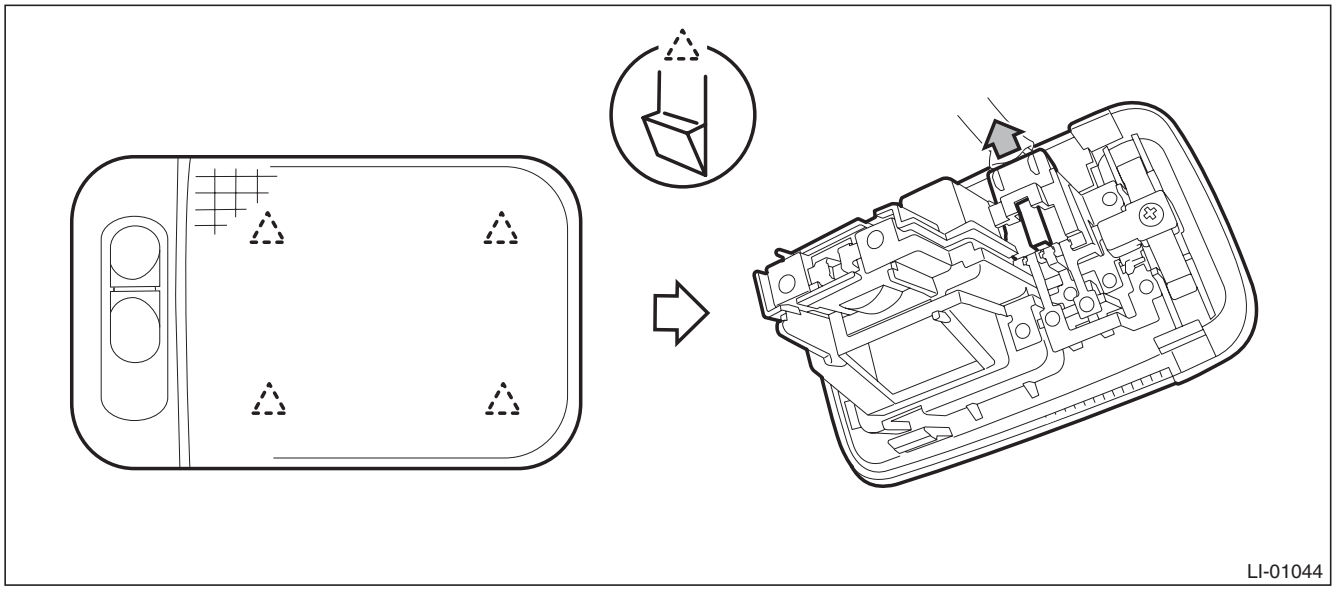

17) Remove all assist grip assembly.
   (1) Remove the cap (a).
   (2) Pull the assist grip toward you (to the vehicle center) and remove the metal clip from the bracket.

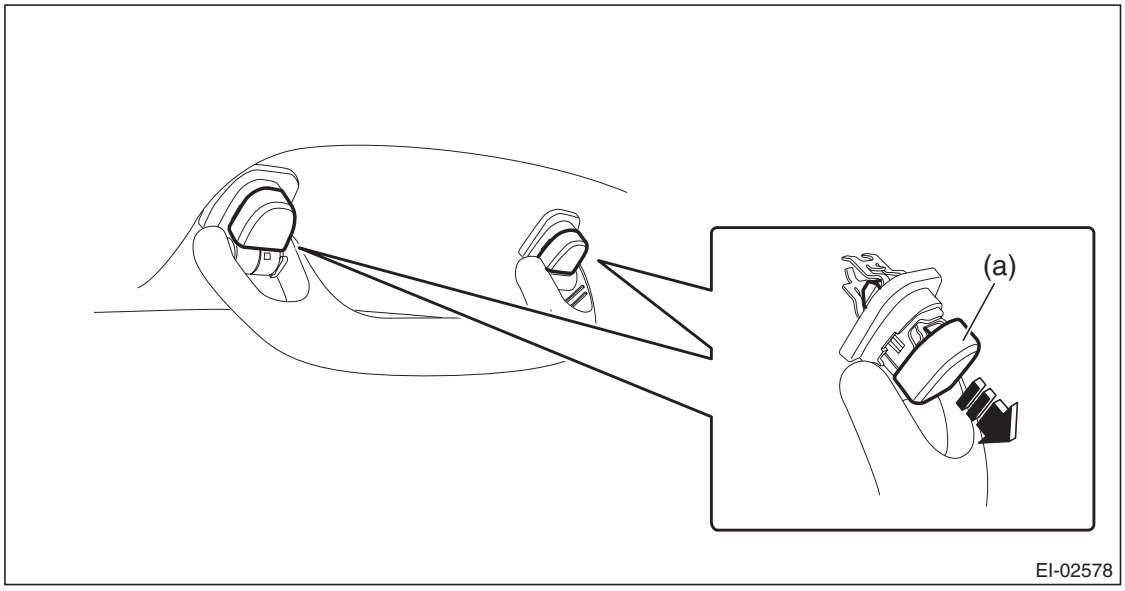

18) Remove the sun roof garnish. (model with sunroof)

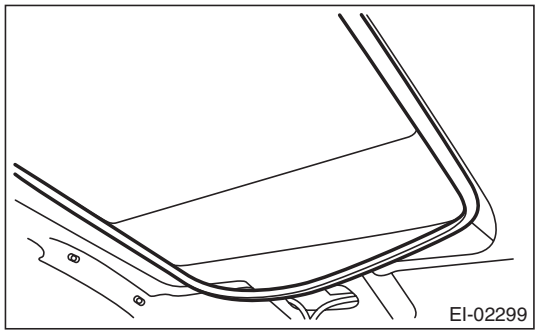

GETtheMANUALS.org

19) Disconnect the roof harness connector at the front pillar RH.
20) Remove the roof trim assembly.
    (1) Release the clips and remove the feeder cord and roof cord from the roof trim.
    (2) Take out the roof trim assembly from the rear gate opening to outside.

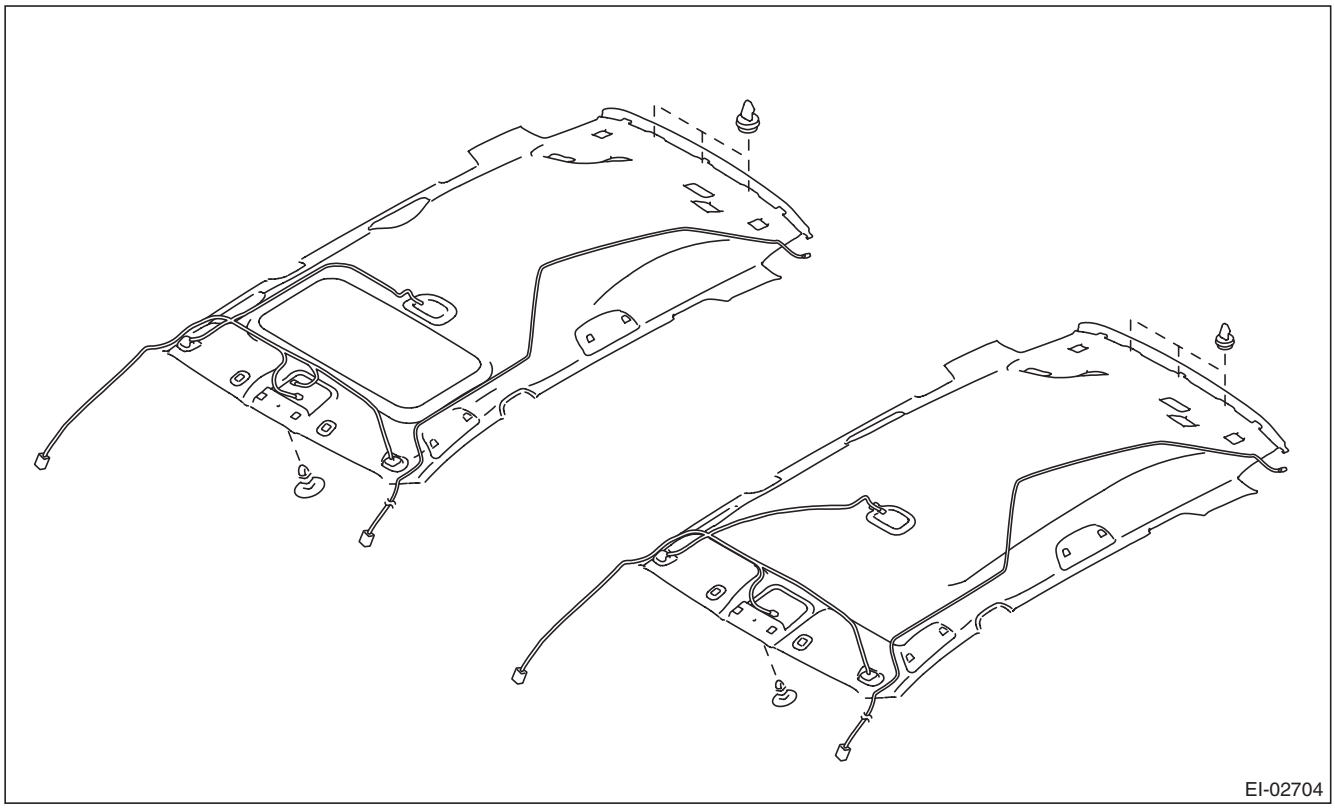

B: INSTALLATION

1) Attach the feeder cord and roof cord to the roof trim.

CAUTION:
Route each cord carefully. The cord may interfere, thus preventing normal deployment of the curtain airbag when necessary.

Tape:
Item number: 86359SC000/TAPE

NOTE:
Use the tape (service parts) by cutting into 80 mm × 50 mm (3.2 in × 2.0 in).

GETtheMANUALS.org

- Sedan model

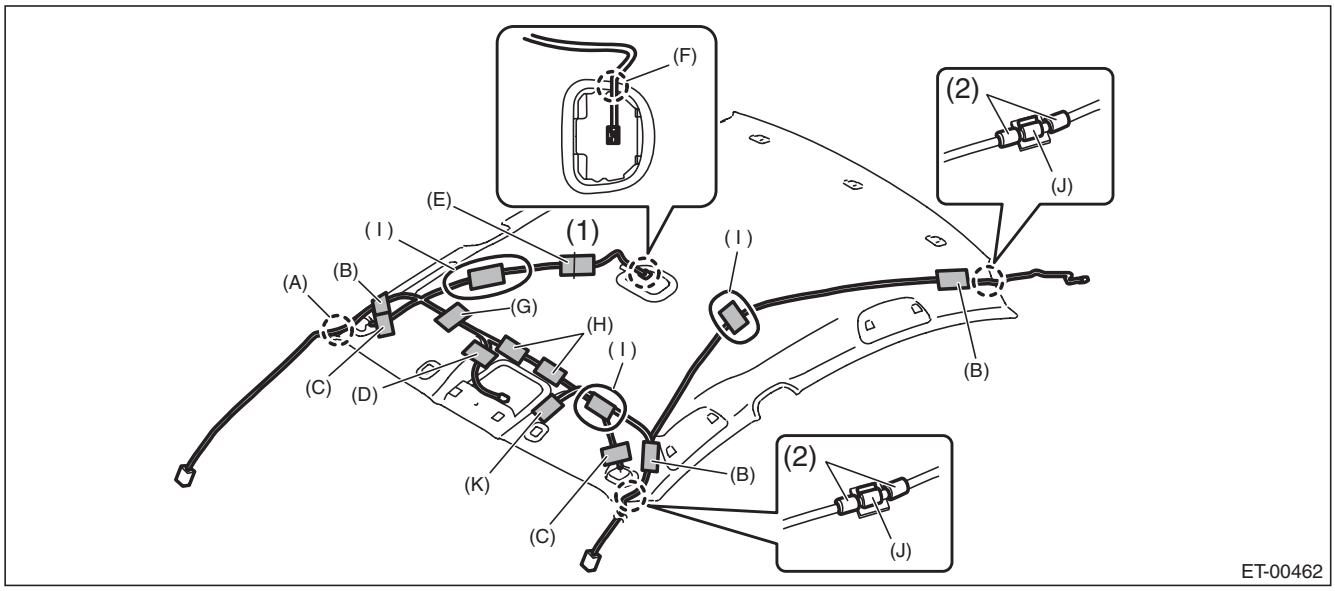

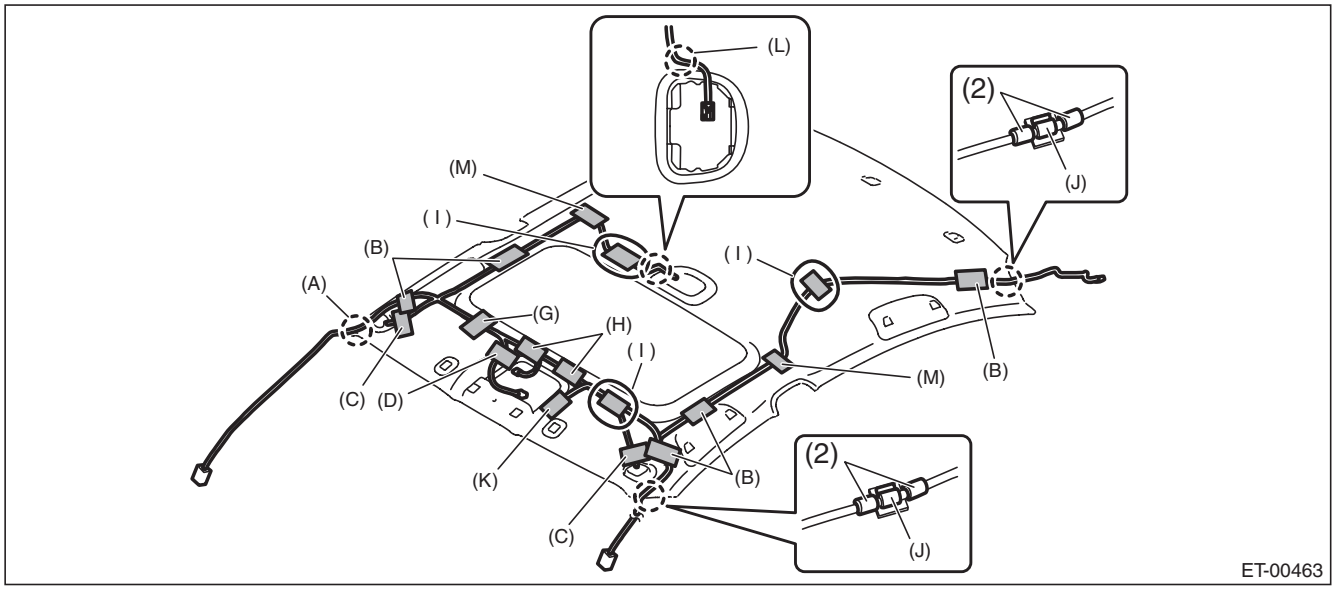

(1)	Mark-off line	(2)	Polyurethane tape		
(A)	Align the marking (white) center of cord with the clamp to secure.	(F)	Place the marking (white) cord center to adjust the excess.	(J)	Place the clamp between the polyurethane tapes (2) to secure.
(B)	Affix with tape while avoiding the assist grip surface.	(G)	Align with the center of sun visor, and affix with tape.	(K)	Affix the prewire connector with tape.
(C)	Adjust the excess cord to 60±10 mm (2.4±0.4 in) from the hole edge, and affix with tape.	(H)	Affix the rear left and right of the hole with tape.	(L)	Pass the marking (white) of cord under the clamp.
(D)	Affix right after the cord branching point with tape.	(I)	Adjust the excess cord at (I) position and affix with tape.	(M)	Affix the cord at the pad rear end with tape.
(E)	Affix with tape while aligning with the mark-off line.				

GETtheMANUALS.org

- OUTBACK model

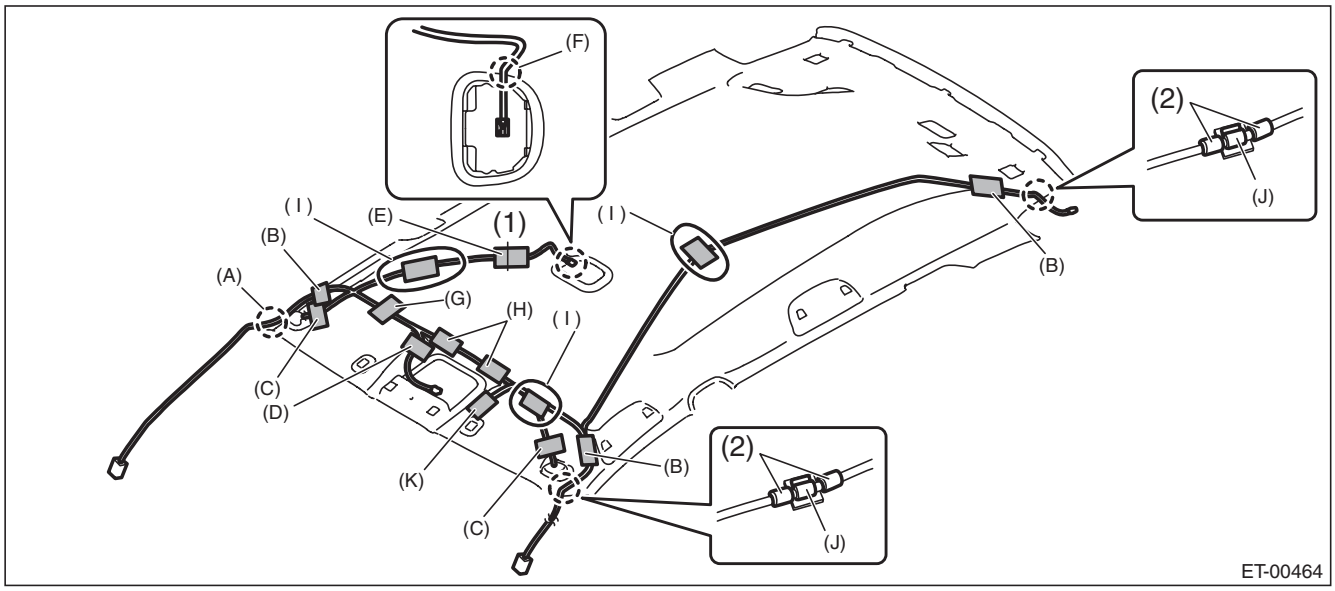

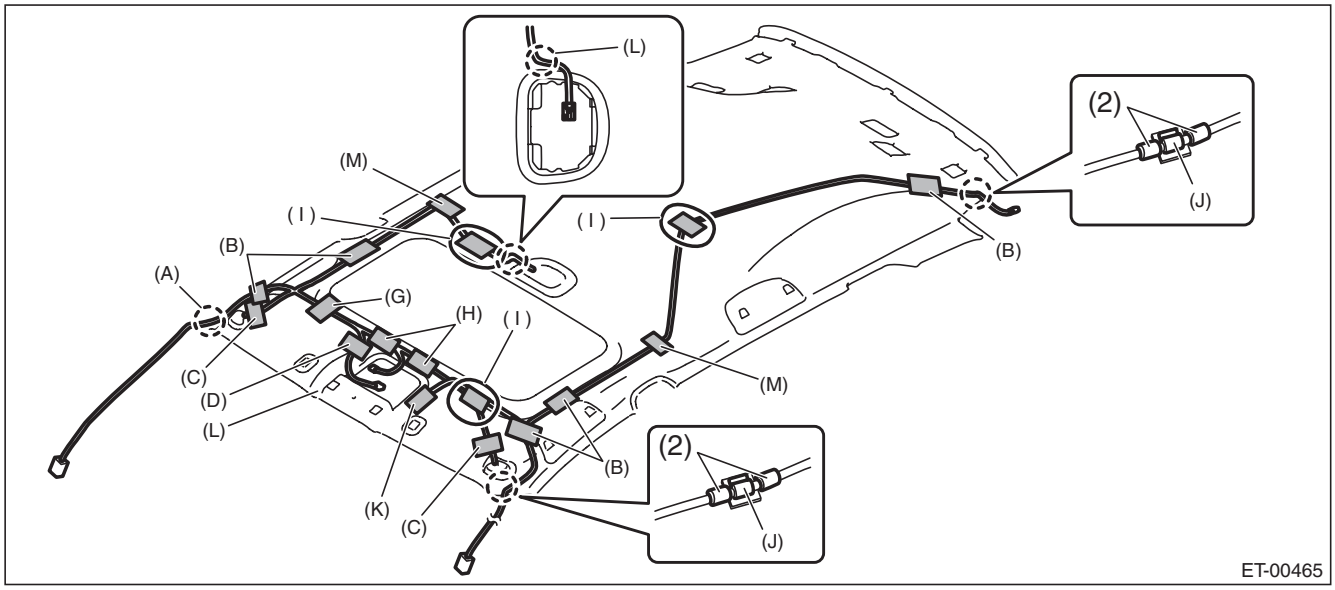

(1)	Mark-off line	(2)	Polyurethane tape		
(A)	Align the marking (white) center of cord with the clamp to secure.	(F)	Place the marking (white) cord center to adjust the excess.	(J)	Place the clamp between the polyurethane tapes (2) to secure.
(B)	Affix with tape while avoiding the assist grip surface.	(G)	Align with the center of sun visor, and affix with tape.	(K)	Affix the prewire connector with tape.
(C)	Adjust the excess cord to 60±10 mm (2.4±0.4 in) from the hole edge, and affix with tape.	(H)	Affix the rear left and right of the hole with tape.	(L)	Pass the marking (white) of cord under the clamp.
(D)	Affix right after the cord branching point with tape.	(I)	Adjust the excess cord at (I) position and affix with tape.	(M)	Affix the cord at the pad rear end with tape.
(E)	Affix with tape while aligning with the mark-off line.				

GETtheMANUALS.org

2) Install each part in the reverse order of removal.

CAUTION:
If the hook is disconnected from the vehicle body, replace the hook with the new part to prevent the decline of the fixed force of the seat.

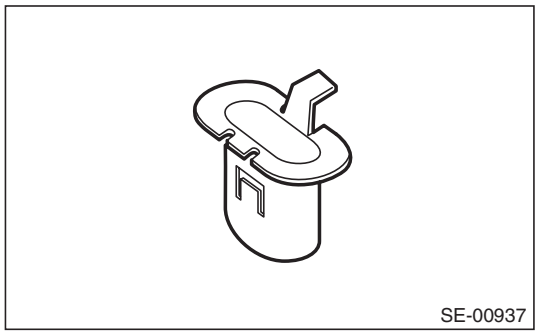

GETtheMANUALS.org

28. Rear Gate Trim

A: REMOVAL

1) Remove the rear gate upper trim.
   (1) Remove the claws on the trim edge.
   (2) Disconnect the claws in the center of trim, and remove the rear gate upper trim.

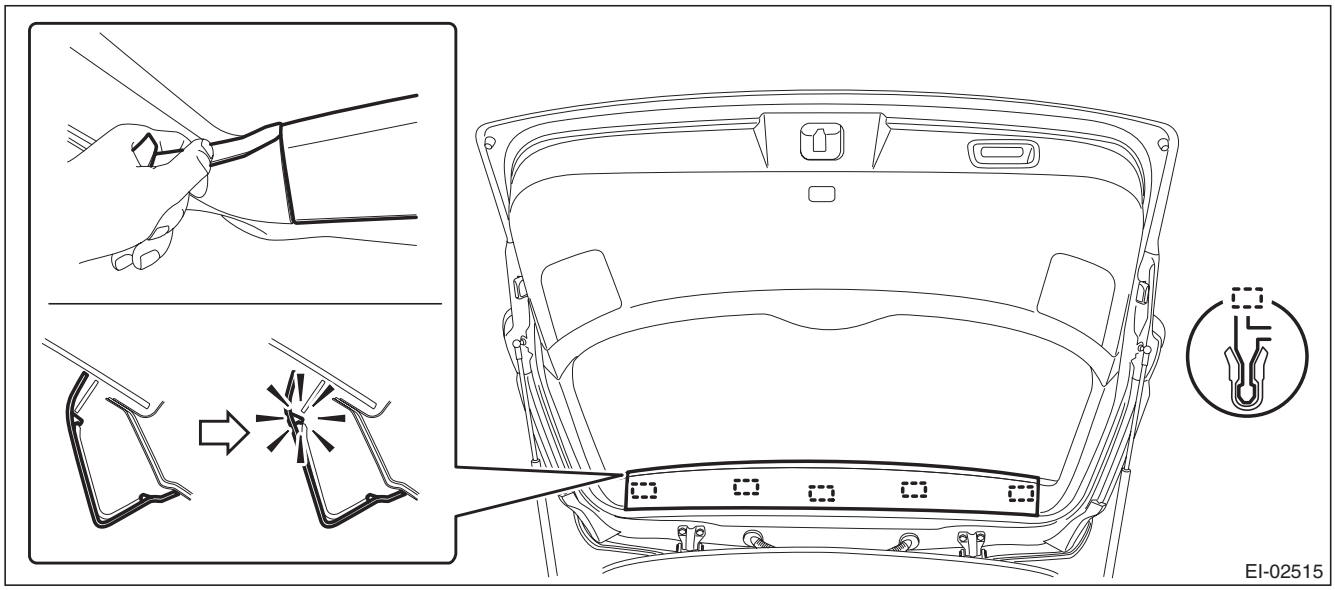

2) Remove the rear gate pillar trim.
   (1) Release the claws.
   (2) Remove the claws on the bottom of trim, and remove the rear gate pillar trim.

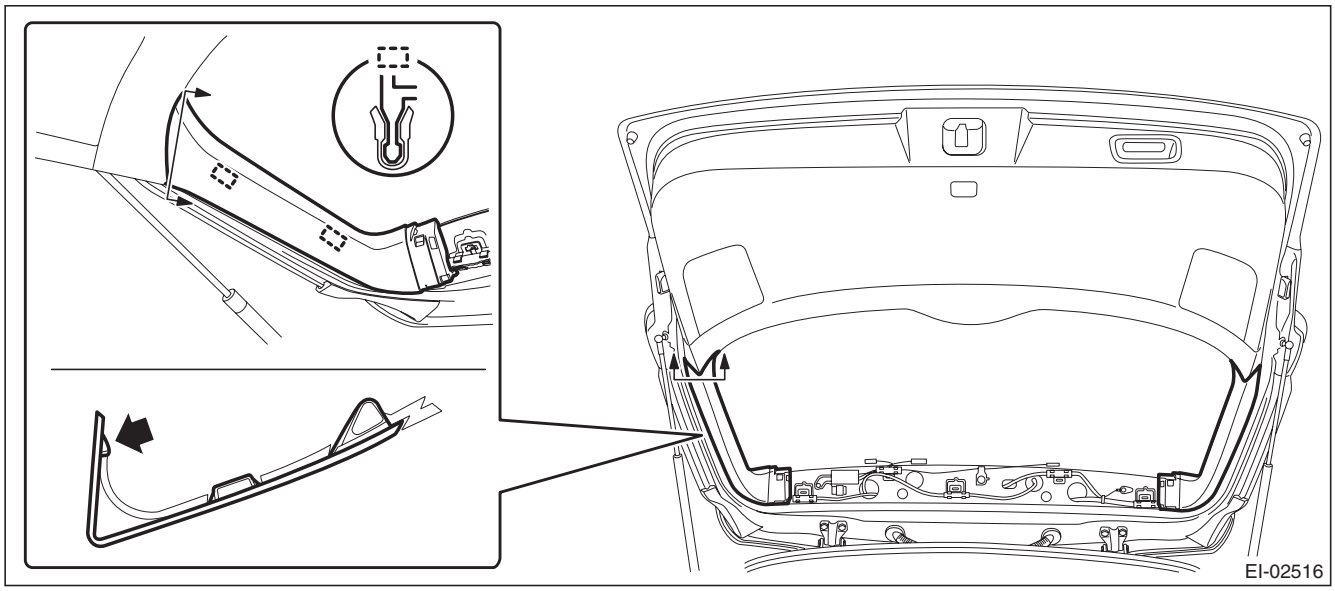

GETtheMANUALS.org

3) Remove the hand grip of rear gate.

CAUTION:
- **Be careful not to scratch the trim.**
- **To protect the trim from damage, attach a protective tape to the tool in use.**
  (1) Insert a precision screwdriver (a).
  (2) With the precision screwdriver inserted, push down the claw to disengage and pull it toward yourself.
  (3) Remove the screws and detach the hand grip.

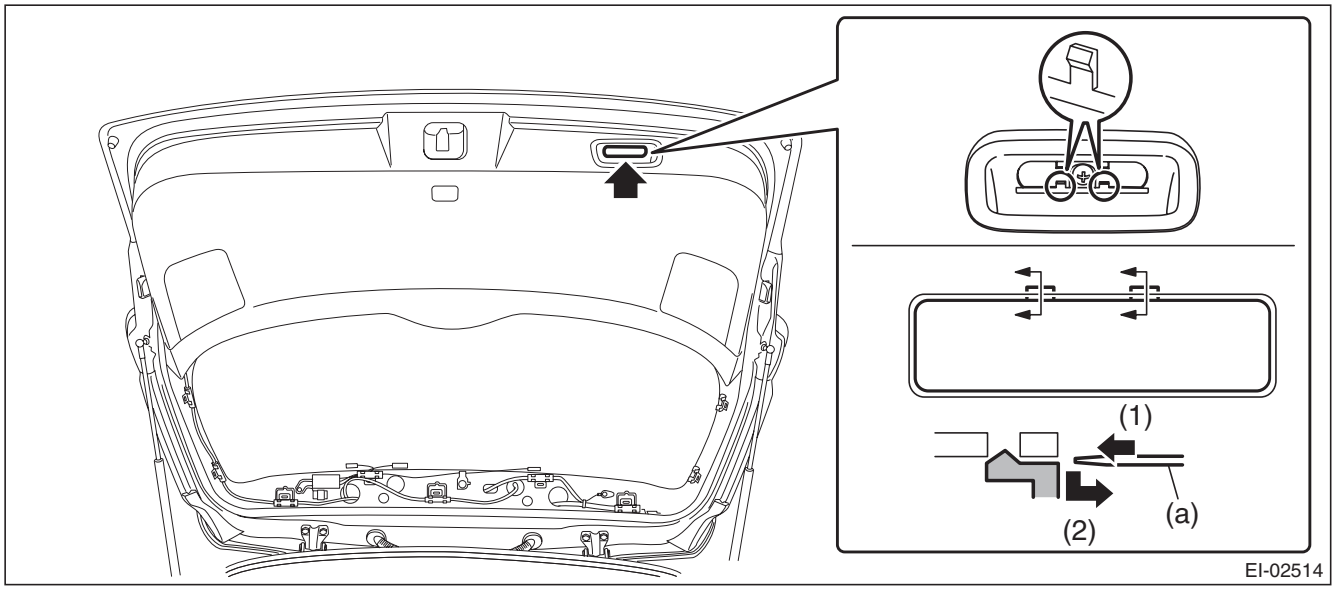

4) Remove the clips and rear gate lower trim.
  (1) Remove the clips on both ends.
  (2) Release the clips and remove the rear gate lower trim.

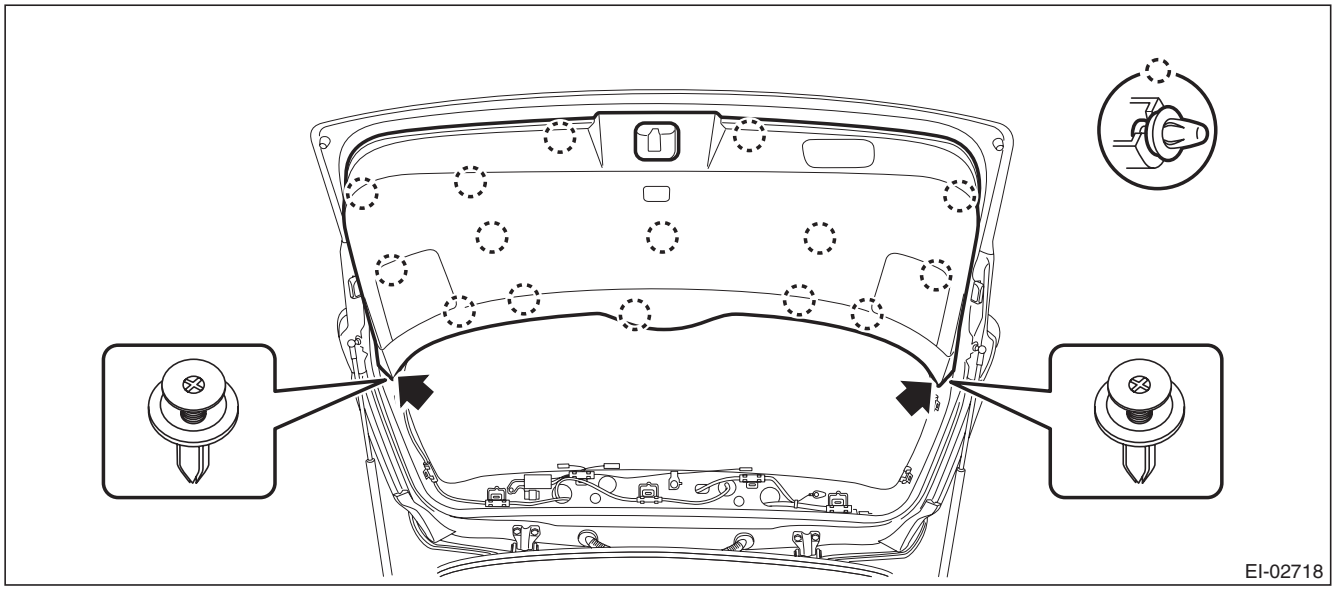

B: INSTALLATION

Install each part in the reverse order of removal.

GETtheMANUALS.org

29. Floor Mat

A: REMOVAL

1) Remove the front seat assembly. <Ref. to SE-10, REMOVAL, Front Seat.>
2) Remove the rear seat cushion assembly. <Ref. to SE-34, REMOVAL, Rear Seat.>
3) Remove the console box assembly. <Ref. to EI-73, REMOVAL, Console Box.>
4) Remove the console front side cover. <Ref. to EI-70, CONSOLE FRONT COVER, REMOVAL, Center Console.>
5) Remove the lower inner trim. <Ref. to EI-96, REMOVAL, Lower Inner Trim.>
6) Take out the floor mat from the vehicle.
   (1) Remove the clips from the floor mat.
   (2) Remove the mat hook on both sides.
   (3) Take out the floor mat after folding down.

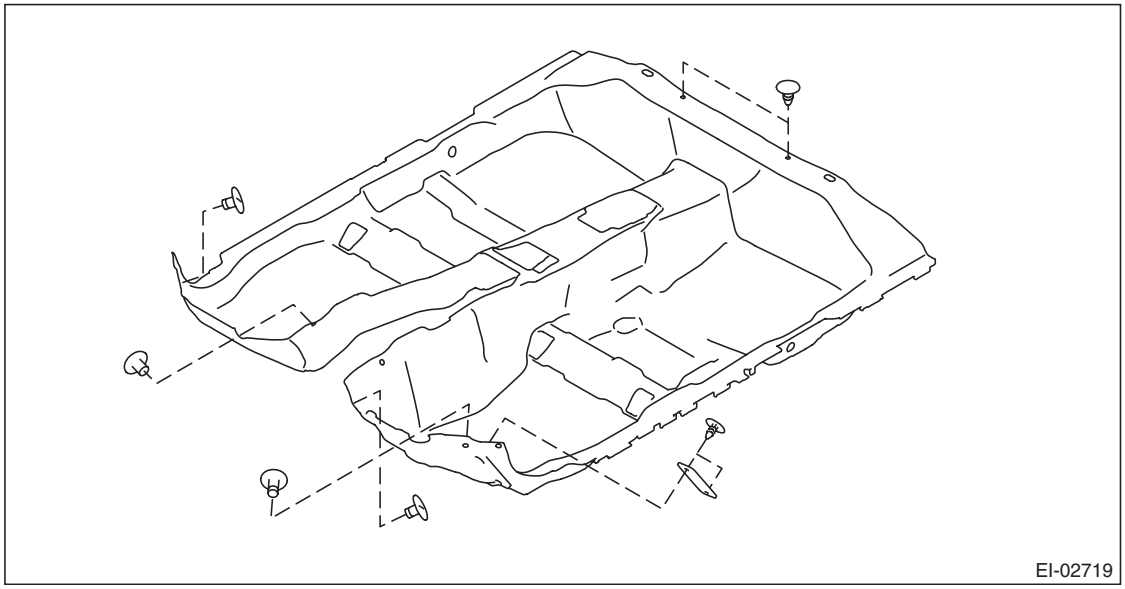

B: INSTALLATION

Install each part in the reverse order of removal.

NOTE:
Secure the mat firmly with hook and clip.

GETtheMANUALS.org

30. Trunk Lid Garnish

A: REMOVAL

1) Remove the trunk lid trim.
   (1) Remove the trunk handle.
   (2) Remove the clips and the trunk lid trim.

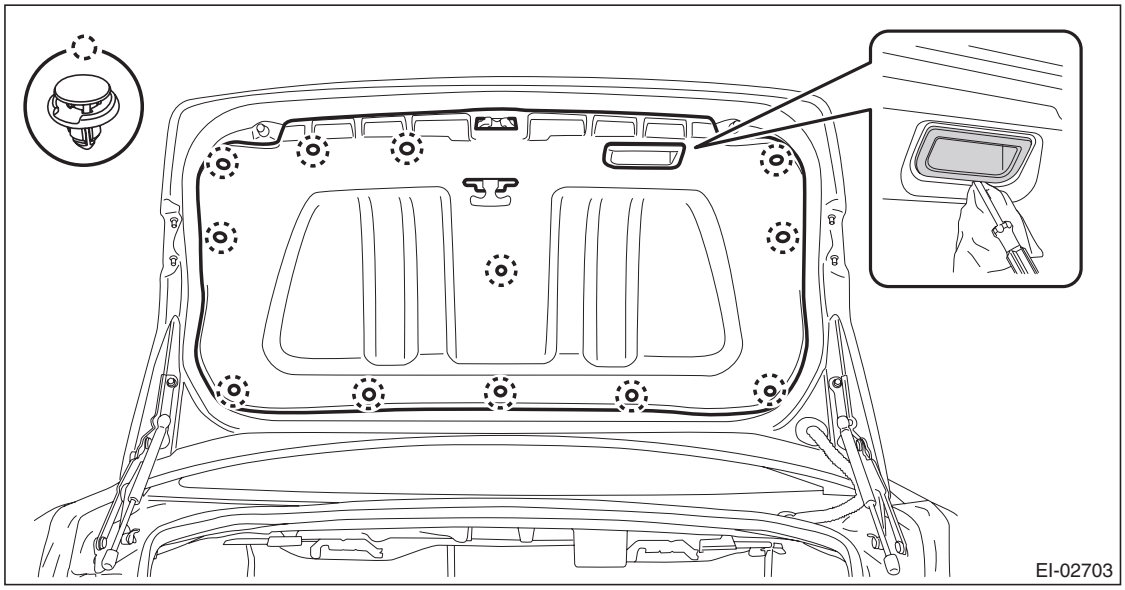

2) Remove the trunk lid garnish.
   (1) Remove the nuts.
   (2) Remove the clips and the trunk lid garnish.

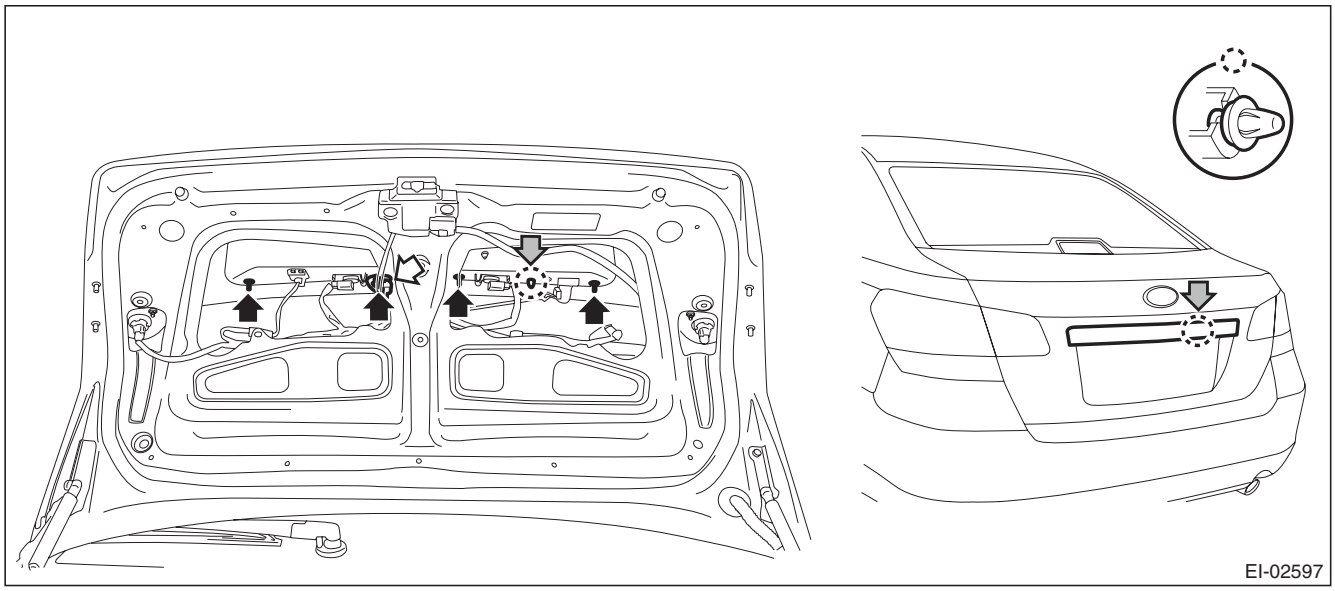

B: INSTALLATION

Install each part in the reverse order of removal.

Tightening torque:
4.5 N·m (0.46 kgf-m, 3.3 ft-lb)

GETtheMANUALS.org

31. Rear Gate Garnish

A: REMOVAL

1) Disconnect the ground cable from battery.
2) Remove the rear gate trim.
   (1) Remove the rear gate upper trim.
      a) Remove the claws on the trim edge.
      b) Disconnect the claws in the center of trim, and remove the rear gate upper trim.

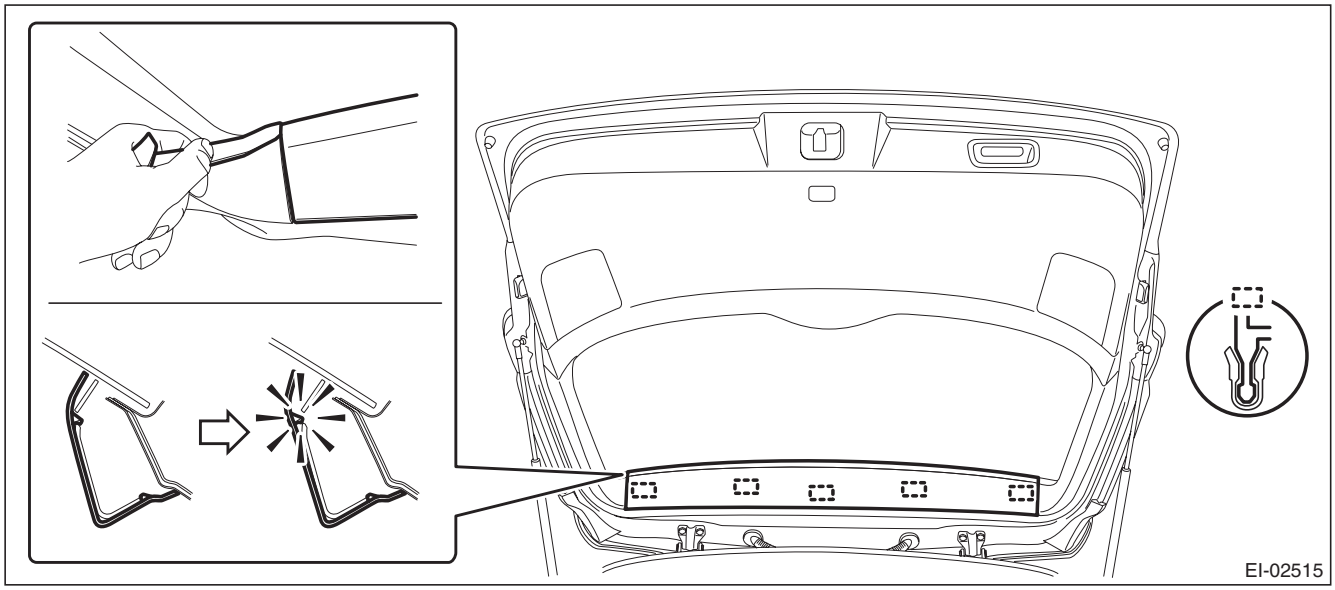

   (2) Remove the rear gate pillar trim.
      a) Release the claws.
      b) Remove the claws on the bottom of trim, and remove the rear gate pillar trim.

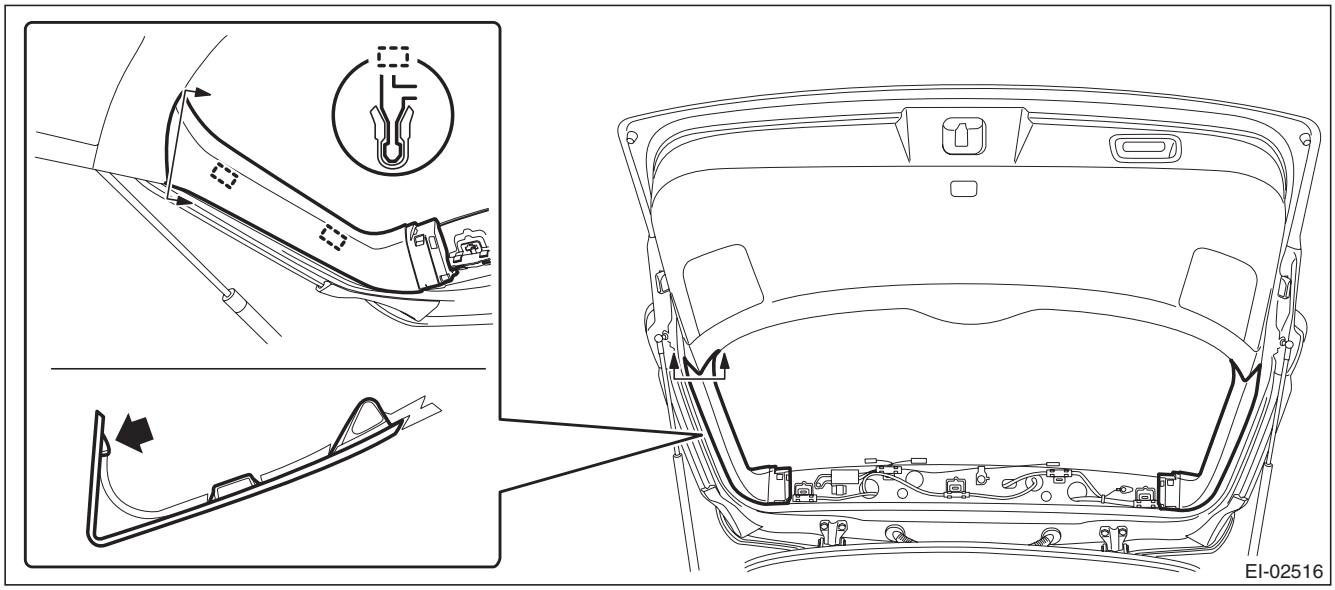

GETtheMANUALS.org

(3) Remove the hand grip of rear gate.

CAUTION:
- **Be careful not to scratch the trim.**
- **To protect the trim from damage, attach a protective tape to the tool in use.**

a) Insert a precision screwdriver (a).
b) With the screwdriver inserted, push it down to release the claw and pull it toward you.
c) Remove the screws and detach the hand grip.

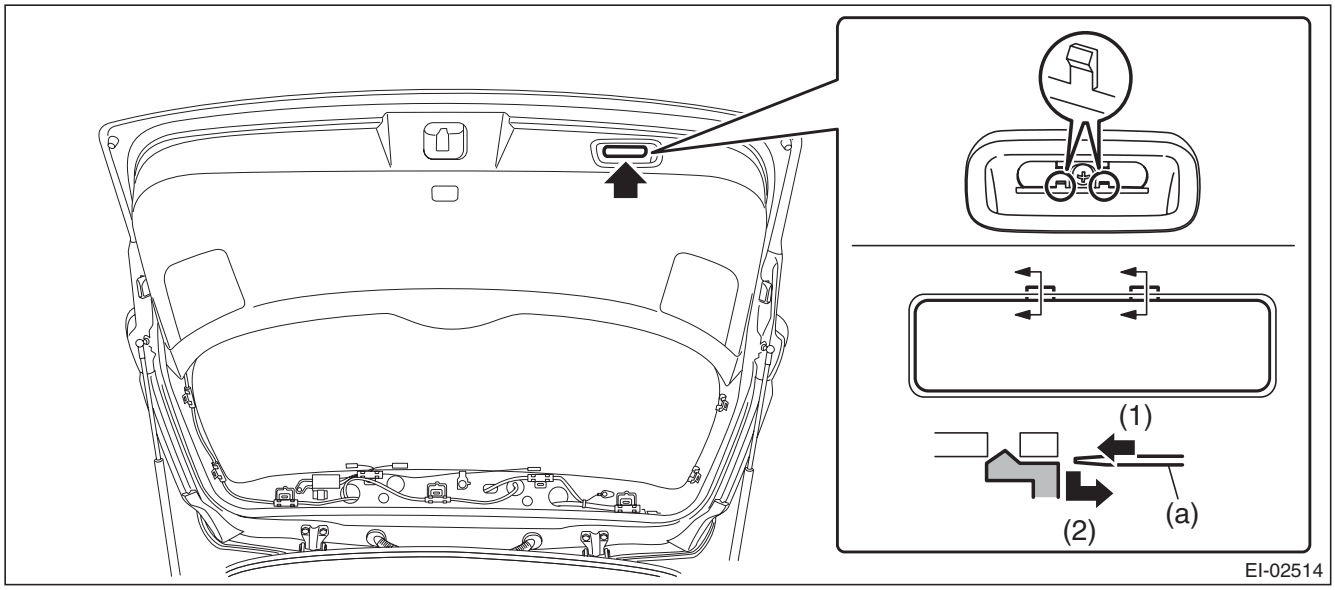

(4) Remove the rear gate lower trim.
a) Remove the clips on both ends.
b) Release the clips and remove the rear gate lower trim.

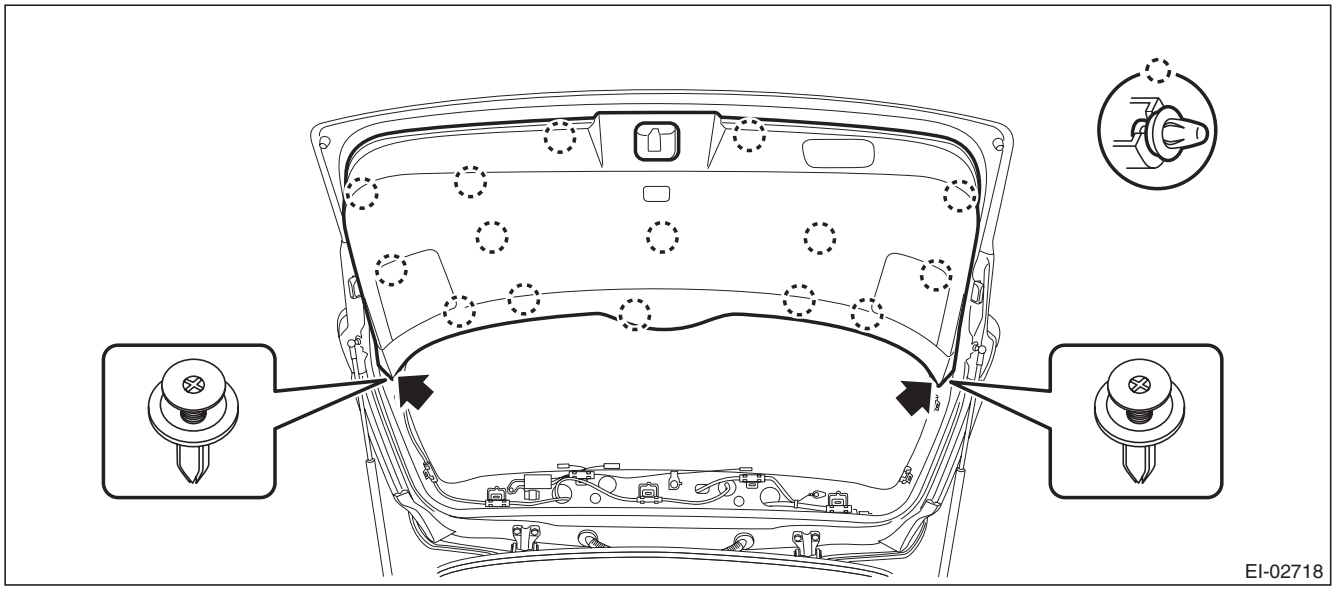

GETtheMANUALS.org

3) Remove the rear gate garnish.
   (1) Release the clips and claws, then detach the rear finisher light side cover.

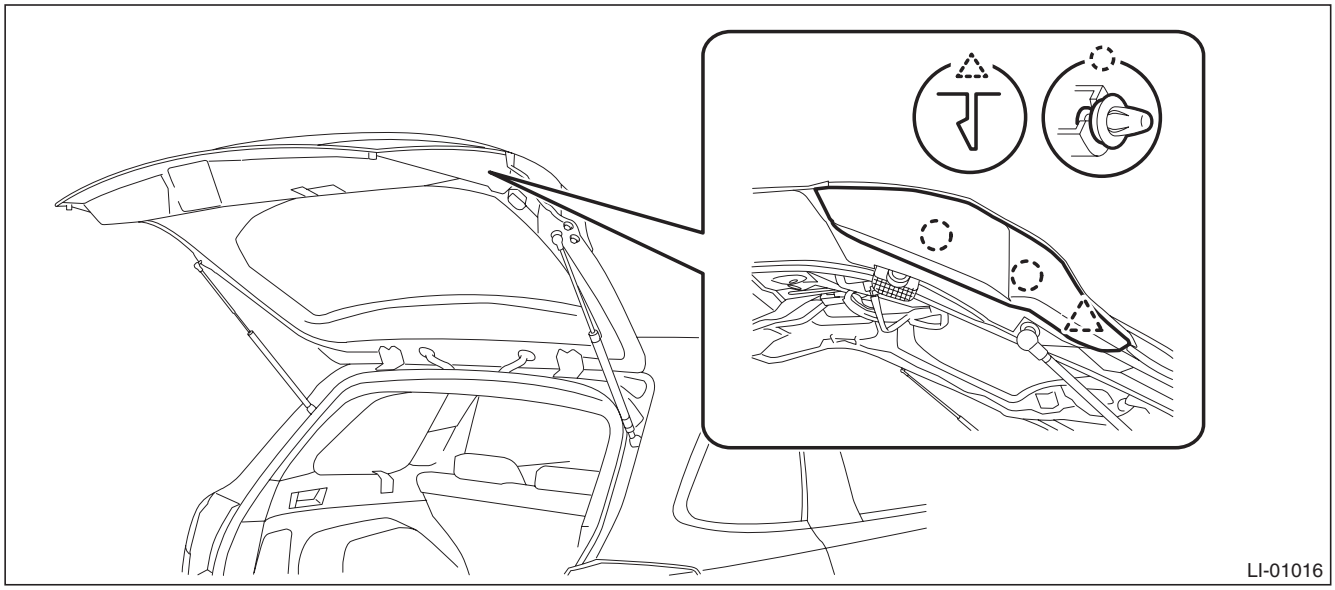

   (2) Disconnect the harness connector of license plate light assembly.
   (3) Remove the nuts.
   (4) Remove the clips, and remove the rear gate garnish.

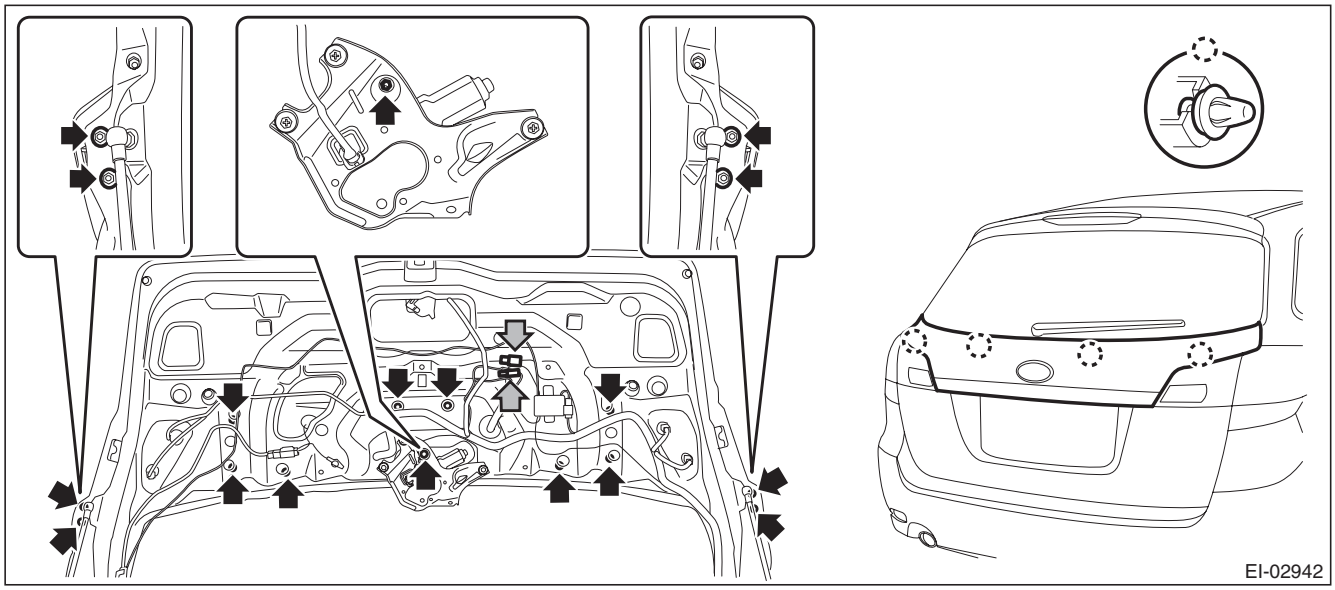

B: INSTALLATION

CAUTION:
Make sure that the harness grommet is installed securely.
Incomplete installation causes water leak.
Install each part in the reverse order of removal.

Tightening torque
Rear gate garnish: 4.5 N·m (0.46 kgf-m, 3.3 ft-lb)

GETtheMANUALS.org

32. Heat Shield Cover

A: REMOVAL

1. FRONT HEAT SHIELD COVER

1) Remove the rear exhaust pipe and muffler.

- **Rear exhaust pipe**
  - H4 turbo model: <Ref. to EX(H4DOTC)-15, REMOVAL, Rear Exhaust Pipe.>
  - H4 non-turbo model: <Ref. to EX(H4SO)-9, REMOVAL, Rear Exhaust Pipe.>
  - H6 model: <Ref. to EX(H6DO)-8, REMOVAL, Rear Exhaust Pipe.>
- **Muffler**
  - H4 turbo model: <Ref. to EX(H4DOTC)-17, REMOVAL, Muffler.>
  - H4 non-turbo model: <Ref. to EX(H4SO)-11, REMOVAL, Muffler.>
  - H6 model: <Ref. to EX(H6DO)-10, REMOVAL, Muffler.>

2) Remove the four bolts to remove the front heat shield cover.

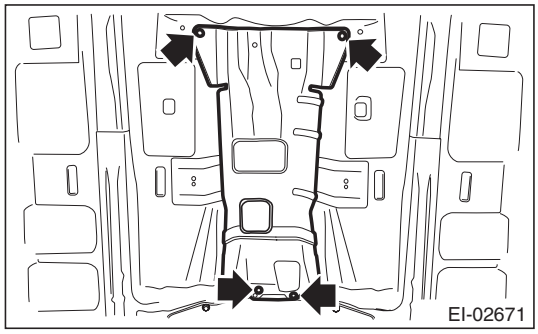

2. CENTER HEAT SHIELD COVER

1) Remove the rear exhaust pipe and muffler.

- **Rear exhaust pipe**
  - H4 turbo model: <Ref. to EX(H4DOTC)-15, REMOVAL, Rear Exhaust Pipe.>
  - H4 non-turbo model: <Ref. to EX(H4SO)-9, REMOVAL, Rear Exhaust Pipe.>
  - H6 model: <Ref. to EX(H6DO)-8, REMOVAL, Rear Exhaust Pipe.>
- **Muffler**
  - H4 turbo model: <Ref. to EX(H4DOTC)-17, REMOVAL, Muffler.>
  - H4 non-turbo model: <Ref. to EX(H4SO)-11, REMOVAL, Muffler.>
  - H6 model: <Ref. to EX(H6DO)-10, REMOVAL, Muffler.>

2) Remove the propeller shaft. (Turbo model only) <Ref. to DS-10, REMOVAL, Propeller Shaft.>

GETtheMANUALS.org

3) Remove the bolt (A), nut (B) and clip (C) to remove center heat shield cover.

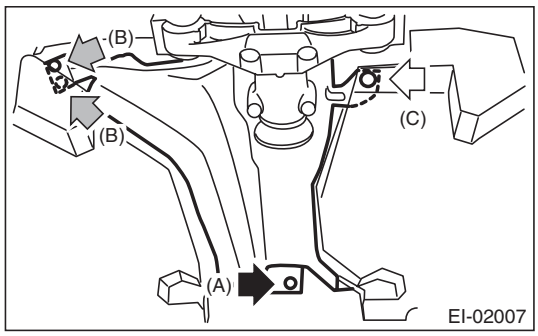

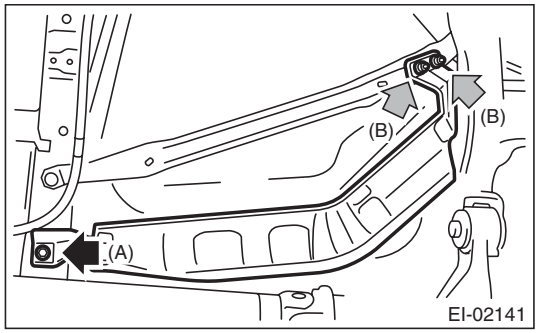

3. REAR HEAT SHIELD COVER

1) Remove the muffler.
- H4 turbo model <Ref. to EX(H4DOTC)-17, REMOVAL, Muffler.>
- H4 non-turbo model <Ref. to EX(H4SO)-11, REMOVAL, Muffler.>
- H6 model <Ref. to EX(H6DO)-10, REMOVAL, Muffler.>

2) Remove the bolts, and remove the rear heat shield cover.

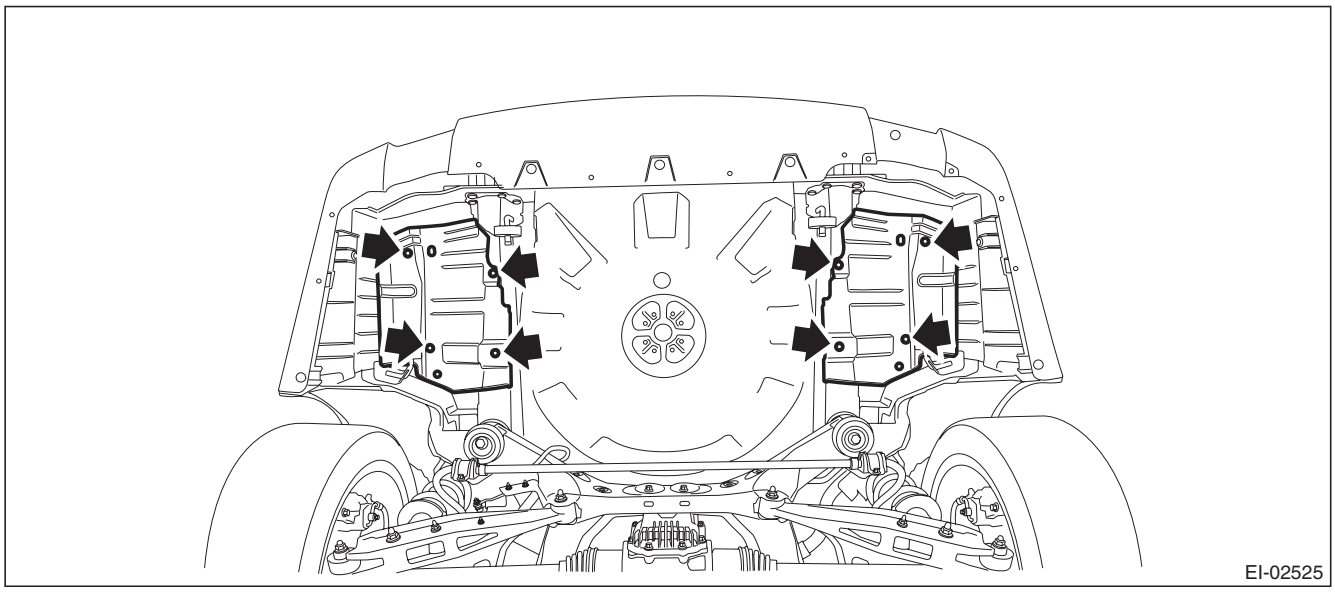

B: INSTALLATION

Install each part in the reverse order of removal.

Tightening torque:

Refer to "COMPONENT" of "General Description". <Ref. to EI-25, HEAT SHIELD COVER, COMPONENT, General Description.>

GETtheMANUALS.org

33. Ornament

A: INSTALLATION

1. LETTER MARK

Adhere the letter mark according to the following measurements.

- Sedan model

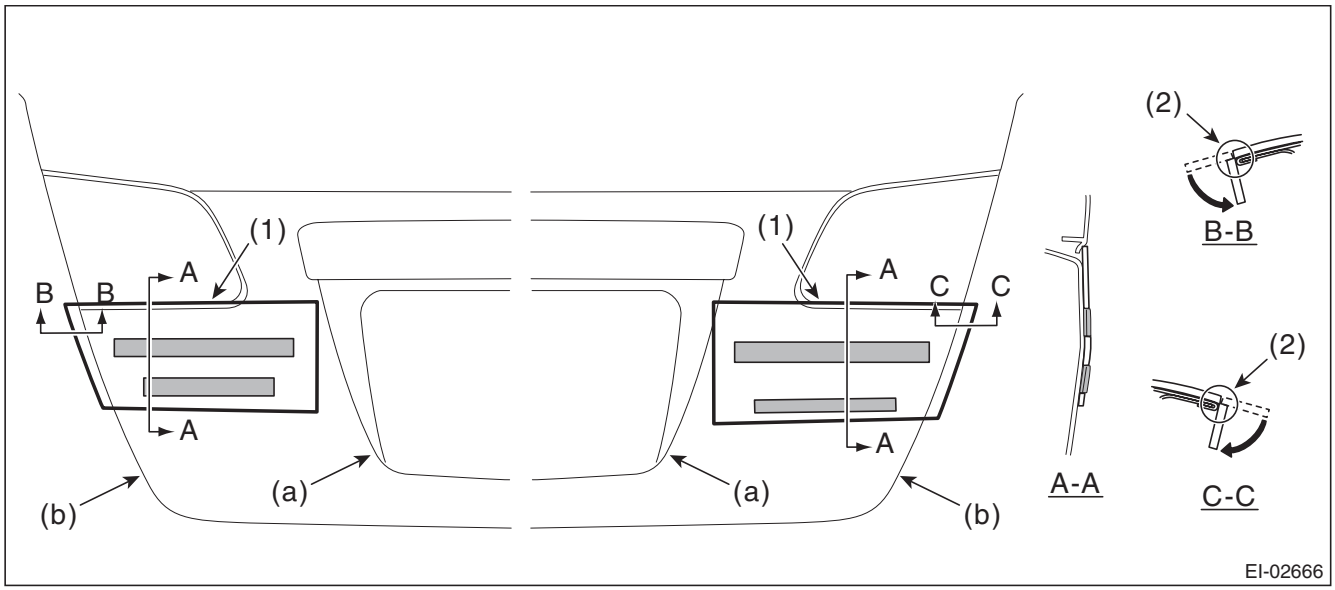

(a)	Character line	(b)	Trunk lid panel end
(1)	Align the top end of application tape to the radius start of the rear finisher light.	(2)	Align the slit of application tape to the end of trunk lid panel and break off the application tape.

GETtheMANUALS.org

- OUTBACK model

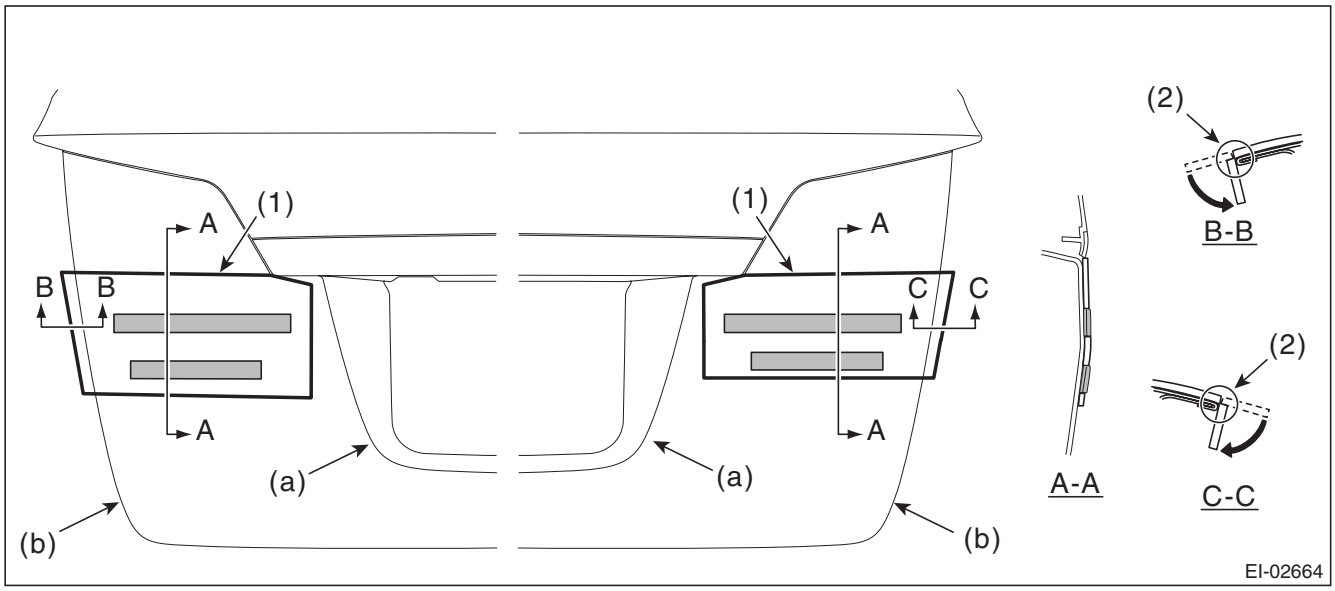

(a)	Character line	(b)	End of rear gate panel
(1)	Align the top end of application tape to the bottom of the rear finisher light.	(2)	Align the slit of application tape to the end of rear ate panel and break off the application tape.

GETtheMANUALS.org

EXTERIOR BODY PANELS

EB

		Page
1.	General Description	2
2.	Front Hood	9
3.	Front Fender	16
4.	Front Door	24
5.	Front Sealing Cover	30
6.	Rear Door	32
7.	Rear Sealing Cover	37
8.	Door Sash Tape	39
9.	Trunk Lid	43
10.	Rear Gate	48
11.	Protector Tape	55

GETtheMANUALS.org

1. General Description

A: SPECIFICATION

Refer to Body Repair Manual for the dimensions of the body.

B: COMPONENT

1. FRONT HOOD

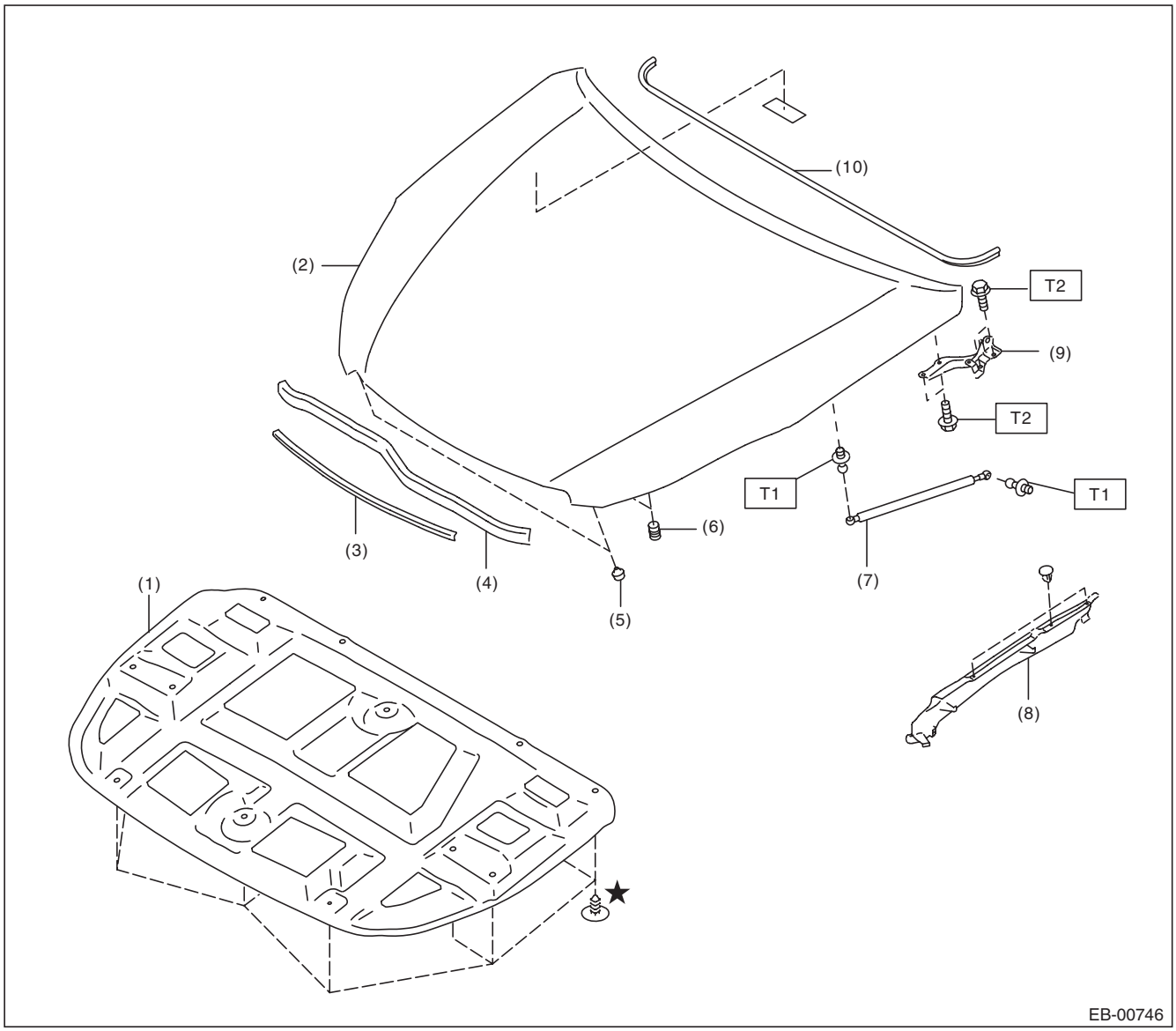

(1)	Insulator	(6)	Buffer (hood side)
(2)	Front hood panel ASSY	(7)	Damper stay ASSY
(3)	Front grille seal ASSY	(8)	Fender cover ASSY UPR
(4)	Front hood seal ASSY	(9)	Hinge
(5)	Front hood stopper	(10)	Cowl panel seal

Tightening torque:N·m (kgf-m, ft-lb)
T1: 20 (2.04, 14.8)
T2: 25 (2.55, 18.4)

GETtheMANUALS.org

2. FRONT FENDER

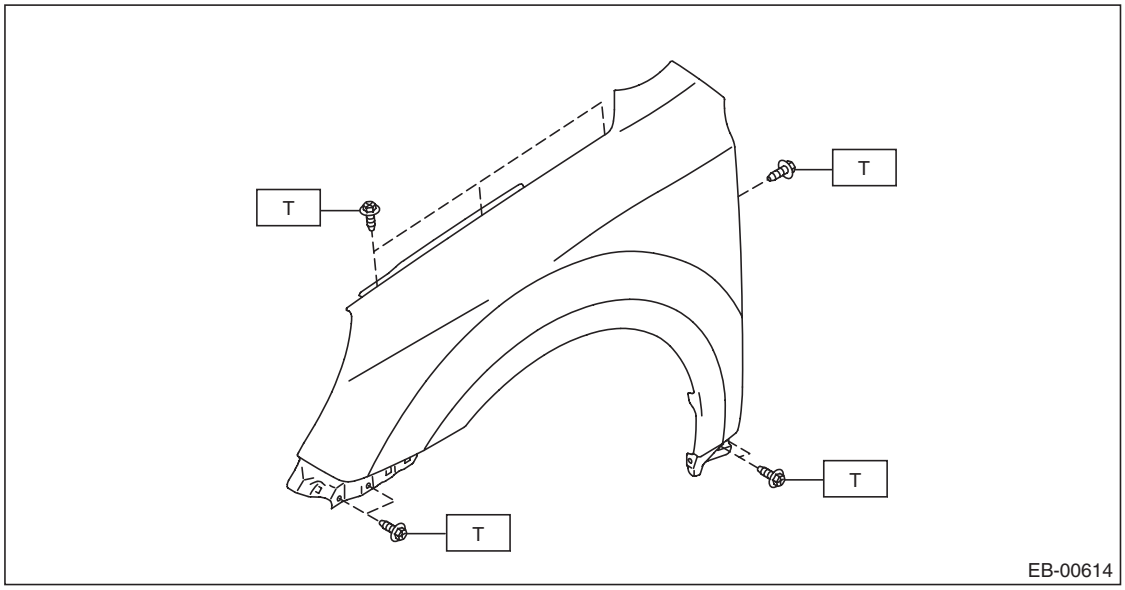

Tightening torque:N·m (kgf-m, ft-lb)
T: 7.5 (0.76, 5.5)

GETtheMANUALS.org

3. FRONT DOOR

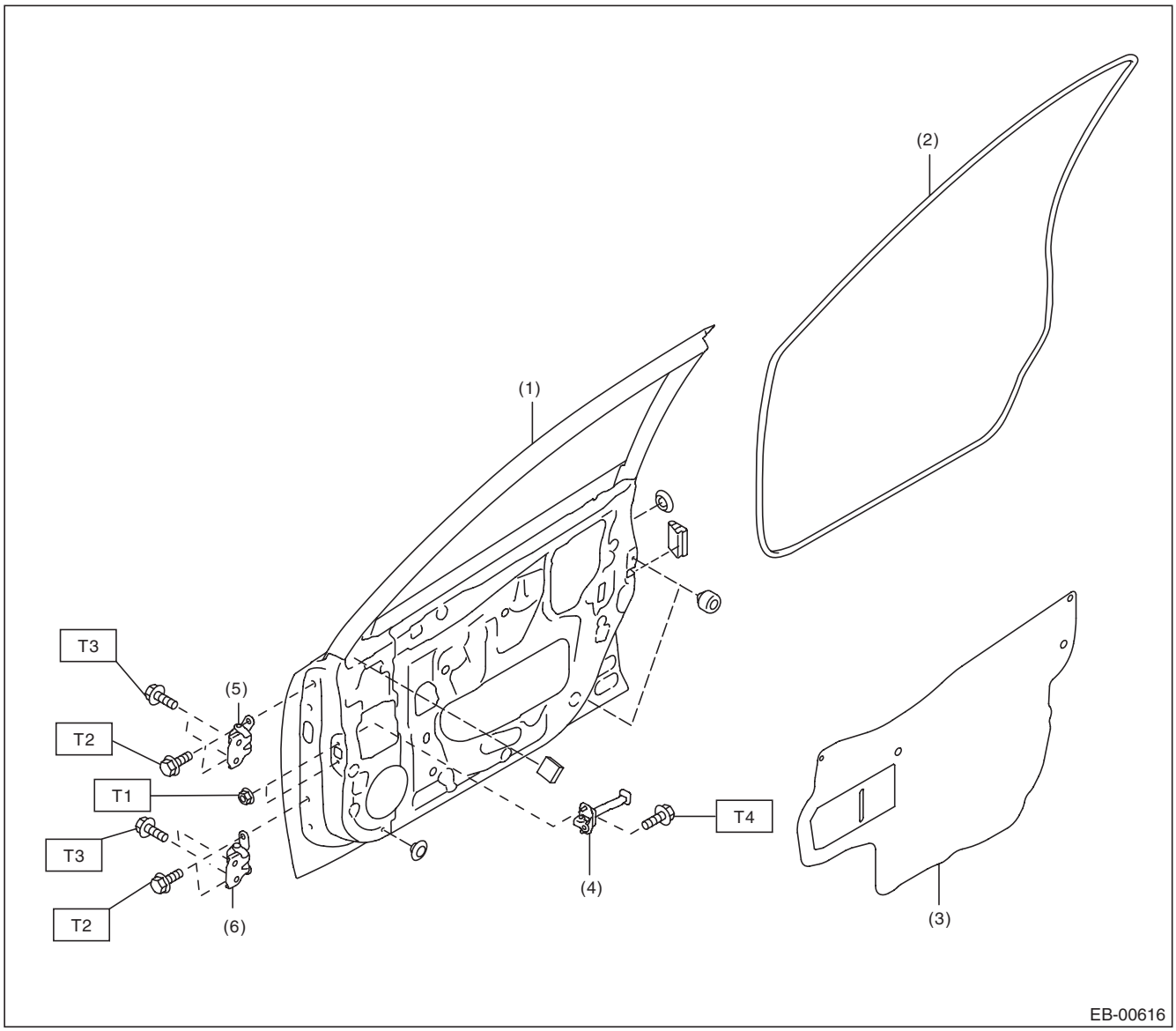

(1) Front door panel
(2) Front door weather strip
(3) Sealing cover
(4) Checker
(5) Upper hinge
(6) Lower hinge

Tightening torque:N·m (kgf-m, ft-lb)
T1: 7.5 (0.76, 5.5)
T2: 25 (2.55, 18.4)
T3: 30 (3.06, 22.1)
T4: 33 (3.36, 24.3)

GETtheMANUALS.org

4. REAR DOOR

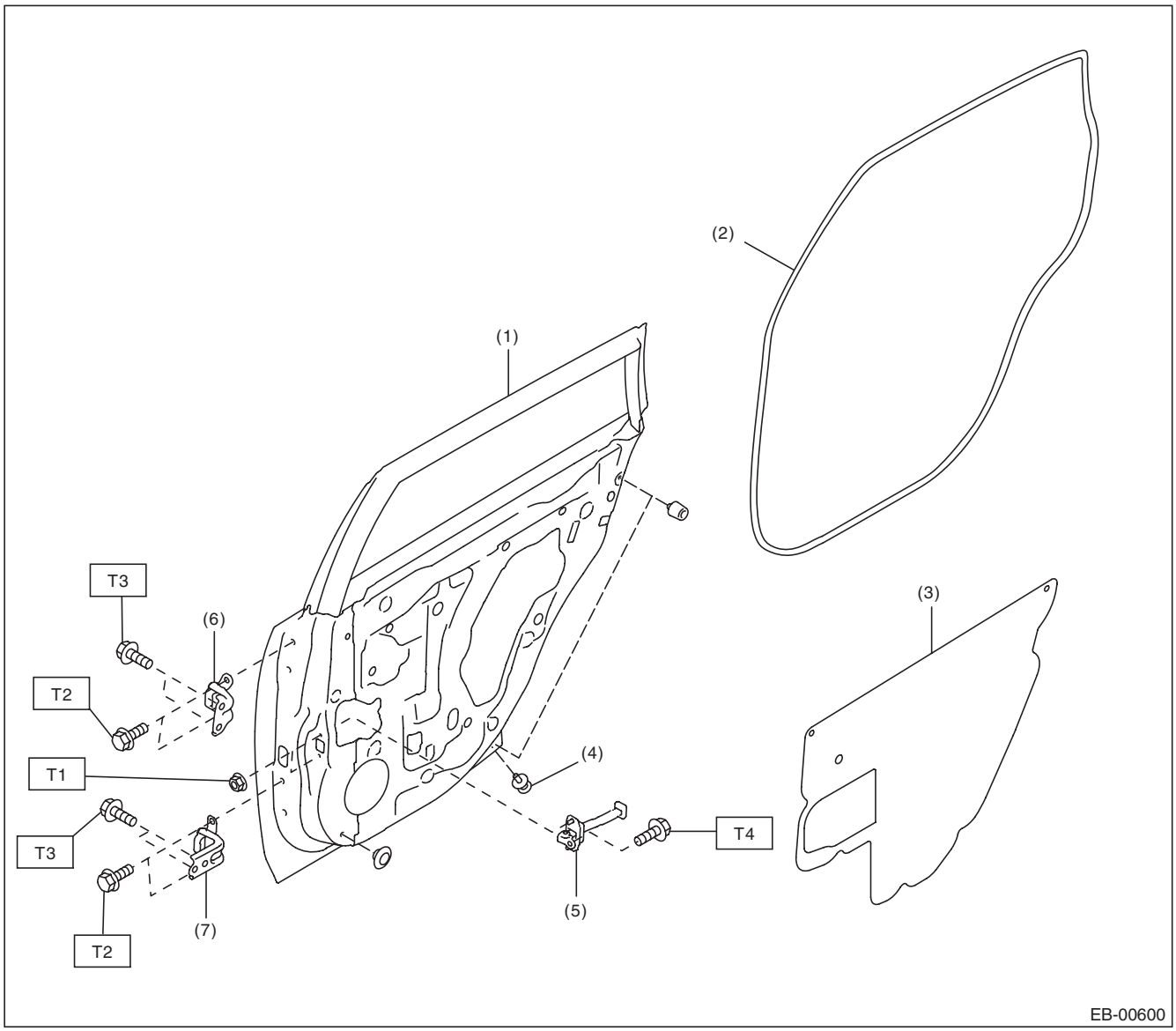

(1)	Rear door panel	(6)	Upper hinge
(2)	Rear door weather strip	(7)	Lower hinge
(3)	Sealing cover		
(4)	Rear door catcher		
(5)	Checker		

Tightening torque:N·m (kgf-m, ft-lb)

T1: 7.5 (0.76, 5.5)
T2: 25 (2.55, 18.4)
T3: 30 (3.06, 22.1)
T4: 33 (3.36, 24.3)

GETtheMANUALS.org

5. TRUNK LID PANEL

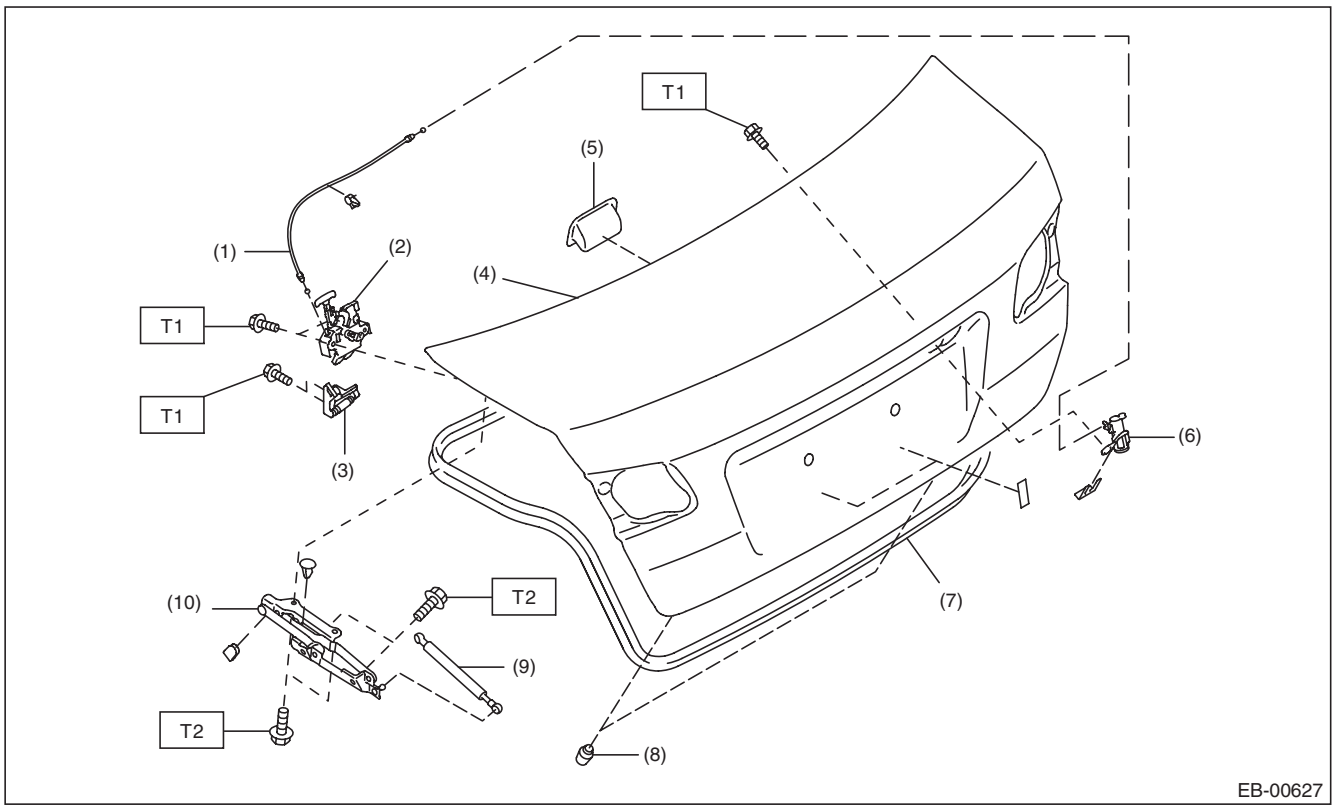

(1)	Trunk release cable ASSY	(6)	Trunk lid key cylinder ASSY
(2)	Trunk lid latch and actuator ASSY	(7)	Weather strip
(3)	Striker	(8)	Trunk lid stopper
(4)	Trunk lid panel ASSY	(9)	Trunk lid damper stay
(5)	Trunk lid inner handle	(10)	Trunk lid hinge ASSY

Tightening torque:N·m (kgf-m, ft-lb)
T1: 7.5 (0.76, 5.5)
T2: 25 (2.55, 18.4)

GETtheMANUALS.org

6. REAR GATE

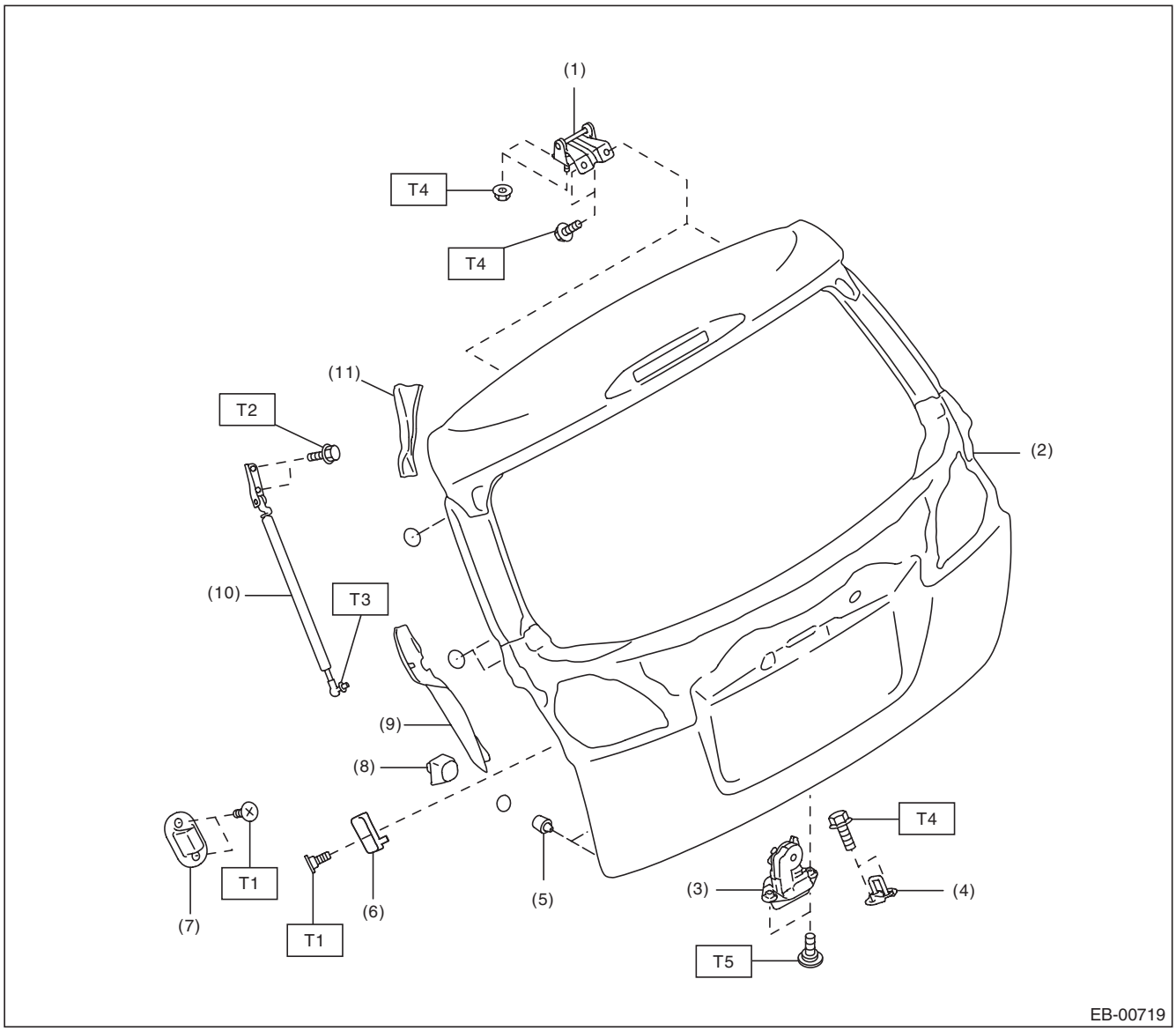

(1)	Hinge	(7)	Buffer (body side)	***Tightening torque:N·m (kgf-m, ft-lb)***
(2)	Rear gate panel	(8)	Rear gate spacer (mounted to the body)	***T1: 7.5 (0.76, 5.5)***
(3)	Rear gate latch and actuator ASSY	(9)	Rear gate cover	***T2: 16 (1.63, 11.8)***
(4)	Striker	(10)	Rear gate damper stay	***T3: 20 (2.04, 14.8)***
(5)	Stopper rubber	(11)	Rear gate drip rubber	***T4: 25 (2.55, 18.4)***
(6)	Buffer (rear gate side)			***T5: 28 (2.86, 20.7)***

GETtheMANUALS.org

C: CAUTION

Exterior body panels are heavy. When removing and installing them, do not drop and damage the panels. Also, be careful not to scratch the coated surfaces of the panels.

D: PREPARATION TOOL

1. SPECIAL TOOL

ILLUSTRATION	TOOL NUMBER	DESCRIPTION	REMARKS
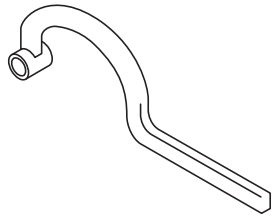 ST-925610000	925610000	WRENCH	Used for removing and installing door hinge.

2. GENERAL TOOL

TOOL NAME	REMARKS
Support jack	Used for supporting door panel.
Clip remover	Used for removing various types of clips

GETtheMANUALS.org

2. Front Hood

A: REMOVAL

1. FRONT HOOD INSULATOR

Release the clips to remove the front hood insulator.

CAUTION:
Do not reuse any clips damaged during removal. The damaged clip cannot fix the insulator securely. Therefore, always replace with a new part.

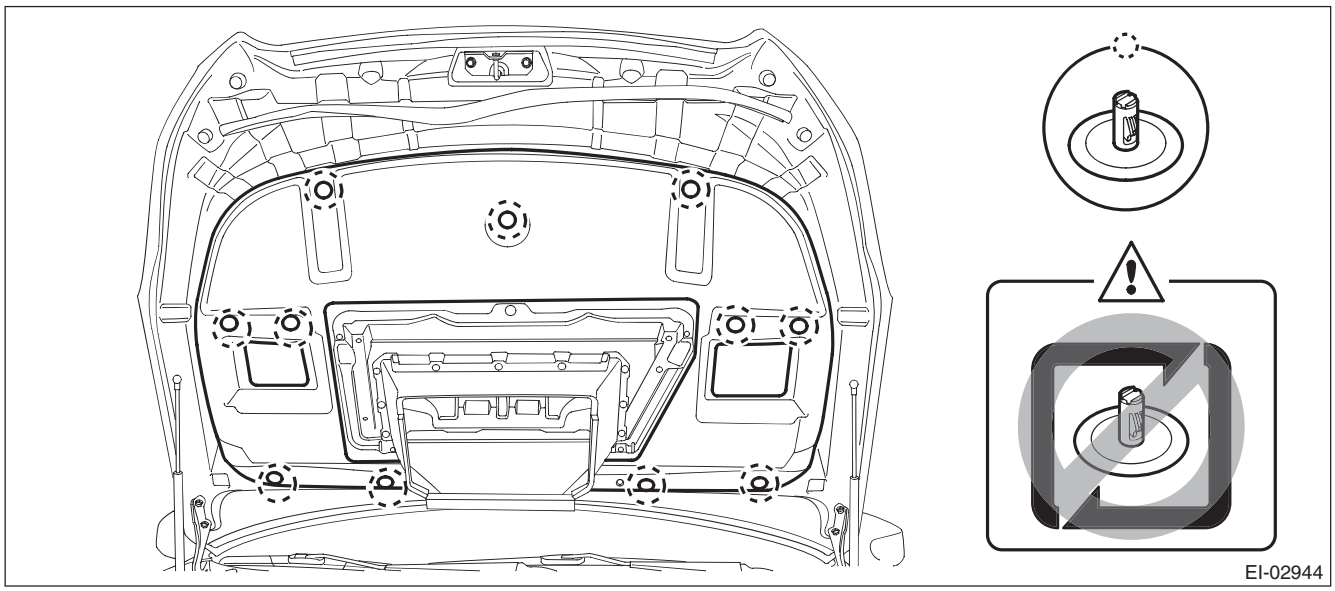

2. FRONT HOOD SEAL

Remove the clip, and remove the seal.

CAUTION:
If the weather strip clip is removed with excessive force, the seal may be damaged. Be sure to use clip remover, etc. to remove.

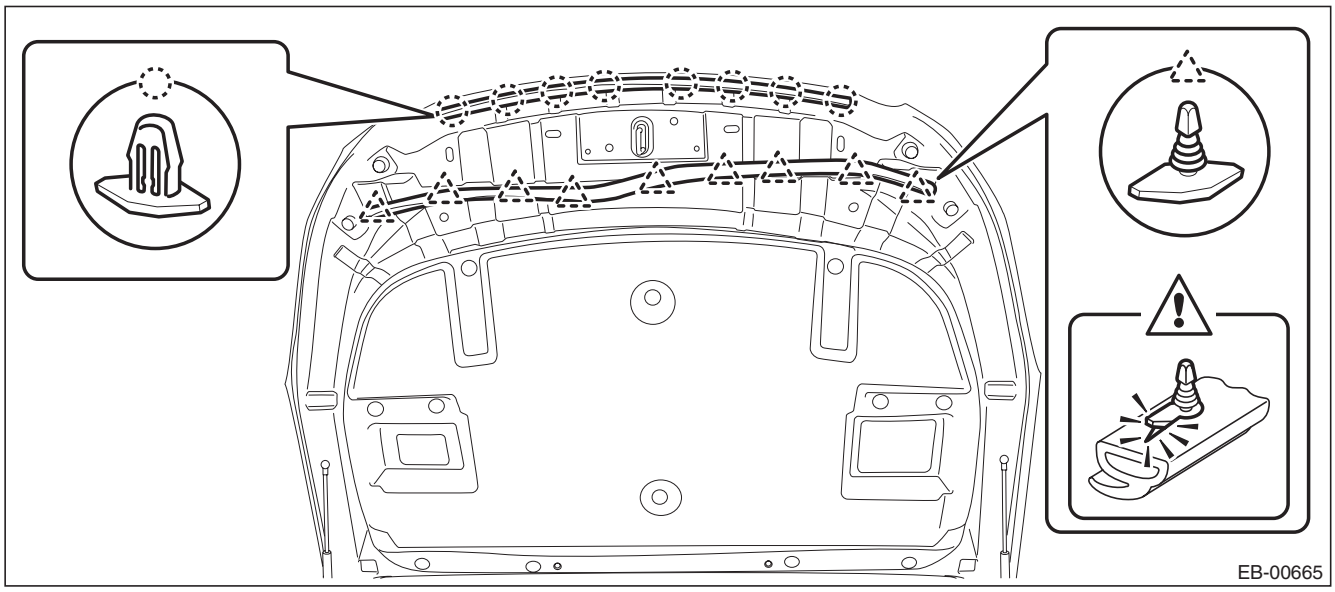

GETtheMANUALS.org

3. FRONT HOOD DAMPER

CAUTION:
- **Do not damage piston rods and oil seals.**
- **Never disassemble cylinders: They contain gas.**
- **Front hood panels are heavy. When removing and installing the damper stays and hood hinges, always work in a team of two or more persons.**

Remove the damper stay by removing mounting bolts.

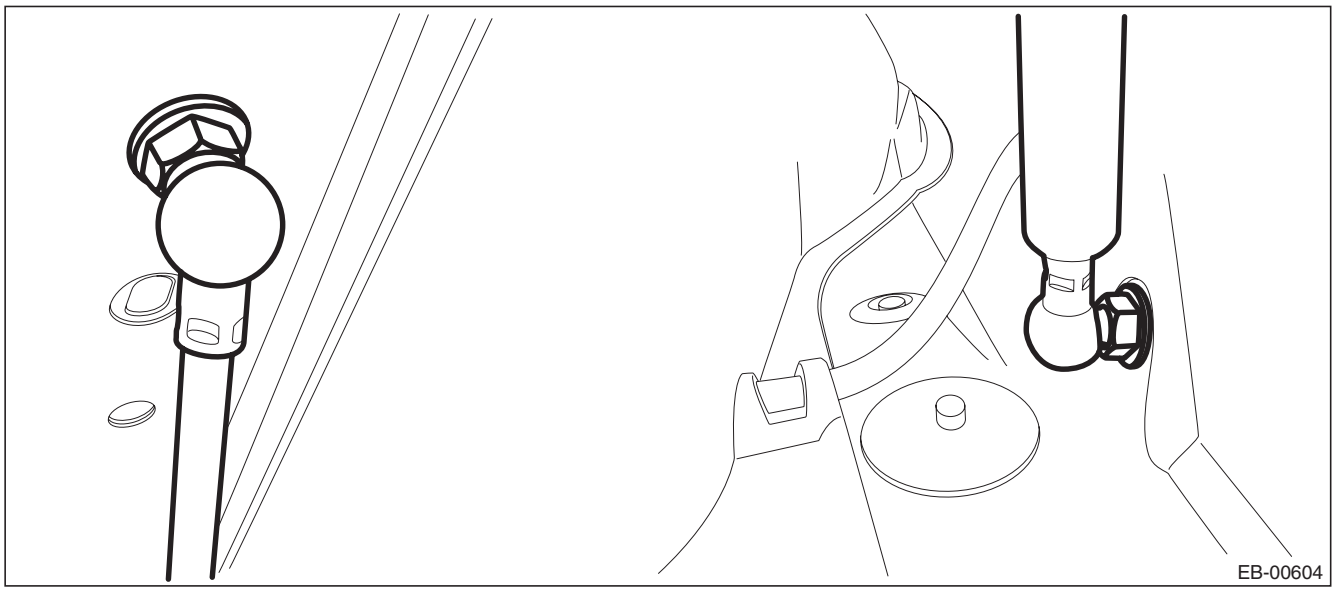

4. FRONT HOOD HINGE

CAUTION:
The front hood panel is heavy. When removing or installing the damper stay and hood hinge, be sure to work in a group of two or more.

1) Remove the fender cover assembly UPR.
   (1) Remove the clip.
   (2) Release the claws of the fender cover assembly UPR by pulling it forward and remove the fender cover.

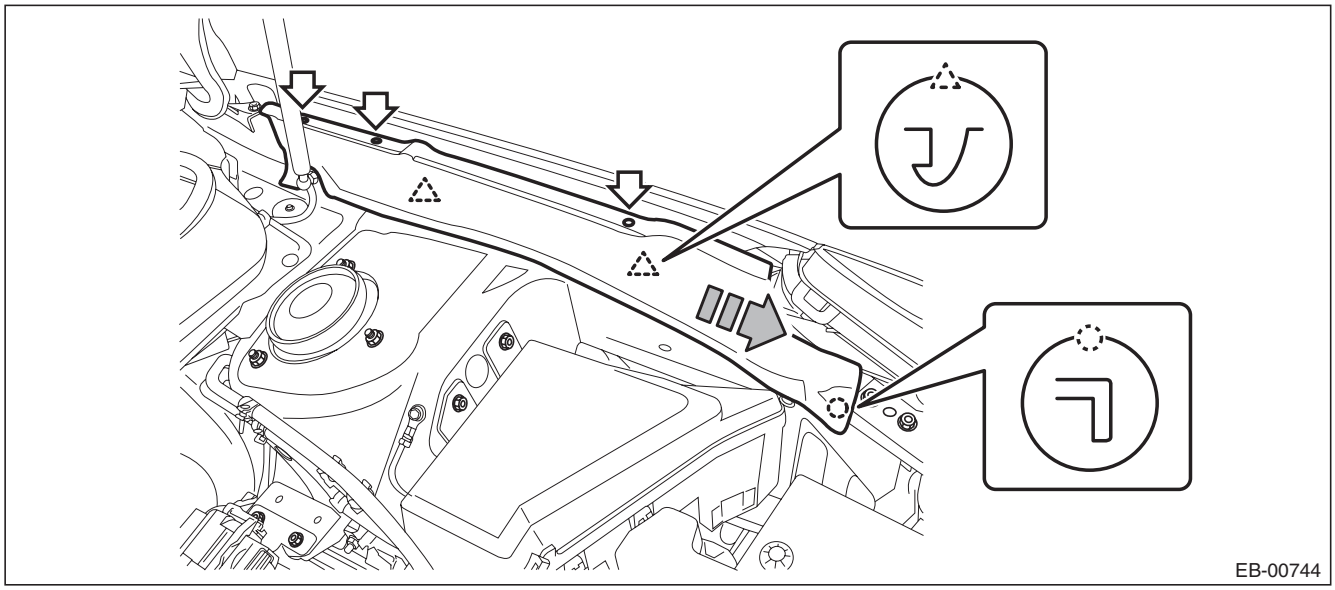

GETtheMANUALS.org

2) Remove the cowl panel side.
   (1) Detach the pins of the cowl panel side.
   (2) Remove the cowl panel side from inside the fender panel by pulling it.

CAUTION:
Applying excessive pulling force may damage the cowl panel side. If it is difficult to remove, use a plastic remover or equivalent tool.

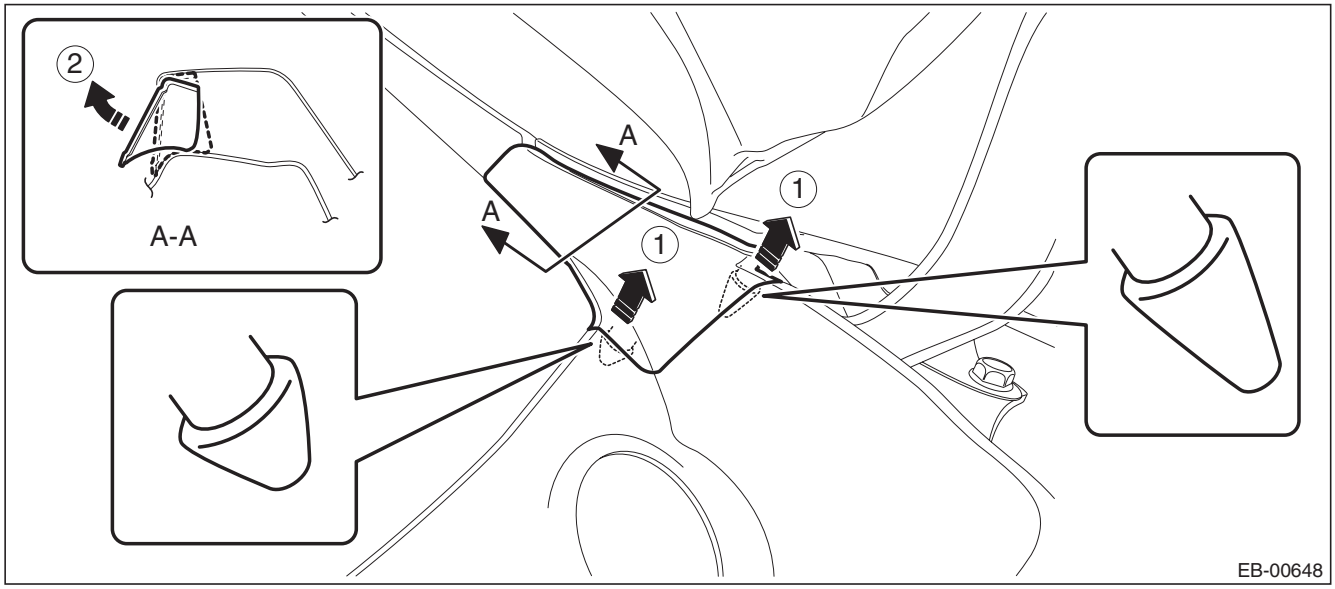

3) Remove the front fender panel. <Ref. to EB-16, REMOVAL, Front Fender.>
4) Remove the front hood panel.
   (1) Remove the damper stay mounting bolt on the hood panel side.
   (2) Remove the bolts on the hood panel, and remove the front hood panel.

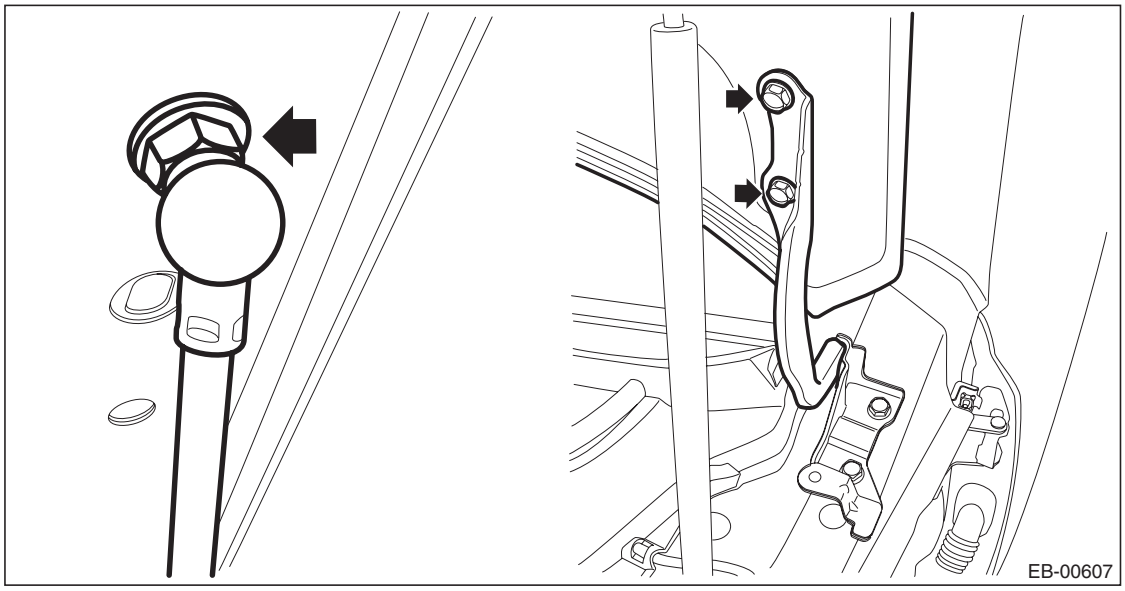

GETtheMANUALS.org

5) Remove the bolts, and remove the front hood hinge.

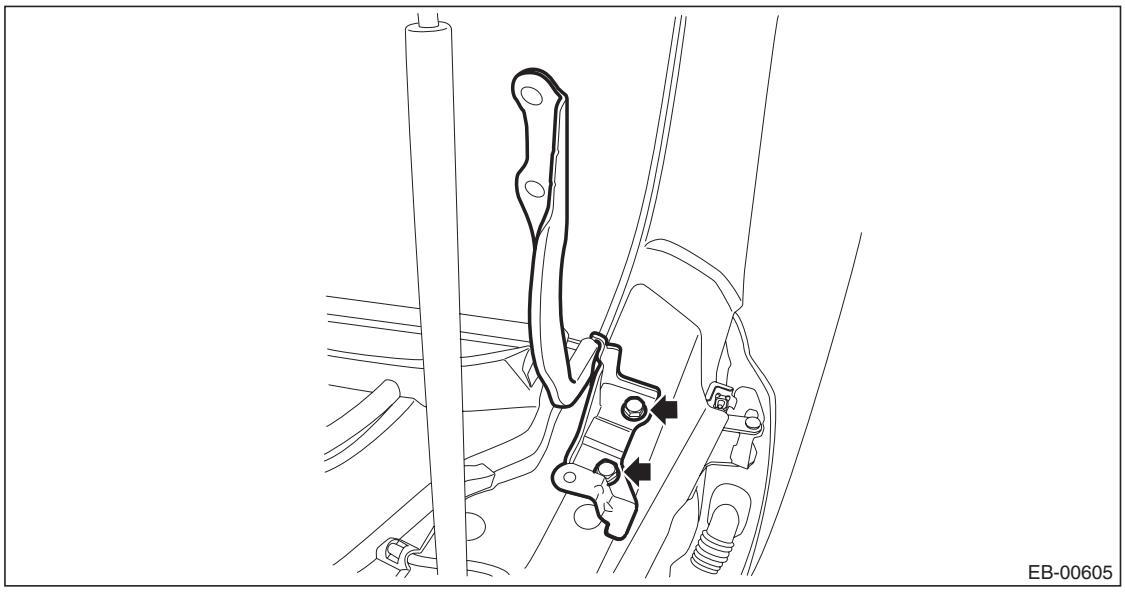

5. FRONT HOOD PANEL

CAUTION:
Front hood panels are heavy. When removing and installing the damper stays and hood hinges, always work in a team of two or more persons.

1) Remove the damper stay mounting bolt on the hood panel side.
2) Remove the bolts on the hood panel, and remove the front hood panel.

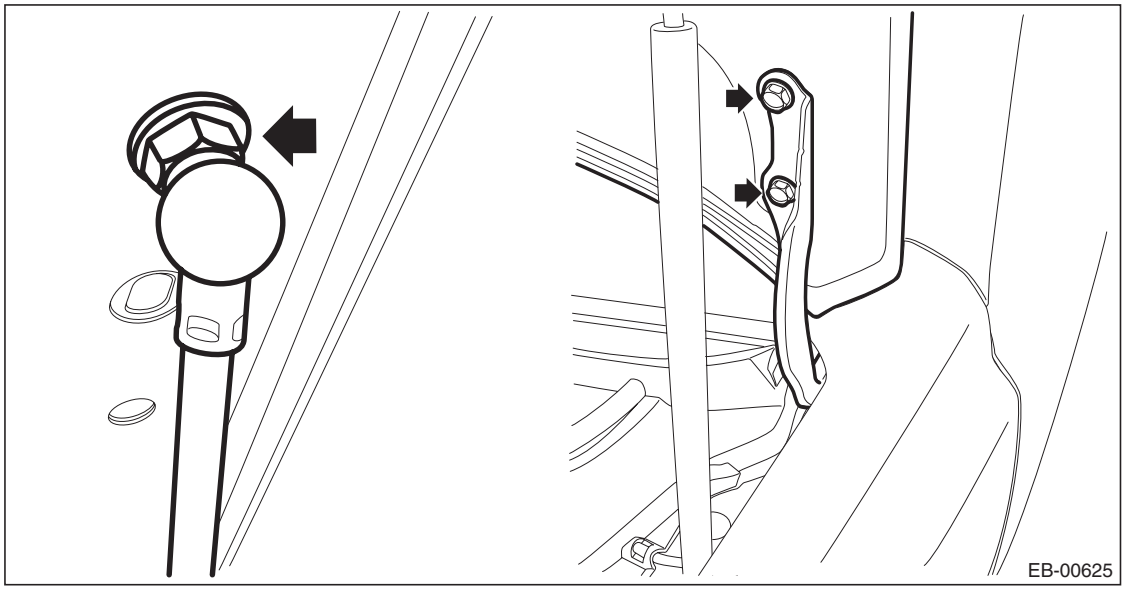

GETtheMANUALS.org

B: INSTALLATION

CAUTION:
The front hood panel is heavy. When removing or installing the damper stay and hood hinge, be sure to work in a group of two or more.
To install the front hood insulator, front hood seal, and front hood damper, follow the reverse order of removal.
To install the front hood hinges and front hood panel, follow the procedure below.
1) Install the front hood hinges to the vehicle body. (When front hood hinges are removed)
2) Temporarily install the front hood panel to the front hood hinges.

NOTE:
When installing the front hood panel, make sure that a uniform clearance is created around the panel.
3) Adjust the clearance around the front hood panel. <Ref. to EB-13, ADJUSTMENT, Front Hood.>
4) Tighten the front hood hinge bolts.

Tightening torque:
25 N·m (2.55 kgf-m, 18.4 ft-lb)
5) Install each part of the front hood in the reverse order of removal.

Tightening torque:
Front hood damper: 20 N·m (2.04 kgf-m, 14.8 ft-lb)
Front hood duct: 4.5 N·m (0.46 kgf-m, 3.3 ft-lb)

C: ADJUSTMENT

Adjust the clearance around the front hood panel as follows.

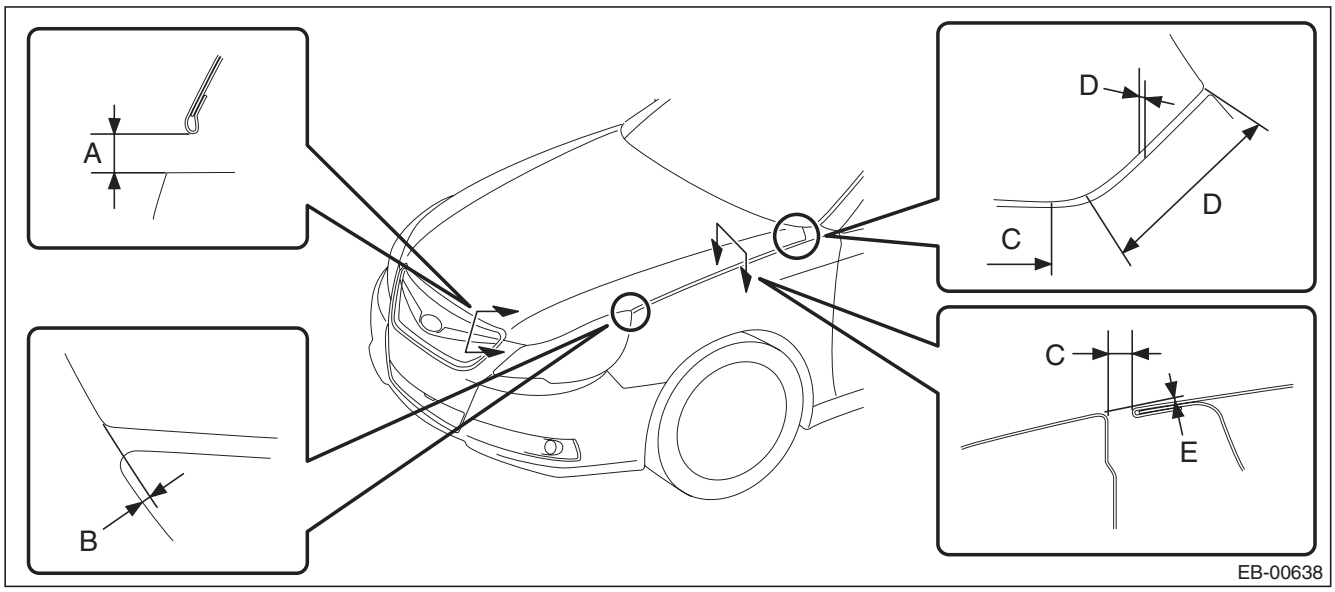

	Part	Standard
A	Front hood panel to Front bumper	6.0±1.0 mm (0.24±0.04 in)
B	Offset value between front hood panel and front fender panel tip	0+0.5, –1.0 mm (0+0.02, –0.04 in)
C	Front hood panel to Front fender panel (from front end to just before curved portion)	3.5±1.0 mm (0.14±0.04 in)
D	Front hood panel to Front fender panel (from rear end to just before curved portion)	4.1±1.0 mm (0.16±0.04 in)
E	Surface level gap between front hood panel and front fender panel	0.5+0.5, –1.0 mm (0.02+0.02, –0.04 in)

GETtheMANUALS.org

1) Adjust the horizontal position of front hood.
   (1) Loosen the left and right hinge attaching bolts.

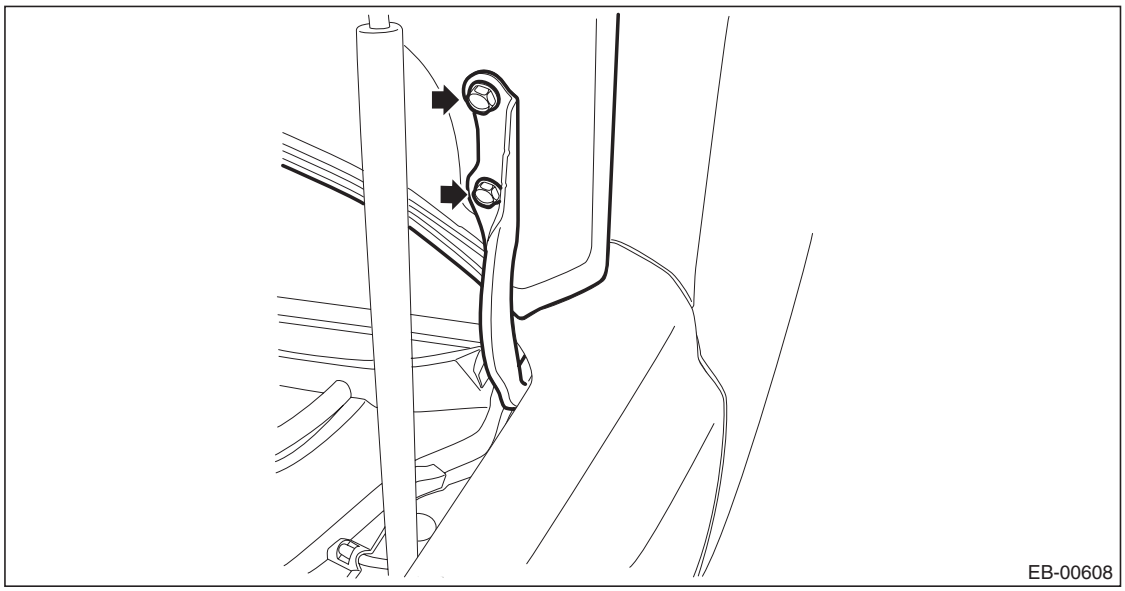

   (2) Adjust the horizontal panel gap of the front hood and tighten the hinge attaching bolts.

Tightening torque:
25 N·m (2.55 kgf-m, 18.4 ft-lb)

2) Adjust the height at the front end of hood.
   (1) Loosen the bolts of the front hood lock assembly.
   (2) Adjust the front hood lock assembly by moving it up and down.

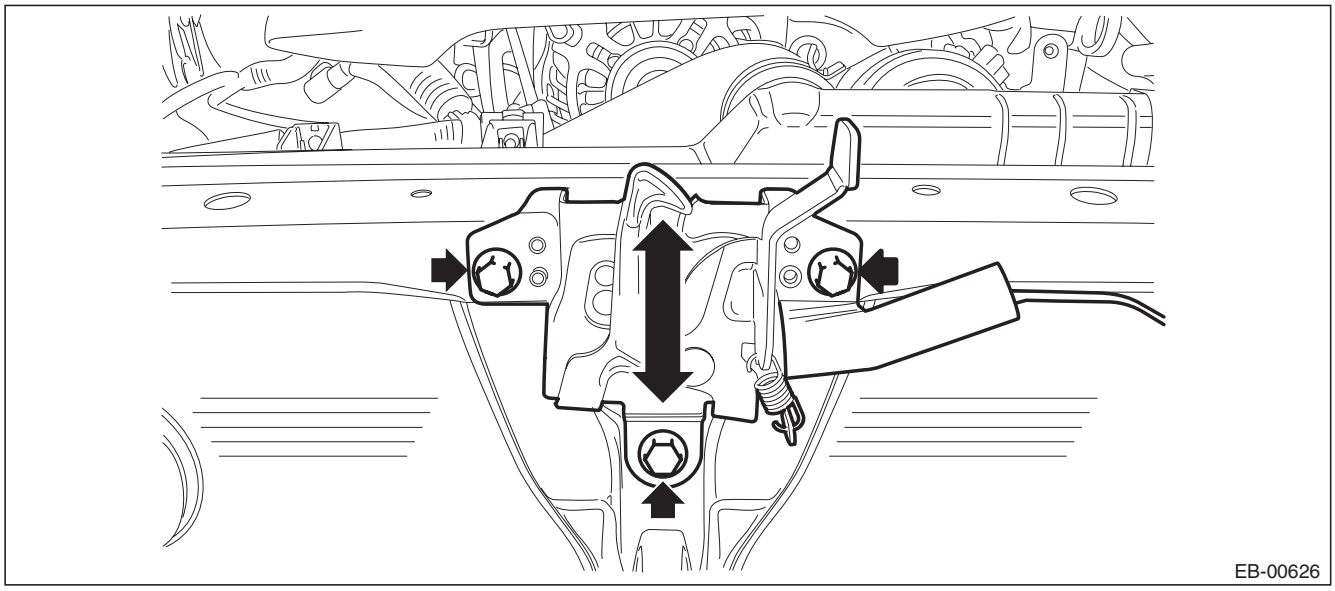

Tightening torque:
33 N·m (3.36 kgf-m, 24.3 ft-lb)

GETtheMANUALS.org

3) Rotate the front hood buffer to adjust lateral height.

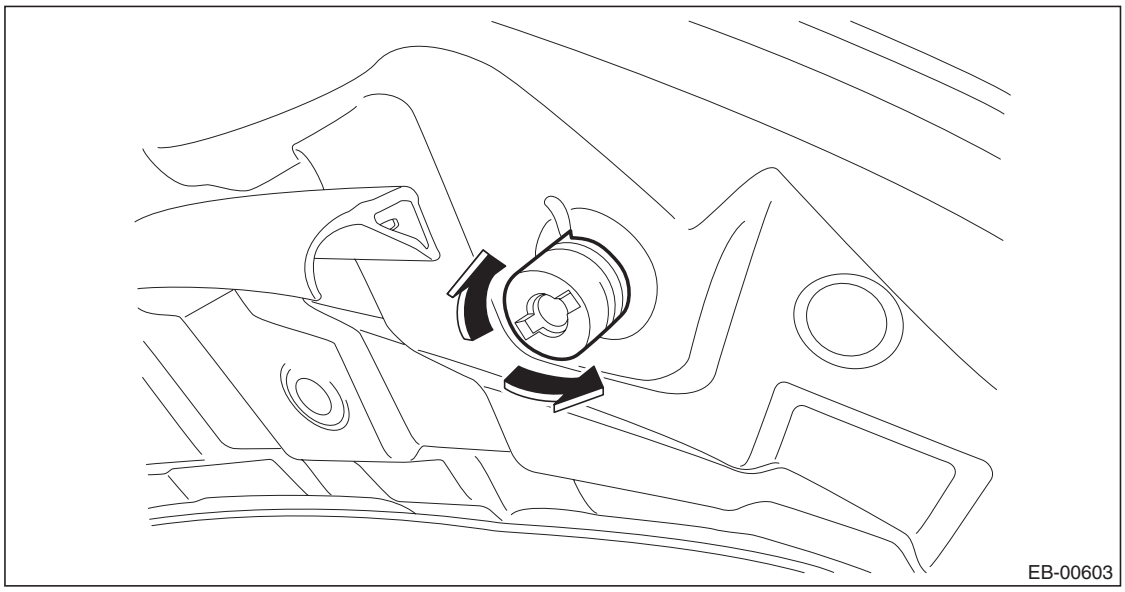

D: DISPOSAL

For the disposal procedures of front hood damper stay, refer to Disposal Procedures of “Rear Gate Damper Stay”. <Ref. to EB-53, REAR GATE DAMPER STAY, DISPOSAL, Rear Gate.>

GETtheMANUALS.org

3. Front Fender

A: REMOVAL

1) Disconnect the ground cable from battery.
2) Remove the bumper face assembly.
   (1) Remove the clips, turn over the front mud guard, and disconnect the fog light connector. (Model with fog light)

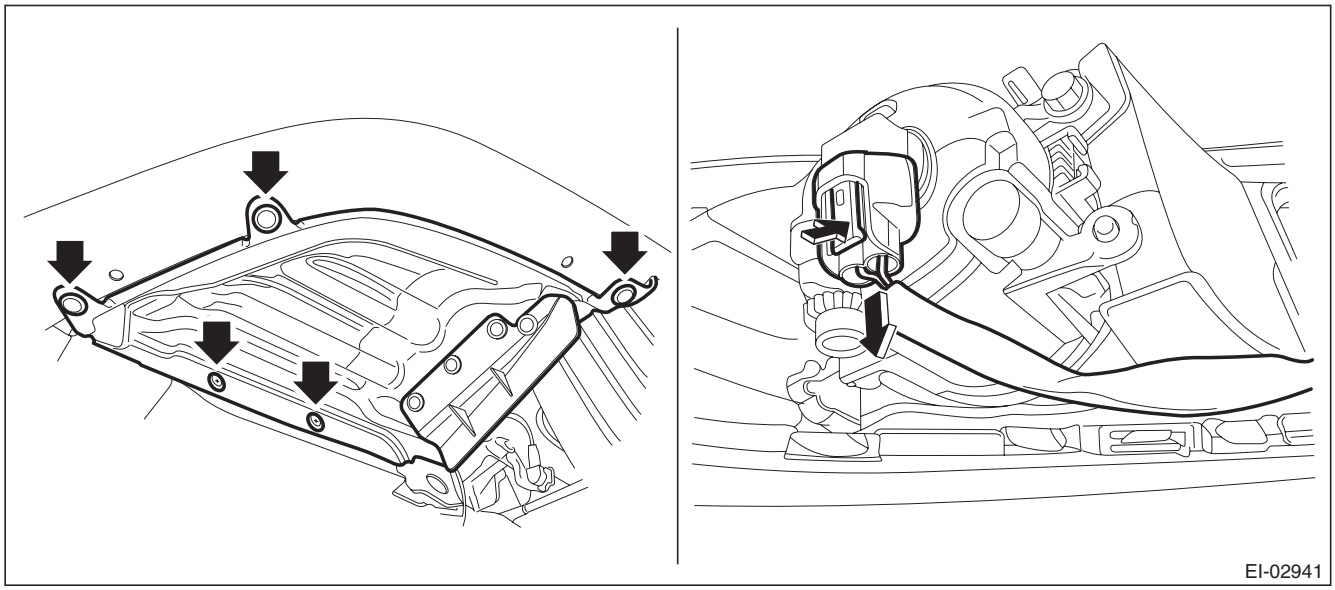

   (2) Remove the clips at the upper side of the bumper.
   (3) Remove the clips from the fender.

GETtheMANUALS.org

(4) Remove the clips at the lower side of bumper.

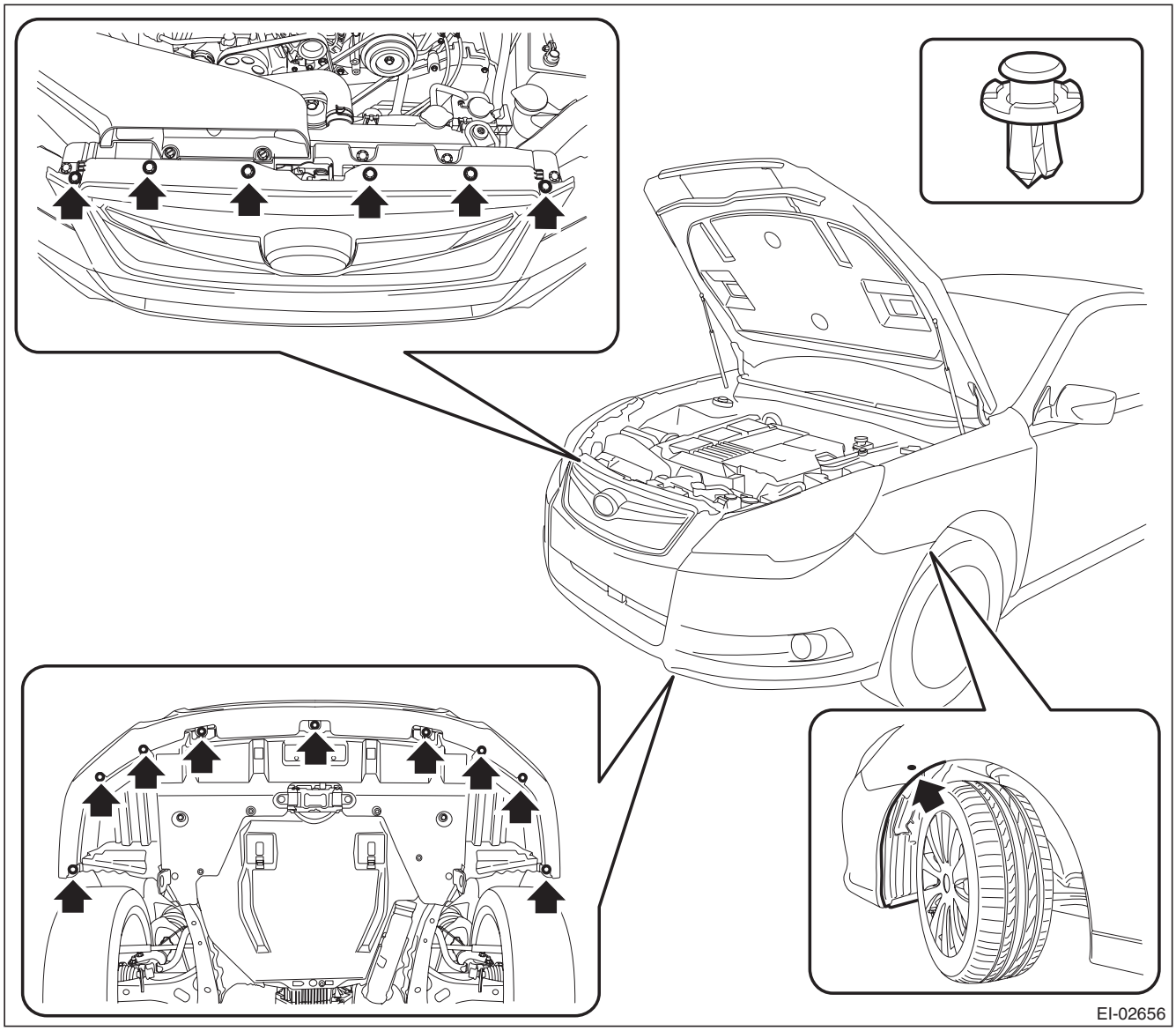

GETtheMANUALS.org

(5) Detach the flange section on the bumper face side from the bracket side front UPR.

CAUTION:
Do not pull forcibly. It may damage the flange sections of the bumper face.

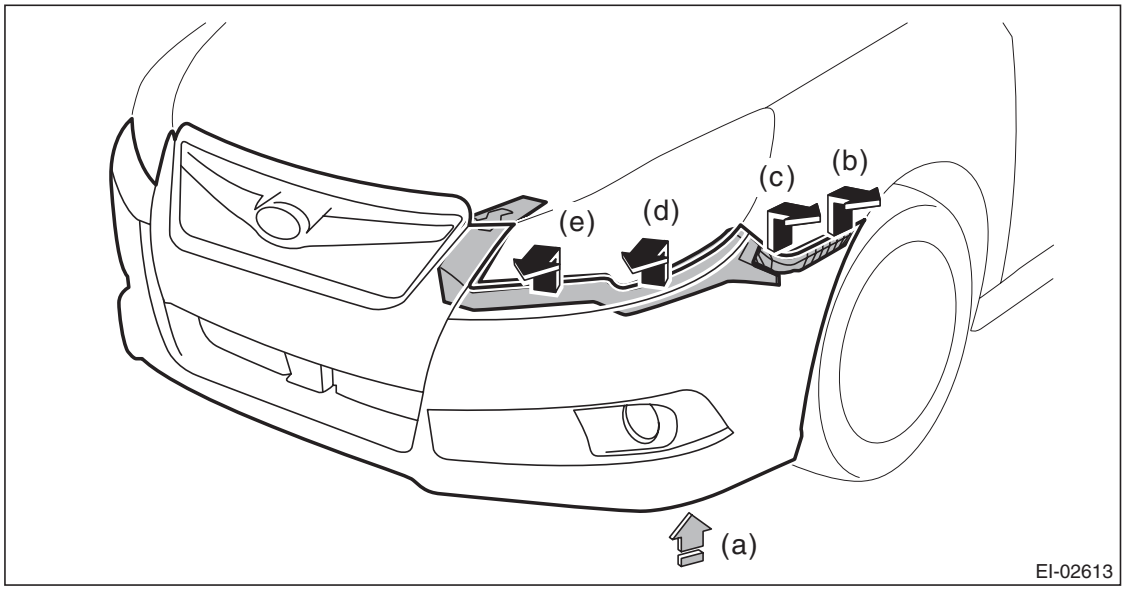

NOTE:
Pushing up the lower side (a) of the fog light, remove from (b) to (e).
Detach the opposite side in the same manner.

3) Remove the cowl panel side.
   (1) Detach the pins of the cowl panel side.
   (2) Remove the cowl panel side from inside the fender panel by pulling it.

CAUTION:
Applying excessive pulling force may damage the cowl panel side. If it is difficult to remove, use a plastic remover or equivalent tool.

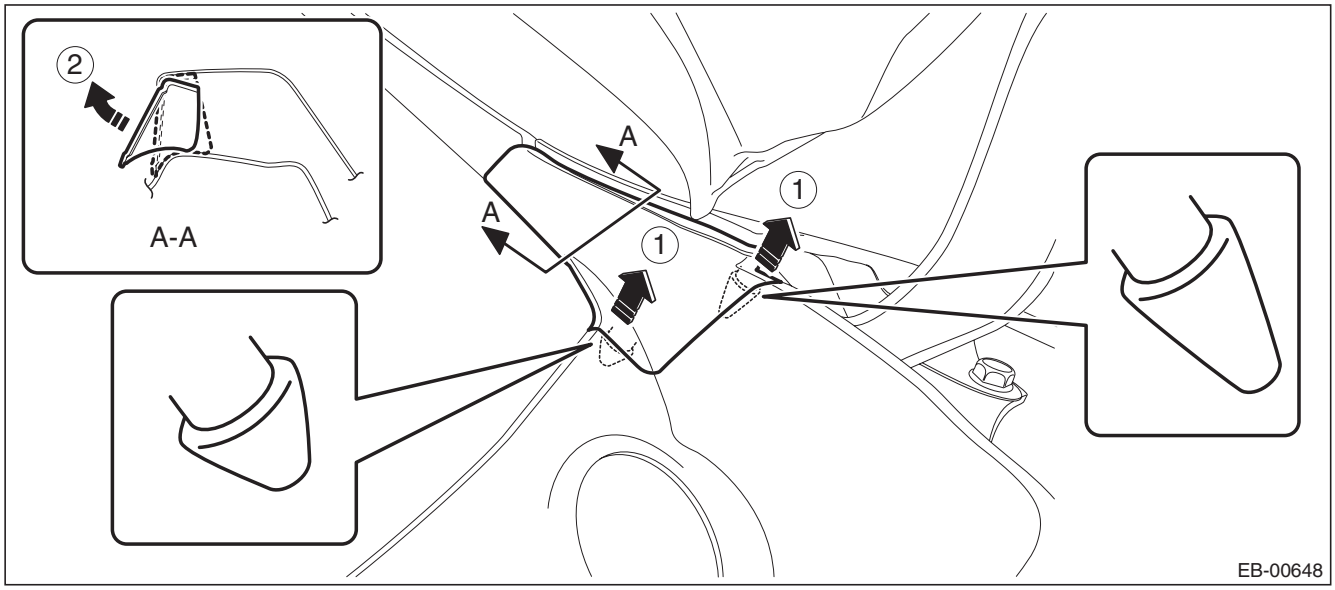

GETtheMANUALS.org

4) Remove the headlight assembly.
   (1) Remove the fender cover assembly UPR.
      a) Remove the clip.
      b) Release the claws of the fender cover assembly UPR by pulling it forward and remove the fender cover.

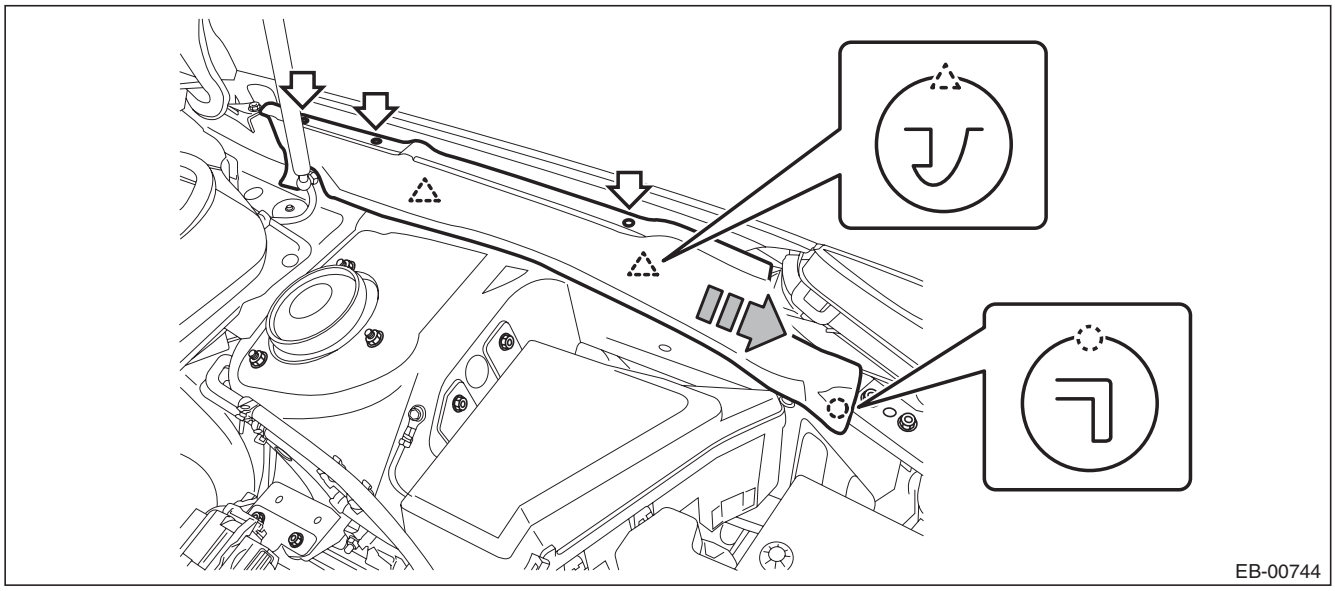

   (2) Remove the headlight assembly.

NOTE:
When removing the RH headlight, remove the air intake duct.

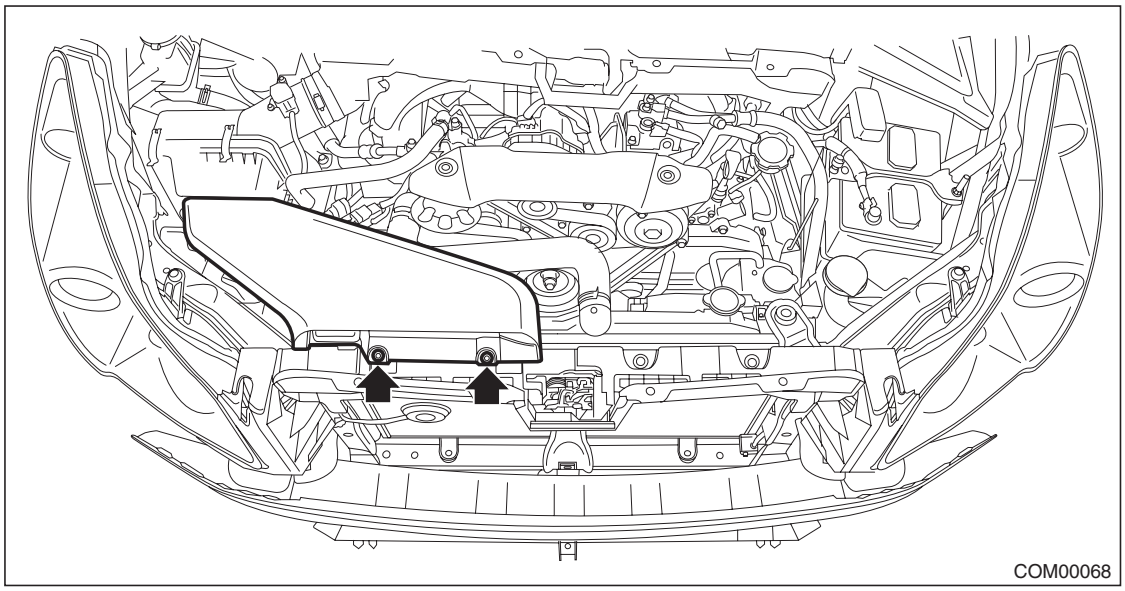

GETtheMANUALS.org

a) Remove the bolts and two clips, and pull out the headlight assembly to the front of the vehicle.

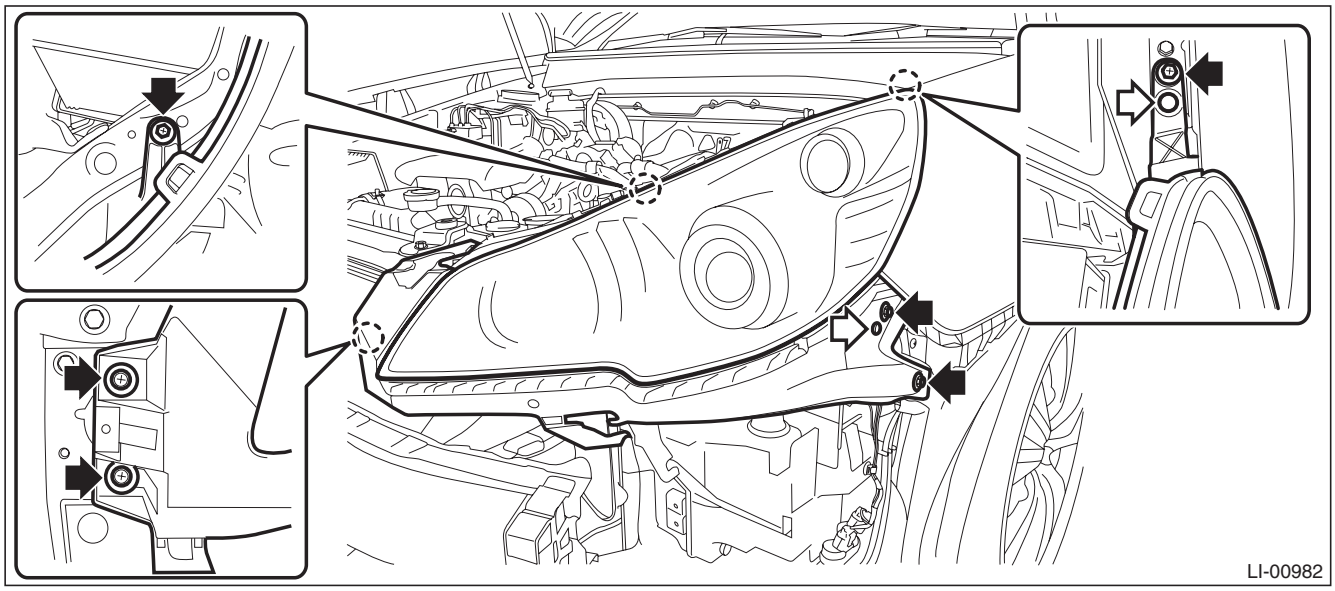

b) Disconnect the connector and remove the headlight assembly.

- Headlight connector RH

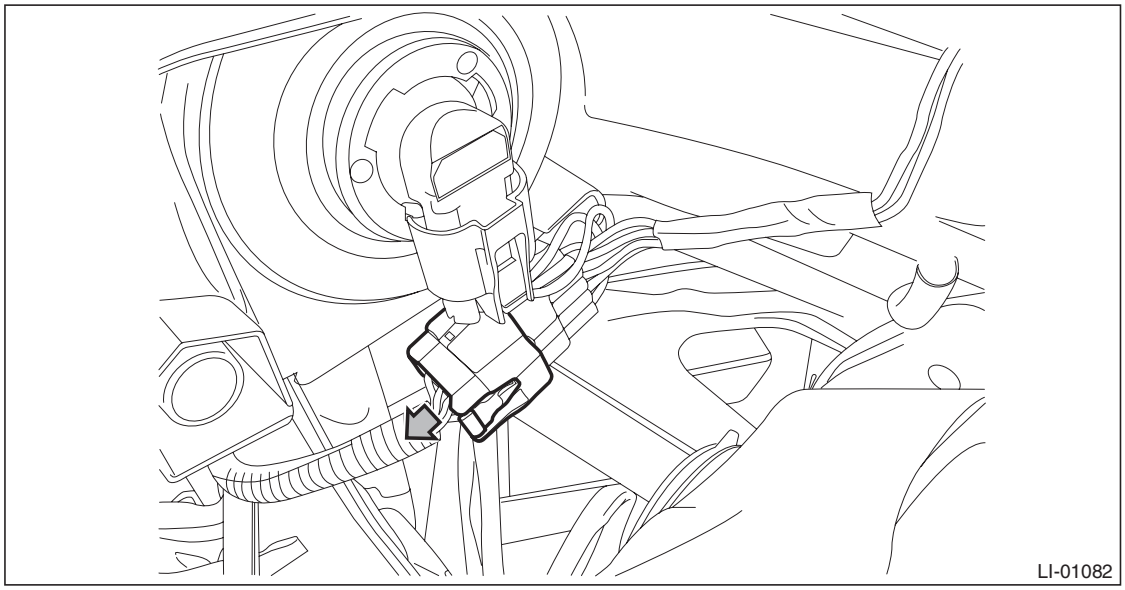

GETtheMANUALS.org

- Headlight connector LH

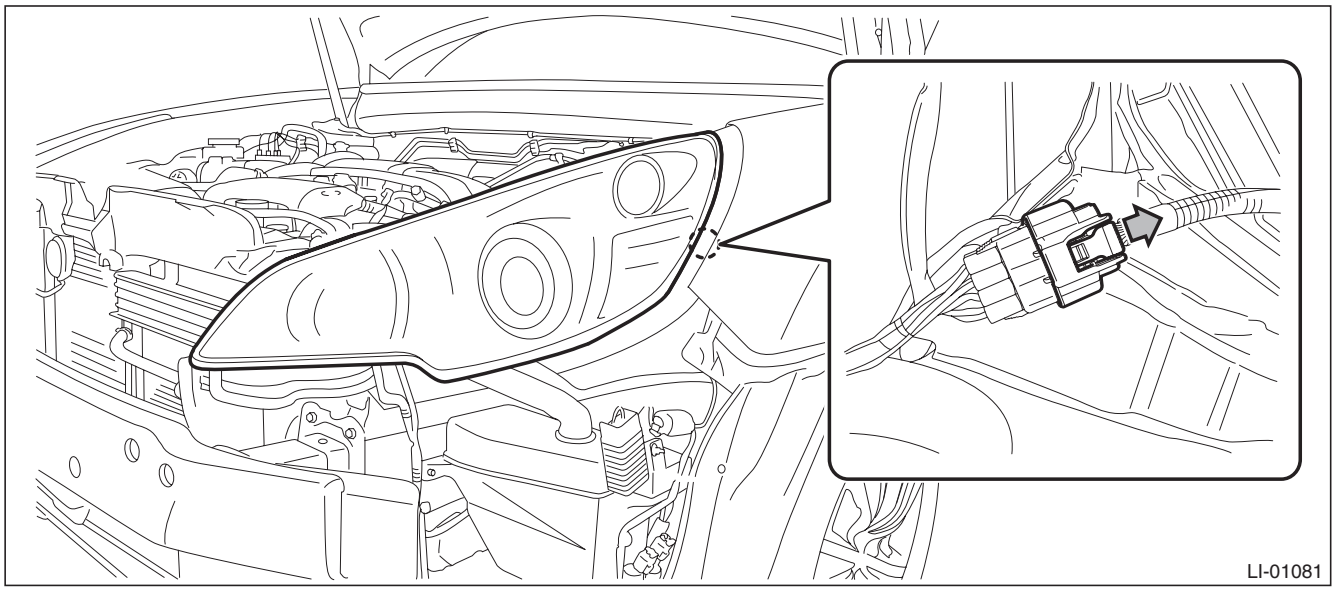

GETtheMANUALS.org

5) Remove the clips, and then remove the side sill garnish.

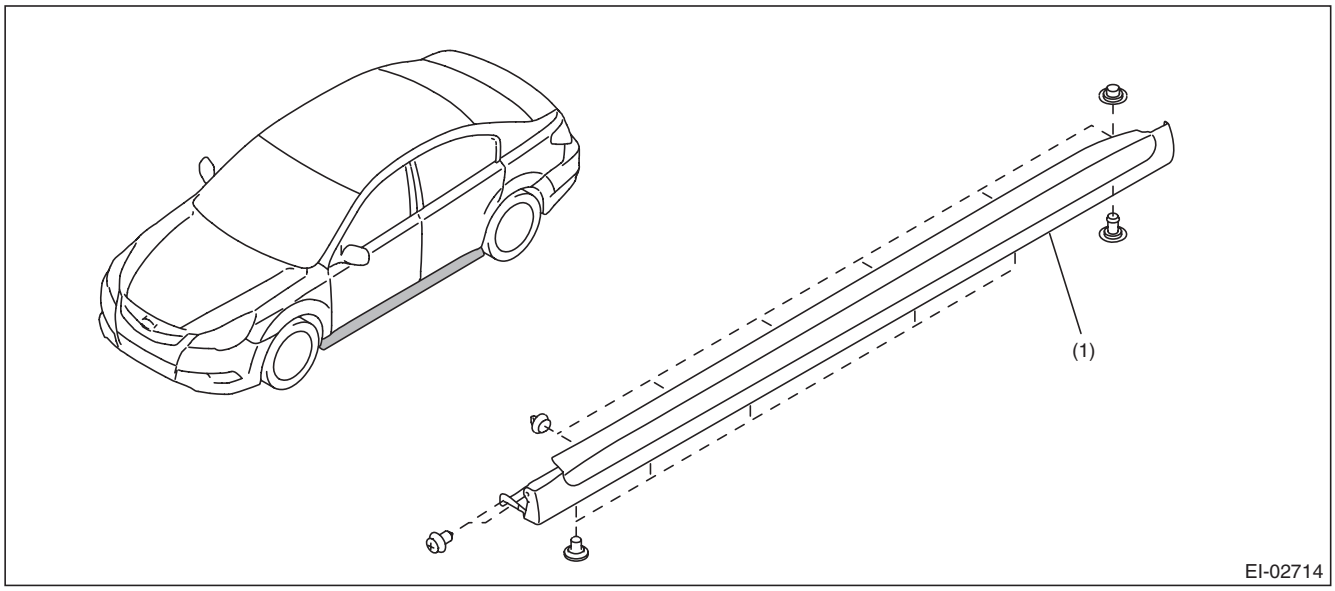

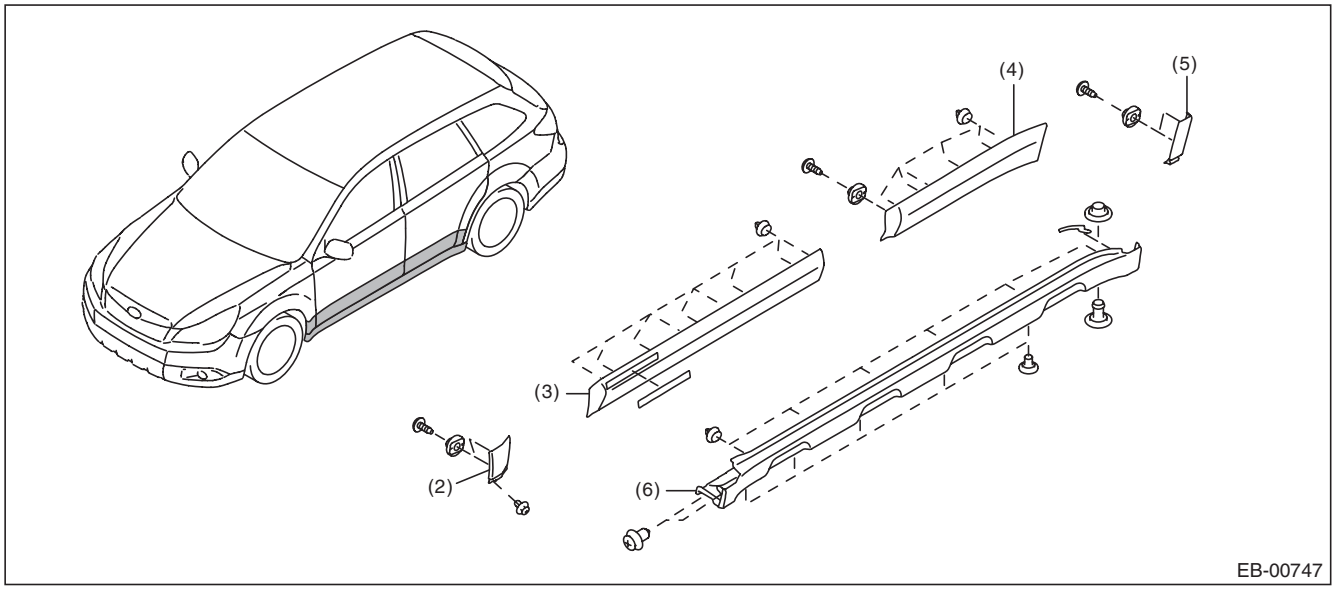

(1)	Side sill garnish ASSY (sedan model)	(3)	Garnish ASSY front door (OUTBACK model)	(5)	Garnish ASSY rear quarter (OUTBACK model)
(2)	Garnish ASSY front fender (OUTBACK model)	(4)	Garnish ASSY rear door (OUTBACK model)	(6)	Side sill garnish ASSY (OUTBACK model)

GETtheMANUALS.org

6) Remove the front fender panel.
   (1) Remove the mud guard clips.
   (2) Remove the bolt, and remove the front fender panel.

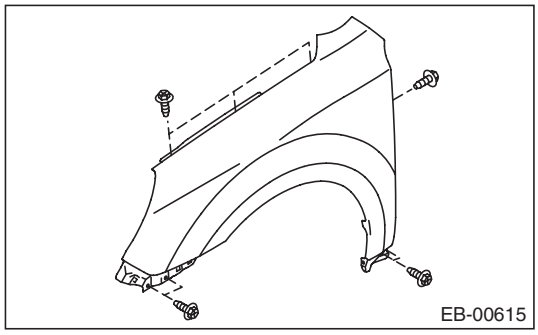

B: INSTALLATION

1) Install each part in the reverse order of removal.

CAUTION:
- **After the installation of front fender panel, be sure to perform headlight beam adjustment. <Ref. to LI-27, HEADLIGHT BEAM ADJUSTMENT, ADJUSTMENT, Headlight Assembly.>**
- **Install the bumper face so that the under cover front end (b) comes inside the front bumper face (a).**

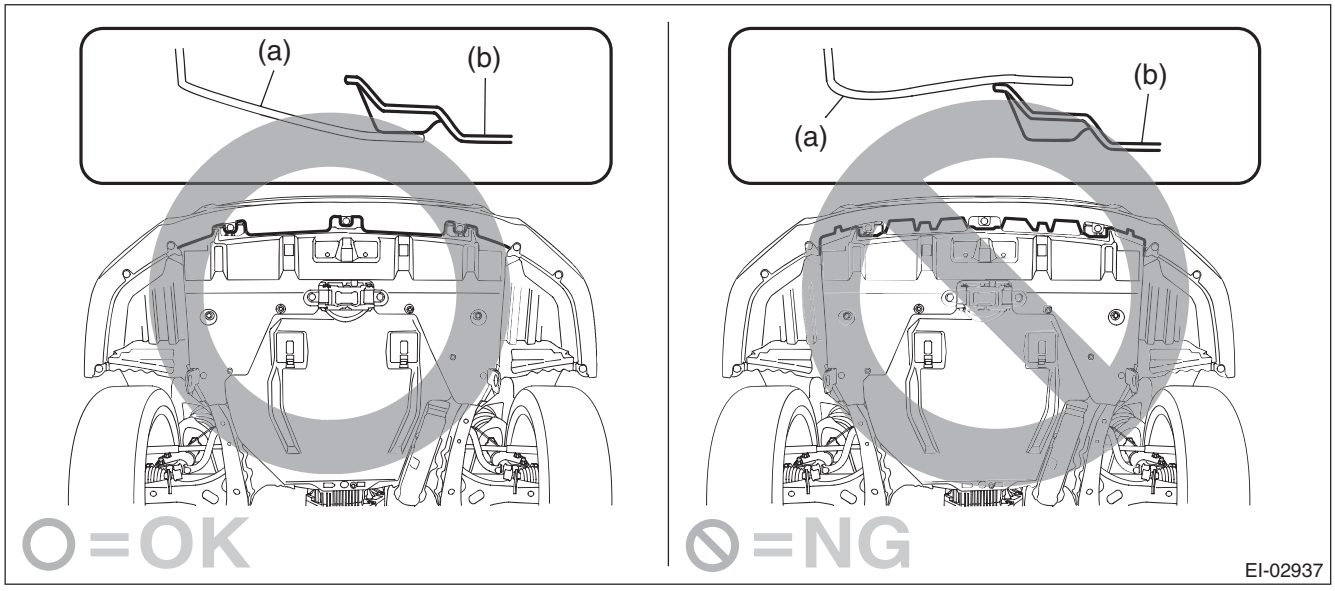

Tightening torque:
Front fender panel: 7.5 N·m (0.76 kgf-m, 5.5 ft-lb)
Headlight assembly: 7.5 N·m (0.76 kgf-m, 5.5 ft-lb)

NOTE:
Install while paying attention to make a uniform clearance around the front fender panel.
- Front fender panel — Front hood panel: <Ref. to EB-13, ADJUSTMENT, Front Hood.>
- Front fender panel — Front door panel: <Ref. to EB-28, ADJUSTMENT, Front Door.>

2) Adjust the fog light beam. (Model with fog light) <Ref. to LI-41, FOG LIGHT AIMING, ADJUSTMENT, Front Fog Light Assembly.>

GETtheMANUALS.org

4. Front Door

A: REMOVAL

1) Disconnect the ground cable from battery.
2) Remove the front door trim. <Ref. to EI-60, FRONT DOOR, REMOVAL, Door Trim.>
3) Remove the outer mirror assembly. <Ref. to GW-28, REMOVAL, Outer Mirror Assembly.>
4) Remove the front door speaker assembly.
   (1) Remove the screws.
   (2) Disconnect the harness connector and remove the front speaker assembly.

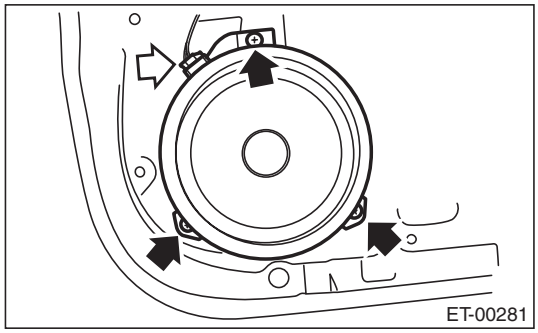

5) Remove the front sealing cover.

CAUTION:
- **Carefully remove the butyl tape. Excessive force will easily break the cover.**
- **If the sealing cover gets broken, replace it with a new part.**
   (1) Remove the screw to remove the door trim bracket.
   (2) Carefully remove the butyl tape to remove the sealing cover.

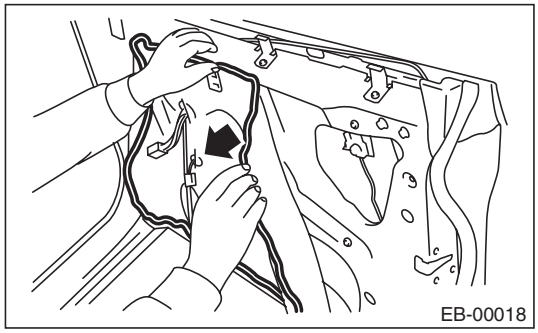

6) Remove the door sash and front door glass. <Ref. to GW-17, REMOVAL, Front Door Glass.>
7) Remove the front door regulator and motor. <Ref. to GW-19, REMOVAL, Front Regulator and Motor Assembly.>
8) Remove the front door latch assembly. <Ref. to SL-34, REMOVAL, Front Door Latch and Door Lock Actuator Assembly.>
9) Remove the front outer handle. <Ref. to SL-31, REMOVAL, Front Outer Handle.>

GETtheMANUALS.org

10) Remove the front door weather strip.

CAUTION:
If the weather strip clip is removed with excessive force, the weather strip may be damaged. Be sure to use clip remover to remove.

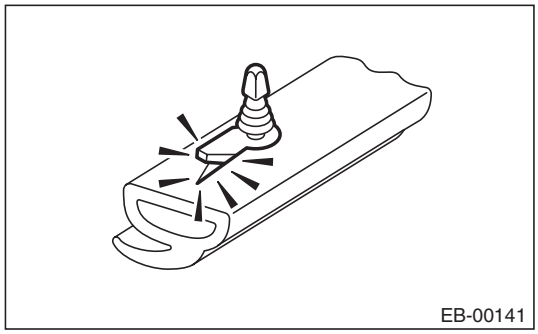

11) Remove the bolts and nuts to remove the door checker.

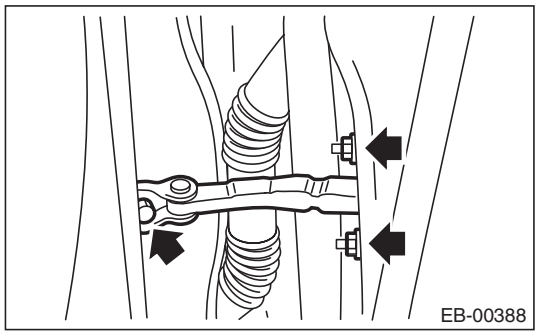

12) Release the claws, and then remove the side sill cover-front INN.

CAUTION:
Do not pull with excessive force. Doing so may damage the claws of the side sill cover INN.

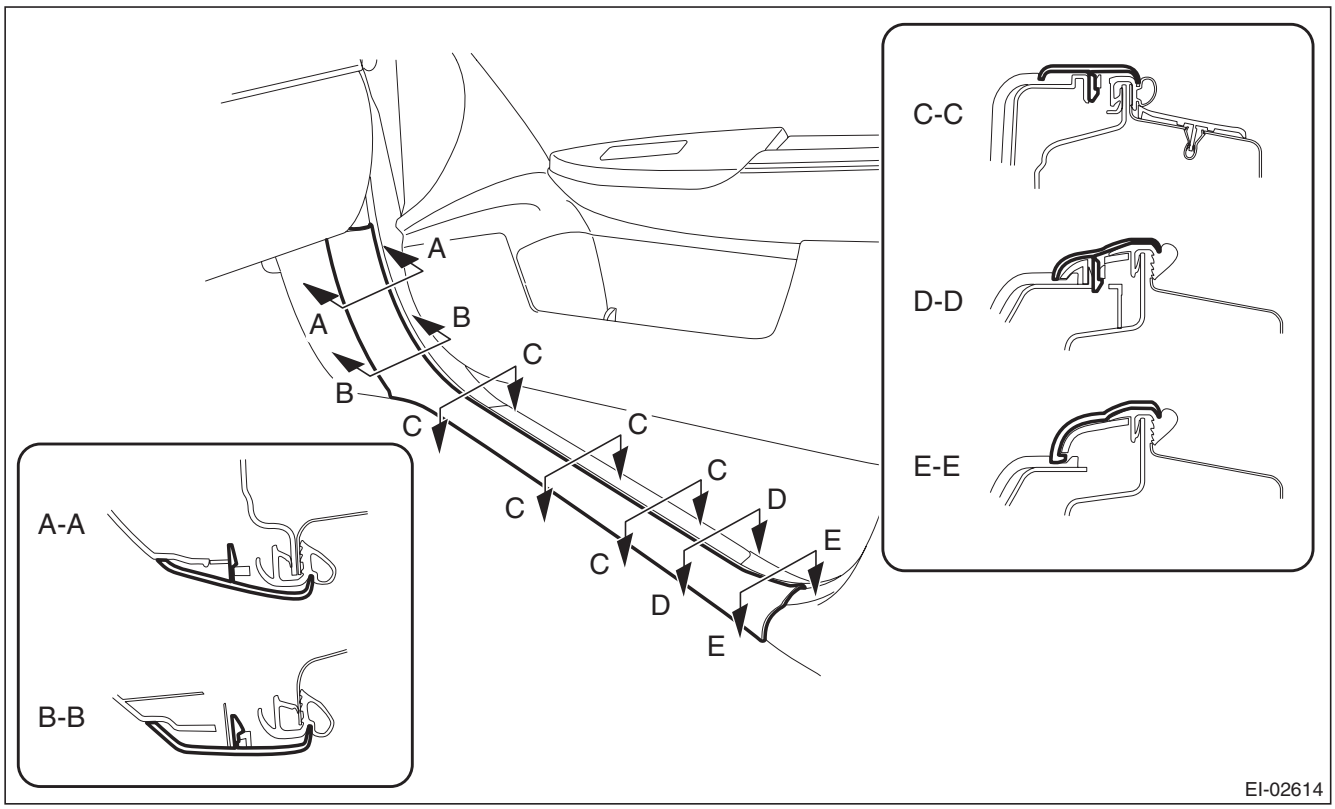

GETtheMANUALS.org

NOTE:
To release the claws of the side sill cover INN, the following steps are recommended.
1. Take out the weather strip from under the side sill cover INN.
2. Turn over the floor mat and release the claw (C-C) by accessing from behind the side sill cover INN.

13) Remove the clip, and remove the side sill cover front.

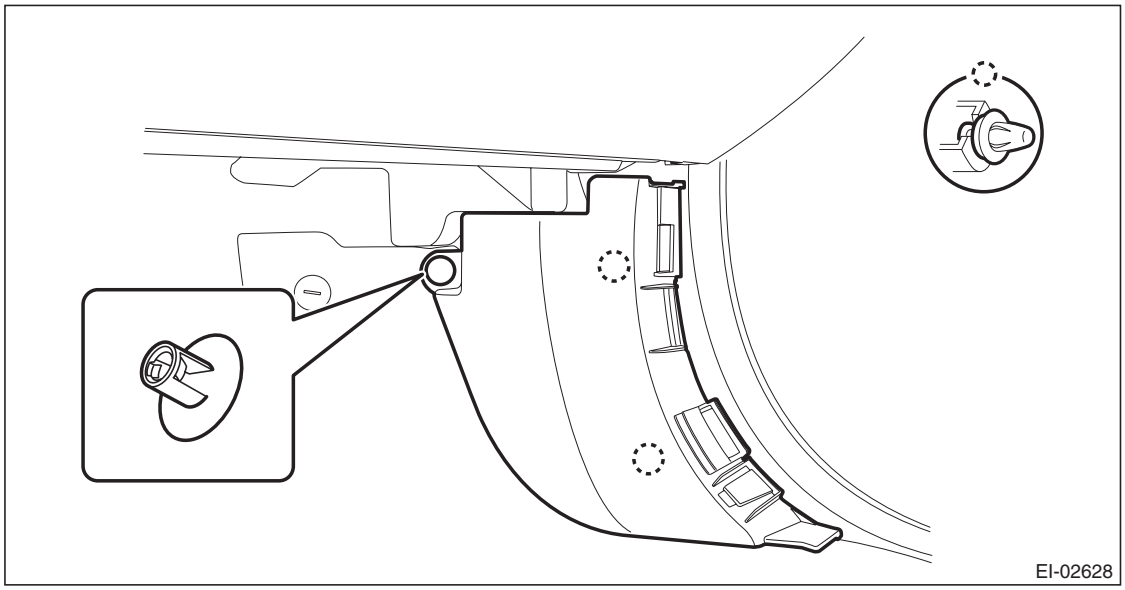

14) Disconnect the connector of door harness from body harness.

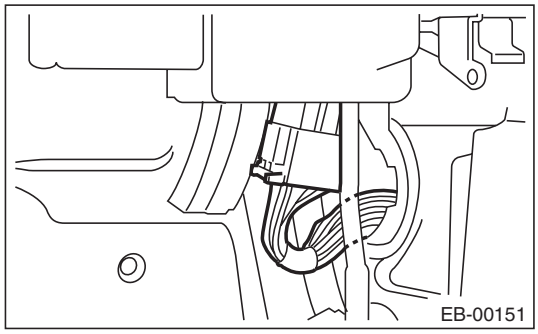

15) Before removing the door panel, make the following preparations.

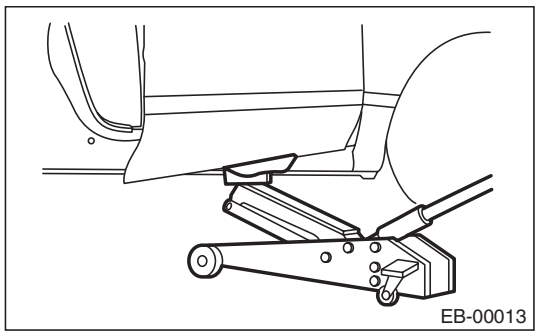

(1) Put a wooden block on a floor jack and place the jack under the front door.
(2) Support the door with a jack to protect it from damage.

CAUTION:
Do not lift the door panel with a floor jack excessively. The door hinges may be damaged.

GETtheMANUALS.org

16) Remove the door-side bolts for upper and lower hinges to remove front door panel.

CAUTION:
Door panels are heavy. When removing and installing them, always work in a team of two or more persons.

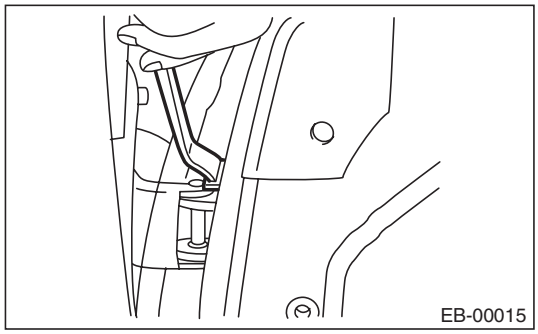

17) Remove the door hinge from vehicle.

B: INSTALLATION

1) Remove the fender cover lower from fender panel.
2) Apply grease to the sliding area of door hinges, and install the door hinge to vehicle.
3) Put a wooden block on jack and place the front door on that.

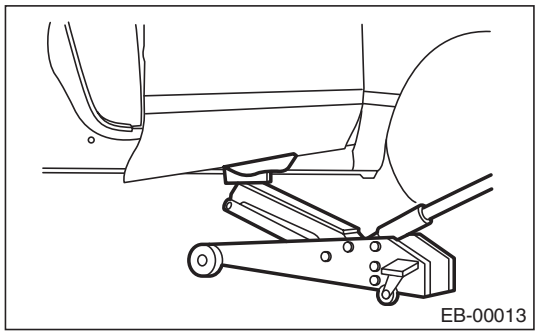

4) Temporarily install the front door to upper hinge and lower hinge after adjusting the height by jack.

NOTE:
When installing, make sure that a uniform clearance is created around the front door panel.
5) Adjust the clearance around the front door panel. <Ref. to EB-28, ADJUSTMENT, Front Door.>
6) Install the fender cover lower.
7) Tighten the bolts and nuts of door hinges and door checker.

Tightening torque:
Refer to "COMPONENT" of "General Description". <Ref. to EB-4, FRONT DOOR, COMPONENT, General Description.>

8) Install door internal parts in the reverse order of removal.
9) Connect the door harness connector, and install the front pillar lower trim.

GETtheMANUALS.org

C: ADJUSTMENT

Adjust the clearance around the front door panel as follows.

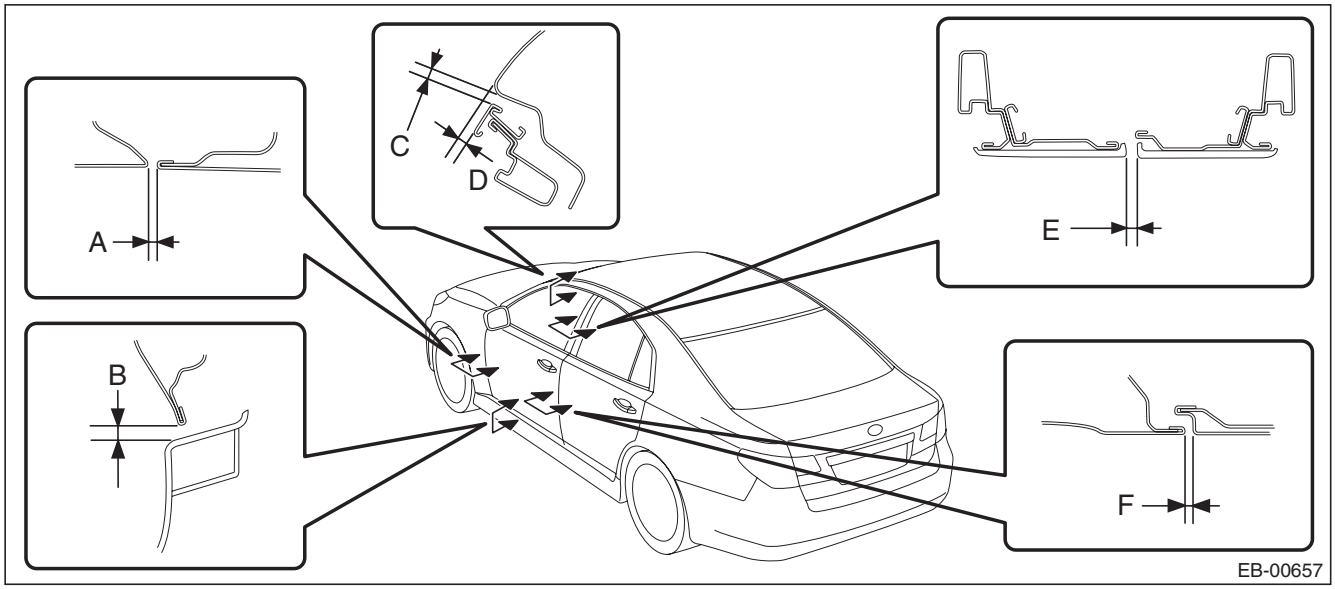

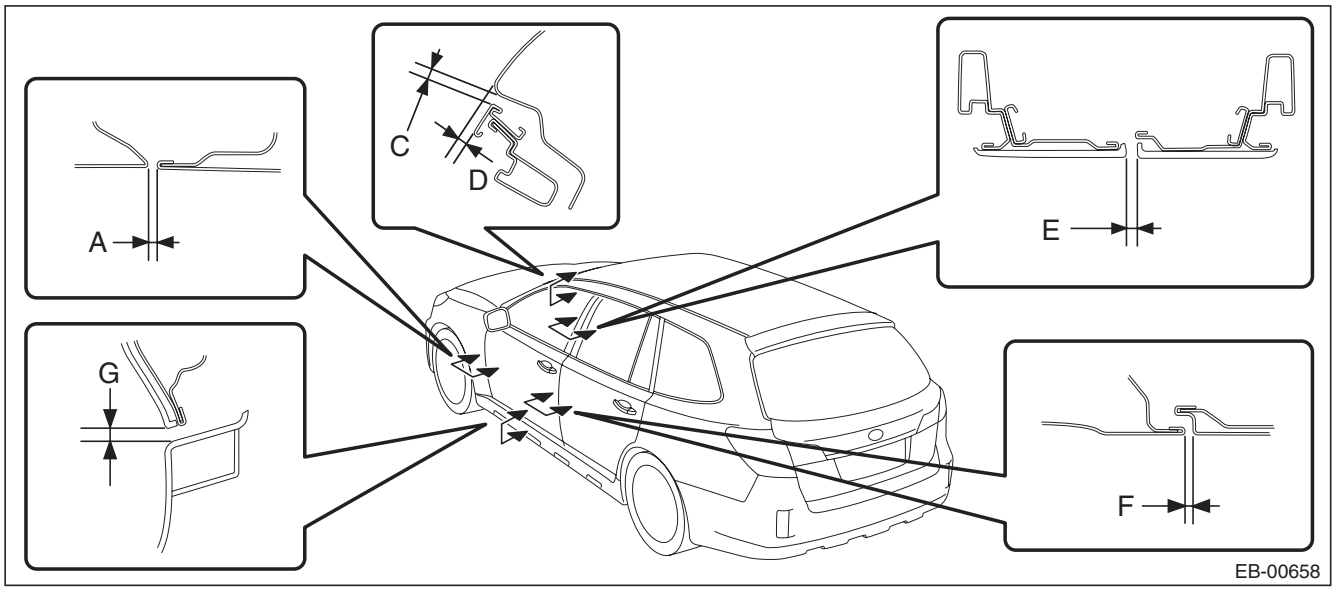

	Part	Standard
A	Front fender panel to Front door panel	4.6±1.0 mm (0.18±0.04 in)
B	Front door panel to Side sill garnish (sedan model)	6.0±1.5 mm (0.24±0.06 in)
C	Roof panel to Front door sash	5.0±1.0 mm (0.20±0.04 in)
D	Surface level gap between roof panel and front door sash	3.5±1.0 mm (0.14±0.04 in)
E	Front door sash to Rear door sash	5.5±1.0 mm (0.22±0.04 in)
F	Front door panel to Rear door panel	4.6±1.0 mm (0.18±0.04 in)
G	Front door garnish to Side sill garnish (OUTBACK model)	8.0±1.0 mm (0.31±0.04 in)

NOTE:
Common to sedan and OUTBACK models

GETtheMANUALS.org

1) Adjust the vertical and horizontal positions of front door panel.

Preparation tool:
ST: WRENCH (925610000)

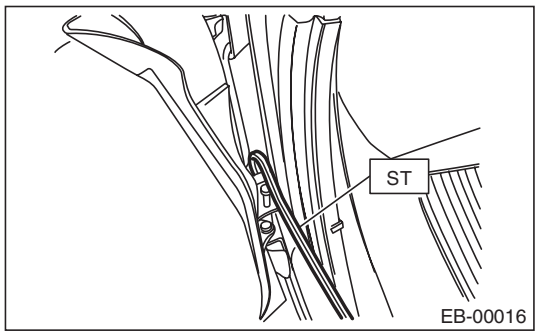

(1) Using ST, loosen the body side bolts of the upper and lower hinges.
(2) Adjust the vertical and horizontal clearance of front door panel.

2) Adjust the surface level gap between front door panel and rear door.

CAUTION:
Do not use an impact wrench. Welding area on the striker nut plate is easily broken.

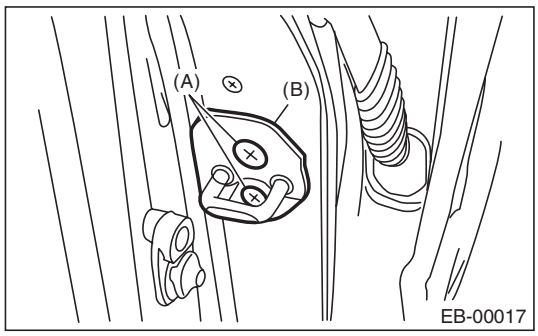

(1) Loosen the screws (A).
(2) Tap the striker (B) using a plastic hammer to adjust the surface level gap between rear end of front door panel and front end of rear door panel.

GETtheMANUALS.org

5. Front Sealing Cover

A: REMOVAL

1) Disconnect the ground cable from battery.
2) Remove the gusset cover.
   (1) Attach the protective tape (a) to the door trim.
   (2) Release the clips and claws, then detach the gusset cover.

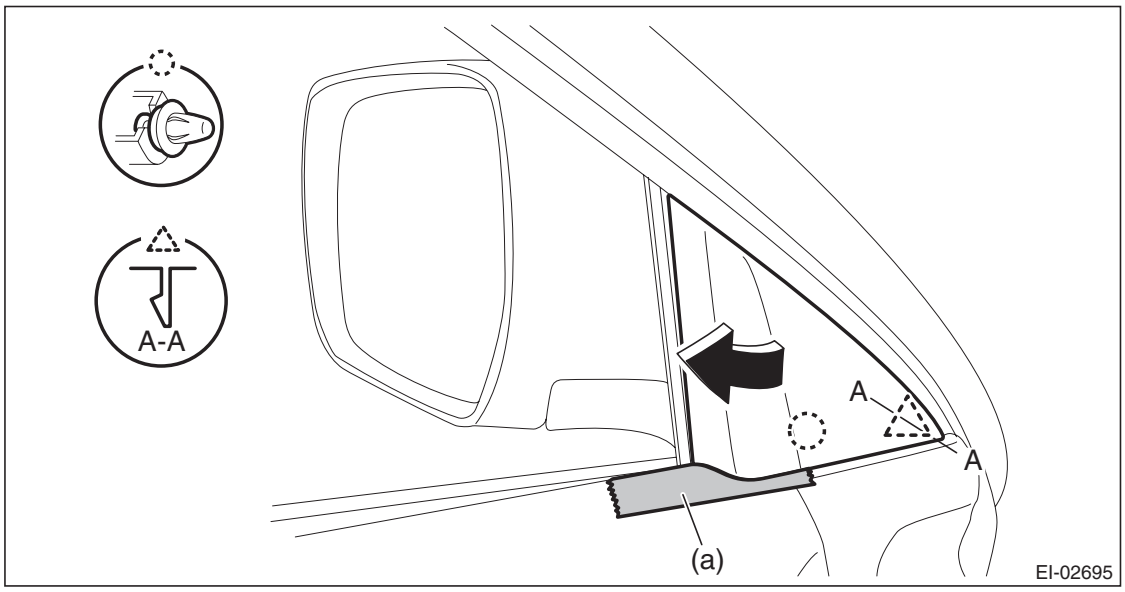

3) Remove the door trim assembly.
   (1) Open the cover and remove the screw.
   (2) Remove the clips in the order of (A) to (J) and remove the door trim assembly from the door panel.

CAUTION:
When removing the door trim, be sure to remove the clips in the correct order. Forcibly removing clips may damage the door panel assembly.

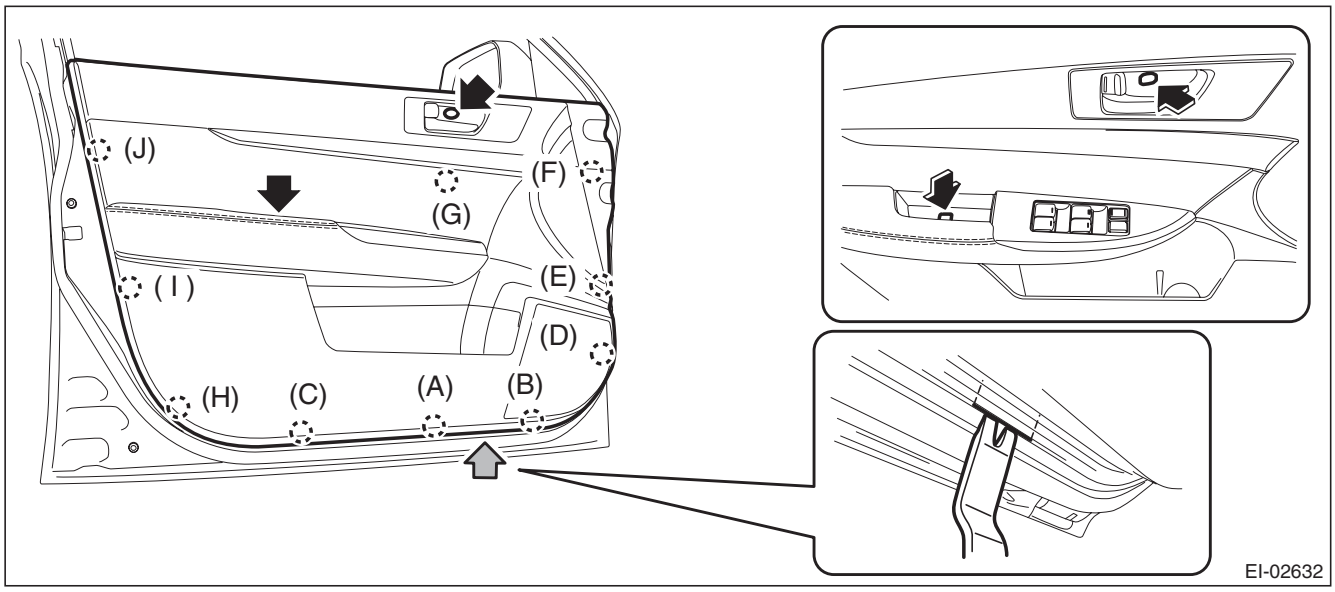

NOTE:
Insert a plastic clip remover into the slit at the bottom of the door trim, to lift the door trim.

GETtheMANUALS.org

(3) Remove the cables (a) and (b) from the cable holder of inner remote.

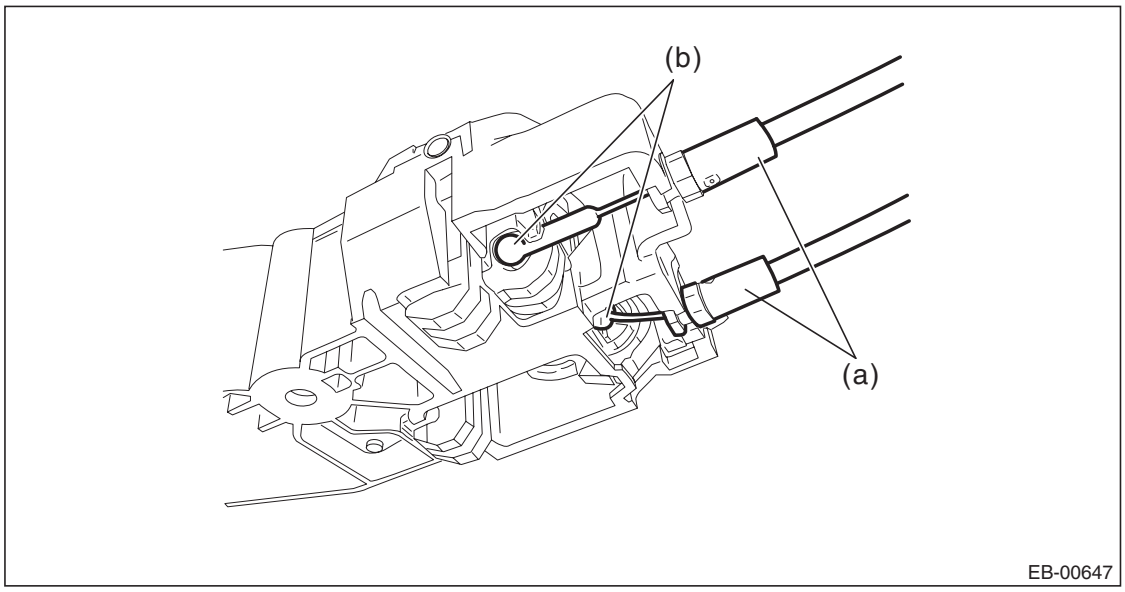

(4) Disconnect the harness connector and remove the door trim assembly.

4) Remove the sealing cover.

CAUTION:
- **Carefully remove the butyl tape. Excessive force will easily break the cover.**
- **If the sealing cover gets broken, replace it with a new part.**

(1) Remove the screw to remove the door trim bracket.
(2) Carefully remove the butyl tape to remove the sealing cover.

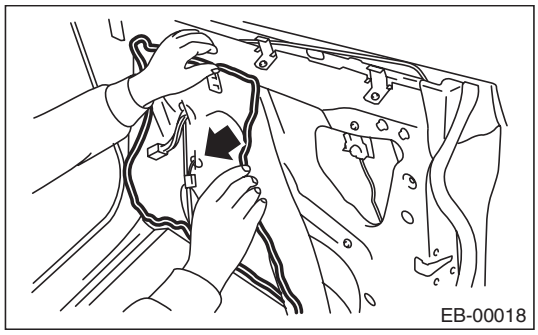

B: INSTALLATION

CAUTION:
- **If the sealing cover gets broken, replace it with a new part.**
- **Apply a uniform bead of butyl tape.**
- **Attach the sealing cover, keeping it from becoming wrinkled.**
- **Breaks in the bead will allow water leakage and contamination.**

1) Install each part in the reverse order of removal.
2) When replacing the sealing cover, use the butyl tape.
3) Press the butyl tape-applied area firmly to prevent any floating on surface.

Butyl tape:
3M8626 or equivalent

C: INSPECTION

If the sealing cover gets damaged, replace it with a new part.

GETtheMANUALS.org

6. Rear Door

A: REMOVAL

1) Disconnect the ground cable from battery.
2) Remove the rear door trim. <Ref. to EI-61, REAR DOOR, REMOVAL, Door Trim.>
3) Remove the rear door speaker assembly.
   (1) Remove the screws.
   (2) Disconnect the harness connector and remove the rear speaker assembly.

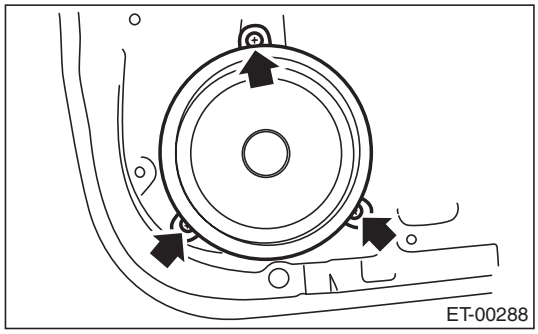

4) Remove the rear sealing cover.

CAUTION:
- **Carefully remove the butyl tape. Excessive force will easily break the cover.**
- **If the sealing cover gets broken, replace it with a new part.**
   (1) Remove the screw to remove the door trim bracket.
   (2) Carefully remove the butyl tape to remove the sealing cover.

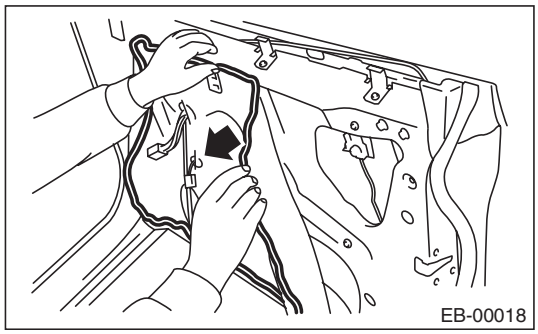

5) Remove the door sash and rear door glass. <Ref. to GW-34, REMOVAL, Rear Door Glass.>
6) Remove the rear door regulator and motor assembly. <Ref. to GW-36, REMOVAL, Rear Regulator and Motor Assembly.>
7) Remove the rear door latch. <Ref. to SL-41, REMOVAL, Rear Door Latch and Door Lock Actuator Assembly.>
8) Remove the rear outer handle. <Ref. to SL-38, REMOVAL, Rear Outer Handle.>

GETtheMANUALS.org

9) Remove the rear door weather strip.

CAUTION:
If the weather strip clip is removed with excessive force, the weather strip may be damaged. Be sure to use clip remover to remove.

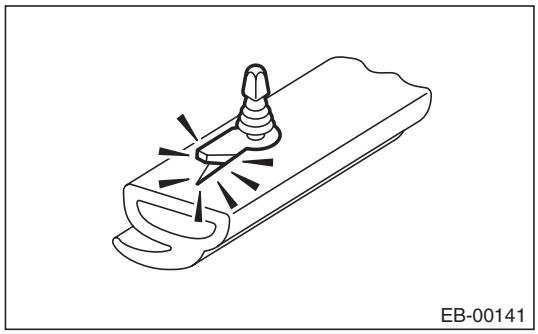

10) Remove the bolts and nuts to remove the door checker.

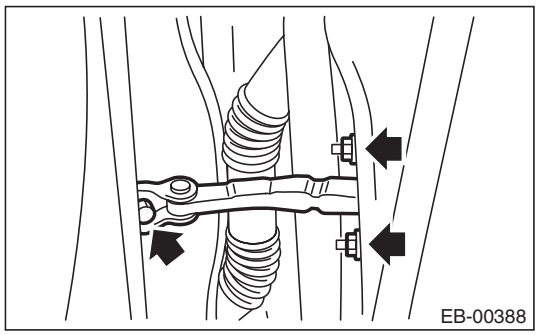

11) Disconnect the rear door harness connectors.

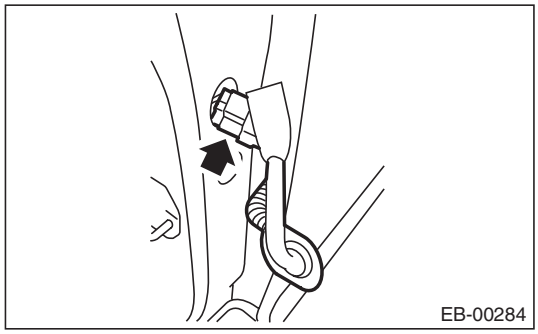

(1) Remove the grommet and pull out the rear door harness connector from inside the center pillar.
(2) Disconnect the rear door harness connectors.

12) Before removing the door panel, make the following preparations.

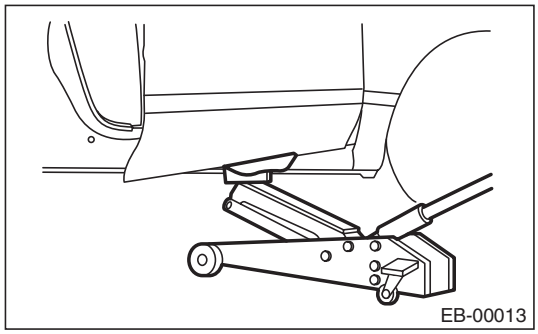

(1) Put a wooden block on a floor jack and place the jack under the rear door.

GETtheMANUALS.org

(2) Support the rear door with the jack to protect it from damage.

CAUTION:
Do not lift the door panel with a floor jack excessively. The door hinges may be damaged.

13) Remove the door-side bolts for upper and lower hinges to remove the rear door panel.

CAUTION:
Door panels are heavy. When removing and installing them, always work in a team of two or more persons.

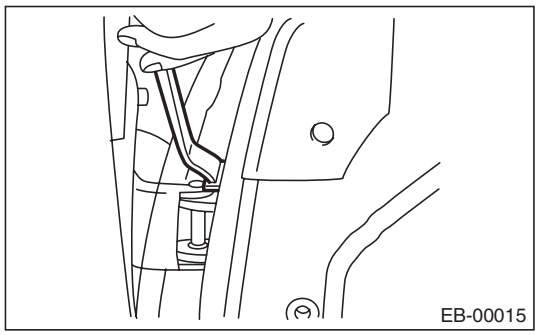

14) Remove the door hinge from vehicle.

B: INSTALLATION

1) Apply grease to the moving part of door hinges.
2) Put a wooden block on jack and place the rear door on that.

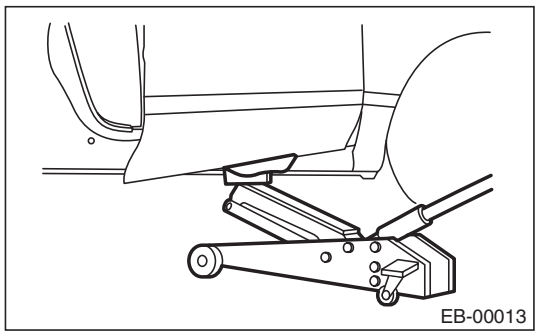

3) Temporarily install the rear door to upper hinge and lower hinge after adjusting the height by jack.

NOTE:
When installing, make sure that a uniform clearance is created around the rear door panel.

4) Adjust the clearance around the rear door panel. <Ref. to EB-35, ADJUSTMENT, Rear Door.>
5) Tighten the bolts and nuts of door hinges and door checker.

Tightening torque:
Refer to "COMPONENT" of "General Description". <Ref. to EB-5, REAR DOOR, COMPONENT, General Description.>

6) Install door internal parts in the reverse order of removal.
7) Connect the door harness connector, and install the center pillar lower trim.

GETtheMANUALS.org

C: ADJUSTMENT

Adjust the clearance around the rear door panel as follows.

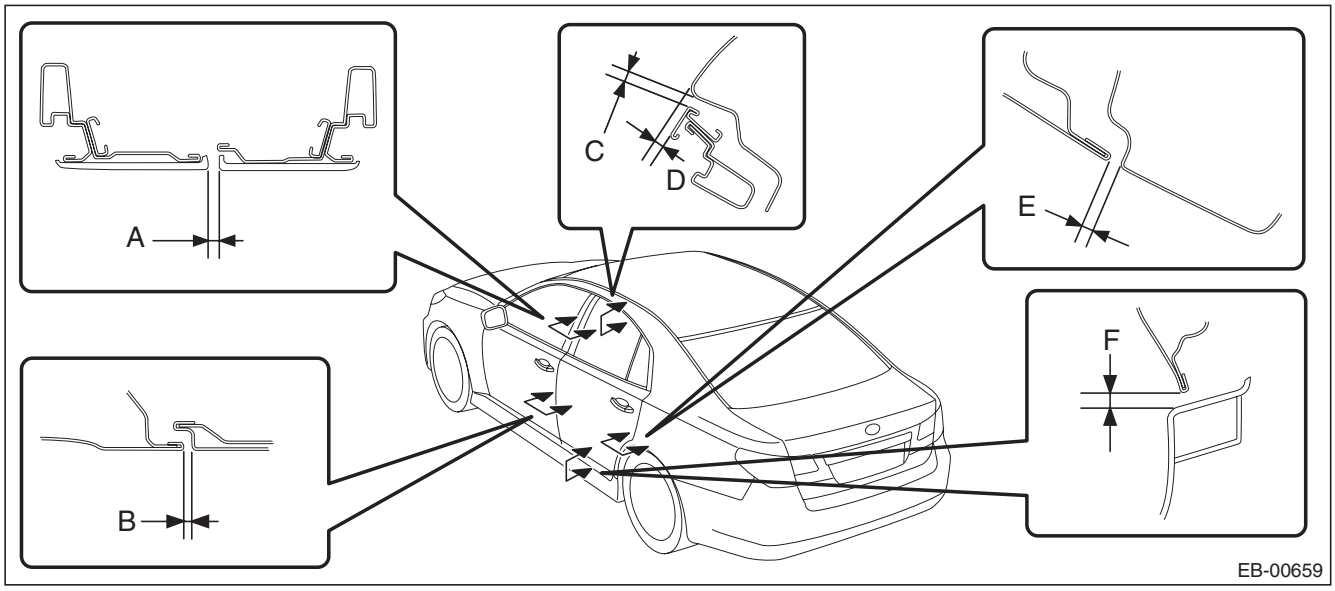

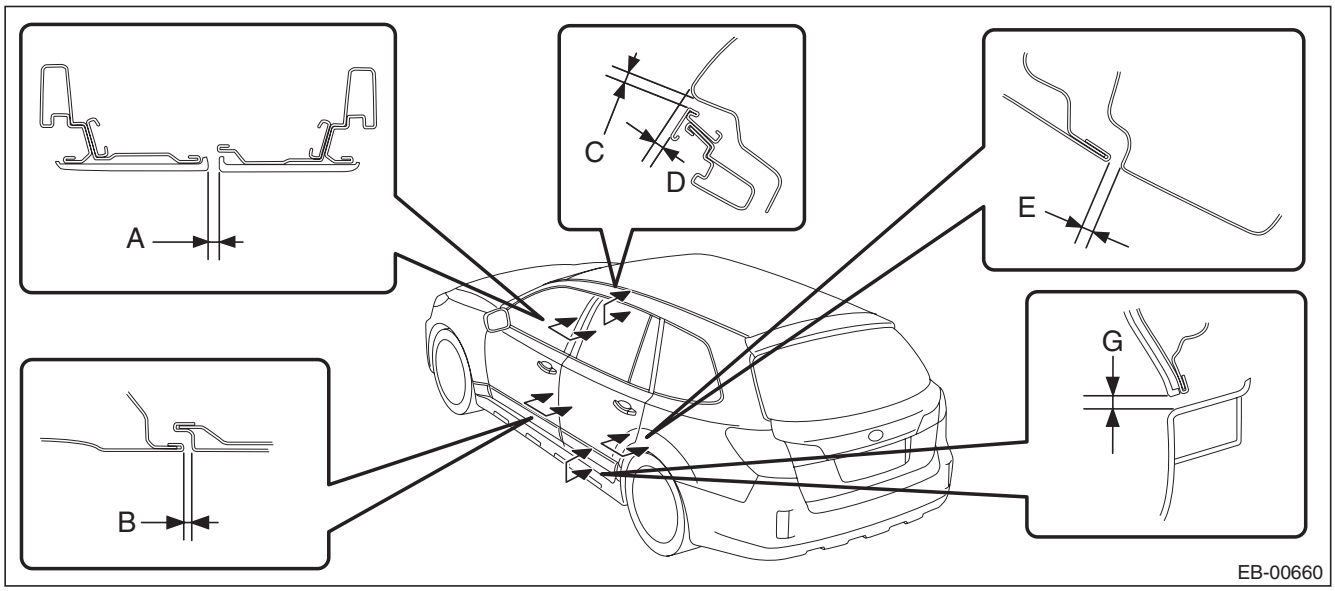

	Part	Standard
A	Front door sash to Rear door sash	5.5±1.0 mm (0.22±0.04 in)
B	Front door panel to Rear door panel	4.6±1.0 mm (0.18±0.04 in)
C	Roof panel to Rear door sash	5.0±1.0 mm (0.20±0.04 in)
D	Surface level gap between roof panel and rear door sash	3.5±1.0 mm (0.14±0.04 in)
E	Rear door panel to Rear quarter panel	4.0±1.0 mm (0.16±0.04 in)
F	Rear door panel to Side sill garnish (sedan model)	6.0±1.5 mm (0.24±0.06 in)
G	Rear door garnish to Side sill garnish (OUTBACK model)	8.0±1.0 mm (0.31±0.04 in)

GETtheMANUALS.org

1) Adjust the vertical and horizontal positions of rear door panel.

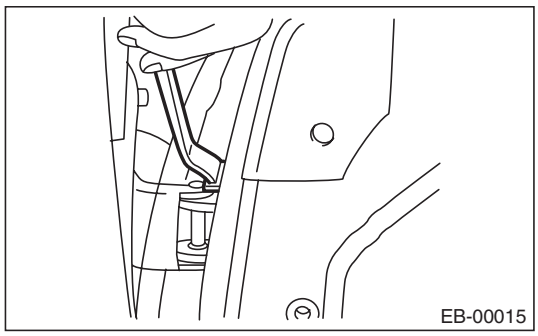

(1) Loosen the body side bolts of upper and lower hinges.
(2) Adjust the vertical and horizontal clearance of rear door panel.

2) Adjust the surface level gap between rear door panel and body.

CAUTION:
Do not use an impact wrench. Welding area on the striker nut plate is easily broken.

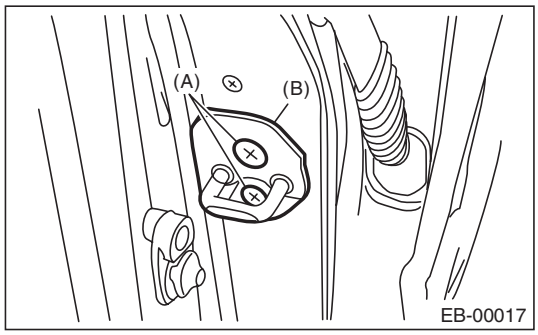

(1) Loosen the screws (A).
(2) Tap the striker (B) using a plastic hammer to adjust the surface level gap between rear end of rear door panel and rear quarter.

GETtheMANUALS.org

7. Rear Sealing Cover

A: REMOVAL

1) Disconnect the ground cable from battery.
2) Remove the door trim assembly.
   (1) Open the cover and remove the screw.
   (2) Remove the clips in the order of (A) to (H) and remove the door trim assembly from the door panel.

CAUTION:
When removing the door trim, be sure to remove the clips in the correct order. Forcibly removing clips may damage the door panel assembly.

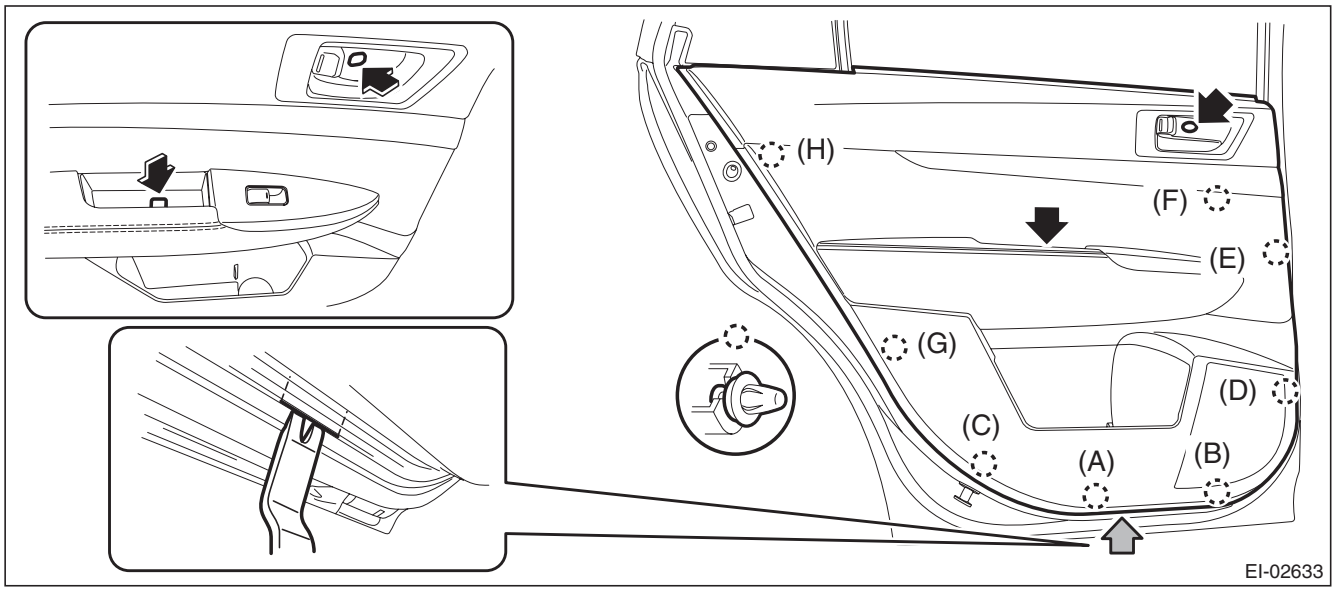

NOTE:
Insert a plastic clip remover into the slit at the bottom of the door trim, to lift the door trim.
   (3) Remove the cables (a) and (b) from the cable holder of inner remote.

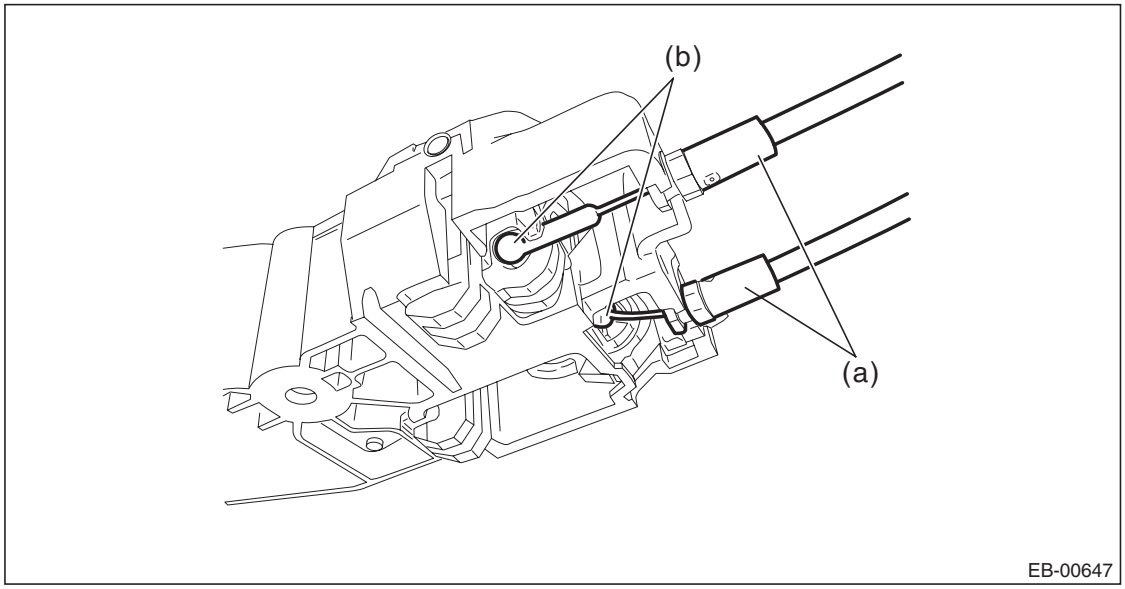

   (4) Disconnect the harness connector and remove the door trim.

GETtheMANUALS.org

3) Remove the sealing cover.

CAUTION:
- **Carefully remove the butyl tape. Excessive force will easily break the cover.**
- **If the sealing cover gets broken, replace it with a new part.**

(1) Remove the screw to remove the door trim bracket.
(2) Carefully remove the butyl tape to remove the sealing cover.

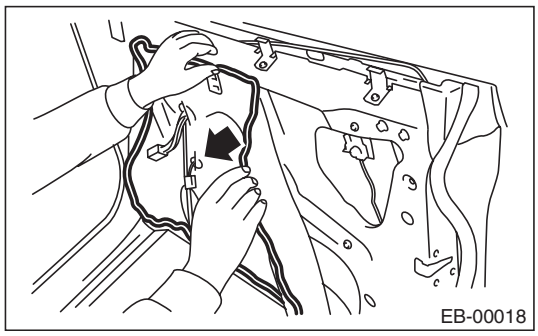

B: INSTALLATION

CAUTION:
- **If the sealing cover gets broken, replace it with a new part.**
- **Apply a butyl tape evenly.**
- **Attach the sealing cover, keeping it from becoming wrinkled.**
- **Breaks in the bead will allow water leakage and contamination.**

1) Install each part in the reverse order of removal.
2) When replacing the sealing cover, use the butyl tape.
3) Press the butyl tape-applied area firmly to prevent any floating on surface.

Butyl tape:
3M8626 or equivalent

C: INSPECTION

If the sealing cover gets damaged, replace it with a new part.

GETtheMANUALS.org

8. Door Sash Tape

A: REMOVAL

1. FRONT DOOR

1) Disconnect the ground cable from battery.
2) Remove the front door trim. <Ref. to EI-60, FRONT DOOR, REMOVAL, Door Trim.>
3) Remove the outer mirror assembly. <Ref. to GW-28, REMOVAL, Outer Mirror Assembly.>
4) Remove the sealing cover.

CAUTION:
- **Carefully remove the butyl tape. Excessive force will easily break the cover.**
- **If the sealing cover gets broken, replace it with a new part.**

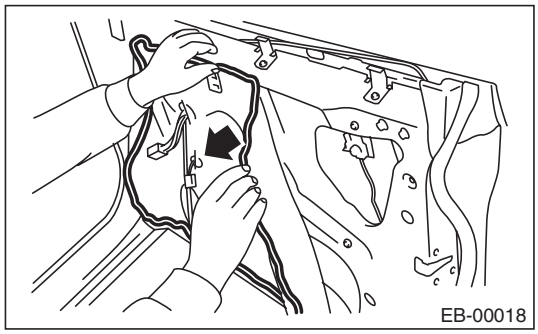

5) Remove the front door glass. <Ref. to GW-17, REMOVAL, Front Door Glass.>
6) Remove the glass run rubber.
7) Release the clips, and remove the inner cover.

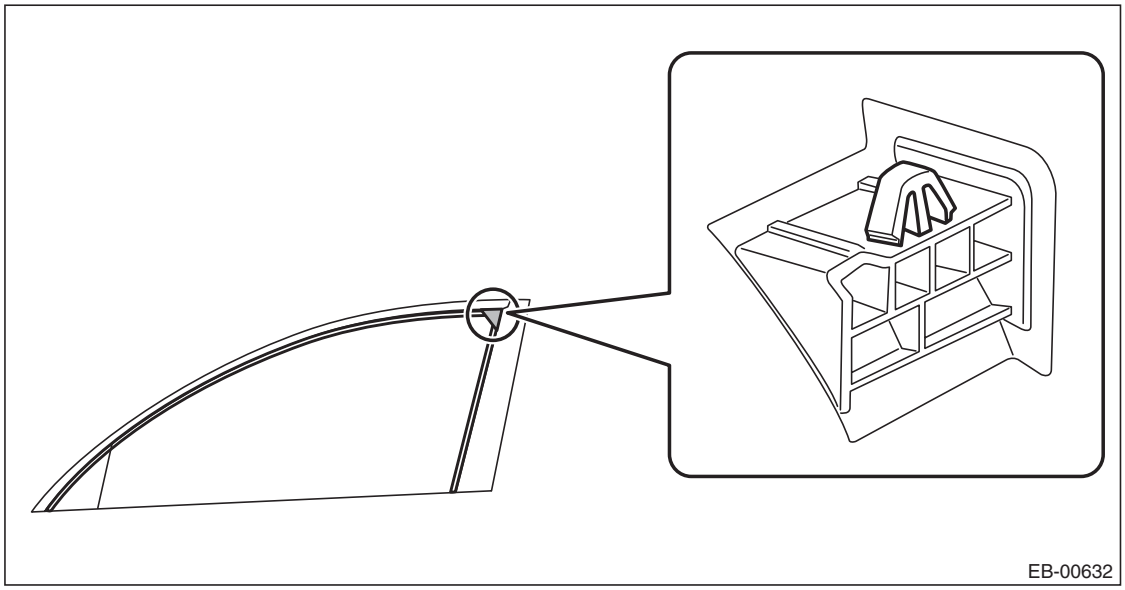

8) Detach the inner tape.

NOTE:
- If the tape is difficult to detach, warm it by a hot air drier.

Make sure to use a home use drier. Do not use an industrial use drier.
- Wipe away any trace of tape adhesive from the door sash.

GETtheMANUALS.org

2. REAR DOOR

1) Disconnect the ground cable from battery.
2) Remove the rear door trim. <Ref. to EI-61, REAR DOOR, REMOVAL, Door Trim.>
3) Remove the sealing cover.

CAUTION:
- **Carefully remove the butyl tape. Excessive force will easily break the cover.**
- **If the sealing cover gets broken, replace it with a new part.**

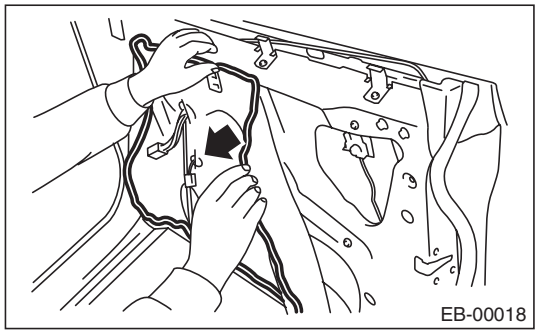

4) Remove the door sash and rear door glass. <Ref. to GW-34, REMOVAL, Rear Door Glass.>
5) Remove the glass run rubber.
6) Release the clips, and remove the inner cover.
- Sedan model

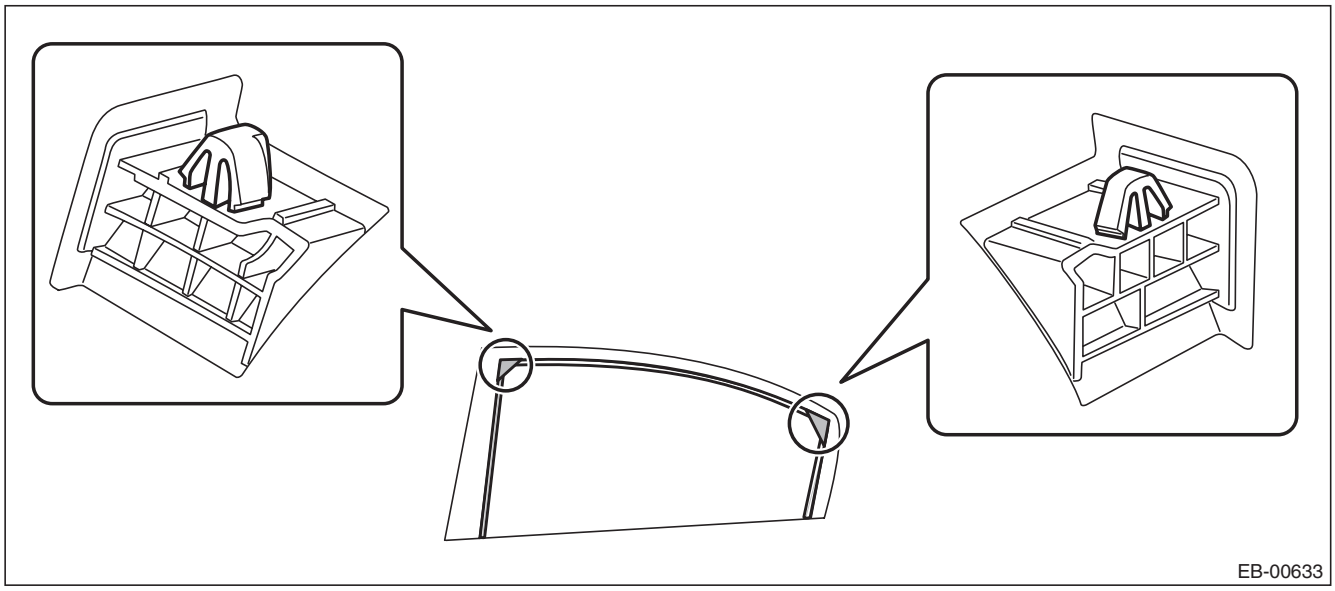

GETtheMANUALS.org

- OUTBACK model

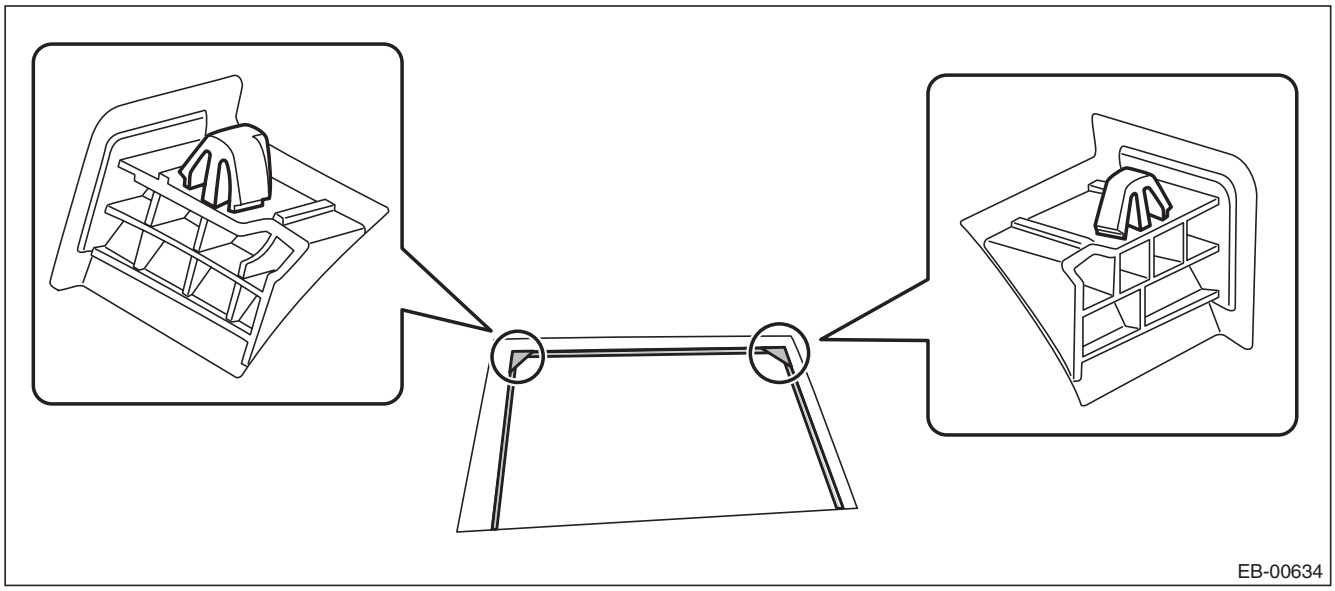

7) Detach the inner tape.

NOTE:
- If the tape is difficult to detach, warm it by a hot air drier.

Make sure to use a home use drier. Do not use an industrial use drier.
- Wipe away any trace of tape adhesive from the door sash.

GETtheMANUALS.org

B: INSTALLATION

CAUTION:
- **Press evenly along the sash when applying the tape using a spatula or similar object to make sure no bubbles are formed.**
If any bubbles are formed, replace the tape.
- **If any wrinkles form in the tape while applying, replace the tape with new tape.**
- **Be sure to press the ends of the tape firmly to adhere securely. If the tape comes off at the ends or where folded, the adhesive strength is weakened and the tape may peel off.**

1) Apply the inner tape along the arrow directions.
- Front

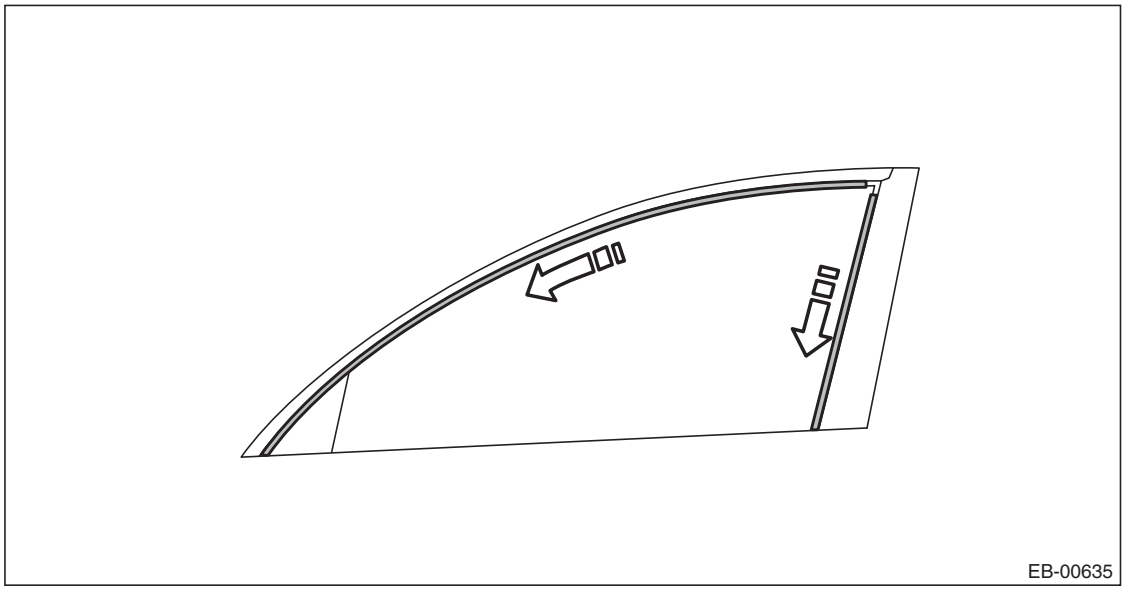

- Rear

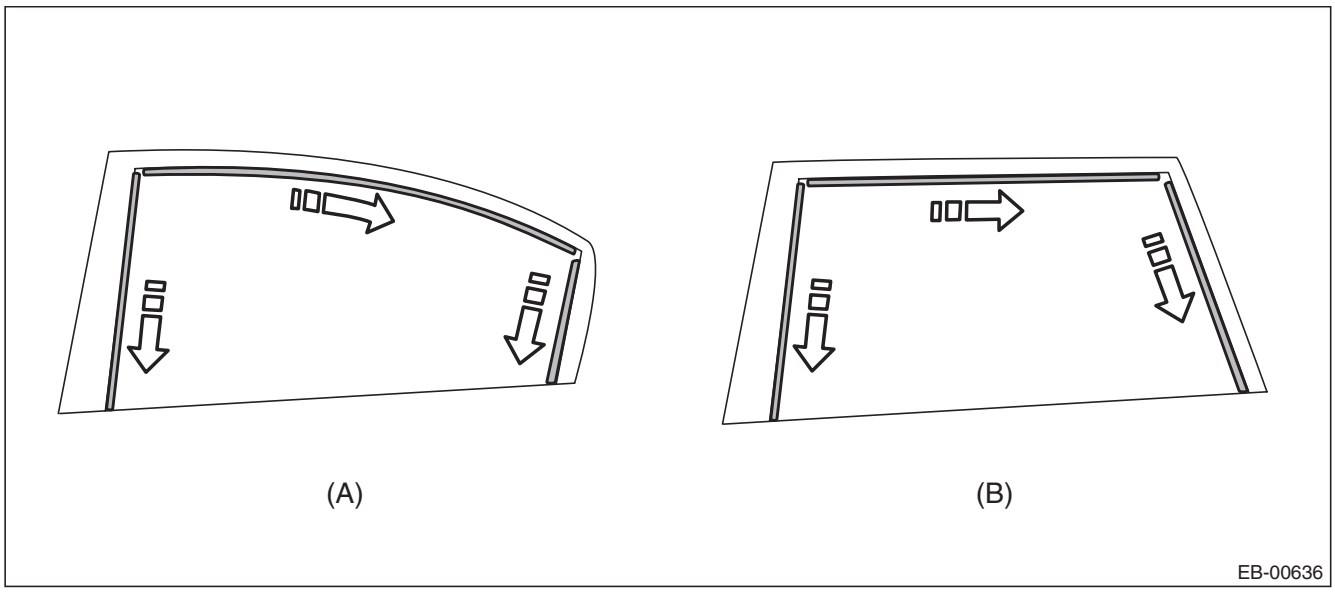

(A) Sedan model (B) OUTBACK model

2) Install the remaining parts in the reverse order of removal.

GETtheMANUALS.org

9. Trunk Lid

A: REMOVAL

1. TRUNK LID DAMPER STAY

1) Open the trunk lid.
2) Remove the trunk lid damper stay.
   (1) Float the lock pin using a flat tip screwdriver, etc. and slide it.
   (2) Remove the trunk lid damper stay by pulling the damper stay mounting point.

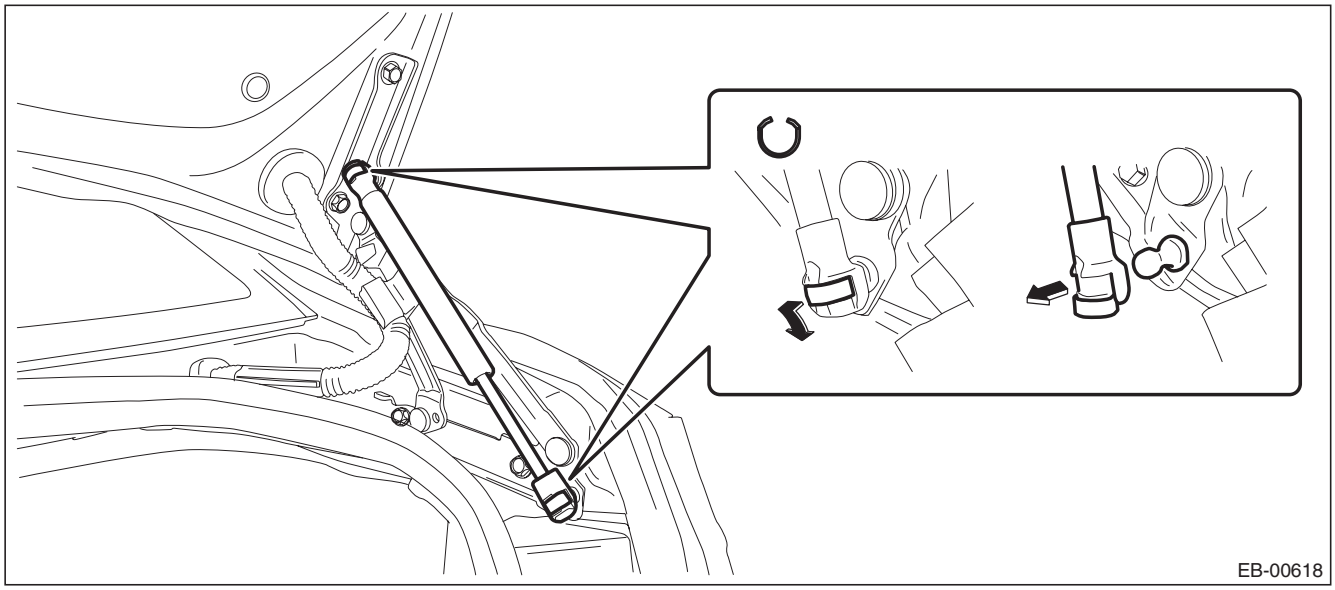

2. TRUNK LID HINGE

1) Open the trunk lid.
2) Remove the trunk lid damper stay.
   (1) Float the lock pin using a flat tip screwdriver, etc. and slide it.
   (2) Remove the trunk lid damper stay by pulling the damper stay mounting point.

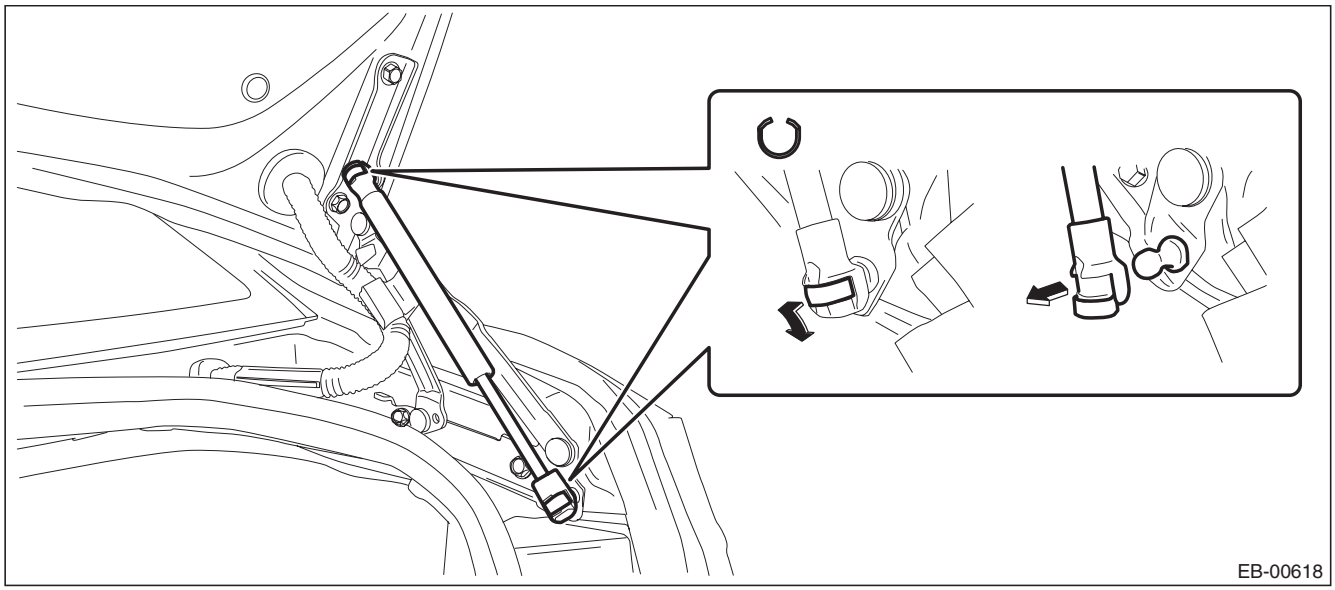

GETtheMANUALS.org

3) Remove the trunk lid trim.
   (1) Remove the trunk handle.
   (2) Remove the clips and the trunk lid trim.

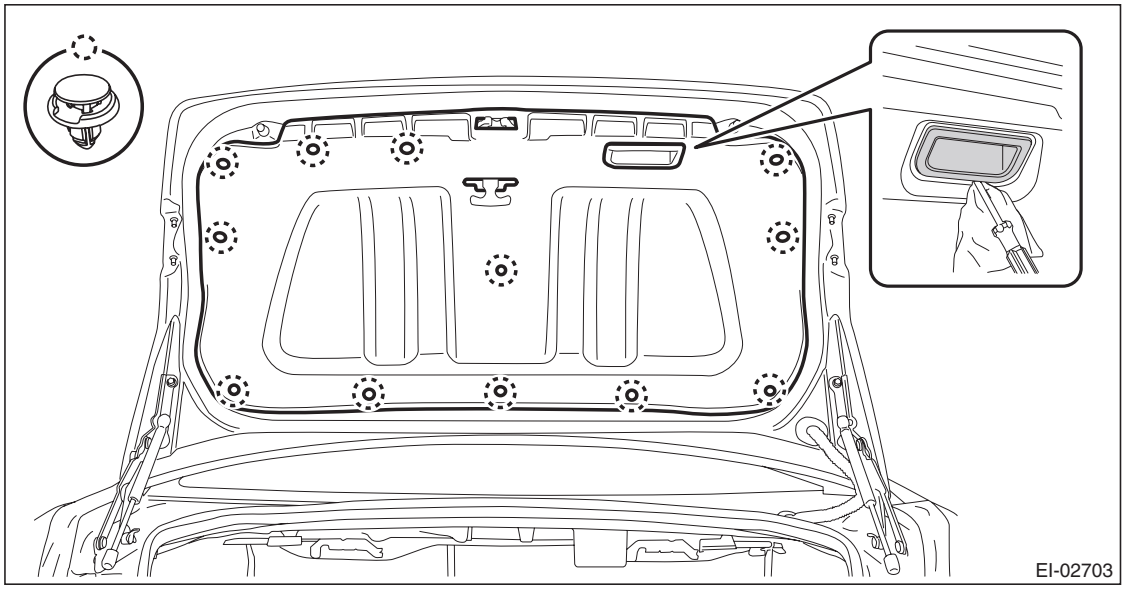

4) Remove the trunk lid hinges.
   (1) Disconnect the trunk lid harness connector and remove the grommet, and pull out the trunk lid harness.
   (2) Remove the harness clamps and bolts, and remove the trunk lid panel.
   (3) Remove the bolts, then remove the trunk lid hinge.

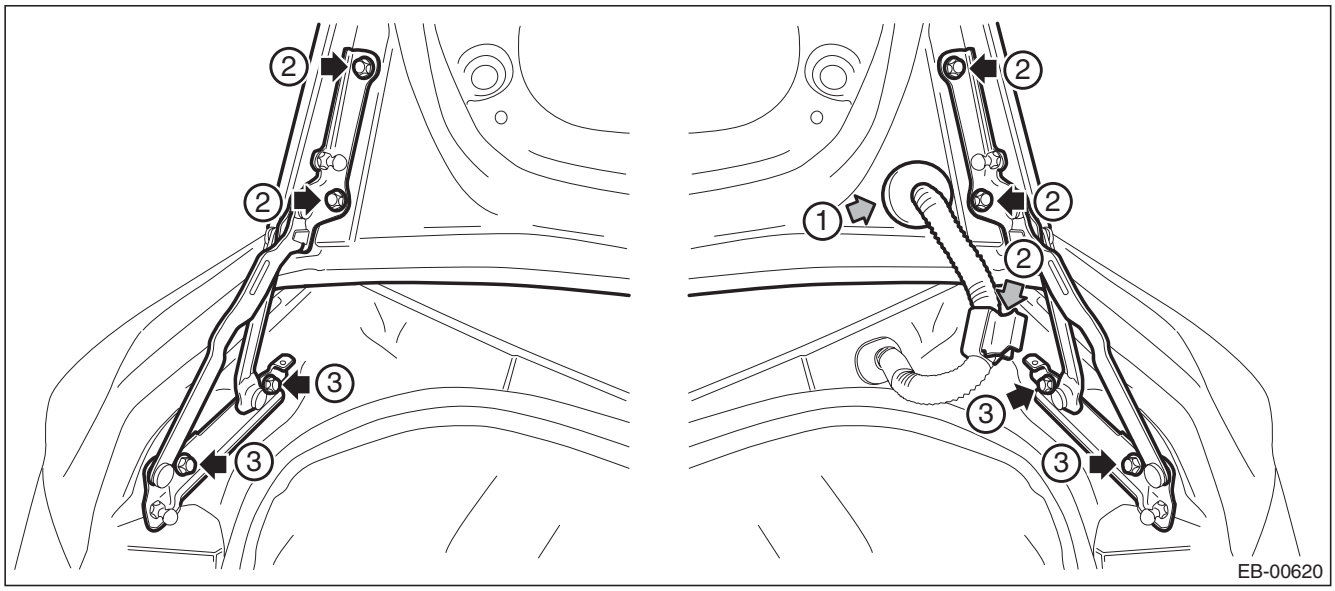

GETtheMANUALS.org

3. TRUNK LID PANEL

1) Disconnect the ground cable from battery.
2) Remove the trunk lid trim.
   (1) Remove the trunk handle.
   (2) Remove the clips and the trunk lid trim.

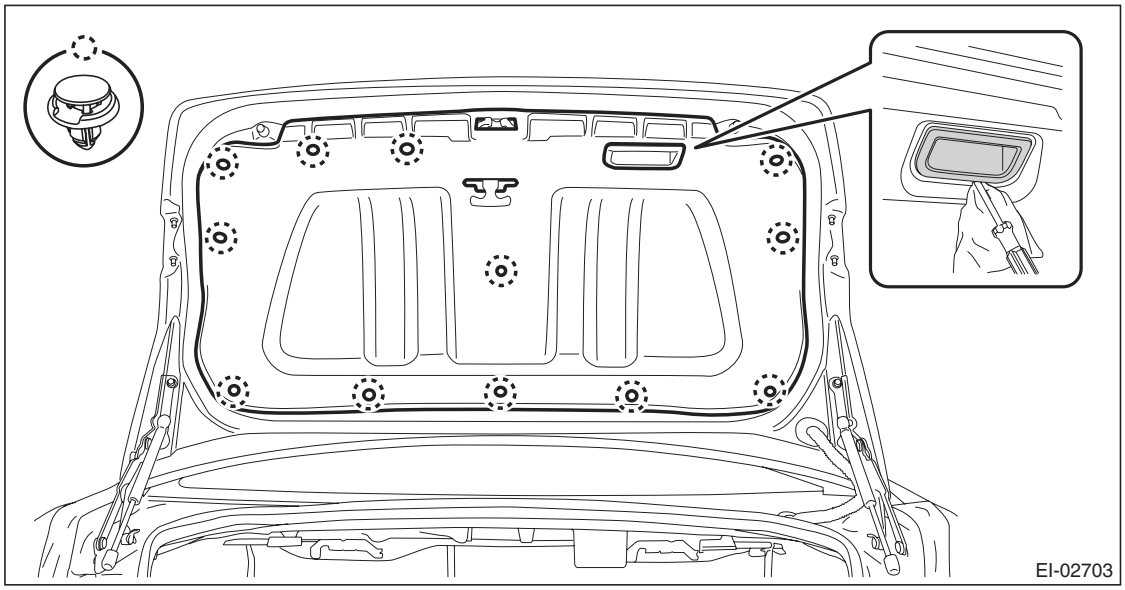

3) Disconnect the connector to remove the trunk lid harness.
4) Remove the trunk lid latch & actuator assembly. <Ref. to SL-49, REMOVAL, Trunk Lid Latch and Actuator Assembly.>
5) Remove the trunk lid garnish. <Ref. to EI-163, REMOVAL, Trunk Lid Garnish.>
6) Remove the trunk lid panel.
   (1) Remove the left and right damper stay upper.
   (2) Remove the grommet and pull out the trunk lid harness. (RH side only)
   (3) Remove the left and right bolts, and remove the trunk lid panel.

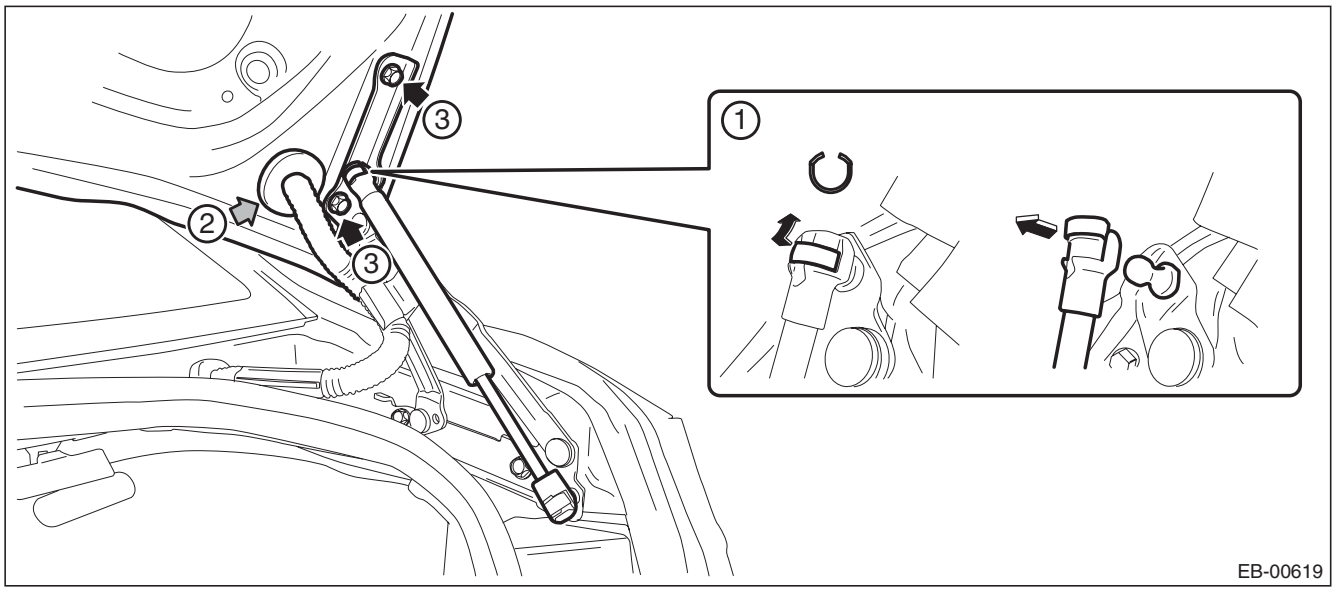

GETtheMANUALS.org

B: INSTALLATION

1) Install each part in the reverse order of removal.
2) Apply grease to the rotating area of hinges and damper stay.
3) Install while paying attention to make a uniform clearance around the trunk lid panel. <Ref. to EB-46, ADJUSTMENT, Trunk Lid.>

Tightening torque:
Refer to "COMPONENT" of "General Description". <Ref. to EB-6, TRUNK LID PANEL, COMPONENT, General Description.>

C: ADJUSTMENT

Adjust the clearance around the trunk lid panel as follows.

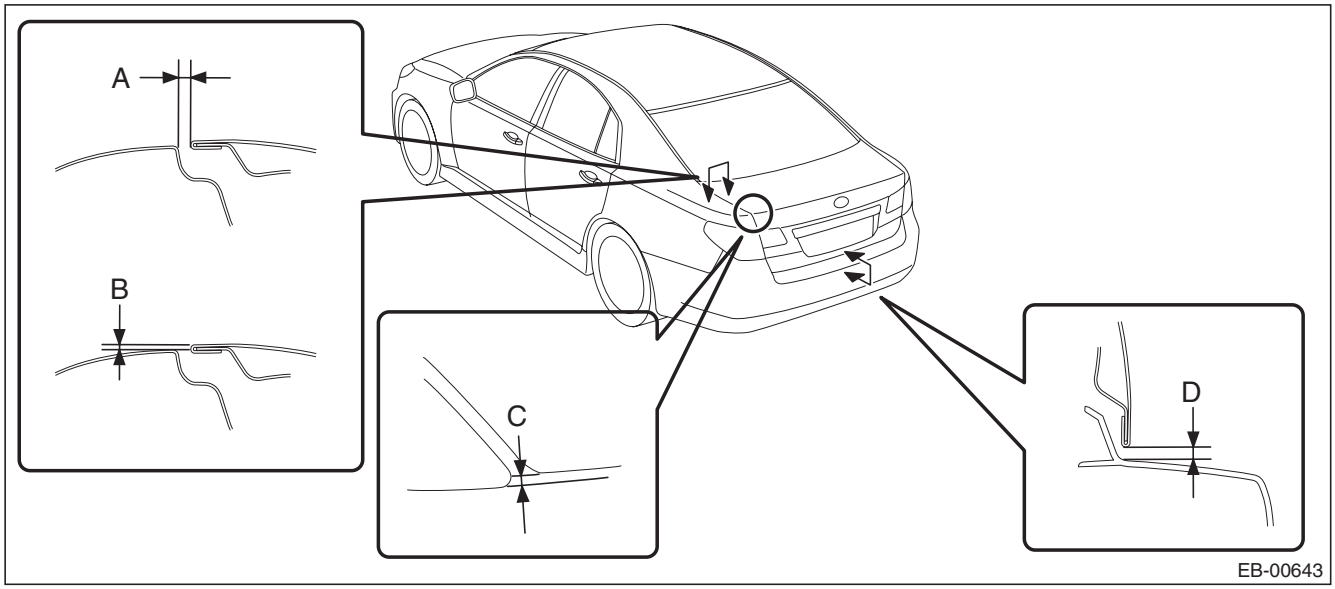

	Part	Standard
A	Trunk lid panel to Rear quarter panel	3.5±1.0 mm (0.14±0.04 in)
B	Surface level gap between trunk lid panel and rear quarter panel	–0.5+1.0, –0.5 mm (–0.02+0.04, –0.02 in)
C	Offset value between trunk lid panel and rear end of rear quarter panel	–0.5±0.7 mm (–0.02±0.03 in)
D	Trunk lid panel to Rear bumper	7.0±1.5 mm (0.28±0.06 in)

GETtheMANUALS.org

1) Adjust the trunk lid panel lateral position.
   (1) Loosen the mounting bolt.
   (2) Align the trunk lid panel lateral panel dimension.

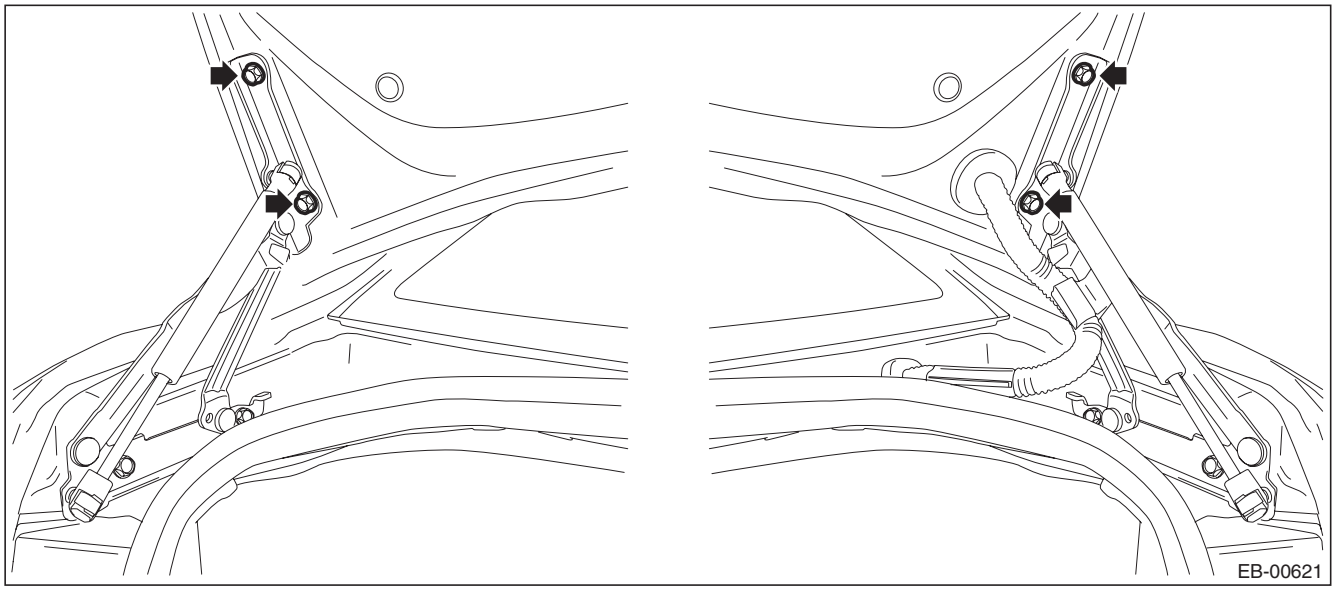

2) Adjust the gap between trunk lid panel and body surface.
   (1) Loosen the bolt.
   (2) Tap striker using plastic hammer to adjust the gap between trunk lid panel and body surface.

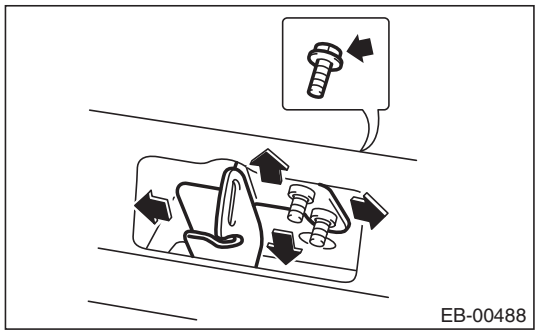

GETtheMANUALS.org

10. Rear Gate

A: REMOVAL

CAUTION:
Rear gate panels are heavy. When removing and installing them, always work in a team of two or more persons.

1. REAR GATE PANEL

1) Disconnect the ground cable from battery.
2) Remove the following parts. <Ref. to EI-164, REMOVAL, Rear Gate Garnish.>
- Rear gate trim
- Rear wiper arm assembly and rear wiper motor assembly
- Rear gate garnish

3) Remove the high-mounted stop light assembly and rear washer nozzle. <Ref. to WW-43, REMOVAL, Rear Washer.>
4) Remove the rear finisher light assembly. <Ref. to LI-54, OUTBACK MODEL, REMOVAL, Rear Finisher Light Assembly.>
5) Remove the rearview camera assembly. <Ref. to ET-46, OUTBACK MODEL, REMOVAL, Rearview Camera System.>
6) Remove the rear gate latch & actuator assembly. <Ref. to SL-47, REMOVAL, Rear Gate Latch and Actuator Assembly.>
7) Remove the clips, and then remove the rear gate drip rubber.

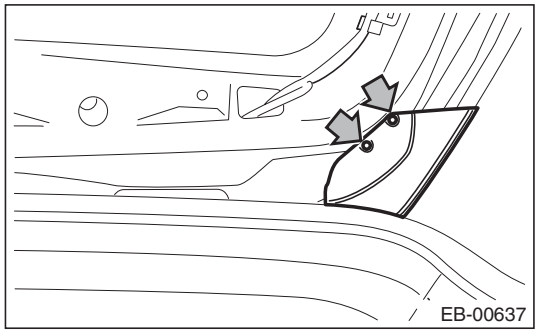

8) Disconnect the rubber duct (A) connection.

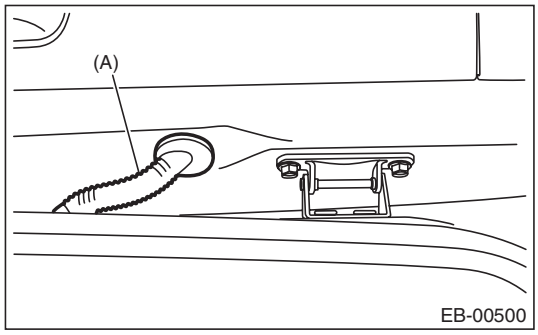

9) Pull out the harnesses and washer hose from the rear gate.
10) Remove harness clip of each connector from the rear gate panel.

GETtheMANUALS.org

11) Before removing the rear gate damper stay, prevent the rear gate from closing using prop or the like.

CAUTION:
If the prop comes off, operators may get injured and vehicle may get damaged. Make sure to support the rear gate with secure material to prevent injury or damage.

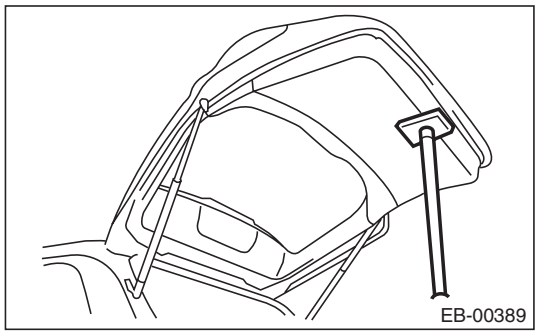

12) Remove the mounting bolt of rear gate damper stay.

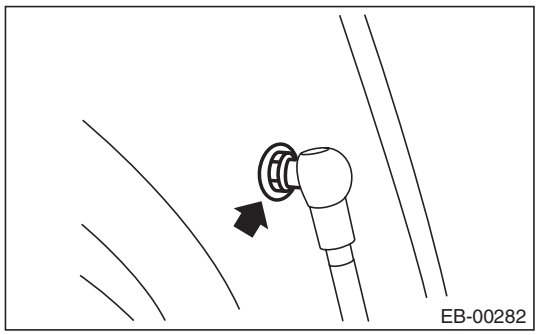

13) Remove the rear gate hinge bolt, and remove the rear gate panel.

CAUTION:
Rear gate panels are heavy. When removing and installing them, always work in a team of two or more persons.

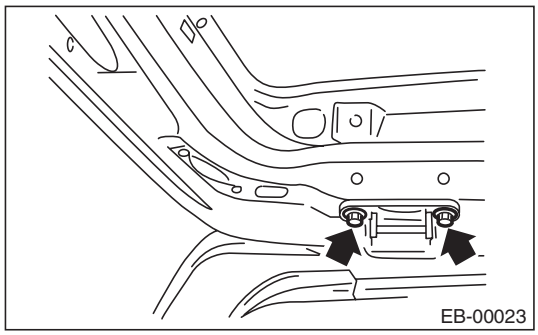

14) Remove the rear gate hinge from the vehicle.

GETtheMANUALS.org

2. REAR GATE DAMPER STAY

CAUTION:
- **Do not damage piston rods and oil seals.**
- **Never disassemble cylinders: They contain gas.**
- **Rear gate panels are heavy. When removing and installing them, always work in a team of two or more persons.**

1) Before removing the rear gate damper stay, prevent the rear gate from closing using prop or the like.

CAUTION:
If the prop comes off, operators may get injured and vehicle may get damaged. Make sure to support the rear gate with secure material to prevent injury or damage.

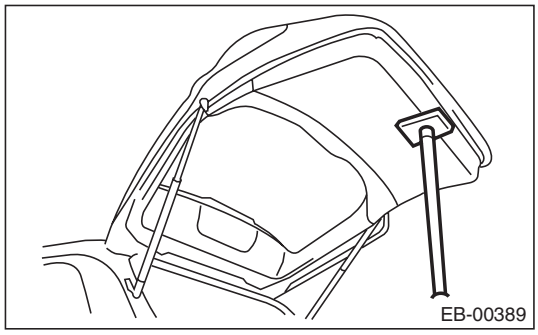

2) Remove the rear gate damper stay by removing mounting bolts.

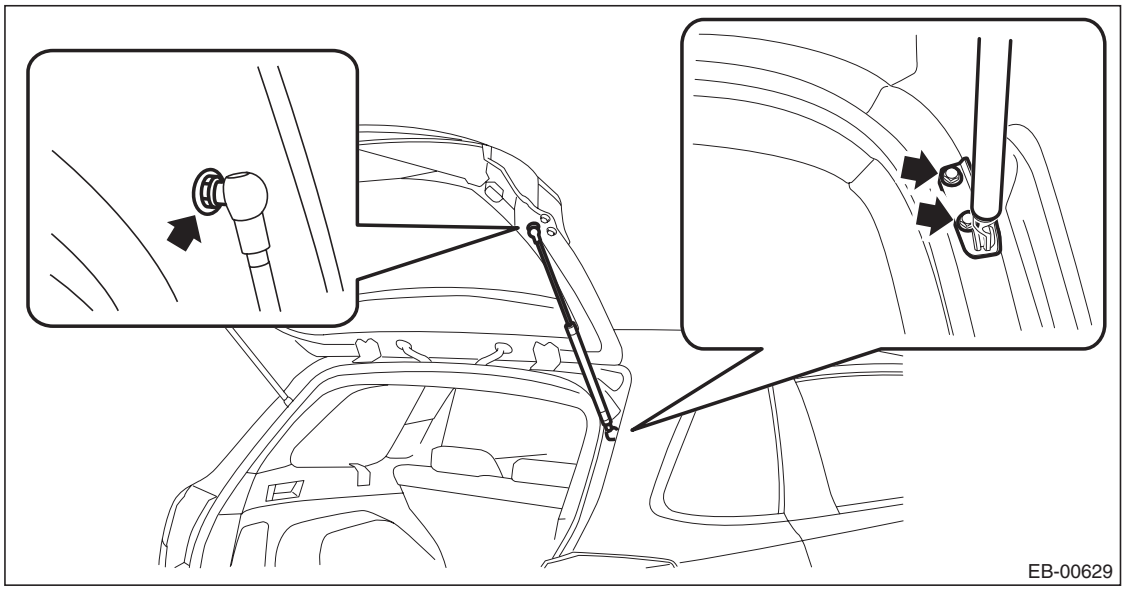

GETtheMANUALS.org

B: INSTALLATION

1. REAR GATE PANEL

CAUTION:
Rear gate panels are heavy. When removing and installing them, always work in a team of two or more persons.

1) Install the rear gate hinges to the vehicle body.
2) Temporarily install the rear gate panel to the rear gate hinges.

NOTE:
When installing, make sure that a uniform clearance is created around the rear gate panel.

3) Adjust the clearance around the rear gate panel. <Ref. to EB-52, ADJUSTMENT, Rear Gate.>
4) Tighten the rear gate hinge bolts.

Tightening torque:
25 N·m (2.55 kgf-m, 18.4 ft-lb)

5) Install each part in the reverse order of removal.

Tightening torque:
Rear gate parts: <Ref. to EB-7, REAR GATE, COMPONENT, General Description.>
Rear gate garnish: 4.5 N·m (0.46 kgf-m, 3.3 ft-lb)
Rear wiper motor & rear wiper arm: <Ref. to WW-4, REAR WIPER, COMPONENT, General Description.>

2. REAR GATE DAMPER STAY

CAUTION:
Rear gate panels are heavy. When removing and installing them, always work in a team of two or more persons.

1) Prevent the rear gate from closing using prop or the like.

CAUTION:
If the prop comes off, operators may get injured and vehicle may get damaged. Make sure to support the rear gate with secure material to prevent injury or damage.

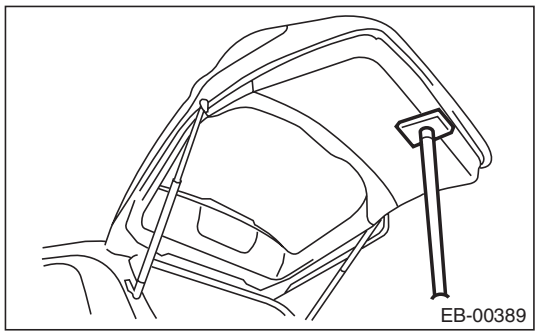

2) Install each part in the reverse order of removal.

Tightening torque:
Refer to "COMPONENT" of "General Description". <Ref. to EB-7, REAR GATE, COMPONENT, General Description.>

GETtheMANUALS.org

C: ADJUSTMENT

Adjust the clearance around the rear gate panel as follows.

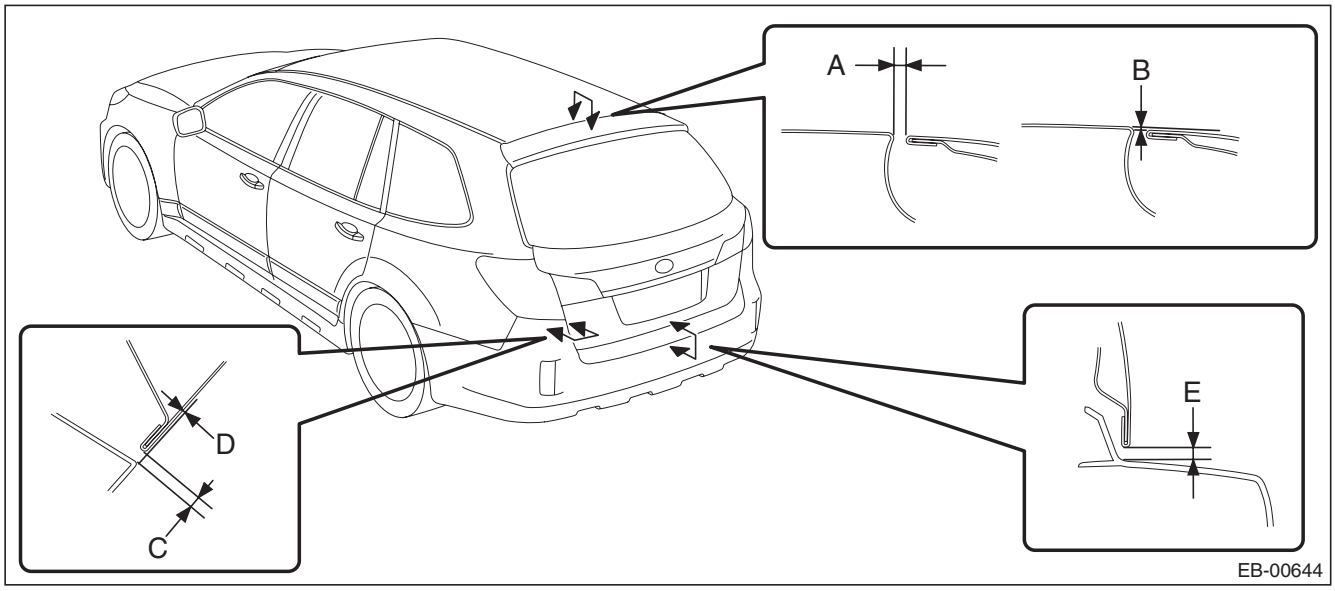

	Part	Standard
A	Rear gate panel to Roof panel	6.6+1.0, –0.5 mm (0.26+0.04, –0.02 in)
B	Surface level gap between rear gate panel and roof panel	1.0±1.0 mm (0.04±0.04 in)
C	Rear gate panel to Rear bumper	5.0±1.0 mm (0.20±0.04 in)
D	Surface level gap between rear gate panel and rear bumper	0.4±1.0 mm (0.02±0.04 in)
E	Rear gate panel to Rear bumper	8.0±1.5 mm (0.31±0.06 in)

1) Align the rear gate panel longitudinal and lateral position.

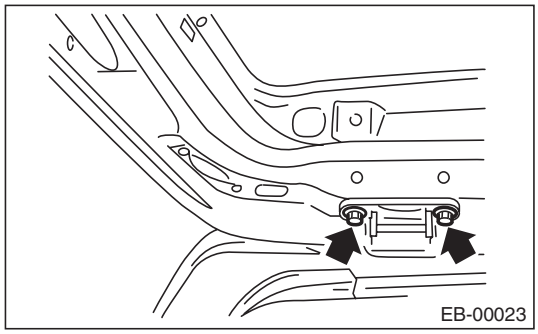

(1) Loosen the hinge attaching bolts.
(2) Align the rear gate panel longitudinal and lateral panel dimension.

Tightening torque:
25 N·m (2.55 kgf-m, 18.4 ft-lb)

GETtheMANUALS.org

2) Adjust the gap between rear gate panel and body surface.

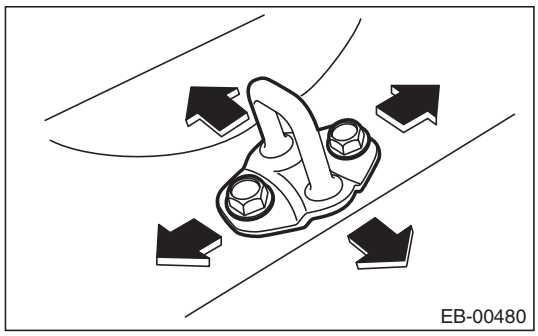

(1) Loosen the bolt.
(2) Tap striker using plastic hammer to adjust the gap between rear gate panel and body surface.

Tightening torque:
25 N·m (2.55 kgf-m, 18.4 ft-lb)

D: DISPOSAL

1. REAR GATE DAMPER STAY

CAUTION:
Gas is colorless, odorless, and harmless. However, gas pressure may spray cutting powder or oil. Be sure to wear dust-resistant goggles.

1) Cover with a vinyl sack as shown in the figure.

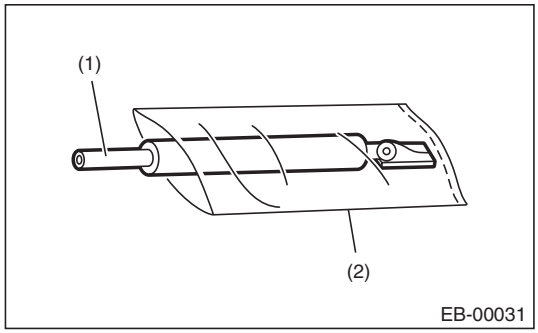

(1) Rear gate damper stay
(2) Vinyl sack

NOTE:
Prevent the vinyl sack from being caught by drill cutting edge.

GETtheMANUALS.org

2) Lift the body side slightly with piston rods fully extended, and secure the body side with vise.
Drill a hole of 2 to 3 mm (0.08 to 0.12 in) diameter at a point 10 to 200 mm (0.39 to 7.87 in) from the body side, and bleed the gas in the rear gate damper stay completely.

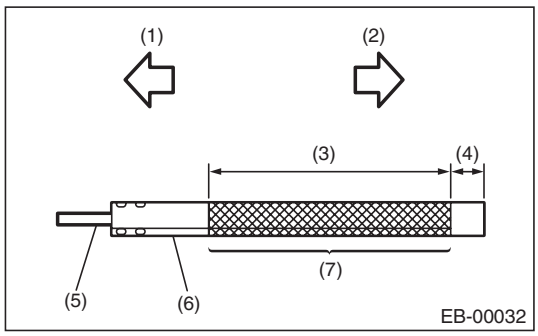

(1) Door side
(2) Body side
(3) 190 mm (7.48 in)
(4) 10 mm (0.39 in)
(5) Piston rod
(6) Cylinder
(7) Portion to be drilled

GETtheMANUALS.org

11. Protector Tape

A: INSTALLATION

Apply the protector tape by the following steps.

1. REAR DOOR PROTECTOR (OUTBACK MODEL)

- Type A

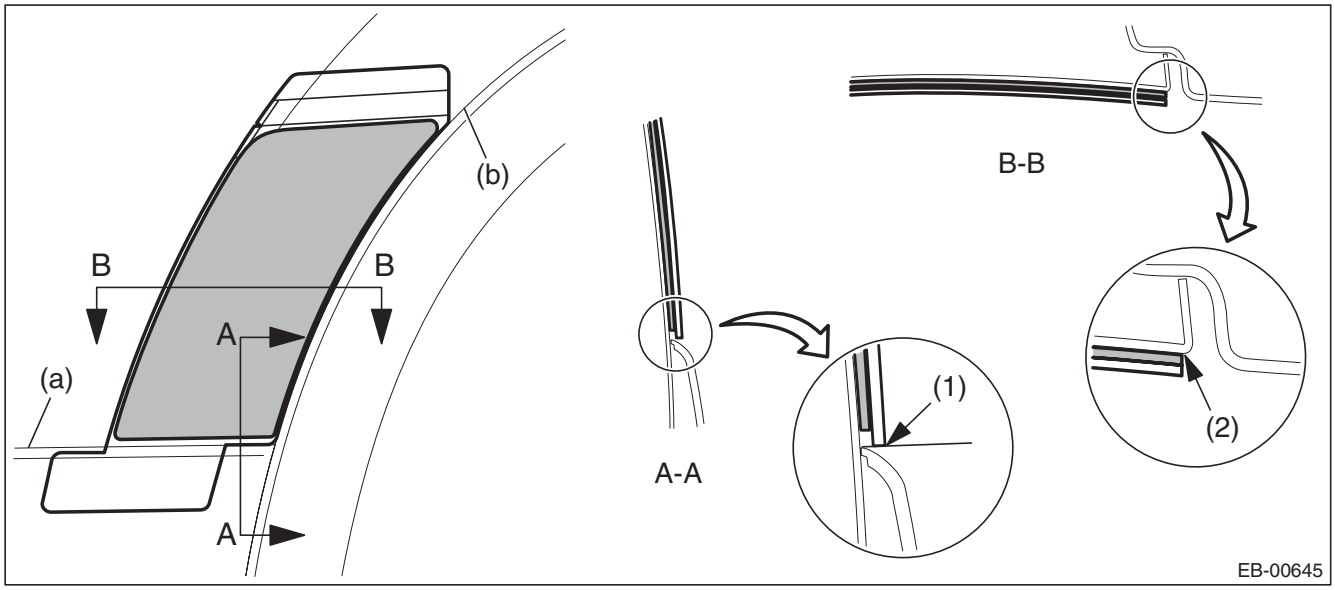

(a)	Rear door garnish end	(b)	Rear door panel end
(1)	Align the application paper to the rear door garnish terminal.	(2)	Align the protector tape to the end of rounded corner.

- Type B

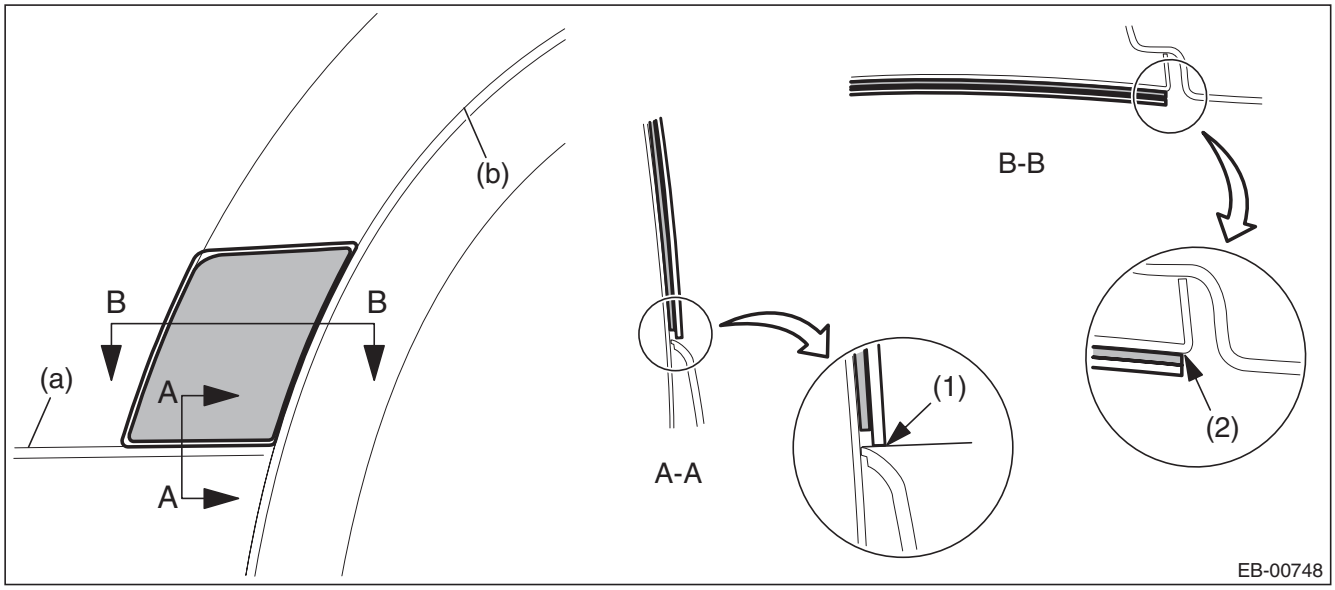

(a)	Rear door garnish end	(b)	Rear door panel end
(1)	Align the application paper to the rear door garnish terminal.	(2)	Align the protector tape to the end of rounded corner.

GETtheMANUALS.org

Protector Tape

1) Clean the area around applying position to remove any foreign objects on body.
2) Detach the backing paper and apply the protector tape after positioning it correctly.
3) Detach the backing papers, and moisten the applying area and the backside of protector tape by spraying liquid (mild detergent solution at 3% concentration).
4) Apply the protector tape to the vehicle body.

CAUTION:
Remove the water or air bubbles out of the protector tape by using the plastic or rubber spatula.
5) Detach the application tape and temporary retention tape.

GETtheMANUALS.org

CRUISE CONTROL SYSTEM

CC

Page

1. General Description 2
2. Relay and Fuse 4
3. Cruise Control System 5
4. Cruise Control Module 6
5. Cruise Control Command Switch 7
6. Combination Meter 11
7. Stop Light & Brake Switch 12
8. Clutch Switch 13
9. Inhibitor Switch 14
10. Transmission Control Module (TCM) 15
11. Neutral Position Switch 16

GETtheMANUALS.org

1. General Description

A: COMPONENT

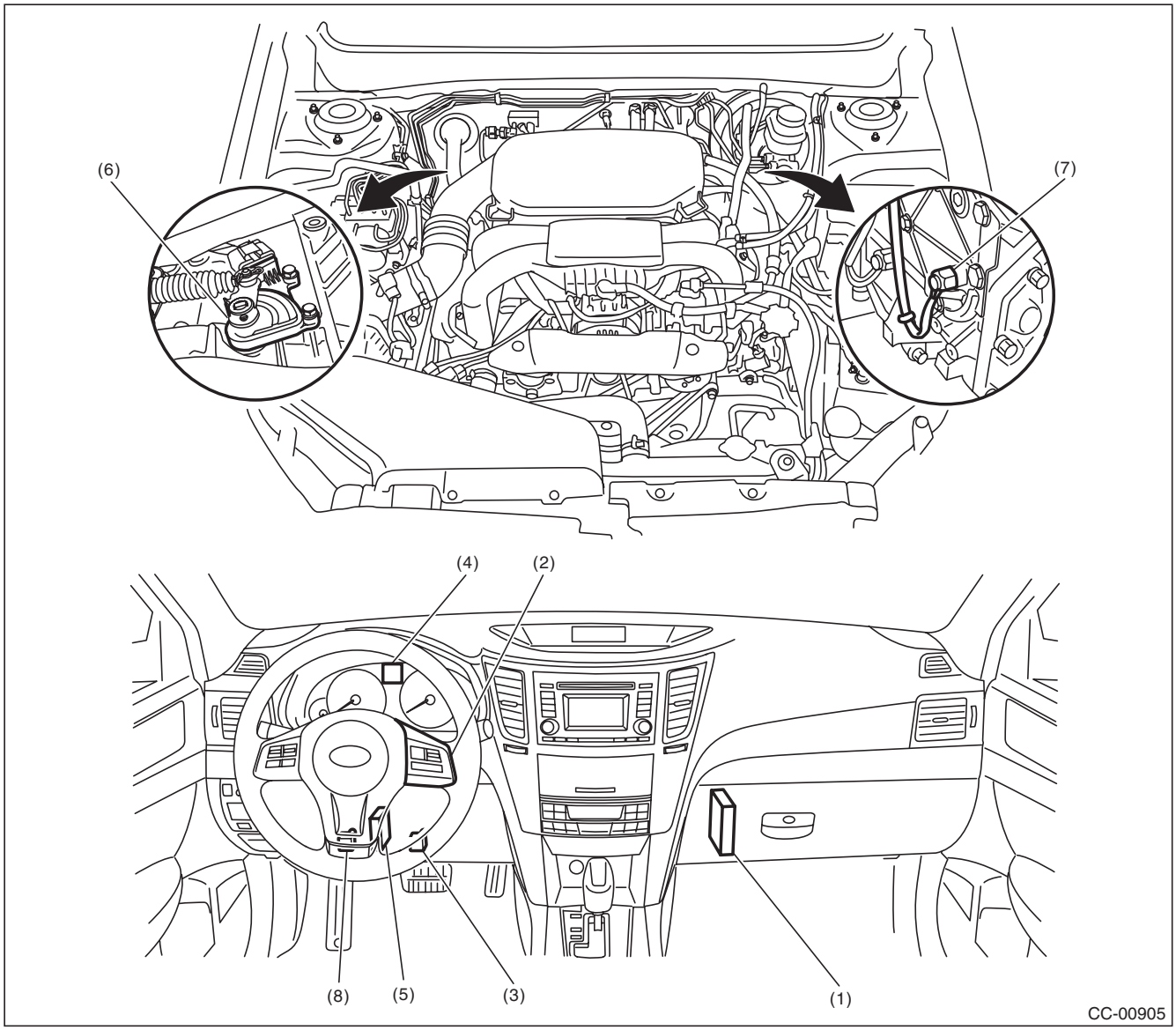

(1)	Engine control module (ECM)	(4)	Cruise indicator light and cruise set indicator light	(7)	Neutral position switch (MT model)
(2)	Cruise control command switch	(5)	Transmission control module (TCM) (AT and CVT model)	(8)	Clutch switch (MT model)
(3)	Stop light and brake switch	(6)	Inhibitor switch (CVT model)		

NOTE:
Inhibitor switch for 5AT model is installed on the valve body assembly.

GETtheMANUALS.org

B: CAUTION

- Before disassembling or reassembling parts, always disconnect the battery ground cable from battery. When replacing the audio, control module and other parts provided with memory functions, record the memory contents before disconnecting the battery ground cable. Otherwise, the memory is cleared.
- Reassemble the parts in the reverse order of disassembly procedure unless otherwise indicated.
- Adjust parts to the given specifications.
- Connect the connectors securely during reassembly.
- After reassembly, make sure that the functional parts operate normally.
- Yellow connectors and harnesses with yellow tapes around them are the connectors and harnesses for the airbag system. Using a tester above such circuits may cause malfunction of airbag system. Follow the cautions for the airbag system in this case. <Ref. to AB-9, CAUTION, General Description.>
- Be careful not to damage the airbag system wiring harness when servicing electrical parts and switches.

C: PREPARATION TOOL

TOOL NAME	REMARKS
Circuit tester	Used for measuring resistance and voltage.

GETtheMANUALS.org

2. Relay and Fuse

A: LOCATION

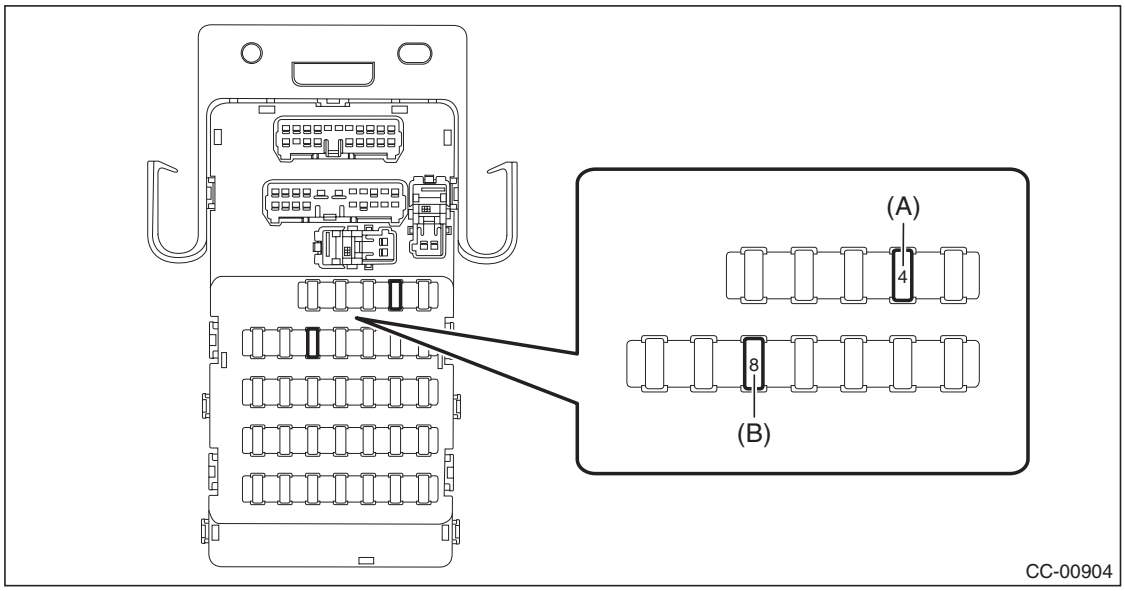

Relay & fuse box	Fuse 7.5A (ECM, stop light & brake switch, clutch switch)	(A)
	Fuse 15A (stop light & brake switch)	(B)

NOTE:
For other related fuses, refer to the wiring diagram. <Ref. to WI-15, Power Supply Circuit.>

B: INSPECTION

1. CHECK FUSE.

1) Remove the fuse and inspect visually.
2) If the fuse is blown out, replace the fuse.

NOTE:
If the fuse is blown again, check the system wiring harness.

GETtheMANUALS.org

3. Cruise Control System

A: WIRING DIAGRAM

Refer to “Cruise Control System” in the wiring diagram. <Ref. to WI-105, WIRING DIAGRAM, Cruise Control System.>

B: INSPECTION

Refer to “Basic Diagnostic Procedure” of “CRUISE CONTROL (DIAGNOSTICS)” section. <Ref. to CC(diag)-2, Basic Diagnostic Procedure.>

C: NOTE

For operation procedures of each component of the cruise control system, refer to the respective section.

- Cruise control unit: <Ref. to CC-6, Cruise Control Module.>
- Cruise control command switch: <Ref. to CC-7, Cruise Control Command Switch.>
- Combination meter: <Ref. to CC-11, Combination Meter.>
- Stop light & brake switch: <Ref. to CC-12, Stop Light & Brake Switch.>
- Clutch switch: <Ref. to CC-13, Clutch Switch.>
- Inhibitor switch: <Ref. to CC-14, Inhibitor Switch.>
- Transmission control module (TCM): <Ref. to CC-15, Transmission Control Module (TCM).>
- Neutral position switch: <Ref. to CC-16, Neutral Position Switch.>

GETtheMANUALS.org

4. Cruise Control Module

A: NOTE

The control of cruise control system is carried out in engine control module (ECM).

B: REMOVAL

- H4 non-turbo model: <Ref. to FU(H4SO)-46, REMOVAL, Engine Control Module (ECM).>
- H4 turbo model: <Ref. to FU(H4DOTC)-58, REMOVAL, Engine Control Module (ECM).>
- H6 model: <Ref. to FU(H6DO)-54, REMOVAL, Engine Control Module (ECM).>

C: INSTALLATION

- H4 non-turbo model: <Ref. to FU(H4SO)-46, INSTALLATION, Engine Control Module (ECM).>
- H4 turbo model: <Ref. to FU(H4DOTC)-58, INSTALLATION, Engine Control Module (ECM).>
- H6 model: <Ref. to FU(H6DO)-54, INSTALLATION, Engine Control Module (ECM).>

GETtheMANUALS.org

5. Cruise Control Command Switch

A: REMOVAL

1) Position the front wheels straight ahead. (After moving a vehicle 5 m (16 ft) or more with front wheels positioned straight ahead, make sure that the vehicle moves straight ahead.)
2) Turn the ignition switch to OFF.
3) Disconnect the ground cable from battery and wait for at least 60 seconds before starting work.
4) Remove the driver's airbag module assembly.

CAUTION:
Before handling the airbag module, refer to "CAUTION" of "General Description" in "AIRBAG SYSTEM". <Ref. to AB-9, CAUTION, General Description.>

(1) Using a hexagon wrench etc. wrapped by protective tape, insert the snap pins and release the locks (3 locations).

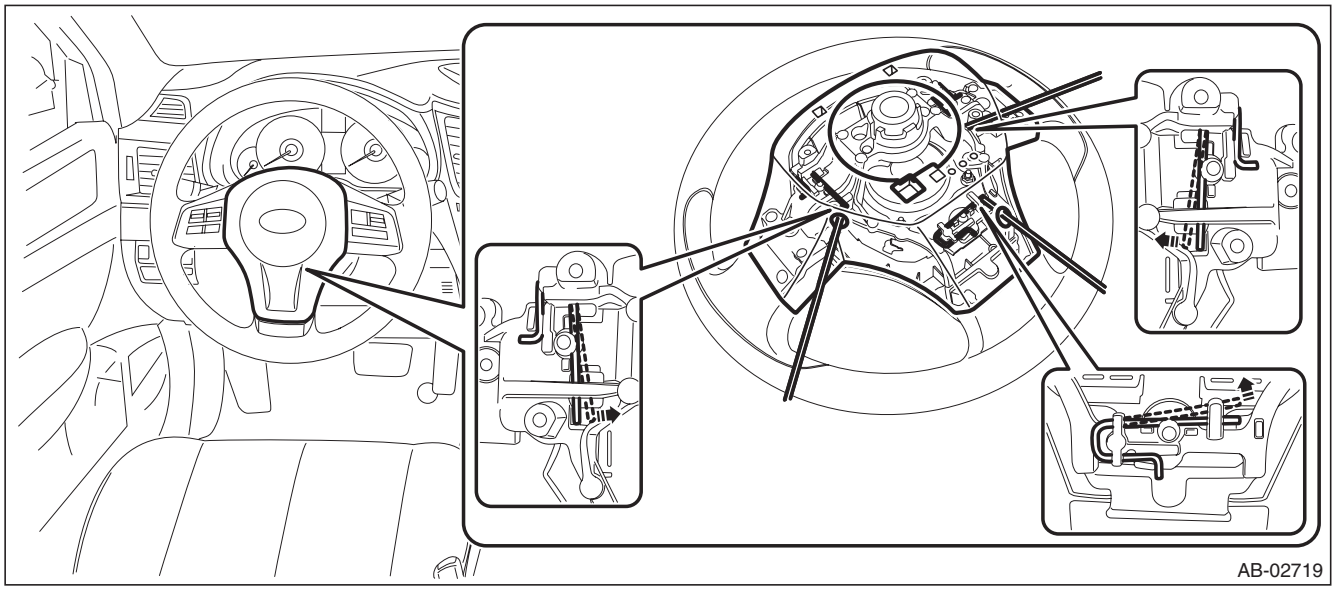

(2) Disconnect the horn harness and airbag connector and remove the airbag module assembly. <Ref. to AB-18, PROCEDURE, Airbag Connector.>

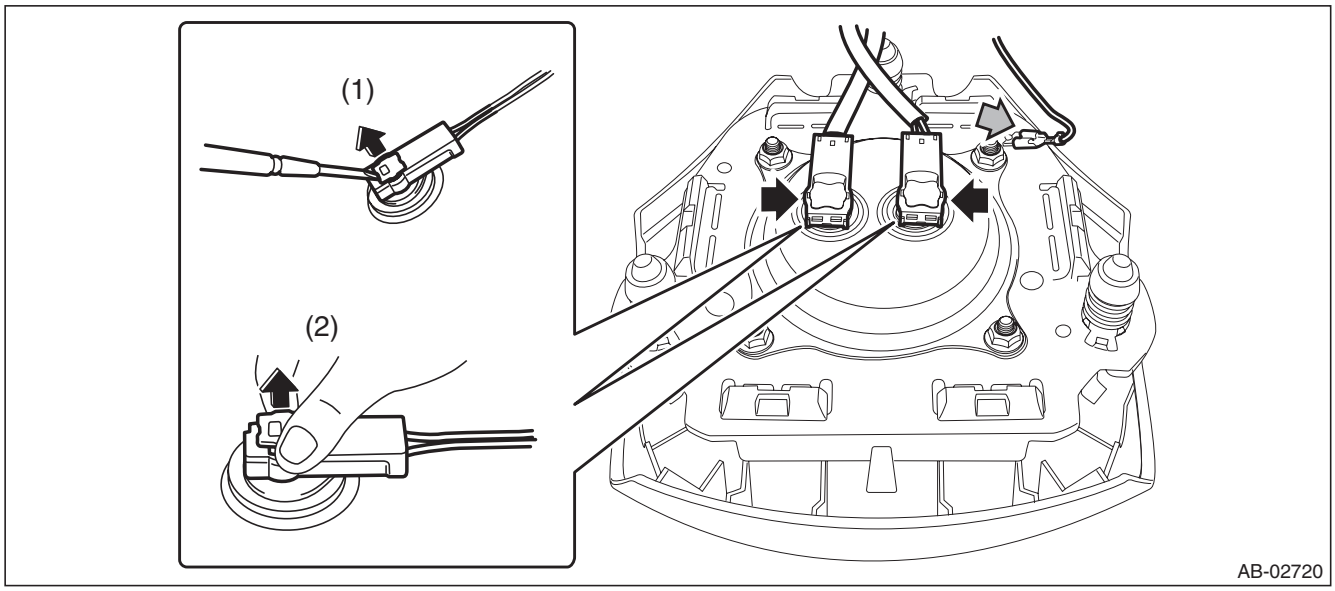

GETtheMANUALS.org

5) Remove the steering wheel.

CAUTION:
- **Always use the steering wheel puller for removal to avoid deforming the steering wheel.**
- **If the steering wheel has been removed, make sure that the roll connector is not turned from the original position.**

Preparation tool: Steering wheel puller

(1) Disconnect the connector and remove the nut.
(2) Put alignment marks and remove the steering wheel using a steering puller.

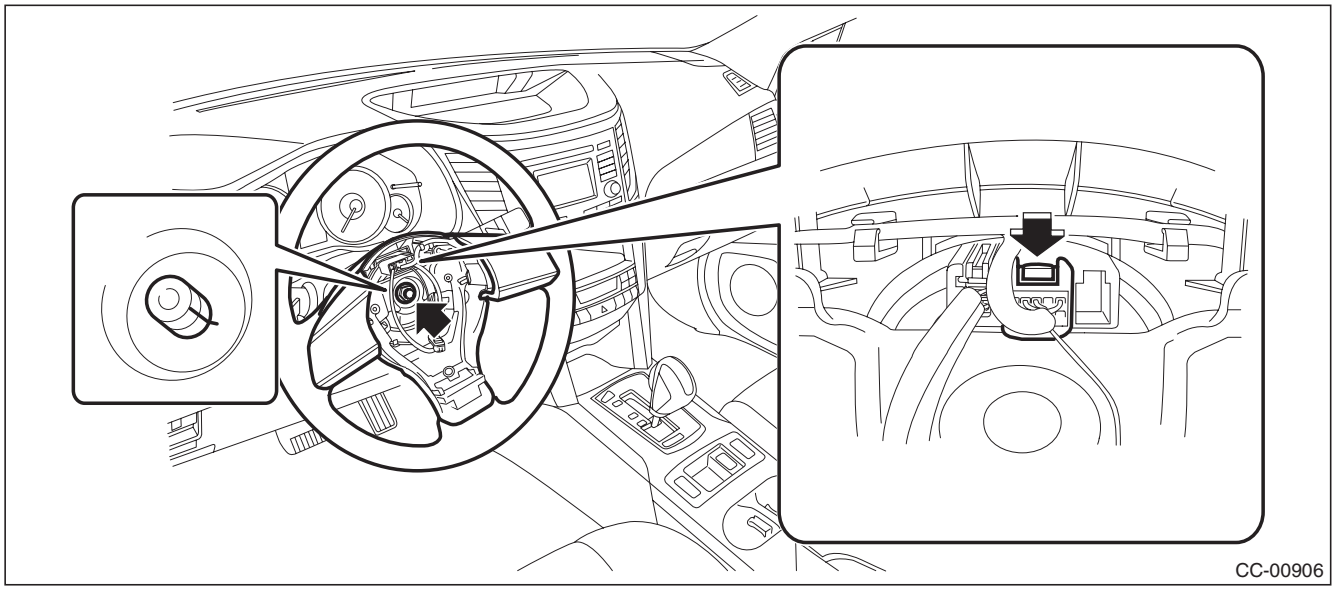

6) Remove the cruise control command switch.

(1) Remove the screw, disconnect the connector and remove the paddle shift switch. (Model with paddle shift)

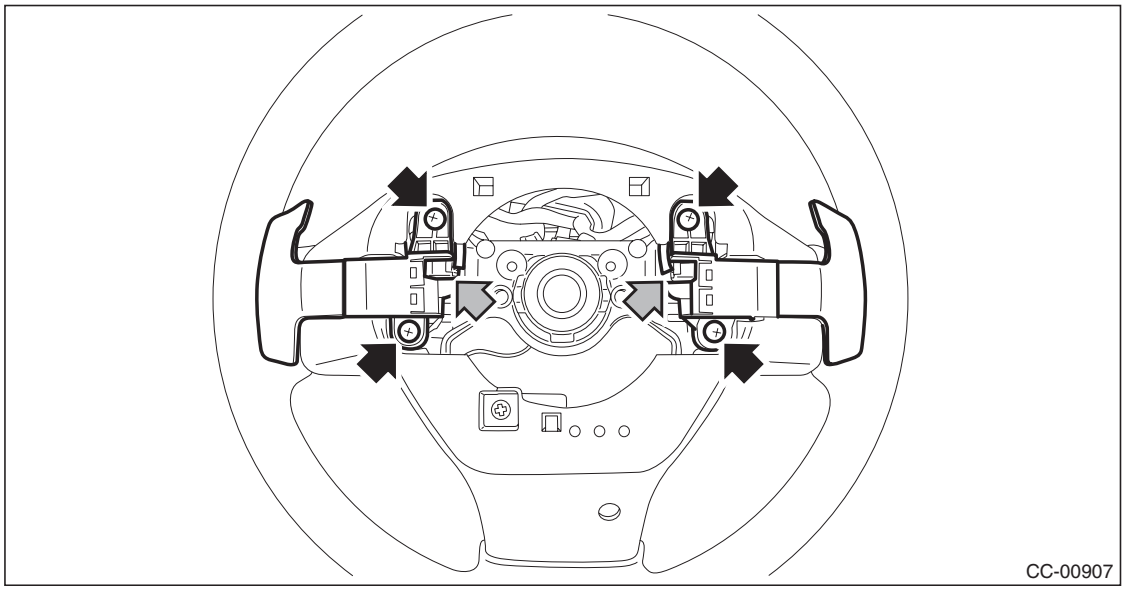

GETtheMANUALS.org

(2) Disconnect the claws and then remove the lower cover.

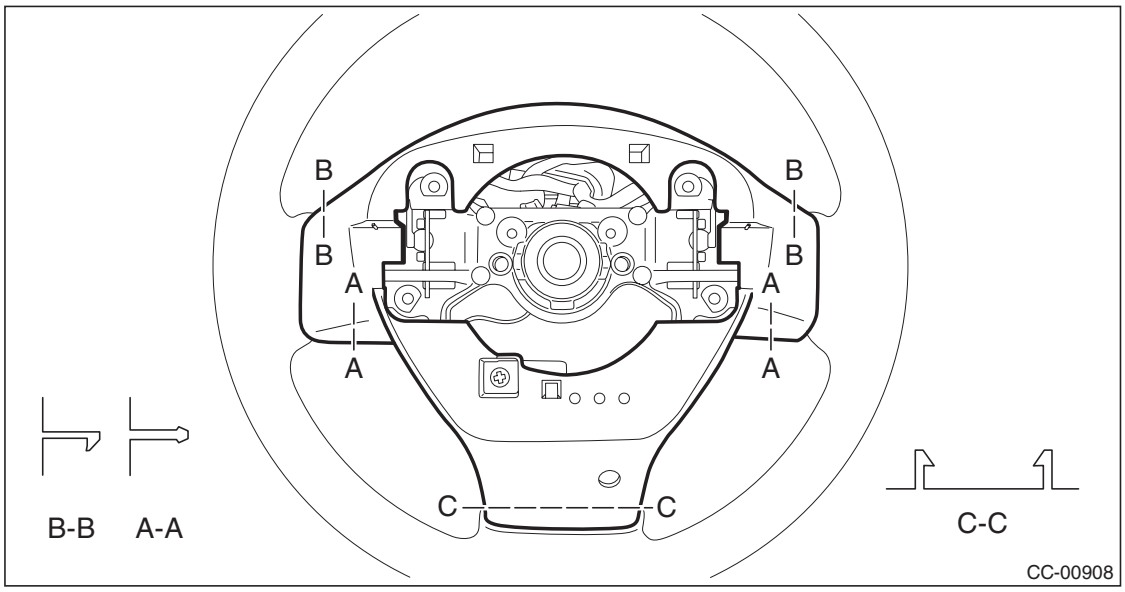

(3) Remove the screw to remove the cruise control command switch assembly.

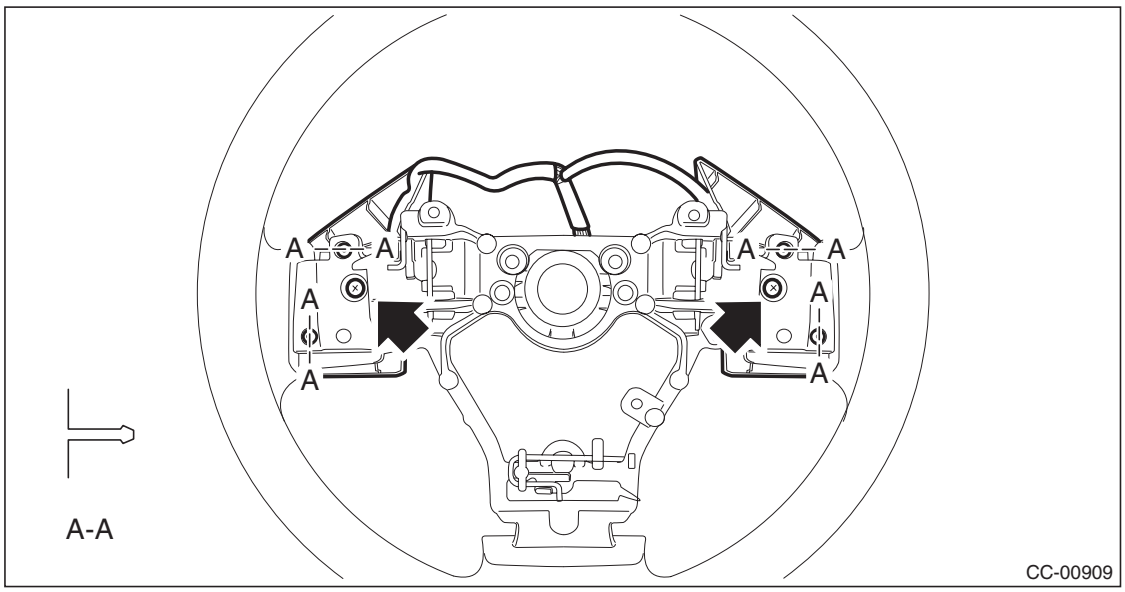

B: INSTALLATION

1) Install each part in the reverse order of removal.

CAUTION:

- **Before handling the airbag module, refer to "CAUTION" of "General Description" in "AIRBAG SYSTEM". <Ref. to AB-9, CAUTION, General Description.>**
- **Do not allow harness and connectors to interfere or get tangled up with other parts.**

2) Before installing steering wheel, be sure to adjust the direction of roll connector with steering. <Ref. to AB-101, ADJUSTMENT, Roll Connector.>

Tightening torque:

Steering wheel: 39 N·m (3.98 kgf-m, 28.8 ft-lb)

Clearance:

Between column cover and steering wheel: 2 — 4 mm (0.08 — 0.16 in)

GETtheMANUALS.org

C: INSPECTION

1) Disconnect the cruise control command switch connector.
2) Check the resistance between cruise control command switch terminals.

Preparation tool: Circuit tester

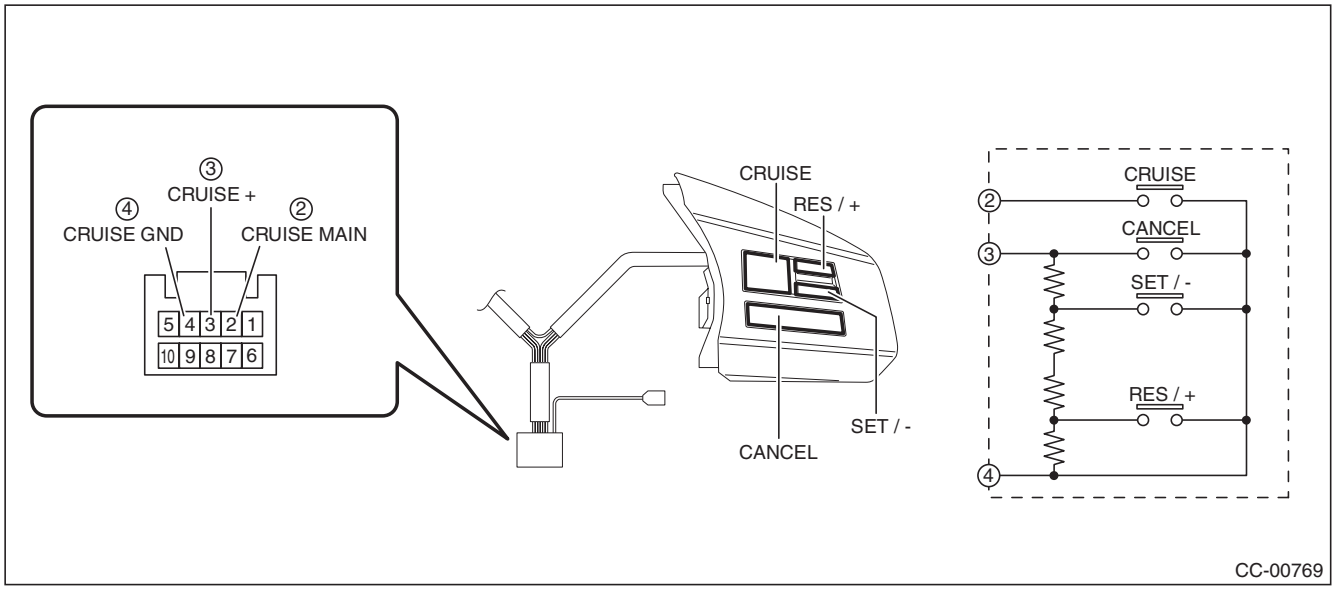

Terminal No.	Inspection conditions		Standard
3 — 4	CANCEL SET/– RES/+	All OFF	Approx. 4 kΩ
3 — 4	CANCEL	ON	Less than 1 Ω
3 — 4	SET/–	ON	Approx. 250 Ω
3 — 4	RES/+	ON	Approx. 1470 Ω
2 — 4	CRUISE (MAIN)	OFF	1 MΩ or more
2 — 4		ON	Less than 1 Ω

3) Replace the cruise control command switch if the inspection result is not within the standard value.

GETtheMANUALS.org

6. Combination Meter

A: NOTE

For the combination meter, refer to “INSTRUMENTATION/DRIVER INFO” section. <Ref. to IDI-21, Combination Meter.>

GETtheMANUALS.org

7. Stop Light & Brake Switch

A: NOTE

For stop light and brake switch, refer to “BRAKE” section. <Ref. to BR-66, INSPECTION, Stop Light Switch.>

GETtheMANUALS.org

8. Clutch Switch

A: NOTE

For clutch switch, refer to “CLUTCH” section. <Ref. to CL-31, Clutch Switch.>

GETtheMANUALS.org

9. Inhibitor Switch

A: NOTE

1. CVT MODEL

For inhibitor switch, refer to “CONTINUOUSLY VARIABLE TRANSMISSION” section. <Ref. to CVT-95, Inhibitor Switch.>

2. 5AT MODEL

Inhibitor switch cannot be removed and checked, because the inhibitor switch is installed on control valve assembly.
When a malfunction occurs, refer to “AUTOMATIC TRANSMISSION (DIAGNOSTICS)” section. <Ref. to 5AT(diag)-36, DTC P0705 TRANSMISSION RANGE SENSOR CIRCUIT (PRNDL INPUT), Diagnostic Procedure with Diagnostic Trouble Code (DTC).>

GETtheMANUALS.org

10. Transmission Control Module (TCM)

A: NOTE

For transmission control module (TCM), refer to following section.

- CVT model: <Ref. to CVT-124, Transmission Control Module (TCM).>
- 5AT model: <Ref. to 5AT-57, Transmission Control Module (TCM).>

GETtheMANUALS.org

11.Neutral Position Switch

A: NOTE

For neutral position switch, refer to “MANUAL TRANSMISSION AND DIFFERENTIAL” section. <Ref. to 6MT-37, Switches and Harness.>

GETtheMANUALS.org

CRUISE CONTROL SYSTEM (DIAGNOSTICS)

CC(diag)

Page

1. Basic Diagnostic Procedure 2
2. General Description 5
3. Electrical Component Location 6
4. Engine Control Module (ECM) I/O Signal 7
5. Subaru Select Monitor 8
6. Read Cancel Code 9
7. Real-time Diagnosis 10
8. Diagnostics with Phenomenon 11
9. List of Cancel Code 13
10. Diagnostic Procedure with Cancel Code 15

GETtheMANUALS.org

1. Basic Diagnostic Procedure

A: PROCEDURE

CAUTION:
- **When performing diagnosis, observe the legal speed limit on the road.**
- **The cancel code will be also appear when cruise control is cancelled by the driver's operation. Do not confuse them.**
- **Be sure to get an assistant to support the diagnosis while driving, and have him/her operate the select monitor.**

Step		Check	Yes	No
1	**CHECK MALFUNCTION INDICATOR LIGHT.** Make sure the malfunction indicator light illuminates.	Does the malfunction indicator light illuminate?	Go to step **5**.	Go to step **2**.
2	**CHECK CRUISE INDICATOR LIGHT.** Make sure the cruise indicator light blinks.	Does the cruise indicator light blink?	Go to step **7**.	Go to step **3**.
3	**CHECK CRUISE SWITCH OPERATION.** Check the CRUISE switch operation. (Check the illumination of the CRUISE indicator.)	Is the CRUISE switch turned on? (Does the CRUISE indicator illuminate?)	Go to step **4**.	Go to phenomenon 1. <Ref. to CC(diag)-11, DIAGNOSTIC PROCEDURE WITH PHENOMENON, Diagnostics with Phenomenon.>
4	**CHECK CRUISE CONTROL SET OPERATION.** Check the cruise control setting operation.	Can the cruise control be set while driving at 40 km/h (25 MPH) or more?	Go to step **8**.	Go to step **7**.
5	**CHECK DTC.** Read all DTCs using the Subaru Select Monitor.	Is an engine or ABS/VDC related DTC displayed?	Record the DTC. Go to step **6**.	Go to phenomenon 2. <Ref. to CC(diag)-11, DIAGNOSTIC PROCEDURE WITH PHENOMENON, Diagnostics with Phenomenon.>
6	**CHECK FREEZE FRAME DATA.** Using the Subaru Select Monitor, check the Freeze Frame Data or Information in Trouble State.	Was the Freeze Frame Data or Information in Trouble State recorded?	Record the data. Perform the diagnosis according to the engine or ABS/VDC related DTC.	Perform the diagnosis according to the engine or ABS/VDC related DTC.
7	**CHECK CANCEL CODE.** Using the Subaru Select Monitor, read the cancel codes. NOTE: • Do not turn the ignition switch to OFF after the cruise control is deactivated. • Do not operate the cruise control command switch after the cruise control is deactivated. If the above is performed, the cancel code will be cleared.	Is it possible to read the cancel codes?	Perform the diagnosis according to the cancel code. <Ref. to CC(diag)-13, LIST, List of Cancel Code.>	Go to step **8**.

GETthemANUALS.org

Step		Check	Yes	No
8	**CHECK SET INDICATOR.** Check the illumination of the SET indicator.	Does the SET indicator illuminate?	Go to step **9**.	Go to phenomenon 3. <Ref. to CC(diag)-11, DIAGNOSTIC PROCEDURE WITH PHENOMENON, Diagnostics with Phenomenon.>
9	**CHECK VEHICLE SPEED IS HELD WITHIN SET SPEED.** Make sure the vehicle speed is held within set speed.	Is the vehicle speed kept within setting speed ±3 km/h (±2 MPH)? (Make sure that on a level road.)	Go to step **10**.	Go to phenomenon 4. <Ref. to CC(diag)-11, DIAGNOSTIC PROCEDURE WITH PHENOMENON, Diagnostics with Phenomenon.>
10	**CHECK RES/+ OPERATION.** Check the RES/+ switch operation.	Does the vehicle speed increase or return to set speed after RES/+ switch has been pressed?	Go to step **11**.	Go to phenomenon 5. <Ref. to CC(diag)-11, DIAGNOSTIC PROCEDURE WITH PHENOMENON, Diagnostics with Phenomenon.>
11	**CHECK SET/– OPERATION.** Check the SET/– switch operation.	Does the vehicle speed decrease after SET/– switch has been pressed?	Go to step **12**.	Go to phenomenon 6. <Ref. to CC(diag)-11, DIAGNOSTIC PROCEDURE WITH PHENOMENON, Diagnostics with Phenomenon.>
12	**CANCEL OPERATION CHECK.** Check the CANCEL switch operation.	Is the cruise control released after CANCEL switch has been pressed?	Go to step **13**.	Go to phenomenon 7. <Ref. to CC(diag)-11, DIAGNOSTIC PROCEDURE WITH PHENOMENON, Diagnostics with Phenomenon.>
13	**CHECK CRUISE CONTROL RELEASE OPERATION.** Check the cruise control release operation.	Is the cruise control released after brake pedal has been depressed?	Go to step **14**.	Go to phenomenon 8. <Ref. to CC(diag)-11, DIAGNOSTIC PROCEDURE WITH PHENOMENON, Diagnostics with Phenomenon.>

GETtheMANUALS.org

Step		Check	Yes	No
14	**CHECK CRUISE CONTROL RELEASE OPERATION.** Check the cruise control release operation.	Is the cruise control released after shifting to the neutral position?	Go to step **15**.	Go to phenomenon 9. <Ref. to CC(diag)-11, DIAGNOSTIC PROCEDURE WITH PHENOMENON, Diagnostics with Phenomenon.>
15	**CHECK CRUISE CONTROL RELEASE OPERATION.** Check the cruise control release operation.	Is the cruise control released after depressing the clutch pedal?	Finish the diagnosis.	Go to phenomenon 10. <Ref. to CC(diag)-11, DIAGNOSTIC PROCEDURE WITH PHENOMENON, Diagnostics with Phenomenon.>

GETtheMANUALS.org

2. General Description

A: CAUTION

Airbag system wiring harness is routed near the cruise control command switch.

CAUTION:
- **Do not use the electrical test equipment on the airbag system wiring harnesses and connector circuits.**
- **Be careful not to damage the airbag system wiring harness when servicing the cruise control command switch. Airbag system wiring harness is routed near the cruise control command switch.**

B: PREPARATION TOOL

1. SPECIAL TOOL

ILLUSTRATION	TOOL NUMBER	DESCRIPTION	REMARKS
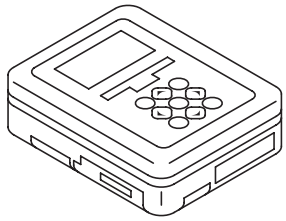 ST1B022XU0	1B022XU0	SUBARU SELECT MONITOR III KIT	Used for troubleshooting the electrical system.

2. GENERAL TOOL

TOOL NAME	REMARKS
Circuit tester	Used for measuring resistance, voltage and current.

C: INSPECTION

Measure the battery voltage and specific gravity of electrolyte.

Standard voltage:
12 V or more

Specific gravity:
1.260 or more

GETtheMANUALS.org

3. Electrical Component Location

A: LOCATION

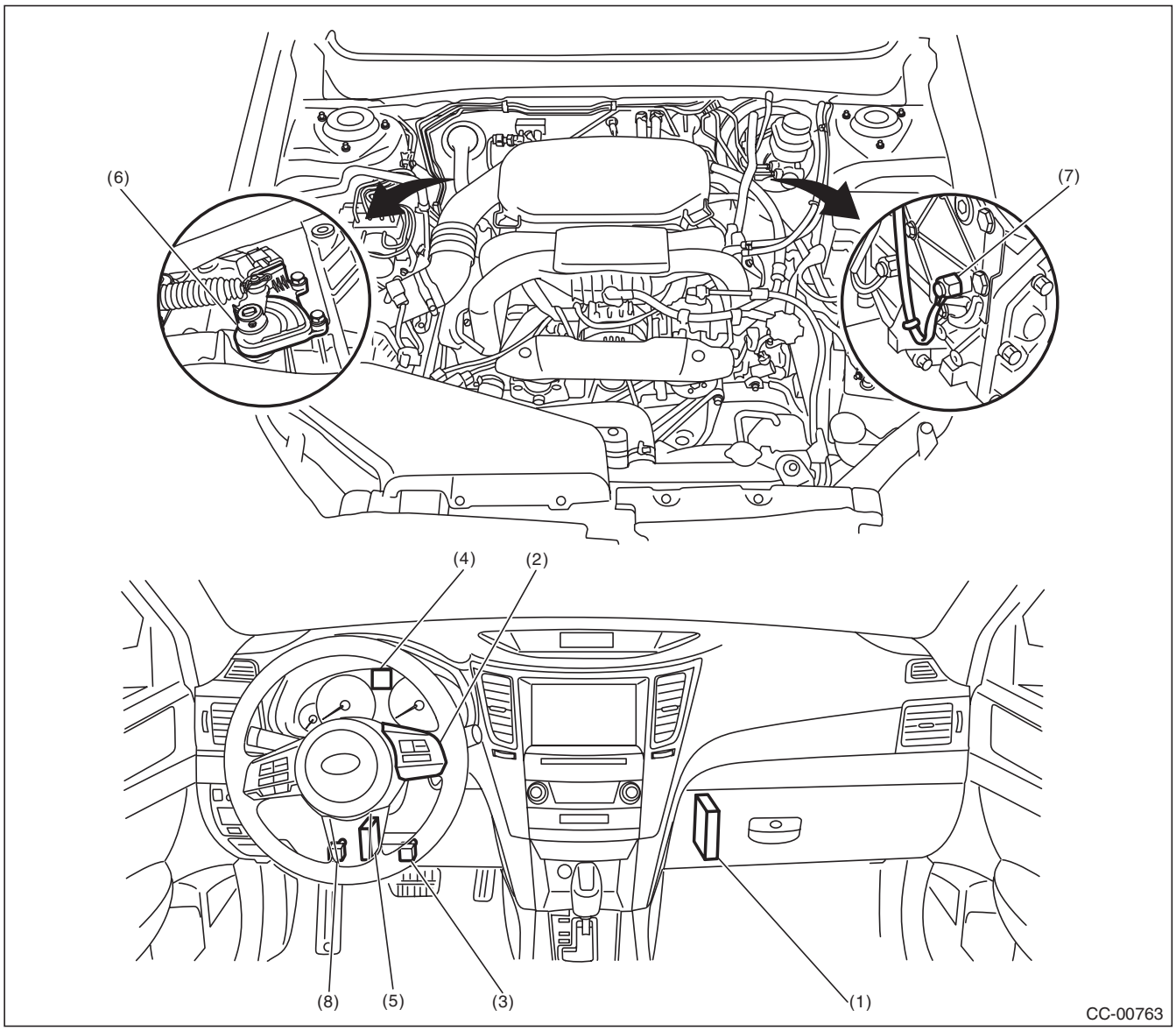

(1)	Engine control module (ECM)	(4)	Cruise indicator light and cruise set indicator light	(7)	Neutral position switch (MT model)
(2)	Cruise control command switch	(5)	Transmission control module (TCM) (AT and CVT model)	(8)	Clutch switch (MT model)
(3)	Stop light and brake switch	(6)	Inhibitor switch (CVT model)		

GETthemANUALS.org

4. Engine Control Module (ECM) I/O Signal

A: ELECTRICAL SPECIFICATION

For details on the input/output signals for the engine control module, refer to ENGINE (DIAGNOSTICS). <Ref. to EN(H4SO)(diag)-17, ELECTRICAL SPECIFICATION, Engine Control Module (ECM) I/O Signal.> <Ref. to EN(H4DOTC)(diag)-18, ELECTRICAL SPECIFICATION, Engine Control Module (ECM) I/O Signal.> <Ref. to EN(H6DO)(diag)-18, ELECTRICAL SPECIFICATION, Engine Control Module (ECM) I/O Signal.>

B: WIRING DIAGRAM

<Ref. to WI-105, WIRING DIAGRAM, Cruise Control System.>

GETthemANUALS.org

5. Subaru Select Monitor

A: OPERATION

1. GENERAL DESCRIPTION

The on-board diagnosis function of the cruise control system uses Subaru Select Monitor.
The on-board diagnosis function operates in two categories, which are used depending on the type of problems;
1) Cruise Control Cancel Conditions Diagnosis:
(1) This category of diagnosis requires actual vehicle driving in order to determine the cause, as when cruise speed is cancelled during driving although cruise cancel condition is not entered.
(2) Cruise control memory in ECM stores the cancel code which occurred during driving. When there are multiple cancel code, they are shown on the Subaru Select Monitor.

CAUTION:
- **The cruise control memory stores not only the cruise "cancel" which occurred (although "cancel" operation is not entered by the driver), but also the "cancel" condition input by the driver.**
- **The content of the latest memory (the latest code) is cleared when the ignition switch is turned to OFF. However, memory contents set by the diagnosis of faulty switches related to the system and cruise control will remain as trouble history (memory code) after the ignition switch is turned to OFF.**

2) Real-time Diagnosis:
Real-time diagnosis function is used to determine whether or not the input signal system is in good order, according to signal emitted from switches, sensors, etc.
(1) Vehicle cannot be driven at cruise speed when the problem occurs in the cruise control system or relevant circuits.
(2) Monitor the signal conditions from switches and sensors.

2. BASIC OPERATION

For the operation procedure, refer to the "PC application help for Subaru Select Monitor".

GETthemANUALS.org

6. Read Cancel Code

A: OPERATION

1) On «Main Menu» display, select {Each System Check}.
On «System Selection Menu» display, select {Engine Control System} and select the [OK]. Select [OK] after the engine type information is displayed.
2) Drive vehicle at 40 km/h (25 MPH) or more and set the cruise control.

CAUTION:
- **When performing diagnosis, observe the legal speed limit on the road.**
- **The cancel code will also appear when cruise control is cancelled by the driver's operation. Do not confuse them.**
- **Be sure to get an assistant to support the diagnosis while driving, and have him/her operate the select monitor.**

3) When the set speed is cancelled by itself (without any cancel operations such as applying brake) or when the cruise control could not be set by performing the setting operation, selecting the {Cancel Code(s) Display} on the engine malfunction diagnosis screen will display the cancel code on the select monitor display.

NOTE:
The {Latest Diagnostic Code(s)} and {Memorized Diagnostic Code(s)} are contained in the cancel code. The latest code recognized during current test drive is displayed in {Latest Diagnostic Code(s)}. Cancel codes resulting from fault diagnosis of switches relating to the system and cruise control are also displayed in {Memorized Diagnostic Code(s)}.
4) Perform engine DTC clear memory operation. <Ref. to EN(H4SO)(diag)-51, OPERATION, Clear Memory Mode.> <Ref. to EN(H4DOTC)(diag)-53, OPERATION, Clear Memory Mode.> <Ref. to EN(H6DO)(diag)-57, OPERATION, Clear Memory Mode.>
Cancel code of switches relating to the system and cruise control are deleted by clearing memory on the engine side.

NOTE:
- The latest code will be cleared by turning ignition switch to OFF.
- For detailed operation procedures, refer to "PC application help for Subaru Select Monitor".
- For details on cancel codes, refer to List of Cancel Code. <Ref. to CC(diag)-13, List of Cancel Code.>

GETthemANUALS.org

7. Real-time Diagnosis

A: OPERATION

1) Select {Current Data Display & Save} in «Engine Diagnosis» display screen.
2) Make sure that normal display is shown when operated as follows:
- Depress and release the brake pedal. (Stop light switch and brake switch are turned ON.)
- Turn the “CRUISE” switch to ON.
- Turn the “CANCEL” switch to ON.
- Turn the “SET/–” switch to ON.
- Turn the “RES/+” switch to ON.
- Depress or release the clutch switch.
- Place the shift lever in any position other than neutral.

NOTE:
For detailed operation procedures, refer to “PC application help for Subaru Select Monitor”.

GETtheMANUALS.org

8. Diagnostics with Phenomenon

A: DIAGNOSTIC PROCEDURE WITH PHENOMENON

Phenomenon		Check item	Reference
1	CRUISE switch is not turned ON. (CRUISE indicator does not illuminate.) Or the cruise control is cancelled without CRUISE switch operation.	(1) Perform cruise cancel conditions diagnosis.	Perform the diagnosis according to displayed cancel code.
		(2) Perform the real-time diagnosis.	Check the input signal of cruise control system.
		(3) Check the cruise control command switch.	<Ref. to CC(diag)-15, 11, Diagnostic Procedure with Cancel Code.>
		(4) Check the CRUISE indicator.	<Ref. to CC(diag)-12, CHECK CRUISE INDICATOR LIGHT AND CRUISE SET INDICATOR LIGHT, Diagnostics with Phenomenon.>
2	Cruise control cannot be set. Or the cruise control is cancelled without canceling operation.	(1) Perform cruise cancel conditions diagnosis.	Perform the diagnosis according to displayed cancel code.
		(2) Perform the real-time diagnosis.	Check the input signal of cruise control system.
		(3) Check the cruise control command switch.	<Ref. to CC(diag)-15, 11, Diagnostic Procedure with Cancel Code.>
		(4) Check stop light switch and brake switch.	<Ref. to BR-64, Stop Light Switch.> <Ref. to CC(diag)-17, 12, Diagnostic Procedure with Cancel Code.>
		(5) Check clutch switch.	<Ref. to CL-31, Clutch Switch.> <Ref. to CC(diag)-19, 13, Diagnostic Procedure with Cancel Code.>
		(6) Check the neutral position switch.	<Ref. to CC(diag)-20, 14, Diagnostic Procedure with Cancel Code.> <Ref. to CC(diag)-24, 62, Diagnostic Procedure with Cancel Code.>
		(7) Check vehicle speed sensor.	<Ref. to CC(diag)-23, 22, Diagnostic Procedure with Cancel Code.>
3	SET indicator does not illuminate.	Check the SET indicator.	<Ref. to CC(diag)-12, CHECK CRUISE INDICATOR LIGHT AND CRUISE SET INDICATOR LIGHT, Diagnostics with Phenomenon.>
4	Vehicle speed is not held within set speed ±3 km/h (±2 MPH).	Check the vehicle speed sensor.	<Ref. to CC(diag)-23, 22, Diagnostic Procedure with Cancel Code.>
5	Vehicle speed does not increase or does not return to set speed after RES/+ switch has been pressed.	(1) Perform the real-time diagnosis.	Check the input signal of cruise control system.
		(2) Check the RES/+ switch.	<Ref. to CC(diag)-15, 11, Diagnostic Procedure with Cancel Code.>
6	Vehicle speed does not decrease after SET/– switch has been pressed.	(1) Perform the real-time diagnosis.	Check the input signal of cruise control system.
		(2) Check the SET/– switch.	<Ref. to CC(diag)-15, 11, Diagnostic Procedure with Cancel Code.>
7	Cruise control is not released after CANCEL switch has been pressed.	(1) Perform the real-time diagnosis.	Check the input signal of cruise control system.
		(2) Check the CANCEL switch.	<Ref. to CC(diag)-15, 11, Diagnostic Procedure with Cancel Code.>
8	Cruise control is not released after brake pedal has been depressed.	(1) Perform the real-time diagnosis.	Check the input signal of cruise control system.
		(2) Check stop light switch and brake switch.	<Ref. to CC(diag)-17, 12, Diagnostic Procedure with Cancel Code.> <Ref. to BR-66, INSTALLATION, Stop Light Switch.>
9	Cruise control is not released after shifting to the neutral position.	(1) Perform the real-time diagnosis.	Check the input signal of cruise control system.
		(2) Check the neutral position switch.	<Ref. to CC(diag)-20, 14, Diagnostic Procedure with Cancel Code.> <Ref. to CC-16, Neutral Position Switch.>
10	Cruise control is not released after clutch pedal has been depressed.	(1) Perform the real-time diagnosis.	Check the input signal of cruise control system.
		(2) Check clutch switch.	<Ref. to CC(diag)-19, 13, Diagnostic Procedure with Cancel Code.> <Ref. to CL-31, CLUTCH SWITCH, INSTALLATION, Clutch Switch.>

GETtheMANUALS.org

B: CHECK CRUISE INDICATOR LIGHT AND CRUISE SET INDICATOR LIGHT

TROUBLE SYMPTOM:

Cruise control can be set, but the CRUISE indicator and SET indicator do not illuminate.

Step		Check	Yes	No
1	**CHECK CRUISE & SET INDICATORS.** Check the combination meter. <Ref. to IDI-6, OPERATION, Combination Meter System.>	Do the CRUISE & SET indicators illuminate?	Go to step **2**.	Replace the meter case assembly. <Ref. to IDI-21, Combination Meter.>
2	**CHECK LAN SYSTEM.** Perform the diagnosis for LAN system. <Ref. to LAN(diag)-2, Basic Diagnostic Procedure.>	Is a DTC of the LAN system detected?	Perform the diagnosis according to DTC for LAN system.	Replace the ECM. <Ref. to FU(H4DOTC)-58, Engine Control Module (ECM).>

GETtheMANUALS.org

9. List of Cancel Code

A: LIST

NOTE:
- The cancel code is registered even when cancel is performed intentionally by the driver.
- Cancel codes are cleared if the ignition switch is turned to OFF.
- If a different cancel code is input after a cancel code (latest code) has been input, the latest code is overwritten.
- If the cruise indicator light is flashing, a malfunction is occurring in the system or cruise control related switch. The cancel code at this time is saved even after ignition switch is OFF as a memory code of a past malfunction.
- To display a cancel code, use the Subaru Select Monitor to read the code after the cruise control is deactivated during a driving test.

Cancel code	Item	Contents of diagnosis	Note
11	Main switch	CRUISE switch of cruise control command switch is turned to OFF, and then the cruise control is released.	This code is displayed without operating the CRUISE switch. <Ref. to CC(diag)-15, 11, Diagnostic Procedure with Cancel Code.>
12	Stop & brake switch	Stop light switch or brake switch is turned to ON, and then the cruise control is released.	This code is displayed without depressing the brake pedal. <Ref. to CC(diag)-17, 12, Diagnostic Procedure with Cancel Code.>
13	Clutch switch	Clutch switch is turned to ON, and then the cruise control is released.	This code is displayed without depressing the clutch pedal. <Ref. to CC(diag)-19, 13, Diagnostic Procedure with Cancel Code.>
14	Neutral switch	Neutral position switch is turned to ON, and then the cruise control is released.	This code is displayed without shifting to neutral position. <Ref. to CC(diag)-20, 14, Diagnostic Procedure with Cancel Code.>
15	Cancel switch	Cancel switch is turned to ON, and then the cruise control is released.	This code is displayed without operating the cancel switch. <Ref. to CC(diag)-21, 15, Diagnostic Procedure with Cancel Code.>
16	Ignition switch	Ignition switch is turned to OFF, and then the cruise control is released.	This code is displayed without operating the ignition switch. <Ref. to CC(diag)-22, 16, Diagnostic Procedure with Cancel Code.>
21	Cruise control switch malfunction when the ignition switch is ON	When the ignition switch is turned to ON, each switch of cruise control command switch is already turned to ON.	This code is displayed when the ignition switch is turned to ON without operating the cruise control command switch. <Ref. to CC(diag)-22, 21, Diagnostic Procedure with Cancel Code.>
22	Abnormality of change in vehicle speed	Malfunction of vehicle speed signal variation is detected.	<Ref. to CC(diag)-23, 22, Diagnostic Procedure with Cancel Code.>
24	Abnormality of switches related to cruise control	Open circuit of the cruise control switch is detected during cruise driving. (The system is judged as model without cruise control.)	This code is displayed with normal operation. <Ref. to CC(diag)-23, 24, Diagnostic Procedure with Cancel Code.>
31	Abnormal engine speed Signal	• Abnormal increase of engine speed is detected. • Gear is placed in Neutral, 1st or Reverse position.	Cruise in 2nd shift position or more. <Ref. to CC(diag)-23, 31, Diagnostic Procedure with Cancel Code.>

GETtheMANUALS.org

List of Cancel Code

Cancel code	Item	Contents of diagnosis	Note
32	Cruse Control out of Range	• Controlled vehicle speed decreased under the limit during cruising. • Set operation was performed at vehicle speed unavailable for setting. • RESUME operation was performed without memorized vehicle speed.	This code is displayed, though the vehicle speed is increased to the speed available for cruise set and set operation was performed again. <Ref. to CC(diag)-23, 32, Diagnostic Procedure with Cancel Code.>
34	Prohibition of cruise control at continuing big Accel. angle	The vehicle has been driven at higher speed than set vehicle speed for an abnormally long time (approximately 10 minutes) during cruise driving.	This code is displayed when driving for a long period of time at higher speed than appropriate cruise set vehicle speed by operating accelerator pedal. In this case, the cruise setting is deactivated. <Ref. to CC(diag)-23, 34, Diagnostic Procedure with Cancel Code.>
35	Prohibition of cruise control at vehicle speed F/B malfunction	Set vehicle speed cannot be kept because of some reasons (steep uphill, parking brake, abnormal decrease of engine output, etc.) during cruise driving.	This code is displayed when driving condition is not suitable for cruise control. Perform cruise set operation again after clearing the possible cause. <Ref. to CC(diag)-24, 35, Diagnostic Procedure with Cancel Code.>
41	VDC/TCS/EPB Operating	Vehicle dynamics control (VDC), TCS or EPB is operated during cruise driving or cruise setting.	This code is displayed when driving condition is not suitable for cruise control. Perform cruise set operation again after clearing the possible cause. <Ref. to CC(diag)-24, 41, Diagnostic Procedure with Cancel Code.>
43	ABS/VDC Failure	ABS or Vehicle dynamics control (VDC) system malfunction is detected during cruise driving or cruise setting.	<Ref. to CC(diag)-24, 43, Diagnostic Procedure with Cancel Code.>
44	Body Integrated unit Failure	Body integrated unit system malfunction is detected during cruise driving or cruise setting.	<Ref. to CC(diag)-24, 44, Diagnostic Procedure with Cancel Code.>
45	Meter Failure	Combination meter malfunction is detected during cruise driving or cruise setting.	<Ref. to CC(diag)-24, 45, Diagnostic Procedure with Cancel Code.>
49	TCM Failure	Transmission control module (TCM) malfunction is detected during cruise driving or cruise setting.	<Ref. to CC(diag)-24, 49, Diagnostic Procedure with Cancel Code.>
61	Brake switch abnormal	Malfunction in the stop light & brake switch is detected.	<Ref. to CC(diag)-24, 61, Diagnostic Procedure with Cancel Code.>
62	Neutral switch abnormal	Neutral position switch malfunction is detected.	<Ref. to CC(diag)-24, 62, Diagnostic Procedure with Cancel Code.>
63	Abnormality 1 of change in vehicle speed	Malfunction of vehicle speed signal variation is detected.	<Ref. to CC(diag)-24, 63, Diagnostic Procedure with Cancel Code.>
64	Engine Sensor Failure 1	Malfunction related to engine is detected.	<Ref. to CC(diag)-25, 64, Diagnostic Procedure with Cancel Code.>
65	Abnormality of switches related to cruise control 1	Cruise control command switch malfunction is detected. (When the switch is pressed ON for a long time (approximately two minutes), stuck ON condition is detected.)	<Ref. to CC(diag)-25, 65, Diagnostic Procedure with Cancel Code.>
66	Cruise Control Calculation Error	Cruise control calculation (microcomputer) malfunction is detected.	<Ref. to CC(diag)-25, 66, Diagnostic Procedure with Cancel Code.>

GETtheMANUALS.org

10. Diagnostic Procedure with Cancel Code

A: 11

When CRUISE switch is pressed, or a malfunction related to CRUISE switch occurs, this is detected.

TROUBLE SYMPTOM:

- Cruise control cannot be set. (Cancelled immediately.)
- Cruise control cannot be released.

WIRING DIAGRAM:

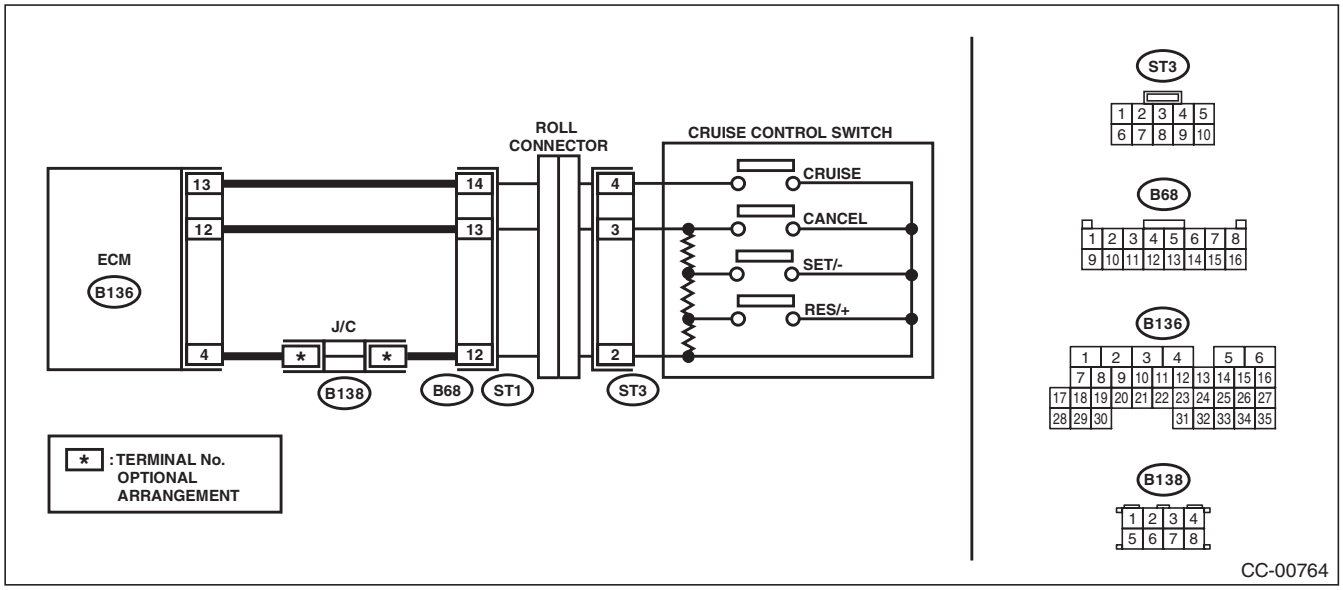

Step		Check	Yes	No
1	**CHECK CRUISE CONTROL COMMAND SWITCH CIRCUIT.** 1) Remove the driver's airbag module. <Ref. to AB-35, REMOVAL, Driver's Airbag Module.> 2) Disconnect the harness connector of cruise control command switch. 3) Turn the ignition switch to ON. 4) Measure the voltage between harness connector terminal and chassis ground. ***Connector & terminal*** ***(ST3) No. 4 (+) — Chassis ground (–):*** ***(ST3) No. 3 (+) — Chassis ground (–):***	Is the voltage 5 V or more?	Go to step **2**.	Check the harness between cruise control command switch and ECM, and the steering roll connector for open or short circuit, or for poor contact.
2	**CHECK CRUISE CONTROL COMMAND SWITCH CIRCUIT.** 1) Turn the ignition switch to OFF. 2) Remove the cruise control command switch. <Ref. to CC-7, REMOVAL, Cruise Control Command Switch.> 3) Measure the resistance between harness connector terminal and chassis ground. ***Connector & terminal*** ***(ST3) No. 2 — Chassis ground:***	Is the resistance less than 10 Ω?	Go to step **3**.	Check for open circuit between cruise control command switch, ECM, and chassis ground and check the ECM.
3	**CHECK CRUISE CONTROL COMMAND SWITCH.** Measure the resistance between switch terminals when the cruise control command switch is not depressed. ***Terminals*** ***No. 2 — No. 3:***	Is the resistance approx. 4 kΩ?	Go to step **4**.	Replace the cruise control command switch. <Ref. to CC-7, Cruise Control Command Switch.>

GETtheMANUALS.org

Step		Check	Yes	No
4	**CHECK CANCEL SWITCH.** 1) Turn the ignition switch to OFF. 2) Remove the cruise control command switch. <Ref. to CC-7, REMOVAL, Cruise Control Command Switch.> 3) Measure the resistance between switch terminals with the CANCEL switch pressed. ***Terminals*** ***No. 2 — No. 3:***	Is the resistance approx. less than 1 Ω when the CANCEL switch is pressed?	Go to step **5**.	Replace the cruise control command switch. <Ref. to CC-7, Cruise Control Command Switch.>
5	**CHECK SET/– SWITCH.** Measure the resistance between the switch terminals with the SET/– switch pressed. ***Terminals*** ***No. 2 — No. 3:***	Is the resistance approx. 250 Ω when the SET/– switch is pressed?	Go to step **6**.	Replace the cruise control command switch. <Ref. to CC-7, Cruise Control Command Switch.>
6	**CHECK RES/+ SWITCH.** Measure the resistance between the switch terminals with the RES/+ switch pressed. ***Terminals*** ***No. 2 — No. 3:***	Is the resistance approx. 1,500 Ω when the RES/+ switch is pressed?	Replace the ECM. <Ref. to FU(H4SO)-46, Engine Control Module (ECM).> <Ref. to FU(H4DOTC)-58, Engine Control Module (ECM).> <Ref. to FU(H6DO)-54, Engine Control Module (ECM).>	Replace the cruise control command switch. <Ref. to CC-7, Cruise Control Command Switch.>

GETtheMANUALS.org

B: 12

Detected when brake pedal is depressed or malfunction related to stop light & brake switch occurs.

TROUBLE SYMPTOM:

- Cruise control cannot be set.
- Cruise control cannot be released.

WIRING DIAGRAM:

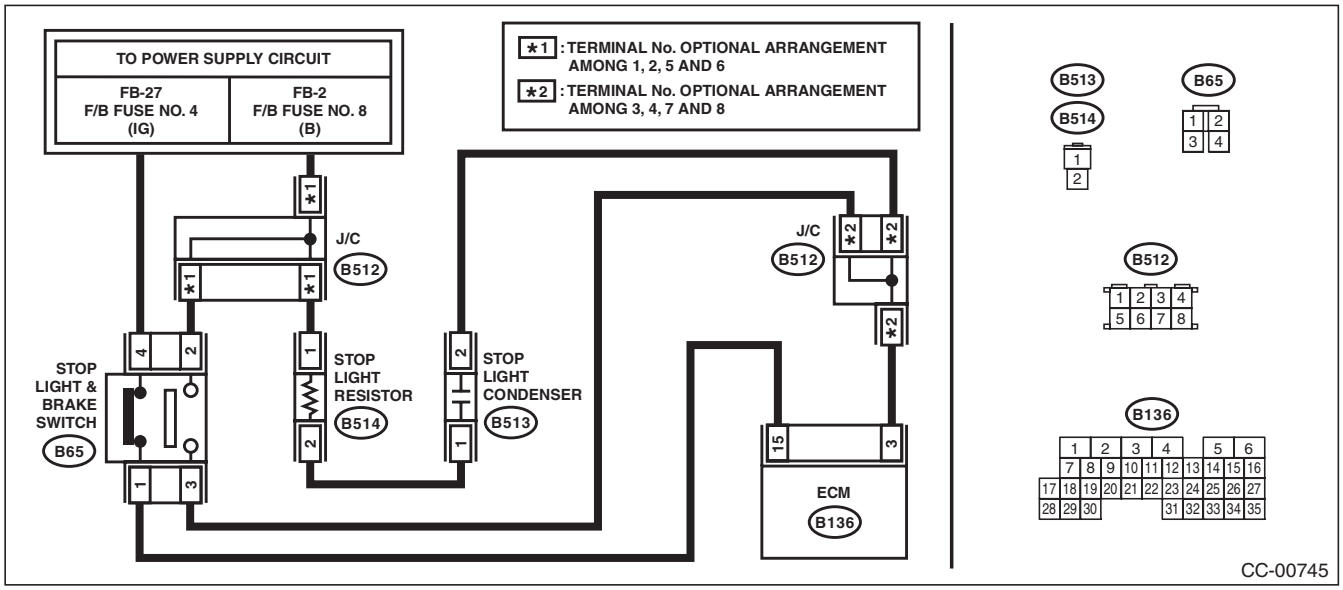

	Step	Check	Yes	No
1	**CHECK STOP LIGHT & BRAKE SWITCH.** Check the stop light & brake switch. <Ref. to CC-12, Stop Light & Brake Switch.>	Is the stop light & brake switch and installation position OK?	Go to step **2**.	Replace the stop light & brake switch. Or adjust the installation position.
2	**CHECK STOP LIGHT & BRAKE SWITCH CIRCUIT.** 1) Turn the ignition switch to OFF. 2) Disconnect the stop light & brake switch harness connector. 3) Turn the ignition switch to ON. 4) Measure the voltage between harness connector terminal and chassis ground. ***Connector & terminal*** ***(B65) No. 2 (+) — Chassis ground (–):***	Is the voltage 10 V or more?	Go to step **3**.	• Check fuse No. 8 (in fuse & relay box). • Check for open or short circuit in the harness between stop light/ brake switch and fuse and relay box.
3	**CHECK STOP LIGHT & BRAKE SWITCH CIRCUIT.** Measure the voltage between harness connector terminal and chassis ground. ***Connector & terminal*** ***(B65) No. 4 (+) — Chassis ground (–):***	Is the voltage 10 V or more?	Go to step **4**.	• Check fuse No. 4 (in fuse & relay box). • Check for open or short circuit in the harness between stop light/ brake switch and fuse and relay box.

GETtheMANUALS.org

Step		Check	Yes	No
4	**CHECK STOP LIGHT & BRAKE SWITCH CIRCUIT.** 1) Turn the ignition switch to OFF. 2) Disconnect the harness connector of ECM. 3) Measure the resistance between ECM harness connector terminal and stop light & brake switch harness connector terminal. ***Connector & terminal*** ***(B136) No. 3 — (B65) No. 3:*** ***(B136) No. 15 — (B65) No. 1:***	Is the resistance less than 10 Ω?	Replace the ECM. <Ref. to FU(H4SO)-46, Engine Control Module (ECM).> <Ref. to FU(H4DOTC)-58, Engine Control Module (ECM).> <Ref. to FU(H6DO)-54, Engine Control Module (ECM).>	Repair the harness.

GETtheMANUALS.org

C: 13

Detected when clutch pedal is depressed or malfunction related to clutch switch occurs.

TROUBLE SYMPTOM:

- Cruise control cannot be set.
- Cruise control cannot be released.

WIRING DIAGRAM:

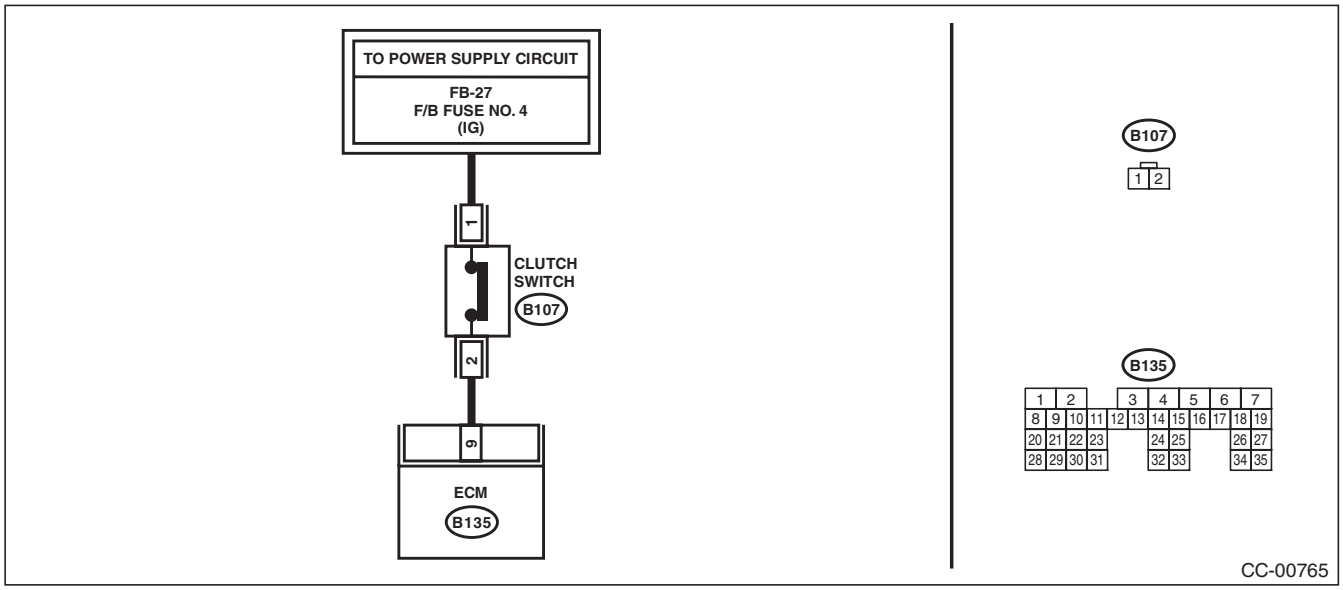

Step		Check	Yes	No
1	**CHECK CLUTCH SWITCH.** Check the clutch switch. <Ref. to CC-13, Clutch Switch.>	Is the clutch switch and installation position OK?	Go to step **2**.	Replace the clutch switch. Or adjust the installation position.
2	**CHECK CLUTCH SWITCH CIRCUIT.** 1) Turn the ignition switch to OFF. 2) Disconnect the clutch switch harness connector. 3) Turn the ignition switch to ON. 4) Measure the voltage between harness connector terminal and chassis ground. ***Connector & terminal*** ***(B107) No. 1 (+) — Chassis ground (–):***	Is the voltage 10 V or more?	Go to step **3**.	• Check fuse No. 4 (in fuse & relay box). • Check open or short circuit of harness between clutch switch and fuse & relay box.
3	**CHECK CLUTCH SWITCH CIRCUIT.** 1) Turn the ignition switch to OFF. 2) Disconnect the harness connector of ECM. 3) Measure the resistance between clutch switch harness connector terminal and ECM harness connector terminal. ***Connector & terminal*** ***(B107) No. 2 — (B135) No. 9:***	Is the resistance less than 10 Ω?	Replace the ECM. <Ref. to FU(H4SO)-46, Engine Control Module (ECM).> <Ref. to FU(H4DOTC)-58, Engine Control Module (ECM).> <Ref. to FU(H6DO)-54, Engine Control Module (ECM).>	Repair the harness.

GETtheMANUALS.org

D: 14

Detected when select lever is set in the neutral position, or when malfunction related to neutral position switch occurs.

TROUBLE SYMPTOM:

Cruise control cannot be set.

WIRING DIAGRAM:

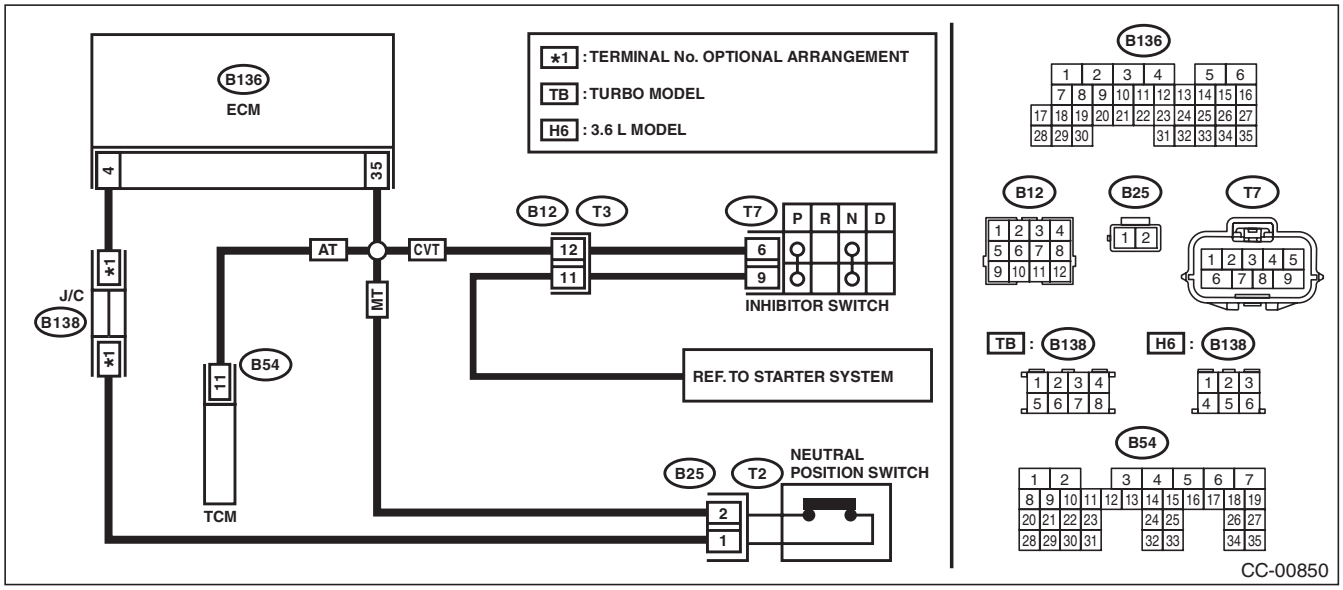

Step		Check	Yes	No
1	**CHECK SPECIFICATIONS OF CHECKED VEHICLE.** Check the vehicle destination and specification.	Is the vehicle 5AT model?	Go to step **2**.	Go to step **5**.
2	**CHECK NEUTRAL POSITION SWITCH SIGNAL.** 1) Connect the Subaru Select Monitor to data link connector. 2) Turn the ignition switch to ON and run the Subaru Select Monitor. 3) Select {Engine Control System} from the main menu. 4) Then, select the {Current Data Display & Save}. 5) Shift the select lever to “P” or “N” range, and check the signal of the neutral position switch.	If the select lever is in the “P” or the “N” range, is the Subaru Select Monitor Display ON? Or, if in a range other than “P” or “N”, is the Subaru Select Monitor display OFF?	Replace the ECM. <Ref. to FU(H4DOTC)-58, Engine Control Module (ECM).> <Ref. to FU(H6DO)-54, Engine Control Module (ECM).>	Go to step **3**.
3	**CHECK TCM OUTPUT VOLTAGE.** 1) Turn the ignition switch to ON. 2) Measure the voltage between TCM harness connector terminal and chassis ground. ***Connector & terminal*** ***(B54) No. 11 (+) — Chassis ground (–):***	If the select lever is in a range other than “P” or “N” ranges, is the voltage 10V or more? Or, if in “P” or “N”, is the voltage less than 1V?	Go to step **4**.	Check the TCM. <Ref. to 5AT(diag)-2, Basic Diagnostic Procedure.>
4	**CHECK HARNESS BETWEEN TCM AND ECM.** 1) Turn the ignition switch to OFF. 2) Disconnect the harness connector from TCM and ECM. 3) Measure the resistance between TCM harness connector terminal and ECM harness connector terminal. ***Connector & terminal*** ***(B136) No. 35 — (B54) No. 11:***	Is the resistance less than 10 Ω?	Replace the ECM. <Ref. to FU(H4DOTC)-58, Engine Control Module (ECM).> <Ref. to FU(H6DO)-54, Engine Control Module (ECM).>	Repair the wiring harness.

GETtheMANUALS.org

	Step	Check	Yes	No
5	**CHECK TRANSMISSION TYPE.**	Is the transmission type CVT?	Go to step **6**.	Go to step **9**. (MT model)
6	**CHECK INHIBITOR SWITCH CIRCUIT.** 1) Turn the ignition switch to OFF. 2) Disconnect the inhibitor switch harness connector. 3) Turn the ignition switch to ON. 4) Measure the voltage between harness connector terminal and chassis ground. ***Connector & terminal*** ***(T7) No. 6 (+) — Chassis ground (–):***	Is the voltage 10 V or more?	Go to step **7**.	Check for open or short in the harness between inhibitor switch and ECM.
7	**CHECK INHIBITOR SWITCH CIRCUIT.** 1) Turn the ignition switch to OFF. 2) Disconnect the starter motor harness connector. 3) Measure the resistance between inhibitor switch harness connector terminal and starter motor. ***Connector & terminal*** ***(T7) No. 9 — Starter motor:***	Is the resistance less than 10 Ω?	Go to step **8**.	Repair the harness.
8	**CHECK INHIBITOR SWITCH.** Remove and check the inhibitor switch. <Ref. to CC-14, Inhibitor Switch.>	Is the inhibitor switch working normal?	Replace the ECM. <Ref. to FU(H4SO)-46, Engine Control Module (ECM).>	Replace the inhibitor switch.
9	**CHECK NEUTRAL POSITION SWITCH CIRCUIT.** 1) Turn the ignition switch to OFF. 2) Disconnect the neutral position switch harness connector. 3) Turn the ignition switch to ON. 4) Measure the voltage between harness connector terminal and chassis ground. ***Connector & terminal*** ***(B25) No. 2 (+) — Chassis ground (–):***	Is the voltage 10 V or more?	Go to step **10**.	Check for open or short in the harness between neutral position switch and ECM.
10	**CHECK NEUTRAL POSITION SWITCH CIRCUIT.** 1) Turn the ignition switch to OFF. 2) Measure resistance between harness connector terminal of neutral position switch and chassis ground. ***Connector & terminal*** ***(B25) No. 1 — Chassis ground:***	Is the resistance less than 10 Ω?	Go to step **11**.	Repair the harness.
11	**CHECK NEUTRAL POSITION SWITCH.** Remove and check the neutral position switch. <Ref. to CC-16, Neutral Position Switch.>	Is the neutral position switch OK?	Replace the ECM. <Ref. to FU(H4SO)-46, Engine Control Module (ECM).> <Ref. to FU(H4DOTC)-58, Engine Control Module (ECM).>	Replace the neutral position switch.

E: 15

Detected when CANCEL switch is pressed or malfunction related to CRUISE switch occurs.

TROUBLE SYMPTOM:

- Cruise control cannot be set. (Cancelled immediately.)
- Cruise control cannot be released.

Refer to DTC 11 for diagnostic procedure.

<Ref. to CC(diag)-15, 11, Diagnostic Procedure with Cancel Code.>

GETtheMANUALS.org

F: 16

Detected when ignition switch is turned to OFF or malfunction related to the ignition switch occurs.
TROUBLE SYMPTOM:
Cruise control cannot be set.
WIRING DIAGRAM:

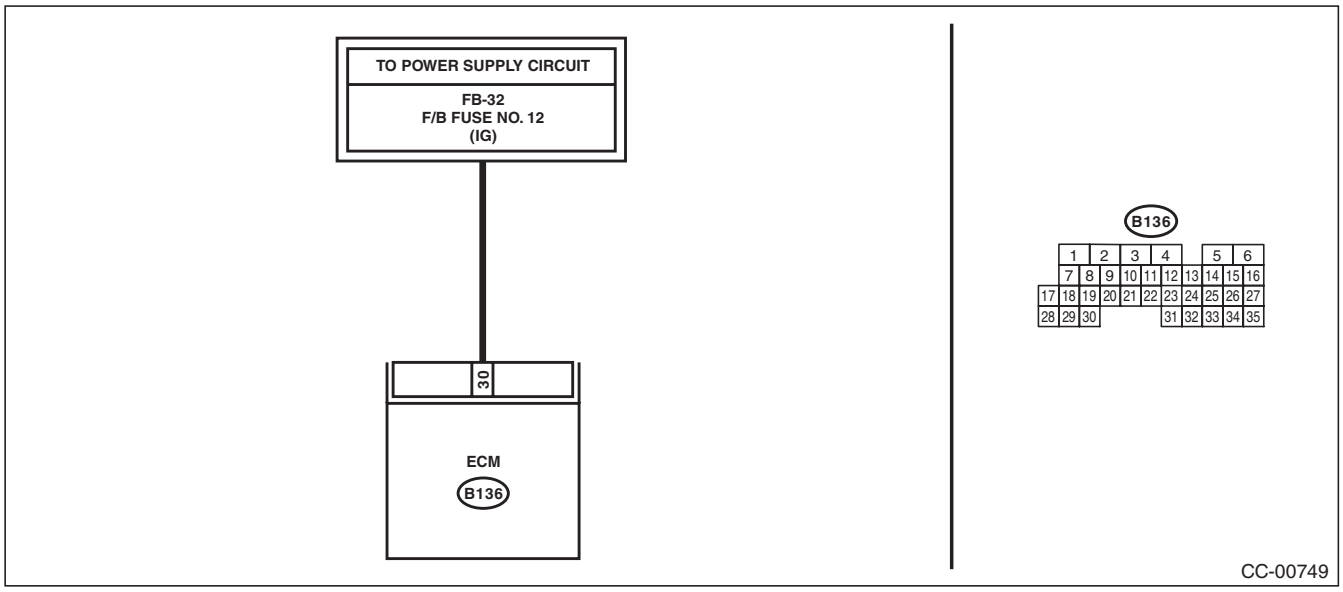

Step	Check	Yes	No
1 **CHECK IGNITION SWITCH CIRCUIT.** 1) Turn the ignition switch to OFF. 2) Disconnect the ECM harness connector. 3) Turn the ignition switch to ON. 4) Measure the voltage between harness connector terminal and chassis ground. ***Connector & terminal*** ***(B136) No. 30 (+) — Chassis ground (–):***	Is the voltage 10 V or more?	Check for poor contact of ECM connector.	• Check fuse No. 12 (in fuse & relay box). • Check the harness for open or short circuit between ignition switch and ECM.

G: 21

Cruise control command switch malfunction is detected.
TROUBLE SYMPTOM:
- Cruise control cannot be set. (Cancelled immediately.)
- Cruise control cannot be released.

Refer to DTC 11 for diagnostic procedure.
<Ref. to CC(diag)-15, 11, Diagnostic Procedure with Cancel Code.>

GETtheMANUALS.org

H: 22

Malfunction related to vehicle speed sensor is detected.
DIAGNOSIS:
Open or shorted circuit in vehicle speed sensor system.
TROUBLE SYMPTOM:
Cruise control cannot be set. (Cancelled immediately.)

Step		Check	Yes	No
1	**CHECK ABS OR VDC WARNING LIGHT.** 1) Turn the ignition switch to ON. 2) After the initial operation of combination meter is completed, check if ABS or VDC warning light continues to illuminate.	Does the warning light continue to illuminate?	Check the VDCCM. <Ref. to VDC(diag)-2, Basic Diagnostic Procedure.>	Go to step **2**.
2	**CHECK DTC OF LAN COMMUNICATION CIRCUIT.** Read the DTC of body integrated unit using Subaru Select Monitor.	Is DTC displayed?	Perform inspection according to DTC.	Replace the ECM. <Ref. to FU(H4SO)-46, Engine Control Module (ECM).> <Ref. to FU(H4DOTC)-58, Engine Control Module (ECM).> <Ref. to FU(H6DO)-54, Engine Control Module (ECM).>

I: 24

Malfunction in cruise control-related switch is detected.
TROUBLE SYMPTOM:
- Cruise control cannot be set. (Cancelled immediately.)
- Cruise control cannot be released.

Refer to DTC 11 for diagnostic procedure.
<Ref. to CC(diag)-15, 11, Diagnostic Procedure with Cancel Code.>

J: 31

Engine speed signal malfunction is detected.
Abnormal increase of engine speed is detected.
Gear is placed in 1st or Reverse position.
After driving at the 2nd gear position or higher, perform the cruise setting again. If a cancel code is not detected, it is normal.

K: 32

This DTC is detected out of vehicle speed range.
Increase vehicle speed high enough to allow the cruise control to function, and then perform setting operation again.
If cancel code is still detected after setting cruise again, perform the diagnosis for DTC 22.
Refer to DTC 22 for diagnostic procedure.
<Ref. to CC(diag)-23, 22, Diagnostic Procedure with Cancel Code.>

L: 34

The vehicle has been driven at a speed higher than set speed for a long time (approximately 10 minutes) during cruise driving.
This cancel code is detected when driving for a long period of time at a speed higher than appropriate for cruise control setting by operating the accelerator pedal.
Perform the cruise control setting operation again. If the cancel code is not detected, it is normal.

GETtheMANUALS.org

M: 35

Detected when it is impossible to perform the vehicle speed feedback.
Set vehicle speed cannot be kept for some reasons (steep uphill, unreleased parking brake, etc.) during cruise driving.
Cancel code is detected when driving conditions are not suitable for cruise control.
Perform cruise set operation again after clearing the possible cause.

N: 41

VDC/TCS/EPB is operated.
Vehicle dynamics control (VDC) or TCS/EPB is operated during cruise driving or cruise setting.
<Ref. to VDC(diag)-2, PROCEDURE, Basic Diagnostic Procedure.>

O: 43

Malfunction of ABS/VDC is detected.
VDC malfunction is detected during cruise driving or cruise setting.
<Ref. to VDC(diag)-2, PROCEDURE, Basic Diagnostic Procedure.>

P: 44

Body integrated unit malfunction is detected.
Body integrated unit system malfunction is detected during cruise driving or cruise setting.
<Ref. to LAN(diag)-2, PROCEDURE, Basic Diagnostic Procedure.>

Q: 45

Malfunction of the combination meter is detected.
Combination meter malfunction is detected during cruise driving or cruise setting.
<Ref. to LAN(diag)-2, PROCEDURE, Basic Diagnostic Procedure.>

R: 49

Automatic transmission malfunction is detected.
Automatic transmission malfunction is detected during cruise driving or cruise setting. <Ref. to 5AT(diag)-2, PROCEDURE, Basic Diagnostic Procedure.> <Ref. to CVT(diag)-2, PROCEDURE, Basic Diagnostic Procedure.>

S: 61

Malfunction in the stop light & brake switch is detected.
TROUBLE SYMPTOM:
- Cruise control cannot be set.
- Cruise control cannot be released.

Refer to DTC 12 for diagnostic procedure.
<Ref. to CC(diag)-17, 12, Diagnostic Procedure with Cancel Code.>

T: 62

Neutral position switch malfunction is detected.
TROUBLE SYMPTOM:
Cruise control cannot be set.
Refer to DTC 14 for diagnostic procedure.
<Ref. to CC(diag)-20, 14, Diagnostic Procedure with Cancel Code.>

U: 63

Malfunction of vehicle speed signal variation is detected.
TROUBLE SYMPTOM:
Cruise control cannot be set. (Cancelled immediately.)
Refer to DTC 22 for diagnostic procedure.
<Ref. to CC(diag)-23, 22, Diagnostic Procedure with Cancel Code.>

GETtheMANUALS.org

V: 64

Malfunction related to engine is detected.
Refer to the Engine Diagnostic Procedure for diagnostic procedure.
<Ref. to EN(H4SO)(diag)-2, PROCEDURE, Basic Diagnostic Procedure.>
<Ref. to EN(H4DOTC)(diag)-2, PROCEDURE, Basic Diagnostic Procedure.>
<Ref. to EN(H6DO)(diag)-2, PROCEDURE, Basic Diagnostic Procedure.>

W: 65

Cruise control command switch malfunction is detected.
While the command switch is pressed ON for a long time (approximately two minutes), stuck ON condition is detected.

TROUBLE SYMPTOM:

- Cruise control cannot be set. (Cancelled immediately.)
- Cruise control cannot be released.

Refer to DTC 11 for diagnostic procedure.
<Ref. to CC(diag)-15, 11, Diagnostic Procedure with Cancel Code.>

X: 66

Cruise control processing malfunction is detected.
Refer to the Engine Diagnostic Procedure for diagnostic procedure.
<Ref. to EN(H4SO)(diag)-2, PROCEDURE, Basic Diagnostic Procedure.>
<Ref. to EN(H4DOTC)(diag)-2, PROCEDURE, Basic Diagnostic Procedure.>
<Ref. to EN(H6DO)(diag)-2, PROCEDURE, Basic Diagnostic Procedure.>

GETtheMANUALS.org

GETtheMANUALS.org

IMMOBILIZER (DIAGNOSTICS)

IM(diag)

		Page
1.	Basic Diagnostic Procedure	2
2.	General Description	4
3.	Electrical Component Location	6
4.	Immobilizer Control Module I/O Signal	7
5.	Subaru Select Monitor	8
6.	Read Diagnostic Trouble Code (DTC)	9
7.	Clear Memory Mode	10
8.	Diagnostics Chart for Security Indicator Light	11
9.	List of Diagnostic Trouble Code (DTC)	14
10.	Diagnostic Procedure with Diagnostic Trouble Code (DTC)	16

GETtheMANUALS.org

1. Basic Diagnostic Procedure

A: PROCEDURE

Step		Check	Yes	No
1	**CHECK SECURITY INDICATOR LIGHT.** 1) Turn the ignition switch to “OFF” or “ACC”. 2) Wait at least 60 seconds.	Does the security indicator light blink?	Go to step **2**.	Check the security indicator light circuit. <Ref. to IM(diag)-11, CHECK SECURITY INDICATOR LIGHT CIRCUIT, INSPECTION, Diagnostics Chart for Security Indicator Light.>
2	**CHECK KEY SWITCH.** Remove the key from ignition switch.	Does the security indicator light begin to blink within 1 second after the key is removed?	Go to step **3**.	Check the key switch circuit. <Ref. to IM(diag)-13, CHECK KEY SWITCH CIRCUIT, INSPECTION, Diagnostics Chart for Security Indicator Light.>
3	**CHECK SECURITY INDICATOR LIGHT.** Turn the ignition switch to ON.	Does the security indicator light go off?	Go to step **5**.	Go to step **4**.
4	**CHECK ENGINE START.** Turn the ignition switch to START.	Does the starter operate?	Check the LAN communication system. <Ref. to LAN(diag)-2, Basic Diagnostic Procedure.>	Go to step **7**.
5	**CHECK ENGINE START.** Turn the ignition switch to START.	Does the starter operate?	Go to step **6**.	Check the LAN communication system. <Ref. to LAN(diag)-2, Basic Diagnostic Procedure.>
6	**CHECK ENGINE START.** Turn the ignition switch to START.	Does the engine start?	Immobilizer system is normal.	Go to step **8**.
7	**CHECK DTC.** Read the DTC of body integrated unit using Subaru Select Monitor. <Ref. to IM(diag)-8, Subaru Select Monitor.>	Is the DTC displayed on screen?	Go to step **10**.	Replace the body integrated unit. <Ref. to SL-71, Body Integrated Unit.> Register all ignition keys (transponders). Refer to the “PC application help for Subaru Select Monitor”.

GETtheMANUALS.org

Step		Check	Yes	No
8	**CHECK DTC.** Read the DTC relating the ECM using the Subaru Select Monitor. <Ref. to IM(diag)-8, Subaru Select Monitor.>	Is the DTC displayed on screen?	Go to step **9**.	Perform the diagnosis for engine system. <Ref. to EN(H4SO)(diag)-63, PROCEDURE, Diagnostics for Engine Starting Failure.> <Ref. to EN(H4DOTC)(diag)-62, PROCEDURE, Diagnostics for Engine Starting Failure.> <Ref. to EN(H6DO)(diag)-70, PROCEDURE, Diagnostics for Engine Starting Failure.>
9	**CHECK FREEZE FRAME DATA.** Using the Subaru Select Monitor, check the Freeze Frame Data.	Was the Freeze Frame Data recorded?	Record the data. Go to step **10**.	Go to step **10**.
10	**PERFORM DIAGNOSIS.** 1) Inspect using the “Diagnostic Procedure with Diagnostic Trouble Code (DTC)”. <Ref. to IM(diag)-16, Diagnostic Procedure with Diagnostic Trouble Code (DTC).> 2) Repair the trouble cause. 3) Perform the Clear Memory Mode. 4) Read DTC’s again.	Is the DTC displayed on screen?	Inspect using the “Diagnostic Procedure with Diagnostic Trouble Code (DTC)”. <Ref. to IM(diag)-16, Diagnostic Procedure with Diagnostic Trouble Code (DTC).>	Finish the diagnosis.

GETtheMANUALS.org

2. General Description

A: CAUTION

CAUTION:

- **Do not use electrical test devices on any airbag system wiring harnesses and connector circuits.**
- **Be careful not to damage the airbag system wiring harness.**
- **While diagnostic items are being checked, do not operate radios, portable telephones, etc. which emit electromagnetic waves near or inside the vehicle.**

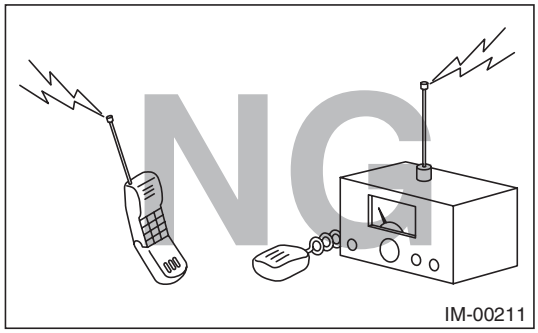

- **When turning the ignition switch to ON or OFF while diagnostic items are being checked, do not allow keys with different ID codes close to the ignition switch. If the ignition key is on a key holder, remove it from the key holder before performing diagnoses.**

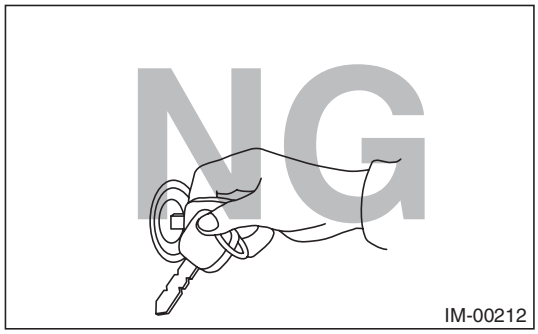

- **When repeatedly turning the ignition switch to ON or OFF while diagnostic items are being checked, it should be switched in cycles of "ON" for at least 5 seconds → "OFF" for at least 8 seconds.**

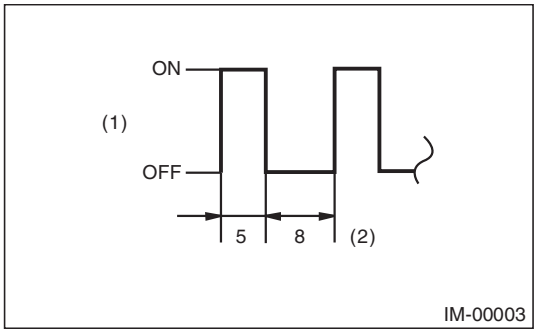

(1) Ignition switch position
(2) Sec.

- **If the engine fails to start with a registered ignition key, detach the ignition key from ignition switch and wait for approx. 1 second until security indicator light begins to flash. And then start the engine again.**
- **Before performing the diagnostics, obtain all keys for the vehicle from the owner.**
- **Do not install or register a body integrated unit already registered to another vehicle to diagnose failures or inspect functions.**

GETtheMANUALS.org

B: PREPARATION TOOL

1. SPECIAL TOOL

ILLUSTRATION	TOOL NUMBER	DESCRIPTION	REMARKS
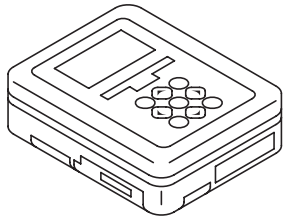 ST1B022XU0	1B022XU0	SUBARU SELECT MONITOR III KIT	Used for troubleshooting the electrical system.

2. GENERAL TOOL

TOOL NAME	REMARKS
Circuit tester	Used for measuring resistance, voltage and current.

GETtheMANUALS.org

3. Electrical Component Location

A: LOCATION

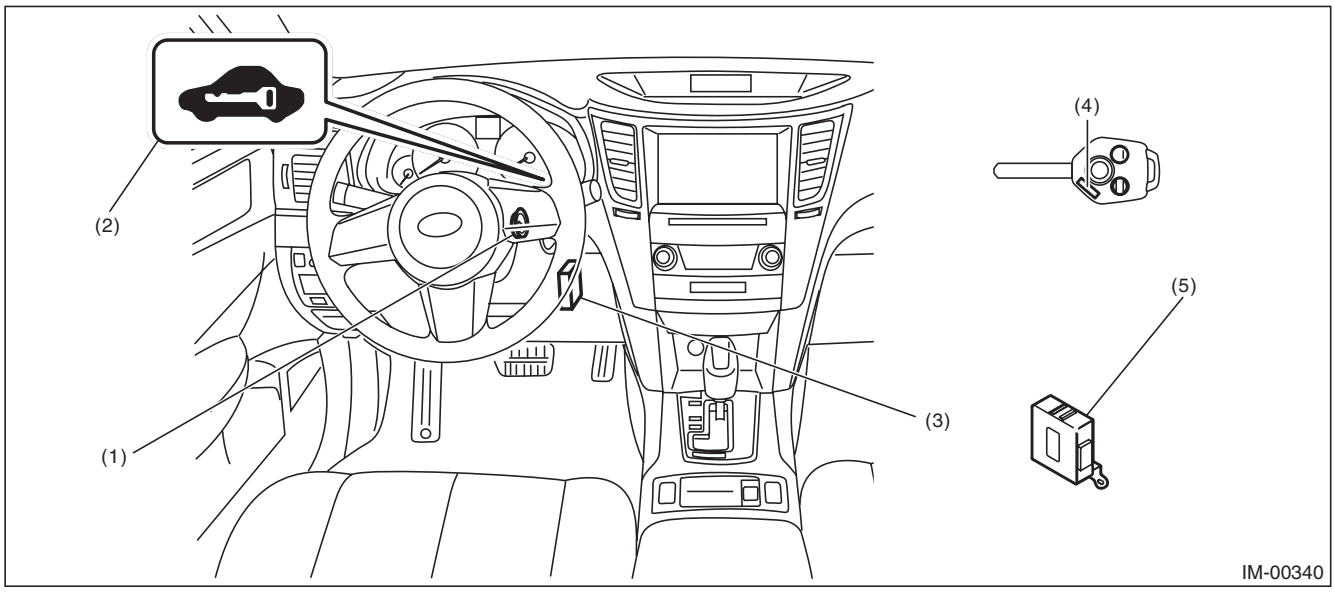

(1)	Antenna	(3)	Body integrated unit	(5)	Security control module (only for Canada models)
(2)	Security indicator light (LED bulb)	(4)	Transponder		

GETtheMANUALS.org

4. Immobilizer Control Module I/O Signal

A: WIRING DIAGRAM

1. IMMOBILIZER

<Ref. to WI-176, WIRING DIAGRAM, Immobilizer System.>

GETtheMANUALS.org

5. Subaru Select Monitor

A: OPERATION

1. HOW TO USE THE SUBARU SELECT MONITOR

For the operation procedure, refer to the “PC application help for Subaru Select Monitor”.

2. READ DIAGNOSTIC TROUBLE CODE (DTC) FOR ENGINE AND BODY INTEGRATED UNIT

Refer to “Read Diagnostic Trouble Code” for information about how to indicate DTC. <Ref. to IM(diag)-9, Read Diagnostic Trouble Code (DTC).>

3. COMMUNICATION LINE CHECK

The communication line between ECM and body integrated unit can be checked in “System Operation Check Mode”. This is referred to as “Communication line check”.
For the operation procedure, refer to the “PC application help for Subaru Select Monitor”.

NOTE:
If a problem is detected, repair the trouble cause. <Ref. to IM(diag)-20, DTC P1572 IMM CIRCUIT FAILURE (EXCEPT ANTENNA CIRCUIT), Diagnostic Procedure with Diagnostic Trouble Code (DTC).>

GETtheMANUALS.org

6. Read Diagnostic Trouble Code (DTC)

A: OPERATION

1. ECM

For the operation procedure, refer to the “PC application help for Subaru Select Monitor”.

NOTE:
For detailed concerning DTC, refer to the List of Diagnostic Trouble Codes (DTC). <Ref. to IM(diag)-14, LIST, List of Diagnostic Trouble Code (DTC).>

2. BODY INTEGRATED UNIT

For the operation procedure, refer to the “PC application help for Subaru Select Monitor”.

NOTE:
For detailed concerning DTC, refer to the List of Diagnostic Trouble Codes (DTC). <Ref. to IM(diag)-14, LIST, List of Diagnostic Trouble Code (DTC).>

GETtheMANUALS.org

7. Clear Memory Mode

A: OPERATION

1. ECM

For the operation procedure, refer to the “PC application help for Subaru Select Monitor”.

NOTE:
Initial diagnosis of electronic throttle control is performed after memory clearance. Wait for 10 seconds or more after turning the ignition switch to ON, and then start the engine.

2. BODY INTEGRATED UNIT

For the operation procedure, refer to the “PC application help for Subaru Select Monitor”.

GETtheMANUALS.org

8. Diagnostics Chart for Security Indicator Light

A: INSPECTION

1. CHECK SECURITY INDICATOR LIGHT CIRCUIT

WIRING DIAGRAM:

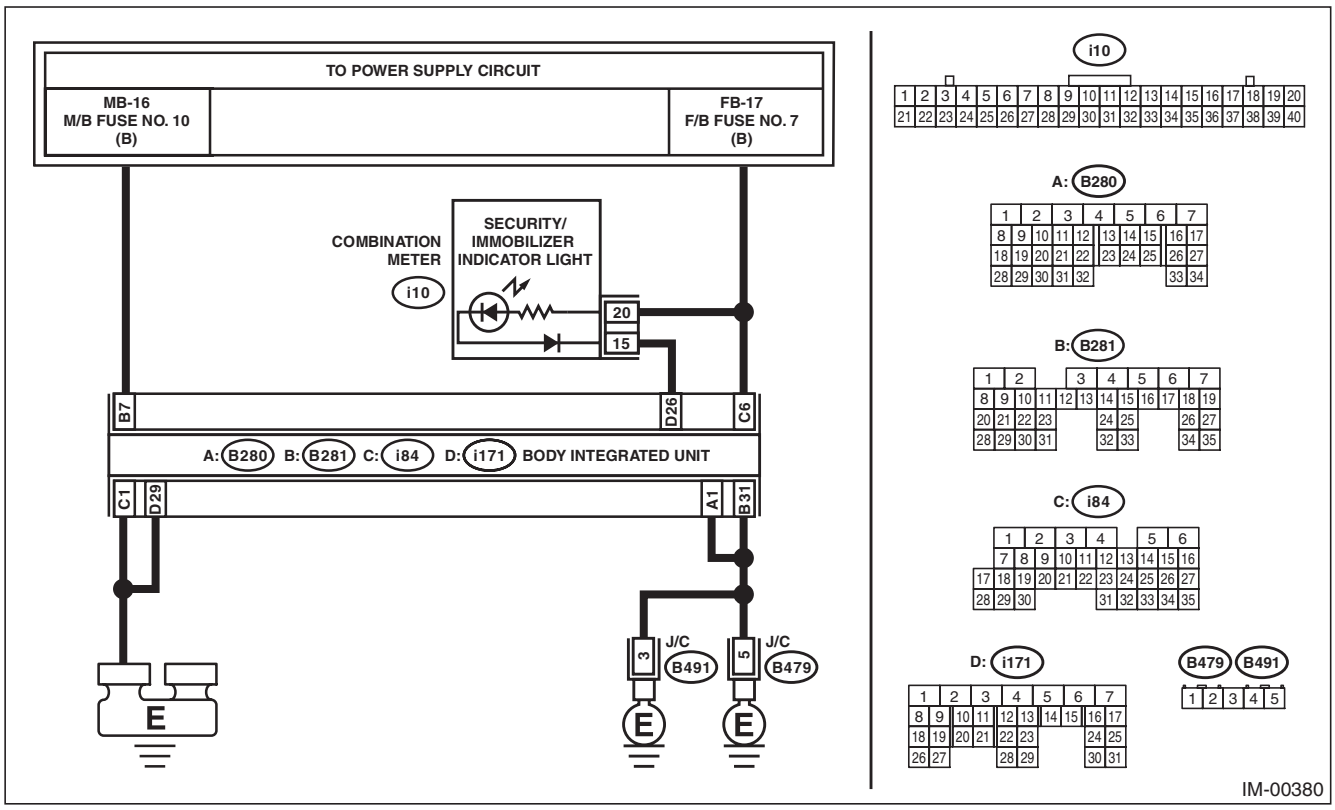

Step		Check	Yes	No
1	**CHECK FUSE.** 1) Remove the ignition key from ignition switch. 2) Check the fuse (M/B No. 10).	Is the fuse OK?	Go to step **2**.	Replace the fuse. If the replaced fuse blows out easily, repair the short circuit in the harness between the fuse and body integrated unit.
2	**CHECK SECURITY INDICATOR LIGHT.** 1) Disconnect the connector from body integrated unit. 2) Connect the resistor (100 Ω) between the body integrated unit connector terminal (i171) No. 26 and chassis ground.	Does the security indicator light illuminate?	Go to step **3**.	Go to step **5**.
3	**CHECK BODY INTEGRATED UNIT GROUND CIRCUIT.** Measure the resistance between the body integrated unit connector terminal and chassis ground. ***Connector & terminal*** ***(B280) No. 1 — Chassis ground:*** ***(B281) No. 31 — Chassis ground:*** ***(i84) No. 1 — Chassis ground:*** ***(i171) No. 29 — Chassis ground:***	Is the resistance less than 10 Ω?	Go to step **4**.	Repair the open circuit of the body integrated unit ground circuit.

GETthemANSWERS.org

Diagnostics Chart for Security Indicator Light

	Step	Check	Yes	No
4	**CHECK BODY INTEGRATED UNIT POWER SUPPLY CIRCUIT.** Measure the voltage between the body integrated unit connector terminal and chassis ground. ***Connector & terminal*** ***(B281) No. 7 (+) — Chassis ground (–):*** ***(i84) No. 6 (+) — Chassis ground (–):***	Is the voltage 10 V or more?	Replace the body integrated unit. <Ref. to SL-71, Body Integrated Unit.> Register all ignition keys (transponders). Refer to the "PC application help for Subaru Select Monitor".	Check the harness for open or short circuit between body integrated unit and fuse.
5	**CHECK COMBINATION METER CIRCUIT.** 1) Remove the combination meter. <Ref. to IDI-21, Combination Meter.> 2) Measure the voltage between combination meter connector terminal and chassis ground. ***Connector & terminal*** ***(i10) No. 20 (+) — Chassis ground (–):***	Is the voltage 10 V or more?	Go to step **6**.	Check for an open or short circuit in the harness between the combination meter and fuse.
6	**CHECK COMBINATION METER CIRCUIT.** Measure the resistance between the body integrated unit connector terminal and combination meter connector terminal. ***Connector & terminal*** ***(i171) No. 26 — (i10) No. 15:***	Is the resistance less than 10 Ω?	LED bulb is defective. Replace the combination meter case assembly. <Ref. to IDI-26, DISASSEMBLY, Combination Meter.>	Repair the harness or connector.

GETthemANUALS.org

2. CHECK KEY SWITCH CIRCUIT

WIRING DIAGRAM:

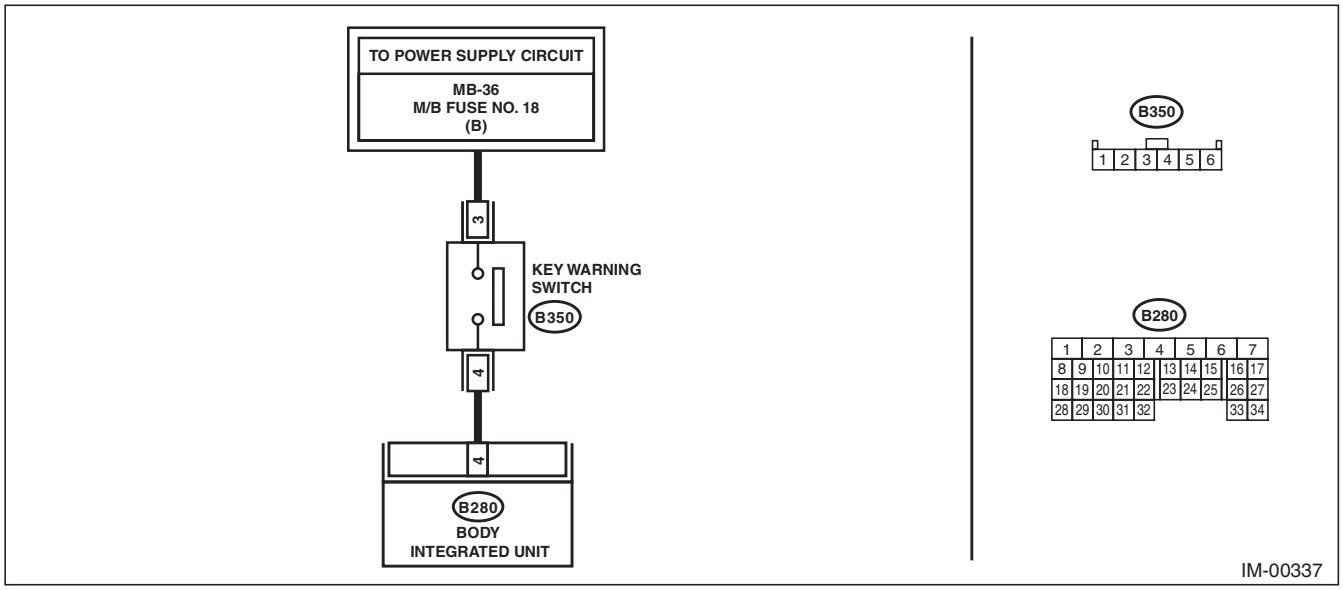

Step		Check	Yes	No
1	**CHECK POWER SUPPLY CIRCUIT.** 1) Disconnect the connector from key warning switch. 2) Measure the voltage between key warning switch connector terminal and chassis ground. ***Connector & terminal*** ***(B350) No. 3 (+) — Chassis ground (–):***	Is the voltage 10 V or more?	Go to step **2**.	Check the harness for an open or short between the key warning switch and fuse.
2	**CHECK KEY WARNING SWITCH.** 1) Insert the ignition key in the ignition switch. (OFF or ACC) 2) Measure the resistance between key warning switch connector terminals. ***Connector & terminal*** ***No. 3 — No. 4:***	Is the resistance less than 1 Ω?	Go to step **3**.	Replace the key warning switch.
3	**CHECK KEY WARNING SWITCH.** 1) Remove the ignition key from ignition switch. 2) Measure the resistance between key warning switch connector terminals. ***Connector & terminal*** ***No. 3 — No. 4:***	Is the resistance 1 MΩ or more?	Go to step **4**.	Replace the key warning switch.
4	**CHECK HARNESS BETWEEN KEY WARNING SWITCH AND BODY INTEGRATED UNIT.** 1) Disconnect the connector from body integrated unit. 2) Measure the resistance between key warning switch connector terminal and body integrated unit connector terminal. ***Connector & terminal*** ***(B350) No. 4 — (B280) No. 4:***	Is the resistance less than 10 Ω?	Replace the body integrated unit. <Ref. to SL-71, Body Integrated Unit.> Register all ignition keys (transponders). Refer to the "PC application help for Subaru Select Monitor".	Repair the harness between key warning switch and body integrated unit.

GETthemANUALS.org

9. List of Diagnostic Trouble Code (DTC)

A: LIST

1. ECM

DTC	Item	Contents of diagnosis	Index No.
P0513	Incorrect Immobilizer Key	Incorrect immobilizer key (Use of unregistered key in body integrated unit)	<Ref. to IM(diag)-16, DTC P0513 INCORRECT IMMOBILIZER KEY, Diagnostic Procedure with Diagnostic Trouble Code (DTC).>
P1570	Antenna	Faulty antenna	<Ref. to IM(diag)-17, DTC P1570 ANTENNA, Diagnostic Procedure with Diagnostic Trouble Code (DTC).>
P1571	Reference Code Incompatibility	Reference code incompatibility between body integrated unit and ECM	<Ref. to IM(diag)-19, DTC P1571 REFERENCE CODE INCOMPATIBILITY, Diagnostic Procedure with Diagnostic Trouble Code (DTC).>
P1572	IMM Circuit Failure (Except Antenna Circuit)	Communication failure between body integrated unit and ECM	<Ref. to IM(diag)-20, DTC P1572 IMM CIRCUIT FAILURE (EXCEPT ANTENNA CIRCUIT), Diagnostic Procedure with Diagnostic Trouble Code (DTC).>
P1574	Key Communication Failure	Communication failure between key and body integrated unit	<Ref. to IM(diag)-22, DTC P1574 KEY COMMUNICATION FAILURE, Diagnostic Procedure with Diagnostic Trouble Code (DTC).>
P1576	EGI Control Module EEPROM	ECM malfunctioning	<Ref. to IM(diag)-22, DTC P1576 EGI CONTROL MODULE EEPROM, Diagnostic Procedure with Diagnostic Trouble Code (DTC).>
P1577	IMM Control Module EEPROM	Body integrated unit malfunctioning	<Ref. to IM(diag)-23, DTC P1577 IMM CONTROL MODULE EEPROM, Diagnostic Procedure with Diagnostic Trouble Code (DTC).>
P1578	Meter Failure (Except for model for Canada)	• Reference code incompatibility between combination meter and body integrated unit • Communication failure between body integrated unit and ECM	<Ref. to IM(diag)-24, DTC P1578 METER FAILURE, Diagnostic Procedure with Diagnostic Trouble Code (DTC).>
	Meter Failure (Model for Canada)	• Reference code incompatibility between body integrated unit and security control module • Communication failure between body integrated unit and ECM	

NOTE:
Perform diagnosis of engine DTC when a DTC other than an immobilizer DTC is detected. <Ref. to EN(H4SO)(diag)-78, List of Diagnostic Trouble Code (DTC).> <Ref. to EN(H4DOTC)(diag)-75, List of Diagnostic Trouble Code (DTC).> <Ref. to EN(H6DO)(diag)-85, List of Diagnostic Trouble Code (DTC).>

GETthemANUALS.org

2. BODY INTEGRATED UNIT

DTC	Item	Contents of diagnosis	Index No.	Relation between ECM and DTC
B1401	M Collation NG	Reference code incompatibility between combination meter and body integrated unit	<Ref. to IM(diag)-25, DTC B1401 M COLLATION NG, Diagnostic Procedure with Diagnostic Trouble Code (DTC).>	P1578
B1402	Immobilizer Key Collation NG	• Incorrect immobilizer key (Use of unregistered key in body integrated unit) • Faulty antenna	<Ref. to IM(diag)-25, DTC B1402 IMMOBILIZER KEY COLLATION NG, Diagnostic Procedure with Diagnostic Trouble Code (DTC).>	• P0513 • P1570 • P1574
B1403	E/G request NG	Communication failure between body integrated unit and ECM	<Ref. to IM(diag)-25, DTC B1403 E/G REQUEST NG, Diagnostic Procedure with Diagnostic Trouble Code (DTC).>	P1572
B1405	SCU Collation NG	Reference code incompatibility between body integrated unit and security control module	<Ref. to IM(diag)-26, DTC B1405 SCU COLLATION NG, Diagnostic Procedure with Diagnostic Trouble Code (DTC).>	P1578
B1406	SCU_EEPROM_NG	Malfunction of security control module	<Ref. to IM(diag)-26, DTC B1406 SCU_EEPROM_NG, Diagnostic Procedure with Diagnostic Trouble Code (DTC).>	P1578

NOTE:
The starter relay control is performed in immobilizer system. When the body integrated unit detects a non-conformity of reference code, it immediately outputs a starter relay cut signal to ECM, and then ECM stops the starter relay operation. In this case, engine does not start, and DTC is not recorded in ECM. Check that the engine does not start on the DTC of body integrated unit.

GETthemANUALS.org

10. Diagnostic Procedure with Diagnostic Trouble Code (DTC)

A: DTC P0513 INCORRECT IMMOBILIZER KEY

DTC DETECTING CONDITION:

Incorrect immobilizer key (Use of unregistered key in body integrated unit)

Step		Check	Yes	No
1	**PERFORM IGNITION KEY REGISTRATION.** Perform registration to all keys used for the vehicle. Refer to the “PC application help for Subaru Select Monitor”.	Is registration of all keys complete?	Finish the diagnosis.	Replace ignition keys (including transponder) which cannot be registered. Go to step **2**.
2	**PERFORM IGNITION KEY REGISTRATION.** Perform registration to all keys used for the vehicle. Refer to the “PC application help for Subaru Select Monitor”.	Is registration of all keys complete?	Finish the diagnosis.	Replace the body integrated unit. <Ref. to SL-71, Body Integrated Unit.> Register all ignition keys (transponders). Refer to the “PC application help for Subaru Select Monitor”.

GETtheMANUALS.org

B: DTC P1570 ANTENNA

DTC DETECTING CONDITION:

Faulty antenna

WIRING DIAGRAM:

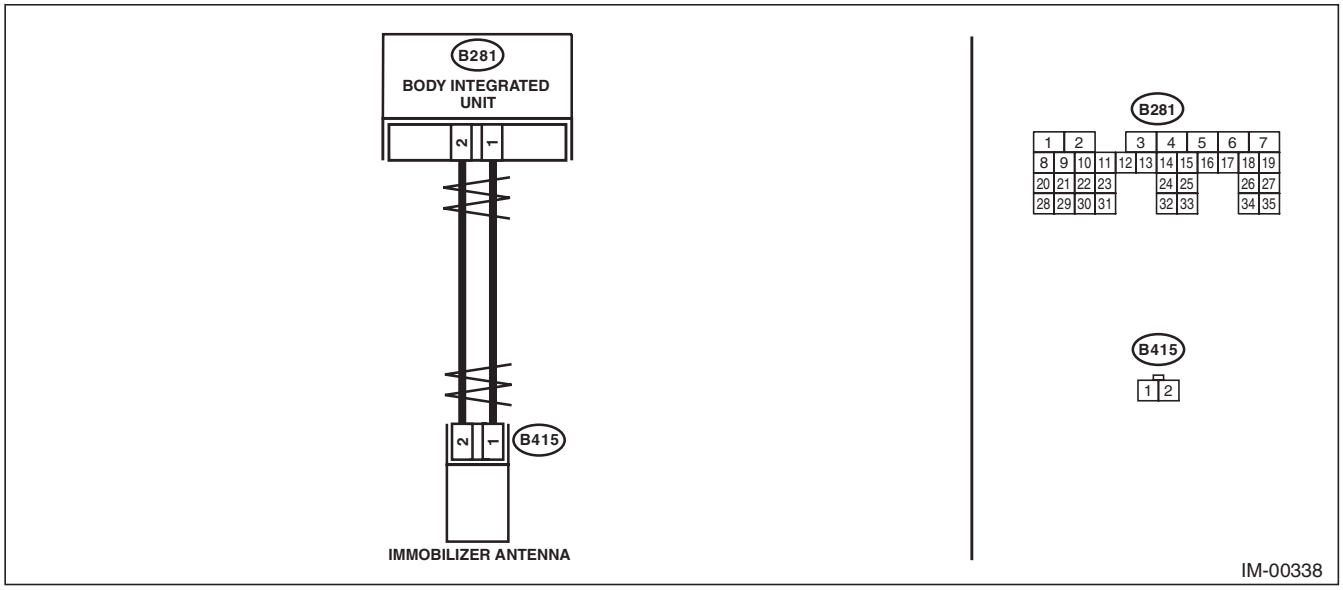

Step		Check	Yes	No
1	**CHECK ANTENNA CIRCUIT.** 1) Turn the ignition switch to OFF. 2) Disconnect the connector from the antenna. <Ref. to SL-79, Immobilizer Antenna.> 3) Measure the resistance of antenna circuit. ***Connector & terminal*** ***(B415) No. 1 — No. 2:***	Is the resistance 6 — 10 Ω?	Go to step **2**.	Replace the antenna. <Ref. to SL-79, Immobilizer Antenna.>
2	**CHECK ANTENNA CIRCUIT.** 1) Disconnect the connector from body integrated unit. 2) Measure the resistance between body integrated unit connector and antenna connector. ***Connector & terminal*** ***(B281) No. 1 — (B415) No. 1:*** ***(B281) No. 2 — (B415) No. 2:***	Is the resistance less than 10 Ω?	Go to step **3**.	Repair the harness.
3	**CHECK ANTENNA CIRCUIT.** Measure the resistance between body integrated unit connector and chassis ground. ***Connector & terminal*** ***(B281) No. 1 — Chassis ground:*** ***(B281) No. 2 — Chassis ground:***	Is the resistance 1 MΩ or more?	Go to step **4**.	Repair the harness.
4	**CHECK BODY INTEGRATED UNIT FUNCTION.** 1) Connect the connector to antenna. 2) Connect the connector to body integrated unit. 3) Insert the key into the ignition switch, then use an oscilloscope to measure changes in voltage between the antenna connectors. ***Connector & terminal*** ***(B281) No. 1 (+) — Chassis ground (–):***	Is the maximum voltage more than 40 V? (Approx. 0.1 second after inserting the key) Is the voltage 0 V? (Approx. 1 second after inserting the key)	Go to step **5**.	Replace the body integrated unit <Ref. to SL-71, Body Integrated Unit.> Register all ignition keys (transponders). Refer to the "PC application help for Subaru Select Monitor".

GETthemANUALS.org

Step		Check	Yes	No
5	**CHECK IGNITION KEY (TRANSPONDER).** 1) Remove the key from ignition switch. 2) Start the engine using other key which is already registered.	Does the engine start?	Replace the ignition key (transponder). Execute the registration procedure next. Refer to the “PC application help for Subaru Select Monitor”.	Replace the body integrated unit <Ref. to SL-71, Body Integrated Unit.> Register all ignition keys (transponders). Refer to the “PC application help for Subaru Select Monitor”.

GETthemANUALS.org

C: DTC P1571 REFERENCE CODE INCOMPATIBILITY

DTC DETECTING CONDITION:

Reference code incompatibility between body integrated unit and ECM

Step		Check	Yes	No
1	**PERFORM REGISTRATION ON IGNITION KEY.** Perform registration on all keys of the vehicle. Refer to the “PC application help for Subaru Select Monitor”.	Is registration for all keys complete?	Finish the diagnosis.	Go to step **2**.
2	**CHECK FOR ANY OTHER DTC ON DISPLAY.**	Is any other immobilizer DTC displayed?	Check the appropriate DTC using the “List of Diagnostic Trouble Code (DTC)”. <Ref. to IM(diag)-14, List of Diagnostic Trouble Code (DTC).> Execute the registration procedure next. Refer to the “PC application help for Subaru Select Monitor”.	Replace the ECM. <Ref. to FU(H4DOTC)-58, Engine Control Module (ECM).> <Ref. to FU(H6DO)-54, Engine Control Module (ECM).> Replace the body integrated unit. <Ref. to SL-71, Body Integrated Unit.> Replace and register all ignition keys (transponders). Refer to the “PC application help for Subaru Select Monitor”.

GETtheMANUALS.org

D: DTC P1572 IMM CIRCUIT FAILURE (EXCEPT ANTENNA CIRCUIT)

DTC DETECTING CONDITION:

Communication failure between body integrated unit and ECM

WIRING DIAGRAM:

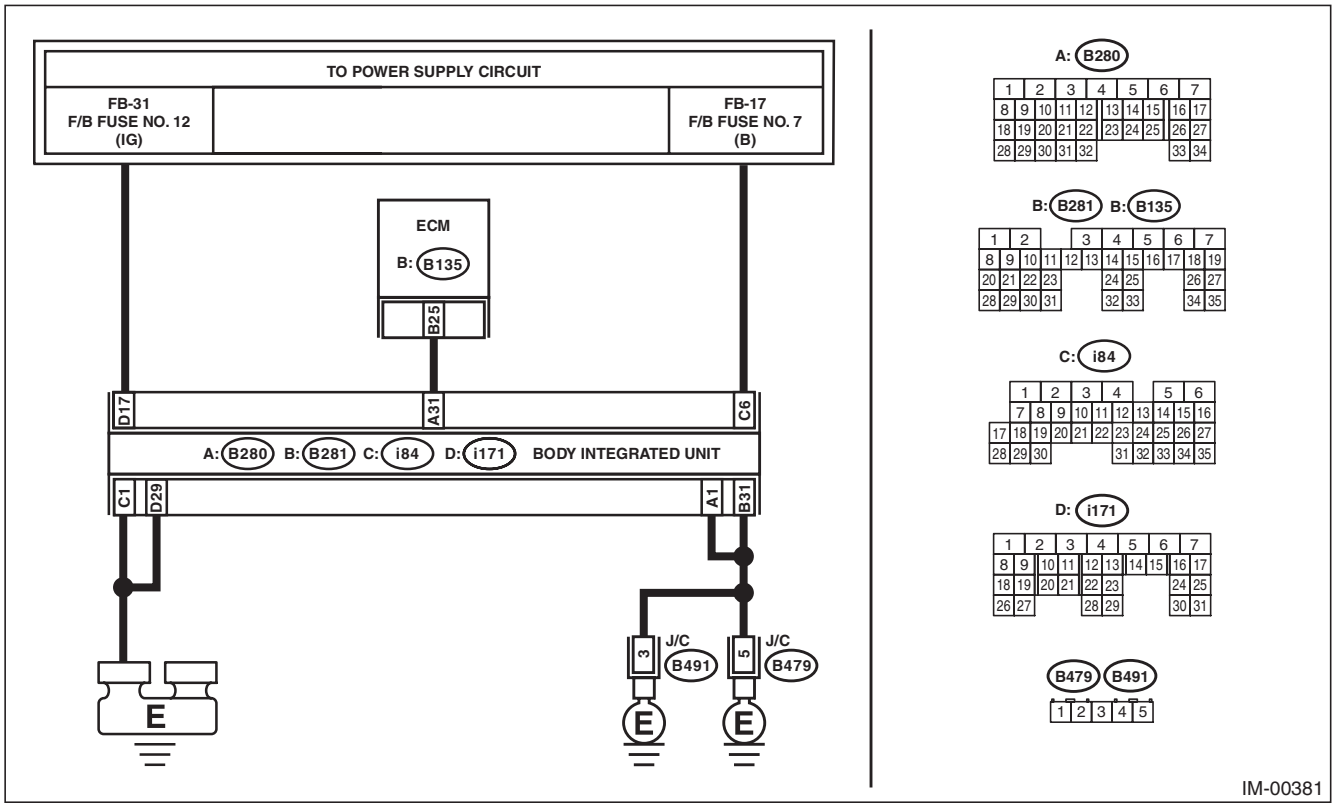

Step		Check	Yes	No
1	**CHECK BODY INTEGRATED UNIT POWER SUPPLY CIRCUIT.** 1) Turn the ignition switch to OFF. 2) Disconnect the connector from body integrated unit. 3) Measure the voltage between the body integrated unit connector terminal and chassis ground. ***Connector & terminal*** ***(i84) No. 6 (+) — Chassis ground (–):***	Is the voltage 10 V or more?	Go to step **2**.	Check the harness for open or short circuit between body integrated unit and fuse.
2	**CHECK BODY INTEGRATED UNIT POWER SUPPLY CIRCUIT.** 1) Turn the ignition switch to ON. 2) Measure the voltage between the body integrated unit connector terminal and chassis ground. ***Connector & terminal*** ***(i171) No. 17 (+) — Chassis ground (–):***	Is the voltage 10 V or more?	Go to step **3**.	Check the harness for open or short circuit between the body integrated unit and ignition switch.

GETthemANSWERS.org

Step		Check	Yes	No
3	**CHECK BODY INTEGRATED UNIT GROUND CIRCUIT.** 1) Turn the ignition switch to OFF. 2) Measure the resistance between the body integrated unit connector terminal and chassis ground. ***Connector & terminal*** ***(B280) No. 1 — Chassis ground:*** ***(B281) No. 31 — Chassis ground:*** ***(i84) No. 1 — Chassis ground:*** ***(i171) No. 29 — Chassis ground:***	Is the resistance less than 10 Ω?	Go to step **4**.	Repair the open circuit of the body integrated unit ground circuit.
4	**CHECK GROUND CIRCUIT FOR ECM.** Measure the resistance between the ECM ground terminal and engine ground.	Is the resistance less than 10 Ω?	Go to step **5**.	Repair the ECM ground circuit.
5	**CHECK HARNESS BETWEEN BODY INTEGRATED UNIT AND ECM.** 1) Disconnect the connector from ECM. 2) Measure the resistance between body integrated unit connector terminal and ECM connector terminal. ***Connector & terminal*** ***(B280) No. 31 — (B135) No. 25:***	Is the resistance less than 10 Ω?	Go to step **6**.	Repair the open circuit of the harness between the body integrated unit and ECM.
6	**CHECK COMMUNICATION CIRCUIT HARNESS.** 1) Turn the ignition switch to ON. 2) Measure the voltage between the body integrated unit connector terminal and chassis ground. ***Connector & terminal*** ***(B280) No. 31 (+) — Chassis ground (–):***	Is the voltage 6 V or more?	Repair the harness between body integrated unit and ECM.	Go to step **7**.
7	**CHECK COMMUNICATION CIRCUIT HARNESS.** Measure the voltage between ECM connector terminal and engine ground. ***Connector & terminal*** ***(B135) No. 25 (+) — Engine ground (–):***	Is the voltage 6 V or more?	Repair the harness between body integrated unit and ECM.	Go to step **8**.
8	**CHECK ECM BY COMMUNICATION LINE CHECK.** 1) Connect the connector to ECM only. 2) Start the communication line short check. <Ref. to IM(diag)-8, COMMUNICATION LINE CHECK, OPERATION, Subaru Select Monitor.>	Is the communication line check OK?	Replace the body integrated unit. <Ref. to SL-71, Body Integrated Unit.> Register all ignition keys (transponders). Refer to the "PC application help for Subaru Select Monitor".	Replace the ECM. <Ref. to FU(H4DOTC)-58, Engine Control Module (ECM).> <Ref. to FU(H6DO)-54, Engine Control Module (ECM).> Perform the registration procedure next. Refer to the "PC application help for Subaru Select Monitor".

NOTE:
Refer to the following inspection when DTC is detected after inspection above. <Ref. to IM(diag)-24, DTC P1578 METER FAILURE, Diagnostic Procedure with Diagnostic Trouble Code (DTC).>

GETthemANUALS.org

E: DTC P1574 KEY COMMUNICATION FAILURE

DTC DETECTING CONDITION:

Communication failure between key and body integrated unit

	Step	Check	Yes	No
1	**CHECK BODY INTEGRATED UNIT FUNCTION.** Insert the key into the ignition switch (LOCK position), then measure changes in voltage between the antenna connector and the chassis ground. ***Connector & terminal*** ***(B415) No. 1 (+) — Chassis ground (–):***	Is the maximum voltage more than 40 V? (Approx. 0.1 second after inserting the key) Is the voltage 0 V? (Approx. 1 second after inserting the key)	Go to step **2**.	Replace the body integrated unit. <Ref. to SL-71, Body Integrated Unit.> Register all ignition keys (transponders). Refer to the "PC application help for Subaru Select Monitor".
2	**CHECK IGNITION KEY (TRANSPONDER).** 1) Remove the key from ignition switch. 2) Start the engine using other key which is already registered.	Does the engine start?	Register ignition keys (transponders). Refer to the "PC application help for Subaru Select Monitor".	Replace the body integrated unit. <Ref. to SL-71, Body Integrated Unit.> Register all ignition keys (transponders). Refer to the "PC application help for Subaru Select Monitor".

F: DTC P1576 EGI CONTROL MODULE EEPROM

DTC DETECTING CONDITION:

- ECM malfunctioning
- Inaccessible ROM in ECM during key registration.

	Step	Check	Yes	No
1	**PERFORM REGISTRATION ON IGNITION KEY.** Perform registration on all keys of the vehicle. Refer to the "PC application help for Subaru Select Monitor".	Is registration for all keys complete?	Make sure it is possible to start the engine with all keys that have been taught. This completes the work.	Go to step **2**.
2	**PERFORM REGISTRATION ON IGNITION KEY.** Perform registration on all keys of the vehicle. Refer to the "PC application help for Subaru Select Monitor".	Is registration for all keys complete?	Make sure it is possible to start the engine with all keys that have been taught. This completes the work.	Go to step **3**.
3	**PERFORM REGISTRATION ON IGNITION KEY.** Perform registration on all keys of the vehicle. Refer to the "PC application help for Subaru Select Monitor".	Is registration for all keys complete?	Make sure it is possible to start the engine with all keys that have been taught. This completes the work.	Replace the ECM. <Ref. to FU(H4DOTC)-58, Engine Control Module (ECM).> <Ref. to FU(H6DO)-54, Engine Control Module (ECM).>

GETthemANSWERS.org

G: DTC P1577 IMM CONTROL MODULE EEPROM

DTC DETECTING CONDITION:

- Body integrated unit malfunctioning
- Failed to access ROM inside the body integrated unit.

Step		Check	Yes	No
1	**PERFORM REGISTRATION ON IGNITION KEY.** Perform registration on all keys of the vehicle. Refer to the “PC application help for Subaru Select Monitor”.	Is registration for all keys complete?	Make sure it is possible to start the engine with all keys that have been taught. This completes the work.	Go to step **2**.
2	**PERFORM REGISTRATION ON IGNITION KEY.** Perform registration on all keys of the vehicle. Refer to the “PC application help for Subaru Select Monitor”.	Is registration for all keys complete?	Make sure it is possible to start the engine with all keys that have been taught. This completes the work.	Go to step **3**.
3	**PERFORM REGISTRATION ON IGNITION KEY.** Perform registration on all keys of the vehicle. Refer to the “PC application help for Subaru Select Monitor”.	Is registration for all keys complete?	Make sure it is possible to start the engine with all keys that have been taught. This completes the work.	Replace the body integrated unit. <Ref. to SL-71, Body Integrated Unit.> Register all ignition keys (transponders). Refer to the “PC application help for Subaru Select Monitor”.

GETthemANUALS.org

H: DTC P1578 METER FAILURE

DTC DETECTING CONDITION:

- Except Canada models

Reference code incompatibility between combination meter and body integrated unit or communication failure between body integrated unit and ECM

- Canada models

Reference code incompatibility between security control module and body integrated unit or communication failure between body integrated unit and ECM

Step		Check	Yes	No
1	**CHECK DTC.** Read the DTC of body integrated unit using Subaru Select Monitor.	Is any of DTC B1401, B1405 and B1406 detected?	Go to step **2**.	<Ref. to IM(diag)-20, DTC P1572 IMM CIRCUIT FAILURE (EXCEPT ANTENNA CIRCUIT), Diagnostic Procedure with Diagnostic Trouble Code (DTC).>
2	**CHECK LAN COMMUNICATION SYSTEM.** Inspect LAN communication system. <Ref. to LAN(diag)-2, Basic Diagnostic Procedure.>	Is DTC U1300, U1301, U1302, B1100 or B1101 of the body integrated unit displayed?	Perform the diagnosis according to the DTC. <Ref. to LAN(diag)-32, List of Diagnostic Trouble Code (DTC).>	Go to step **3**.
3	**CHECK DTC.** Perform inspection for the diagnosis trouble code detected in step 1.	Is DTC B1401 detected?	Go to step **4**.	Perform the diagnosis for DTC B1405 or B1406.
4	**CHECK COMBINATION METER.** Perform the registration of immobilizer. Refer to the “PC application help for Subaru Select Monitor”.	Is the immobilizer registration achieved?	Go to step **5**.	Replace the combination meter and perform the registration of immobilizer again.
5	**CHECK ENGINE START.** Start the engine.	Does the engine start?	System is normal.	Replace the combination meter, perform the registration of immobilizer again and check that the engine starts normally.

NOTE:
When the combination meter and body integrated unit are replaced at a time, the immobilizer can not be registered. In this case, it is necessary to rewrite the ID into the body integrated unit.

GETtheMANUALS.org

I: DTC B1401 M COLLATION NG

NOTE:
Refer to DTC P1578 "Meter Failure" for diagnostic procedure. <Ref. to IM(diag)-24, DTC P1578 METER FAILURE, Diagnostic Procedure with Diagnostic Trouble Code (DTC).>

J: DTC B1402 IMMOBILIZER KEY COLLATION NG

NOTE:
Refer to the following inspections for diagnostic procedure.

- DTC P0513 "Incorrect Immobilizer Key"<Ref. to IM(diag)-16, DTC P0513 INCORRECT IMMOBILIZER KEY, Diagnostic Procedure with Diagnostic Trouble Code (DTC).>
- DTC P1570 "Antenna"<Ref. to IM(diag)-17, DTC P1570 ANTENNA, Diagnostic Procedure with Diagnostic Trouble Code (DTC).>
- DTC P1574 "Key Communication Failure"<Ref. to IM(diag)-22, DTC P1574 KEY COMMUNICATION FAILURE, Diagnostic Procedure with Diagnostic Trouble Code (DTC).>

K: DTC B1403 E/G REQUEST NG

NOTE:
Refer to DTC P1572 "IMM Circuit Failure (Except Antenna Circuit)" for diagnostic procedure. <Ref. to IM(diag)-20, DTC P1572 IMM CIRCUIT FAILURE (EXCEPT ANTENNA CIRCUIT), Diagnostic Procedure with Diagnostic Trouble Code (DTC).>

GETthemANUALS.org

L: DTC B1405 SCU COLLATION NG

DTC DETECTING CONDITION:

Reference code incompatibility between security control module and body integrated unit

Step		Check	Yes	No
1	**CHECK SCM COLLATION MODE.** Using Subaru Select Monitor, perform the function check «SCM Collation Mode» for the body integrated unit. <Ref. to BC(diag)-20, OPERATION, Function Check.>	Is there any malfunction?	Make sure it is possible to start the engine with all keys. This completes the work.	Perform the diagnosis according to the Select Monitor display.

M: DTC B1406 SCU_EEPROM_NG

DTC DETECTING CONDITION:

- Defective security control module
- ROM of security control module cannot be accessed

Step		Check	Yes	No
1	**PERFORM IGNITION KEY REGISTRATION.** Perform registration to all keys used for the vehicle. Refer to the “PC application help for Subaru Select Monitor”.	Is registration of all keys complete?	Make sure it is possible to start the engine with all keys that have been taught. This completes the work.	Go to step **2**.
2	**PERFORM IGNITION KEY REGISTRATION.** Perform registration to all keys used for the vehicle. Refer to the “PC application help for Subaru Select Monitor”.	Is registration of all keys complete?	Make sure it is possible to start the engine with all keys that have been taught. This completes the work.	Go to step **3**.
3	**PERFORM IGNITION KEY REGISTRATION.** Perform registration to all keys used for the vehicle. Refer to the “PC application help for Subaru Select Monitor”.	Is registration of all keys complete?	Make sure it is possible to start the engine with all keys that have been taught. This completes the work.	Replace the security control module. <Ref. to SL-65, Security Control Module.> Register all ignition keys (transponders). Refer to the “PC application help for Subaru Select Monitor”.

NOTE:

When the security control module and body integrated unit are replaced at a time, the immobilizer can not be registered. In this case, it is necessary to rewrite the ID into the body integrated unit.

GETthemANUALS.org

LAN SYSTEM (DIAGNOSTICS)

LAN(diag)

		Page
1.	Basic Diagnostic Procedure	2
2.	Check List for Interview	3
3.	General Description	4
4.	Electrical Component Location	6
5.	Control Module I/O Signal	8
6.	Subaru Select Monitor	9
7.	Read Diagnostic Trouble Code (DTC)	10
8.	Clear Memory Mode	11
9.	CAN Communication Circuit Check	12
10.	List of Diagnostic Trouble Code (DTC)	32
11.	Diagnostic Procedure with Diagnostic Trouble Code (DTC)	48
12.	General Diagnostic Table	82

GETtheMANUALS.org

1. Basic Diagnostic Procedure

A: PROCEDURE

CAUTION:
- **Subaru Select Monitor is required for reading DTC, performing diagnosis, reading current data, customizing and active test (compulsory drive).**
- **Remove foreign matter (dust, water, oil, etc.) from each control module connector during removal and installation.**
- **For model with immobilizer or model with keyless access, registration of immobilizer may be needed after the replacement of controller etc. For details, refer to the "PC application help for Subaru Select Monitor".**

NOTE:
- To check harness for open or short circuits, shake the suspected trouble spot or connector.
- Check List for Interview <Ref. to LAN(diag)-3, Check List for Interview.>

	Step	Check	Yes	No
1	**CHECK PRE-INSPECTION.** Ask the customer when and how the trouble occurred using the interview check list. <Ref. to LAN(diag)-3, Check List for Interview.>	Did you interview the customer?	Go to step **2**.	Interview the customer.
2	**BASIC INSPECTION.** Check components which might affect CAN communication problem. <Ref. to LAN(diag)-4, INSPECTION, General Description.>	Is the component that might affect CAN communication problem normal?	Go to step **3**.	Repair or replace each component.
3	**CHECK DTC.** 1) Start the engine and read all DTCs. NOTE: • When the engine does not start, perform the diagnosis for the engine start malfunction. <Ref. to EN(H4SO)(diag)-63, Diagnostics for Engine Starting Failure.> • If the communication function of the Subaru Select Monitor cannot be executed properly, check the communication circuit. <Ref. to LAN(diag)-48, COMMUNICATION FOR INITIALIZING IMPOSSIBLE, Diagnostic Procedure with Diagnostic Trouble Code (DTC).> 2) Record all DTCs and freeze frame data.	Is DTC regarding CAN communication displayed on Subaru Select Monitor?	Go to step **5**.	Go to step **4**.
4	**PERFORM GENERAL DIAGNOSTICS.** Inspect using "General Diagnostics Table". <Ref. to LAN(diag)-82, General Diagnostic Table.>	Is result of inspection OK?	LAN system is normal.	Go to step **5**.
5	**PERFORM DIAGNOSIS.** 1) Correct the cause of trouble. 2) Perform the Clear Memory Mode. <Ref. to LAN(diag)-11, OPERATION, Clear Memory Mode.> 3) Read the DTC. <Ref. to LAN(diag)-10, OPERATION, Read Diagnostic Trouble Code (DTC).>	Is DTC displayed on Subaru Select Monitor?	Repeat step 5 until DTC is not shown.	Finish the diagnosis.

GETtheMANUALS.org

2. Check List for Interview

A: CHECK

Inspect the following item about the vehicle's state.

1. DISPLAY STATUS IN THE COMBINATION METER

Display status in the combination meter	Engine coolant temperature gauge display	❑ OK / ❑ NG
	Fuel gauge display	❑ OK / ❑ NG
Display of other indicators	Malfunction indicator light	❑ ON / ❑ OFF
	SPORT indicator light (AT warning light)	❑ ON / ❑ OFF
	ABS warning light/Vehicle dynamics control (VDC) warning light	❑ ON / ❑ OFF
	Immobilizer indicator light	❑ ON / ❑ Blink / ❑ OFF

2. CONDITIONS UNDER WHICH TROUBLE OCCURS

Driving condition	❑ At standstill (While idling) ❑ When the vehicle is running Vehicle speed km/h (MPH) ❑ While accelerating Acceleration km/h (MPH) to km/h (MPH) ❑ Decelerating (With braking) Deceleration km/h (MPH) to km/h (MPH) ❑ Decelerating (Without braking) Deceleration km/h (MPH) to km/h (MPH)
	❑ Flat road ❑ Uphill ❑ Downhill ❑ Gravel road ❑ Bumpy road ❑ Snowy road
	Does it occur when operating any part? Operated part: **TROUBLE SYMPTOM:**
	Are there any other troubles occurred? From where: **TROUBLE SYMPTOM:**

GETtheMANUALS.org

3. General Description

A: CAUTION

1. SUPPLEMENTAL RESTRAINT SYSTEM "AIRBAG"

Airbag system wiring harness is routed near the body integrated unit and twisted pair line.

CAUTION:

- **Do not use the electrical test equipment on all airbag system wiring harnesses and connectors.**
- **Be careful not to damage the airbag system wiring harness when servicing the body integrated unit and LAN system.**

2. LAN SYSTEM

- Bus line of LAN system is twisted pair line. Be careful not to by-pass or partly unbind the twisted pair line.
- Do not make clearance between bus lines (CAN High, CAN Low).
- Difference of bus line length should be within 10 cm (3.94 in).
- Fray near the connector should be within 8 cm (3.14 in).

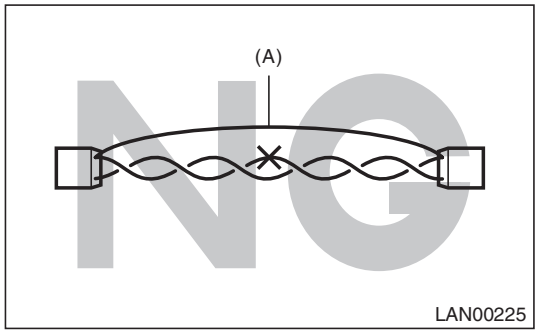

(A) Bypass wire connection

- If the characteristics of the twisted pair line are changed, it may extremely weaken against noise.
- When repairing the harness, connect the wires using soldering and protect it with insulating tape etc.

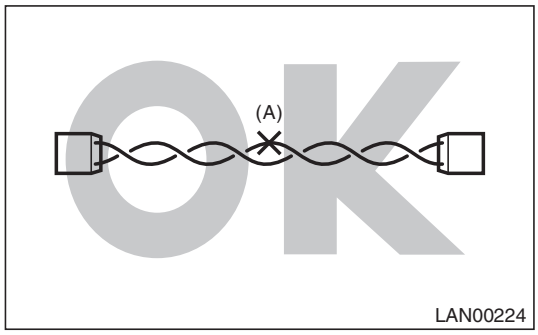

(A) Soldering and protection with insulating tape

B: INSPECTION

Before performing diagnostics, check the following item which might affect body integrated unit malfunctions.

1) Measure the battery voltage and check electrolyte.

Standard voltage: 12 V or more

Specific gravity: 1.260 or more

2) Check the fuse condition.
Make sure that ampere of the fuse is setting value, and it is not blown out.
3) Check the connecting condition of harness and harness connector.
4) Confirm settings of body integrated unit are corresponded to vehicle equipment. <Ref. to BC(diag)-18, OPERATION, Registration Body Integrated Unit.>
5) Make sure that the User Customizing of the body integrated unit matches the vehicle equipment. <Ref. to BC(diag)-16, OPERATION, User Customizing.>
6) Confirm "Factory initial setting" of body integrated unit registrations is set to "Market".
7) Confirm key illumination does not blink with ignition switch turned to ON.

GETtheMANUALS.org

C: PREPARATION TOOL

1. SPECIAL TOOL

ILLUSTRATION	TOOL NUMBER	DESCRIPTION	REMARKS
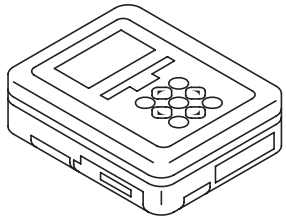 ST1B022XU0	1B022XU0	SUBARU SELECT MONITOR III KIT	Used for troubleshooting the electrical system.

2. GENERAL TOOL

TOOL NAME	REMARKS
Circuit tester	Used for measuring resistance, voltage and current.

GETtheMANUALS.org

4. Electrical Component Location

A: LOCATION

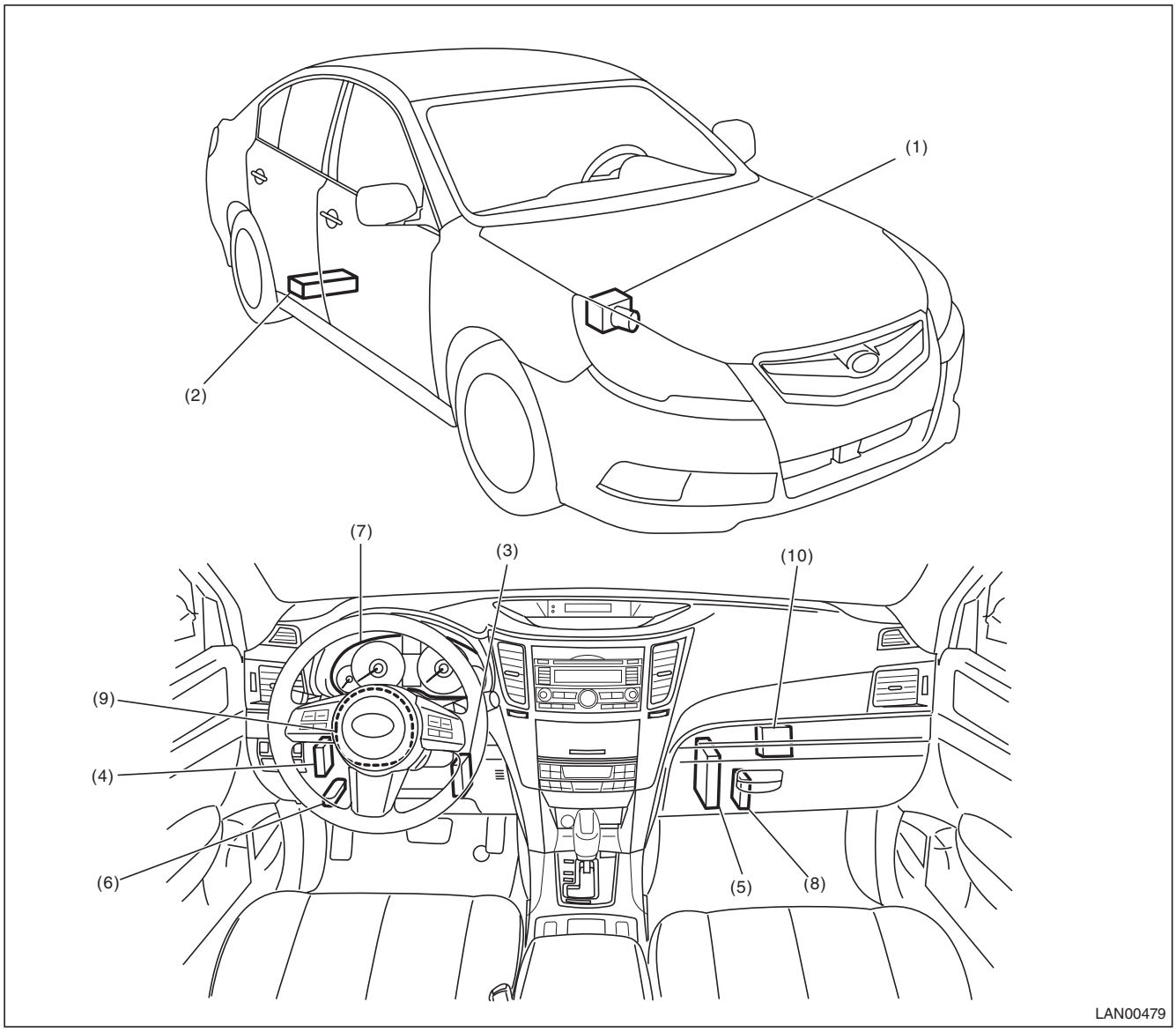

(1)	ABSCM&H/U or VDCCM&H/U (inside engine room)	(5)	Engine control module	(9)	Steering angle sensor
(2)	Electronic parking CM	(6)	Data link connector	(10)	Security CM
(3)	Body integrated unit	(7)	Combination meter		
(4)	Transmission control module (AT)	(8)	A/C CM		

GETtheMANUALS.org

Electrical Component Location

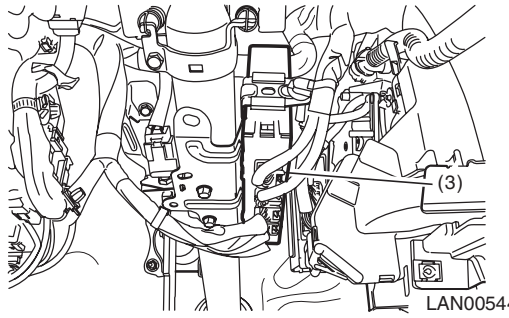

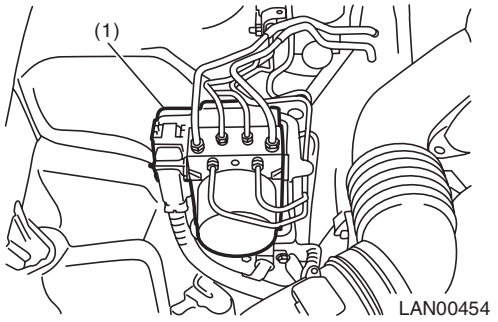

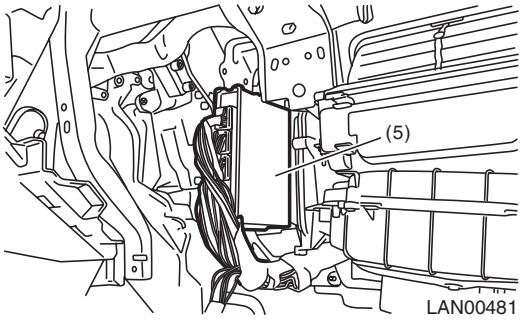

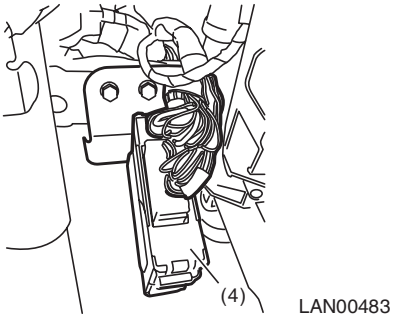

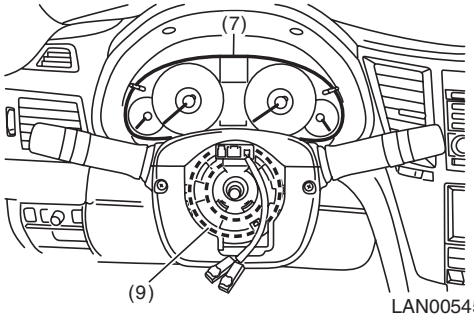

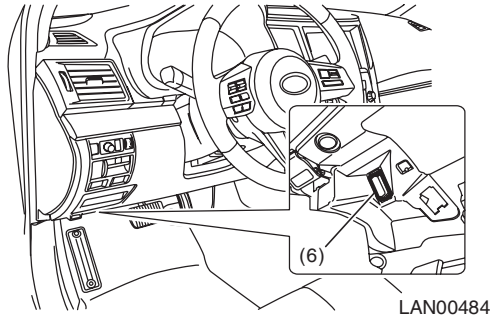

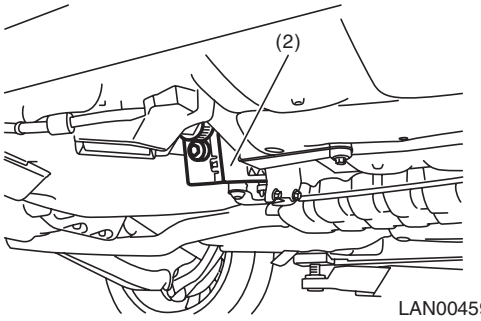

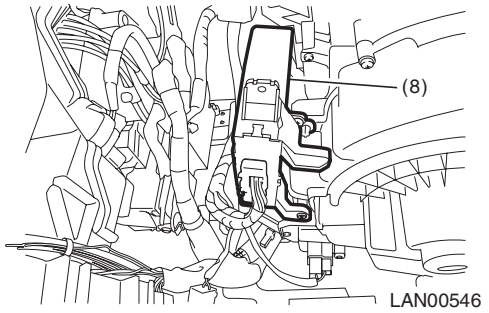

GETtheMANUALS.org

5. Control Module I/O Signal

A: ELECTRICAL SPECIFICATION

- Body integrated unit

For I/O signals of the body integrated unit, refer to Body Control (Diagnostics). <Ref. to BC(diag)-7, Control Module I/O Signal.>

- Engine control module

For I/O signals of ECM, refer to Engine (Diagnostics). <Ref. to EN(H4SO)(diag)-17, Engine Control Module (ECM) I/O Signal.> <Ref. to EN(H4DOTC)(diag)-18, Engine Control Module (ECM) I/O Signal.> <Ref. to EN(H6DO)(diag)-18, Engine Control Module (ECM) I/O Signal.>

- Transmission control module

For I/O signals of TCM, refer to Automatic Transmission (Diagnostics). <Ref. to 5AT(diag)-13, Transmission Control Module (TCM) I/O Signal.> <Ref. to CVT(diag)-11, Transmission Control Module (TCM) I/O Signal.>

- VDC control module

For I/O signals of VDC CM, refer to Vehicle Dynamics Control (Diagnostics). <Ref. to VDC(diag)-12, Control Module I/O Signal.>

- Electronic parking CM

For I/O signals of electronic CM, refer to Parking Brake (Diagnostics). <Ref. to PB(diag)-12, Control Module I/O Signal.>

- A/C CM

For unit I/O signals of A/C CM, refer to HVAC System (Diagnostics). <Ref. to AC(diag)-6, Control Module I/O Signal.>

- Combination meter

For I/O signals of combination meter, refer to Combination Meter System. <Ref. to WI-98, WIRING DIAGRAM, Combination Meter System.>

- Data link connector

For I/O signals of data link connector, refer to Engine (Diagnostics). <Ref. to EN(H4SO)(diag)-27, Data Link Connector.> <Ref. to EN(H4DOTC)(diag)-29, Data Link Connector.> <Ref. to EN(H6DO)(diag)-28, Data Link Connector.>

* CAN sleep state:

Hold on for approx. one minute with ignition OFF and the doors, trunk, rear gate all closed.

B: WIRING DIAGRAM

<Ref. to WI-85, WIRING DIAGRAM, CAN Communication System.>

GETtheMANUALS.org

6. Subaru Select Monitor

A: OPERATION

For details of basic operations, refer to “PC application help for Subaru Select Monitor”.

GETtheMANUALS.org

7. Read Diagnostic Trouble Code (DTC)

A: OPERATION

For details of operation procedures, refer to “PC application help for Subaru Select Monitor”.

GETtheMANUALS.org

8. Clear Memory Mode

A: OPERATION

For details of operation procedures, refer to “PC application help for Subaru Select Monitor”.

GETthemANUALS.org

9. CAN Communication Circuit Check

A: PROCEDURE

NOTE:
When measuring the resistance of CAN communication circuit, measure it in sleep status.
To enter sleep status
• With ignition switch OFF and key or switch operation stopped, keep the doors, trunk, and rear gate all closed for one minute or more.

WIRING DIAGRAM:

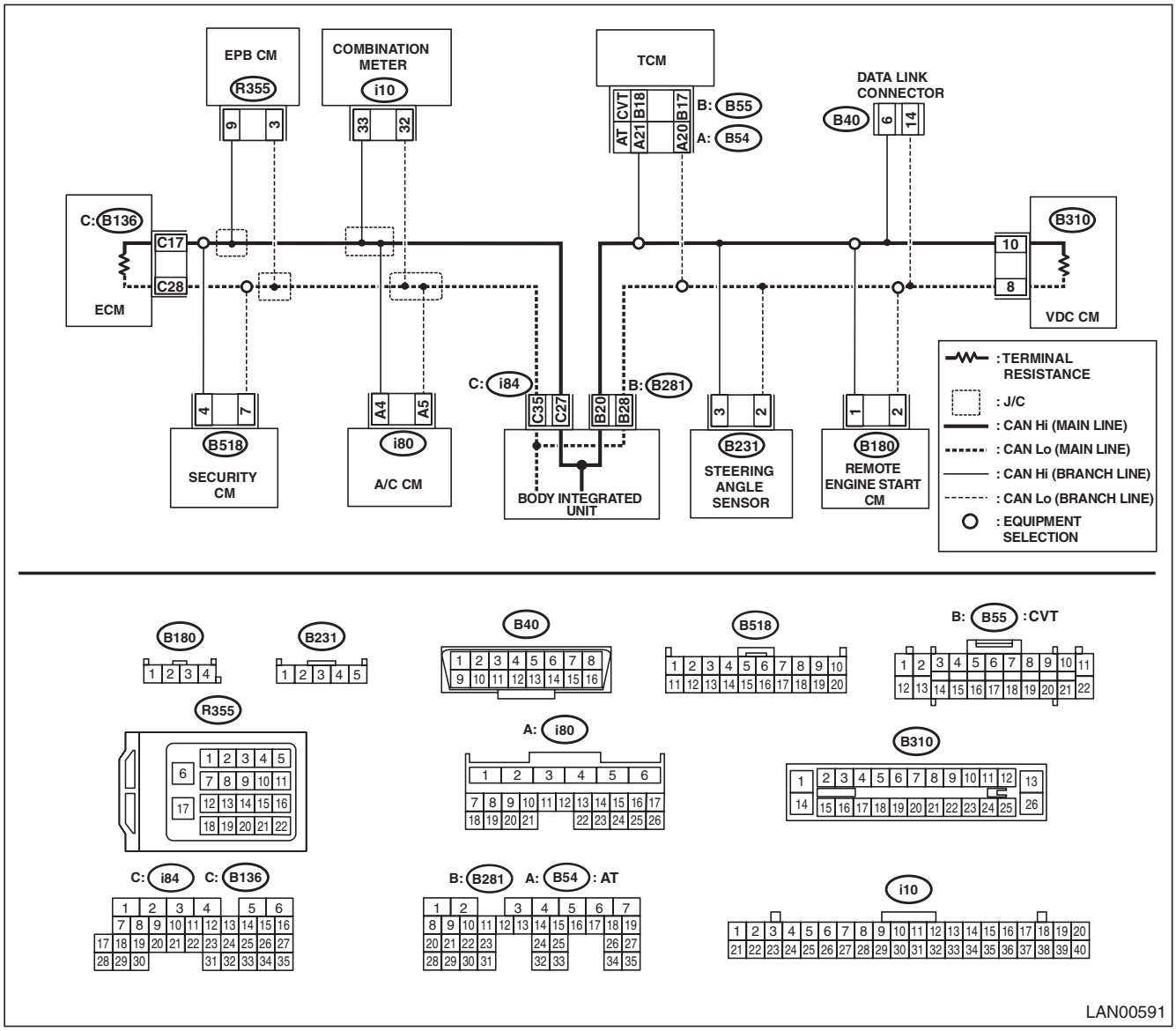

GETtheMANUALS.org

CAN Communication Circuit Check

	Step	Check	Yes	No
1	**CHECK FROM DATA LINK CONNECTOR.** Using the tester, measure the resistance between terminals. ***Connector & terminal*** ***(B40) No. 6 — Chassis ground:*** ***(B40) No. 14 — Chassis ground:***	Is the resistance 10 Ω or less?	Check for ground short. <Ref. to LAN(diag)-15, GROUND SHORT INSPECTION, INSPECTION, CAN Communication Circuit Check.>	Go to step **2**.
2	**CHECK FROM DATA LINK CONNECTOR.** 1) Turn the ignition switch to ON. 2) Using the tester, measure the voltage between terminals. ***Connector & terminal*** ***(B40) No. 6 (+) — Chassis ground (–):*** ***(B40) No. 14 (+) — Chassis ground (–):***	Is the voltage 5 V or less?	Go to step **3**.	Check for battery short. <Ref. to LAN(diag)-17, BATTERY SHORT INSPECTION, INSPECTION, CAN Communication Circuit Check.>
3	**CHECK FROM DATA LINK CONNECTOR.** 1) Turn the ignition switch to OFF. 2) Using the tester, measure the resistance between terminals. ***Connector & terminal*** ***(B40) No. 6 — No. 14:***	Is the resistance 55 Ω or less?	Perform the inspection for 55 Ω or less. <Ref. to LAN(diag)-21, 55 Ω OR LESS, INSPECTION, CAN Communication Circuit Check.>	Go to step **4**.
4	**CHECK FROM DATA LINK CONNECTOR.** Using the tester, measure the resistance between terminals. ***Connector & terminal*** ***(B40) No. 6 — No. 14:***	Is the resistance 65 Ω or more?	Perform the inspection for 65 Ω or more. <Ref. to LAN(diag)-23, 65 Ω OR MORE, INSPECTION, CAN Communication Circuit Check.>	A related line may be open. Perform the inspection for 56 — 64 Ω relevant to the detected DTC. <Ref. to LAN(diag)-14, LIST, CAN Communication Circuit Check.>

GETthemMANUALS.org

B: LIST

Resistance value between CAN Hi And Lo	Contents of inspection	Remarks
Ground short inspection	<Ref. to LAN(diag)-15, GROUND SHORT INSPECTION, INSPECTION, CAN Communication Circuit Check.>	Shorted to ground in the communication circuit or control module.
Battery short inspection	<Ref. to LAN(diag)-17, BATTERY SHORT INSPECTION, INSPECTION, CAN Communication Circuit Check.>	Shorted to battery power supply in the communication circuit or control module.
56 — 64 Ω	<Ref. to LAN(diag)-19, 56 — 64 Ω, INSPECTION, CAN Communication Circuit Check.>	Combined resistance of end resistance does not have malfunction; short to ground or +B short of the CAN communication circuit is possible, however.
55 Ω or less	<Ref. to LAN(diag)-21, 55 Ω OR LESS, INSPECTION, CAN Communication Circuit Check.>	Resistance is lower than combined resistance of end resistance. Short to CAN Hi and CAN Lo on the CAN communication circuit is possible.
65 Ω or more	<Ref. to LAN(diag)-23, 65 Ω OR MORE, INSPECTION, CAN Communication Circuit Check.>	Resistance is higher than combined resistance of end resistance. Open circuit of CAN communication circuit is possible.
56 — 64 Ω (TCM)	<Ref. to LAN(diag)-25, 56 — 64 Ω (TCM), INSPECTION, CAN Communication Circuit Check.>	No TCM data is received. Perform inspection when faulty is detected.
56 — 64 Ω (Steering angle sensor)	<Ref. to LAN(diag)-27, RELATED LINES 56 — 64 Ω (STEERING ANGLE SENSOR), INSPECTION, CAN Communication Circuit Check.>	No other data is received. Perform inspection when faulty is not detected.
56 — 64 Ω (A/C CM)	<Ref. to LAN(diag)-28, 56 — 64 Ω (A/C CM), INSPECTION, CAN Communication Circuit Check.>	No A/C data is received. Perform inspection when faulty is detected.
56 — 64 Ω (Electronic parking CM)	<Ref. to LAN(diag)-29, 56 — 64 Ω (ELECTRONIC PARKING CM), INSPECTION, CAN Communication Circuit Check.>	No EPB data is received. Perform inspection when faulty is detected.
56 — 64 Ω (Combination meter)	<Ref. to LAN(diag)-30, 56 — 64 Ω (COMBINATION METER), INSPECTION, CAN Communication Circuit Check.>	No meter data is received. Perform inspection when faulty is detected.
56 — 64 Ω (Security CM)	<Ref. to LAN(diag)-31, 56 — 64 Ω (SECURITY CM), INSPECTION, CAN Communication Circuit Check.>	No security CM data is received. Perform inspection when faulty is detected.

GETthemANDALS.org

C: INSPECTION

1. GROUND SHORT INSPECTION

WIRING DIAGRAM:

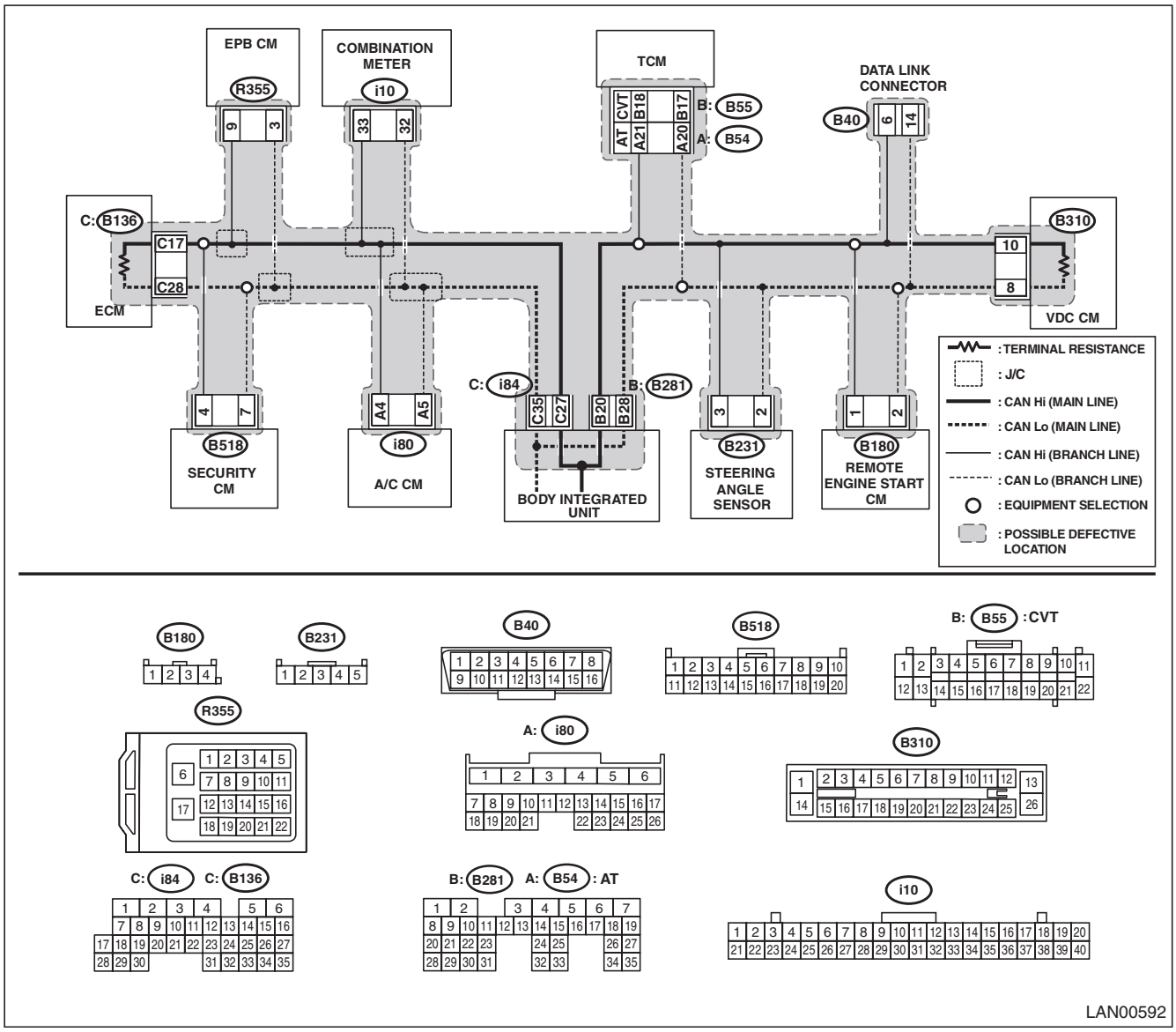

NOTE:
Main wiring harness or related lines may be shorted to ground, or shorted to ground in one of the control modules.

Step		Check	Yes	No
1	**CHECK BETWEEN RELATED LINES AND MAIN WIRING HARNESS.** Using the tester, measure the resistance between terminals. ***Connector & terminal*** ***(B40) No. 6 — Chassis ground:*** ***(B40) No. 14 — Chassis ground:***	Is the resistance 10 Ω or less?	Go to step **2**.	Repair or replace the short circuit of the harness.

GETtheMANUALS.org

Step		Check	Yes	No
2	**CHECK CONTROL MODULE.** With the tester connected, disconnect control module. NOTE: Disconnect the body integrated unit at the end. ***Connector & terminal*** ***(B40) No. 6 — Chassis ground:*** ***(B40) No. 14 — Chassis ground:***	Did the resistance change to 10 Ω or more?	Replace the control module whose resistance has changed. When the value changed at disconnecting the body integrated unit, go to next. Go to step **3**.	Go to step **3**.
3	**CHECK BETWEEN MAIN WIRING HARNESSES.** Using the tester, measure the resistance between terminals. ***Connector & terminal*** ***(i84) No. 27 — Chassis ground:*** ***(i84) No. 35 — Chassis ground:***	Is the resistance 10 Ω or less?	Repair or replace the short circuit of the harness.	Replace the body integrated unit. <Ref. to SL-71, REMOVAL, Body Integrated Unit.>

GETthemMANUALS.org

2. BATTERY SHORT INSPECTION

WIRING DIAGRAM:

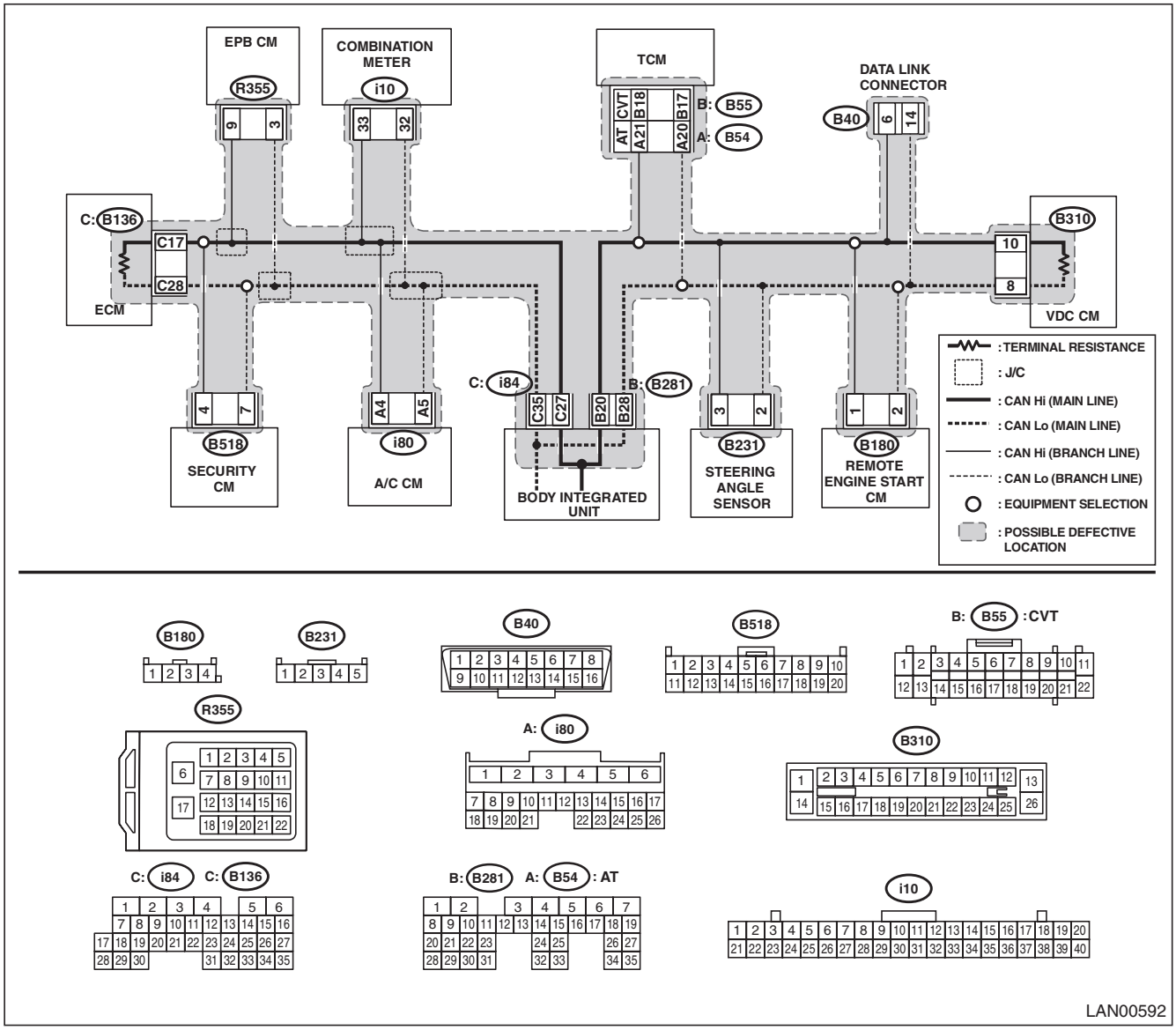

NOTE:
Main wiring harness or related lines may be shorted to battery circuit, or shorted to battery circuit in one of the control modules.

Step		Check	Yes	No
1	**CHECK BETWEEN RELATED LINES AND MAIN WIRING HARNESS.** 1) Turn the ignition switch to ON. 2) Using the tester, measure the voltage between terminals. ***Connector & terminal*** ***(B40) No. 6 (+) — Chassis ground (–):*** ***(B40) No. 14 (+) — Chassis ground (–):***	Is the voltage 5 V or less?	Currently returned to normal.	Go to step **2**.

GETthemANDALS.org

Step		Check	Yes	No
2	**CHECK CONTROL MODULE.** With the tester connected, disconnect control module. NOTE: Disconnect the body integrated unit at the end. ***Connector & terminal*** ***(B40) No. 6 (+) — Chassis ground (–):*** ***(B40) No. 14 (+) — Chassis ground (–):***	Did the voltage change to 5 V or less?	Replace the control module whose voltage has changed. When the value changed at disconnecting the body integrated unit, go to next. Go to step **3**.	Go to step **3**.
3	**CHECK BETWEEN MAIN WIRING HARNESSES.** Using the tester, measure the voltage between terminals. ***Connector & terminal*** ***(i84) No. 27 (+) — Chassis ground (–):*** ***(i84) No. 35 (+) — Chassis ground (–):***	Is the voltage 1 V or less?	Replace the body integrated unit. <Ref. to SL-71, REMOVAL, Body Integrated Unit.>	Repair or replace the short circuit of the harness.

GETtheMANUALS.org

3. 56 — 64 Ω

WIRING DIAGRAM:

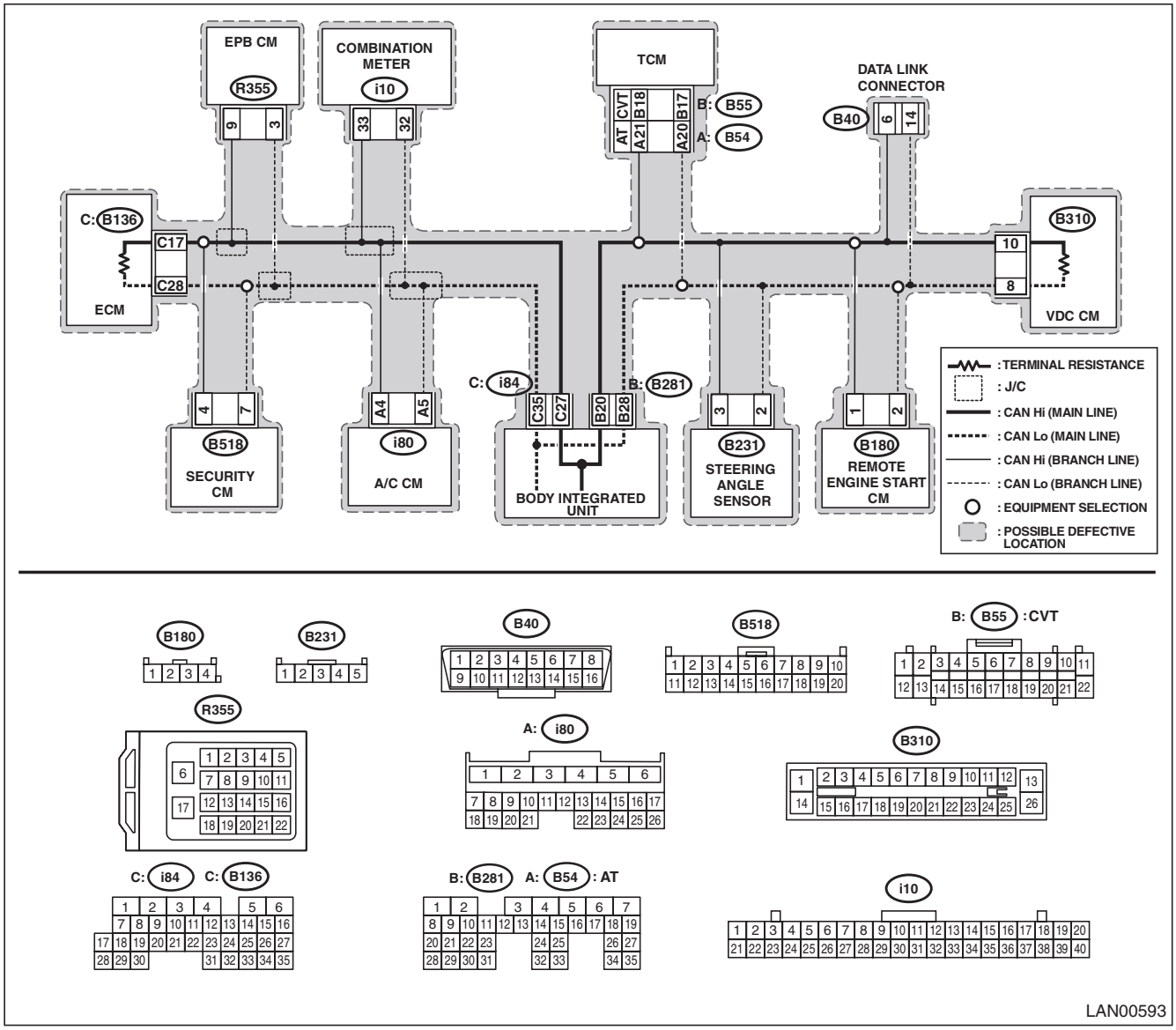

NOTE:
When the measured resistance value is 56 — 64 Ω, main wiring harness or related lines may be shorted to ground, or shorted to power supply line, or related line may be open.

Step		Check	Yes	No
1	**CHECK BETWEEN RELATED LINES AND MAIN WIRING HARNESS.** Using the tester, measure the resistance between terminals. ***Connector & terminal*** ***(B40) No. 6 — Chassis ground:*** ***(B40) No. 14 — Chassis ground:***	Is the resistance 10 Ω or less?	Go to step **2**.	Go to step **4**.

GETtheMANUALS.org

	Step	Check	Yes	No
2	**CHECK CONTROL MODULE.** With the tester connected, disconnect control module. NOTE: Disconnect the body integrated unit at the end. ***Connector & terminal*** ***(B40) No. 6 — Chassis ground:*** ***(B40) No. 14 — Chassis ground:***	Did the resistance change to 10 Ω or more?	Replace the control module whose resistance has changed. When the value changed at disconnecting the body integrated unit, go to next. Go to step **3**.	Repair or replace the short circuit of the harness.
3	**CHECK MAIN WIRING HARNESS AND RELATED LINES.** Using the tester, measure the resistance between terminals. ***Connector & terminal*** ***(i84) No. 27 — Chassis ground:*** ***(i84) No. 35 — Chassis ground:***	Is the resistance 10 Ω or less?	Repair or replace the short circuit of the harness.	Replace the body integrated unit. <Ref. to SL-71, REMOVAL, Body Integrated Unit.>
4	**CHECK BETWEEN RELATED LINES AND MAIN WIRING HARNESS.** 1) Turn the ignition switch to ON. 2) Using the tester, measure the voltage between terminals. ***Connector & terminal*** ***(B40) No. 6 (+) — Chassis ground (–):*** ***(B40) No. 14 (+) — Chassis ground (–):***	Is the voltage 5 V or less?	CAN communication circuit is normal.	Go to step **5**.
5	**CHECK CONTROL MODULE.** With the tester connected, disconnect control module. NOTE: Disconnect the body integrated unit at the end. ***Connector & terminal*** ***(B40) No. 6 (+) — Chassis ground (–):*** ***(B40) No. 14 (+) — Chassis ground (–):***	Did the voltage change to 5 V or less?	Replace the control module whose voltage has changed. When the value changed at disconnecting the body integrated unit, go to next. Go to step **6**.	Repair or replace the short circuit of the harness.
6	**CHECK HARNESS.** Using a tester, measure the voltage between terminals and chassis ground. ***Connector & terminal*** ***(i84) No. 27 (+) — Chassis ground (–):*** ***(i84) No. 35 (+) — Chassis ground (–):***	Is the voltage 5 V or less?	Replace the body integrated unit. <Ref. to SL-71, REMOVAL, Body Integrated Unit.>	Repair or replace the short circuit of the harness.

GETtheMANUALS.org

4. 55 Ω OR LESS

WIRING DIAGRAM:

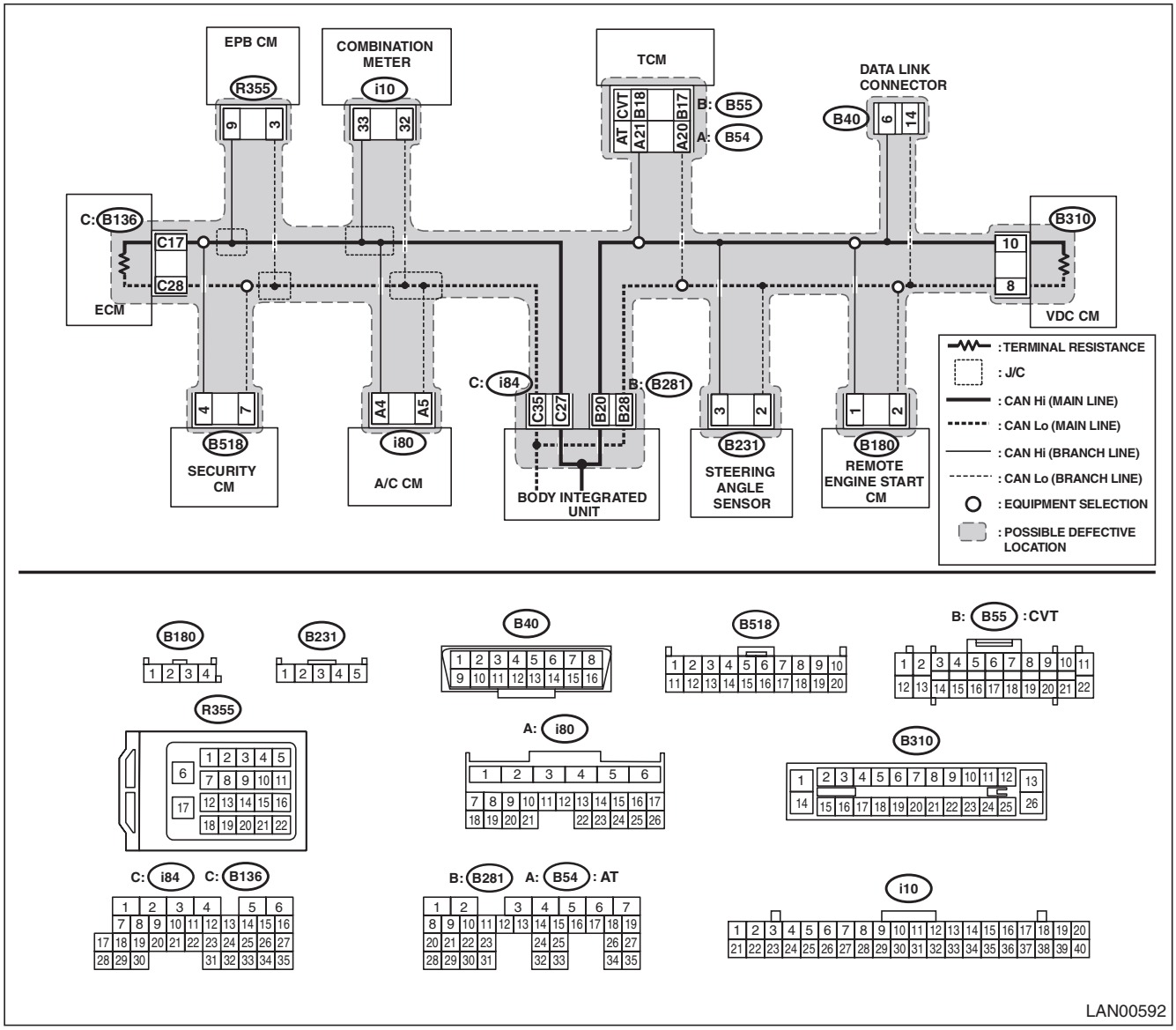

NOTE:
When the bus line is measured, combined resistance of end resistance (120 Ω) in ECM and end resistance (120 Ω) in VDC CM can be measured. The combined resistance is approximately 56 — 64 Ω. When the measured resistance value is 55 Ω or less, main wiring harness or related lines may be shorted, or combined resistance may have changed because resistance other than end resistance is created on the circuit.

Step		Check	Yes	No
1	**CHECK BETWEEN RELATED LINES AND MAIN WIRING HARNESS.** Using the tester, measure the resistance between terminals. ***Connector & terminal*** ***(B40) No. 6 — No. 14:***	Is the resistance 10 Ω or less?	Go to step **2**.	Go to step **4**.

GETthemANSWERS.org

Step		Check	Yes	No
2	**CHECK MAIN WIRING HARNESS AND RELATED LINES.** With a tester connected, disconnect control module connectors in order. NOTE: Disconnect the body integrated unit at the end. ***Connector & terminal*** ***(B40) No. 6 — No. 14:***	Is there any control module whose condition has changed from short state?	Replace the control module whose resistance has changed. When the value changed at disconnecting the body integrated unit, go to next. Go to step **3**.	Go to step **4**.
3	**CHECK BETWEEN MAIN WIRING HARNESSES.** Using the tester, measure the resistance between terminals. ***Connector & terminal*** ***(i84) No. 27 — No. 35:***	Is the resistance 10 Ω or less?	Repair or replace the short circuit of the harness.	Replace the body integrated unit. <Ref. to SL-71, REMOVAL, Body Integrated Unit.>
4	**CHECK CONTROL MODULE.** 1) Disconnect ECM and VDC CM connectors. 2) Using a tester, measure the resistance between control module terminals. ***Connector & terminal*** ***(B136) No. 17 — No. 28:*** ***(B310) No. 8 — No. 10:***	Is the resistance 115 — 135 Ω?	Go to step **5**.	Replace the control module whose end resistance value is out of the specified range.
5	**CHECK CONTROL MODULE.** 1) Disconnect the connector of body integrated unit. 2) Using a tester, measure the resistance between control module terminals. ***Connector & terminal*** ***(B281) No. 28 — (i84) No. 27:*** ***(B281) No. 20 — (i84) No. 35:***	Is the resistance 1425 — 1575 Ω?	Go to step **6**.	Replace the body integrated unit. <Ref. to SL-71, REMOVAL, Body Integrated Unit.>
6	**CHECK CONTROL MODULE.** Using a tester, measure the resistance between control module terminals. ***Connector & terminal*** ***(B281) No. 28 — (i84) No. 35:*** ***(B281) No. 20 — (i84) No. 27:***	Is the resistance less than 1 Ω?	Go to step **7**.	Replace the body integrated unit. <Ref. to SL-71, REMOVAL, Body Integrated Unit.>
7	**CHECK CONTROL MODULE.** 1) Disconnect the security CM connector. 2) Using a tester, measure the resistance between control module terminals. ***Connector & terminal*** ***(B40) No. 6 — No. 14:***	Is the resistance 1425 — 1575 Ω?	Go to step **8**.	Replace the security CM.
8	**CHECK HARNESS.** Using the tester, check the short circuit portion of each harness. ***Connector & terminal*** ***(B281) No. 28 — No. 20:***	Is the resistance 1 MΩ or more?	Go to step **10**.	Go to step **9**.
9	**CHECK CONTROL MODULE.** With a tester connected, disconnect control modules in order. ***Connector & terminal*** ***(B281) No. 28 — No. 20:***	Are there any control modules whose resistance changed to 1 MΩ or more?	Replace the control module that has changed.	Repair or replace the harness due to resistance component.
10	**CHECK CONTROL MODULE.** With a tester connected, disconnect control modules in order. ***Connector & terminal*** ***(i84) No. 27 — No. 35:***	Is there any control module whose resistance has changed to 1 MΩ or more?	Replace the control module that has changed.	Repair or replace the harness due to resistance component.

GETthemMANUALS.org

5. 65 Ω OR MORE

WIRING DIAGRAM:

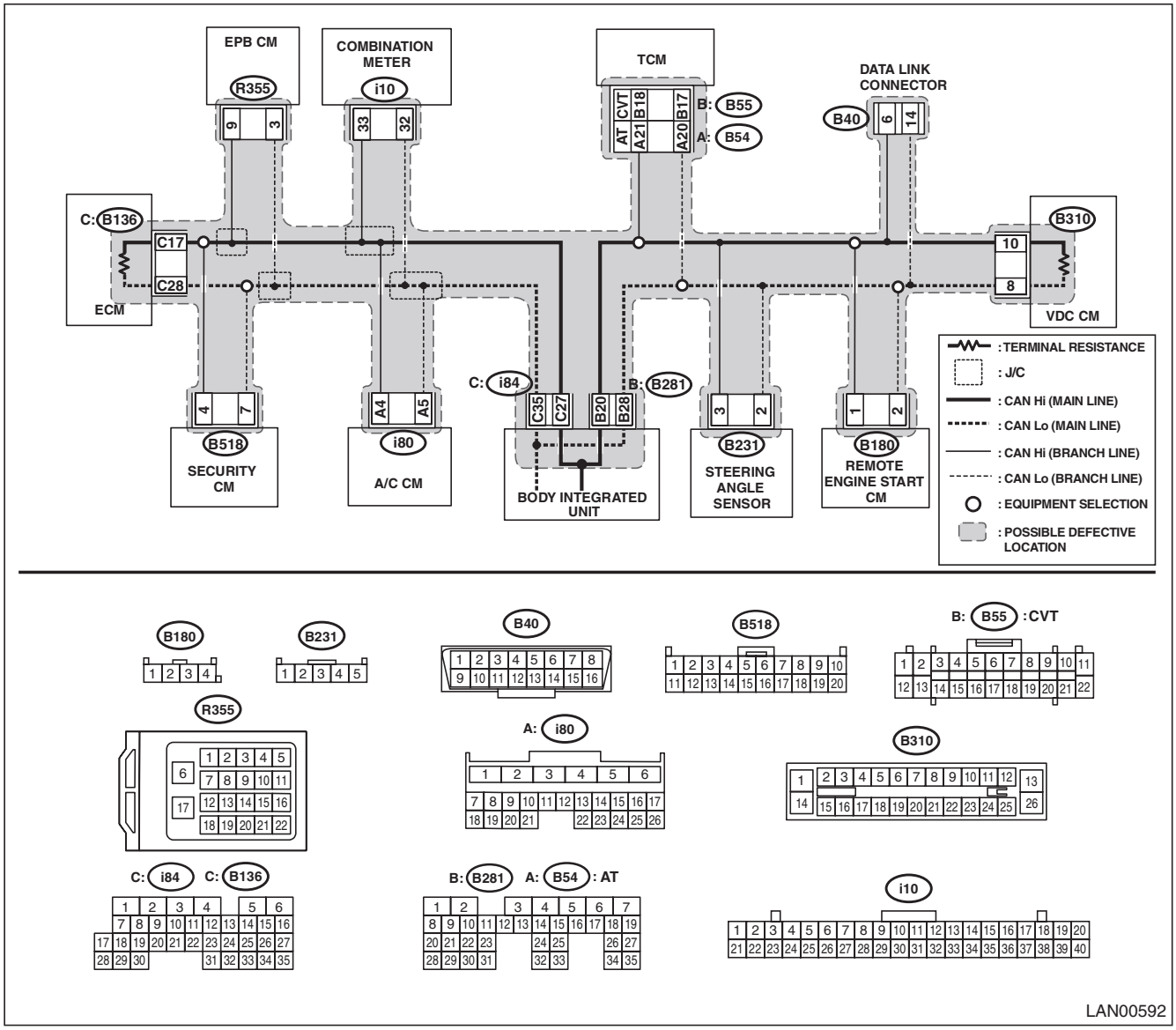

NOTE:
When CAN communication circuit is measured, combined resistance of end resistance (120 Ω) in ECM and end resistance (120 Ω) in VDC CM can be measured. The combined resistance is approximately 56 — 64 Ω. When the measured resistance value is 65 Ω or more, either of end resistance or main wiring harness may have malfunction such as open circuit.

Step		Check	Yes	No
1	**CHECK CONTROL MODULE.** 1) Disconnect ECM and VDC CM connectors. 2) Using a tester, measure the resistance between control module terminals. ***Connector & terminal*** ***(B136) No. 17 — No. 28:*** ***(B310) No. 8 — No. 10:***	Is the resistance 115 — 135 Ω?	Go to step **2**.	Replace the control module whose value is out of the specification.

GETthemMANUALS.org

Step		Check	Yes	No
2	**CHECK CONTROL MODULE.** 1) Disconnect the connector of body control module. 2) Using a tester, measure the resistance between control module terminals. ***Connector & terminal*** ***(B281) No. 28 — (i84) No. 27:*** ***(B281) No. 20 — (i84) No. 35:***	Is the resistance 1425 — 1575 Ω?	Go to step **3**.	Replace the body integrated unit. <Ref. to SL-71, REMOVAL, Body Integrated Unit.>
3	**CHECK CONTROL MODULE.** Using the tester, measure the resistance between terminals. ***Connector & terminal*** ***(B281) No. 28 — (i84) No. 35:*** ***(B281) No. 20 — (i84) No. 27:***	Is the resistance less than 1 Ω?	Go to step **4**.	Replace the body integrated unit. <Ref. to SL-71, REMOVAL, Body Integrated Unit.>
4	**CHECK HARNESS.** Using a tester, check continuity between terminals. ***Connector & terminal*** ***(B40) No. 6 — (B310) No. 10:*** ***(B40) No. 14 — (B310) No. 8:*** ***(B40) No. 6 — (i281) No. 20:*** ***(B40) No. 14 — (i281) No. 28:***	Is there continuity?	Go to step **5**.	Repair or replace the open circuit of harness.
5	**CHECK HARNESS.** 1) Disconnect the ECM connector. 2) Using a tester, check continuity between terminals. ***Connector & terminal*** ***(B40) No. 6 — (B136) No. 17:*** ***(B40) No. 14 — (B136) No. 28:***	Is there continuity?	It is possible that temporary poor communication occurs.	Repair or replace the open circuit of harness.

GETthemMANUALS.org

6. 56 — 64 Ω (TCM)

WIRING DIAGRAM:

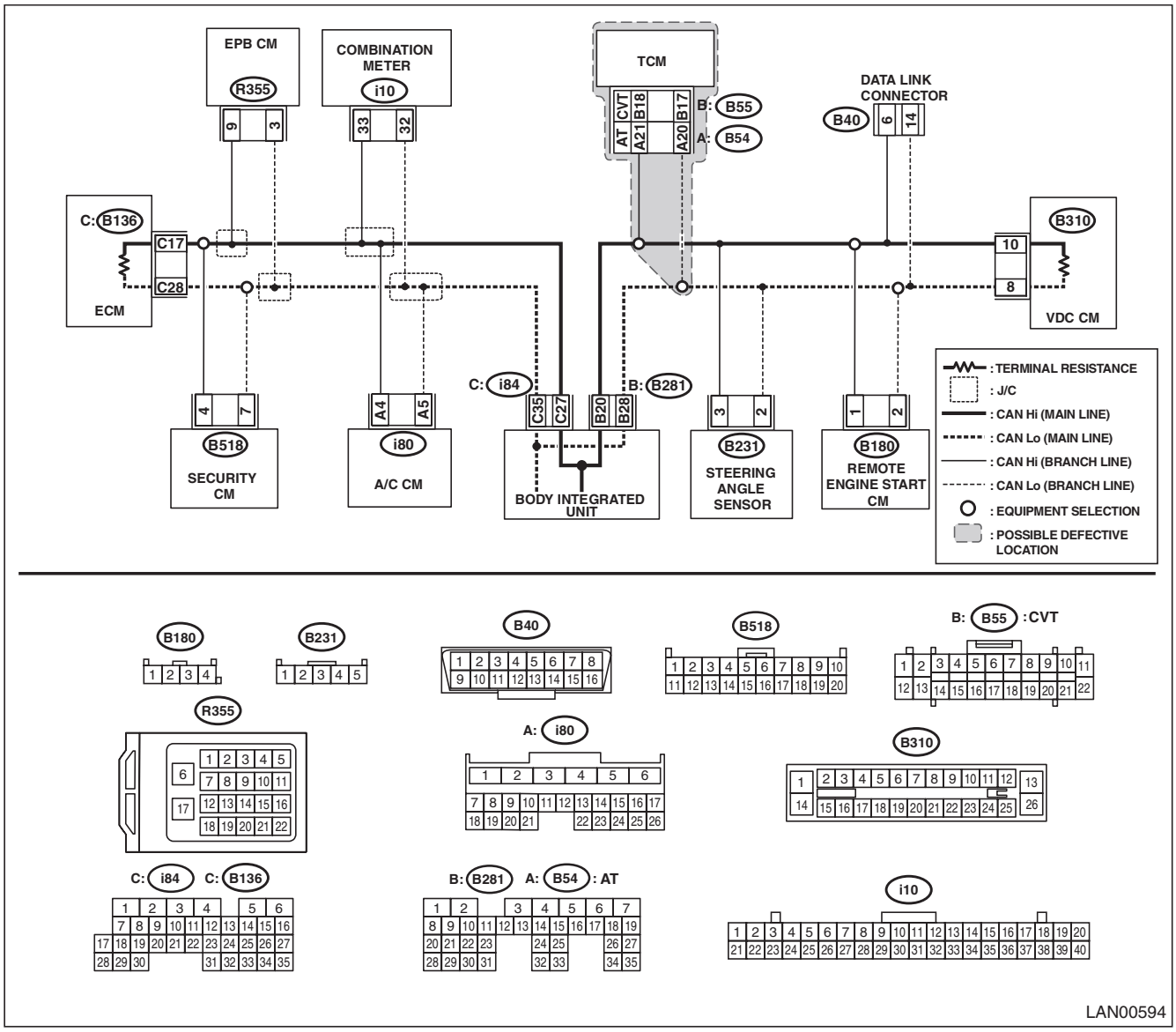

NOTE:
Perform inspection when no data is received, or faulty is detected. This is different from power supply shorted or ground shorted.

Step		Check	Yes	No
1	**CHECK BETWEEN RELATED LINES AND MAIN WIRING HARNESS.** 1) Disconnect the TCM connector. 2) Using the tester, measure the resistance between terminals. ***Connector & terminal*** ***CVT model*** ***(B55) No. 17 — No. 18:*** ***5AT model*** ***(B54) No. 20 — No. 21:***	Is the resistance 400 Ω or more?	Related lines between TCM and main wiring harness is open, or main wiring harness is open at two places or more.	Go to step **2**.

GETtheMANUALS.org

Step		Check	Yes	No
2	**CHECK RELATED LINES.** Using the tester, measure the resistance between terminals. ***Connector & terminal*** ***CVT model*** ***(B55) No. 17 — (B40) No. 14:*** ***(B55) No. 18 — (B40) No. 6:*** ***5AT model*** ***(B54) No. 20 — (B40) No. 14:*** ***(B54) No. 21 — (B40) No. 6:***	Is the resistance 10 Ω or more?	Repair or replace the open circuit portion of TCM related lines.	Check DTC of TCM. <Ref. to CVT(diag)-17, OPERATION, Read Diagnostic Trouble Code (DTC).> <Ref. to 5AT(diag)-20, OPERATION, Read Diagnostic Trouble Code (DTC).>

GETtheMANUALS.org

7. RELATED LINES 56 — 64 Ω (STEERING ANGLE SENSOR)

WIRING DIAGRAM:

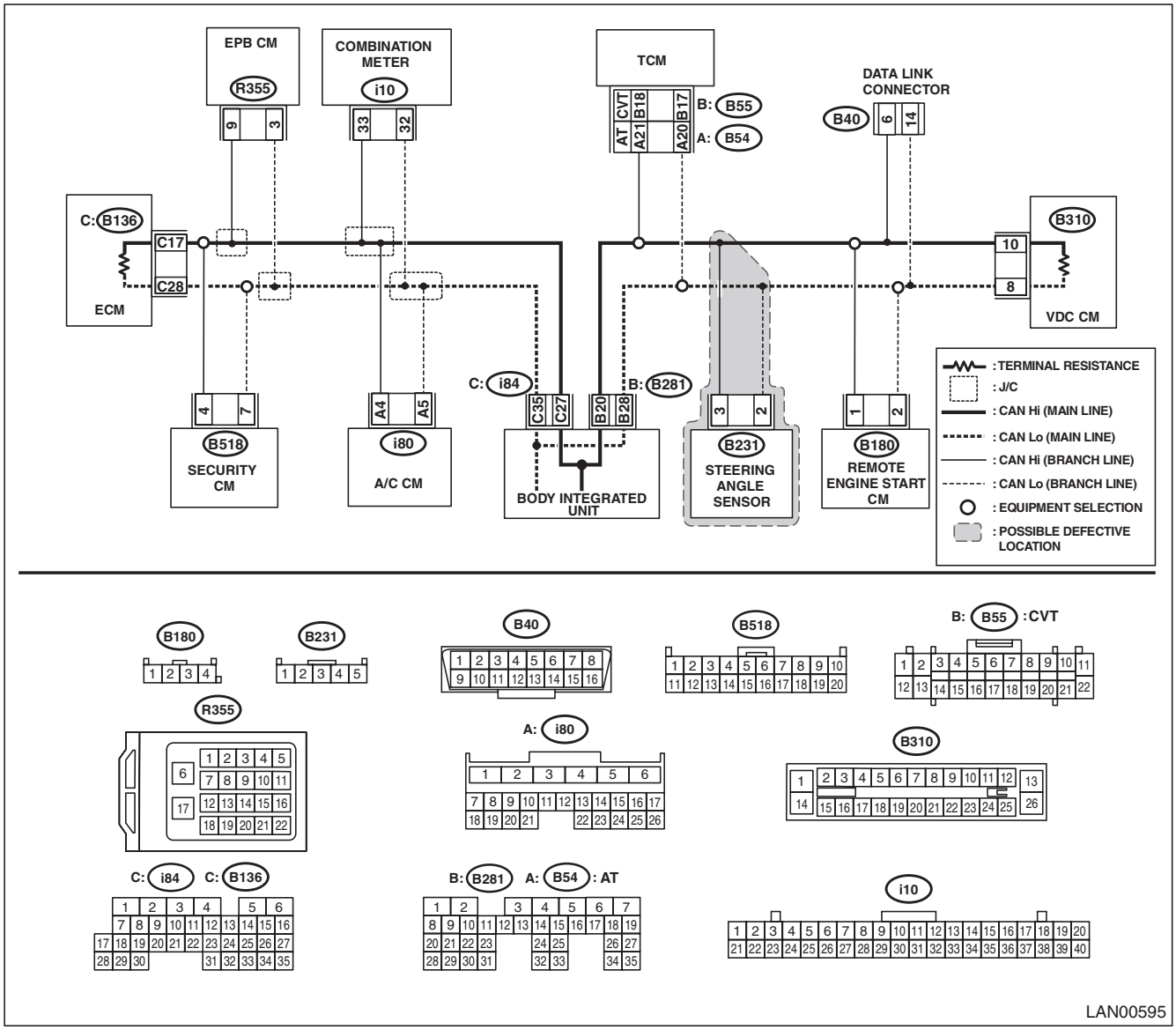

Step		Check	Yes	No
1	**CHECK BETWEEN RELATED LINES AND MAIN WIRING HARNESS.** 1) Disconnect the steering angle sensor connector. 2) Using the tester, measure the resistance between terminals. ***Connector & terminal*** ***(B231) No. 2 — No. 3:***	Is the resistance 400 Ω or more?	Related lines between steering angle sensor and main wiring harness is open, or main wiring harness is open at two places or more.	Go to step **2**.
2	**CHECK RELATED LINES.** Using the tester, measure the resistance between terminals. ***Connector & terminal*** ***(B231) No. 2 — (B40) No. 14:*** ***(B231) No. 3 — (B40) No. 6:***	Is the resistance 10 Ω or more?	Repair or replace the open circuit portion of steering angle sensor related lines.	Check DTC of VDC CM. <Ref. to VDC(diag)-23, OPERATION, Read Diagnostic Trouble Code (DTC).>

GETthemANDALS.org

8. 56 — 64 Ω (A/C CM)

WIRING DIAGRAM:

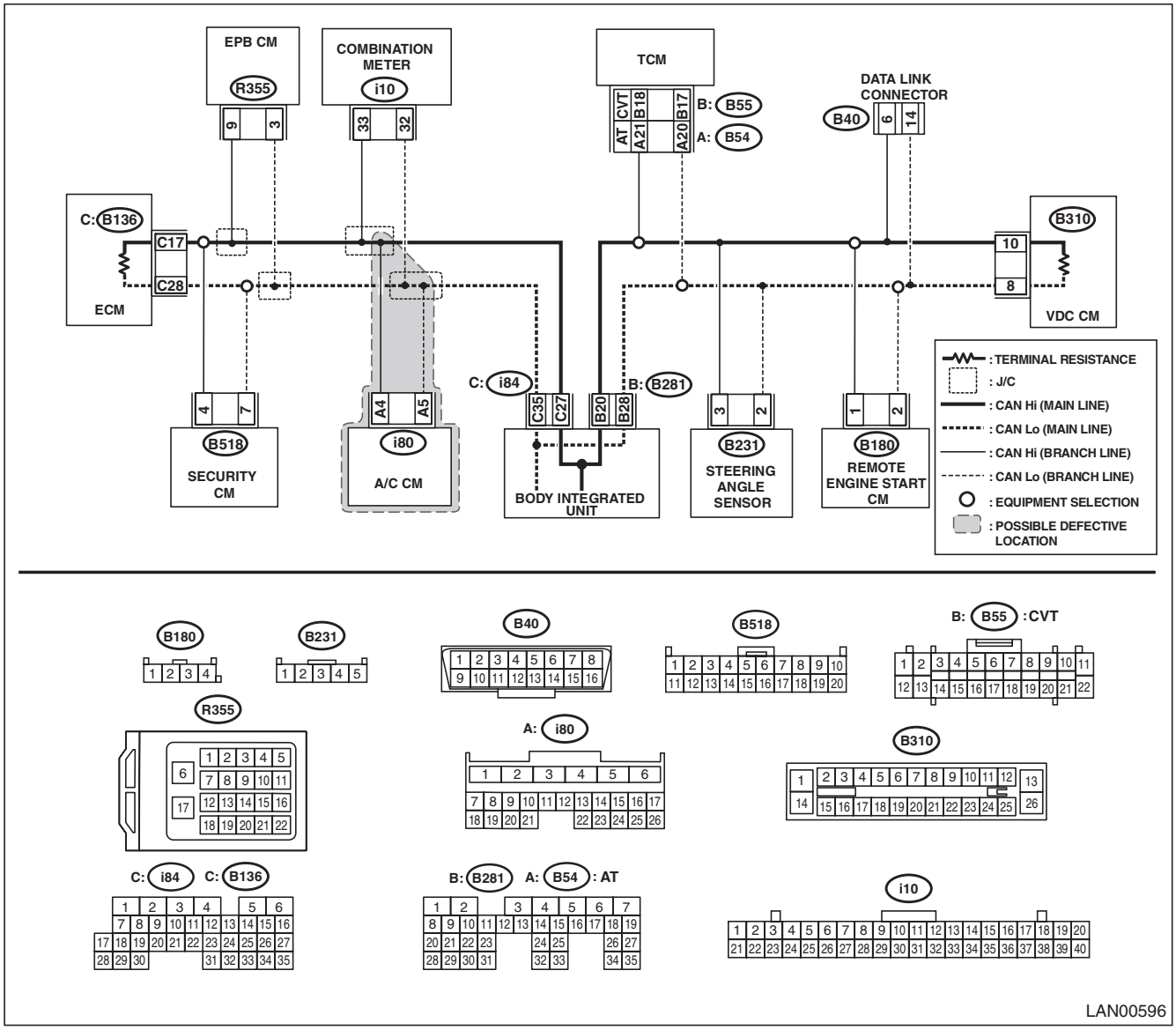

Step		Check	Yes	No
1	**CHECK BETWEEN RELATED LINES AND MAIN WIRING HARNESS.** 1) Disconnect the A/C CM connector. 2) Using the tester, measure the resistance between terminals. ***Connector & terminal*** ***(i80) No. 4 — No. 5:***	Is the resistance 400 Ω or more?	Related lines between A/C CM and main wiring harness is open, or main wiring harness is open at two places or more.	Go to step **2**.
2	**CHECK RELATED LINES.** Using the tester, measure the resistance between terminals. ***Connector & terminal*** ***(i80) No. 4 — (B40) No. 6:*** ***(i80) No. 5 — (B40) No. 14:***	Is the resistance 10 Ω or more?	Repair or replace the open circuit of A/C CM related lines.	Check DTC of A/C CM. <Ref. to AC(diag)-47, OPERATION, Read Diagnostic Trouble Code (DTC).>

GETtheMANUALS.org

9. 56 — 64 Ω (ELECTRONIC PARKING CM)

WIRING DIAGRAM:

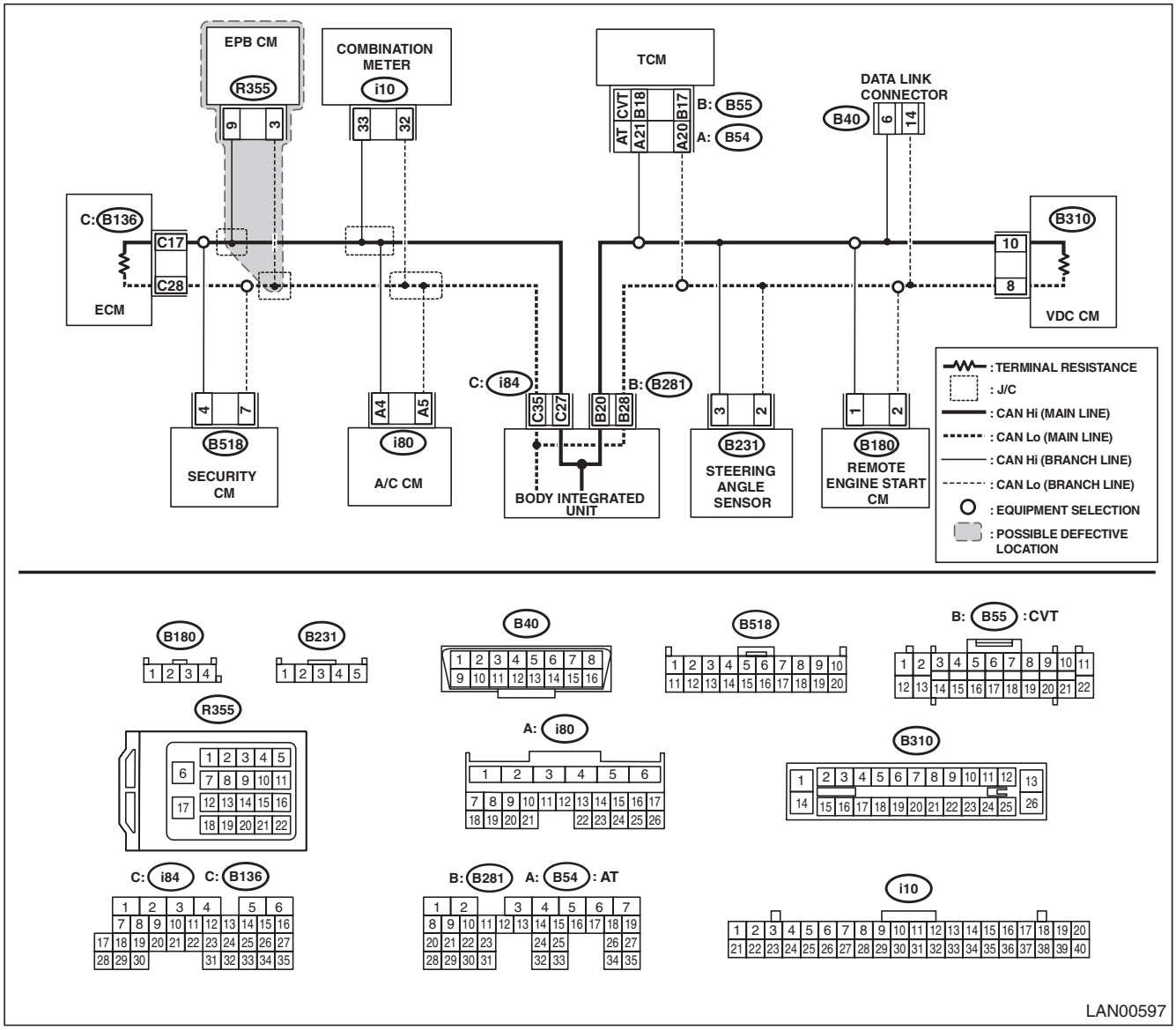

Step		Check	Yes	No
1	**CHECK BETWEEN RELATED LINES AND MAIN WIRING HARNESS.** 1) Disconnect the electronic parking CM connector. 2) Using the tester, measure the resistance between terminals. ***Connector & terminal*** ***(R355) No. 3 — No. 9:***	Is the resistance 400 Ω or more?	Related lines between electronic parking CM and main wiring harness is open, or main wiring harness is open at two places or more.	Go to step **2**.
2	**CHECK RELATED LINES.** Using the tester, measure the resistance between terminals. ***Connector & terminal*** ***(R355) No. 9 — (B40) No. 6:*** ***(R355) No. 3 — (B40) No. 14:***	Is the resistance 10 Ω or more?	Repair or replace the open circuit portion of electronic parking CM related lines.	Check DTC of electronic parking CM. <Ref. to PB(diag)-23, OPERATION, Read Diagnostic Trouble Code (DTC).>

GETtheMANUALS.org

10.56 — 64 Ω (COMBINATION METER)

WIRING DIAGRAM:

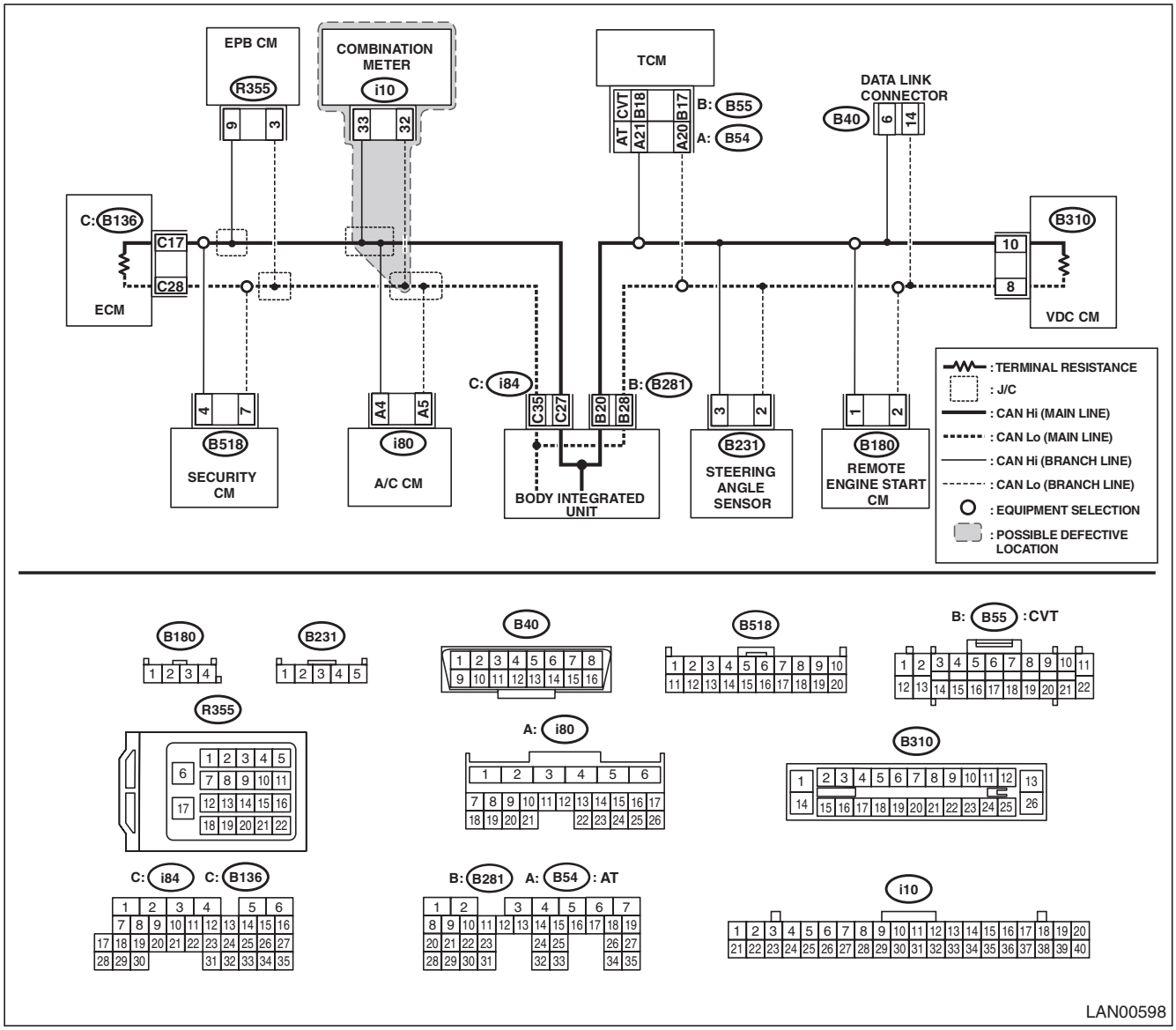

Step		Check	Yes	No
1	**CHECK BETWEEN RELATED LINES AND MAIN WIRING HARNESS.** 1) Disconnect the combination meter connector. 2) Using the tester, measure the resistance between terminals. ***Connector & terminal*** ***(i10) No. 32 — No. 33:***	Is the resistance 400 Ω or more?	Related lines between combination meter and main wiring harness is open, or main wiring harness is open at two places or more.	Go to step **2**.
2	**CHECK RELATED LINES.** Using the tester, measure the resistance between terminals. ***Connector & terminal*** ***(i10) No. 32 — (B40) No. 14:*** ***(i10) No. 33 — (B40) No. 6:***	Is the resistance 10 Ω or more?	Repair or replace the open circuit portion of combination meter related lines.	Check DTC of combination meter.

GETthemANDALS.org

11.56 — 64 Ω (SECURITY CM)

WIRING DIAGRAM:

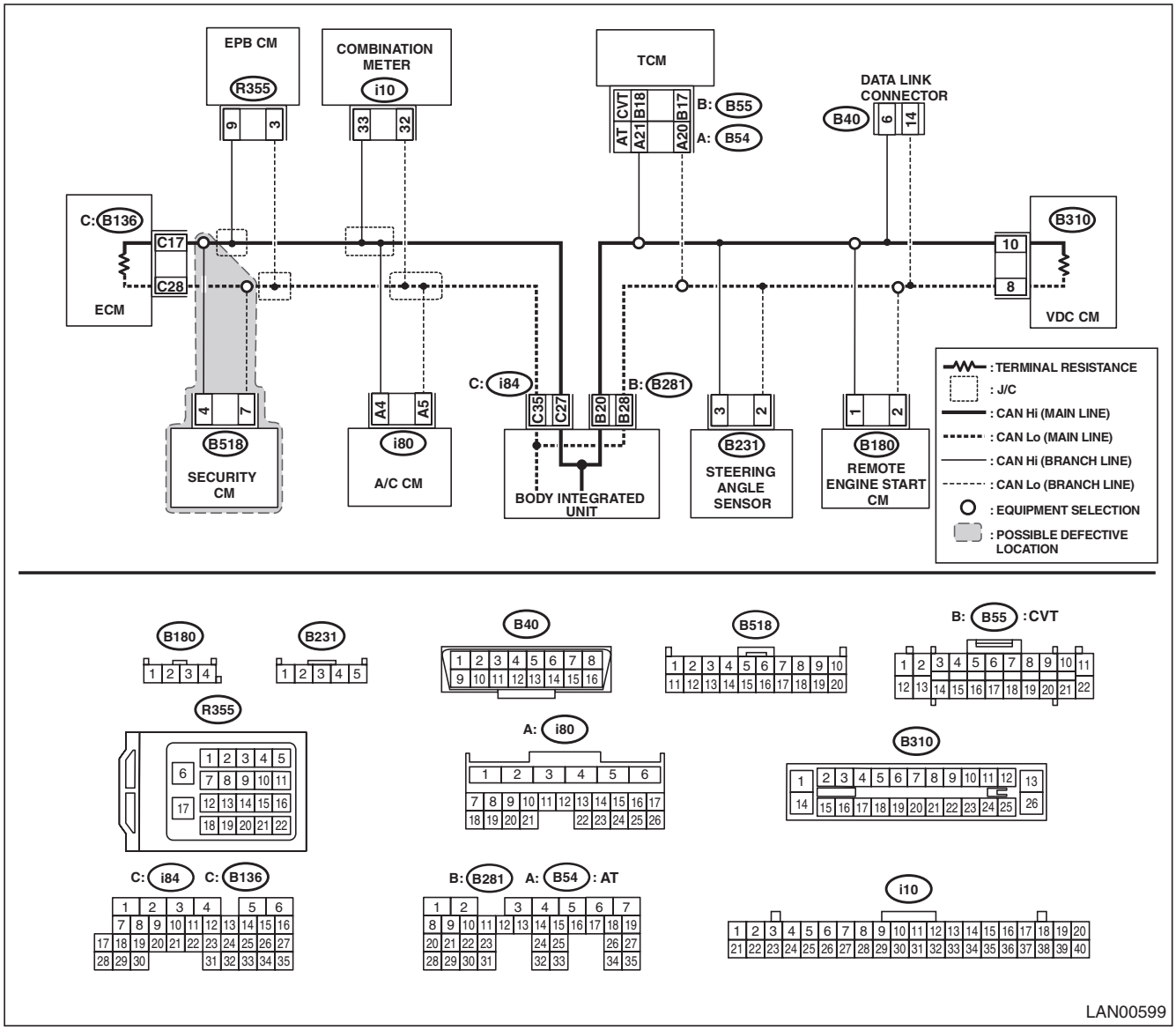

Step		Check	Yes	No
1	**CHECK BETWEEN RELATED LINES AND MAIN WIRING HARNESS.** 1) Disconnect the security CM connector. 2) Using the tester, measure the resistance between terminals. ***Connector & terminal*** ***(B518) No. 7 — No. 4:***	Is the resistance 400 Ω or more?	Related lines between security CM and main wiring harness is open, or main wiring harness is open at two places or more.	Go to step **2**.
2	**CHECK RELATED LINES.** Using the tester, measure the resistance between terminals. ***Connector & terminal*** ***(B518) No. 4 — (B40) No. 6:*** ***(B518) No. 7 — (B40) No. 14:***	Is the resistance 10 Ω or more?	Repair or replace the open circuit portion of security CM related lines.	Check DTC of immobilizer system. <Ref. to IM(diag)-9, OPERATION, Read Diagnostic Trouble Code (DTC).>

GETthemANDALS.org

10. List of Diagnostic Trouble Code (DTC)

A: LIST

DTC	Contents	Content of diagnosis	Note
None	Communication for Initializing Impossible	Subaru Select Monitor communication is open or shorted.	<Ref. to LAN(diag)-48, COMMUNICATION FOR INITIALIZING IMPOSSIBLE, Diagnostic Procedure with Diagnostic Trouble Code (DTC).>
U1201	CAN-HS counter abnormal	High speed CAN communication error	<Ref. to LAN(diag)-50, DTC U1201 CAN-HS COUNTER ABNORMAL, Diagnostic Procedure with Diagnostic Trouble Code (DTC).>
U1202	CAN-HS Bus OFF	Communication of some module is shut down.	<Ref. to LAN(diag)-52, DTC U1202 CAN-HS BUS OFF, Diagnostic Procedure with Diagnostic Trouble Code (DTC).>
U1211	CAN-HS ECM data abnormal	Received error data from ECM.	<Ref. to LAN(diag)-54, DTC U1211 CAN-HS ECM DATA ABNORMAL, Diagnostic Procedure with Diagnostic Trouble Code (DTC).>
U1212	CAN-HS TCM data abnormal	Received error data from TCM.	<Ref. to LAN(diag)-56, DTC U1212 CAN-HS TCM DATA ABNORMAL, Diagnostic Procedure with Diagnostic Trouble Code (DTC).>
U1213	CAN-HS VDC Data Abnormal	Received error data from VDC module.	<Ref. to LAN(diag)-58, DTC U1213 CAN-HS VDC DATA ABNORMAL, Diagnostic Procedure with Diagnostic Trouble Code (DTC).>
U121A	CAN-HS Meter Unit Data Abnormal	Received error data from meter.	<Ref. to LAN(diag)-62, DTC U121A CAN-HS METER UNIT DATA ABNORMAL, Diagnostic Procedure with Diagnostic Trouble Code (DTC).>
U121B	CAN-HS A/C Data Abnormal	Received error data from A/C module.	<Ref. to LAN(diag)-64, DTC U121B CAN-HS A/C DATA ABNORMAL, Diagnostic Procedure with Diagnostic Trouble Code (DTC).>
U121C	CAN-HS SCU Data Abnormal	Received error data from SCU.	<Ref. to LAN(diag)-66, DTC U121C CAN-HS SCU DATA ABNORMAL, Diagnostic Procedure with Diagnostic Trouble Code (DTC).>
U1219	CAN-HS EPB Data Abnormal	Received error data from EPB module.	<Ref. to LAN(diag)-60, DTC U1219 CAN-HS EPB DATA ABNORMAL, Diagnostic Procedure with Diagnostic Trouble Code (DTC).>
U1221	CAN-HS ECM no-receive data	Not received data from ECM.	<Ref. to LAN(diag)-68, DTC U1221 CAN-HS ECM NO-RECEIVE DATA, Diagnostic Procedure with Diagnostic Trouble Code (DTC).>
U1222	CAN-HS TCM No-Receive Data	Not received data from TCM.	<Ref. to LAN(diag)-70, DTC U1222 CAN-HS TCM NO-RECEIVE DATA, Diagnostic Procedure with Diagnostic Trouble Code (DTC).>
U1223	CAN-HS VDC No-Receive Data	Not received data from VDC module.	<Ref. to LAN(diag)-72, DTC U1223 CAN-HS VDC NO-RECEIVE DATA, Diagnostic Procedure with Diagnostic Trouble Code (DTC).>
U122A	CAN-HS Meter No-Receive Data	Not received data from meter.	<Ref. to LAN(diag)-76, DTC U122A CAN-HS METER NO-RECEIVE DATA, Diagnostic Procedure with Diagnostic Trouble Code (DTC).>
U122B	CAN-HS A/C No-Receive Data	Not received data from A/C CM.	<Ref. to LAN(diag)-78, DTC U122B CAN-HS A/C NO-RECEIVE DATA, Diagnostic Procedure with Diagnostic Trouble Code (DTC).>
U122C	CAN-HS SCU No-Receive Data	Not received data from SCU.	<Ref. to LAN(diag)-80, DTC U122C CAN-HS SCU NO-RECEIVE DATA, Diagnostic Procedure with Diagnostic Trouble Code (DTC).>
U1229	CAN-HS EPB No-Receive Data	Not received data from EPB module.	<Ref. to LAN(diag)-74, DTC U1229 CAN-HS EPB NO-RECEIVE DATA, Diagnostic Procedure with Diagnostic Trouble Code (DTC).>

GETtheMANUALS.org

1. DTC TABLE

NOTE:
When more than one DTC codes are recorded, referring to their combination and indicator display in the combination meter will make it easy to identify the possible cause. Refer to the list for typical examples.

Combination meter display	Diagnostic Code that was displayed.						Portions with high rate of malfunction occurrence
	ECM	A/C	EPB (electronic parking brake)	Body integrated unit	TCM	VDC CM (Detailed code)	
CRUISE blink Check engine lit [S] lit [S] lit VDC OFF lit EPB operating light lit	U0122	Communication failure	Communication failure	U1222 U1223	P1718	5144 5143 5136	Hi-side circuit near the body integrated unit 1 is open
CRUISE lit Check engine lit VDC lit [S] lit	U0122 (Past)	U0002 (Past)	C0264	U1201 U1222 U1223 (Past)	P1718 (Past)	5143 5144 5136	Hi-side circuit near the body integrated unit 1 was open (restored)
CRUISE blink Check engine lit [S] lit VDC lit VDC OFF lit EPB operating light lit Shift indicator off	U0122	Communication failure	Communication failure	U1222 U1223	P1718	5144 5136	Lo-side circuit near the body integrated unit 1 is open
CRUISE blink CHECK EGI [S] blink VDC VDC OFF ABS EPB operating light lit Shift indicator off	U0122 (Past)	U0002 (Past)	C0264	U1222 U1223 (Past)	U1718 (Past)	5143 5121 5144	Lo-side circuit near the body integrated unit 1 was open (restored)
CRUISE blink CHECK EGI [S] blink VDC VDC OFF ABS EPB operating light lit Shift indicator off	U0122	Communication failure	Communication failure	U1222 U1223	P1718	5144 5136	Hi- and Lo-side circuits near the body integrated unit 1 are open
CRUISE lit CHECK EGI VDC S blink	U0122 (Past)	U0002 (Past)	C0262 C0264	U1222 U1223 (Past)	P1718 (Past)	5143 5144 5136	Hi- and Lo-side circuits near the body integrated unit 1 were open (restored)

GETtheMANUALS.org

List of Diagnostic Trouble Code (DTC)

Combination meter display	Diagnostic Code that was displayed.						Portions with high rate of malfunction occurrence
	ECM	A/C	EPB (electronic parking brake)	Body integrated unit	TCM	VDC CM (Detailed code)	
EPB OFF VDC VDC OFF Coolant temperature blink (red/blue) FUEL blink ABS EPB operating light blink EPB warning light Door off [I] blink CRUISE/blink Shift indicator off	U0073	Communication failure	Communication failure	U1201 U1202 U1221 U1223 U1229 U122A U122B	P1718	5135 5121	Hi-side circuit near the body integrated unit 1 is shorted to ground
EPB OFF VDC VDC OFF Coolant temperature blink (red/blue) FUEL blink ABS EPB operating light blink EPB warning light Door off [I] blink CRUISE/blink Shift indicator off	U0073 (Past)	U0002 (Past)	—	U1201 U1202 U1221 U1223 U1229 U122A U122B (Past)	P1718 (Past)	5143 5135 5121	Hi-side circuit near the body integrated unit 1 was shorted to ground
Normal	—	—	—	—	—	—	Lo-side circuit near the body integrated unit 1 is shorted to ground
Normal	—	—	—	—	—	—	Lo-side circuit near the body integrated unit 1 was shorted to ground
CRUISE lit CHECK EGI [S] blink VDC Shift indicator off	U0073 U0140	Communication failure	Communication failure	U1201 U1202 U1221 U1223 U1229 U122A U122B	P1718	5135 5121	Hi- and Lo-side circuits near the body integrated unit 1 are shorted
CRUISE lit CHECK EGI [S] blink VDC	U0073 U0140	U0002 (Past)	—	U1201 U1202 U1221 U1223 U1229 U122A U122B (Past)	P1718 (Past)	5143 5135 5121	Hi- and Lo-side circuits near the body integrated unit 1 were shorted

GETtheMANUALS.org

Combination meter display	Diagnostic Code that was displayed.						Portions with high rate of malfunction occurrence
	ECM	A/C	EPB (electronic parking brake)	Body integrated unit	TCM	VDC CM (Detailed code)	
CRUISE blink CHECK EGI [S] blink FUEL blink VDC VDC OFF ABS EPB operating light lit Shift indicator off	U0122	Communication failure	Communication failure	U1221 U1229 U122A U122B	P1718	5144 5136	Hi-side circuit near the body integrated unit 2 is open
CRUISE lit CHECK EGI VDC S blink	U0122 (Past)	U0002 (Past)	C0262 C0263 C0264 C0265 C0266 C0267	U1221 (Past)	P1718 (Past)	5143 5144 5136	Hi-side circuit near the body integrated unit 2 was open
CRUISE blink CHECK EGI [S] blink FUEL blink VDC VDC OFF ABS EPB operating light lit Shift indicator off	—	Communication failure	Communication failure	U1221	P1718	5144 5136	Lo-side circuit near the body integrated unit 2 is open
CRUISE lit CHECK EGI VDC S blink	—	U0002 (Past)	—	U1221 (Past)	P1718 (Past)	5143 5144 5136	Lo-side circuit near the body integrated unit 2 was open
CRUISE blink CHECK EGI [S] blink FUEL blink VDC VDC OFF ABS EPB operating light lit Shift indicator off	—	Communication failure	Communication failure	U1221	P1718	5144 5136	Hi- and Lo-side circuits near the body integrated unit 2 are open
CRUISE lit CHECK EGI VDC S blink	—	U0002 (Past)	—	U1221 (Past)	P1718 (Past)	5143 5144 5136	Hi- and Lo-side circuits near the body integrated unit 2 were open
EPB OFF VDC VDC OFF Coolant temperature blink (red/blue) FUEL blink ABS EPB operating light blink EPB warning light Door off [I] blink CRUISE/blink Shift indicator off	U0073	Communication failure	Communication failure	U1201 U1202 U1221 U1223 U1229 U122A U122B	P1718	5135 5121	Hi-side circuit near the body integrated unit 2 is shorted to ground

GETtheMANUALS.org

Combination meter display	Diagnostic Code that was displayed.						Portions with high rate of malfunction occurrence
	ECM	A/C	EPB (electronic parking brake)	Body integrated unit	TCM	VDC CM (Detailed code)	
EPB OFF VDC VDC OFF Coolant temperature blink (red/blue) FUEL blink ABS EPB operating light blink EPB warning light Door off [I] blink CRUISE/blink Shift indicator off	U0073 (Past)	U0002 (Past)	—	U1201 U1202 U1221 U1223 U1229 U122A U122B (Past)	P1718 (Past)	5143 5135 5121	Hi-side circuit near the body integrated unit 2 was shorted to ground
Normal	—	—	—	—	—	—	Lo-side circuit near the body integrated unit 2 is shorted to ground
Normal	—	—	—	—	—	—	Lo-side circuit near the body integrated unit 2 was shorted to ground
CRUISE lit CHECK EGI [S] blink VDC Shift indicator off	U0073 U0140	Communi-cation failure	Communi-cation failure	U1201 U1202 U1221 U1223 U1229 U122A U122B	P1718	5135 5121	Hi- and Lo-side circuits near the body integrated unit 2 are shorted
CRUISE lit CHECK EGI [S] blink VDC	U0073 U0140	U0002 (Past)	—	U1201 U1202 U1221 U1223 U1229 U122A U122B (Past)	P1718 (Past)	5143 5135 5121	Hi- and Lo-side circuits near the body integrated unit 2 were shorted
CRUISE lit CHECK EGI [S] blink VDC Shift indicator off	U0101	—	C0262	U1222	P1718 or P1725	5143 5137	Hi-side circuit near TCM is open
CRUISE lit CHECK EGI [S] blink VDC	U0101 (Past)	—	C0262	U1222 (Past)	P1718 or P1725 (Past)	5143 5137	Hi-side circuit near TCM was open
CRUISE lit CHECK EGI [S] blink VDC Shift indicator off	U0101	—	C0262	U1222	P1718 or P1725	5143 5137	Lo-side circuit near TCM is open
CRUISE lit CHECK EGI [S] blink VDC	U0101 (Past)	—	C0262	U1222 (Past)	P1718 or P1725 (Past)	5143 5137	Lo-side circuit near TCM was open

GETtheMANUALS.org

List of Diagnostic Trouble Code (DTC)

Combination meter display	Diagnostic Code that was displayed.						Portions with high rate of malfunction occurrence
	ECM	A/C	EPB (electronic parking brake)	Body integrated unit	TCM	VDC CM (Detailed code)	
CRUISE lit CHECK EGI [S] blink VDC Shift indicator off	U0101	—	C0262	U1222	P1718 or P1725	5143 5137	Hi- and Lo-side circuits near TCM are open
CRUISE lit CHECK EGI [S] blink VDC	U0101 (Past)	—	C0262	U1222 (Past)	P1718 or P1725 (Past)	5143 5137	Hi- and Lo-side circuits near TCM were open
EPB OFF VDC VDC OFF Coolant temperature blink (red/blue) FUEL blink ABS EPB operating light blink EPB warning light CHECK EGI Door off [I] blink CRUISE/blink Shift indicator off	U0073	Communication failure	Communication failure	U1201 U1202 U1221 U1223 U1229 U122A U122B	P1718 or P1725	5135 5136 5152	Hi-side circuit near TCM is shorted to ground
CRUISE lit CHECK EGI VDC S blink	U0073 (Past)	U0002 (Past)	—	U1201 U1202 U1221 U1223 U1229 U122A U122B (Past)	P1718 or P1725 (Past)	5143 5135 5136	Hi-side circuit near TCM was shorted to ground
Normal	—	—	—	—	—	—	Lo-side circuit near TCM is shorted to ground
Normal	—	—	—	—	—	—	Lo-side circuit near TCM was shorted to ground
EPB OFF VDC VDC OFF Coolant temperature blink (red/blue) FUEL blink ABS EPB operating light blink EPB warning light CHECK EGI Door off [I] blink CRUISE/blink Shift indicator off	U0073	Communication failure	Communication failure	U1201 U1202 U1221 U1223 U1229 U122A U122B	P1718 or P1725	5135 5121	Hi- and Lo-side circuits near TCM are shorted

GETthemMANUALS.org

List of Diagnostic Trouble Code (DTC)

Combination meter display	Diagnostic Code that was displayed.						Portions with high rate of malfunction occurrence
	ECM	A/C	EPB (electronic parking brake)	Body integrated unit	TCM	VDC CM (Detailed code)	
CRUISE lit CHECK EGI VDC S blink	U0073 (Past)	U0001 U0002 (Past)	C0261	U1201 U1202 U1221 U1223 U1229 U122A U122B (Past)	U1718 or P1725 (Past)	5143 5135 5121	Hi- and Lo-side circuits near TCM were shorted
CRUISE lit	—	Communication failure	—	U122B	—	—	Hi-side circuit near A/C is open
Normal	—	U0001 U0002 (Past)	—	U122B (Past)	—	—	Hi-side circuit near A/C was open
AT_OIL blink VDC CRUISE lit	—	Communication failure	—	U122B U1201	P1718 or P1725	5135 5121	Lo-side circuit near A/C is open
Normal	—	U0001 U0002	—	U1201 U122B (Past)	P1718 or P1725 (Past)	5144 5135 5121	Lo-side circuit near A/C was open
CRUISE lit	—	Communication failure	—	U122B	—	—	Hi- and Lo-side circuits near A/C are open
Normal	—	U0002 (Past)	—	U122B (Past)	—	—	Hi- and Lo-side circuits near A/C were open
EPB OFF VDC VDC OFF Coolant temperature blink (red/blue) FUEL blink ABS EPB operating light blink EPB warning light CHECK EGI Door off [I] blink CRUISE/blink Shift indicator off	U0073 U0122	Communication failure	Communication failure	U1201 U1202 U1221 U1223 U1229 U122A U122B	P1718 or P1725	5135 5137 5121	Hi-side circuit near A/C is shorted to ground
CRUISE lit CHECK EGI VDC S blink	—	U0001 U0002 (Past)	—	U1201 U1202 U1221 U1223 U1229 U122A U122B (Past)	P1718 or P1725 (Past)	5143 5135 5137	Hi-side circuit near A/C was shorted to ground
Normal	—	—	—	—	—	—	Lo-side circuit near A/C is shorted to ground
Normal	—	—	—	—	—	—	Lo-side circuit near A/C was shorted to ground

GETtheMANUALS.org

List of Diagnostic Trouble Code (DTC)

Combination meter display	Diagnostic Code that was displayed.						Portions with high rate of malfunction occurrence
	ECM	A/C	EPB (electronic parking brake)	Body integrated unit	TCM	VDC CM (Detailed code)	
EPB OFF VDC VDC OFF Coolant temperature blink (red/blue) FUEL lit ABS EPB operating light blink EPB warning light CHECK EGI Door off [I] blink CRUISE/blink Shift indicator off	U0073	Communication failure	Communication failure	U1201 U1202 U1221 U1223 U1229 U122A U122B	P1718 or P1725	5135 5136 5152	Hi- and Lo-side circuits near A/C are shorted
CRUISE lit CHECK EGI VDC S blink	U0073 (Past)	U0001 U0002 (Past)	C0261	U1201 U1202 U1221 U1223 U1229 U122A U122B (Past)	P1718 or P1725 (Past)	5143 5135 5136	Hi- and Lo-side circuits near A/C were shorted
CRUISE lit Coolant temperature blink (red/blue) CHECK EGI ATOIL I blink FUEL blink VDC EPS warning light	U0073	Communication failure	C0261 C0263	U1201 U1202 U1221	P1718	5144 5135 5121	Hi-side circuit near ECM is open
CRUISE lit CHECK EGI VDC S blink	U0073 (Past)	U0001 U0002	—	U1201 U1202 U1221 (Past)	P1718 (Past)	5143	Hi-side circuit near ECM was open
CRUISE lit Coolant temperature blink (red/blue) CHECK EGI ATOIL blink I blink FUEL blink VDC	U0073	Communication failure	C0261 C0263	U1201 U1202 U1221	P1718	5144 5135 5136	Lo-side circuit near ECM is open
CRUISE lit CHECK EGI VDC S blink	U0073 (Past)	U0001 U0002 (Past)	C0261 C0263	U1201 U1202 U1221 (Past)	P1718 (Past)	5143 5144 5135	Lo-side circuit near ECM was open

GETtheMANUALS.org

List of Diagnostic Trouble Code (DTC)

Combination meter display	Diagnostic Code that was displayed.						Portions with high rate of malfunction occurrence
	ECM	A/C	EPB (electronic parking brake)	Body integrated unit	TCM	VDC CM (Detailed code)	
CRUISE lit Coolant temperature blink (red/blue) CHECK EGI ATOIL blink I blink FUEL blink VDC	U0073	U0002	C0263	U1221 U1201	P1718	5144 5136	Hi- and Lo-side circuits near ECM are open
CRUISE lit CHECK EGI VDC S blink	U0073 (Past)	U0001 U0002 (Past)	C0263	U1201 U1221 (Past)	P1718 (Past)	5143 5144 5136	Hi- and Lo-side circuits near ECM were open
EPB OFF VDC VDC OFF Coolant temperature blink (red/blue) FUEL blink ABS EPB operating light blink EPB warning light CHECK EGI Door off [I] blink CRUISE/blink Shift indicator off	U0073	Communication failure	Communication failure	U1201 U1202 U1221 U1223 U1229 U122A U122B	P1718	5135 5121	Hi-side circuit near ECM is shorted to ground
CRUISE lit CHECK EGI VDC S blink	U0073 (Past)	U0001 U0002	—	U1201 U1202 U1221 U1223 U1229 U122A U122B (Past)	P1718 (Past)	5143 5135 5121	Hi-side circuit near ECM was shorted to ground
Normal	—	—	—	—	—	—	Lo-side circuit near ECM is shorted to ground
Normal	—	—	—	—	—	—	Lo-side circuit near ECM was shorted to ground
EPB OFF VDC VDC OFF Coolant temperature blink (red/blue) FUEL blink ABS EPB operating light blink EPB warning light CHECK EGI Door off [I] blink CRUISE/blink Shift indicator off	U0073 U0122	Communication failure	Communication failure	U1201 U1202 U1221 U1223 U1229 U122A U122B	P1718	5143 5135 5144	Hi- and Lo-side circuits near ECM are shorted

GETtheMANUALS.org

List of Diagnostic Trouble Code (DTC)

Combination meter display	Diagnostic Code that was displayed.						Portions with high rate of malfunction occurrence
	ECM	A/C	EPB (electronic parking brake)	Body integrated unit	TCM	VDC CM (Detailed code)	
CRUISE lit CHECK EGI VDC S blink	U0073 U0122 (Past)	U0001 U0002 (Past)	C0261	U1201 U1202 U1221 U1223 U1229 U122A U122B (Past)	P1718 (Past)	5143 5135 5144	Hi- and Lo-side circuits near ECM were shorted
EPB OFF VDC VDC OFF Coolant temperature blink (red/blue) FUEL blink ABS EPB operating light blink EPB warning light Door off [I] blink CRUISE/blink Shift indicator off	—	U0002	C0267	U122A	—	—	Hi-side circuit near meter is open
Normal	—	U0002 (Past)	C0267	U122A (Past)	—	—	Hi-side circuit near meter was open
EPB OFF VDC VDC OFF Coolant temperature blink (red/blue) FUEL blink ABS EPB operating light blink EPB warning light Door off [I] blink CRUISE/blink Shift indicator off	—	U0002	C0267	U122A	—	—	Lo-side circuit near meter is open
Normal	—	U0002	C0267	U122A (Past)	—	—	Lo-side circuit near meter was open
EPB OFF VDC VDC OFF Coolant temperature blink (red/blue) FUEL blink ABS EPB operating light blink EPB warning light Door off [I] blink CRUISE/blink Shift indicator off	—	U0002	C0267	U122A	—	—	Hi- and Lo-side circuits near meter are open

GETthemANDALS.org

List of Diagnostic Trouble Code (DTC)

Combination meter display	Diagnostic Code that was displayed.						Portions with high rate of malfunction occurrence
	ECM	A/C	EPB (electronic parking brake)	Body integrated unit	TCM	VDC CM (Detailed code)	
Normal	—	U0002	C0267	U122A (Past)	—	—	Hi- and Lo-side circuits near meter were open
CRUISE lit CHECK EGI VDC S blink	U0122 U0073	Communication failure	Communication failure	U1201 U1202 U1221 U1223 U1229 U122A U122B	P1718 or P1725	5135 5137 5136	Hi-side circuit near meter is shorted to ground
CRUISE lit CHECK EGI VDC S blink	U0122 U0073 (Past)	U0001 U0002 (Past)	C0261	U1201 U1202 U1221 U1223 U1229 U122A U122B (Past)	P1718 or P1725 (Past)	5143 5135 5137	Hi-side circuit near meter was shorted to ground
Normal	—	—	—	—	—	—	Lo-side circuit near meter is shorted to ground
Normal	—	—	—	—	—	—	Lo-side circuit near meter was shorted to ground
EPB OFF VDC VDC OFF Coolant temperature blink (red/blue) FUEL blink ABS EPB operating light blink EPB warning light CHECK EGI Door off [I] blink CRUISE/blink Shift indicator off	U0073	Communication failure	Communication failure	U1201 U1202 U1221 U1223 U1229 U122A U122B	P1718 or P1725	5135 5121	Hi- and Lo-side circuits near meter are shorted
CRUISE lit CHECK EGI VDC S blink	U0073 (Past)	U0001 U0002 (Past)	C0261	U1201 U1202 U1221 U1223 U1229 U122A U122B (Past)	P1718 or P1725 (Past)	5134 5135 5121	Hi- and Lo-side circuits near meter were shorted
EPB OFF EPB operating light blink EPB warning light CRUISE/lit	—	—	Communication failure	U1229	—	—	Hi-side circuit near electronic parking brake is open
Normal	—	—	C0261	U1229	—	—	Hi-side circuit near electronic parking brake was open

GETtheMANUALS.org

Combination meter display	Diagnostic Code that was displayed.						Portions with high rate of malfunction occurrence
	ECM	A/C	EPB (electronic parking brake)	Body integrated unit	TCM	VDC CM (Detailed code)	
EPB OFF EPB operating light blink EPB warning light CRUISE/lit	—	—	Communication failure	U1229	—	—	Lo-side circuit near electronic parking brake is open
Normal	—	—	C0261	U1229	—	—	Lo-side circuit near electronic parking brake was open
EPB OFF EPB operating light blink EPB warning light CRUISE/lit	—	—	Communication failure	U1229	—	—	Hi- and Lo-side circuits near electronic parking brake are open
Normal	—	—	C0261	U1229	—	—	Hi- and Lo-side circuits near electronic parking brake were open
EPB OFF VDC VDC OFF Coolant temperature blink (red/blue) FUEL blink ABS EPB operating light blink EPB warning light CHECK EGI Door off [I] blink CRUISE/blink Shift indicator off	U0073 U0122	Communication failure	Communication failure	U1201 U1202 U1221 U1229 U122A U122B	P1718 or P1725	51335 5137 5121	Hi-side circuit near electronic parking brake is shorted to ground
CRUISE lit CHECK EGI VDC S blink	U0073 U0122 (Past)	U0001 U0002 (Past)	C0261	U1201 U1202 U1221 U1223 U1229 U122A U122B (Past)	P1718 or P1725 (Past)	5143 5135 5137	Hi-side circuit near electronic parking brake was shorted to ground
Normal	—	—	—	—	—	—	Lo-side circuit near electronic parking brake is shorted to ground
Normal	—	—	—	—	—	—	Lo-side circuit near electronic parking brake was shorted to ground

GETtheMANUALS.org

List of Diagnostic Trouble Code (DTC)

Combination meter display	Diagnostic Code that was displayed.						Portions with high rate of malfunction occurrence
	ECM	A/C	EPB (electronic parking brake)	Body integrated unit	TCM	VDC CM (Detailed code)	
EPB OFF VDC VDC OFF Coolant temperature blink (red/blue) FUEL blink ABS EPB operating light blink EPB warning light CHECK EGI Door off [I] blink CRUISE/blink Shift indicator off	U0073	Communication failure	Communication failure	U1201 U1202 U1221 U1223 U1229 U122A U122B	P1718 or P1725	5135 5121	Hi- and Lo-side circuits near electronic parking brake are shorted
CRUISE lit CHECK EGI VDC S blink	U0073 (Past)	U0001 U0002 (Past)	C0261	U1201 U1202 U1221 U1223 U1229 U122A U122B (Past)	P1718 or P1725	5143 5135 5121	Hi- and Lo-side circuits near electronic parking brake were shorted
CRUISE lit VDC OFF CHECK EGI ATOIL blink VDC S blink EPS warning light ABS	U0122	U0002	C0264	U1223	P1718	5135 5136 5137	Hi-side circuit near VDC is open
CRUISE lit CHECK EGI VDC S blink	—	—	C0264	U1223 (Past)	—	5143	Hi-side circuit near VDC was open
CRUISE lit VDC OFF CHECK EGI ATOIL blink VDC S blink EPS warning light ABS	U0122	U0002	C0264	U1201 U1202 U1223	P1718	5135 5136 5152	Lo-side circuit near VDC is open
CRUISE lit CHECK EGI VDC S blink	—	—	C0264	U1201 U1202 U1223 (Past)	—	5143	Lo-side circuit near VDC was open
CRUISE lit VDC OFF CHECK EGI ATOIL blink VDC S blink EPS warning light ABS	U0122	U0002	C0264	U1223	P1718	5135 5136 5137	Hi- and Lo-side circuits near VDC are open

GETtheMANUALS.org

Combination meter display	Diagnostic Code that was displayed.						Portions with high rate of malfunction occurrence
	ECM	A/C	EPB (electronic parking brake)	Body integrated unit	TCM	VDC CM (Detailed code)	
CRUISE lit CHECK EGI VDC S blink	—	—	C0264	U1223 (Past)	—	5143	Hi- and Lo-side circuits near VDC were open
EPB OFF VDC VDC OFF Coolant temperature blink (red/blue) FUEL blink ABS EPB operating light blink EPB warning light CHECK EGI Door off [I] blink CRUISE/blink Shift indicator off	U0073	Communication failure	Communication failure	U1201 U1202 U1221 U1223 U1229 U122A U122B	P1718	5135 5121	Hi-side circuit near VDC is shorted to ground
CRUISE lit CHECK EGI VDC S blink	—	U0001 U0002	C0261	U1201 U1202 U1221 U1223 U1229 U122A U122B (Past)	—	5143	Hi-side circuit near VDC was shorted to ground
Normal	—	—	—	—	—	—	Lo-side circuit near VDC is shorted to ground
Normal	—	U0028	—	—	—	—	Lo-side circuit near VDC was shorted to ground
EPB OFF VDC VDC OFF Coolant temperature blink (red/blue) FUEL blink ABS EPB operating light blink EPB warning light CHECK EGI Door off [I] blink CRUISE/blink Shift indicator off	U0073	Communication failure	Communication failure	U1201 U1202 U1221 U1223 U1229 U122A U122B	P1718	5135 5152 5136	Hi- and Lo-side circuits near VDC are shorted
CRUISE lit CHECK EGI VDC S blink	U0073 (Past)	U0028	—	U1201 U1202 U1221 U1223 U1229 U122A U122B (Past)	P1718 (Past)	5143	Hi- and Lo-side circuits near VDC were shorted

GETtheMANUALS.org

List of Diagnostic Trouble Code (DTC)

Combination meter display	Diagnostic Code that was displayed.						Portions with high rate of malfunction occurrence
	ECM	A/C	EPB (electronic parking brake)	Body integrated unit	TCM	VDC CM (Detailed code)	
CRUISE lit VDC	—	—	—	U1201 U1202	—	5121	Hi-side circuit near steering angle sensor is open
Normal	—	—	—	U1201 U1202 (Past)	—	5121	Hi-side circuit near steering angle sensor was open
CRUISE lit VDC	—	—	—	U1201	—	5121	Lo-side circuit near steering angle sensor is open
Normal	—	—	—	U1201 (Past)	—	5121	Lo-side circuit near steering angle sensor was open
CRUISE lit VDC	—	U0028 (Past)	—	—	—	5121	Hi- and Lo-side circuits near steering angle sensor are open
Normal	—	U0028 (Past)	—	—	—	5121	Hi- and Lo-side circuits near steering angle sensor were open
EPB OFF VDC VDC OFF Coolant temperature blink (red/blue) FUEL blink ABS EPB operating light blink EPB warning light CHECK EGI Door off [I] blink CRUISE/blink Shift indicator off	U0073	Communication failure	Communication failure	U1201 U1202 U1221 U1223 U1229 U122A U122B	P1718 or P1725	5135 5137	Hi-side circuit near steering angle sensor is shorted to ground
VDC CHECK EGI [S] blink CRUISE lit	U0073 (Past)	U0001 U0002 (Past)	C0261	U1201 U1202 U1221 U1223 U1229 U122A U122B (Past)	P1718 or P1725 (Past)	5143 5135	Hi-side circuit near steering angle sensor was shorted to ground
Normal	—	—	—	—	—	—	Lo-side circuit near steering angle sensor is shorted to ground
Normal	—	—	—	—	—	—	Lo-side circuit near steering angle sensor was shorted to ground

GETtheMANUALS.org

List of Diagnostic Trouble Code (DTC)

Combination meter display	Diagnostic Code that was displayed.						Portions with high rate of malfunction occurrence
	ECM	A/C	EPB (electronic parking brake)	Body integrated unit	TCM	VDC CM (Detailed code)	
EPB OFF VDC VDC OFF Coolant temperature blink (red/blue) FUEL blink ABS EPB operating light blink EPB warning light CHECK EGI Door off [I] blink CRUISE/blink Shift indicator off	U0073	Communication failure	Communication failure	U1201 U1202 U1221 U1223 U1229 U122A U122B	P1718 or P1725	5135 5152 5136	Hi- and Lo-side circuits near steering angle sensor are shorted
VDC CHECK EGI [S] blink CRUISE lit	U0073 (Past)	U0001 U0002 (Past)	C0261	U1201 U1202 U1221 U1223 U1229 U122A U122B (Past)	P1718 or P1725 (Past)	5143 5135 5152	Hi- and Lo-side circuits near steering angle sensor were shorted

GETthemMANUALS.org

11. Diagnostic Procedure with Diagnostic Trouble Code (DTC)

A: COMMUNICATION FOR INITIALIZING IMPOSSIBLE

NOTE:
- This is an inspection method for control modules using the Subaru Select Monitor communication line (K-line).
- For the control modules that read trouble code and current data using CAN communication circuit, perform diagnosis following DTCs for CAN communications.

DIAGNOSIS:
Subaru Select Monitor communication line (K-line) is open or shorted.
TROUBLE SYMPTOM:
Not communicable with Subaru Select Monitor.
WIRING DIAGRAM:

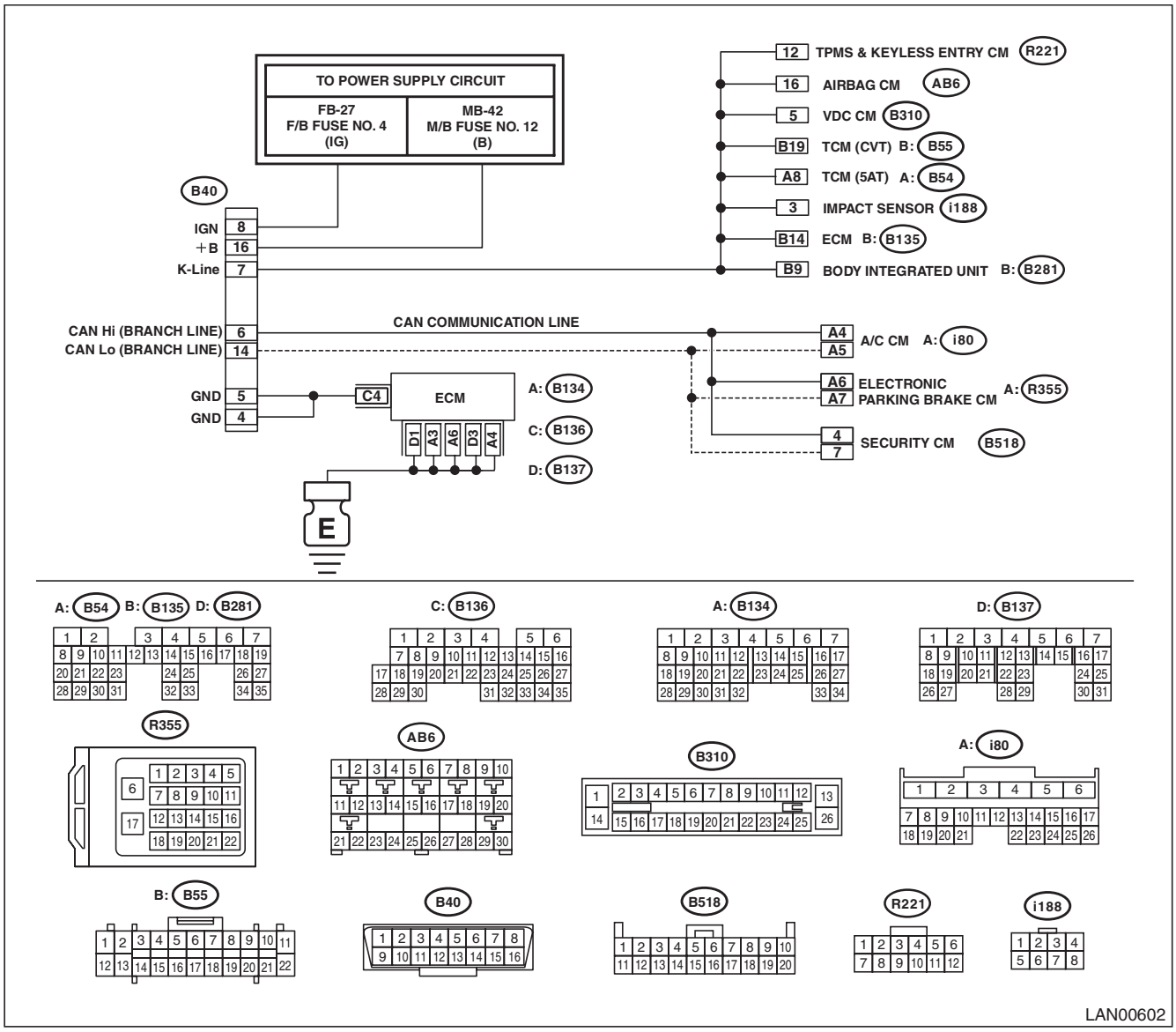

Step		Check	Yes	No
1	**CHECK COMBINATION METER.** 1) Connect the Subaru Select Monitor. 2) Start the engine. 3) Check display of combination meter.	Does the warning lights illuminate or gauge have display error?	Go to step **2**.	Go to step **4**.

GETtheMANUALS.org

	Step	Check	Yes	No
2	**CHECK SUBARU SELECT MONITOR.** 1) Connect the Subaru Select Monitor to another vehicle. 2) Check communication condition between Subaru Select Monitor and vehicle.	Is communication performed normally?	Go to step **3**.	Subaru Select Monitor unit or diagnosis cable is faulty.
3	**CHECK CAN COMMUNICATION CIRCUIT.** Check CAN communication circuit. (Refer to the inspection for CAN communication circuit.) <Ref. to LAN(diag)-12, CAN Communication Circuit Check.>	Is the CAN communication circuit normal?	Replace the modules that did not perform communication.	Repair the CAN communication circuit.
4	**CHECK K-LINE.** 1) Perform communication between Subaru Select Monitor and all modules. 2) Check continuity between the modules that did not communicate with Subaru Select Monitor. ***Connector & terminal*** ***(B40) No. 7 — (AB6) No. 16:*** ***(B40) No. 7 — (B310) No. 5:*** ***(B40) No. 7 — (B55) No. 19 (CVT):*** ***(B40) No. 7 — (B54) No. 8 (5AT):*** ***(B40) No. 7 — (B135) No. 14:*** ***(B40) No. 7 — (B281) No. 9:*** ***(B40) No. 7 — (R221) No. 12 (TPMS):*** ***(B40) No. 7 — (i188) No. 3 (OP):***	Is there continuity?	Go to step **5**.	Repair or replace the open circuit.
5	**CHECK K-LINE.** Check continuity between K-line and chassis ground. ***Connector & terminal*** ***(B40) No. 7 — Chassis ground:***	Is there continuity?	Repair or replace the short circuit portion.	Go to step **6**.
6	**CHECK K-LINE.** Check voltage between K-line and chassis ground. ***Connector & terminal*** ***(B40) No. 7 — Chassis ground:***	Is the voltage 5 V or more with IG ON?	Repair or replace the short circuit portion.	Go to step **7**.
7	**CHECK GROUND CIRCUIT.** Check continuity of ground circuit. ***Connector & terminal*** ***(B40) No. 4 — Chassis ground:*** ***(B40) No. 5 — Chassis ground:***	Is there continuity?	Go to step **9**.	Go to step **8**.
8	**CHECK HARNESS.** 1) Disconnect the ECM connector. 2) Check continuity between data link connector and ECM. ***Connector & terminal*** ***(B40) No. 4 — (B137) No. 4:*** ***(B40) No. 5 — (B137) No. 4:***	Is there continuity?	Check ECM ground.	Repair or replace the open circuit.
9	**CHECK POWER SUPPLY CIRCUIT.** Check the power supply circuit for data link connector. ***Connector & terminal*** ***(B40) No. 8 (+) — Chassis ground (–):*** ***(B40) No. 16 (+) — Chassis ground (–):***	Is the voltage 10 V or more?	The vehicle is normal.	Check the power supply circuits to the data link connector.

CAUTION:
When replacing body integrated unit on the model with immobilizer system, refer to the "PC application help for Subaru Select Monitor"

GETthemMANUALS.org

B: DTC U1201 CAN-HS COUNTER ABNORMAL

DTC DETECTING CONDITION:

Communication is unstable because of high speed CAN communication error.

TROUBLE SYMPTOM:

- Display of combination meter indicates faulty.
- Control faulty may occur due to CAN communication error.

WIRING DIAGRAM:

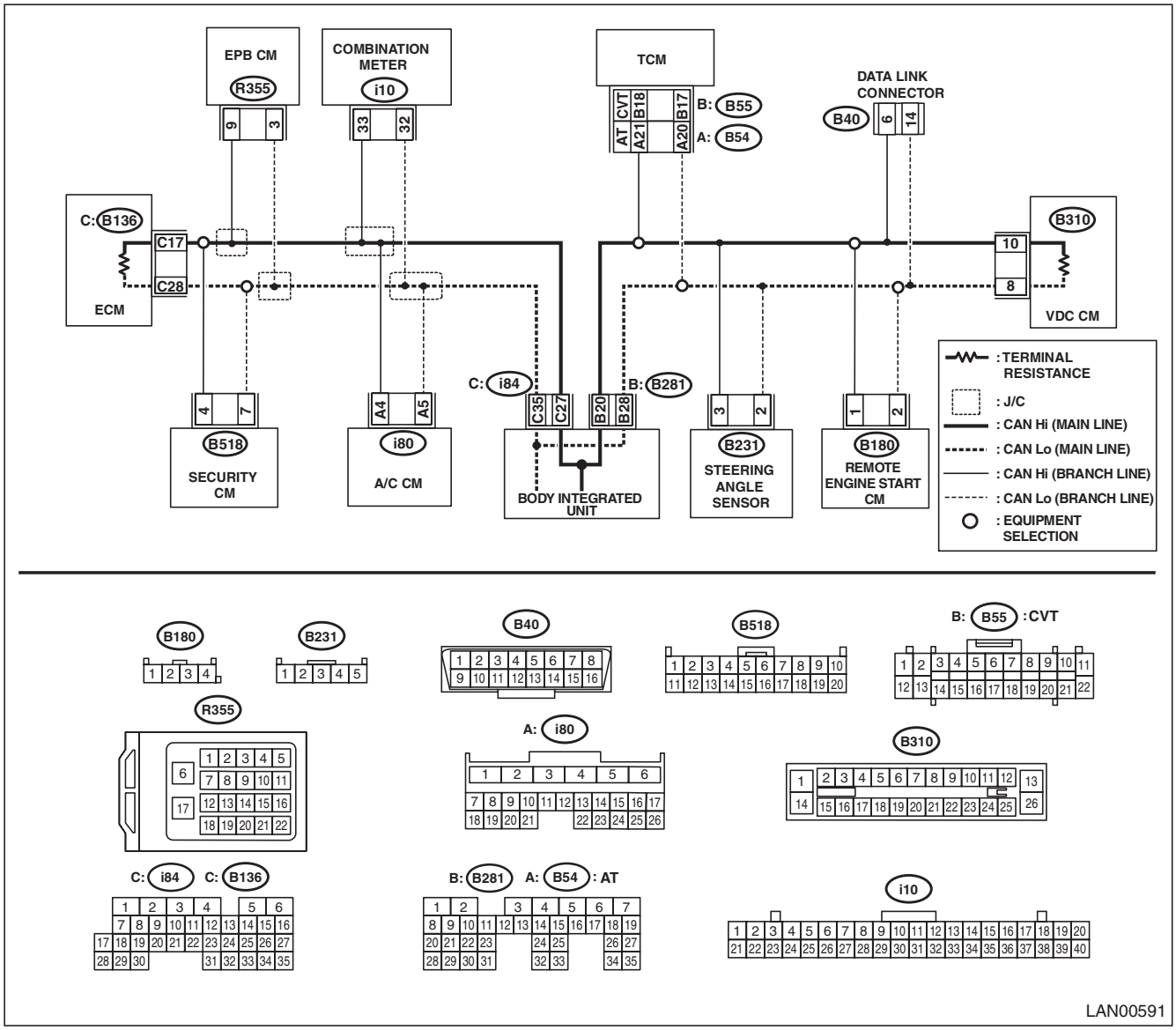

Step		Check	Yes	No
1	**CHECK CAN COMMUNICATION CIRCUIT.** Check CAN communication circuit. <Ref. to LAN(diag)-12, PROCEDURE, CAN Communication Circuit Check.>	Is CAN communication circuit faulty?	Repair the faulty portion, following the diagnosis procedure.	Go to step **2**.

GETtheMANUALS.org

Step		Check	Yes	No
2	**CHECK DTC.** 1) Start the engine. 2) Using the Subaru Select Monitor, read DTC of CAN system.	Is U1202 a current malfunction?	Perform the diagnosis of U1202. <Ref. to LAN(diag)-50, DTC U1201 CAN-HS COUNTER ABNORMAL, Diagnostic Procedure with Diagnostic Trouble Code (DTC).>	Go to step **3**.
3	**CHECK DTC.** Check the displayed DTC.	Is U1201 a current malfunction?	Go to step **4**.	It is possible that temporary poor communication occurs. Perform the clear memory.
4	**CHECK DTC.** 1) Turn the ignition switch to ON. 2) Using the Subaru Select Monitor, read DTC of CAN system.	Is U1201 a current malfunction?	Go to step **5**.	It is possible that temporary poor communication occurs. Perform the clear memory.
5	**CHECK CONTROL MODULE.** 1) Turn the ignition switch to OFF. 2) Disconnect the control modules other than body integrated unit in order. NOTE: When disconnecting ECM or VDC CM, connect resistance of 120 Ω between CAN Hi and CAN Lo as an alternative of end resistance. 3) Turn the ignition switch to ON. 4) Using the Subaru Select Monitor, read DTC of CAN system.	Is there any control module that U1201 is not detected as current malfunction?	Replace the control module.	Repeat 1) to 4) in step 5 until U1201 is not detected.

GETthemMANUALS.org

C: DTC U1202 CAN-HS BUS OFF

DTC DETECTING CONDITION:

Integrated unit communication is shut down because of high speed CAN error.

TROUBLE SYMPTOM:

CAN communication is not normal.

WIRING DIAGRAM:

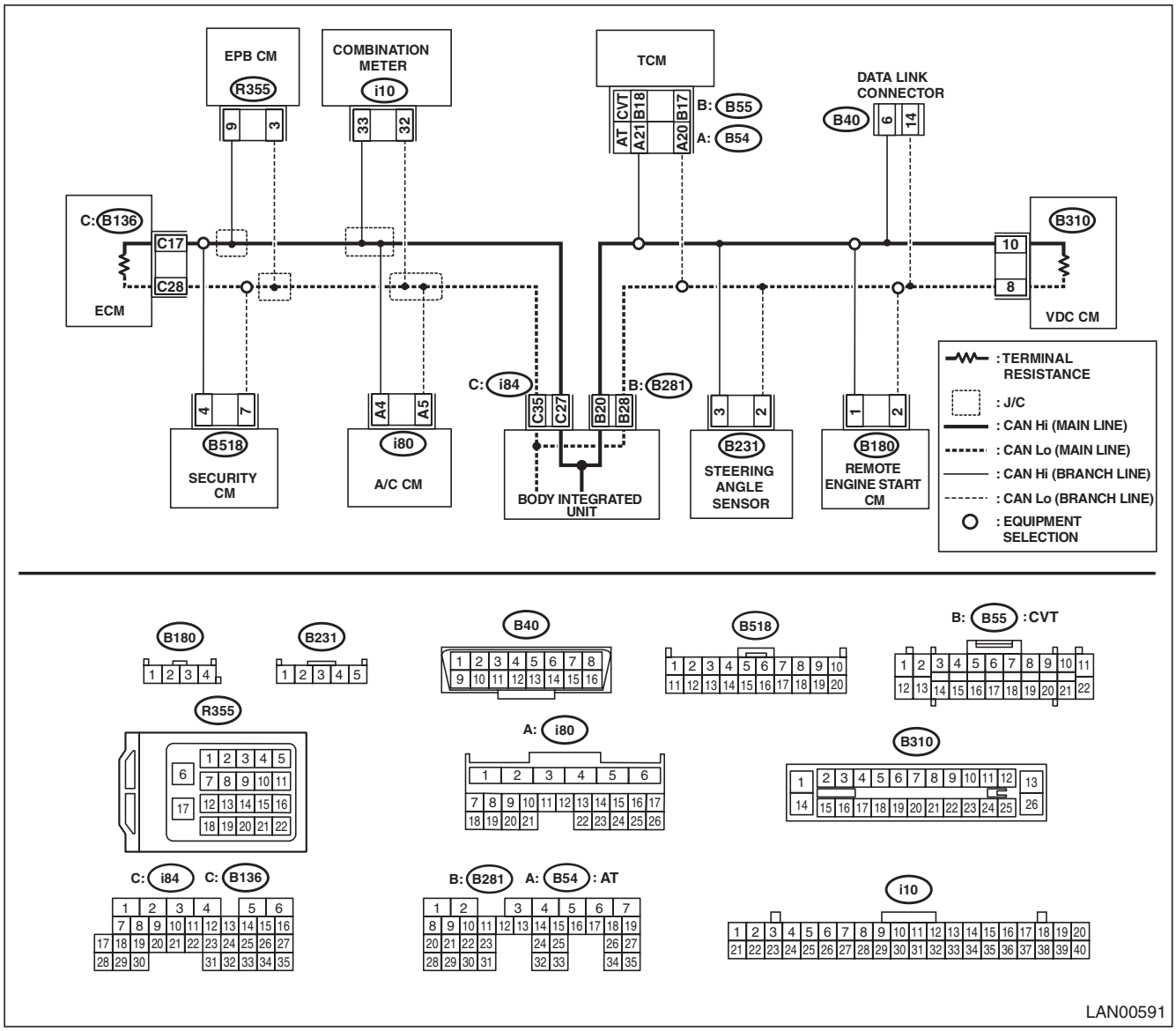

	Step	Check	Yes	No
1	**CHECK CAN COMMUNICATION CIRCUIT.** Check CAN communication circuit. <Ref. to LAN(diag)-12, PROCEDURE, CAN Communication Circuit Check.>	Is CAN communication circuit faulty?	Repair the faulty portion, following the diagnosis procedure.	Go to step **2**.
2	**CHECK DTC.** 1) Start the engine. 2) Using the Subaru Select Monitor, read DTC of CAN system.	Is U1202 a current malfunction?	Go to step **3**.	It may be a temporary poor contact. Perform the clear memory.

GETthemANDAES.org

Step		Check	Yes	No
3	**CHECK CONTROL MODULE.** 1) Turn the ignition switch to OFF. 2) Disconnect the control modules other than body integrated unit in order. NOTE: When disconnecting ECM or VDC CM, connect resistance of 120 Ω between CAN Hi and CAN Lo as an alternative of end resistance. 3) Turn the ignition switch to ON. 4) Using the Subaru Select Monitor, read DTC of CAN system.	Is there any control module that U1201 is not detected as current malfunction?	Replace the control module.	Repeat 1) to 4) in step 3 until U1202 is not detected.

GETtheMANUALS.org

D: DTC U1211 CAN-HS ECM DATA ABNORMAL

DTC DETECTING CONDITION:
Defective data from ECM.
TROUBLE SYMPTOM:
Defective data on CAN communication occurs.
WIRING DIAGRAM:

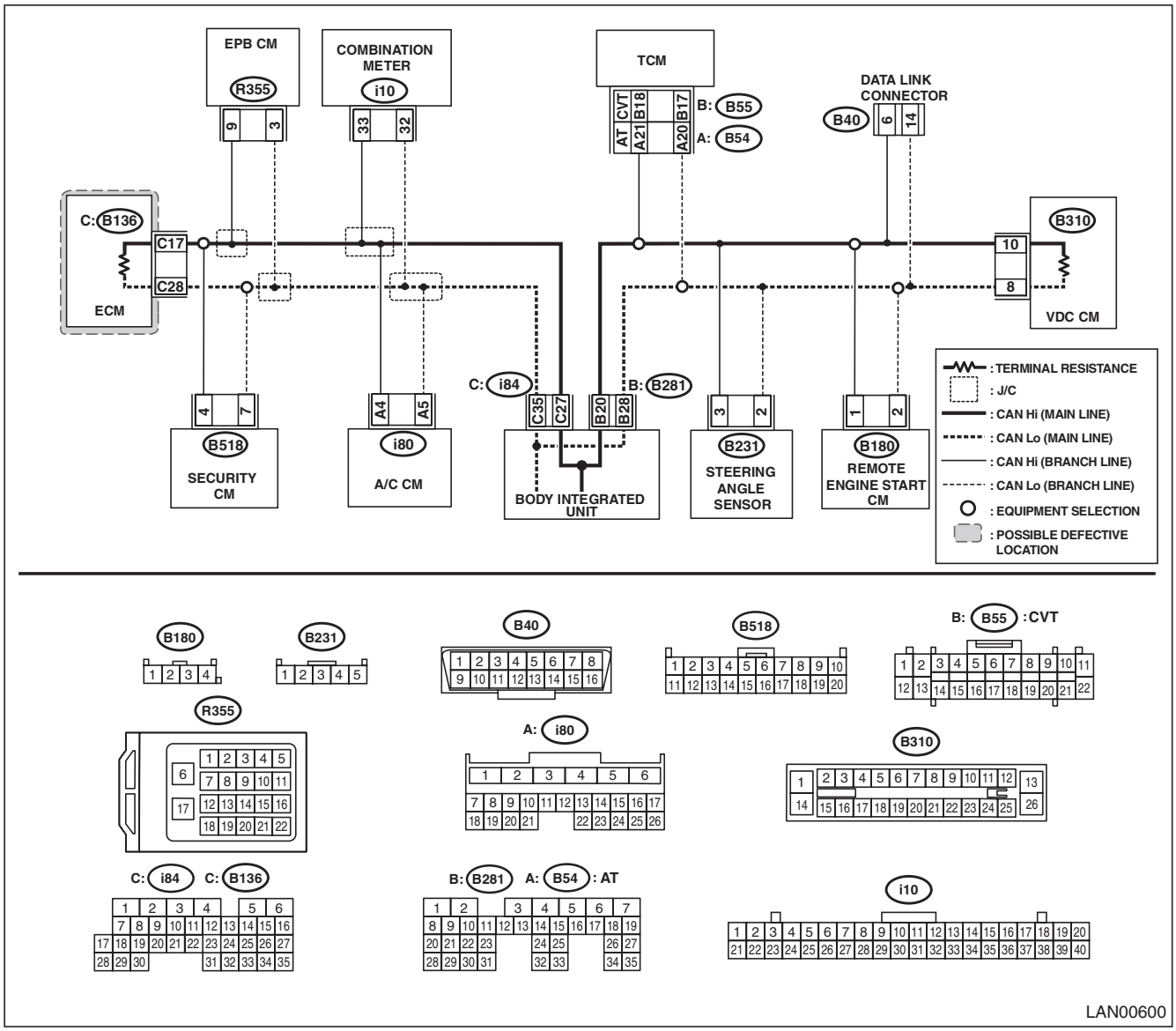

Step		Check	Yes	No
1	**CHECK DTC.** Using the Subaru Select Monitor, read all DTCs.	Is there DTC other than CAN system?	Perform the diagnosis according to DTCs for other control modules.	Go to step **2**.
2	**CHECK DTC.** Check DTC indicated in CAN system.	Is U1211 a current malfunction?	Go to step **3**.	Go to step **4**.

GETtheMANUALS.org

Step		Check	Yes	No
3	**CHECK DTC.** 1) Turn the ignition switch to OFF. 2) Disconnect the ECM connector. 3) Connect the disconnected connectors. 4) Using the Subaru Select Monitor, read DTC of CAN system.	Is U1211 a current malfunction?	Replace the ECM. <Ref. to FU(H6DO)-54, Engine Control Module (ECM).>	Go to step **4**.
4	**CHECK HARNESS.** 1) Shake the harness, and check for poor contact. 2) Using the Subaru Select Monitor, read DTC of CAN system.	Is U1211 a current malfunction?	Repair the poor contact of harness, or replace the harness.	Go to step **5**.
5	**CHECK CONNECTOR.** Check the connector used for high speed CAN for poor contact.	Is there poor contact of connector?	Repair the connector that has poor contact, or replace harness.	It is possible that temporary poor communication occurs. Delete the DTC.

GETthemMANUALS.org

E: DTC U1212 CAN-HS TCM DATA ABNORMAL

DTC DETECTING CONDITION:
Received error data from TCM.
TROUBLE SYMPTOM:
SPORT indicator light blinks.
WIRING DIAGRAM:

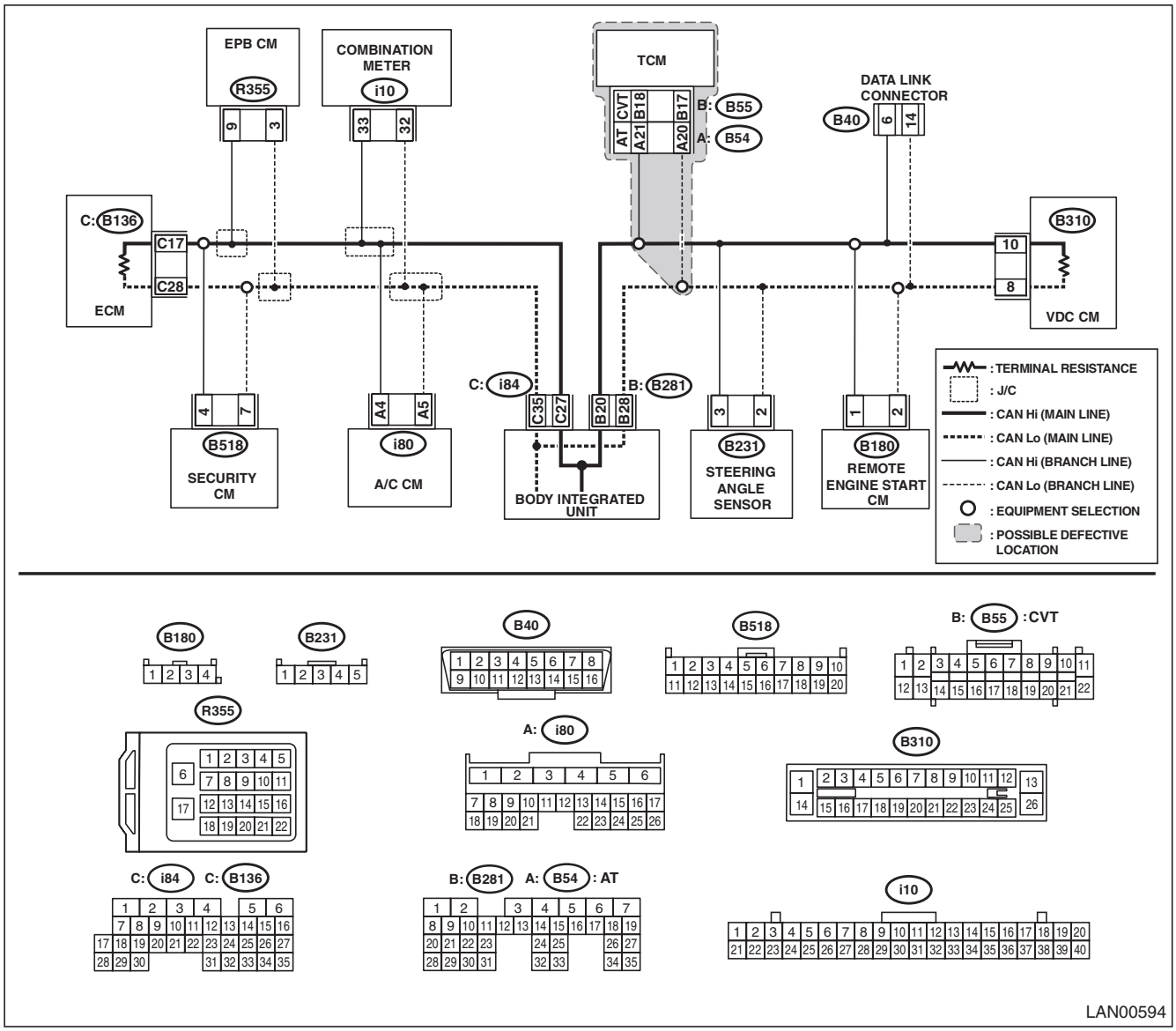

Step		Check	Yes	No
1	**CHECK DTC.** Using the Subaru Select Monitor, read all DTCs.	Is there DTC other than CAN system?	Perform the diagnosis according to DTCs for other control modules.	Go to step **2**.
2	**CHECK DTC.** Check DTC indicated in CAN system.	Is U1212 a current malfunction?	Go to step **3**.	Go to step **4**.

GETthemANDALS.org

Step		Check	Yes	No
3	**CHECK DTC.** 1) Turn the ignition switch to OFF. 2) Disconnect the TCM connector. 3) Connect the disconnected connectors. 4) Using the Subaru Select Monitor, read DTC of CAN system.	Is U1212 a current malfunction?	Replace the TCM. <Ref. to 5AT-57, Transmission Control Module (TCM).>	Go to step **4**.
4	**CHECK HARNESS.** 1) Shake the harness, and check for poor contact. 2) Using the Subaru Select Monitor, read DTC of CAN system.	Is U1212 a current malfunction?	Repair the poor contact of harness, or replace the harness.	Go to step **5**.
5	**CHECK CONNECTOR.** Check the connector used for high speed CAN for poor contact.	Is there poor contact of connector?	Repair the connector that has poor contact, or replace harness.	A temporary communication failure may be a possible cause. Clear the DTC memory.

GETthemMANUALS.org

F: DTC U1213 CAN-HS VDC DATA ABNORMAL

DTC DETECTING CONDITION:
Data from VDCCM is faulty.
TROUBLE SYMPTOM:
ABS warning light and VDC warning light illuminate.
WIRING DIAGRAM:

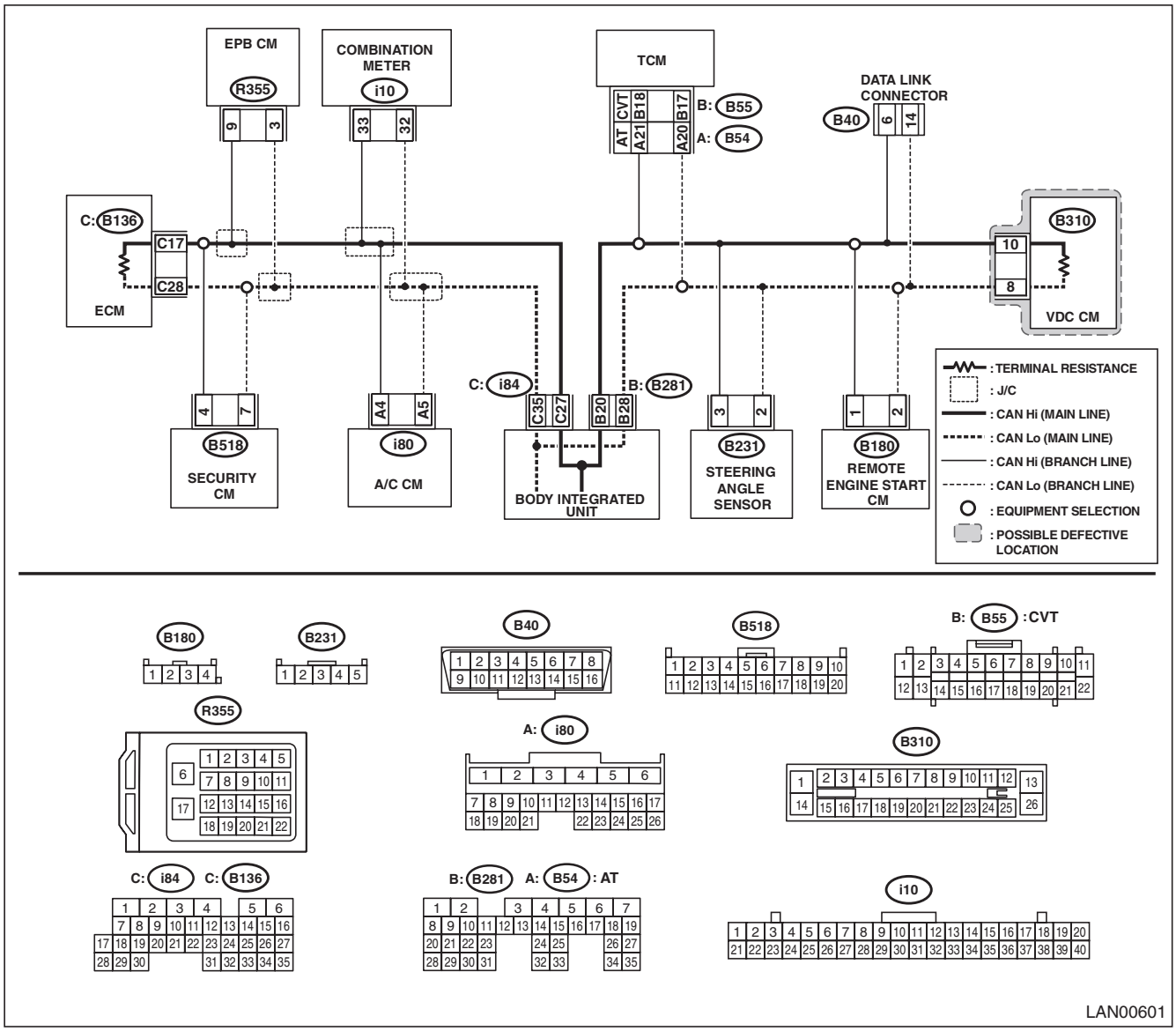

Step		Check	Yes	No
1	**CHECK DTC.** Using the Subaru Select Monitor, read all DTCs.	Is there DTC other than CAN system?	Perform the diagnosis according to DTCs for other control modules.	Go to step **2**.
2	**CHECK DTC.** Check DTC indicated in CAN system.	Is U1213 a current malfunction?	Go to step **3**.	Go to step **4**.

GETtheMANUALS.org

Step		Check	Yes	No
3	**CHECK DTC.** 1) Turn the ignition switch to OFF. 2) Disconnect the VDC CM connector. 3) Connect the disconnected connectors. 4) Using the Subaru Select Monitor, read DTC of CAN system.	Is U1213 a current malfunction?	Replace the VDC CM. <Ref. to VDC-9, VDC Control Module and Hydraulic Control Unit (VDCCM&H/U).>	Go to step **4**.
4	**CHECK HARNESS.** 1) Shake the harness, and check for poor contact. 2) Using the Subaru Select Monitor, read DTC of CAN system.	Is U1213 a current malfunction?	Repair the poor contact of harness, or replace the harness.	Go to step **5**.
5	**CHECK CONNECTOR.** Check the connector used for high speed CAN for poor contact.	Is there poor contact of connector?	Repair the connector that has poor contact, or replace harness.	A temporary communication failure may be a possible cause. Clear the DTC memory.

GETtheMANUALS.org

G: DTC U1219 CAN-HS EPB DATA ABNORMAL

DTC DETECTING CONDITION:

Defective data was transmitted from electronic parking brake control module.

TROUBLE SYMPTOM:

Electronic parking brake cooperation control does not operate.

WIRING DIAGRAM:

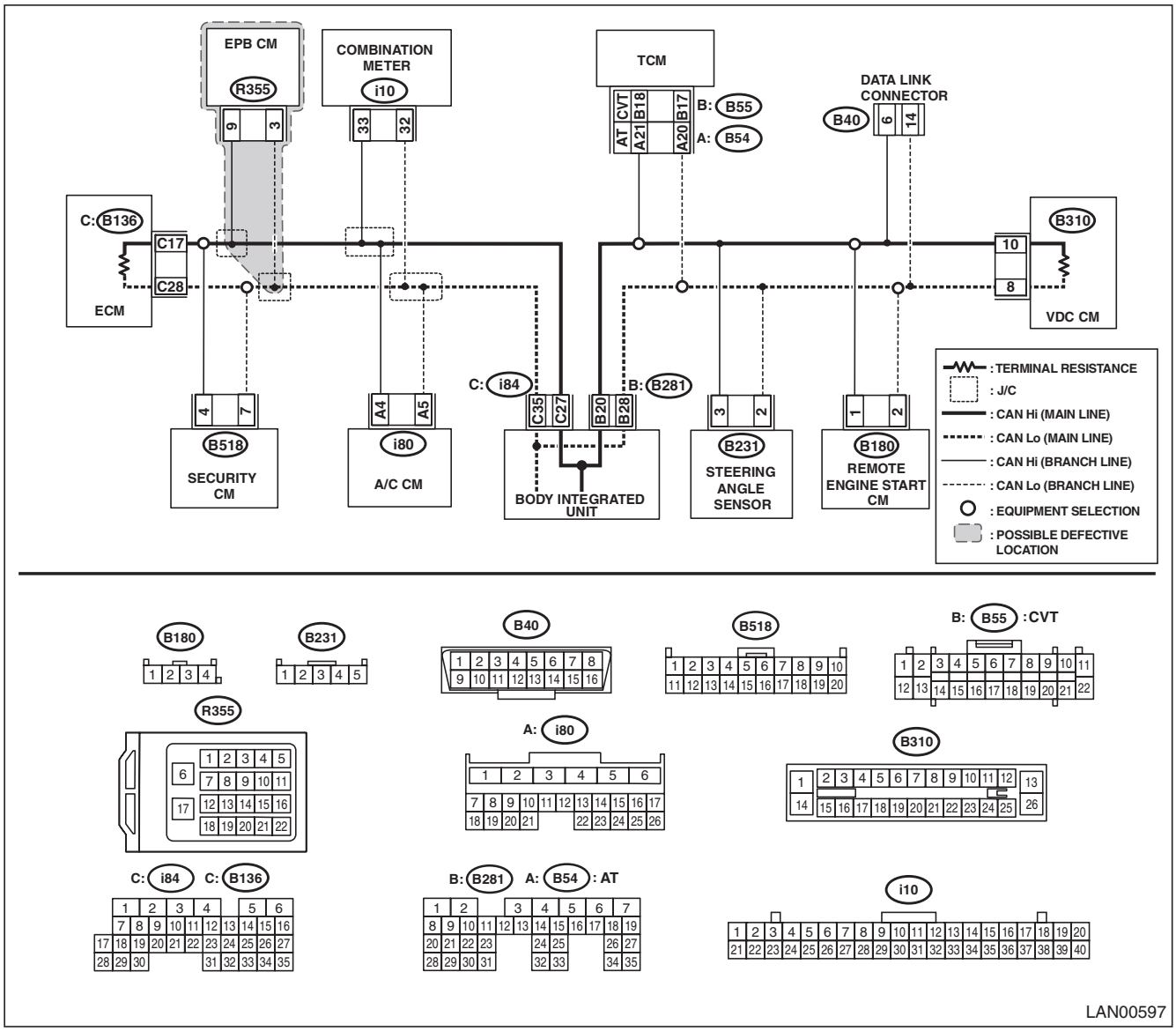

Step		Check	Yes	No
1	**CHECK DTC.** Using the Subaru Select Monitor, read all DTCs.	Is there DTC other than CAN system?	Perform the diagnosis according to DTCs for other control modules.	Go to step **2**.
2	**CHECK DTC.** Check DTC indicated in CAN system.	Is U1219 a current malfunction?	Go to step **3**.	Go to step **4**.

GETthemANDALS.org

Step		Check	Yes	No
3	**CHECK DTC.** Turn the ignition switch to OFF, and read the DTC again.	Is U1219 a current malfunction?	Replace the electronic parking CM. <Ref. to PB-6, REMOVAL, Parking Brake Actuator.>	Go to step **4**.
4	**CHECK ELECTRIC PARKING CM.** 1) Disconnect the electronic parking CM connector. 2) Using the Subaru Select Monitor, perform the clear memory. 3) Using the Subaru Select Monitor, read DTC of CAN system.	Is the displayed DTC other than U1219?	Go to step **5**.	Replace the electronic parking CM. <Ref. to PB-6, REMOVAL, Parking Brake Actuator.>
5	**CHECK ELECTRIC PARKING CM.** 1) Connect the electronic parking CM connector. 2) Using the Subaru Select Monitor, read DTC of electronic parking CM. <Ref. to PB(diag)-14, OPERATION, Subaru Select Monitor.>	Is DTC other than CAN system displayed?	Perform the diagnosis according to DTC.	Replace the body integrated unit. <Ref. to SL-71, REMOVAL, Body Integrated Unit.>

GETtheMANUALS.org

H: DTC U121A CAN-HS METER UNIT DATA ABNORMAL

DTC DETECTING CONDITION:

Defective data was transmitted from combination meter.

TROUBLE SYMPTOM:

Display of combination meter does not operate properly.

WIRING DIAGRAM:

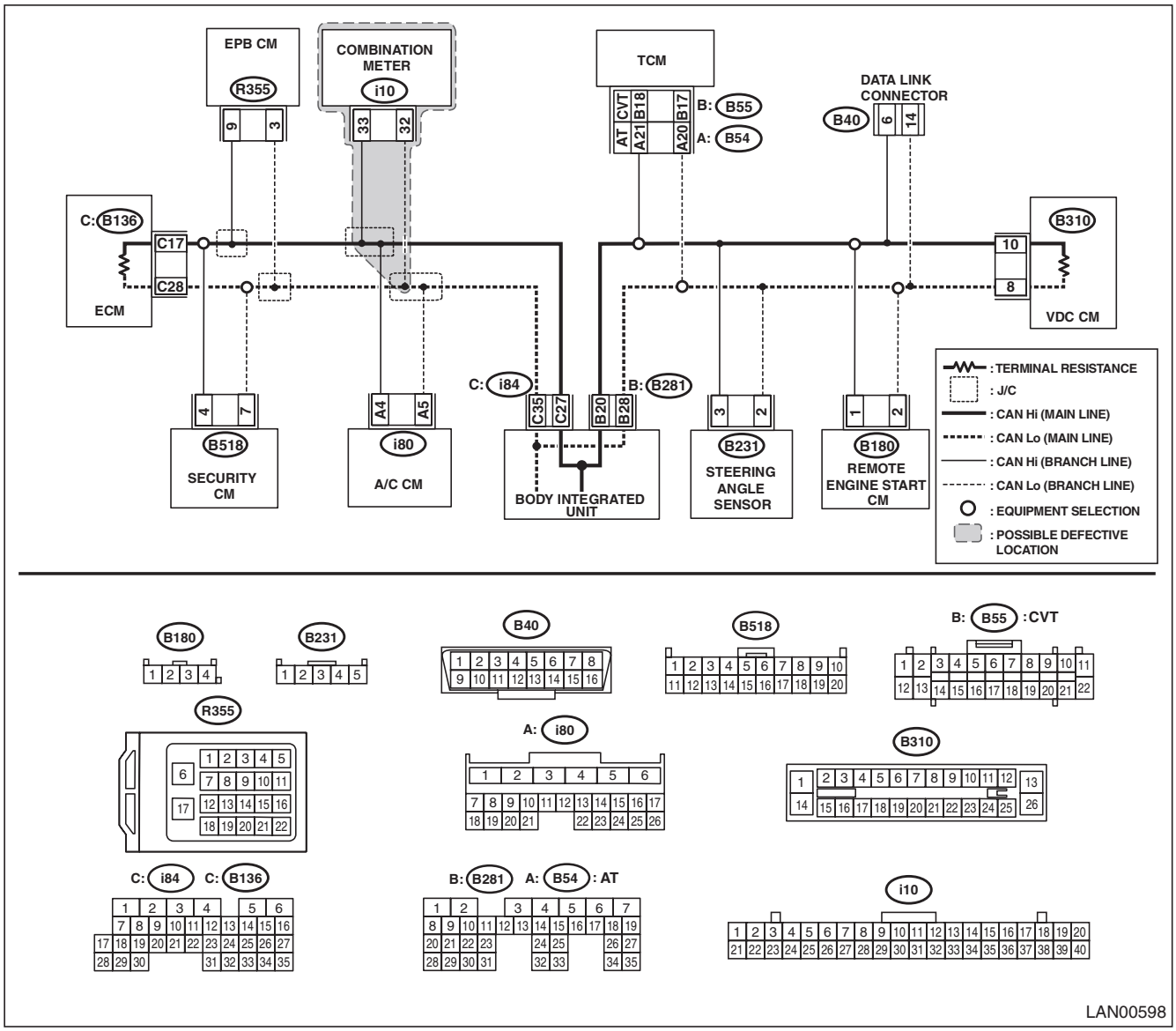

Step		Check	Yes	No
1	**CHECK DTC.** Using the Subaru Select Monitor, read all DTCs.	Is there DTC other than CAN system?	Perform the diagnosis according to DTCs for other control modules.	Go to step **2**.
2	**CHECK DTC.** Check DTC indicated in CAN system.	Is U121A a current malfunction?	Go to step **3**.	Go to step **4**.
3	**CHECK DTC.** Turn the ignition switch to OFF, and read the DTC again.	Is U121A a current malfunction?	Replace the combination meter. <Ref. to IDI-21, REMOVAL, Combination Meter.>	Go to step **4**.

GETthemANDAES.org

Step		Check	Yes	No
4	**CHECK COMBINATION METER.** 1) Disconnect the combination meter connector. 2) Using the Subaru Select Monitor, perform the clear memory. 3) Using the Subaru Select Monitor, read DTC of CAN system.	Is the displayed DTC other than U121A?	Go to step **5**.	Replace the combination meter. <Ref. to IDI-21, REMOVAL, Combination Meter.>
5	**CHECK COMBINATION METER.** 1) Connect the combination meter connector. 2) Using the Subaru Select Monitor, read DTC of combination meter. <Ref. to IDI-6, SELF-DIAGNOSIS DISPLAY MODE, OPERATION, Combination Meter System.>	Is DTC other than CAN system displayed?	Perform the diagnosis according to DTC.	Replace the body integrated unit. <Ref. to SL-71, REMOVAL, Body Integrated Unit.>

GETtheMANUALS.org

I: DTC U121B CAN-HS A/C DATA ABNORMAL

DTC DETECTING CONDITION:
Defective data was transmitted from A/C CM.
TROUBLE SYMPTOM:
Cooperation control of air conditioner does not operate properly.
WIRING DIAGRAM:

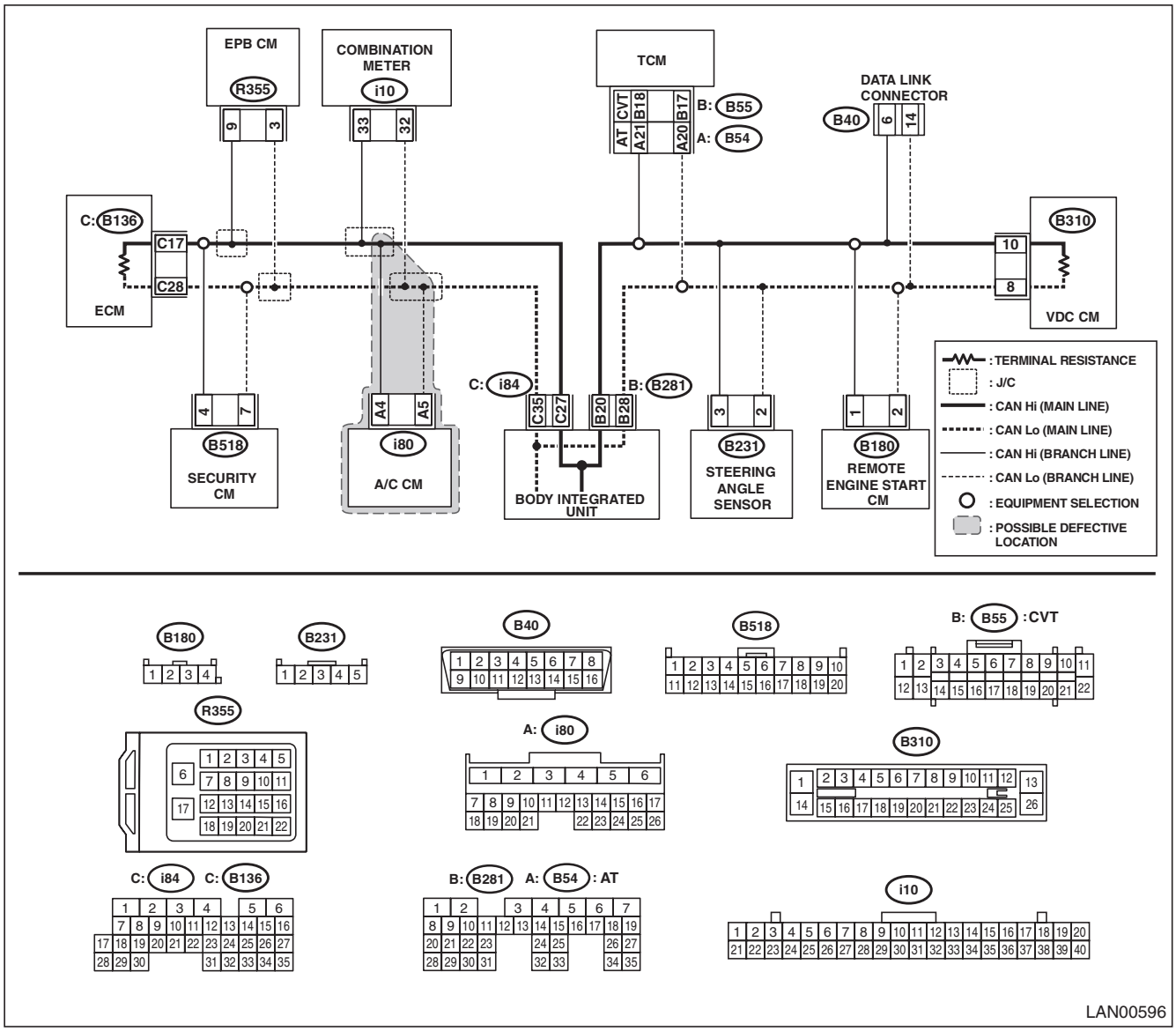

Step		Check	Yes	No
1	**CHECK DTC.** Using the Subaru Select Monitor, read all DTCs.	Is there DTC other than CAN system?	Perform the diagnosis according to DTCs for other control modules.	Go to step **2**.
2	**CHECK DTC.** Check DTC indicated in CAN system.	Is U121B a current malfunction?	Go to step **3**.	Go to step **4**.
3	**CHECK DTC.** Turn the ignition switch to OFF, and read the DTC again.	Is U121B a current malfunction?	Replace the A/C CM. <Ref. to AC-54, REMOVAL, Control Unit.>	Go to step **4**.

GETthemANSWERS.org

Step		Check	Yes	No
4	**CHECK A/C CM.** 1) Disconnect the A/C CM connector. 2) Using the Subaru Select Monitor, perform the clear memory. 3) Using the Subaru Select Monitor, read DTC of CAN system.	Is the displayed DTC other than U121B?	Go to step **5**.	Replace the A/C CM. <Ref. to AC-54, REMOVAL, Control Unit.>
5	**CHECK A/C CM.** 1) Connect the A/C CM connector. 2) Using the Subaru Select Monitor, read DTC of A/C CM. <Ref. to AC(diag)-46, OPERATION, Subaru Select Monitor.>	Is DTC other than CAN system displayed?	Perform the diagnosis according to DTC.	Replace the body integrated unit. <Ref. to SL-71, REMOVAL, Body Integrated Unit.>

GETtheMANUALS.org

J: DTC U121C CAN-HS SCU DATA ABNORMAL

DTC DETECTING CONDITION:
Defective data was transmitted from SCM.
TROUBLE SYMPTOM:
Immobilizer does not operate normally.
WIRING DIAGRAM:

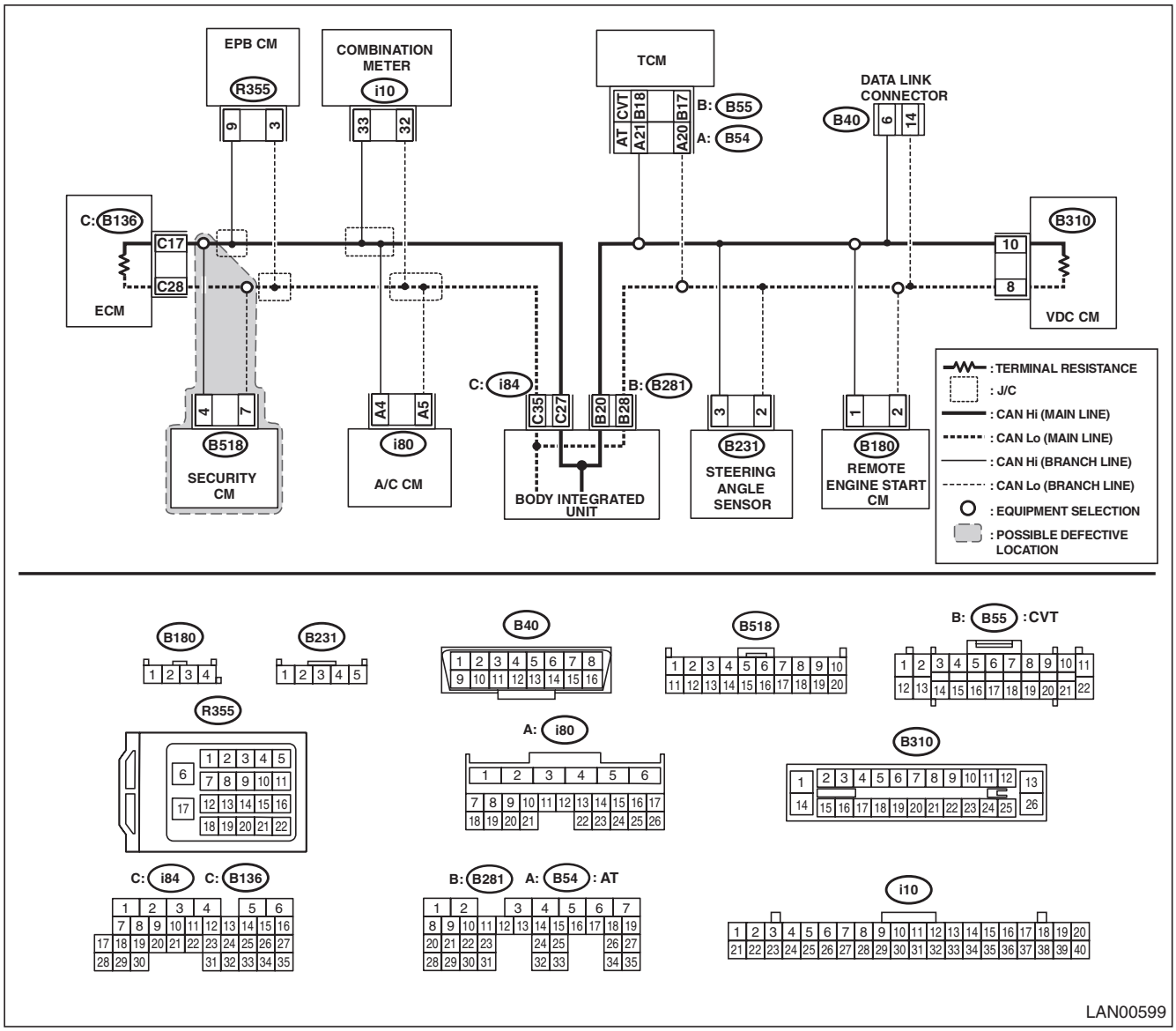

Step		Check	Yes	No
1	**CHECK DTC.** Using the Subaru Select Monitor, read all DTCs.	Is there DTC other than CAN system?	Perform the diagnosis according to DTCs for other control modules.	Go to step **2**.
2	**CHECK DTC.** Check DTC indicated in CAN system.	Is U121C a current malfunction?	Go to step **3**.	Go to step **4**.
3	**CHECK DTC.** Turn the ignition switch to OFF, and read the DTC again.	Is U121C a current malfunction?	Replace SCM. <Ref. to SL-65, REMOVAL, Security Control Module.>	Go to step **4**.

GETthemANSWERS.org

Step		Check	Yes	No
4	**CHECK SCM.** 1) Disconnect the connector from SCM. 2) Using the Subaru Select Monitor, perform the clear memory. 3) Using the Subaru Select Monitor, read DTC of CAN system.	Is the displayed DTC other than U121C?	Go to step **5**.	Replace SCM. <Ref. to SL-65, REMOVAL, Security Control Module.>
5	**CHECK SCM.** 1) Connect the SCM connector. 2) Using the Subaru Select Monitor, read DTC of immobilizer. <Ref. to IM(diag)-9, OPERATION, Read Diagnostic Trouble Code (DTC).>	Is DTC other than CAN system displayed?	Perform the diagnosis according to DTC.	Replace the body integrated unit. <Ref. to SL-71, REMOVAL, Body Integrated Unit.>

GETtheMANUALS.org

K: DTC U1221 CAN-HS ECM NO-RECEIVE DATA

DTC DETECTING CONDITION:
Not received data from ECM.
TROUBLE SYMPTOM:
Cooperation control of transmission may not operate properly.
WIRING DIAGRAM:

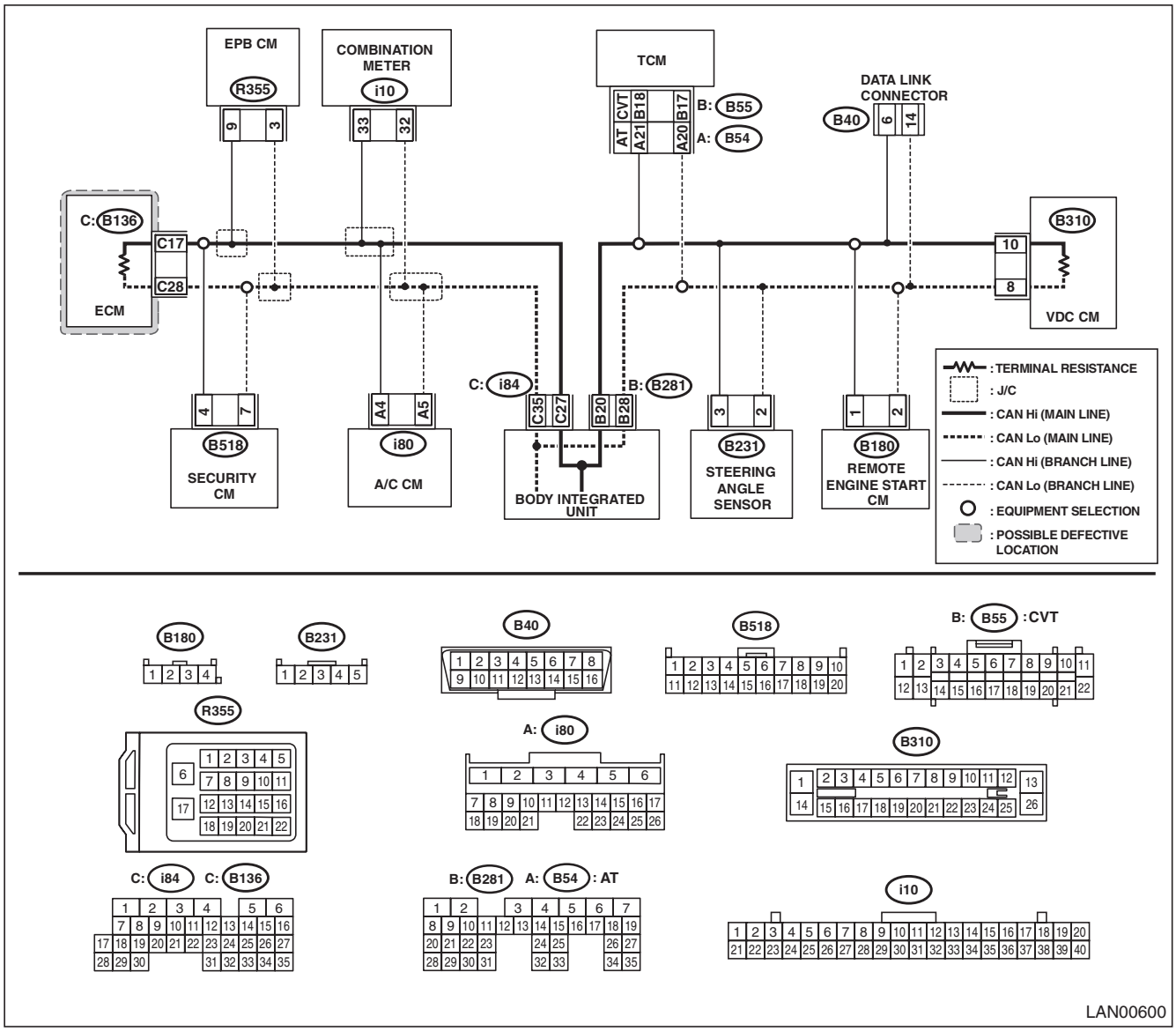

Step		Check	Yes	No
1	**CHECK DTC.** Using the Subaru Select Monitor, read all DTCs.	Is there DTC other than CAN system?	Perform the diagnosis according to DTCs for other control modules.	Go to step **2**.
2	**CHECK DTC.** Check DTC indicated in CAN system.	Is U1221 a current malfunction?	Go to step **3**.	Go to step **7**.

GETthemANDALS.org

Step		Check	Yes	No
3	**CHECK DTC.** 1) Turn the ignition switch to OFF. 2) Disconnect the control module connector that is connected to high speed CAN. 3) Connect the disconnected connectors. 4) Using the Subaru Select Monitor, read DTC of CAN system.	Is U1221 a current malfunction?	Go to step **4**.	Go to step **7**.
4	**CHECK HARNESS.** 1) Turn the ignition switch to OFF. 2) Disconnect the control module connector that is connected to high speed CAN. 3) Using the tester, measure the resistance between terminals. ***Connector & terminal*** ***(B40) No. 6 — (B136) No. 17:*** ***(B40) No. 14 — (B136) No. 28:***	Is the resistance 10 Ω or less?	Go to step **5**.	Repair the open circuit of harness or replace harness.
5	**CHECK DTC.** 1) Connect the disconnected connectors. 2) Start the engine. 3) Turn the ignition switch to OFF. 4) Using the Subaru Select Monitor, read DTC of CAN system.	Is U1221 a current malfunction?	Go to step **6**.	Go to step **7**.
6	**CHECK DTC.** Using the Subaru Select Monitor, read all DTCs.	Is P1718, C0044, C0045 detected?	Replace the ECM. <Ref. to FU(H4DOTC)-58, REMOVAL, Engine Control Module (ECM).>	Replace the body integrated unit. <Ref. to SL-71, REMOVAL, Body Integrated Unit.>
7	**CHECK HARNESS.** 1) Shake the harness, and check for poor contact. 2) Using the Subaru Select Monitor, read DTC of CAN system.	Is U1221 a current malfunction?	Repair the poor contact of harness, or replace the harness.	Go to step **8**.
8	**CHECK CONNECTOR.** Check the connector used for high speed CAN for poor contact.	Is there poor contact of connector?	Repair the connector, or replace harness.	It is possible that temporary poor communication occurs. Delete the DTC.

GETthemMANUALS.org

L: DTC U1222 CAN-HS TCM NO-RECEIVE DATA

DTC DETECTING CONDITION:
Not received data from TCM.
TROUBLE SYMPTOM:
Cooperation control with transmission is not performed.
WIRING DIAGRAM:

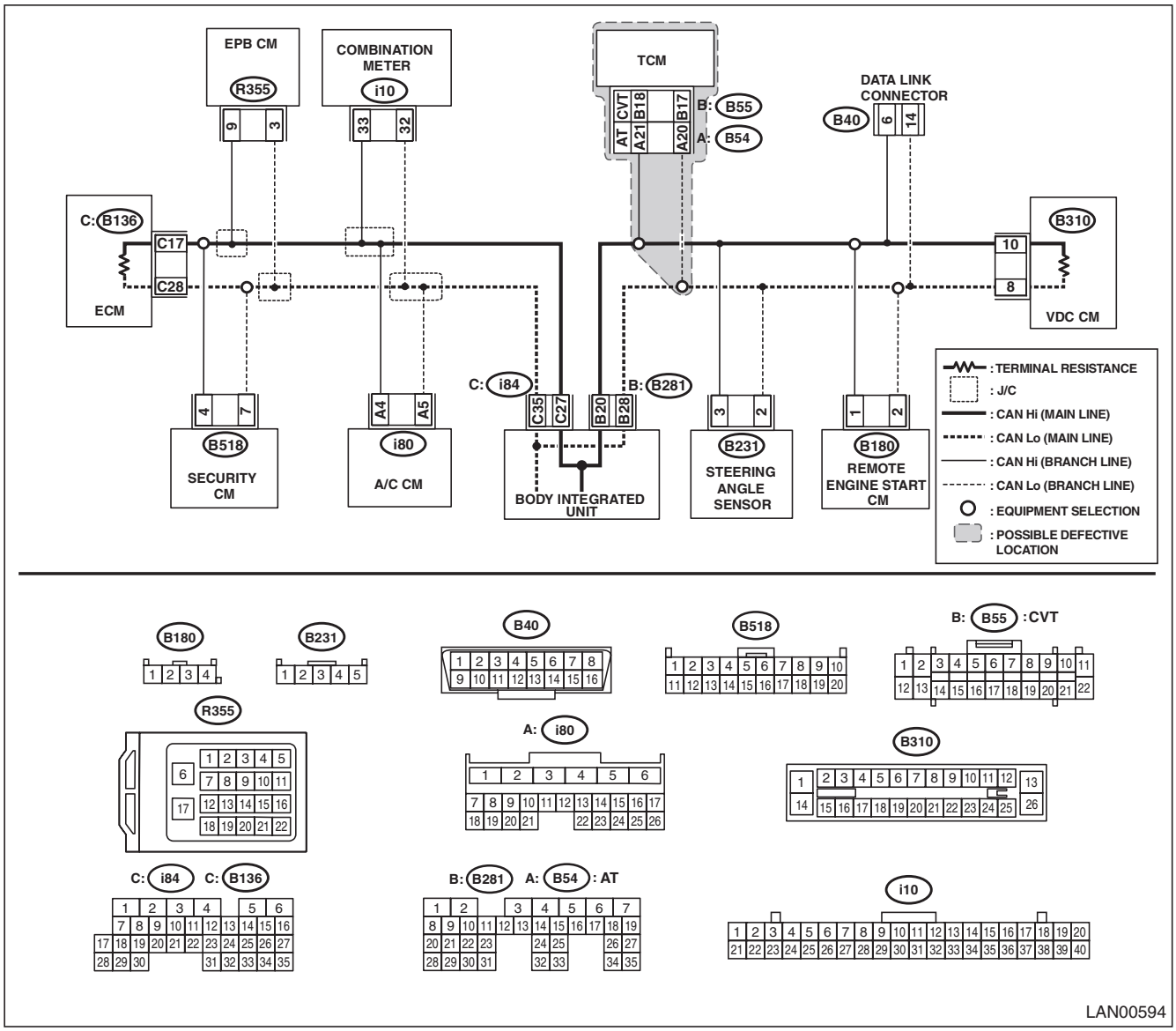

Step		Check	Yes	No
1	**CHECK DTC.** Using the Subaru Select Monitor, read all DTCs.	Is there DTC other than CAN system?	Perform the diagnosis according to DTCs for other control modules.	Go to step **2**.
2	**CHECK DTC.** Check DTC indicated in CAN system.	Is U1222 a current malfunction?	Go to step **3**.	Go to step **7**.

GETthemMANUALS.org

Step		Check	Yes	No
3	**CHECK DTC.** 1) Turn the ignition switch to OFF. 2) Disconnect the control module connector that is connected to high speed CAN. 3) Connect the disconnected connectors. 4) Using the Subaru Select Monitor, read DTC of CAN system.	Is U1222 a current malfunction?	Go to step **4**.	Go to step **7**.
4	**CHECK HARNESS.** 1) Turn the ignition switch to OFF. 2) Disconnect the control module connector that is connected to high speed CAN. 3) Using the tester, measure the resistance between terminals. ***Connector & terminal*** ***(B40) No. 6 — (B55) No. 18 (CVT):*** ***(B40) No. 14 — (B55) No. 17 (CVT):*** ***(B40) No. 6 — (B54) No. 21 (5AT):*** ***(B40) No. 14 — (B54) No. 20 (5AT):***	Is the resistance 10 Ω or less?	Go to step **5**.	Repair the open circuit of harness or replace harness.
5	**CHECK DTC.** 1) Connect the disconnected connectors. 2) Start the engine. 3) Turn the ignition switch to OFF (stop the engine). 4) Using the Subaru Select Monitor, read DTC of CAN system.	Is U1222 a current malfunction?	Go to step **6**.	Go to step **7**.
6	**CHECK DTC.** Using the Subaru Select Monitor, read all DTCs.	Is P1718, C0044, C0045 detected?	Replace the TCM. <Ref. to 5AT-57, REMOVAL, Transmission Control Module (TCM).>	Replace the body integrated unit. <Ref. to SL-71, REMOVAL, Body Integrated Unit.>
7	**CHECK HARNESS.** 1) Shake the harness, and check for poor contact. 2) Using the Subaru Select Monitor, read DTC of CAN system.	Is U1222 a current malfunction?	Repair the open circuit of harness or replace harness.	Go to step **8**.
8	**CHECK CONNECTOR.** Check the connector used for high speed CAN for poor contact.	Is there poor contact of connector?	Repair the connector, or replace harness.	It is possible that temporary poor communication occurs. Delete the DTC.

GETthemMANUALS.org

M: DTC U1223 CAN-HS VDC NO-RECEIVE DATA

DTC DETECTING CONDITION:
No data from VDCCM is received.
TROUBLE SYMPTOM:
ABS warning light and VDC warning light illuminate.
WIRING DIAGRAM:

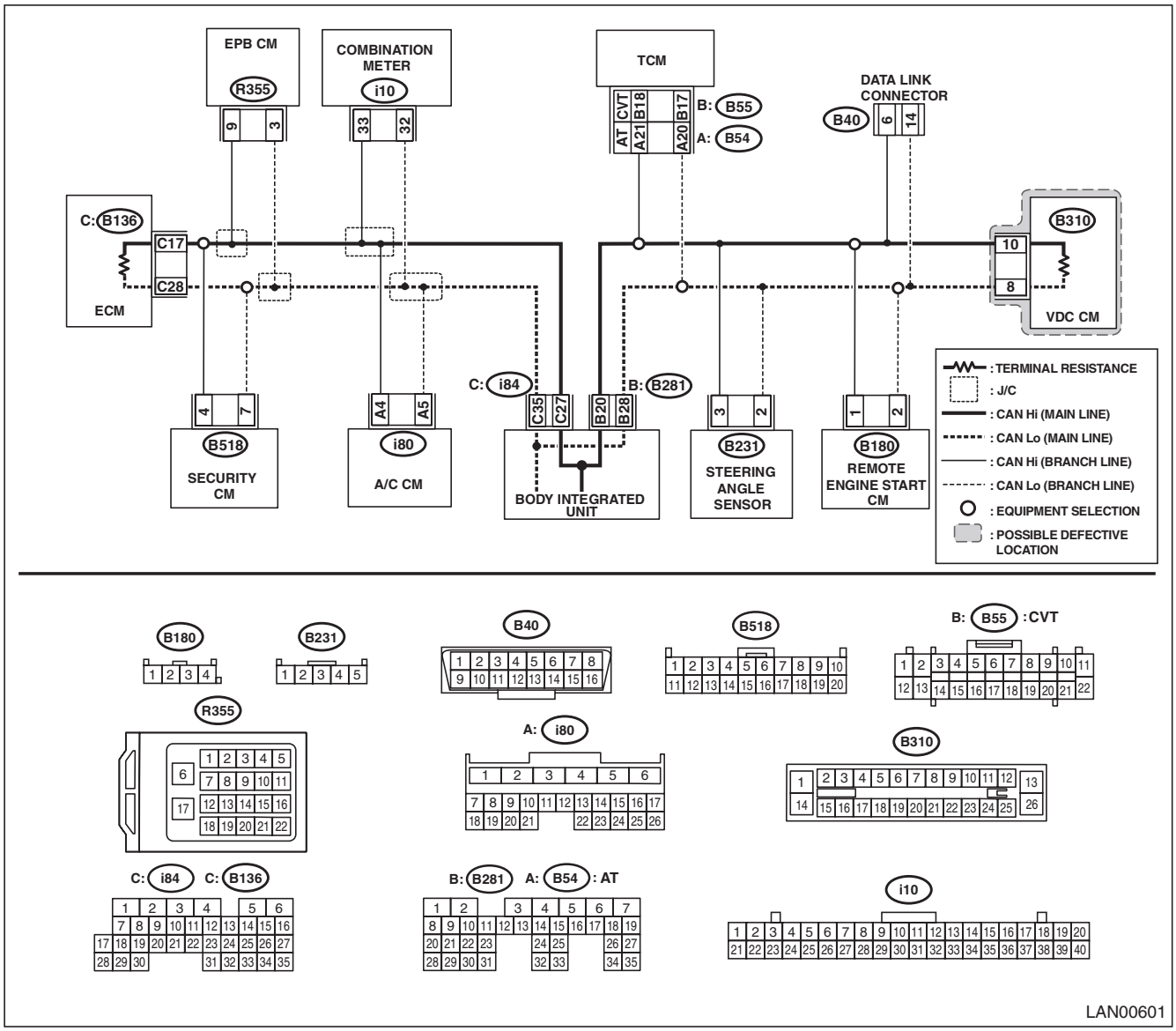

Step		Check	Yes	No
1	**CHECK DTC.** Using the Subaru Select Monitor, read all DTCs.	Is there DTC other than CAN system?	Perform the diagnosis according to DTCs for other control modules.	Go to step **2**.
2	**CHECK DTC.** Check DTC indicated in CAN system.	Is U1223 a current malfunction?	Go to step **3**.	Go to step **7**.

GETthemMANUALS.org

Step		Check	Yes	No
3	**CHECK DTC.** 1) Turn the ignition switch to OFF. 2) Disconnect the control module connector that is connected to high speed CAN. 3) Connect the disconnected connectors. 4) Using the Subaru Select Monitor, read DTC of CAN system.	Is U1223 a current malfunction?	Go to step **4**.	Go to step **7**.
4	**CHECK HARNESS.** 1) Turn the ignition switch to OFF. 2) Disconnect the control module connector that is connected to high speed CAN. 3) Using the tester, measure the resistance between terminals. ***Connector & terminal*** ***(B40) No. 6 — (B310) No. 10:*** ***(B40) No. 6 — (B231) No. 3:*** ***(B40) No. 14 — (B310) No. 8:*** ***(B40) No. 14 — (B231) No. 2:***	Is the resistance 10 Ω or less?	Go to step **5**.	Repair the open circuit of harness or replace harness.
5	**CHECK DTC.** 1) Connect the disconnected connectors. 2) Start the engine. 3) Turn the ignition switch to OFF. 4) Using the Subaru Select Monitor, read DTC of CAN system.	Is U1223 a current malfunction?	Go to step **6**.	Go to step **7**.
6	**CHECK DTC.** Using the Subaru Select Monitor, read all DTCs.	Is P1718 detected?	Replace the VDC CM. <Ref. to VDC-9, REMOVAL, VDC Control Module and Hydraulic Control Unit (VDCCM&H/U).>	Replace the body integrated unit. <Ref. to SL-71, REMOVAL, Body Integrated Unit.>
7	**CHECK HARNESS.** 1) Shake the harness, and check for poor contact. 2) Using the Subaru Select Monitor, read DTC of CAN system.	Is U1223 a current malfunction?	Repair the poor contact of harness, or replace the harness.	Go to step **8**.
8	**CHECK CONNECTOR.** Check the connector used for high speed CAN for poor contact.	Is there poor contact of connector?	Repair the connector, or replace harness.	It is possible that temporary poor communication occurs. Delete the DTC.

GETthemMANUALS.org

N: DTC U1229 CAN-HS EPB NO-RECEIVE DATA

DTC DETECTING CONDITION:

No data from electronic parking brake control module is received.

TROUBLE SYMPTOM:

Electronic parking brake cooperation control does not operate.

WIRING DIAGRAM:

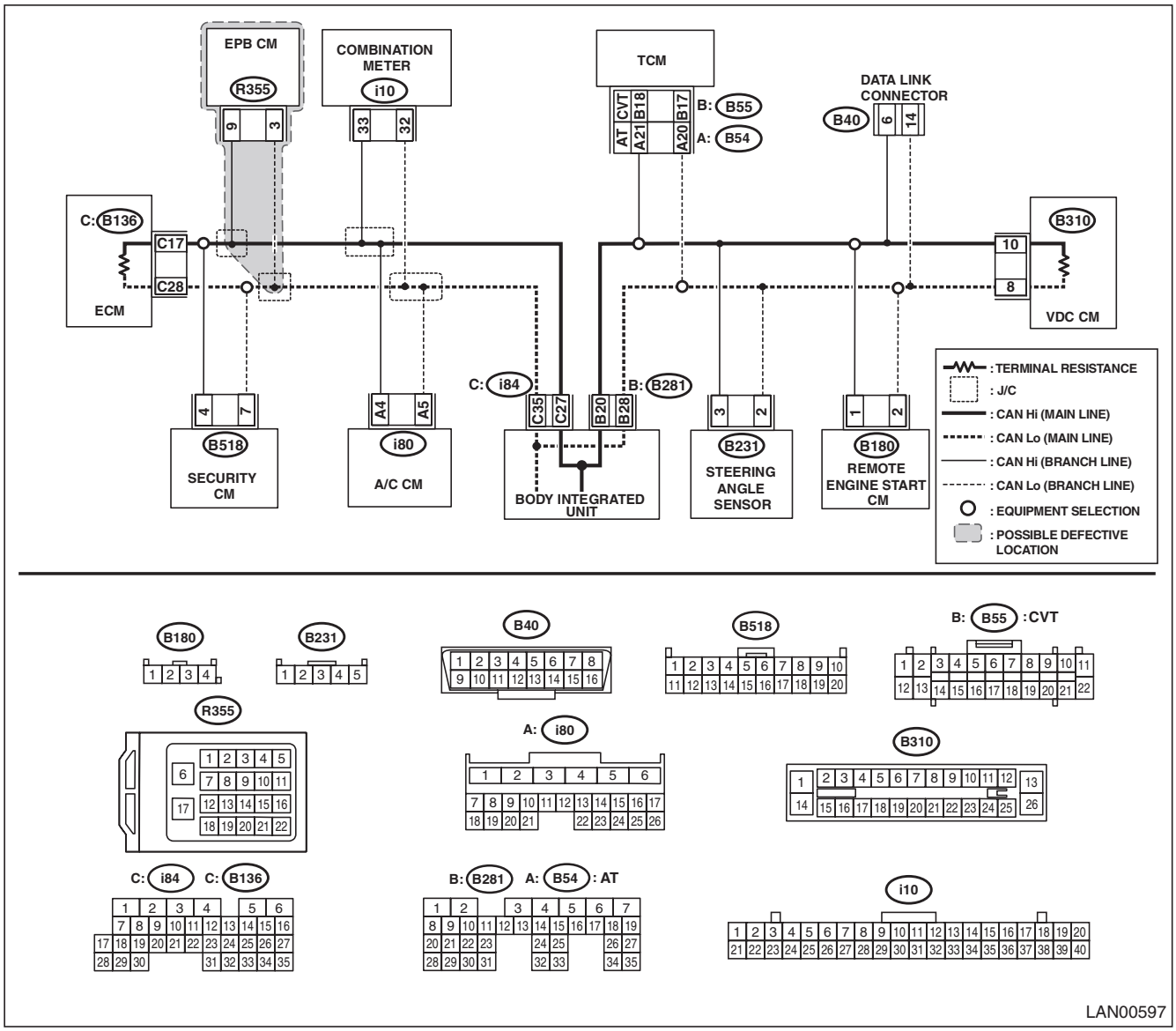

Step		Check	Yes	No
1	**CHECK DTC.** Using the Subaru Select Monitor, read all DTCs.	Is there DTC other than CAN system?	Perform the diagnosis according to DTCs for other control modules.	Go to step **2**.
2	**CHECK DTC.** Check DTC indicated in CAN system.	Is U1229 a current malfunction?	Go to step **3**.	Go to step **4**.

GETthemANDALS.org

Step		Check	Yes	No
3	**CHECK DTC.** Turn the ignition switch to OFF, and read the DTC again.	Is U1229 a current malfunction?	Replace the electronic parking CM. <Ref. to PB-6, REMOVAL, Parking Brake Actuator.>	Go to step **4**.
4	**CHECK ELECTRIC PARKING CM.** 1) Disconnect the electronic parking CM connector. 2) Using the Subaru Select Monitor, perform the clear memory. 3) Using the Subaru Select Monitor, read DTC of CAN system.	Is the displayed DTC other than U1229?	Go to step **5**.	Replace the electronic parking CM. <Ref. to PB-6, REMOVAL, Parking Brake Actuator.>
5	**CHECK ELECTRIC PARKING CM.** 1) Connect the electronic parking CM connector. 2) Using the Subaru Select Monitor, read DTC of electronic parking CM. <Ref. to PB(diag)-14, OPERATION, Subaru Select Monitor.>	Is DTC other than CAN system displayed?	Perform the diagnosis according to DTC.	Replace the body integrated unit. <Ref. to SL-71, REMOVAL, Body Integrated Unit.>

GETtheMANUALS.org

O: DTC U122A CAN-HS METER NO-RECEIVE DATA

DTC DETECTING CONDITION:
No data received from combination meter.
TROUBLE SYMPTOM:
Display of combination meter does not operate properly.
WIRING DIAGRAM:

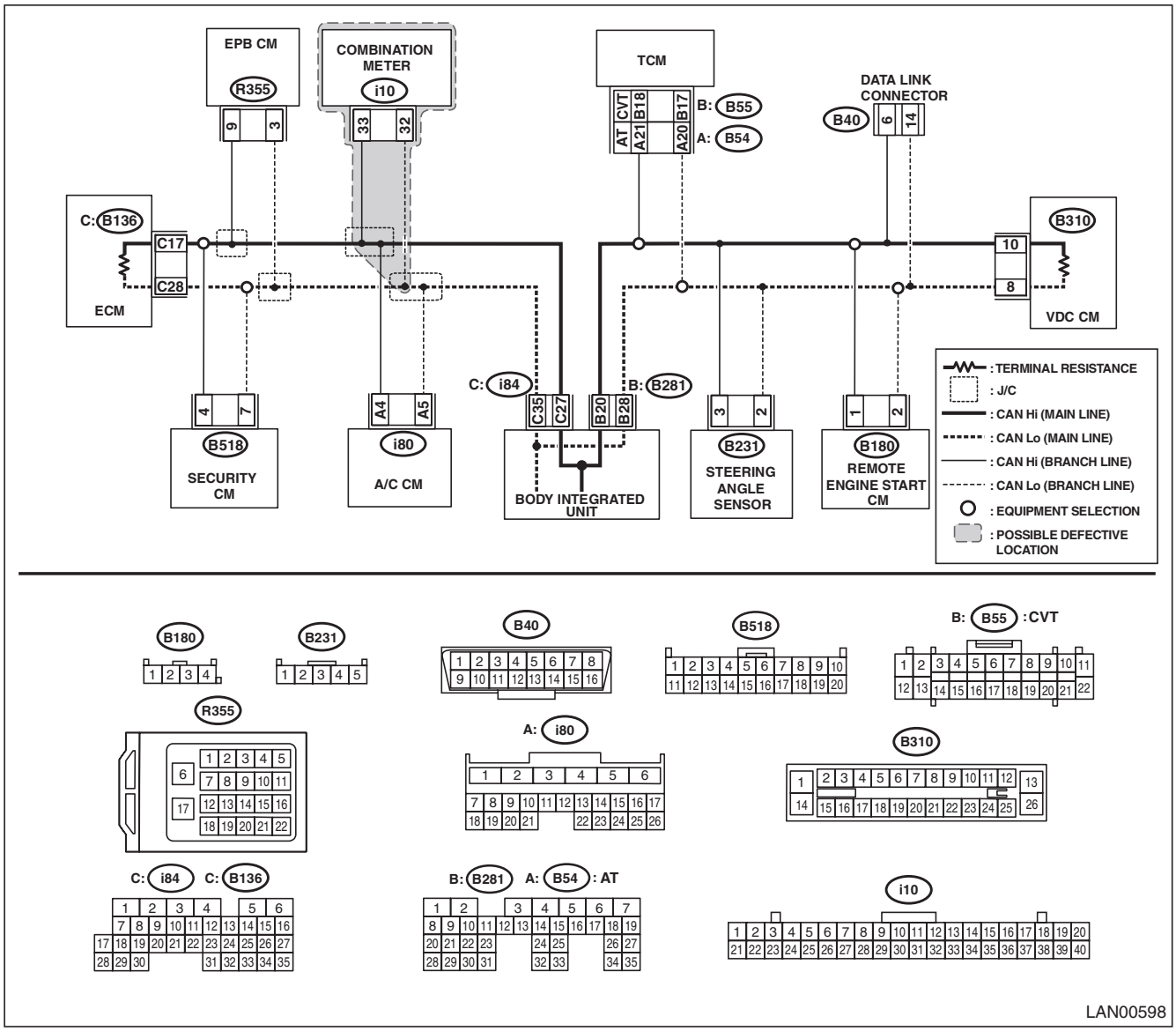

Step		Check	Yes	No
1	**CHECK DTC.** Using the Subaru Select Monitor, read all DTCs.	Is there DTC other than CAN system?	Perform the diagnosis according to DTCs for other control modules.	Go to step **2**.
2	**CHECK DTC.** Check DTC indicated in CAN system.	Is U122A a current malfunction?	Go to step **3**.	Go to step **4**.
3	**CHECK DTC.** Turn the ignition switch to OFF, and read the DTC again.	Is U122A a current malfunction?	Replace the combination meter. <Ref. to IDI-21, REMOVAL, Combination Meter.>	Go to step **4**.

GETthemANDALS.org

Step		Check	Yes	No
4	**CHECK COMBINATION METER.** 1) Disconnect the combination meter connector. 2) Using the Subaru Select Monitor, perform the clear memory. 3) Using the Subaru Select Monitor, read DTC of CAN system.	Is the displayed DTC other than U122A?	Go to step **5**.	Replace the combination meter. <Ref. to IDI-21, REMOVAL, Combination Meter.>
5	**CHECK COMBINATION METER.** 1) Connect the combination meter connector. 2) Using the Subaru Select Monitor, read DTC of combination meter. <Ref. to IDI-6, SELF-DIAGNOSIS DISPLAY MODE, OPERATION, Combination Meter System.>	Is DTC other than CAN system displayed?	Perform the diagnosis according to DTC.	Replace the body integrated unit. <Ref. to SL-71, REMOVAL, Body Integrated Unit.>

GETthemMANUALS.org

P: DTC U122B CAN-HS A/C NO-RECEIVE DATA

DTC DETECTING CONDITION:
No data received from A/C CM.
TROUBLE SYMPTOM:
Cooperation control of air conditioner does not operate properly.
WIRING DIAGRAM:

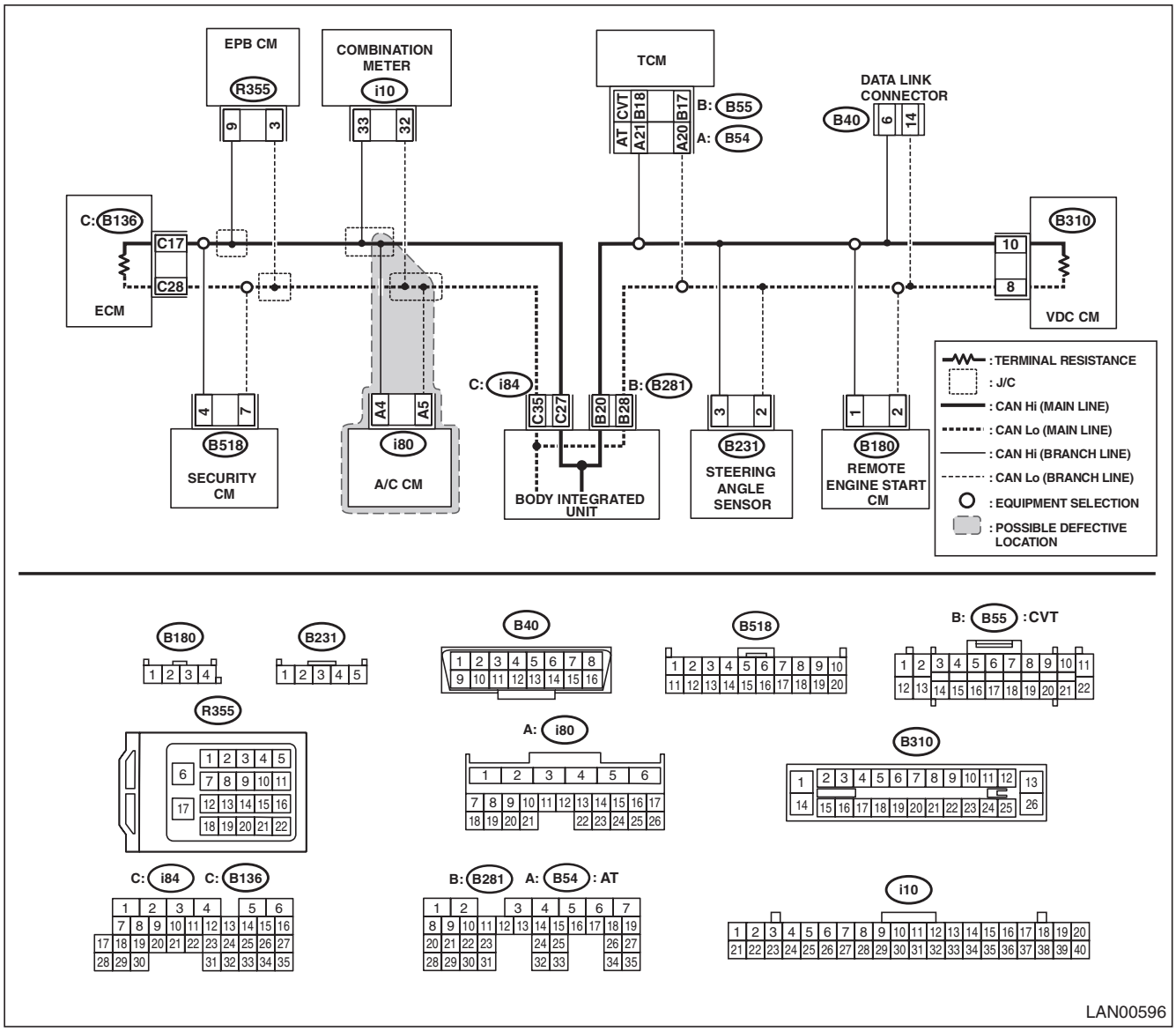

Step		Check	Yes	No
1	**CHECK DTC.** Using the Subaru Select Monitor, read all DTCs.	Is there DTC other than CAN system?	Perform the diagnosis according to DTCs for other control modules.	Go to step **2**.
2	**CHECK DTC.** Check DTC indicated in CAN system.	Is U122B a current malfunction?	Go to step **3**.	Go to step **4**.
3	**CHECK DTC.** Turn the ignition switch to OFF, and read the DTC again.	Is U122B a current malfunction?	Replace the A/C CM. <Ref. to AC-54, REMOVAL, Control Unit.>	Go to step **4**.

GETthemANDALS.org

Step		Check	Yes	No
4	**CHECK A/C CM.** 1) Disconnect the A/C CM connector. 2) Using the Subaru Select Monitor, perform the clear memory. 3) Using the Subaru Select Monitor, read DTC of CAN system.	Is the displayed DTC other than U122B?	Go to step **5**.	Replace the A/C CM. <Ref. to AC-54, REMOVAL, Control Unit.>
5	**CHECK A/C CM.** 1) Connect the A/C CM connector. 2) Using the Subaru Select Monitor, read DTC of A/C CM. <Ref. to AC(diag)-46, OPERATION, Subaru Select Monitor.>	Is DTC other than CAN system displayed?	Perform the diagnosis according to DTC.	Replace the body integrated unit. <Ref. to SL-71, REMOVAL, Body Integrated Unit.>

GETtheMANUALS.org

Q: DTC U122C CAN-HS SCU NO-RECEIVE DATA

DTC DETECTING CONDITION:
No data received from SCM.
TROUBLE SYMPTOM:
Immobilizer does not operate normally.
WIRING DIAGRAM:

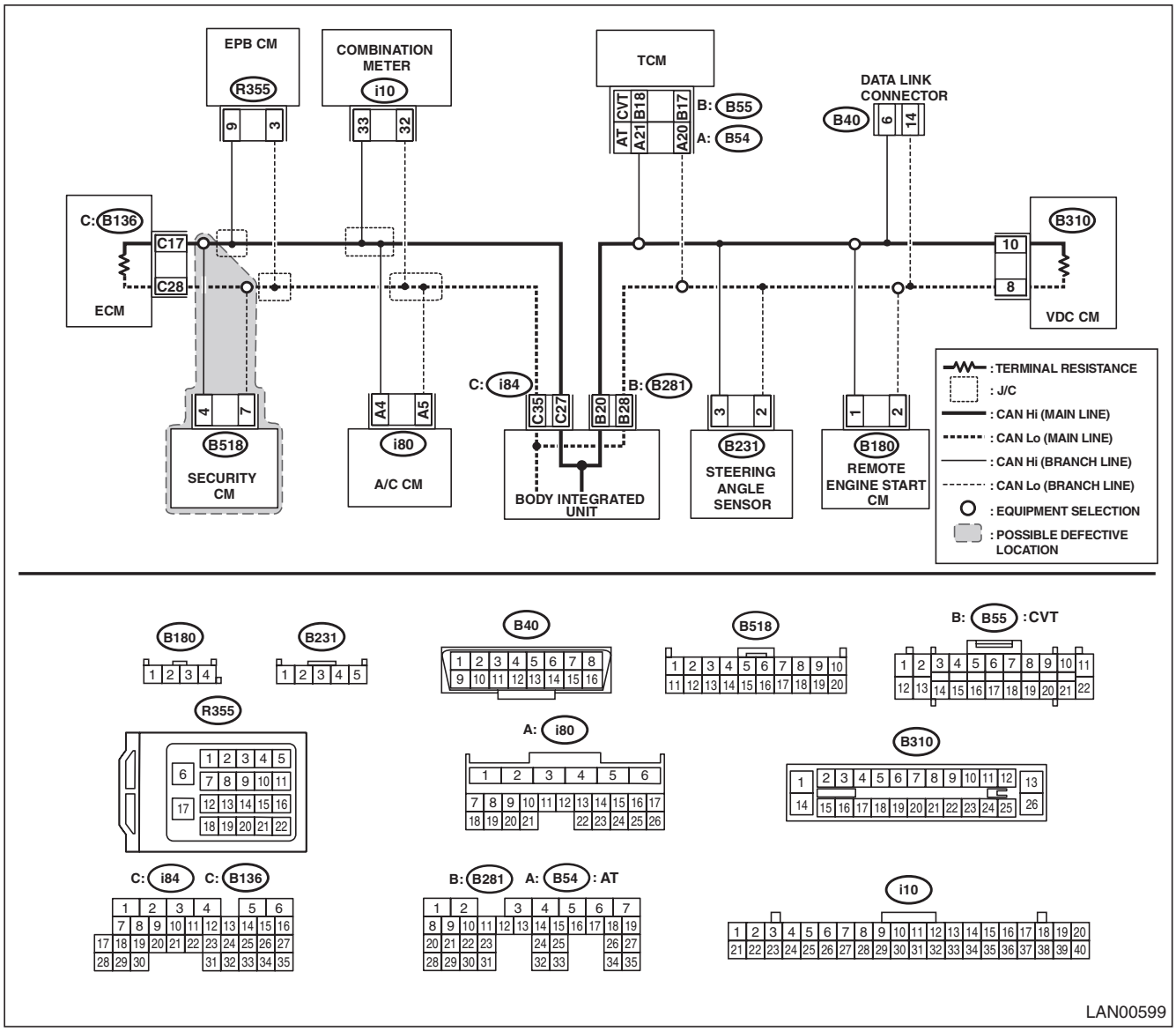

Step		Check	Yes	No
1	**CHECK DTC.** Using the Subaru Select Monitor, read all DTCs.	Is there DTC other than CAN system?	Perform the diagnosis according to DTCs for other control modules.	Go to step **2**.
2	**CHECK DTC.** Check DTC indicated in CAN system.	Is U122C a current malfunction?	Go to step **3**.	Go to step **4**.
3	**CHECK DTC.** Turn the ignition switch to OFF, and read the DTC again.	Is U122C a current malfunction?	Replace SCM. <Ref. to SL-65, REMOVAL, Security Control Module.>	Go to step **4**.

GETthemANDALS.org

Step		Check	Yes	No
4	**CHECK SCM.** 1) Disconnect the connector from SCM. 2) Using the Subaru Select Monitor, perform the clear memory. 3) Using the Subaru Select Monitor, read DTC of CAN system.	Is the displayed DTC other than U122C?	Go to step **5**.	Replace SCM. <Ref. to SL-65, REMOVAL, Security Control Module.>
5	**CHECK SCM.** 1) Connect the SCM connector. 2) Using the Subaru Select Monitor, read DTC of immobilizer. <Ref. to IM(diag)-8, OPERATION, Subaru Select Monitor.>	Is DTC other than CAN system displayed?	Perform the diagnosis according to DTC.	Replace the body integrated unit. <Ref. to SL-71, REMOVAL, Body Integrated Unit.>

GETtheMANUALS.org

12. General Diagnostic Table

A: INSPECTION

Contents	Operation	Specifications		Note
		YES	NO	
Diagnostic code	DTC is displayed when inspecting all DTCs.	Perform the diagnosis according to DTC.	System is normal.	—
Speedometer	Faster vehicle speed than the actual speed is displayed.	VDC CM data may not be received.	System is normal.	Also, check vehicle speed pulse circuit.
Fuel gauge	Fuel is present, but displayed less than actual amount.	Communication error may be present.	System is normal.	Also, check the fuel gauge.
Fuel level warning light	Fuel is present, but the light illuminates.	Communication error may be present.	System is normal.	Also, check the fuel gauge.
Engine coolant temperature light	Engine coolant temperature illuminates in red or blue.	Communication error may be present.	System is normal.	Check the engine coolant light related items.
[S], [I] or [S#] indicator	Blinking.	Communication error may be present.	System is normal.	Check the intelligent switch.
VDC indicator	Illuminating.	Communication error may be present.	System is normal.	Check that VDC is not operating.
VDC OFF indicator	Illuminating.	Communication error may be present.	System is normal.	Check that VDC is not OFF.
Electronic parking brake warning, etc.	Blinking.	Communication error may be present.	System is normal.	Check the electronic parking system as well.
Brake warning, etc.	Illuminating.	Brake fluid may be low in amount, or communication error may be present.	System is normal.	Check brake related items.
Shift position	Not displayed.	Communication error may be present.	System is normal.	Also, check AT system.
AT temperature light	Blinking.	Communication error may be present.	System is normal.	Also, check AT system.
Door indicator	Not displayed.	Communication error may be present.	System is normal.	Check the door switch.
Clearance indicator	Not illuminating.	Communication error may be present.	System is normal.	Check the combination switch.
Hi beam indicator	Not illuminating.	Communication error may be present.	System is normal.	Check the combination switch.
Front fog indicator	Not illuminating.	Communication error may be present.	System is normal.	Check the combination switch.
Illumination	Illuminating at the maximum brightness.	Communication error may be present.	System is normal.	Also, check the illumination switch.
Cruise control indicator	Not illuminating.	Communication error may be present.	System is normal.	Check the cruise control system.
AWD indicator	Not illuminating.	Communication error may be present.	System is normal.	Check TCM.
Hill hold indicator	Not illuminating.	Communication error may be present.	System is normal.	Also, check VDC CM.

GETtheMANUALS.org

BODY CONTROL SYSTEM (DIAGNOSTICS)

BC(diag)

		Page
1.	Basic Diagnostic Procedure	2
2.	Check List for Interview	3
3.	General Description	4
4.	Electrical Component Location	6
5.	Control Module I/O Signal	7
6.	Read Diagnostic Trouble Code (DTC)	10
7.	Clear Memory Mode	11
8.	Read Current Data	12
9.	User Customizing	16
10.	Registration Body Integrated Unit	18
11.	Function Check	20
12.	List of Diagnostic Trouble Code (DTC)	21
13.	Diagnostic Procedure with Diagnostic Trouble Code (DTC)	22
14.	General Diagnostic Table	36

GETtheMANUALS.org

1. Basic Diagnostic Procedure

A: PROCEDURE

CAUTION:
- **Subaru Select Monitor is required for reading DTC, performing diagnosis and reading current data.**
- **Remove foreign matter (dust, water, oil, etc.) from the body integrated unit connector during removal and installation.**
- **Registration of the immobilizer is necessary after the replacement of the control module, etc. For details, refer to the "PC application help for Subaru Select Monitor".**

NOTE:
- To check harness for open or short circuits, shake the suspected trouble spot or connector.
- Check List for Interview <Ref. to BC(diag)-3, Check List for Interview.>

Step		Check	Yes	No
1	**CHECK PRE-INSPECTION.** Ask the customer when and how the trouble occurred using the interview check list. <Ref. to BC(diag)-3, Check List for Interview.>	Did you interview the customer?	Go to step **2**.	Interview the customer.
2	**BASIC INSPECTION.** Check components which might affect body control. <Ref. to BC(diag)-4, INSPECTION, General Description.>	Is the component that might influence the body control problem normal?	Go to step **3**.	Repair or replace each component.
3	**CHECK DTC.** 1) Read the DTC. <Ref. to BC(diag)-10, OPERATION, Read Diagnostic Trouble Code (DTC).> NOTE: If the communication function of the Subaru Select Monitor cannot be executed properly, check the communication circuit. <Ref. to LAN(diag)-48, COMMUNICATION FOR INITIALIZING IMPOSSIBLE, Diagnostic Procedure with Diagnostic Trouble Code (DTC).> 2) Record all DTCs and freeze frame data.	Is DTC displayed on Subaru Select Monitor?	Go to step **5**.	Go to step **4**.
4	**PERFORM GENERAL DIAGNOSTICS.** Inspect using the "General Diagnostics Table". <Ref. to BC(diag)-36, General Diagnostic Table.>	Is result of inspection OK?	The body control system is normal.	Go to step **5**.
5	**PERFORM DIAGNOSIS.** 1) Correct the cause of trouble. 2) Perform the Clear Memory Mode. <Ref. to BC(diag)-11, OPERATION, Clear Memory Mode.> 3) Read the DTC. <Ref. to BC(diag)-10, OPERATION, Read Diagnostic Trouble Code (DTC).>	Is DTC displayed on Subaru Select Monitor?	Repeat step 5 until DTC is not shown.	Finish the diagnosis.

GETthemMANUALS.org

2. Check List for Interview

A: CHECK

Inspect the following items regarding the vehicle's state.

Body Control System Check List for Interview		Date of Vehicle Bring-in Year Month Day	
Customer's name		Registration No.	Initial year of registration Year Month Date
		Vehicle model	Frame number
Interviewer	Inspector	Engine type	Odometer reading
Customer specified content			
Date and time when the trouble occurred		Frequency of trouble occurrence	
Condition of trouble occurrence		Weather	
Road conditions		Occurrence location	
Accessory installation condition			
Trouble condition			
❑ Diagnostic code			❑ ( )

GETthemMANUALS.org

3. General Description

A: CAUTION

1. SRS AIRBAG SYSTEM

Airbag system wiring harness is routed near the body integrated unit and body control circuits.

CAUTION:
- **Do not use the electrical test equipment on all airbag system wiring harnesses and connectors.**
- **Be careful not to damage the airbag system wiring harness, when servicing the body control system.**

B: INSPECTION

Before performing diagnosis, check the following items which might affect body control system problems.

1) Measure the battery voltage and check electrolyte.

Standard voltage: 12 V or more

Specific gravity: 1.260 or more

2) Check the fuse condition.
Make sure that ampere of the fuse is setting value, and it is not blown out.
3) Check the connecting condition of harness and harness connector.
4) Confirm settings of body integrated unit are corresponded to vehicle equipment. <Ref. to BC(diag)-18, OPERATION, Registration Body Integrated Unit.>
5) Make sure that the User Customizing of the body integrated unit matches the vehicle equipment. <Ref. to BC(diag)-16, OPERATION, User Customizing.>
6) Confirm “Factory initial setting” of body integrated unit registrations is “Market”.
7) Confirm key illumination does not blink with ignition switch turned to ON.

GETthemMANUALS.org

C: PREPARATION TOOL

1. SPECIAL TOOL

ILLUSTRATION	TOOL NUMBER	DESCRIPTION	REMARKS
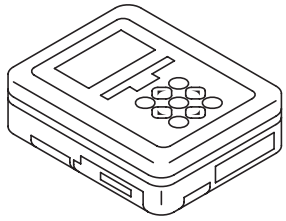 ST1B022XU0	1B022XU0	SUBARU SELECT MONITOR III KIT	Used for troubleshooting the electrical system.

2. GENERAL TOOL

TOOL NAME	REMARKS
Circuit tester	Used for measuring resistance, voltage and current.

GETthemANUALS.org

4. Electrical Component Location

A: LOCATION

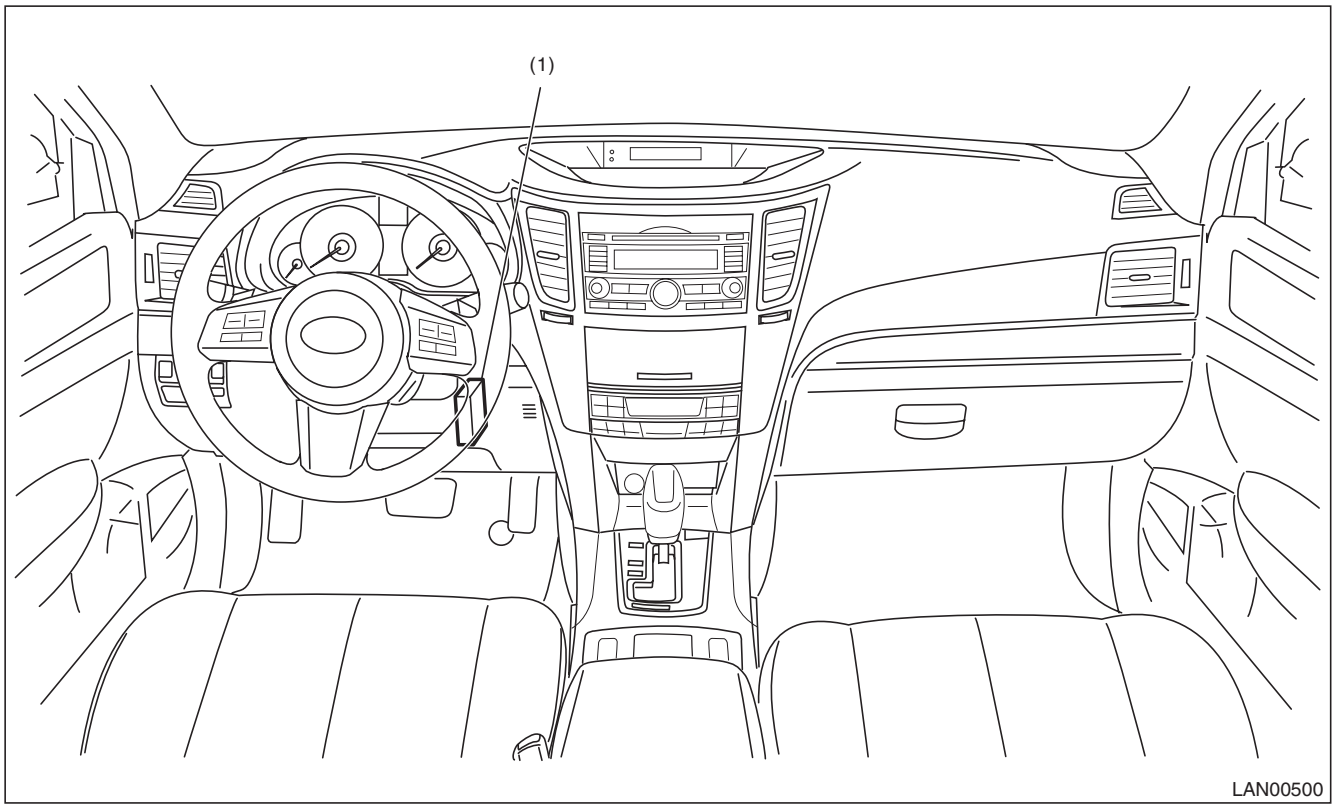

(1) Body integrated unit

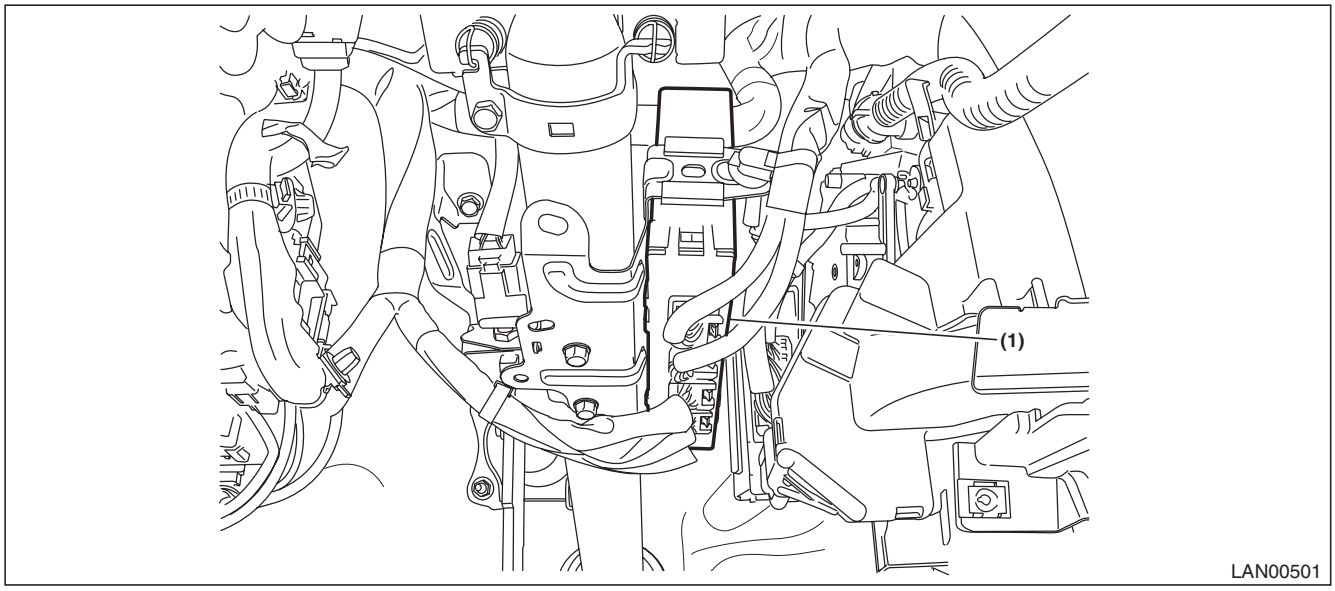

GETthemMANUALS.org

5. Control Module I/O Signal

A: ELECTRICAL SPECIFICATION

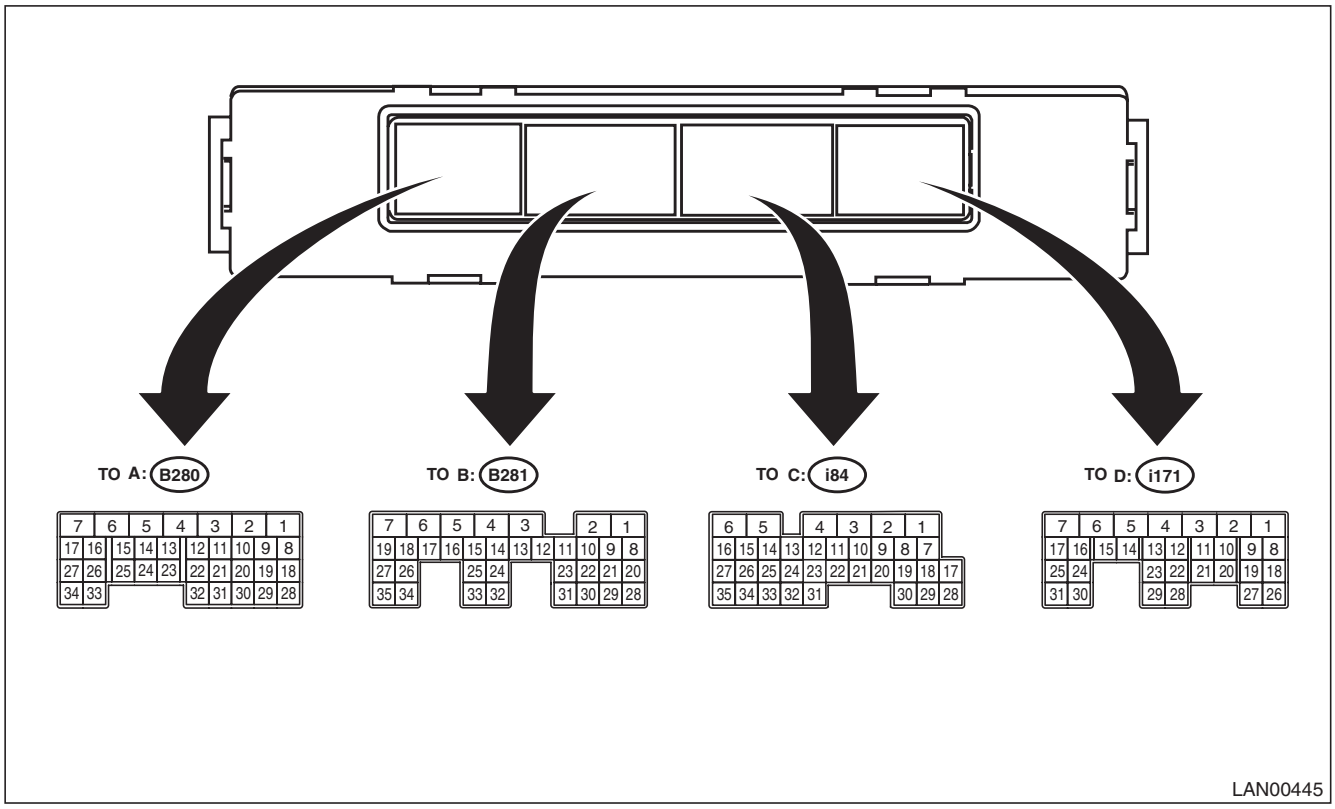

Description	Terminal No.	Signal (V or Ω) Ignition switch ON (engine OFF)	Note
Ignition power supply (rear wiper)	A5 ←→ chassis ground	Less than 1.5 V → 10 — 13 V	Ignition switch OFF → ON
Battery power supply (shift lock/key lock)	B6 ←→ chassis ground	10 — 13 V	Always
Battery power supply (door lock)	D1 ←→ chassis ground	10 — 13 V	Always
Battery power supply (control)	C6 ←→ chassis ground	10 — 13 V	Always
Ground	A1 ←→ chassis ground	Less than 1.5 V	Always
	B31←→chassisground		
	C1 ←→ chassis ground		
	D29←→chassisground		
Battery power supply (back-up)	B7 ←→ chassis ground	10 — 13 V	Always
Ignition power supply	D17←→chassisground	Less than 1.5 V → 10 — 13 V	Ignition switch OFF → ON
ACC power supply	D25←→chassisground	Less than 1.5 V → 10 — 13 V	Ignition switch OFF → Accessory ON
Key-in switch	A4 ←→ chassis ground	Less than 1.5 V → 10 — 13 V	Key inserted
P range SW	B21←→chassisground	8 V or more → less than 1.5 V	P range to other than P range
Stop light SW	A10←→chassisground	Less than 1.5 V → 8 V or more	Stop light switch OFF → ON
Door SW (driver's)	C14←→chassisground	8 V or more → less than 1.5 V	Front right door closed → open
Door SW (passenger's)	C13←→chassisground	8 V or more → less than 1.5 V	Front left door closed → open
Door SW (rear right)	C25←→chassisground	8 V or more → less than 1.5 V	Rear right door closed → open

GETthemMANUALS.org

Control Module I/O Signal

Description	Terminal No.	Signal (V or Ω) Ignition switch ON (engine OFF)	Note
Door SW (rear left)	C24←→chassisground	8 V or more → less than 1.5 V	Rear left door closed → open
Accessory connector	B30←→chassisground	8 V or more → less than 1.5 V	Rear gate/trunk closed → open
Rear gate SW/trunk SW	C33←→chassisground	8 V or more → less than 1.5 V	Rear gate/trunk closed → open
Opener SW (trunk/rear gate)	C10←→chassisground	8 V or more → less than 1.5 V	Rear gate/trunk opener switch ON
Manual switch (LOCK)	C9 ←→ chassis ground	8 V or more → less than 1.5 V	Door lock switch ON
Manual switch (UNLOCK)	C20←→chassisground	8 V or more → less than 1.5 V	Door unlock switch ON
Door lock status switch (driver's)	C12	Less than 1 Ω	Door in UNLOCK status
Door lock status switch (passenger's)	C23	Less than 1 Ω	Door in UNLOCK status
Door lock status switch (driver's)	C12←→chassisground	8 V or more → less than 1.5 V	Door in UNLOCK status
Door lock status switch (passenger's)	C23←→chassisground	8 V or more → less than 1.5 V	Door in UNLOCK status
Lighting AUTO	B16←→chassisground	8 V or more → less than 1.5 V	Switch at AUTO position
Lighting II	A34←→chassisground B34←→chassisground	8 V or more → less than 1.5 V	Switch at II position
Lighting I	B17←→chassisground	8 V or more → less than 1.5 V	Switch at I position
Dimmer passing	B25←→chassisground	8 V or more → less than 1.5 V	Switch at passing position
Dimmer Hi beam	B15←→chassisground	8 V or more → less than 1.5 V	Switch at Hi beam position
Front fog light SW	B26←→chassisground	8 V or more → less than 1.5 V	Front fog light switch ON
TPMS	C34	Less than 1 Ω	At answer-back of transmitter registration
Illumination sensor power supply	A9 ←→ A29	Less than 1.5 V → 8 V or more	Ignition switch OFF → ON
Illumination sensor signal	A19	47 — 1200 Hz	When AUTO
Ground (illumination sensor)	A29←→chassisground	Less than 1.5 V	Always
Rear wiper SW ON	A12←→chassisground	8 V or more → less than 1.5 V	Switch at ON position
Rear wiper SW INT	A22←→chassisground	8 V or more → less than 1.5 V	Switch at INT position
Rear washer SW	A32←→chassisground	8 V or more → less than 1.5 V	Switch at ON position
Illumination SW (Vi1)	D12←→chassisground	Approx. 5 V	While clearance light illuminates
Illumination SW (Vi2)	D22←→chassisground	0.3 — 4.5 V	
Illumination SW (Vi3)	D28←→chassisground	Less than 1.5 V	Always
Bright SW	C21←→chassisground	8 V or more → less than 1.5 V	Switch at ON position
Reverse SW (MT)	B22←→chassisground	Less than 1.5 V → 8 V or more	Reverse SW ON
Fuel level sensor	C17←→chassisground	15.4 — 416 Ω	Always
Seat belt SW (driver's)	C30←→chassisground	Less than 1.5 V → 8 V or more	Buckle removal → insert
Seat belt SW (passenger's)	C29←→chassisground	Less than 1.5 V → 8 V or more	Buckle removal → insert
Impact sensor	C28←→chassisground	Less than 1.5 V → 8 V or more	Apply an impact
Hi-speed CAN communication circuit 1 (Hi)	B20	Serial communication	Except for sleep status*1
Hi-speed CAN communication circuit 1 (Lo)	B28		
Hi-speed CAN communication circuit 2 (Hi)	C27	Serial communication	Except for sleep status*1
Hi-speed CAN communication circuit 2 (Lo)	C35		
Low-speed CAN circuit (Hi)	A11	Serial communication	Except for sleep status*1
Low-speed CAN circuit (Lo)	A21		
K-line	B9	Serial communication	Select Monitor communication in progress

GETthemANDALS.org

Control Module I/O Signal

Description	Terminal No.	Signal (V or Ω) Ignition switch ON (engine OFF)	Note
Audio/Navigation communication circuit	D21	Serial communication	
Keyless entry communication line	D11	Serial communication	
Immobilizer antenna	B1 ←→ chassis ground	-20 — 20 V	Communication with ignition key in progress
	B2 ←→ chassis ground	0 — 5 V	
Shift lock solenoid	B5 ←→ chassis ground	Less than 1.5 V → 8 V or more	When shift lock is operating (AT models)
Key lock solenoid (LOCK)	B4 ←→ B3	Less than 1.5 V → 8 V or more	LOCK status ON (AT models)*2
Key lock solenoid (UNLOCK)	B3 ←→ B4		UNLOCK status ON (AT models)*2
Rear wiper ON output	A7 ←→ chassis ground	Less than 0.5 V → 8 V or more	Rear wiper operation in progress
Rear wiper return output	A6 ←→ chassis ground	Less than 0.5 V → 8 V or more	Wiper reversed operation in progress
Door LOCK output	D2 ←→ chassis ground	Less than 0.5 V → 8 V or more	When LOCK signal is output
Door UNLOCK output	D3 ←→ chassis ground	Less than 0.5 V → 8 V or more	When UNLOCK signal is output
Rear gate/trunk UNLOCK output	D7 ←→ chassis ground	Less than 0.5 V → 8 V or more	When UNLOCK signal is output
Lighting relay power supply	A3 ←→ chassis ground	10 — 13 V	ACC or key-in SW ON
	B19←→chassisground	10 — 13 V	ACC or key-in SW ON
Lighting relay Hi output	A17←→chassisground	8 V or more → less than 1.0 V	Dimmer SW at Hi position
Lighting relay Lo output	B35←→chassisground	8 V or more → less than 1.0 V	Dimmer SW at Lo position
Lighting Lo relay output 2	A27←→chassisground	8 V or more → less than 1.0 V	Lighting II SW at ON position
Lighting relay I output	A16←→chassisground	8 V or more → less than 1.0 V	Lighting I SW at ON position
Front fog light output	A15←→chassisground	8 V or more → less than 1.0 V	Front fog light SW at ON position
DRL cancel output	D19←→chassisground	8 V or more → less than 1.0 V	Headlight switch ON or Hi beam ON, passing switch ON
Illumination output	B8	Pulse output	Illumination ON
	C16	Pulse output	Illumination ON
Key ring illumination	A25	Pulse output	Illumination ON
Room light output	C4	Pulse output	Room light ON (doors interlocked)
Map light output	D8	Pulse output	Map light ON (keyless answer-back, etc.)
Luggage/trunk light output	C3	Pulse output	Luggage/trunk at open state
Rear defogger relay output	A26←→chassisground	8 V or more → less than 1.0 V	Rear defogger SW ON
Wiper deicer relay output	D9 ←→ chassis ground	8 V or more → less than 1.0 V	Wiper deicer SW ON
Turn/hazard output	D18←→chassisground	8 V or more → less than 1.0 V	When answer-back is output
Security horn output	A24←→chassisground	8 V or more → less than 1.0 V	When security is operating
Security light	D26	Pulse control	When security light is illuminating
Answer-back buzzer output	A20←→chassisground	8 V or more → less than 1.0 V	When answer-back operates
Immobilizer communication	A31	Serial communication	

*1: For CAN sleep state, hold on for approx. one minute with ignition OFF and the doors, trunk, and rear gate all closed.
*2: Use an oscilloscope for measurement due to short output time.

GETthemMANUALS.org

6. Read Diagnostic Trouble Code (DTC)

A: OPERATION

For details concerning the work procedure, refer to the “PC application help for Subaru Select Monitor”.

NOTE:
For details concerning DTC, refer to List of Diagnostic Trouble Code (DTC). <Ref. to BC(diag)-21, List of Diagnostic Trouble Code (DTC).>

GETtheMANUALS.org

7. Clear Memory Mode

A: OPERATION

For details concerning the work procedure, refer to the “PC application help for Subaru Select Monitor”.

GETtheMANUALS.org

8. Read Current Data

A: OPERATION

For details concerning the work procedure, refer to the “PC application help for Subaru Select Monitor”.

B: LIST

Items to be displayed	Unit of measure	Remarks	Note
BATT voltage (control)	10 — 15 V	Body integrated unit input value	Always
BATT voltage (BACKUP)	10 — 15 V	Body integrated unit input value	Always
IG power supply voltage	10 — 15 V	Body integrated unit input value	Ignition switch ON
ACC voltage	10 — 15 V	Body integrated unit input value	Ignition switch ACC
Illumination VR Voltage	0 — 5 V	Body integrated unit input value	Input value from illumination volume
Illumi. output d-ratio	0 — 100%	Body integrated unit output value	Small light ON Illumination volume is other than bright.
Ambient Temperature	–40 — 87.5°C	CAN data input value	Ignition switch ON
Fuel level voltage	0 — 8.89 V	Body integrated unit input value	Ignition switch ON
Fuel level resistance input value	0 — 500 Ω	Body integrated unit input value	Ignition switch ON
number of regist.	0 — 4	Number of keyless key registered	
Front Wheel Speed	km/h	CAN data input value	Reception from VDC module
Blower fan steps	OFF, 1 — 5 steps, MAX	CAN data input value	Reception from air conditioner ECM
Fuel level resistance output value	0 — 102.3 Ω	CAN data output value	Reception from body integrated unit
Fuel consumption	cc/s	CAN data input value	Reception from ECM
Coolant Temperature	–40 — 130°C	CAN data input value	Reception from ECM
Vehicle longitudinal G	m/s^2	CAN data input value	Reception from VDC module
Shift Position	1 — 4, D, N, R, P	CAN data input value	Reception from TCM
Buzzer beeping request	No beeping Belt warning Key warning Beeping pattern 1 Beeping pattern 2 Free beeping ---	CAN data output value	Reception from body integrated unit
EPB Operating status	Error Cancel Operate Operating Cancelling Dynamic parking	CAN data input value	Reception from EPB
D-belt warning light O/P	Light ON Light blinking Light OFF	CAN data output value	Reception from body integrated unit
P-belt warning light O/P	Light ON Light blinking Light OFF	CAN data output value	Reception from body integrated unit
Engine displacement	1.5L — 3.6L	CAN data input value	Display engine equipped
Destination Code	0 — 16	CAN data input value	—
Illumination Sensor Output	0 — 1250 Hz	CAN data input value	—
key-lock warning SW	ON/OFF	Body integrated unit input value	ON when ignition key inserted
Stop light SW	ON/OFF	Body integrated unit input value	ON when brake pedal is depressed
Front fog lamp SW input	ON/OFF	Body integrated unit input value	When front fog light switch is ON
TPMS input	ON/OFF	Body integrated unit input value	TPMS registration answer-back signal

GETtheMANUALS.org

Items to be displayed	Unit of measure	Remarks	Note
Driver's door SW input	ON/OFF	Body integrated unit input value	ON when driver's door is open
P-door SW input	ON/OFF	Body integrated unit input value	ON when passenger's door is open
Rear right door SW input	ON/OFF	Body integrated unit input value	ON when rear right door is open
Rear left door SW input	ON/OFF	Body integrated unit input value	ON when rear left door is open
R Gate SW input	ON/OFF	Body integrated unit input value	ON when rear gate/trunk open
Manual lock SW input	ON/OFF	Body integrated unit input value	Manual lock switch ON
Manual unlock SW input	ON/OFF	Body integrated unit input value	Manual unlock switch ON
Bright SW input	ON/OFF	Body integrated unit input value	Bright switch ON
P SW	ON/OFF	Body integrated unit input value	ON when shift range is in parking Shift lever P switch signal
MT Reverse Switch	ON/OFF	Body integrated unit input value	Reverse switch ON (for MT vehicle only)
R wiper ON SW input	ON/OFF	Body integrated unit input value	Rear wiper switch ON
R wiper INT SW input	ON/OFF	Body integrated unit input value	Rear wiper switch (INT ON)
R washer SW input	ON/OFF	Body integrated unit input value	Rear washer switch ON
Driver's Seat SW input	ON/OFF	Body integrated unit input value	Driver's seat buckle switch ON
P seatbelt SW input	ON/OFF	Body integrated unit input value	Passenger's seat buckle switch ON
Fr wiper input	ON/OFF	Body integrated unit input value	ON when front wiper is operating
R gate lock status SW input	ON/OFF	Body integrated unit input value	Displays latch state, ON when locked
Rear gate/Trunk release switch	ON/OFF	Body integrated unit input value	Rear gate/trunk release switch ON
Rr Defogger output	ON/OFF	Body integrated unit output value	ON when rear defogger relay is operating
lock actuat. LOCK output	ON/OFF	Body integrated unit output value	ON when LOCK signal is output
All seat UNLOCK output	ON/OFF	Body integrated unit output value	ON when unlock signal is output
D-seat UNLOCK output	ON/OFF	Body integrated unit output value	ON when unlock signal is output
R gate/trunk UNLK output	ON/OFF	Body integrated unit output value	ON when rear gate/trunk unlock signal is output
R wiper output	ON/OFF	Body integrated unit output value	ON when rear wiper motor is operating
Shift Lock Solenoid	ON/OFF	Body integrated unit output value	ON when shift lock solenoid is operating (only AT)
Key Lock solenoid	lock/unlock	Body integrated unit output value	LOCK when the key is locked
wiper deicer output	ON/OFF	Body integrated unit output value	ON when wiper deicer relay is operating
Hazard Output	ON/OFF	Body integrated unit output value	ON when answer-back signal is received or when hazard is operating
Keyless Buzzer Output	ON/OFF	Body integrated unit output value	ON when lock/unlock signal is received
Horn Output	ON/OFF	Body integrated unit output value	ON when security warning is operating
Illumination lamp O/P	ON/OFF	Body integrated unit output value	ON when illumination is illuminated
Room lamp output	ON/OFF	Body integrated unit output value	ON when keyless lock/unlock signal is received (when key in switch connector is removed)
key illumi. lamp o/p	ON/OFF	Body integrated unit output value	ON when key illumination light is illuminated
Immobilizer lamp output	ON/OFF	Body integrated unit output value	ON when immobilizer pilot light blinks

GETtheMANUALS.org

Read Current Data

Items to be displayed	Unit of measure	Remarks	Note
Keyless operation 1	Regist./Normal	Body integrated unit input value	When keyless registration connector connected
Keyless operation 2	Deletion/Normal	Body integrated unit input value	When keyless registration is deleted
Small Light SW	ON/OFF	Body integrated unit input value	ON when small light is illuminated
Headlamp	ON/OFF	Body integrated unit input value	ON when headlight Lo is illuminated
High Beam	ON/OFF	Body integrated unit input value	ON when headlight Hi is illuminated
Rr Defogger SW	ON/OFF	CAN data input value	Rear defogger switch ON
Number of cylinders	4 Cylinder/6 Cylinder	CAN data input value	Display engine equipped
Cam shaft specification	SOHC/DOHC	CAN data input value	Display engine equipped
Turbo	TURBO/Without turbo	CAN data input value	Display engine equipped
AT Vehicle ID Signal	ON/OFF	CAN data input value	Display transmission equipped
Blower fan information	ON/OFF	CAN data input value	Reception from air conditioner CM
Auto A/C failure	OK/NG	CAN data input value	Reception from air conditioner CM
Lighting I Switch Input	ON/OFF	Body integrated unit input value	Small light switch ON
Lighting II Switch Input	ON/OFF	Body integrated unit input value	Headlight switch ON
Lighting AUTO input	ON/OFF	Body integrated unit input value	Headlight AUTO switch ON
Dimmer Hi Switch Input	ON/OFF	Body integrated unit input value	Dimmer Hi switch ON
Dimmer Pass Switch Input	ON/OFF	Body integrated unit input value	Dimmer Pass switch ON
Illumination sensor flag	ON/OFF	Body integrated unit input value	Reception from air conditioner CM
Lighting I Lamp Output	ON/OFF	Relay drive	ON when small light is illuminated
Lighting II Lamp Output	ON/OFF	Relay drive	ON when headlight is illuminated
Lighting Hi Lamp Output	ON/OFF	Relay drive	ON when headlight Hi is illuminated
Front Fog Lamp Output	ON/OFF	Relay drive	When front fog light relay ON output
DRL Cancel Output	ON/OFF	Relay drive	When DRL cancel relay ON output
Power Supply Tr	ON/OFF	Inner Tr drive	Headlight auxiliary power supply ON
Map lamp output	ON/OFF	Body integrated unit output value	ON when map light is illuminated
Luggage/Trunk lamp output	ON/OFF	Body integrated unit output value	ON when luggage/trunk light is illuminated
Off delay time	OFF — Long	Body integrated unit setting	Customize setting
Auto Light Sensitivity Adjustment	0 — 3	Body integrated unit setting	Customize setting
Rr defogger op. mode	Continuous/Normal	Body integrated unit setting	Customize setting
Security Alarm Setup	ON/OFF	Body integrated unit setting	Customize setting
Impact Sensor Setup	ON/OFF	Body integrated unit setting	Customize setting
Alarm delay setup	ON/OFF	Body integrated unit setting	Customize setting
Lockout prevention	ON/OFF	Body integrated unit setting	Customize setting
Impact sensor	ON/OFF	Body integrated unit setting	Customize setting
Answer-back buzzer setup	ON/OFF	Body integrated unit setting	Customize setting
Hazard answer-back setup	ON/OFF	Body integrated unit setting	Customize setting
Ans.-back Buzzer	ON/OFF	Body integrated unit setting	Customize setting
Auto locking	ON/OFF	Body integrated unit setting	Customize setting
Passive Alarm	ON/OFF	Body integrated unit setting	Customize setting
Door open warning	ON/OFF	Body integrated unit setting value	Customize setting
Dome Light Alarm Setting	ON/OFF	Body integrated unit setting value	Customize setting
Belt Warning Switch	ON/OFF	Body integrated unit setting value	Customize setting

GETtheMANUALS.org

Items to be displayed	Unit of measure	Remarks	Note
A/C ECM setting	ON/OFF	Body integrated unit setting value	Customize setting
Line Navigation Setting	ON/OFF	Body integrated unit setting value	Customize setting
wiperdeicer	ON/OFF	Body integrated unit setting value	Customize setting
Sedan/Wagon Setting	Sedan/Wagon	Body integrated unit setting value	Customize setting
MT/AT Setting	MT/AT	Body integrated unit setting value	Customize setting
6MT Setting	6MT/Other than 6MT	Body integrated unit setting value	Customize setting
Destination Setting	0 — 16	Body integrated unit setting value	Displays body integrated unit customizing
Factory initial setting	Market/Factory	Body integrated unit setting value	Displays body integrated unit customizing
SCU applicable	Applicable/ Not applicable	Body integrated unit setting value	(Models for Canada only)

NOTE:
For detailed operation procedures, refer to “PC application help for Subaru Select Monitor”.

GETtheMANUALS.org

9. User Customizing

A: OPERATION

1) On «Main Menu» display, select {Each System Check}.
2) On «System Selection Menu» display, select {Integ. unit mode}.
3) On «Integ. unit mode failure diag.» display, select {Unit customizing}.
4) Change the setting with UP/DOWN key and set with the [OK] key.

List of User Customizing item

Data	Initial setting value	Customize setting	Remarks
Off delay time	Long		Delay time below can be selected by setting.
		OFF	0 seconds
		Short	10 seconds
		Normal	20 seconds
		Long	30 seconds
Auto Light Sensitivity Adjustment	Normal	Dull	Slow response
		Normal	Standard
		Sensitive	Quick response
		Very sensitive	Fairly quick response
Rr defogger op. mode	Normal	Normal	Automatically stops in 15 minutes after switch is turned to ON.
		Continuous	Repeats active condition for 15 minutes and inactive condition for 2 minutes until switch is turned to OFF.
Security Alarm Setup	ON	ON	Security alarm (hazard, horn or siren) in active condition
		OFF	Security alarm in inactive condition
Impact Sensor Setup	OFF	ON	Workable when Impact Sensor Setup is set to “ON”. Impact sensor function becomes activated.
		OFF	Impact sensor in inactive condition (Set to “OFF” in models without sensors.)
Alarm delay setup	ON		After the keyless lock operation, the alarm monitor starts after the following delay time has passed.
		ON	Delay time is 30 seconds.
		OFF	Delay time is 0 second.
Lockout prevention	ON	ON	key lockout prevention function is activated. (The function does not operate if safety knob is locked by hand.)
		OFF	Key lockout prevention function is deactivated.
Impact sensor (OP)	OFF	ON	Vehicle is controlled in impact sensor equipped mode. (Make sure to set to “OFF” for models without the impact sensor. When “ON”, hazard, horn or siren become activated by keyless lock (alarm monitor start).)
		OFF	Vehicle is controlled in no impact sensor mode.
Answer-back buzzer setup	ON	ON	When lock/unlock is selected by keyless entry system operation, buzzer operates.
		OFF	When lock/unlock is selected by keyless entry system operation, buzzer does not operate.
Hazard answer-back setup	ON	ON	When lock/unlock is selected by keyless entry system operation, hazard blinks.
		OFF	When lock/unlock is selected by keyless entry system operation, hazard does not interlock.
Initial keyless setting	—	—	
		Execution	
Initial button setting	—	—	
		Execution	

GETtheMANUALS.org

Data	Initial setting value	Customize setting	Remarks
Passive Alarm	OFF	ON	
		OFF	
Door open warning	ON	ON	
		OFF	
Dome Light Alarm Setting	OFF	ON	Room light illuminates interlocking with alarm.
		OFF	Room light does not illuminate interlocking with alarm.
Belt Warning Switch	ON	ON	Belt warning buzzer beeps.
		OFF	Belt warning buzzer stops.

5) After setting, make sure that the setting changed in the {Current Data Display & Save} is same as vehicle equipment.

CAUTION:
- **The above settings must match the actual vehicle equipment.**
- **Do not change settings except for setting above while setting the functions.**
- **Be sure not to change Factory initial setting except when installing a new body integrated unit.**

NOTE:
For detailed operation procedures, refer to “PC application help for Subaru Select Monitor”.

GETtheMANUALS.org

10. Registration Body Integrated Unit

A: OPERATION

1. CONFIRM CURRENT SETTING.

1) On «Main Menu» display, select {Others}.
2) On «Other Menu» display, select {Customized Setting}.
3) Save the setting.
Required items for new registration. (Except for system not equipped)

Item	Item to confirm				Remarks
number of regist.	1	2	3	4	Number of registered ID
Off delay time	OFF	Long	Normal	Short	Setting for lighting off time
Auto Light Sensitivity Adjustment	Dull	Normal (Standard)	Sensitive	Very sensitive	1st (slow) — 4th (fairly quick)
Rr defogger op. mode	Normal		Continuous		
Security Alarm Setup	ON		OFF		
Impact Sensor Setup	ON		OFF		Option setting
Alarm delay setup	ON		OFF		
Lockout prevention	ON		OFF		
Impact sensor	ON		OFF		Option setting
Answer-back buzzer setup	ON		OFF		
Hazard answer-back setup	ON		OFF		
Passive Alarm	ON		OFF		
Door open warning	ON		OFF		
Dome Light Alarm Setting	ON		OFF		
Belt Warning Switch	ON		OFF		
A/C ECM setting	ON		OFF		
Line Navigation Setting	ON		OFF		Models with line navigation
wiperdeicer	ON		OFF		Option setting
Sedan/Wagon Setting	Wagon		Sedan		
MT/AT Setting	MT		AT		
6MT Setting	6MT		Other than 6MT		
Destination Setting	C0, C5		U4, U5, U6, C6		Set for Canada model only.
Seat Memory Setting	ON		OFF		Option setting
Factory initial setting	Factory		Market		Do not change to factory mode.

GETtheMANUALS.org

2. REGISTRATION BODY INTEGRATED UNIT (FUNCTION SETTING)

CAUTION:
For the body integrated unit, function selection is available to control the entire vehicle systems. It is possible to control the original functions of vehicle when registrations of body integrated unit and function setting are corresponded to vehicle equipment.
If registrations and function setting are different from vehicle equipment, vehicle system does not operate normally and diagnosis cannot be performed correctly. Pay attention to following item.
- **Be sure to correspond registrations, or User Customizing settings to vehicle equipment.**
- **Do not change the settings of vehicle improperly.**
- **Make sure that the key illumination does not blink with ignition switch ON, or that the body integrated unit registration item, "Factory initial setting", is set as "Market". If "Factory initial setting" is set to "Factory", key illumination blinks when ignition key is turned ON, to notify that the settings are unconfirmed.**
- **Key illumination does not blink with ignition switch turned to ON and go off with door closed.**
- **Be sure to register immobilizer if body integrated unit is replaced with a new part.**
- **Make a registration of immobilizer when the parts related to immobilizer have been replaced. Refer to the "PC application help for Subaru Select Monitor".**

1) On «Main Menu» display, select {Each System Check}.
2) On «System Selection Menu» display, select {Integ. unit mode}.
3) Click the [OK] button after the control module name {Integ. Unit} is displayed.
4) On «Integ. unit mode failure diag.» display, select {Integ. Unit customizing}.
5) Change the setting to the contents saved at confirmation of current setting.

CAUTION:
- **To perform normal operation of vehicle and diagnosis, the above settings must match the actual vehicle equipment.**
- **When the body integrated unit is new or in Factory mode, the key illumination blinks, and user customizing is incomplete. Check the user customizing settings.**
- **Be sure not to change Factory initial setting except when installing a new body integrated unit.**

NOTE:
"Factory" mode:
- Body integrated unit has not been set yet. It can be recognized by key illumination blinking with ignition switch turned to ON.
- All replacement body integrated units are set to "Factory" mode. When replacing a body integrated unit, be sure to perform the registration operation.

"Market" mode:
- Each settings have been set. It can be recognized by key ring illumination coming on in concocting with room light and going off with ignition switch turned to ON.

6) Perform the Factory initial setting. On the «Integ. Unit customizing» display screen of Subaru Select Monitor, select the {Factory initial setting}.
7) Change the mode from Factory to Market.
8) Turn the ignition switch to OFF to settle the setting.
9) Change the Subaru Select Monitor system selection to «Immobilizer» to register the immobilizer key.
10) Perform procedures according to the "PC application help for Subaru Select Monitor".
11) When key registration is completed, "Do you want to register remote engine start?" is displayed. Perform registration only for equipped models.
12) Perform the User Customizing. <Ref. to BC(diag)-16, OPERATION, User Customizing.>

NOTE:
For detailed operation procedures, refer to "PC application help for Subaru Select Monitor".

GETtheMANUALS.org

11.Function Check

A: OPERATION

NOTE:
In order to check the body integrated unit function, inspect the body integrated unit and actuator using Subaru Select Monitor without operating switches.
1) On «Main Menu» display, select {Each System Check}.
2) On «System Selection Menu» display, select {Integ. unit mode}.
3) On «Integ. unit mode failure diag.» display, select {Function check}.
4) Select an item to be operated on «Function check» display, and press the [OK] button.
5) Pressing [Next] starts, [End] cancels the operation and [OK] returns to the System Operation Check Mode display screen.

NOTE:
- If not equipped (based on area or condition), process will not go on.
- For detailed operation procedures, refer to “PC application help for Subaru Select Monitor”.

GETtheMANUALS.org

12. List of Diagnostic Trouble Code (DTC)

A: LIST

DTC	Item	Content of diagnosis	Note
None	Communication for Initializing Impossible	Subaru Select Monitor communication is open or shorted.	<Ref. to LAN(diag)-48, COMMUNICATION FOR INITIALIZING IMPOSSIBLE, Diagnostic Procedure with Diagnostic Trouble Code (DTC).>
B1100	Integ. Unit System Error	Body integrated unit internal error	<Ref. to BC(diag)-22, DTC B1100 INTEG. UNIT SYSTEM ERROR, Diagnostic Procedure with Diagnostic Trouble Code (DTC).>
B1101	BATT p/supply malfunction cont	Voltage malfunction caused by poor contact of battery power supply control circuits	<Ref. to BC(diag)-23, DTC B1101 BATT P/SUPPLY MALFUNCTION CONT, Diagnostic Procedure with Diagnostic Trouble Code (DTC).>
B1102	BATT p/supply malfunction backup	Voltage malfunction caused by poor contact of battery power supply backup circuits	<Ref. to BC(diag)-25, DTC B1102 BATT P/SUPPLY MALFUNCTION BACKUP, Diagnostic Procedure with Diagnostic Trouble Code (DTC).>
B1103	Ignition power failure	Voltage malfunction caused by poor contact of IGN power supply circuits	<Ref. to BC(diag)-27, DTC B1103 IGNITION POWER FAILURE, Diagnostic Procedure with Diagnostic Trouble Code (DTC).>
B1104	ACC power failure	Voltage malfunction caused by poor contact of ACC power supply circuits	<Ref. to BC(diag)-29, DTC B1104 ACC POWER FAILURE, Diagnostic Procedure with Diagnostic Trouble Code (DTC).>
B1106	shift lock circuit Failure	Voltage malfunction caused by poor contact of shift lock circuits	<Ref. to BC(diag)-31, DTC B1106 SHIFT LOCK CIRCUIT FAILURE, Diagnostic Procedure with Diagnostic Trouble Code (DTC).>
B1401	M Collation NG	Malfunction related immobilizer	<Ref. to BC(diag)-33, DTC B1401 M COLLATION NG, Diagnostic Procedure with Diagnostic Trouble Code (DTC).>
B1402	Immobilizer Key Collation NG	Malfunction related immobilizer	<Ref. to BC(diag)-33, DTC B1402 IMMOBILIZER KEY COLLATION NG, Diagnostic Procedure with Diagnostic Trouble Code (DTC).>
B1403	E/G request NG	Malfunction related immobilizer	<Ref. to BC(diag)-33, DTC B1403 E/G REQUEST NG, Diagnostic Procedure with Diagnostic Trouble Code (DTC).>
B1405	SCU Collation NG	Malfunction related immobilizer	<Ref. to BC(diag)-33, DTC B1405 SCU COLLATION NG, Diagnostic Procedure with Diagnostic Trouble Code (DTC).>
B1406	SCU_EEPROM_NG	Malfunction related immobilizer	<Ref. to BC(diag)-33, DTC B1406 SCU_EEPROM_NG, Diagnostic Procedure with Diagnostic Trouble Code (DTC).>
B1500	Keyless UART com. Malfunction	Open or short circuit in keyless UART circuit	<Ref. to BC(diag)-34, DTC B1500 KEYLESS UART COM. MALFUNCTION, Diagnostic Procedure with Diagnostic Trouble Code (DTC).>

GETtheMANUALS.org

13. Diagnostic Procedure with Diagnostic Trouble Code (DTC)

A: DTC B1100 INTEG. UNIT SYSTEM ERROR

DTC DETECTING CONDITION:
System error in body integrated unit
TROUBLE SYMPTOM:
LAN communication immobilizer function may not be executed normally.

Step		Check	Yes	No
1	**CHECK DTC.** Check DTC indicated by body integrated unit.	Is B1100 current malfunction?	Go to step **2**.	Temporary EEPROM access error occurred.
2	**CHECK CONNECTOR.** 1) Turn the ignition switch to OFF. 2) Disconnect the body integrated unit connector. 3) Connect the disconnected connectors. 4) Read the DTC of body integrated unit using Subaru Select Monitor.	Is B1100 current malfunction?	Replace the body integrated unit. <Ref. to SL-71, REMOVAL, Body Integrated Unit.>	Temporary EEPROM access error occurred.

GETtheMANUALS.org

B: DTC B1101 BATT P/SUPPLY MALFUNCTION CONT

DTC DETECTING CONDITION:

- Voltage malfunction caused by poor contact of battery power supply control circuit
- Battery voltage of body integrated unit is not within the 8.5 — 16.5 V range.

TROUBLE SYMPTOM:

Functions of body integrated unit stop.

NOTE:

When B1102 BATT p/supply malfunction backup is output at the same time, all the function of body integrated unit may not operate.

WIRING DIAGRAM:

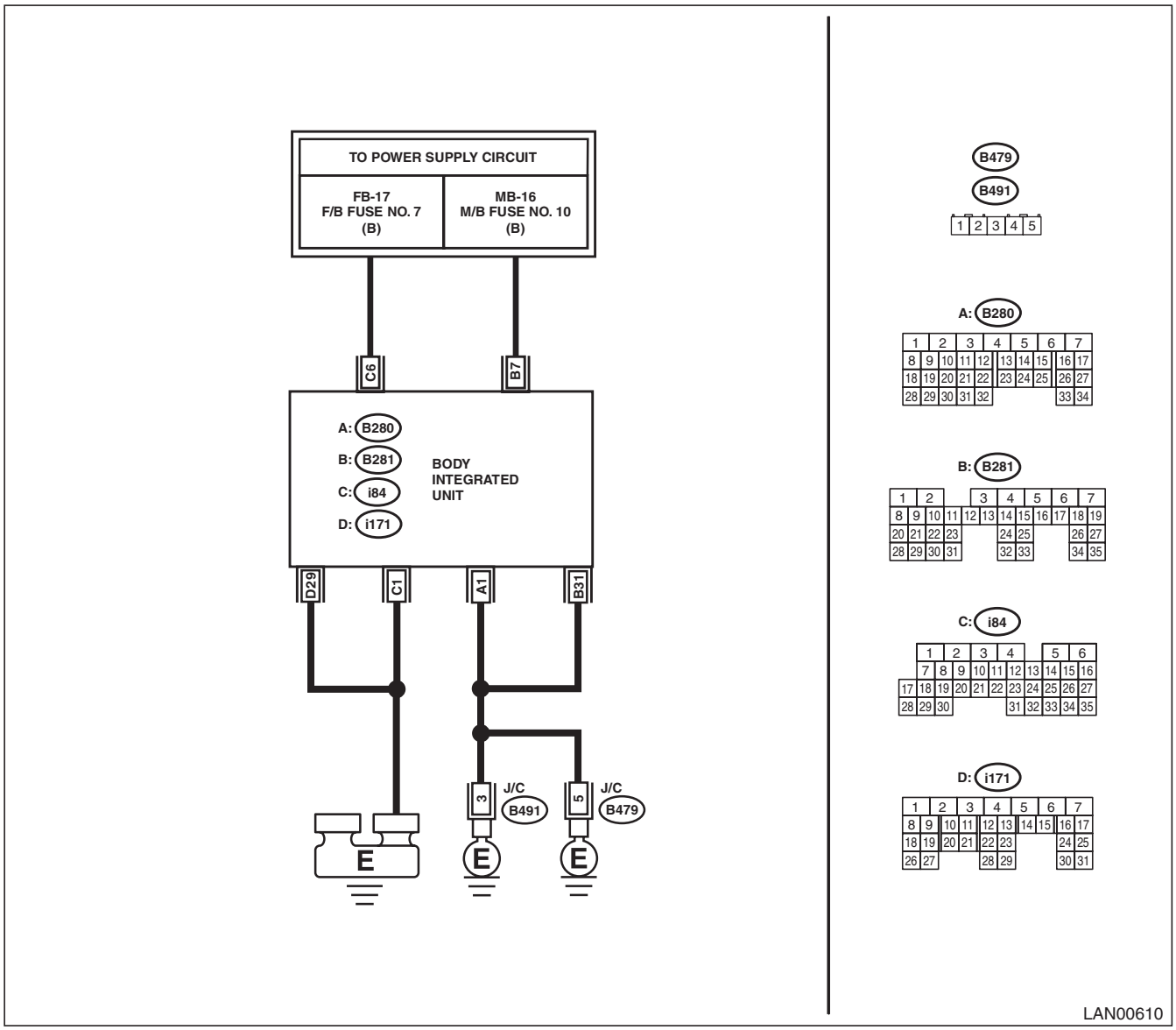

Step		Check	Yes	No
1	**CHECK DTC.** Read the DTC of body integrated unit using Subaru Select Monitor.	Is B1101 current malfunction?	Go to step **2**.	Go to step **5**.

GETtheMANUALS.org

Step		Check	Yes	No
2	**CHECK DTC.** 1) Turn the ignition switch to OFF. 2) Disconnect and then connect the body integrated unit connector. 3) Wait approx. 2 minutes. 4) Turn the ignition switch to ON. 5) Read the DTC of body integrated unit using Subaru Select Monitor.	Is B1101 current malfunction?	Go to step **3**.	Go to step **5**.
3	**CHECK FUSE.** 1) Turn the ignition switch to OFF. 2) Check the fuse.	Is the fuse OK?	Go to step **4**.	Replace the defective fuse.
4	**CHECK HARNESS.** 1) Disconnect the body integrated unit connector. 2) Using the tester, measure the voltage between terminals. ***Connector & terminal*** ***(i84) No. 6 (+) — Chassis ground (–):***	Is the voltage 8.5 — 16.5 V?	Replace the body integrated unit. <Ref. to SL-71, REMOVAL, Body Integrated Unit.>	Repair the harness between body integrated unit and fuse.
5	**CHECK CONNECTOR.** 1) Turn the ignition switch to OFF. 2) Disconnect the body integrated unit connector.	Is there poor contact of connector?	Repair or replace the poor contact of connector.	A temporary change of voltage occurred.

GETtheMANUALS.org

C: DTC B1102 BATT P/SUPPLY MALFUNCTION BACKUP

DTC DETECTING CONDITION:

Voltage malfunction caused by poor contact of battery power supply backup circuits

TROUBLE SYMPTOM:

Illuminations for the keyless entry, map light, luggage light, trunk light, room light, and ignition switch do not turn on.

NOTE:

When B1101 BATT p/supply malfunction cont is output at the same time, all function of body integrated unit may not operate.

WIRING DIAGRAM:

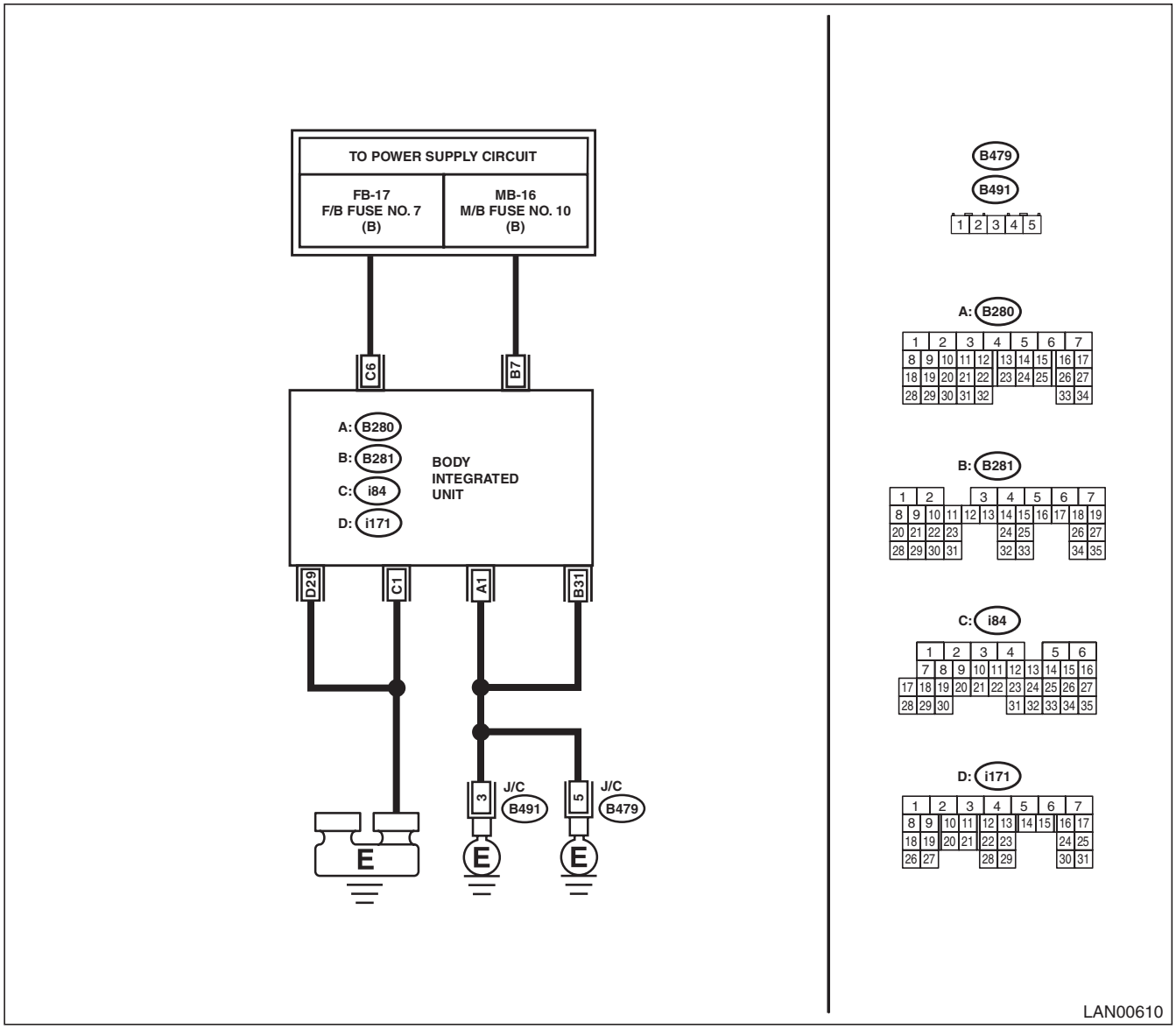

Step		Check	Yes	No
1	**CHECK DTC.** Read the DTC of body integrated unit using Subaru Select Monitor.	Is B1102 current malfunction?	Go to step **2**.	Go to step **5**.

GETtheMANUALS.org

Step		Check	Yes	No
2	**CHECK DTC.** 1) Turn the ignition switch to OFF. 2) Disconnect and then connect the body integrated unit connector. 3) Wait approx. 2 minutes. 4) Turn the ignition switch to ON. 5) Read the DTC of body integrated unit using Subaru Select Monitor.	Is B1102 current malfunction?	Go to step **3**.	Go to step **5**.
3	**CHECK FUSE.** 1) Turn the ignition switch to OFF. 2) Check the fuse.	Is the fuse OK?	Go to step **4**.	Replace the defective fuse.
4	**CHECK HARNESS.** 1) Disconnect the body integrated unit connector. 2) Using the tester, measure the voltage between terminals. ***Connector & terminal*** ***(B281) No. 7 (+) — Chassis ground (–):***	Is the voltage 8.5 — 16.5 V?	Replace the body integrated unit. <Ref. to SL-71, REMOVAL, Body Integrated Unit.>	Repair the harness between body integrated unit and fuse.
5	**CHECK CONNECTOR.** 1) Turn the ignition switch to OFF. 2) Disconnect the body integrated unit connector.	Is there poor contact of connector?	Repair or replace the poor contact of connector.	A temporary change of voltage occurred.

GETtheMANUALS.org

D: DTC B1103 IGNITION POWER FAILURE

DTC DETECTING CONDITION:

Voltage malfunction caused by poor contact of IGN power supply circuits

TROUBLE SYMPTOM:

Symptoms such as shift lock, reverse lock or wiper not operating may occur.

WIRING DIAGRAM:

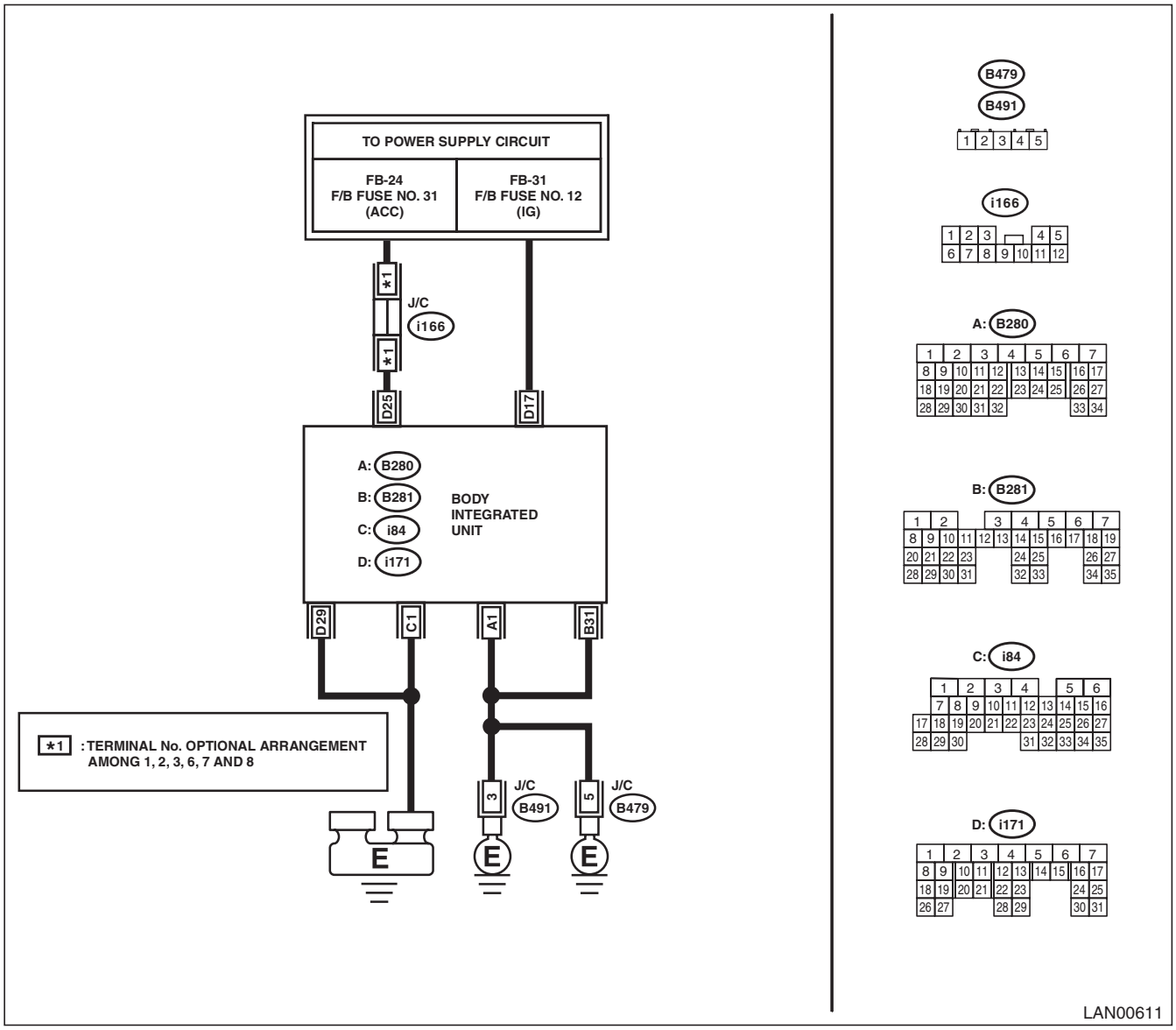

Step		Check	Yes	No
1	**CHECK DTC.** Read the DTC of body integrated unit using Subaru Select Monitor.	Is B1103 current malfunction?	Go to step **2**.	Go to step **5**.
2	**CHECK DTC.** 1) Turn the ignition switch to OFF. 2) Disconnect and then connect the body integrated unit connector. 3) Wait approx. 2 minutes. 4) Turn the ignition switch to ON. 5) Read the DTC of body integrated unit using Subaru Select Monitor.	Is B1103 current malfunction?	Go to step **3**.	Go to step **5**.

GETtheMANUALS.org

Step		Check	Yes	No
3	**CHECK FUSE.** 1) Turn the ignition switch to OFF. 2) Check the fuse.	Is the fuse OK?	Go to step **4**.	Replace the defective fuse.
4	**CHECK HARNESS.** 1) Disconnect the body integrated unit connector. 2) Using the tester, measure the voltage between terminals. ***Connector & terminal*** ***(i171) No. 17 (+) — Chassis ground (–):***	Is the voltage 8.5 — 16.5 V?	Replace the body integrated unit. <Ref. to SL-71, REMOVAL, Body Integrated Unit.>	Repair the harness between body integrated unit and fuse.
5	**CHECK CONNECTOR.** 1) Turn the ignition switch to OFF. 2) Disconnect the body integrated unit connector.	Is there poor contact of connector?	Repair or replace the poor contact of connector.	A temporary change of voltage occurred.

GETtheMANUALS.org

E: DTC B1104 ACC POWER FAILURE

DTC DETECTING CONDITION:

Voltage malfunction caused by poor contact of ACC power supply circuit

TROUBLE SYMPTOM:

DRL may not illuminate.

WIRING DIAGRAM:

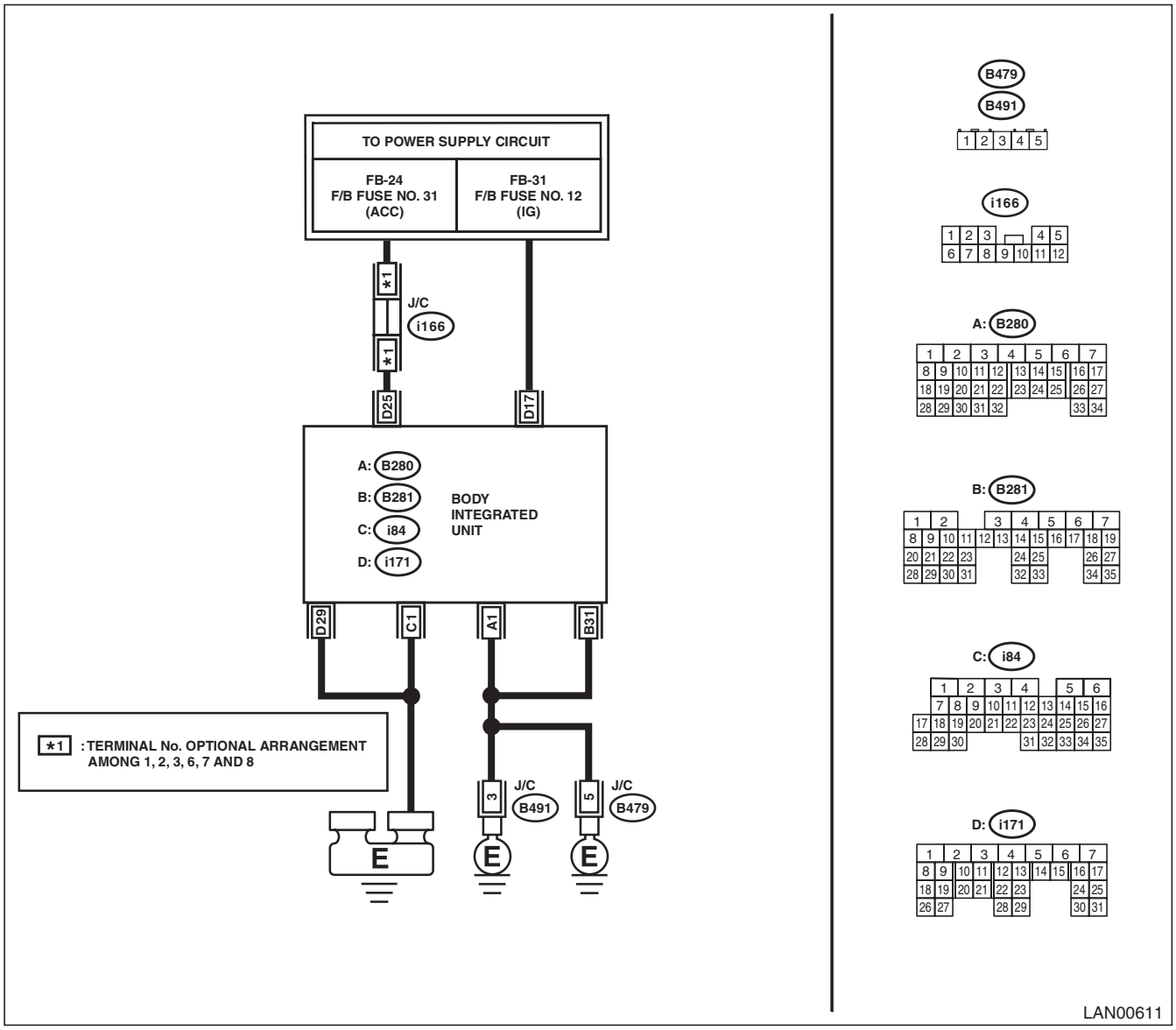

Step		Check	Yes	No
1	**CHECK DTC.** Read the DTC of body integrated unit using Subaru Select Monitor.	Is B1104 current malfunction?	Go to step **2**.	Go to step **5**.
2	**CHECK DTC.** 1) Turn the ignition switch to OFF. 2) Disconnect and then connect the body integrated unit connector. 3) Wait approx. 2 minutes. 4) Turn the ignition switch to ON. 5) Read the DTC of body integrated unit using Subaru Select Monitor.	Is B1104 current malfunction?	Go to step **3**.	Go to step **5**.

GETthemANUALS.org

Step		Check	Yes	No
3	**CHECK FUSE.** 1) Turn the ignition switch to OFF. 2) Check the fuse.	Is the fuse OK?	Go to step **4**.	Replace the defective fuse.
4	**CHECK HARNESS.** 1) Disconnect the body integrated unit connector. 2) Using the tester, measure the voltage between terminals. ***Connector & terminal*** ***(i171) No. 25 (+) — Chassis ground (–):***	Is the voltage 8.5 — 16.5 V?	Replace the body integrated unit. <Ref. to SL-71, REMOVAL, Body Integrated Unit.>	Repair the harness between body integrated unit and fuse.
5	**CHECK CONNECTOR.** 1) Turn the ignition switch to OFF. 2) Disconnect the body integrated unit connector.	Is there poor contact of connector?	Repair or replace the poor contact of connector.	A temporary change of voltage occurred.

GETtheMANUALS.org

F: DTC B1106 SHIFT LOCK CIRCUIT FAILURE

DTC DETECTING CONDITION:

Open or power supply-output short, GND-output short in shift lock circuit.

TROUBLE SYMPTOM:

Shift lock does not be released or remain locked.

WIRING DIAGRAM:

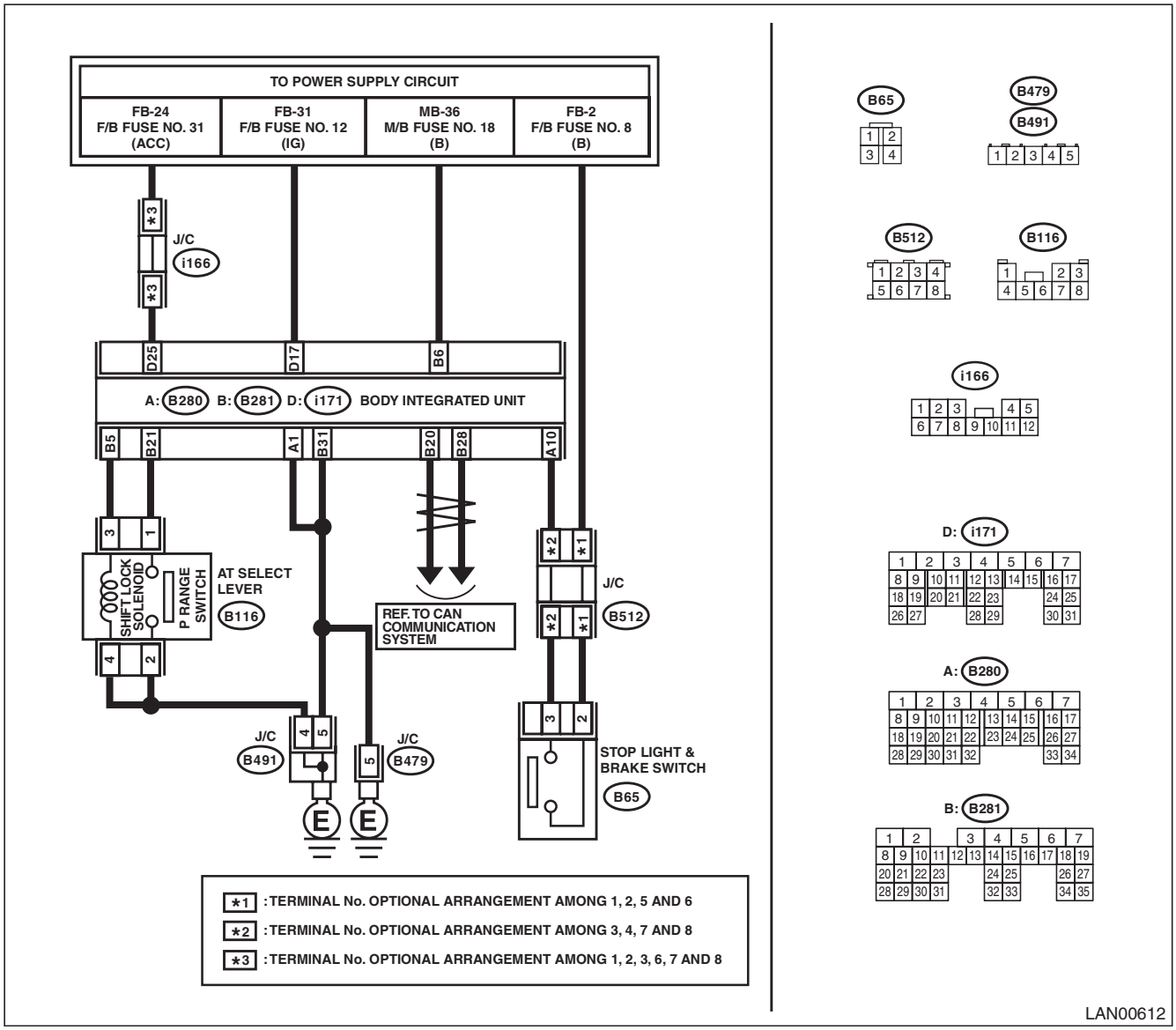

Step		Check	Yes	No
1	**CHECK DTC.** 1) Turn the ignition switch to ON. 2) Keep the Parking range for approx. 5 seconds. 3) Read the DTC of body integrated unit using Subaru Select Monitor.	Is B1106 current malfunction?	Go to step **6**.	Go to step **2**.

GETthemANUALS.org

	Step	Check	Yes	No
2	**CHECK DTC.** 1) Turn the ignition switch to OFF. 2) Disconnect the shift lock solenoid connector. 3) Connect the disconnected connectors. 4) Turn the ignition switch to ON, then keep the Parking range for approx. 5 seconds. 5) Read the DTC of body integrated unit using Subaru Select Monitor.	Is B1106 current malfunction?	Go to step **3**.	Go to step **7**.
3	**CHECK HARNESS.** 1) Turn the ignition switch to OFF. 2) Disconnect the shift lock solenoid connector. 3) Using the tester, measure the resistance between terminals. ***Connector & terminal*** ***(B116) No. 4 — Chassis ground:***	Is the resistance less than 10 Ω?	Go to step **4**.	Repair or replace the open circuit of harness.
4	**CHECK SHIFT LOCK SOLENOID.** Using a tester, measure the resistance between shift lock solenoid terminals. ***Connector & terminal*** ***(B116) No. 4 — No. 3:***	Is the resistance less than 27 — 31 Ω?	Go to step **5**.	Replace the shift lock solenoid. <Ref. to CS-31, DISASSEMBLY, Select Lever.>
5	**CHECK SHIFT LOCK SOLENOID.** Connect the battery terminal to shift lock solenoid. ***Connector & terminal*** ***(B116) No. 3 — positive terminal:*** ***(B116) No. 4 — ground terminal:***	Does the shift lock solenoid operate and then release the lock?	Go to step **6**.	Replace the shift lock solenoid. <Ref. to CS-31, DISASSEMBLY, Select Lever.>
6	**CHECK HARNESS.** Use a tester to measure the resistance between harness terminals. ***Connector & terminal*** ***(B116) No. 3 — (B281) No. 5:*** NOTE: If body integrated unit and shift lock connector are not disconnected, disconnect them first and then perform measurement.	Is the resistance less than 10 Ω?	Replace the body integrated unit. <Ref. to SL-71, Body Integrated Unit.>	Repair or replace the open circuit of harness.
7	**CHECK DTC.** 1) Depress the brake pedal at the parking range. 2) Read the DTC of body integrated unit using Subaru Select Monitor.	Is B1106 current malfunction?	Go to step **8**.	Go to step **9**.
8	**CHECK DTC.** 1) Turn the ignition switch to OFF. 2) Disconnect the body integrated unit connector and shift lock connector. 3) Connect the disconnected connectors. 4) Turn the ignition switch to ON. 5) Depress the brake pedal at the parking range. 6) Read the DTC of body integrated unit using Subaru Select Monitor.	Is B1106 current malfunction?	Go to step **4**.	Go to step **9**.
9	**CHECK CONNECTOR.** 1) Turn the ignition switch to OFF. 2) Disconnect the body integrated unit connector and shift lock connector.	Is there poor contact of connector terminal?	Repair or replace the poor contact of terminal.	It is possible that temporary poor contact occurs.

GETtheMANUALS.org

G: DTC B1401 M COLLATION NG

For detailed diagnosis procedure, refer to IMMOBILIZER (DIAG). <Ref. to IM(diag)-25, DTC B1401 M COLLATION NG, Diagnostic Procedure with Diagnostic Trouble Code (DTC).>

H: DTC B1402 IMMOBILIZER KEY COLLATION NG

For detailed diagnosis procedure, refer to IMMOBILIZER (DIAG). <Ref. to IM(diag)-25, DTC B1402 IMMOBILIZER KEY COLLATION NG, Diagnostic Procedure with Diagnostic Trouble Code (DTC).>

I: DTC B1403 E/G REQUEST NG

For detailed diagnosis procedure, refer to IMMOBILIZER (DIAG). <Ref. to IM(diag)-25, DTC B1403 E/G REQUEST NG, Diagnostic Procedure with Diagnostic Trouble Code (DTC).>

J: DTC B1405 SCU COLLATION NG

For detailed diagnosis procedure, refer to IMMOBILIZER (DIAG). <Ref. to IM(diag)-26, DTC B1405 SCU COLLATION NG, Diagnostic Procedure with Diagnostic Trouble Code (DTC).>

K: DTC B1406 SCU_EEPROM_NG

For detailed diagnosis procedure, refer to IMMOBILIZER (DIAG). <Ref. to IM(diag)-26, DTC B1406 SCU_EEPROM_NG, Diagnostic Procedure with Diagnostic Trouble Code (DTC).>

GETtheMANUALS.org

L: DTC B1500 KEYLESS UART COM. MALFUNCTION

DTC DETECTING CONDITION:

UART between the keyless control module and body integrated unit is open or shorted, or has communication failure.

TROUBLE SYMPTOM:

Door lock does not operate with keyless.

WIRING DIAGRAM:

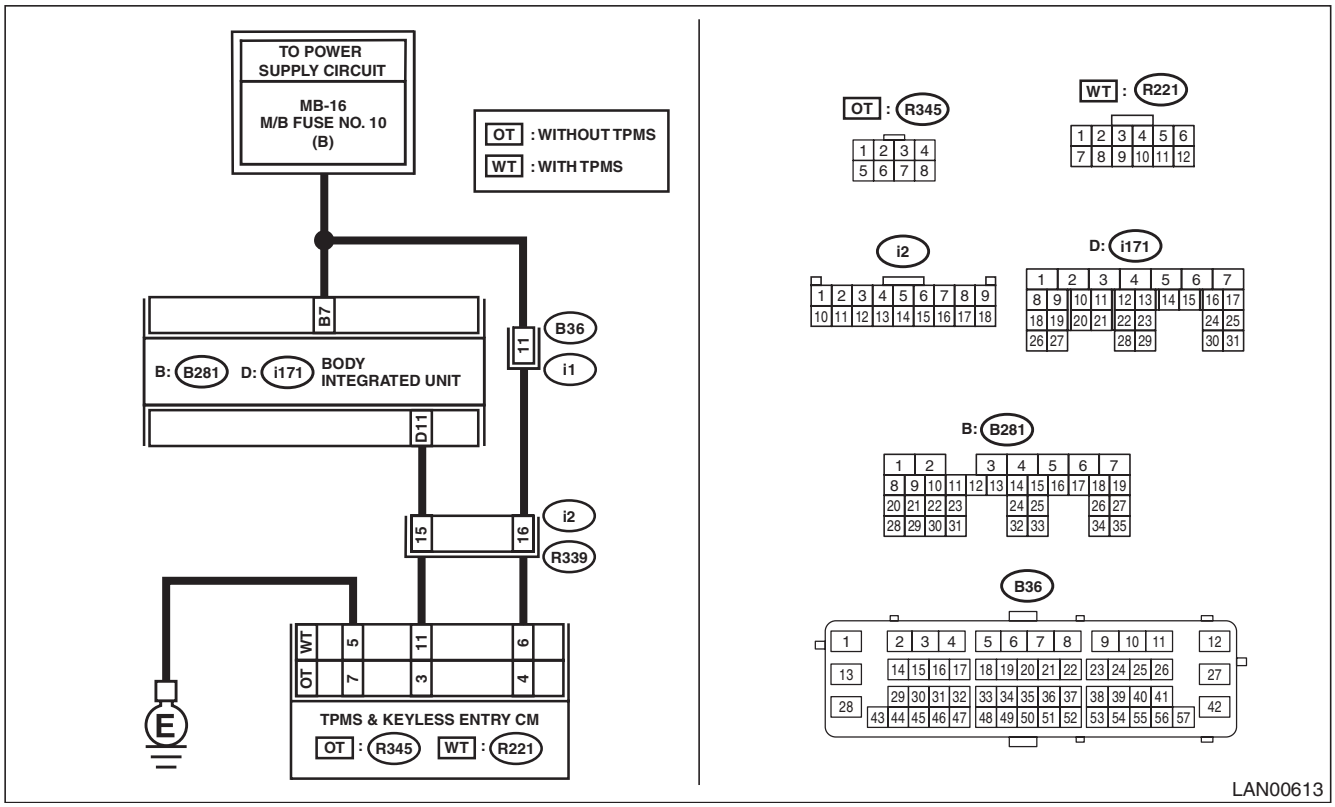

Step		Check	Yes	No
1	**CHECK DTC.** 1) Insert the ignition key to the ignition key cylinder and remove. 2) Read the DTC of body integrated unit using Subaru Select Monitor.	Is B1500 current malfunction?	Go to step **2**.	Go to step **7**.
2	**CHECK DTC.** 1) Turn the ignition switch to OFF. 2) Disconnect the body integrated unit and keyless entry control module connector. 3) Connect the disconnected connectors. 4) Insert the ignition key to the ignition key cylinder and remove. 5) Read the DTC of body integrated unit using Subaru Select Monitor.	Is B1500 current malfunction?	Go to step **3**.	Go to step **7**.

GETtheMANUALS.org

Step		Check	Yes	No
3	**CHECK HARNESS.** 1) Turn the ignition switch to OFF. 2) Disconnect the body integrated unit and keyless entry control module connector. 3) Using the tester, measure the resistance between terminals. ***Connector & terminal*** ***With TPMS*** ***(i171) No. 11 — (R221) No. 11:*** ***Without TPMS*** ***(i171) No. 11 — (R345) No. 3:***	Is the resistance 10 Ω or less?	Go to step **4**.	Repair the open circuit of harness or replace harness.
4	**CHECK HARNESS.** 1) Turn the ignition switch to OFF. 2) Use a tester to measure the voltage between the terminals. ***Connector & terminal*** ***With TPMS*** ***(R221) No. 6 (+) — Chassis ground (–):*** ***Without TPMS*** ***(R345) No. 4 (+) — Chassis ground (–):***	Is the voltage 10 V or more?	Go to step **5**.	Repair the power supply circuit.
5	**CHECK HARNESS.** Using the tester, measure the resistance between terminals. ***Connector & terminal*** ***With TPMS*** ***(R221) No. 5 — Chassis ground:*** ***Without TPMS*** ***(R345) No. 7 — Chassis ground:***	Is the resistance 10 Ω or less?	Go to step **6**.	Repair the ground circuit.
6	**CHECK CONTROL MODULE.** 1) Turn the ignition switch to OFF. 2) Remove the keyless entry control module. 3) Install a keyless entry control module that was operating normally on another vehicle.	Does it operate with the remote control key of another vehicle?	Replace the keyless entry control module. <Ref. to SL-68, REMOVAL, Keyless Entry Control Module.>	Replace the body integrated unit.
7	**CHECK CONNECTOR.** Check for poor contact of connectors used for low-speed CAN.	Is there poor contact of connector?	Repair the connector that has poor contact, or replace harness.	It is possible that temporary poor communication occurs. Delete the DTC.

GETtheMANUALS.org

14. General Diagnostic Table

A: INSPECTION

Using the Subaru Select Monitor, read DTC, or check the following data on the current data display to make judgments.

Item	Operation	Specifications		Note
		YES	NO	
Diagnostic code	DTC is not displayed when inspecting all DTCs.	DTC is not displayed.	Perform the diagnosis according to DTC.	—
Remaining fuel level	Fuel gauge displays correctly.	System is normal.	Check the combination meter system and LAN system.	—
	Remaining fuel level warning light is not illuminating.	System is normal.		
Clearance light (Low beam) (High beam)	Clearance light and low/high beams illuminate normally when the switch is operated. Indicator in the meter illuminates at the same time.	System is normal.	Check the lighting system, combination meter system and LAN system.	—
Fog light	Front fog light illuminates when the switch is operated. Indicator in the meter illuminates at the same time.	System is normal.	Check the lighting system, combination meter system and LAN system.	—
Rear defogger	Rear defogger operates when the switch is operated. The indicator illuminates at the same time.	System is normal.	Check the rear window defogger system and A/C system.	—
Wiper deicer	Wiper deicer operates when the switch is operated. The indicator illuminates at the same time. When the ambient temperature is 5°C (41°F) or higher, press the switch 3 seconds or more to forcibly activate the system.	System is normal.	Check the wiper deicer system and A/C system.	Wiper deicer operates when “Wiper deicer setting” of the body integrated unit is set to on.
DRL	After starting the engine and releasing the parking brake, the DRL illuminates.	System is normal.	Check the lighting system and LAN system.	—
Rear wiper	Rear wiper operates when the switch is operated.	System is normal.	Check wiper or washer system.	Depending on user customizing “Sedan/Wagon Setting” of the body integrated unit, vehicle sensory time varies.
Key interlock	• Key cannot be removed in other than P range. • Key can be removed in other than P range.	System is normal.	Check the body control system.	—
Shift lock	The select lever can be moved from the P range to other ranges only when the brake pedal is depressed with IG ON.	System is normal.	Check the body control system.	—
Key warning switch alarm	When the driver’s door is open without the key removed, the buzzer sounds.	System is normal.	Check the combination meter and body control system.	—
Seat belt warning alarm	Indicator in the meter blinks and the alarm sounds when the driver’s seat belt is not fastened. Indicator in the clock blinks when the passenger’s seat is occupied without the passenger’s seat belt fastened. When the vehicle speed exceeds 15 km/h (9 MPH) with the belt unfastened, the buzzer sounds.	System is normal.	Check the seat belt system and combination meter LAN system.	—

GETtheMANUALS.org

General Diagnostic Table

Item	Operation	Specifications		Note
		YES	NO	
Door lock	The doors lock/unlock when the door switch is operated. Rear gate/trunk opens when the rear gate/trunk release switch is operated.	System is normal.	Check the security & lock and body control system.	If user customizing “Sedan/ Wagon Setting” is different, trunk and rear gate do not open.
Keyless entry	The lock locks/unlocks when the keyless transmitter is operated. Trunk/rear gate unlocks when trunk/rear gate unlock but-ton is operated.	System is normal.	Check the keyless entry and body control sys-tem.	—
Answer back	Answer-back operates when the keyless entry locks/unlocks.	System is normal.	Check the security & lock system, and LAN system.	—
Room light	The light illuminates/goes off according to the door open/close.	System is normal.	Check the room light system, security & lock system, and LAN sys-tem.	—
Map light	The light illuminates/goes off according to the door open/close. (Except for rear gate)	System is normal.	Check the spot map light, security & lock system, and LAN sys-tem.	—
Luggage/trunk light	The light illuminates/goes off according to the rear gate open/close.	System is normal.	Check the luggage/ trunk light, security & lock system, and LAN system.	—
Key illumination	The light illuminates/goes off according to the driver’s door open/close.	System is normal.	Check the ignition switch illumination, security & lock, and LAN system.	—
Illumination control	Illumination volume control is available.	System is normal.	Check the illumination control switch, combina-tion meter, and body control system.	Illumination volume control is not available when user customizing “Illumination Control On/Off” of the body integrated unit is set to off.
Engine start	Engine starts.	System is normal.	Check the engine sys-tem, immobilizer, and LAN system.	—
Vehicle security	Security monitoring/security canceling can be performed by operating the keyless entry.	System is normal.	Check the security & lock system, and LAN system.	Security monitoring starts and at the same time the warning buzzer sounds, when impact sensor is not connected and user cus-tomizing “Impact Sensor” of the body integrated unit is set to on.

GETtheMANUALS.org

GETtheMANUALS.org