SECTION FL
FUEL SYSTEM

CONTENTS

PRECAUTION 2

PRECAUTIONS 2
Precautions for Removing of Battery Terminal 2
General Precautions 2

PREPARATION 3

PREPARATION 3
Special Service Tool 3
Commercial Service Tools 3

PERIODIC MAINTENANCE 4

FUEL SYSTEM 4
Inspection 4
Quick Connector 4

REMOVAL AND INSTALLATION 5

FUEL LEVEL SENSOR UNIT, FUEL FILTER AND FUEL PUMP ASSEMBLY 5
Exploded View 5
Removal and Installation 5
Inspection 8

FUEL TANK 9
Exploded View 9
Removal and Installation 9
Inspection 13

EVAP CANISTER 14
Exploded View 14
Removal and Installation 14
Inspection 14

SERVICE DATA AND SPECIFICATIONS (SDS) 15

SERVICE DATA AND SPECIFICATIONS (SDS) 15
Fuel Tank 15

PRECAUTION

PRECAUTIONS

Precautions for Removing of Battery Terminal

INFOID:0000000010119024

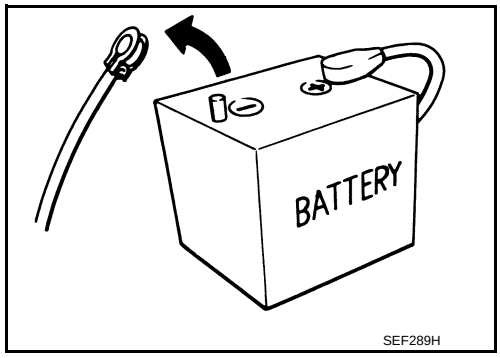

- When removing the 12V battery terminal, turn OFF the ignition switch and wait at least 30 seconds.
  NOTE:
  ECU may be active for several tens of seconds after the ignition switch is turned OFF. If the battery terminal is removed before ECU stops, then a DTC detection error or ECU data corruption may occur.
- For vehicles with the 2-batteries, be sure to connect the main battery and the sub battery before turning ON the ignition switch.
  NOTE:
  If the ignition switch is turned ON with any one of the terminals of main battery and sub battery disconnected, then DTC may be detected.
- After installing the 12V battery, always check "Self Diagnosis Result" of all ECUs and erase DTC.
  NOTE:
  The removal of 12V battery may cause a DTC detection error.

General Precautions

INFOID:0000000009950420

WARNING:
When replacing fuel line parts, be sure to observe the following.
- **Put a “CAUTION: FLAMMABLE” sign in the workshop.**
- **Be sure to work in a well ventilated area and furnish workshop with a CO_2 fire extinguisher.**
- **Never smoke while servicing fuel system. Keep open flames and sparks away from the work area.**

CAUTION:
- **Use gasoline required by the regulations for octane number. Refer to GI-30, "Fuel".**
- **Before removing fuel line parts, perform out the following procedures:**
  - **Put drained fuel in an explosion-proof container and put the lid on securely. Keep the container in safe area.**
  - **Release fuel pressure from the fuel lines. Refer to EC-478, "Inspection".**
  - **Disconnect the battery cable from the negative terminal.**
- **Always replace O-ring and clamps with new ones.**
- **Never kink or twist tubes when they are being installed.**
- **Never tighten hose clamps excessively to avoid damaging hoses.**
- **After installing tubes, check there is no fuel leakage at connections in the following steps.**
  - **Apply fuel pressure to fuel lines with turning ignition switch “ON” (with engine stopped). Then check for fuel leakage at connections.**
  - **Start engine and rev it up and check for fuel leakage at connections.**
- **Use only a genuine NISSAN fuel filler cap as a replacement. If an incorrect fuel filler cap is used, the “MIL” may come on.**
- **For servicing “On Board Refueling Vapor Recovery (ORVR)” parts, refer to EC-418, "Description".**

PREPARATION

PREPARATION

Special Service Tool

INFOID:0000000009950421

The actual shapes of Kent-Moore tools may differ from those of special service tools illustrated here.

Tool number (Kent-Moore No.) Tool name	Description
KV991J0090 (J-46214) Lock ring wrench 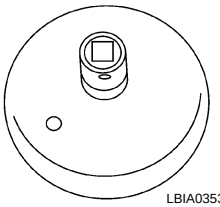 LBIA0353E	Removing and Installing lock ring

Commercial Service Tools

INFOID:0000000009950422

Tool name	Description
Power tool 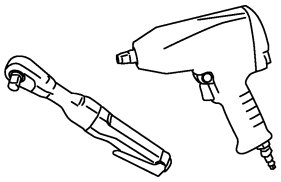 PBIC0190E	Loosening bolts and nuts

PERIODIC MAINTENANCE

FUEL SYSTEM

Inspection

INFOID:0000000009950423

Inspect fuel lines, fuel filler cap, and fuel tank for improper attachment, leakage, cracks, damage, loose connections, chafing or deterioration.

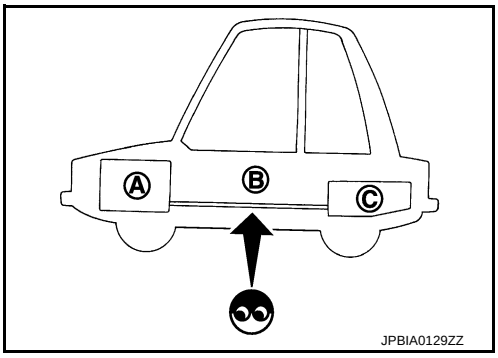

A : Engine
B : Fuel line
C : Fuel tank

If necessary, repair or replace damaged parts.

Quick Connector

INFOID:0000000009950424

CAUTION:
- **After connecting fuel tube quick connectors, check quick connectors are secure.**
- **Ensure that connector and resin tube never contact any adjacent parts.**

REMOVAL AND INSTALLATION

FUEL LEVEL SENSOR UNIT, FUEL FILTER AND FUEL PUMP ASSEMBLY

Exploded View

INFOID:0000000009950425

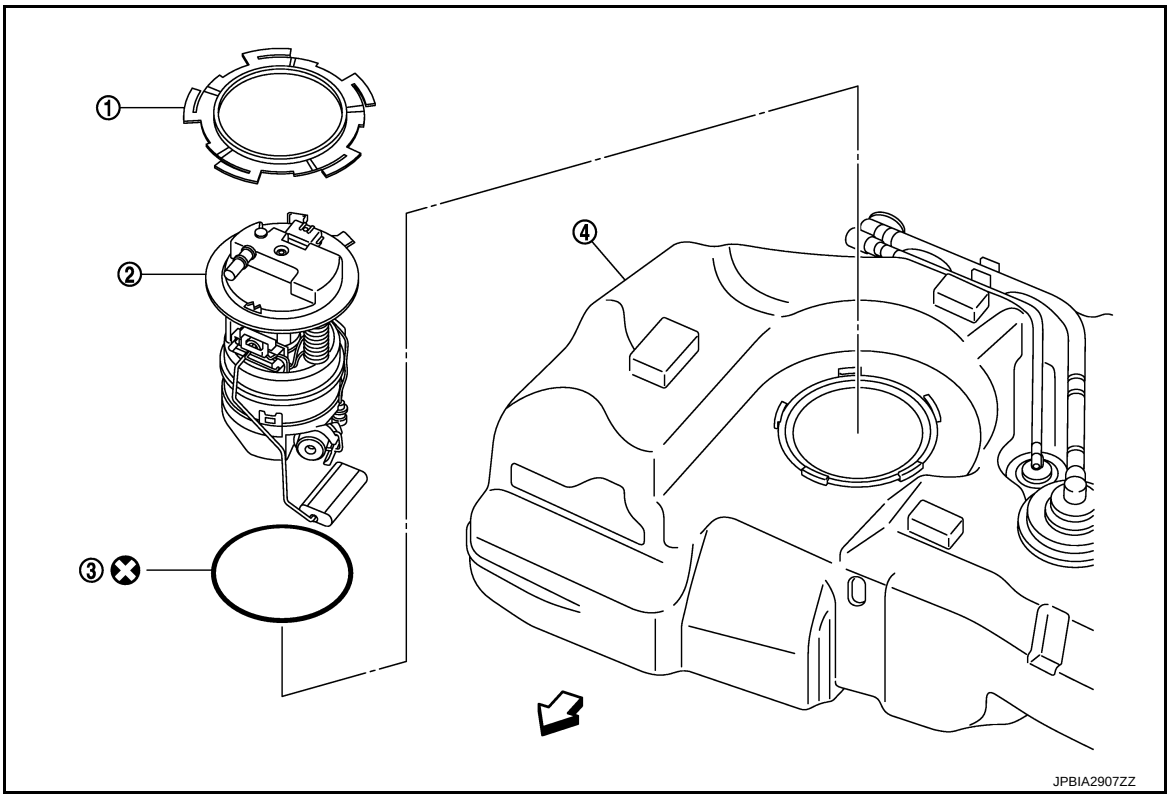

1. Lock ring
2. Fuel level sensor unit, fuel filter and fuel pump assembly
3. O-ring
4. Fuel tank

⇦ : Vehicle front

⊗ : Always replace after every disassembly.

Removal and Installation

INFOID:0000000009950426

WARNING:
Read “General Precautions” when working on the fuel system. Refer to FL-2, "General Precautions".

REMOVAL

1. Release the fuel pressure from the fuel lines. Refer to EC-478, "Inspection".
2. Check fuel level on fuel gauge. If fuel gauge indicates more than the level as shown in the figure (full or almost full), drain fuel from fuel tank until fuel gauge indicates level as shown in the figure or below.
   NOTE:
   The above instructions must be followed since fuel spills when removing the fuel level sensor unit if the fuel level exceeds the mounting surface.
   - As a guide, fuel level becomes the position as shown in the figure or below when approximately 10 ℓ (2-5/8 US gal, 2-1/4 Imp gal) of fuel are drained from fuel tank.
   - In a case that fuel pump does not operate, perform the following procedure.

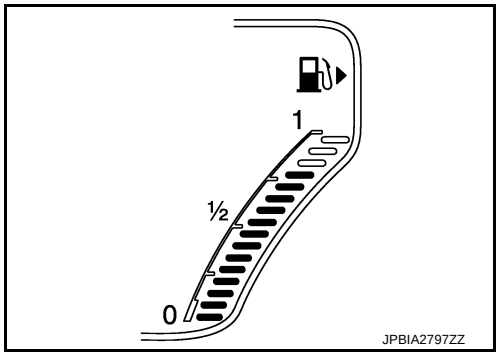

a. Insert hose of less than 20 mm (0.79 in) in diameter into fuel filler tube through fuel filler opening to draw fuel from fuel filler tube.
b. Disconnect fuel filler hose from fuel filler tube. Refer to FL-9, "Exploded View".
c. Insert hose into fuel tank through fuel filler hose to draw fuel from fuel tank.

3. Open fuel filler lid.
4. Open filler cap and release the pressure inside fuel tank.
5. Remove rear seat. Refer to SE-17, "Exploded View".
6. Remove inspection hole cover.
   - Using a screwdriver, remove it by turning clips clockwise by 90 degrees.
7. Disconnect harness connector (1) and quick connector (3).

2 : Fuel level sensor unit, fuel filter and fuel pump assembly

⇦ : Vehicle front

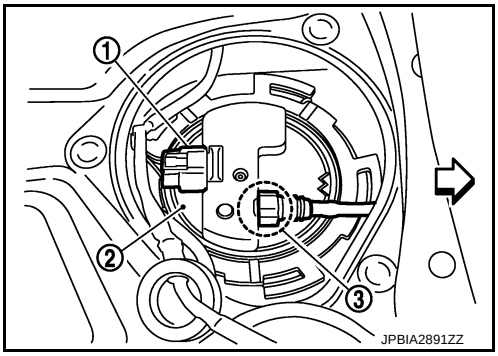

- Remove quick connector in the following procedures.
- Pinch quick connector square-part (A) with your fingers, and pull out the quick connector (1) by hand.
- If quick connector and tube on sender unit are stuck, push and pull several times until they move, and pull out.

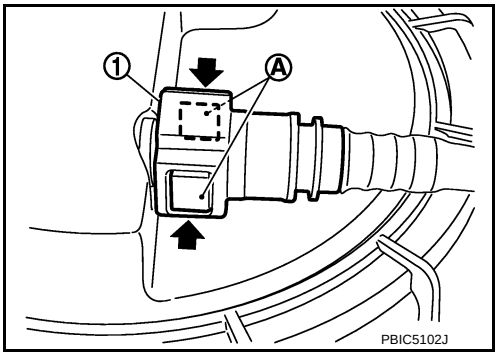

CAUTION:

- **Quick connector can be removed when the tabs are completely depressed. Never twist it more than necessary.**
- **Never use any tools to disconnected quick connector.**
- **Keep resin tube away from heat. Be especially careful when welding near the resin tube.**
- **Prevent acid liquid such as battery electrolyte, etc. from getting on resin tube.**
- **Never bend or twist resin tube during installation and disconnection.**
- **To keep the connecting portion clean and to avoid damage and foreign materials, cover them completely with plastic bags (A) or something similar.**
- **Never insert plug, preventing damage on O-ring in quick connector.**

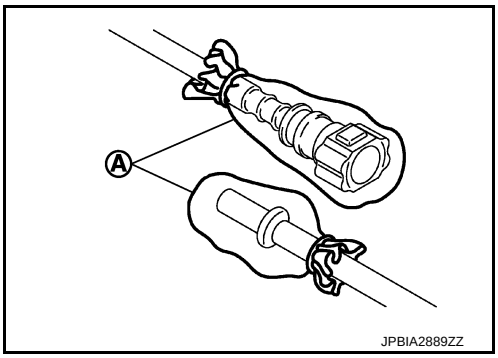

8. Remove lock ring for fuel level sensor unit, fuel filter and fuel pump assembly with fuel tank lock ring wrench [SST: KV991J0090 (J-46214)] (A) by turning counterclockwise.

⇦ : Vehicle front

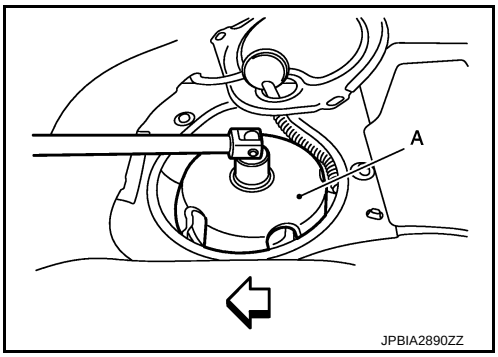

9. Remove fuel level sensor unit, fuel filter and fuel pump assembly (1).
   CAUTION:
   - **Never bend float arm (2) during removal.**
   - **Never pollute the inside by residue fuel. Draw out avoiding inclination by supporting with a cloth.**
   - **Never cause impacts such by dropping when handling components.**

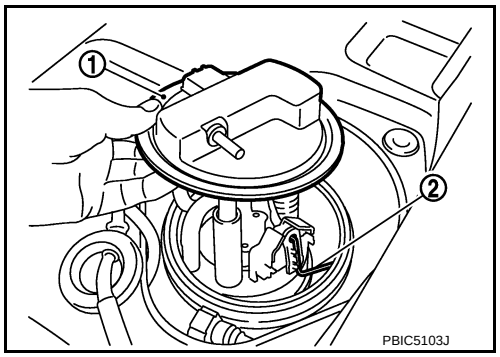

INSTALLATION

Note to the following, and install in the reverse order of removal.

CAUTION:
Do not reuse O-rings.

Fuel Level Sensor Unit

1. Install new O-ring to fuel tank without any twist.
   CAUTION:
   Do not reuse O-ring.
2. Align (A) with (B) as shown in the figure. Install fuel level sensor unit, fuel filter and fuel pump assembly (1) to fuel tank.

   ⇦ : Vehicle front

   CAUTION:
   - **Never allow O-ring to drop.**
   - **Never bend float arm during installing.**

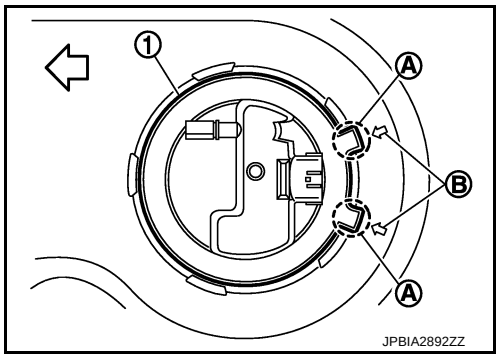

3. Install lock ring for fuel level sensor unit, fuel filter and fuel pump assembly with lock ring wrench [SST: KV991J0090 (J-46214)] (A) by turning clockwise.

   ⇦ : Vehicle front

   CAUTION:
   Install lock ring horizontally.

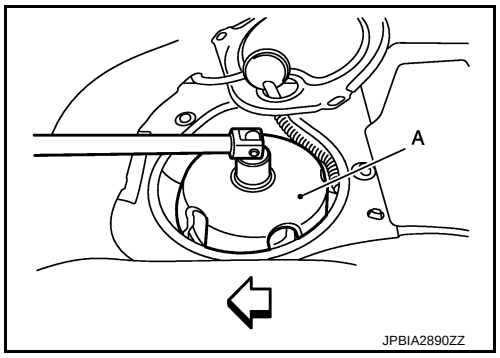

Quick Connector

Connect quick connector as follows:

1. Check the connection for damage or any foreign materials.
2. Align the connector with the tube, then insert the connector straight into the tube until a click sound is heard.
3. After connecting, check that the connection is secure by following method.
   - Visually confirm that the two tabs are connected to the connector.

- Pull (A) the tube and the connector to check they are securely connected.

  1 : Quick connector

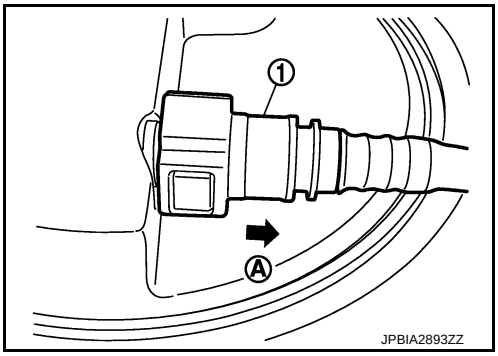

Inspection

INFOID:0000000009950427

INSPECTION AFTER INSTALLATION

Use the following procedure to check for fuel leakage.

1. Turn ignition switch “ON” (with engine stopped), then check connections for leakage by applying fuel pressure to fuel piping.
2. Start engine and let it idle and check there are no fuel leakage at the fuel system connections.

FUEL TANK

Exploded View

INFOID:0000000009950428

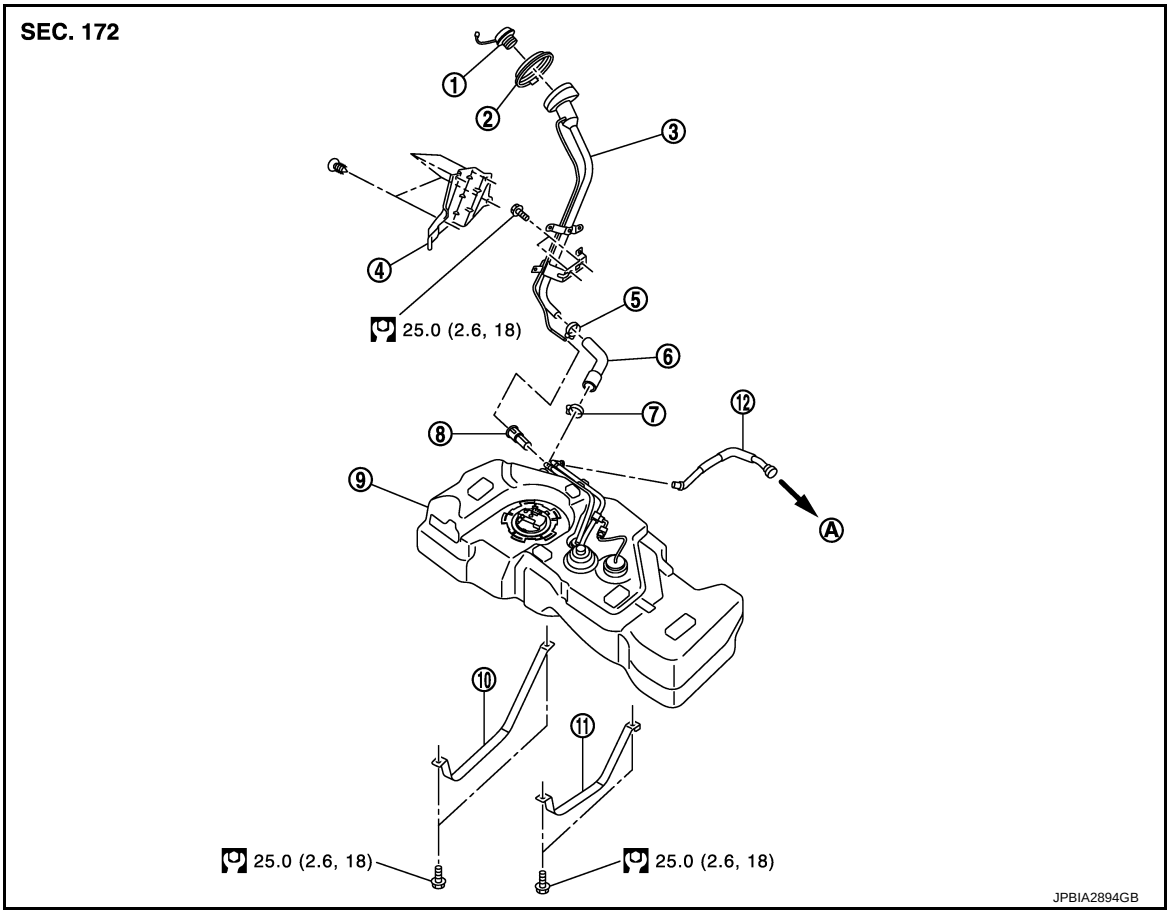

1.	Fuel filler cap	2.	Grommet	3.	Fuel filler tube
4.	Cover	5.	Clamp	6.	Fuel filler hose
7.	Clamp	8.	EVAP hose protector	9.	Fuel tank
10.	Fuel tank mounting band (RH)	11.	Fuel tank mounting band (LH)	12.	Vent tube
A.	To EVAP canister				

: N·m (kg-m, ft-lb)

Removal and Installation

INFOID:0000000009950429

WARNING:
Be sure to read “General Precautions” when working on the fuel system. Refer to FL-2, "General Precautions".

REMOVAL

- Drain fuel from fuel tank if necessary. Refer to FL-5, "Removal and Installation".
- Perform work on level place.

1. Perform steps 2 to 7 of “REMOVAL” in “FUEL LEVEL SENSOR UNIT, FUEL FILTER AND FUEL PUMP ASSEMBLY” on fuel level sensor unit, fuel filter and fuel pump assembly. Refer to FL-5, "Removal and Installation".
2. Remove center muffler. Refer to EX-5, "Exploded View".
3. Remove insulator on vehicle side located above center and main mufflers.

4. Move parking brake cable (1) from the lower face of fuel tank. Then remove clips for parking brake cable.

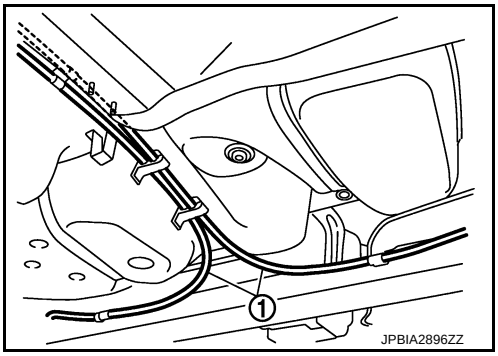

5. Remove brake tube protector. Refer to RSU-11, "Exploded View".
6. Disconnect fuel filler hose (4) at fuel tank side.

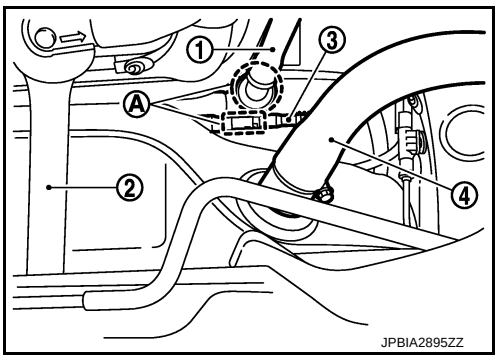

1 : Vent tube
2 : Fuel tank mounting band (RH)
3 : EVAP hose
A : Quick connector

7. Disconnect EVAP hose and vent tube at the position shown in the figure.
   - Instruction for quick connector of EVAP hose and vent tube, refer to the following:

EVAP hose

CAUTION:

- **Quick connector (1) can be disconnected when the tabs (F) are depressed completely. Never twist it more than necessary.**

B : Connection (cross-section)
D : To fuel tank
E : To fuel filler tube
G : Disconnection

- **Never use any tools to disconnected quick connector.**
- **Keep resin tube (C) away from heat. Be especially careful when welding near the resin tube.**
- **Prevent acid liquid such as battery electrolyte, etc. from getting on resin tube.**
- **Never bend or twist resin tube during installation and disconnection.**
- **Never remove the remaining retainer (2) on hard tube (or the equivalent) (A) except when resin tube or retainer is replaced.**
- **When resin tube or hard tube (or the equivalent) is replaced, also replace retainer with new one.**

Retainer color : Green

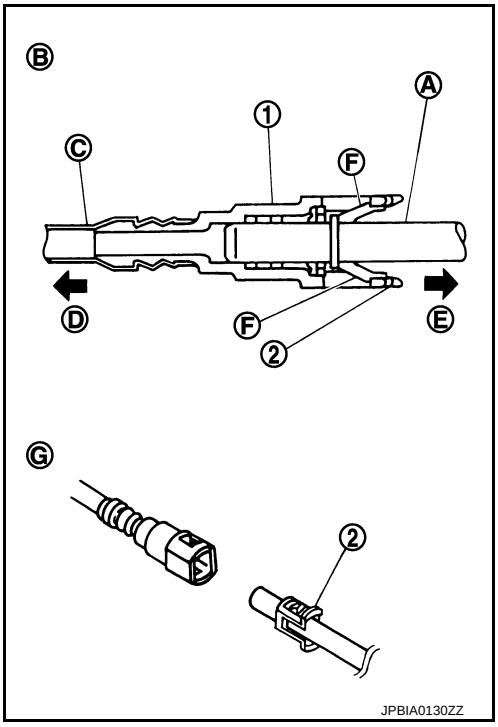

- **To keep the connecting portion clean and to avoid damage and foreign materials, cover them completely with plastic bags (A) or something similar.**
- **Never insert plug, preventing damage on O-ring in quick connector.**

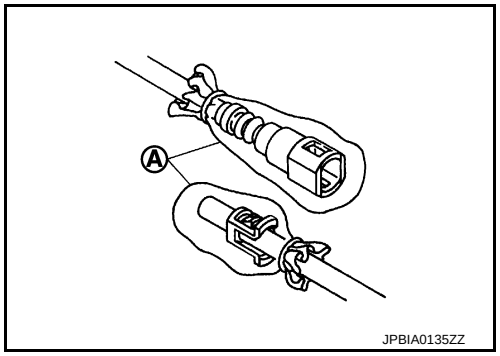

Vent tube
- Remove quick connector in the following procedures.
- Pinch quick connector square-part (A) with your fingers, and pull out the quick connector (1) by hand.
- If quick connector and tube on vehicle are stuck, push and pull several times until they move, and pull out.

CAUTION:
- **The tube can be removed when the tabs are completely depressed. Never twist it more than necessary.**
- **Never use any tools to disconnect quick connector.**
- **Keep the resin tube away from heat. Be especially careful when welding near the tube.**
- **Prevent acid liquid such as battery electrolyte, etc. from getting on the resin tube.**
- **Never bend or twist resin tube during installation and disconnection.**
- **To keep the connecting portion clean and to avoid damage and foreign materials, cover them completely with plastic bags (A) or something similar.**
- **Never insert plug, preventing damage on O-ring in quick connector.**

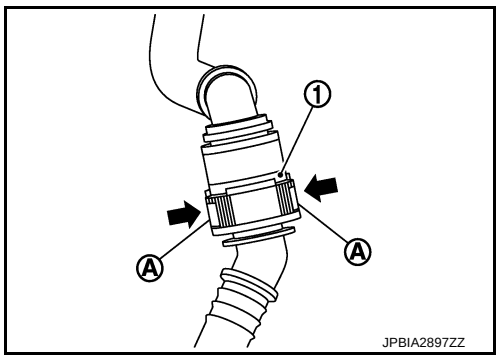

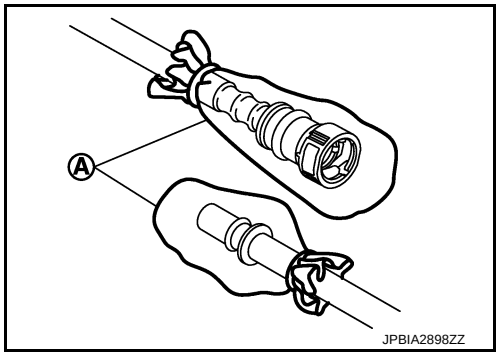

8. Support the center part of fuel tank (1) with transmission jack (A).

CAUTION:
Securely support the fuel tank with a piece of wood (B).

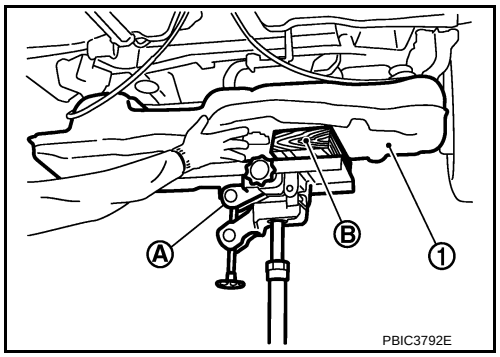

9. Remove canister filter (1).

2 : EVAP canister
3 : Fuel tank mounting band (RH)
⇦ : Vehicle front

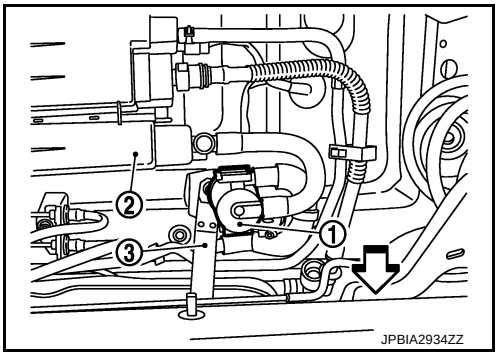

10. Remove fuel tank mounting bands (RH and LH).
11. Lower transmission jack carefully to remove fuel tank while holding it by hand.
    CAUTION:
    Fuel tank may be in an unstable condition because of the shape of fuel tank bottom. Never rely on jack too much. Be sure to hold tank securely.

INSTALLATION

Note the following, and install in the reverse order of removal.

Fuel Tank

1. Temporarily tighten bolts [except (4)] in the order of 1 to 4 as shown in the figure.

A : Under view
⇦ : Vehicle front

2. Tighten bolt (4) to specified torque, pressing fuel tank in the direction (⬅) shown in the figure.
3. Tighten bolts [except (4)] to specified torque in the reverse order as shown in the figure.

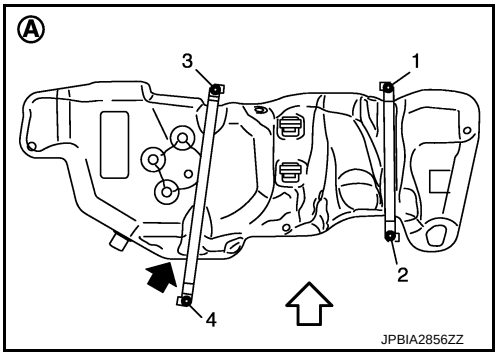

Fuel Filler Hose

- Surely clamp fuel hose insert fuel filler hose to the length below.

Fuel filler hose : 35 mm (1.38 in)
The other hose : 25 mm (0.98 in)

- Be sure hose clamp is not placed on swelled area of fuel filler tube.
- Tighten the clamp band with the top mark (A) until the mark is on the bolt head flange.

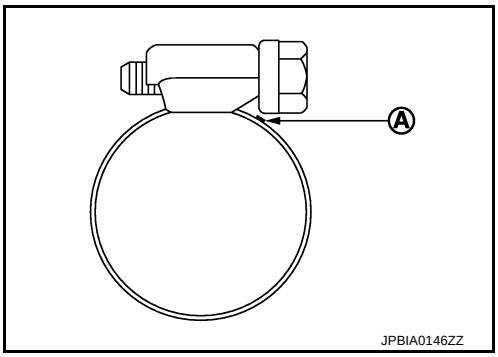

EVAP Hose and Vent Tube

1. Check connections for damage or foreign material.
2. Align the matching side connection part with the center of shaft, and insert connector straight until it clicks.

3. After connecting, pull out quick connector and centralized under floor piping by hand. Check connections are secure.

A : Pull

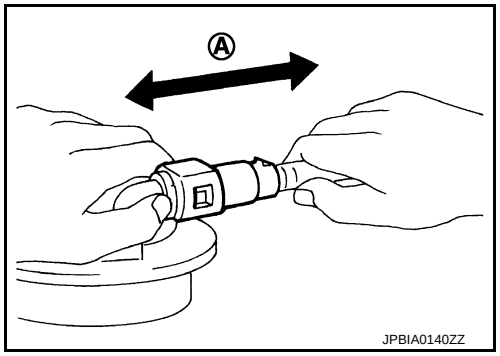

Inspection

INFOID:0000000009950430

INSPECTION AFTER INSTALLATION

Use the following procedure to check for fuel leakage.

1. Turn ignition switch “ON” (with engine stopped), and check connections for leakage by applying fuel pressure to fuel piping.
2. Start engine and rev it up and check there are no fuel leakage at the fuel system tube and hose connections.

EVAP CANISTER

Exploded View

INFOID:0000000009950431

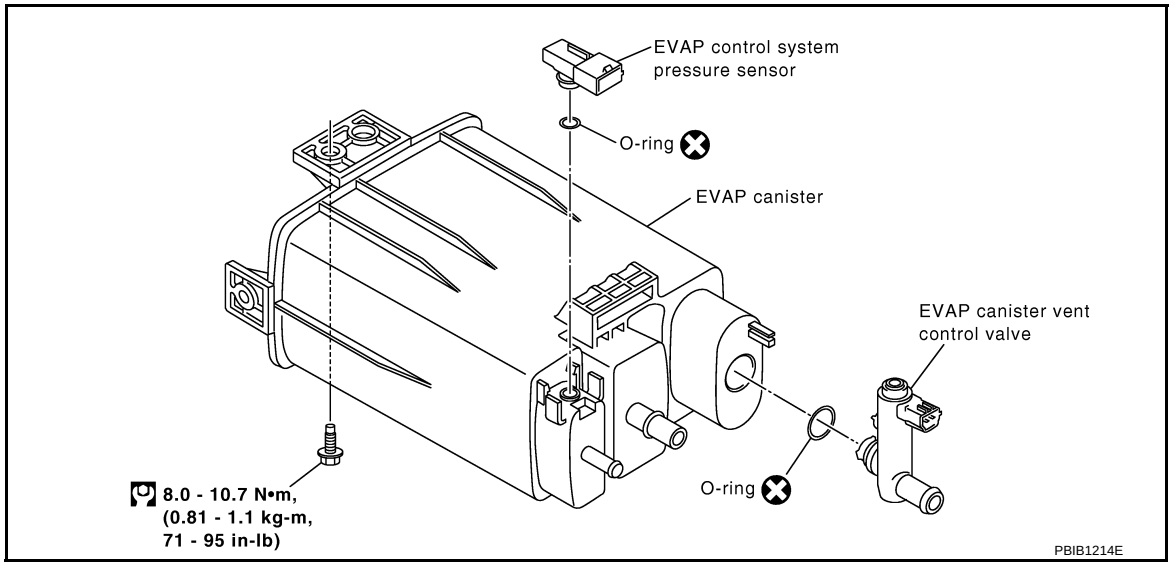

: Always replace after every disassembly.

: N·m (kg-m, ft-lb)

Removal and Installation

INFOID:0000000009950432

REMOVAL

1. Lift up the vehicle.
2. Remove EVAP canister fixing bolt.
3. Remove EVAP canister.

NOTE:
The EVAP canister vent control valve and EVAP canister system pressure sensor can be removed without removing the EVAP canister.

INSTALLATION

Install in the reverse order of removal.
NOTE:
Tighten EVAP canister fixing bolt to the specified torque.

Inspection

INFOID:0000000009950433

Check EVAP canister as per the following:

1. Block port (B).
2. Blow air into port (A) and check that it flows freely out of port (C).
3. Release blocked port (B).
4. Apply vacuum pressure to port (B) and check that vacuum pressure exists at the ports (A) and (C).
5. Block port (A) and (B).
6. Apply pressure to port (C) and check that there is no leakage.

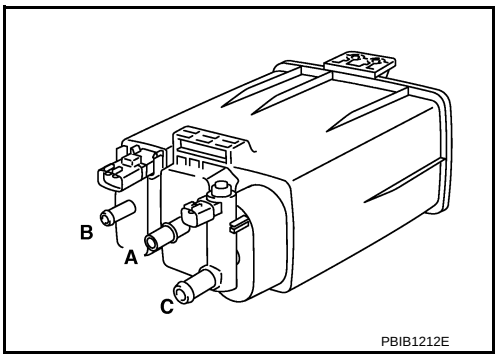

SERVICE DATA AND SPECIFICATIONS (SDS)

SERVICE DATA AND SPECIFICATIONS (SDS)

Fuel Tank

INFOID:0000000009950434

Standard and Limit

Fuel tank capacity	Approx. 50.0 ℓ (13-1/4 US gal, 11 Imp gal)
Fuel recommendation	Refer to GI-30