Subject **Page**

Sound Systems. 39

Sport Wagon Sound System. 40

Convertible Sound System. 43

NG Radio. 47

Radio Removal Hints. 53

E46 Mark 2 Navigation System 54

Navigation Service Mode Display. 56

Navigation System Calibration. 60

Navigation System Diagnosis. 60

MK 3 Navigation System 61

Purpose of the System. 62

System Components. 63

Navigation Computer. 63
GPS Receiver. 64
Gyro Sensor. 64
GPS Antenna. 65
Display Units. 65
Information/Body Bus Interface. 66
Video/Audio Signals. 67
Speed Signals. 68
Reverse Gear Input. 68

Principle of Operation. 69

Workshop Hints. 71

Park Distance Control. 76

Review Questions. 81

bardiagn.com

SOUND SYSTEMS

Two different sound systems were available for the E46 at the start of production. The standard radio features the in-dash cassette player and the optional radio has a single in-dash CD player. Both radios are prewired for the optional CD changer that mounts in the trunk.

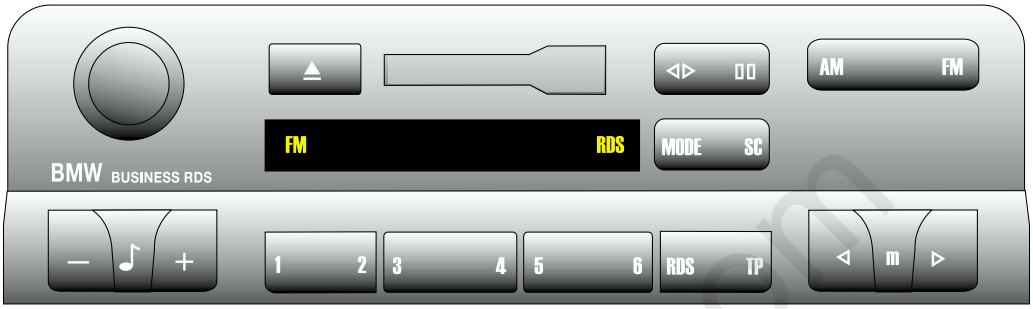

The sound systems for the E46 continue with the integration feature introduced with the E38. The sound system is interconnected on the K-Bus for amplifier and MFL communication.

Theft proofing of the radio via a code is no longer required as the radio will not function without the K-Bus connection and a valid K-Bus signal from the instrument cluster.

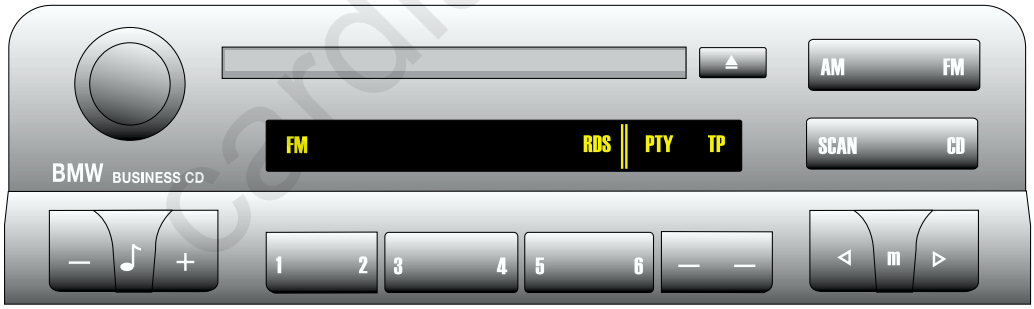

cardiagn.com

E46 Sport Wagon Sound System

Antenna Configuration

The sound systems available for the E46 Sport Wagon are the same as the systems installed in the E46 Sedan and Coupe. The following antenna layout is used for the Sport wagon body:

- FM 1 - Rear window on the right side
- FM 2 - Rear window in the center
- FM 3 - Left rear side window
- AM - Rear spoiler
- FZV - Combined with FM 2 antenna

The amplifier for FM 1 and FM 2 antennas is located beneath the rear spoiler. The signal from the antennas passes from the amplifier to the diversity module located in the left side storage compartment.

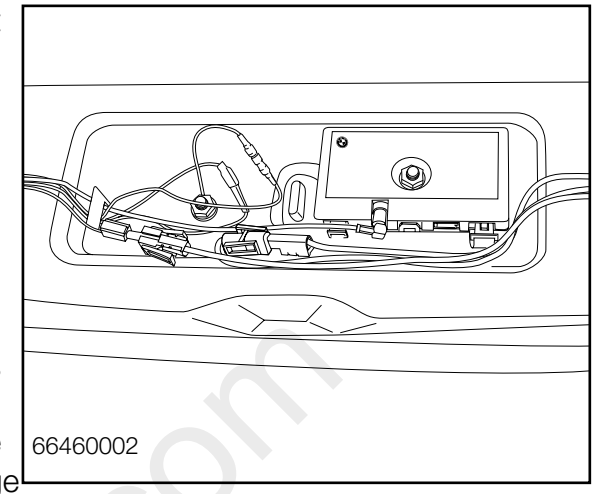

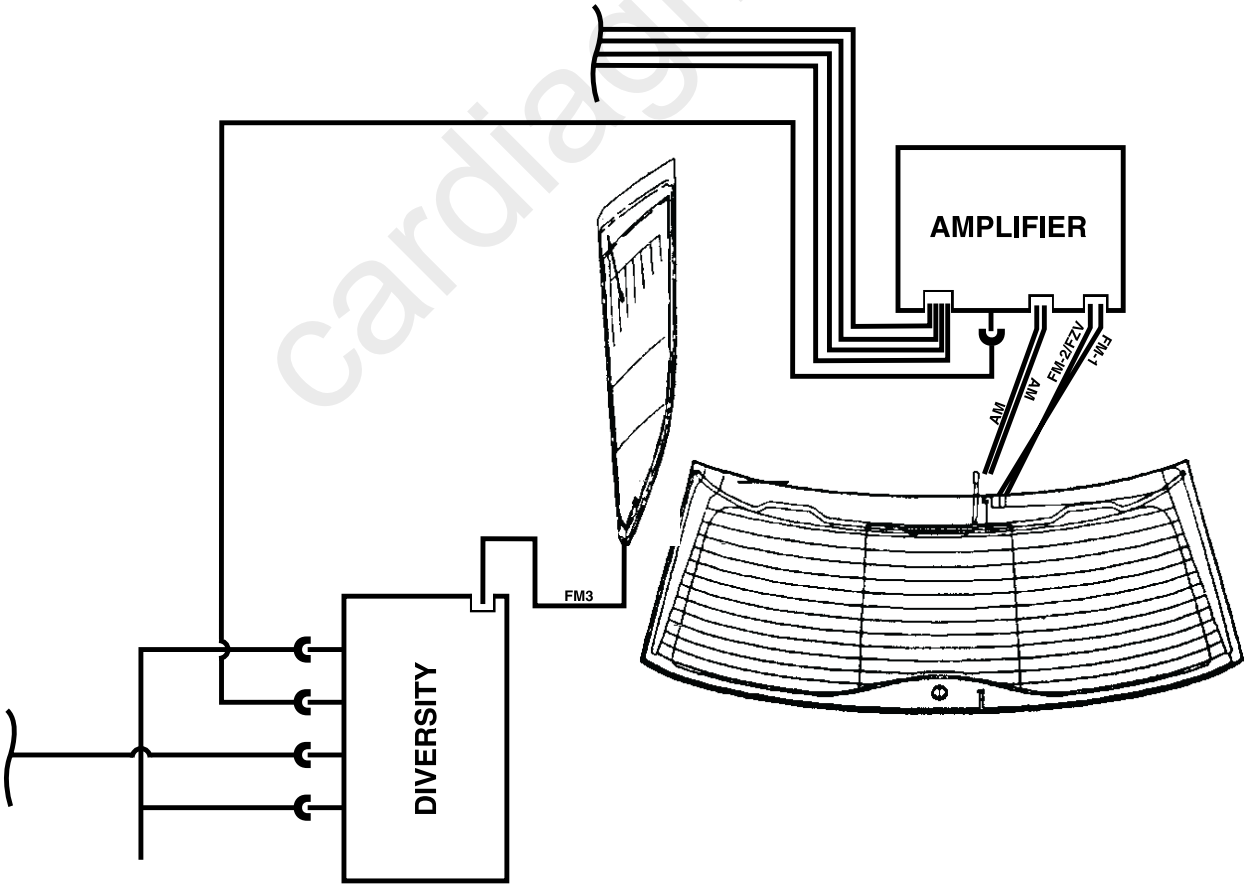

cardiagn.com

SOUND SYSTEM

Antenna Configuration

The FM 3 antenna has a separate amplifier that is integrated into the diversity module which is mounted behind the storage cover on the left side.

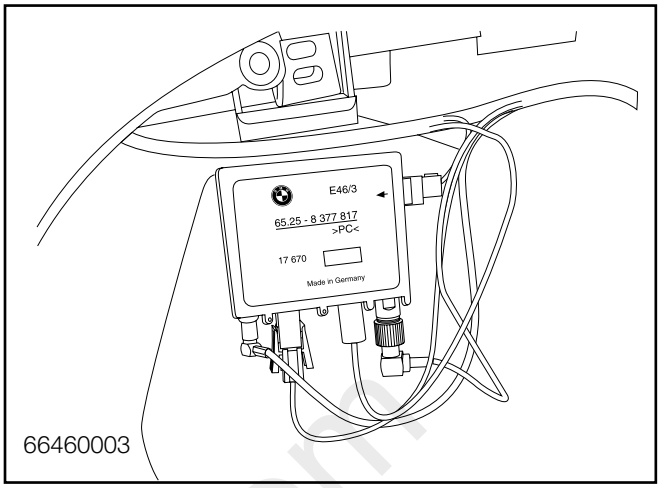

Diversity Switching

The FM1/FM2 amplifier can only send one FM signal at a time. The diversity module controls the switching of the signals by applying a voltage signal to the RF cable. When the voltage signal is low, the amplifier sends the FM 1 signal. When the voltage level is high, it sends the FM 2 signal. The FM 1 and FM 2 inputs are continuously checked for the clearest signal. The diversity module then checks the signal from FM1/FM2 with the signal from FM 3. The clearest of these signals will always be sent to the radio for FM reception.

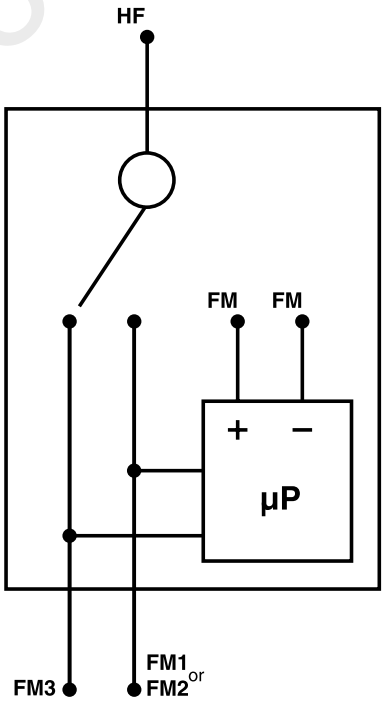

FZV Antenna

The RF receiver module (315MHz) is integrated into the antenna amplifier. The receiver has a separate KL 30 power supply for its operation. Signal from the FZV key are processed by the module and sent to the GM for locking/unlocking functions over a dedicated line.

carlagn.com

AUDIO SYSTEM SPEAKERS

The rear speakers for the sound system are mounted on the left and right wheel housing behind the trim covers

If the Navigation system is installed in the Sport Wagon, the GPS receiver module is installed under the load floor in front of the spare tire well.

Convertible Sound System

The audio systems available for the E46iC correspond to the systems available in the E46 Coupe. Two radios, with either the in dash CD player or cassette player are available. The navigation system with the board monitor is optional equipment. All sound systems are pre-wired for the optional CD changer that mounts in the trunk. The sound systems continue to be interconnected on the K-Bus and all radio test functions carry over.

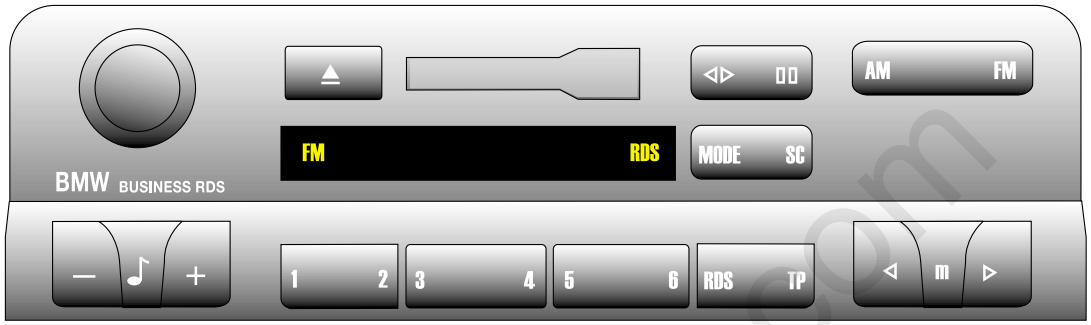

ART-BAYERN1

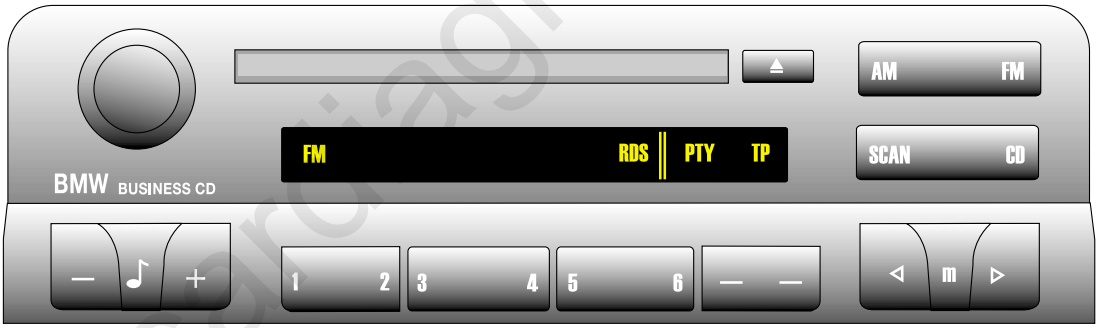

ART-BAYERN2

84E46NAVG0000

carmagn.com

HARMAN/KARDEN SOUND SYSTEM

Speaker and component locations will vary depending on the type of sound system installed. Four rear speakers are mounted in the rear side trim panels, two on each side (one wide band 130 mm and one tweeter dome).

The Harman/Karden system incorporates an additional Subwoofer is installed in the trunk in the ski bag cover. The subwoofer is 200 mm diameter without a subwoofer amplifier. The amplification for the subwoofer comes from the main sound system amplifier.

The subwoofer is hinged so that it will swing to the side when the ski bag is used. A magnet on the subwoofer cover will hold the subwoofer in place against the rear bulkhead while the ski bag is being used.

The subwoofer will continue to function in either position closed/open.
As mentioned , with the Harman/Karden system, the stereophonic sound is modified when the top is lowered. The sound system amplifier receives a signal from the rear window defroster relay when the top is lowered to switch the stereophonic sound off.

cardiagn.com

ANTENNAS/DIVERSITY

Purpose of the System:

The E46iC is equipped with a diversity antenna system to provide the sound system with the strongest possible radio station signal to receive the best performance possible from the sound system.

Components of the System:

The Diversity antenna system on the E46iC consists of:

- Main antenna mast - mounted on the left rear fender.
- Diversity antenna - mounted in the top storage cover.
- Main antenna amplifier - mounted directly below the antenna mast
- Auxiliary antenna amplifier - mounted on the top storage cover.
- Diversity switching module - mounted below the antenna mast in the trunk.

The telephone antenna is wound around the main antenna mast.

cardiagn.com

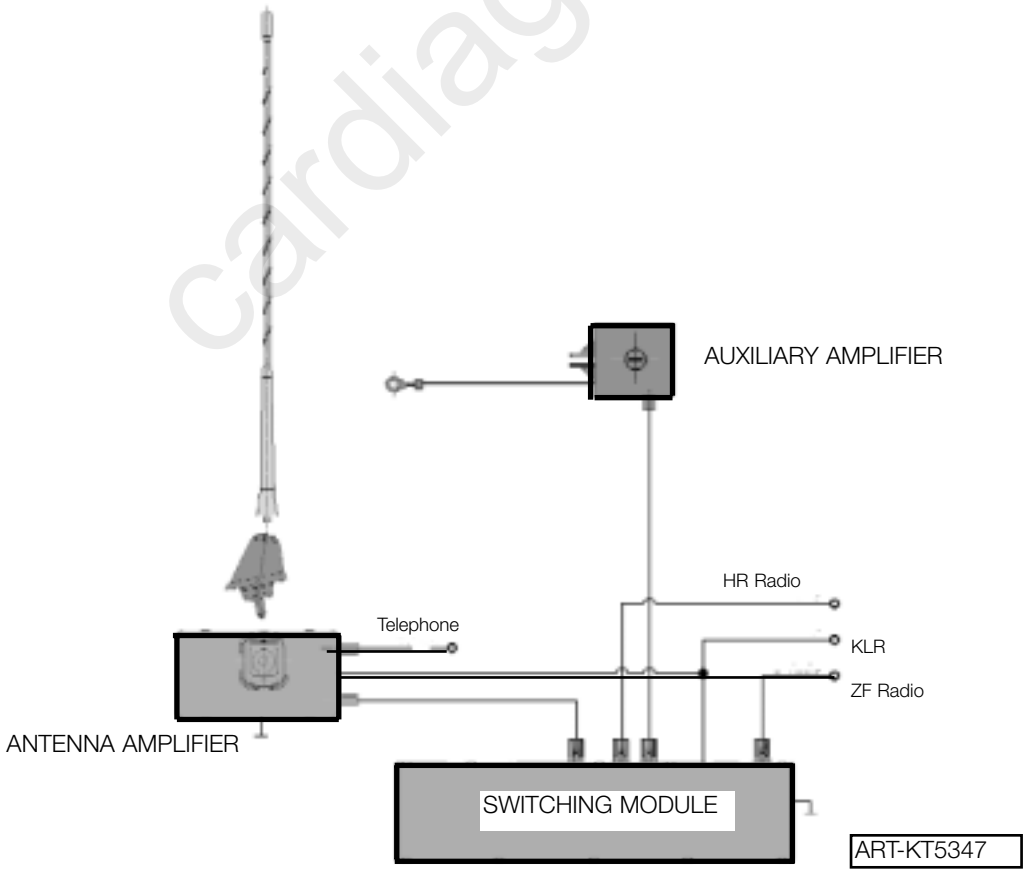

The second antenna for the FM diversity system is integrated in the convertible top storage cover. The FM2 antenna incorporates a separate amplifier that receives its power through the antenna lead.

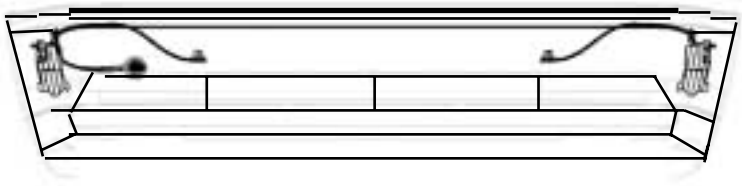

ART-KT-5344

AUXILIARY ANTENNA AMPLIFIER

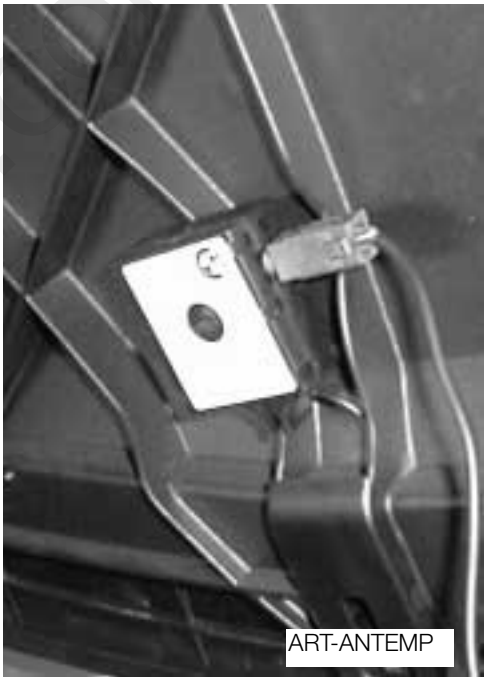

ART-ANTEMP

System Operation

Both antennas receive the signals for radio reception. Each signal is amplified by its own antenna amplifier and the signals are passed two the diversity switching module. The diversity module will lock onto the stronger of the two signals and send it to the radio receiver for sound system operation.

cardiagn.com

Introduction

Starting September 2000, a family of new generation radios will begin to be phased into production. The exception to this is the E52 which has been available with the MIR (multi-information radio) NG radio since series launch in mid 2000.

The NG "New Generation" radios will have increased functions:

- Radio can be operated without KL R.
- Radios are world frequency.
- Car memory programming.
- Audio mixing on vehicles equipped with navigation.

The radios external appearance has not changed. NG radios can be identified by their "53" designation.

Overview of the Radios for Each Model

RADIO	TYPE	MANUFACTURER	MODEL	INTRODUCTION DATE
C53	Business with cassette	Philips	E46	3/01
CD53	Business with in-dash CD	Alpine	E46	3/01
C53	Business with MID control and cassette	Phillips	E39/E53	9/00 E39 10/00 E53
CD53	Business with MID control and in-dash CD	Alpine	E39/E53	9/00 E39 10/00 E53
C53	Business MIR without cassette	VDO	E52	Start of production
BM53	Business with BM control	Becker	E46/E39/E53	03/01 E46 02/01 E39 04/01 E53

cardiagn.com

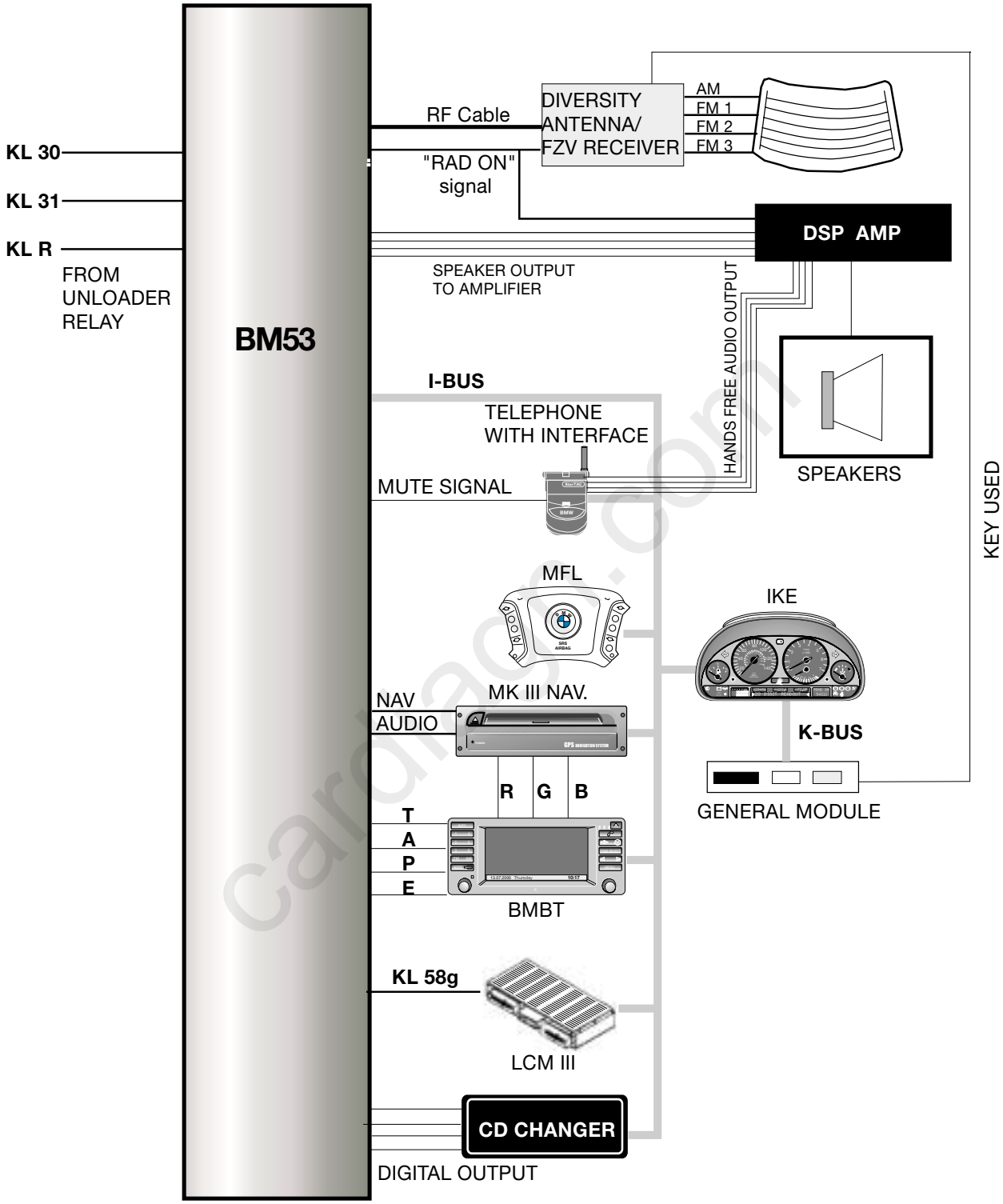

NG Radio System Overview
Example: E39 with MK III navigation and BMBT

Functional Overview

NG Radios

Radio Operation with KL R off

Operation is possible with the key off on the C53 and CD 53 radios. If the radio is turned on with KL R off, it will play at the last stored volume and settings for 16 minutes until the General Module sends the sleep command. No changes may be made to the radio unless KL R is switched back on. The radio can be turned on and off as many times desired.

Diversity Antenna

Antenna diversity has been adapted to the new generation of radios. When the radio is in operation, the diversity control unit is activated by the “RAD ON” signal.

World Frequency Radio

Radios on vehicles sold in the U.S. are world radios. Specific country settings can be made using the service mode. The settings are stored in an EEPROM.

Car Memory

If programmed, when locking the vehicle using the remote transmitter the:

- last station
- Volume setting
- Last audio mode (Tape, FM, CD etc.)

are stored according to the key number used. Unlocking the vehicle with the same transmitter will restore the settings. There is a maximum setting for volume which may be lower than the setting when the radio was last operated.

Clock

Time can also be displayed when KL R is off by pressing the clock button on the Radio/MID.

Backlighting

The LCM/LSZ produces two signals for the control of radio backlighting.

- Hardwired KL 58g
- Lights on/off over the K/I Bus.

The radio contains a photo-cell for adjustment of backlighting to ambient conditions.

cardiagn.com

Reset and Voltage Monitoring
A radio reset is triggered by under voltage or the internal processor monitor. The reset function restarts the radio, similar to turning it off and back on again. Operating voltage is measured at the KL 30 input. The radio is switched off if the system voltage exceeds 17V to protect the radio, it will switch on when the voltage falls below 16V.

GAL (Speed Dependent Volume)
The speed signal from the IKE/KOMBI is available to the radio over the K/I Bus. GAL is not a feature on vehicles equipped with DSP.

Bus Communication
The radio communicates with other modules via the K bus or I Bus dependent on the model. The information shared over the bus line includes:

- **IKE/KOMBI** - Terminal status (KL 15, KL R)
- **LCM/LSZ** - Lights on
- **IKE/KOMBI link to TXD** - Diagnosis
- **MID or BMBT** - button or rotary knob status.
- **GM** - Key used to lock or unlock vehicle
- **MFL** - audio controls status

NG radios do not use anti-theft codes. Operation of the radio is only possible if connected to a bus line and the detection of at least one other component.

cardiagn.com

Workshop Hints

Service Mode for NG Radios

A service mode is available as on previous radios as a diagnosis tool and for changing radio settings. Entering the service mode varies by the device used to control the radio.

To enter the service mode:

C53/CD53 with and without MID:
- Turn on the radio.
- Within 8 seconds, press and hold the “m” button for 8 seconds.
- Scroll through functions using the “+” and “-” keys or the station < > search buttons.
- Turn off the radio to end the service mode.

C53 MIR:
- Turn on the radio.
- Within 8 seconds, press and hold the “SEL” button for at least 8 seconds.
- Scroll through functions using the station < > search buttons.
- Turn off the radio to end the service mode.

BM53 with board monitor:
- Turn on the radio.
- Press and hold the “RDS” button for at least 8 seconds.
- Scroll through the functions using the station < > search buttons.
- Turn off the radio to end the service mode.

BM53 with Widescreen board monitor:
- Turn on the radio.
- Within 8 seconds, press the “INFO” button.
- From the info screen select RDS
- Press and hold the BM control knob for at least 8 seconds.
- Scroll through functions using the station < > search buttons.
- Turn off the radio to end the service mode

cardiagn.com

Service Mode Functions

1. Serial Number: Display of the radio serial number.

2. Software version: Display of the radio software version. Displayed as (calender week, year, version)

3. GAL: Speed-sensitive volume control. Can be adjusted from level 1-6 using the 6 pre-set audio buttons. Vehicles equipped with DSP do not use this feature.

4. Field strength and Quality (F/Q): The station currently displayed can be assessed for field strength and quality. An “F” (i.e. F15) number is used to indicate the strength of the signal being received by the radio. This is a good test of the antenna system, station signal, and the radio itself. A “Q” (i.e. Q-00) number is used to determine the quality of the radio station including both the audio and RDS signal if applicable.

5. DSP: This function provides information about whether the vehicle is fitted with DSP. The value is displayed as a one (fitted) or zero (not fitted) and is communicated by the DSP amplifier via the I/K bus.

6. TP Volume: Provides adjustment for traffic report minimum volume. Not used in the US.

7. AF: Alternative Frequency tracking setting. Not used in the US.

8. Area: Used to select the appropriate market setting (USA, Canada, Europe, Japan and Oceania). Adjust using the pre-set buttons.

9.Index: Display of the revision index.

cardiagn.com

To Remove Radio:

- Remove center dash trim above glove box by prying off with a trim stick.
- Remove center dash trim over radio by prying off with a trim stick.
- Remove two screws at the top of radio assembly.
- Slide radio forward and out of the plastic carrier.
- Remove main radio connector by lifting connector lock to the upper most position, away from top of radio, using a screwdriver as show on connector.
- Remove the antenna connection.
- Install in the reverse order.

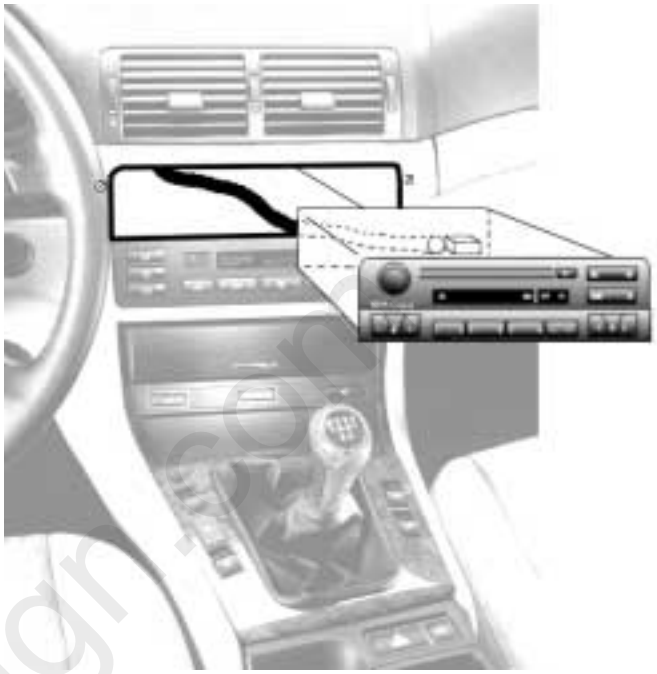

cardiagn.com

E46 MARK II NAVIGATION SYSTEM

COMPONENT OVERVIEW

The E46 Mark II Navigation System is similar to E38/E39 Mark II. All of the E38/E39 Mark II system components are carried over with the exception of the BMBT:

E46 Specific Board Monitor (BMBT):

- 5 inch display (320 X 234 pixel resolution)
- Uses on screen soft keys for telephone send/end functions. E38/E39 uses buttons.
- Does not include auxiliary ventilation function (not a function of E46 BC/IHKA).
- Provides display and control functions for the Audio System (radio, cassette and CD).
- Provides display and control functions for systems in the menu display.

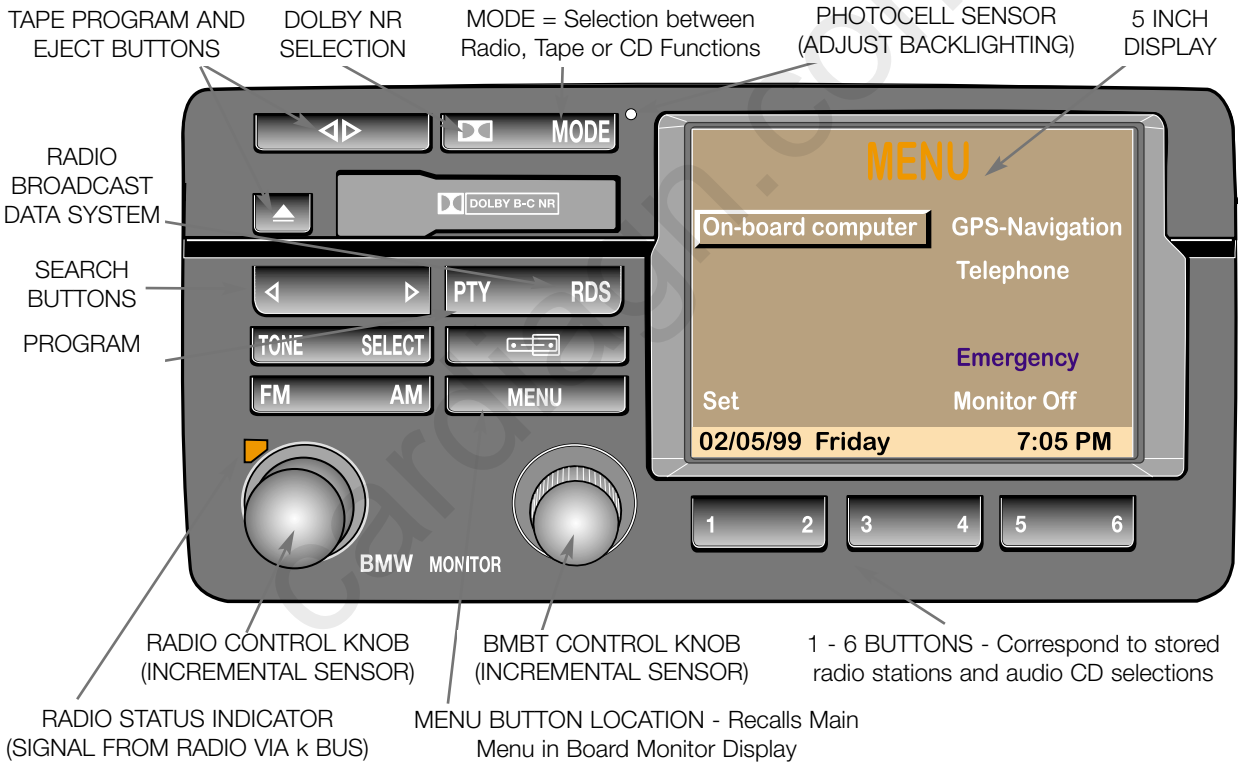

1999 MODEL YEAR RADIO CHANGES

- The 1999 model year radios do not have the weatherband feature.
- **RDS =** Radio Broadcast Data System. In the future, this button will put the vehicle occupants in touch with a wide variety of broadcast data including weather information.
- **PTY =** Any unit having RDS will also have a separate button for the PTY feature. It stands for Program Type and will indicate the type of music being played.

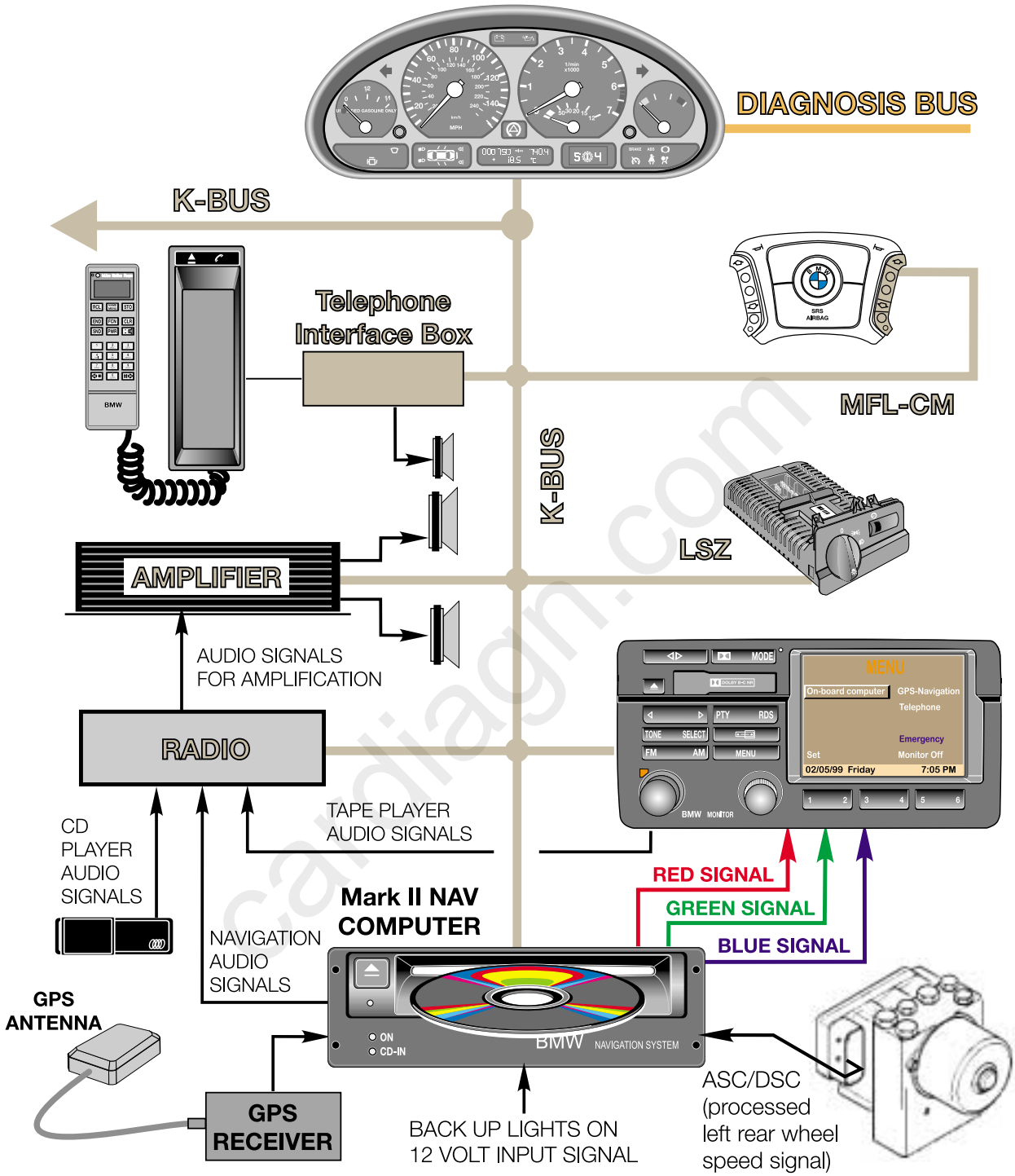

The BMBT communicates with interfacing control modules via the K Bus. As with all previous Original Equipment Navigation Systems, the radio electronics are installed in the trunk. The BMBT sends and receives operation instructions to the radio via bus communication. The Mark II Nav computer continues to provide the RGB output signals to the BMBT for system function display.

E46 BOARD MONITOR & NAVIGATION SERVICE MODE DISPLAYS

The Mark II system provides a service mode display function. These screens provide system hardware/software identification numbers and status of Board Monitor and Navigation specific functions for use as a diagnostic tool. The screens are accessed as follows:

- From the Main Menu select “Set”.
- Once in the Set function, press and hold the menu button for 8 seconds.
- The next screen to appear is the SERVICE MODE menu.

The first accessible function is “On-board monitor”. Pressing this selection calls up the version screen which provides identification of hardware/ software specific index versions for the installed system.

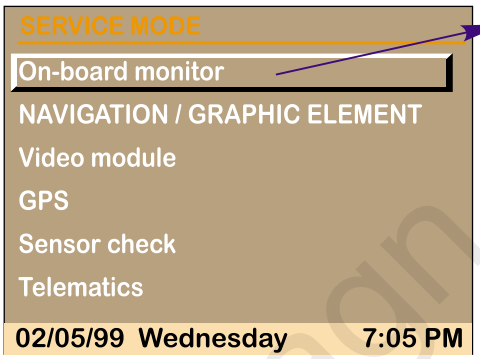

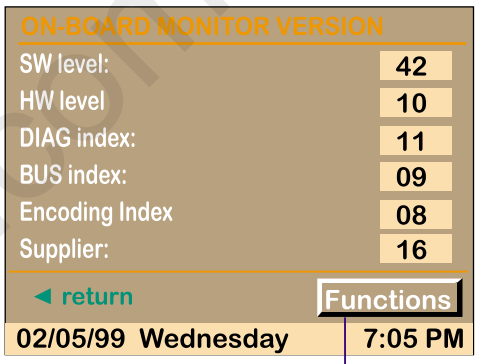

Pressing the functions key at the bottom continues into additional screens including the Key Functions and Brightness controls.

Key Functions tests the key input on the BMBT. Input status (1-25) will display in the window.

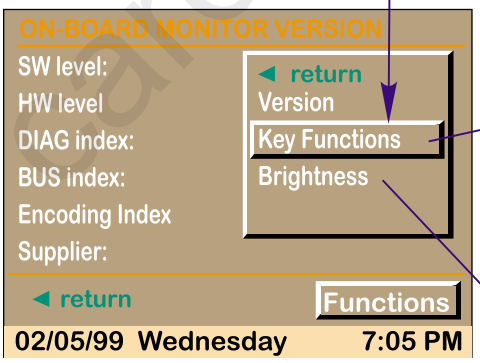

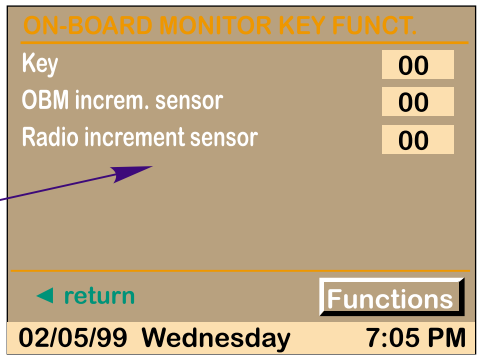

If no keys are pressed the status will be displayed as “FF”.

Rotating the left or right rotary knob displays hex code input status.

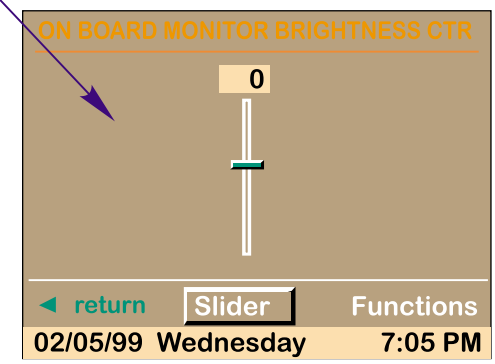

Rotated slowly, the display changes with each increment. The display eventually stops at “1F” in the left rotated direction and “E0” to the right.

The key function test terminates automatically if no keys or knobs are moved after a short duration (“00”).

cardiagn.com

The next accessible function is the NAVI/GRAPHIC ELEMENT.

This screen identifies hardware/software specific index versions for the installed system.

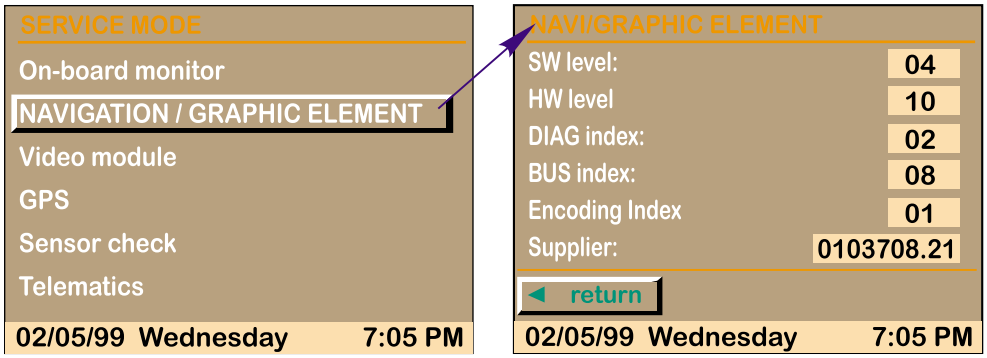

The Video module selection is not functional since the US version Mark II nav system does not utilize the video module.

The next available selection from the service mode menu is "GPS".

This display provides the GPS receiver module hardware version number and date of programmed software.

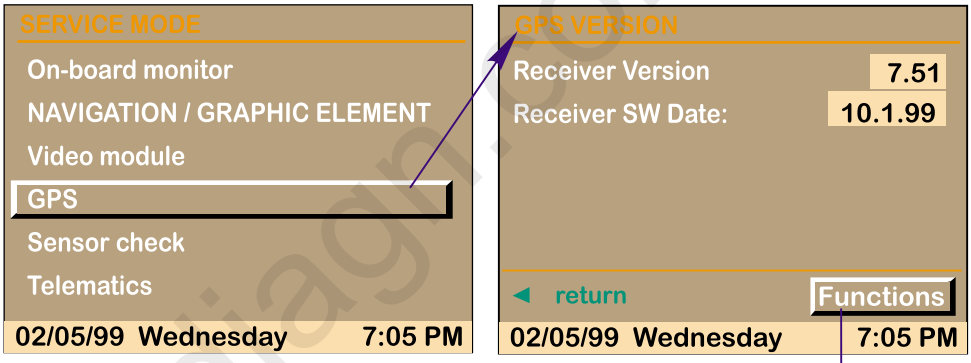

Pressing the functions button in the lower right corner of this screen provides a sub-selection menu.

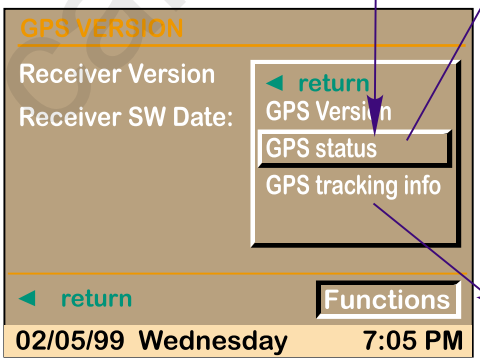

GPS Status provides information on the exact coordinates of the vehicle based on the calculations of the GPS receiver module.

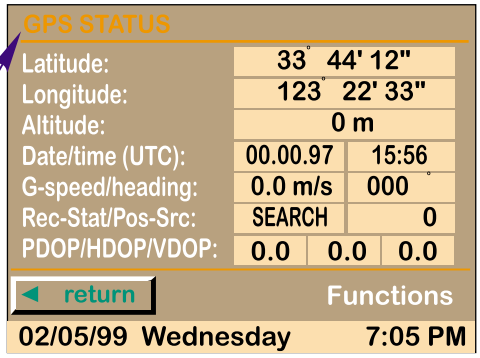

GPS Tracking provides information about the individual satellites currently sending signals to the GPS

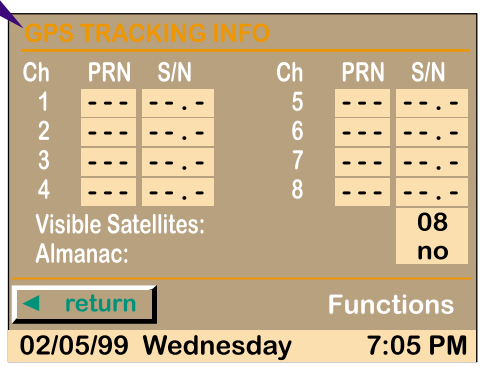

cardiagn.com

The next selection available from the SERVICE MODE menu is “Sensor check” which provides:

- Wheel speed input (only one wheel speed signal, displayed).
- Number of satellites detected.

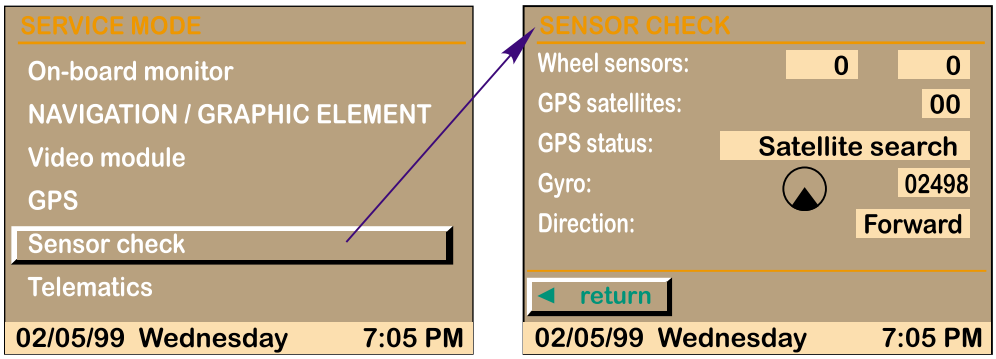

- What mode the GPS receiver module is currently in; (ie: Search)
- The Gyro status provides the millivoltage value the Nav computer is utilizing for the current vehicle position. This area also includes an icon representing what direction the vehicle is heading in.
- The direction status indicates what gear is selected (forward or reverse).

The Sensor check display is intended to be used while test driving the vehicle. Use the legend below to compare with the display status.

STATUS DISPLAY	WHAT SHOULD BE DISPLAYED	WHAT TO DO IF NOT OK
Wheel Sensors:	As the vehicle is driven, the number should increase with an increase in vehicle speed.	Check fault codes in ASC/DSC system. If necessary carry out wheel speed sensor test.
GPS Satellites:	With unobstructed upward view of sky the display should be > 3	Check for interference of signals to GPS antenna, Check integrity of circuit from GPS receiver module and Nav computer
GPS Status:	“See Legend on next page”	
Gyro:	Direction icon moves with vehicle turning movement. Milli voltage display value should be approx 2500 mV (+/- 400mV) when the vehicle is stationary or driven straight ahead. When the vehicle is turning, the value must rise or fall which indicates the gyro sensor is detecting yaw.	Replace Navigation computer.
Direction:	Reverse is displayed when range selector is in reverse. Forward in any other range.	Check back up light signal input.

cardiagn.com

GPS Status Text Display	Description
1. “GPS fault”	Problem with GPS system. Swap GPS receiver module and or antenna from know good vehicle after checking GPS status display information described on page 153 .
2. “Reception Interference”	Problem with GPS system. Same as above.
3. “No Almanac”	No Data yet stored from satellites. The GPS almanac is a memory account of received satellite signals. If the vehicle battery has been disconnected or after replacing a GPS receiver module it has an empty memory and requires satellite signals to become functional. After the receiver module receives battery voltage and ground, it must be left outside with an unobstructed sky above with the ignition switched to KL R for approximatly 15 minutes.
4. “Satellite search”	GPS is currently searching for satellite signals.
5. “Satellite contact”	At least one satellite is found
6. “Position known”	Vehicle’s Latitude and Longitude known. Navigation is possible.

The last selection available is the **Telematics** entry display. This replaces the “VIN” selection from the E38/E39 Mark II systems. The only requirement of this entry screen is that the VIN is entered at the VPC when prepped prior to distribution.

This is necessary for the Emergency program if needed when calling the Cross Country Group Roadside Assistance Program.

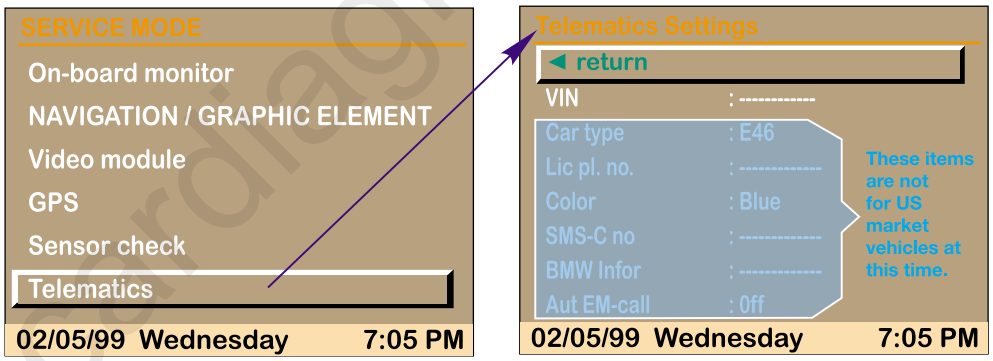

Additionally, if the vehicle is equipped with a Phase V phone the system will automatically utilize the entered VIN as per E38/E39 Mark II systems.

The VIN is entered at the VPC for all vehicles (with or without a Phase V phone). If the VIN has been incorrectly entered it can be changed by turning and pressing the rotary knob when the correct letter or digit of the last seven character of the VIN is displayed.

The balance of the data displayed below the VIN entry is not currently used in the US market.

cardiagn.com

MARK II NAVIGATION SYSTEM CALIBRATION

The calibration procedure of the Mark I system is not required with the Mark II system. This system self calibrates automatically as the vehicle is driven after following the steps below.

- System must be fully functional with no faults present in fault memory.
- Correct Map data base CD installed for your .
- Vehicle outside with an unobstructed overhead view. Switch ignition on and allow system adequate time to receive a minimum of three GPS signals. This is confirmed by the green GPS indicator in the map display.
- Set the map display to the 400' scale and drive the vehicle on digitized roads. Make frequent turns at intersections where possible.

While driving, the system utilizes the map CD, the received GPS coordinates, the Gyro sensor to determine turn activity and the wheel speed sensor input. It compares all of these variables and automatically pinpoints the vehicle position.

MARK II NAVIGATION SYSTEM DIAGNOSIS

The Nav computer does not communicate with the DIS/MoDiC. Diagnosis of the Nav Computer is performed with conventional procedures and by utilizing the Status displays on the previous pages.

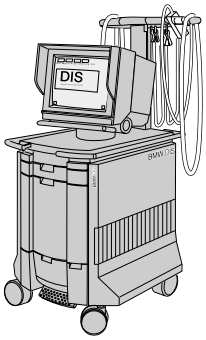

Refer to the DIS for RGB output signal oscilloscope displays for visual confirmation of signal integrity.

The Board monitor (BMBT) does however communicate with the DIS/MoDiC. Follow the fault symptom path of the DIS Diagnosis Program for detailed diagnostic procedures.

cardiagn.com

Mk-3 NAVIGATION SYSTEM

Models: E38, E39, E46, E52, E53

Production Date: E46 from 6/00, all others from 9/00

Objectives

After completing this module you should be able to:

- Recognize the changes to Mk-3 from the previous Mk-2 navigation system.
- Identify the components used in the system.
- Review the operating fundamentals of GPS navigation.
- Describe how to properly code and program the Mk-3 computer.

cardiagn.com

Purpose of the System

The Mk-3 navigation system is a factory installed navigation system that replaces the previous Mk-2 version. The purpose of the system remains the same as previous navigation systems: To provide the driver with navigation instructions to an entered destination based on the vehicles current position and the roads available selected from a digitized road map.

The principle differences of the Mk-3 system over the previous Mk-2 are:

- GPS receiver is integrated into the MK-3 computer.
- Optimized memory and faster processor resulting in faster start-up and operation.
- New split screen and magnifying feature when equipped with wide screen monitor. (software feature)
- Same navigation computer used for color board monitor or monochrome MIR display units.

cardiagn.com

System Components

Mk-3 Navigation Computer

The Mk-3 navigation computer is located in the left side of the vehicles trunk or cargo area. (In the case of the Z8 it is installed in the storage box behind the passenger seat.)

The navigation computer housing contains:

- Map CD drive
- Hardware for navigation function
- GPS receiver
- Gyro sensor
- Output for audio interface
- Output for visual display
- Cooling fan for unit

There are two different hardware versions available dependent on the angle of installation in the vehicle (horizontal or vertical). The Mk-3 is compatible with both board monitor or MIR display units. **(See workshop hints for configuration instructions)**

Identification of the Mk-3 computer over the previous versions is easy due to a change in the face plate design and the elimination of the “CD-IN” LED.

Mk-3 Navigation Computer

Mk-1 and Mk-2 Navigation Computer

cardiagn.com

Mk-3 computer

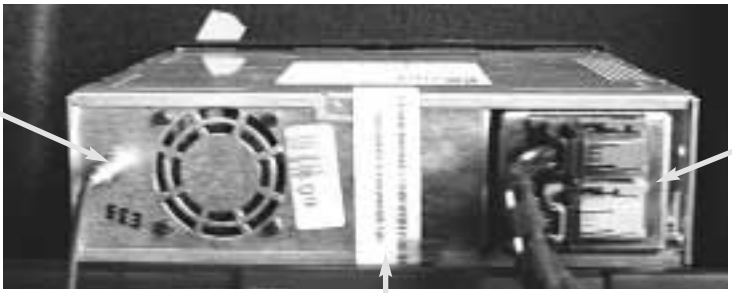

GPS (Global Positioning System) Receiver

The GPS receiver module of the previous Mk-2 system is integrated into the housing of the Mk-3 computer, further reducing the complexity and the number of components used in the system. The receiver is not serviceable.

The GPS receiver is responsible for receiving the satellite signals and providing the vehicle's position information to the navigation computer.

Information provided by the GPS receiver to the navigation computer can be displayed in the service mode **(see workshop hints)** but is not typically used in diagnosis.

Gyro (Rotation) Sensor

The navigation computer contains the electronic (piezo) Gyro sensor that detects rotation (yaw) of the vehicle as a confirmation that the vehicle is turning. The signal provided by the gyro is a mili-voltage that changes as the vehicle rotates. The navigation computer uses the input to track the vehicle along the digitized map and display the exact vehicle position.

The signal is available in the sensor test page of the service mode for diagnosis. The sensor is not a separately serviceable item and does not require calibration.

cardiagn.com

GPS Antenna

The GPS antenna is directly connected to the navigation computer via a coaxial cable. Locations of the antenna in the vehicles are as follows:

E38:	**Under the rear parcel shelf.**
E39 sedan:	**Under the rear parcel shelf.**
E39 Sport Wagon:	**Behind the dashboard on the left side.**
E46 sedan/coupe:	**Under the rear parcel shelf.**
E46 Sport Wagon:	**Above the rear glass under the spoiler.**
E46 Convertible:	**Behind the instrument cluster.**
E52:	**Left front corner behind the dashboard.**
E53:	**Above the rear glass under the spoiler.**

Display Units

Based on the particular model, the factory installed Mk-3 system is displayed using a color board monitor or on a smaller monochromatic screen (MIR).

E52 MIR (Multi Information Radio)

E46/E53 Color Board Monitor

E38/E39 Wide Screen Color Board Monitor (phased in for E53 1/01, E46 9/01)

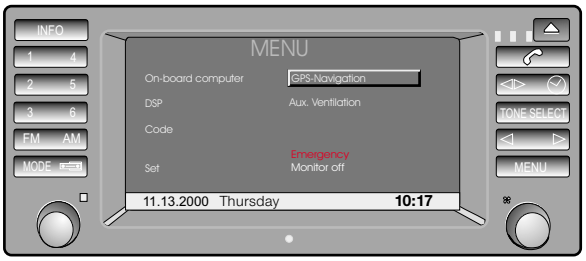

cardiagn.com

Navigation System Interface

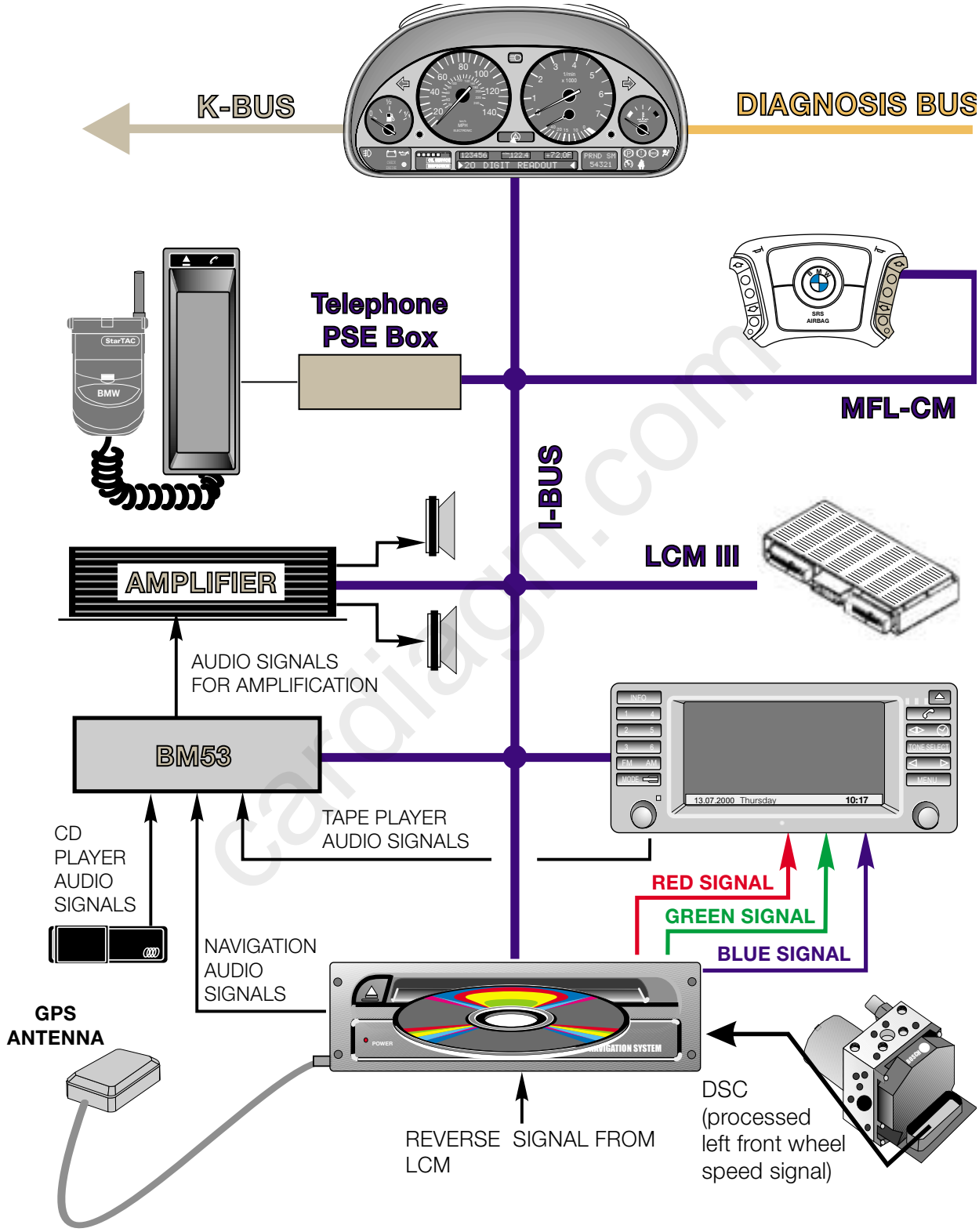

Example of E38/E39 with Mk-3 navigation

Information/body bus Interface

The navigation computer is integrated into the vehicle bus system as it's main communication link with the vehicle.

Communication occurs with the following modules:

- **BMBT** - Control inputs
- **Radio** - Display data
- **GM** - Door open
- **IKE/Kombi** - On-board computer data
- **Telephone PSE Box** - Monitor display data, mayday function
- **DISplus** - Coding data

PSE = Portable Support Electronics

Video/Audio Signals

Board Monitor (Top Navigation)

The RGB video signal for all display functions of the board monitor are produced by the navigation computer graphics stage via three output signals. The Red-Green-Blue signals are direct inputs to the board monitor. The audio signals for navigation instructions to the radio are sent via two separate lines.

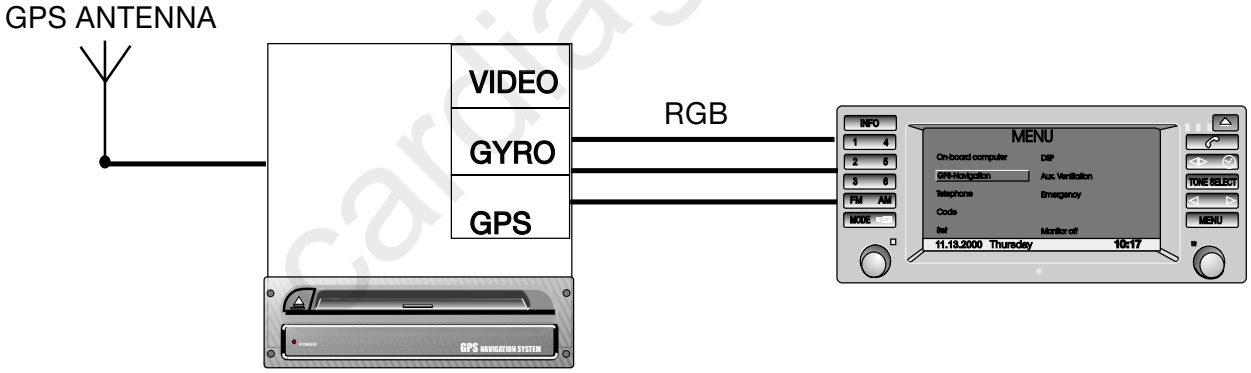

MIR (Radio Navigation)

Since a color display is not used for the MIR, the navigation information for the display is sent via a NAV bus. The NAV bus is a single dedicated line between the Mk-3 computer and the MIR. Audio signals for navigation instructions are sent to the radio via two separate lines.

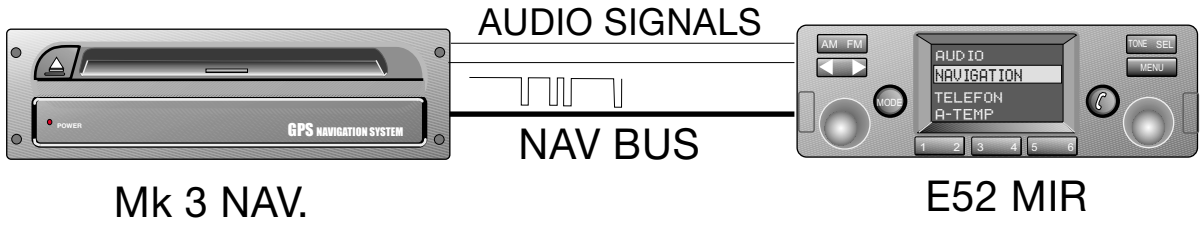

cardiagn.com

Speed Signals

A speed signal is provided to the navigation computer for detection of distance traveled and vehicle speed to calculate the vehicles position on the digital map. The input is a processed signal provided by the vehicles DSC control unit.

- E46: The speed signal used is from the left rear wheel.
- E38/E39/E52/E53: The speed signal used is from the left front wheel.

Reverse Gear Input

The reverse gear input is used by the navigation computer to distinguish between the vehicle backing up or turning around.

- E38/E39/E52/E53: The reverse input is a high signal produced by the LCM III.

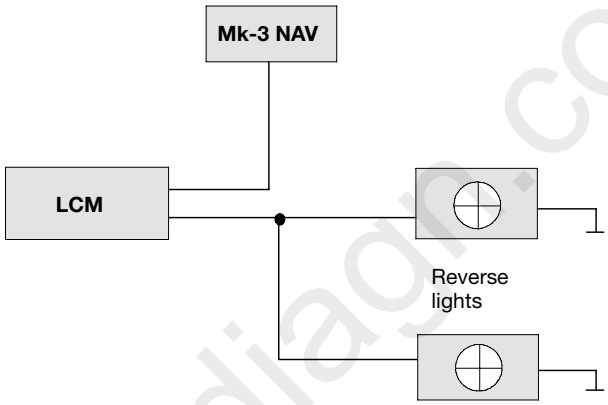

- E46: The reverse input is a high signal supplied by a splice from the back-up lights.

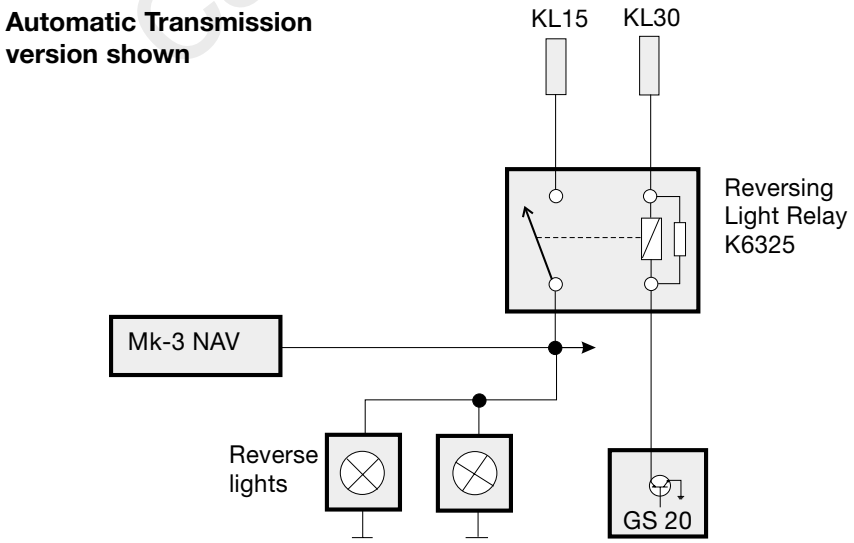

cardiagn.com

Principle of Operation

The Global Positioning System is a satellite based system developed by the US Department of Defense that provides both military and civilian users accurate information about location.

The GPS system uses 24 satellites in six orbits 12,550 miles above the Earth moving at 1.7mi per second. Usually 7 to 10 satellites are in view over any one point on the earth.

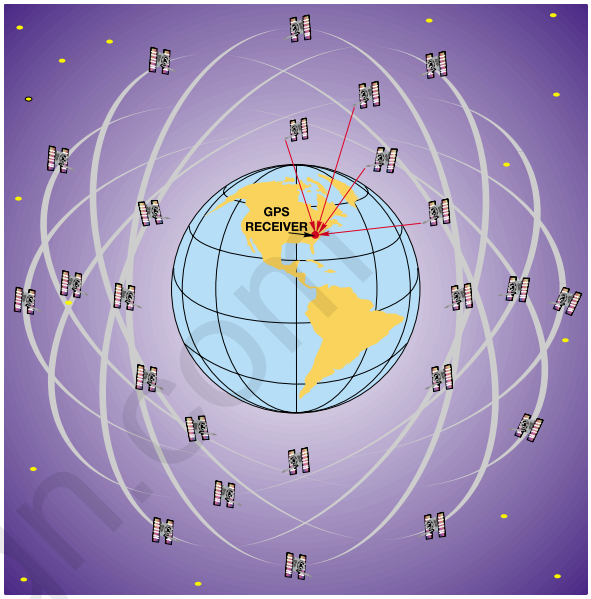

The GPS satellites are basically extremely accurate clocks that broadcast a coded signal representing time. The GPS receiver determines it's distance from the satellite by measuring the time it takes between satellite transmission of the signal and reception to the receiver. The receiver does this with at least 2 other satellites and uses the information to determine the vehicles latitude, longitude, and altitude. The accuracy of the system for civilian use is within 100m (300ft).

The vehicle must have an unobstructed view of the sky to receive the maximum amount of satellite signals. Trees, large buildings and excessive cloud cover can block the reception of the satellites' transmissions.

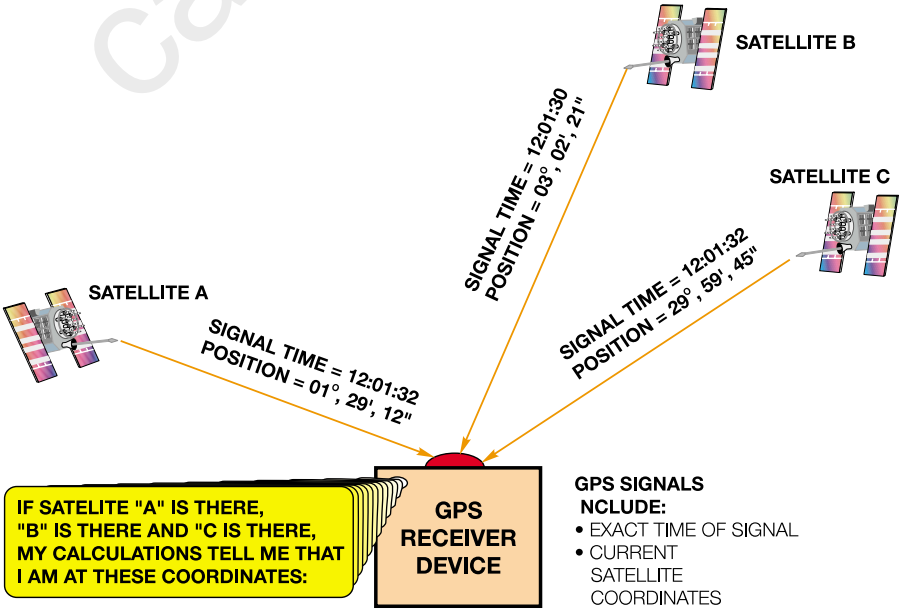

cardiagn.com

The GPS antenna passes the signal to the GPS receiver incorporated in the navigation computer. A CD with map data is loaded in the CD drive of the navigation computer. The navigation computer combines the vehicle position calculated by the GPS with this map data.

The current position of the vehicle can be shown on the on-board monitor by selecting "Emergency" from the main menu.

The driver can enter a destination. The navigation computer calculates a route from the current location to this destination based on selectable criteria (main use of highways, shortest distance, etc.). The calculated route is shown in the route display.

The navigation computer generates the RGB color video signal for all on-board monitor displays. These three signals are sent over separate shielded wires to the on-board monitor.

In the case of the E52 MIR (also referred as radio navigation) which does not have a color display, the visual display data is sent via one wire called the navigation bus. On both systems, color and monochrome display, the audio output from the navigation computer for voice directions is sent over two separate wires.

The driver has the choice of displays that utilize a color map with an icon of the vehicle being traced on the map or the use of arrow indicators and distance data shown on the on-board monitor display. Vehicles equipped with the wide screen board monitor have a split screen option that includes both display methods. The MIR only makes use of the arrows and distance display. With the assistance of voice prompts, the navigation computer indicates how and where to get into the correct lane or turn off.

The navigation computer calculates the distance traveled from the wheel speed signal delivered by the DSC control unit.

The gyro incorporated into the navigation computer housing informs the navigation computer when the vehicle is turning. An alternative route is re-calculated automatically if the driver does not follow the original route instructions.

Once the driver has reached their destination, the navigation computer is ready for another destination input.

Refer to the on-board monitor owners manual for instructions on using the navigation system software.

cardiagn.com

Workshop Hints

Replacing the Mk-3 navigation computer

When replacing the Mk-3 navigation computer be aware that there are two hardware variants depending on the installation position (vertical or horizontal).

The ignition should be in position 0 during removal and replacement of the computer. After installing, close all doors, hood and trunk. A bus line reset will be carried out within two minutes. Resetting allows the gyro to perform a calibration run. Do not move the car during this reset period.

The coding sequence for the Mk-3 navigation computer has been changed from the previous Mk-2. There is now an additional step (configuration) that must be done before the software can be loaded.

After resetting, a configuration signal is needed to allow the computer to load the correct software for use with a board monitor or MIR. This is performed using the DIS coding program (CD 22.0 onward) and the Navigation System operating software (CD V15.0 onward).

Note: Vehicles using the wide screen BM require CD V16.1 onward.

1. **From the DIS/MoDiC Coding /Programming select “1 ZCS Coding”**
2. **Select the appropriate series (E46,E39,E38,E52,E53)**
3. **Select “4 Conversion”**
4. **Select “3 IKE?Kombi”**
5. **Select “2 language”**
6. **At the prompt “is the CD ROM present?” select yes , but do not install the operating software CD ROM yet.**
7. **First select the main language and then an additional language. (i.e. English-spanish)**
8. **Select the gender of the navigation audio voice.**
9. **Select “automatic coding-yes”**

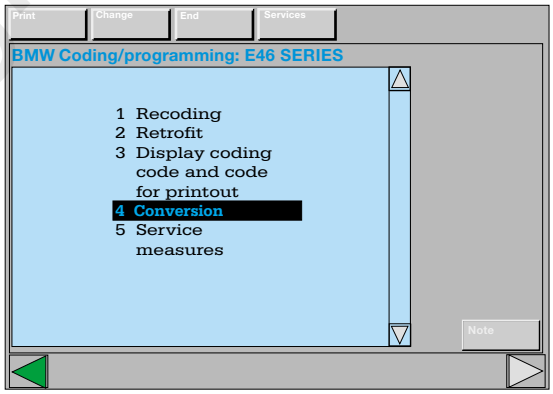

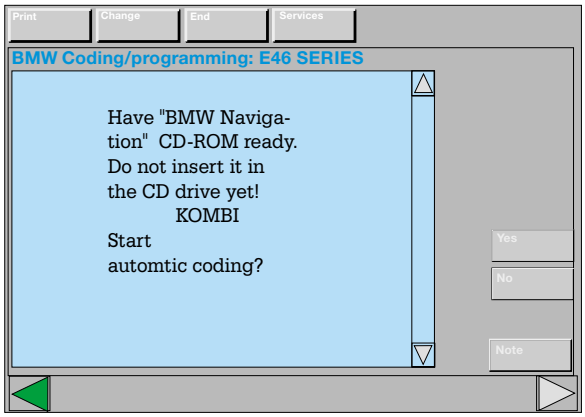

cardiagn.com

10. **After coding is done the DIS/MoDiC instructs you to follow the instructions on the monitor for the installation of the Navigation System CD ROM.**

11. **Place the navigation system software in the navigation computer CD drive.**

Important: Do not switch the ignition off during the software loading procedure. Do not use any software for the Mk-3 earlier than CD V15.0.

12. **Once loading has been completed, remove the CD and then confirm completion by pressing the rotary push-button on the monitor.**

13. **Turn off the key for 10 seconds, then turn it back on and conduct a functional check.**

14. **After this step has been finished, encode the navigation computer using the "Recoding" path in ZCS Coding. The coding process involves coding vehicle specific data: VIN, Model, Telematics data etc.**

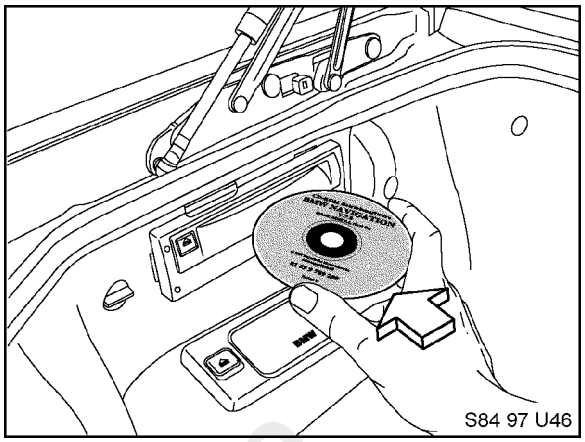

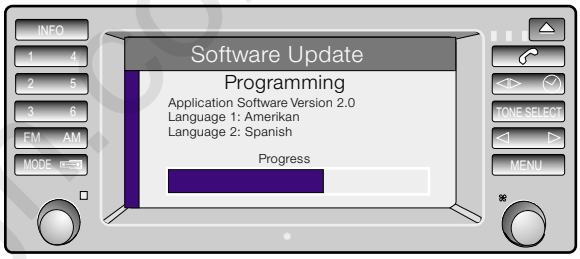

The software status can be confirmed from the "Set" screen for Mk-3 systems.

- **3** = Third generation system Mk-3.
- **1** = Device variant (1=Color screen, 2= MIR monochrome screen).
- **20** = Software version of the graphic component (Version 2.0).

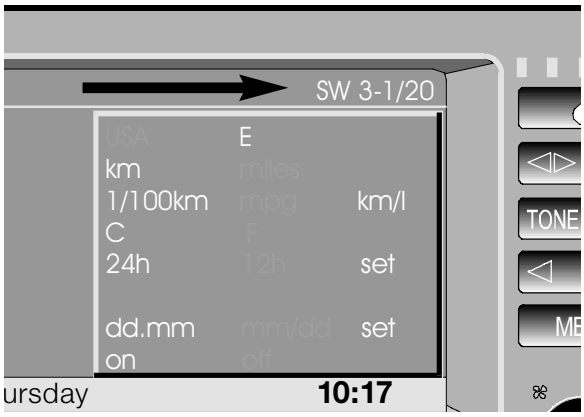

After the navigation computer has been successfully programmed and coded the vehicle should be left in an area with a clear view of the sky with the key in KL R for at least 15 minutes to complete the calibration process.

cardiagn.com

Service Mode

Just as Mk-2, Mk-3 provides an on-screen service mode for diagnosis. The service mode provides five different test screens:

- On-board monitor
- Navigation/Graphic element
- GPS
- Sensor Check
- Telematics

To enter the Navigation Service Mode:

- Turn the ignition key to position 1 (KL R).
- From the Menu screen select “SET”.
- Once in the Set screen, press and hold the “MENU” button for 8 seconds.
- The Service Mode menu will appear on the display.
- Select from the Service Mode menu for navigation specific tests.

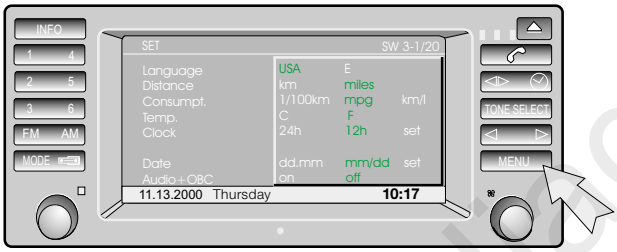

Press and hold for 8 seconds after entering the “Set” mode

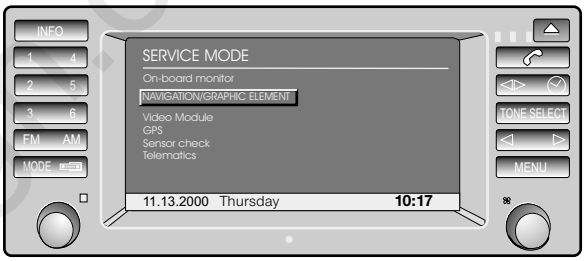

Service Mode main menu display

Diagnosis

Diagnosis is carried out using Test Modules in the Diagnosis Program as well as on-screen in the Service mode.The Sensor Check display is intended to be used while test driving the vehicle. The following pages contain charts with explanations of the Service Mode display.

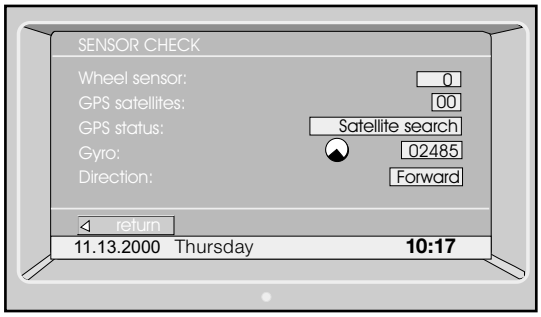

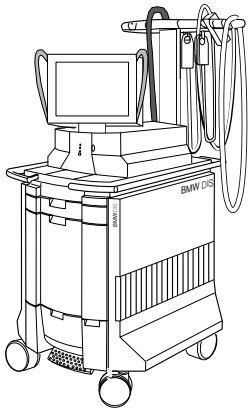

cardiagn.com

STATUS DISPLAY	WHAT SHOULD BE DISPLAYED	WHAT TO DO IF NOT OK
Wheel Sensors:	As the vehicle is driven, the number should increase with an increase in vehicle speed.	Check fault codes in DSC system. If necessary carry out wheel speed sensor test.
GPS Satellites:	With unobstructed upward view of sky the display should be > 3	Check for interference of signals to GPS antenna, Check integrity of circuit from GPS antenna to nav computer.
GPS Status:	"See Legend below"	
Gyro:	Direction icon moves with vehicle turning movement. Milli voltage display value should be approx 2500 mV (+/- 400mV) when the vehicle is stationary or driven straight ahead. When the vehicle is turning, the signal voltage should increase on right hand turns and decrease on left hand turns.	Replace Navigation computer.
Direction:	Reverse is displayed when range selector is in reverse. Forward in any other range.	Check back up light signal input.

GPS Status Text Display	Description
1. "GPS fault"	Problem with GPS system. Swap nav computer and or antenna from know good vehicle after checking GPS status display information
2. "Reception Interference"	Problem with GPS system. Same as above.
3. "No Almanac"	No Data yet stored from satellites. The GPS almanac is a memory account of received satellite signals. If the vehicle battery has been disconnected or after replacing a nav computer it has an empty memory and requires satellite signals to become functional. After the nav computer receives battery voltage and ground, it must be left outside with an unobstructed sky above with the ignition switched to KL R for approximatly 15 minutes.
4. "Satellite search"	GPS is currently searching for satellite signals.
5. "Satellite contact"	At least one satellite is found
6. "Position known"	Vehicle's Latitude and Longitude known. Navigation is possible.

cardiagn.com

Menu	Display	Explanation
GPS/Status	G-speed	Relative speed over the ground
	Heading	Direction of travel
	Rec status	Search/track/position receiver status
	Pos-src	Number of satellites available for analysis
	PDOP	Accuracy of the calculated location
	HDOP	<8=sufficient determinations of location
	VDOP	<4=very good determinations of location
GPS/Tracking info	CH	Channel
	PRN	Satellite detection
	S/N	Better reception as the value increases
	Visible Sat	Number of visible satellites, receivable Signals, depending on time of day/configuration
	Almanac	Satellite database, loaded automatically after 15 minutes
Telematics	VIN	VIN (Automatically assigned during coding)
	Color	Color code or text
	GSM	Telephone network/contract number
	BMW info	Customer specific info
	Emergency call out	On/off status
	Initialization	Telematics services on/off status
	Logging off	Logging off telematics services

PDOP **Position Dilution of Precision**
HDOP **Horizontal Dilution of Precision**
VDOP **Vertical Dilution of Precision**
S/N **Signal/noise relationship**
Gyro **Piezo gyro sensor (in navigation computer)**
Dir **Direction of travel**

cardiagn.com

PARK DISTANCE CONTROL

INTRODUCTION

Park Distance Control is a safety/convenience system that is an option on the E46. The system is carried over from the E39 and features the ultra-sonic sensors on the rear bumper only.

The sensors detect the close proximity to other objects when maneuvering the vehicle in tight spaces (such as parallel parking or parking in narrow garages spaces).

The driver is warned, through an audible tone (beeping), when the vehicle comes close to another object. As the distance to the object decreases, the beeping frequency increases until a steady tone is produced. As the distance to the object increases, the steady tone will return to a beep and stop when the vehicle moves away from the object.

The PDC is automatically switched ON when the ignition is switched on, however it does not become active until the vehicle is shifted into reverse.

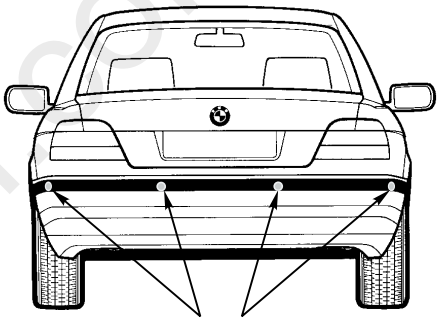

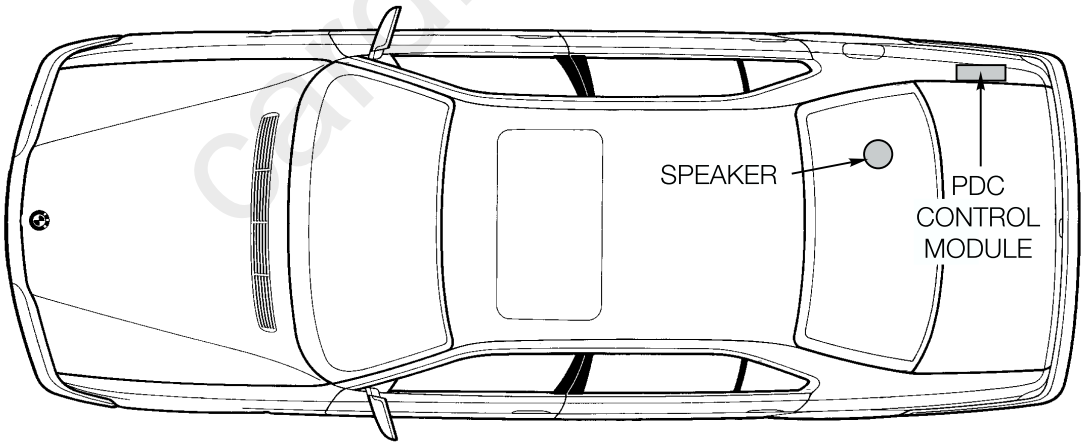

cardiagn.com

PDC COMPONENTS

The PDC consists of the following components:

PDC CONTROL MODULE - Mounted in the trunk on the right side above the battery.

The PDC control module activates the ultrasonic sensors mounted in the rear bumper cover. After activation, the module monitors the signals coming back through the sensors. Through this signal, the control module is able to determine the distance to any object close to the bumpers of the vehicle. As the vehicle comes close to an object, the control module will activate the acoustic warning through the right rear audio system speaker.

FOUR ULTRASONIC SENSORS - Mounted in the rear bumper. The sensors are small transmitter/receiver modules that are specifically designed for automotive use. The sensors are limited to the following angles of monitoring:

- 90° on the horizontal plane
- 60° on the vertical plane

cardiagn.com

TRANSMITTING MODE

The control module sends a 40 Khz signal to the sensor and each sensor is then activated in a specific sequence (firing order). The ceramic element of the sensor vibrates and produces an ultrasonic sound wave that is sent out from the bumper.

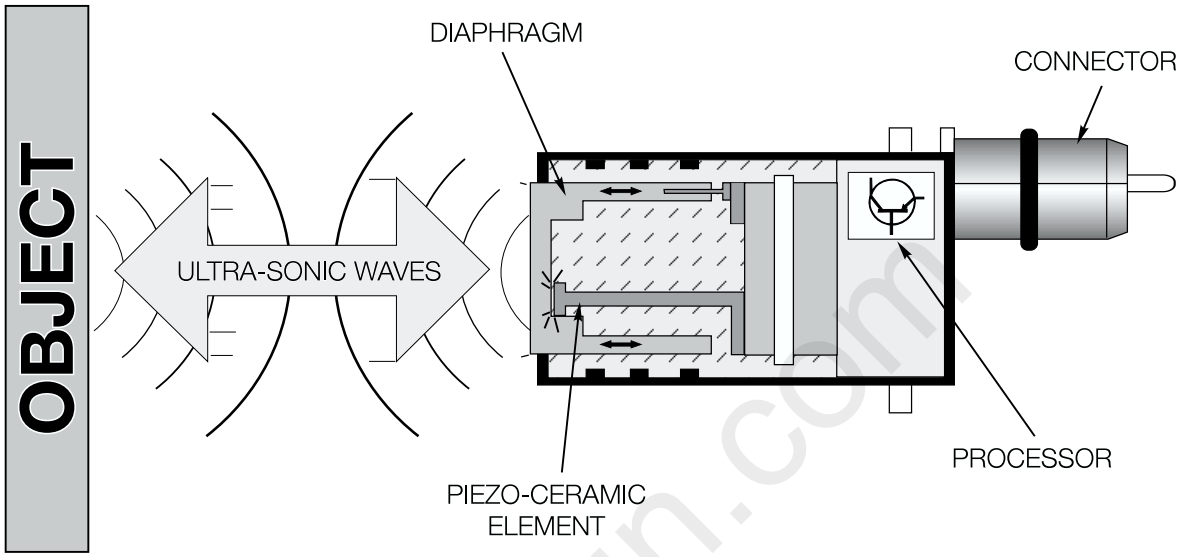

RECEIVING MODE

If the sound wave contacts an object, the wave is bounced back to the sensor. The returning wave causes the ceramic element to vibrate creating an electrical signal as feedback to the control module.

The control module determines the distance to the object by the time difference between the sent signal and the received ultrasonic wave signals.

cardiagn.com

SYSTEM OPERATION

When KL 15 is switched ON, the PDC system is switched "ON", in the standby mode. The system performs a self-check of the ultrasonic sensors and control electronics.

When the vehicle is shifted into reverse, the system is activated and the sensors are activated in the predetermined order.

If an object is detected within the operating range of one the sensors, a signal is sent to the PDC control module and the acoustic warning is generated. At the same time the control module checks the signals from the adjacent sensors to help determine the actual distance to the object.

As the distance to the object decreases, to approximately 1 ½ feet, the output acoustic frequency increases until a steady tone is generated.

As the distance to the object increases the frequency will decrease until the object is out of the monitoring range of the sensor.

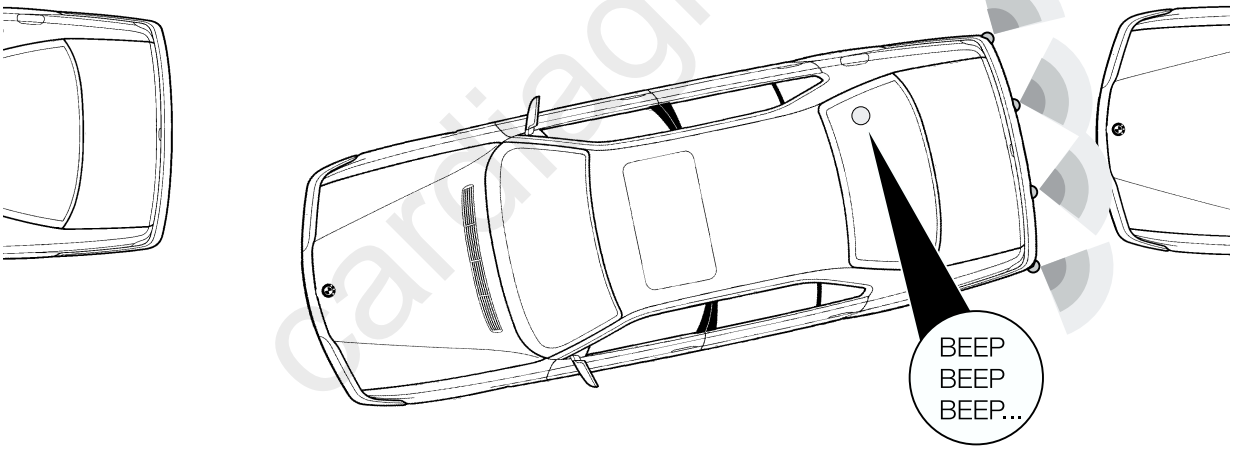

cartiagn.com

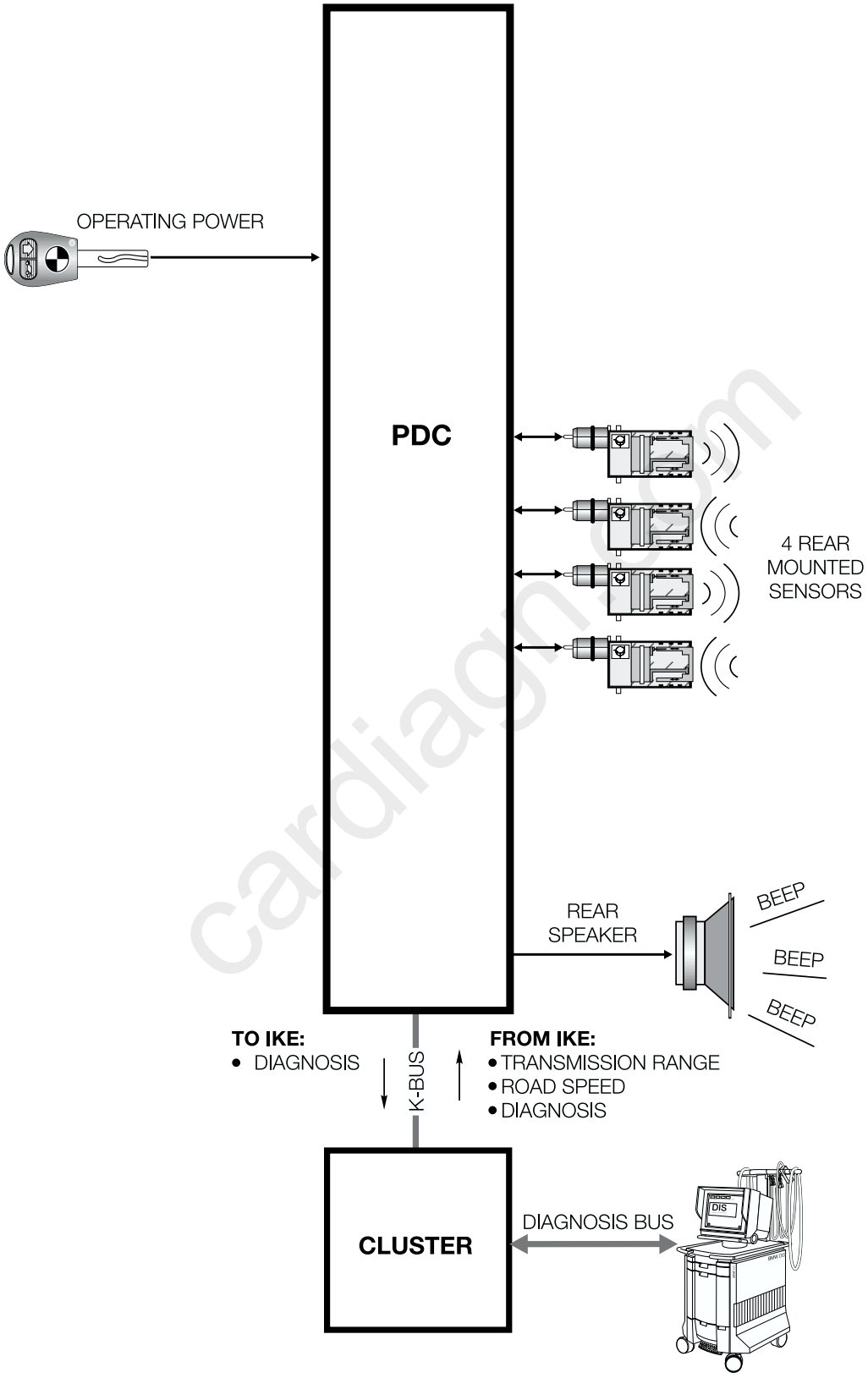

cardiagn.com

Review Questions

1. What is the principle Bus line used on the E46? List the modules that are located on this bus. _____

_____

_____

2. Describe how the Instrument Cluster receives the speed signal from the ASC/DSC control unit. _____

_____

3. What information does the cluster use to determine the Service Interval? Where can the Coded Consumption Limit be found? _____

_____

_____

4. Discuss how the Instrument Cluster and the LSZ share data storage. What would happen if a cluster from another vehicle is installed? Why does this happen?

_____

_____

5. If the LSZ module were to fail, what lights would remain functional?

_____

6. Explain the possible testing/troubleshooting procedures for an E46 equipped with Xenon lights. _____

_____

7. Which module is responsible for the automatic head light adjustments? What type of sensors are used in this system and where are they located? _____

_____

8. Where is the Diversity Antenna Amplifier located on an E46 Touring?

_____

9. Describe how to enter the Radio service mode on a vehicle with a Board Monitor.

_____

cardiagn.com

10. List the most significant changes made to the Mk-3 navigation computer over the previous Mk-2.

12. How can the signal provided by the gyro sensor to the navigation computer be checked?

13. What step is necessary before loading the navigation computer operating software CD on a newly replaced Mk-3 navigation computer? Where can the software status be confirmed after it has been loaded?

14. How is PDC switched on? What diagnosis is possible on the system?

cardiagn.com