EMISSION CONTROL SYSTEM

PARTS LOCATION

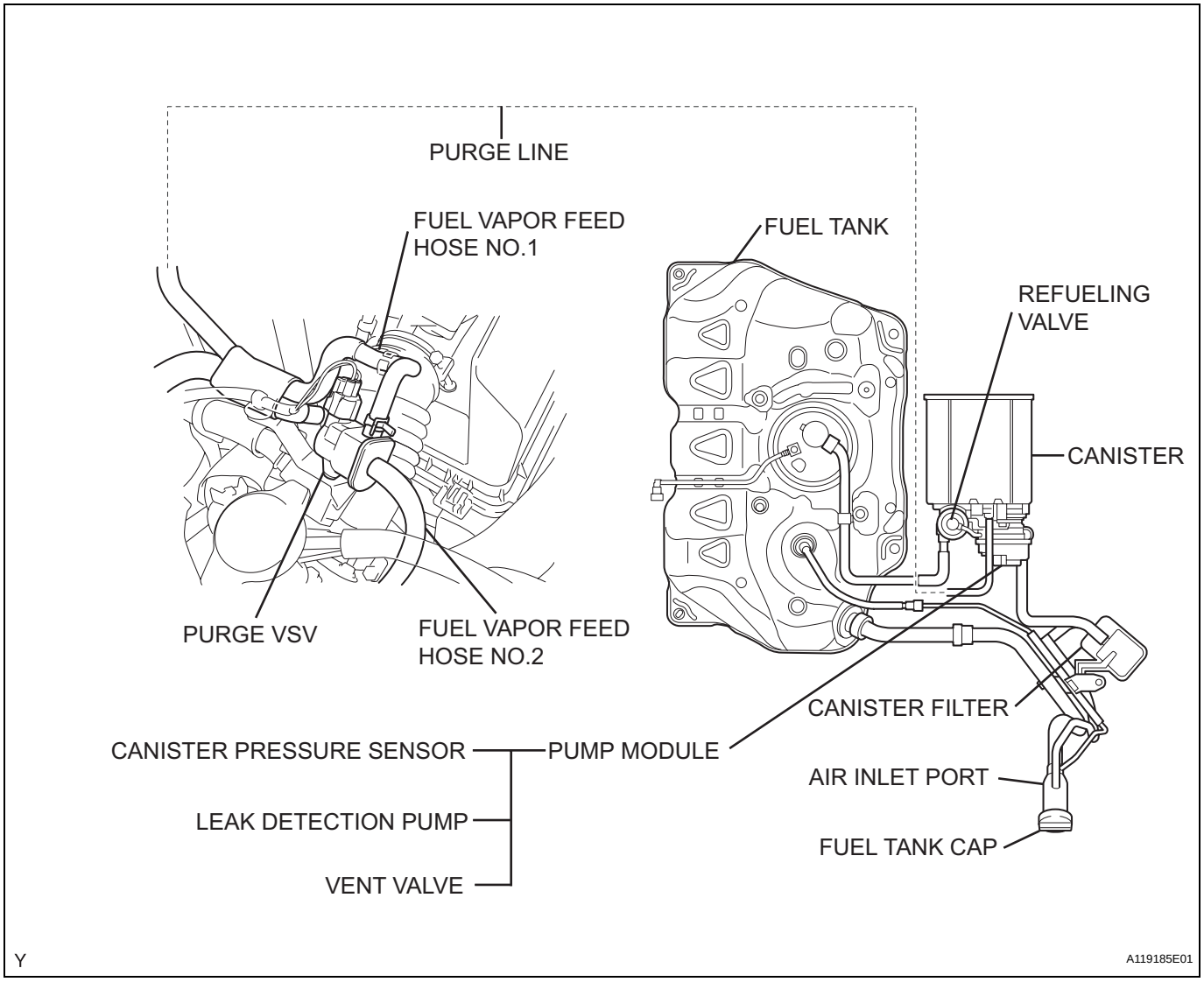

EC

EC

for Hatchback:

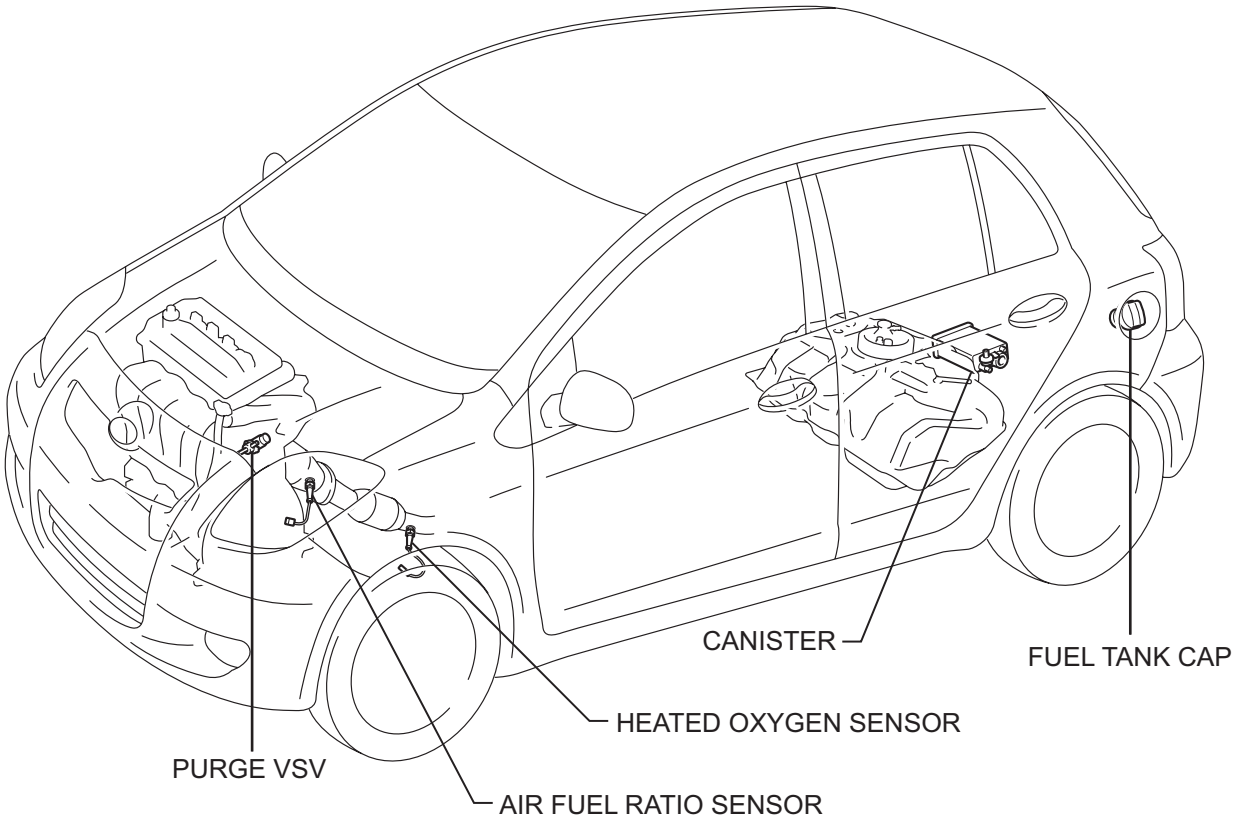

N

A117786E01

for Sedan:

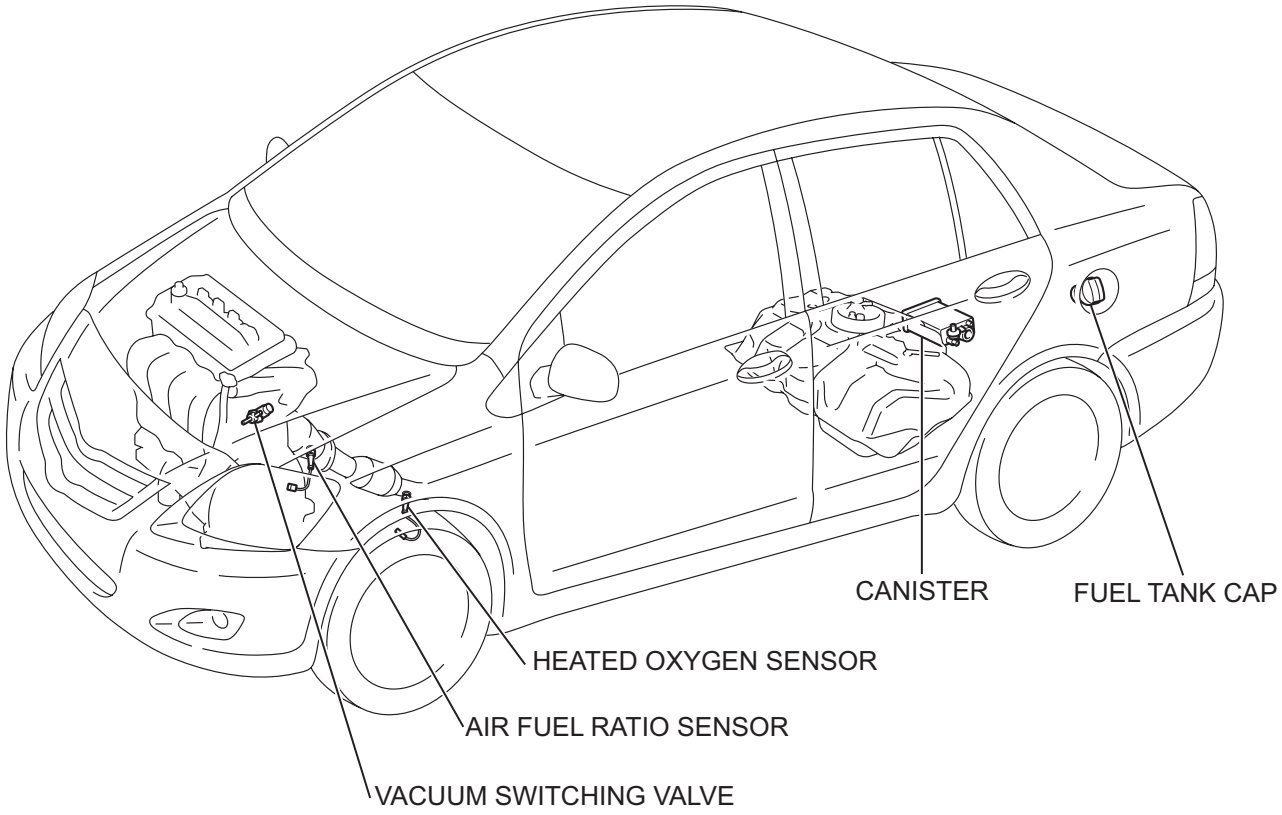

N

A133333E01

ON-VEHICLE INSPECTION

1. INSPECT FUEL CUT-OFF RPM

(a) Start and warm up the engine.
(b) Increase the engine speed to approximately 3,500 rpm.
(c) Using a sound scope, check the operation sound of the injector.
(d) Release the accelerator pedal. Check that the operation noise stops momentarily and then resumes.

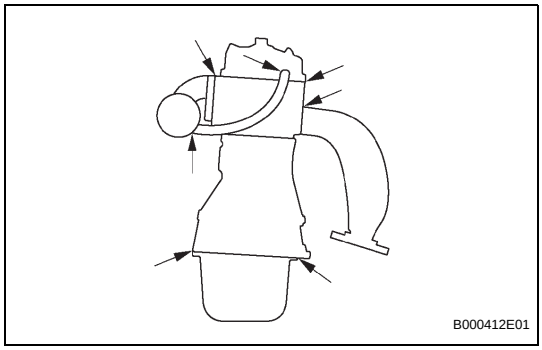

2. VISUALLY INSPECT HOSES, CONNECTIONS AND GASKETS

(a) Check that there are no cracks, leakage or scratches on the hoses, connections or gaskets.
HINT:
- Removing the oil level gauge, oil filter cap or PCV hose may cause the engine to malfunction or stall.
- Disconnections, looseness or cracks in the parts of the air induction system between the intake system and cylinder head will allow air suction and cause the engine to run improperly.

3. CHECK LINE AND CONNECTORS

(a) Visually check for loose connections, sharp bends and damage.

4. CHECK FUEL TANK ASSEMBLY

(a) Visually check for deformation, cracks and fuel leakage.

5. CHECK FUEL TANK AND VENT LINE

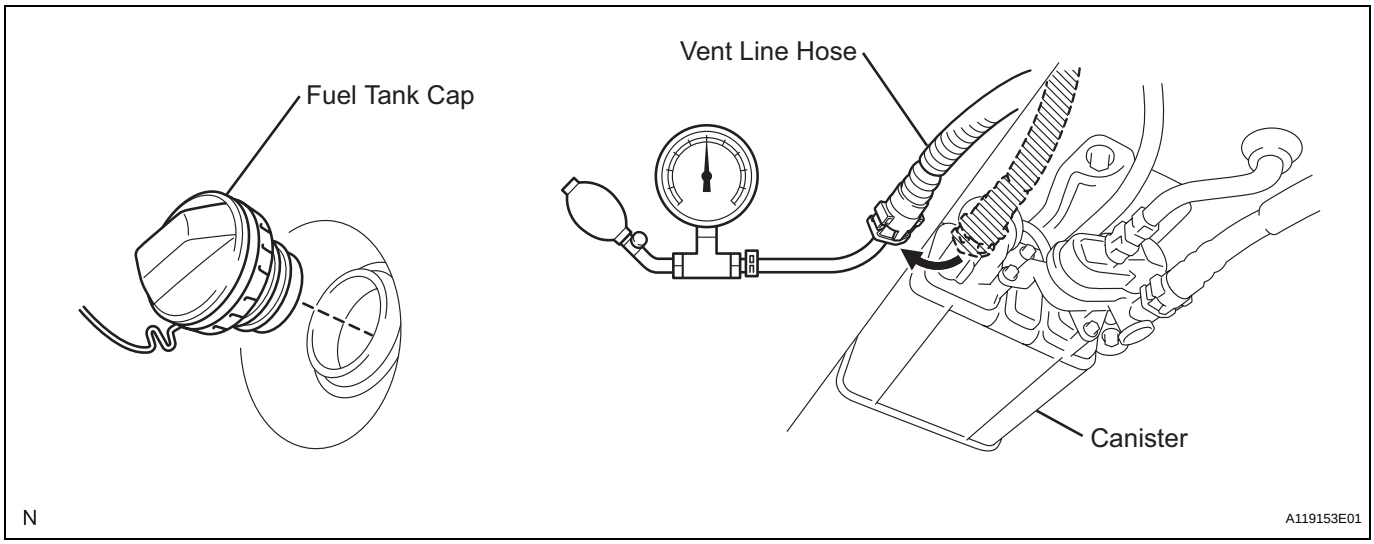

(a) Disconnect the vent line hose from the canister.
(b) Connect the pressure gauge to the vent line hose.

EC

(c) Apply 4 kPa (41 kgf/cm2, 30 mmHg) of pressure to the vent line of the fuel tank.
HINT:
Perform this inspection with the fuel tank less than 90% full. When the fuel tank is full, the fuel cutoff valve closes and the pressure is released through the 2 mm orifice. As a result, when the fuel tank cap is removed, the pressure does not decrease smoothly.

(d) Check that the fuel tank pressure is maintained for some time, and does not decrease immediately.
HINT:
If the pressure decreases immediately, one of the following may apply:
- The fuel tank cap is not completely tightened.
- The fuel tank cap is damaged.
- Air is leaking from the vent line.
- The fuel tank is damaged.

(e) When the fuel tank cap is removed, check that the pressure is released smoothly.
HINT:
If the pressure does not drop, replace the fuel tank assembly.

(f) Reconnect the vent line hose to the canister.

6. CHECK AIR INLET LINE

(a) Disconnect the air inlet line hose from the canister.

(b) Check that air flows freely into the air inlet line.
HINT:
If air does not flow freely into the air inlet line, repair or replace it.

(c) Reconnect the air inlet line hose to the canister.

CANISTER

COMPONENTS

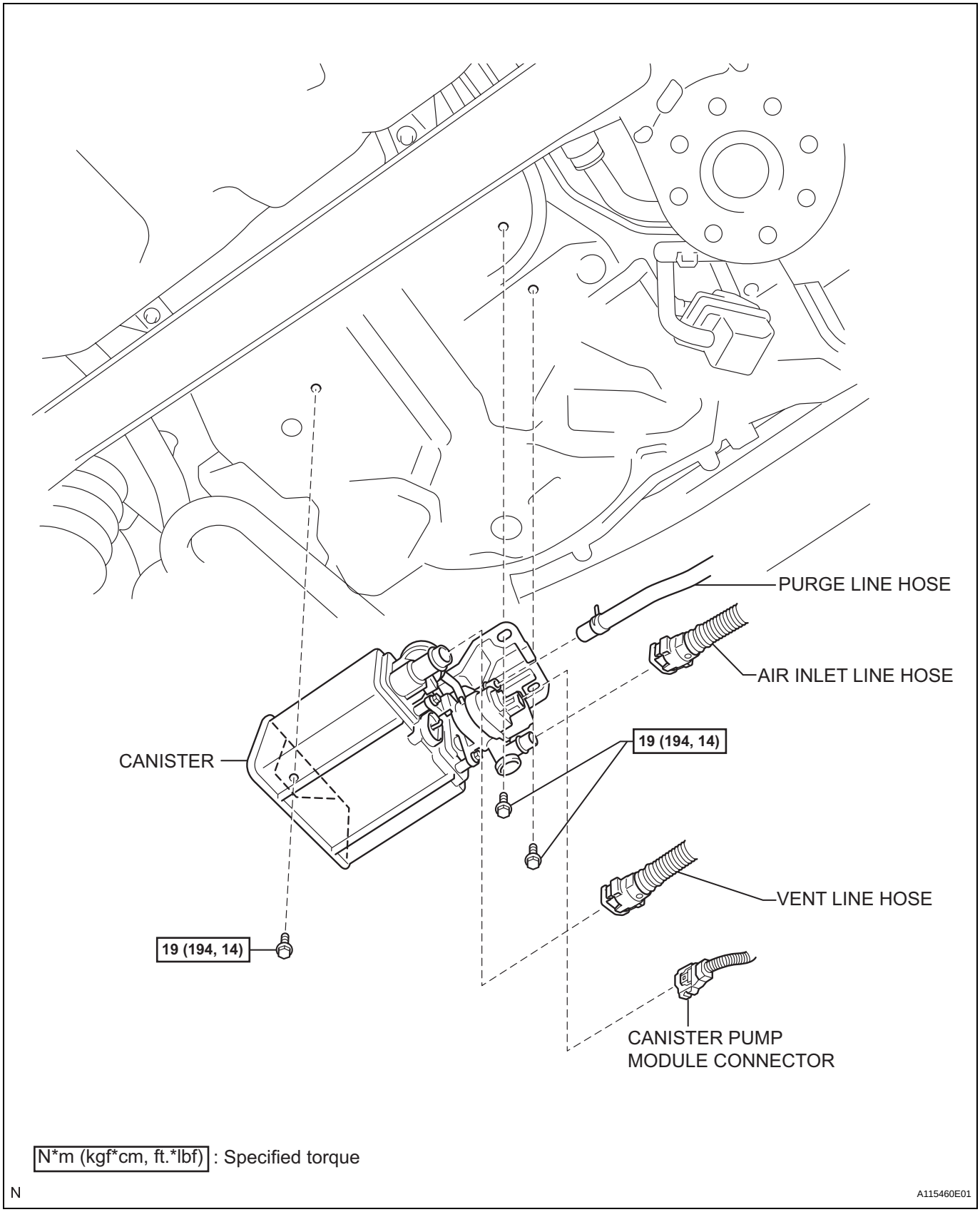

REMOVAL

1. DISCONNECT CABLE FROM NEGATIVE BATTERY TERMINAL

2. REMOVE CANISTER

(a) Disconnect the connector.

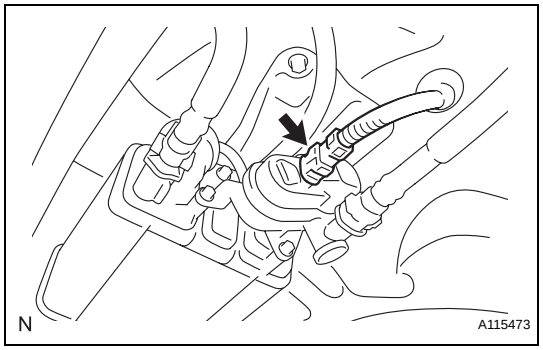

(b) Disconnect the purge line hose.
(c) Disconnect the air inlet line hose from the leak detection pump.
(d) Disconnect the vent line hose from the canister.

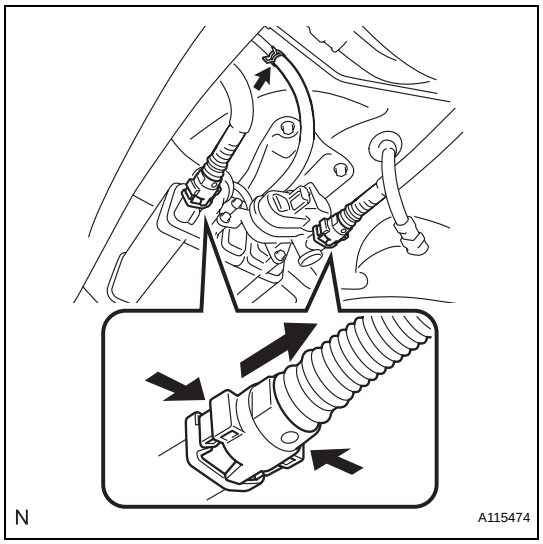

(e) Remove the 3 bolts and the canister assembly.

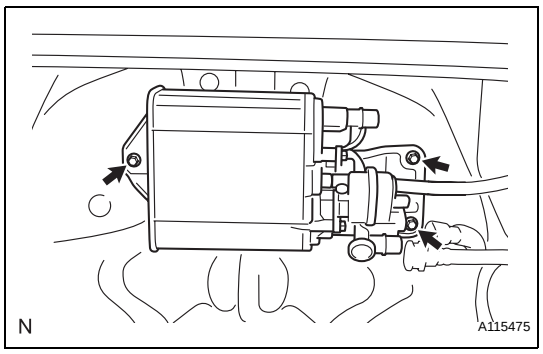

INSPECTION

1. INSPECT CANISTER

(a) Visually check the canister for cracks and damage. If cracks or damage are found, replace the canister.

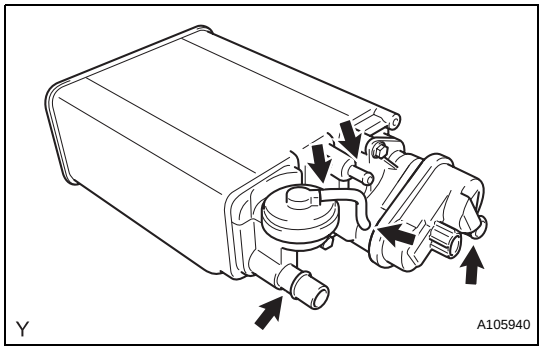

EC

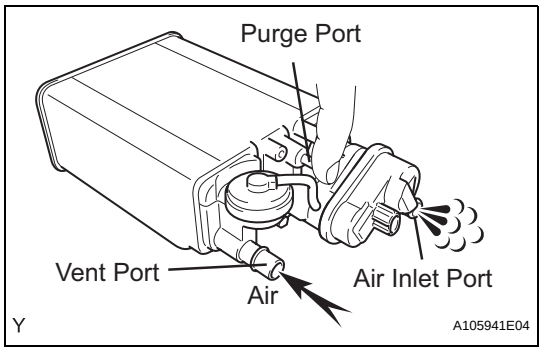

(b) Check the canister operation.

(1) While holding the purge port closed, blow air at 0.39 kPa (4.0 kgf/cm^2, 3 mmHg) into the vent port, and check that air flows from the air inlet port.
If the result is not as specified, replace the canister.

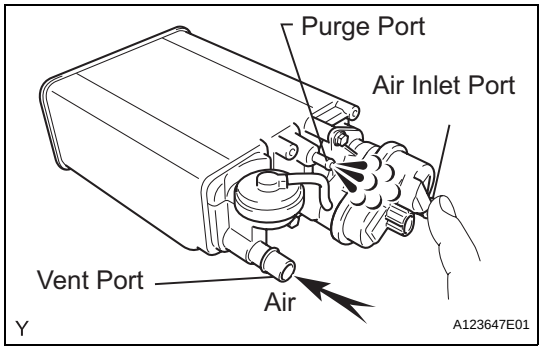

(2) While holding the air inlet port closed, blow air at 0.39 kPa (4.0 kgf/cm^2, 3 mmHg) into the vent port, and check that air flows from the purge port.
If the result is not as specified, replace the canister.

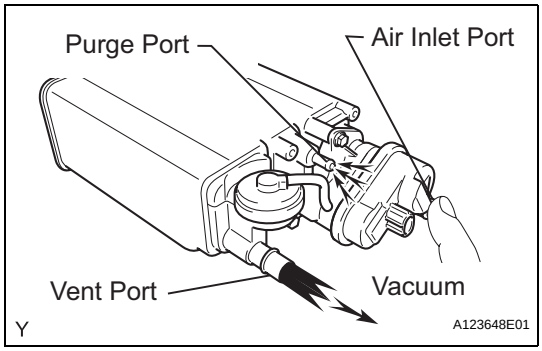

(3) While holding the air inlet port closed, apply vacuum at 3.43 kPa (35.0 kgf/cm^2, 25.7 mmHg) into the vent port, and check that air is sucked into the purge port.
If the result is not as specified, replace the canister.

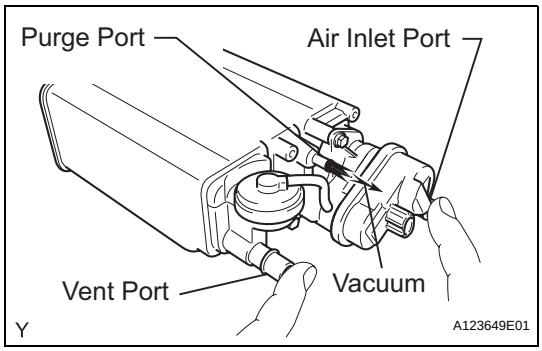

(c) Check the air tightness.

(1) While holding the vent and air inlet ports closed, apply vacuum at 3.43 kPa (35.0 kgf/cm^2, 25.7 mmHg) into the purge port, and check that the vacuum is maintained for 1 minute.
If the result is not as specified, replace the canister.

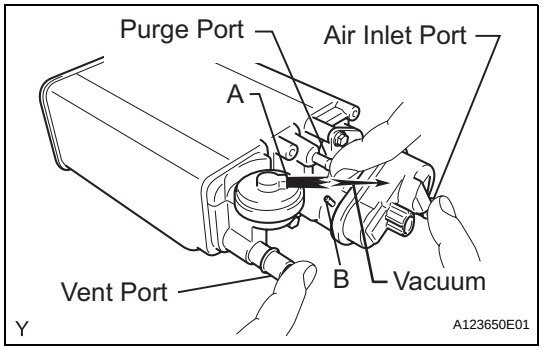

(d) Check the diaphragm.

(1) Remove the air hose between ports A and B.

(2) While holding the vent, purge and air inlet ports closed, apply vacuum at 1.42 kPa (14.5 kgf/cm^2, 10.6 mmHg) into port A, and check that air is not sucked into port B.

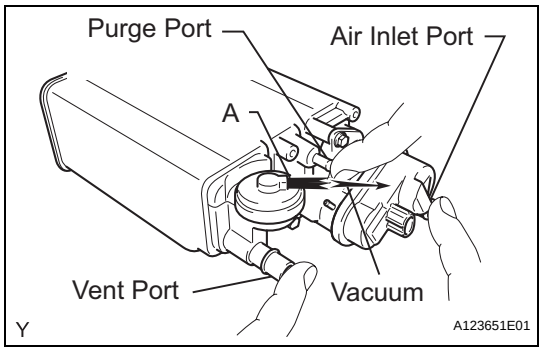

(3) While holding the vent, purge and air inlet ports closed, apply vacuum at 1.42 kPa (14.5 kgf/cm^2, 10.6 mmHg) into port A, and measure how long it takes for the vacuum to drop.
Vacuum drop time:
10 seconds or more
If the result is not as specified, replace the canister.

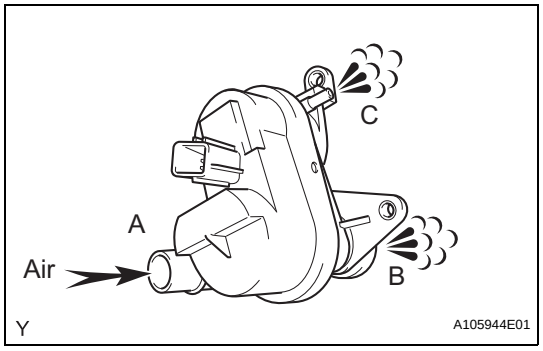

(e) Check the leak detection pump.
(1) Check that air flows from port A to ports B and C.
If the result is not as specified, replace the canister.

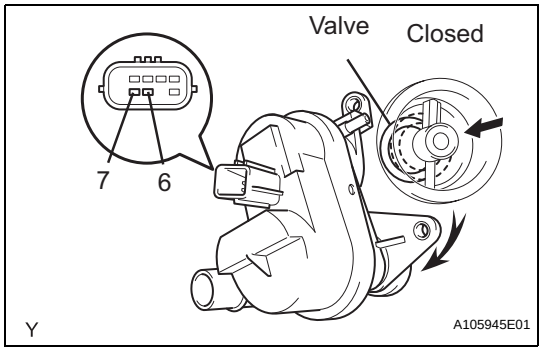

(2) Connect the positive (+) lead of the battery to terminal 7 and the negative (-) lead to terminal 6.
(3) Check that the valve is closed.
If the result is not as specified, replace the canister.
(4) Install the canister pump module.

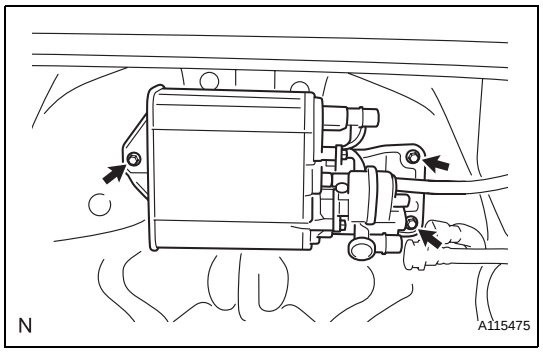

INSTALLATION

1. INSTALL CANISTER

(a) Install the canister with the 3 bolts.
Torque: 19 N*m (194 kgf*cm, 14 ft.*lbf)

EC

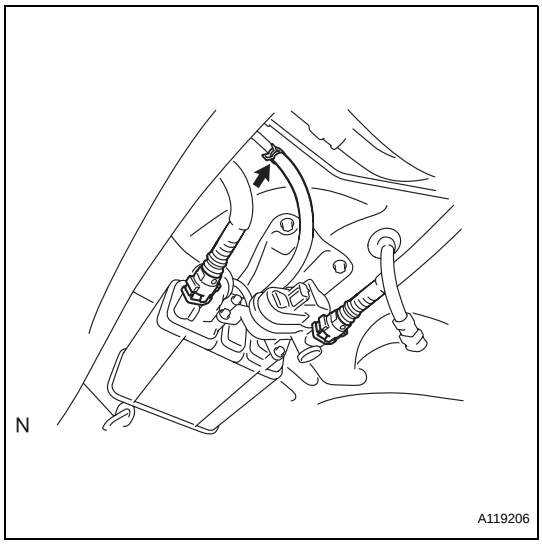

(b) Connect the vent line hose to the canister.
(c) Connect the air inlet line hose to the leak detection pump.
(d) Connect the purge line hose.

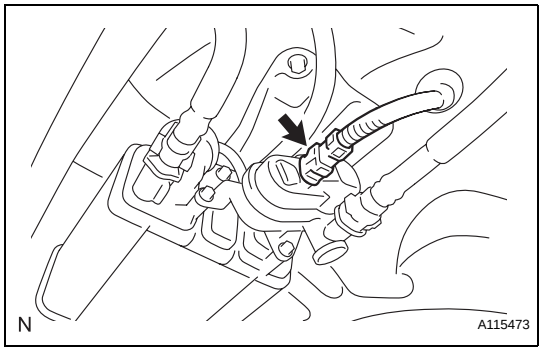

(e) Connect the connector.

2. CONNECT CABLE TO NEGATIVE BATTERY TERMINAL
Torque: 5.4 N*m (55 kgf*cm, 48 in.*lbf)

VACUUM SWITCHING VALVE

COMPONENTS

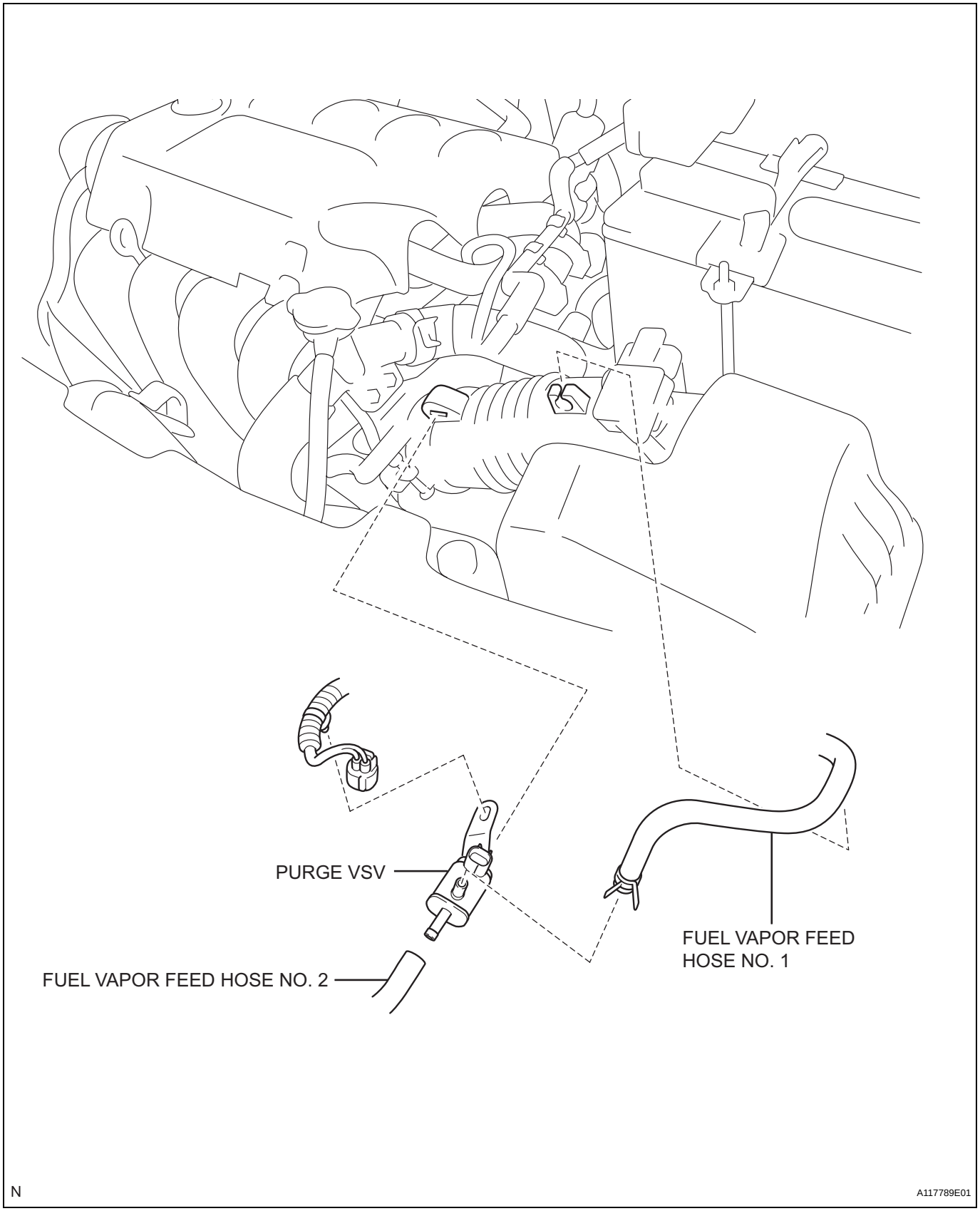

REMOVAL

1. DISCONNECT CABLE FROM NEGATIVE BATTERY TERMINAL

2. DISCONNECT FUEL VAPOR FEED HOSE NO. 1

(a) Disconnect fuel vapor feed hose No. 1.

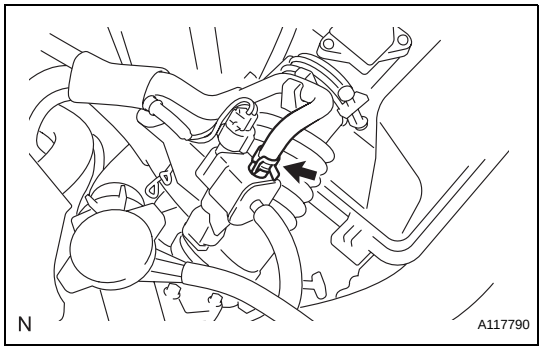

3. DISCONNECT FUEL VAPOR FEED HOSE NO. 2

(a) Disconnect fuel vapor feed hose No. 2.

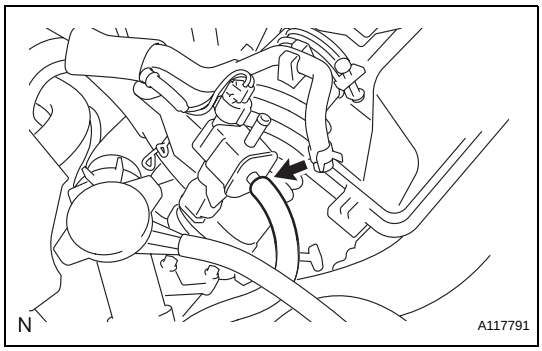

4. REMOVE PURGE VSV

(a) Disconnect the purge VSV connector and disengage the clip.

(b) Remove the purge VSV.

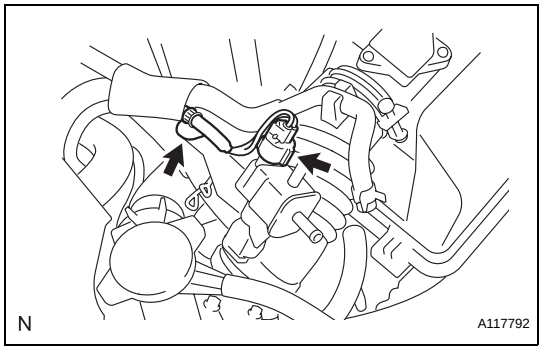

INSPECTION

1. INSPECT PURGE VSV

(a) Check the resistance.

(1) Using an ohmmeter, measure the resistance between the terminals.

Standard resistance

Tester Connection	Specified Condition
1 - 2	23 to 26 Ω at 20°C (68°F)

If the resistance is not as specified, replace the purge VSV.

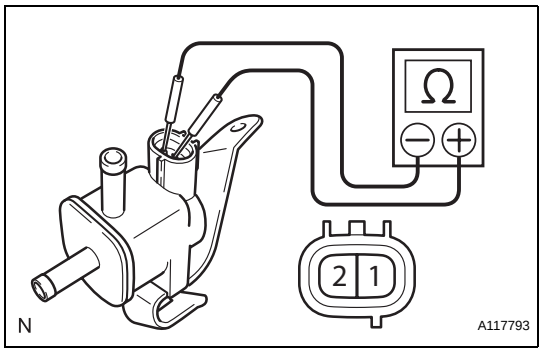

EC

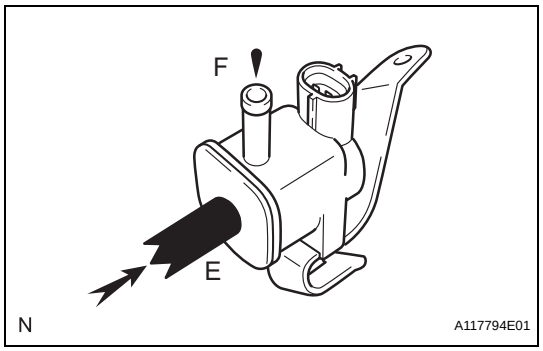

(b) Check the operation.
(1) Check that air does not flow from port E to F.

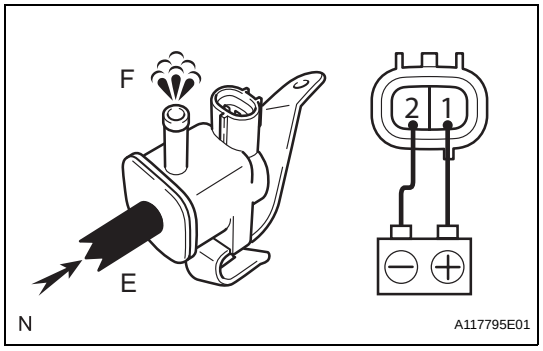

(2) Apply battery voltage across the terminals.
(3) Check that air flows from port E to F.
If the operation is not as specified, replace the purge VSV.

INSTALLATION

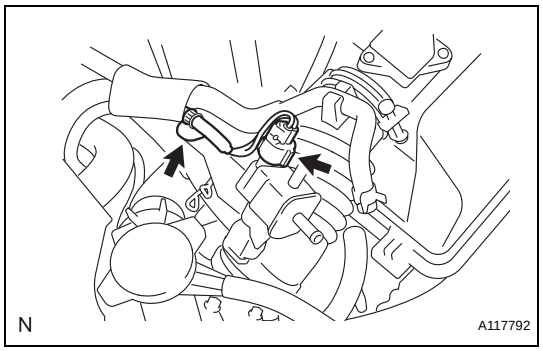

1. INSTALL PURGE VSV
(a) Install the purge VSV.
(b) Engage the clip and connect the purge VSV connector.

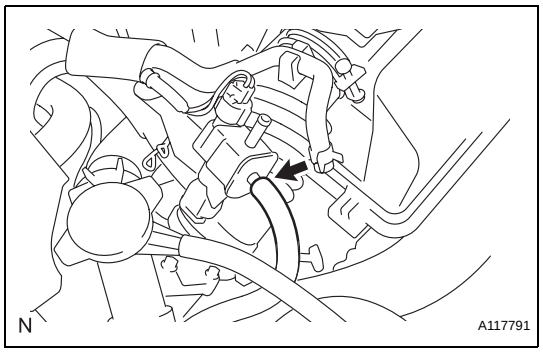

2. CONNECT FUEL VAPOR FEED HOSE NO. 2
(a) Connect fuel vapor feed hose No. 2.

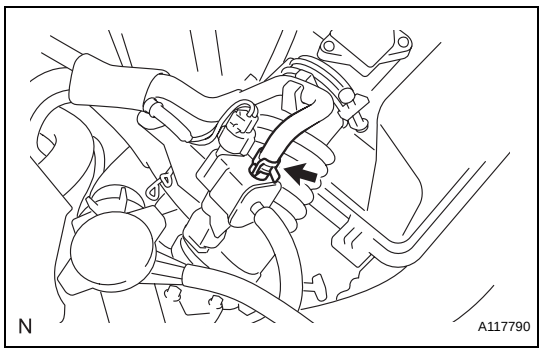

3. CONNECT FUEL VAPOR FEED HOSE NO. 1
(a) Connect fuel vapor feed hose No. 1.

4. CONNECT CABLE TO NEGATIVE BATTERY TERMINAL
Torque: 5.4 N*m (55 kgf*cm, 48 in.*lbf)

VENTILATION VALVE

COMPONENTS

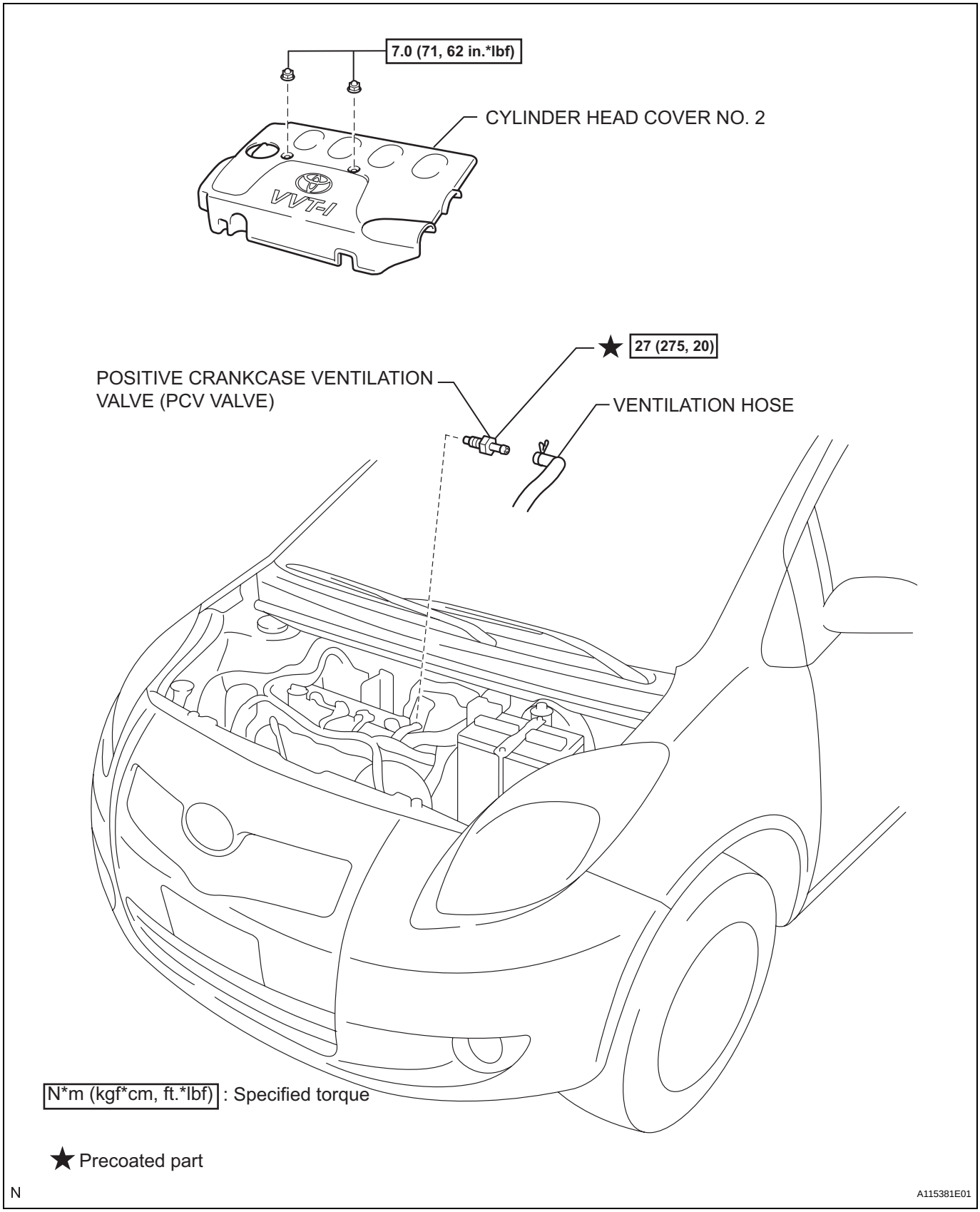

EC

REMOVAL

1. **REMOVE CYLINDER HEAD COVER NO. 2 (See page IG-9)**

2. **DISCONNECT VENTILATION HOSE**

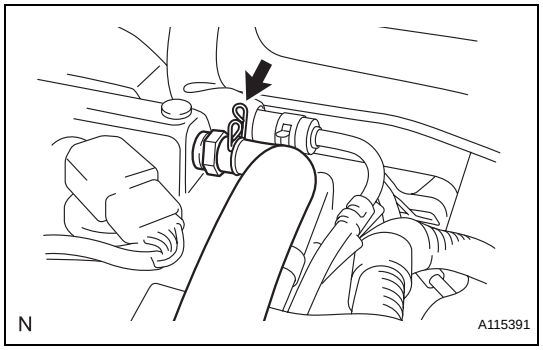

3. **REMOVE POSITIVE CRANKCASE VENTILATION VALVE (PCV VALVE)**
   (a) Remove the positive crankcase ventilation valve (PCV valve).

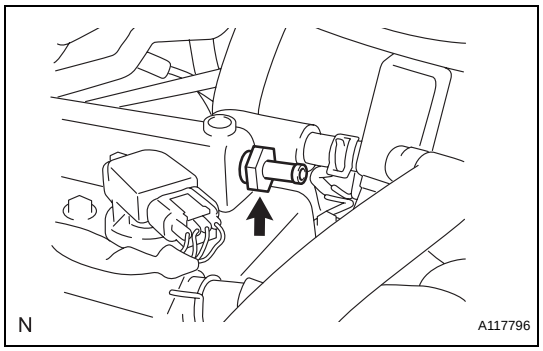

INSPECTION

1. **INSPECT POSITIVE CRANKCASE VENTILATION VALVE (PCV VALVE)**
   (a) Install the hose onto the positive crankcase ventilation valve (PCV valve).
   (b) Check the ventilation.
      (1) Check the ventilation when air is applied from the cylinder head side.
      Standard:
      Air flows.
      CAUTION:
      Do not inhale the air from the ventilation valve because it is harmful.

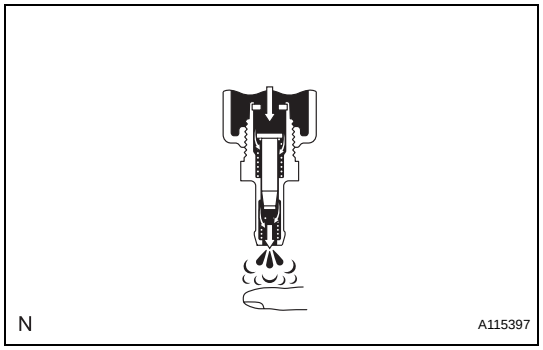

      (2) Check the ventilation when air is applied from the intake manifold side.
      Standard:
      Air does not flow.
      If the ventilation is not as specified, replace the positive crankcase ventilation valve (PCV valve).
   (c) Remove the hose from the positive crankcase ventilation valve (PCV valve).

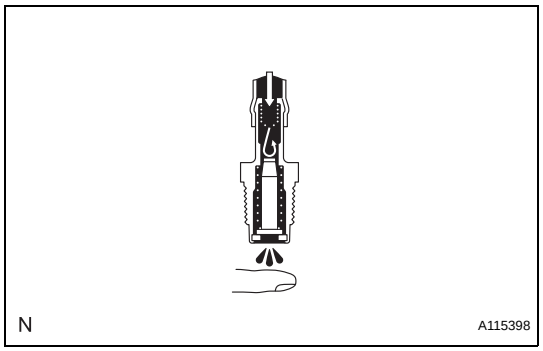

EC

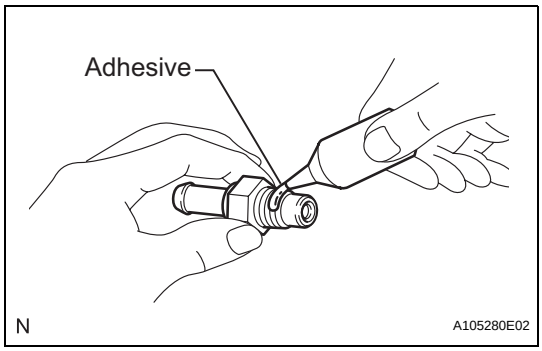

INSTALLATION

1. INSTALL POSITIVE CRANKCASE VENTILATION VALVE (PCV VALVE)

(a) Install the positive crankcase ventilation valve (PCV valve).

(1) Apply adhesive to the end 2 or 3 threads of the bolt.

Adhesive:
Toyota Genuine Adhesive 1324, Three Bond 1324 or the equivalent.

(2) Install the positive crankcase ventilation valve (PCV valve).

Torque: 27 N*m (275 kgf*cm, 20 ft.*lbf)

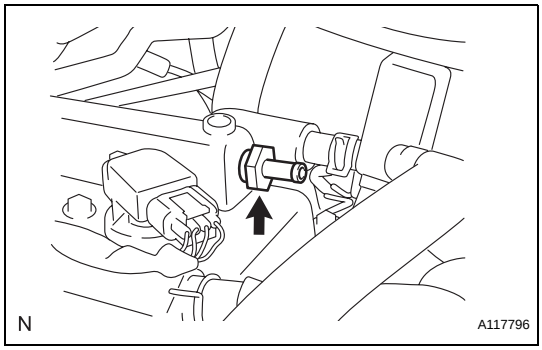

EC

2. CONNECT VENTILATION HOSE

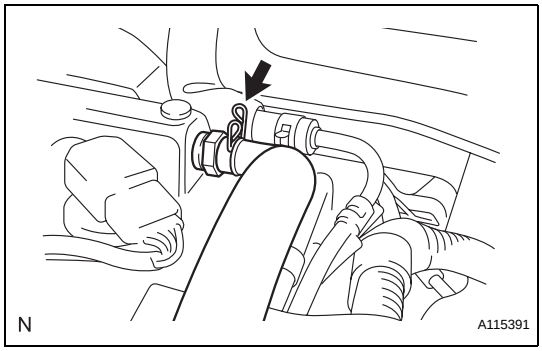

3. INSTALL CYLINDER HEAD COVER NO. 2 (See page IG-10)

AIR FUEL RATIO SENSOR

COMPONENTS

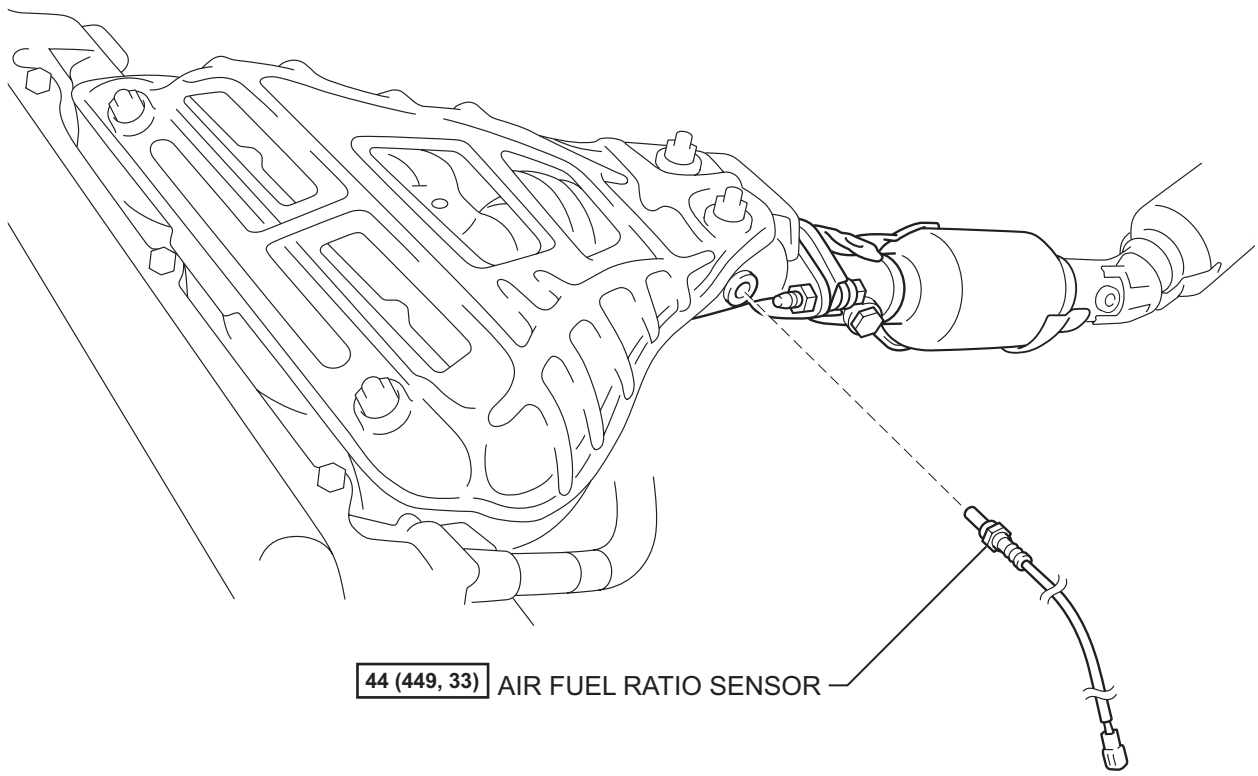

N*m (kgf*cm, ft.*lbf) : Specified torque

N

A115422E02

REMOVAL

1. DISCONNECT CABLE FROM NEGATIVE BATTERY TERMINAL

2. REMOVE AIR FUEL RATIO SENSOR

(a) Disconnect the air fuel ratio sensor connector and clamp.

(b) Using SST, remove the heated oxygen sensor.
SST 09224-00010

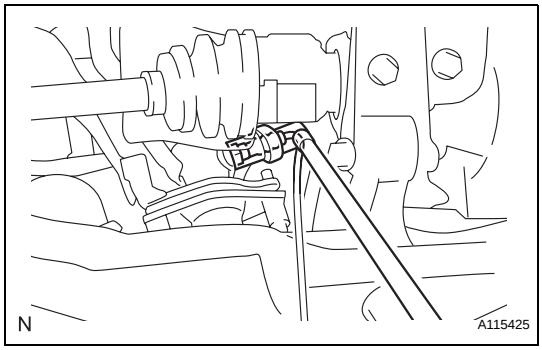

INSPECTION

1. INSPECT AIR FUEL RATIO SENSOR

(a) Check the resistance.

(1) Using an ohmmeter, measure the resistance between the terminals.
Standard resistance

Tester Connection	Specified Condition
1 (HA1A) - 2 (+B)	1.8 to 3.4 Ω at 20°C (68°F)
1 (HA1A) - 4 (E2)	10 kΩ or higher

If the resistance is not as specified, replace the sensor.

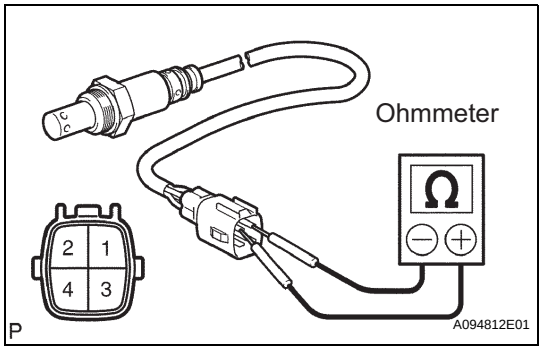

INSTALLATION

1. INSTALL AIR FUEL RATIO SENSOR

(a) Using SST, install the air fuel ratio sensor.
SST 09224-00010
Torque: 44 N*m (449 kgf*cm, 33 ft.*lbf) (without SST)
Torque: 40 N*m (408 kgf*cm, 30 ft.*lbf) (with SST)
HINT:
Use a torque wrench with a fulcrum length of 300 mm (11.81 in.).

(b) Connect the air fuel ratio sensor connector and the clamp.

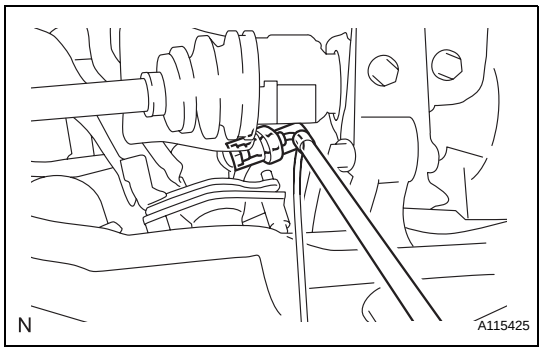

2. CONNECT CABLE TO NEGATIVE BATTERY TERMINAL
Torque: 5.4 N*m (55 kgf*cm, 48 in.*lbf)

3. CHECK FOR EXHAUST GAS LEAKAGE

HEATED OXYGEN SENSOR

COMPONENTS

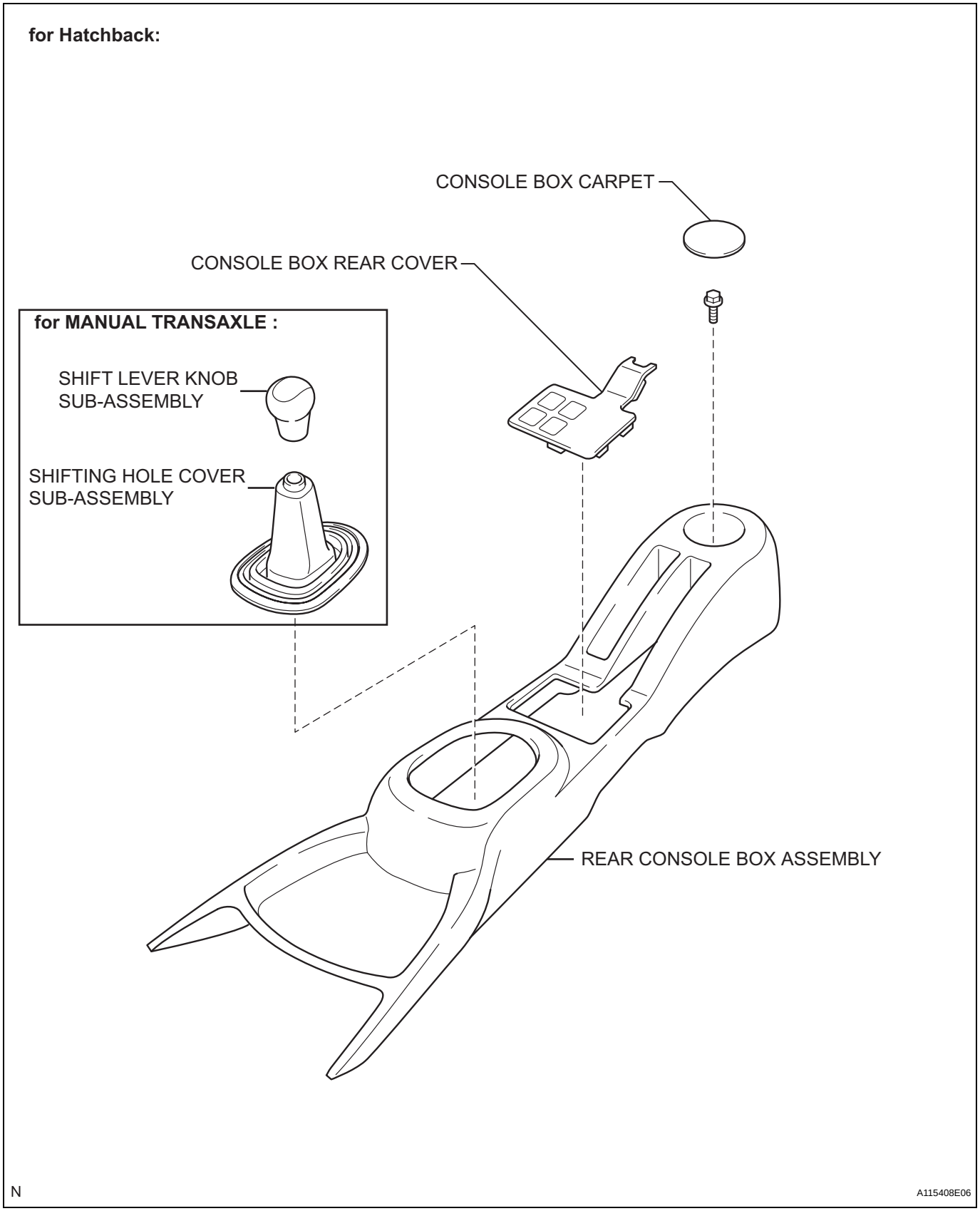

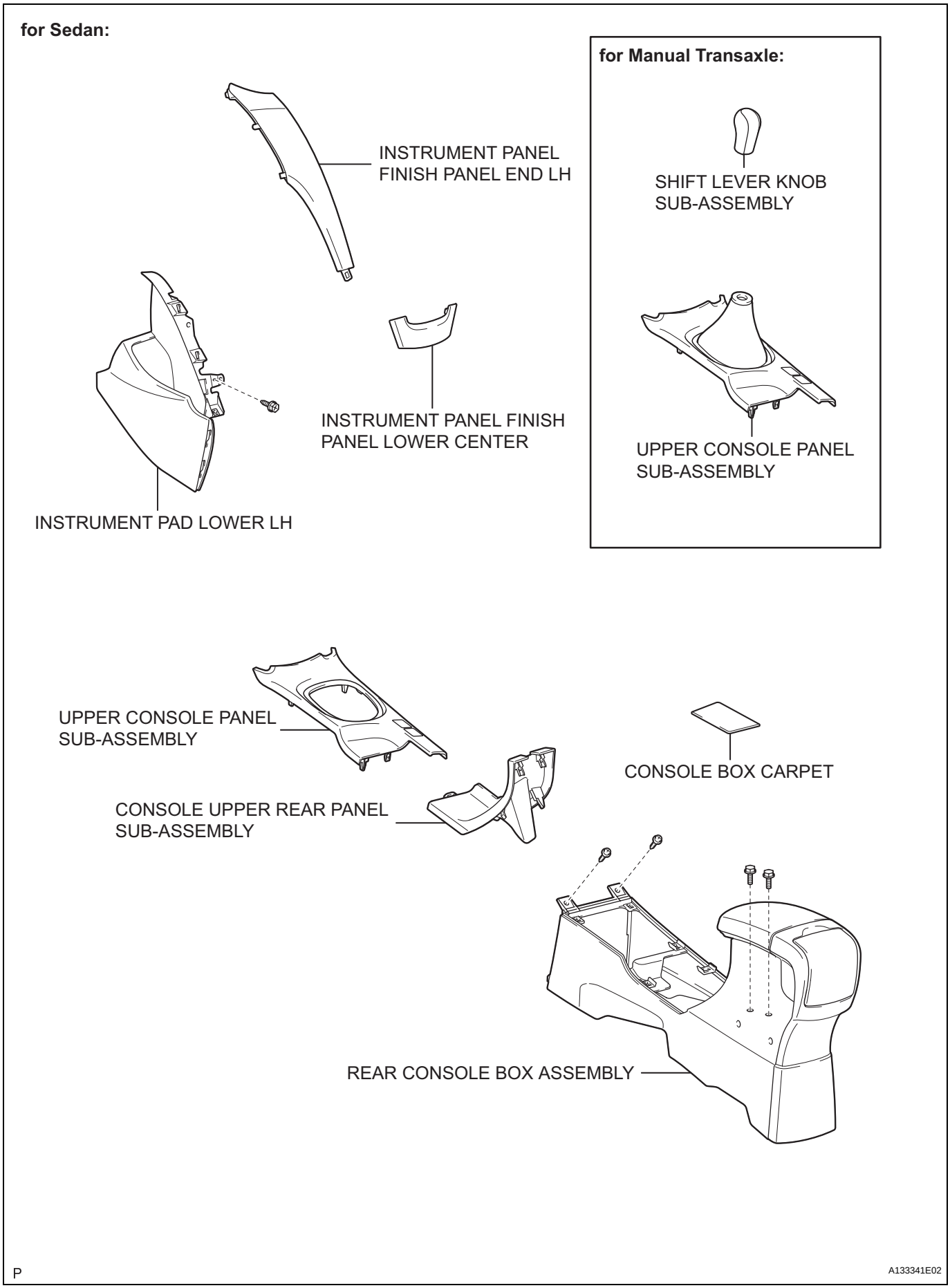
for Sedan:
INSTRUMENT PANEL FINISH PANEL END LH
INSTRUMENT PANEL FINISH PANEL LOWER CENTER
INSTRUMENT PAD LOWER LH
for Manual Transaxle:
SHIFT LEVER KNOB SUB-ASSEMBLY
UPPER CONSOLE PANEL SUB-ASSEMBLY
UPPER CONSOLE PANEL SUB-ASSEMBLY
CONSOLE BOX CARPET
CONSOLE UPPER REAR PANEL SUB-ASSEMBLY
REAR CONSOLE BOX ASSEMBLY
P
A133341E02

EC

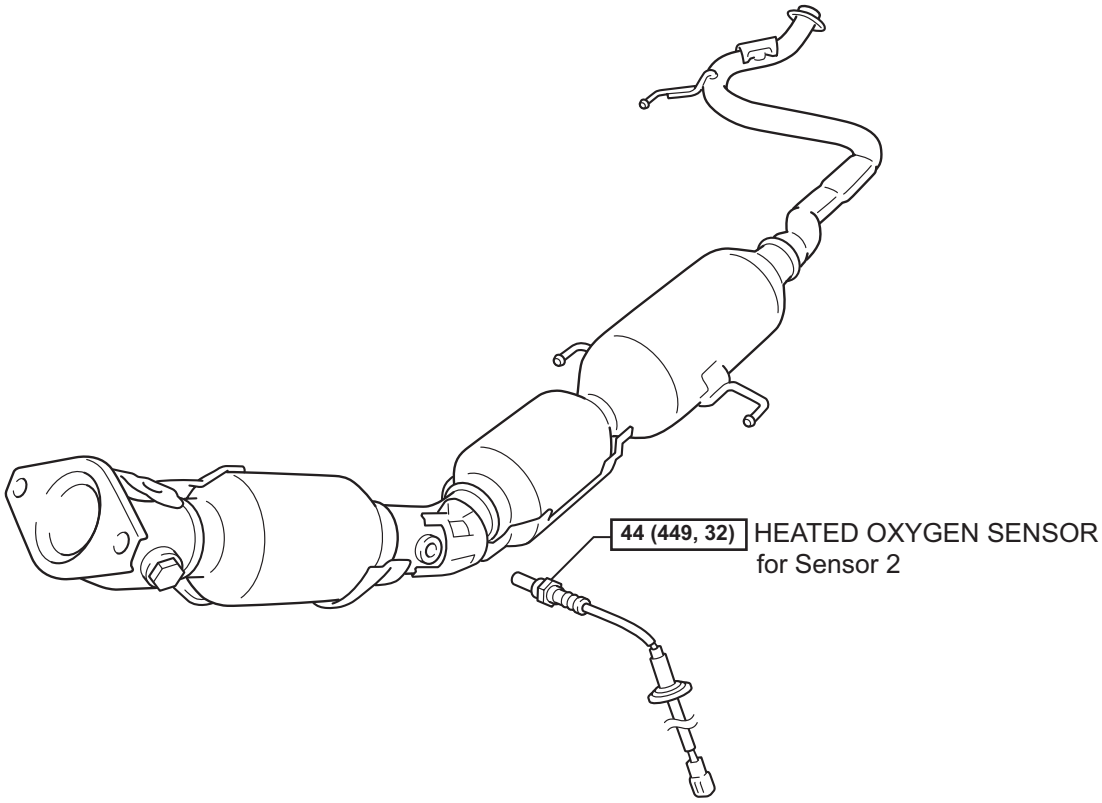

N*m (kgf*cm, ft.*lbf) : Specified torque

N

A137395E01

EC

REMOVAL

1. **DISCONNECT CABLE FROM NEGATIVE BATTERY TERMINAL**
2. **REMOVE INSTRUMENT PANEL FINISH PANEL LOWER CENTER (for Sedan) (See page ME-138)**
3. **REMOVE INSTRUMENT PANEL FINISH PANEL END LH (for Sedan) (See page ME-138)**
4. **REMOVE SHIFT LEVER KNOB SUB-ASSEMBLY (for Manual Transaxle)**
5. **REMOVE SHIFTING HOLE COVER SUB-ASSEMBLY (for Hatchback Manual Transaxle) (See page PB-6)**
6. **REMOVE UPPER CONSOLE PANEL SUB-ASSEMBLY (for Sedan) (See page IP-84)**
7. **REMOVE CONSOLE BOX REAR COVER (for Hatchback) (See page PB-6)**
8. **REMOVE CONSOLE UPPER REAR PANEL SUB-ASSEMBLY (for Sedan) (See page IP-84)**
9. **REMOVE CONSOLE BOX CARPET (See page PB-7)**
10. **REMOVE REAR CONSOLE BOX ASSEMBLY (See page PB-8)**
11. **REMOVE INSTRUMENT PAD LOWER LH (for Sedan) (See page IP-55)**
12. **REMOVE HEATED OXYGEN SENSOR**
    (a) Disconnect the sensor connector.
    (b) Remove the grommet and pass the sensor connector out of the cabin through the floor panel.
    (c) Using SST, remove heated oxygen sensor No. 2.
    SST 09224-00010

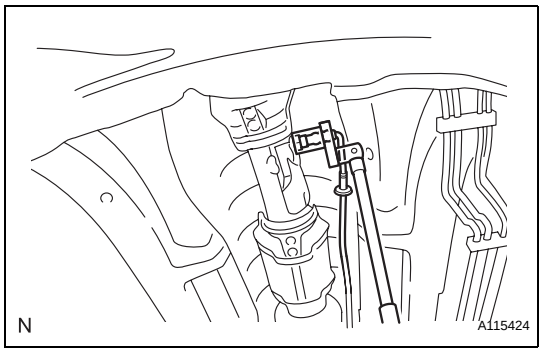

INSPECTION

1. **INSPECT HEATED OXYGEN SENSOR**
    (a) Check the resistance.
        (1) Using an ohmmeter, measure the resistance between the terminals.
        Standard resistance

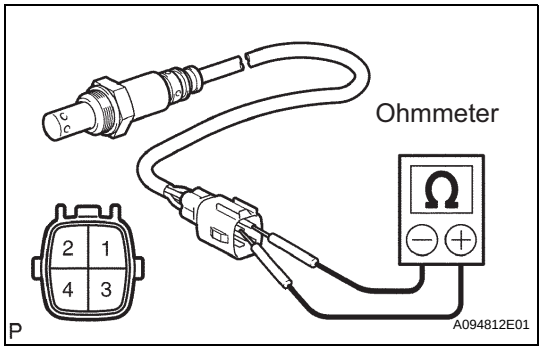

Tester Connection	Specified Condition
1 (HT1B) - 2 (+B)	11 to 16 Ω at 20°C (68°F)
1 (HT1B) - 4 (E2)	10 kΩ or higher

If the resistance is not as specified, replace the sensor.

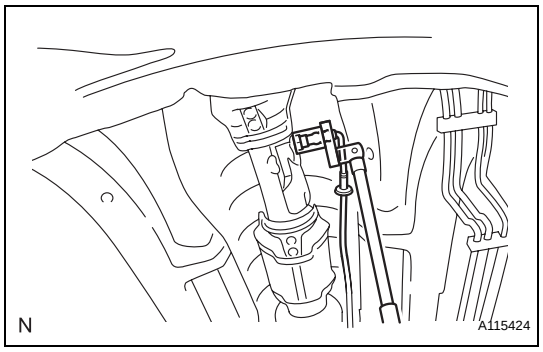

INSTALLATION

1. **INSTALL HEATED OXYGEN SENSOR**
   (a) Using SST, install the sensor onto the front exhaust pipe.
   SST 09224-00010
   Torque: 44 N*m (449 kgf*cm, 32 ft.*lbf) (without SST)
   Torque: 40 N*m (408 kgf*cm, 30 ft.*lbf) (with SST)
   HINT:
   Use a torque wrench with a fulcrum length of 300 mm (11.81 in.).
   (b) Pass the sensor connector through the floor panel and install the grommet.
   (c) Connect the sensor connector.
2. **INSTALL INSTRUMENT PAD LOWER LH (for Sedan) (See page IP-55)**
3. **INSTALL REAR CONSOLE BOX ASSEMBLY (See page PB-10)**
4. **INSTALL CONSOLE BOX CARPET (See page PB-11)**
5. **INSTALL CONSOLE BOX REAR COVER (for Hatchback) (See page PB-11)**
6. **INSTALL CONSOLE UPPER REAR PANEL SUB-ASSEMBLY (for Sedan) (See page IP-89)**
7. **INSTALL SHIFTING HOLE COVER SUB-ASSEMBLY (for Hatchback Manual Transaxle) (See page PB-12)**
8. **INSTALL UPPER CONSOLE PANEL SUB-ASSEMBLY (for Sedan) (See page IP-89)**
9. **INSTALL SHIFT LEVER KNOB SUB-ASSEMBLY (for Manual Transaxle)**
10. **INSTALL INSTRUMENT PANEL FINISH PANEL END LH (for Sedan) (See page ME-141)**
11. **INSTALL INSTRUMENT PANEL FINISH PANEL LOWER CENTER (for Sedan) (See page ME-142)**
12. **CONNECT CABLE TO NEGATIVE BATTERY TERMINAL**
    Torque: 5.4 N*m (55 kgf*cm, 48 in.*lbf)
13. **CHECK FOR EXHAUST GAS LEAKAGE**

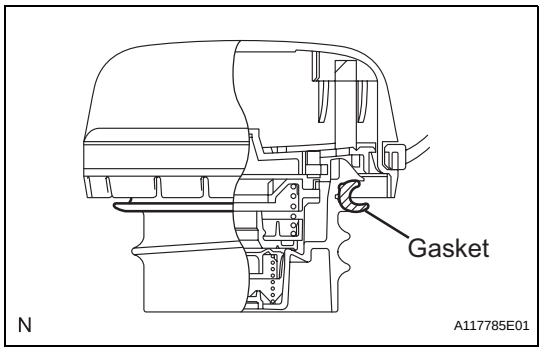

FUEL TANK CAP

ON-VEHICLE INSPECTION

1. INSPECT FUEL TANK CAP ASSEMBLY

(a) Check that there is no deformation or damage to the fuel tank cap or gasket. If necessary, replace the fuel tank cap.