Table of Contents

E60 Complete Vehicle

Subject **Page**

E60 Complete Vehicle
Objectives of the Module 2
Purpose of the System 3
Brief History 3
Highlights and Design 5
System Components 7
Vehicle Data Views 10
Technical Data 12

Front Bumper System
Removing and Refitting 14
Headlights 16

Rear Bumper System
Rear Light Clusters 19
Removing and Refitting 20

Luggage Compartment and Door Attaching Hardware
Hinges 22
Exterior Door Handles 23

cardiagn.com

Initial Print Date: 08/03 Revision Date: 09/03

E60 Complete Vehicle

Model: E60 - 525i, 530i, 545i

Production: Start of Production MY 2004

This intent of this workbook is to assist you with diagnosis and testing in addition to the detailed information found in the the latest Diagnosis and TIS of the DISplus/GT1.

This section will be instructor led for a brief review of the E60 Complete Vehicle. You are encouraged to use this workbook with the latest Diagnosis and TIS information to make notes during diagnosis and testing of the *new components/systems of the E60.* This will be valuable to you as supplementary information or a memory refresher when performing diagnosis in the future.

Note: For more in depth and detailed information about the E60 Complete Vehicle, refer to the ST046 E60 Complete Vehicle training CD.

For additional and updated information, always refer to:

www.bmwcenternet.com
- Diagnosis and TIS information/updates
- Service Information Bulletins
- DCS messages

Objectives:

After completion of this module you will be able to:

- Properly remove, install and adjust the front bumper system
- Properly remove, install and adjust the head lights
- Properly remove, install and adjust the rear light clusters
- Properly remove, install and adjust the rear bumper system
- Properly remove and install the exterior door handles

cardiagn.com

E60 Complete Vehicle

Purpose of the System

The E60 is the fifth edition of the BMW 5 Series replacing the E39. The automobile revolution in design and engineering initiated by the E65/E66 now finds its logical continuation in the E60. Virtually all the significant innovations of the 7 Series are also offered in the 5 Series.

However the E60 also offers new features of its own, some of which will make their appearance in other model series in due time. The most important of these new features are:

- Active steering system, whose variable reduction ratio adapts itself to the relevant driving situation.
- Lightweight design with a front-end structure of bonded and riveted aluminum (GRAV).
- Head-up display, which projects the most important information such as vehicle speed or navigation arrows in the form of a virtual image directly into the driver's field of vision.
- Adaptive directional headlight system, which adapts itself continuously to the steering angle and thus illuminates the approaching bend.

cardiagn.com

BMW 5 Series - Brief History

The E12

The first BMW to be christened the "5 Series" was the E12. In 1972 this model in the form of the "520" began the system of model designation which has remained to this day: The first number stands for the model series, while the second and third numbers represent the cubic capacity.

KT-9494

A total of 702,242 E12s from the 518 to the 535i were produced in Dingolfing and Munich until 1985.

The E28

The successor model E28, which at first glance appeared to have only minor modifications, brought the production figures to 723,001 with the model designations 518i to 535i between 1980 and 1990.

KT-9490

From January 1983 production of the 5 Series - with the exception of the M5 offered for the first time - was confined exclusively to Dingolfing. 1983 was also the year when the 524td became the first 5 Series to feature a diesel engine.

The E34

The 3rd generation 5 Series registered a major increase in production volume: Between 1987 and 1996 a total of 1,330,661 E34s came off the Dingolfing production line. The engine range of four- and six-cylinder models was extended to include a V8 (518i to 540i) and rounded off by diesel engines (525td and 525tds) and the high-performance M5.

KT-9489

A second bodystyle was also introduced in the form of the 5 Series touring, which also included a version that ran on liquefied petroleum gas (518g touring). A four-wheel drive was also produced in both saloon and touring versions in the form of the 525ix.

cardiagn.com

The E39

The current 5 Series was launched in 1995, of which to date 1,362,884 have been built (as at: 30 September 2002). In addition to the standard saloon and touring, there is also a safety saloon version of the E39 (540i Protection).

KT-9473

The engine options available range from the 518i to the 540i (diesel: 520d to 530d), as well as the M5.

The new E60 - Highlights and Design

The BMW Group's new design strategy with its broadening of the family resemblance lends future BMW model series still more individual character. It is thus possible for the E60 to embody the values of the 3 Series (dynamic and sporty) as well as those of the 7 Series (successful, top of the range and sporty) and yet remain an individual and original car within the scope of traditional BMW model series.

Unlike its competitors - and also its predecessors at BMW in previous years - the new 5 Series demonstrates its own clearly recognizable lines: The unique character of the individual model series within the overall range of the BMW marque will in future be increasingly accentuated. The new 5 Series therefore comes across neither as a small 7 Series nor as a big 3 Series.

KT-11013

The front end makes a bold and dynamic statement.

The most striking features are the new twin headlights and the dramatically sloping hood lines on both sides which now already begin at the level of the earlier swage line.

Flowing lines run from the headlights along the sides to the rear end of the E60.

KT-11012

The side line is a logical extension of the front-end design. Thus the E60 is the first BMW model not to have the previously typical side swage line. Its place is taken by a character line, an edge of light which lends the side view a whole new character. Various light reflections above and below this line produce a play of light and shadow, thereby giving the impression of a very low side panel.

KT-11014

The transition from the hood to the side panel occurs in the imaginary extension of the character line. *Thus the E60 has the lowest front end ever of any BMW.* The sculpture-like appearance of the side view is consolidated by the fact that there are no protective strips in the door areas.

Despite its increased height, the passenger cell has a coupe-like appearance thanks to the sweeping design of the C-pillar. Short overhangs and generously dimensioned wheel arches accentuate the dynamic, bold overall appearance. The clear shaping of the wheel lips as a typical BMW design element emphasize the wide track of the E60.

The rear end conveys an at once wide and compact effect due to the fact that there are no visible joints. Under the high deck lid with integrated spoiler lies *the biggest luggage compartment in the current BMW range.* The rear lights are mounted in brilliant optical housings, the tops of which are sloping in appearance.

The large rear apron of the E60 is subdivided by additional reflector elements and thus gives the impression of being lighter.

A distinctive diffuser lip not only ensures optimum aerodynamics but also reduces the amount of dirt which accumulates on the vehicle rear end.

The overall impression communicates an unmistakable sense of the E60's power and strength to road-users driving behind it.

KT-11016

cardiagn.com

System Components

Body Structure

The body dimensions have been increased to improve roominess in the rear compartment (+ 5 cm knee room) and to increase the luggage compartment capacity (at 520 L the largest capacity of all the BMW vehicles including the E65).

In order to make the E60 significantly lighter than the current 5 Series, BMW designed a "reduced-weight aluminum front end" (GRAV).

The front end consists almost entirely of aluminum while the transition to steel occurs in the front bulkhead area. Aluminum components are shown in darker shaded (front clip) section.

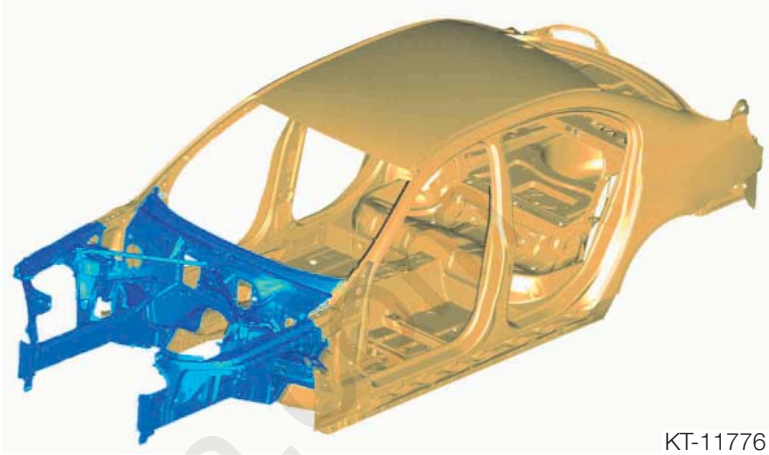

KT-11776

The weight saving at the front end not only reduces the total weight of the vehicle but is also a significant factor in the E60 attaining the ideal axle-load distribution of 50/50.

On the one hand, an aluminum body section offers reduced shielding against external electrical radiation, making it necessary for separate shielding of the wiring harnesses and electronic control units.

On the other hand, riveted and bonded aluminum components do not always provide a guaranteed circuit to ground. This results in individual front end components being connected (in production) with small EMC safety weld seams and in the event of repair, with grounding straps.

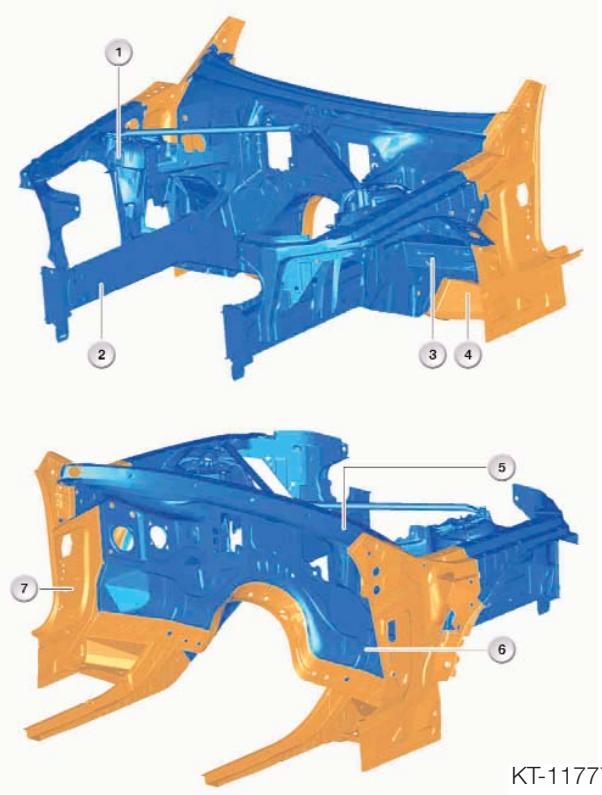

KT-11777

1. Spring Support
2. Engine Support
3. Bulkhead carrier support
4. Outer connection (steel)
5. Bulkhead Cross Member
6. Bulkhead
7. Inner A-pillar (steel)

The transition from the aluminum front engine support rail to the steel rail section joint (connection) is produced by bonding and punch riveting.

To increase conductivity, ground points are located on the two rails and are connected with a ground strap.

In addition to the underhood strut tower V- struts (2 lower left), the bumper carrier (1 lower right) and thrust panel (2 lower right) provide additional reinforcement and structural rigidity.

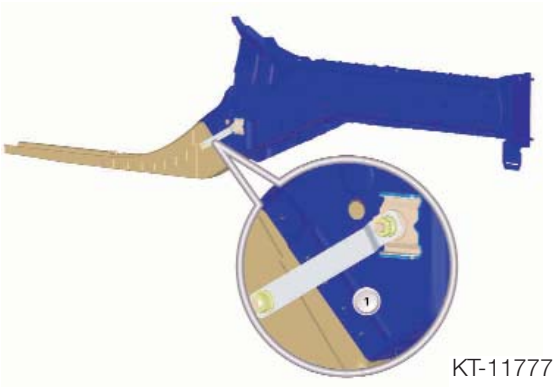

KT-11777

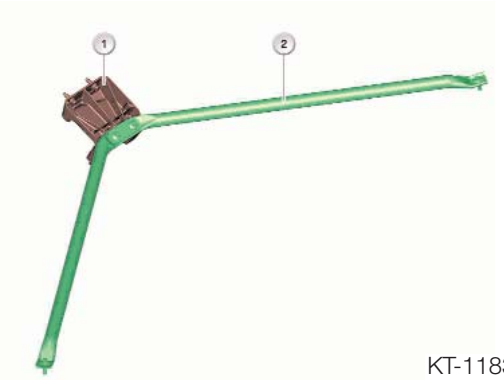

KT-11836

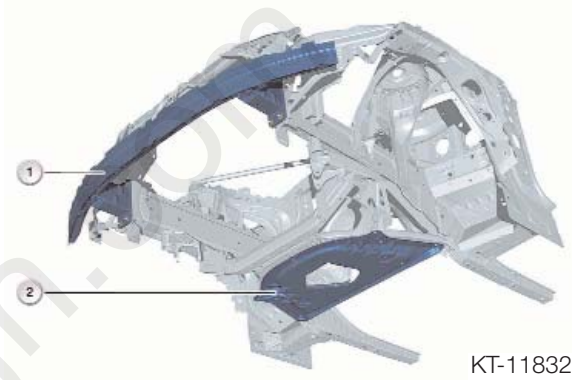

KT-11832

Note: The V-struts, bumper carrier and thrust panel must be installed and properly torqued before the vehicle is driven. If not, the rigidity of the front end will be considerably reduced leading to noise and structural damage.

The crash box is a deformation element specially developed for the E60.

The crash box is part of the side frame and is secured at the bottom of the A-pillar.

In the event of a frontal crash, the crash box absorbs forces that are transmitted via the front wheel into the side frame in the sill area.

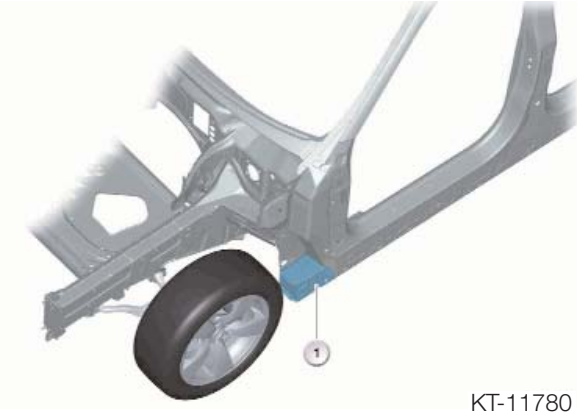

KT-11780

cardiagn.com

The E60 also integrates the familiar side impact protection gards (steel).

These are bolt on parts that must be replaced when damaged.

KT-02600

Body Repair

Repairing an aluminum body requires completely new repair methods in body shops with properly trained personnel, as well as proper tools and equipment.

Aluminum materials can not be “stretched”, this rules out the possibility of pulling on a straightening bench. Components deformed as a result of an accident ***must always be replaced***, which incurs more extensive training, tools and assembly procedures than is the case with steel bodies.

Using the frame rail as an example, deformed E60 aluminum components must be cut off at permanently defined points and replaced by new components.

Special insert repair elements made of aluminum are required to ensure that the replacement parts are safely and securely held in place.

The insert element for repairing aluminum (top left) is inserted into profile chambers and then expanded into place by bolts (refer to the E60 SIP for more details).

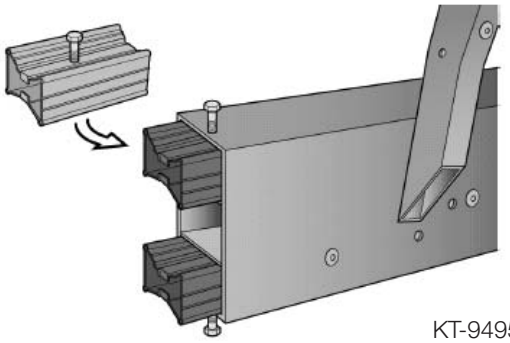

KT-9495

Notes:

cardiagn.com

Vehicle Data Views - Heights / Widths / Door Angles / Turning Circle

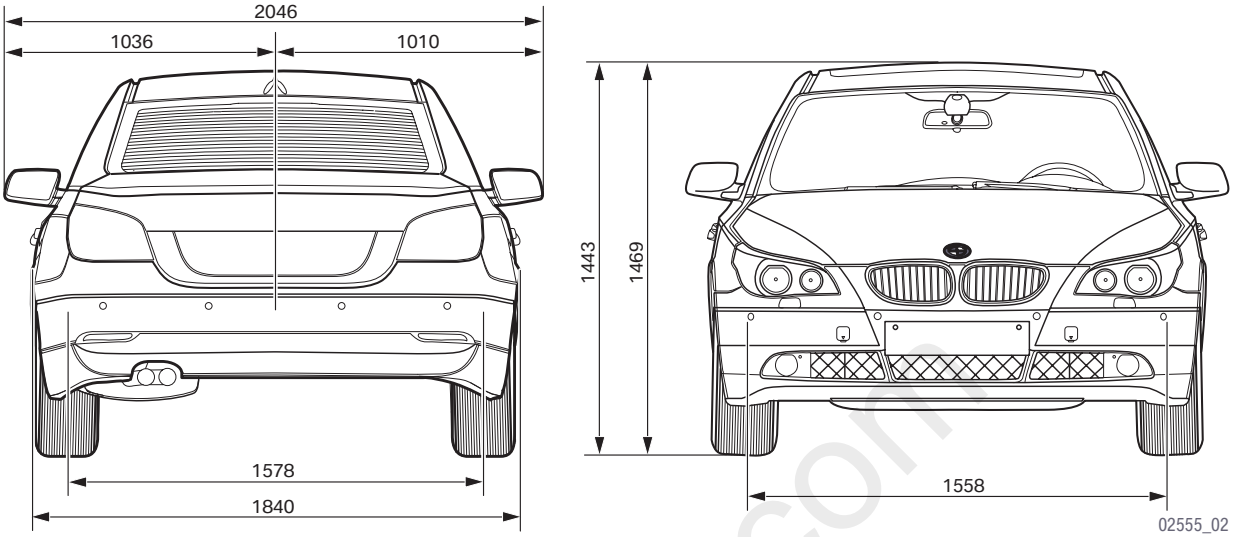

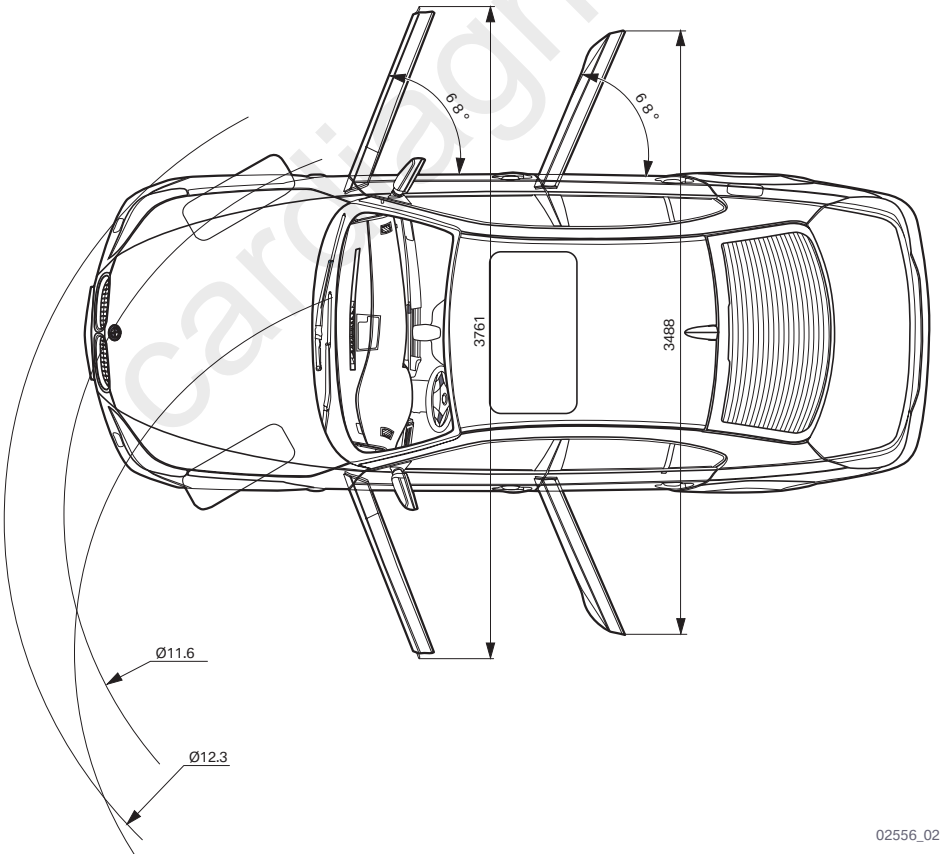

cardiagn.com

Vehicle Data Views - Lengths / Heights / Hood - Luggage Comp. Angles / Overhang Angle

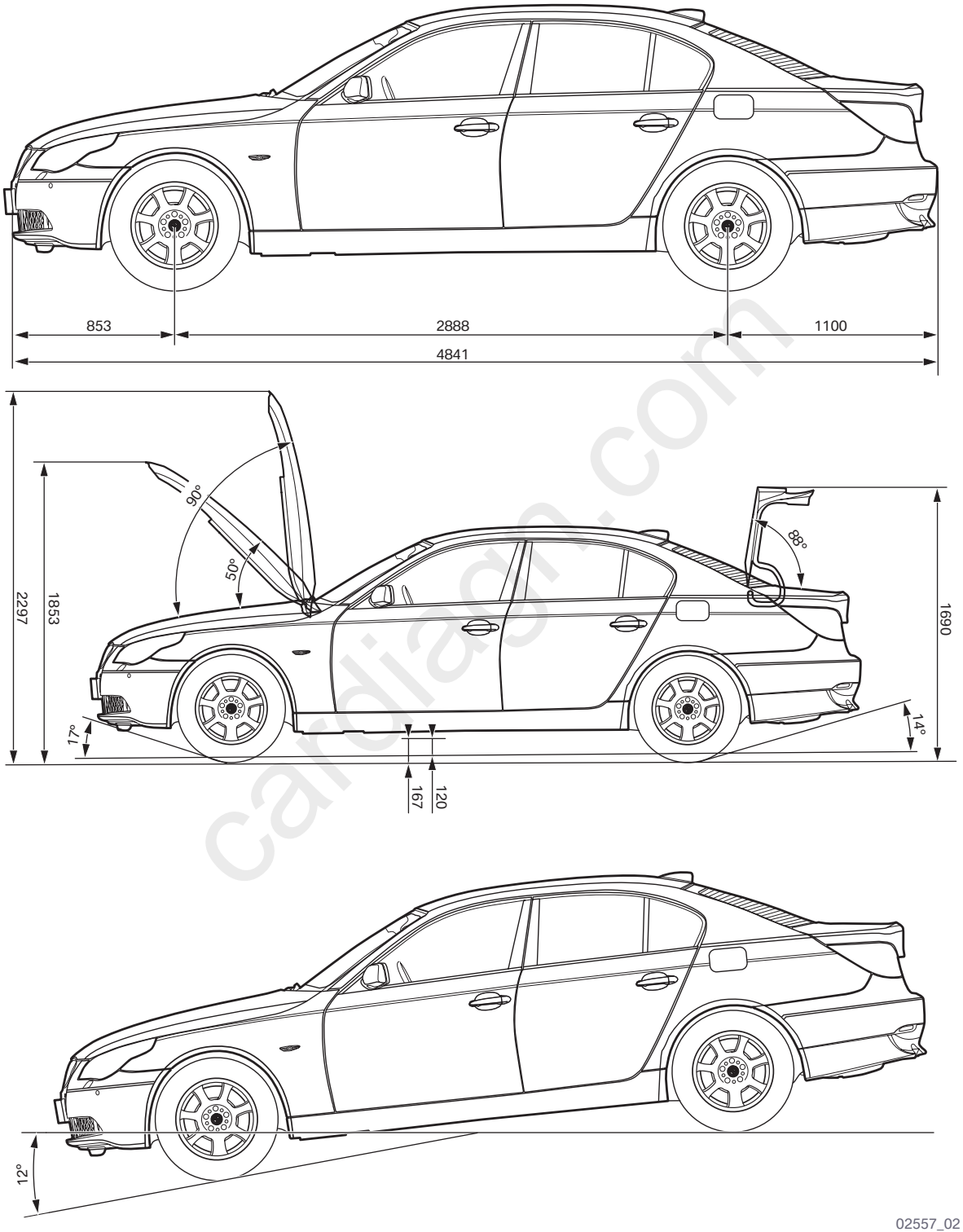

cardiagn.com

Technical Data - Comparison with Predecessor

Model (5) Series	E39	E60
Number of doors / seats	4 / 5	4 / 5
Length (mm)	4775	4841
Width (mm)	1800	1846
Height, unladen (mm)	1435	1469
Wheelbase (mm)	2830	2888
Turning circle (m)	11.3	11.4
Track width, front (mm)	1512	1558
Track width, rear (mm)	1530	1578
Shoulder room, front / rear (mm)	1442 / 1420	1455 / 1454
Elbow room, front / rear (mm)	1472 / 1487	1481 / 1496
Head room, front / rear (mm)	984 / 960	991 / 962
Luggage compartment capacity (L)	460	520
Unladen weight as 530i (kg)	1606	1570 (545i = 1695)
Maximum load as 530i (kg)	540	560
Fuel tank capacity L (gal)	70 (18.5)	70 (18.5)

Technical Data - E60

E60 Model Variants (US)	525i / 530i	545i
Engine	M54B25 / M54B30	N62B44
Cylinders, valves per cylinder	In line 6, 4	V8, 4
Capacity (cc)	2494 / 2979	4398
Stroke / bore (mm)	75 / 84 89.6 / 84	82.7 / 92
Power output (bhp) at engine speed (rpm)	184 / 225 6000 / 5900	325 5900
Maximum torque (lb ft) at engine speed (rpm)	175 / 214 3500	330 3600
Compression ratio (:1)	10.5 / 10.2	10.0
Engine management system	Siemens MS45.1 (US)	Bosch ME 9.2
Fuel requirement	Premium unleaded	Premium unleaded

cardiagn.com

Technical Data - E60 (continued)

E60 Model Variants (US)	525i /530i	545i
Maximum engine speed (rpm)	6500	6500
Manual transmission (6 spd)	GS6-37BZ	GS6-53BZ
Automatic transmission (6 spd)	ZF GA6HP19	ZF GA6HP26
Final Drive Ratio (:1)	3.15 (M) 3.73 (A) / 2.93 (M) 3.46 (A)	2.93 (M) 3.38 (A)
Aerodynamic drag	.28 / .29	.29
Wheels (std)	Cast Alloy 17 x 7.5	Cast Alloy 17 x 7.5
Tires (std)	225/55 R16 225/50 R17	225/55 R17
Battery (Ah/A/CCA)	110, 850A, 850CCA	110, 850A, 850CCA
Alternator (A/W)	140 / 1960	170 / 2380

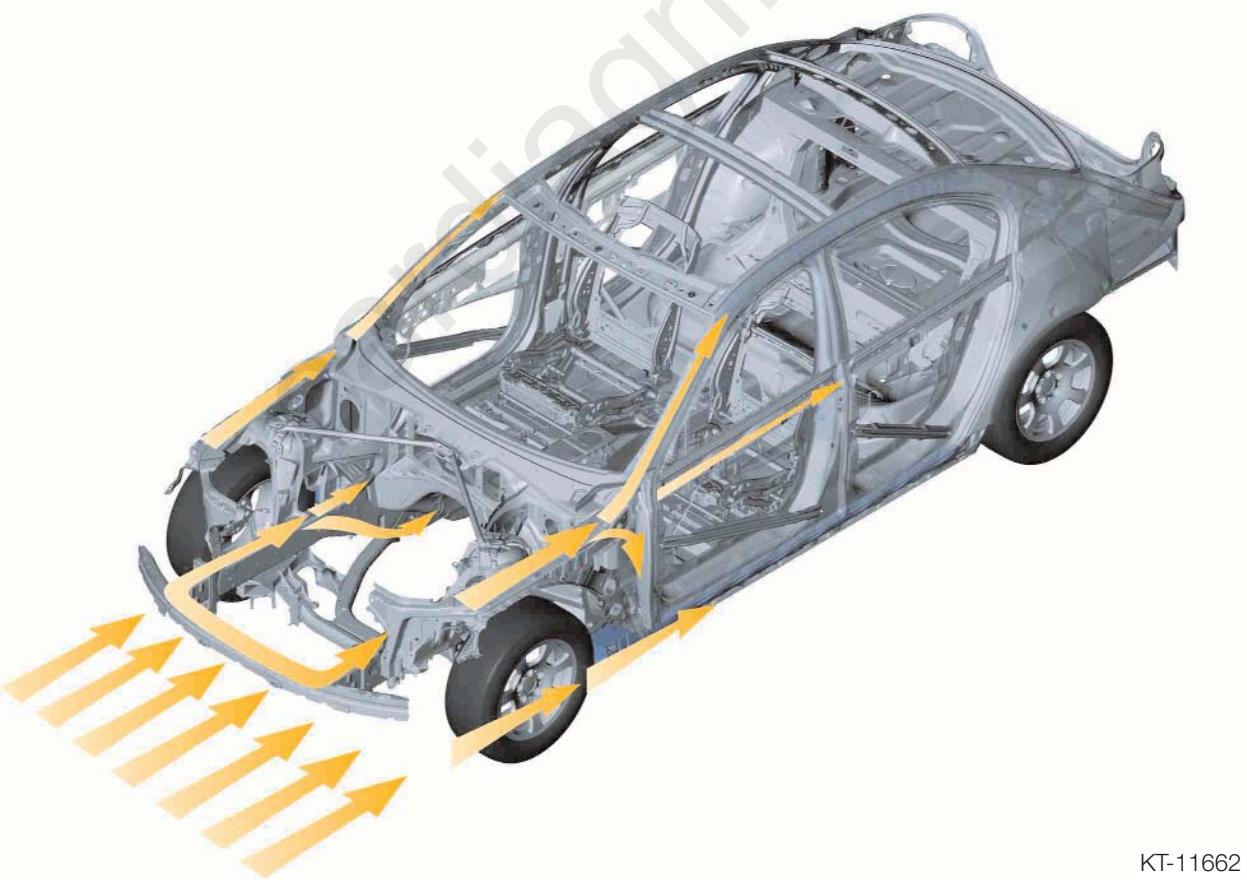

KT-11662

erdiagn.com

Front Bumper System

The bumpers are integrated in the vehicle structure. The front and rear one-piece plastic bumper panels are finished in body color and wrap around as far as the wheel arches. There are differences between the EU and US country-specific versions due to the different legal requirements regarding certain impact speeds (4 and 8 km/h). The front cross-panel is made entirely of aluminum. The components of the cross-panel are finished in an electrodeposition dip-coating process.

Removing and Refitting the Front Bumper Trim Panel

- Remove the screws attaching the trim panel to the wheel-arch liners
- Remove the three lower grill inserts (snap out) and remove the lower trim panel screws (under the bumper cross member)
- Un-snap and remove the hood seal assembly (flat blade screw driver will assist in releasing the snaps)
- Remove the bolts attaching the trim panel to the top mounting bracket (front cross-panel)

CAUTION!
Once all fasteners have been removed, push the bumper trim panel rearwards (at each corner) and pull the corners out to slide it out of the side mounting brackets (the trim panel has locking hooks). *Failure to do so will cause damage!*

- When refitting the front bumper trim panel, the headlamps must first be adjusted and aligned with the side panels (see headlight section)
- The bumper trim panel is clipped into the side mounting brackets
- The bumper trim panel is aligned with the headlamps
- Tighten all bolts and wheel-arch liner screws.

Replacing the Kidney Grille

- The bumper trim panel must be removed in order replace the kidney grille.

cardiagn.com

Workshop Exercise - Front Bumper System Removal

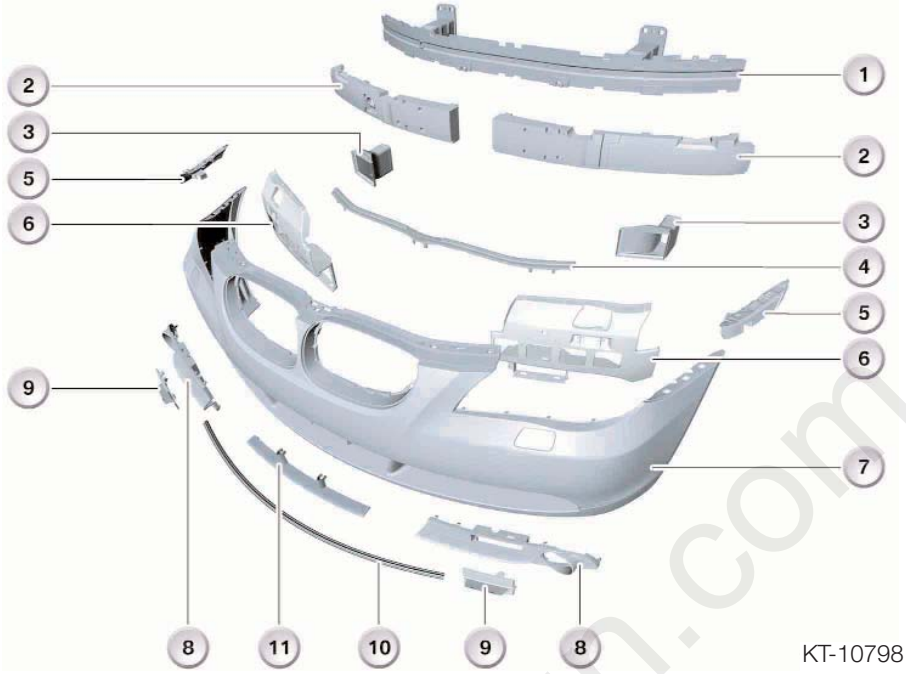

KT-10798

1. Bumper cross-member with deformation elements
2. Impact absorber
3. Brake air cowl
4. Hood seal
5. Bumper trim panel side mounting brackets
6. Side bumper inserts
7. Bumper trim panel
8. Side air grilles
9. Blanking plates for the brake air cowls (model specific)
10. Vibration damper strip
11. Center air grille

Record the steps and fasteners removed during those steps as you remove the front bumper system:

_____

_____

_____

_____

_____

_____

_____

_____

_____

_____

_____

_____

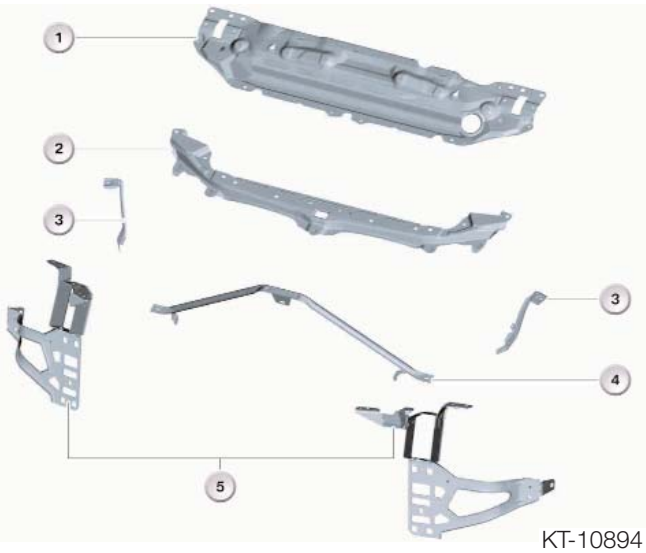

KT-10894

1. Top connecting plate
2. Top mounting bracket for bumper trim panel
3. Lower side panel bracket
4. "V" brace
5. Side supports

cardiagn.com

Headlights

The Adaptive Headlight (AHL) function is available as an option. It is offered in combination with the Bi-xenon headlights. This feature allows the low beam headlamps to swivel around the vertical axis. This means that the headlights can illuminate the curve of the road more effectively when negotiating bends.

Adaptive Headlights improve night-time visibility by continual adjustment of headlight aim to suit the curvature of the road. Illumination of the curve of the road allows the driver to follow its course more easily instead of having to drive into a "black hole." Dynamic headlamp aim adjustment improves peripheral awareness and reduces the risk of accidents.

1. Design feature (with bi-xenon headlights contains LEDs for side marker light)
2. Direction indicators
3. Reflector for low headlights
4. Fibre-optic ring lights for side lights
5. Reflector for high beam headlight

KT-11137

Halogen Headlights

The headlamp reflectors are framed by fiber-optic ring lights. The side light function is effected by the two reflectors. Above the direction indicators is a PCB with 6 LEDs and a fiber-optic tube to perform the side marker light function (not separately replaceable). The direction indicator function is performed by a 21W long-life bulb.

For parking lights, a 5W bulb supplies the fiber-optic ring light and produces a hot spot in the lower part of the reflector.

The low beam headlight function is performed by an H7 long-life bulb in each of the outer reflectors.

The high beam headlight function is performed by an H7 long-life bulb in each of the inner reflectors.

The flash to pass simply uses the high beam light only.

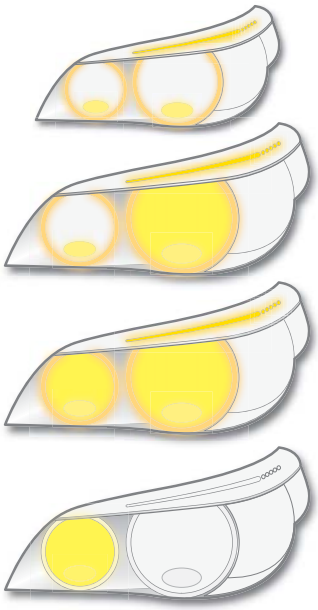
KT-71003

Bi-xenon Headlights (optional)

Bi-xenon headlights are only available as an option in combination with the Adaptive Headlights feature (for additional detailed information, refer to AHL section). A dynamic beamheight adjustment function is also incorporated in the Bi-xenon headlight package.

The Bi-xenon bulbs are fitted in the outer reflectors. On each Bi-xenon headlight there is a stepper motor for adjusting the position of the Bi-xenon bulb. The Bi-xenon control units and the stepper motor controllers (SMCs) are located next to each other on the underside of the headlamp units.

The stepper motors are not fitted with motor position sensors, the zero position is detected by the zero position sensor (below the Bi-xenon bulb). The zero position is sensed by changes in inductivity.

The direction indicator function is performed by a 21W long-life bulb. Above the direction indicators is a PCB with 6 LEDs and a fiber-optic tube to perform the side marker light function (not separately replaceable).

For parking lights, the headlamp reflectors are framed by fiber-optic ring lights. The ring lights are supplied by a 10W bulb with a reflector. The reflector is in the headlamp unit near the high beam headlight.

The low beam headlight function is performed by a Bi-xenon bulb (D2S) in each of the outer reflectors. The Xenon control unit controls the Bi-xenon bulb function (low beam/high beam).

The high beam headlight function is performed only by the Bi-xenon lights and not by the halogen lights in the inner reflectors.

In each inner reflector there is an H7 long-life bulb, which is used for the flash to pass function.

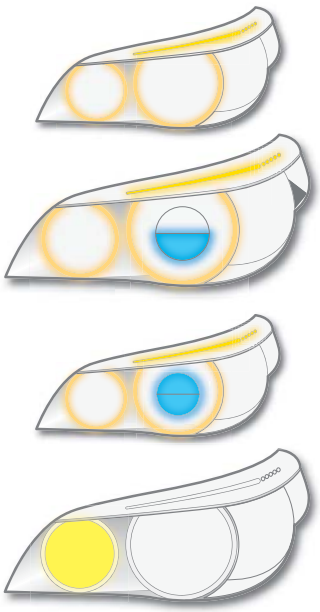

KT-71003b

Notes: _____

cardiagn.com

US-Version System Functions

The country-specific US version incorporates the following functions that differ from the EU version:

- High beam headlights. If Bi-xenon bulbs are fitted, the high beam headlight function is performed only by the Bi-xenon lights and not by the halogen lights in the inner reflectors.

- Daytime lights. The daytime lights function is performed by the fiber-optic ring lights.

Workshop Hints

The lens is permanently bonded to the headlight unit casing. The headlight units are adjustable along the x, y and z axes. Vertical adjustment of the headlight units is performed by the inner socket-head adjuster screws. Horizontal adjustment of the headlight units is performed by the outer socket-head adjuster screws.

- The bulbs in the halogen headlights can be replaced with the headlight unit in place.

- *Replacement of the bulbs in the Bi-xenon headlights requires removal of the headlight unit.*

Headlight Unit Removal and Installation

Note: It is suggested to mark the headlight location around the adjustment mounts and attaching screws before removal.

- The headlight unit is removed by removing the top 2 screws from the front crosspanel and the bottom 2 screws from the mounting bracket.

- The headlight unit is removed forwards and then lifted upwards, detaching one main harness connection. The stepper motor for the Adaptive Headlights is replaceable.

- For installation, the headlamps must first be adjusted and aligned with the side panels (slides in adjustment slots with bolts loose, up/dn adjustment by a threaded mount). The bumper trim panel is then aligned to the headlamp units.

Notes: _____

cardiagn.com

Rear Bumper System

Rear Light Clusters

Each rear light cluster is attached to the body by 4 bolts and nuts. Between each rear light cluster and the body there is a gasket seal. The rear light clusters are subdivided into compartments:

1. Direction indicator
2. Brake force light
3. Reverse light
4. Reflector
5. Tail light/brake light
6. Tail light/brake light
7. Side marker light

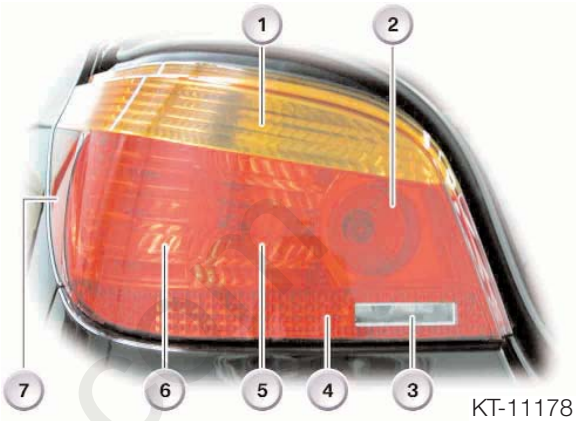

KT-11178

The bulbs for the for the tail light, brake light, direction indicator and brake force light are all held in a common bulb holder with a central connector. All of those lights use 21W long-life bulbs. The reverse light has a separate bulb holder (16W bulb). The lower part of the rear light cluster contains a reflector.

The tail light function is performed by two of the rear light cluster compartments. The light is provided by the 21W long-life bulbs in each compartment, which are dimmed to 6 to 7 Watts.

The brake light function is performed by a 21W long-life bulb in the outer compartment of each rear light cluster. For the Brake Force Display system, the inner rear light cluster compartment is used as an additional brake light.

The direction indicator function is performed by a 21W long-life bulb. The reverse light function is performed by a 16W long-life bulb on each side (which is replaced with the holder).

US-Version System Functions

- Side marker light. The outer partition of the outer compartment of the rear light cluster has an opening through which the tail light illuminates the rear side marker light.

- Brake Force Display. To improve the reaction of other drivers in a panic stop, the E60 has a Brake Force Display System. If an extreme deceleration rate or ABS signal is detected, the bulbs will receive the full 21 Watts of power and the brake light plus Brake Force Display function is illuminated.

Removing and Refitting the Rear Bumper Trim Panel

- The rear lamp units must be removed before removing or refitting the rear bumper trim panel
- Remove the 4 self-tapping screws on each side of the wheel-arch liners to the bumper trim panel through the side mounting brackets
- Remove the expander rivet on each side of the vehicle attaching the bumper trim panel to each side mounting bracket (below the wheel-arch liners)
- Remove 4 self tapping screws that are screwed through the bodywork into each bumper trim panel side insert from inside the luggage compartment
- The bumper trim panel must be unclipped from the bottom guide (flat blade screw driver will assist in releasing the clip)

The following points should be noted when refitting:

- From inside the luggage compartment, an Allen key is used to adjust the gap between the bumper trim panel and the body by squaredrive socket-head adjuster bolts in the bumper trim panel side inserts
- After adjusting the bumper trim panel position using the Allen key, the 4 self tapping screws are screwed into the bumper trim panel side inserts from inside the luggage compartment through the same holes in the body panel that were used to access the adjuster bolts.
- Install the rear lamp units and align with the luggage compartment lid and the side panels.

Notes: _____

cardiagn.com

Workshop Exercise - Rear Bumper System Removal

1. Bumper trim
2. Bumper cross-member
3. Deformation elements
4. Bumper trim panel bottom guide
5. Bumper trim panel center mounting bracket
6. Bumper trim panel side mounting brackets
7. Locating bracket for bumper left side mounting bracket
8. Bumper cross-member
9. Impact dampers
10. Bracket
11. Support shell
12. Bracket
13. Side mounting bracket

KT-10799

Record the steps and fasteners removed during those steps as you remove the rear bumper system:

cardiagn.com

Luggage Compartment and Door Attaching Hardware

Luggage Compartment Lid Hinges

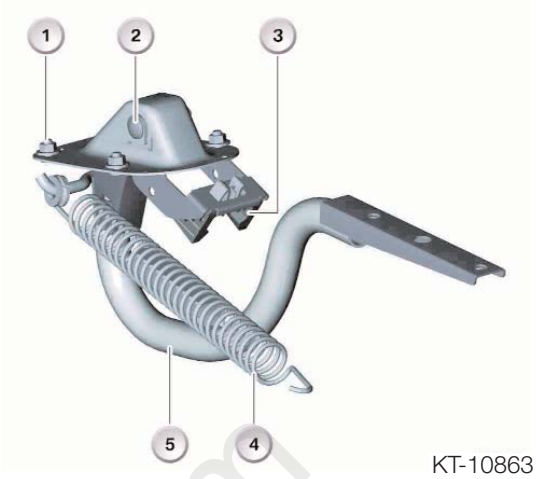

KT-10863

The hinges (3) are attached to the body attachment flange of the luggage compartment bulkhead by four bolts with self-locking nuts (1). The force of the spring (4) in its effective direction is 700 N.

The hinge arms (5) are attached by carriage bolts (2). These bolts do not have to be held when adjusting the luggage compartment lid height (up/dn).

Only the nuts have to be loosened, which can be accessed through plugs in the upper shelf (under the rear window) from the luggage compartment (as shown by arrow on right).

There are 3 attachment points in the spring holder (1) for the spring (2) which change the opening and closing force of the luggage compartment lid.

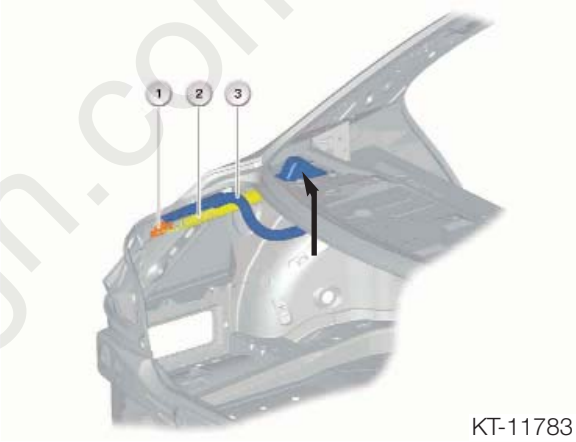

KT-11783

Door Hinges

The front doors are attached to the A-pillar by two hinges each held by a central bolt (M12) and a specially shaped brace plate. The brace plates are inside the A-pillars. The hinges are bolted onto the pillars from the outside. The hinge bolts screw directly into a thread inside the brace plates.

Like the front doors, the rear doors use the new hinge design with a central hinge bolt (M12). In this case, however, the bolt is inserted through the B-pillar from the inside. It then screws directly into a thread inside the hinge backplate.

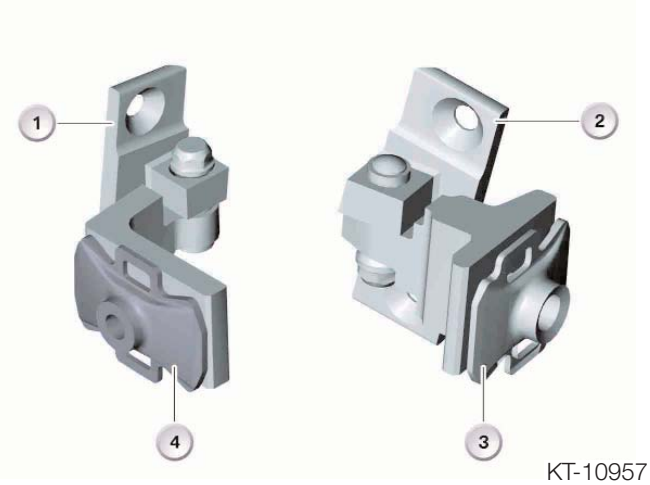

KT-10957

1. Door attachment plate, front door hinge
2. Door attachment plate, rear door hinge
3. Hinge brace plate (attaches to B-pillar), rear door
4. Hinge brace plate (attaches to A-pillar), front door

cardiagn.com

Doors and Exterior Door Handles

The doors are composed of a door outer panel, a door inner panel, a door outer skin reinforcing bar, a lock plate and a diagonally mounted side-impact bar.

1. Diagonally mounted side-impact bar
2. Exterior door handle mounting plate with door handle and recess plate
3. Lock

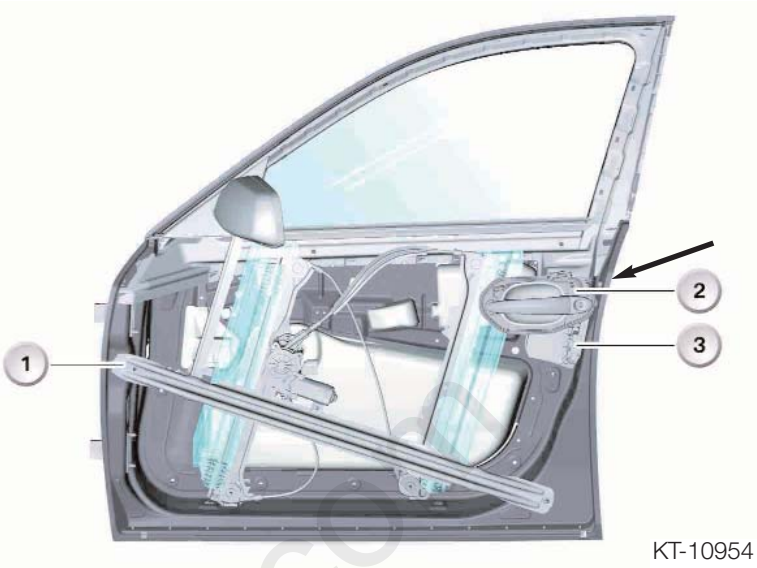

The door control module is integrated in the door. The door lock is an L-type lock that has been used on the basic version of the E65 since 09/02.

The exterior door handle is a three-piece assembly. It consists of a mounting plate fitted from the inside, a handle recess plate fitted from the outside and the handle fitted and screwed onto the recess plate from the outside (access screw from outside - arrow, above).

Workshop Exercise - Exterior Door Handle Removal

The Instructor will demonstrate the proper door handle release and attachment procedure using mockup parts and special tool. This will familiarize you before attempting "on vehicle" removal. After the demonstration is completed, proceed to "on vehicle" removal and installation.

Caution: Lift handle until access hole (to screw) is exposed and insert tool to engage in screw, do not overtighten securing screw in either direction!

1. *To remove door handle, turn screw counter clockwise against stop. Pull rear of handle out, pivot and pull handle off of front pin.*

2. *To install handle, position on front pin and swivel into place. Push rear of handle into socket (lightly) until it snaps in (slight resistance). Turn screw clockwise until it seats. Remove tool, release door handle.*

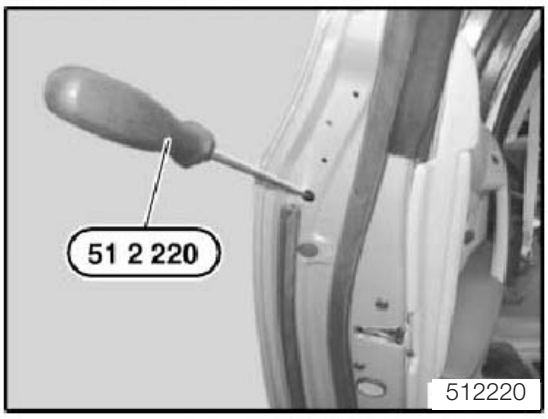

cardiagn.com