Renault TRAFIC

Driver's handbook

RENAULT

A passion for **performance**

ELF, partner of world series by RENAULT

RENAULT recommends ELF

Partners in cutting-edge automotive technology, Elf and Renault combine their expertise on both the racetrack and the city streets. This enduring partnership gives drivers a range of lubricants perfectly suited to Renault cars. Lasting protection and optimum performance for your engine – guaranteed. Whether changing the oil or simply topping up, to find the approved ELF lubricant best suited to your vehicle, ask your Renault dealer for a recommendation or consult your vehicle maintenance handbook.

www.lubricants.elf.com

elf

A brand from TOTAL

Welcome to your new vehicle

This Driver's Handbook contains the information necessary:

– for you to familiarise yourself with your vehicle, to use it to its best advantage and to benefit fully from the all the functions and the technical developments it incorporates.

– to ensure that it always gives the best performance by following the simple, but comprehensive advice concerning regular maintenance.

– to enable you to deal quickly with minor faults not requiring specialist attention.

It is well worth taking a few minutes to read this handbook to familiarise yourself with the information and guidelines it contains about the vehicle and its functions and new features. If certain points are still unclear, our Network technicians will be only too pleased to provide you with any additional information.

The following symbol will help you when reading this handbook:

To indicate a hazard, danger or safety recommendation.

The descriptions of the models given in this handbook are based on the technical specifications at the time of writing. **This handbook covers all items of equipment** (both standard and optional) **available for these models but whether or not these are fitted to the vehicle depends on the version, options selected and the country where the vehicle is sold.**

This handbook may also contain information about items of equipment to be introduced later in the model year.

Throughout the manual, the "approved Dealer" is your RENAULT Dealer.

Enjoy driving your new vehicle.

Translated from French. Copying or translation, in part or in full, is forbidden unless prior written permission has been obtained from the vehicle manufacturer.

0.2

C O N T E N T S

Sections

Getting to know your vehicle 1

Driving 2

Your comfort 3

Maintenance 4

Practical advice 5

Technical specifications 6

Alphabetical index 7

0.4

Section 1: Getting to know your vehicle

Key, remote controls 1.2
RENAULT card: General information, use, deadlocking 1.7
Opening and closing the doors 1.14
Tailgate 1.22
Locking, unlocking the opening elements 1.23
Automatic locking when driving 1.27
Headrests - Seats 1.28
Steering wheel/Power-assisted steering 1.31
Seat belts. 1.32
Additional methods of restraint 1.37
    in addition to the front seat belts 1.37
    to the rear seatbelt 1.41
    side. 1.42
Child safety: General information 1.44
    Choosing a child seat mounting 1.47
    fitting a child seat, general information. 1.49
Child seats: attachment by seat belt or by Isofix system. 1.51
Child safety: deactivating/activating the front passenger airbag 1.77
Driving position 1.80
Instrument panel 1.84
    Trip computer and warning system 1.90
Clock and outdoor temperature. 1.99
Rear view mirrors 1.101
Exterior lighting and signals. 1.103
Headlight beam adjustment. 1.106
Audible and visual signals 1.108
Washers, wipers 1.109
Fuel tank (filling with fuel) 1.112
Additive tank 1.115

KEY, RADIO FREQUENCY REMOTE CONTROLS: general information (1/2)

A

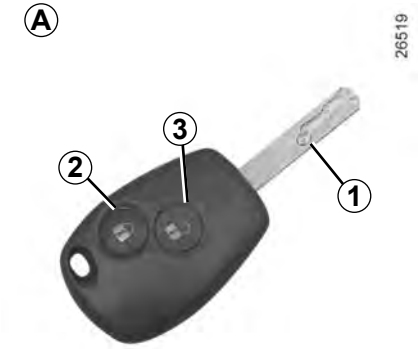

B

Radio frequency remote control *A* or *B*

1 Ignition-starter key, door key.
2 Locking the doors and tailgate.
3 Unlocks all doors and boot or, depending on the vehicle, the driver's door only. Refer to the information on "Key, radio frequency remote control: use" in Section 1.

4 Locks/unlocks the boot and, depending on the vehicle, the side sliding door.

The key must not be used for any function other than those described in the handbook (removing the cap from a bottle, etc.).

Advice

Avoid leaving the remote control in hot, cold or humid areas.

Driver's responsibility when parking or stopping the vehicle

Never leave an animal, child or adult who is not self-sufficient alone in your vehicle, even for a short time.

They may pose a risk to themselves or to others by starting the engine, activating equipment such as the electric windows or locking the doors, for example.

Also, in hot and/or sunny weather, please remember that the temperature inside the passenger compartment increases very quickly.

RISK OF DEATH OR SERIOUS INJURY.

Radio frequency remote control operating range

This varies according to the environment: take care not to lock or unlock the doors by inadvertently pressing the buttons on the remote control.

Note: on certain vehicles, if a door is not opened within approximately 2 minutes of the door being unlocked by remote control, the doors will lock again automatically.

Interference

Interference by factors in the immediate vicinity (external installations or the use of equipment operating on the same frequency as the remote control) may affect the operation of the remote control.

For replacement, or if you require an additional remote control.

You must only contact an approved Dealer.

– To replace a remote control, the vehicle and all its keys must be taken to an authorised dealer as the vehicle and remote control are required to initialise the system.
– Depending on the vehicle, you have the option of using up to four remote controls.

Remote control unit failure

Make sure that the correct battery type is being used, and that the battery is in good condition and inserted correctly. These batteries have a service life of approximately two years.

To learn how to change the battery, please refer to the information on the “Key, radio frequency remote control: Batteries” in Section 5.

Unlocking the doors and tailgate

For vehicles not fitted with unlocking of the driver's door only

Pressing and holding button ***2*** unlocks all the opening elements.

For vehicles fitted with unlocking of the driver's door only

A single press on button ***2*** unlocks the driver's door only. A second press within approximately 20 seconds after the first press unlocks all the doors.

A short press on button ***3*** unlocks the rear doors and, depending on the vehicle, the sliding side doors.

The hazard warning lights and indicator lights **flash once** to indicate that the doors have unlocked.

The key must not be used for any function other than those described in the handbook (removing the cap from a bottle, etc.).

Note: if a door is not opened within approximately 2 minutes of the door being unlocked by the remote control, the doors will lock again automatically.

Driver's responsibility when parking or stopping the vehicle

Never leave an animal, child or adult who is not self-sufficient alone in your vehicle, even for a short time.

They may pose a risk to themselves or to others by starting the engine, activating equipment such as the electric windows or locking the doors, for example.

Also, in hot and/or sunny weather, please remember that the temperature inside the passenger compartment increases very quickly.

RISK OF DEATH OR SERIOUS INJURY.

Locking the doors and luggage compartment

Pressing button ***1*** unlocks all the opening elements.

A short press on button ***3*** unlocks the rear doors and, depending on the vehicle, the sliding side doors.

The hazard warning lights and indicator lights **flash twice** to indicate that the doors have locked.

If a door is open or incorrectly closed, the vehicle locks and then unlocks quickly and the side indicator lights and hazard warning lights do not flash.

26519

Deadlocking the doors

If fitted to the vehicle, this allows the doors to be locked and prevents them from being opened with the interior handles (for example, by breaking the window and then trying to open the doors from the inside).

25028

To activate deadlocking

Press button ***1*** twice in quick succession.

The hazard warning lights and indicator lights flash **five** times to indicate that the doors have locked.

Special note: deadlocking is not possible if the hazard warning lights or the side lights are lit.

Never use deadlocking if someone is still inside the vehicle.

RENAULT CARD: general information (1/2)

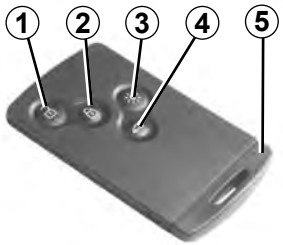

1 Unlocking the doors and tailgate.
2 Locking all doors and tailgate.
3 Switch on the courtesy lighting remotely.
4 Locking/unlocking the boot and the sliding side doors.
5 Integrated key.

The RENAULT card is used for:

– locking and unlocking the doors (refer to the following pages);
– switch on the vehicle lighting remotely (refer to the following pages);
– starting the engine; refer to the information on “Starting the engine” in Section 2.

Battery life

Make sure that the correct battery type is being used, and that the battery is in good condition and inserted correctly. Its service life is approximately two years: replace it when the message “KEYCARD BATTERY LOW” appears on the instrument panel (refer to the information on the “RENAULT card: battery" in section 5).

When the battery is flat, you can still lock/unlock and start your vehicle. Refer to the information on “Locking/unlocking the doors” in Section 1 and “Starting the engine” in Section 2.

RENAULT card operating range

This varies according to the surroundings: when handling the RENAULT card, it is important to make sure that you do not lock or unlock the doors by inadvertently pressing the buttons.

Driver’s responsibility when parking or stopping the vehicle

Never leave an animal, child or adult who is not self-sufficient alone in your vehicle, even for a short time.
They may pose a risk to themselves or to others by starting the engine, activating equipment such as the electric windows or locking the doors, for example.
Also, in hot and/or sunny weather, please remember that the temperature inside the passenger compartment increases very quickly.
RISK OF DEATH OR SERIOUS INJURY.

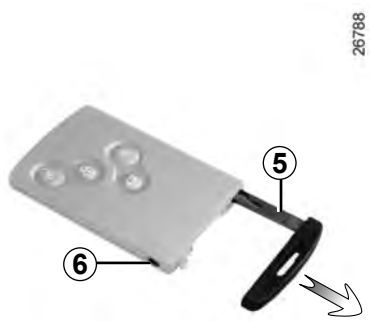

Integrated key *5*

The integrated key is used to lock or unlock the front left-hand door and, depending on the vehicle, the rear door when the RENAULT card does not work:

– when the RENAULT card battery is drained, flat battery, etc.

– use of devices using the same frequency as the card;

– vehicle located in a high electromagnetic radiation zone.

Access to key 5

Press button ***6*** and pull on key ***5*** then release the button.

Using the key

Please refer to the information on “Locking and unlocking the opening elements”.

Once you have accessed the vehicle using the integrated key, replace it in its housing in the RENAULT card, then insert the RENAULT card into the card reader to start the vehicle.

Advice

Avoid leaving the card in hot, cold or humid areas.

Do not keep the RENAULT card in a place where it could be bent or damaged accidentally, such as in a back pocket of a garment.

Replacement: need for an additional RENAULT Card

If you lose your RENAULT card or require another, you can obtain one from an authorised dealer.

If a RENAULT card is replaced, it will be necessary to take the vehicle and **all of its RENAULT** cards to an approved Dealer to initialise the system.

You may use up to four RENAULT cards per vehicle.

It allows locking/unlocking without input on the card RENAULT when within the access zone ***1***.

Locking/unlocking the vehicle

There are two ways to unlock/lock the vehicle: be within the access zone or using the card RENAULT.

Do not store the RENAULT card anywhere it may come into contact with other electronic equipment (computer, phone, etc.) as this could hinder its operation.

Driver’s responsibility when parking or stopping the vehicle

Never leave an animal, child or adult who is not self-sufficient alone in your vehicle, even for a short time.

They may pose a risk to themselves or to others by starting the engine, activating equipment such as the electric windows or locking the doors, for example.

Also, in hot and/or sunny weather, please remember that the temperature inside the passenger compartment increases very quickly.

RISK OF DEATH OR SERIOUS INJURY.

Be within the access zone

Depending on the vehicle, press button ***2*** on the handle of one of the front doors, the tailgate or the rear hinged door.

The hazard warning lights flashing tells you about the vehicle status:
- **two flashes** indicate that the vehicle is locked.
- **one flash** indicates that the vehicle is unlocked.

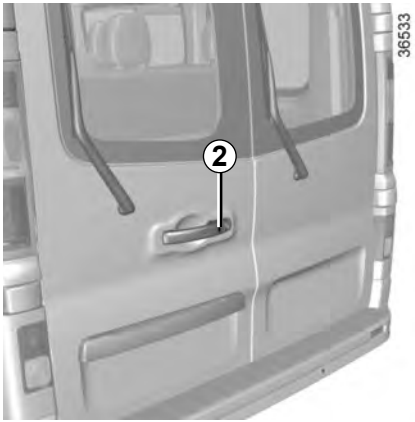

Special features relating to vehicle locking

- When locking, if a door is open or incorrectly closed, the vehicle will lock and unlock in quick succession without the hazard warning lights flashing;
- after locking by pressing button ***2***, you have to wait approximately 3 seconds to be able to unlock the vehicle again.

“HANDS-FREE” RENAULT CARD: usage (3/4)

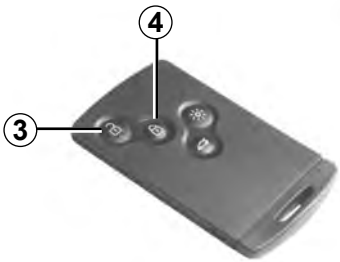

26787

Unlocking with the card RENAULT

Press the button ***3***.
The hazard warning lights **flash once** to indicate that the doors have been unlocked.

Locking using the RENAULT card

With the doors closed, press button ***4***: the vehicle will lock.

The hazard warning lights **flash twice** to indicate that the doors have locked.

NB: The maximum distance at which the vehicle locks depends on the surroundings.

36509

Special note:
The vehicle will not lock if:
– a door is open or not properly closed;
– the card is not in the zone ***1***.

After locking/unlocking the vehicle using the buttons on the RENAULT card, "hands-free" locking and unlocking is deactivated.

To reactivate the “hands-free” mode: restart the vehicle.

Driver’s responsibility when parking or stopping the vehicle

Never leave an animal, child or adult who is not self-sufficient alone in your vehicle, even for a short time.

They may pose a risk to themselves or to others by starting the engine, activating equipment such as the electric windows or locking the doors, for example.

Also, in hot and/or sunny weather, please remember that the temperature inside the passenger compartment increases very quickly.

RISK OF DEATH OR SERIOUS INJURY.

36626

With the engine running, if, after opening and closing a door, the card is no longer in the zone ***5***, the message “KEYCARD NOT DETECTED” (together with a beep when the speed exceeds a limit) warns you that the card is no longer in the vehicle. This avoids you driving away after having dropped off a passenger who has the card, for example.

The warning disappears when the card is detected again.

26787

Distance lighting function

The interior lights come on for approximately 30 seconds when button ***6*** is pressed. This can be used, for example, to identify the vehicle from a distance when parked in a car park.
NB: Pressing button ***6*** again switches off the lighting.

Rear opening elements locking/unlocking

Press button ***7*** to lock/unlock the rear hinged doors or the tailgate and, depending on the vehicle, the side doors.

The hazard warning lights flashing notifies you of the status of the rear opening elements:
– **two flashes** indicate that the rear opening elements are locked;
– **one flash** indicates that the rear opening elements are unlocked.

After locking/unlocking the vehicle using the buttons on the RENAULT card, "hands-free" locking and unlocking is deactivated.

To reactivate the “hands-free” mode: restart the vehicle.

26787

If the vehicle is equipped with a deadlocking function, this allows you to lock the opening elements and to prevent the doors from being unlocked using the interior handles (for example, by breaking the window and then trying to open the door from the inside).

Never use deadlocking if someone is still inside the vehicle.

36508

To activate deadlocking

– Press the button ***2*** twice in quick succession;

or

– With the vehicle unlocked, you can also press the button ***3*** on the driver or passenger side door twice in quick succession (or, depending on the vehicle, on the tailgate or the rear door).

In both cases, locking is indicated by the hazard warning lights flashing **five** times.

To deactivate deadlocking

Unlock the vehicle using button ***1*** on the RENAULT card.

The hazard warning lights flash once to indicate that the doors have been unlocked.

After activating the deadlocking function using button ***2***, “hands-free” locking and unlocking are deactivated.

To reactivate the “hands-free” mode: restart the vehicle.

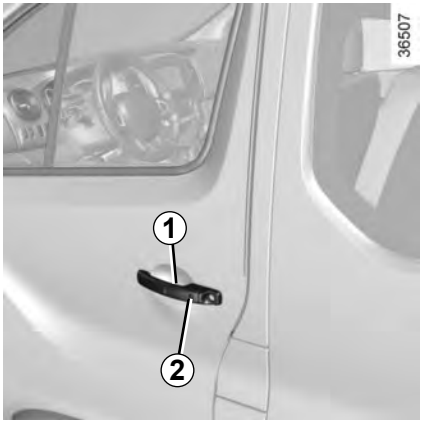

Opening the doors from the outside

Vehicles with a remote control
Unlock the vehicle using the remote control and pull handle ***1***.

Vehicles with RENAULT card
With the card on your person, press button ***2*** to unlock the vehicle and pull handle ***1***.

Closing from the outside

Push the door. Lock it using the remote control or, for vehicles fitted with the RENAULT card, by pressing button ***2***.

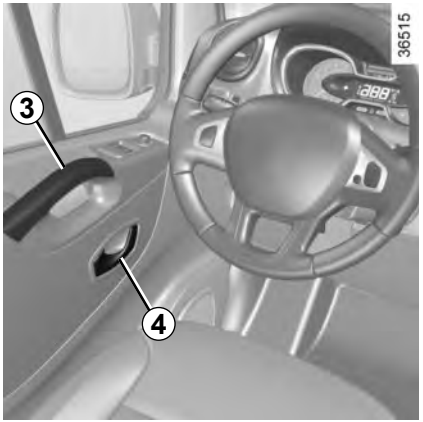

Opening from the inside

Pull handle ***4*** and push the door.

Closing from the inside

Pull the door exclusively using handle ***3***.

As a safety precaution, the doors should only be opened or closed when the vehicle is stationary.

Driver's responsibility when parking or stopping the vehicle

Never leave an animal, child or adult who is not self-sufficient alone on your vehicle, even for a short time.
They may pose a risk to themselves or to others by starting the engine, activating equipment such as the electric windows or locking the doors.
Also, in hot and/or sunny weather, please remember that the temperature inside the passenger compartment increases very quickly.
RISK OF DEATH OR SERIOUS INJURY.

Lights-on reminder buzzer

If you have switched off the ignition and left the lights switched on, a reminder buzzer will sound when a door is opened.

Card reminder buzzer

(depending on the vehicle)

On opening the driver's door, if the card is still in the reader, the message "PLEASE REMOVE KEYCARD" is displayed on the instrument panel accompanied by a warning beep.

Key reminder alarm

(depending on the vehicle)

If you have left the key in the ignition, an alarm will sound when the driver's door is opened.

Door/tailgate open buzzer

If a door is open or not properly closed, as soon as the vehicle reaches a speed of approximately 12 mph (20 km/h), the message "Door open" will appear on the instrument panel, accompanied by a warning light.

Special note

Depending on the vehicle, accessories (e.g. radio) stop working either when the engine is switched off or when the driver's door is opened or when the doors are locked.

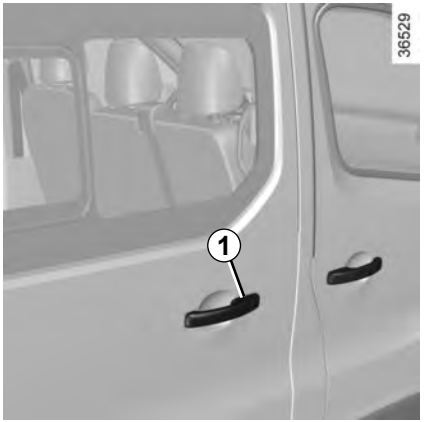

Vehicles with a remote control

The sliding side door is locked and unlocked by pressing the remote control button.

Vehicles with RENAULT card

The sliding side door is locked and unlocked:
– by pressing the RENAULT card buttons;
– in hands-free mode by locking/unlocking the front doors or the tailgate.

Opening the doors from the outside

With the vehicle unlocked, pull handle ***1*** towards you and slide the door towards the rear.

Opening from the inside

Pull lever ***2*** towards the rear and open the sliding door until it locks into position.

Closing from the outside

Pull handle ***1*** and slide the door towards the front of the vehicle until it closes completely.

Closing from the inside

Pull lever ***2*** towards the front and close the door until it latches.

Manual locking from inside

Lower button ***3***. The sliding door is locked.

As a safety precaution, the doors should only be opened or closed when the vehicle is stationary.

Child safety

To make it impossible for the rear doors to be opened from the inside, move screw ***4*** and close the door.

Check from the inside that all the doors are locked.

The door can only be opened from the outside of the vehicle.

Driver's responsibility when parking or stopping the vehicle

Never leave an animal, child or adult who is not self-sufficient alone on your vehicle, even for a short time.
They may pose a risk to themselves or to others by starting the engine, activating equipment such as the electric windows or locking the doors.
Also, in hot and/or sunny weather, please remember that the temperature inside the passenger compartment increases very quickly.
RISK OF DEATH OR SERIOUS INJURY.

Recommendations concerning the sliding side door.

Care must be taken when opening or closing the sliding door, as is the case for any of the opening elements on the vehicle:

- Check that the door will not come into contact with any person, part of the body, animal or object.
- Only use the handles on the inside and outside of the door to operate it.
- Take care when opening and closing the door.
- Take particular care when the vehicle is parked on a slope: open or close the door fully until it latches into its locking position.
- Before moving off, always ensure that the sliding door is properly closed.

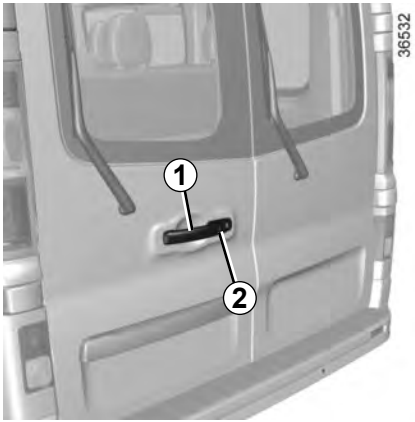

Opening the doors from the outside

Vehicles with a remote control
Unlock the vehicle using the remote control and pull handle ***1***.

Vehicles with RENAULT card
With the card on your person, press button ***2*** to unlock the vehicle and pull handle ***1***.

Pull the lever ***3*** to open the door.

If the vehicle is parked on the hard shoulder with tailgate open, the rear lights may be obscured. You should make other road users aware of your vehicle by using a warning triangle or other equipment specified by the road traffic regulations of the country you are driving in.

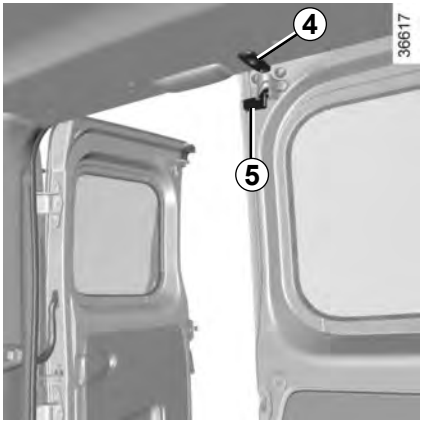

Driving with the right-hand door open

With the right-hand door open, close the left-hand door.

On equipped vehicles, lock the left-hand door by turning the lock ***5*** to put it in its housing ***4***.

If driving with the right-hand rear hinged door open, always secure transported loads (please refer to the section “Transporting objects” in Section 3). The left-hand door, which remains shut, should not be used to hold transported loads in place. Using the right rear hinged door open while driving should only be done in exceptional cases.

In any event, please refer to local legislation. Risk of loads falling on the road surface.

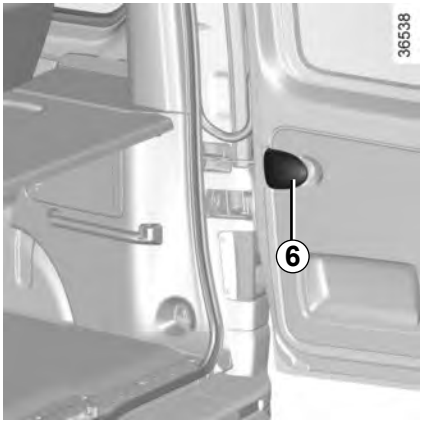

Opening the doors to the maximum position

For each door, pull handle ***6*** to release the door check strap ***7***. Open the door as far as possible.

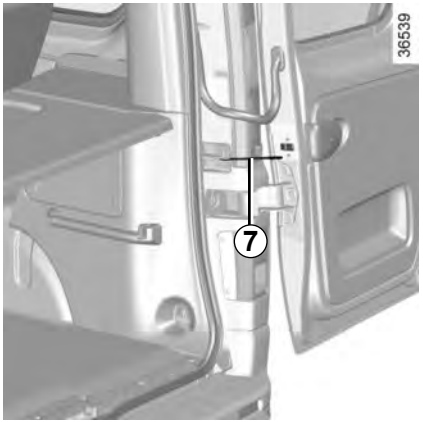

Closing from the outside

Partially close the right-hand door, then slam it shut.

Then repeat this with the left-hand door.

Lock.

Do not leave the hinged rear doors open in case of strong winds. Risk of injury.

For your safety, check that all the vehicle's doors are properly closed before starting the engine.

To unlock the door ***A***, refer to the information on “Central door locking/unlocking” in Section 1.

Manual locking/unlocking from the inside

Turn the button ***8*** clockwise to lock the door ***A***.

Turn the button ***8*** anticlockwise to unlock the door ***A***.

Opening from the inside

Pull the handle ***9*** and push the door ***A***.

Pull the lever ***3*** and open the door ***B***.

Do not leave the hinged rear doors open in case of strong winds. Risk of injury.

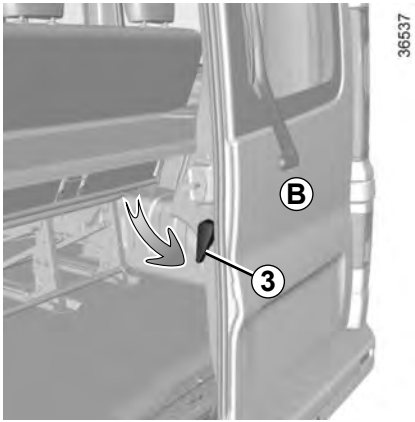

Closing from the inside

Partially close door ***B***, then slam it shut.

Then repeat this with door ***A***.

For your safety, check that all the vehicle’s doors are properly closed before starting the engine.

Vehicles with a remote control

The tailgate is locked and unlocked by pressing the remote control button.

Vehicles with RENAULT card

The tailgate is locked and unlocked:
– by pressing the RENAULT card buttons;
– in hands-free mode by locking/unlocking the front doors.

To open

With the tailgate unlocked, press the button ***1*** and lift the tailgate.

To close

Lower the tailgate, initially using the interior handle ***2*** to assist you.

When the tailgate has been lowered to shoulder height, release handle ***2*** and finish closing the tailgate by pressing down on the tailgate from the outside.

Interior locking/unlocking door control

The switch ***1*** simultaneously controls all the doors.

If a door is open or not properly closed, the doors lock and then quickly unlock.

If you need to transport objects with the boot open, the other opening elements can still be locked: **with the engine stopped,** press switch ***1*** for more than five seconds to lock the other opening elements.

Locking the opening elements without the RENAULT card or the key

For example, in the event of a discharged battery or the RENAULT card or key temporarily not working, etc.

With the engine off, the rear doors closed and a front door open, press switch ***1*** for more than five seconds.

Make sure you have your key or RENAULT card with you before leaving your vehicle.

When the door is closed, all the doors and tailgate will be locked.

Unlocking from the outside can only be done using the key or the RENAULT card.

After locking/unlocking the vehicle using the buttons on the RENAULT card, "hands-free" locking and unlocking is deactivated.

To reactivate the “hands-free” mode: restart the vehicle.

Never leave your vehicle with the key or RENAULT card inside.

Doors and tailgate status indicator light

When the ignition is on, the indicator light integrated in switch ***1*** informs you of the status of the doors and tailgate:
– indicator light on, the doors and tailgate are locked;
– light off, the doors and tailgate are unlocked.

When the ignition is off, the indicator light remains lit and then goes out when you lock the doors.

Locking the doors with the tailgate open

To lock the vehicle with the boot open (e.g. when transporting something in the boot which prevents it from being closed), or when the vehicle is located in a zone of high electromagnetic radiation, or if the card or key is faulty: with the engine switched off, press and hold switch ***1*** for more than five seconds.

NB: If you close the boot, it will lock.

Driver's responsibility

If you decide to keep the doors locked when you are driving, remember that it may be more difficult for those assisting you to gain access to the passenger compartment in the event of an emergency.

Driver's responsibility when parking or stopping the vehicle

Never leave an animal, child or adult who is not self-sufficient alone in your vehicle, even for a short time.

They may pose a risk to themselves or to others by starting the engine, activating equipment such as the electric windows or locking the doors, for example.

Also, in hot and/or sunny weather, please remember that the temperature inside the passenger compartment increases very quickly.

RISK OF DEATH OR SERIOUS INJURY.

Locking/unlocking from the outside

This is done using the remote control or the RENAULT card: refer to the information on “Radio frequency remote control: general information” or “RENAULT card: general information” in Section 1.

In some cases, the radio frequency remote control or the RENAULT card may not work:

– RENAULT card/radio frequency remote control battery worn or run flat.

– if equipment operating on the same frequency as the card (mobile phones, etc.) is used;

– vehicle located in a high electromagnetic radiation zone.

It is then possible:

– depending on the vehicle, use the radio frequency remote control or the emergency key integrated in the card to unlock the front left-hand door, or depending on the vehicle, the rear hinged door;
– to lock each of the doors manually;
– use the interior locking/unlocking door control (please refer to the information on “Locking and unlocking the opening elements” in Section 1).

Using the key

Insert the key into the lock ***1*** and lock or unlock the front left-hand door and, depending on the vehicle, the rear hinged door.

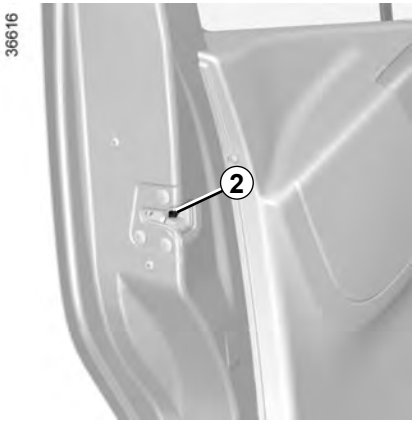

Locking the doors manually

Turn screw ***2*** with the door open (using the end of the key) and close the door. This means that the doors are then locked from the outside.
The doors may then only be opened from inside the vehicle or with the key for the front doors.

Special feature on vehicles with a tailgate

After manually locking the doors, the tailgate remains unlocked.

Driver's responsibility when parking or stopping the vehicle

Never leave an animal, child or adult who is not self-sufficient alone on your vehicle, even for a short time.

They may pose a risk to themselves or to others by starting the engine, activating equipment such as the electric windows or locking the doors.

Also, in hot and/or sunny weather, please remember that the temperature inside the passenger compartment increases very quickly.

RISK OF DEATH OR SERIOUS INJURY.

You can decide whether you want to activate this function.

To activate

With the ignition on, press switch ***1*** for approximately 5 seconds until you hear a beep.

To deactivate

With the ignition on, press and hold switch ***1*** for approximately 5 seconds, until you hear a beep.

Operating principle

After the vehicle is started, the system automatically locks the doors once your speed reaches approximately 4 mph (7 km/h).

The door can be unlocked:

– by pressing the door unlocking button ***1***.

– by opening a front door (vehicle stationary).

NB: If a door is opened or closed, it will automatically lock again when the vehicle reaches a speed of 4 mph (7 km/h).

Operating faults

If you notice an operating fault (automatic locking impossible), first check that all doors are correctly locked. If they are correctly locked and the fault is still present, contact an approved Dealer.

Also make sure that locking has not been inadvertently deactivated.

If it has, switch the ignition off and on again and reactivate it.

Driver's responsibility

If you decide to keep the doors locked when you are driving, remember that it may be more difficult for those assisting you to gain access to the passenger compartment in the event of an emergency.

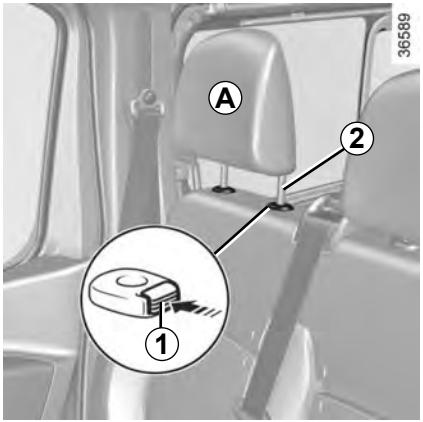

To raise the headrest

Pull the headrest upwards to the desired height. Check that it is correctly locked.

To lower the headrest

Press button ***1*** and guide the headrest down to the desired height. Check that it is correctly locked.

To raise the headrest

Raise the headrest to its highest position (tilt the seatback if necessary). Press button ***1*** and lift the headrest to release it.

To refit the headrest

Insert the headrest rods into the holes (tilt the seatback if necessary). Lower the headrest until it locks and press button ***1*** to adjust to the desired height. Check that each rod ***2*** on the seatback is securely locked.

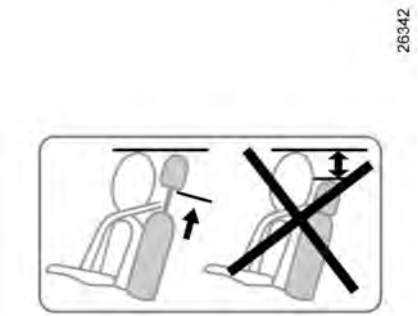

The headrest is important for safety. Ensure that it is in place and in the correct position: the top of the headrest should be as close as possible to the top of the head and there must be a minimal distance between the head and the headrest ***A***.

Seat adjustments

To move forwards or backwards

Lift handle ***1*** to release. Release the handle once the seat is in the correct position and ensure that the seat is locked.

To adjust the height of the seat base

Lower or pull lever ***3*** as many times as is necessary to raise or lower the seat base.

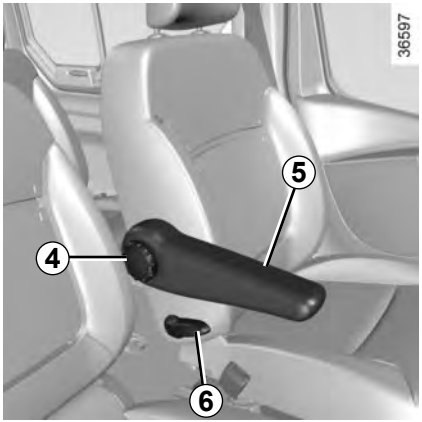

Lumbar adjustment

Turn control knob ***4*** to increase or decrease support.

To tilt the seatback

Move lever ***6***.

Front armrests *5*

Heated seats

With the ignition on, press switch ***2***. The integrated indicator comes on.

The system, which has a thermostat, decides whether or not the heating is needed.

For safety reasons, carry out any adjustments when the vehicle is not being driven.

We would advise you not to recline the seatbacks too far to ensure that the effectiveness of the seat belts is not reduced.

Nothing should be placed on the floor (area in front of driver) as such objects may slide under the pedal during braking manoeuvres, thus obstructing its use.

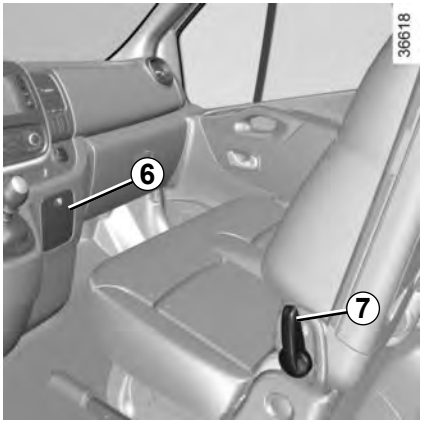

Central passenger seat table formation

Make sure the cup holder ***6*** is closed.

Make sure that nothing prevents the seat from moving.

– hold the seatback by the top to guide it downwards, and simultaneously activate control ***7*** and fold the seatback forwards;
– press on the back of the seatback to lock it in place. Make sure you lock the seatback properly.

To reposition the central passenger seat

Make sure that nothing prevents the seat from moving.

– Activate control ***7*** to unlock the seatback;
– Lift the seat back;
– Make sure the seat is correctly locked in position.

For your safety, attach any transported objects when the seat is in the table position.

When the front seat is in table position, the front passenger air bag must be disabled (see information on “Child safety: activating/deactivating the front passenger air bag” in Section 1).

Risk of serious injury caused by items resting on the seatback table which may be dislodged when the air bag is deployed.

The label (on the dashboard) and the markings (on the windscreen) remind you of these instructions.

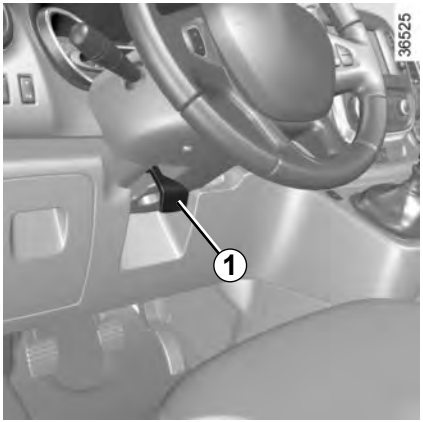

Adjusting the steering wheel height and depth

Pull lever ***1*** and place the steering wheel in the required position; push the lever beyond the point of resistance to lock the steering wheel in place.

Make sure that the steering wheel is correctly locked.

For safety reasons, only adjust the steering wheel when the vehicle is stationary.

Power Assisted Steering

Never drive with an inadequately charged battery.

Variable power assisted steering

The variable power assisted steering system is equipped with an electronic control system which alters the level of assistance to suit the vehicle speed.

Steering is made easier during parking manoeuvres (for added comfort) whilst the force needed to steer increases progressively as the speed rises (for enhanced safety at high speeds).

With the engine switched off, or if there is a system fault, it is still possible to turn the steering wheel. The force required will be greater.

Never switch off the ignition when travelling downhill, and avoid doing so in normal driving (assistance is not provided).

Always wear your seat belt when travelling in your vehicle. You must also comply with the legislation of the particular country you are in.

Make sure that the rear bench seat is locked in position correctly so that the rear seat belts will operate efficiently. Refer to the information on the “Rear bench seat: functions” in Section 3.

Incorrectly adjusted or twisted seat belts may cause injuries in the event of an accident.

Use one seat belt per person, whether child or adult.

Even pregnant women should wear a seat belt. In this case, ensure that the lap belt is not exerting too much pressure on the abdomen, but do not allow any slack.

Before starting, first adjust your driving position, then ask all occupants to adjust their seat belts to ensure optimum protection.

Adjusting your driving position

- **Sit well back in your seat** (having first removed your coat or jacket). This is essential to ensure your back is positioned correctly;
- **adjust the distance between the seat and the pedals.** Your seat should be as far back as possible while still allowing you to depress the clutch pedal fully. The seatback should be adjusted so that your arms are slightly bent when you hold the steering wheel;
- **adjust the position of your headrest.** For the maximum safety, your head must be as close as possible to the headrest;
- **adjust the height of the seat.** This adjustment allows you to select the seat position which offers you the best possible view**;**
- **adjust the position of the steering wheel.**

Adjusting the seat belts

Sit with your back firmly against the seatback.

Shoulder strap ***1*** should be as close as possible to the base of the neck but not on it.

Lap belt ***2*** should be worn flat over the thighs and against the pelvis.

The belt should be worn so that it is as close as possible to your body, i.e.: avoid wearing heavy clothing or keeping bulky objects under the belts, etc.

Locking

Unwind the belt **slowly and smoothly** and ensure that buckle ***3*** locks into catch ***5*** (check that it is locked by pulling on buckle ***3***).

If the belt jams, allow it to return slightly before attempting to unwind it again.

If your seat belt is completely jammed, pull slowly, but firmly, so that just over 3 cm unwinds. Allow it to return slightly before attempting to unwind it again.

If there is still a problem, contact an approved dealer.

Front seat belt reminder warning light

If the seat belt is not fastened, the light remains lit when the vehicle is started, then when the car reaches a speed of approximately 9.92 mph (16 km/h), it flashes and a beep sounds for approximately 2 minutes.

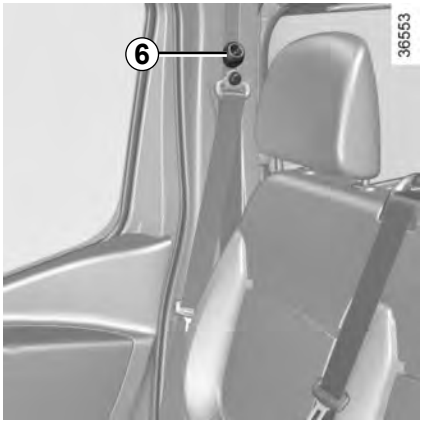

Adjusting the height of the front seat belts

Move button ***6*** to select the position you require so that chest strap ***1*** is worn as described above.

Make sure that the seat belt is locked in position correctly after you have adjusted it.

Unlocking

Press button ***4*** and the seat belt will be rewound by the inertia reel. Guide the belt.

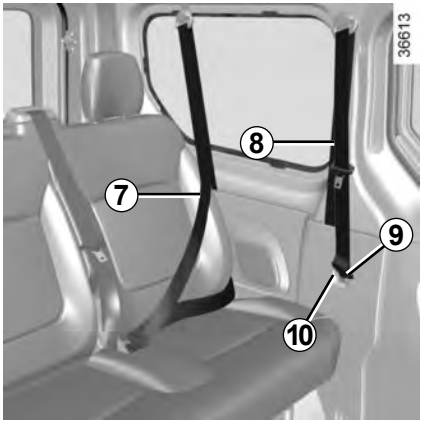

Rear side seat belts

– For the first row of rear seats, it is **mandatory** to use seat belts ***8***;

– for the last row of rear seats, it is **mandatory** to use seat belts ***7***.

When the seat belt ***8*** is not in use, place the buckle ***9*** in its housing ***10***.

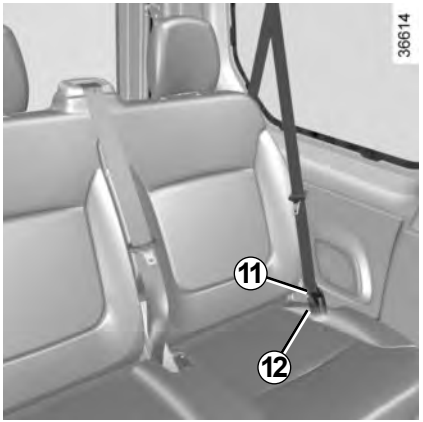

Conditions of use

Before using the rear side seat belts, make sure that for each one, the fixed buckle ***11*** is fully clicked into its catch ***12***.

The belts are then locked and unlocked in the same way as the front seats.

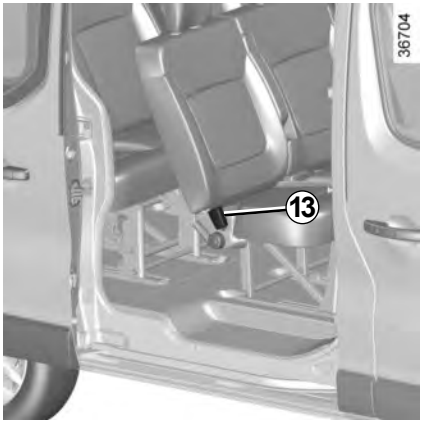

Access to the last row

To facilitate access to the last row of seats, detach the second row seat belt by unlocking it from its catch ***13***. Insert the detached part of the seat belt into the small bar on the fixed part of the belt.

Remember to lock the seat belt in place once more when a passenger is occupying the seat.

Check that the rear seat belts are positioned and operating correctly each time the rear bench seat is moved.

Centre seat belts

Unwind the seat belt slowly until the buckle locks in catch ***14***.

Make sure that the rear bench seats are locked in position properly so that the seat belts will operate efficiently. Refer to the information on the “Rear bench seats” in Section 3.

Rear seat functions

Refer to the information on the “Rear bench seats” in Section 3.

SEAT BELTS (5/5)

The following information applies to the vehicle's front and rear seat belts.

– No modification may be made to the component parts of the originally fitted restraint system: seat belts, seats and their mountings. For special operations (e.g. fitting child seats), contact an authorised dealer.

– Do not use devices which allow any slack in the belts (e.g. clothes pegs, clips, etc.): a seat belt which is worn too loosely may cause injury in the event of an accident.

– Never wear the shoulder strap under your arm or behind your back.

– Never use the same belt for more than one person and never hold a baby or child on your lap with your seat belt around them.

– The belt should never be twisted.

– Following an accident, have the seat belts checked and replaced if necessary. Always replace your seat belts as soon as they show any signs of wear.

– When putting back the rear bench seat, make sure the seat belts are correctly positioned so that they can be used properly.

– Make sure that the buckle is inserted into the appropriate catch.

– Ensure that no objects are placed in the area around the seat belt catch as they could prevent it from being properly secured.

– Make sure the seat belt catch is properly positioned (it should not be hidden away, crushed or flattened by people or objects).

METHODS OF RESTRAINT IN ADDITION TO THE FRONT SEAT BELTS (1/4)

Depending on the vehicle, they will consist of:

- **front seat belt inertia reel pretensioners;**
- **chest-level load limiters;**
- **air bags for driver and front passenger.**

These systems are designed to act independently or together when the vehicle is subjected to a frontal impact.

Depending on the severity of the impact, the system can trigger:

- seat belt locking;
- the seat belt inertia reel pretensioner (which engages to correct seat belt slack);
- airbags.

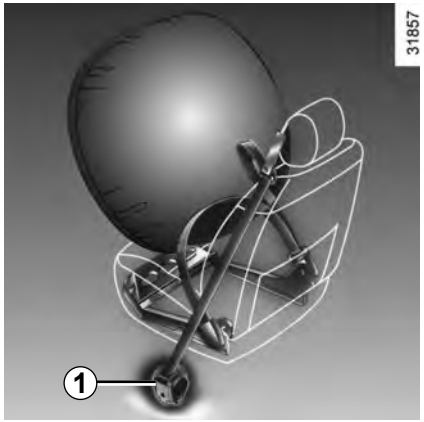

Pretensioners

The pretensioners hold the seat belt against the body, holding the occupant more securely against the seat, thus increasing the seat belt's efficiency.

With the ignition on, following a significant frontal impact and depending on the severity of the impact, the system may trigger the seat belt inertia reel pretensioner ***1***, which instantly retracts the seat belt.

- Have the entire restraint system checked following an accident.
- No operation whatsoever is permitted on any part of the system (pretensioners, air bags, computers, wiring) and the system components must not be reused on any other vehicle, even if identical.
- To avoid incorrect triggering of the system which may cause injury, only qualified personnel from an approved Dealer may work on the pretensioner and air bag system.
- The electric trigger system may only be tested by a specially trained technician using special equipment.
- When the vehicle is scrapped, contact an approved Dealer for disposal of the pretensioner and air bag gas generators.

Load limiter

Above a certain severity of impact, this mechanism is used to limit the force of the belt against the body so that it is at an acceptable level.

Airbags for driver and front passenger

Fitted to the driver and passenger sides.

An “Airbag” marking on the steering wheel and the dashboard (airbag area ***A***) indicates that this device is fitted.

The passenger airbag only protects the front side passenger; the front centre passenger is only protected by the seat belt. Please follow the usual safety instructions (wearing the seat belt).

Risk of injury in the event of an accident.

Each air bag system consists of:
- an air bag and gas generator fitted on the steering wheel for the driver and in the dashboard for the front passenger;
- an electronic unit for system monitoring which controls the gas generator electrical trigger system;
- a single warning light on the instrument panel.

The air bag system uses pyrotechnic principles. This explains why, when the air bag inflates, it will generate heat, produce smoke (this does not mean that a fire is about to start) and make a noise upon detonation. In a situation where an air bag is required, it will inflate immediately and this may cause some minor, superficial grazing to the skin or other problems.

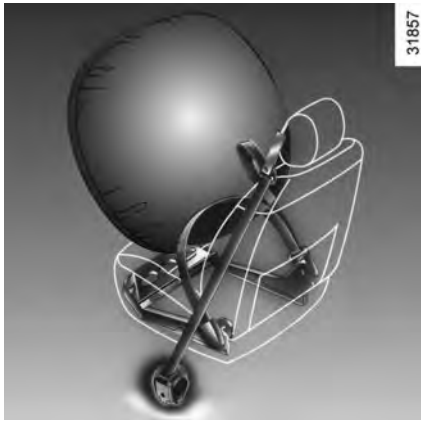

Operation

This system is only operational when the ignition is switched on.

In a severe **frontal** impact, the air bags inflate rapidly, cushioning the impact of the driver's head and chest against the steering wheel and of the front passenger against the dashboard. The air bags then deflate immediately so that the passengers are not in any way hindered from leaving the vehicle.

Operating faults

Warning light ***4*** will light up on the instrument panel when the ignition is turned on and then go out after a few seconds.

If it does not light up when the ignition is switched on, or comes on when the engine is running, there is a fault in the system.

Contact your approved Dealer as soon as possible. Your protection will be reduced until this fault is rectified.

METHODS OF RESTRAINT IN ADDITION TO THE FRONT SEAT BELTS (4/4)

All of the warnings below are given so that the air bag is not obstructed in any way when it is inflated and also to prevent the risk of serious injuries caused by items which may be dislodged when the air bag inflates.

Warnings concerning the driver's air bag

– Do not modify the steering wheel or the steering wheel boss.

– Do not cover the steering wheel boss under any circumstances.

– Do not attach any objects (badge, logo, clock, telephone holder, etc.) to the steering wheel boss.

– The steering wheel must not be removed (except by qualified personnel from our Network).

– When driving, do not sit too close to the steering wheel. Sit with your arms slightly bent (see the information on "Adjusting your driving position" in Section 1). This will allow sufficient space for the air bag to deploy correctly and be fully effective.

Warnings concerning the passenger air bag

– Do not attach or glue any objects (badge, logo, clock, telephone holder, etc.) to the dashboard on or near the air bag.

– Do not place anything between the dashboard and the passenger (pet, umbrella, walking stick, parcels, etc.).

– The passenger must not put his or her feet on the dashboard or seat as there is a risk that serious injuries may occur. In general, parts of the body should be kept away from the dashboard (knees, hands, head, etc.).

– The devices in addition to the front passenger seat belt should be reactivated as soon as a child seat is removed, to ensure the protection of the passenger in the event of an impact.

A REAR-FACING CHILD SEAT MUST NOT BE FITTED TO THE FRONT PASSENGER SEAT UNLESS THE ADDITIONAL RESTRAINT SYSTEMS, I.E. THE PASSENGER AIR BAG, ARE DEACTIVATED.

(refer to the information on "Child safety: deactivating/activating the front passenger air bag" in Section 1)

Force limiter

Above a certain level of impact force, this mechanism is used to limit the force of the belt against the body so that it is at an acceptable level.

– Have the entire restraint system checked following an accident.

– No operation whatsoever is permitted on any part of the system (pretensioners, air bags, computers, wiring) and the system components must not be reused on any other vehicle, even if identical.

– To avoid incorrect triggering of the system which may cause injury, only qualified personnel from an approved dealer may work on the pretensioner and air bag system.

– The electric trigger system may only be tested by a specially trained technician using special equipment.

– When the vehicle is scrapped, contact an approved dealer for disposal of the pretensioner and air bag gas generators.

Side Airbags

These airbags may be fitted to individual seats and are deployed at the sides of the seats (door side) to protect the occupants in the event of a severe side impact.

Curtain Airbags

These are airbags fitted to each upper side of the vehicle. They deploy along the front door side windows to protect occupants in the event of a severe side impact.

Warning relating to the side airbag

– **Fitting seat covers:** seats equipped with an airbag require covers specifically designed for your vehicle. Contact an approved Dealer to find out if these covers are available. The use of any covers other than those designed for your vehicle (and including those designed for another vehicle) may affect the operation of the airbags and reduce your protection.

– Do not place any accessories, objects or even pets between the seatback, the door and the internal fittings. Do not cover the seatback with any items such as clothes or accessories. This may prevent the air bag from operating correctly or cause injury when the airbag is deployed.

– No work or modification whatsoever may be carried out on the seat or internal fittings, except by qualified personnel from an approved Dealer.

ADDITIONAL METHODS OF RESTRAINT

All of the warnings below are given so that the airbag is not obstructed in any way when it is inflated and also to prevent the risk of serious injuries caused by items which may be dislodged when it inflates.

The airbag is designed to complement the action of the seat belt. Both the air bags and seat belts are integral parts of the same protection system. It is therefore essential to wear seat belts at all times. If seat belts are not worn, the occupants are exposed to the risk of serious injury in the event of an accident. It may also increase the risk of minor superficial injuries occurring when the airbag is deployed, although such minor injuries are always possible with air bags.

If the vehicle should overturn or in the event of a rear impact, however severe, the pretensioners and airbags are not always triggered. Impacts to the underside of the vehicle, e.g. from pavements, potholes or stones, can all trigger these systems.

– No work or modification **whatsoever** may be carried out on any part of the airbag system (airbags, pretensioners, computer, wiring harness, etc.), except by qualified Network personnel.

– To ensure that the system is in good working order and to avoid accidental triggering of the system which may cause injury, only qualified Network personnel may work on the airbag system.

– As a safety precaution, have the airbag system checked if your vehicle has been involved in an accident, or is stolen or broken into.

– When selling or lending the vehicle, inform the user of these points and hand over this handbook with the vehicle.

– When scrapping your vehicle, contact your approved Dealer for disposal of the gas generator(s).

Carrying children

Children, and adults, must be correctly seated and strapped in for all journeys. The children being carried in your vehicle are your responsibility.

A child is not a miniature adult. Children are at risk of specific injuries as their muscles and bones have not yet finished growing. The seat belt alone would not provide suitable protection. Use an approved child seat and ensure you use it correctly.

To prevent the doors being opened, use the “Child safety” device (refer to the information on “Opening and closing the doors” in Section 1).

A collision at 30 mph (50 km/h) is the same as falling a distance of 10 metres.
Transporting a child without a restraint is the equivalent of allowing him or her to play on a fourth-floor balcony without railings.
Never travel with a child held in your arms. In the event of an accident, you will not be able to keep hold of the child, even if you yourself are wearing a seat belt.
If your vehicle has been involved in a road accident, replace the child seat and have the seat belts and ISOFIX anchorage points checked.

Driver’s responsibility when parking or stopping the vehicle

Never leave an animal, child or adult who is not self-sufficient alone on your vehicle, even for a short time.

They may pose a risk to themselves or to others by starting the engine, activating equipment such as the electric windows or by locking the doors.

Also, in hot and/or sunny weather, please remember that the temperature inside the passenger compartment increases very quickly.

RISK OF DEATH OR SERIOUS INJURY.

Using a child seat

The level of protection offered by the child seat depends on its ability to restrain your child and on its installation. Incorrect installation compromises the protection it offers the child in the event of harsh braking or an impact.

Before purchasing a child seat, check that it complies with the regulations for the country you are in and that it can be fitted in your vehicle. Consult an approved dealer to find out which seats are recommended for your vehicle.

Before fitting a child seat, read the manual and respect its instructions. If you experience any difficulties during installation, contact the manufacturer of the equipment. Keep the instructions with the seat.

Set a good example by always fastening your seat belt and teaching your child:
- to strap themselves in correctly;
- to always get in and out of the car at the kerb, away from busy traffic.

Do not use a second-hand child seat or one without an instruction manual.

Check that there are no objects in the vicinity of the child seat which could impede its operation.

Never leave a child unattended in the vehicle.

Check that your child is always strapped in and that the belt or safety harness used is correctly set and adjusted. Avoid wearing bulky clothing which could cause the belts to slacken.

Never let your child put their head or arms out of the window.

Check that the child is in the correct position for the entire journey, especially if asleep.

Rear-facing child seats
A baby's head is, proportionally, heavier than that of an adult and its neck is very fragile. Transport the child in this position for as long as possible (until the age of 2 at the very least). It supports both the head and the neck.
Choose a bucket type seat for best side protection and change it as soon as the child's head is higher than the shell.

Forward-facing child seats
The child's head and abdomen need to be protected as a priority. A forward-facing child seat which is firmly attached to the vehicle will reduce the risk of impact to the head. Ensure your child travels in a forward-facing seat with a harness for as long as their size permits.
Choose a bucket type seat for optimum side protection.

Booster cushions
From 15 kg or 4 years, the child can travel using a booster seat, which will enable the seat belt to be adapted to suit his/her size and shape. The booster seat cushion must be fitted with guides to position the seat belt on the child's thighs rather than the stomach. It is recommended that you use a seat-back fitted with a belt strap guide which can be adjusted in terms of height to position the seat belt in the centre of the shoulder. It must never rest on the neck or on the arm.
Choose a bucket type seat for optimum side protection.

CHILD SAFETY: choosing a child/baby seat mounting (1/2)

There are two ways of attaching child seats: via the seat belt or using the ISOFIX system.

Attachment via the seat belt

The seat belt must be adjusted to ensure that it is effective in the event of harsh braking or an impact.
Ensure that the strap paths indicated by the child seat manufacturer are respected.
Always check that the seat belt is correctly fastened by pulling it up, then pulling it out fully whilst pressing on the child seat.
Check that the seat is correctly held by moving it from side to side and back to front: the seat should remain firmly fixed.
Check that the child seat has not been installed at an angle and that it is not resting against a window.

Do not use the child seat if it may unfasten the seat belt restraining it: the base of the seat must not rest on the buckle and/or catch of the seat belt.

Before using an ISOFIX child seat that you purchased for another vehicle, check that its installation is authorised. Consult the list of vehicles which can be fitted with the seat from the equipment manufacturer.

The seat belt must never be twisted or the tension relieved. Never pass the shoulder strap under the arm or behind the back.
Check that the seat belt has not been damaged by sharp edges.
If the seat belt does not operate normally, it will not protect the child. Consult an approved dealer. Do not use this seat until the seat belt has been repaired.

Attachment using the ISOFIX system

Authorised ISOFIX child seats are approved in accordance with regulation ECE-R44 in one of the three following cases:
– ISOFIXuniversal 3-point forward-facing seat;
– ISOFIXsemi-universal 2-point seat;
– specific.

For the latter two, check that your child seat can be installed by consulting the list of compatible vehicles.

Attach the child seat with the ISOFIX locks, if these are provided. The ISOFIX system allows quick, easy, safe fitting.

The ISOFIX system consists of 2 rings and, in some cases, a third ring.

No modifications may be made to the component parts of the restraint system (seat belts, ISOFIX and seats and their mountings) originally fitted.

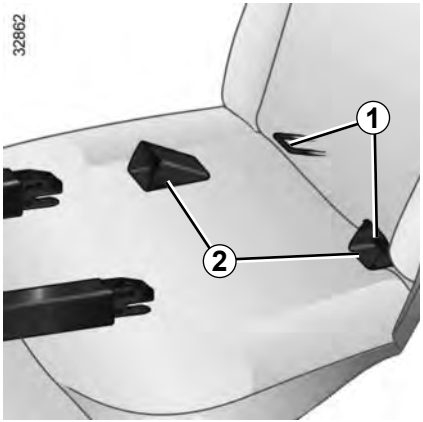

The two rings ***1*** are located between the seatback and the seat base of the seat and are identified by a marking .

To ensure your child seat can be easily fitted and locked on rings ***1***, use access guides ***2*** on the child seat.

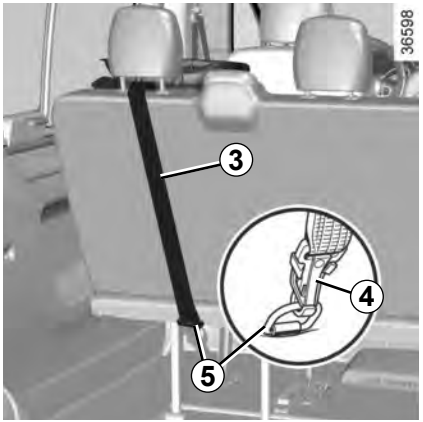

Front-facing seat mounting ring for rear side seats

The 3rd ring is used to attach the upper belt on some child seats.

– Place the headrest in the top position or remove it;
– pass belt ***3*** (supplied with the seat) between the two rear headrest rods;
– the hook ***4*** **must** be attached to the ring ***5*** marked by the symbol to the rear of the seat;
– pull the belt so that the child seat comes into contact with the vehicle seatback.

The ISOFIX anchorage points have been exclusively designed for child seats with the ISOFIX system. Never fit a different type of child seat, seat belt or other objects to these anchorage points.
Check that nothing is obstructing the anchorage points.
If your vehicle has been involved in a road accident, have the ISOFIX anchorage points checked and replace your child seat.

Check that the seatback of the forward-facing child seat is in contact with the back of the vehicle seat. In this case, the child seat may not always rest on the base of the vehicle seat.

CHILD SAFETY: fitting a child seat, general information (1/2)

Some seats are not suitable for fitting child seats. The diagram on the following page shows you how to attach a child seat.

The types of child seat indicated may not be available. Before using a different child seat, check with the manufacturer that it can be fitted.

Ensure that the child seat or the child's feet do not prevent the front seat from locking correctly. Refer to the information on the "Front seat" in Section 1.
Check that when installing the child seat in the vehicle it is not at risk of coming loose from its base.
If you have to remove the headrest, check that it is correctly stored so that it does not come loose under harsh braking or impact.
Always attach the child seat to the vehicle even if it is not in use so that it does not come loose under harsh braking or impact.

In the front seat

The laws concerning children travelling in the front passenger seat differ in every country. Consult the legislation in force and follow the indications on the diagram on the following page.

Before fitting a child seat in this seat (if authorised):

– lower the seat belt as far as possible;

– move the seat as far back as possible;

– gently tilt the seatback away from vertical (approximately 25°);

– on equipped vehicles, raise the seat base as far as possible.

In all situations, reinsert the headrest to its full extent so that it does not interfere with the child seat (see the information on "Front headrests" in Section 1);

After installing the child seat, if necessary, the seat may be advanced (so as to leave enough space in the rear seats for passengers or other child seats). For a rear-facing child seat, do not let it touch the dashboard or move it to the furthest forward position.

Do not change other settings after installing the child seat.

RISK OF DEATH OR SERIOUS INJURY: Before installing a child seat on the front passenger seat, check that the airbag has been deactivated (please refer to "Child safety: front passenger airbag deactivation and activation" in Section 1).

In the rear side seat

A carrycot can be installed across the vehicle and will take up at least two seats.
Position the child with their feet nearest the door.
Move the front seat as far forward as possible to install a rear-facing child seat, then move back the seat in front as far as it will go, although without allowing it to come into contact with the child seat.

For the safety of the child in the forward-facing seat, do not move the seat in front back past the middle of the runner, do not tilt the seatback too far (maximum of 25°) and raise the seat as much as possible.

In all situations, remove the rear headrests (refer to the information on the “Rear headrests” in Section 3). This must be done before fitting the child seat.

Check that the forward-facing child seat is resting against the back of the vehicle seat.

Rear centre seat

Check that the belt is suitable for securing your child seat. Consult an approved dealer.

Fit the child seat in a rear seat wherever possible.

2-seater van

3-seater van

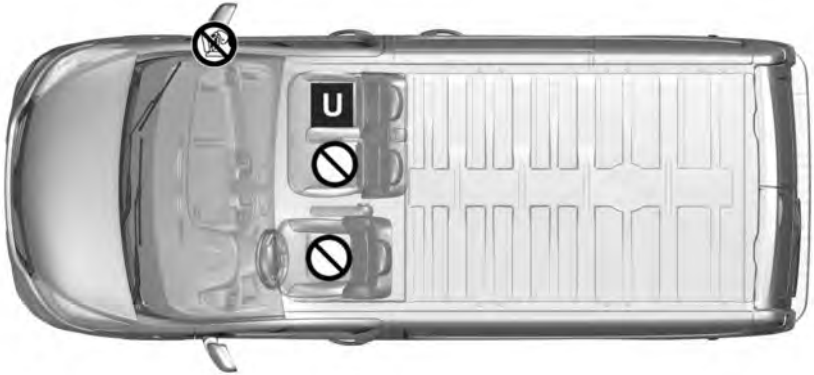

Check the status of the air bag before fitting a child seat or allowing a passenger to use the seat.

Seat not suitable for fitting child seats.

Child seat attached using the belt

U Seat which allows a child seat with “Universal” approval to be attached by a seat belt.

Using a child safety system which is not approved for this vehicle will not correctly protect the baby or child. They risk serious or even fatal injury.

RISK OF DEATH OR SERIOUS INJURY: before fitting a rear-facing child seat on the front passenger seat, check that the air bag has been deactivated (refer to the information on “Deactivating the front passenger air bag” in Section 1).

CHILD SEATS: attachment by seat belt (2/14)

The table below summarises the information already shown on the diagram on the previous page, to ensure the applicable regulations are respected.

Two or three-seater van versions				
Type of child seat	**Weight of the child**	**Front passenger seat(s) (2)**		
		With single passenger seat (1)	**With two-seater bench seat**	
			Centre seat	**Side seat**
Shell seat/rear-facing seat Groups 0, 0+ and 1	< 13 kg and 9 to 18 kg	U	X	U
Forward-facing seat Group 1	9 to 18 kg	U	X	U
Booster seat Groups 2 and 3	15 to 25 kg and 22 to 36 kg	U	X	U

X Seat which does not allow a child seat to be fitted.
U Seat which allows a child seat with “Universal” approval to be installed using a seat belt; check that it can be fitted.

(1) Forward-facing child seat; position the seatback of the child seat in contact with the seatback of the vehicle seat. Raise the headrest. Raise the seat to the maximum and position it as far back as possible, tilting the seatback slightly (approximately 25°).

(2) RISK OF DEATH OR SERIOUS INJURY: before fitting a rear-facing child seat on the front passenger seat, check that the airbag has been deactivated (please refer to the information on “Child safety: front passenger airbag deactivation/activation” in Section 1).

5-seater Combi

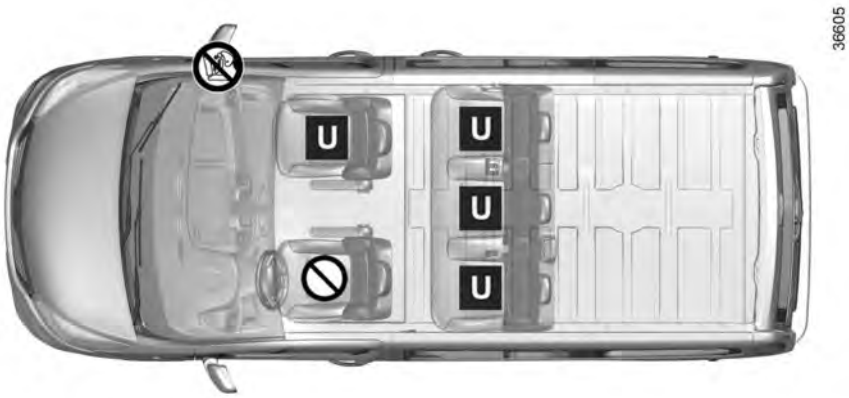

RISK OF DEATH OR SERIOUS INJURY: before fitting a rear-facing child seat on the front passenger seat, check that the airbag has been deactivated (please refer to the information on “Child safety: front passenger airbag deactivation, activation” in Section 1).

Using a child safety system which is not approved for this vehicle will not correctly protect the baby or child. They risk serious or even fatal injury.

Check the status of the air bag before fitting a child seat or allowing a passenger to use the seat.

Child seat attached using the belt

U Seat which allows a seat with “Universal” approval to be fitted using a seat belt;

Seat not suitable for fitting child seats.

CHILD SEATS: attachment by seat belt (4/14)

The table below summarises the information already shown on the diagram on the previous page, to ensure the applicable regulations are respected.

5-seater Combi version				
Type of child seat	**Weight of the child**	**Front passenger seat (1) (2)**	**Rear side seat**	**Rear centre seat**
Carrycot fitted across the vehicle Group 0	< 10 kg	X	U (3) U (3)	U (3)
Rear-facing shell seat Groups 0 and 0+	< 13 kg	U	U (4)	U (4)
Rear-facing seat Groups 0+ and 1	< 13 kg and 9 to 18 kg	U	U (4)	U (4)
Forward-facing seat Group 1	9 to 18 kg	X	U (5)	U (5)
Booster seat Groups 2 and 3	15 to 25 kg and 22 to 36 kg	X	U (5)	U (5)

(1) RISK OF DEATH OR SERIOUS INJURY: before fitting a rear-facing child seat on the front passenger seat, check that the airbag has been deactivated (please refer to the information on “Child safety: front passenger airbag deactivation/activation” in Section 1).

CHILD SEATS: attachment by seat belt (5/14)

X = Seat not suitable for fitting child seats of this type.
U = Seat which allows a child seat with “Universal” approval to be installed using a seat belt; check that it can be fitted.

(2) Raise the seat to the maximum and position it as far back as possible, tilting the seatback slightly (approximately 25°).

(3) A carrycot can be installed across the vehicle and will take up at least two seats. Position the child with his or her feet nearest the door.

(4) Move the front seat as far forward as possible to install a rear-facing child seat, then move back the seat in front as far as it will go, although without allowing it to come into contact with the child seat.

(5) Forward-facing child seat; position the seatback of the child seat in contact with the seatback of the vehicle seat. In all situations, remove the rear headrest of the seat on which the child seat is positioned. This must be done before fitting the child seat (please refer to the section entitled “Rear headrests” in Section 3). Do not push the seat in front of the child more than halfway back on its runners and do not recline the seatback more than 25°.

CHILD SEATS: attachment by seat belt (6/14)

The table below summarises the information already shown in the diagram on the following pages, to ensure the applicable regulations are respected.

6-seater Combi version					
Type of child seat	**Weight of the child**	**Front seat**		**Rear seat**	
		centre passenger	**side passenger (1)**	**side**	**centre**
Carrycot fitted across the vehicle Group 0	< 10 kg	X	X	U (2)	U (2)
Rear-facing shell seat Groups 0 and 0+	< 13 kg	X	U	U (3)	U (3)
Rear-facing seat Groups 0+ and 1	< 13 kg and 9 to 18 kg	X	U	U (3)	U (3)
Forward-facing seat Group 1	9 to 18 kg	X	X	U (4)	U (4)
Booster seat Groups 2 and 3	15 to 25 kg and 22 to 36 kg	X	X	U (4)	U (4)

(1) RISK OF DEATH OR SERIOUS INJURY: before fitting a rear-facing child seat on the front passenger seat, check that the airbag has been deactivated (please refer to the information on “Child safety: front passenger airbag deactivation/activation” in Section 1).

CHILD SEATS: attachment by seat belt (7/14)

X = Seat not suitable for fitting child seats of this type.
U = Seat which allows a child seat with “Universal” approval to be installed using a seat belt; check that it can be fitted.

(2) A carrycot can be installed across the vehicle and will take up at least two seats. Position the child with his or her feet nearest the door.

(3) Move the front seat as far forward as possible to install a rear-facing child seat, then move back the seat in front as far as it will go, although without allowing it to come into contact with the child seat.

(4) Forward-facing child seat; position the seatback of the child seat in contact with the seatback of the vehicle seat. In all situations, remove the rear headrest of the seat on which the child seat is positioned. This must be done before fitting the child seat (please refer to the section entitled “Rear headrests” in Section 3). Do not push the seat in front of the child more than halfway back on its runners and do not recline the seatback more than 25°.

6-seater Combi

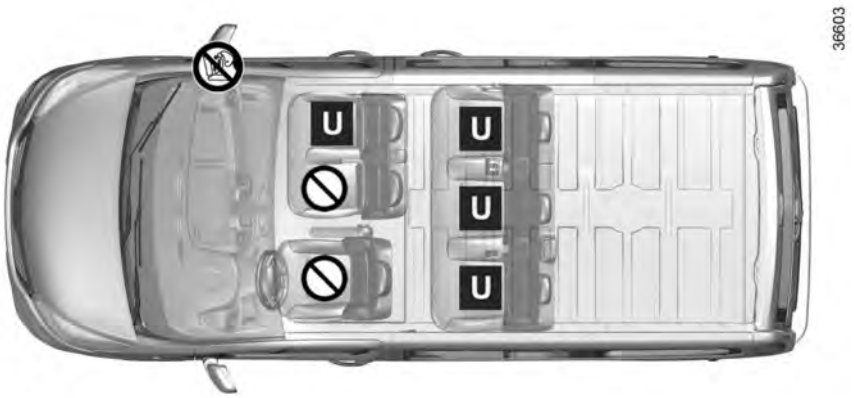

RISK OF DEATH OR SERIOUS INJURY: before fitting a rear-facing child seat on the front passenger seat, check that the airbag has been deactivated (please refer to the information on “Child safety: front passenger airbag deactivation, activation” in Section 1).

Using a child safety system which is not approved for this vehicle will not correctly protect the baby or child. They risk serious or even fatal injury.

Check the status of the air bag before fitting a child seat or allowing a passenger to use the seat.

Child seat attached using the belt

U Seat which allows a seat with “Universal” approval to be fitted using a seat belt;

Seat not suitable for fitting child seats.

8-seater combi/bus

RISK OF DEATH OR SERIOUS INJURY: before fitting a rear-facing child seat on the front passenger seat, check that the airbag has been deactivated (please refer to the information on “Child safety: front passenger airbag deactivation, activation” in Section 1).

Using a child safety system which is not approved for this vehicle will not correctly protect the baby or child. They risk serious or even fatal injury.

Check the status of the air bag before fitting a child seat or allowing a passenger to use the seat.

Child seat attached using the belt

U Seat which allows a seat with “Universal” approval to be fitted using a seat belt;

Seat not suitable for fitting child seats.

CHILD SEATS: attachment by seat belt (10/14)

The table below summarises the information already shown on the diagram on the previous page, to ensure the applicable regulations are respected.

8-seater Bus/Combi version						
Type of child seat	**Weight of the child**	**Front passenger seat (1) (2)**	**Rear seat**			
			2nd row side seats	**2nd row centre seat**	**3rd row side seats**	**3rd row centre seat**
Carrycot fitted across the vehicle Group 0	< 10 kg	X	U (3)	U (3)	U (3)	U (3)
Rear-facing shell seat Groups 0 and 0+	< 13 kg	U	U (4)	U (4)	U (4)	U (4)
Rear-facing seat Groups 0+ and 1	< 13 kg and 9 to 18 kg	U	U (4)	U (4)	U (4)	U (4)
Forward-facing seat Group 1	9 to 18 kg	X	U (5)	U (5)	U (5)	U (5)
Booster seat Groups 2 and 3	15 to 25 kg and 22 to 36 kg	X	U (5)	U (5)	U (5)	U (5)

(1) RISK OF DEATH OR SERIOUS INJURY: before fitting a rear-facing child seat on the front passenger seat, check that the airbag has been deactivated (please refer to the information on “Child safety: front passenger airbag deactivation/activation” in Section 1).

CHILD SEATS: attachment by seat belt (11/14)

X = Seat not suitable for fitting child seats of this type.
U = Seat which allows a child seat with “Universal” approval to be installed using a seat belt; check that it can be fitted.

(2) Raise the seat to the maximum and position it as far back as possible, tilting the seatback slightly (approximately 25°).

(3) A carrycot can be installed across the vehicle and will take up at least two seats. Position the child with his or her feet nearest the door.

(4) Move the front seat as far forward as possible to install a rear-facing child seat, then move back the seat in front as far as it will go, although without allowing it to come into contact with the child seat.

(5) Forward-facing child seat; position the seatback of the child seat in contact with the seatback of the vehicle seat. In all situations, remove the rear headrest of the seat on which the child seat is positioned. This must be done before fitting the child seat (please refer to the section entitled “Rear headrests” in Section 3). Do not push the seat in front of the child more than halfway back on its runners and do not recline the seatback more than 25°.

CHILD SEATS: attachment by seat belt (12/14)

The table below summarises the information already shown in the diagram on the following pages, to ensure the applicable regulations are respected.

9-seater Bus/Combi version							
Type of child seat	**Weight of the child**	**Front seat**		**Rear seat**			
		centre passenger	**side passenger (1)**	**2nd row side seats**	**2nd row centre**	**3rd row side seats**	**3rd row centre seat**
Carrycot fitted across the vehicle Group 0	< 10 kg	X	X	U (2)	U (2)	U (2)	U (3)
Rear-facing shell seat Groups 0 and 0+	< 13 kg	X	U	U (3)	U (3)	U (3)	U (3)
Rear-facing seat Groups 0+ and 1	< 13 kg and 9 to 18 kg	X	U	U (4)	U (3)	U (3)	U (3)
Forward-facing seat Group 1	9 to 18 kg	X	X	U (4)	U (4)	U (4)	U (4)
Booster seat Groups 2 and 3	15 to 25 kg and 22 to 36 kg	X	X	U (4)	U (4)	U (4)	U (4)

(1) RISK OF DEATH OR SERIOUS INJURY: before fitting a rear-facing child seat on the front passenger seat, check that the airbag has been deactivated (please refer to the information on “Child safety: front passenger airbag deactivation/activation” in Section 1).

CHILD SEATS: attachment by seat belt (13/14)

X = Seat not suitable for fitting child seats of this type.
U = Seat which allows a child seat with “Universal” approval to be installed using a seat belt; check that it can be fitted.

(2) A carrycot can be installed across the vehicle and will take up at least two seats. Position the child with his or her feet nearest the door.

(3) Move the front seat as far forward as possible to install a rear-facing child seat, then move back the seat in front as far as it will go, although without allowing it to come into contact with the child seat.

(4) Forward-facing child seat; position the seatback of the child seat in contact with the seatback of the vehicle seat. In all situations, remove the rear headrest of the seat on which the child seat is positioned. This must be done before fitting the child seat (please refer to the section entitled “Rear headrests” in Section 3). Do not push the seat in front of the child more than halfway back on its runners and do not recline the seatback more than 25°.

9-seater combi/bus

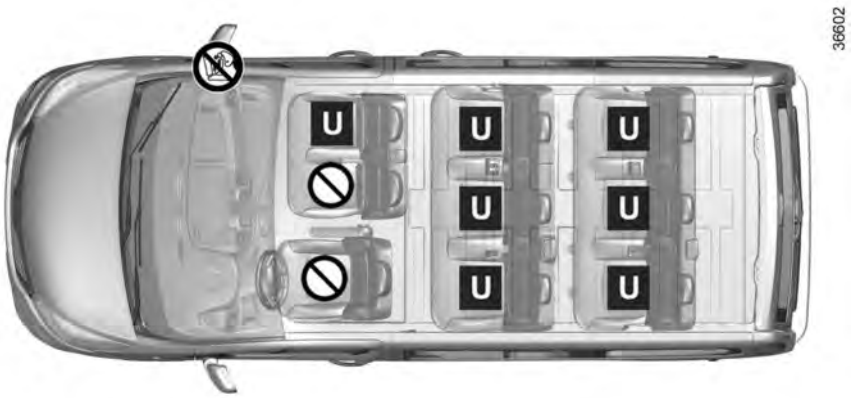

RISK OF DEATH OR SERIOUS INJURY: before fitting a rear-facing child seat on the front passenger seat, check that the air bag has been deactivated (refer to the information on “Deactivating the front passenger air bag” in Section 1).

Using a child safety system which is not approved for this vehicle will not correctly protect the baby or child. They risk serious or even fatal injury.

Check the status of the air bag before fitting a child seat or allowing a passenger to use the seat.

Child seat attached using the belt

U Seat which allows a seat with “Universal” approval to be fitted using a seat belt;

Seat not suitable for fitting child seats.

5-seater Combi

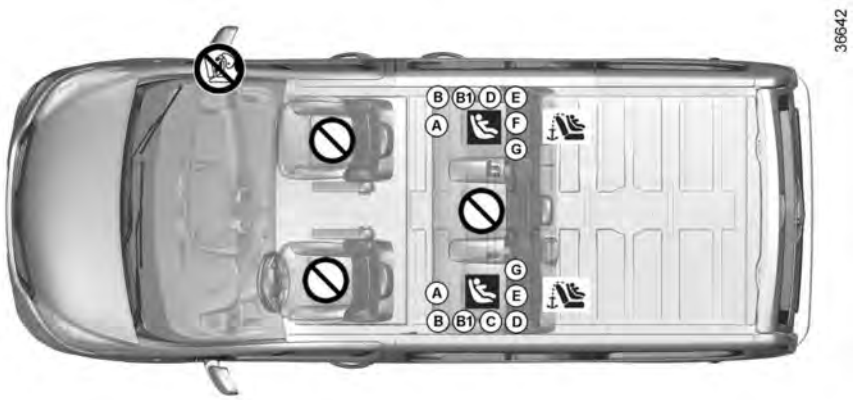

Seat which does not allow a child seat to be fitted.

Using a child safety system which is not approved for this vehicle will not correctly protect the baby or child. They risk serious or even fatal injury.

Child seat attached using the ISOFIX mounting

Seat which allows an ISOFIX child seat to be fitted.

The rear seats are fitted with an anchorage point which allows a forward-facing ISOFIX child seat with universal approval to be fitted. The anchorage points are located in the luggage compartment and are visible.

The size of the ISOFIX child seat is indicated by a letter:

- A, B and B1: for forward-facing seats in group 1 (9 to 18 kg);
- C: rear-facing seats in group 1 (9 to 18 kg);
- D and E: shell seat or rear-facing seats in group 0 or 0+ (less than 13 kg);
- F and G: carrycots in group 0 (less than 10 kg).

CHILD SEATS: attachment using the ISOFIX system (2/12)

The table below summarises the information already shown on the diagram on the previous page, to ensure the applicable regulations are respected.

5-seater Combi version					
Type of child seat	**Weight of the child**	**Seat size ISOFIX**	**Front passenger seat**	**Rear side seat**	**Rear centre seat**
Carrycot fitted across the vehicle Group 0	< 10 kg	F G	X	IL (1)	X
Rear-facing shell seat Groups 0 and 0+	< 13 kg	E	X	IL (2)	X
Rear-facing seat Groups 0+ and 1	< 13 kg and 9 to 18 kg	C, D	X	IL (2)	X
Forward-facing seat Group 1	9 to 18 kg	A, B, B1	X	IUF- IL (3)	X
Booster seat Groups 2 and 3	15 to 25 kg and 22 to 36 kg		X	IUF- IL (3)	X

CHILD SEATS: attachment using the ISOFIX system (3/12)

X = Seat not suitable for fitting child seats ISOFIX.
IUF/IL = On equipped vehicles, seat which allows an approved “Universal”/“semi-universal” or “vehicle specific” child seat to be attached using the ISOFIX system; check that it can be fitted.

(1) A carrycot can be installed across the vehicle and will take up at least two seats. Position the child with his or her feet nearest the door.

(2) Move the front seat as far forward as possible to install a rear-facing child seat, then move back the seat in front as far as it will go, although without allowing it to come into contact with the child seat.

(3) Forward-facing child seat; position the seatback of the child seat in contact with the seatback of the vehicle seat. In all situations, remove the rear headrest of the seat on which the child seat is positioned. This must be done before fitting the child seat (please refer to the section entitled “Rear headrests” in Section 3). Do not push the seat in front of the child more than halfway back on its runners and do not recline the seatback more than 25°.

CHILD SEATS: attachment using the ISOFIX system (4/12)

The table below summarises the information already shown in the diagram on the following pages, to ensure the applicable regulations are respected.

6-seater Combi version						
Type of child seat	**Weight of the child**	**Size of ISOFIX seat**	**Front seat**		**Rear seat**	
			centre passenger	**passenger side**	**side**	**centre**
Carrycot fitted across the vehicle Group 0	< 10 kg	F	X	X	X	X
		G				
Rear-facing shell seat Groups 0 and 0+	< 13 kg	E	X	X	IL (2)	X
Rear-facing seat Groups 0+ and 1	< 13 kg and 9 to 18 kg	C	X	X	X	X
		D				
Forward-facing seat Group 1	9 to 18 kg	A, B, B1	X	X	IUF- IL (3)	X
Booster seat Groups 2 and 3	15 to 25 kg and 22 to 36 kg		X	X	IUF- IL (3)	X

CHILD SEATS: attachment using the ISOFIX system (5/12)

X = Seat not suitable for fitting child seats ISOFIX.
IUF/IL = On equipped vehicles, seat which allows an approved “Universal”/“semi-universal” or “vehicle specific” child seat to be attached using the ISOFIX system; check that it can be fitted.

(1) A carrycot can be installed across the vehicle and will take up at least two seats. Position the child with his or her feet nearest the door.

(2) Move the front seat as far forward as possible to install a rear-facing child seat, then move back the seat in front as far as it will go, although without allowing it to come into contact with the child seat.

(3) Forward-facing child seat; position the seatback of the child seat in contact with the seatback of the vehicle seat. In all situations, remove the rear headrest of the seat on which the child seat is positioned. This must be done before fitting the child seat (please refer to the section entitled “Rear headrests” in Section 3). Do not push the seat in front of the child more than halfway back on its runners and do not recline the seatback more than 25°.

6-seater Combi

Seat which does not allow a child seat to be fitted.

Using a child safety system which is not approved for this vehicle will not correctly protect the baby or child. They risk serious or even fatal injury.

Child seat attached using the ISOFIX mounting

Seat which allows an ISOFIX child seat to be fitted.

The rear seats are fitted with an anchorage point which allows a forward-facing ISOFIX child seat with universal approval to be fitted. The anchorage points are located in the luggage compartment and are visible.

The size of the ISOFIX child seat is indicated by a letter:

- A, B and B1: for forward-facing seats in group 1 (9 to 18 kg);
- C: rear-facing seats in group 1 (9 to 18 kg);
- D and E: shell seat or rear-facing seats in group 0 or 0+ (less than 13 kg);
- F and G: carrycots in group 0 (less than 10 kg).

8-seater combi/bus

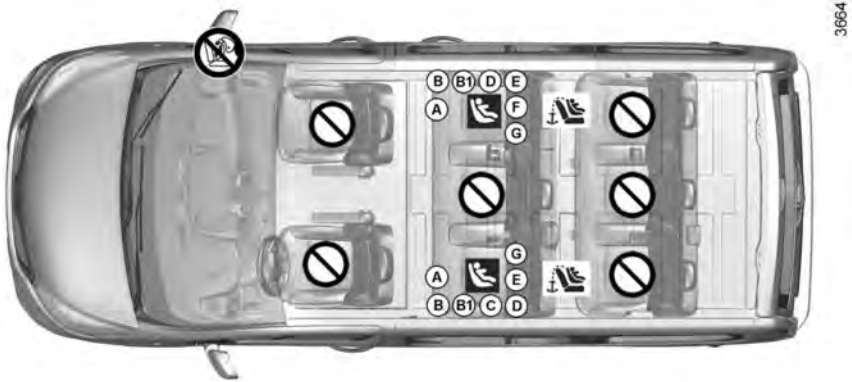

Seat which does not allow a child seat to be fitted.

Using a child safety system which is not approved for this vehicle will not correctly protect the baby or child. They risk serious or even fatal injury.

Child seat attached using the ISOFIX mounting

Seat which allows an ISOFIX child seat to be fitted.

The rear seats are fitted with an anchorage point which allows a forward-facing ISOFIX child seat with universal approval to be fitted. The anchorage points are located in the luggage compartment and are visible.

The size of the ISOFIX child seat is indicated by a letter:

- A, B and B1: for forward-facing seats in group 1 (9 to 18 kg);
- C: rear-facing seats in group 1 (9 to 18 kg);
- D and E: shell seat or rear-facing seats in group 0 or 0+ (less than 13 kg);
- F and G: carrycots in group 0 (less than 10 kg).

CHILD SEATS: attachment using the ISOFIX system (8/12)

The table below summarises the information already shown on the diagram on the previous page, to ensure the applicable regulations are respected.

8-seater Bus/Combi version							
				Rear seat			
Type of child seat	**Weight of the child**	**Size of ISOFIX seat**	**Front passenger seat**	**2nd row side seats**	**2nd row centre seat**	**3rd row side seats**	**3rd row centre seat**
Carrycot fitted across the vehicle Group 0	< 10 kg	F G	X	IL (1)	X	X	X
Rear-facing shell seat Groups 0 and 0+	< 13 kg	E	X	IL (2)	X	X	X
Rear-facing seat Groups 0+ and 1	< 13 kg and 9 to 18 kg	C, D	X	IL (2)	X	X	X
Forward-facing seat Group 1	9 to 18 kg	A, B, B1	X	IUF- IL (3)	X	X	X
Booster seat Groups 2 and 3	15 to 25 kg and 22 to 36 kg		X	IUF- IL (3)	X	X	X

CHILD SEATS: attachment using the ISOFIX system (9/12)

X = Seat not suitable for fitting child seats ISOFIX.
IUF/IL = On equipped vehicles, seat which allows an approved “Universal”/“semi-universal” or “vehicle specific” child seat to be attached using the ISOFIX system; check that it can be fitted.

(1) A carrycot can be installed across the vehicle and will take up at least two seats. Position the child with his or her feet nearest the door.

(2) Move the front seat as far forward as possible to install a rear-facing child seat, then move back the seat in front as far as it will go, although without allowing it to come into contact with the child seat.

(3) Forward-facing child seat; position the seatback of the child seat in contact with the seatback of the vehicle seat. In all situations, remove the rear headrest of the seat on which the child seat is positioned. This must be done before fitting the child seat (please refer to the section entitled “Rear headrests” in Section 3). Do not push the seat in front of the child more than halfway back on its runners and do not recline the seatback more than 25°.

CHILD SEATS: attachment using the ISOFIX system (10/12)

The table below summarises the information already shown on the diagram on the following pages, to ensure the applicable regulations are respected.

9-seater Bus/Combi version								
Type of child seat	**Weight of the child**	**Size of ISOFIX seat**	**Front seat**		**Rear seat**			
			centre passenger	**passenger side**	**2nd row side seats**	**2nd row centre**	**3rd row side seats**	**3rd row centre seat**
Carrycot fitted across the vehicle Group 0	< 10 kg	F G	X	X	X	X	X	X
Rear-facing shell seat Groups 0 and 0+	< 13 kg	E	X	X	IL (2)	X	X	X
Rear-facing seat Groups 0+ and 1	< 13 kg and 9 to 18 kg	C D	X	X	X	X	X	X
Forward-facing seat Group 1	9 to 18 kg	A, B, B1	X	X	IUF- IL (3)	X	X	X
Booster seat Groups 2 and 3	15 to 25 kg and 22 to 36 kg		X	X	IUF- IL (3)	X	X	X

CHILD SEATS: attachment using the ISOFIX system (11/12)

X = Seat not suitable for fitting child seats ISOFIX.
IUF/IL = On equipped vehicles, seat which allows an approved “Universal”/“semi-universal” or “vehicle specific” child seat to be attached using the ISOFIX system; check that it can be fitted.

(1) A carrycot can be installed across the vehicle and will take up at least two seats. Position the child with his or her feet nearest the door.

(2) Move the front seat as far forward as possible to install a rear-facing child seat, then move back the seat in front as far as it will go, although without allowing it to come into contact with the child seat.

(3) Forward-facing child seat; position the seatback of the child seat in contact with the seatback of the vehicle seat. In all situations, remove the rear headrest of the seat on which the child seat is positioned. This must be done before fitting the child seat (please refer to the section entitled “Rear headrests” in Section 3). Do not push the seat in front of the child more than halfway back on its runners and do not recline the seatback more than 25°.

9-seater combi/bus

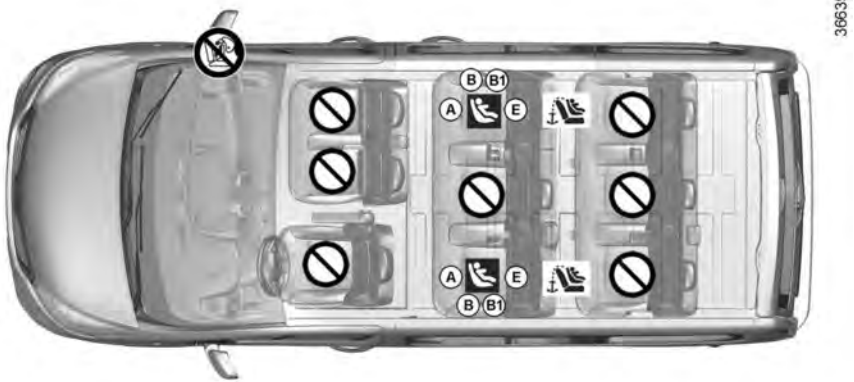

Seat which does not allow a child seat to be fitted.

Using a child safety system which is not approved for this vehicle will not correctly protect the baby or child. They risk serious or even fatal injury.

Child seat attached using the ISOFIX mounting

Seat which allows an ISOFIX child seat to be fitted.

The rear seats are fitted with an anchorage point which allows a forward-facing ISOFIX child seat with universal approval to be fitted. The anchorage points are located in the luggage compartment and are visible.

The size of the ISOFIX child seat is indicated by a letter:

- A, B and B1: for forward-facing seats in group 1 (9 to 18 kg);
- C: rear-facing seats in group 1 (9 to 18 kg);
- D and E: shell seat or rear-facing seats in group 0 or 0+ (less than 13 kg);
- F and G: carrycots in group 0 (less than 10 kg).

Deactivating the front passenger airbags
(on equipped vehicles)

You **must** deactivate the devices in addition to the front passenger seat belt before fitting a child seat in the front passenger seat.

To deactivate the airbags: with the vehicle stopped and the ignition off, push and turn lock ***1*** to the **OFF** position.

With the ignition on, you **must** check that the warning light on the display ***2*** is lit up and, depending on the vehicle, that the message “airbag passenger deactivated” is displayed.

This light remains permanently lit to let you know that you can fit a child seat.

DANGER

Since operation of the front passenger airbag is not compatible with the position of a rear-facing child seat, **NEVER** fit a restraint system for a rear-facing child in a seat protected by an **ACTIVATED front AIRBAG**. This can cause the **CHILD’S DEATH** or **SERIOUS INJURY**.

The passenger air bag must only be deactivated or activated **with the ignition off**.
If it is interfered with when the vehicle is being driven, indicator lights and will come on.
Switch the ignition off then on again to reset the air bag in accordance with the lock.

The markings on the dashboard and labels ***A*** on each side of passenger sun blind ***3*** (example: label shown above) remind you of these instructions.

DANGER

Since operation of the front passenger airbag is not compatible with the position of a rear-facing child seat, **NEVER** fit a restraint system for a rear-facing child in a seat protected by an **ACTIVATED front AIRBAG**. This can cause the **CHILD'S DEATH** or **SERIOUS INJURY**.

Activating the front passenger air bags

You should reactivate the airbags as soon as you remove the child seat from the front passenger seat to ensure the protection of the front passenger in the event of an impact.

To reactivate the airbags: with the vehicle stopped and the ignition off, push and turn lock ***1*** to the **ON** position. With the ignition switched on, you **must** check that the warning light is out and that the warning light comes on the display ***2*** after each start-up for around 60 seconds.

The front passenger seat belt additional restraint systems are activated.

Operating faults

It is forbidden to fit a rear-facing child seat to the front passenger seat if the airbags activation/deactivation system is faulty.

Allowing any other passenger to sit in that seat is not recommended.

Contact your approved dealer as soon as possible.

The passenger airbag must only be deactivated or activated when the **vehicle is stationary**.

If it is interfered with when the vehicle is being driven, indicator lights and will come on.

Switch the ignition off then on again to reset the airbag in accordance with the lock position.

DRIVING POSITION: LEFT-HAND DRIVE (1/2)

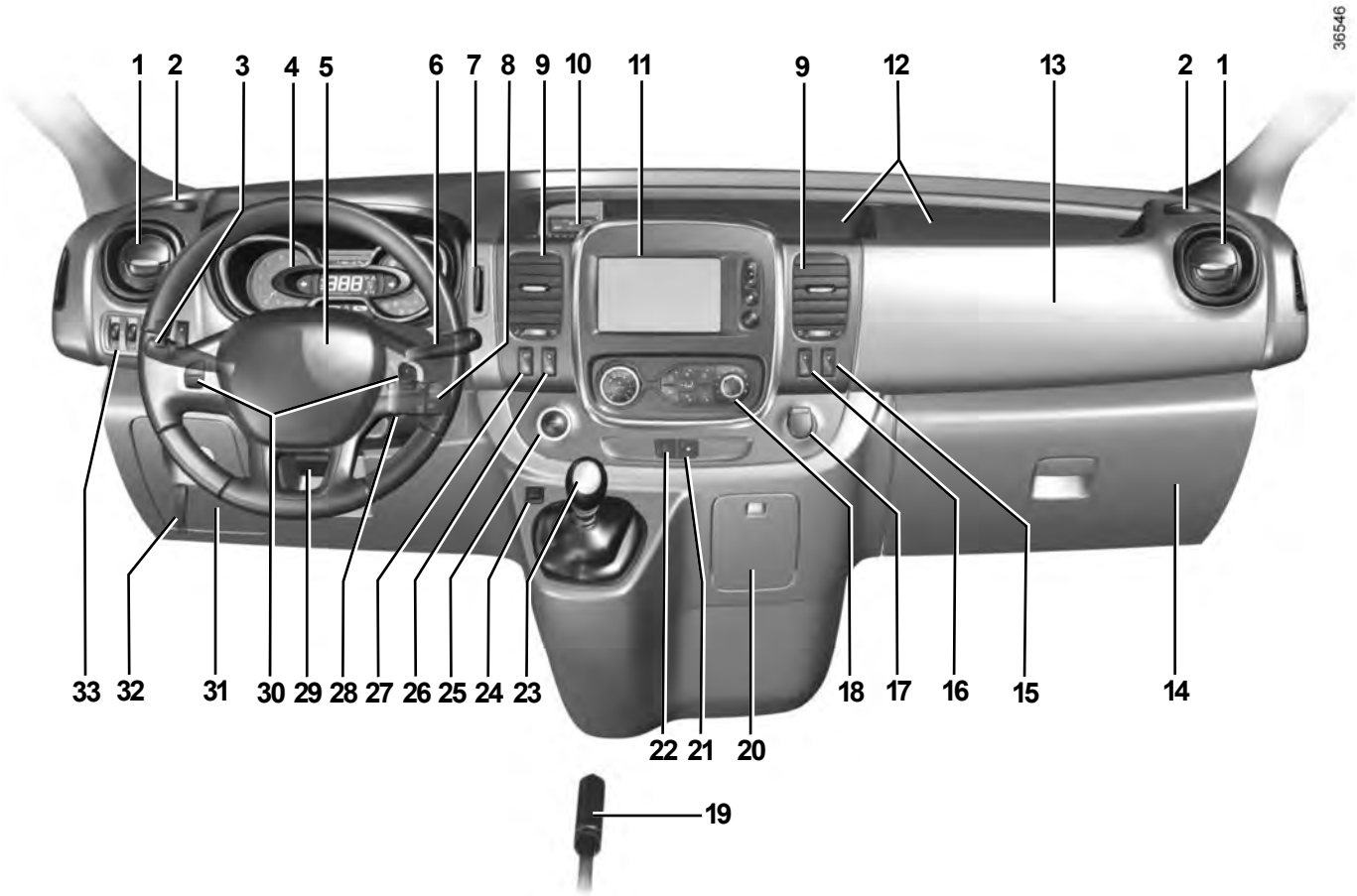

DRIVING POSITION: LEFT-HAND DRIVE (2/2)

The equipment fitted, described below, DEPENDS ON THE VERSION AND COUNTRY.

1 Side air vent.

2 Location for ashtray or cup holder.

3 Stalk for:
- direction indicator lights;
- exterior lights;
- front fog lights;
- rear fog lights.

4 Instrument panel.

5 Location for driver's airbag and horn.

6 Stalk for:
- windscreen and rear screen wiper/washer;
- trip computer and warning system information read-out.

7 RENAULT card reader.

8 Remote radio controls.

9 Centre air vent.

10 Accessories socket.

11 Multimedia/radio touchscreen.

12 Storage compartment.

13 Location for passenger airbag or storage compartment.

14 Glovebox.

15 Fast idle speed switch.

16 Rear de-icer switch.

17 Accessories socket or cigarette lighter.

18 Heating and ventilation controls.

19 Handbrake.

20 Location for ashtray or cup holder.

21 Central door locking/unlocking controls.

22 Hazard warning lights switch.

23 Gear lever.

24 ECO mode switch.

25 Engine start/stop button.

26 Stop and Start function activation/deactivation control.

27 Cruise control/speed limiter main control.

28 Ignition switch for vehicles with key.

29 Control for adjusting steering wheel reach.

30 Cruise control/speed limiter controls.

31 Storage compartment.

32 Bonnet release control.

33 Controls for:
- electric headlight beam adjustment,
- instrument panel lighting dimmer,
- traction control,
- activation/deactivation of the parking distance control system.

DRIVING POSITION: RIGHT-HAND DRIVE (1/2)

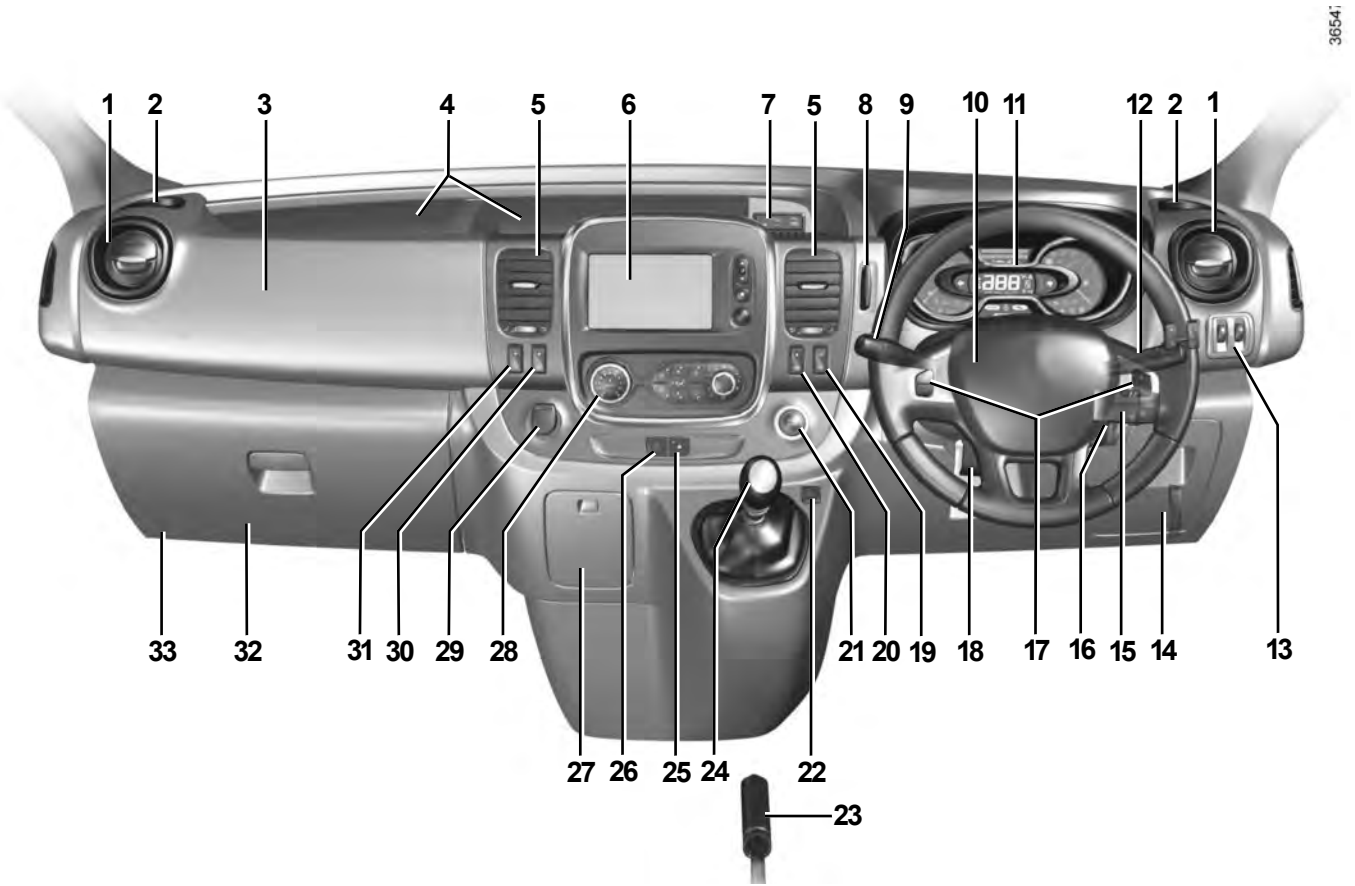

DRIVING POSITION: RIGHT-HAND DRIVE (2/2)

The equipment fitted, described below, DEPENDS ON THE VERSION AND COUNTRY.

1 Side air vent.

2 Location for ashtray or cup holder.

3 Location for passenger airbag or storage compartment.

4 Storage compartment.

5 Centre air vent.

6 Multimedia/radio touchscreen.

7 Accessories socket.

8 RENAULT card reader.

9 Stalk for:
- direction indicator lights;
- exterior lights;
- front fog lights;
- rear fog lights.

10 Location for driver's airbag and horn.

11 Instrument panel.

12 Stalk for:
- windscreen and rear screen wiper/washer;
- trip computer and warning system information read-out.

13 Controls for:
- electric headlight beam adjustment,
- instrument panel lighting dimmer,
- traction control,
- activation/deactivation of the parking distance control system.

14 Storage compartment.

15 Remote radio controls.

16 Ignition switch for vehicles with key.

17 Cruise control/speed limiter controls.

18 Control for adjusting steering wheel reach.

19 Cruise control/speed limiter main control.

20 Stop and Start mode activation/deactivation control.

21 Engine start/stop button.

22 ECO mode switch.

23 Handbrake.

24 Gear lever.

25 Central door locking/unlocking controls.

26 Hazard warning lights switch.

27 Location for ashtray or cup holder.

28 Heating and ventilation controls.

29 Accessories socket or cigarette lighter.

30 Rear de-icer switch.

31 Fast idle speed switch.

32 Glovebox.

33 Bonnet release control.

WARNING LIGHTS (1/4)

The display of information shown below DEPENDS ON THE VEHICLE EQUIPMENT AND COUNTRY.

Instrument panel *A*: lights up when the ignition is switched on. The brightness can be adjusted by turning control knob ***1***.

In some cases, the appearance of a warning light is accompanied by a message.

The warning light means you should **drive very carefully** to an approved dealer as soon as possible. If you fail to follow this recommendation, you risk damaging your vehicle.

Side light warning light

Main beam headlight tell-tale

Dipped beam headlight tell-tale

Front fog light tell-tale

Rear fog light telltale

Left-hand direction indicator tell-tale

Right-hand direction indicator tell-tale

Warning light STOP requires you to stop immediately, for your own safety, as soon as traffic conditions allow. Switch off the engine and do not restart it. Contact an approved Dealer.

Air bag warning light

This lights up when the ignition is switched on and goes out after a few seconds.

If it does not come on when the ignition is switched on, or comes on when the engine is running, there is a fault in the system.

Contact your approved Dealer as soon as possible.

Low fuel level warning light

This lights up when the ignition is switched on and goes out after a few seconds.

If it lights up when driving, fill up with fuel as soon as possible. There is only approximately 30 miles (50 km) worth of fuel left.

If no lights or sounds are apparent, this indicates a fault in the instrument panel. This indicates that it is essential to stop immediately (as soon as traffic conditions allow). Ensure that the vehicle is correctly immobilised and contact an approved Dealer.

WARNING LIGHTS (2/4)

The display of information shown below DEPENDS ON THE VEHICLE EQUIPMENT AND COUNTRY.

STOP light

This lights up when the ignition is switched on and goes out as soon as the engine is started. It comes on with other warning lights and/or messages, and is accompanied by a beep.

It requires you to stop immediately, for your own safety, as soon as traffic conditions allow. Switch off the engine and do not restart it.

Contact an approved Dealer.

Handbrake on and brake circuit incident warning light

This comes on when the ignition is switched on and goes out as soon as the handbrake is released.
If it comes on during braking and is accompanied by the STOP warning light and a beep, it indicates that the fluid level in the circuit is low or that there is a braking system fault.
Stop as soon as traffic conditions allow and contact an approved Dealer.

Battery charge warning light

This lights up when the ignition is switched on and goes out after a few seconds.

If it comes on when the vehicle is being driven, and is accompanied by the STOP warning light and a beep, it indicates that the electrical circuit is overcharged or undercharged.

Stop as soon as traffic conditions allow and contact an approved Dealer.

Oil pressure warning light

This lights up when the ignition is switched on and goes out after a few seconds.

If it comes on when you are driving accompanied by the STOP warning light and a beep, it is essential to stop and switch off the ignition.

Check the oil level. If the level is normal, the indicator light is being lit by something else. Contact an approved Dealer.

Warning light

This lights up when the ignition is switched on and goes out as soon as the engine is started. It can light up in conjunction with other indicator lights and/or messages on the instrument panel.
It means you should **drive very carefully** to an approved dealer as soon as possible. If you fail to follow this recommendation, you risk damaging your vehicle.

The display of information shown below DEPENDS ON THE VEHICLE EQUIPMENT AND COUNTRY.

Warning light, additive level and faults in the exhaust gas reduction system

Refer to the information on "Additive tank" in Section 1.

Toxic Fume Filter System Warning Light

For vehicles equipped with this option, the light comes on when the ignition is switched on then goes out.

– If it lights up continuously, consult your approved dealer as soon as possible;
– if it flashes, reduce the engine speed until the light stops flashing. Contact your approved Dealer as soon as possible.

Refer to the information on “Advice: antipollution, fuel economy and driving” in Section 2.

Electronic Stability Program (ESP) and traction control system warning light

This lights up when the ignition is switched on and goes out after a few seconds.

There are several reasons for the warning light to come on: please refer to the information on “Driver correction devices and aids” in Section 2.

Anti-lock braking warning light

This lights up when the ignition is switched on and goes out after a few seconds.
If it lights up when you are driving, it indicates a fault in the anti-lock braking system.
Braking will then be as normal, without the ABS. Contact an approved Dealer as soon as possible.

Coolant temperature warning light

This comes on when the ignition is switched on.

If it turns red, stop and let the engine idle for a minute or two.

The temperature should lower and the warning light should return to a blue colour. If not, stop the engine. Let the engine cool down before checking the coolant.

Contact an approved Dealer.

WARNING LIGHTS (4/4)

The display of information shown below DEPENDS ON THE VEHICLE EQUIPMENT AND COUNTRY.

Engine standby warning light

Please see information in the paragraph on “Stop and Start Function” in Section 2.

Unavailability of engine standby warning light

Please see information in the paragraph on “Stop and Start Function” in Section 2.

Speed limiter and cruise control indicator lights

See the information on the “Speed limiter” and “Cruise control” in Section 2.

Tyre pressure loss warning

Please refer to the information on the “Tyre pressure loss warning” in Section 2.

Traction control warning light

Refer to the information on “Driving correction devices and aids” in Section 2.

Preheating warning light (diesel version)

This should come on when the ignition is switched on. It indicates that the heater plugs are in operation.

It goes out when preheating is complete. The engine can be started.

Gear change indicators

This lights up to advise you to change to a higher gear (up arrow) or lower gear (down arrow).

ECO mode warning light

This comes on when ECO mode is activated.

Please refer to the information on “Driving advice, Eco-driving” in Section 2.

Front seat belt reminder warning light

If the seat belt is not fastened, the light remains lit when the vehicle is started, then when the car reaches a speed of approximately 9.92 mph (16 km/h), it flashes and a beep sounds for approximately two minutes.

Door(s) open warning light

Rev counter *1*
(graduations x 1000)

Speedometer *2*
(km or miles per hour)

Overspeed buzzer

Depending on the vehicle, a buzzer sounds for approximately 10 seconds every 40 seconds, as long as the vehicle is travelling in excess of 72 mph (120 km/h).

Driving style indicator *4*

Please refer to the information on “Eco-driving” in Section 2.

Low engine oil level warning

When the engine is started, display ***3*** alerts the driver when the oil level is at its minimum. Refer to the information on the “Engine oil level” in Section 4.

Fuel gauge *5*

Instrument panel *6* in miles
(option to switch to km/h)

– With ignition off, press button ***9*** or ***10*** at the end of stalk ***7*** and the start button ***8***;

– the speedometer unit indicator flashes for approximately ten seconds, then the new unit is displayed: release button ***9*** or ***10*** when the unit stops flashing.

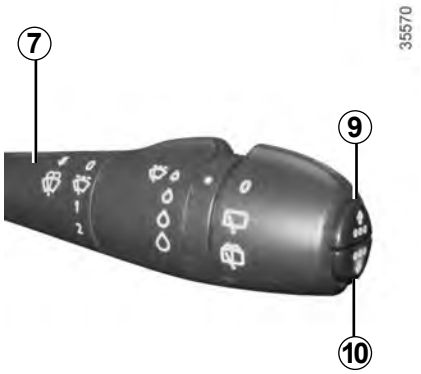

To return to the previous mode, repeat the same operation.

Note: once the battery is switched off, the trip computer and warning system automatically returns to the original unit of measurement.

On-board computer *1*

Depending on the vehicle, this includes the following functions:

– distance travelled;
– journey settings;
– information messages;
– operating fault messages (connected to the warning light);
– warning messages (connected to the STOP warning light).

All these functions are described on the following pages.

Display selection keys *2* and *3*

Scroll through the following information upwards (key ***2***) or downwards (key ***3***) by pressing briefly and successively (the display depends on the vehicle equipment and country).

a) total mileage and trip mileage recorder;
b) fuel used;
c) average fuel consumption;
d) current fuel consumption;
e) estimated range;
f) distance travelled;
g) average speed;
h) mileage before service, oil change counter;
i) Reset the tyre pressure
j) cruise control/speed limiter programmed speed;
k) clock and temperature;
l) trip log, operating faults and information message readout;
m) percentage volume of remaining additives.

Resetting the trip mileage

With “trip mileage recorder” selected on the display, press button ***2*** or ***3*** until the mileage recorder resets to zero.

Resetting the journey parameters (reset button)

With one of the trip parameters selected as the display, press and hold button ***2*** or ***3*** until the display resets.

Interpreting some of the values displayed after resetting

The values showing average fuel consumption, range and average speed will become more stable and reliable the further you travel after pressing the reset button.

For the first few miles after pressing the reset key you will notice that the range increases as you travel. This range takes into account the average fuel consumption since the last time the reset button was pressed. Therefore, the average fuel consumption may decrease when:

– the vehicle stops accelerating;

– the engine reaches its operating temperature (if the engine was cold when the reset key was pressed);

– when driving from an urban area onto the open road.

Automatic resetting of the journey parameters

Resetting occurs automatically when the maximum value of any of the parameters is exceeded.

ON-BOARD COMPUTER: trip settings (1/4)

The display of information shown below DEPENDS ON THE VEHICLE EQUIPMENT AND COUNTRY.

Examples of selections	Interpreting the display selected
101778 km 112.4 km	**a) Total mileage and trip mileage recorder.**
FUEL USED 8L	**b) Journey parameters.** **Fuel used.** Fuel consumed since the last reset.
AVERAGE 5.8 L/100	**c) Average fuel consumption** since the last reset. The value is displayed after having travelled at least 400 metres since the last reset.
CURRENT 7.4 L/100	**d) Current fuel consumption.** This value is displayed after a speed of approximately 20 mph (30 km/h) is reached.

ON-BOARD COMPUTER: trip settings (2/4)

The display of information shown below DEPENDS ON THE VEHICLE EQUIPMENT AND COUNTRY.

Examples of selections	Interpreting the display selected
RANGE 541 km	**e) Estimated range with remaining fuel.** The value is displayed after driving 400 metres.
DISTANCE 522 km	**f) Distance travelled** since last reset.
AVERAGE 89.4 km/h	**g) Average speed** since the last reset. The value is displayed after driving 400 metres.

ON-BOARD COMPUTER: trip settings (3/4)

The display of information shown below DEPENDS ON THE VEHICLE EQUIPMENT AND COUNTRY.

Examples of selections On-board computer with distance before next service message (cntd.)	Interpreting the display selected
SERVICE INTERVALS → OIL CHANGE IN 30 000 km / 24 MO → SERVICE DUE IN 300 km / 24 DAYS → SERVICE REQUIRED	**h) Mileage before service** **With the ignition switched on and the engine not running**, when the message “SERVICE INTERVALS” is displayed, press button ***2*** or ***3*** for around 5 seconds to display the mileage before the next service (distance or time remaining before the next oil change). When the range approaches its limit, there are several possible scenarios: – distance/time remaining less than **900 miles (1,500 km)** or **one month**: the message “Service due in” is displayed accompanied by the nearest term (distance or time); – range equal to **0 km/miles** or **service date reached:** the message “SERVICE REQUIRED” is displayed accompanied by warning light . The vehicle requires an oil change as soon as possible.

Depending on the vehicle, the mileage before an oil change varies according to the driving style (frequent driving at low speed, door-to-door journeys, extensive use at idling speed, towing a trailer, etc.). The distance remaining until the next oil change can therefore decrease more quickly in some cases than the actual distance travelled.

Resetting: To reset the mileage before the next oil change, display the remaining range (distance and time), then press and hold button ***2*** or ***3*** for approximately 10 seconds until the display shows the mileage before oil change without flashing.

ON-BOARD COMPUTER: trip settings (4/4)

The display of information shown below DEPENDS ON THE VEHICLE EQUIPMENT AND COUNTRY.

Examples of selections	Interpreting the display selected
LEARNING THE TYRE PRESSURE	**i) Reset the tyre pressure.** Please refer to the information on the “Tyre pressure loss warning” in Section 2.
SPEED LIMITER 90 km/h CRUISE CONTROL 90 km/h	**j) Cruise control/speed limiter programmed speed.** Refer to the information on the “Speed limiter” and “Cruise control” in Section 2.
13° 16:30	**k) Clock and temperature.** Please refer to the information on the “Clock and exterior temperature” in Section 1.
NO MESSAGE MEMORISED	**l) Trip log.** Successive display: – information messages (passenger airbag OFF etc.); – operating fault messages (check the injection system, etc.).
ADBLUE 62%	**m) Percentage volume of remaining additives.** Refer to the information on “Additive tank” in Section 1.

TRIP COMPUTER AND WARNING SYSTEM: information messages

These can help in the vehicle starting phase, or give information about a selection or a driving status.
Examples of information messages are given in the following pages.

Examples of messages	Interpreting the display selected
« PARKING BRAKE ON »	Indicates that the parking brake has been applied.
« BATTERY LOW START ENGINE »	Indicates that the vehicle must be started to recharge the battery (e.g. after the engine has been switched off for some time whilst listening to the radio).
« TOP UP OIL LEVEL »	Indicates that the oil level needs adjusting.
« AUTO DOOR LOCK OFF »	Indicates that the automatic door locking while driving is deactivated.
« STEERING WHEEL NOT LOCKED »	Indicates that the steering column has not been locked.

TRIP COMPUTER AND WARNING SYSTEM: operating fault messages

These appear with the warning light and mean that you should drive very carefully to an authorised dealer as soon as possible. If you fail to follow this recommendation, you risk damaging your vehicle.
They disappear when the display selection key is pressed or after several seconds and are stored in the computer log. The warning light stays on. Examples of operating fault messages are given in the following pages.

Examples of messages	Interpreting the display selected
« CLEAN DIESEL FILTER »	Indicates the presence of water in the diesel filter; contact an approved Dealer as soon as possible.
« CHECK VEHICLE »	Indicates a fault in one of the pedal sensors, battery management system or oil level sensor.
« CHECK AIRBAG »	Indicates a fault in the restraint system in addition to the seat belts. In the event of an accident, it is possible that they may not be triggered.
« Check antipollution system »	– Indicates a fault in the vehicle's emission control system. – Indicates a fault in the emissions reduction system when it is accompanied by the warning light. Refer to the information on «Additive tank» in Section 1.

These appear with the STOP warning light and require you to stop immediately, for your own safety, as soon as traffic conditions allow. Stop your engine and do not restart it. Contact an approved Dealer.
Examples of warning messages are given in the following pages. **Note:** the messages appear on the display either individually or alternately (when there are several messages to be displayed), and may be accompanied by a warning light and/or a beep.

Examples of messages	Interpreting the display selected
« GEAR BOX RISK OF BREAKAGE »	Indicates an injection fault, the vehicle's engine has overheated or there is a serious engine fault.
« Braking system fault »	Indicates a fault in the braking system.
« BATTERY CHARGING FAULT »	Indicates a fault in the vehicle battery charging circuit (alternator etc.).
« PUNCTURE «	Indicates that at least one wheel is punctured or severely underinflated.

CLOCK AND EXTERIOR TEMPERATURE (1/2)

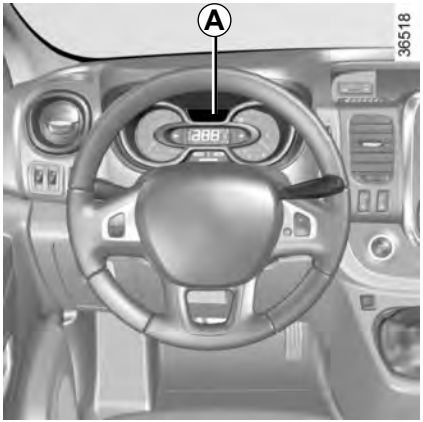

Display *A*
(depending on the vehicle)

To access display ***1*** for setting the time, press button ***2*** or ***3***. Wait for a few seconds.

The hours and minutes flash and you are now in setting mode; press and hold button ***2*** or ***3*** to set the hours.

Once the minutes flash, repeatedly press or press and hold button ***2*** ou ***3*** to set the time.

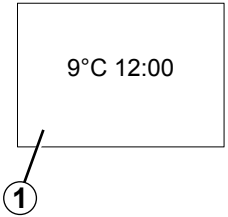

Then press and hold button ***2*** or ***3*** to confirm the time set.

The minute display flashes: repeatedly press or press and hold button ***2*** or ***3*** to set the time.

When setting is complete, the hours and minutes remain displayed continuously for 2 seconds: your setting is registered.

You may change the display.

If the power supply is cut (battery disconnected, supply wire cut, etc.), the clock must be reset.

We recommend that you do not adjust these settings while driving.

Display *B*

Vehicles fitted with touch-screen multimedia, navigation aid systems, telephones, etc.

Refer to the separate instructions for the function to understand the special features of this equipment.

External temperature indicator

Special note:

When the exterior temperature is - 3°C to + 3°C, the °C characters flash (signalling a risk of ice on the road).

External temperature indicator

As ice formation is related to climatic exposure, local air humidity and temperature, the external temperature alone is not sufficient to detect ice.

If the power supply is cut (battery disconnected, supply wire cut, etc.), the clock must be reset.

We recommend that you do not adjust these settings while driving.

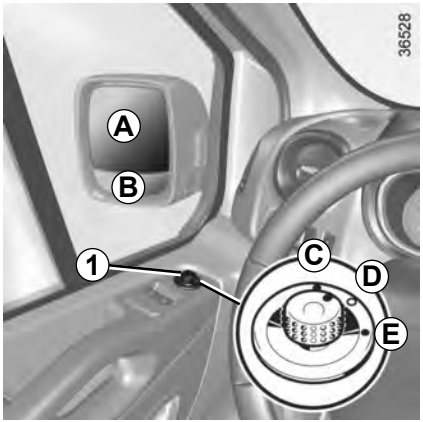

Electrically-adjustable door mirrors

With the ignition on, position control ***1*** on:

C to adjust the left-hand door mirror,
E to adjust the right-hand door mirror,
D to deactivate it.

For safety reasons, carry out any adjustments when the vehicle is stationary.

Heated door mirrors

Depending on the vehicle, with the engine running, the mirrors are heated in conjunction with the rear windows.

Manual door mirrors

To adjust, press the mirror ***A***.

The driver's door mirror may have two clearly defined zones. Zone ***A*** shows what can normally be seen in an ordinary rear-view mirror. Zone ***B*** increases rear side visibility.

Objects in the mirror are closer than they appear.

Interior rear view mirror

Its position can be adjusted.

Rear-view mirror with lever *2*

For night driving, to avoid being dazzled by the headlights of the car behind you, flip the small lever ***2*** located behind the rear view mirror.

Rear view mirror without lever *2*

The rear view mirror darkens automatically at night if you are being followed by a vehicle with its lights on.

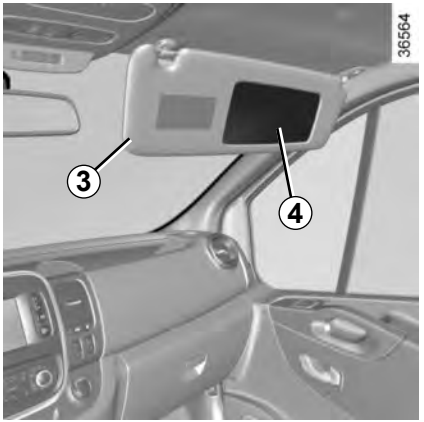

Additional rear-view mirror *4*

(depending on the vehicle)

Lower the sun visor ***3*** to access the special mirror to increase lateral vision when manoeuvring.

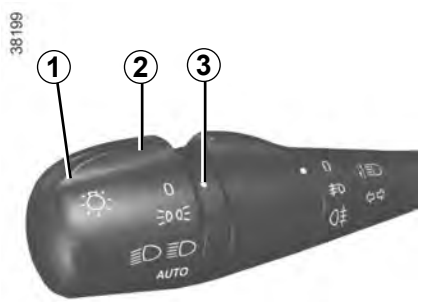

Side lights

Turn the ring ***2*** until the symbol is opposite mark ***3***.

An indicator light on the instrument panel will come on.

Switching off the side lights

Manually, move ring ***2*** to position **0**.

Daytime running lights function

(front lights only)

The daytime running lights come on automatically with no action on stalk ***1*** when the engine is started, and they go off once the engine is switched off.

When driving on the left in a left-hand drive vehicle (or vice versa), drivers must re-adjust their lights throughout their stay (see “Adjusting headlight beams” in Section 1).

Before driving at night, check that the electrical equipment is operating correctly and adjust the headlight beams (if your vehicle is not carrying its normal load). As a general precaution, check that the lights are not obscured (by dirt, mud, snow or objects being transported).

Dipped beam headlights

Manual operation

Turn the ring ***2*** until the symbol is opposite mark ***3***. This indicator light on the instrument panel comes on.

Automatic operation

(depending on vehicle)

Turn ring ***2*** until the AUTO symbol is opposite mark ***3***: with the engine running, the dipped beam headlights switch on or off automatically depending on the brightness of the light outside, without any action on stalk ***1***.

Switching off the dipped beam headlights

– Manually, move ring ***2*** to position **0**;
– automatically, with ring ***2*** in position AUTO, the dipped beam headlights go out upon stopping the engine, the driver's door is opened or the vehicle is locked. In this case, the next time the engine is started, the dipped beam headlights will be switched back on, taking into account the exterior light level, without moving the stalk ***1***.

NB: If the main beam headlights or the fog lights are on, the lights are not switched off automatically.

If the vehicle is parked on the hard shoulder with tailgate open, the rear lights may be obscured. You should make other road users aware of your vehicle by using a warning triangle or other equipment specified by the road traffic regulations of the country you are driving in.

Main beam headlights

With the engine running and the dipped beam headlights lit, push stalk ***1***. This indicator light on the instrument panel comes on.

To return to the dipped headlight position, pull the stalk ***1*** towards you again.

Switching off the main beam headlights

Manually, move ring ***2*** to position **0**.

Lights-on reminder buzzer

When the lights have been switched on manually, a warning beep will sound when the engine is switched off and when the driver's door is opened to remind you that the lights are still on.

Front fog lights

Turn centre ring ***4*** on the stalk ***1*** until the symbol faces mark ***5***, then release it.
Operation of the fog lights depends on the exterior lighting position selected, and an indicator light will light up on the instrument panel.

Cornering lights function

Whenever the dipped beam headlights are on and under certain conditions (at speed, the steering wheel at an angle, in forward gear, the indicator lights on, etc.), when taking a corner one of the front fog lights will come on to light the inside of the bend.

Rear fog light

Turn centre ring ***4*** on the stalk until the symbol faces mark ***5***, then release it.

Operation of the fog lights depends on the exterior lighting selected, and an indicator light will light up on the instrument panel.

To avoid inconveniencing other road users, remember to switch off the rear fog light when it is no longer needed.

Switching off the lights

Turn ring ***4*** again until mark ***5*** is opposite the symbol for the fog light you wish to switch off. The corresponding indicator light goes out on the instrument panel.

The front and rear fog lights switch off when the exterior lights are switched off.

When driving in fog or snow, or when transporting objects which are higher than the roof, the headlights do not come on automatically.

Switching on the fog lights remains the responsibility of the driver: the indicator lights on the instrument panel inform you whether the fog lights are lit (indicator light on) or not (indicator light not on).

If the vehicle is parked on the hard shoulder with tailgate open, the rear lights may be obscured. You should make other road users aware of your vehicle by using a warning triangle or other equipment specified by the road traffic regulations of the country you are driving in.

HEADLIGHT BEAM ADJUSTMENT (1/2)

On vehicles fitted with this function, control ***A*** allows you to adjust the height of the beams according to the load.

Turn control ***A*** downwards to lower the headlights and upwards to raise them.

Load status	Control position
Empty, driver only	**0**
Driver with passenger(s) and luggage compartment full (1)	**2**
Other cases	According to driver's judgement

(1) Load status at maximum permitted weight.

HEADLIGHT BEAM ADJUSTMENT (2/2)

When driving on the left in a left-hand drive vehicle (or vice versa), you must adjust your lights temporarily during your stay.

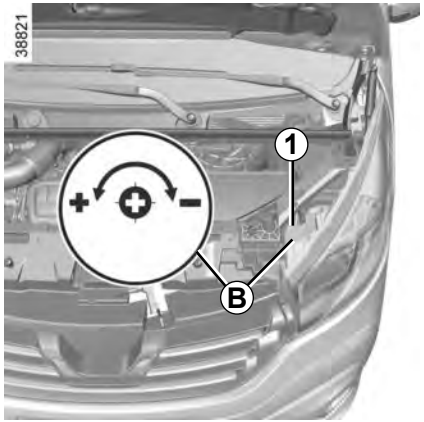

Temporary adjustment

Open the bonnet and identify the marking ***B*** next to one of the front headlight projectors.

For each headlight, using a screwdriver, turn the screw ***1*** by a quarter turn towards the - symbol to lower the beams.

Return to the starting point once your trip is over: turn the screw ***1*** by a quarter turn towards the + symbol to raise the beams.

Horn

Press steering wheel boss ***A***.

Headlight flasher

Pull stalk ***1*** towards you to flash the headlights.

Direction indicators

Move stalk ***1*** parallel to the steering wheel and in the direction you are going to turn it.

One-touch mode

When driving, it is possible that the steering wheel may not be turned sufficiently to return the stalk automatically to its starting position.
In this case, move the stick ***1*** to halfway, then release it: the stalk returns to its original point and the indicator light flashes three times.

Hazard warning lights

Press switch ***2***.
This switch activates all four direction indicators and the side indicator lights simultaneously. It must only be used in an emergency to warn drivers of other vehicles that you have had to stop in an area where stopping is prohibited or unexpected, or that you are obliged to drive under special conditions.
Depending on the vehicle, the hazard warning lights may come on automatically under heavy deceleration. You can switch them off by pressing switch ***2*** once.

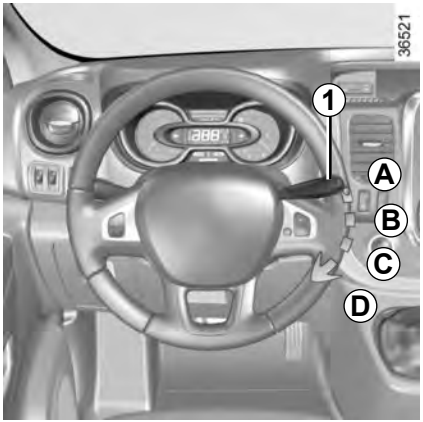

With the ignition on, move stalk ***1***

- ***A*** **park.**
- ***B*** **intermittent wiping.**
  The wipers will pause for several seconds between sweeps. It is possible to change the time between sweeps by turning ring ***2***.
- ***C*** **normal wiping speed.**
- ***D*** **fast wiping speed.**

Wiping ***B*** and ***C*** can be done with the ignition switched on. Wiping ***D*** can be done only while the engine is running.

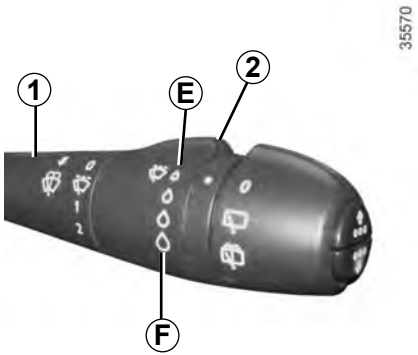

Special note
When driving, the wiping speed slows down whenever the vehicle stops. The speed will change from fast wiping speed to normal wiping speed.
As soon as the vehicle moves off, wiping will return to the speed originally selected. If stalk ***1*** is operated, it overrides and cancels the automatic function.

When working in the engine compartment, ensure that the windscreen wiper stalk is in position ***A*** (park).

Risk of injury.

Vehicles with automatic wiper function

With the engine running, move stalk ***1***

- ***A*** **park.**
- ***B*** **automatic wiper function**
  When this position is selected, the system detects water on the windscreen and triggers the wipers at a suitable wiping speed. It is possible to change the triggering threshold and the time sweeps by turning ring ***2***:
  - ***E***: minimum sensitivity
  - ***F***: maximum sensitivity

  NB: in foggy weather or during snowfalls, the wiping is not automatically triggered and remains under the driver's control.
- ***C*** **normal wiping speed.**
- ***D*** **fast wiping speed.**

Wiping ***C*** can be done with the ignition switched on. Wiping ***B*** and ***D*** can be done only with the engine running.

Note:

There is a maintenance position for replacing wiper blades.
With the ignition on and the engine off, lower windscreen wiper stalk ***1*** fully (position ***D***). Wiper arms stop in a position away from the bonnet (please refer to the information on “Windscreen wiper blades” in Section 5).

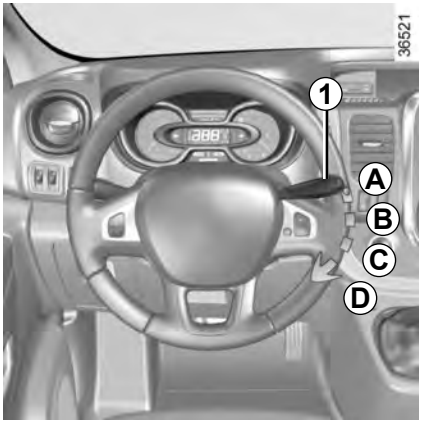

Windscreen washer

With the ignition on, pull stalk ***1*** towards you.

A brief pull will trigger a single sweep of the wipers, in addition to the windscreen washer.

A longer pull will trigger three sweeps of the wipers followed, a few seconds later, by a fourth, in addition to the windscreen washer.

Before any action involving the windscreen (washing the vehicle, de-icing, cleaning the windscreen, etc.) return stalk ***1*** to position ***A*** (park).

Risk of injury and/or damage.

In freezing or snowy weather, ensure they are not stuck to the windscreen (including the central area located behind the interior rear-view mirror) and the rear screen before starting the wipers (risk of motor overheating).

Check the condition of the wiper blades. You are responsible for their service life:
– they must remain clean: clean the blades, windscreen and rear screen regularly with soapy water;
– do not use them when the windscreen or rear screen are dry;
– free them from the windscreen or rear screen when they have not been used for a long time.

In all cases, replace them as soon as they begin to lose efficiency: approximately once a year.
Before using the rear wiper, check that no object obstructs the travel of the blade.
Do not use the wiper arm to open or close the tailgate.

Speed-dependent timed rear screen wiper

With the ignition on, turn the end of stalk ***1*** to align mark ***2*** with the symbol. Wiping frequency varies with speed.

When working in the engine compartment, ensure that the windscreen wiper stalk is in the park position.

Risk of injury.

Rear screen wash/wipe

With the ignition on, turn the end of stalk ***1*** to align mark ***2*** with the symbol.

When the stalk is released, it returns to the rear wipe position.

Special note

If the windscreen wipers are operating or are in automatic mode, the rear screen wiper wipes intermittently when reverse gear is engaged.

Before any action on the windscreen (washing the vehicle, de-icing, cleaning the windscreen, etc.) return stalk ***1*** to the park position.

Risk of injury or damage.

In freezing or snowy weather, ensure they are not stuck to the windscreen (including the central area located behind the interior rear-view mirror) and the rear screen before starting the wipers (risk of motor overheating).

Check the condition of the wiper blades. You are responsible for their service life:

– they must remain clean: clean the blades, windscreen and rear screen regularly with soapy water;
– do not use them when the windscreen or rear screen are dry;
– free them from the windscreen or rear screen when they have not been used for a long time.

In all cases, replace them as soon as they begin to lose efficiency: approximately once a year.

Before using the rear wiper, check that no object obstructs the travel of the blade.

Do not use the wiper arm to open or close the tailgate.

Useful capacity of fuel tank: Approx. 80 litres

Open the front left door to open the cover ***A***.
When filling, use the cap holder ***1*** on the cover ***A*** to secure the cap ***2***.

After filling, check that the cap and cover are closed.

Fuel grade

Use a high-grade fuel that complies with the legislation in force in each country and which **must** comply with the specifications given on the label on the cover ***A***. Please refer to the information on “Engine specifications” in Section 6.

Diesel version

Only use diesel fuel which complies with the information on the label located inside the cover ***A***.

Fuel filler cap: this is specific.

If you have to replace it, make sure it is identical to the original cap. Contact an approved Dealer.
Never place the cap near a source of heat or flame.

Do not wash the filler area with a high-pressure washer.

Do not mix even small amounts of petrol (unleaded or E85) with diesel.
Do not use ethanol-based fuel if your vehicle is not compatible with this fuel.
Do not add additive to the fuel – otherwise you risk damaging the engine.

Filling with fuel

With the ignition off, insert the nozzle and insert it **fully** before turning it on to fill the fuel tank (risk of splashing).

Keep the nozzle in this position throughout the entire filling operation.
When the pump cuts out automatically at the end of the filling procedure, a maximum of two further filling attempts may be made, as there must be sufficient space in the fuel tank to allow for expansion.
Make sure that no water enters the fuel tank during filling. The cover ***A*** and its surround must remain clean.

Vehicle fitted with the Stop and Start function

To fill up with fuel, the engine must be stopped (and not on standby): stop the engine (please refer to the information on “Starting and stopping the engine” in Section 2).

Persistent fuel odour

If you notice a persistent fuel odour you should:

– stop the vehicle as soon as traffic conditions allow and switch off the ignition;

– switch on the hazard warning lights and ask your passengers to leave the vehicle and stay clear of the traffic;

– contact an approved Dealer.

Running out of fuel on diesel versions

Vehicles with key/remote control

– Put the ignition key in “On” position **M** (please see the information on the “Ignition switch” in Section 2) and wait for a few minutes before starting, to enable the fuel circuit to be primed;

– turn the key to position **D**. If the engine does not start, repeat the procedure.

Vehicles with RENAULT card

Insert the **RENAULT** card into the ***3*** card reader. Press the start button ***4*** without pressing any of the pedals. Wait a few minutes before starting. This will enable the fuel circuit to be primed. If the engine does not start, repeat the procedure.

The engine may be hot when working in close proximity. In addition, the engine cooling fan may come on at any moment.

Risk of injury.

No modifications whatsoever are permitted on any part of the fuel supply system (electronic units, wiring, fuel circuit, injectors, protective covers, etc.) as this may be dangerous (unless undertaken by qualified Network personnel).

ADDITIVE TANK (1/4)

Please ensure that you comply with the legislation of your country.

It is important to remember that failure to respect regulations in force could lead to legal action being taken against the vehicle owner.

Operating principle

The use of additives reduces exhaust emissions by transforming the pollutants into water vapour and nitrogen.

Filling

Capacity of the fuel tank: 20 litres approximately.

Open the front left door to open the cover ***A***. Unscrew the cap ***1***.

Fuel filler cap: this is specific.
If you have to replace it, make sure it is identical to the original cap. Contact an approved Dealer. Do not wash the filler area with a high pressure washer.

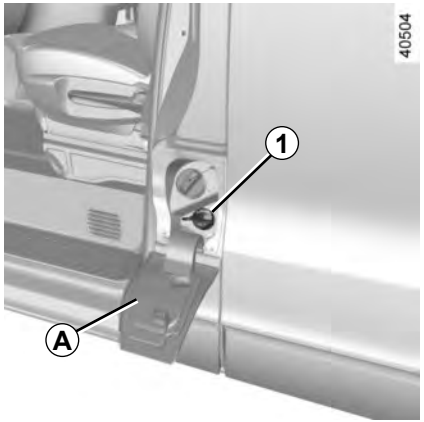

Vehicle fitted with the Stop and Start function
To fill up with additive, the engine must be stopped (and not on standby): stop the engine (Please See «Starting, stopping the engine» in Section 2).

No work whatsoever is permitted on any part of the system. To prevent damage, only qualified personnel from our network may work on the system.

If the warning "XXXX KM FAILURE TOP UP ADBLUE" appears, fill the additive tank (minimum 2.2 gallons [10 litres]) and refer to the filling instructions.
Risk of immobilisation of the vehicle.

Topping up

After filling the additive tank, check that the cap and cover are closed, start the engine and **WAIT 10 seconds with the vehicle stationary, engine running** before setting off again.
If this operation is not carried out, the filling of the tank will not be taken into account automatically until after several dozens of minutes of driving. The message "--- TOP UP ADBLUE" and/or the warning lights will continue to appear until the filling has been taken into account by the system.

Additive quality

Use **only additives which conform to standard ISO 22241** and in accordance with the label on the fuel filler flap.

Average fuel consumption

Approximately 1412 mpg (2 l/1000 km) depending on the vehicle and the driving style.

Precautions for use

Handle additives with care. They can damage clothes, shoes, bodywork components etc.
If the additive overflows, or contaminates any paintwork, clean the affected area quickly with a damp cloth.
Do not top up the additive when the temperature is below 0°C.

Always read the information on the additive can.

The additive must not come into contact with eyes or skin. If it does, wash the affected area with plenty of cold water. If necessary, consult a doctor.

ADDITIVE TANK (3/4)

Maintenance/Range

Warning lights and messages on the instrument panel
When the indicator lights described light up, this may be accompanied by a beep.

Indicator lights	Message	What to do?
comes on each time the vehicle is started.	«ADBLUE LEVEL LOW»	Fill or have an Approved Dealer fill or top up the additive tank.
comes on.	«ADBLUE TO FILL»	
comes on.	«XXXX KM FAILURE TOP UP ADBLUE»	Fill or have an Approved Dealer fill or top up the tank with at least 2.2 gallons (10 litres) of additive as soon as possible.
comes on.	«0KM FAILURE TOP UP ADBLUE»	**The engine will not start.** To restart, you must yourself add at least 2.2 gallons (10 litres) of additive to the tank.

ADDITIVE TANK (4/4)

System fault

The integrated indicator lights described below are accompanied by a beep.

Indicator lights	Message	Readings
and come on.	«CHECK ANTI- - POLLUTION SYSTEM»	Indicates a fault in the system. Contact your approved dealer as soon as possible.
and come on.	«XXXX KM FAILURE ANTIPOLLUTION»	Indicates that **in less than 682 miles (1100 km) it will become impossible to restart the vehicle**. These warnings will be repeated every 60 miles (100 km). Contact your approved dealer as soon as possible.
and come on.	«0KM FAILURE TOP UP ADBLUE»	Indicates that after the ignition is switched off **the vehicle will not restart**. Call an approved Dealer.

Section 2: Driving

(Advice on use relating to fuel economy and the environment)

Running in 2.2
Ignition switch 2.2
Starting, stopping the engine using the key/remote control unit 2.3
Starting/stopping the engine: vehicle with RENAULT card 2.4
Stop and Start Function. 2.7
Special features of diesel versions 2.10
Gear lever/Handbrake 2.11
Driving advice, Eco-driving 2.12
Maintenance and antipollution advice 2.16
Environment 2.17
Tyre pressure loss warning 2.18
Driver correction devices/aids 2.21
Speed limiter 2.26
Cruise control 2.29
Overspeed function 2.33
Fast idle speed 2.34
Parking distance control 2.35
Reversing camera 2.37

Diesel version

For the first **1,000 miles (1,500 km),** do not exceed 80 mph (130 km/h) in the highest gear, or 2,500 rpm. After completing this mileage you may drive faster, although you may only expect top performance after approximately 3,600 miles (6,000 km).

During the running in period, do not accelerate hard while the engine is still cold and do not let the engine over-rev.

Service intervals: refer to the Maintenance Document for your vehicle.

Off position S (steering lock applied)

To lock: remove the key and turn the steering wheel until the steering column locks.

To unlock: turn the key and the steering wheel slightly.

“Accessories” position A

When the ignition is switched off, any accessories (radio, etc.) will continue to function.

Ignition position M.

The ignition is switched on:

Start position D

If the engine fails to start at the first attempt, the key must be turned back before the starter can be activated again. Release the key as soon as the engine starts.

Note: on diesel versions, several seconds may pass between turning the key and the engine starting to allow for engine preheating.

Starting the engine

Turn the ignition key to the “Ignition on” position **M** and hold this position until the engine preheating warning light goes out.

Turn the key to starter position **D without depressing the accelerator pedal**.

Release the key as soon as the engine starts.

Stopping the engine

With the engine idling, turn the key to the “Stop” position **St**.

Never start your vehicle while freewheeling on a gradient. Risk of non-activation of power-assisted steering.

There is a risk of accidents.

Never switch off the ignition before the vehicle has stopped completely. Once the engine has stopped, the brake servo, power-assisted steering, etc. and the passive safety devices such as air bags and pretensioners will no longer operate.

Driver’s responsibility when parking or stopping the vehicle

Never leave an animal, child or adult who is not self-sufficient alone in your vehicle, even for a short time.

They may pose a risk to themselves or to others by starting the engine, activating equipment such as the electric windows or locking the doors, for example.

Also, in hot and/or sunny weather, please remember that the temperature inside the passenger compartment increases very quickly.

RISK OF DEATH OR SERIOUS INJURY.

STARTING, STOPPING THE ENGINE: vehicle with RENAULT CARD (1/3)

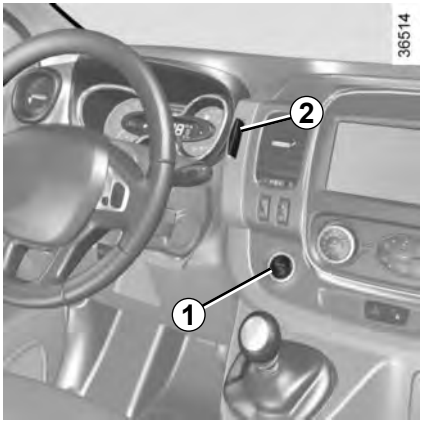

The RENAULT card must be inserted in card reader ***2*** or in detection zone ***3***.

To start, depress the brake or clutch pedal and press button ***1***. If a gear is engaged, the vehicle may only be started by depressing the clutch pedal.

Never start your vehicle while freewheeling on a gradient. Risk of non-activation of power-assisted steering.

There is a risk of accidents.

Never switch off the ignition before the vehicle has stopped completely. Once the engine has stopped, the brake servo, power-assisted steering, etc. and the passive safety devices such as air bags and pretensioners will no longer operate.

Driver's responsibility when parking or stopping the vehicle

Never leave an animal, child or adult who is not self-sufficient alone in your vehicle, even for a short time.

They may pose a risk to themselves or to others by starting the engine, activating equipment such as the electric windows or locking the doors, for example.

Also, in hot and/or sunny weather, please remember that the temperature inside the passenger compartment increases very quickly.

RISK OF DEATH OR SERIOUS INJURY.

Special features

– If one of starting conditions is not applied, the message “PRESS BRAKE + START” or “PRESS CLUTCH + START” or “GEAR LEVER TO P” is displayed on the instrument panel;
– in some cases, it will be necessary to move the steering wheel whilst pressing the start button ***1*** to help unlock the steering column; the message “TURN STEERINGWHEEL + START” will warn you of this;
– in the event of starting the engine in very low exterior temperatures (lower than -10°C): hold down the clutch pedal until the engine starts.

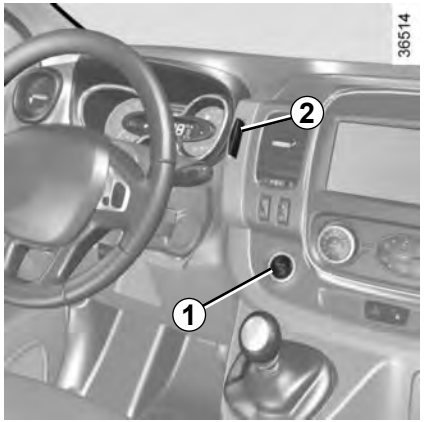

Accessories function

(switching on the ignition)

Once you have gained access to your vehicle, you may use some of its functions (radio, navigation, wipers, etc.).

To use the other functions, with the card in the passenger compartment or inserted in the card reader ***2***, press the button ***1*** without pressing the pedals.

Operating faults

In certain cases, the hands-free RENAULT card may not work:

– when the RENAULT card battery is drained, flat battery, etc.
– near to appliances operating on the same frequency as the card (monitor, mobile phone, video game, etc.);
– vehicle located in a high electromagnetic radiation zone.

The message “PLEASE INSERT KEYCARD” appears on the instrument panel.

Insert the RENAULT card fully into card reader ***2***.

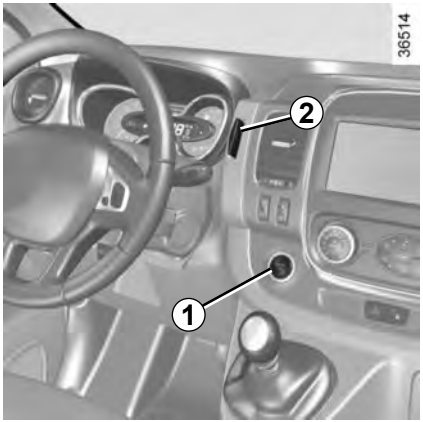

Conditions for stopping the engine

The vehicle must be at a standstill.

With the ***2*** card in the card reader or in the detection zone ***3***, press button ***1***: the engine stops. The steering column is locked when the driver's door is opened or the vehicle is locked.

If the card is no longer in the passenger compartment when you try to switch the engine off, the message "NO KEYCARD PRESS AND HOLD" appears on the instrument panel: press button ***1*** for longer than 2 seconds.

With the engine switched off, any accessories being used (radio, etc.) will continue to function for approximately 10 minutes.

When the driver's door is opened, the accessories stop working.

Never switch off the ignition before the vehicle has stopped completely. Once the engine has stopped, the brake servo, power-assisted steering, etc. and the passive safety devices such as air bags and pretensioners will no longer operate.

When you leave your vehicle, especially if you have your RENAULT card with you, check that the engine is completely switched off.

Driver's responsibility when parking or stopping the vehicle

Never leave an animal, child or adult who is not self-sufficient alone in your vehicle, even for a short time.
They may pose a risk to themselves or to others by starting the engine, activating equipment such as the electric windows or locking the doors, for example.
Also, in hot and/or sunny weather, please remember that the temperature inside the passenger compartment increases very quickly.

RISK OF DEATH OR SERIOUS INJURY.

STOP AND START function (1/3)

This system enables a reduced fuel consumption and lower greenhouse gas emissions.
The system is activated automatically when the vehicle is started.
While driving, the system stops the engine (standby) when the vehicle is at a standstill (traffic jam, traffic lights, etc).

System operating conditions

Engine standby is activated if:

– the vehicle has been driven since its last stop;

– the gearbox is in neutral;

– the clutch pedal is released;

and

– the vehicle is travelling at less than 3 km/h.

Do not drive off when the engine is on standby (warning light is displayed on the instrument panel).

Warning light is displayed on the instrument panel. This notifies you that the engine is on standby.

The vehicle equipment remain operational while the engine is stopped.

The engine will restart when you press the clutch pedal and move into gear.

If you get out of the vehicle, a beep and the message “IGNITION OFF” notifies you that the engine is on standby and has not been switched off.

Engine on standby - braking assistance is no longer operational.

Before getting out of the vehicle, you must switch off the ignition (please see section on “Starting, stopping the engine”).

Special feature of the automatic engine re-start

Under certain conditions, the engine can restart on its own in order to guarantee your safety and comfort.
This can occur especially when:

– the outdoor temperature is too low or too high (less than around 0 °C or higher than around 30 °C);
– the “Clear View” function is activated (please see the information on “Air conditioning” in Section 3);
– the battery is not sufficiently charged;
– the vehicle speed is above 3 mph (5 km/h) (downhill slope, etc.);
– repeated pressing on the brake pedal or braking system requirement;
– ...

Special features of vehicles with remote control

Some of these conditions prevent the engine from automatically restarting upon opening:

– one of the doors for vehicles using a key;
– the passenger side door for vehicles using a RENAULT card.

Conditions preventing the standby of the engine

Depending on the vehicle, certain conditions prevent the system from using the engine standby function, including when:

– reverse gear is engaged;

– the bonnet is not locked;

– for vehicles using a RENAULT card, the driver's side door is not closed;

– for vehicles using a RENAULT card, the driver's seat belt is not buckled;

– the outdoor temperature is too low or too high (less than around 0 °C or higher than around 30 °C);

– the battery is not sufficiently charged;

– the difference between the vehicle interior temperature and the automatic climate control instruction is too high;

– the "Clear View" function is activated (please see the information on "Air conditioning" in Section 3);

– the engine coolant temperature is too low;

– automatic particle filter cleaning is underway;

or

– ...

Warning light is displayed on the instrument panel. This notifies you that engine standby is not available.

To fill up with fuel, the engine must be stopped (and not on standby): stop the engine (please refer to the information on "Starting and stopping the engine" in Section 2).

Special cases

– For vehicles using a RENAULT card, while the system is operating and the engine is stopped (traffic jam, traffic lights, etc.), if the driver gets out of their seat or unfastens their seatbelt and opens the driver's door, the ignition will be switched off. To restart and reactivate the Stop and Start system, press the start button (please see "Starting and stopping the engine").

– In the event of the engine stalling, if the system is operational, press down the clutch pedal as far as it will go to restart.

Deactivating, activating the function

Press switch ***1*** to deactivate the function. The message “STOP AND START DEACTIVATED” will appear on the instrument panel and the integrated warning light ***2*** on the switch will light up.

Pressing again will reactivate the system. The message “STOP AND START ACTIVATED” will appear on the instrument panel and the integrated warning light ***2*** on the switch ***1*** will go out.

The system is automatically reactivated each time the vehicle is started (please see section on “Starting, stopping the engine”).

Special note: engine on standby, press switch ***1*** to automatically restart the engine.

The engine must be stopped before leaving the vehicle (and not on standby): stop the engine (please refer to the information on “Starting and stopping the engine” in Section 2).

Operating faults

When the message “CHECK STOP AND START” appears on the instrument panel and the integrated warning light ***2*** lights up on the switch ***1***, the system is deactivated.

Please consult an authorised dealer.

In the event of an emergency, the engine can be restarted by pressing on the clutch pedal if the Stop and Start function is activated.

Diesel engine speed

Diesel engines are fitted with injection equipment **which prevents the engine speed being exceeded** irrespective of the gear selected.

If the message “Check antipollution system” is displayed along with warning lights and , consult an authorised dealer immediately.

When driving, depending on the fuel grade used, it is possible that white smoke may be emitted.

This is due to the exhaust particle filter being cleaned automatically, and does not affect the way the vehicle runs.

Running out of fuel

If the **tank has been completely drained**, the system must be reprimed after the tank is refilled: see information on the “fuel tank” in section 1 before restarting the engine.

Precautions to be taken in winter

To avoid any faults in icy weather:

– ensure that the battery is always fully charged,

– always keep the diesel tank relatively full to avoid water vapour condensing in it and accumulating at the bottom of the tank.

Do not park the vehicle or run the engine in locations where combustible substances or materials such as grass or leaves can come into contact with the hot exhaust system.

Gear lever

To select reverse gear (vehicle stationary)

Move the lever to neutral, then position the lever in reverse.

Ring ***1*** has to be lifted up to the gear lever knob to select reverse gear.

The reversing lights will come on as soon as reverse gear is selected (with the ignition on).

Vehicles fitted with parking distance control: refer to the information on the “Parking distance control” in Section 2 for details of the special features.

Handbrake

To release:

Pull the lever up slightly, press button ***2*** and then lower the lever to the floor.

The red warning light on the instrument panel will light up if you are driving with an incorrectly released handbrake.

To apply:

Pull the lever upwards and make sure the vehicle is immobilised.

Make sure that the handbrake is properly released when driving (red indicator light off), otherwise overheating may occur.

When stationary and depending on the slope and/or vehicle load, it may be necessary to pull up the handbrake at least two extra notches and engage a gear (1st or reverse gear) for vehicles with a manual gearbox or position **P** for vehicles with an automatic transmission.

An impact to the underside of the vehicle when reversing (e.g. striking a raised kerb) may result in damage to the vehicle (eg. deformation of the rear axle).

To avoid any risk of accident, have your vehicle checked by an approved Dealer.

Fuel consumption is accredited in accordance with a standard regulatory method. Identical for all manufacturers, this enables vehicles to be compared with one another. Consumption in real time depends on vehicle usage conditions, the equipment fitted and the user's driving style. To optimise fuel consumption, please refer to the following advice.

Depending on the vehicle, you will have various functions which enable you to lower your fuel consumption:

– the rev counter;
– gear change indicator;
– the driving style indicator;
– the journey record and eco-driving advice via the multimedia display;
– ECO mode – activated by the ECO button.

If fitted on the vehicle, the navigation system provides additional information.

Gear change indicator *1*

Depending on the vehicle, to obtain optimum consumption levels, a warning light on the instrument panel lets you know the best time to move up or down a gear:

move up a gear;

move down a gear.

Driving style indicator *2*

Informs you about the driving style adopted in real time. You will be notified by the colour of warning light **2**.

– Green: measured, economical driving;
– Yellow: opt for a calmer driving style;
– Orange: driving too fast.

The driving style indicator is activated by default. If you wish to deactivate it, please see the multimedia system instructions.

Journey record

Once the engine is switched off, you will see “Journey record” displayed on the screen ***3***, enabling you to view information relating to your last journey.

This indicates:
– average fuel consumption;
– number of miles/kilometres travelled;
– number of miles/kilometres saved.

An overall rating from 0 to 100 is displayed to let you assess your eco driving performance. The higher the rating, the lower the fuel consumption.
Eco advice is given to help improve your performance.
With your favourite journeys saved, you can evaluate your performance.
For more information, please see the multimedia system instructions.

ECO mode

ECO mode is a function which optimises fuel consumption. It acts on all elements which consume fuel (engine power, heating and/or air conditioning, etc).

Activating the function

Press switch ***4***.

The ***5*** **ECO** warning light comes on on the instrument panel to confirm activation.

While driving, it is possible to leave the ECO mode temporarily in order to improve engine performance.

For this, depress the accelerator pedal firmly and fully.

ECO mode is reactivated when you take pressure off the accelerator pedal.

Disabling the function

Press switch ***4***.
The ***5*** **ECO** light goes out on the instrument panel to confirm deactivation.

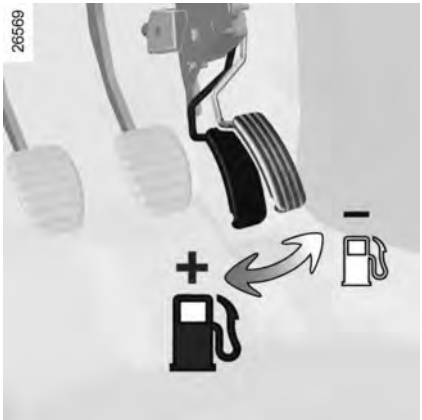

Driving advice, Eco-driving

Behaviour

– Drive carefully for the first few miles until the engine reaches its normal operating temperature, rather than let it warm up while the vehicle is stationary.
– Speed is expensive.
– Sporty driving uses a lot of fuel: drive with a light right foot.
– Do not overrev the engine in the intermediate gears.
  You should always use the highest gear possible.
– Avoid sudden acceleration.
– Brake as little as possible. If you anticipate an obstacle or bend in advance, you may then simply release the accelerator pedal.
– Do not try to maintain the same speed up a hill, accelerate no more than you would on the level. Keep your foot in the same position on the accelerator pedal.
– Double declutching and accelerating before switching off are unnecessary in modern vehicles.
– Bad weather, flooded roads:

Do not drive through floods if the water is above the lower edge of the wheel rims.

Obstructions to the driver
On the driver's side, only use mats suitable for the vehicle, attached with the pre-fitted components, and check the fitting regularly. Do not lay one mat on top of another.
There is a risk of wedging the pedals

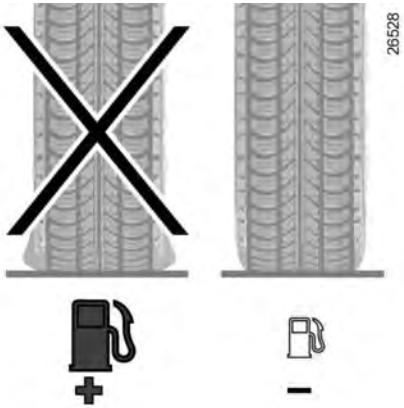

Tyres

– An underinflated tyre increases fuel consumption.
– The use of non-recommended tyres can increase fuel consumption.

Advice on use

– Favour ECO mode.
– Electricity is fuel; switch off all the electrical components which are not really needed. **However** (safety first), keep your lights on when the visibility is bad (“see and be seen”).
– Use the air vents. Driving with the windows open at 60 mph (100 km/h) will increase fuel consumption by 4%.
– Never fill the fuel tank right to the brim to avoid overflow.
– **In vehicles fitted with air conditioning,** it is normal to observe an increase in fuel consumption (especially in urban conditions) when it is used. For vehicles fitted with manual air conditioning, switch off the system when it is not required.

Advice for reducing consumption and therefore helping to preserve the environment:

If the vehicle has been parked in the sun, open the doors for a few moments to let the hot air escape before starting the engine.
– Do not leave an empty roof rack fitted to the vehicle.
– It is better to fit a trailer for bulky objects.
– When towing a caravan, fit a wind deflector and adjust it carefully.
– Avoid using the car for door-to-door calls (short journeys with long waits in between) because the engine never reaches its normal operating temperature.

Your vehicle complies with criteria for recycling and recovering vehicles at the end of their service life which will come into force in 2015.

Some parts of your vehicle have therefore been designed to facilitate future recycling.

These parts are easy to remove so that they can be recovered and reprocessed by recycling companies.

By virtue of its design, moderate fuel consumption and initial settings, your vehicle also conforms to current antipollution regulations. The manufacturer is actively striving to reduce pollutant exhaust gas emissions and to save energy. But the fuel consumption of your vehicle and the level of pollutant exhaust gas emissions are also your responsibility. Ensure that it is maintained and used correctly.

Maintenance

It is important to remember that failure to respect antipollution regulations could lead to legal action being taken against the vehicle owner. In addition, replacing engine, fuel supply system and exhaust components with parts other than those originally recommended by the manufacturer may alter your vehicle so that it no longer complies with antipollution regulations.

Have your vehicle adjusted and checked by an approved Dealer, in accordance with the instructions given in your maintenance schedule: they will have all the equipment necessary for ensuring that your vehicle is maintained to its original standard.

Engine adjustments

– **Air filter, diesel filter:** a choked element will reduce efficiency. It must be replaced.

– **Idle speed:** this does not require adjustment.

Exhaust gas monitoring system

The exhaust gas monitoring system will detect any operating faults in the vehicle's antipollution system.
If this system malfunctions, toxic substances may be released into the atmosphere or damage may occur.

This warning light on the instrument panel will indicate if there are any faults in the system:
This lights up when the ignition is switched on and goes out when the engine is started.

– If it lights up continuously, consult an approved Dealer as soon as possible;
– if it flashes, reduce the engine speed until the light stops flashing. Contact your approved dealer as soon as possible.

Refer to the information on «Additive tank» in Section 1.

ENVIRONMENT

Your vehicle has been designed with respect for the **environment** in mind for its entire service life: during production, use and at the end of its life.
This commitment is illustrated by the of the manufacturer eco² signature.

Manufacture

Your vehicle has been manufactured at a factory which complies with a policy to reduce the environmental impact on the surrounding areas (reduction of water and energy consumption, visual and noise pollution, atmospheric emissions and waste water; sorting and re-using waste).

Emissions

Your vehicle has been designed to emit fewer greenhouse gases (CO2) while in use, and therefore to consume less fuel (e.g. 170 g/km, equivalent to 6.4 l/100 km for a diesel vehicle).

Vehicles are also fitted with anti-pollution systems such as a catalytic converter, an oxygen sensor, and more.

For certain diesel vehicles, this system also has a particle filter to reduce the volume of soot particles emitted.

Please make your own contribution towards protecting the environment too

– Worn parts replaced in the course of routine vehicle maintenance (vehicle battery, oil filter, air filter, batteries, etc.) and oil containers (empty or filled with used oil) must be disposed of through specialist organisations.

– At the end of the vehicle's service life, it should be sent to approved centres to ensure that it is recycled.

– In all cases, comply with local legislation.

Recycling

Your vehicle is 85% recyclable and 95% recoverable.

To achieve these objectives, many of the vehicle components have been designed to enable them to be recycled. The materials and structures have been carefully designed to allow these components to be easily removed and reprocessed by specialist companies.

In order to preserve raw material resources, this vehicle incorporates numerous parts made from recycled plastics or renewable materials (vegetable or animal-derived materials such as cotton or wool).

TYRE PRESSURE LOSS WARNING (1/3)

When fitted to the vehicle, this system notifies the driver if one or more tyres lose pressure.

Operating principle

Each wheel (except for the emergency spare wheel) has a sensor in the inflation valve which periodically measures the tyre pressure while driving.

Warning light ***1*** comes on to alert the driver in the event of insufficient pressure (deflated wheel, punctured tyre, etc.).

Resetting the standard level for the tyre pressures

This should be done:
- when the standard tyre pressure needs to be changed to adapt to usage conditions (empty, carrying a load, motorway driving, etc.);
- after swapping a wheel (however this practice is not recommended);
- after changing a wheel.

It should always be done after checking the tyre pressure of all four tyres when cold.

Tyre pressures must correspond to the current usage of the vehicle (empty, carrying a load, motorway driving, etc.).

This function is an additional driving aid.

However, the function does not take the place of the driver. It cannot, therefore, under any circumstances replace the vigilance or the responsibility of the driver.

Check the tyre pressures, including the emergency spare wheel, once a month.

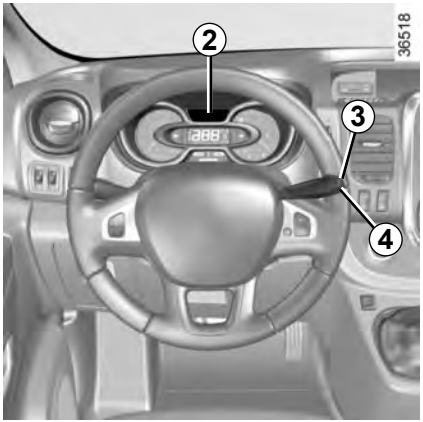

Resetting procedure
With the ignition on:
– repeatedly press button ***3*** or ***4*** to select the “LEARNING THE TYRE PRESSURE” function on the display ***2***;
– press and hold (around 3 seconds) button ***3*** or ***4*** to start initialisation. Display of the message “PRESSURE REF ONGOING” indicates that the reset request for the tyre pressure reference value has been taken into account.

Reinitialisation is carried out after a few minutes’ driving.

Note:
The standard tyre pressure cannot be less than that recommended and indicated on the door frame.

Display

Display ***2*** on the instrument panel informs you of any tyre pressure faults (flat tyre, punctured tyre, etc.).

« ADJUST TYRE PRESSURE »

Warning light comes on, along with the message “ADJUST TYRE PRESSURE”.
These indicate that at least one tyre is flat.

Check and, if necessary, readjust the pressures of the four wheels when cold.

The warning light goes off after a few minutes’ driving.

The sudden loss of pressure in a tyre (burst tyre, etc.) cannot be detected by the system.

« PUNCTURE »

The warning light comes on steady, accompanied by the message “PUNCTURE” and a beep.

This message appears along with the STOP warning light.

They indicate that at least one wheel is punctured or severely underinflated. Replace it or contact an approved dealer if it is punctured. Top up the tyre pressure if the wheel is deflated.

Warning light STOP requires you to stop immediately, for your own safety, as soon as traffic conditions allow.

« CHECK TYRE PRESSURE SENSORS »

The warning light flashes for several seconds, then stays on, along with the message “CHECK TYRE PRESSURE SENSORS”.

This message appears along with the warning light.

They indicate that at least one tyre is not fitted with sensors (e.g. emergency spare wheel). Otherwise, consult an authorised dealer.

Readjustment of tyre pressures

The tyre pressures must be adjusted when cold (please refer to the label located on the edge of the driver’s door). If tyre pressures cannot be checked when the tyres are **cold**, the recommended pressures must be increased by **0.2** to **0.3** bar (**3** PSI).

Never deflate a hot tyre.

Replacing wheels/tyres

This system requires specific equipment (wheels, tyres, hubcaps, etc.). Please see the information on “Tyres” in Section 5.

Contact an approved Dealer to fit new tyres and to find out about available accessories compatible with the system and available from your dealer network: the use of any other accessory could affect the correct operation of the system or damage a sensor.

Emergency spare wheel

If the vehicle is equipped with an emergency spare wheel, it will not have a sensor. When it is fitted on the vehicle, the warning light flashes for several seconds, then stays on, together with the warning light and the message “CHECK TYRE PRESSURE SENSORS” appears on the instrument panel.

Tyre repair product and inflation kit

Because the valves are specially designed, only use equipment approved by the approved network. Please refer to “Tyre inflation kit” in Section 5.

Changing a wheel

The system may take several minutes depending on use for the new wheel pressures to be recognised; check the tyre pressures after all operations.

Depending on the vehicle, this is composed of:

- **anti-lock braking system (ABS);**
- **electronic stability program (ESC) with understeer control and traction control;**
- **driver assistance with a trailer;**
- **emergency brake assist;**
- **grip control;**
- **hill start assistance.**

Anti-lock braking system (ABS)

Under heavy braking, the ABS prevents the wheels from locking, allowing the stopping distance to be managed and keeping control of the vehicle.
Under these circumstances, the vehicle can be steered to avoid an obstacle whilst braking. In addition, this system can increase stopping distances, particularly on roads with low surface grip (wet ground etc.).
You will feel a pulsation through the brake pedal each time the system is activated. The ABS does not in any way improve the vehicle's physical performance relating to the road surface and road-holding. It is still **essential** to follow the rules of good driving practice (such as driving at a safe distance from the vehicle in front etc.).

In an emergency, apply **firm and continuous pressure** to the brake pedal. There is no need to pump it repeatedly. The ABS will modulate the force applied in the braking system.

Operating faults:

- and lit up on the instrument panel alongside messages “CHECK ABS”, “CHECK BRAKING SYSTEM” and “Check ESC”: ABS, ESC and emergency brake assist are deactivated. **Braking is always enabled**;
- , , and STOP lit up on the instrument panel alongside the message “Braking system fault”: **this indicates a fault in the braking system.**

In both cases, please consult an Authorised Dealer.

Your braking systems are partially operational. However, it is **dangerous to brake suddenly** and it is essential to stop immediately, as soon as traffic conditions allow. Contact an approved dealer.

Electronic stability program (ESC) with understeer control and traction control

Electronic stability control ESC

This system helps you to keep control of the vehicle in critical driving conditions (avoiding an obstacle, loss of grip on a bend, etc.).

Operating principle

A sensor in the steering wheel detects the direction selected by the driver.

Other sensors throughout the vehicle measure the actual direction.

The system compares driver input to the actual trajectory of the vehicle and corrects the trajectory if necessary by controlling the braking of certain wheels and/or engine power. In the event that the system is engaged, indicator light flashes on the instrument panel.

Understeer control

This system optimises the action of the ESC in the case of pronounced understeer (loss of front axle road holding).

Traction control

This system helps to limit wheelspin of the drive wheels and to control the vehicle when pulling away accelerating or decelerating.

Operating principle

Using the wheel sensors, the system measures and compares the speed of the drive wheels at all times and slows down their over-rotation. If a wheel is starting to slip, the system brakes automatically until the drive supplied becomes compatible with the level of grip under the wheel again.

The system also adjusts the engine speed to the grip available under the wheels, independently of the pressure exerted on the accelerator pedal.

Operating faults

When the system detects an operating fault the message “Check ESC” and warning light and appear on the instrument panel. In this case, the ESC and traction control system are deactivated.
Consult an approved dealer.

These functions are an additional aid in the event of critical driving conditions, enabling the vehicle behaviour to be adapted to suit the driving conditions.

However, the functions do not take the place of the driver. **They do not increase the vehicle’s limits and should not encourage you to drive more quickly.** Therefore, they can under no circumstances replace the vigilance or responsibility of the driver when manoeuvring the vehicle (the driver must always be ready for sudden incidents which may occur when driving).

Driver assistance with a trailer

This system helps to maintain control over the vehicle while using a trailer. It detects shaking caused by towing a trailer under certain driving conditions.

Operating conditions

– the towbar must be approved by an authorised dealer;
– the harness must be approved by an authorised dealer;
– the towbar must be connected to the vehicle.

Operating principle

The function stabilises the vehicle by:

– asymmetric braking of the front wheels to reduce shaking caused by the trailer;
– braking of all four wheels and limitation on engine torque to reduce the vehicle speed until the shaking has stopped.

Warning light flashes on the instrument panel to inform the driver.

Emergency brake assist

This system supplements the ABS and helps reduce vehicle stopping distances.

Operating principle

The system is for detecting an emergency braking situation. In this case, the braking assistance immediately develops maximum power and may trigger ABS regulation.

ABS braking is maintained as long as the brake pedal is applied.

Hazard warning lights switching on

Depending on the vehicle, these may light up in the event of sudden deceleration.

Braking anticipation

Depending on the vehicle, when you rapidly release the accelerator, the system anticipates the braking manoeuvre in order to reduce stopping distances.

When using the cruise control:

– if you use the accelerator, when you release it, the system may be triggered;
– if you do not use the accelerator, the system will not be triggered.

Operating faults

When the system detects an operating fault the message “CHECK BRAKING SYSTEM” appears on the instrument panel along with the warning light.

Consult an approved dealer.

Grip control

If fitted on the vehicle, grip control makes it easier to control the vehicle on low grip surfaces (soft ground, etc.).

These functions are an additional aid in the event of critical driving conditions, enabling the vehicle behaviour to be adapted to suit the driving conditions.

However, the functions do not take the place of the driver. **They do not increase the vehicle's limits and should not encourage you to drive more quickly.** Therefore, they can under no circumstances replace the vigilance or responsibility of the driver when manoeuvring the vehicle (the driver must always be ready for sudden incidents which may occur when driving).

"Road" mode

Upon starting up the vehicle, the "STANDARD ROAD MODE ON" message is displayed on the instrument panel. Warning light on the instrument panel is out.
This position enables optimal usage under normal driving conditions (dryness, humidity, light snow, etc.).
"Road" mode uses traction control functions.

"Soft ground" mode

Press the switch ***1***: warning light comes on the instrument panel accompanied by the message "NON GRIP ROAD MODE ON".

This position enables optimal usage on soft ground (mud, sand, dead leaves, etc.). "Soft ground" mode uses traction control functions. The system automatically switches to "Road" mode at speeds above 30 mph (50 km/h), and warning light on the instrument panel goes out.

Tyres
When they need to be replaced, only tyres of the same make, size, type and profile should be used.

Tyres fitted to the vehicle should either be identical to those fitted originally or conform to those recommended by your approved dealer.

Hill start assistance

Depending on the gradient of the incline, this system assists the driver when starting on a hill. It prevents the vehicle from rolling backwards, depending on the slope, by automatically applying the brakes when the driver lifts his/her foot off the brake pedal to depress the accelerator pedal.

System operation

It only operates when the gear lever is in a position other than neutral and the vehicle is completely stationary (brake pedal depressed).

The system holds the vehicle for approximately **2 seconds**. The brakes are then gradually released (the vehicle will move according to the slope).

The hill start assistance system cannot completely prevent the vehicle from rolling backwards in all situations (extremely steep gradients, etc.).

In all cases, the driver may depress the brake pedal to prevent the vehicle from rolling forwards or backwards.

The hill start assistance function should not be used for prolonged stops: use the brake pedal.

This function is not designed to immobilise the vehicle permanently.

If necessary, use the brake pedal to stop the vehicle.

The driver must remain particularly vigilant when driving on slippery or low-grip surfaces and/or on hills.

Risk of serious injury.

The speed limiter function helps you stay within the driving speed limit that you choose, known as the **limit speed**.

Controls

1 Main “On/Off” switch.

2 Limit speed activation, storage and increase switch (+).

3 Decreasing the limit speed (-).

4 Activation and recall of memorised limit speed (R).

5 Speed limiter function standby (with limited speed memory) (O).

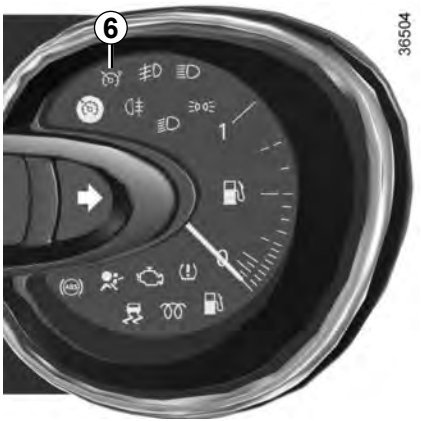

Switching on

Press the side switch ***1*** . Indicator light ***6*** comes on, lit orange, and the message “SPEED LIMITER” appears on the instrument panel, accompanied by dashes to indicate that the speed limiter function is activated and waiting to store a limited speed.

To store the current speed, press switch ***2*** (+): the limit speed will replace the dashes.

The minimum stored speed is 20 mph (30 km/h).

Driving

When a limited speed has been stored and this speed is not reached, driving is similar to driving a vehicle without the speed limiter function.

Once you have reached the stored speed, no effort on the accelerator pedal will allow you to exceed the programmed speed except in an emergency (refer to information on “Exceeding the limit speed”).

Varying the limit speed

The limit speed may be changed by repeatedly pressing:

– switch ***2*** (+) to increase speed;

– switch ***3*** (-) to reduce speed.

The speed limiter function is in no way linked to the braking system.

Exceeding the limit speed

It is possible to exceed the limit speed at any time. To do this: press the accelerator pedal **firmly and fully** (beyond the resistance point).

If the speed is exceeded, the limited speed flashes on the instrument panel accompanied by a beep.

Then, release the accelerator: the speed limiter function will return as soon as you reach a speed lower than the stored speed.

Limited speed cannot be maintained

If driving up or down a steep gradient, the system is unable to maintain the limited speed: the memorised speed flashes on the instrument panel and a beep sounds at regular intervals to inform you.

Putting the function on standby

The speed limiter function is suspended when you press switch ***5*** (O). In this case, the limit speed remains stored and the message “MEMORISED” accompanied by this speed appears on the instrument panel.

Recalling the limit speed

If a speed has been saved, it can be recalled by pressing switch ***4*** ((R)).

When the speed limiter is put on standby, pressing switch ***2*** (+) reactivates the function without taking into account the stored speed: it is the speed at which the vehicle is moving that is taken into account.

Switching off the function

The speed limiter function is deactivated if you press switch ***1***: in this case a speed is no longer stored. The orange instrument panel warning light goes out, confirming that the function is stopped.

The cruise control function helps you to maintain your driving speed at a speed that you choose, called the **cruising speed.**

This cruising speed may be set at any speed above 20 mph (30 km/h).

The cruise control function is in no way linked to the braking system.

This function is an additional driving aid. However, the function does not take the place of the driver.

Therefore, it can under no circumstances replace the driver's responsibility to respect speed limits and to be vigilant (the driver must always be ready to brake).

Cruise control must not be used in heavy traffic, on undulating or slippery roads (black ice, aquaplaning, gravel) and during bad weather (fog, rain, side winds etc.).

There is a risk of accidents.

Controls

1 Main "On/Off" switch.

2 Cruising speed activation, storage and increase switch (+).

3 Decreasing cruising speed (-).

4 Activation with recall of saved cruising speed (R).

5 Switch the function to standby (with cruising speed saved) (O).

Switching on

Press switch ***1*** side .

Indicator light ***7*** comes on, lit green, and the message “CRUISE CONTROL” appears on the instrument panel, accompanied by dashes to indicate that the cruise control function is activated and waiting to store a cruising speed.

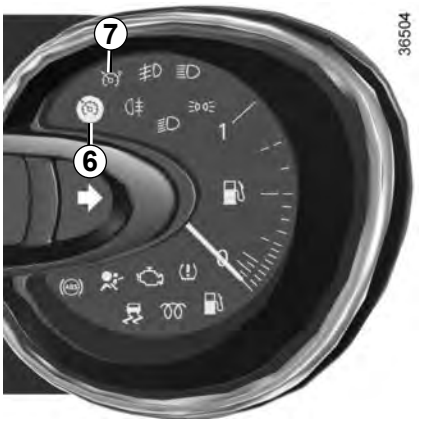

Activating cruise control

At a steady speed (above 18 mph (30 km/h approximately)) press switch ***2*** or (+): the function is activated and the current speed is saved.

The cruising speed replaces the dashes and the cruise control is confirmed by the appearance of warning light ***6*** lit green, as well as warning light ***7***.

Driving

Once a cruising speed is stored and the cruise control function is active, you may lift your foot off the accelerator pedal.

Important: you are nevertheless advised to keep your feet close to the pedals in order to react if necessary.

Adjusting the cruising speed

The cruising speed may be changed by pressing the following repeatedly:

– switch ***2*** (+) to increase the speed,

– switch ***3*** (-) to decrease the speed.

The cruise control function is in no way linked to the braking system.

Exceeding the cruising speed

The cruising speed may be exceeded at any time by depressing the accelerator pedal. While it is being exceeded, the cruising speed flashes on the instrument panel.

Then, release the accelerator: after a few seconds, the vehicle will automatically return to its set cruising speed.

Cruising speed cannot be maintained

When driving down a steep gradient, the system is unable to maintain the cruising speed: the stored speed will flash on the instrument panel information display to inform you of this situation.

Putting the function on standby

The function is set to standby if you:

– use the switch ***5*** (O);

– the brake pedal;

– the clutch pedal;

In all three cases, the cruising speed remains stored and the message “MEMORISED” appears on the instrument panel.

Standby is confirmed when indicator light goes out.

Returning to the cruising speed

If a speed is stored, it can be recalled, once you are sure that the road conditions are suitable (traffic, road surface, weather conditions, etc.). Press switch ***4*** (R) if the vehicle speed is above 20 mph (30 km/h).
When the stored speed is recalled, activation of the cruise control is confirmed by the illumination of the warning light.

NB: if the speed previously stored is much higher than the current speed, the vehicle will accelerate more rapidly to reach this threshold.

When the cruise control function is put on standby, pressing switch ***2*** (+) reactivates the cruise control function without taking into account the stored speed: it is the speed at which the vehicle is moving that is taken into account.

Switching off the function

The cruise control function is deactivated if you press switch ***1***: in this case a speed is no longer stored. The two instrument panel warning lights and go out to confirm that the function is deactivated.

Putting the cruise control on standby or switching it off does not cause a rapid reduction in speed: you must brake by depressing the brake pedal.

VEHICLE WITH OVERSPEED FUNCTION

The vehicle speed may be permanently set at a fixed value depending on the vehicle or on local legislation.

To adjust the value or activate/deactivate the function, consult an approved dealer.

In the event of statutory limits (depending on the vehicle), this function may not be deactivated.

Label ***1*** attached to the dashboard shows the speed limit.

Special case: if your vehicle is fitted with the Cruise control/Speed limiter, fully depressing the accelerator pedal (beyond the kickdown point) will not allow you to exceed the overspeed function set speed (refer to the information on the “Speed limiter” in Section 2).

In exceptional circumstances (e.g. steep gradient), the overspeed function speed may be exceeded slightly as the function does not affect the braking system.

The function does not take the place of the driver. Under no circumstances should it replace observation of speed limits nor vigilance and responsibility on the part of the driver.

FAST IDLE SPEED

Press control ***1***, and the function will be activated after a few seconds.

Modifying fast idle speed

To increase or reduce the speed, contact an approved dealer.

Switching off the function

The function is interrupted when:

– you depress the clutch pedal and/or accelerator pedal;

– the vehicle speed is above 0 mph;

– the STOP indicator light is lit up on the instrument panel;

– the indicator light is lit up on the instrument panel;

– the indicator light is lit up on the instrument panel.

PARKING DISTANCE CONTROL (1/2)

Operating principle

Ultrasonic detectors, installed in the rear bumper (depending on the vehicle), measure the distance between the vehicle and an obstacle whilst reversing.

This measurement is indicated by beeps which become more frequent the closer you come to the obstacle, until they become a continuous beep when the vehicle is approximately 30 centimetres from the obstacle.

NB: make sure that the ultrasonic sensors are not obscured (by dirt, mud, snow, etc.).

NB: depending on the vehicle, screen ***1*** shows the vehicle surroundings alongside the beeps.

Operation

When reverse gear is selected, most objects which are less than approximately 1.20 metres from the rear of the vehicle are detected, a beep sounds and, depending on the vehicle, the display ***1*** comes on.

This function is an additional aid that indicates the distance between the vehicle and an obstacle whilst reversing, using sound signals.

Under no circumstances should it replace the driver's care or responsibility whilst reversing.

The driver should always look out for sudden hazards during driving: always ensure that there are no moving obstacles (such as a child, animal, pram or bicycle, etc.) or small, narrow objects such as stones or posts in your path when manoeuvring.

Adjusting the parking distance control volume

Depending on the vehicle, certain settings can be adjusted from the touch-screen ***1***. Please see the equipment instructions for further information.

Deactivating the system

Press switch ***2*** to deactivate the system.

The indicator light built into the switch lights up to remind you that the system is deactivated.

Pressing the switch again will reactivate the system and switch off the indicator light.

Depending on the vehicle, you can deactivate the parking distance control from the touch-screen. Please see the equipment instructions for further information.

Operating faults

Depending on the vehicle, when the system detects an operating fault, the message “check parking distance control” appears on the instrument panel, accompanied by the warning light and a beep lasting approximately 5 seconds. Please contact an authorised dealer.

An impact to the underside of the vehicle while manoeuvring (e.g.: striking a post, raised kerb or other street furniture) may result in damage to the vehicle (e.g.: deformation of an axle).

To avoid any risk of accident, have your vehicle checked by an approved Dealer.

Operation

Moving into reverse gear, the camera ***1*** located on the tailgate or, depending on the vehicle, on the rear hinged door, provides a view of the area behind the vehicle on the rear-view mirror ***2*** or, depending on the vehicle, on the multimedia display ***3***, accompanied by two moving or fixed guide lines ***4*** and ***5***.

Note: make sure that the reversing camera is not obscured (by dirt, mud, snow, etc.).

NB: Depending on the vehicle, you can adjust certain settings from the multimedia display ***3***. Refer to the handbook for the equipment.

This function is an additional aid. It cannot, therefore, under any circumstances replace the vigilance or the responsibility of the driver.
The driver should always pay attention to sudden incidents during driving: always ensure that there are no moving obstacles (such as a child, animal, pram, bicycle, etc.) or small, narrow objects such as stones or posts in your path when manoeuvring.

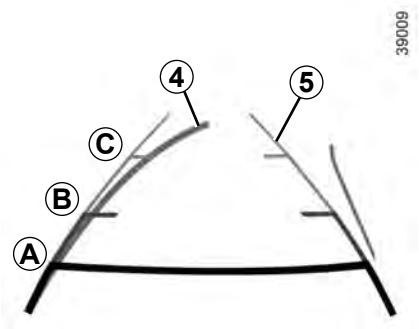

Dynamic gauge *4* (depending on the vehicle)
This is shown in blue on the multimedia display ***3***. It indicates the vehicle trajectory according to the position of the steering wheel.

Static guide line *5*:
The fixed clearance gauge comprises coloured markers ***A***, ***B*** and ***C***, indicating the distance behind the vehicle:

– ***A*** (red) approximately 30 centimetres from the vehicle;
– ***B*** (yellow) approximately 70 centimetres from the vehicle;
– ***C*** (green) approximately 150 centimetres from the vehicle.

This gauge remains fixed and indicates the vehicle trajectory if the wheels are in line with the vehicle.

This system is initially used with the aid of several gauges (mobile for trajectory and fixed for distance). When the red zone is reached, use the bumper image to stop accurately.

The screen shows a reverse image.

The frames are a representation projected onto flat ground; this information must not be taken into account when superimposed on a vertical object or an object on the ground.

Objects which appear on the edge of the screen may be deformed.

In very bright light (snow, vehicle in sunshine etc.), the camera vision may be adversely affected.

If the rear doors are open or poorly closed, the message “BOOT OPEN” appears and, depending on the vehicle, the camera display disappears.

Section 3: Your comfort

Air Vents 3.2
Manual air conditioning/heating system 3.4
Automatic climate control 3.8
Air conditioning: information and advice on use 3.12
Additional heating and air conditioning 3.13
Windows 3.14
Sun visor 3.16
Interior lighting 3.17
Passenger compartment storage/fittings 3.19
Ashtray, accessories socket 3.28
Rear bench seat: functions 3.31
Luggage cover 3.35
Luggage net 3.36
Transporting objects 3.38
Transporting objects: 3.40
towing, attachments 3.40
Multimedia equipment 3.41

AIR VENTS, air outlets (1/2)

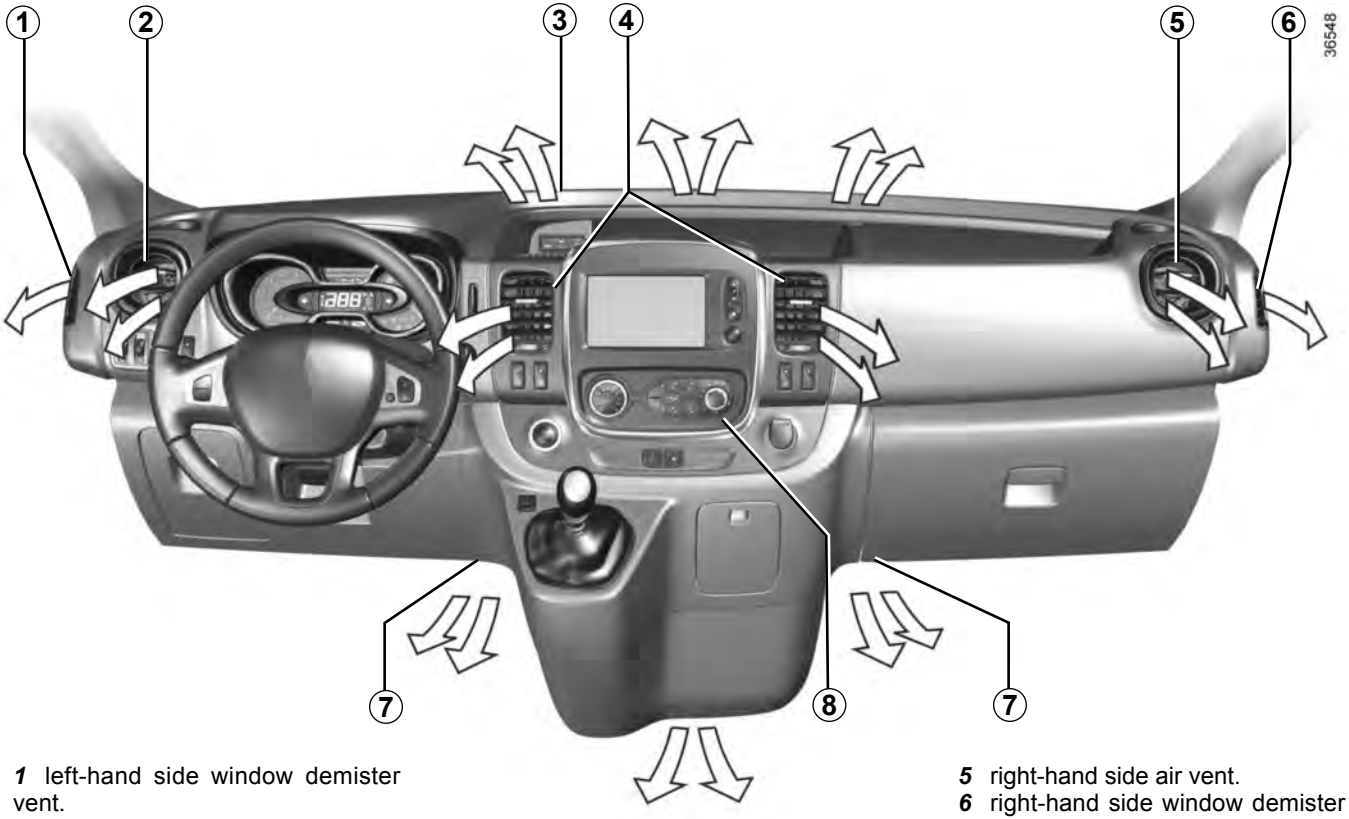

1 left-hand side window demister vent.
2 left-hand side air vent.
3 windscreen demisting vents.
4 centre air vents.
5 right-hand side air vent.
6 right-hand side window demister outlet.
7 passenger footwell heater outlets.
8 control panel.

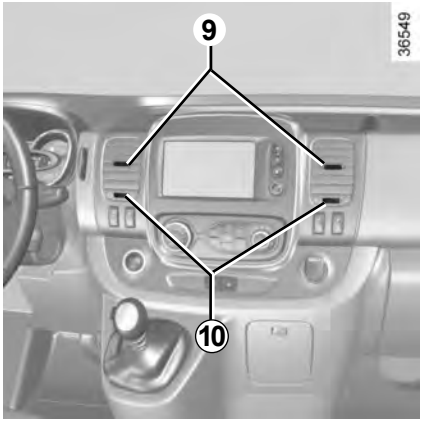

Centre air vents.

To close the vents, lower the tabs ***9*** fully.

Direction

Up/down: move the tabs ***9***.

Right/left: move the control knobs ***10***.

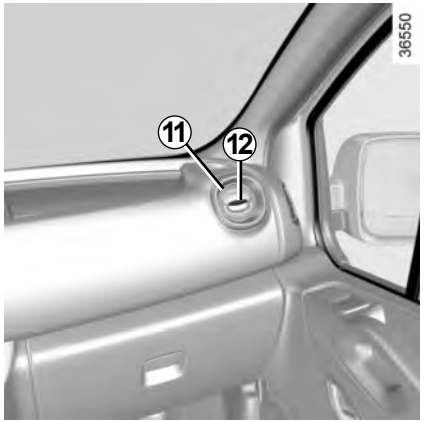

Side air vents

Air flow

To open air vent ***11***, press on the air vent (point ***12***) until it is open as far as required.

Direction

To direct the air flow, swivel side air vent ***11***.

To remove bad odours from your vehicles, only use the systems designed for this purpose. Consult an approved Dealer.

Do not add anything to the vehicle's ventilation circuit (for example, to remove bad odours).

There is a risk of damage or of fire.

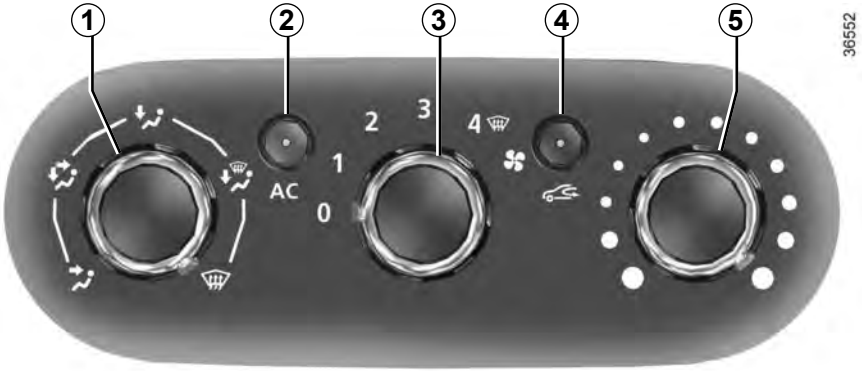

Controls

The controls will depend on the vehicle equipment level.

1 Distribution of air.

2 Switching air conditioning on or off.

3 Adjusting the ventilation fan speed.

4 Switching passenger compartment isolation mode/air recirculation mode on

5 Air temperature adjuster.

Information and advice on use: refer to information on “Air conditioning: information and advice on use”.

Adjusting the air temperature

Turn control ***5*** to obtain the desired temperature. The further towards the red the slide is, the higher the temperature will be.

Adjusting the ventilation fan speed.

Turn control ***3*** from 0 to 4. The further to the right it is positioned, the more air is blown into the passenger compartment. If you want to shut off the flow of air, set control ***3*** to 0.
The system is deactivated: the ventilation speed for the passenger compartment air is zero (vehicle stationary), you can however still feel a slight flow of air when the vehicle is moving.

Note:
Leaving this control in position 0 for prolonged periods can lead to condensation forming on the side windows and windscreen and problems due to the use of non-renewed air in the passenger compartment.

Rapid demisting

Isolation of the passenger compartment/air recirculation deactivated (warning light integrated in button 4 is off), put controls ***1*** and ***3*** to positions.
Using the climate control increases the speed of demisting.

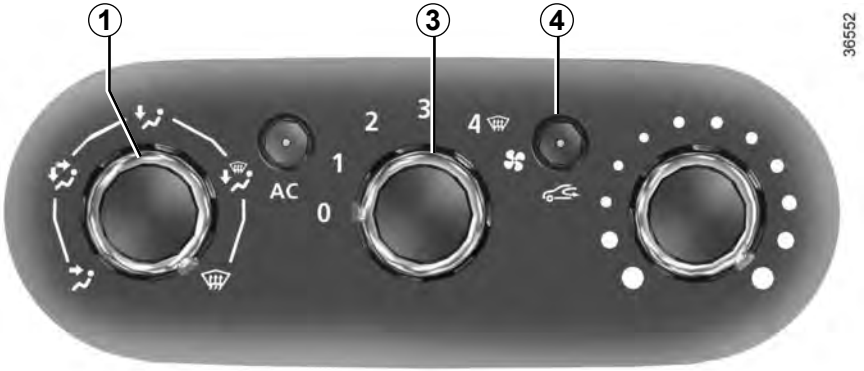

Switching passenger compartment isolation mode/ air recirculation mode on.

Press button ***4*** (the warning light comes on).

Under these conditions, air is taken from the passenger compartment and is recirculated, with no air being taken from outside the vehicle.

Air recirculation is used to:

– to isolate the passenger compartment from the external atmosphere (e.g. driving in polluted areas, etc.);

– to bring the passenger compartment to the desired temperature as quickly as possible.

Prolonged use of air recirculation can lead to condensation forming on the side windows and windscreen, and discomfort due to the use of non-renewed air in the passenger compartment. We therefore advise you to return to normal mode (external air) as soon as the air recirculation function is no longer required, by pressing the button ***4*** again.

Rear screen de-icing/ demisting

With the engine running, press switch ***6***. The integrated indicator light comes on.

This function permits rapid demisting/ de-icing of the rear screen and de-icing of the door mirrors (on equipped vehicles).

To exit the function, press switch ***6*** again.

Demisting automatically stops.

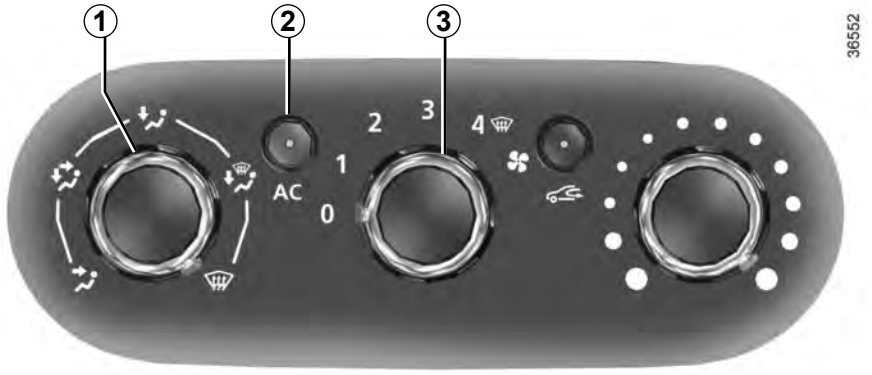

Distribution of air in the passenger compartment

Turn control ***1*** to choose the distribution option.

All the air flow is directed to the dashboard vents.

The air flow is directed towards the dashboard vents and the footwells.

The air flow is mainly distributed between the front and rear footwells and the dashboard vents. Close the dashboard vents to direct all the air to the foot wells.

The air flow is distributed between all the air vents, the front side window demisting air vents, the windscreen demisting vents and the footwells.

All the air is then directed to the windscreen and front side window demisting vents.

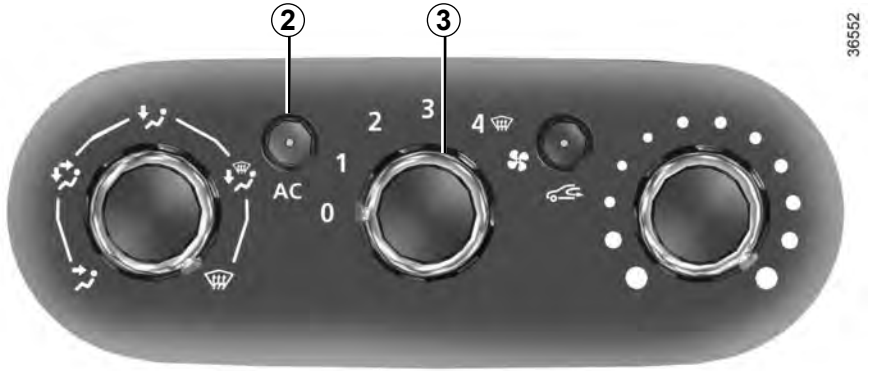

Switching air conditioning on or off

The air conditioning is switched on (indicator light illuminated) or off (indicator light extinguished) using button ***2***.

Activation is not possible if control ***3*** is set to 0.

The air conditioning system is used for:

– lower the temperature inside the passenger compartment;

– eliminate condensation more quickly.

The air conditioning does not operate when the exterior temperature is low.

Do not open the refrigerant fluid circuit. The fluid may damage eyes or skin.

Vehicles fitted with the ECO mode (button *7*): Once activated, ECO mode may reduce the effective performance of the heating and/or air conditioning. Please refer to the information on “Driving advice, Eco-driving” in Section 2.

AUTOMATIC CLIMATE CONTROL (1/4)

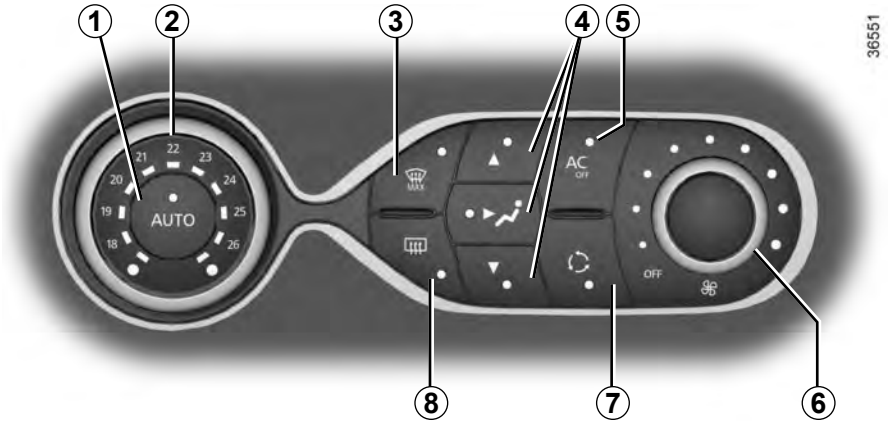

The controls

1 Automatic mode.

2 Air temperature adjuster.

3 “Clear View” function.

4 Passenger compartment air distribution adjustment.

5 Air conditioning control.

6 Adjusting the ventilation fan speed.

7 Air recirculation.

8 De-icing/demisting of the rear screen and, depending on the vehicle, the door mirrors.

Automatic mode

The automatic climate control system guarantees comfort in the passenger compartment and good visibility (except in the event of extreme conditions), while optimising consumption. The system controls the ventilation speed, air distribution, air recirculation, and starting and stopping the air conditioning and air temperature.

AUTO: allows the selected comfort level to be best attained, depending on the exterior conditions. Press button ***1***.

Varying the ventilation speed

In automatic mode, the system uses the most suitable amount of air to reach and maintain the desired comfort level.

You can still adjust the ventilation speed by turning control ***6*** to increase or reduce the ventilation speed.

Adjusting the air temperature

Turn control ***2*** to obtain the desired temperature.

Turning the control to the right increases the temperature.

Special note: the maximum and minimum settings allow the system to produce a minimum or maximum temperature (18°C and 26°C).

Clear View function

Press button ***3*** – the integrated indicator light comes on.

This function quickly demists and de-ices the windscreen, the rear screen, the front side windows, and the door mirrors (depending on the vehicle). The air conditioning and rear screen de-icing functions must be activated.

Press button ***8*** to stop the heated rear screen operating, and the integrated indicator goes out.

To exit this function, press button ***3*** or ***1***.

Some buttons have an operating tell-tale which indicates the operating status.

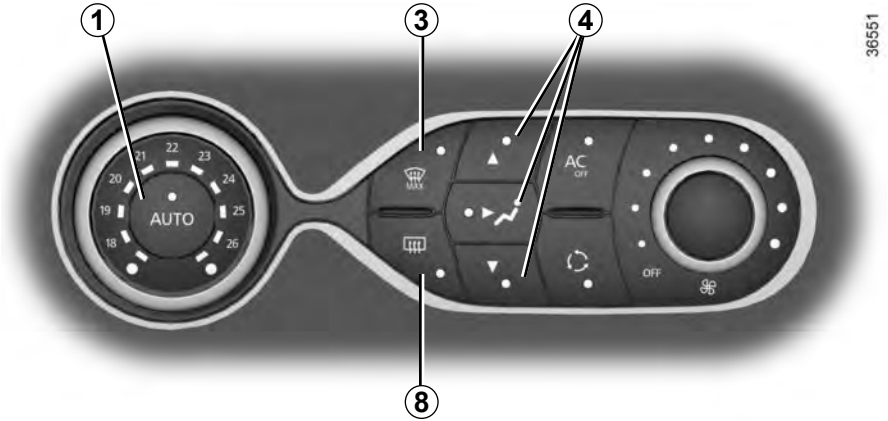

Adjusting the distribution of air in the passenger compartment

Press one of the buttons ***4***. The integrated warning light in the button comes on.

It is possible to combine two positions simultaneously – press both buttons ***4***.

The air flow is distributed between all the air vents, the front side window demisting air vents and the windscreen demisting vents.

The air flow is mainly directed to the dashboard air vents.

The air flow is directed mainly towards the footwells.

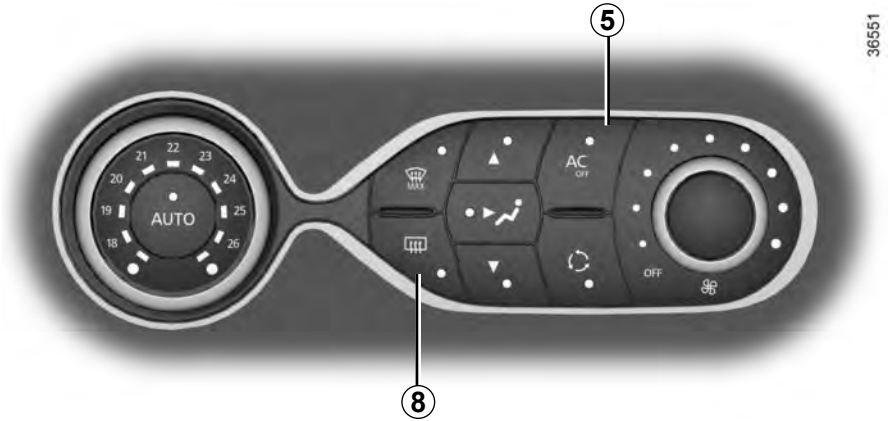

Rear screen de-icing/ demisting

Press button ***8*** – the integrated indicator light comes on. This function enables rapid demisting or de-icing of the rear screen and de-icing of the door mirrors (on equipped vehicles).

To exit this function, press button ***8*** again. Demisting automatically stops.

Switching air conditioning on or off

In automatic mode, the system switches the air conditioning system on or off, depending on the climate conditions.

Press button ***5*** to switch off the air conditioning; the integrated indicator comes on.

Do not open the refrigerant fluid circuit. The fluid may damage eyes or skin.

Vehicles fitted with the ECO mode (button *9*): Once activated, the ECO mode may reduce the effective performance of the air conditioning. Please refer to the information on “Driving advice, Eco-driving” in Section 2.

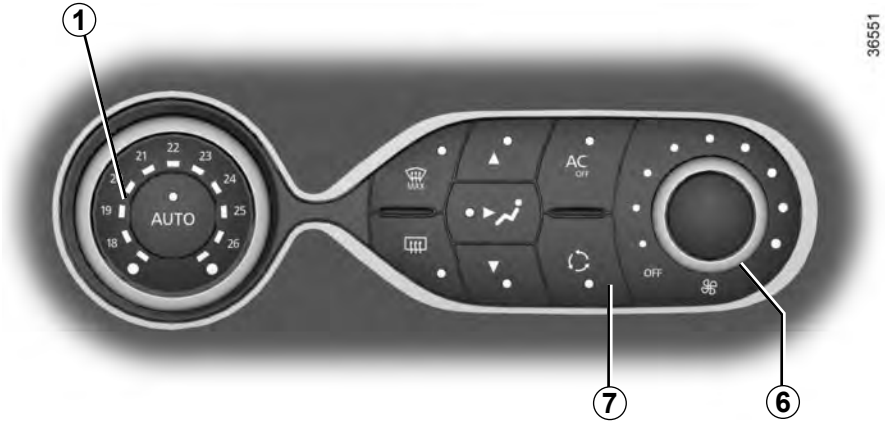

Air recirculation (isolation of the passenger compartment)

This function is managed automatically (operation is confirmed by a warning light on button ***7***), but you can also activate it manually.

The demisting/de-icing will still take priority over the air recirculation.

NB:

- during recirculation, air is taken from the passenger compartment and is recycled, with no air being taken from outside the vehicle;
- air recirculation allows the external atmosphere to be cut off (when driving in polluted areas, etc.);
- bringing the passenger compartment to the desired temperature as quickly as possible.

Manual use

Press button ***7*** – the integrated indicator light comes on.

Prolonged use of this position may lead to odours, caused by non-renewal of air, and the formation of condensation on the windows.

We therefore advise you to return to automatic mode as soon as air recirculation is no longer needed, by pressing button ***7***.

To exit this function, press button ***7*** again.

Stopping the system

Turn control ***6*** to “OFF” to stop the system. To start, turn control ***6*** again to adjust the blower speed or press button ***1***.

Advice on use

In some situations, (air conditioning off, air recirculation activated, ventilation speed at zero or low, etc.) you may notice that condensation starts to form on the windows and windscreen.
If there is condensation, use the **"Clear View"** function to remove it, then use the air conditioning in automatic mode to stop it forming again.

Maintenance

Refer to the Maintenance Document for your vehicle for the inspection frequency.

Fuel consumption increases when the air conditioning is being used (switch it off when it is not required).

Do not add anything to the vehicle's ventilation circuit (for example, to remove bad odours).

There is a risk of damage or of fire.

Fuel consumption

You will normally notice an increase in fuel consumption (especially in town) when the air conditioning is operating.

Advice for reducing consumption and helping to preserve the environment
Switch off the system when it is not required.
Drive with the air vents open and the windows closed.
If the vehicle has been parked in the sun, open the doors for a few moments to let the hot air escape before starting the engine.

Vehicles fitted with an auxiliary heater

Some vehicles are fitted with an auxiliary heater which heats the passenger compartment more quickly.
This device operates only when the engine is running and in cold weather.
When the device is functioning you can normally see a small amount of smoke on the right-hand side of the vehicle coming from the heater's exhaust system.

Operating faults

As a general rule, contact your approved dealer in the event of an operating fault.

– **Reduction in de-icing, demisting or air conditioning performance.** This may be caused by the passenger compartment filter cartridge becoming clogged.
– **No cold air is being produced**. Check that the controls are set correctly and that the fuses are sound. Otherwise, switch off the system.

Presence of water under the vehicle

After prolonged use of the air conditioning system, it is normal for water to be present under the vehicle. This is caused by condensation.

Do not open the refrigerant fluid circuit. The fluid may damage eyes or skin.

On equipped vehicles, there are four adjustable air vents and controls ***1***.

These controls only affect the amount of air blown into the passenger compartment:

– one control for hot (air comes from lower vents);

– one control for cold (air comes from upper vents).

Note: avoid closing the four air vents at the same time (risk of damaging the system components).

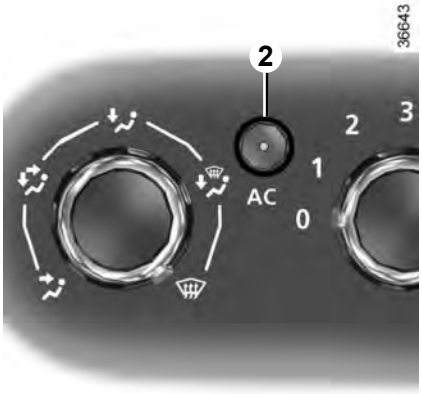

Heating and air conditioning system

Make sure that the air conditioning is operational (warning light on button 2 lit up).

Button ***2*** has an operating tell-tale:

– indicator light on, the function is switched on;

– indicator light off, the function is switched off.

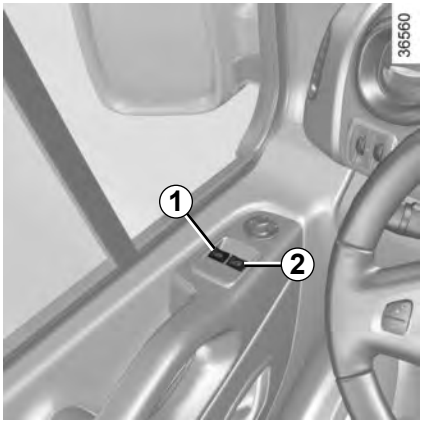

Electric windows

With the ignition on:

– press the switch for the window concerned to lower it to the desired height;

– lift the switch for the window concerned to raise it to the desired height.

From the driver's seat

Operate the switches as follows:

– ***1*** for the driver's side;

– ***2*** for the front passenger side.

From the front passenger seat

Press switch ***3***.

Avoid resting any objects against a half-open window: there is a risk that the electric window winder could be damaged.

Driver's responsibility
Never leave your vehicle with the RENAULT card or key inside, and never leave a child, adult who is not self-sufficient or a pet, even for a short while. They may pose a risk to themselves or to others by starting the engine or activating equipment (such as the gear lever or electric windows). If any part of the body becomes trapped, reverse the direction of the window immediately by pressing the relevant switch.

Risk of serious injury.

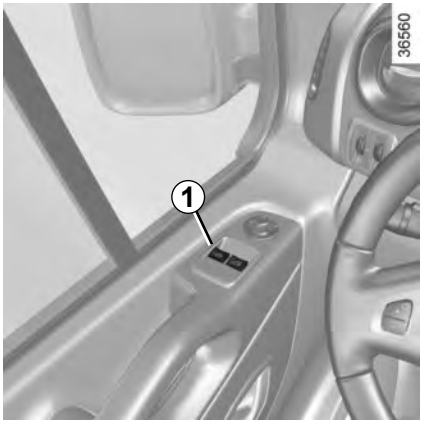

One-touch mode

Depending on the vehicle, this mode works in addition to the operation of the electric windows described previously. It is only fitted to the driver's window.
Briefly press or pull switch ***1*** fully: the window is fully lowered or raised. Pressing the switch again stops the window moving.

Note: if the window detects resistance when closing (e.g.: branch of a tree, etc.) it stops and then lowers again by a few centimetres.

Operating faults

In case of a fault when closing a window, the system reverts to normal mode: pull the switch concerned up as often as necessary to fully close the window (the window will close gradually), hold the switch (still on the closure side) for one second then lower and raise the window fully to reinitialise the system.

If necessary, contact your authorised dealer.

When closing the windows, ensure that no part of the body (arm, hand, etc.) is protruding from the vehicle.

Risk of serious injury.

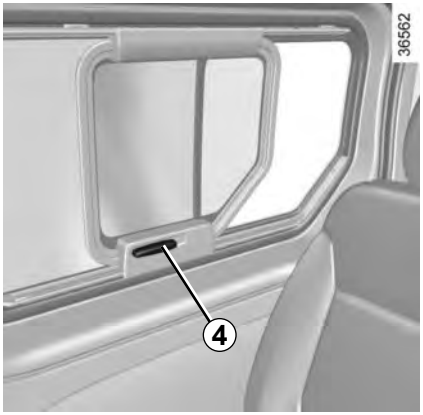

Sliding rear windows

Move the handle ***4*** and slide the window to the desired notch.

Sliding windows and doors

Before moving them, ensure that no passenger has part of their body outside the window or door.

SUN VISOR

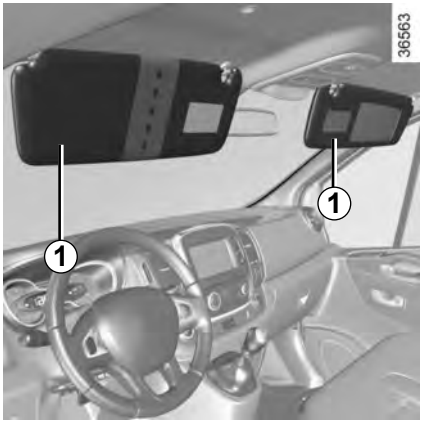

Sun visor

Lower sun visor ***1***.

The sun visor can be swung round against the window.

Courtesy mirror or additional rear-view mirror *2*

(depending on the vehicle)

Lower the sun visor to access the mirror.

Special feature of the additional rear-view mirror

Please refer to the information on “Rear-view mirrors” in Section 1.

Courtesy lights

Switches ***1***, ***2*** or ***3*** provide:

– permanent lighting;

– intermittent lighting, which comes on when a door is opened. It goes out when the doors concerned are properly closed;

– immediate switching off.

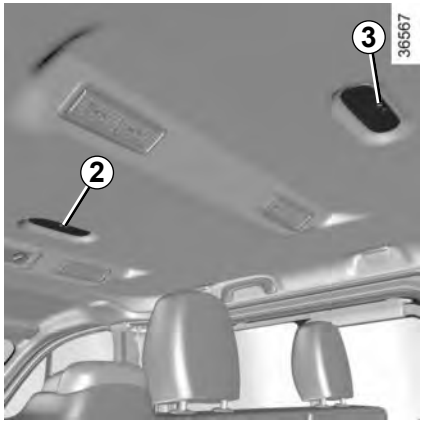

When the doors are unlocked and opened, the courtesy and footwell lights come on temporarily.

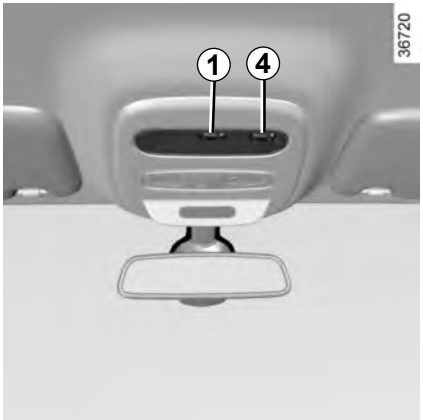

Map reading light

(depending on the vehicle)

Move switch ***4***.

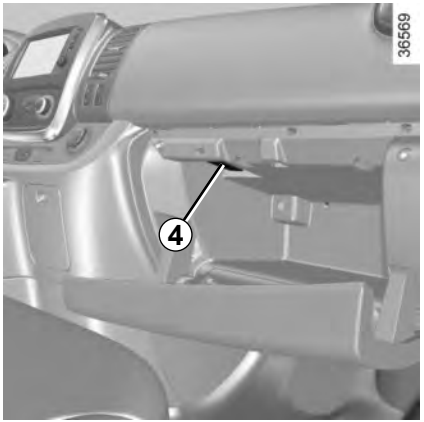

Glovebox light *4*

This lights up when the glovebox is opened.

Boot light *5*

It comes on when the boot is opened.

With the doors properly shut, locking or starting the engine make the interior lights and the courtesy lights go out.

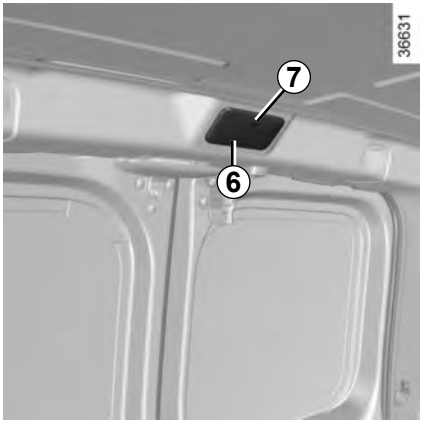

Rear light *6*

Move switch ***7*** to get:

– permanent lighting;

– intermittent lighting, which comes on when a rear door is opened. The light only goes out when the doors are correctly closed;

– lighting switches off immediately.

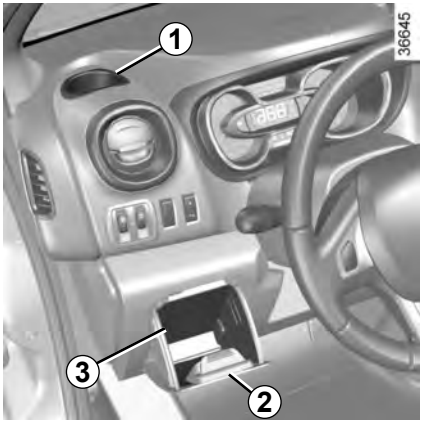

Location *1*

This location can be used as a cup holder, a storage compartment or as a receptacle to fit the ashtray.

Storage compartment *3*

To open, pull the handle **2**.

Nothing should be placed on the floor (area in front of driver) as such objects may slide under the pedal during braking manoeuvres, thus obstructing its use.

Sun visor storage *4*

This can be used for storing motorway tickets, cards, etc.

Ensure that no hard, heavy or pointed objects are placed in the “open” storage compartments in such a way that they may fall onto passengers during sudden turning, braking or in the event of an accident.

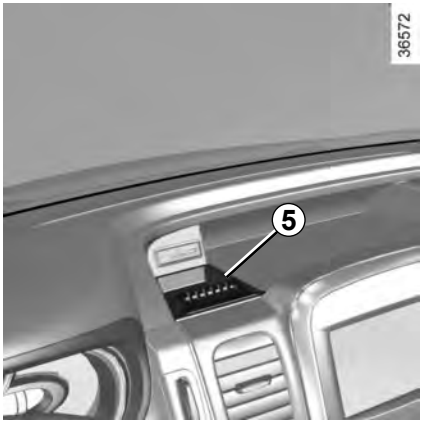

Storage *5*

These can hold bank cards, loose change, etc.

Telephone holder *6*

Using a telephone and/or multimedia tablet

We remind you of the need to conform to the legislation in force concerning the use of such equipment.

Holder for multimedia tablet *8*

Pull the handle ***7*** towards you fully.

Swivel the holder ***8*** and push it in fully.

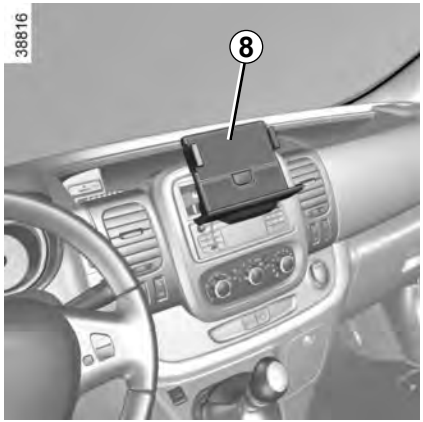

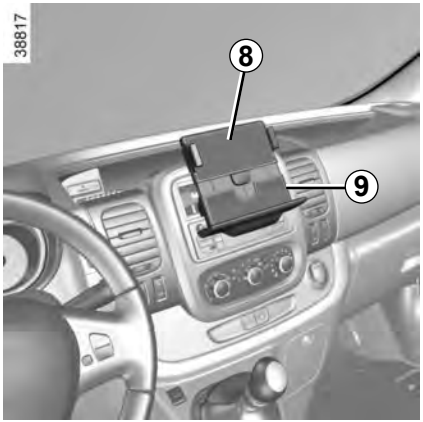

If necessary, lower the base ***9*** of the holder ***8*** to extend it.

To refit it, pull the holder fully towards you, lift it up until it is horizontal and push it in fully.

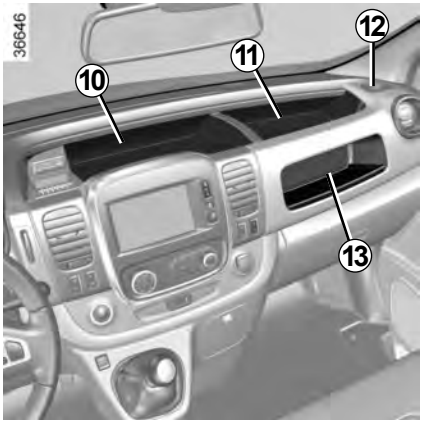

Dashboard storage compartment *10*, *11* and *13*

Location *12*

This location can be used as a cup holder, a storage compartment or as a receptacle to fit the ashtray.

Nothing should be placed on the floor (area in front of driver) as such objects may slide under the pedal during braking manoeuvres, thus obstructing its use.

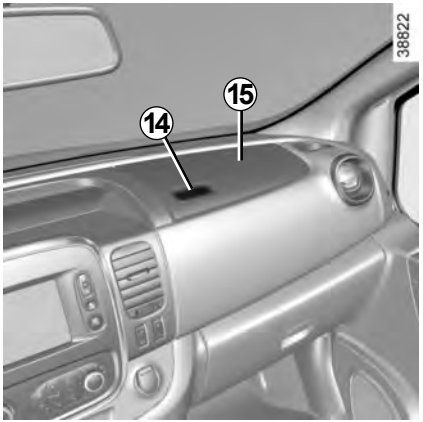

Dashboard passenger storage compartment *15*

To open, press the control ***14***.

Ensure that no hard, heavy or pointed objects are placed in the “open” storage compartments in such a way that they may fall onto passengers during sudden turning, braking or in the event of an accident.

Passenger side glove box

To open, press control ***16***.

Depending on the vehicle, the glove box may have ventilation and air conditioning (one 1.5 litre bottle can be stored there).

Location *17*

This location can be used as a cup holder, a storage compartment or as a receptacle to fit the ashtray.

When turning corners, accelerating or braking, ensure that the receptacle being held by the cup holder is not dislodged.

There is a risk of injury if hot liquid escapes.

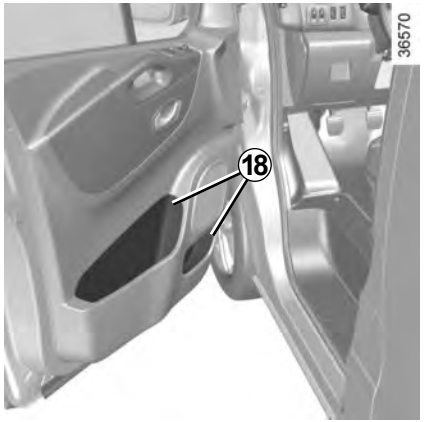

Front door storage compartments *18*

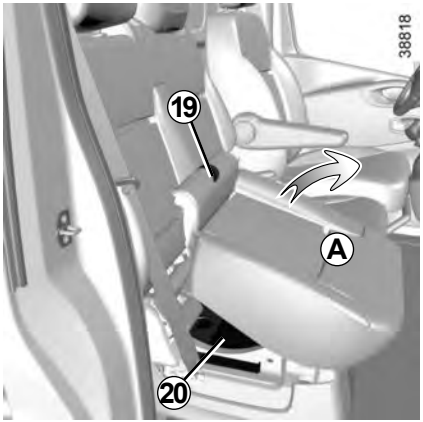

Storage compartment *20* under the front seat

To access this, pull the tab ***19*** and move the seat ***A*** forwards.

Always close the seat base when driving:

– there is a risk of injury when braking suddenly or in the event of an accident;

– there is a risk of objects being hurled through the passenger compartment.

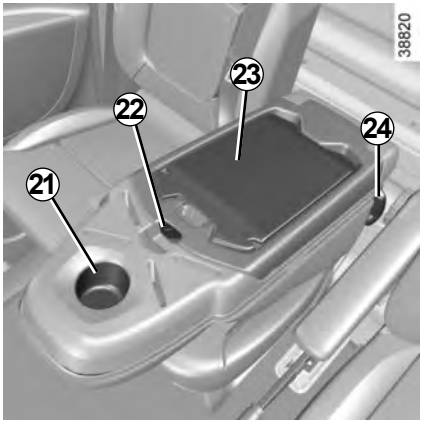

Seatback in table position

On equipped vehicles, lower the back of the centre seat by lifting the control ***24***. On the back of the centre seat you will find:
– a cup holder ***21***;
– storage ***25***;
– a shelf ***23***.

It is forbidden to sit in the centre seat if its seatback is folded down.

Note: Make sure the storage ***17*** is closed before folding back the centre seat.

When turning corners, accelerating or braking, ensure that the receptacle being held by the cup holder is not dislodged.

There is a risk of burning if hot liquid escapes.

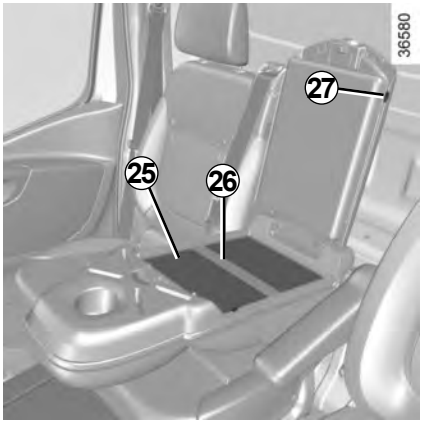

Storage *25*

To open, press control ***22***.

The strap ***26*** inside can keep an item in position.

With the storage ***25*** closed, the passage ***27*** allows you to plug in a charging cord to connect devices to an accessories socket.

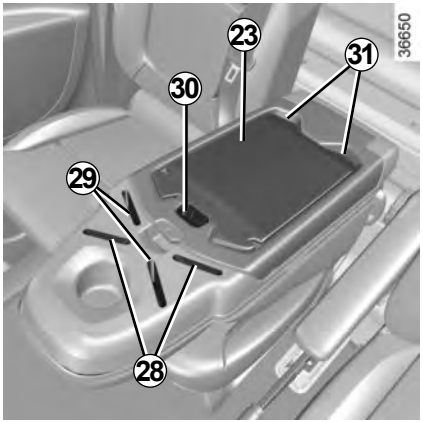

Tray *23*

To unlock the tray, press the control ***30***.

To install the tray, insert the end pieces ***31*** of the tray into the slots ***28*** or ***29***.

You can attach it using the document grip ***32***.

To remove the tray, press the control ***33***.

NB: Make sure you replace the tray and remove any item from the cup holder before raising the centre seat back. Check that the back of the centre seat is properly locked.

Ensure that no hard, heavy or pointed objects are placed in the open storage compartments in such a way that they may fall on any passengers during sudden turning, braking or in the event of an accident.

Grab handle *34*

This offers support and can be held when the vehicle is being driven.

Do not use it for getting into or out of the vehicle.

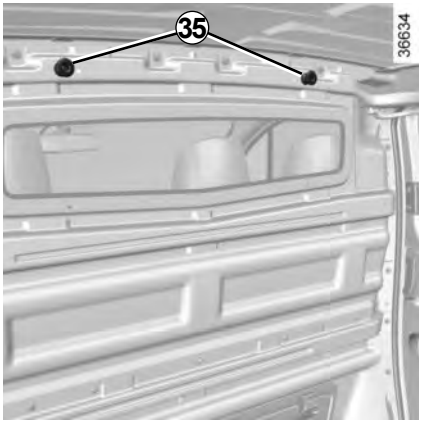

Clothes hooks *35*

Depending on the vehicle, hooks may be placed in the partition in the loading space.

For safety reasons, this hook may only be used to hang clothes.

Rear load area storage compartment *36*

Reserved for the transport of objects only.

The total weight of the rear load area storage compartment must not exceed 35 kg, evenly distributed.

Do not hang any heavy and/or sharp objects which may fall while you are driving. Risk of injury.

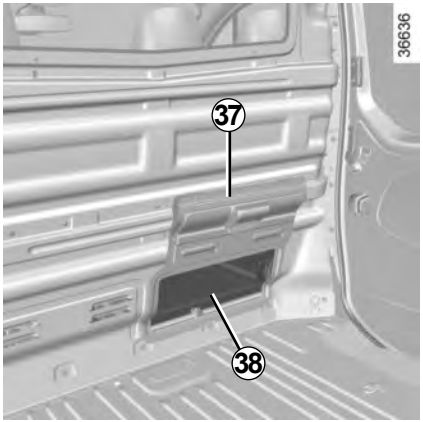

Recess *38* and flap *40*

Depending on the length of the objects being transported in the rear load area, you can use the recess ***38***.
Open the flap ***37***, held in place by magnets.

Nothing should be placed on the floor (area in front of driver) as such objects may slide under the pedal during braking manoeuvres, thus obstructing its use.

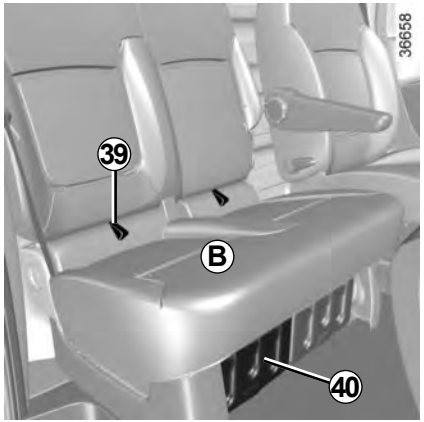

Use the flap ***40*** to extend the load length:
– pull the tab ***39*** to raise the seat ***B***;
– move the flap ***40*** towards the interior of the seat by pulling the tab ***41***.

When the flap ***40*** is open, use of the front side passenger seat is prohibited. Risk of serious injury when braking sharply or in an impact.

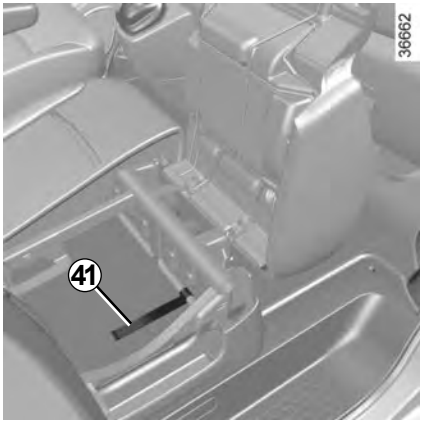

Ensure that no hard, heavy or pointed objects are placed in the “open” storage compartments in such a way that they may fall onto passengers during sudden turning, braking or in the event of an accident.

ASHTRAY, ACCESSORIES SOCKET (1/2)

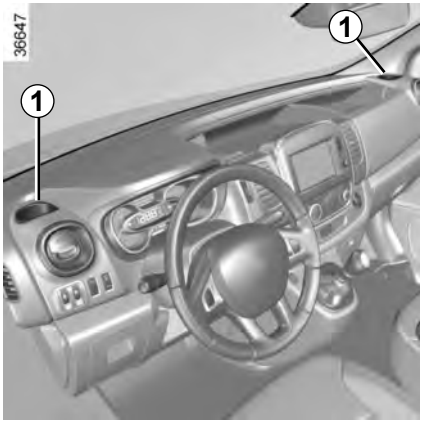

Ashtray

It can be housed in either position ***1*** or ***2***.

If your vehicle is not fitted with a cigar lighter and an ashtray, these can be obtained from an approved Dealer.

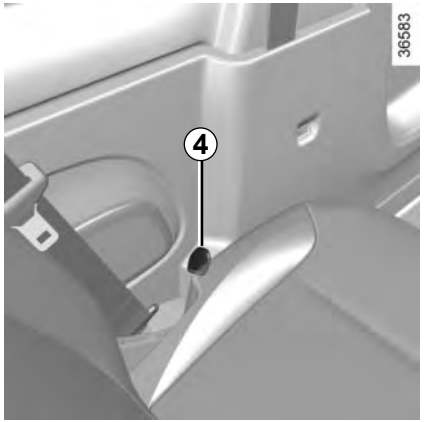

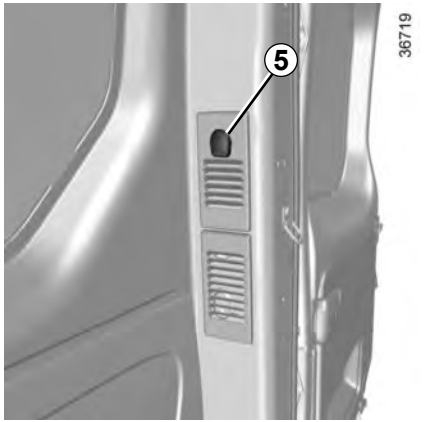

Accessories socket

The ***3*** socket and, depending on the vehicle, sockets ***4*** and ***5*** are designed for connecting accessories which have been approved by our Technical Department. Their power level should not exceed 120 Watts (12V).

Connect accessories with a maximum power of 120 watts (12 V) only.

When several accessory sockets are used at the same time, the total power of the connected accessories must not exceed 180 watts.

Fire hazard.

REAR HEAD RESTS

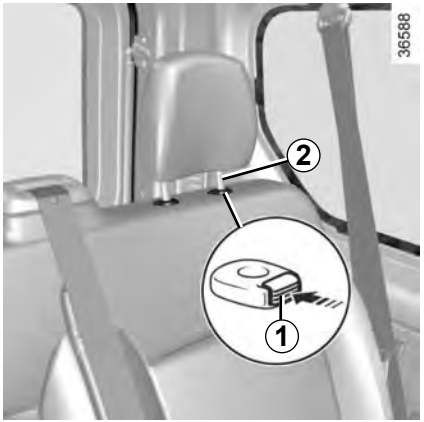

To raise the headrest

Press button ***1*** and lift the headrest to release it (tilt the seatback if necessary).

To refit the headrest

Insert the headrest rods into the holes (tilt the seatback if necessary). Lower the headrest as far as it will go, then lift until it locks into place. Check that each rod ***2*** on the seatback is securely locked.

The headrest is a safety component, check that it is fitted and in the correct position.

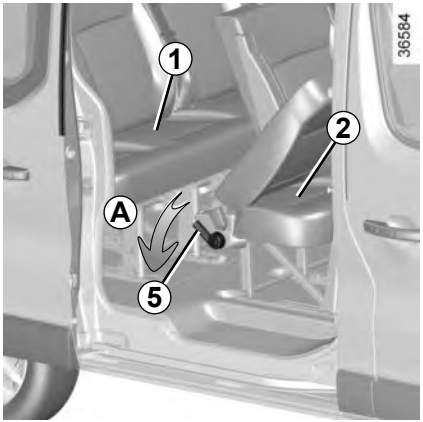

Depending on the vehicle, there may be two rear bench seats: bench seat ***2*** (2nd row of seats) and bench seat ***1*** (3rd row of seats).

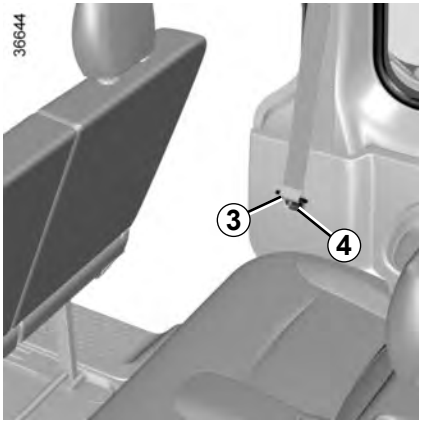

Bench seat *2*

Insert the buckles ***3*** into the housings ***4*** before moving the seatback(s).

To assist with access to the last row (bench seat ***1***), move control ***5*** downwards (movement ***A***) to tilt the bench seat back ***2***.

Remember to lock the seat belt in place once more when a passenger is occupying the seat.

For safety reasons, carry out any adjustments when the vehicle is not being driven.

Ensure that the bench seats are locked in place correctly when refitting them.

Check that the side seat belts are locked in their unit correctly.

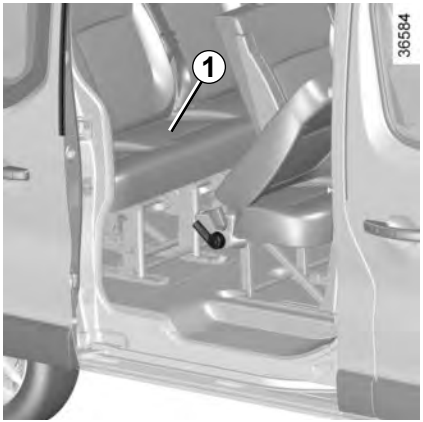

Bench seat *1*

This can be folded away and folded down.

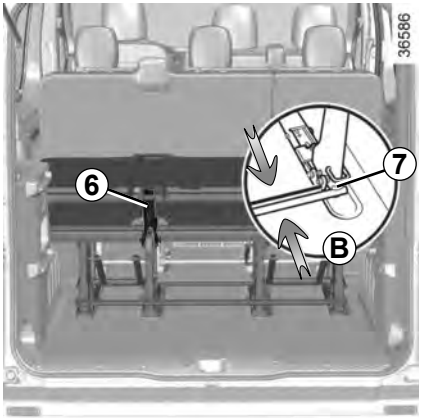

To fold it down

– Pull seat back unlocking strap ***6***;

– fold down the seatback onto the seat base.

When moving the rear bench seat, check that the bench seat anchorage points are clean (they should be free from grit, cloths or any other item which may prevent the bench seat from locking securely).

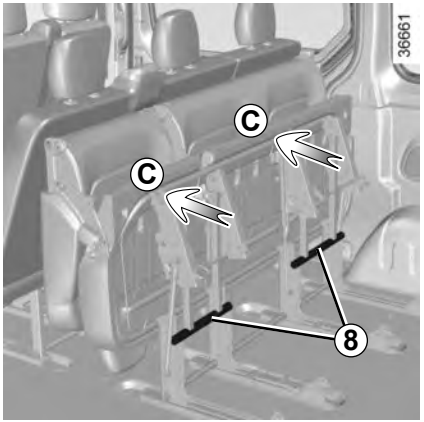

To fold down
(depending on the vehicle)

– Hold the bars ***7*** and bring them together simultaneously (movement ***B***);

– tilt the seat unit forwards until it locks;

– press on the top of the seat (at ***C***) and lock the seat in position by pushing the locking levers ***8***;

– ensure it is correctly locked in place.

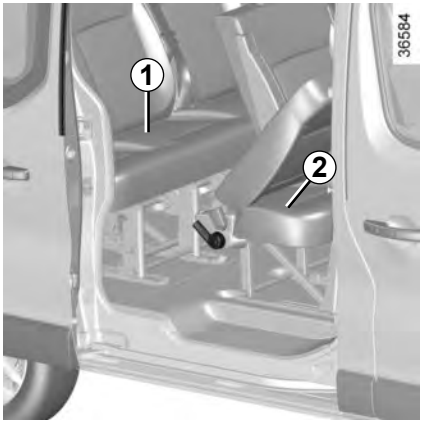

Removal/refitting of bench seat *1* and *2*

(depending on the vehicle)

These are removed and refitted in the same way.

It is not permitted to swap bench seats ***1*** and ***2***

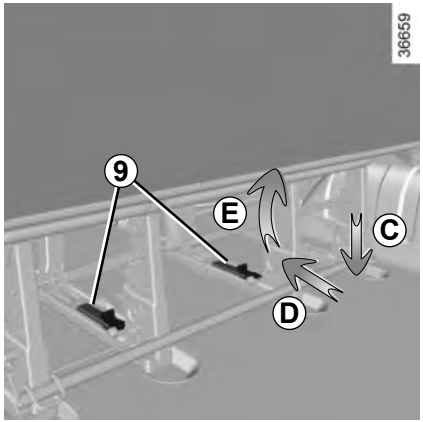

Removal

First, release the side seat belts by unlocking them from their unit.

– Underneath the bench seat, press on the latch ***9***, then pull it forwards (movements ***C*** and ***D***);

– lift (movement ***E***);

For safety reasons, carry out any adjustments when the vehicle is not being driven.

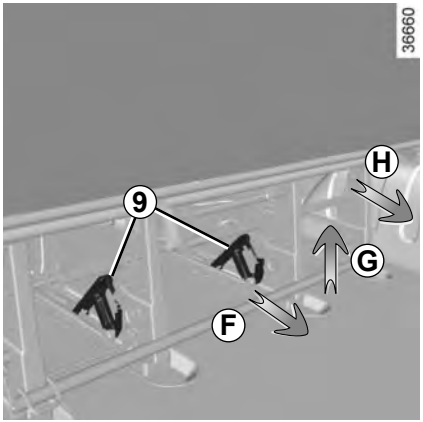

– move the bench seat towards the rear of the vehicle to release the anchorage points (movement ***F***);

– lift the bench seat (movement ***G***);

– move the bench seat towards the rear again (movement ***H***) to release the front anchorage points;

– remove the bench seat from the front of the vehicle.

Remove bench seat ***2*** before removing bench seat ***1***.

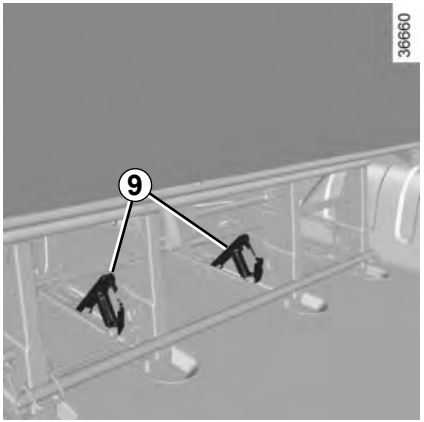

Refitting

– position the bench seat over the front anchorage points;
– push the bench seat until it sits over the rear anchorage points;
– Lower latches ***9*** and push them until they lock in place;
– make sure the visual markers on latches 9 are properly aligned.

Ensure that the bench seats are locked in place correctly when refitting them.

Check that the side seat belts are locked in their unit correctly.

The rear bench seats must be placed on their original anchorage points.

Driving with the bench seat in a rear-facing position is prohibited.

LUGGAGE COVER

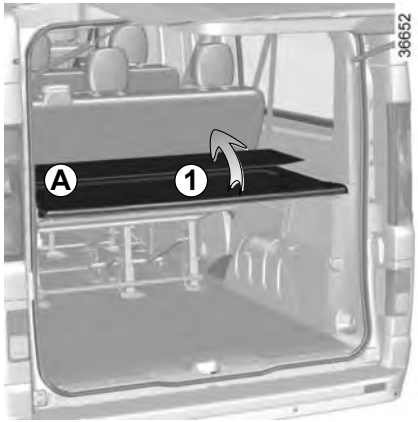

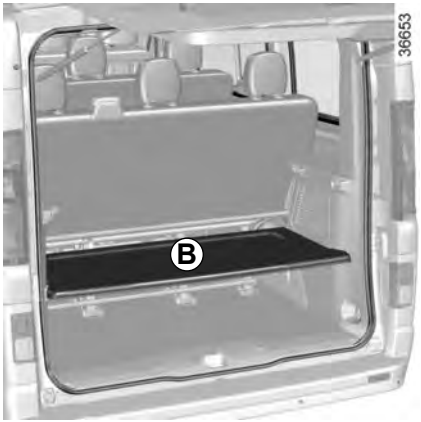

The luggage cover is made up of one or two rigid sections.

There are two possible positions:

– top position ***A***;

– the lower position ***B***.

Depending on the vehicle, you can lift the section ***1*** to a vertical position to make loading easier.

Do not place any objects, especially heavy or solid objects on the luggage cover. These may pose a risk to the vehicle occupants if the driver has to brake suddenly or if the vehicle is involved in an accident.

On equipped vehicles, the luggage net ***A*** can be used, when transporting animals or luggage, to separate them from the passenger section.

It can be positioned:

– behind the front seats;

– behind a rear bench seat.

Make sure that the rod end ***1*** is supported by the metal part and not the plastic part of the cover.

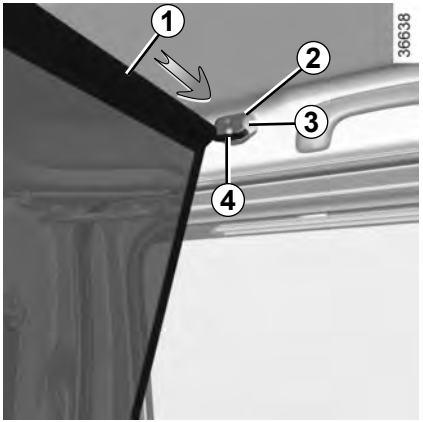

Fitting the luggage net behind the front seats

Inside the vehicle on each side:

Upper mounting:

– lift and hold the cover ***2***, using a flat-blade screwdriver, to access the mounting hole,

– fully insert the top rod ***1*** of the net into the largest section ***3*** of the hole,

– slide the rod into the lower section ***4*** of the hole.

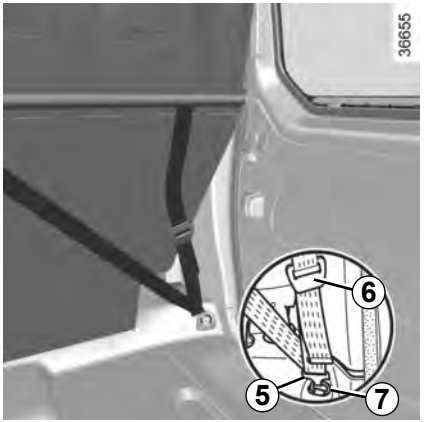

Lower mounting:

– attach hook ***5*** of the luggage strap onto ring ***7*** at the base of the bench seat,

– adjust the net strap so that it is taut.

Removal

Loosen the strap by lifting adjustment device ***6*** upwards. Detach the belts.

Fitting the luggage net *A* behind the rear seats

Inside the vehicle on each side:

Upper mounting:

– lift and hold the cover ***2***, using a flat-blade screwdriver, to access the mounting hole;

– fully insert the top rod ***1*** of the net into the largest section ***3*** of the hole;

– slide the rod into the lower section ***4*** of the hole.

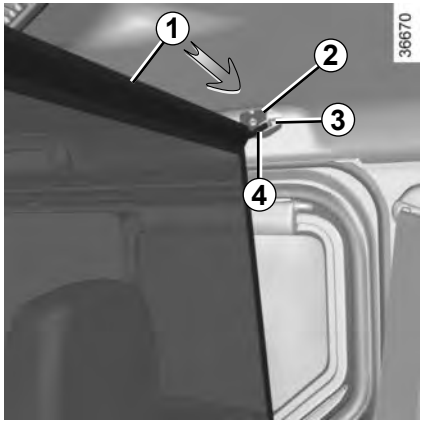

Lower mounting:

– fix the net belt hook ***5*** onto the ring ***8***;

– adjust the net strap so that it is taut.

Removal

Loosen the strap. Detach the belts.

Make sure that the rod end ***1*** is supported by the metal part and not the plastic part of the cover.

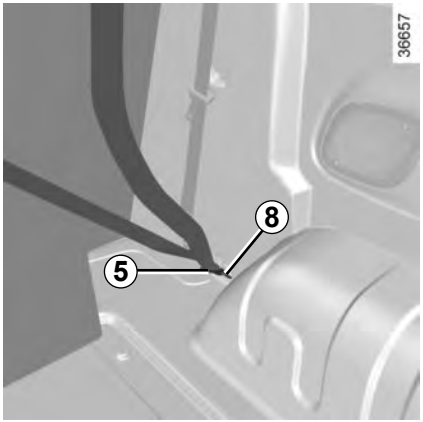

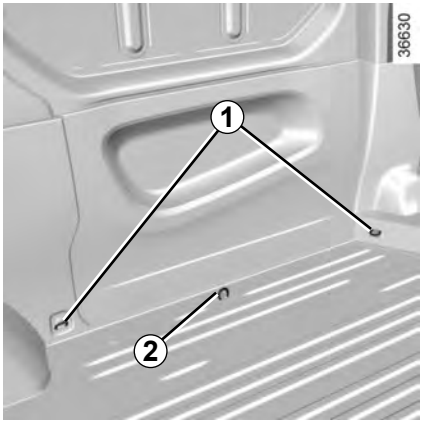

Transporting objects in the rear load area

Depending on the vehicle, securing rings ***1*** and ***2*** can be used to stop transported objects from moving. The number of rings and their position may vary depending on the vehicle.

The sole purpose of these rings ***1*** is to prevent transported objects from moving. The objects must be secured to the mounting rings ***2*** on the vehicle floor beforehand.

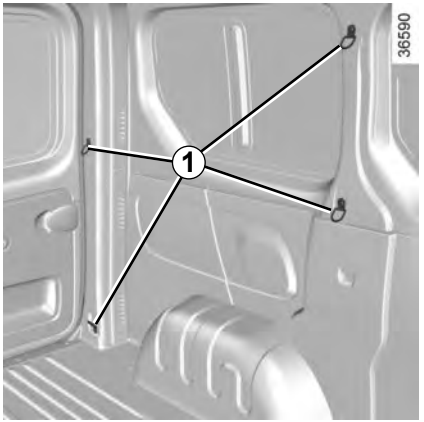

Always position the heaviest items directly on the floor. Use the lashing points on the luggage compartment floor, if these are fitted to the vehicle. The load should be loaded in such a way that no items will be thrown forward and strike the occupants if the driver has to brake suddenly or while driving on a steep gradient. Fasten the rear seat belts, even if the seats are not occupied.

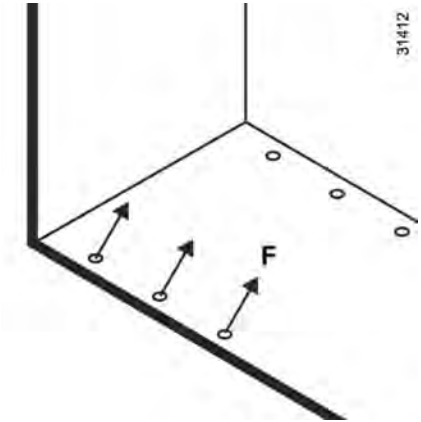

Special note for van version

Max. **F**: 625 daN

For your safety, check that all the vehicle's doors are properly closed before starting the engine.

While driving with the right rear hinged door open, always secure transported loads. The left-hand door, which remains shut, should not be used to hold transported loads in place. Using the right rear hinged door open while driving should only be done in exceptional cases.
In any event, please refer to local legislation. Risk of loads falling on the road surface.

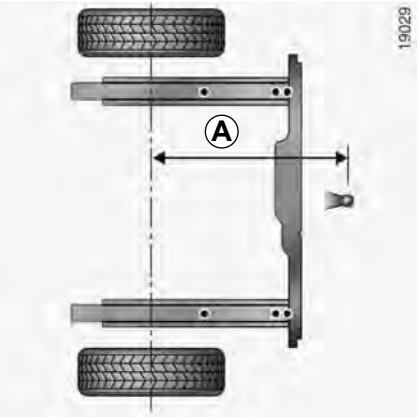

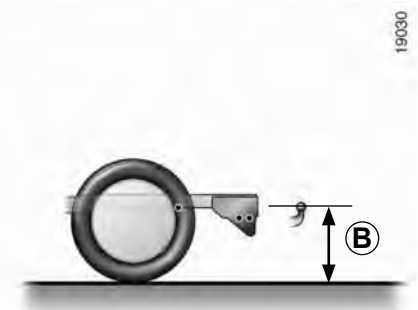

Fitting towing equipment

A: 1,090 mm

Fitting the towbar coupling ball

Position the ball within the range of bolts ***1*** or ***2***, to respect the height ***B***, which must be between 350 and 420 mm, with the vehicle laden (use the illustration example below).

To assemble the towbar ball, please consult the equipment assembly instructions.

If the towbar ball obscures the registration plate or the rear fog lights, it should be removed when not in use.

In all cases, comply with local legislation.

Permissible nose weight, maximum permissible towing weight, braked and unbraked: refer to the information on “Weights” in Section 6.

Choice and fitting of towing equipment

Maximum weight of towing equipment: 22 kg

To assemble the towbar ball, please consult the equipment assembly instructions.

Please keep these instructions with the rest of the vehicle documentation.

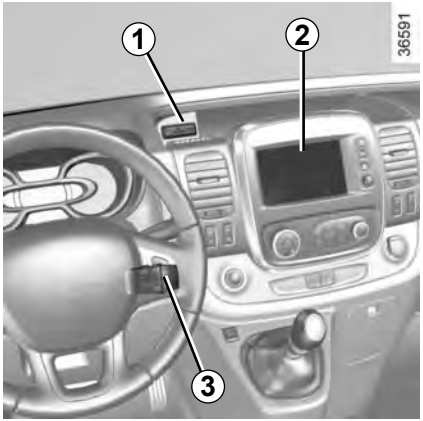

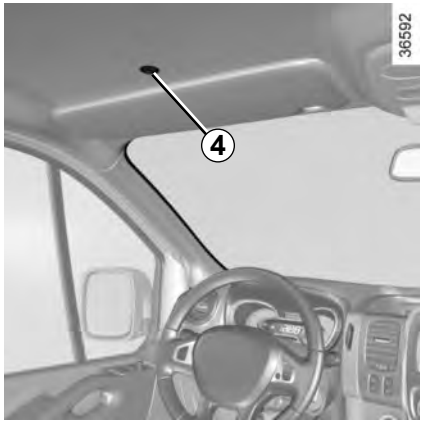

The presence and location of this equipment depends on the vehicle's multimedia equipment.

1 Multimedia sockets;

2 multimedia touchscreen;

3 steering column control;

4 microphone.

To operate this equipment: please refer to the driver's handbook.

Using the telephone

We remind you of the need to conform to the legislation in force concerning the use of such equipment.

Section 4: Maintenance

Bonnet 4.2
Engine oil level: general information 4.4
Engine oil level: topping up/filling 4.5
Oil change 4.6
Levels 4.7
engine coolant 4.7
Brake fluid 4.8
windscreen washer reservoir 4.9
Filters 4.9
Tyre pressure 4.10
Battery 4.12
Bodywork maintenance 4.13
Interior trim maintenance 4.15

BONNET (1/2)

The engine must be stopped before any action (and not on standby): stop the engine (please refer to the information on “Starting and stopping the engine” in Section 2).

Do not press down on the bonnet: there is a risk that the bonnet may accidentally close.

The engine may be hot when carrying out operations in close proximity. In addition, the engine cooling fan can come on at any moment.
Risk of injury.

When working in the engine compartment, ensure that the windscreen wiper stalk is in the park position.

Risk of injury.

In the event of even a slight impact involving the radiator grille or bonnet, have the bonnet lock checked by an approved dealer as soon as possible.

After carrying out any work in the engine compartment, check that nothing has been left behind (cloth, tools, etc.).
These may damage the engine or cause a fire.

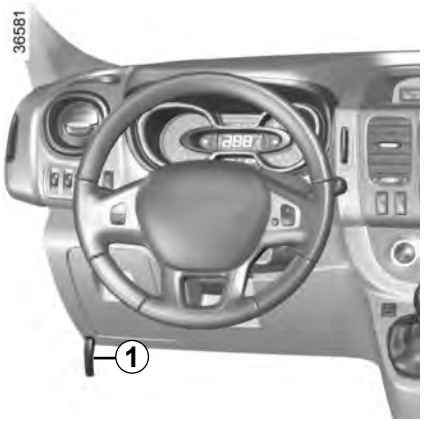

To open the bonnet, pull the handle ***1***.

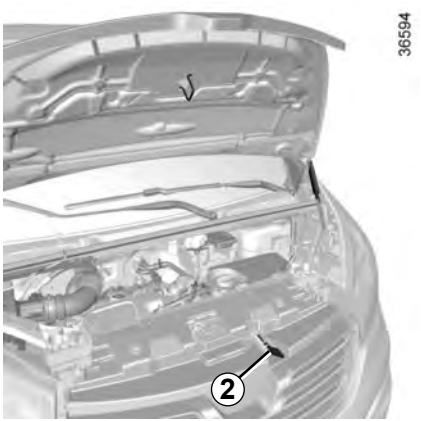

Unlocking the bonnet catch

To open, push tab ***2*** to the left as you open the bonnet.

Opening the bonnet

Lift the bonnet, helping it up, and it will rest in position with the help of struts.

Closing the bonnet

Check that nothing has been left in the engine compartment.
To close the bonnet again, hold the bonnet in the middle and lower it to 30 cm above the closed position, then release it. It will latch automatically under its own weight.

Ensure that the bonnet is properly locked.
Check that nothing is preventing the catch from locking (gravel, cloth, etc.).

ENGINE OIL LEVEL: general information

It is normal for an engine to use oil for lubrication and cooling of moving parts and it is normal to top up the level between oil changes.

However, contact your approved Dealer if more than 0.5 litres is being consumed every 600 miles (1,000 km) after the running in period.

Oil change frequency: check the oil level from time to time and certainly before any long journey to avoid the risk of damaging your engine.

The engine must be stopped before any action (and not on standby): stop the engine (please refer to the information on “Starting and stopping the engine” in Section 2).

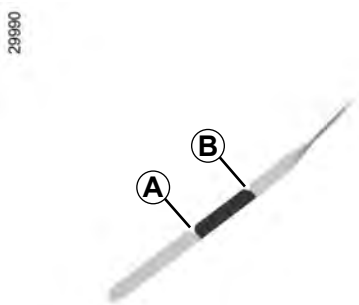

Exceeding the maximum engine oil level

Under no circumstances should maximum filling level ***B*** be exceeded: this could damage the engine and the catalytic converter.
If the oil level exceeds the maximum level, **do not start your vehicle** and contact an approved Dealer.

Reading the oil level

The oil level should be read with the vehicle on level ground, after the engine has been switched off for some time.

The dipstick must be used to read the exact oil level and make sure that the maximum level has not been exceeded (risk of engine damage).

The instrument panel display only alerts the driver when the oil level is at its minimum.

– remove the dipstick and wipe with a clean, lint-free cloth;
– push the dipstick in as far as it will go;
– take out the dipstick again;
– read the level: it should never fall below minimum mark ***A*** or exceed maximum mark ***B***.

Once the level has been read, push the dipstick in as far as it will go.

In order to prevent splashback, it is recommended that a funnel be used when topping up/filling with oil.

ENGINE OIL LEVEL: topping up/filling (1/2)

The engine must be stopped before any action (and not on standby): stop the engine (please refer to the information on “Starting and stopping the engine” in Section 2).

The engine may be hot when carrying out operations in close proximity. In addition, the engine cooling fan can come on at any moment.

Risk of injury.

Filling: take care when topping up the oil that no oil drips onto engine components - risk of fire. Remember to refit the cap securely as there is a risk of fire if oil splashes onto hot engine components.

Engine oil change: if you are changing the oil when the engine is hot, be careful not to scald yourself if the oil overflows.

Never run the engine in an enclosed space as exhaust gases are poisonous.

When working in the engine compartment, ensure that the windscreen wiper stalk is in the park position.

Risk of injury.

Exceeding the maximum engine oil level

Under no circumstances must the maximum fill level be exceeded: risk of damage to the engine and catalytic converter.
If the oil level exceeds the maximum level, **do not start your vehicle** and contact an approved Dealer.

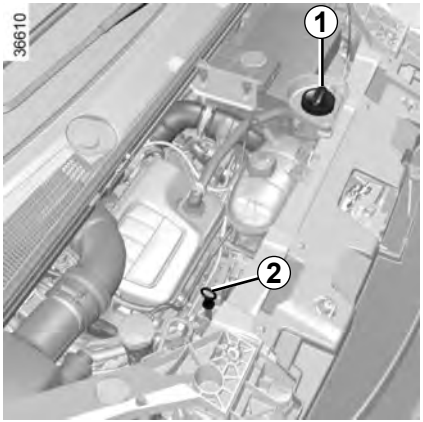

Topping up/filling

The vehicle must be parked on level ground and the engine should be cold (for instance, before the engine is started up for the first time in the day).

– Unscrew cap ***1***;

– top up the level (as a guide, the capacity between the minimum and maximum reading on the dipstick ***2*** is between 1.5 and 2 litres, depending on the engine);

– wait for approximately 10 minutes to allow the oil to flow into the engine;

– check the level using the dipstick ***2*** (as described above).

Once the operation has been completed, ensure that the dipstick is pushed in as far as it will go and that the cap is completely screwed in.

In order to prevent splashback, it is recommended that a funnel be used when topping up/filling with oil.

Do not exceed the **max** level and do not forget to refit cap ***1*** and dipstick ***2***.

Oil change

Service interval: refer to the Maintenance Service Booklet for your vehicle.

Oil change capacity

Please refer to the maintenance document for your vehicle, or contact an authorised dealer.
Always check the engine oil level using the dipstick, as explained previously (it should never fall below the minimum level, or be over the maximum level on the dipstick).

Engine oil grade

Refer to the Maintenance Service Booklet for your vehicle.

Consult your approved dealer at once if you notice an abnormal or repeated drop in any of the fluid levels.

The engine must be stopped before any action (and not on standby): stop the engine (please refer to the information on “Starting and stopping the engine” in Section 2).

The engine may be hot when carrying out operations in close proximity. In addition, the engine cooling fan can come on at any moment.

Risk of injury.

When working in the engine compartment, ensure that the windscreen wiper stalk is in the park position.

Risk of injury.

No operations should be carried out on the cooling circuit when the engine is hot.

Risk of burns.

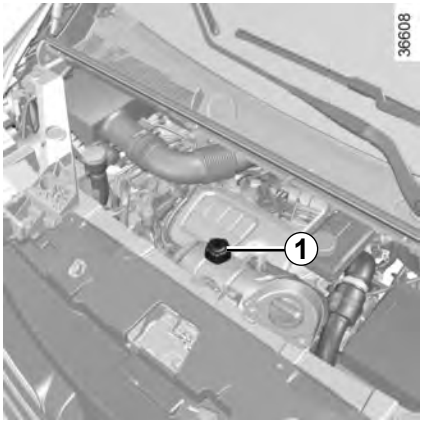

Coolant level

With the engine switched off and on level ground, the level **when cold** must be between the MINI and MAXI marks on reservoir ***1***.

Top this level up **when cold** before it reaches the MINI mark.

Consult your approved dealer at once if you notice an abnormal or repeated drop in any of the fluid levels.

Frequency of checking coolant level

Check the coolant level regularly (very severe damage is likely to be caused to the engine if it runs out of coolant).

If the level needs to be topped up, only use products approved by our Technical Department which ensure:

– protection against freezing;

– an anti-corrosion protection for the cooling system.

Replacement interval

Refer to the Maintenance Document for your vehicle.

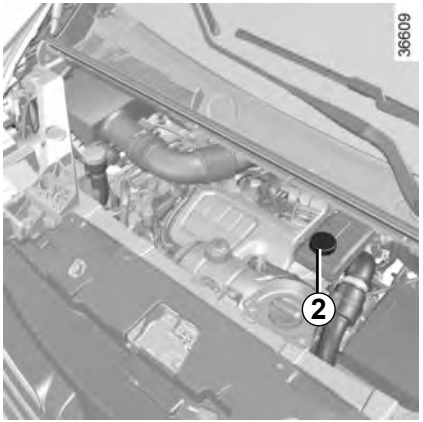

Brake fluid level

The level should be read with the engine switched off and on level ground.

This should be checked frequently, and immediately if you notice even the slightest loss in braking efficiency.

Level *2*

It is normal for the level to drop as the brake shoes become worn, but it must never drop lower than the "**MINI**" warning line.

If you wish to check the disc and drum wear yourself, you should obtain the document explaining the checking procedure from the manufacturer's network or web site.

Topping up

After any operation on the hydraulic circuit, a specialist must replace the brake fluid.

Only use fluids approved by our Technical Department (and taken from a sealed container).

Replacement interval

Refer to the Maintenance Document for your vehicle.

Consult your approved dealer at once if you notice an abnormal or repeated drop in any of the fluid levels.

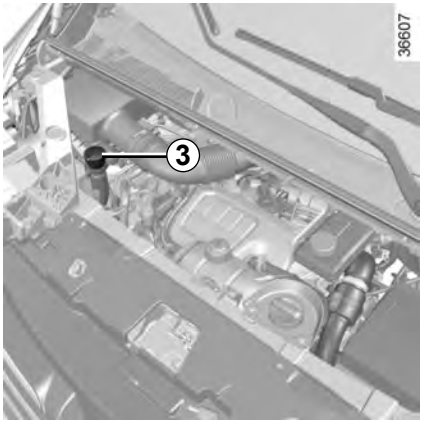

Windscreen washer reservoir

Topping up

With the engine switched off, open the cap ***3***. Fill until you can see the fluid, then replace the cap.

Liquid

Screen wash product (product with antifreeze in winter).

Filters

The replacement of filter components (air filter, cabin filter, diesel filter, etc.) is scheduled in the maintenance operations for your vehicle.

Replacement intervals for filter elements: refer to the Maintenance Document for your vehicle.

Label *A*

Open the driver's door to read it.

Tyre pressures should be checked when the tyres are cold.

If the tyre pressures cannot be checked when the tyres are **cold**, increase the pressures from **0.2** to **0.3** bar (or **3 PSI**). **Never deflate a hot tyre.**

Vehicle fitted with a tyre pressure loss warning system

If underinflated (puncture, low pressure, etc.), the warning light on the instrument panel comes on, see "Tyre pressure loss warning system" in Section 2.

For your safety, please respect the speed limit.

When they need to be replaced, only tyres of the same make, size, type and profile should be used on a single axle.

They must: either have a load capacity and speed rating at least equal to those of the original tyres, or conform to those recommended by an authorised dealer.

Failure to heed these instructions could endanger your safety and affect your vehicle's roadworthiness.

Risk of loss of control of the vehicle.

TYRE PRESSURE (2/2)

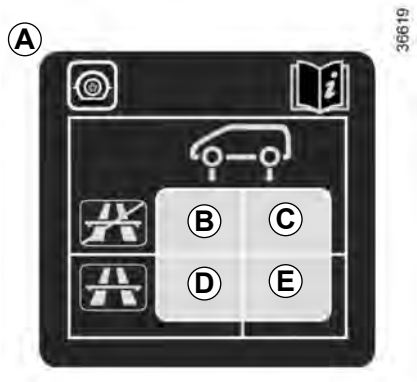

B: front tyre pressure when driving (non-motorway), or if less than 4 people occupy the vehicle.

C: rear tyre pressure when driving (non-motorway), or if less than 4 people occupy the vehicle.

D: tyre pressures for the front wheels (motorway) or when driving with a significant load.

E: tyre pressures for the rear wheels (motorway) or when driving with a significant load.

Tyre safety and use of snow chains

Refer to the information on “Tyres” in Section 5 for the servicing conditions and, depending on the version, the use of chains.

Special note

For vehicles used fully laden (maximum permissible all-up weight) **and towing a trailer.** The maximum speed must be limited to **60 mph (100 km/h)** and the tyre pressure increased by **0.2 bar.**

Refer to the information on “Weights” in Section 6.

The engine must be stopped before any action (and not on standby): stop the engine (please refer to the information on “Starting and stopping the engine” in Section 2).

The battery is a **specific type**, please ensure it is replaced with the same type. Consult an approved dealer.

Handle the battery with care as it contains sulphuric acid, which must not come into contact with eyes or skin. If it does, wash the affected area with plenty of cold water. If necessary, consult a doctor.

Ensure that naked flames, red hot objects and sparks do not come into contact with the battery as there is a risk of explosion.

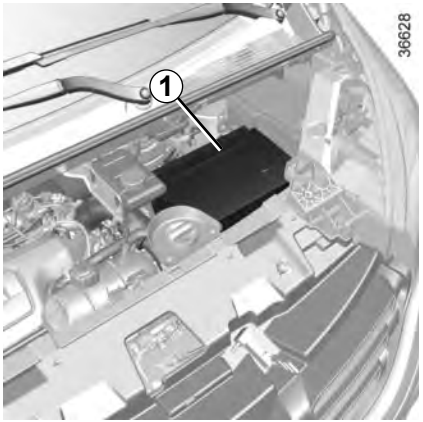

This is located under cover ***1*** and does not need to be serviced. **You should not open it or add any fluid.**

Replacing the battery

As this operation is complex, we advise you to contact an approved Dealer.

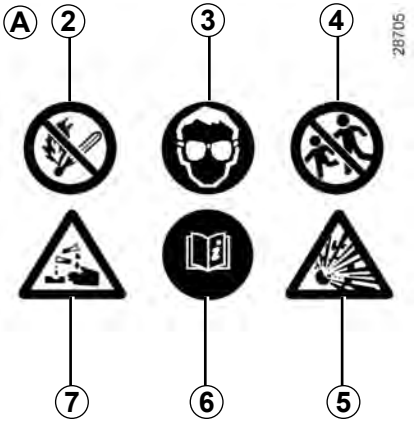

Label *A*

Observe the indications on the battery:

- ***2*** naked flames and smoking are forbidden;
- ***3*** eye protection required;
- ***4*** keep away from children;
- ***5*** explosive materials;
- ***6*** refer to the handbook;
- ***7*** corrosive materials.

The engine may be hot when carrying out operations in close proximity. In addition, the engine cooling fan can come on at any moment. Risk of injury.

BODYWORK MAINTENANCE (1/2)

A well-maintained vehicle will last longer. It is therefore recommended to maintain the exterior of the vehicle regularly.

Your vehicle has been treated with very effective anti-corrosion products. It is nevertheless subject to various outside influences.

Corrosive agents in the atmosphere
- atmospheric pollution (built-up and industrial areas),
- saline atmospheres (near the sea, particularly in hot weather),
- seasonal and damp weather conditions (e.g. road salt in winter, water from road cleaners, etc.).

Minor impacts

Abrasive action
Dust and sand in the air, mud, road grit thrown up by other vehicles, etc.

You should take a number of minor precautions in order to safeguard your vehicle against such risks.

What you should not do

Do not degrease or clean mechanical components (e.g. the engine compartment), underneath the body, parts with hinges (e.g. inside the doors) and painted plastic external fittings (e.g. bumpers) using high-pressure cleaning equipment or by spraying on products not approved by our Technical Department. Doing this could give rise to corrosion or operational faults.

Wash the vehicle in bright sunlight or freezing temperatures.

Do not scrape off mud or dirt without pre-wetting.

Allow dirt to accumulate on the exterior.

Allow rust to form following minor impacts.

Do not use solvents not approved by our Technical Department to remove stains as this could damage the paintwork.

Do not drive in snow or muddy conditions without washing the vehicle, particularly under the wheel arches and body.

You should

Wash your car frequently, **with the engine off**, with cleaning products recommended by the manufacturer (never use abrasive products). Rinse thoroughly beforehand with a jet:
- spots of tree resin and industrial grime;
- mud in the wheel arches and underneath the body which forms damp patches;
- **bird droppings**, which cause a chemical reaction with the paint that **rapidly discolours paintwork and may even cause the paint to peel off;**
  wash the vehicle **immediately** to remove these marks since it is impossible to remove them by polishing;
- salt, particularly in the wheel arches and underneath the body after driving in areas where the roads have been gritted.

Remove any plant matter (resin, leaves, etc.) from the vehicle regularly.

Respect local regulations about washing vehicles (e.g. do not wash your vehicle on a public highway).

Observe the vehicle stopping distances when driving on gravelled surfaces to prevent paint damage.

Repair, or have repaired quickly, areas where the paint has been damaged, to prevent corrosion spreading.

Remember to visit the body shop periodically in order to maintain your anti-corrosion warranty. Refer to the Maintenance Document.

If it is necessary to clean mechanical components, hinges, etc., spray them with products approved by our Technical Department to protect them after they have been cleaned.

We have selected special products to care for your vehicle and you can obtain these from the manufacturer's accessory outlets.

Vehicles with a matte paint finish

This type of paint requires certain precautions.

Do not do the following

– use wax-based products (polishing);
– rub hard;
– wash the vehicle in a roller-type car wash;
– wash the vehicle using a high-pressure device;
– attach stickers to the paintwork (risk of leaving marks).

You should do the following

Wash the vehicle by hand using plenty of water, using a soft cloth or a gentle sponge.

Using a roller type car wash

Return the windscreen wiper stalk to the Park position (refer to the information on the "Windscreen washer, wiper" in Section 1). Check the mounting of external accessories, additional lights and mirrors, and ensure that the wiper blades are secured with adhesive tape. Remove the radio aerial mast if your vehicle is fitted with this equipment.
Remember to remove the tape and refit the antenna after washing.

Cleaning the headlights

As the headlights are made of plastic "glass", use a soft cloth or cotton wool to clean them. If this does not clean them properly, moisten the cloth with soapy water, then wipe clean with a soft damp cloth or cotton wool.
Finally, carefully dry off with a soft dry cloth.

Cleaning products containing alcohol must not be used.

INTERIOR TRIM MAINTENANCE (1/2)

A well-maintained vehicle will last longer. It is therefore recommended to maintain the interior of the vehicle regularly.

A stain should always be dealt with swiftly.

Whatever type of stain is on the trim, use **cold** (or warm) **soapy water with natural soap**.

Detergents (washing-up liquid, powdered products, alcohol-based products) should not be used.

Use a soft cloth.

Rinse and soak up the excess.

Glass instrument panel

(e.g.: instrument panel, clock, exterior temperature display, radio display, multimedia or multifunction display etc.)

Use a soft cloth (or cotton wool).
If this does not clean them properly, use a soft cloth (or cotton wool) slightly moistened with soapy water and then wipe clean with another soft damp cloth or cotton wool.
Finally, **carefully** dry off with a soft dry cloth.

Do not use products containing alcohol and/or spray fluids on the area.

Seat belts

These must be kept clean.
Use products selected by our Technical Department (Approved outlets) or warm, soapy water and a sponge and wipe with a dry cloth.
Detergents or dyes must not be used under any circumstances.

Textiles (seats, door trim, etc)

Vacuum-clean the textiles **regularly**.

Liquid stain

Use soapy water.

Dab lightly (never rub) with a soft cloth, rinse and remove the excess.

Solid or pasty stain

Carefully remove the excess solid or pasty material **immediately** with a spatula (working from the edges to the centre to avoid spreading the stain).
Clean as for a liquid stain.

Special instructions for sweets or chewing gum

Put an ice cube on the stain to solidify it, then proceed as for a solid stain.

For further recommendations for maintaining the interior, and/or for any unsatisfactory results, please see an authorised dealer.

Removal/replacing removable equipment originally fitted in the vehicle

If you need to remove equipment in order to clean the passenger compartment (for example, mats), always ensure that they are correctly refitted and are the right way around (the driver's mat should be fitted on the driver's side, etc.) and fit them with the components supplied with the equipment (for example, the driver mat should always be fixed using the pre-fitted mounting components).

With the vehicle stationary, always ensure that nothing will impede driving (anything obstructing the pedals, heel wedged by the mat etc.).

You should not:

You are strongly advised not to position objects such as deodorants, scents, etc. near air vents, as this could damage your dashboard trim.

You are strongly recommended not to use high-pressure or spray cleaning equipment inside the passenger compartment: use of such equipment could impair the correct functioning of the electrical or electronic components in the vehicle, or have other detrimental effects.

Section 5: Practical advice

Puncture, emergency spare wheel 5.2
Tyre inflation kit 5.4
Tools 5.7
Wheel trims 5.8
Changing a wheel 5.9
Tyres (tyre and wheel safety, use in winter) 5.11
Headlights (changing bulbs) 5.14
Side lights 5.15
Rear lights (changing bulbs) 5.16
Indicator lights (changing bulbs) 5.19
Interior lighting (changing bulbs) 5.20
Key, radio frequency remote control: battery 5.22
RENAULT card: battery 5.23
Battery 5.24
Fitting a radio 5.26
Fuses 5.27
Accessories 5.30
Wipers (replacing blades) 5.31
Towing 5.33
Operating faults 5.35

If the emergency spare wheel has been stored for several years, have it checked by your Dealer to ensure that it is safe to use.

Vehicle fitted with an emergency spare wheel that differs from the other wheels:

- Never fit more than one emergency spare wheel to the same vehicle.
- As the punctured wheel is wider than the emergency spare wheel, the vehicle's ground clearance is reduced.
- Replace the emergency spare wheel as soon as possible with a wheel identical to the original one.
- When this is fitted to the vehicle, which must only be a temporary measure, the driving speed must not exceed the speed indicated on the label on the wheel.
- Fitting an emergency spare wheel may alter the way the vehicle usually runs. Avoid sudden acceleration or deceleration and reduce your speed when cornering.
- If you need to use snow chains, fit the emergency spare wheel to the rear axle and check the tyre pressure.

In case of puncture

Depending on the vehicle, a tyre inflation kit or emergency spare wheel is provided (refer to the following pages).

If the emergency spare wheel has been stored for several years, have it checked by your Dealer to ensure that it is safe to use.

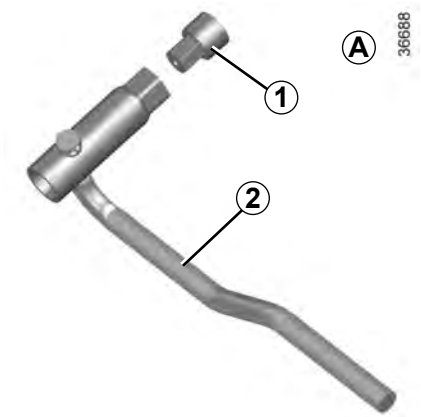

Emergency spare wheel

On equipped vehicles, **use tool *A***, comprising:

– wheelbrace ***2***;

– for some versions, special end piece ***1*** (which must be added).

These components are stored in the tool kit.

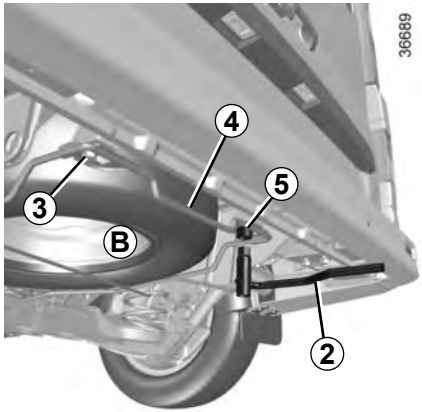

To take out emergency spare wheel *B*

Using the tool ***A***, completely unscrew the nut ***5*** (right-hand side) and partially unscrew the nut ***3*** (left-hand side) until the notch of the wheel carrier ***4*** is released from the nut ***3***.

Move it up and down and from side to side to release the emergency spare wheel.

Depending on the vehicle, a note in the tool kit covers these instructions.

To refit emergency spare wheel *B*

Proceed in reverse order. Check that wheel carrier ***4*** is correctly positioned before tightening nuts ***3*** and ***5***.

In some cases (rear puncture, vehicle loaded with towing equipment, etc.), it is necessary to raise the vehicle (using the lifting point nearest the wheel concerned) to permit access to the emergency spare wheel.

The kit repairs tyres when tread ***A*** has been damaged by objects smaller than 4 mm. It cannot repair all types of puncture, such as cuts larger than 4 mm, or cuts in tyre sidewall ***B***.

Ensure also that the wheel rim is in good condition.

Do not pull out the foreign body causing the puncture if it is still in the tyre.

Do not attempt to use the inflation kit if the tyre has been damaged as a result of driving with a puncture.

You should therefore carefully check the condition of the tyre sidewalls before any operation.

Driving with underinflated, flat or punctured tyres can be dangerous and may make the tyre impossible to repair.

This repair is temporary

A tyre which has been punctured should always be inspected (and repaired, where possible) as soon as possible by a specialist.

When taking a tyre which has been repaired using this kit to be replaced, you must inform the specialist.

When driving, vibration may be felt due to the presence of the repair product injected into the tyre.

The kit is only approved for inflating the tyres of the vehicle originally equipped with the kit.

It must never be used to inflate the tyres of another vehicle, or any other inflatable object (rubber ring, rubber boat, etc.).

Avoid spillage on skin when handling the repair liquid bottle. If droplets do leak out, rinse them off with plenty of water.

Keep the repair kit away from children.

Do not dispose of the empty bottle in the countryside. Return it to your approved dealer or to a recycling organisation.

The bottle has a limited service life which is indicated on its label. Check the expiry date.

Contact an approved dealer to replace the inflation tube and repair product bottle.

Before using this kit, park the vehicle at a sufficient distance from traffic, switch on the hazard warning lights, apply the handbrake, ask all passengers to leave the vehicle and keep them away from traffic.

If the vehicle is parked on the hard shoulder, you must warn other road users of your vehicle's presence with a warning triangle or with other devices as per the legislation applying to the country you are in.

Nothing should be placed around the driver's feet as such objects may slide under the pedals during sudden braking manoeuvres and obstruct their use.

Please be aware that a poorly tightened or missing valve cap can make the tyres less airtight and may lead to pressure loss.

Always use valve caps identical to those fitted originally and tighten them fully.

Following repair with the kit, do not travel further than 120 miles (200 km). In addition, reduce your speed and under no circumstances exceed 48 mph (80 km/h). The sticker, which you must affix in a prominent position on the dashboard, reminds you of this.
Depending on the country or local legislation, a tyre repaired with the inflation kit may need to be replaced.

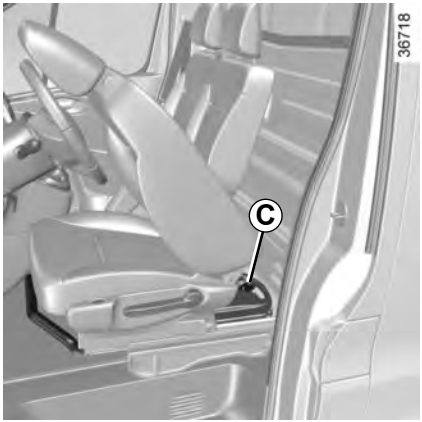

Depending on the vehicle, in the event of a puncture, use the kit located in the tool kit underneath the driver's seat.

To remove it, move the seat forwards as far as it will go, and move the seatback.

Unscrew the mounting screw ***C*** from the unit and swivel to extract.

Precautions when using the kit

The kit should not be operated for more than 15 consecutive minutes.

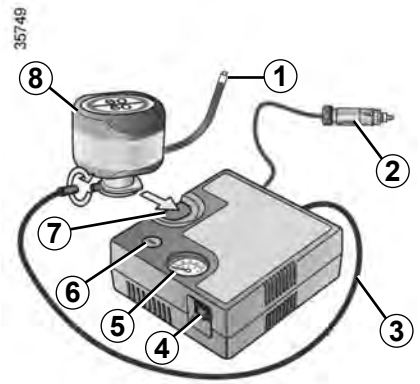

With the engine running and the parking brake applied,

– unroll the hose from the container;

– connect the compressor hose ***3*** to the container's inlet ***8***;

– depending on the vehicle, connect the container ***8*** to the compressor from the container recess ***7***;

– unscrew the valve cap on the relevant wheel and screw on the container's inflation adapter ***1***;

– disconnect any accessories previously connected to the vehicle's accessories sockets;

– adapter ***2*** **must** be connected to the vehicle accessories socket;

– press switch ***4*** to inflate the tyre to the recommended pressure (please refer to the information on "Tyre inflation pressure" in Section 4);

– after a maximum of **15** minutes, stop inflating and read the pressure (on pressure gauge ***5***).

Note: while the container is emptying (approximately 30 seconds), the pressure gauge ***5*** will briefly indicate a pressure of up to **6** bar. The pressure will then drop.

– adjust the pressure: to increase it, continue inflation with the kit; to reduce it, press button ***6***.

If a minimum pressure of 1.8 bar is not reached after 15 minutes, repair is not possible; do not drive the vehicle but contact an approved dealer.

Once the tyre is correctly inflated, remove the kit: slowly unscrew the inflation adapter ***1*** to prevent any repair product from escaping and store the container in plastic packaging to prevent the product from escaping.

– Affix the driving recommendation label to the dashboard where it can easily be seen by the driver;

– Store the kit in the toolkit and reinsert it properly under the driver's seat.

– At the end of this initial inflation operation, air will still escape from the tyre. You must drive a short distance in order to seal the hole.

– Start immediately and drive at between 12 and 40 mph (20 and 60 km/h) in order to distribute the product evenly in the tyre and, after driving for 2 miles (3 km), stop and check the pressure.

– If the pressure is greater than 1.3 bar but less than the recommended pressure (refer to the label affixed to the edge of the driver's door), readjust it. Otherwise, please contact an authorised dealer: the tyre cannot be repaired.

Do not leave the tools unsecured inside the vehicle as they may come loose under braking. After use, check that all the tools are correctly clipped into the tool kit, then position it correctly in its housing: there is a risk of injury.
The jack is designed for wheel changing purposes only. Under no circumstances should it be used for carrying out repairs underneath the vehicle or to gain access to the underside of the vehicle.

Nothing should be placed on the floor area in front of the driver as such objects may slide under the pedal during braking manoeuvres, thus obstructing its use.

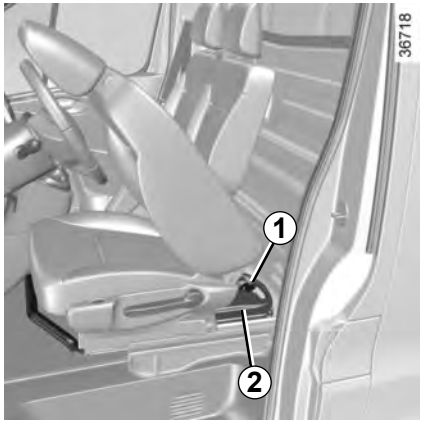

The tools included in the tool kit depend on the vehicle. The tool kit ***2*** is located under the driver's seat. To remove it, move the seat forward and fold down the seatback (refer to the information on the "Front seats" in Section 1). Unscrew the mounting screw ***1*** from the unit and swivel to extract.

Jack *3*
Fold it correctly before refitting it in its housing (ensure that the wheelbrace is correctly positioned).

Wheel bolt anti-theft piece *4*.

Hubcap tool *5*
This tool is used to remove the wheel trims.

Offset wrench *6*.

Wheelbrace *7*
This locks and unlocks the wheel bolts and the emergency spare wheel holder.

Tow eye *8*
Please see "Towing: breakdown recovery" in Section 5.

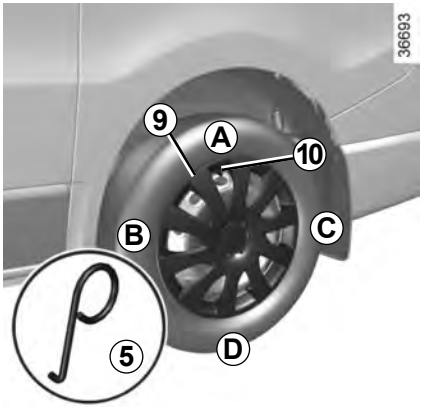

Trim *9*

Remove the wheel trim using hubcap tool ***5*** (located in the tool kit) by fitting the hook into one of the openings around the edge of the wheel trim.

To refit it, align it with valve ***10***.

Push the retaining hooks in fully, starting with side ***A*** near the valve, followed by ***B*** and ***C***, finishing at ***D*** opposite the valve.

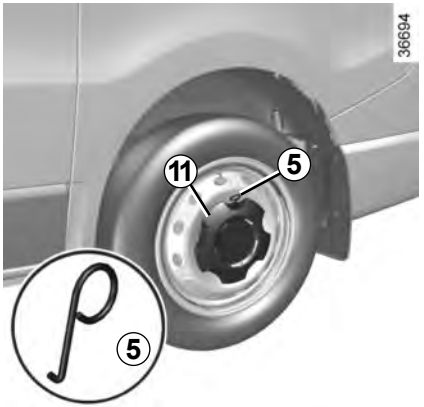

Trim *11*

Remove using hubcap tool ***5*** (located in the tool kit) by engaging the hook in the opening near the edge of the trim.

To refit, position the five trim attachments facing the five wheel attachments and press hard in the middle of the trim to clip it to the wheel.

Switch on the hazard warning lights.

Keep the vehicle away from traffic and on a level surface where it will not slip.

Apply the hand brake and engage a gear (first or reverse, or **P** for automatic transmissions).

Ask all the passengers to leave the vehicle and keep them away from traffic.

If the vehicle is parked on the hard shoulder, you must warn other road users of your vehicle's presence with a warning triangle or with other devices as per the legislation applying to the country you are in.

Do not leave the tools unsecured inside the vehicle as they may come loose under braking. After use, check that all the tools are correctly clipped into the tool kit, then position it correctly in its housing: there is a risk of injury.
The jack is designed for wheel changing purposes only. Under no circumstances should it be used for carrying out repairs underneath the vehicle or to gain access to the underside of the vehicle.

If you have a puncture, replace the wheel as soon as possible.

A tyre which has been punctured should always be inspected (and repaired, where possible) by a specialist.

Remove the wheel trim (refer to the information on “Wheel trims” in Section 5).

Use the wheelbrace ***1*** to slacken off the wheel bolts. Position it so as to be able to push from above.

Insert the jack ***2*** horizontally; the jack head pin ***3*** should line up with the hole in the lower part of the bodywork nearest the wheel concerned.

Begin to crank the jack so that the baseplate is correctly positioned (it should be underneath the vehicle and aligned with the jack head).

Loosen the wheel nuts and remove the wheel.

Fit the emergency spare wheel in place on the central hub.

Tighten the nuts and lower the jack.

With the wheels on the ground, tighten the nuts fully and check if they are tight as quickly as possible.

Position the trim.

Anti-theft bolt

If you use anti-theft bolts, fit these nearest the valve (otherwise it may not be possible to fit the wheel trim).

Incorrect tyre pressures lead to abnormal tyre wear and unusually hot running. These are factors which may seriously affect safety and lead to:

– poor road holding,

– risk of bursting or tread separation.

The pressure depends on the load and the speed of use. Adjust the pressure according to the conditions of use (refer to the label affixed to the edge of the driver's door).

Incidents which occur when driving, such as striking the kerb, may damage the tyres and wheel rims, and could also lead to misalignment of the front or rear axle geometry. In this case, have the condition of these checked by an approved dealer.

Fitting new tyres

For safety reasons, this operation must be carried out by a specialist.

Fitting different tyres may change your vehicle as follows:

– it may mean that your vehicle no longer conforms to current regulations;

– it may change the way it handles when cornering;

– it may cause the steering to be heavy;

– it may affect the use of snow chains.

Please be aware that a poorly tightened or missing valve cap can make the tyres less airtight and lead to pressure loss.

Always use valve caps identical to those fitted originally and tighten them fully.

For your safety, please respect the speed limit.

When they need to be replaced, only tyres of the same make, size, type and profile should be used on a single axle.

They must: either have a load capacity and speed rating at least equal to those of the original tyres, or conform to those recommended by an authorised dealer.

Failure to heed these instructions could endanger your safety and affect your vehicle's roadworthiness.

Risk of loss of control of the vehicle.

Tyre and wheel safety

The tyres are the only contact between the vehicle and the road, so it is essential to keep them in good condition.

You must make sure that your tyres conform to local road traffic regulations.

Maintaining the tyres

The tyres must be in good condition and the tread form must have sufficient depth; tyres approved by our Technical Department have wear warning strips ***1*** which are **indicators moulded into the tread at several points.**

When the tyre tread has been worn to the level of the warning strips, **they become visible *2***: it is **then** necessary to replace your tyres because the tread rubber is now only **1.6 mm deep at most, resulting in poor road holding on wet roads.**

An overloaded vehicle, long journeys by motorway, particularly in very hot weather, or continual driving on poorly surfaced minor roads will lead to more rapid tyre wear and affect safety.

Tyre pressures

Adhere to the tyre pressures (including the emergency spare wheel). The tyre pressures should be checked at least once a month and additionally before any long journey (refer to the label affixed to the edge of the driver's door).
Pressures should be checked when the tyres are cold; ignore higher pressures which may be reached in hot weather or following a fast journey.
If tyre pressures cannot be checked when the tyres are **cold**, assume an increase of **0.2** to **0.3** bar (or **3 PSI**).

Never deflate a hot tyre.

Vehicle fitted with a tyre pressure loss warning system

If underinflated (puncture, low pressure, etc.), the warning light on the instrument panel comes on, see "Tyre pressure loss warning system" in Section 2.

Emergency spare wheel

Refer to the information on the “Emergency spare wheel” and instructions on “Changing a wheel” in Section 5.

Changing wheels around

This practice is not recommended.

Use in winter

Chains

For safety reasons, fitting snow chains to the rear axle is strictly forbidden.

Chains cannot be fitted to tyres which are larger than those originally fitted to the vehicle.

Snow or Winter tyres

We would recommend that these be fitted to all **four wheels** to ensure that your vehicle retains maximum adhesion.

Warning: These tyres sometimes have a specific direction of rotation and a maximum speed index which may be lower than the maximum speed of your vehicle.

Chains may only be fitted to tyres of the same size as those originally fitted to **your vehicle**.

Studded tyres

This type of equipment may only be used for a limited period and as laid down by local legislation. It is necessary to observe the speed specified by current legislation.

These tyres must, at a minimum, be fitted to the two front wheels.

In all cases, we would recommend that you contact an approved dealer who will be able to advise you on the choice of equipment which is most suitable for your vehicle.

17” wheels cannot be fitted with chains.

If you wish to fit snow chains, you must use **special equipment**.

Consult an approved Dealer.

Take care when working in the engine compartment as the engine cooling fan may start to operate at any moment without warning.

Risk of injury.

Any operation on (or modification to) the electrical system must be performed by an approved dealer since an incorrect connection might damage the electrical equipment (harness, components and in particular the alternator). In addition, your Dealer has all the parts required for fitting these units.

The engine must be stopped before any action (and not on standby): stop the engine (please refer to the information on “Starting and stopping the engine” in Section 2).

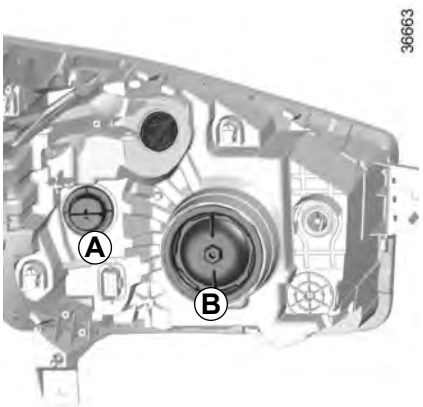

Daytime running lights

Turn the bulb holder ***A*** a quarter of a turn and remove.

Bulb type: W21W/5W.

Change the bulb and replace the bulb holder.

The bulbs are under pressure and can break when replaced.

Risk of injury.

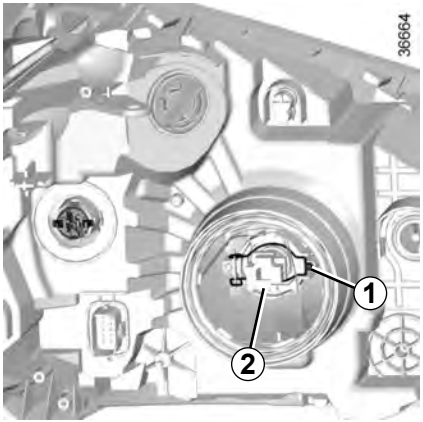

Main headlight and dipped beam headlight

Turn the cover ***B*** a quarter turn.

Disconnect the wiring ***2***.

Unclip spring ***1*** and remove the bulb.

Bulb type: H4.

Do not touch the bulb glass. Hold it by its base.

Replace the bulb, replace the connectors and check that the cover ***B*** is replaced correctly.

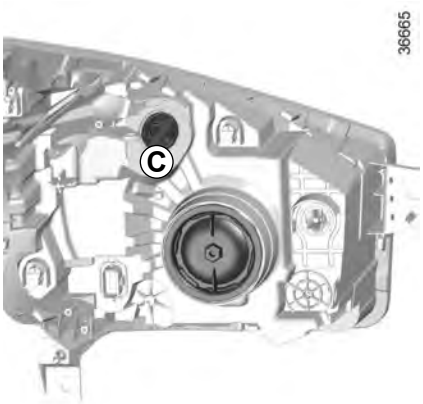

Direction indicators

Turn the bulb holder ***C*** a quarter of a turn and take out the bulb.

Bulb type: PY21W (orange bulb).

To comply with local legislation, or as a precaution, you can obtain an emergency kit containing a set of spare bulbs and fuses from an approved dealer.

Front fog lights *3*

– Access the bulb holder via the underneath of the vehicle;
– unclip the flap;
– turn the bulb holder a quarter turn.

Bulb type: H16LL.
Type of bulb for vehicles fitted with cornering lights: H11LL.

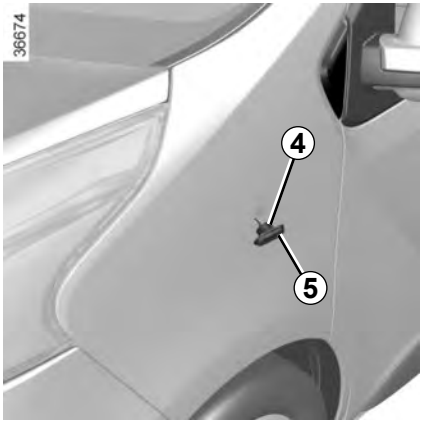

Side indicator lights

Unclip the side mounted indicator light ***5*** (using a flat-blade screwdriver or similar).

Turn the bulb holder ***4*** a quarter of a turn and take out the bulb.

Type of bulb: W5W or WY5 W, depending on the vehicle.

Additional lights

If you wish to fit fog lights or long range headlights to your vehicle, consult an approved dealer.

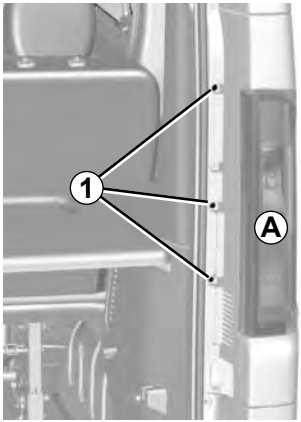

Rear light unit *A*

Remove bolt ***1***.

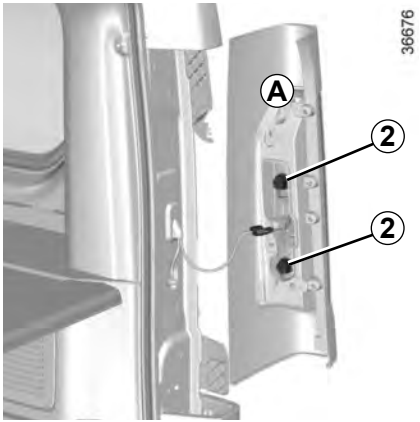

Turn the light unit slightly and release it to access the bulb holder ***2***.

Unclip the bulb holders by rotating them a quarter of a turn.

Unclip the bulbs by pressing them slightly and rotating them a quarter of a turn.

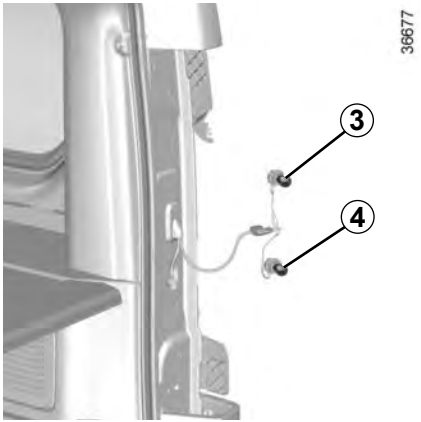

Direction indicator lights *3*

Pear-shaped, bayonet type **PY 21W** bulb**.**

Side lights and brake lights *4*

Pear-shaped, bayonet type **P 21/5W** bulb**.**

The bulbs are under pressure and can break when replaced.

Risk of injury.

Rear light unit *B*

Remove screws ***5***.

Release the headlight unit.

Turn the bulb holder ***6*** or ***7*** and release it.

Replace the bulb concerned.

Refit the bulb holder and secure it by turning.

Check that it is securely mounted.

Reposition the headlight unit and screw it in place.

6 **Fog light (driver's side only)**

Pear-shaped bayonet bulb **W16W.**

7 **Reversing light**

Pear-shaped bayonet bulb **W16W.**

High-level brake light on rear hinged doors

Remove nuts ***8***.

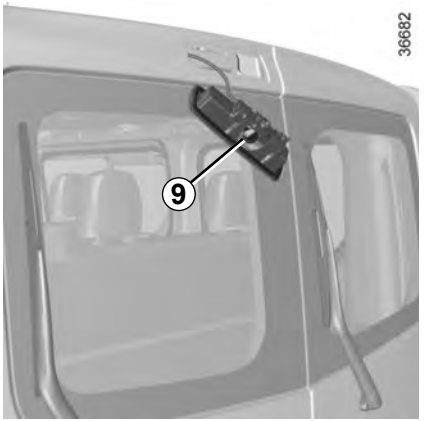

Remove the light sideways from the outside to access bulb ***9***.

Pear-shaped, bayonet type **P 21W bulb.**

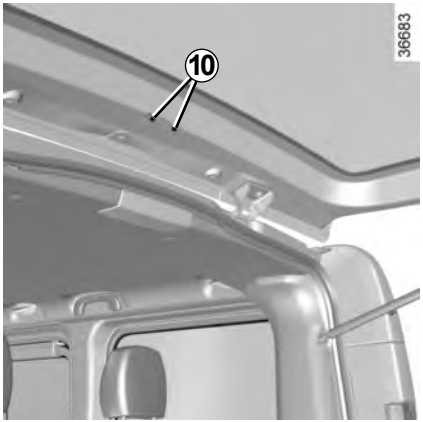

High-mounted brake light on tailgate

Remove nuts ***10***.

Remove the light from the outside to access the bulb ***11***.

Pear-shaped, bayonet type **P 21W bulb.**

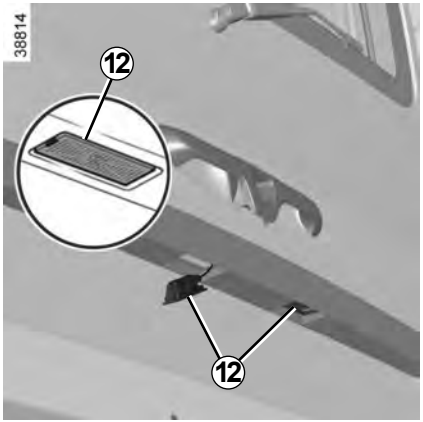

Number plate lights

The bulb is accessed in the same way for both vehicles with hinged doors and those with the tailgate.

Unclip the light ***12*** (using a tool such as a flat-blade screwdriver).

Remove the light cover to gain access to the bulb.

Bulb type: W5W.

Courtesy lights

Remove the relevant roof diffuser ***1*** using a flat-blade screwdriver.

Pull the bulb to remove it from its housing.

Bulb type: W6W

Replace the bulb and refit the lens.

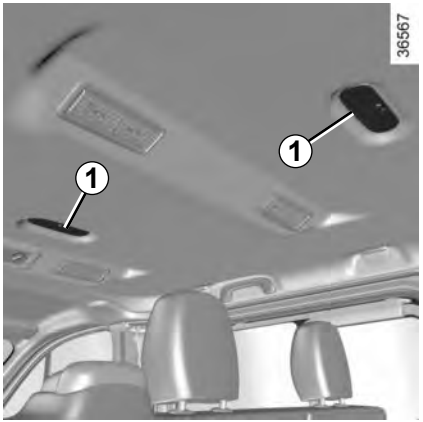

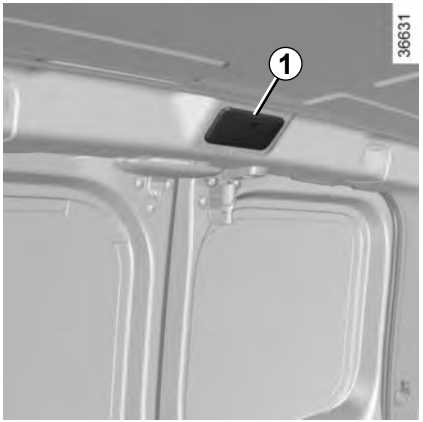

Special features for vehicles fitted with a reading lamp

Type of bulb *2*: festoon 10W
Type of reading lamp *3*: W5W

The bulbs are under pressure and can break when replaced.

Risk of injury.

INTERIOR LIGHTING: changing bulbs (2/2)

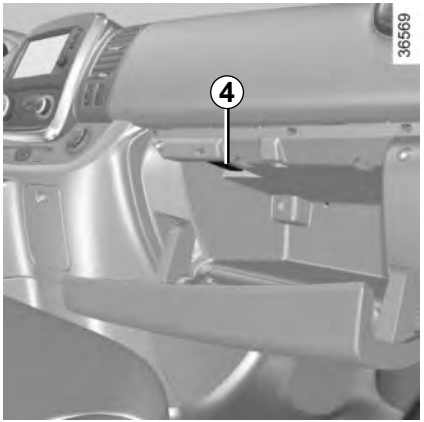

Glovebox lights *4*

Remove the lens using a tool such as a flat-blade screwdriver.

Pull the bulb to remove it from its housing.

Bulb type: W5W

Replace the bulb and refit the lens.

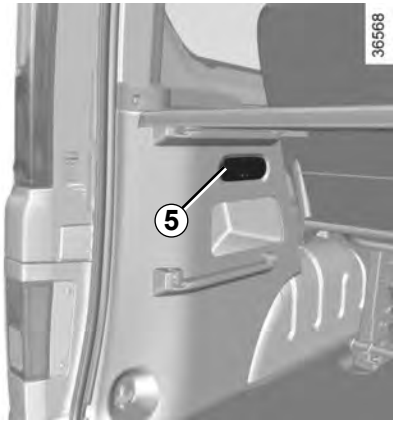

Light *5*

Remove the lens using a tool such as a flat-blade screwdriver.

Pull the bulb to remove it from its housing.

Bulb type: W5W

Replace the bulb and refit the lens.

29999

Replacing the remote control battery

Undo screw ***1*** to remove the remote control cover.

The batteries are available from approved Dealers, and their service life approximately two years.

Check that there is no dye on the battery: risk of an incorrect electrical contact.

31574

Replace battery ***2*** according to the direction marked on the cover.

Note: It is not advisable to touch the electronic circuit in the key cover when replacing the battery.

When refitting, ensure that the cover is correctly clipped on and the screw tightened.

26913

Do not dispose of your used batteries in the countryside. Give them to an organisation that collects and recycles used batteries.

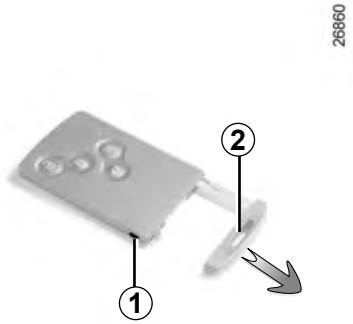

Replacing the battery

When the message “KEYCARD BATTERY LOW” appears on the instrument panel, replace the RENAULT card battery, press button ***1*** pulling on emergency key ***2***, then unclip the cover ***3*** using tab ***4***.

Remove the battery by pressing on one side (movement ***A***) and by lifting the other (movement ***B***) then replace it, ensuring the polarity and model, shown on cover ***3*** are respected.

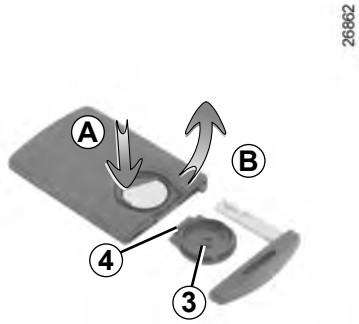

When refitting, proceed in the reverse order, then press one of the buttons on the card four times, close to the vehicle: the next time the vehicle is started, the message will disappear.

Note: it is not advisable to touch the electronic circuit or contacts on the RENAULT card when replacing the battery.

Check that the cover is clipped shut.

The batteries are available from approved Dealers, and their service life approximately two years. Check that there is no dye on the battery: risk of an incorrect electrical contact.

Operating faults

If the battery is too weak to ensure correct operation, you can still start (insert the RENAULT card in the card reader) and lock/unlock the vehicle (refer to the information on "Locking/unlocking the doors" in Section 1).

Do not throw away your used batteries; give them to an organisation responsible for collecting and recycling batteries.

Handle the battery with care as it contains sulphuric acid, which must not come into contact with eyes or skin. If it does, wash the affected area with plenty of cold water. If necessary, consult a doctor.

Ensure that naked flames, red hot objects and sparks do not come into contact with the battery as there is a risk of explosion.

The engine may be hot when carrying out operations in close proximity. In addition, the engine cooling fan can come on at any moment.

Risk of injury.

The engine must be stopped before any action (and not on standby): stop the engine (please refer to the information on “Starting and stopping the engine” in Section 2).

Special procedures may be required to charge some batteries. Contact your approved dealer.

Avoid all risk of sparks which may cause an immediate explosion, and charge the battery in a well-ventilated area. Risk of serious injury.

To avoid all risk of sparks:

- Ensure that any electrical consumers (courtesy lights, etc.) are switched off before disconnecting or reconnecting the battery.
- When charging, stop the charger before connecting or disconnecting the battery.
- Do not place metal objects on the battery to avoid creating a short circuit between the terminals.
- Always wait at least one minute after the engine has been switched off before disconnecting a battery.
- Make sure that you reconnect the battery terminals after refitting.

Connecting a battery charger

The battery charger must be compatible with a battery with nominal voltage of 12 volts.

Do not disconnect the battery when the engine is running. **Follow the instructions given by the manufacturer of the battery charger you are using.**

Starting the vehicle using the battery from another vehicle

If you have to use the battery from another vehicle to start, obtain suitable jump leads (with a large cross section) from an approved dealer or, if you already have jump leads, ensure that they are in perfect condition.

The two batteries must have an identical nominal voltage of 12 volts. The battery supplying the current should have a capacity (amp-hours, Ah) which is at least the same as that of the discharged battery.

Ensure that there is no risk of contact between the two vehicles (risk of short circuiting when the positive terminals are connected) and that the discharged battery is properly connected. Switch off your vehicle ignition.

Start the engine of the vehicle supplying the current and run it at an intermediate engine speed.

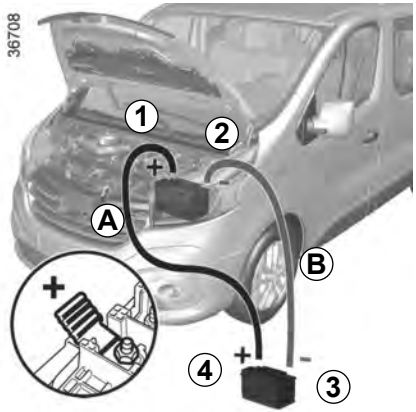

Depending on the vehicle, unclip the battery cover.

Connect the positive cable ***A*** to the support on the (+) terminal ***1***, then to the **(+) terminal *4*** of the battery supplying the current.

Connect the negative cable ***B*** to the **(–)** terminal ***3*** of the battery supplying the current and then to the **(–)** terminal ***2*** of the discharged battery.

Start the engine, and as soon as it starts running, disconnect cables ***A*** and ***B*** in reverse order **(*2 - 3 - 4 - 1*).**

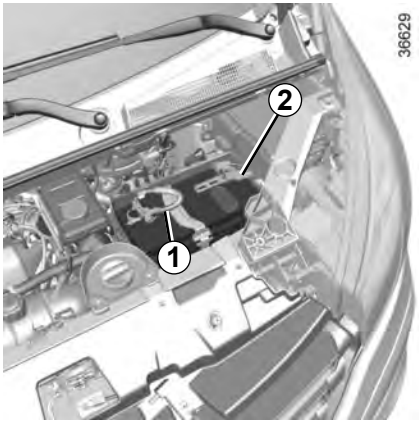

Check that there is no contact between leads ***A*** and ***B*** and that the positive lead ***A*** is not touching any metal parts on the vehicle supplying the current.

Risk of injury and/or damage to the vehicle.

Radio location *1*

Unclip the cover blanking the radio location ***1***. The connections are found behind the cover: aerial, + and – supply, and speaker wires.

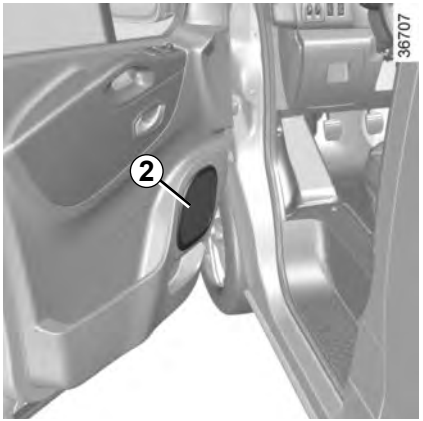

Speakers

Turn the grilles ***2*** to gain access to the speaker's wiring.

To use this equipment, consult the instructions for the equipment which should be kept with the other vehicle documentation.

– In all cases, it is very important to follow the manufacturer's instructions carefully.

– The specifications of the brackets and wires (available from our network) vary depending on the equipment level of your vehicle and the type of radio.

  Consult an approved Dealer to find out the correct part number.

– No work may be carried out on the vehicle's electrical or radio circuits, except by approved dealers: an incorrectly connected system may result in damage being caused to the electrical equipment and/or the components connected to it.

Fuses in passenger compartment A
If any electrical component does not work, check the condition of the fuses. Unclip the storage ***A***.

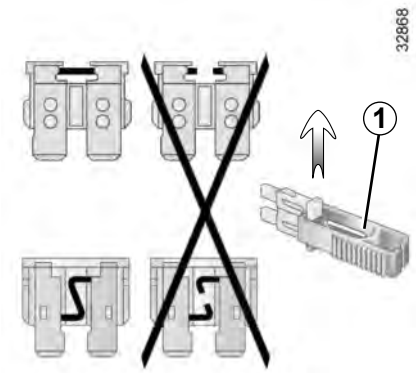

Clip *1*

Remove the fuse using tweezers ***1***, located at the back of flap ***A***.
To remove the fuse from the tweezers, slide the fuse to the side.
It is not advisable to use the free fuse locations.

Check the fuse in question and **replace it,** if necessary, **by a fuse of the same rating.**

If a fuse is fitted with too high a rating, it may cause the electrical circuit to overheat (risk of fire) in the event of an item of equipment using an excessive amount of current.

To comply with current legislation, or as a precaution, you can obtain an emergency kit from your approved dealer containing a set of spare bulbs and fuses.

FUSES (2/3)

Allocation of fuses
(the presence of certain fuse depends on the vehicle equipment level)

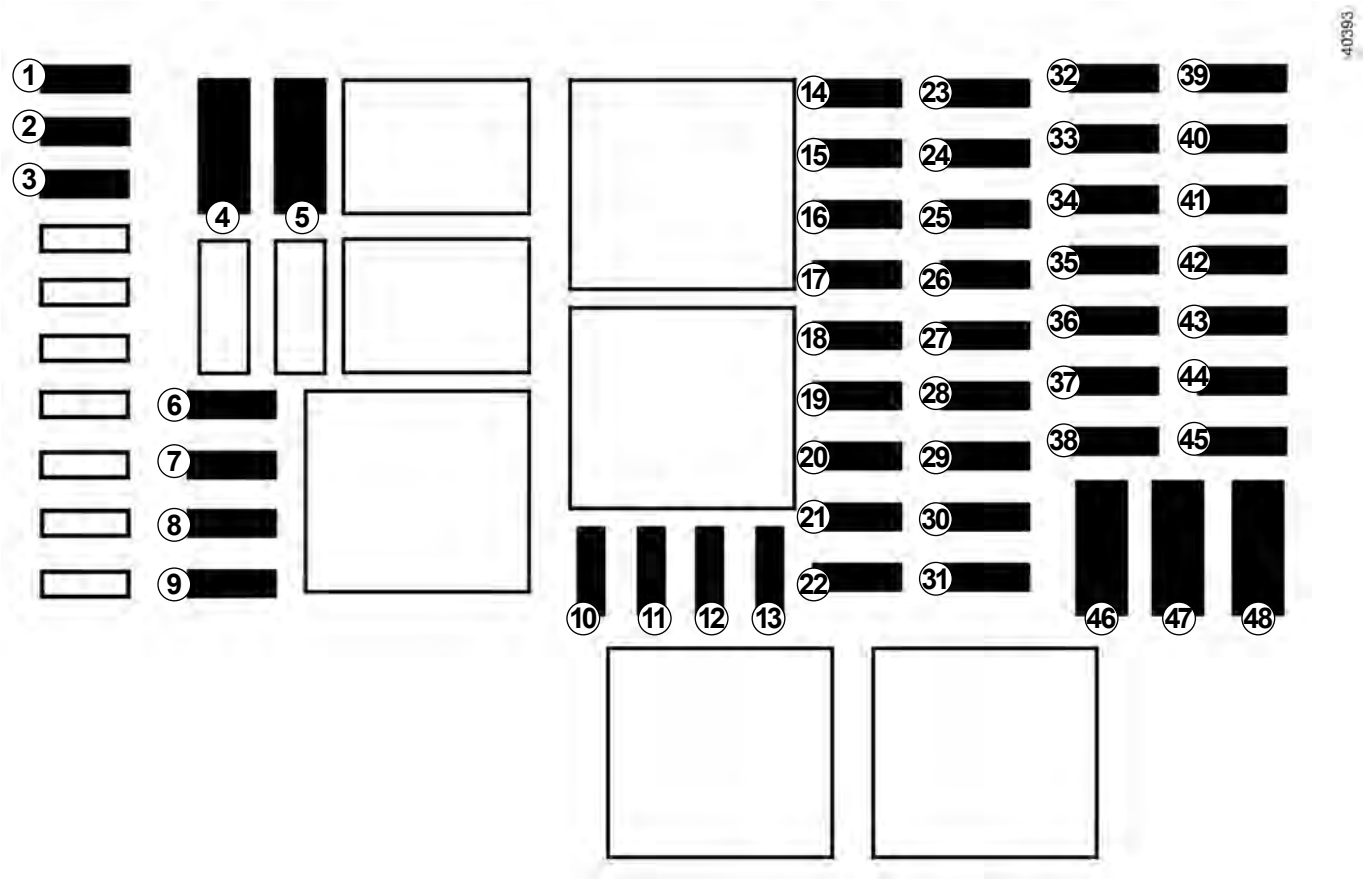

FUSES (3/3)

No.	Allocation
1	+ battery urea injection
2	+ battery for vehicles with RENAULT card
3	APC load for vehicle with RENAULT card
4	Heater
5	Adjustment
6	Adjustment
7	Heater
8	Additional heating and air conditioning
9	Supplementary passenger compartment heating
10	Electric door mirrors, supplementary central unit adjustment
11	Heated door mirror
12	Radio, multimedia, rear-view mirror, diagnostic socket
13	Pre-equipment, towbar socket
14	Timed battery, passenger compartment unit
15	Passenger compartment central unit, tyre pressure loss notification, hands-free access

No.	Allocation
16	Hazard warning lights, direction indicator lights
17	Central locking of opening elements
18	Left-hand daytime running light, rear side light, left-hand main beam headlight, right-hand dipped beam headlight
19	Registration plate lighting, front and rear fog lights
20	Alarm, horn, lighting and wiper stalks
21	Instrument panel
22	Light stalk
23	Rear screen wiper, screenwash pump, horn
24	General APC load
25	Reversing lights
26	Brake switch
27	Injection, starting
28	Airbag, steering column lock
29	Passenger side window control
30	Power-assisted steering
31	Brake lights

No.	Allocation
32	APC load for vehicle with RENAULT card
33	General service
34	Cigarette lighter, accessories socket
35	Right-hand daytime running light, front side lights, right-hand main beam headlight, left-hand dipped beam headlight
36	Brake light, ABS, transponder
37	Interior lighting, air-conditioning
38	Starting for vehicles with RENAULT card
39	Rear windscreen wiper
40	Electromagnetic notification
41	Accessories socket in the loading area
42	Driver’s side window control motor
43	Rear accessories socket
44	BCM starting
45	Heated seats
46	Heating, air conditioning system
47	Front windscreen wiper
48	Tachograph

Electrical and electronic accessories
Before installing this type of accessory (particularly for transmitters/receivers: frequency bandwidth, power level, position of the aerial, etc.), make sure it is compatible with your vehicle. You can get advice from an authorised dealer.
Connect accessories with a maximum power of 120 Watts only. **Fire hazard.** When several accessory sockets are used at the same time, the total power of the connected accessories must not exceed 180 watts.
No work may be carried out on the vehicle's electrical or radio circuits, except by authorised dealers: an incorrectly connected system may result in damage being caused to the electrical equipment and/or the components connected to it.
If the vehicle is fitted with any aftermarket electrical equipment, make sure that the installation is correctly protected by a fuse. Establish the rating and position of this fuse.

Using the diagnostic socket
The use of electronic accessories on the diagnostic socket may cause serious disturbance to the vehicle's electronic systems. For your safety we recommend that you use only electronic accessories approved by the manufacturer, consult an Approved Dealer. **Serious accident risk**.

Use of transmitting/receiving devices (telephones, CB equipment etc.).
Telephones and CB equipment with integrated aerials may cause interference to the electronic systems originally fitted to the vehicle: it is advisable only to use equipment with an external aerial. **Furthermore, we remind you of the need to conform to the legislation in force concerning the use of such equipment.**

Fitting aftermarket accessories
If you wish to install accessories on the vehicle: please contact an authorised dealer. Also, to ensure the correct operation of your vehicle, and to avoid any risk to your safety, we recommend that you use only accessories specifically designed for your vehicle, which are the only accessories for which the manufacturer will provide a warranty.
If you are using an anti-theft device, only attach it to the brake pedal.
Obstructions to the driver
On the driver's side, only use mats suitable for the vehicle, attached with the pre-fitted components, and check the fitting regularly. Do not lay one mat on top of another. **There is a risk of wedging the pedals.**

Check the condition of the wiper blades. You are responsible for their service life:

– clean the blades, windscreen and rear screen regularly with soapy water;

– do not use them when the windscreen or rear screen are dry;

– free them from the windscreen or rear screen when they have not been used for a long time.

– In frosty weather, make sure that the wiper blades are not stuck by ice (to avoid the risk of the motor overheating).

– Check the condition of the wiper blades.
Replace the wiper blades as soon as they begin to lose efficiency (approximately once a year).

Whilst changing the blade, take care not to drop the arm onto the window after it has been removed as this may break the window.

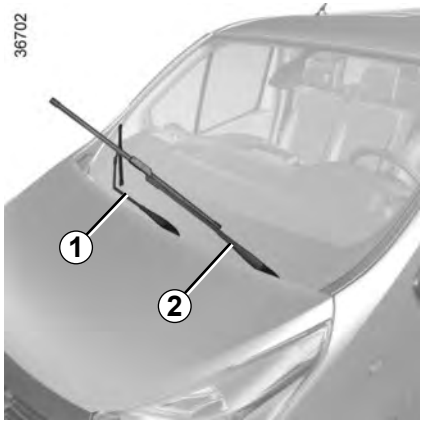

Replacing windscreen wiper blades

With the ignition on and the engine stopped:

– lower the windscreen wiper stalk fully: they stop slightly away from the bonnet;

– lift the wiper arms ***1*** and ***2***;

– pull the tab ***4*** (movement ***A***) and push the blade ***3*** upwards.

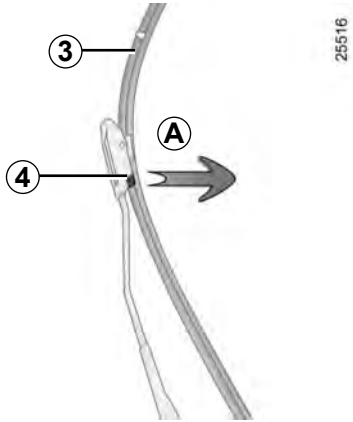

To refit

To refit the wiper blade, proceed in reverse order to removal. Make sure that the blade is correctly locked in position.

Raise the windscreen wiper stalk fully: the front windscreen wiper blades will settle down onto the bonnet.

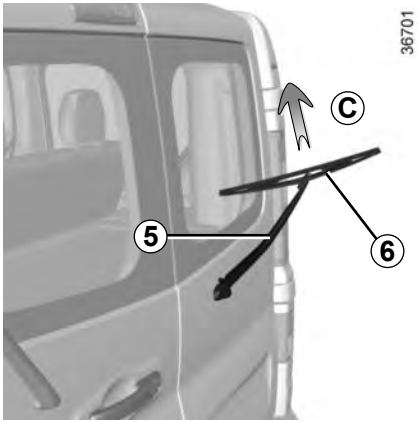

Rear screen wiper blade on rear hinged doors

– Lift wiper arm ***5***;

– pivot the blade ***6*** until some resistance is met;

– pull the blade to release it (movement ***C***).

Rear windscreen wiper blade on tailgate

– Lift the wiper arm ***7***;

– pull the tab ***9*** (movement ***B***) and push the blade ***8*** upwards.

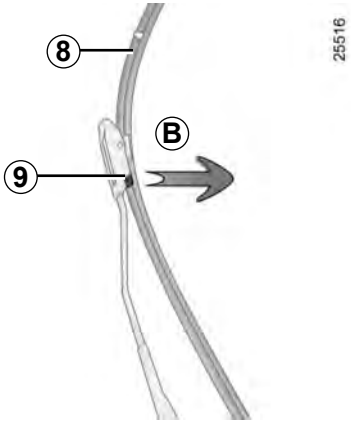

To refit

Proceed in the reverse order to removal. Make sure that the blade is correctly locked in position.

– Use a rigid towing bar. If a rope or cable is used (where the law allows this), the vehicle being towed must be able to brake.
– A vehicle must not be towed if it is not fit to be driven.
– Do not accelerate or brake suddenly when towing, as this may result in damage being caused to the vehicle.
– When towing a vehicle, do not exceed **15 mph (25 km/h)**.
– Do not push the vehicle if the steering column is locked.

When the engine is stopped, steering and braking assistance are not operational.

Do not remove the key from the ignition switch or the card from the reader during towing.

The steering wheel must be unlocked and the ignition key must be in position M (ignition on) to provide brake lights and hazard warning lights on the towed vehicle. At night the vehicle must have its lights on.

Unhitch the trailer, etc., if one is being towed.

You must observe the towing regulations which apply in the country in which you are driving: do not exceed the towing weight for your vehicle.

Contact an approved dealer.

Never use the drive shafts or axles.

These towing points may only be used for traction: never use them for lifting the vehicle directly or indirectly.

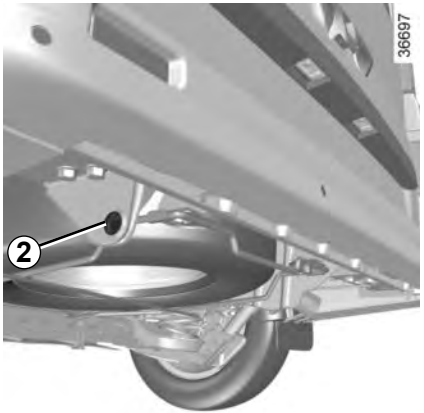

Use only

At the rear:

- **for vehicles without towing equipment, towing point *2*;**
- **for vehicles with towing equipment, towing point *3* (towbar ball);**

At the front:

- **At the front, tow eye *6*** (from the tool kit) **and towing point *6*.**

Rear towing point *2*

(Vehicle without towing equipment)

Rear towing point *3*

(Vehicle with towing equipment)

To assemble the towbar ball, please consult the equipment assembly instructions.

Front towing point *6*

Unclip the cover ***5*** by inserting a flat-blade screwdriver or similar under the cover.

Tighten the tow eye *4* fully: as much as possible by hand at first, then finish tightening it using the wheelbrace.

Only use the towing eye ***4*** stored with the tools. Please refer to the information on “Tools” in Section 5.

OPERATING FAULTS (1/7)

The following advice will enable you to carry out quick, temporary repairs. For safety reasons you should always contact an approved Dealer as soon as possible.

Using the RENAULT card	POSSIBLE CAUSES	WHAT TO DO
The RENAULT card does not lock or unlock the doors.	Card battery is flat.	Replace the battery. You can still lock/unlock and start your vehicle (refer to the information on “Locking, unlocking the opening elements” in Section 1 and “Starting, stopping the engine” in Section 2).
	Use of appliances operating on the same frequency as the card (mobile phone, etc.).	Stop using the equipment or use the integrated key (refer to the information on “Locking, unlocking the opening elements” in Section 1).
	Vehicle located in a high electromagnetic radiation zone. Vehicle battery flat.	Use the key integrated in the card (refer to the information on “Locking, unlocking the opening elements” in Section 1).
	The vehicle is started.	With the engine running, the card’s locking/unlocking device is blocked. Turn off the ignition.

OPERATING FAULTS (2/7)

The following advice will enable you to carry out quick, temporary repairs. For safety reasons you should always contact an approved dealer as soon as possible.

Using the remote control	POSSIBLE CAUSES	ACTION REQUIRED
The remote control does not lock or unlock the doors.	The remote control battery is flat.	Use the emergency key.
	Use of appliances operating on the same frequency as the remote control (mobile phone, etc.).	Stop using the devices or use the key.
	Vehicle located in a high electromagnetic radiation zone. Discharged battery.	Replace the battery. You can still lock/unlock and start your vehicle (refer to the information on “Locking/unlocking the doors” in Section 1 and “Starting/Stopping the engine” in Section 2).
	The vehicle is started.	With the engine running, the key’s locking/unlocking device is blocked. Turn off the ignition.

OPERATING FAULTS (3/7)

The starter is activated	POSSIBLE CAUSES	WHAT TO DO
The instrument panel indicator lights are weak or fail to light up and the starter does not turn.	Battery terminals not tight, battery terminals disconnected or oxidised.	Retighten or reconnect the terminals, or clean them if they are oxidised.
	Discharged battery or not operational.	Connect another battery to the faulty battery. Refer to information on “Battery: troubleshooting” in Section 5 or replace the battery if necessary. Do not push the vehicle if the steering column is locked.
	Faulty circuit.	Consult an approved dealer.
The engine will not start.	Starting conditions are not fulfilled.	Please refer to the information on “Starting, stopping the engine” in Section 2.
	The RENAULT “hands-free” card does not work.	Insert the card in the card reader in order to start the engine. Please refer to the information on “Starting, stopping the engine” in Section 2.
The engine cannot be switched off.	Card not detected.	Insert the card in card reader.
	Electronic fault.	Press the starter button quickly five times.
The steering column remains locked.	Steering wheel locked.	Move the steering wheel while pressing the engine start button (please refer to Section 2 “Starting, stopping the engine”).
	Faulty circuit.	Consult an approved dealer.

On the road	POSSIBLE CAUSES	WHAT TO DO
White smoke from the exhaust.	In the diesel version, this is necessarily a fault. Smoke may be caused by particle filter regeneration.	Please refer to the information on “Special features of diesel versions” in Section 2.
Smoke under the vehicle when starting the heating.	This is not necessarily a fault. The smoke may come from the heater. If this happens, the smoke will gradually disappear once the passenger compartment temperature has reached the appropriate level.	
Smoke under the bonnet.	Short-circuit or cooling system leak.	Stop, switch off the ignition, stand away from the vehicle and contact an approved dealer.
The oil pressure warning light comes on:		
while cornering or braking	The level is too low.	Top up the engine oil level (refer to the information on “Engine oil level: topping up, filling” in Section 4).
is slow to go out or remains lit under acceleration	Loss of oil pressure.	Stop the vehicle and contact an approved Dealer.

OPERATING FAULTS (5/7)

On the road	POSSIBLE CAUSES	WHAT TO DO
Steering becomes heavy.	Assistance overheating.	Consult an approved dealer.
Vibrations.	Tyres not inflated to correct pressures, incorrectly balanced or damaged.	Check the tyre pressures: if this is not the problem, have them checked by an approved Dealer.
The engine is overheating. The coolant temperature indicator is in the warning zone and warning light STOP comes on.	Engine cooling fan not working.	Stop the vehicle, switch off the engine and contact an approved dealer.
	Coolant leaks.	Check the coolant reservoir: it should contain fluid. If there is no coolant, consult an approved dealer as soon as possible.
Coolant boiling in the coolant reservoir.	Mechanical fault: damaged cylinder head gasket.	Stop the engine. Contact an approved dealer.

Radiator: If there is a significant lack of coolant, remember that it must never be topped up using cold coolant while the engine is very warm. After any procedure on the vehicle which has involved even partial draining of the cooling system, it must be refilled with a new mixture prepared in the correct proportions. Reminder: only products approved by our Technical Department may be used for this purpose.

OPERATING FAULTS (6/7)

Electrical equipment	POSSIBLE CAUSES	WHAT TO DO
The wipers do not work.	Wiper blades stuck.	Free the blades before using the wipers.
	Faulty electrical circuit.	Consult an approved dealer.
	Fuse damaged.	Replace the fuse, refer to the information on “Fuses”.
The wiper does not stop.	Faulty electrical controls.	Consult an approved dealer.
Direction indicators flashing more quickly.	Blown bulb.	See information on “Headlights: changing bulbs” or “Rear and side lights: changing bulbs”.
The direction indicators do not work.	Faulty electrical circuit or control.	Consult an approved dealer.
	Fuse damaged.	Replace the fuse, refer to the information on “Fuses”.
The lights do not come on or go off.	Faulty electrical circuit or control.	Consult an approved dealer.
	Fuse damaged.	Replace the fuse, refer to the information on “Fuses”.

OPERATING FAULTS (7/7)

Electrical equipment	POSSIBLE CAUSES	WHAT TO DO
Traces of condensation in the lights.	Traces of condensation may be a natural phenomenon caused by variations in temperature. In this case, the traces will disappear slowly once the lights are switched on.	
The front seat belt reminder light comes on when the seat belts are fastened.	An object is stuck between the floor and the seat and is disrupting the operation of the sensor.	Remove all objects from underneath the front seats.

Section 6: Technical specifications

Vehicle identification plate 6.2
Engine identification plate 6.3
Dimensions 6.4
Engine specifications 6.8
Towing weights 6.9
Weights 6.9
Replacement parts and repairs 6.11
Service sheets 6.12
Anticorrosion check 6.18

VEHICLE IDENTIFICATION PLATES

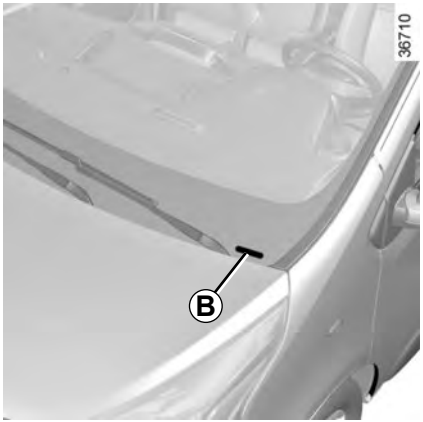

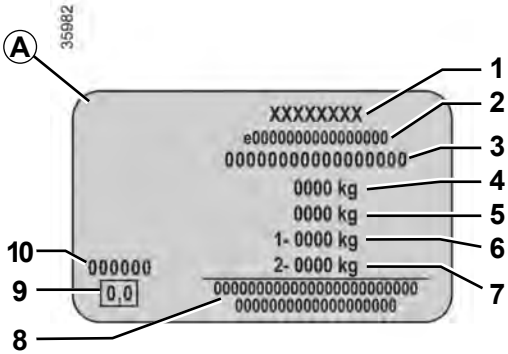

The information shown on the vehicle identification plate should be quoted on all correspondence or orders.

The presence and location of the information depends on the vehicle.

Vehicle identification plate *A*

1 Manufacturer name.
2 EC design number or approval number.
3 Identification number.
Depending on the vehicle, this information is also given on marking *B*.
4 MAM (Maximum Authorised Mass).
5 GTW (Gross train weight: vehicle fully loaded, with trailer).
6 MPAW (Maximim Permissible Weight) for front axle.
7 MPAW on rear axle.
8 Reserved for related or additional entries.
9 Diesel exhaust emissions.
10 Paint reference (colour code).

ENGINE IDENTIFICATION PLATES

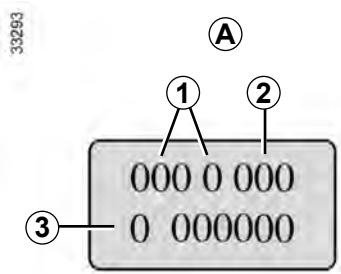

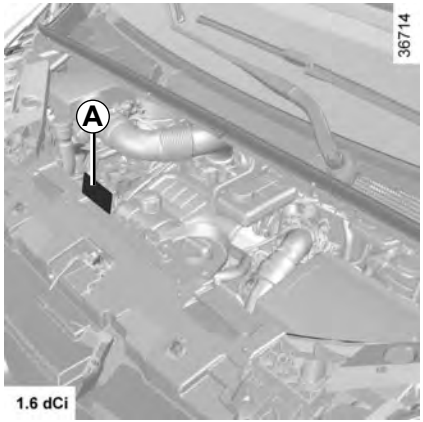

Please quote the information on the engine plate or label *A* in all correspondence or orders.
(Location varies depending on engine)

1 Engine type.

2 Engine suffix.

3 Engine number.

DIMENSIONS (in metres) (1/4)

Van version

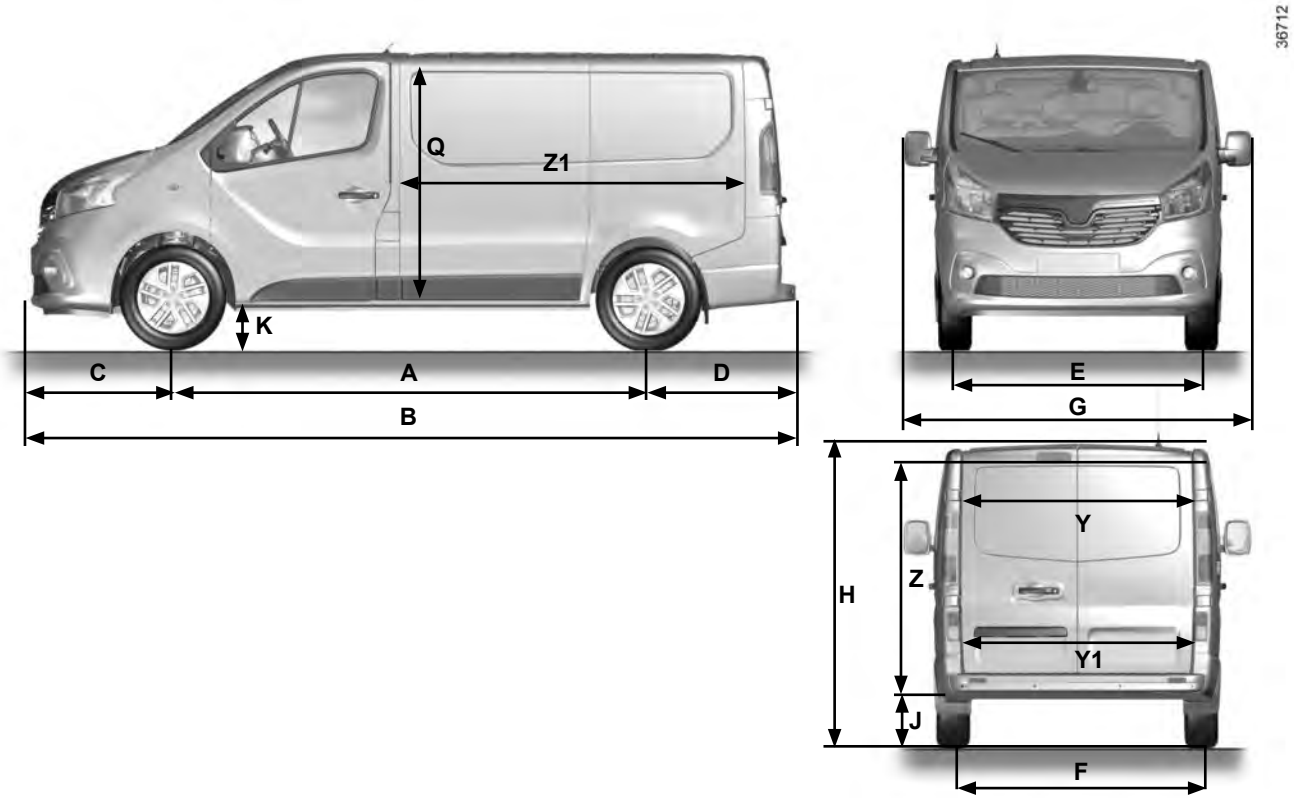

DIMENSIONS (in metres) (2/4)

Complete vehicles without recent alterations

VAN	Standard chassis		Long chassis	
	Standard van	Raised van	Standard van	Raised van
A	3.098		3.498	
B	4,999		5,399	
C	0,933			
D	0,968			
E	1.615			
F	1,628			
G	2,283			
H(1)	1,971 → 2,493			
J(1)	0,552 → 0,552			
K(2)	0,160 → 0,166			
Q	1,387	1,913	1,387	1.913
Y	1.370	1.167	1.370	1.167
Y1	1,391			
Z	1,295	1.818	1,295	1.818
Z1	2,537		2,937	

(1) Unladen

(2) Laden

DIMENSIONS (in metres) (3/4)

Combi version

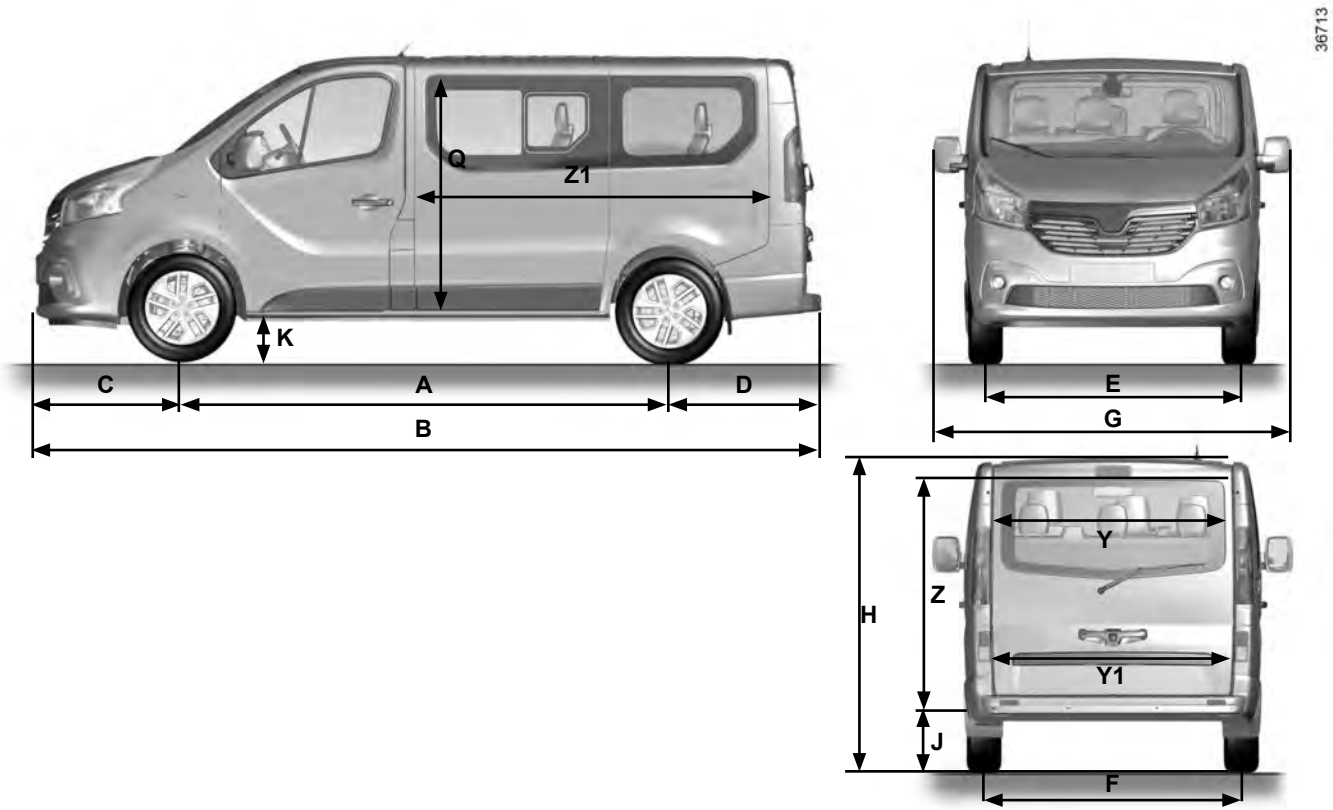

DIMENSIONS (in metres) (4/4)

Complete vehicles without recent alterations

COMBI	Standard chassis				Long chassis	
	Standard combi		Raised combi		Standard combi	
	With 3rd row bench seat	Without 3rd row bench seat	With 3rd row bench seat	Without 3rd row bench seat	With 3rd row bench seat	Without 3rd row bench seat
A	3.098				3.498	
B	4,999				5,399	
C	0,933					
D	0,968					
E	1.615					
F	1,628					
G	2,283					
H(1)	1,963 → 1,970					
J(1)	0,546 → 0,553					
K(2)	0,160→ 0,161					
Q	1.369					
Y	1.370					
Y1	1,391					
Z	1.306					
Z1	0,736	1,620	0,736	1,620	1,136	2,020

(1) Unladen

(2) Laden

ENGINE SPECIFICATIONS

Versions	**1.6 dCi**
Engine type (see engine plate)	R9M
Cubic capacity (cc)	1 598
Type of fuel **Octane rating**	Diesel: the label located in the fuel filler flap indicates authorised fuels.
Spark plugs	–

WEIGHTS (in kg) (1/2)

The weights indicated for a basic vehicle without options: they vary depending on the your vehicle's equipment. Contact an approved Dealer.

Versions (marketed depending on country)	**Standard VAN**	**Raised VAN**
Maximum permissible all-up weight (MMAC) **Gross Train Weight (MTR)**	Weights are indicated on the vehicle identification plate (refer to the information on "Vehicle identification plates" in Section 6)	
Braked Trailer Weight*	found by calculating: **MTR - MMAC**	
Unbraked Trailer Weight*	750	
Permissible nose weight*	80	
Maximum permissible load on roof	200 (including carrying device)	150 (including carrying device)

*** Towing weight (towing a caravan, boat, etc.)**

Towing is prohibited when the MTR - MMAC calculation is equal to zero, or when the MTR is equal to zero (or is not listed) on the identification plate.

- It is important to comply with the towing weights, governed by local legislation in each country and, in particular, laid down in the Road Traffic Regulations. Contact an approved Dealer about any towing equipment.
- When towing, under no circumstances may **the total train weight (vehicle + trailer) be exceeded**. However the following is permitted:
  - rear axle MMTA exceeded by no more than 15%,
  - maximum MMAC exceeded by no more than 10% or 100 kg (whichever is reached first).

  In either case, the maximum speed of the vehicle and trailer must not exceed 48 mph (80 kph), depending on local legislation, and the tyre pressure must be increased by 0.2 bar (3 PSI).
- The engine output and climbing capability are reduced with altitude. We recommend that the maximum load be reduced by 10% at an altitude of 1,000 metres and by an additional 10% for each 1,000 metres thereafter.

WEIGHTS (in kg) (2/2)

The weights indicated for a basic vehicle without options: they vary depending on the your vehicle's equipment. Contact an approved Dealer.

COMBI Versions (versions marketed depend on country)	
Maximum permissible all-up weight (MMAC) **Gross Train Weight (MTR)**	Weights are indicated on the vehicle identification plate (refer to the information on "Vehicle identification plates" in Section 6)
Braked Trailer Weight*	found by calculating: **MTR - MMAC**
Unbraked Trailer Weight*	750
Permissible nose weight*	80
Maximum permissible load on roof	200 (including carrying device)

*** Towing weight (towing a caravan, boat, etc.)**
Towing is prohibited when the MTR - MMAC calculation is equal to zero, or when the MTR is equal to zero (or is not listed) on the identification plate.

- It is important to comply with the towing weights, governed by local legislation in each country and, in particular, laid down in the Road Traffic Regulations. Contact an approved Dealer about any towing equipment.
- When towing, under no circumstances may **the total train weight (vehicle + trailer) be exceeded**. However the following is permitted:
  - rear MMTA exceeded by no more than 15%;
  - MMAC exceeded by no more than 10% or 100 kg (whichever is reached first).

  In both cases, the maximum speed of the vehicle and trailer must not exceed 60 mph (100 km/h), depending on local legislation, and the tyre pressure must be increased by 0.2 bar (3 PSI).
- The engine output and climbing capability are reduced with altitude. We recommend that the maximum load be reduced by 10% at an altitude of 1,000 metres and by an additional 10% for each 1,000 metres thereafter.

REPLACEMENT PARTS AND REPAIRS

Original parts are based on strict specifications and are subject to highly-specialised tests. Therefore, they are of at least the same level of quality as the parts fitted originally.

If you always fit genuine replacement parts to your vehicle, you will ensure that it performs well. Furthermore, repairs carried out within the manufacturer's Network using original parts are guaranteed according to the conditions set out on the reverse of the repair order.

SERVICE SHEETS (1/6)

VIN: .....

Date: Miles (Km): Invoice number:		Comments/miscellaneous
Type of operation: Service □ ..... □ **Anti-corrosion check:** OK □ Not OK* □ *See specific page	**Stamp**	

Date: Miles (Km): Invoice number:		Comments/miscellaneous
Type of operation: Service □ ..... □ **Anti-corrosion check:** OK □ Not OK* □ *See specific page	**Stamp**	

Date: Miles (Km): Invoice number:		Comments/miscellaneous
Type of operation: Service □ ..... □ **Anti-corrosion check:** OK □ Not OK* □ *See specific page	**Stamp**	

SERVICE SHEETS (2/6)

VIN: .....

Date: Miles (Km): Invoice number:		Comments/miscellaneous
Type of operation: Service □ ..... □ **Anti-corrosion check:** OK □ Not OK* □ *See specific page	**Stamp**	

Date: Miles (Km): Invoice number:		Comments/miscellaneous
Type of operation: Service □ ..... □ **Anti-corrosion check:** OK □ Not OK* □ *See specific page	**Stamp**	

Date: Miles (Km): Invoice number:		Comments/miscellaneous
Type of operation: Service □ ..... □ **Anti-corrosion check:** OK □ Not OK* □ *See specific page	**Stamp**	

SERVICE SHEETS (3/6)

VIN: .....

Date: Miles (Km): Invoice number:		Comments/miscellaneous
Type of operation: Service □ ..... □ **Anti-corrosion check:** OK □ Not OK* □ *See specific page	**Stamp**	

Date: Miles (Km): Invoice number:		Comments/miscellaneous
Type of operation: Service □ ..... □ **Anti-corrosion check:** OK □ Not OK* □ *See specific page	**Stamp**	

Date: Miles (Km): Invoice number:		Comments/miscellaneous
Type of operation: Service □ ..... □ **Anti-corrosion check:** OK □ Not OK* □ *See specific page	**Stamp**	

SERVICE SHEETS (4/6)

VIN: .....

Date: Miles (Km):	Invoice number:	Comments/miscellaneous
Type of operation: Service □ ..... □ **Anti-corrosion check:** OK □ Not OK* □ *See specific page	**Stamp**	

Date: Miles (Km):	Invoice number:	Comments/miscellaneous
Type of operation: Service □ ..... □ **Anti-corrosion check:** OK □ Not OK* □ *See specific page	**Stamp**	

Date: Miles (Km):	Invoice number:	Comments/miscellaneous
Type of operation: Service □ ..... □ **Anti-corrosion check:** OK □ Not OK* □ *See specific page	**Stamp**	

SERVICE SHEETS (5/6)

VIN: .....

Date: Miles (Km): Invoice number:		Comments/miscellaneous
Type of operation: Service □ ..... □ **Anti-corrosion check:** OK □ Not OK* □ *See specific page	**Stamp**	

Date: Miles (Km): Invoice number:		Comments/miscellaneous
Type of operation: Service □ ..... □ **Anti-corrosion check:** OK □ Not OK* □ *See specific page	**Stamp**	

Date: Miles (Km): Invoice number:		Comments/miscellaneous
Type of operation: Service □ ..... □ **Anti-corrosion check:** OK □ Not OK* □ *See specific page	**Stamp**	

SERVICE SHEETS (6/6)

VIN: .....

Date: Miles (Km):	Invoice number:	Comments/miscellaneous
Type of operation: Service □ ..... □ **Anti-corrosion check:** OK □ Not OK* □ *See specific page	**Stamp**	

Date: Miles (Km):	Invoice number:	Comments/miscellaneous
Type of operation: Service □ ..... □ **Anti-corrosion check:** OK □ Not OK* □ *See specific page	**Stamp**	

Date: Miles (Km):	Invoice number:	Comments/miscellaneous
Type of operation: Service □ ..... □ **Anti-corrosion check:** OK □ Not OK* □ *See specific page	**Stamp**	

ANTICORROSION CHECK (1/5)

If the continuation of the warranty is subject to repair, it is indicated below.

VIN: .....

Corrosion repair operation to be carried out: Date of repair:	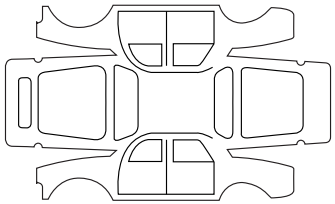	**Stamp**
Repair to be carried out: Date of repair:	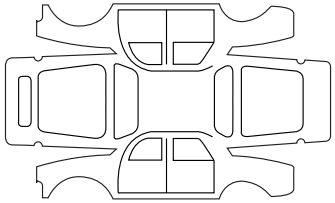	**Stamp**
Repair to be carried out: Date of repair:	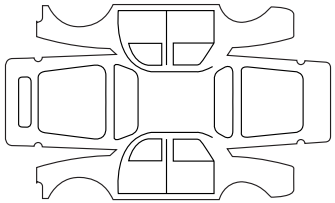	**Stamp**

ANTICORROSION CHECK (2/5)

If the continuation of the warranty is subject to repair, it is indicated below.

VIN: .....

Corrosion repair operation to be carried out: Date of repair:		**Stamp**
Repair to be carried out: Date of repair:		**Stamp**
Repair to be carried out: Date of repair:		**Stamp**

ANTICORROSION CHECK (3/5)

If the continuation of the warranty is subject to repair, it is indicated below.

VIN: .....

Corrosion repair operation to be carried out: Date of repair:		**Stamp**
Repair to be carried out: Date of repair:		**Stamp**
Repair to be carried out: Date of repair:		**Stamp**

ANTICORROSION CHECK (4/5)

If the continuation of the warranty is subject to repair, it is indicated below.

VIN: .....

Corrosion repair operation to be carried out: Date of repair:		**Stamp**
Repair to be carried out: Date of repair:		**Stamp**
Repair to be carried out: Date of repair:		**Stamp**

ANTICORROSION CHECK (5/5)

If the continuation of the warranty is subject to repair, it is indicated below.

VIN: .....

Corrosion repair operation to be carried out: Date of repair:		**Stamp**
Repair to be carried out: Date of repair:		**Stamp**
Repair to be carried out: Date of repair:		**Stamp**

ALPHABETICAL INDEX (1/5)

A

ABS ....1.86, 2.21 → 2.25
accessories.... 5.30
accessories socket .... 3.28 – 3.29
AdBlue .... 1.115 → 1.118
AdBlue additive.... 1.115 → 1.118
additional methods of restraint 1.43
side protection 1.42
to the front seat belts ....1.37 → 1.40
to the rear seat belts 1.41
additive (tank).... 1.115 → 1.118
additive tank .... 1.115 → 1.118
adjusting your driving position ..1.28 – 1.30, 1.32 → 1.36, 3.30
advice on antipollution 2.16
air bag....1.37 → 1.40, 1.42 – 1.43, 1.84
activating the front passenger air bags 1.79
deactivating the front passenger air bags 1.77
air conditioning ....3.4 → 3.13
air vents .... 3.2 – 3.3
anti-corrosion check ....6.18 → 6.22
anti-corrosion protection 4.13
anti-lock braking system: ABS ....2.21 → 2.25
antipollution
advice 2.16
armrest:
front.... 3.23
ashtray.... 3.28 – 3.29
audible and visual signals.... 1.108

B

battery.... 4.12, 5.24 – 5.25
troubleshooting .... 5.24 – 5.25
bonnet.... 4.2 – 4.3
brake fluid 4.8
bulbs
changing ....5.14 → 5.21

C

catalytic converter.... 2.10
central door locking1.4 → 1.6, 1.13, 1.16 → 1.21, 1.23 → 1.27
changing a bulb ....5.14 → 5.21
changing a wheel.... 5.9 – 5.10
changing gear.... 2.11
child restraint/seat ....1.44 – 1.45, 1.47 → 1.64, 1.77
child safety.....1.15, 1.40, 1.44 – 1.45, 1.47 → 1.64, 1.77, 2.4, 3.14 – 3.15
child seats....1.44 – 1.45, 1.47 → 1.64
children .... 1.2, 1.7, 1.44 – 1.45, 3.14 – 3.15
children (safety).... 1.2, 1.7, 1.15
cigar lighter .... 3.28 – 3.29
cleaning:
inside the vehicle .... 4.15 – 4.16
clock .... 1.99 – 1.100
closing the doors .... 1.14 – 1.15, 1.27
control instruments ....1.84 → 1.91, 1.99 – 1.100
controls ....1.80 → 1.83
courtesy light .... 3.17 – 3.18, 5.20
cruise control ....1.87, 2.29 → 2.32
cruise control-speed limiter....2.26 → 2.32

D

dashboard....1.80 → 1.83
deadlocking the doors 1.6, 1.13
demisting
rear screen....3.8 → 3.11
windscreen....3.5, 3.8 → 3.11
dimensions ....6.4 → 6.7
dipstick.... 4.4
display ....1.84 → 1.89
doors....1.18 → 1.21
doors/tailgate ....1.2 → 1.8, 1.13, 1.23 – 1.24, 1.27
driver's position ....1.80 → 1.87
driving ....2.2 → 2.6, 2.10, 2.14, 2.18 → 2.33, 2.35 – 2.36

driving position
settings ....1.32 → 1.36
driving recommendations ....2.12 → 2.15

E
ECO driving ....2.12 → 2.15
ECO mode 2.13, 3.10
electric beam height adjustment ....1.106 – 1.107
electric windows ....3.14 – 3.15
electronic stability control: ESC ....2.21 → 2.25
emergency brake assist ....2.21 → 2.25
emergency braking ....2.21 → 2.25
emergency key ....1.7 – 1.8
emergency spare wheel ....5.2 – 5.3
engine
technical specifications 6.8
engine coolant 4.7
engine oil ....4.4 → 4.6
engine oil capacity ....4.5 – 4.6
engine oil level ....4.4 → 4.6
engine specifications 6.3, 6.8
engine standby ....2.7 → 2.9
engine start/stop button ....2.3 → 2.6
environment 2.17
ESC: electronic stability control ....1.86, 2.21 → 2.25
external temperature 1.100

F
faults
operating faults ....5.35 → 5.41
filter
air filter 4.9
oil filter ....4.5 – 4.6
passenger compartment filter 4.9
fitting a radio 5.26
fittings ....3.19 → 3.27
front passenger air bag deactivation 1.77
front seat adjustment ....1.29 – 1.30
front seats
adjustment ....1.28 – 1.30, 1.32
fuel
advice on fuel economy ....2.12 → 2.15
consumption ....2.12 → 2.15
filling ....1.84, 1.112 → 1.114
grade ....1.112 → 1.114
fuel consumption ....2.12 → 2.15
fuel filler cap ....1.112 → 1.114
fuel level ....1.84 → 1.88
fuel tank
capacity 1.112
fuel tank capacity ....1.112 → 1.114
fuses ....5.27 → 5.29

G
gear lever 2.11
grip control 2.24

H
handbrake 2.11
hazard warning lights signal 1.108
headlight beam adjustment ....1.106 – 1.107
headrest 1.28, 3.30
heated seats 1.29
heated windscreen ....3.8 → 3.11
heating and air conditioning system ....3.4 → 3.13
heating system ....3.4 → 3.12
Hill Start Assist ....2.21 → 2.25
horn 1.108
horn:
flash 1.108
hubcap tool ....5.7 – 5.8

I
idle speed 2.34
ignition switch 2.2
indicator lights 5.19
indicators ..... 1.108, 5.14 → 5.19
indicators:
direction indicators 1.108
instrument panel ..... 1.84 → 1.91
instrument panel ..... 1.84 → 1.98
instrument panel messages ..... 1.90 → 1.98
interior trim
maintenance ..... 4.15 – 4.16
Isofix ..... 1.47 – 1.48

J
jack ..... 5.7 – 5.8

K
keys ..... 1.2 → 1.5

L
levels ..... 4.7 → 4.9
levels:
brake fluid 4.8
coolant 4.7
windscreen washer reservoir 4.9
lifting the vehicle
changing a wheel ..... 5.9 – 5.10
lighting:
exterior ..... 1.103 → 1.108
instrument panel 1.103
interior ..... 3.17 – 3.18, 5.20 – 5.21
lights
adjustment ..... 1.106 – 1.107
changing bulbs ..... 5.14 – 5.15
front ..... 5.14 – 5.15
lights:
adjusting ..... 1.106 – 1.107
brake lights ..... 5.16 → 5.19
dipped beam headlights ..... 1.84, 1.103, 5.14 – 5.15
direction indicators ..... 1.84, 1.108, 5.14 → 5.16
fog lights 1.84, 1.105, 5.16
hazard warning 1.108
main beam headlights 1.84, 1.103, 5.14
number plate lights 5.19
reversing lights 5.16
side lights ..... 1.103, 5.14 → 5.16
load permitted on the roof ..... 6.9 – 6.10
locking the doors ..... 1.2 → 1.8, 1.13 → 1.17, 1.23 → 1.27
luggage compartment cover 3.35
luggage retaining net ..... 3.36 – 3.37

M
maintenance 2.16
maintenance:
bodywork ..... 4.13 – 4.14
interior trim ..... 4.15 – 4.16
mechanical ..... 4.4, 4.12, 6.12 → 6.17
map reading lights ..... 3.17 – 3.18
methods of restraint in addition to the seat belts ... 1.37 → 1.43
multimedia equipment 3.41, 5.26

N
navigation system 3.41

O
oil change ..... 4.5 – 4.6
opening the doors ..... 1.14 – 1.15
operating faults ..... 1.84 → 1.87, 5.35 → 5.41

P
paintwork
maintenance ..... 4.13 – 4.14
parking distance control..... 2.35 – 2.36
power-assisted steering..... 1.31
pretensioners.....1.37 → 1.40
puncture.....5.2 – 5.3, 5.7 → 5.10

R
radio..... 3.41
radio frequency remote control/key
use ..... 1.4 – 1.5
rear bench seat.....3.31 → 3.34
rear seats..... 1.34
functions .....3.31 → 3.34
rear view mirrors..... 1.101 – 1.102
remote control door locking
batteries 5.22
remote control door locking unit ..... 1.2 – 1.3
RENAULT ANTI-INTRUDER DEVICE (RAID)..... 1.27
RENAULT card
battery..... 5.23
use ..... 1.7 → 1.13, 2.4 → 2.6
RENAULT card battery 5.23
replacement parts..... 6.11
reverse gear
selecting..... 2.11
reversing sensor..... 2.35 – 2.36
running in..... 2.2

S
seat belt pretensioners
front seat belt .....1.37 → 1.40
seat belts .....1.32 → 1.40, 1.43
service sheets.....6.12 → 6.17
side protection devices 1.42
signals and lights .....1.103 → 1.108
speakers
location 5.26
special features of diesel versions..... 2.10
speed limiter .....1.87, 2.26 → 2.28
starting the engine .....2.2 → 2.9
steering wheel
adjustment 1.31
Stop & Start .....1.87, 2.7 → 2.9
Stop & Start function.....2.7 → 2.9
stopping the engine .....2.3 → 2.6
storage compartment.....3.19 → 3.27
storage compartments.....3.19 → 3.27
sun visor 3.16
switching on the vehicle ignition .....2.2, 2.4 → 2.6

T
tailgate .....3.36 → 3.39
tank
AdBlue ..... 1.115 → 1.118
tanks and reservoirs
brake fluid 4.8
coolant 4.7
tanks and reservoirs:
windscreen washer 4.9
technical specifications.....6.4 → 6.11
telephone..... 3.41
temperature regulation .....3.8 → 3.12
tool kit ..... 5.7 – 5.8
towing
driving 2.23
breakdown ..... 5.33 – 5.34
towing equipment..... 3.40
towing a caravan ..... 3.40, 6.9 – 6.10
towing equipment
fitting 3.40

towing hitch..... 5.7 – 5.8, 5.33 – 5.34
towing rings .....3.36 → 3.39
towing weights ..... 6.9 – 6.10
traction control .....2.21 → 2.25
transporting children .....1.44 – 1.45, 1.47 → 1.64, 1.77
transporting objects
in the luggage compartment .....3.36 → 3.39
on the roof..... 6.9 – 6.10
trip computer and warning system... 1.84 → 1.87, 1.90 → 1.98
tyre inflation kit.....5.4 → 5.6
tyre pressure.....2.18 → 2.20, 4.10 – 4.11, 5.12
tyre pressure loss warning.....2.18 → 2.20
tyre pressures..... 4.10 – 4.11
tyres..... 2.18 → 2.20, 4.10 – 4.11, 5.11 → 5.13

U
unlocking the doors .....1.23 → 1.26

V
variable power-assisted steering..... 1.31
vehicle identification plates..... 6.3
ventilation .....3.2 → 3.13

W
warning lights.....1.84 → 1.98
washing ..... 4.13 – 4.14
weights ..... 6.9 – 6.10
wheel trim 5.8
wheelbrace ..... 5.7 – 5.8
wheels (safety) .....5.11 → 5.13
windscreen de-icing/demisting .....3.8 → 3.11
windscreen washer..... 1.109 → 1.111
wiper blades ..... 5.31 – 5.32
wipers ..... 1.109 → 1.111
blades ..... 5.31 – 5.32

RENAULT S.A.S. SOCIÉTÉ PAR ACTIONS SIMPLIFIÉE AU CAPITAL DE 533 941 113 € / 13-15, QUAI LE GALLO
92100 BOULOGNE-BILLANCOURT R.C.S. NANTERRE 780 129 987 — SIRET 780 129 987 03591 / TÉL. : 0810 40 50 60
NU 1120-5 – 99 91 004 56R – 09/2015 – Edition anglaise