INSIGNIA

Owner's Manual

Contents

Introduction 2
In brief 6
Keys, doors and windows 20
Seats, restraints 44
Storage 72
Instruments and controls 87
Lighting 135
Climate control 149
Driving and operating 161
Vehicle care 238
Service and maintenance 284
Technical data 288
Customer information 307
Index 316

Introduction

Fuel	Designation			
Engine oil	Grade			
	Viscosity			
Tyre pressure		Tyre size	Front	Rear
	Summer tyres			
	Winter tyres			
Weights				
	Gross vehicle weight rating			
	- Kerb weight, basic model			
	= Loading			

Vehicle specific data

Please enter your vehicle's data on the previous page to keep it easily accessible. This information is available in the sections "Service and maintenance" and "Technical data" as well as on the identification plate.

Introduction

Your vehicle is a designed combination of advanced technology, safety, environmental friendliness and economy.

This Owner's Manual provides you with all the necessary information to enable you to drive your vehicle safely and efficiently.

Make sure your passengers are aware of the possible risk of accident and injury which may result from improper use of the vehicle.

You must always comply with the specific laws and regulations of the country that you are in. These laws may differ from the information in this Owner's Manual.

Disregarding the description given in this manual may affect your warranty.

When this Owner's Manual refers to a workshop visit, we recommend your Opel Service Partner. For gas vehicles, we recommend an Opel Repairer authorised for servicing gas vehicles.

All Opel Service Partners provide first-class service at reasonable prices. Experienced mechanics trained by Opel work according to specific Opel instructions.

The customer literature pack should always be kept ready to hand in the vehicle.

Using this manual

- This manual describes all options and features available for this model. **Certain descriptions, including those for display and menu functions, may not apply to your vehicle due to model variant, country specifications, special equipment or accessories.**
- The "In brief" section will give you an initial overview.
- The table of contents at the beginning of this manual and within each section shows where the information is located.
- The index will enable you to search for specific information.
- This Owner's Manual depicts left-hand drive vehicles. Operation is similar for right-hand drive vehicles.
- The Owner's Manual uses the engine identifier code. The corresponding sales designation and engineering code can be found in the section "Technical data".
- Directional data, e.g. left or right, or front or back, always relate to the direction of travel.
- Displays may not support your specific language.
- Display messages and interior labelling are written in **bold** letters.

Danger, Warnings and Cautions

⚠ Danger

Text marked ⚠ **Danger** provides information on risk of fatal injury. Disregarding this information may endanger life.

⚠ Warning

Text marked ⚠ **Warning** provides information on risk of accident or injury. Disregarding this information may lead to injury.

Caution

Text marked **Caution** provides information on possible damage to the vehicle. Disregarding this information may lead to vehicle damage.

Symbols

Page references are indicated with ⇨. ⇨ means "see page".

Chronological order to select menu entries in the vehicle personalisation is indicated with ➧.

Page references and index entries refer to the indented headings given in the section table of content.

We wish you many hours of pleasurable driving.

Adam Opel GmbH

In brief

Initial drive information

Vehicle unlocking

Press 🔓 to unlock the doors and load compartment. Open the doors by pulling the handles. To open the tailgate, push the brand emblem and open the tailgate.

Electronic key system ⇨ 20, Central locking system ⇨ 22, Load compartment ⇨ 28.

Seat adjustment

Longitudinal adjustment

Pull handle, slide seat, release handle. Try to move the seat back and forth to ensure that the seat is locked in place.

Seat position ⇨ 46, Manual seat adjustment ⇨ 47, Power seat adjustment ⇨ 49.

Backrest inclination

Turn handwheel. Do not lean on backrest when adjusting.

Seat position ⇨ 46, Manual seat adjustment ⇨ 47, Power seat adjustment ⇨ 49.

Seat height

Lever pumping motion

up : seat higher
down : seat lower

Seat position ⇨ 46, Manual seat adjustment ⇨ 47, Power seat adjustment ⇨ 49.

Seat inclination

Press switch

top : front end higher
bottom : front end lower

Seat position ⇨ 46, Manual seat adjustment ⇨ 47, Power seat adjustment ⇨ 49.

Head restraint adjustment

Press release button, adjust height, engage.

Head restraints ⇨ 44.

Seat belt

Pull out the seat belt and fasten in belt buckle. The seat belt must not be twisted and must fit close against the body. The backrest must not be tilted back too far (maximum approx. 25°).

To unfasten belt, press red button on belt buckle.

Seat position ⇨ 46, Seat belts ⇨ 55, Airbag system ⇨ 57.

Mirror adjustment

Interior mirror

To adjust the mirror, move the mirror housing in the desired direction.

Manual anti-dazzle interior mirror ⇨ 38, Automatic anti-dazzle interior mirror ⇨ 39.

Exterior mirrors

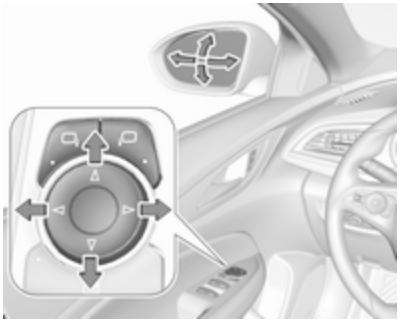

Select the relevant exterior mirror by pushing left or right mirror button. LED in button indicates the selection.

Then swivel the control to adjust the mirror.

Convex exterior mirrors ⇨ 36, Electric adjustment ⇨ 36, Folding exterior mirrors ⇨ 37, Heated exterior mirrors ⇨ 38.

Steering wheel adjustment

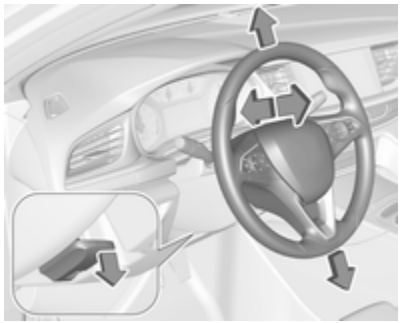

Unlock lever, adjust steering wheel, then engage lever and ensure it is fully locked. Do not adjust steering wheel unless vehicle is stationary and steering wheel lock has been released.

Airbag system ⇨ 57.

Instrument panel overview

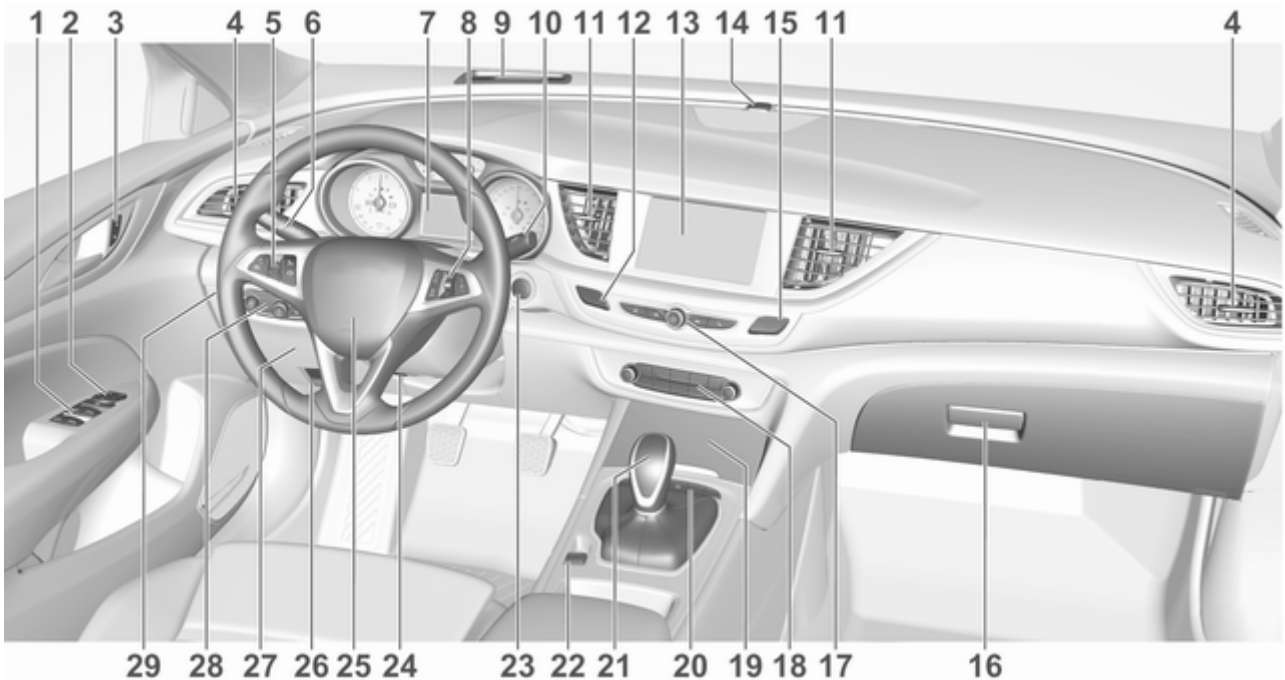

1 Power windows 39
2 Exterior mirrors 36
3 Central locking system 22
4 Side air vents 158
5 Cruise control 187
Speed limiter 189
Adaptive cruise control 190
Forward collision alert 198
6 Turn and lane-change signals, headlight flash, low/high beam, high beam assist 142
Exit lighting 146
Parking lights 143
Buttons for Driver Information Centre 113
7 Instruments 102
Driver Information Centre 113
8 Buttons for Driver Information Centre 113
9 Head-up display 122
10 Windscreen wiper and washer, headlight washer, rear wiper and washer 89
11 Centre air vents 158
12 Hazard warning flashers 142
13 Info-Display 120
14 Anti-theft alarm system status LED 33
15 Electronic Stability Control . 183
Traction Control system 182
16 Glovebox 72
17 Controls for Info-Display operation 120
18 Climate control system 149
19 Storage 72
20 Sport/Tour mode 184
Parking assist/Advanced parking assist 207
Lane keep assist 229
Eco button for stop-start system 166
21 Manual transmission 178
Automatic transmission 174
22 Electric parking brake 180
23 Power switch 163
24 Steering wheel adjustment . . 88
25 Horn 89
26 Bonnet release lever 240
27 Fuse box 260
28 Light switch 135
Headlight range adjustment 138
Front/rear fog lights 143
Instrument illumination 144
29 Head-up display 122

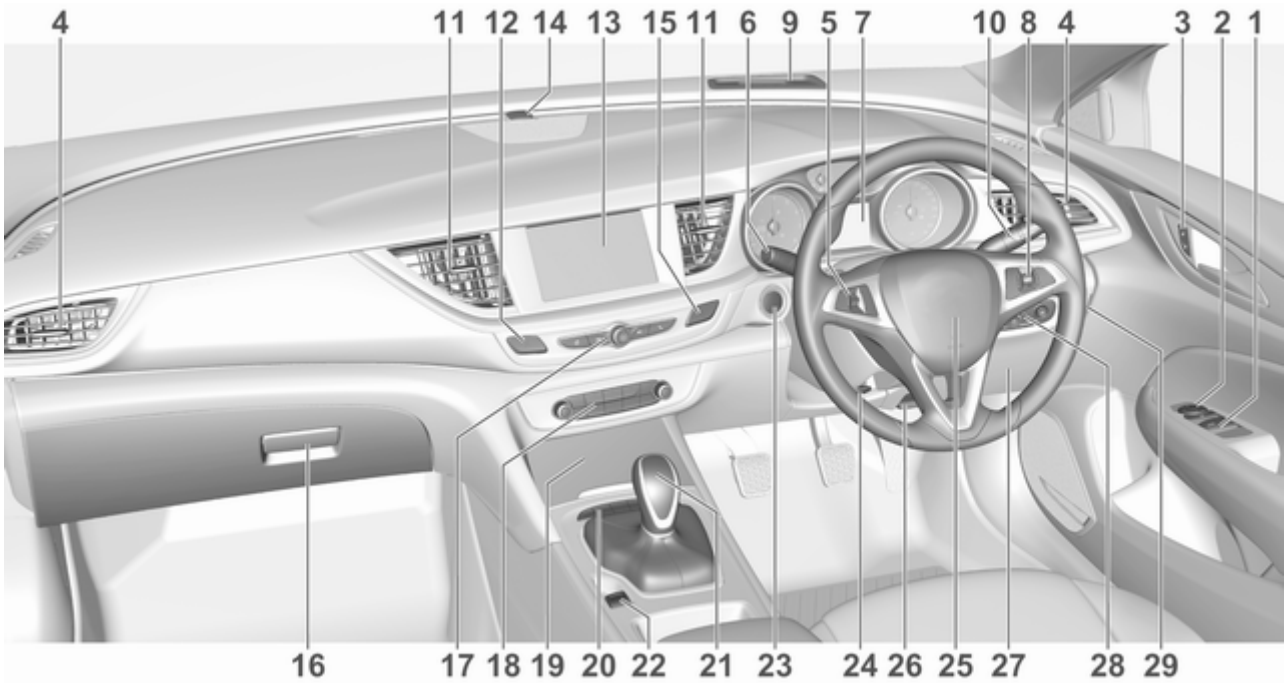
4
11
12
14
13
15
11
6
9
5
7
10
8
4
3
2
1
16
17
18
19
20
22
21
23
24
26
25
27
28
29

Exterior lighting

Automatic light control

AUTO : automatic light control switches automatically between daytime running light and headlight
: sidelights
: headlights

Automatic light control ⇨ 136.

Fog lights

: front fog lights
: rear fog light

Headlight flash, high beam and low beam

headlight flash : pull lever
high beam : push lever
low beam : push or pull lever

High beam ⇨ 136.

Headlight flash ⇨ 138.

LED headlights ⇨ 139.

High beam assist ⇨ 139.

Turn and lane-change signals

lever up : right turn signal
lever down : left turn signal

Turn and lane-change signals ⇨ 142, Parking lights ⇨ 143.

Hazard warning flashers

Operated by pressing ⚠.

Hazard warning flashers ⇨ 142.

Horn

Press 📯.

Washer and wiper systems

Windscreen wiper

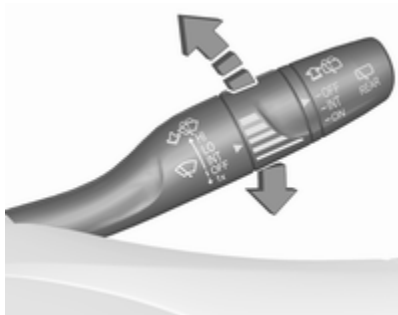

HI : fast
LO : slow
INT : interval wiping or automatic wiping with rain sensor
OFF : off

For a single wipe when the windscreen wiper is off, press the lever down to position **1x**.

Windscreen wiper ⇨ 89, Wiper blade replacement ⇨ 245.

Windscreen washer

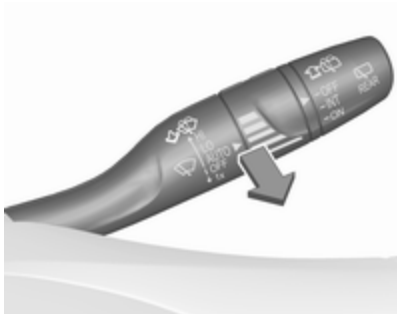

Pull lever.

Windscreen and headlight washer system ⇨ 89, Washer fluid ⇨ 243.

Rear window wiper

Turn outer cap to activate the rear window wiper:

OFF : off
INT : intermittent operation
ON : continuous operation

Rear window washer

Push lever.

Washer fluid is sprayed on the rear window and the wiper wipes a few times.

Rear window wiper/washer ⇨ 91.

Climate control

Heated rear window

Heating is operated by pressing REAR.

Heated rear window ⇨ 41.

Heated windscreen

Heating is operated by pressing .

Heated windscreen ⇨ 42.

Heated exterior mirrors

Pressing REAR also activates the heated exterior mirrors.

Heated exterior mirrors ⇨ 38.

Demisting and defrosting the windows, air conditioning system

- Press FRONT: fan automatically switches to higher speed, the air distribution is directed towards the windscreen.
- Set temperature control to warmest level.
- Switch on air conditioning **A/C** if required.
- Switch on heated rear window REAR.
- Open side air vents as required and direct them towards the door windows.

Air conditioning system ⇨ 149.

Demisting and defrosting the windows, electronic climate control

- Press MAX. Temperature and air distribution are set automatically and the fan runs at high speed.
- Switch on air conditioning A/C ON in Climate setting menu by pressing **CLIMATE**, if required.
- Switch on heated rear window REAR.

Electronic climate control system ⇨ 152.

Transmission

Manual transmission

Reverse: with the vehicle stationary, depress clutch pedal, press the release button on the selector lever and engage the gear.

Manual transmission ⇨ 178.

Automatic transmission

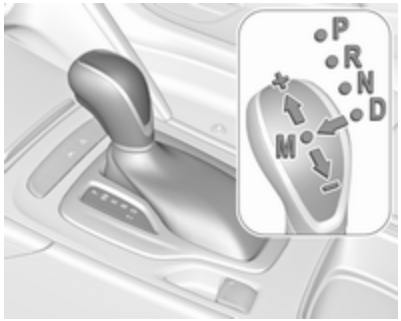

P : park position
R : reverse
N : neutral mode
D : automatic mode
M : manual mode
+ : upshift
− : downshift

The selector lever can only be moved out of **P** when the ignition is on and the brake pedal is applied. To engage **P** or **R**, press the release button.

Automatic transmission ⇨ 174.

Starting off

Check before starting off

- Tyre pressure and condition ⇨ 263, ⇨ 301.
- Engine oil level and fluid levels ⇨ 241.
- All windows, mirrors, exterior lighting and number plates are free from dirt, snow and ice and are operational.
- Proper position of mirrors, seats, and seat belts ⇨ 36, ⇨ 46, ⇨ 56.
- Brake function at low speed, particularly if the brakes are wet.

Starting the engine

- Manual transmission: operate clutch and brake pedal.
- Automatic transmission: operate brake pedal and move selector lever to **P** or **N**.
- Do not operate accelerator pedal.

- Press **Engine Start/Stop** briefly.
- The engine starts after a short delay.

Starting the engine ⇨ 164.

Stop-start system

If the vehicle is at a low speed or at a standstill and certain conditions are fulfilled, an Autostop is activated.

An Autostop is indicated by the needle at the **AUTOSTOP** position in the tachometer.

A restart is indicated by the needle at the idle speed position in the tachometer.

Stop-start system ⇨ 166.

Parking

⚠ Warning

- Do not park the vehicle on an easily ignitable surface. The high temperature of the exhaust system could ignite the surface.
- Always apply the parking brake. Pull switch Ⓟ for approx. one second and check if the control indicator Ⓟ illuminates.

  The electric parking brake is applied when control indicator Ⓟ illuminates ⇨ 108.
- Switch off the engine.
- If the vehicle is on a level surface or uphill slope, engage first gear or set the selector lever to position **P** before switching off ignition. On an uphill slope, turn the front wheels away from the kerb.

  If the vehicle is on a downhill slope, engage reverse gear or set the selector lever to position **P** before switching off ignition. Turn the front wheels towards the kerb.
- Close the windows and the sunroof.
- Switch off ignition with power button. Turn the steering wheel until the steering wheel lock is felt to engage.

- Lock the vehicle by pressing the button on the door handle.

  Activate the anti-theft alarm system ⇨ 33.
- The engine cooling fans may run after the engine has been switched off ⇨ 240.

Caution

After running at high engine speeds or with high engine loads, operate the engine briefly at a low load or run in neutral for approx. 30 seconds before switching off, in order to protect the turbocharger.

Electronic key system ⇨ 20, Laying the vehicle up for a long period of time ⇨ 239.

Keys, doors and windows

Keys, locks **20**
Electronic key system 20
Memorised settings 22
Central locking system 22
Automatic locking 26
Child locks 27
Doors **28**
Load compartment 28
Vehicle security **33**
Anti-theft locking system 33
Anti-theft alarm system 33
Immobiliser 36
Exterior mirrors **36**
Convex shape 36
Electric adjustment 36
Folding mirrors 37
Heated mirrors 38
Automatic dimming 38
Parking assist 38
Interior mirrors **38**
Manual anti-dazzle 38
Automatic anti-dazzle 39
Windows **39**
Windscreen 39
Power windows 39
Heated rear window 41
Heated windscreen 42
Sun visors 42
Roof **42**
Sunroof 42

Keys, locks

Electronic key system

Enables a keyless operation of the following functions:

- central locking system ⇨ 22
- switching on ignition and starting the engine ⇨ 164

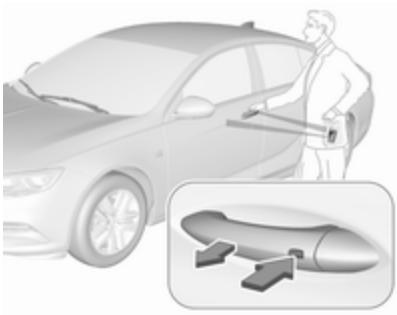

The electronic key simply needs to be on the driver's person.

Additionally, the electronic key includes the functionality of the radio remote control:

- central locking system
- anti-theft alarm system
- power windows

The hazard warning flashers confirm operation.

Handle the device with care, protect from moisture and high temperatures and avoid unnecessary operation.

Note
Do not put the electronic key in the load compartment.

Replacing battery in electronic key

Replace the battery as soon as the system no longer operates properly or the range is reduced. The need for battery replacement is indicated by a message in the Driver Information Centre ⇨ 124.

Batteries do not belong in household waste. They must be disposed of at an appropriate recycling collection point.

To replace:

1. Press button at the back of the electronic key unit and extract the key blade from the housing.

2. Insert the key blade again for approx. 6 mm and turn the key to open the housing. Further insertion of the key blade can damage the housing.
3. Remove and replace battery. Use CR 2032 or equivalent battery. Pay attention to the installation position.
4. Close the housing and insert key blade.

Batteries do not belong in household waste. They must be disposed of at an appropriate recycling collection point.

Fault

If the central locking cannot be operated or the engine cannot be started, the cause may be one of the following:

- Fault in electronic key.
- Electronic key is out of reception range.
- The battery voltage is too low.
- Overload of the central locking system by operating at frequent intervals, the power supply is interrupted for a short time.
- Interference from higher-power radio waves from other sources.

To rectify the cause of the fault, change the position of the electronic key.

Manual unlocking ⇨ 22.

Memorised settings

Whenever the ignition is switched off, the following settings are automatically memorised by the electronic key:

- automatic climate control
- lighting
- Infotainment system
- central locking system
- Sport mode settings
- comfort settings

The saved settings are automatically used the next time the ignition is switched on with the memorised electronic key ⇨ 20.

A precondition is that **Personalisation by Driver** is activated in the personal settings of the Info-Display. This must be set for each electronic key which is used. The status change is available only after locking and unlocking the vehicle.

The assigned memory position of the power seat is automatically recalled when switching on ignition and **Auto Memory Recall** is activated in the Info-Display for the memorised electronic key.

Power seat ⇨ 49.

Vehicle personalisation ⇨ 126.

Central locking system

Unlocks and locks doors, load compartment and fuel filler flap.

A pull on an interior door handle unlocks the respective door. Pulling the handle once more opens the door.

Note
In the event of an accident in which airbags or belt pretensioners are deployed, the vehicle is automatically unlocked.

Note
A short time after unlocking with the electronic key, the doors are being locked automatically if no door has been opened. A precondition is that the setting is activated in the vehicle personalisation ⇨ 126.

Electronic key system operation

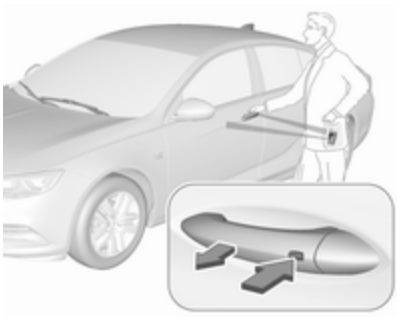

The electronic key must be outside the vehicle, within a range of approx. one metre of the relevant door side.

Unlocking

Press the button on the respective exterior door handle and pull the handle.

Unlocking mode can be set in the vehicle personalisation menu in the Info-Display. Two settings are selectable:

- All doors, load compartment and fuel filler flap will be unlocked by pressing the button on any exterior handle once.
- Only the driver's door, load compartment and fuel filler flap will be unlocked by pressing the button on the driver's door exterior handle once. To unlock all doors, press button twice.

The setting can be changed in the menu **Settings** in the Info-Display. Vehicle personalisation ⇨ 126.

Locking

Press the button on any exterior door handle.

All doors, load compartment and fuel filler flap will be locked.

The system locks if any of the following occurs:

- It has been more than five seconds since unlocking.
- The button on an exterior handle has been pressed twice within five seconds to unlock the vehicle.
- Any door has been opened and all doors are now closed.

If the driver's door is not closed properly, the electronic key remains in the vehicle or the ignition is not off, locking will not be permitted.

If there have been two or more electronic keys in the vehicle and the ignition was on once, the doors will be locked even if just one electronic key is taken out of the vehicle.

Unlocking and opening the tailgate

The tailgate can be unlocked and opened handsfree via moving the foot below the rear bumper or by pushing the touchpad switch under the brand emblem when the electronic key is in range. The doors remain locked. Load compartment ⇨ 28.

Operation with buttons on the electronic key

The central locking system can also be operated with the buttons on the electronic key.

Unlocking
Press 🔓.

Unlocking mode can be set in the vehicle personalisation menu in the Info-Display. Two settings are selectable:

- All doors, load compartment and fuel filler flap will be unlocked by pressing 🔓 once.
- Only the driver's door and fuel filler flap will be unlocked by pressing 🔓 once. To unlock all doors, press 🔓 twice.

Select the relevant setting in **Settings**, ➡ **Vehicle** in the Info-Display.

Info-Display ⇨ 120.

Vehicle personalisation ⇨ 126.

The setting can be saved for the key being used. Memorised settings ⇨ 22.

Locking
Close doors, load compartment and fuel filler flap.

Press 🔒.

If the driver's door is not closed properly, the central locking system will not work.

Passive locking

Automatic locking ⇨ 26.

Confirmation

Operation of central locking system is confirmed by the hazard warning flashers. A precondition is that the setting is activated in the vehicle personalisation ⇨ 126.

Central locking buttons

Locks or unlocks all doors, the load compartment and fuel filler flap from the passenger compartment via a switch in the driver's door panel.

Press 🔒 to lock. LED in button illuminates.

Press 🔓 to unlock.

Operation with the key in case of a central locking system fault

In case of a fault, e.g. vehicle battery or electronic key battery is discharged, the driver's door can be locked or unlocked with the key blade.

Push the button on the electronic key and pull out the key blade.

The lock cylinder in the driver's door is covered by a cap.

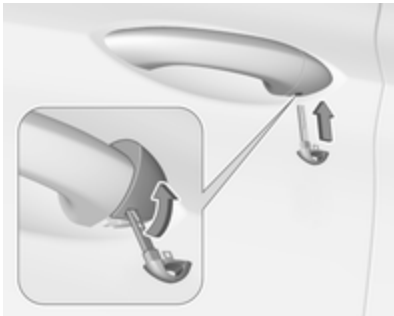

Insert the key blade into the recess at the bottom of the cap and swivel the key upward.

Manual unlocking

Manually unlock the driver's door by inserting and turning the key blade in the lock cylinder.

The other doors can be opened by pulling the interior handle twice or by pressing 🔓 in the driver's door panel. The load compartment and fuel filler flap will possibly not be unlocked.

By switching on the ignition, the anti-theft locking system is deactivated.

Manual locking

Push inside locking knob of all doors except driver's door or press 🔒 in the driver's door panel. Then close the driver's door and lock it from the outside by turning the key in the lock cylinder. The fuel filler flap and tailgate are possibly not locked.

After locking, cover the lock cylinder with the cap: insert the cap with the lower side in the recesses, swivel and push the cap until it engages at the upper side.

Automatic locking

Automatic locking after driving off

This security feature can be configured to automatically lock all doors, load compartment and fuel filler flap after driving off and exceeding a certain speed.

When at a standstill after driving, the vehicle will be unlocked automatically as soon as the key is removed from the ignition switch, or with electronic key system when the ignition is switched off.

Activation or deactivation of automatic locking can be set in the menu **Settings**, ➧ **Vehicle** in the Info-Display.

Info-Display ⇨ 120.

Vehicle personalisation ⇨ 126.

The setting can be saved for each electronic key being used ⇨ 22.

Automatic relock after unlocking

This feature can be configured to automatically lock all doors, load compartment and fuel filler flap a

short time after unlocking with the remote control or electronic key, provided no door has been opened.

Activation or deactivation of automatic relock can be set in the menu **Settings**, ➧ **Vehicle** in the Info-Display.

Info-Display ⇨ 120.

Vehicle personalisation ⇨ 126.

The setting can be saved for each electronic key being used ⇨ 22.

Passive locking

This feature locks the vehicle automatically after several seconds if an electronic key has been recognised previously inside the vehicle, all doors have then been closed and the electronic key does not remain within the vehicle.

If the electronic key remains in the vehicle or the ignition is not off, passive locking will not be permitted.

If there have been two or more electronic keys in the vehicle and the ignition was on once, the feature locks the vehicle if just one electronic key is taken out of the vehicle.

To prevent passive locking of the vehicle e.g. when refuelling or if passengers remain in the vehicle, the system must be disabled.

To disable the system, press the central locking button 🔓 for a few seconds while one door is open. An acoustic signal sounds three times to confirm deactivation. The function remains disabled until the central locking button 🔒 is pressed or the ignition is switched on.

Activation or deactivation of passive locking can be set in the menu **Settings**, ➧ **Vehicle** in the Info-Display.

Info-Display ⇨ 120.

Vehicle personalisation ⇨ 126.

The setting can be saved for each electronic key being used ⇨ 22.

Child locks

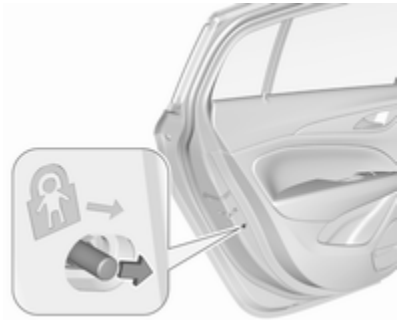

⚠ Warning

Use the child locks whenever children are occupying the rear seats.

Move the pin in the rear door to the front position. The door cannot be opened from the inside.

To deactivate, move the pin to the rear position.

Doors

Load compartment

Tailgate

Opening
Grand Sport

After unlocking, push the brand emblem and open the tailgate.

Sports Tourer, Country Tourer

After unlocking, push the touchpad switch under the tailgate moulding and open the tailgate manually.

Central locking system ⇨ 22.

Closing

Use the interior handle.

Central locking system ⇨ 22.

Power tailgate

⚠Warning

Take care when operating the power tailgate. Risk of injury, particularly to children.

Keep a close watch on the movable tailgate when operating. Ensure that nothing becomes

trapped during operating and no one is standing within the moving area.

The power tailgate can be operated by:

- Pressing twice on the electronic key. To prevent unintended opening of the tailgate, must be pressed longer than during locking or unlocking.
- Handsfree operation with motion sensor below the rear bumper.
- The touchpad switch under the exterior tailgate moulding and in the open tailgate.
- The switch on the inside of the driver's door.

On vehicles with automatic transmission, the tailgate can only be operated when the vehicle is stationary and with selector lever in **P**.

The turn signal lights flash and a chime sounds when the power tailgate is operating.

Note

Operating the power tailgate does not operate the central locking system. To open the tailgate with the button on the electronic key, or with the touchpad switch under the tailgate moulding or via handsfree operation, it is not necessary to unlock the vehicle. A precondition is that the electronic key is outside the vehicle, within a range of approx. one metre of the tailgate.

Do not leave the electronic key in the load compartment.

Lock the vehicle after closing if it was unlocked previously.

Central locking system ⇨ 22.

Operation with the electronic key

Press twice to open or close the tailgate. To prevent unintended opening of the tailgate, must be pressed longer than during locking or unlocking.

Handsfree operation with motion sensor below the rear bumper

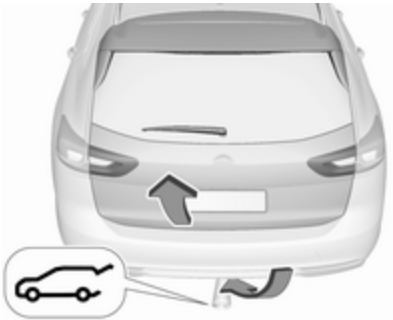

To open or close the tailgate, move the foot below the rear bumper back and forth in the area where the hologram is projected on the ground. Do not hold the foot longer or move too slow below the bumper. The electronic key must be outside the vehicle, within a range of approx. one metre of the tailgate. When foot motion is being detected by the sensor, the system actuates the tailgate after a short delay.

⚠ Danger

Do not touch any vehicle parts below the vehicle during handsfree operation. There is a risk of injury from hot engine parts.

Operation with the touchpad switch under the exterior tailgate moulding

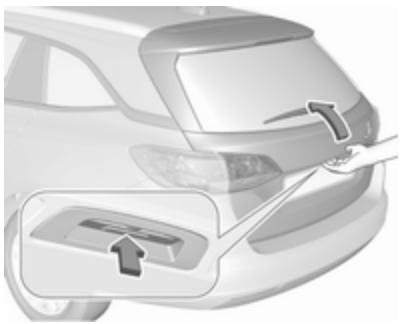

To open the tailgate, press the touchpad switch under the tailgate moulding until the tailgate starts to move. If the vehicle is locked, the electronic key must be outside the vehicle, within a range of approx. one metre of the tailgate.

To close, press in the open tailgate until the tailgate starts to move.

Operation with the switch on the inside of the driver's door

Press on the inside of the driver's door until the tailgate starts to open or close.

Stop or change direction of movement

To stop movement of the tailgate immediately:

- press once on the electronic key, or
- press the touchpad switch under the exterior tailgate moulding, or
- press on the open tailgate, or
- press on the inside of the driver's door.

Pressing one of the switches again will reverse the direction of movement.

Operation modes

The power tailgate has three modes of operation, which are controlled by the switch in the driver's door. To change the mode, turn the switch:

- Normal mode **MAX**: Power tailgate opens to full height.
- Intermediate mode **3/4**: Power tailgate opens to a reduced height that can be adjusted.
- Mode **Off**: Tailgate can only be operated manually.

Adjust reduced opening height in intermediate mode

1. Turn operation mode switch to **3/4**.
2. Open power tailgate with any operation switch.
3. Stop movement at the desired height by pressing any operation switch. If required, manually move the stopped tailgate to the desired position.

4. Press and hold the button on the inside of the open tailgate for three seconds.

Note
Adjusting opening height should be programmed at ground level.

A chime sound indicates the new setting and the turn signal lights will flash. The reduced height can only set at an opening angle of above 30°.

When turning the adjuster wheel in the driver's door to intermediate mode **3/4**, the power tailgate will stop opening at the newly set position.

The tailgate can only be held open if a minimum height is exceeded (minimum opening angle from 30°). The opening height cannot be programmed below that height.

Safety function
If the power tailgate encounters an obstacle during opening or closing, the direction of movement will automatically be reversed slightly. Multiple obstacles in one power cycle will deactivate the function. In this case, close or open the tailgate manually.

The power tailgate has pinch sensors on the side edges. If the sensors detect obstacles between tailgate and chassis, the tailgate will open, until it is activated again or closed manually.

The safety function is indicated by a warning chime.

Remove all obstacles before resuming normal power operation.

If the vehicle is equipped with factory-fitted towing equipment and a trailer is electrically connected, the power tailgate can only be opened with the touchpad switch or closed with in the open tailgate. Ensure that there are no obstacles in the moving area.

Overload
If the power tailgate is repeatedly operated at short intervals, the function is disabled for some time. Move tailgate manually into end position to reset the system.

General hints for operating tailgate

⚠ Danger

Do not drive with the tailgate open or ajar, e.g. when transporting bulky objects, since toxic exhaust gases, which cannot be seen or smelled, could enter the vehicle. This can cause unconsciousness and even death.

Caution

Before opening the tailgate, check overhead obstructions, e.g. a garage door, to avoid damage to

the tailgate. Always check the moving area above and behind the tailgate.

Note
The installation of certain heavy accessories onto the tailgate may affect its ability to remain open.

Note
The operation of the power tailgate is disabled under low vehicle battery conditions. In this case, the tailgate may not even be manually operable.

Note
With the power tailgate disabled and all doors unlocked, the tailgate can only be operated manually. In this event, manually closing the tailgate requires significantly greater force.

Note
At low outside temperatures the tailgate may not open fully by itself. In this event, lift the tailgate manually to its normal end position.

Vehicle security

Anti-theft locking system

⚠ Warning

Do not use the system if there are people in the vehicle! The doors cannot be unlocked from the inside.

The system deadlocks all the doors. All doors must be closed otherwise the system cannot be activated.

Unlocking the vehicle disables the mechanical anti-theft locking system. This is not possible with the central locking button.

Activating

Press 🔒 on the electronic key twice within five seconds.

Anti-theft alarm system

The anti-theft alarm system is combined with the anti-theft locking system.

It monitors:

- doors, tailgate, bonnet
- passenger compartment including adjoining load compartment

- vehicle inclination, e.g. if it is raised
- ignition

Activation

All doors must be closed and the electronic key of the electronic key system must not remain in the vehicle. Otherwise the system cannot be activated.

- self-activated 30 seconds after locking the vehicle by pressing the button on any exterior door handle.

- directly by pressing 🔒 twice within five seconds.
- with passive locking enabled: briefly activated after passive locking occurs.

Note
Changes to the vehicle interior such as the use of seat covers, and open windows or sunroof, could impair the function of passenger compartment monitoring.

Activation without monitoring of passenger compartment and vehicle inclination

Switch off the monitoring of passenger compartment and vehicle inclination when animals are being left in the vehicle, because of high volume ultrasonic signals or movements triggering the alarm. Also switch off when the vehicle is on a ferry or train.

1. Close tailgate, bonnet, windows and sunroof.
2. Press 🚗. LED in the button 🚗 illuminates for a maximum of ten minutes.
3. Close doors.
4. Activate the anti-theft alarm system.

Status message is displayed in the Driver Information Centre.

Status LED

Status LED is integrated in the sensor on top of the instrument panel.

Status during the first 30 seconds of anti-theft alarm system activation:

LED illuminates	:	test, arming delay
LED flashes quickly	:	doors, tailgate or bonnet not completely closed, or system fault

Status after system is armed:

LED flashes slowly	:	system is armed

Seek the assistance of a workshop in the event of faults.

Deactivation

Unlocking the vehicle by pressing the button on any exterior door handle deactivates the anti-theft alarm system.

The electronic key must be outside the vehicle, within a range of approx. one metre of the relevant door side.

The system is not deactivated by unlocking the driver's door with the key or with the central locking button in the passenger compartment.

Alarm

When triggered, the alarm horn sounds and the hazard warning lights flash simultaneously. The number and duration of alarm signals are stipulated by legislation.

The anti-theft alarm system can be deactivated by pressing 🔓, by pressing the switch on the door handle with electronic key system or switching on the ignition.

A triggered alarm, which has not been interrupted by the driver, will be indicated by the hazard warning lights. They will flash quickly three times the next time the vehicle is unlocked with the electronic key. Additionally, a warning message is displayed in the Driver Information Centre after switching on the ignition.

Vehicle messages ⇨ 124.

If the vehicle's battery is to be disconnected (e.g. for maintenance work), the alarm siren must be deactivated as follows: switch the ignition on then off, then disconnect the vehicle's battery within 15 seconds.

Immobiliser

The immobiliser is activated automatically.

If the control indicator flashes when the ignition is on, there is a fault in the system; the engine cannot be started. Switch off the ignition and repeat the start attempt. Retry with the key in the transmitter pocket. Operation on vehicles with electronic key system in case of failure ⇨ 163.

If the control indicator continues flashing, attempt to start the engine using the spare key.

Seek the assistance of a workshop.

Note
Radio Frequency Identification (RFID) tags may cause interference with the key. Do not have it placed near the key when starting the vehicle.

Note
The immobiliser does not lock the doors. You should always lock the vehicle after leaving it and switch on the anti-theft alarm system ⇨ 22, ⇨ 33.

Control indicator ⇨ 111.

Exterior mirrors

Convex shape

The convex exterior mirror on the driver's side contains an aspherical area and reduces blind spots. The shape of the mirror makes objects appear smaller, which will affect the ability to estimate distances.

Side blind zone assistant ⇨ 215.

Electric adjustment

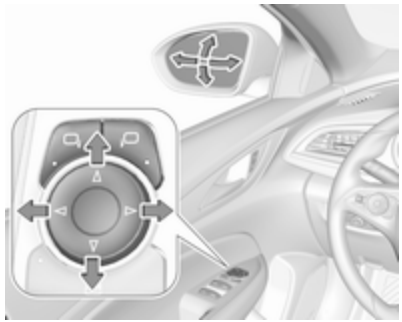

Select the relevant exterior mirror by pushing for left mirror or for right mirror. LED in button indicates the selection.

Then swivel the control to adjust the mirror.

Folding mirrors

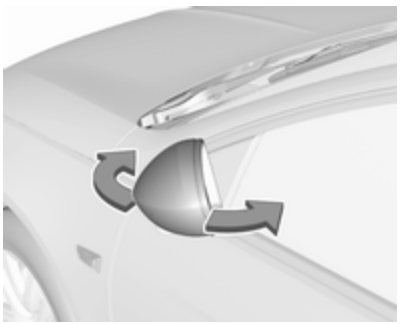

For pedestrian safety, the exterior mirrors will swing out of their normal mounting position if they are struck with sufficient force. Reposition the mirror by applying slight pressure to the mirror housing.

Electric folding

Push . Both exterior mirrors will fold.

Push again to return both exterior mirrors to their original position.

If an electrically folded mirror is manually extended, pushing will only electrically extend the other mirror.

Folding mirrors with electronic key

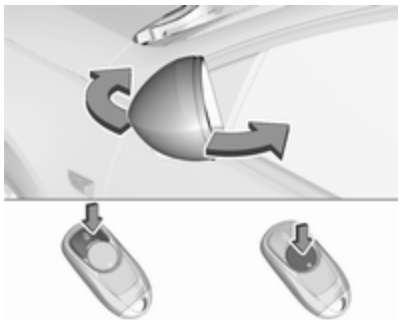

Press again after locking for one second to fold in mirrors.

Press again after unlocking for one second to fold out mirrors.

This function can be activated or deactivated in the Vehicle personalisation.

Vehicle personalisation ⇨ 126.

The settings are automatically stored for the key being used ⇨ 22.

Heated mirrors

Operated by pressing REAR together with heated rear window. LED in button illuminates.

Heating works with the engine running and is switched off automatically after a short time.

Automatic dimming

Dazzling by following vehicles at night is automatically reduced by dimming the exterior mirror on the driver's side.

Parking assist

For mirrors with position memory, the exterior mirrors are automatically aimed at the rear tyres as a parking aid when reverse gear is selected, except during trailer operation.

Position memory ⇨ 49.

Activation or deactivation of this function can be changed in vehicle personalisation.

Vehicle personalisation ⇨ 126.

Interior mirrors

Manual anti-dazzle

To reduce dazzle, adjust the lever on the underside of the mirror housing.

Automatic anti-dazzle

Dazzle from following vehicles at night is automatically reduced.

Windows

Windscreen

Windscreen stickers

Do not attach stickers such as toll road stickers or similar on the windscreen in the area of the interior mirror. Otherwise the detection zone of the sensor and the view area of the camera in the mirror housing could be restricted.

Windscreen replacement

Caution

If the vehicle has a front-looking camera sensor for the driver assistance systems, it is very important that any windscreen replacement is performed accurately according to Opel specifications. Otherwise, these systems may not work properly and there is a risk of unexpected behaviour and/or messages from these systems.

Caution

If the vehicle is equipped with a Head-up display, it is very important that any windscreen replacement is performed accurately according to Opel specifications. Otherwise, the system may not work properly and the image may look out of focus.

Power windows

⚠ Warning

Take care when operating the power windows. Risk of injury, particularly to children.

If there are children on the rear seats, switch on the child safety system for the power windows.

Keep a close watch on the windows when closing them. Ensure that nothing becomes trapped in them as they move.

Switch on ignition to operate power windows. Retained power off ⇨ 164.

Operate ⊏A⊐ for the respective window by pushing to open or pulling to close.

Pushing or pulling gently to the first detent: window moves up or down as long as the switch is operated.

Pushing or pulling firmly to the second detent then releasing: window moves up or down automatically with safety function enabled. To stop movement, operate the switch once more in the same direction.

Safety function

If the window glass encounters resistance above the middle of the window during automatic closing, it is immediately stopped and opened again.

Override safety function

In the event of closing difficulties due to frost or the like, switch on the ignition, then pull the switch to the first detent and hold. The window moves up without safety function enabled. To stop movement, release the switch.

Child safety system for rear windows

Press ⊠ to deactivate rear door power windows; the LED illuminates. To activate, press ⊠ again.

Operating windows from outside

The windows can be operated remotely from outside the vehicle.

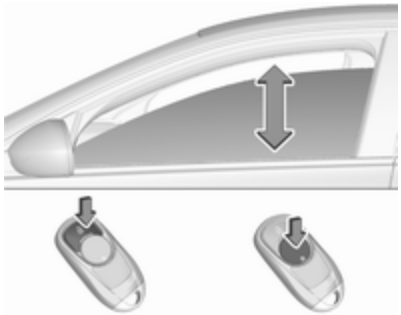

Press and hold for more than two seconds to open windows.

Press and hold for more than two seconds to close windows.

Release button to stop window movement.

If the windows are fully opened or closed, the hazard warning lights will flash twice.

Overload

If the windows are repeatedly operated within short intervals, the window operation is disabled for some time.

Initialising the power windows

If the windows cannot be closed automatically (e.g. after disconnecting the vehicle battery), a warning message is displayed in the Driver Information Centre.

Vehicle messages ⇨ 124.

Activate the window electronics as follows:

1. Close doors.
2. Switch on ignition.
3. Pull the switch until the window is closed and keep pulling for additional two seconds.
4. Push the switch until the window is completely open and keep pushing for additional two seconds.
5. Repeat for each window.

Heated rear window

Operated by pressing REAR together with heated exterior mirrors. LED in button illuminates.

Heating works with the engine running and is switched off automatically after a short time.

Heated windscreen

Operated by pressing . LED in button illuminates.

Heating works with the engine running and is switched off automatically after a short time.

Pressing once more during the same ignition cycle allows the heating to operate for another three minutes.

Sun visors

The sun visors can be folded down or swivelled to the side to prevent dazzling.

The covers of the mirrors should be closed when driving.

A ticket holder is located on the backside of the sun visor.

Roof

Sunroof

⚠ Warning

Take care when operating the sunroof. Risk of injury, particularly to children.

Keep a close watch on the movable parts when operating them. Ensure that nothing becomes trapped in them as they move.

Switch on ignition to operate the sunroof.

Open or close

Press SLIDE or gently to the first detent: sunroof is opened or closed as long as the switch is operated.

Press SLIDE or firmly to the second detent then release: the sunroof is opened or closed automatically. During closing the safety function is enabled. To stop movement, operate the switch once more.

Raise or close

Press TILT or : sunroof is raised or closed automatically. During closing the safety function is enabled.

Sunblind

The sunblind is manually operated.

Close or open the sunblind by sliding. When the sunroof is open, the sunblind is always open.

General hints

Safety function

If the sunroof encounters resistance during automatic closing, it is immediately stopped and opened again.

Override safety function

In the event of closing difficulties, e.g. due to frost, hold the switch pressed to the second detent. The sunroof closes with safety function disabled. To stop movement, release the switch.

Closing sunroof from outside

The sunroof can be closed remotely from outside the vehicle.

Press and hold for more than two seconds to close the sunroof.

Release the button to stop the movement.

Initialising after a power failure

After a power failure, it may only be possible to operate the sunroof to a limited extent. Have the system initialised by your workshop.

Seats, restraints

Head restraints **44**
Front seats **46**
Seat position 46
Manual seat adjustment 47
Power seat adjustment 49
Armrest 52
Heating 53
Ventilating 53
Massage 54
Rear seats **54**
Armrest 54
Heating 54
Seat belts **55**
Three-point seat belt 56
Airbag system **57**
Front airbag system 60
Side airbag system 61
Curtain airbag system 61
Airbag deactivation 62
Child restraints **63**
Child restraint systems 63
Child restraint installation locations 66
Pedestrian protection system **70**
Active bonnet 70

Head restraints

Position

⚠Warning

Only drive with the head restraint set to the proper position.

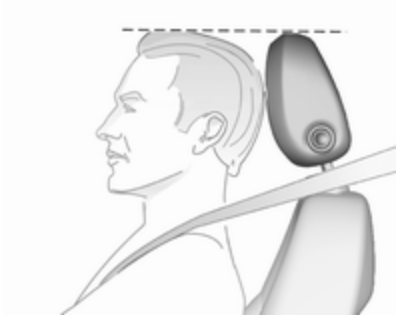

The upper edge of the head restraint should be at upper head level. If this is not possible for extremely tall people, set to highest position, and set to lowest position for small people.

Adjustment

Head restraints on front seats

Height adjustment

Press release button, adjust height, engage.

Horizontal adjustment

Press release button, pull bolster of head restraint forwards slowly. It engages in several positions.

Head restraints on rear seats

Height adjustment
Pull the head restraint upwards or press the catch to release and push the head restraint downwards.

Removal of rear head restraints
E.g. for load compartment extension ⇨ 74.

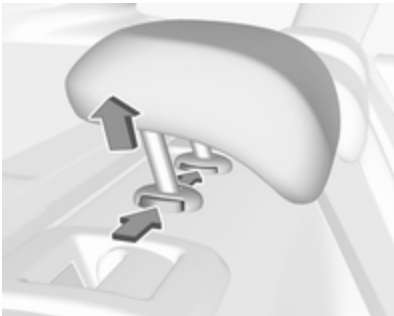

Press both catches, pull the head restraint upwards and remove.

Front seats

Seat position

⚠ Warning

Only drive with the seat correctly adjusted.

⚠ Danger

Do not sit closer than 25 cm to the steering wheel, to permit safe airbag deployment.

⚠ Warning

Never adjust seats while driving as they could move uncontrollably.

⚠ Warning

Never store any objects under the seats.

- Sit with buttocks as far back against the backrest as possible. Adjust the distance between the seat and the pedals so that legs are slightly angled when fully pressing the pedals. Slide the front passenger seat as far back as possible.
- Set seat height high enough to have a clear field of vision on all sides and of all display instruments. There should be at least one hand of clearance between head and the roof frame. Your thighs should rest lightly on the seat without pressing into it.

- Sit with shoulders as far back against the backrest as possible. Set the backrest rake so that it is possible to easily reach the steering wheel with arms slightly bent. Maintain contact between shoulders and the backrest when turning the steering wheel. Do not angle the backrest too far back. We recommend a maximum rake of approx. 25°.
- Adjust seat and steering wheel in a way that the wrist rests on top of the steering wheel while the arm is fully extended and shoulders on the backrest.
- Adjust the steering wheel ⇨ 88.
- Adjust the head restraint ⇨ 44.
- Adjust the thigh support so that there is a space approx. two fingers wide between the edge of the seat and the hollow of the knee.
- Adjust the lumbar support so that it supports the natural shape of the spine.

Manual seat adjustment

Drive only with engaged seats and backrests.

Longitudinal adjustment

Pull handle, slide seat, release handle. Try to move the seat back and forth to ensure that the seat is locked in place.

Backrest inclination

Turn handwheel. Do not lean on backrest when adjusting.

Seat height

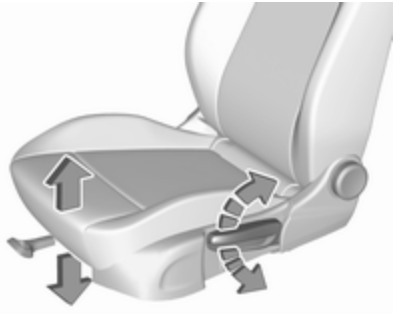

Lever pumping motion

up : seat higher
down : seat lower

Seat inclination

Press switch

top : front end higher
bottom : front end lower

Lumbar support

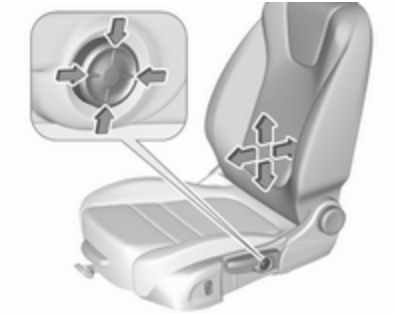

Adjust lumbar support using the four-way switch to suit personal requirements.

Moving support up and down: push switch up or down.

Increasing and decreasing support: push switch forwards or backwards.

Adjustable thigh support

Pull the lever and slide the thigh support.

Power seat adjustment

⚠ Warning

Care must be taken when operating the power seats. There is a risk of injury, particularly for children. Objects could become trapped.

Keep a close watch on the seats when adjusting them. Vehicle passengers should be informed accordingly.

Longitudinal adjustment

Move switch forwards/backwards.

Seat height

Move switch upwards/downwards.

Seat inclination

Tilt front of switch upwards/ downwards.

Backrest inclination

Tilt switch forwards/backwards.

Lumbar support

Adjust lumbar support using the four-way switch to suit personal requirements.

Moving support up and down: push switch up or down.

Increasing and decreasing support: push switch forwards or backwards.

Adjustable thigh support

Pull the lever and slide the thigh support.

Side bolster

Adjust seat backrest width to suit personal requirements.

Press ⏢ to reduce backrest width.

Press ⏢ to increase backrest width.

Memory function for power seat adjustment and exterior mirrors

Two different driver's seat and exterior mirror settings can be stored.

Memorised settings ⇨ 22, Vehicle personalisation ⇨ 126.

Storing memory position

- Adjust driver's seat and then adjust exterior mirrors to desired positions.
- Press and hold **MEM** and **1** or **2** simultaneously until a chime sounds.

Recall of memory positions

Press and hold button**1** or **2** until the stored seat and exterior mirror positions have been reached. Releasing the button during seat movement cancels the recall.

Automatic recall of memory positions

Memory positions are assigned to the driver (1 or 2) using the respective key and are automatically recalled when the ignition is switched on. In addition, a message in the Driver Information Centre indicates the driver number, identified by the used key. If the ignition is switched on more than three subsequent times with the same key, the message will not be displayed again until another key is being used.

To stop recall movement, press one of the memory-, power mirror- or power seat controls.

Precondition is that **Personalization By Driver** and **Auto Memory Recall** is activated in the personal settings of the Info-Display.

This function can be activated or deactivated in the vehicle personalisation.

Select the relevant setting in the **Vehicle** menu in the Info-Display.

Info-Display ⇨ 120.

Vehicle personalisation ⇨ 126.

Easy exit function

For a convenient exit out of the vehicle, the power driver seat moves rearwards when vehicle is stationary.

To activate the easy exit function:

- set selector lever to position **P** (automatic transmission)
- apply parking brake (manual transmission)
- switch off ignition
- remove key from the ignition switch
- open the driver's door

If the door is already open, switch off ignition to activate easy exit.

To stop movement, press one of the memory or power seat controls.

This function can be activated or deactivated in the vehicle personalisation.

Select the relevant setting in the **Vehicle** menu in the Info-Display.

Info-Display ⇨ 120.

Vehicle personalisation ⇨ 126.

Safety function

If the driver's seat encounters resistance during movement, the recall may stop. After removing the obstruction, press and hold the appropriate memory position button for two seconds. Try recalling the memory position again. If the recall does not operate, consult a workshop.

Overload

If the seat setting is electrically overloaded, the power supply is automatically cut-off for a short time.

Note
After an accident in which airbags have been deployed, the memory function for each position button will be deactivated.

Armrest

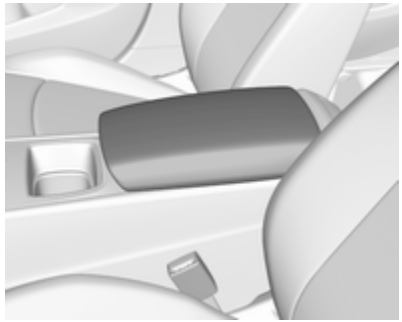

Push button and fold armrest upwards. Under the armrest there is a storage compartment and an inductive charger.

Inductive charging ⇨ 95.

Heating

Adjust heating to the desired setting by pressing for the respective seat one or more times. The control indicator in the button indicates the setting.

Prolonged use of the highest setting for people with sensitive skin is not recommended.

The seat heating will be reduced automatically from highest level to medium level after 30 minutes.

Seat heating is operational when engine is running and during an Autostop.

Stop-start system ⇨ 166.

Automatic seat heating

Depending on the equipment, the automatic seat heating can be enabled in the vehicle personalisation menu in the Info-Display.

Vehicle personalisation ⇨ 126.

When enabled, the heating of the seats will be activated automatically at vehicle start. The activation is based on several parameters such as vehicle interior temperature, intensity and direction of the sun and temperature setting of the electronic climate control system for the driver and passenger side.

As the vehicle's interior warms up, the seat heating level will be reduced automatically until it finally goes off. The seat heating level being provided during the automatic operation is shown by heated seat indicator lights.

If the passenger seat is unoccupied, the automatic seat heating feature will not activate the seat heating for that seat.

The seat heating buttons can be pressed at any time to exit the automatic seat heating for the respective seat and control the seat heating manually instead.

Ventilating

Adjust ventilation to the desired setting by pressing for the respective seat one or more times. The control indicator in the button indicates the setting.

Ventilated seats are operational when engine is running and during an Autostop.

Stop-start system ⇨ 166.

Massage

Press ⌯ to switch on the back massage function.

To switch off, press ⌯ again. The current massage procedure will be ended, this may take a few seconds.

After ten minutes the massage function is switched off automatically.

Rear seats

Armrest

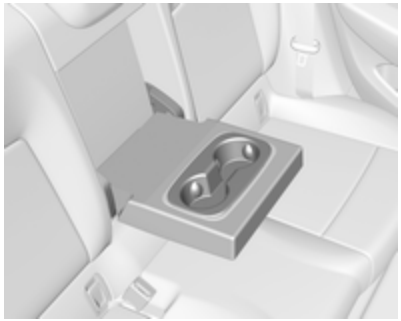

Fold armrest down. The armrest contains cupholders.

Heating

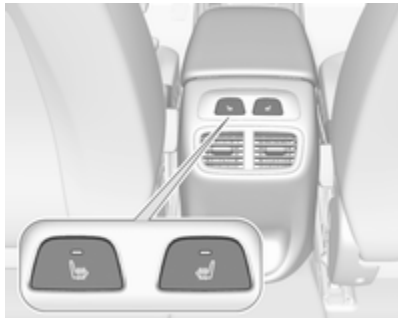

Activate seat heating by pressing ⌯ for the respective rear outer seat. Activation is indicated by the LED in the button.

Press ⌯ once more to deactivate seat heating.

Prolonged use for people with sensitive skin is not recommended.

Seat heating is operational when engine is running and during an Autostop.

Stop-start system ⇨ 166.

Seat belts

The seat belts are locked during heavy acceleration or deceleration of the vehicle, holding the occupants in the seat position. Thereby the risk of injury is considerably reduced.

⚠ Warning

Fasten seat belt before each trip.

In the event of an accident, people not wearing seat belts endanger their fellow occupants and themselves.

Seat belts are designed to be used by only one person at a time. Child restraint system ⇨ 63.

Periodically check all parts of the belt system for damage, soiling and proper functionality.

Have damaged components replaced by a workshop. After an accident, have the belts and triggered belt pretensioners replaced by a workshop.

Note
Make sure that the belts are not damaged by shoes or sharp-edged objects or trapped. Prevent dirt from getting into the belt retractors.

Seat belt reminder

Each seat is equipped with a seat belt reminder, indicated for front seats by control indicators and ², or for rear seats by the symbol in the Driver Information Centre ⇨ 106.

Belt force limiters

Stress on the body is reduced by the gradual release of the belt during a collision.

Belt pretensioners

In the event of a head-on, rear-end or side-on collision of a certain severity, the front and rear seat belts are tightened. The front seat belts and the outer rear seat belts are tightened by one pretensioner per seat.

⚠ Warning

Incorrect handling (e.g. removal or fitting of belts) can trigger the belt pretensioners.

Deployment of the belt pretensioners is indicated by continuous illumination of control indicator ⇨ 107.

Triggered belt pretensioners must be replaced by a workshop. Belt pretensioners can only be triggered once.

Note
Do not affix or install accessories or other objects that may interfere with the operation of the belt pretensioners. Do not make any modifications to belt pretensioner components as this will invalidate the operating permit of your vehicle.

Three-point seat belt

Fasten

Withdraw the belt from the retractor, guide it untwisted across the body and insert the latch plate into the buckle. Tighten the lap belt regularly whilst driving by pulling the shoulder belt.

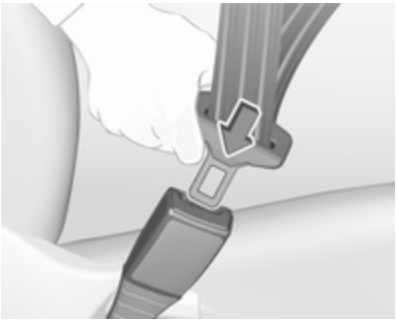

Loose or bulky clothing prevents the belt from fitting snugly. Do not place objects such as handbags or mobile phones between the belt and your body.

⚠ Warning

The belt must not rest against hard or fragile objects in the pockets of your clothing.

Seat belt reminder, ⇨ 106.

Unfasten

To release belt, press red button on belt buckle.

Using the seat belt while pregnant

⚠ Warning

The lap belt must be positioned as low as possible across the pelvis to prevent pressure on the abdomen.

Airbag system

The airbag system consists of a number of individual systems depending on the scope of equipment.

When triggered, the airbags inflate within milliseconds. They also deflate so quickly that it is often unnoticeable during the collision.

⚠ Warning

The airbag system deploys in an explosive manner, repairs must be performed by skilled personnel only.

⚠ Warning

Adding accessories that change the vehicle's frame, bumper system, height, front end or side sheet metal, may keep the airbag system from working properly. The operation of the airbag system can also be affected by changing any parts of the front seats, seat belts, airbag sensing and diagnostic module, steering wheel, instrument panel, inner door seals including the speakers, any of the airbag modules, ceiling or pillar trim, front sensors, side impact sensors or airbag wiring.

Note

The airbag systems and belt pretensioner control electronics are located in the centre console area. Do not put any magnetic objects in this area.

Do not affix any objects onto the airbag covers and do not cover them with other materials. Have damaged covers replaced by a workshop.

Each airbag is triggered only once. Have deployed airbags replaced by a workshop. Furthermore, it may be necessary to have the steering wheel, the instrument panel, parts of the panelling, the door seals, handles and the seats replaced.

Do not make any modifications to the airbag system as this will invalidate the vehicle operating permit.

Control indicator for airbag systems ⇨ 107.

Child restraint systems on front passenger seat with airbag systems

Warning according to ECE R94.02:

EN: NEVER use a rearward-facing child restraint on a seat protected by an ACTIVE AIRBAG in front of it; DEATH or SERIOUS INJURY to the CHILD can occur.

DE: Nach hinten gerichtete Kindersitze NIEMALS auf einem Sitz verwenden, der durch einen davor befindlichen AKTIVEN AIRBAG geschützt ist, da dies den TOD oder SCHWERE VERLETZUNGEN DES KINDES zur Folge haben kann.

FR: NE JAMAIS utiliser un siège d'enfant orienté vers l'arrière sur un siège protégé par un COUSSIN GONFLABLE ACTIF placé devant lui, sous peine d'infliger des BLESSURES GRAVES, voire MORTELLES à l'ENFANT.

ES: NUNCA utilice un sistema de retención infantil orientado hacia atrás en un asiento protegido por un AIRBAG FRONTAL ACTIVO. Peligro de MUERTE o LESIONES GRAVES para el NIÑO.

RU: ЗАПРЕЩАЕТСЯ устанавливать детское удерживающее устройство лицом назад на сиденье автомобиля, оборудованном фронтальной подушкой безопасности, если ПОДУШКА НЕ ОТКЛЮЧЕНА! Это может привести к СМЕРТИ или СЕРЬЕЗНЫМ ТРАВМАМ РЕБЕНКА.

NL: Gebruik NOOIT een achterwaarts gericht kinderzitje op een stoel met een ACTIEVE AIRBAG ervoor, om DODELIJK of ERNSTIG LETSEL van het KIND te voorkomen.

DA: Brug ALDRIG en bagudvendt autostol på et forsæde med AKTIV AIRBAG, BARNET kan komme i LIVSFARE eller komme ALVORLIGT TIL SKADE.

SV: Använd ALDRIG en bakåtvänd barnstol på ett säte som skyddas med en framförvarande AKTIV AIRBAG. DÖDSFALL eller ALLVARLIGA SKADOR kan drabba BARNET.

FI: ÄLÄ KOSKAAN sijoita taaksepäin suunnattua lasten turvaistuinta istuimelle, jonka edessä on AKTIIVINEN TURVATYYNY, LAPSI VOI KUOLLA tai VAMMAUTUA VAKAVASTI.

NO: Bakovervendt barnesikringsutstyr må ALDRI brukes på et sete med AKTIV KOLLISJONSPUTE foran, da det kan

føre til at BARNET utsettes for LIVSFARE og fare for ALVORLIGE SKADER.

PT: NUNCA use um sistema de retenção para crianças voltado para trás num banco protegido com um AIRBAG ACTIVO na frente do mesmo, poderá ocorrer a PERDA DE VIDA ou FERIMENTOS GRAVES na CRIANÇA.

IT: Non usare mai un sistema di sicurezza per bambini rivolto all'indietro su un sedile protetto da AIRBAG ATTIVO di fronte ad esso: pericolo di MORTE o LESIONI GRAVI per il BAMBINO!

EL: ΠΟΤΕ μη χρησιμοποιείτε παιδικό κάθισμα ασφαλείας με φορά προς τα πίσω σε κάθισμα που προστατεύεται από μετωπικό ΕΝΕΡΓΟ ΑΕΡΟΣΑΚΟ, διότι το παιδί μπορεί να υποστεί ΘΑΝΑΣΙΜΟ ή ΣΟΒΑΡΟ ΤΡΑΥΜΑΤΙΣΜΟ.

PL: NIE WOLNO montować fotelika dziecięcego zwróconego tyłem do kierunku jazdy na fotelu, przed którym znajduje się WŁĄCZONA PODUSZKA POWIETRZNA. Niezastosowanie się do tego zalecenia może być przyczyną ŚMIERCI lub POWAŻNYCH OBRAŻEŃ u DZIECKA.

TR: Arkaya bakan bir çocuk emniyet sistemini KESİNLİKLE önünde bir AKTİF HAVA YASTIĞI ile korunmakta olan bir koltukta kullanmayınız. ÇOCUK ÖLEBİLİR veya AĞIR ŞEKİLDE YARALANABİLİR.

UK: НІКОЛИ не використовуйте систему безпеки для дітей, що встановлюється обличчям назад, на сидінні з УВІМКНЕНОЮ ПОДУШКОЮ БЕЗПЕКИ, інакше це може призвести до СМЕРТІ чи СЕРЙОЗНОГО ТРАВМУВАННЯ ДИТИНИ.

HU: SOHA ne használjon hátrafelé néző biztonsági gyerekülést előlről AKTÍV LÉGZSÁKKAL védett ülésen, mert a GYERMEK HALÁLÁT vagy KOMOLY SÉRÜLÉSÉT okozhatja.

HR: NIKADA nemojte koristiti sustav zadržavanja za djecu okrenut prema natrag na sjedalu s AKTIVNIM ZRAČNIM JASTUKOM ispred njega, to bi moglo dovesti do SMRTI ili OZBILJNJIH OZLJEDA za DIJETE.

SL: NIKOLI ne nameščajte otroškega varnostnega sedeža, obrnjenega v nasprotni smeri vožnje, na sedež z AKTIVNO ČELNO ZRAČNO BLAZINO, saj pri tem obstaja nevarnost RESNIH ali SMRTNIH POŠKODB za OTROKA.

SR: NIKADA ne koristiti bezbednosni sistem za decu u kome su deca okrenuta unazad na sedištu sa AKTIVNIM VAZDUŠNIM JASTUKOM ispred sedišta zato što DETE može da NASTRADA ili da se TEŠKO POVREDI.

MK: НИКОГАШ не користете детско седиште свртено наназад на седиште заштитено со АКТИВНО ВОЗДУШНО ПЕРНИЧЕ пред него, затоа што детето може ДА ЗАГИНЕ или да биде ТЕШКО ПОВРЕДЕНО.

BG: НИКОГА не използвайте детска седалка, гледаща назад, върху седалка, която е защитена чрез АКТИВНА ВЪЗДУШНА ВЪЗГЛАВНИЦА пред нея - може да се стигне до СМЪРТ или СЕРИОЗНО НАРАНЯВАНЕ на ДЕТЕТО.

RO: Nu utilizați NICIODATĂ un scaun pentru copil îndreptat spre partea din spate a mașinii pe un scaun protejat de un AIRBAG ACTIV în fața sa; acest lucru poate duce la DECESUL sau VĂTĂMAREA GRAVĂ a COPILULUI.

CS: NIKDY nepoužívejte dětský zádržný systém instalovaný proti směru jízdy na sedadle, které je chráněno před sedadlem AKTIVNÍM AIRBAGEM. Mohlo by dojít k VÁŽNÉMU PORANĚNÍ nebo ÚMRTÍ DÍTĚTE.

SK: NIKDY nepoužívajte detskú sedačku otočenú vzad na sedadle chránenom AKTÍVNYM AIRBAGOM, pretože môže dôjsť k SMRTI alebo VÁŽNYM ZRANENIAM DIEŤAŤA.

LT: JOKIU BŪDU nemontuokite atgal atgręžtos vaiko tvirtinimo sistemos sėdynėje, prieš kurią įrengta AKTYVI ORO PAGALVĖ, nes VAIKAS GALI ŽŪTI arba RIMTAI SUSIŽALOTI.

LV: NEKĀDĀ GADĪJUMĀ neizmantojiet uz aizmuguri vērstu bērnu sēdeklīti sēdvietā, kas tiek aizsargāta ar tās priekšā uzstādītu AKTĪVU DROŠĪBAS SPILVENU, jo pretējā gadījumā BĒRNS var gūt SMAGAS TRAUMAS vai IET BOJĀ.

ET: ÄRGE kasutage tahapoole suunatud lapseturvaistet istmel, mille ees on AKTIIVSE TURVAPADJAGA kaitstud iste, sest see võib põhjustada LAPSE SURMA või TÕSISE VIGASTUSE.

MT: QATT tuża trażżin għat-tfal li jħares lejn in-naħa ta' wara fuq sit protett b'AIRBAG ATTIV quddiemu; dan jista' jikkawża l-MEWT jew ĠRIEĦI SERJI lit-TFAL.

GA: Ná húsáid srian sábháilteachta linbh cúil RIAMH ar shuíochán a bhfuil mála aeir ag feidhmiú os a chomhair. Tá baol BÁIS nó GORTÚ DONA don PHÁISTE ag baint leis.

Beyond the warning required by ECE R94.02, for safety reasons a forward-facing child restraint system must only be used subject to the instructions and restrictions in the table ⇨ 66.

The airbag label is located on both sides of the front passenger sun visor.

Airbag deactivation ⇨ 62.

Front airbag system

The front airbag system consists of one airbag in the steering wheel and one in the instrument panel on the front passenger side. These can be identified by the word **AIRBAG**.

The front airbag system is triggered in the event of a front-end impact of a certain severity. The ignition must be switched on.

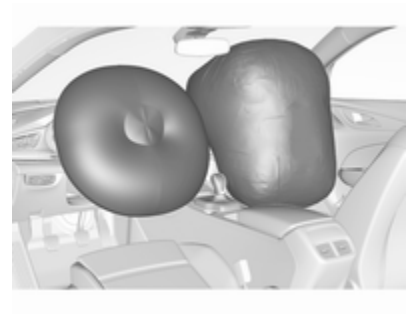

The inflated airbags cushion the impact, thereby reducing the risk of injury to the upper body and head of the front seat occupants considerably.

⚠ Warning

Optimum protection is only provided when the seat is in the proper position.

Seat position ⇨ 46.

Keep the area in which the airbag inflates clear of obstructions.

Fit the seat belt correctly and engage securely. Only then is the airbag able to protect.

Side airbag system

The side airbag system consists of an airbag in each front seat backrest and in the rear outboard seat backrests. This can be identified by the word **AIRBAG**.

The side airbag system is triggered in the event of a side impact of a certain severity. The ignition must be switched on.

The inflated airbags cushion the impact, thereby reducing the risk of injury to the upper body and pelvis in the event of a side-on collision considerably.

⚠ Warning

Keep the area in which the airbag inflates clear of obstructions.

Note
Only use protective seat covers that have been approved for the vehicle. Be careful not to cover the airbags.

Curtain airbag system

The curtain airbag system consists of an airbag in the roof frame on each side. This can be identified by the word **AIRBAG** on the roof pillars.

The curtain airbag system is triggered in the event of a side-on impact of a certain severity. The ignition must be switched on.

The inflated airbags cushion the impact, thereby reducing the risk of injury to the head in the event of a side-on impact considerably.

⚠ Warning

Keep the area in which the airbag inflates clear of obstructions.

The hooks on the handles in the roof frame are only suitable for hanging up light articles of clothing, without coat hangers. Do not keep any items in these clothes.

Airbag deactivation

The front passenger airbag system must be deactivated for child restraint system on the passenger seat according to the instructions in the table ⇨ 66. The side airbag and curtain airbag systems, the belt pretensioners and all driver airbag systems will remain active.

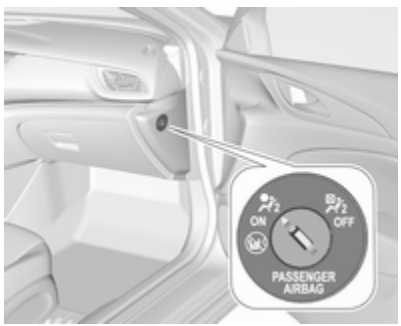

The front passenger airbag system can be deactivated via a key-operated switch on the passenger side of the instrument panel.

Use the key blade, located in the electronic key, to choose the position:

OFF : front passenger airbag is deactivated and will not inflate in the event of a collision. Control indicator OFF illuminates continuously in the centre console

ON : front passenger airbag is active

⚠ Danger

Deactivate passenger airbag only in combination with the use of a child restraint system, subject to the instructions and restrictions in the table ⇨ 66.

Otherwise, there is a risk of fatal injury for a person occupying a seat with a deactivated front passenger airbag.

If the control indicator illuminates for approx. 60 seconds after the ignition is switched on, the front passenger airbag system will inflate in the event of a collision.

If the control indicator illuminates after the ignition is switched on, the front passenger airbag system is deactivated. It stays on while the airbag is deactivated.

If both control indicators are illuminated at the same time, there is a system failure. The status of the system is not discernible, therefore no person is allowed to occupy the front passenger seat. Contact a workshop immediately.

Consult a workshop immediately if neither of the two control indicators are illuminated.

Change status only when the vehicle is stopped with the ignition off.

Status remains until the next change.

Control indicator for airbag deactivation ⇨ 107.

Child restraints

Child restraint systems

⚠ Danger

If using a rear-facing child restraint system on the front passenger seat, the airbag system for the front passenger seat must be deactivated. This also applies to certain forward-facing child restraint systems as indicated in the tables ⇨ 66.

Airbag deactivation ⇨ 62, Airbag label ⇨ 57.

We recommend a child restraint system which is tailored specifically to the vehicle. For further information, contact your workshop.

When a child restraint system is being used, pay attention to the following usage and installation instructions and also those supplied with the child restraint system.

Always comply with local or national regulations. In some countries, the use of child restraint systems is forbidden on certain seats.

Child restraint systems can be fastened with:

- Three-point seat belt
- ISOFIX brackets
- Top-tether

Three-point seat belt

Child restraint systems can be fastened by using a three-point seat belt. Depending on the size of the used child restraint systems, up to three child restraint systems can be attached to the rear seats ⇨ 66.

ISOFIX brackets

Fasten vehicle-approved ISOFIX child restraint systems to the ISOFIX brackets. Specific vehicle ISOFIX child restraint system positions are marked in the ISOFIX table ⇨ 66.

ISOFIX brackets are indicated by a label on the backrest.

An i-size child restraint system is an universal ISOFIX child restraint system according UN Regulation No. 129.

All i-size child restraint systems can be used on any vehicle seat suitable for i-size, i-size table ⇨ 66.

Either a Top-tether strap or a support leg must be used in addition to the ISOFIX brackets.

i-size child seats and vehicle seats with i-size approval are marked with i-size symbol, see illustration.

Top-tether anchors

Top-tether anchors are marked with the symbol for a child seat.

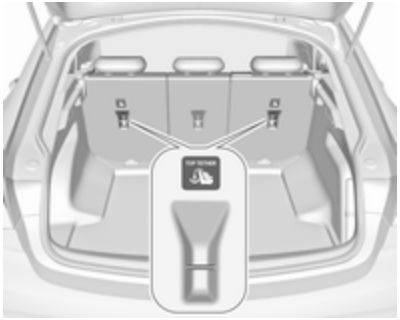

In addition to the ISOFIX mounting brackets, fasten the Top-tether strap to the Top-tether anchors.

ISOFIX child restraint systems of universal category positions are marked in the table by IUF ⇨ 66.

Selecting the right system

The rear seats are the most convenient location to fasten a child restraint system.

Children should travel facing rearwards in the vehicle as long as possible. This makes sure that the child's backbone, which is still very weak, is under less strain in the event of an accident.

Suitable are restraint systems that comply with valid UN ECE regulations. Check local laws and regulations for mandatory use of child restraint systems.

The following child restraints are recommended for the following weight classes:

Maxi Cosi Cabriofix for children up to 13 kg for group 0, group 0+ and Duo Plus for children from 13 kg to 18 kg in group I.

Ensure that the child restraint system to be installed is compatible with the vehicle type.

Ensure that the mounting location of the child restraint system within the vehicle is correct, see following tables.

Allow children to enter and exit the vehicle only on the side facing away from the traffic.

When the child restraint system is not in use, secure the seat with a seat belt or remove it from the vehicle.

Note

Do not affix anything on the child restraint systems and do not cover them with any other materials.

A child restraint system which has been subjected to stress in an accident must be replaced.

Child restraint installation locations

Permissible options for fastening a child restraint system with a three-point seat belt

	On front passenger seat			
Weight class	activated airbag	deactivated airbag	On rear outboard seats	On rear centre seat
Group 0: up to 10 kg	X	U[1,2]	U/L[3]	U
Group 0+: up to 13 kg	X	U[1,2]	U/L[3]	U
Group I: 9 to 18 kg	X	U[1,2]	U/L[3,4]	U[4]
Group II: 15 to 25 kg	U[1,2]	X	U/L[3,4]	U[4]
Group III: 22 to 36 kg	U[1,2]	X	U/L[3,4]	U[4]

U : universal suitability in conjunction with three-point seat belt
L : suitable for particular child restraint systems of the 'specific-vehicle', 'restricted' or 'semi-universal' categories. The child restraint system must be approved for the specific vehicle type (refer to the vehicle type list of the child restraint system)
X : no child restraint system permitted in this weight class
[1] : move seat forwards as far as necessary and adjust seat backrest as far as necessary to a vertical position to ensure that the belt runs forwards from the upper anchorage point
[2] : move seat upwards as far as necessary and adjust seat backrest as far as necessary to a vertical position to ensure that the belt is tight on the buckle side
[3] : move the respective front seat ahead of the child restraint system forwards as far as necessary
[4] : adjust the respective headrest as necessary or remove if required

Permissible options for fitting an ISOFIX child restraint system with ISOFIX brackets

Weight class	Size class	Fixture	On front passenger seat activated airbag	On front passenger seat deactivated airbag	On rear outboard seats	On rear centre seat
Group 0: up to 10 kg	G	ISO/L2	X	X	X	X
	F	ISO/L1	X	X	X	X
	E	ISO/R1	X	X	IL[3]	X
Group 0+: up to 13 kg	E	ISO/R1	X	X	IL[3]	X
	D	ISO/R2	X	X	IL[3]	X
	C	ISO/R3	X	X	IL[3]	X
Group I: 9 to 18 kg	D	ISO/R2	X	X	IL[3,4]	X
	C	ISO/R3	X	X	IL[3,4]	X
	B	ISO/F2	X	X	IL, IUF[3,4]	X
	B1	ISO/F2X	X	X	IL, IUF[3,4]	X
	A	ISO/F3	X	X	IL, IUF[3,4]	X
Group II: 15 to 25 kg			X	X	IL[3,4]	X
Group III: 22 to 36 kg			X	X	IL[3,4]	X

IL : suitable for particular ISOFIX restraint systems of the 'specific-vehicle', 'restricted' or 'semi-universal' categories. The ISOFIX restraint system must be approved for the specific vehicle type (refer to the vehicle type list of the child restraint system)
IUF : suitable for ISOFIX forward-facing child restraint systems of universal category approved for use in this weight class
X : no ISOFIX child restraint system approved in this weight class
1 : move seat forwards as far as necessary and adjust seat backrest inclination as far as necessary to a vertical position to ensure that the belt runs forwards from the upper anchorage point
2 : move seat height adjustment upwards as far as necessary and adjust seat backrest inclination as far as necessary to a vertical position to ensure that the belt is tight on the buckle side
3 : move the respective front seat ahead of the child restraint system forwards as far as necessary
4 : adjust the respective headrest as necessary or remove if required

ISOFIX size class and seat device

A – ISO/F3 : forward-facing child restraint system for children of maximum size in the weight class 9 to 18 kg
B – ISO/F2 : forward-facing child restraint system for smaller children in the weight class 9 to 18 kg
B1 – ISO/F2X : forward-facing child restraint system for smaller children in the weight class 9 to 18 kg
C – ISO/R3 : rear-facing child restraint system for children of maximum size in the weight class up to 18 kg
D – ISO/R2 : rear-facing child restraint system for smaller children in the weight class up to 18 kg
E – ISO/R1 : rear-facing child restraint system for young children in the weight class up to 13 kg
F– ISO/L1 : left lateral facing position child restraint system (carry-cot)
G – ISO/L2 : right lateral facing position child restraint system (carry-cot)

Permissible options for fitting an i-Size child restraint system with ISOFIX brackets

	On front passenger seat			
	activated airbag	deactivated airbag	On rear outboard seats	On rear centre seat
i-Size child restraint systems	X	X	i - U	X

i - U : suitable for i-Size 'universal' forward and rearward facing child restraint systems
X : seating position not suitable for i-Size 'universal' child restraint systems

Pedestrian protection system

Active bonnet

Pedestrian protection system can help to reduce the injury of pedestrians in case of a front collision.

When the sensors in the front bumper detect a certain impact within the speed range of 25 km/h to 50 km/h, the rear part of the bonnet will be lifted to reduce pedestrians head injuries.

In addition the front bumper is designed to reduce leg injuries of pedestrians.

The active bonnet can be triggered only once and remains in the raised position. A message is displayed in the Driver Information Centre.

Seek the assistance of a workshop as soon as possible, thereby adapting the driving style, to have the actuators, hinges and bonnet replaced.

⚠Warning

Do not drive with the bonnet raised.

⚠Warning

After any frontal accident the front bumper may appear to be intact, however, the sensors may be damaged. Consult a workshop to verify proper functionality of the sensors.

The system may not trigger under the following conditions:

- The impact is out of sensor range.
- The sensors are damaged or blocked by accessory parts.
- The bonnet is blocked by snow or ice.
- The vehicle speed is not within the range.
- The object is too small.

Manually bonnet lowering

⚠Warning

After the system has triggered, the hinges of the bonnet are hot. Do not touch.

To manually lower the triggered bonnet for driving to the next workshop:

1. Pull the bonnet release lever.
2. Push the safety catch to left vehicle side.
3. Open the bonnet approx. 20 cm and lower it slowly without engaging.
4. Push down bonnet with both hands at rear corners in small steps alternating between right and left side.

⚠Warning

Be sure to keep away from the edge of the bonnet to prevent injuries.

5. Check that the bonnet is engaged at the rear.
6. Close bonnet at the front and check that it is engaged ⇨ 240.

Storage

Storage compartments **72**
Glovebox 72
Cupholders 72
Front storage 73
Sunglasses storage 73
Armrest storage 73
Centre console storage 73
Load compartment **74**
Load compartment cover 77
Rear floor storage cover 79
Rear storage 79
Lashing eyes 80
Cargo management system 80
Safety net 80
Warning triangle 83
First aid kit 83
Roof rack system **84**
Roof rack 84
Loading information **85**

Storage compartments

⚠ Warning

Do not store heavy or sharp objects in the storage compartments. Otherwise, the storage compartment lid could open and vehicle occupants could be injured by objects being thrown around in the event of hard braking, a sudden change in direction or an accident.

Glovebox

The glovebox should be closed whilst driving.

Cupholders

Cupholders are located in the centre console behind a cover. Open the cover.

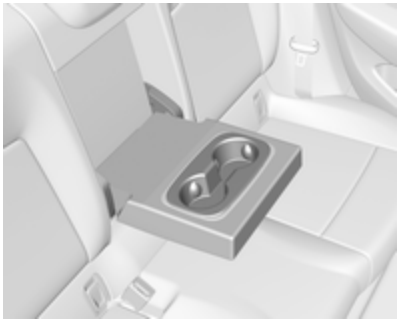

Additional cupholders are located in the rear armrest. Fold down armrest.

Front storage

A storage box is located in the centre console. Push cover to the front.

Sunglasses storage

Fold down and open.

Do not use for storing heavy objects.

Armrest storage

Storage in the front armrest

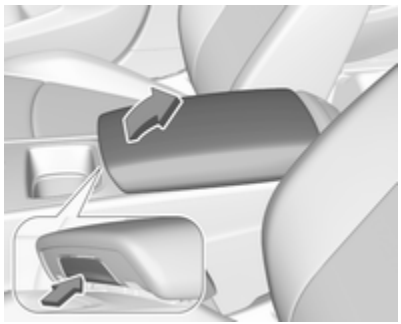

Push button to fold up the armrest.

Centre console storage

The storage container can be used to store small items.

Depending on the version, the storage compartment is located under a cover.

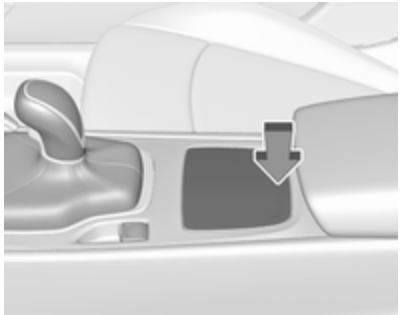

Press cover at the rear to open.

Load compartment

Depending on the equipment, the rear seat backrest is divided into two or three parts. All parts can be folded down.

Before folding rear seat backrests, execute the following if necessary:

- Remove the load compartment cover ⇨ 77.
- Press and hold the catch to push the head restraints down ⇨ 44.
- Remove the rear head restraints to have the backrests fully rest on the seat cushions ⇨ 44.

Load compartment extension (two-part rear seat backrest)

- Pull the release lever on one or both outer sides and fold down the backrests onto the seat cushion.
- To fold up, raise the backrests and guide them into an upright position until they engage audibly. Make sure that the belts are positioned correctly and stay clear of the folding area.

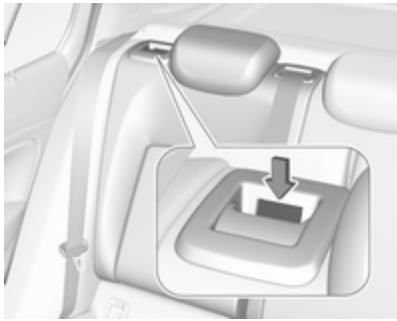

The backrests are properly engaged when the red mark near the release lever is no longer visible.

⚠ Warning

When folding up, ensure that backrests are securely locked in position before driving. Failure to do so may result in personal injury or damage to the load or vehicle in the event of hard braking or a collision.

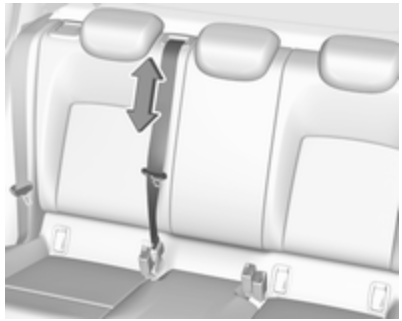

The seat belt of the centre seat could be blocked when the backrest is folded up too quickly. To unlock the retractor, push in the seat belt or pull it out by approx. 20 mm then release.

Load compartment extension (three-part rear seat backrest)

- Fold up the rear armrest.

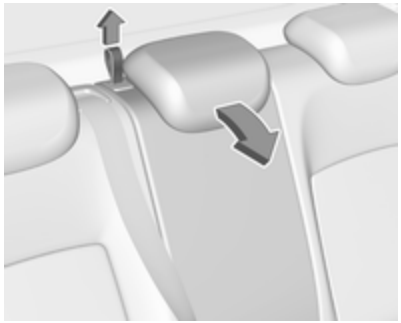

- Pull the loop and fold down the backrest of the centre seat.
- Pull the release lever on one or both outer sides and fold down the backrests onto the seat cushion.

⚠ Warning

Take care when folding down the right outer seat backrest if the centre seat backrest is already folded down. Risk of injury due to bolt protruding from the inner side of the backrest.

- Pull the release lever on one or both outer sides and fold down the backrests onto the seat cushion.

⚠ Warning

Take care when folding down the right outer seat backrest if the centre seat backrest is already folded down. Risk of injury due to bolt protruding from the inner side of the backrest.

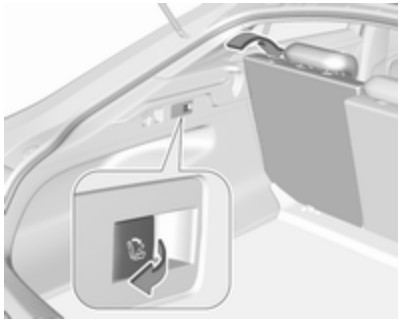

- Alternatively fold seat backrests from the load compartment: pull switch on left or right sidewall of the load compartment to fold the corresponding part of the rear seat backrest.

⚠ Warning

Take care when operating the rear backrests from the load compartment. The backrest is folded with considerable force. Risk of injury, particularly to children.

Ensure that nothing is attached to the rear seats or located on the seat cushion.

- To fold up, raise the backrests and guide them into an upright position until they engage audibly. Make sure that the belts are positioned correctly and stay clear of the folding area.

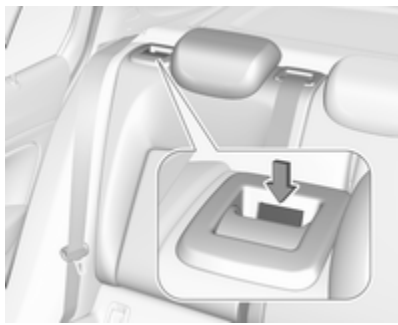

The backrests are properly engaged when the red mark near the release lever is no longer visible.

⚠ Warning

When folding up, ensure that backrests are securely locked in position before driving. Failure to do so may result in personal injury or damage to the load or vehicle in the event of hard braking or a collision.

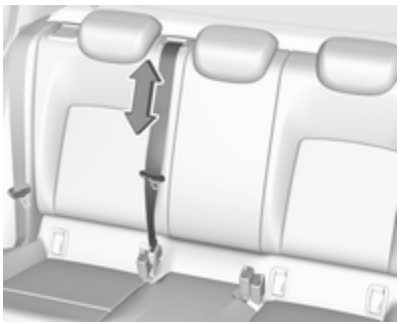

The seat belt of the centre seat could be blocked when the backrest is folded up too quickly. To unlock the retractor, push in the seat belt or pull it out by approx. 20 mm then release.

Load compartment cover

Do not place any objects on the cover.

Grand Sport

Removing cover

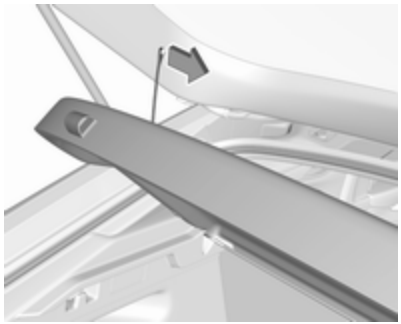

Unhook retaining straps from tailgate.

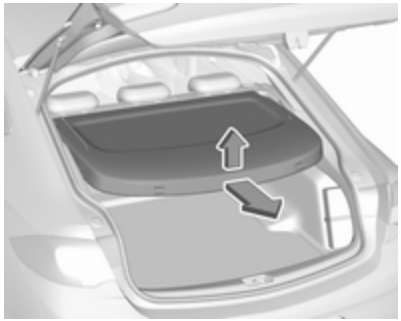

Lift cover at the rear and at the front.

Remove the cover.

Fitting cover

Engage cover in side guides and fold downwards. Attach the retaining straps to the tailgate.

Sports Tourer, Country Tourer

Closing roller blind

Pull the roller blind using the handle towards the rear and upwards until it engages in the sideward retainers.

Opening roller blind

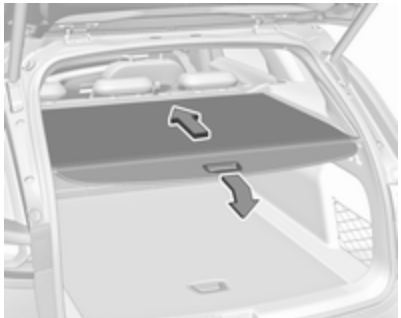

Pull the roller blind handle to the rear and downwards. It rolls up automatically.

Opening roller blind in load position

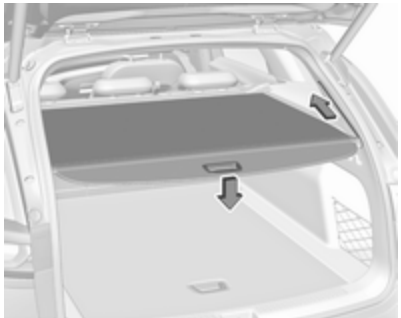

Press the roller blind handle.

The rear of the roller blind is guided upwards automatically.

Removing roller blind

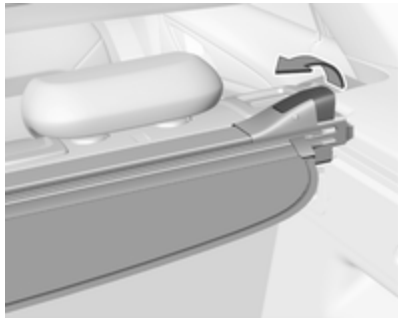

Open the roller blind.

Pull the release lever on the right side up an hold it. Lift the roller blind first on the right side and remove from retrainers.

Installing roller blind

Insert the left side of the roller blind in recess, then pull release lever up.

Hold and insert the right side of the roller blind in recess and engage.

Rear floor storage cover

Grand Sport

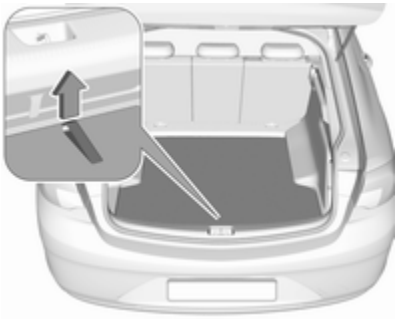

The rear floor cover can be removed. Raise cover at the loop and remove.

Sports Tourer, Country Tourer

The rear floor cover can be removed. Raise cover at the loop and remove.

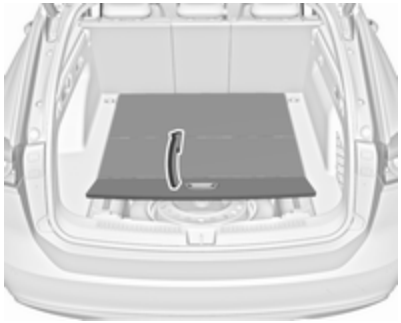

Pull the handle and fold the rear part of the cover forward.

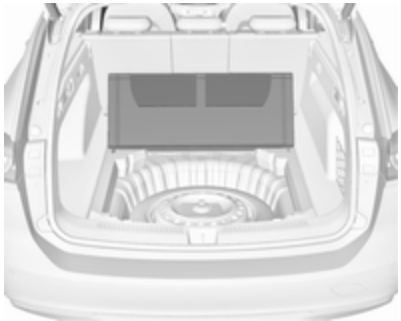

Set up the folded cover upright behind the rear seat backrests.

Rear storage

Storage box

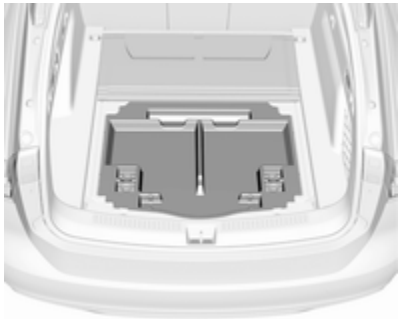

A storage box is located in the load compartment. Remove the cover to gain access to the storage box.

Lashing eyes

The lashing eyes are designed to secure items against slippage, e.g. using lashing straps or luggage net.

Cargo management system

The cargo rail system is a movable system to secure items at the the load compartment floor against slippage.

Mounting carriages in the rail

Insert carriages into the rails at the load compartment floor. Thereby use the recess in the rail and press the button on the carriage while inserting it.

Using the lashing eyes

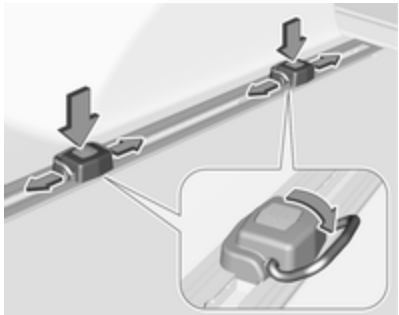

Press the button on a carriage and slide it to the required position. Fold up the lashing eyes to use them.

Removing
Fold down the lashing eyes. Press the button of a carriage and remove it fromt the rail via recess.

Safety net

The safety net can be installed behind the rear seats. If the rear seat backrests are folded the safety net can be installed behind the front seats.

Passengers must not be transported behind the safety net.

Behind the rear seats

Installation

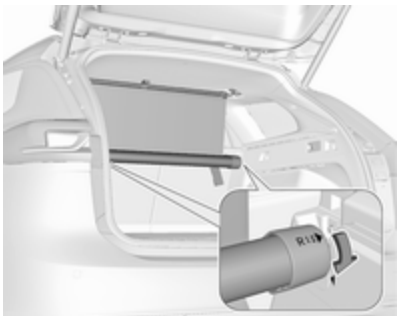

- Insert the cassette into retainers on left and right side. Note the signs **L** (left side) and **R** (right side) on the cassette as an installation hint.

  Turn cassette slightly forward until the arrows face each other, to lock the cassette.

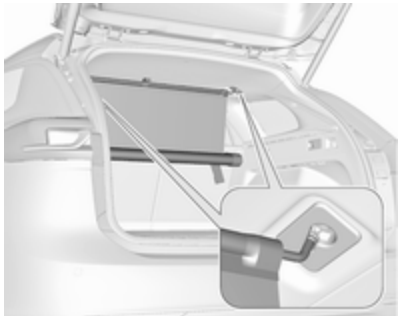

- Pull safety net rod out of cassette. Suspend and engage safety net rod into installation opening on one side of the roof frame. Compress rod and suspend and engage at the other side.

Remove load compartment cover ⇨ 77

Removal

- Remove and compress one side of safety net rod from installation opening. Remove other side of safety net rod from installation opening.
- Roll up safety net.

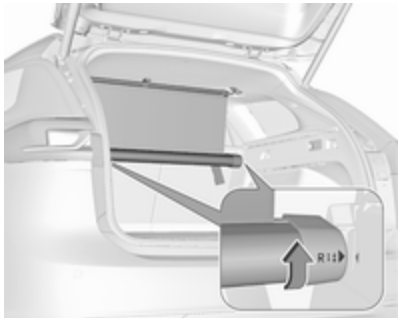

- Turn cassette slightly backwards to unlock and remove from retainers.

Behind the front seats

Installation

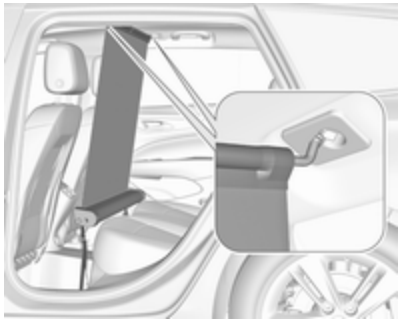

- Suspend and engage safety net rod into installation opening on one side of the roof frame. Compress rod, suspend and engage at the other side. Pull safety net rod out of cassette.

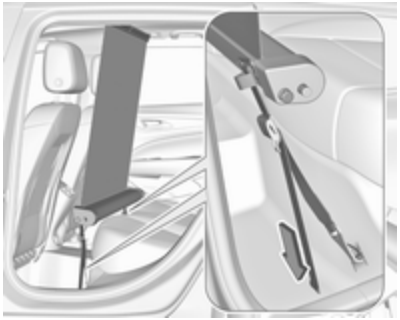

- Attach hooks of safety net cassette to lashing eyes in the floor in front of rear seats. To get access to the lashing eyes, push hooks in the perforated parts in the floor cover on both sides.
- Tension both straps by pulling at the loose end.
- Push down head restraints and fold down rear seat backrests ⇨ 74.

Removal

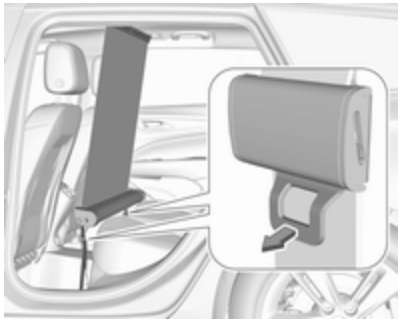

- Pull the flap at the tightener on both sides to release the straps.
- Remove and compress one side of safety net rod from installation opening. Remove other side of safety net rod from installation opening.
- Roll up safety net.
- Detach hooks from the lashing eyes.

Warning triangle

Grand Sport

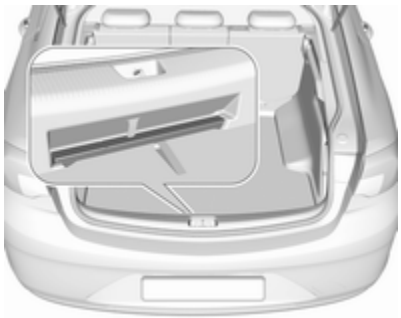

Stow the warning triangle in the space at the rear of the load compartment.

Sports Tourer, Country Tourer

Stow the warning triangle with the retaining straps of the tailgate inner panelling.

First aid kit

Grand Sport

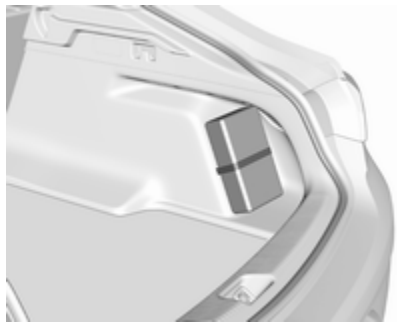

Stow the first aid kit on the right side of the load compartment and secure it with the strap.

Sports Tourer, Country Tourer

Stow the first aid kit with the retaining straps of the tailgate inner panelling.

Roof rack system

Roof rack

For safety reasons and to avoid damage to the roof, the vehicle approved roof rack system is recommended. For further information, contact your workshop.

Mounting roof rack

Grand Sport

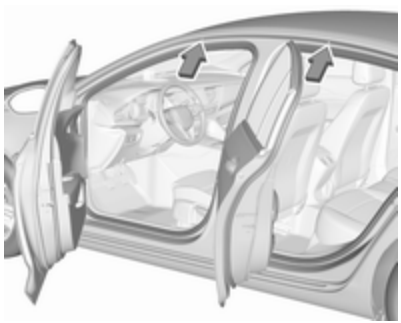

Open all doors.

Mounting points are located in each door frame of the vehicle body.

Fasten the roof rack according to the installation instructions delivered with the roof rack.

Remove the roof rack when not in use.

Sports Tourer, Country Tourer

Mounting points are located in each roof railing.

Fasten the roof rack on the first two mounting points according to the installation instructions delivered with the roof rack.

Remove the roof rack when not in use.

Loading information

- Heavy objects in the load compartment should be placed against the seat backrests. Make sure that the backrests are securely engaged, i.e. no longer showing the red markings on the side near the release lever. If objects can be stacked, heavier objects should be placed at the bottom.
- Secure objects with lashing straps attached to lashing eyes ⇨ 80.
- Secure loose objects in the load compartment to prevent from sliding.
- When transporting objects in the load compartment, the backrests of the rear seats must not be angled forward.
- Do not allow the load to protrude above the upper edge of the backrests.
- Do not place any objects on the load compartment cover or the instrument panel, and do not cover the sensor on top of the instrument panel.
- The load must not obstruct the operation of the pedals, parking brake and gear selector, or hinder the freedom of movement of the driver. Do not place any unsecured objects in the interior.
- Do not drive with an open load compartment.

⚠ Warning

Always ensure that the load in the vehicle is securely stowed. Otherwise objects can be thrown around inside the vehicle and cause personal injury or damage to the load or vehicle.

- The payload is the difference between the permitted gross vehicle weight (see identification plate ⇨ 288) and the EC kerb weight.

  To calculate the payload, enter the data for your vehicle in the weights table at the front of this manual.

  The EC kerb weight includes weights for the driver (68 kg), luggage (7 kg) and all fluids (fuel tank 90% full).

  Optional equipment and accessories increase the kerb weight.
- Driving with a roof load increases the sensitivity of the vehicle to cross-winds and has a

detrimental effect on vehicle handling due to the vehicle's higher centre of gravity. Distribute the load evenly and secure it properly with retaining straps. Adjust the tyre pressure and vehicle speed according to the load conditions. Check and retighten the straps frequently.

Do not drive faster than 120 km/h.

The permissible roof load is 100 kg. The roof load is the combined weight of the roof rack and the load.

Instruments and controls

Controls **88**
Steering wheel adjustment 88
Steering wheel controls 88
Heated steering wheel 89
Horn 89
Windscreen wiper/washer 89
Rear window wiper/washer 91
Outside temperature 92
Clock 92
Power outlets 94
Inductive charging 95
Ashtrays 96
Warning lights, gauges and indicators **97**
Instrument cluster 97
Speedometer 102
Odometer 103
Trip odometer 103
Tachometer 104
Fuel gauge 104
Engine coolant temperature gauge 105
Service display 105
Control indicators 106
Turn signal 106
Seat belt reminder 106
Airbag and belt tensioners 107
Airbag deactivation 107
Charging system 108
Malfunction indicator light 108
Brake and clutch system 108
Electric parking brake 108
Electric parking brake fault 108
Antilock brake system (ABS) ... 109
Gear shifting 109
Following distance 109
Lane keep assist 109
Electronic Stability Control off . 109
Electronic Stability Control and Traction Control system 109
Traction Control system off 110
Engine coolant temperature 110
Preheating 110
AdBlue 110
Tyre pressure monitoring system 110
Engine oil pressure 110
Low fuel 111
Immobiliser 111
Exterior light 111
High beam 111
High beam assist 111
LED headlights 111
Fog light 111
Rear fog light 112
Cruise control 112
Adaptive cruise control 112
Vehicle detected ahead 112
Pedestrian detection 112
Speed limiter 112
Traffic sign assistant 112
Door open 112
Information displays **113**
Driver Information Centre 113
Info display 120
Head-up display 122
Vehicle messages **124**
Warning chimes 125
Battery voltage 125
Vehicle personalisation **126**
Telematics service **130**
OnStar 130

Controls

Steering wheel adjustment

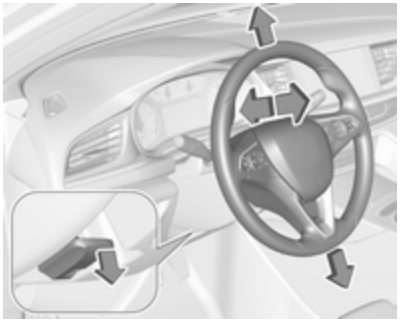

Unlock lever, adjust steering wheel, then engage lever and ensure it is fully locked.

Do not adjust steering wheel unless vehicle is stationary and steering wheel lock has been released.

Steering wheel controls

Driver Information Centre, some driver assistance systems, Infotainment system and a connected mobile phone can be operated via the controls on the steering wheel.

The illustrations show different versions.

Driver Information Centre ⇨ 113.

Driver assistance systems ⇨ 187.

Further information is available in the Infotainment manual.

Heated steering wheel

Activate heating by pressing ♨. Activation is indicated by the LED in the button.

Heating is operational when the engine is running and during an Autostop.

Stop-start system ⇨ 166.

Horn

Press 📯.

Windscreen wiper/washer

Windscreen wiper with adjustable wiper interval

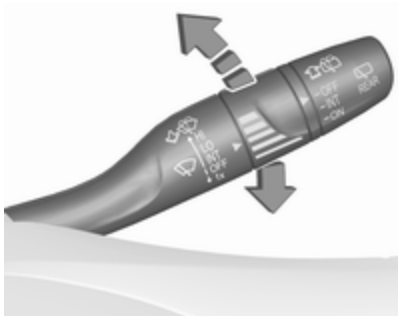

HI : fast
LO : slow
INT : interval wiping
OFF : off

For a single wipe when the windscreen wiper is off, press the lever downwards to position **1x**.

Do not use if the windscreen is frozen.

Switch off in car washes.

Adjustable wiper interval

Wiper lever in position **INT**.

Turn the adjuster wheel to adjust the wiping frequency.

Windscreen wiper with rain sensor

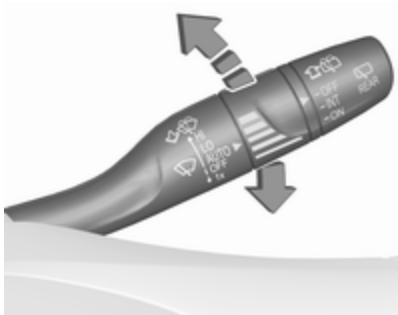

HI : fast
LO : slow
AUTO : automatic wiping with rain sensor
OFF : off

In **AUTO** position, the rain sensor detects the amount of water on the windscreen and automatically regulates the frequency of the windscreen wiper.

For a single wipe when the windscreen wiper is off, press the lever downwards to position **1x**.

Do not use if the windscreen is frozen.

Switch off in car washes.

Adjustable sensitivity of the rain sensor

Wiper lever in position **AUTO**.

Turn the adjuster wheel to adjust the sensitivity of the rain sensor.

Keep the sensor free from dust, dirt and ice.

Rain sensor function can be activated or deactivated in the Vehicle personalisation.

Select the relevant setting in **Settings**, ➧ **Vehicle** in the Info-Display.

Info-Display ⇨ 120.

Vehicle personalisation ⇨ 126.

Windscreen washer

Pull lever. Washer fluid is sprayed onto the windscreen and the wiper wipes a few times.

Washer fluid ⇨ 243.

Rear window wiper/washer

Rear window wiper

Turn outer cap to activate the rear window wiper:

OFF : off
INT : intermittent operation
ON : continuous operation

Do not use if the rear window is frozen.

Switch off in car washes.

The rear window wiper comes on automatically when the windscreen wiper is switched on and reverse gear is engaged.

Activation or deactivation of this function can be changed in the menu **Settings** in the Info-Display.

Vehicle personalisation ⇨ 126.

Rear window washer

Push lever.

Washer fluid is sprayed onto the rear window and the wiper wipes a few times.

The rear window washer system is deactivated when the fluid level is low.

Washer fluid ⇨ 243.

Outside temperature

A drop in temperature is indicated immediately and a rise in temperature after a time delay.

Illustration shows an example.

If outside temperature drops to 3 °C, a warning message is displayed in the Driver Information Centre.

⚠ Warning

The road surface may already be icy even though the display indicates a few degrees above 0 °C.

Clock

Date and time are shown in the Info-Display.

Info-Display ⇨ 120.

7" Colour-Info-Display

Press ⌂ and then select **Settings**.

Select **Time and Date** to display the respective submenu.

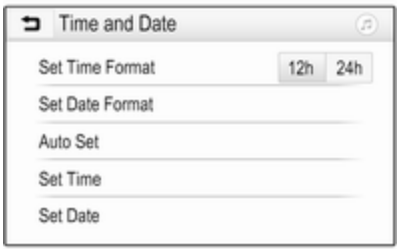

Set Time Format

To select the desired time format, touch the screen buttons **12 h** or **24 h**.

Set Date Format

To select the desired date format, select **Set Date Format** and choose between the available options in the submenu.

Auto Set

To choose whether time and date are to be set automatically or manually, select **Auto Set**.

For time and date to be set automatically, select **On - RDS**.

For time and date to be set manually, select **Off - Manual**. If **Auto Set** is set to **Off - Manual**, the submenu items **Set Time** and **Set Date** become available.

Set time and date

To adjust the time and date settings, select **Set Time** or **Set Date**.

Touch **+** and **-** to adjust the settings.

8" Colour-Info-Display

Press ⌂ and then select the **Settings** icon.

Select **Time and Date**.

Set time

Select **Set Time** to enter the respective submenu.

Select **Auto Set** at the bottom of the screen. Activate either **On - RDS** or **Off - Manual**.

If **Off - Manual** is selected, adjust hours and minutes by touching ∧ or ∨.

Touch **12-24 Hr** on the right side of the screen to select a time mode.

If 12-hour mode is selected, a third column for AM and PM setting is displayed. Select the desired option.

Set date

Select **Set Date** to enter the respective submenu.

Note
If date information is automatically provided, this menu item is not available.

Select **Auto Set** at the bottom of the screen. Activate either **On - RDS** or **Off - Manual**.

If **Off - Manual** is selected, adjust the date by touching ∧ or ∨.

Clock display
Select **Clock Display** to enter the respective submenu.

To turn off the digital clock display in the menus, select **Off**.

Power outlets

A 12 Volt power outlet is located in the centre console.

Sports Tourer, Country Tourer: A 12 Volt power outlet is located at the left sidewall in the load compartment.

Do not exceed the maximum power consumption of 120 watts.

With ignition off, the power outlet is deactivated. Additionally, the power outlet is deactivated in the event of low vehicle battery voltage.

Electrical accessories that are connected must comply with the electromagnetic compatibility requirements laid down in DIN VDE 40 839.

Do not connect any current-delivering accessories, e.g. electrical charging devices or batteries.

Do not damage the outlets by using unsuitable plugs.

Stop-start system ⇨ 166.

USB charging port

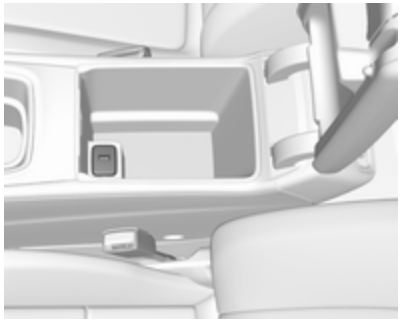

An USB port for charging devices is located below the foldable armrest. The USB port has also a data connection to the Infotainment system. For further information, see Infotainment manual.

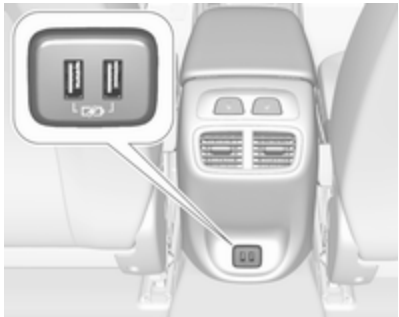

Two USB ports for charging devices only are located in the back of the centre console.

Note
The sockets must always be kept clean and dry.

Inductive charging

⚠ Warning

Inductive charging can affect the operation of implanted pacemakers or other medical devices. If applicable, seek medical advice before using the inductive charging device.

⚠ Warning

Remove any metal objects from the charging device before charging a mobile phone, as these objects could become very hot.

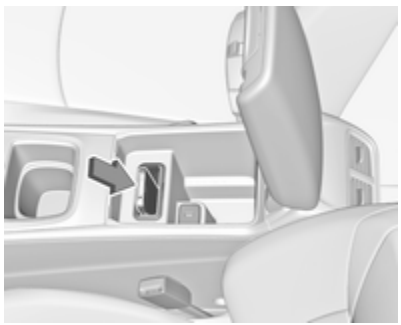

To charge a device, the ignition must be switched on.

The charging slot is located below the front armrest.

To charge a mobile device:

1. Remove all objects from the charging slot otherwise the system may not charge.
2. Insert the mobile device with the display facing to the rear in the charging slot. Charging status is indicated in the Info display ⚡ and shows if mobile device is properly positioned.

If ⚡ is not displayed, remove mobile device from the slot. Turn mobile device 180 degrees and wait three seconds before inserting mobile device again.

PMA or Qi compatible mobile devices can be charged inductively.

A back cover with an integrated coil (e.g. Samsung 4 and 5) or a jacket (e.g. some iPhone models) may be required to charge a mobile device

The mobile device must be smaller than 8 cm in width and 15 cm in length to fit into the charging device.

Protective cover for the mobile phone could have impact on the inductive charging.

Ashtrays

Caution
To be used only for ash and not for combustible rubbish.

A portable ashtray can be placed in the cupholders.

Warning lights, gauges and indicators

Instrument cluster

Depending on the version, three instrument clusters are available:

- Baselevel
- Midlevel
- Uplevel

Uplevel instrument cluster can be displayed as Sport mode or Tour mode.

Baselevel instrument cluster

Midlevel instrument cluster

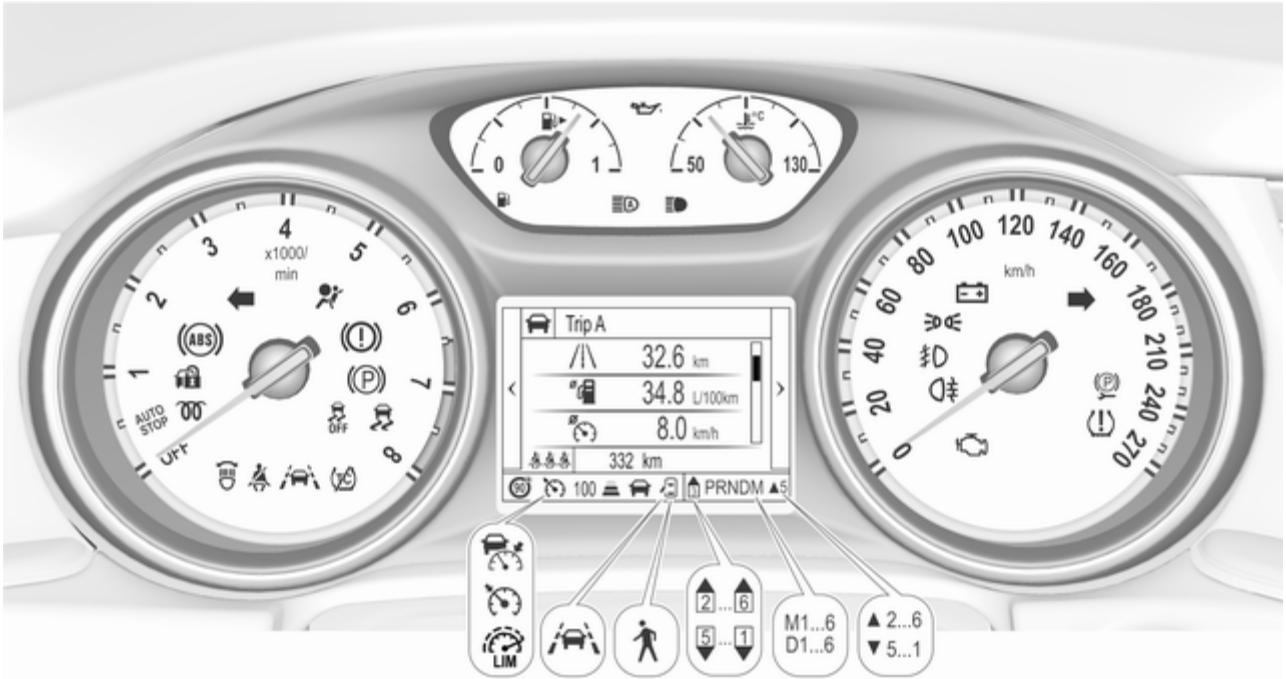

Uplevel instrument cluster, Sport mode

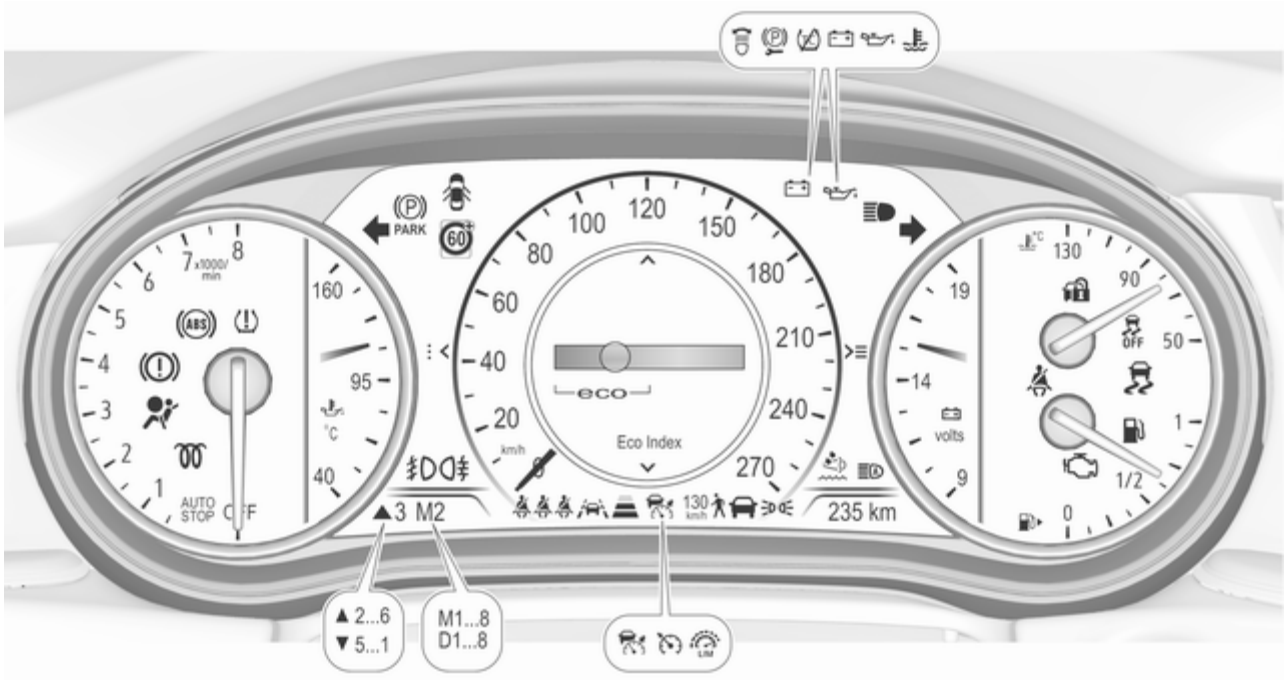

Uplevel instrument cluster, Tour mode

Overview

- Turn signal ⇨ 106
- Seat belt reminder ⇨ 106
- Airbag and belt tensioners ⇨ 107
- Airbag deactivation ⇨ 107
- Charging system ⇨ 108
- Malfunction indicator light ⇨ 108
- Brake and clutch system ⇨ 108
- Electric parking brake ⇨ 108
- Electric parking brake fault ⇨ 108
- Antilock brake system (ABS) ⇨ 109
- Gear shifting ⇨ 109
- Following distance ⇨ 109
- Lane keep assist ⇨ 109
- Electronic Stability Control off ⇨ 109
- Electronic Stability Control and Traction Control system ⇨ 109
- Traction Control system off ⇨ 110
- Engine coolant temperature ⇨ 110
- Preheating ⇨ 110
- AdBlue ⇨ 110
- Tyre pressure monitoring system ⇨ 110
- Engine oil pressure ⇨ 110
- Low fuel ⇨ 111
- Immobiliser ⇨ 111
- Exterior light ⇨ 111
- High beam ⇨ 111
- High beam assist ⇨ 111
- LED headlights ⇨ 111
- Fog light ⇨ 111
- Rear fog light ⇨ 112
- Cruise control ⇨ 112
- Adaptive cruise control ⇨ 112
- Vehicle detected ahead ⇨ 112
- Pedestrian detected ahead ⇨ 205
- Speed limiter ⇨ 112
- Traffic sign assistant ⇨ 112
- Door open ⇨ 112

Speedometer

Indicates vehicle speed.

Odometer

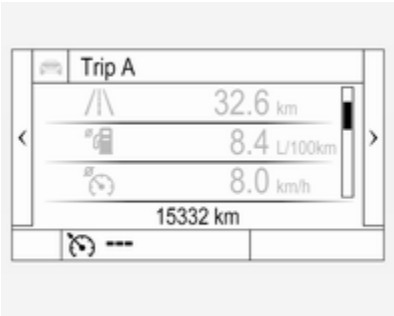

The total recorded distance is displayed in km.

Trip odometer

The recorded distance since the last reset is displayed on the trip computer page.

Trip odometer counts up to 9,999 km and then restarts at 0.

Two trip odometer pages are selectable for different trips.

Baselevel instrument cluster

Select /i\ by pressing **Menu** on the turn signal lever. Turn adjuster wheel on turn signal lever and select /i\1 or /i\2. Each trip odometer page can be reset separately by pressing **SET/CLR** on the turn signal lever for a few seconds on the respective menu.

Midlevel instrument cluster

Select **Info** page on main menu. Choose page **Trip A** or **Trip B** by pressing ∨ on the steering wheel.

Each trip odometer can be reset separately when ignition is on: select respective page, press >. Confirm by pressing ✔.

Driver Information Centre ⇨ 113.

Uplevel instrument cluster

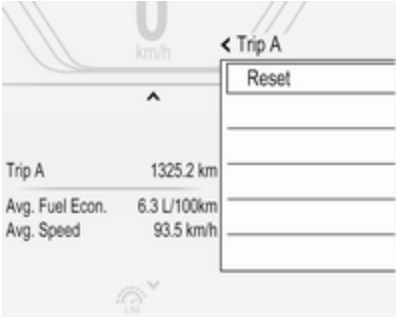

Select **Info** page on main menu. Choose page **Trip A** or **Trip B** by pressing ∨ on the steering wheel.

Each trip odometer can be reset separately when ignition is on: select respective page, press >. Confirm by pressing ✔.

Tachometer

Displays the engine speed.

Drive in a low engine speed range for each gear as much as possible.

Caution

If the needle is in the red warning zone, the maximum permitted engine speed is exceeded. Engine at risk.

Fuel gauge

Displays the level in the fuel tank.

The arrow indicates the vehicle side where the fuel filler flap is located.

Control indicator ⛽ illuminates if the level in the tank is low. Refuel immediately if it flashes.

Never run the fuel tank dry.

Because of the fuel remaining in the tank, the top-up quantity may be less than the specified fuel tank capacity.

Engine coolant temperature gauge

Displays the coolant temperature.

50°	:	engine operating temperature not yet reached
90° (central area)	:	normal operating temperature
130°	:	temperature too high

Note
If engine coolant temperature is too high, stop vehicle, idle engine. Danger to engine. Check coolant level.

Service display

The engine oil life system informs when to change the engine oil and filter. Based on driving conditions, the interval at which an engine oil and filter change will be indicated can vary considerably.

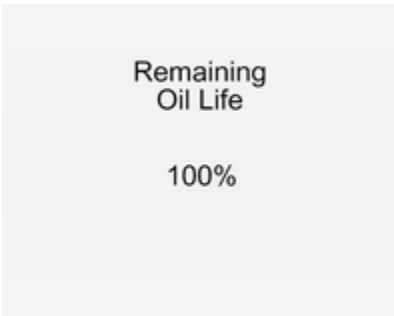

The remaining oil life duration menu is displayed in the Driver Information Centre ⇨ 113.

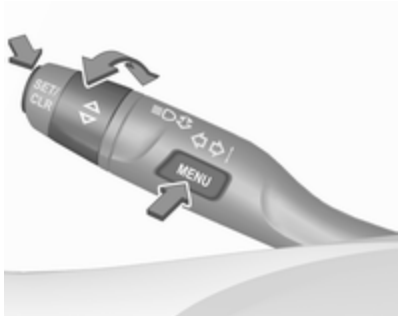

On Baselevel display select by pressing **MENU** on the turn signal lever. Turn the adjuster wheel to select the **Remaining Oil Life** page.

On Mid- and Uplevel display select **Info** Menu by pressing ⊲ on steering wheel. Press ∇ to select **Remaining Oil Life** page.

Remaining oil life duration is indicated in percentage.

Reset

On Baselevel display press **SET/CLR** on turn signal lever for several seconds to reset. The ignition must be switched on but engine not running.

On Mid- and Uplevel display press ⊳ on steering wheel to open the subfolder. Select **Reset** and confirm by pressing ✔ for several seconds. The ignition must be switched on but engine not running.

The system must be reset every time the engine oil is changed to allow proper functionality. Seek the assistance of a workshop.

Next service

When the system has calculated that engine oil life has been diminished, **Change Engine Oil Soon** appears in the Driver Information Centre. Have engine oil and filter changed by a workshop within one week or 500 km (whichever occurs first).

Service information ⇨ 284.

Control indicators

The control indicators described are not present in all vehicles. The description applies to all instrument versions. Depending on the equipment, the position of the control indicators may vary. When the ignition is switched on, most control indicators will illuminate briefly as a functionality test.

The control indicator colours mean:

red : danger, important reminder
yellow : warning, information, fault
green : confirmation of activation
blue : confirmation of activation
white : confirmation of activation

See all control indicators on different instrument clusters ⇨ 97.

Turn signal

⇦⇨ illuminates or flashes green.

Illuminates briefly

The parking lights are switched on.

Flashes

A turn signal or the hazard warning flashers are activated.

Rapid flashing: failure of a turn signal light or associated fuse, failure of turn signal light on trailer.

Bulb replacement ⇨ 246, Fuses ⇨ 256.

Turn signals ⇨ 142.

Seat belt reminder

Seat belt reminder on front seats

for driver's seat illuminates or flashes red in the instrument cluster.

for front passenger seat illuminates or flashes red in the roof console, when seat is occupied.

Illuminates
After the ignition has been switched on until the seat belt has been fastened.

Flashes
After having started the engine for a maximum of 100 seconds until the seat belt has been fastened.

Seat belt status on rear seats (vehicles with Baselevel display)

illuminates or flashes white or grey in the Driver Information Centre, after having started the engine.

Illuminates white
Seat belt is unfastened.

Illuminates grey
Seat belt has been fastened.

Flashes white or grey
Fastened seat belt has been unfastened.

Fastening the seat belt ⇨ 56.

Seat belt status on rear seats (vehicles with Mid- or Uplevel display)

illuminates green or grey or flashes yellow in the Driver Information Centre, after having started the engine.

Illuminates grey
Seat belt is unfastened.

Illuminates green
Seat belt has been fastened.

Flashes yellow
Fastened seat belt has been unfastened.

Fastening the seat belt ⇨ 56.

Airbag and belt tensioners

illuminates red.

When the ignition is switched on, the control indicator illuminates for approx. four seconds. If it does not illuminate, does not go out after four seconds or illuminates whilst driving, there is a fault in the airbag system. Seek the assistance of a workshop. The airbags and belt pretensioners may fail to trigger in the event of an accident.

Deployment of the belt pretensioners or airbags is indicated by continuous illumination of .

⚠ Warning

Have the cause of the fault remedied immediately by a workshop.

Belt pretensioners, airbag system ⇨ 55, ⇨ 57.

Airbag deactivation

illuminates yellow.

The front passenger airbag is activated.

illuminates yellow.

The front passenger airbag is deactivated.

Airbag deactivation ⇨ 62.

Charging system

illuminates red.

Illuminates when the ignition is switched on and extinguishes shortly after the engine starts.

Illuminates when the engine is running

Stop, switch off engine. Vehicle battery is not charging. Engine cooling may be interrupted. The brake servo unit may cease to be effective. Seek the assistance of a workshop.

Malfunction indicator light

illuminates or flashes yellow.

Illuminates when the ignition is switched on and extinguishes shortly after the engine starts.

Illuminates when the engine is running

Fault in the emission control system. The permitted emission limits may be exceeded.

On diesel engines, the cleaning process of the diesel particle filter is potentially not possible.

Seek the assistance of a workshop immediately.

Flashes when the engine is running

Fault that could lead to catalytic converter damage. Ease up on the accelerator until the flashing stops. Seek the assistance of a workshop immediately.

Brake and clutch system

illuminates red.

The brake and clutch fluid level is too low.

⚠Warning

Stop. Do not continue your journey. Consult a workshop.

Electric parking brake

(P) illuminates or flashes red.

Illuminates

Electric parking brake is applied ⇨ 180.

Flashes

Electric parking brake is not fully applied or released. Depress the brake pedal and attempt to reset the system by first releasing then applying the electric parking brake. If (P) remains flashing, do not drive and seek the assistance of a workshop.

Electric parking brake fault

illuminates or flashes yellow.

Illuminates

Electric parking brake is operating with degraded performance ⇨ 180.

Flashes

Electric parking brake is in service mode. Stop vehicle, apply and release the electric parking brake to reset.

⚠Warning

Have the cause of the fault remedied immediately by a workshop. Avoid parking on inclines until the cause of the fault has been remedied.

Antilock brake system (ABS)

(ABS) illuminates yellow.

Illuminates for a few seconds after the ignition is switched on. The system is ready for operation when the control indicator extinguishes.

If the control indicator does not go out after a few seconds, or if it illuminates while driving, there is a fault in the ABS. The brake system remains operational but without ABS regulation.

Antilock brake system ⇨ 179.

Gear shifting

▲ or ▼ with the number of a higher or lower gear is indicated, when up- or downshifting is recommended for fuel saving reasons.

Following distance

indicates the following distance setting of the alert timing sensitivity for the forward collision alert using filled distance bars.

Forward collision alert ⇨ 198.

Lane keep assist

illuminates green or yellow, or flashes yellow.

Illuminates green

The system is switched on and ready to operate.

Illuminates yellow

The system approaches a detected lane marking without using the turn signal in that direction.

Flashes yellow

The system recognizes that the lane is departed significantly.

Lane keep assist ⇨ 229

Electronic Stability Control off

OFF illuminates yellow.

The system is deactivated.

Electronic Stability Control and Traction Control system

illuminates or flashes yellow.

Illuminates

A fault in the system is present. Continued driving is possible. Driving stability, however, may deteriorate depending on road surface conditions.

Have the cause of the fault remedied by a workshop.

Flashes

The system is actively engaged. Engine output may be reduced and the vehicle may be braked automatically to a small degree.

Electronic Stability Control ⇨ 183, Traction Control system ⇨ 182.

Traction Control system off

illuminates yellow.

The system is deactivated.

Engine coolant temperature

illuminates red.

Illuminates when the engine is running

Stop, switch off engine.

Caution
Coolant temperature too high.

Check coolant level immediately ⇨ 242.

If there is sufficient coolant, consult a workshop.

Preheating

illuminates yellow.

Preheating of Diesel engine is activated. Only activates when outside temperature is low. Start the engine when control indicator extinguishes.

AdBlue

flashes yellow.

AdBlue level is low. Refill AdBlue soon to avoid prevention of the engine start.

AdBlue ⇨ 171.

Tyre pressure monitoring system

illuminates or flashes yellow.

Illuminates

Tyre pressure loss. Stop immediately and check tyre pressure.

Flashes

Fault in system or tyre without pressure sensor mounted (e.g. spare wheel). After 60 to 90 seconds the control indicator illuminates continuously. Consult a workshop.

Engine oil pressure

illuminates red.

Illuminates when the ignition is switched on and extinguishes shortly after the engine starts.

Illuminates when the engine is running

Caution
Engine lubrication may be interrupted. This may result in damage to the engine and/or locking of the drive wheels.

1. Depress clutch.
2. Select neutral gear.
3. Move out of the flow of traffic as quickly as possible without impeding other vehicles.
4. Switch off ignition.

⚠ Warning

When the engine is off, considerably more force is needed to brake and steer.

During an Autostop, the brake servo unit will still be operational.

Do not remove key until vehicle is stationary, otherwise the steering wheel lock could engage unexpectedly.

Check oil level before seeking assistance of a workshop ⇨ 241.

Low fuel

⛽ illuminates or flashes yellow.

Illuminates

Level in fuel tank is too low.

Flashes

Fuel used up. Refuel immediately. Never run the tank dry.

Refuelling ⇨ 232.

Catalytic converter ⇨ 170.

Bleeding the diesel fuel system ⇨ 245.

Immobiliser

🔒 flashes yellow.

Fault in the immobiliser system. The engine cannot be started.

Immobiliser ⇨ 36.

Exterior light

illuminates green.

The exterior lights are on ⇨ 135.

High beam

illuminates blue.

Illuminated when high beam is on or during headlight flash ⇨ 136.

High beam assist

illuminates green.

The high beam assist is activated, see LED headlights ⇨ 139.

LED headlights

illuminates or flashes yellow.

Illuminates

Fault in the system.

Seek the assistance of a workshop.

Flashes

System is switched to symmetrical low beam.

Control indicator flashes for approx. four seconds after the ignition is switched on as a reminder for symmetrical headlight ⇨ 138.

Fog light

illuminates green.

The front fog lights are on ⇨ 143.

Rear fog light

illuminates yellow.

The rear fog light is on ⇨ 143.

Cruise control

illuminates white or green.

Illuminates white

The system is on.

Illuminates green

Cruise control is active. Set speed is indicated in the Driver Information Centre.

Cruise control ⇨ 187.

Adaptive cruise control

illuminates in the Driver Information Centre.

illuminates white

The system is on.

illuminates green

Adaptive cruise control is active.

Adaptive cruise control ⇨ 190.

Vehicle detected ahead

illuminates green or yellow.

Illuminates green

A vehicle ahead is detected in the same lane.

Illuminates yellow

The distance to a preceding moving vehicle gets too small or when approaching another vehicle too rapidly.

Adaptive cruise control ⇨ 190, Forward collision alert ⇨ 198.

Pedestrian detection

illuminates yellow.

A pedestrian ahead is detected.

Speed limiter

illuminates white or green.

Illuminates white

The system is on.

Illuminates green

Speed limiter is active. Set speed is indicated near symbol.

Speed limiter ⇨ 189.

Traffic sign assistant

displays detected traffic signs as control indicator.

Traffic sign assistant ⇨ 224.

Door open

illuminates red.

A door or the tailgate is open.

Information displays

Driver Information Centre

The Driver Information Centre is located in the instrument cluster.

Depending on the version and the instrument cluster, the Driver Information Centre is available as Baselevel display, Midlevel display or Uplevel display.

Driver Information Centre indicates depending on the equipment:

- overall and trip odometer
- vehicle information and settings
- trip/fuel information
- driving economic information
- driver assistance alerts
- warning messages
- audio and infotainment information
- phone information
- navigation information

Baselevel display

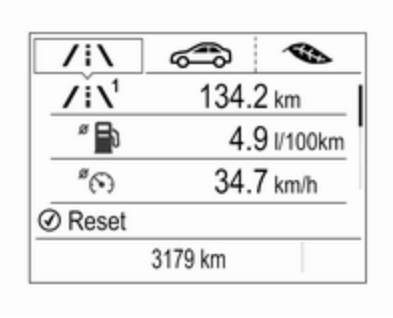

Depending on the version, the menu pages of the Baselevel display are selected by pressing:

- **MENU** on the turn signal lever

  or

- ⊲ and ⊽ on the steering wheel.

Main menu symbols are indicated in the top line of the display:

- Trip/fuel information, displayed by /i\, see description below.
- Vehicle information, displayed by 🚗, see description below.
- Eco information, displayed by 🍃, see description below.

Some of the displayed functions differ when the vehicle is being driven or at a standstill. Some functions are only available when the vehicle is being driven.

Selecting menus and functions

Turn signal lever with MENU button

The menus and functions can be selected via the buttons on the turn signal lever.

Press **MENU** to switch between the main menus or to return from a submenu to the next higher menu level.

Turn the adjuster wheel to select a submenu of the main menu or to set a numeric value.

Press **SET/CLR** to select and confirm a function.

Vehicle and service messages are popped-up in the Driver Information Centre when required. Confirm messages by pressing **SET/CLR**. Vehicle messages ⇨ 124.

Steering wheel controls
The menus and functions can be selected via the buttons on the right side of the steering wheel.

Press ⊲ or ⊳ to switch between the main menus or to return from a submenu to the next higher menu level.

Press ∇ or Δ to select a submenu of the main menu or to set a numeric value.

Press ✔ to select and confirm a function.

Vehicle and service messages are popped-up in the Driver Information Centre if required. Confirm messages by pressing ✔. Vehicle messages ⇨ 124.

Midlevel display

Menu pages are selected by pressing ⊲ and ∇ on the steering wheel.

Main menus are:

- Trip/fuel information, displayed by **Info**, see description below.
- Audio information, displayed by **Audio**, see description below.
- Phone information, displayed by **Phone**, see description below.
- Navigation information, displayed by **Navigation**, see description below.
- Vehicle information, displayed by **Options**, see description below.

Some of the displayed functions differ when the vehicle is being driven or at a standstill and some functions are only active when the vehicle is being driven.

Selecting menus and functions

The menus and functions can be selected via the buttons on the right side of the steering wheel.

Press ⊲ to open main menu page.

Select a main menu page with ∆ or ∇.

Confirm a main menu page with ✔.

Once a main menu page is selected, press ∆ or ∇ to select subpages.

Press ⊳ to open a next folder of the selected subpage.

Press ∆ or ∇ to select functions or to set a numeric value, if required.

Press ✔ to select and confirm a function.

Once a main menu page is selected, this selection remains stored until another main menu page is selected. Subpages are changed by pressing ∇ or ∆.

Vehicle and service messages are popped-up in the Driver Information Centre if required. Confirm messages by pressing ✔. Vehicle messages ⇨ 124.

Uplevel display

Menu pages are selected by pressing ⊲ and ∇ on the steering wheel.

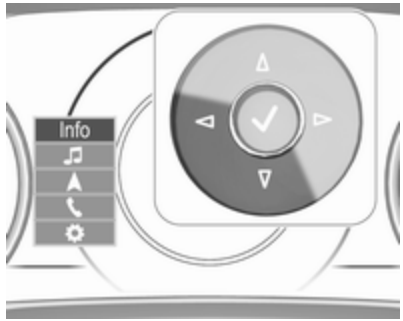

Main menus are:

- Trip/fuel information, displayed by **Info**, see description below.
- Audio information, displayed by **Audio**, see description below.
- Phone information, displayed by **Phone**, see description below.
- Navigation information, displayed by **Navigation**, see description below.
- Vehicle information, displayed by **Options**, see description below.

Some of the displayed functions differ when the vehicle is being driven or at a standstill and some functions are only active when the vehicle is being driven.

Uplevel instrument cluster can be displayed as Sport mode or Tour mode. See below: Settings Menu, Display Themes.

Selecting menus and functions

The menus and functions can be selected via the buttons on the right side of the steering wheel.

Press ◅ to open main menu page.

Select a main menu page with ∆ or ∇.

Confirm a main menu page with ✔.

Once a main menu page is selected, press ∆ or ∇ to select subpages.

Press ▻ to open the next folder of the selected subpage.

Press ∆ or ∇ to select functions or to set a numeric value, if required.

Press ✔ to select and confirm a function.

Once a main menu page is selected, this selection remains stored until another main menu page is selected. Subpages are changed by pressing ∇ or ∆.

Vehicle and service messages are popped-up in the Driver Information Centre if required. Confirm messages by pressing ✔. Vehicle messages ⇨ 124.

Trip/fuel information menu, ⁄i\ or Info

The following list contains all possible Info Menu pages. Some may not be available for your particular vehicle. Depending on the display some functions are symbolised.

Turn the adjuster wheel or press ∆ or ∇ to select a page:

- trip odometer 1 or A
  average fuel consumption 1 or A
  average speed 1 or A
- trip odometer 2 or B
  average fuel consumption 2 or B
  average speed 2 or B
- digital speed
- fuel range
- instantaneous fuel consumption
- remaining oil life
- tyre pressure
- timer
- traffic sign assistant
- following distance
- blank page

On Baselevel display, the pages Remaining Oil Life, Tyre Pressure, Traffic Sign Assistant and Following Distance are displayed in the Vehicle information menu, select 🚗 by pressing **MENU**.

Trip odometer 1/A or 2/B

Trip odometer displays the current distance since a certain reset.

Trip odometer counts up to a distance of 9,999 km then restarts at 0.

To reset on Baselevel display, press **SET/CLR** for a few seconds, on Midlevel and Uplevel display, press ⊳ and confirm with ✔.

The information of trip odometer page 1 and 2 can be reset separately for odometer, average consumption and average speed while the respective display is active.

Average fuel consumption 1/A or 2/B

Display of average consumption. The measurement can be reset at any time and starts with a default value.

To reset on Baselevel display, press **SET/CLR** for a few seconds, on Midlevel and Uplevel display, press ⊳ and confirm with ✔.

Average speed 1/A or 2/B

Display of average speed. The measurement can be reset at any time.

To reset on Baselevel display, press **SET/CLR** for a few seconds, on Midlevel and Uplevel display, press ⊳ and confirm with ✔.

Digital speed

Digital display of the instantaneous speed.

Fuel range

Range is calculated from current fuel tank level and current consumption. The display shows average values.

After refuelling, the range is updated automatically after a brief delay.

When the fuel level in the tank is low, a message appears on the display and control indicator ⛽ in the fuel gauge illuminates.

When the tank must be refuelled immediately, a warning message appears and remains on the display. Additionally, control indicator ⛽ in the fuel gauge flashes ⇨ 111.

Instantaneous fuel consumption

Display of the instantaneous consumption.

Remaining oil life

Indicates an estimate of the oil's useful life. The number in % means the remaining of current oil life ⇨ 105.

Tire pressure

Checks tyre pressure of all wheels during driving ⇨ 264.

Timer

To start and stop press ✔. To reset, press ⊳ and confirm Reset.

Traffic sign assistant

Displays the detected traffic signs for the current route section ⇨ 224.

Following distance

Displays the distance in seconds to a preceding moving vehicle ⇨ 201. If Adaptive cruise control is active this page shows the following distance setting instead.

Blank page

A blank page can be selected when no DIC information is requested.

Eco information menu,

- Top consumers
- Economy trend
- Eco index

On Mid- and Uplevel display the pages Top Consumers, Economy Trend and Eco index, are displayed in the Trip/fuel information menu, select **Info**.

Top Consumers

List of top comfort consumers currently switched on is displayed in descending order. Fuel saving potential is indicated.

During sporadic driving conditions, the engine will activate the heated rear window automatically to increase the engine load. In this event, the heated rear window is indicated as one of the top consumers, without activation by the driver.

Economy Trend

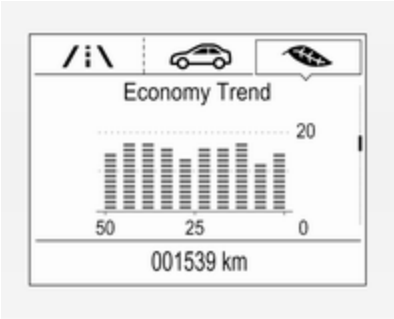

Displays the average consumption development over a distance of 50 km. Filled segments display the consumption in 5 km steps and shows the effect of topography or driving behaviour on fuel consumption.

Economy index

The current fuel consumption is indicated on an economic scale. For economical driving, adapt driving style to keep the filled segments within the Eco area. The more segments are filled, the higher the fuel consumption.

Simultaneously the average consumption value is indicated.

Audio menu

Audio menu enables browsing for music, selecting from favourites or changing the audio source.

See Infotainment manual.

Phone menu

Phone menu enables managing and performing of phone calls, scrolling through contacts or operating handsfree phoning.

See Infotainment manual.

Navigation menu

Navigation menu enables route guidance.

See Infotainment manual.

Vehicle information menu, or Options

The following list contains all possible Options Menu pages. Some may not be available for your particular vehicle. Depending on the display some functions are symbolised.

Turn the adjuster wheel or press ∆ or ∇ to select a page and follow the instructions given in the submenus:

- units
- display themes
- info pages
- speed warning
- tyre loading
- pocket gauges
- software information

Units

Press ⊳ while units page is displayed. Select imperial or metric units by pressing ✔.

Display themes

Press ⊳ while display themes is displayed. Select Sport or Touring mode by pressing ✔. Sport mode includes more vehicle information, Tour mode includes more media information.

This setting is only available with Uplevel display.

Info pages

Press ⊳ while Info pages is displayed. A list of all items in the Info Menu is displayed. Select the functions to be displayed in the Info page by pressing ✔. Selected pages have a ✔ in a checkbox. Non viewable functions have a blank checkbox. See **Info Menu** above.

Speed warning

The speed warning display allows you to set a speed that you do not want to exceed.

To set the speed warning, press ⊳ while the page is displayed. Press ∆ or ∇ to adjust the value. Press ✔ to set the speed. Once the speed is set, this feature can be turned off by pressing ✔ while viewing this page. If the selected speed limit is exceeded, a pop-up warning is displayed with a chime.

Tyre loading

The tyre pressure category according to the actual tyre inflation pressure can be selected ⇨ 264.

Pocket gauges

Depending on vehicle equipment, pocket gauges can be displayed in the outer left and right edges near the speedometer. Different gauge types can be configured.

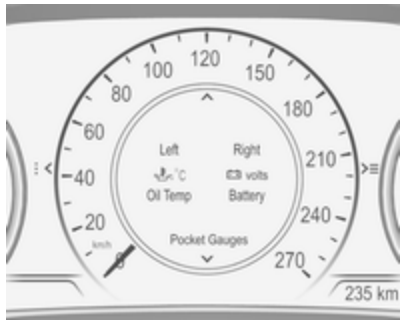

Press ⊳ while pocket gauges is displayed. Select left or right pocket by pressing ⊳ or ⊲. Choose gauge type for each pocket by pressing ∇. Confirm with ✔.

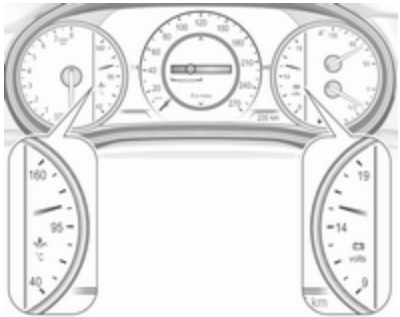

Selectable gauge types are:

- **Battery voltage**
  Displays the vehicle battery voltage (V). During engine running voltage can vary between 12V and 15,5V. Temporary voltage below 12V is possible when high electrical load is used.
- **Oil temperature**
  Displays oil temperature in degrees Celsius.
- **Oil pressure**
  Displays oil pressure in kPa.
- **Engine boost**
  Displays boost of the turbo charger in kPa.

Pocket gauges is only available with Uplevel display.

Software information
Displays the open source software information.

Info display

The Info-Display is located in the instrument panel near the instrument cluster.

Depending on the vehicle configuration the vehicle has a

- **7" Colour-Info-Display** with touchscreen functionality

  or

- **8" Colour-Info-Display** with touchscreen functionality

The Info displays can indicate:

- time ⇨ 92
- outside temperature ⇨ 92
- date ⇨ 92
- Infotainment system, see description in the Infotainment manual
- climate control settings ⇨ 152
- rear view camera ⇨ 221
- panoramic view system ⇨ 219
- parking assist instructions ⇨ 207
- rear cross traffic ⇨ 223
- Flex Ride visualisation menu ⇨ 184
- navigation, see description in the Infotainment manual
- system messages
- settings for vehicle personalisation ⇨ 126

7" Colour-Info-Display

Selecting menus and settings
Menus and settings are accessed via the display.

Press ⏻ to switch on the display.

Press ⌂ to display the homepage.

Touch required menu display icon with the finger.

Touch a respective icon to confirm a selection.

Touch ↩ to return to the next higher menu level.

Press ⌂ to return to the homepage.

For further information, see Infotainment manual.

Vehicle personalisation ⇨ 126.

8" Colour-Info-Display

Selecting menus and settings

There are three options to operate the display:

- via buttons below the display
- by touching the touchscreen with the finger
- via speech recognition

Button operation

Press ⏻ to switch on the display.

Press ⌂ to display the homepage.

Press **BACK** to exit a menu without changing a setting.

For further information, see Infotainment manual.

Touchscreen operation

Display must be switched on by pressing ⏻. Press ⌂ to select homepage.

Touch required menu display icon or select a function with the finger.

Scroll a longer submenu list with the finger up or down.

Confirm a required function or selection by touching.

Touch ↩ on the display to exit a menu without changing a setting.

Press ⌂ to return to the homepage.

For further information, see Infotainment manual.

Speech recognition

Description see Infotainment manual.

Vehicle personalisation ⇨ 126.

Valet mode

Some functions of the Driver Information Centre and the Info-Display can be limited for some drivers. The load compartment is being locked and cannot be unlocked.

For more information, see Infotainment manual.

Head-up display

The head-up display shows driver information concerning the instrument cluster onto the windscreen on the driver's side.

The information appears as an image projected from a lense in the instrument panel onto the windscreen directly ahead in driver's view. The image appears focused out toward the front of the vehicle.

Depending on the equipment head-up display can indicate:

- general driving information
- alerts from driver assistance systems
- automatic transmission selector lever position
- gear shift indication
- audio/phone information
- turn-by-turn navigation information if equipped with navigation infotainment.

There are three controls above the light switch to operate the head-up display.

Display views

Different views are selectable in the head-up display by pressing INFO button. Each press will change the display view.

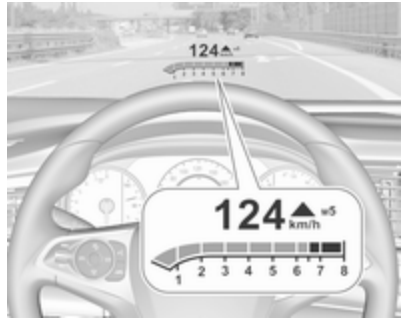

Speed view

Indicates

- speedometer: digital indication of speed
- traffic signs: indication of speed limits

Performance View

Indicates

- speedometer: digital indication of speed
- tachometer: engine speed in round per minute
- automatic transmission: selector lever position

- manual/automatic transmission: gear shift indication
- auto stop indication

Audio view

Indicates

- speedometer: digital indication of speed
- actual audio playing information

Navigation view

Indicates

- speedometer: digital indication of speed
- turn-by-turn navigation information

Active safety control indicators

On all views control indicators of following Driver assistance systems are indicated in the top line of the display

- vehicle detected ahead : vehicle recognition
- lane keep assist : status and warning
- adaptive cruise control : set speed and status
- pedestrian detected ahead : pedestrian recognition

Pop-up alerts

The following list contains just an extract of possible alerts. Some may not be available for your particular vehicle, others can appear depending on vehicle configuration.

Alerts pop-up on each page if required

- pedestrian protection alert
- forward collision alert
- up-/downshift alert
- incoming call

Alerts with lower priority can be reset by pressing ✓, high priority alerts appear as long as danger continues. System messages or vehicle warnings may require immediately action. Seek the assistance of a workshop.

Adjust position of head-up display image

1. Adjust the driver's seat.
2. Start the engine.
3. Press down or lift up button to centre the image. It can only be adjusted up and down, not side to side.

⚠ Warning

If the head-up display image is too bright or too high in your field of view, it may obstruct your view when it is dark outside. Be sure to keep the head-up display image dim and placed low in your field of view.

Adjust brightness

The head-up display image will automatically dim and brighten to compensate for outside lighting. Brightness can also be adjusted manually as needed:

Lift up and hold to brighten the display. Press down and hold to dim the display.

The image can temporarily light up depending on angel and position of sunlight.

Switching off

Hold down ±☼ to turn the head-up display off.

Language

Preferred language can be set in vehicle personalisation menu ⇨ 126.

Units

Units can be changed in the settings menu of the Driver Information Centre ⇨ 113.

Care of head-up display

Clean the inside of the windscreen as needed to remove any dirt or film that could reduce the sharpness or clarity of the head-up image.

Clean the head-up display lens in the instrument panel with a soft cloth sprayed with glass cleaner. Wipe the lens gently, then dry it.

System limitations

Head-up display may not operate properly when:

- The lens in the instrument panel is covered by objects or windscreen and lens are not clean.
- Display brightness is too dim or bright.
- Image is not adjusted to the proper height.
- The driver wears polarised sunglasses.

If the head-up image is not correct for other reasons, contact a workshop.

The windscreen is part of the head-up display system. Windscreen replacement ⇨ 39.

Vehicle messages

Messages are indicated in the Driver Information Centre, in some cases together with a warning and signal buzzer.

On Baselevel display press **SET/CLR** on the turn signal lever to confirm a message.

On Midlevel and Uplevel display, press ✔ to confirm a message.

Vehicle and service messages

The vehicle messages are displayed as text. Follow the instructions given in the messages.

Messages in the Colour-Info-Display

Some important messages may appear additionally in the Colour-Info-Display. Press the multifunction knob to confirm a message. Some messages only pop-up for a few seconds.

Warning chimes

When starting the engine or whilst driving

Only one warning chime will sound at a time.

The warning chime regarding not fastened seat belts has priority over any other warning chime.

- If seat belt is not fastened.
- If a door or the tailgate is not fully closed when starting off.
- If a certain speed is exceeded with parking brake applied.
- If adaptive cruise control deactivates automatically.
- If approaching a vehicle ahead too closely.
- If approaching a pedestrian ahead too closely.
- If a programmed speed or speed limit is exceeded.
- If a warning message appears in the Driver Information Centre.
- If the electronic key is not in the passenger compartment.
- If the parking assist detects an object.
- If an unintended lane change occurs.
- If the diesel particle filter has reached the maximum filling level.

When the vehicle is parked and/or the driver's door is opened

- With exterior lights on.
- If the trailer hitch is not engaged.

During an Autostop

- If the driver's door is opened.
- If any condition for an Autostop is not fulfilled.

Battery voltage

When the vehicle battery voltage is running low, a warning message will appear in the Driver Information Centre.

1. Switch off any electrical consumers which are not required for a safe ride, e.g. seat heating, heated rear window or other main consumers.
2. Charge the vehicle battery by driving continuously for a while or by using a charging device.

The warning message will disappear after the engine has been started twice without a voltage drop.

If the vehicle battery cannot be recharged, have the cause of the fault remedied by a workshop.

Vehicle personalisation

The vehicle's behaviour can be personalised by changing the settings in the Info-Display.

Some of the personal settings for different drivers can be memorised individually for each vehicle key. Memorised settings ⇨ 22.

Depending on vehicle equipment and country-specific regulations some of the functions described below may not be available.

Some functions are only displayed or active when the engine is running.

Personal settings

7" Colour-Info-Display

Press ⌂, select **Settings** and then **Vehicle** on the touch-screen.

In the corresponding submenus the following settings can be changed:

Vehicle

- **Climate & Air Quality**

  Auto Fan Max Speed: Modifies the level of the cabin airflow of the climate control in automatic mode.

  Auto Heated Seats: Automatically activates the seat heating.

  Auto Defog: Supports windscreen dehumidification by automatically selecting the necessary settings and automatic air conditioning mode.

Auto Rear Defog: Automatically activates heated rear window.

- **Collision / Detection Systems**

  Forward Collision Alert : Activates or deactivates forward collision alert.

  Auto Collision Preparation: Activates or deactivates the automatic brake functionality of the vehicle in the event of imminent collision danger. The following is selectable: the system will take over brake control, warn by chimes only or is deactivated completely.

  Forward Collision System: Changes the settings of forward collision alert.

  Front pedestrian protection: Activates or deactivates and changes the settings of the front pedestrian protection.

  Rear Cross Traffic Alert: Activates or deactivates rear cross traffic alert.

  Park Assist: Activates or deactivates the ultrasonic parking assist. Activation is selectable with or without attached trailer coupling.

  Go Notifier: Activates or deactivates the reminder to drive off when the adaptive cruise control holds the vehicle at standstill.

  Side Blind Zone Alert: Activates or deactivates side blind zone alert.

- **Comfort and Convenience**

  Auto Memory Recall : Changes the settings to the recall of memorised settings for power seat adjustment.

  Easy Exit Driver Seat: Activates or deactivates easy exit function of the power seat.

  Chime Volume: Changes the volume of warning chimes.

  Reverse Tilt Mirror: Activates or deactivates the parking assist function of the exterior mirrors.

  Auto Mirror Folding: Activates or deactivates folding of the exterior mirrors with the remote control.

  Personalization By Driver: Activates or deactivates the personalisation function.

  Rain Sense Wipers: Activates or deactivates automatic wiping with rain sensor.

  Auto Wipe in Reverse Gear: Activates or deactivates automatic switching on of the rear window wiper when reverse gear is engaged.

- **Lighting**

  Vehicle Locator Lights: Activates or deactivates the entry lighting.

  Exit Lighting: Activates or deactivates and changes the duration of exit lighting.

  Left or Right Hand Traffic : Changes between lighting for left or right-hand traffic.

  Adaptive Forward Lighting : Changes the settings of the functions of the LED headlights.

- **Power Door Locks**

  Unlocked Door Anti Lock Out: Activates or deactivates the door

locking function while a door is open.

Auto Door Lock: Activates or deactivates the automatic door locking function after switching on ignition.

Delayed Door Lock: Activates or deactivates the delayed door locking function. This feature delays the actual locking of the doors until all doors are closed.

- **Remote Lock, Unlock, Start**

  Remote Unlock Light Feedback: Activates or deactivates the hazard warning flasher feedback whilst unlocking.

  Remote Lock Feedback: Changes what kind of feedback is given when locking the vehicle.

  Remote Door Unlock: Changes the configuration to unlock only the driver's door or the whole vehicle whilst unlocking.

  Relock Remotely Unlocked Doors: Activates or deactivates the automatic relock function after unlocking without opening the vehicle.

  Remote Window Operation: Activates or deactivates the operation of power windows with electronic key.

  Passive Door Unlock: Changes the configuration to unlock only the driver's door or the whole vehicle whilst unlocking.

  Passive Door Lock : Activates or deactivates the passive locking function. This feature locks the vehicle automatically after several seconds if all doors have been closed and an electronic key has been removed from the vehicle.

  Remote Left in Vehicle Alert: Activates or deactivates the warning chime when the electronic key remains in the vehicle.

Personal settings

8" Colour-Info-Display

Press ⚙ then select the **SETTINGS** icon.

In the corresponding submenus the following settings can be changed:

Vehicle

- **Climate and Air Quality**

  Auto Fan Speed: Modifies the level of the cabin airflow of the climate control in automatic mode.

  Auto Heated Seats: Automatically activates the seat heating.

  Auto Demist: Supports windscreen dehumidification by automatically selecting the necessary settings and automatic air conditioning mode.

Auto Rear Demist: Automatically activates heated rear window.

- **Collision / Detection Systems**

  Forward Collision Alert: Activates or deactivates forward collision alert.

  Auto Collision Preparation: Activates or deactivates the automatic brake functionality of the vehicle in the event of imminent collision danger. The following is selectable: the system will take over brake control, warn by chimes only or is deactivated completely.

  Forward Collision System: Changes the settings of forward collision alert.

  Front pedestrian protection: Activates or deactivates and changes the settings of the front pedestrian protection.

  Rear Cross Traffic Alert: Activates or deactivates rear cross traffic alert.

  Park Assist: Activates or deactivates the ultrasonic parking assist. Activation is selectable with or without attached trailer coupling.

  Go Notifier: Activates or deactivates the reminder function of the adaptive cruise control.

  Side Blind Zone Alert: Activates or deactivates side blind zone alert.

- **Comfort and Convenience**

  Auto Memory Recall: Changes the settings to the recall of memorised settings for power seat adjustment.

  Easy Exit Driver Seat: Activates or deactivates easy exit function of the power seat.

  Chime Volume: Changes the volume of warning chimes.

  Reverse Tilt Mirror: Activates or deactivates the parking assist function of the exterior mirrors.

  Auto Mirror Folding: Activates or deactivates folding of the exterior mirrors with the remote control.

  Personalisation by Driver: Activates or deactivates the personalisation function.

  Rainsense Wipers: Activates or deactivates automatic wiping with rain sensor.

  Auto Wipe in Reverse Gear: Activates or deactivates automatic switching on of the rear window wiper when reverse gear is engaged.

- **Lighting**

  Vehicle Locator Lights: Activates or deactivates the entry lighting.

  Exit Lighting: Activates or deactivates and changes the duration of exit lighting.

  Left or Right Hand Traffic: Changes between lighting for left or right-hand traffic.

  Adaptive Forward Lighting: Changes the settings of the functions of the LED headlights.

- **Power Door Locks**

  Unlocked Door Anti-Lockout: Activates or deactivates the door locking function while a door is open.

  Auto Door Lock: Activates or deactivates the automatic door

locking function after switching on ignition.

Delayed Door Lock: Activates or deactivates the delayed door locking function. This feature delays the actual locking of the doors until all doors are closed.

- **Remote Lock, Unlock, Start**

Remote Unlock Light Feedback: Activates or deactivates the hazard warning flasher feedback whilst unlocking.

Remote Lock Feedback: Changes what kind of feedback is given when locking the vehicle.

Remote Door Unlock: Changes the configuration to unlock only the driver's door or the whole vehicle whilst unlocking.

Relock Remote Unlocked Doors: Activates or deactivates the automatic relock function after unlocking without opening the vehicle.

Remote Window Operation: Activates or deactivates the operation of power windows with electronic key.

Passive Door Unlock: Changes the configuration to unlock only the driver's door or the whole vehicle whilst unlocking.

Passive Door Lock: Activates or deactivates the passive locking function. This feature locks the vehicle automatically after several seconds if all doors have been closed and an electronic key has been removed from the vehicle.

Remote Left in Vehicle Alert: Activates or deactivates the warning chime when the electronic key remains in the vehicle.

Telematics service

OnStar

OnStar is a personal connectivity and service assistant with integrated Wi-Fi hotspot. The OnStar service is available 24 hours a day, seven days a week.

Note
OnStar is not available for all markets. For further information, contact your workshop.

Note
In order to be available and operational, OnStar needs a valid OnStar subscription, functioning vehicle electrics, mobile service and GPS satellite link.

To activate the OnStar services and set up an account, press ⓞⓝ and speak with an advisor.

Depending on the equipment of the vehicle, the following services are available:

- Emergency services and support in the case of a vehicle breakdown
- Wi-Fi hotspot
- Smartphone application
- Remote control, e.g. location of the vehicle, activation of horn and lights, control of central locking system
- Stolen vehicle assistance
- Vehicle diagnostics
- Destination download

Note
The OnStar module of the vehicle is deactivated after ten days without an ignition cycle. Functions requiring a data connection will be available again after switching on the ignition.

OnStar buttons

Privacy button
Press and hold ⊘ until a message is heard to activate or deactivate the transmission of the vehicle location.

Press ⊘ to answer a call or to end a call to an advisor.

Press ⊘ to access the Wi-Fi settings.

Service button
Press ⊙ to establish a connection to an advisor.

SOS button
Press SOS to establish a priority emergency connection to a specially trained emergency advisor.

Status LED
Green: The system is ready with activated transmission of the vehicle location.

Green flashing: The system is on a call.

Red: A problem arose.

Off: The system is ready with deactivated transmission of the vehicle location or the system is in standby mode.

Red / green flashing for a short period of time: The transmission of the vehicle location has been deactivated.

OnStar services

General services
If you need any information e.g. opening hours, points of interest and destinations or if you need any support e.g. in the case of a vehicle

breakdown, a flat tyre and empty fuel tank, press ⓞ to establish a connection to an advisor.

Emergency services

In the case of an emergency situation, press ⓔ and talk to an advisor. The advisor then contacts emergency or assistance service providers and directs them to your vehicle.

In the case of an accident with activation of airbags or belt tensioners, an automatic emergency call is established. The advisor is immediately connected to your vehicle to see whether help is needed.

Note
Establishing an emergency call may not be possible in areas without sufficient network availability or due to hardware damage during an accident.

Wi-Fi hotspot

The Wi-Fi hotspot of the vehicle provides internet connectivity with a maximum speed of 4G/LTE.

Note
The Wi-Fi hotspot functionality is not available for all markets.

Up to seven devices may be connected.

To connect a mobile device with the Wi-Fi hotspot:

1. Press ⚙ and then select Wi-Fi settings on the Info-Display. The settings displayed include the Wi-Fi hotspot name (SSID), password and connection type.
2. Start a Wi-Fi network search on your mobile device.
3. Select your vehicle hotspot (SSID) when listed.
4. When prompted, enter the password on your mobile device.

Note
To change the SSID or password, press ⓞ and talk to an advisor or log in to your account.

To switch off the Wi-Fi hotspot functionality, press ⓞ to call an advisor.

Smartphone app

With the myOpel smartphone app, some vehicle functions can be operated remotely.

The following functions are available:

- Lock or unlock vehicle.
- Honk horn or flash lights.
- Check fuel level, engine oil life and tyre pressure (only with tyre pressure monitoring system).
- Send navigation destination to the vehicle, if equipped with a built-in navigation system.
- Locate vehicle on a map.
- Manage Wi-Fi settings.

To operate these functions, download the app from App Store® or Google Play™ Store.

Remote control

If desired, use any phone to call an advisor, who can remotely operate specific vehicle functions. Find the respective OnStar phone number on our country-specific website.

The following functions are available:

- Lock or unlock vehicle.
- Provide information on the vehicle location.
- Honk horn or flash lights.

Stolen vehicle assistance

If the vehicle is stolen, report the theft to the authorities and request OnStar stolen vehicle assistance. Use any phone to call an advisor. Find the respective OnStar phone number on our country-specific website.

OnStar can provide support in locating and recovering the vehicle.

Theft alert

When the anti-theft alarm system is triggered, a notification is sent to OnStar. You are then informed about this event by text message or email.

Restart prevention

By sending remote signals, OnStar can prevent the vehicle from restarting once it has been turned off.

On-demand diagnostics

At any time e.g. if the vehicle displays a vehicle message, press ⓞⓝ to contact an advisor and ask to complete a real-time diagnostic check to directly determine the issue. Depending on the results, the advisor will provide further support.

Diagnostic report

The vehicle automatically transmits diagnostic data to OnStar which sends a monthly email report to you and your preferred workshop.

Note
The workshop notification function can be disabled in your account.

The report contains the status of key operating systems of the vehicle like engine, transmission, airbags, ABS, and other major systems. It also provides information on possible maintenance items and tyre pressure (only with tyre pressure monitoring system).

To look at the information in greater detail, select the link within the email and log in to your account.

Destination download

A desired destination can be directly downloaded to the navigation system.

Press ⓞⓝ to call an advisor and describe the destination or point of interest.

The advisor can look up any address or point of interest and directly send the destination to the built-in navigation system.

OnStar settings

OnStar PIN

To have full access to all OnStar services, a four-digit PIN is required. The PIN has to be personalised when first talking to an advisor.

To change the PIN, press ⓞⓝ to call an advisor.

Account data

An OnStar subscriber has an account where all the data is stored. To request a change of the account information, press ⓞⓝ and talk to an advisor or log in to your account.

If the OnStar service is used on another vehicle, press ⓞ and request that the account be transferred to the new vehicle.

Note
In any case, if the vehicle is disposed of, sold or otherwise transferred, immediately inform OnStar about the changes and terminate the OnStar service on this vehicle.

Vehicle location

The vehicle location is transmitted to OnStar when service is requested or triggered. A message on the Info-Display informs about this transmission.

To activate or deactivate the transmission of the vehicle location, press and hold ⓝ until an audio message is heard.

The deactivation is indicated by the status light flashing red and green for a short period of time and each time the vehicle is started.

Note
If the transmission of the vehicle location is deactivated, some services are no longer available.

Note
The vehicle location always remains accessible to OnStar in the case of an emergency.

Find the privacy policy in your account.

Software updates

OnStar may remotely carry out software updates without further notice or consent. These updates are to enhance or maintain safety and security or the operation of the vehicle.

These updates may concern privacy issues. Find the privacy policy in your account.

Lighting

Exterior lighting **135**
Light switch 135
Automatic light control 136
High beam 136
High beam assist 136
Headlight flash 138
Headlight range adjustment 138
Headlights when driving abroad 138
Daytime running lights 139
LED headlights 139
Hazard warning flashers 142
Turn and lane-change signals . 142
Front fog lights 143
Rear fog light 143
Parking lights 143
Reversing lights 144
Misted light covers 144
Interior lighting **144**
Instrument panel illumination control 144
Interior lights 144
Reading lights 145
Sunvisor lights 146
Lighting features **146**
Centre console lighting 146
Entry lighting 146
Exit lighting 146
Battery discharge protection 147

Exterior lighting

Light switch

Turn light switch:

AUTO : automatic light control switches automatically between daytime running light and headlight

⇶ : sidelights

≣D : headlights

When switching on the ignition, automatic light control is active.

Control indicator ⇶ ⇨ 111.

Tail lights

Tail lights are illuminated together with low/high beam and sidelights.

Automatic light control

When the automatic light control function is switched on and the engine is running, the system switches between daytime running lights and headlights automatically depending on the external lighting conditions and information given by the wiper system.

Daytime running light ⇨ 139.

Automatic headlight activation

During poor lighting conditions headlights are switched on.

Additionally, headlights are switched on if the windscreen wipers have been activated for several wipes.

LED headlights ⇨ 139.

Tunnel detection

When a tunnel is entered, headlights are switched on immediately.

High beam

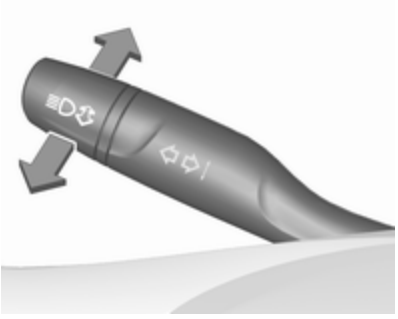

Push lever to switch from low to high beam.

Pull lever to deactivate high beam.

High beam assist ⇨ 139.

High beam assist

Description for version with halogen headlights. High beam assist with LED headlights ⇨ 139.

This feature allows the high beam to function as the main driving light at night and when vehicle speed is faster than 40 km/h.

It switches automatically to low beam when:

- A sensor detects the lights of oncoming or preceding vehicles.
- Driving in urban areas.
- The vehicle speed is slower than 20 km/h.
- It is foggy or snowy.
- Front or rear fog lights are switched on.

If there are no restrictions detected, the system switches back to high beam.

Activation

Turn signal lever with MENU button

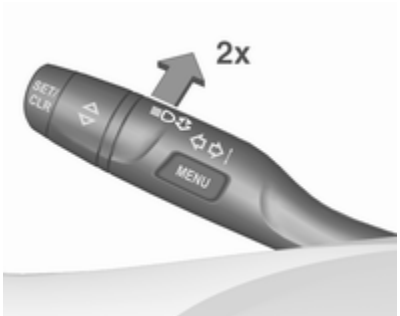

The high beam assist is activated by pushing the turn signal lever twice at a speed above 40 km/h.

Turn signal lever with ≣Ⓐ button

The green control indicator ≣Ⓐ illuminates continuously when the assist is activated, the blue one ≣D illuminates when high beam is on.

Control indicator ≣Ⓐ ⇨ 111.

Deactivation

With high beam on, pull the turn signal lever once to deactivate high beam assist. If a headlight flash is activated when the high beam is off, the high beam assist will remain activated.

Pushing the indicator lever to activate manual high beam will deactivate high beam assist. It is also deactivated when fog lights are switched on.

Turn signal lever with **MENU** button: when high beam is off, push indicator lever twice to deactivate high beam assist.

Turn signal lever with ≣Ⓐ button: press ≣Ⓐ once to deactivate high beam assist.

The latest setting of the high beam assist is being stored and remains set when the ignition is switched on again.

Headlight flash

To activate the headlight flash, pull lever.

Pulling lever deactivates high beam.

LED headlights ⇨ 139.

Headlight range adjustment

Manual headlight range adjustment

To adapt headlight range to the vehicle load to prevent dazzling: push and then turn to required position.

0 : front seats occupied
1 : all seats occupied
2 : all seats occupied and load compartment laden
3 : driver's seat occupied and load compartment laden

Dynamic automatic headlight levelling ⇨ 139.

Headlights when driving abroad

The asymmetrical headlight beam extends visibility at the edge of the road at the passenger side.

However, when driving in countries where traffic drives on the opposite side of the road, adjust the headlights to prevent dazzling of oncoming traffic.

Vehicles with halogen headlight system

The headlights do not have to be adjusted.

Vehicles with LED headlight

Headlights can be set for driving on the opposite side of the road in the vehicle personalisation menu via the Info-Display.

Select the relevant setting in **Settings**, ➧ **Vehicle**.

Info-Display ⇨ 120.

Vehicle personalisation ⇨ 126.

Every time the ignition is switched on, ⦿ flashes for approx. four seconds as a reminder.

To deactivate, use the same procedure as described above. ⦿ will not flash when function is deactivated.

Control indicator ⦿ ⇨ 111.

Daytime running lights

Daytime running lights increase visibility of the vehicle during daylight.

They are switched on automatically during daytime when engine is running.

The system switches between daytime running lights and headlights automatically, depending on the lighting conditions. Automatic light control ⇨ 136.

LED headlights

LED headlight system contains a variety of particular LEDs in each headlight which enables the control of different lighting programs.

Light distribution and intensity of light are variably triggered depending on the lighting conditions, road type and driving situation. The vehicle adapts the headlights automatically to the situation to enable optimal light performance for the driver.

Some functions of the LED headlights can be deactivated or activated in the vehicle personalisation menu. Select the relevant setting in **Settings**, ⚙ **Vehicle** in the Info-Display. Vehicle personalisation ⇨ 126.

High beam assist can not be deactivated.

The following lighting functions are available with light switch in position **AUTO** or ≡D.

Town light

Activated automatically at a speed up to approx. 55 km/h and in situations with exterior ambient light. The light is wide and symmetrical. A special beam pattern is designed to avoid glare for other road users.

Country light

Activated automatically at a speed above approx. 55 km/h when driving in rural areas. The illumination of the current lane and the side of the road is improved. Oncoming and preceding vehicles are not dazzled.

Curve light

Particular LEDs, based on steering angle and speed, are additionally triggered to improve lighting in curves. This function is activated at speeds from 40 km/h to 70 km/h and reacts to steering angle.

Corner light

When turning off, depending on the steering angle and the turn signal light, particular LEDs are triggered which illuminate the direction of travel. It is activated up to a speed of 40 km/h.

Reverse parking function

To assist driver's orientation when parking, both corner lights and reversing light illuminate when headlights are on and reverse gear is engaged. They remain illuminated for a short time after disengaging reverse gear or until driving faster than 7 km/h in a forward gear.

High beam assist

This feature allows the high beam to function as main driving light at night.

The camera in the windscreen detects the lights of oncoming or preceding vehicles. Each LED on right or left side can be triggered or faded out particularly according to the traffic situation. This gives the best light distribution without dazzling other road users. Once activated, high beam assist remains active and switches high beam on and off depending on surrounding conditions. The latest setting of the high beam assist will remain after the ignition is switched on again.

High beam assist includes a special motorway mode. When driving faster than 115 km/h on motorways, the light beam becomes smaller to avoid dazzling of oncoming traffic. When following vehicles ahead or passing, mirror dazzling for these vehicles is reduced.

Activation
Indicator lever with MENU button

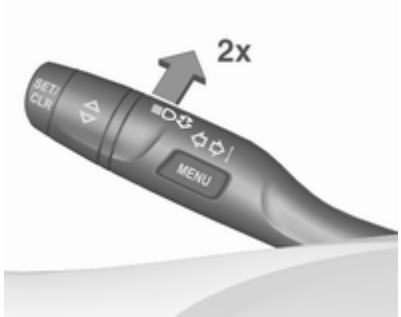

Activate high beam assist by pushing the indicator lever twice. High beam is switched on automatically at a speed above 50 km/h. High beam is switched off at a speed below 35 km/h, but high beam assist remains active.

Indicator lever with ≡D button

Activate high beam assist by pressing ≡D once. High beam is switched on automatically at a speed above 50 km/h. High beam is switched off at a speed below 35 km/h, but high beam assist remains active.

The green control indicator ≡D illuminates continuously when the high beam assist is activated, the blue one ≡D illuminates when high beam is on.

Control indicator ≡D ⇨ 111, ≡D ⇨ 111.

Pressing indicator lever once switches on manual high beam without high beam assist.

High beam assist switches automatically to low beam when:

- Driving in urban areas.
- Camera detects heavy fog.
- Front or rear fog lights are switched on.

If there are no restrictions detected, the system switches back to high beam.

Deactivation

Indicator lever with or without MENU button

If high beam assist is active and high beam is on, pull indicator lever once to deactivate high beam assist.

If high beam assist is active and high beam is off, push indicator lever twice to deactivate high beam assist.

Pushing the indicator lever to activate manual high beam will also deactivate high beam assist.

Indicator lever with ≡D button

If high beam assist is active and high beam is on, press ≡D once or pull indicator lever once to deactivate high beam assist.

If high beam assist is active and high beam is off, press ≡D once to deactivate high beam assist.

Pushing the indicator lever to activate manual high beam will also deactivate high beam assist.

Headlight flash in conjunction with high beam assist

Headlight flash by pulling indicator lever once will not deactivate high beam assist when high beam is off.

Headlight flash by pulling indicator lever once deactivates high beam assist when high beam is on.

Dynamic automatic headlight levelling

To prevent oncoming traffic from being dazzled, headlight levelling is automatically adjusted based on inclination information measured by front and rear axle, acceleration or deceleration and vehicle speed.

Headlights when driving abroad

⇨ 138.

Fault in LED headlight system

When the system detects a failure in the LED headlight system, it selects a preset position to avoid dazzling of oncoming traffic. A warning is displayed in the Driver Information Centre.

Hazard warning flashers

Operated by pressing ⚠.

In the event of an accident with airbag deployment, the hazard warning flashers are activated automatically.

Turn and lane-change signals

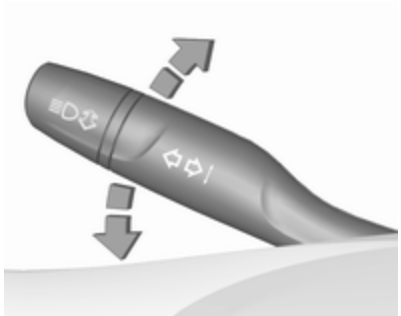

lever up : right turn signal
lever down : left turn signal

A resistance point can be felt by moving the lever.

Constant flashing is activated when the lever is being moved beyond the resistance point. It is deactivated when the steering wheel is moved in the opposite direction or lever is manually moved back to its neutral position.

Activate temporary flashing by holding the lever just before the resistance point. Turning lights will flash until lever is being released.

To activate three flashes, tap the lever briefly without passing the resistance point. With a trailer connected, the turn signal flashes six times and tone frequency changes.

Front fog lights

Operated by pressing ≢D.

Light switch in position **AUTO**: switching on front fog lights will switch headlights on automatically.

Rear fog light

Operated by pressing ⦶≢.

Light switch in position **AUTO**: switching on rear fog light will switch headlights on automatically.

Light switch in position ≣D⦶: rear fog light can only be switched on with front fog lights.

The vehicle rear fog light is deactivated when towing a trailer or a plug is connected with the socket, e. g. when a bicycle carrier is used.

Parking lights

When the vehicle is parked, the parking lights on one side can be activated:

1. Switch off ignition.
2. Move turn signal lever all the way up (right parking lights) or down (left parking lights).

Confirmed by a signal and the corresponding turn signal control indicator.

Reversing lights

The reversing light comes on when the ignition is on and reverse gear is selected.

Misted light covers

The inside of the light housing may mist up briefly in poor, wet and cold weather conditions, in heavy rain or after washing. The mist disappears quickly by itself; to help switch on the headlights.

Interior lighting

Instrument panel illumination control

Brightness of the following lights can be adjusted in position AUTO when the light sensor detects night conditions, or in position ≡D or ≡D.

- instrument panel illumination
- Info-Display
- illuminated switches and operation elements

Push and then turn ☼ until the desired brightness is obtained.

Interior lights

During entry and exit of the vehicle, the front and rear courtesy lights automatically switch on and then off after a delay.

Note
In the event of an accident with airbag deployment the courtesy lights are turned on automatically.

Front courtesy light

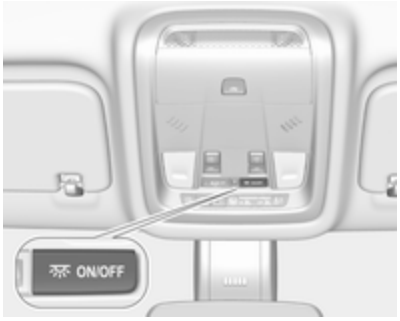

press ON/OFF : interior lights are switched on or off manually

press OFF : interior lights are not automatically switched on when a door is opened. Deactivation is indicated by a LED in the switch.

Rear courtesy lights

Illuminate in conjunction with the front courtesy light.

Reading lights

Operated by pressing the respective reading light.

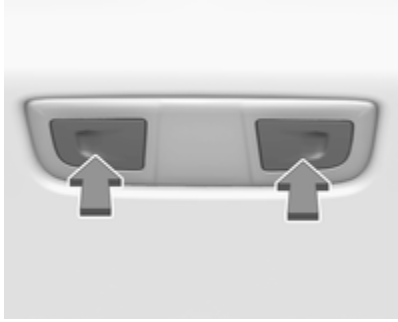

Illustration shows rear reading light.

Sunvisor lights

Illuminates when the cover is opened.

Lighting features

Centre console lighting

Spotlight incorporated in the interior lighting comes on when headlights are switched on.

Entry lighting

Welcome lighting

The following lights are switched on for a short time by unlocking the vehicle with the electronic key:

- headlights
- puddle lights in both outside mirrors
- tail lights
- number plate lights
- instrument panel light
- interior lights

Some functions are only operable when it is dark outside to facilitate locating the vehicle.

The lighting switches off immediately when the ignition is switched on. Starting off ⇨ 18.

This function can be activated or deactivated in the vehicle personalisation.

Select the relevant setting in **Settings**, ➡ **Vehicle** in the Info-Display.

Info-Display ⇨ 120.

Vehicle personalisation ⇨ 126.

The settings can be saved for the key being used ⇨ 22.

The following lights will additionally switch on when the driver's door is opened:

- illumination of some switches
- Driver Information Centre
- door pocket lights

Exit lighting

The following lights will switch on when the ignition is switched off:

- interior lights
- instrument panel light
- puddle lights in both outside mirrors

They will switch off automatically after a delay. This function works only in the dark. Theatre lighting is activated if the driver's door is opened during this time.

Path lighting

Headlights, tail lights and number plate lights illuminate the surrounding area for an adjustable time after leaving the vehicle.

Activating
Halogen headlights

1. Switch off the ignition.
2. Open the driver's door.
3. Pull the turn signal lever.
4. Close the driver's door.

If the driver's door is not closed, the lights switch off after two minutes.

Exit lighting is switched off immediately if the turn signal lever is pulled while the driver's door is open.

LED headlights
Path lighting is activated, when the ignistion is switched off and the driver's door is opened.

This function can be activated or deactivated in the vehicle personalisation.

Select the relevant setting in **Settings**, ➧ **Vehicle** in the Info-Display.

Info-Display ⇨ 120.

Vehicle personalisation ⇨ 126.

The settings can be saved for the key being used ⇨ 22.

Battery discharge protection

Vehicle battery state of charge function

The function guarantees longest vehicle battery life via a generator with controllable power output and optimised power distribution.

To prevent discharge of the vehicle battery when driving, the following systems are reduced automatically in two stages and finally switched off:

- auxiliary heater
- heated rear and front window
- heated steering wheel
- heated mirrors
- heated seats
- fan

In the second stage, a message which confirms the activation of the vehicle battery discharge protection will be displayed in the Driver Information Centre.

Switching off electric lights

To prevent discharge of the vehicle battery when the ignition is switched off, some interior lights are switched off automatically after some time.

Climate control

Climate control systems **149**
Air conditioning system 149
Electronic climate control system 152
Auxiliary heater 158
Air vents **158**
Adjustable air vents 158
Fixed air vents 159
Maintenance **159**
Air intake 159
Air conditioning regular operation 160
Service 160

Climate control systems

Air conditioning system

Illustration shows functions which may not be available for your particular vehicle.

Controls for:

- Fan speed
- Temperature **TEMP**
- Air distribution , , and
- Air conditioning **A/C**
- Demisting and defrosting FRONT
- Air recirculation
- External air
- Heated rear window and exterior mirrors REAR
- Heated windscreen
- Heated seats

Some changes of settings are indicated briefly in the Info-Display. Activated functions are indicated by the LED in the respective button.

Fan speed

Adjust the air flow by turning to the desired speed.

clockwise : increase
anti-clockwise : decrease

Temperature TEMP

Adjust the temperature by turning **TEMP** to the desired temperature.

red area : warmer
blue area : colder

Heating will not be fully effective until the engine has reached normal operating temperature.

Air distribution

Press:

- : to windscreen and front door windows
- : to head area and rear seats via adjustable air vents
- : to front and rear foot well and windscreen

Combinations are possible.

Air conditioning A/C

Press **A/C** to switch on cooling. Activation is indicated by the LED in the button. Cooling is only functional when the engine is running and climate control fan is switched on.

Press **A/C** again to switch off cooling.

The air conditioning system cools and dehumidifies (dries) as soon as the outside temperature is slightly above the freezing point. Therefore condensation may form and drip from under the vehicle.

If no cooling or drying is required, switch off the cooling system for fuel saving reasons.

Activated cooling may inhibit Autostops. Stop-start system ⇨ 166.

Demisting and defrosting the windows

- Press : fan automatically switches to higher speed, the air distribution is directed towards the windscreen.
- Set temperature controller **TEMP** to warmest level.
- Switch on air conditioning **A/C** if required.
- Switch on heated rear window .
- Switch on heated windscreen if available.

- Open side air vents as required and direct them towards the door windows.
- For maximum demisting and defrosting set fan speed to highest level.

Note

If FRONT is pressed while the engine is running, an Autostop will be inhibited until FRONT is pressed again.

If FRONT is pressed while the engine is in an Autostop, the engine will restart automatically.

Stop-start system ⇨ 166.

Air recirculation system

Press to activate air recirculation mode, LED is indicated.

Select air recirculation to assist in cooling the interior or in blocking outside odours or exhaust.

Press again to deactivate air recirculation mode.

On version without heated windscreen, press to deactivate air recirculation. External air mode is activated.

⚠ Warning

The exchange of fresh air is reduced in air recirculation mode. In operation without cooling the air humidity increases, so the windows may mist up from inside. The quality of the passenger compartment air deteriorates, which may cause the vehicle occupants to feel drowsy.

In warm and very humid ambient air conditions, the windscreen may mist up from outside when cold air is directed towards it. If windscreen mists up from outside, activate windscreen wiper and deactivate .

External air mode

Press to activate external air mode, LED is indicated.

Press to activate air recirculation mode. External air mode is deactivated.

Maximum cooling

Briefly open the windows so that hot air can disperse quickly.

- Switch on air conditioning **A/C**.
- Press for air recirculation system on.
- Press for air distribution.
- Set temperature control **TEMP** to coldest level.
- Set fan speed to highest level.
- Open all vents.

Version with heated windscreen

If the vehicle is equipped with heated windscreen, button is replaced by button .

Heated rear window and exterior mirrors

⇨ 41

Heated windscreen

⇨ 42.

Heated seats

⇨ 53.

Electronic climate control system

The dual zone climate control allows different temperatures for driver side and front passenger side.

In automatic mode, temperature, fan speed and air distribution are regulated automatically.

Illustration shows functions which may not be available for your particular vehicle.

Controls for:

- Control dial for temperature on driver side
- Control dial for temperature on passenger side
- **CLIMATE** enters the Climate setting menu in the Info-Display
- Fan speed increase and decrease
- Climate control **ON/OFF** or
- Automatic mode **AUTO**
- Manual air recirculation
- Demisting and defrosting
- Heated rear window and exterior mirrors
- Heated windscreen
- Heated seats
- Ventilated seats

Activated functions are indicated by the LED in the respective control.

The electronic climate control system is only fully operational when the engine is running.

Climate setting menu CLIMATE

Settings for

- Air distribution
- Fan speed
- Temperature for driver and passenger side **23°/25°**
- Dual zone temperature synchronisation **SYNC**
- Air conditioning **ON/OFF**

can be triggered manually in the Climate setting menu. Press **CLIMATE** to enter the menu and follow the touch buttons.

Climate setting menu can also be displayed by touching button in the Info-Display ⇨ 120.

Changes of settings via the controls are indicated as pop up in the Info-Display.

Automatic mode AUTO

Basic settings for automatic control with maximum comfort:

- Press **AUTO**, the air distribution and fan speed are regulated automatically.
- Open all air vents to allow optimised air distribution in automatic mode.

- Cooling must be activated in the climate setting menu for optimal cooling and demisting. Press **Climate** to enter the menu and follow the touch button to switch on air conditioning A/C.
- Set the preselected temperatures separately for driver and front passenger using the left and right control dials. Recommended temperature is 22 °C. Temperature is indicated briefly in displays beside the control dials and in the climate setting menu.
- Air recirculation mode should be deactivated. When deactivated the LED in the button is not illuminated.

Manual settings

Climate control system settings can be changed by activating the following functions as described below.

Fan speed

Press upper button to increase or lower button to decrease fan speed. The fan speed is indicated as pop-up in the Info Display. Fan speed can also be changed by touch buttons in the climate setting display. Press **Climate** to enter the menu.

Pressing the lower button for longer: fan and cooling are switched off.

To return to automatic mode press **AUTO**.

Air distribution

Press **Climate** to enter the menu.

Touch:

- : to windscreen and front door windows
- : to head area and rear seats via adjustable air vents
- : to front and rear foot well and windscreen

To return to automatic air distribution press **AUTO**.

Temperature preselection

Set the preselected temperatures separately for driver and front passenger to the desired value using the left and right control dials. The knob on the passenger side changes the temperature for the passenger side. The knob on the driver's side changes the temperature for the driver's side or for both sides depending on activation of synchronisation **SYNC**.
Recommended temperature is 22 °C.
Temperature is indicated in displays beside the control dials and as pop-up in the Info-Display.

If the minimum temperature **Lo** is set, the climate control system runs at maximum cooling, if cooling **A/C** is switched on.

If the maximum temperature **Hi** is set, the climate control system runs at maximum heating.

Note
If **A/C** is switched on, reducing the set cabin temperature can cause the engine to restart from an Autostop or inhibit an Autostop.

Stop-start system ⇨ 166.

Dual zone temperature synchronisation SYNC

Press **Climate** to enter the menu. Touch SYNC to link passenger side temperature setting to the driver side.

When passenger side control dial will be adjusted, synchronisation is deactivated.

Air conditioning A/C

Press **Climate** to enter the menu and follow the touch button to switch air conditioning A/C ON or A/C OFF.

Cooling is only functional when the engine is running and climate control fan is switched on.

The air conditioning system cools and dehumidifies (dries) when outside temperature is above a specific level. Therefore condensation may form and drip from under the vehicle.

If no cooling or drying is required, switch off the cooling system for fuel saving reasons.

Manual air recirculation

Press to activate the air recirculation mode. The LED in the button illuminates to indicate activation.

Press again to deactivate recirculation mode.

⚠ Warning

The exchange of fresh air is reduced in air recirculation mode. In operation without cooling the air humidity increases, so the windows may mist up from inside.

The quality of the passenger compartment air deteriorates, which may cause the vehicle occupants to feel drowsy.

In warm and very humid ambient air conditions, the windscreen may mist up from outside, when cold air is directed towards it. If windscreen mists up from outside, activate windscreen wiper and deactivate .

Automatic air recirculation

An air humidity sensor switches automatically to external air if internal air humidity is too high.

Demisting and defrosting the windows

- Press . The LED in the button illuminates to indicate activation.
- Temperature and air distribution are set automatically and the fan runs at high speed.
- Switch on air conditioning A/C ON in Climate setting menu by pressing **Climate**, if required.
- Switch on heated rear window .

- Switch on heated windscreen if available.
- To return to previous mode press MAX again, to return to automatic mode press **AUTO**.

Note

If MAX is pressed while the engine is running, an Autostop will be inhibited until MAX is pressed again.

If MAX is pressed while the engine is in an Autostop, the engine will restart automatically.

Stop-start system ⇨ 166.

Deactivation or activation of Electronic climate control system ON/OFF

Cooling, fan and automatic mode can be switched off by pressing **ON/OFF**. When the system is deactivated, the LED in the button **ON/OFF** is not illuminated.

Activation by pressing **ON/OFF** again or **AUTO**. The LED in the button illuminates to indicate activation.

Version with heated windscreen

If the vehicle is equipped with heated windscreen, button **ON/OFF** is replaced by button .

Climate control system will then switched off by button OFF. Switch on by pressing .

Basic settings

Following settings can be changed in the Personalisation menu in the Info-Display:

- fan speed regulation in automatic mode.
- settings of automatic rear window heating.
- settings of automatic windscreen dehumidification
- settings of automatic seat heating

Vehicle personalisation ⇨ 126.

Heated rear window and exterior mirrors

⇨ 41

Heated windscreen

⇨ 42.

Heated seats

⇨ 53.

Ventilated seats

⇨ 53

Auxiliary heater

Air heater

Quickheat is an electric auxiliary air heater which automatically warms up the passenger compartment more quickly.

Air vents

Adjustable air vents

At least one air vent must be open while cooling is on.

Illustration shows centre air vents in instrument panel.

Illustration shows outer air vents in instrument panel.

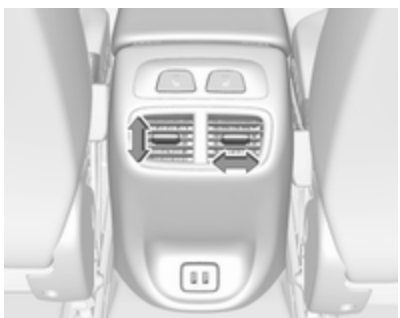

Illustration shows air vents for rear passenger.

Direct the flow of air by tilting and swivelling the slats.

To close the vent, swivel the slat sideways.

⚠Warning
Do not attach any objects to the slats of the air vents. Risk of damage and injury in case of an accident.

Fixed air vents

Additional air vents are located beneath the windscreen and door windows and in the foot wells.

Maintenance

Air intake

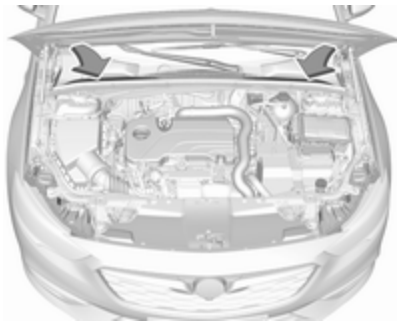

The air intake in front of the windscreen in the engine compartment must be kept clear to allow air intake. Remove any leaves, dirt or snow.

Cabin air filter

Change filter regulary for maximum effect.

Air conditioning regular operation

In order to ensure continuously efficient performance, cooling must be operated for a few minutes once a month, irrespective of the weather and time of year. Operation with cooling is not possible when the outside temperature is too low.

Service

For optimal cooling performance, it is recommended to annually check the climate control system, starting three years after initial vehicle registration, including:

- functionality and pressure test
- heating functionality
- leakage check
- check of drive belts
- cleaning of condenser and evaporator drainage
- performance check
- cabin air filter check

Driving and operating

Driving hints **162**
Control of the vehicle 162
Steering 162
Starting and operating **162**
New vehicle running-in 162
Power button 163
Retained power off 164
Starting the engine 164
Overrun cut-off 165
Stop-start system 166
Parking 168
Engine exhaust **169**
Diesel particle filter 169
Catalytic converter 170
AdBlue 171
Automatic transmission **174**
Manual transmission **178**
Drive systems **179**
All-wheel drive 179
Brakes **179**
Antilock brake system 179
Parking brake 180
Brake assist 181
Hill start assist 182
Ride control systems **182**
Traction Control system 182
Electronic Stability Control 183
Interactive driving system 184
Driver assistance systems **187**
Cruise control 187
Speed limiter 189
Adaptive cruise control 190
Forward collision alert 198
Following distance indication ... 201
Active emergency braking 202
Front pedestrian protection 205
Parking assist 207
Side blind zone assistant 215
Lane change alert 217
Panoramic view system 219
Rear view camera 221
Rear cross traffic alert 223
Traffic sign assistant 224
Lane keep assist 229
Fuel **231**
Fuel for petrol engines 231
Fuel for diesel engines 232
Refuelling 232
Trailer hitch **234**
General information 234
Driving characteristics and towing tips 235
Trailer towing 235
Towing equipment 236
Trailer stability assist 237

Driving hints

Control of the vehicle

Never coast with engine not running

Many systems will not function in this situation (e.g. brake servo unit, power steering). Driving in this manner is a danger to yourself and others.

All systems function during an Autostop.

Stop-start system ⇨ 166.

Idle boost

If charging of the vehicle battery is required due to battery condition, the power output of the generator must be increased. This will be achieved by an idle boost which may be audible.

A message appears in the Driver Information Centre.

Pedals

To ensure the pedal travel is uninhibited, there must be no mats in the area of the pedals.

Use only floor mats, which fit properly and are fixed by the retainers on the driver side.

Steering

If power steering assist is lost because the engine stops or due to a system malfunction, the vehicle can be steered but may require increased effort.

Starting and operating

New vehicle running-in

Do not brake unnecessarily hard for the first few journeys.

During the first drive, smoke may occur because of wax and oil evaporating off the exhaust system. Park the vehicle in the open for a while after the first drive and avoid inhaling the fumes.

During the running-in period, fuel and engine oil consumption may be higher.

Additionally, the cleaning process of the diesel particle filter may take place more often.

Diesel particle filter ⇨ 169.

Autostop may be inhibited to allow for charging of the vehicle battery.

Power button

Electronic key must be inside the vehicle.

Accessory power mode
Press **Engine Start/Stop** once without operating clutch or brake pedal. The yellow LED in the button illuminates. Steering wheel lock is released and some electrical functions are operable, ignition is off.

Ignition on power mode
Press and hold **Engine Start/Stop** for six seconds without operating clutch or brake pedal. The green LED in the button illuminates, diesel engine is preheating. Control indicators illuminate and most electrical functions are operable.

Engine start
Press **Engine Start/Stop** briefly while:

- manual transmission: operating clutch pedal,
- automatic transmission: operating brake pedal with selector lever in **P** or **N.**

Starting the engine ⇨ 164.

Ignition off
Press **Engine Start/Stop** briefly when Autostop is activated or when engine is running and vehicle is stationary. Automatic transmission: apply the parking brake and engage **P**.

Press **Engine Start/Stop** briefly without operating clutch or brake pedal when in ignition on power mode.

Some functions remain active until driver's door is opened, provided the ignition was on previously.

Emergency engine shut off during driving
Press **Engine Start/Stop** for more than two seconds or press twice briefly within five seconds ⇨ 164.

Steering wheel lock

The steering wheel lock activates automatically when:

- The vehicle is stationary.
- The ignition has been switched off.
- The driver's door is opened.

To release steering wheel lock, open and close driver's door and switch on accessory mode or start the engine directly.

⚠ Warning

If the vehicle battery is discharged, the vehicle must not be towed, tow-started or jump-started as the steering wheel lock cannot be disengaged.

Operation on vehicles with electronic key system in case of failure

If either the electronic key fails or the battery of the electronic key is weak, the Driver Information Centre may display **No Remote Detected** or **Replace Battery in Remote Key** when you try to start the vehicle.

Open the cover of the centre console in front of the gear shift lever. Place the electronic key across with buttons upside in the transmitter pocket beside the power outlet, as shown in the illustration.

Other objects, e.g. other keys, transponder, tags, coins etc. must be removed from the pocket.

Depress the clutch pedal (manual transmission) or the brake pedal (automatic transmission) and press **Engine Start/Stop**.

To switch off the engine, press **Engine Start/Stop** again. Remove the electronic key from the transmitter pocket.

This option is intended for emergencies only. Replace the electronic key battery as soon as possible ⇨ 20.

For unlocking or locking the doors, see fault in electronic key system ⇨ 22.

Retained power off

The following electronic systems can work until the driver's door is opened or for 10 minutes after the ignition is switched off:

- power windows
- sunroof
- power outlets

Starting the engine

Vehicles with power button

Manual transmission: operate clutch and brake pedal.

Automatic transmission: operate brake pedal and move selector lever to **P** or **N**.

Do not operate accelerator pedal.

Press **Engine Start/Stop** briefly: an automatic procedure operates the starter with a short delay until the engine is running.

To switch off the engine when vehicle is stationary, press **Engine Start/Stop** briefly. Automatic transmission: apply the parking brake and engage **P**.

Manual transmission: during an Autostop, the engine can be started by depressing the clutch pedal ⇨ 166.

Automatic transmission: during an Autostop, the engine can be started by releasing the brake pedal ⇨ 166.

Emergency engine shut off during driving

If the engine needs to be switched off during driving in case of emergency, press **Engine Start/Stop** for more than two seconds or press twice briefly within five seconds.

⚠ Danger

Switching off the engine during driving may cause loss of power support for brake and steering systems. Assistance systems and airbag systems are disabled.

Lighting and brake lights will extinguish. Therefore power down the engine and ignition while driving only when required in case of emergency.

Starting the vehicle at low temperatures

Starting the engine without additional heaters is possible down to -25 °C for diesel engines and -30 °C for petrol engines. Required is an engine oil with the correct viscosity, the correct fuel, performed services and a sufficiently charged vehicle battery. With temperatures below -30 °C the automatic transmission requires a warming phase of approx.
five minutes. The selector lever must be in position **P**.

Automatic Starter Control

This function controls the engine starting procedure. The driver does not need to hold **Engine Start/Stop** pressed. Once applied, the system will go on starting automatically until the engine is running. Because of the checking procedure, the engine starts running after a short delay.

Possible reasons for a non-starting engine:

- Clutch pedal not operated (manual transmission).
- Brake pedal not operated or selector lever not in **P** or **N** (automatic transmission).
- Timeout occurred.

Turbo engine warm-up

Upon start-up, engine available torque may be limited for a short time, especially when the engine temperature is cold. The limitation is to allow the lubrication system to fully protect the engine.

Overrun cut-off

The fuel supply is automatically cut off during overrun, i.e. when the vehicle is driven with a gear engaged but accelerator pedal is released.

Depending on driving conditions, the overrun cut-off may be deactivated.

Stop-start system

The stop-start system helps to save fuel and to reduce the exhaust emissions. When conditions allow, it switches off the engine as soon as the vehicle is at a low speed or at a standstill, e.g. at a traffic light or in a traffic jam.

Activation

The stop-start system is available as soon as the engine is started, the vehicle starts-off and the conditions as stated below in this section are fulfilled.

Deactivation

Deactivate the stop-start system manually by pressing Ⓐ OFF. Deactivation is indicated when the LED in the button illuminates.

Autostop

Vehicles with manual transmission

An Autostop can be activated at a standstill or at a low speed up to 14 km/h.

Activate a conventional Autostop as follows:

- Depress the clutch pedal.
- Set the lever to neutral.
- Release the clutch pedal.

The engine will be switched off while the ignition stays on.

Indication

An Autostop is indicated by the needle at the **AUTOSTOP** position in the tachometer.

After restarting, the idle speed is indicated.

During an Autostop, the heating and brake performance will be maintained.

Conditions for an Autostop

The stop-start system checks if each of the following conditions is fulfilled.

- The stop-start system is not manually deactivated.
- The bonnet is fully closed.

- The driver's door is closed or the driver's seat belt is fastened.
- The vehicle battery is sufficiently charged and in good condition.
- The engine is warmed up.
- The engine coolant temperature is not too high.
- The engine exhaust temperature is not too high, e.g. after driving with high engine load.
- The ambient temperature is above -5 °C.
- The climate control system allows an Autostop.
- The brake vacuum is sufficient.
- The self-cleaning function of the diesel particle filter is not active.
- The vehicle was driven at least at walking speed since the last Autostop.

Otherwise an Autostop will be inhibited.

Certain settings of the climate control system may inhibit an Autostop. See Climate control chapter for more details ⇨ 149.

Immediately after motorway driving, an Autostop may be inhibited.

New vehicle running-in ⇨ 162.

Vehicle battery discharge protection

To ensure reliable engine restarts, several battery discharge protection features are implemented as part of the stop-start system.

Power saving measures

During an Autostop, several electrical features e.g. auxiliary electric heater or heated rear window are disabled or switched to a power saving mode. The fan speed of the climate control system is reduced to save power.

Restart of the engine by the driver

Vehicles with manual transmission

Conventional restart

All engines have conventional restart.

Depress the clutch pedal without depressing the brake pedal to restart the engine.

On engines with late restart a conventional restart is only possible without depressed brake pedal.

Late restart

All engines have late restart in addition to conventional restart. Late restart is only active on gradients up to 5%.

- Depress the brake pedal.
- Depress the clutch pedal.
- Select first gear.
- Release the brake pedal to restart the engine.

Vehicles with automatic transmission

Release the brake pedal or move selector lever out of **D** into **N** or **P** to restart the engine.

Restart of the engine by the stop-start system

The selector lever must be in neutral to enable an automatic restart.

If one of the following conditions occurs during an Autostop, the engine will be restarted automatically by the stop-start system:

- The stop-start system is manually deactivated.
- The bonnet is opened.

- The driver's seat belt is unfastened and the driver's door is opened.
- The engine temperature is too low.
- The charging level of the vehicle battery is below a defined level.
- The brake vacuum is not sufficient.
- The vehicle is driven at least at walking speed.
- The climate control system requests an engine start.
- The air conditioning is manually switched on.

If the bonnet is not fully closed, a warning message is displayed in the Driver Information Centre.

If an electrical accessory, e.g. a portable CD player, is connected to the power outlet, a brief power drop during the restart might be noticeable.

Parking

⚠ Warning

- Do not park the vehicle on an easily ignitable surface. The high temperature of the exhaust system could ignite the surface.
- Always apply the parking brake. Pull switch Ⓟ for approx. one second and check if the control indicator Ⓟ illuminates.

  The electric parking brake is applied when control indicator Ⓟ illuminates ⇨ 108.
- Switch off the engine.
- If the vehicle is on a level surface or uphill slope, engage first gear or set the selector lever to position **P** before switching off ignition. On an uphill slope, turn the front wheels away from the kerb.

  If the vehicle is on a downhill slope, engage reverse gear or set the selector lever to position **P** before switching off ignition. Turn the front wheels towards the kerb.
- Close the windows and the sunroof.
- Switch off ignition with power button. Turn the steering wheel until the steering wheel lock is felt to engage.

- Lock the vehicle with button on the door handle.

  Activate the anti-theft alarm system ⇨ 33.
- The engine cooling fans may run after the engine has been switched off ⇨ 240.

Caution

After running at high engine speeds or with high engine loads, operate the engine briefly at a low load or run in neutral for approx. 30 seconds before switching off, in order to protect the turbocharger.

Note
In the event of an accident with airbag deployment, the engine is turned off automatically if the vehicle comes to a standstill within a certain time.

Engine exhaust

⚠ Danger

Engine exhaust gases contain poisonous carbon monoxide, which is colourless and odourless and could be fatal if inhaled.

If exhaust gases enter the interior of the vehicle, open the windows. Have the cause of the fault rectified by a workshop.

Avoid driving with an open load compartment, otherwise exhaust gases could enter the vehicle.

Diesel particle filter

Automatic cleaning process

The diesel particle filter system filters harmful soot particles out of the exhaust gases. The system includes a self-cleaning function that runs automatically during driving without any notification. The filter is cleaned by periodically burning off the soot particles at high temperature. This process takes place automatically under set driving conditions and may take up to 25 minutes. Typically it needs between seven and twelve minutes. Autostop is not available and fuel consumption may be higher during this period. The emission of smells and smoke during this process is normal.

System requires cleaning process

Under certain driving conditions, e.g. short distances, the system cannot clean itself automatically.

If cleaning of the filter is required and if previous driving conditions did not enable automatic cleaning, it will be

indicated by illumination of and a warning message in the Driver Information Centre.

illuminates along with a warning message illuminates when diesel particle filter is full. Start cleaning process as soon as possible.

flashes along with a warning message when diesel particle filter has reached the maximum filling level. Start cleaning process immediately to avoid damage to the engine.

Activate self-cleaning process

To activate cleaning process, continue driving, keep engine speed above 2000 rpm. Shift down if necessary. Diesel particle filter cleaning is then started.

Cleaning takes place quickest at high engine speeds and loads.

Control indicator extinguishes as soon as the self-cleaning operation is complete. Keep on driving until self-cleaning operation is complete.

Caution

If possible, do not interrupt cleaning process. Drive until cleaning is completed to avoid the need for service or repair by a workshop.

Cleaning process not possible

If cleaning is not possible for any reasons, control indicator illuminates and a warning message appears in the Driver Information Centre. Engine power may be reduced. Seek the assistance of a workshop immediately.

Catalytic converter

The catalytic converter reduces the amount of harmful substances in the exhaust gases.

Caution

Fuel grades other than those listed on pages ⇨ 231, ⇨ 293 could damage the catalytic converter or electronic components.

Unburnt petrol will overheat and damage the catalytic converter. Therefore avoid excessive use of the starter, running the fuel tank dry and starting the engine by pushing or towing.

In the event of misfiring, uneven engine running, a reduction in engine performance or other unusual problems, have the cause of the fault rectified by a workshop as soon as possible. In an emergency, driving can be continued for a short period, keeping vehicle speed and engine speed low.

AdBlue

General information

The selective catalytic reduction (BlueInjection) is a method to substantially reduce the nitrogen oxides in the exhaust emission. This is achieved by injecting a Diesel Exhaust Fluid (DEF) into the exhaust system. The ammonia released by the fluid reacts with nitrous gases (NO_x) from the exhaust and turns it into nitrogen and water.

The designation of this fluid is AdBlue®. It is a non-toxic, non-flammable, colourless and odourless fluid which consists of 32% urea and 68% water.

⚠ Warning

Avoid contact of your eyes or skin with AdBlue.

In case of eye or skin contact, rinse off with water.

Caution

Avoid contact of the paintwork with AdBlue.

In case of contact, rinse off with water.

AdBlue freezes at a temperature of approx. -11 °C. As the vehicle is equipped with an AdBlue pre-heater, the emissions reduction at low temperatures is ensured. The AdBlue pre-heater works automatically.

The typical AdBlue consumption is approx. two litres per 1000 km, but can also be higher depending on driving behaviour (e.g. high load or towing).

AdBlue tank

At a remaining volume of approx. five litres, there is a liquid level switch. Warning messages are displayed only below that threshold. Tank volume ⇨ 300.

Level warnings

Depending on the calculated range of AdBlue, different messages are displayed in the Driver Information Centre. The messages and the restrictions are a legal requirement.

The first possible warning is **AdBlue Range: 2400 km**.

This warning will show up once briefly with the calculated range. Driving is possible without any restrictions.

The next warning level is entered with a range below 1750 km. The message with the current range will always be displayed when ignition is switched on and needs to be confirmed ⇨ 113. Refill AdBlue before entering the next warning level.

At an AdBlue range below 900 km, the following warning messages are alternately displayed and cannot be dismissed:

- **AdBlue Low Refill Now**
- **Engine Restart Prevented in 900 km**.

Additionally, control indicator flashes continuously.

Note
In case of high AdBlue consumption, the Driver Information Centre may display this warning without the previous warning stages.

The last warning level is entered when the AdBlue tank is empty. Restart of the engine is not possible. The following warning messages are alternately displayed and cannot be dismissed:

- **AdBlue Empty Refill Now**
- **Engine Will Not Restart**.

Additionally, control indicator flashes continuously.

With active prevention of an engine start, the following message will be displayed:

Refill AdBlue To Start Vehicle.

The tank must be refilled completely with AdBlue, otherwise restarting of the engine is not possible.

High emission warnings

If the exhaust emission rises above a certain value, warnings similar to the range warnings will be displayed in the Driver Information Centre.

Requests to have the exhaust system checked and finally the announcement of the prevention of an engine restart are displayed. These restrictions are a legal requirement.

Consult a workshop for assistance.

Refilling AdBlue

Caution

Only use AdBlue that complies with European standards DIN 70 070 and ISO 22241-1.

Do not use additives.

Do not dilute AdBlue.

Otherwise the selective catalytic reduction system could be damaged.

Note
Whenever a filling pump with a nozzle for passenger cars is not available at a filling station, use only AdBlue bottles or canisters with a sealed refill adapter for refilling, to prevent splashback and overspill, and in order to ensure that the fumes from the tank are captured and do not emerge. AdBlue in bottles or canisters is available in many filling stations and can be purchased e.g. at Opel dealers and other retail outlets.

Since AdBlue has a limited durability, check the date of expiry before refilling.

Note
The refilling of AdBlue is only detected by the system when the above mentioned liquid level switch in the tank is activated.

In case AdBlue refill is not successfully detected:

1. Continuously drive the vehicle for 10 minutes making sure that vehicle speed is always higher than 20 km/h.
2. If AdBlue refill is detected successfully, AdBlue supply-driven limitations will disappear.

If AdBlue refill is still not detected, seek the assistance of a workshop.

If AdBlue must be refilled at temperatures below -11 °C, the refilling of AdBlue may not be detected by the system. In this event, park the vehicle in a space with a higher ambient temperature until AdBlue is liquefied.

Note
When unscrewing the protective cap from the filler neck, ammonia fumes may emerge. Do not inhale as the fumes have a pungent smell. The fumes are not harmful by inhalation.

The AdBlue tank should be filled completely. This must be done if the warning message regarding prevention of an engine restart is already displayed.

The vehicle must be parked on a level surface.

The filler neck for AdBlue is located behind the fuel filler flap, which is located at right rear side of the vehicle.

The fuel filler flap can only be opened if the vehicle is unlocked.

1. Remove key from ignition switch.
2. Close all doors to avoid ammonia fumes entering the interior of the vehicle.
3. Release the fuel filler flap by pushing the flap ⇨ 232.

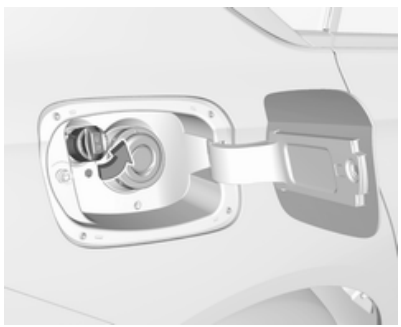

4. Unscrew protective cap from the filler neck.
5. Open AdBlue canister.
6. Mount one end of the hose on the canister and screw the other end on the filler neck.
7. Lift the canister until it is empty, or until the flow from the canister has stopped. This can take up to five minutes.
8. Place the canister on the ground to empty the hose, wait 15 seconds.
9. Unscrew the hose from the filler neck.
10. Mount the protective cap and turn clockwise until it engages.

Note
Dispose of AdBlue canister according to environmental requirements. Hose can be reused after flushing with clear water before AdBlue dries out.

Automatic transmission

The automatic transmission permits automatic gear shifting (automatic mode) or manual gear shifting (manual mode).

Manual shifting is possible in manual mode by tapping the selector lever to **+** or **-** or pulling the steering wheel paddles.

Transmission display

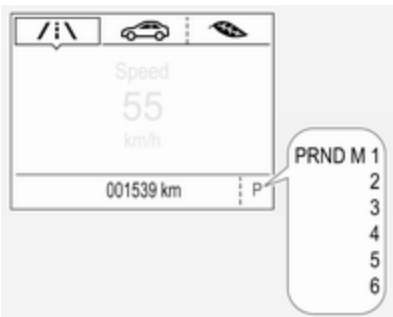

Illustrations show different versions.

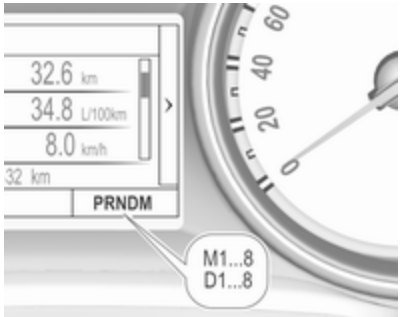

The mode or selected gear is shown in the Driver Information Centre.

In automatic mode, the driving programme is indicated by **D**.

In manual mode, **M** and the number of the selected gear is indicated.

R indicates reverse gear.

N indicates neutral position.

P indicates park position.

Selector lever

P : park position, wheels are locked, engage only when the vehicle is stationary
R : reverse gear, engage only when the vehicle is stationary
N : neutral
D : automatic mode
M : manual mode
+ : upshift in manual mode
− : downshift in manual mode

The selector lever is locked in **P** and can only be moved when the ignition is on, the release button on the selector lever is pushed and the brake pedal is applied.

Without brake pedal applied, control indicator ⊘ illuminates.

If the selector lever is not in **P** when the ignition is switched off, control indicator ⊘ flashes.

To engage **P** or **R**, press the release button.

The engine can only be started with lever in position **P** or **N**. When position **N** is selected, press brake pedal or apply parking brake before starting.

Do not accelerate while engaging a gear. Never depress the accelerator pedal and brake pedal at the same time.

When a gear is engaged, the vehicle begins to creep when the brake is released.

Engine braking

To utilise the engine braking effect, select a lower gear in good time when driving downhill, see manual mode.

Rocking the vehicle

Rocking the vehicle is only permissible if the vehicle is stuck in sand, mud or snow. Move the selector lever between **D** and **R** in a repeat pattern. Do not race the engine and avoid sudden acceleration.

Parking

Apply the parking brake and engage **P**.

Manual mode

Selector lever

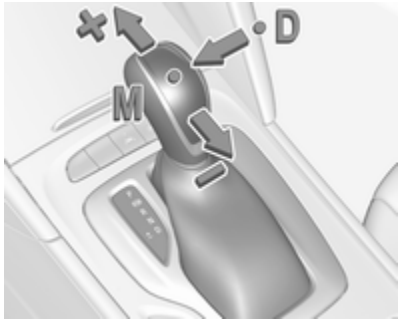

Move selector lever out of position **D** towards the left in position **M**.

Manual mode **M** can be activated from position **D** in each driving situation and speed.

Tap selector lever upwards **+** to shift to a higher gear.

Tap the selector lever downwards **-** to shift to a lower gear.

The selected gear is indicated in the instrument cluster.

Steering wheel paddles

Move selector lever out of position **D** towards the left in position **M**.

Manual mode **M** can be activated from position **D** in each driving situation and speed.

Pull steering wheel paddles to select gears manually.

Pull right paddle **+** to shift to a higher gear.

Pull left paddle **-** to shift to a lower gear.

Multiple pulls allow gears to be skipped.

The selected gear is indicated in the instrument cluster.

Temporary manual mode in drive mode D

Manual paddle shifting is also possible in automatic mode **D**. Upon completion of manual shifting operation, transmission changes to automatic mode **D** after a defined time.

To interrupt manual mode and return to **D**, do one of the following:

- Press **+** paddle for 1 second.
- Move selector lever towards the left to manual mode and back to position **D**.

If the vehicle is at a standstill and engine is idling, the transmission will remain in temporary manual mode. It changes to automatic mode when accelerator pedal is operated for a defined time, and no paddle shifting at the steering wheel is performed.

General

If a higher gear is selected when vehicle speed is too low, or a lower gear when vehicle speed is too high, the shift is not executed. This can cause a message in the Driver Information Centre.

In manual mode, no automatic shifting to a higher gear takes place at high engine revolutions, except activating the kickdown function.

Gear shift indication

The symbol ▲ or ▼ with a number beside it is indicated when gear shifting is recommended for fuel saving reasons.

Shift indication appears only in manual mode.

Electronic driving programmes

- Following a cold start, the operating temperature programme increases engine speed to quickly bring the catalytic converter to the required temperature.
- When SPORT mode is engaged, the vehicle shifts at higher engine speeds (unless cruise control is on). SPORT mode ⇨ 184.

- Special programmes automatically adapt the shifting points when driving up inclines or down hills.
- In snowy or icy conditions or on other slippery surfaces, the electronic transmission control enables the driver to manually select first, second or third gear for starting off.

Kickdown

Pressing down the accelerator pedal beyond the kickdown detent will lead to maximum acceleration even in manual mode. The transmission shifts to a lower gear depending on engine speed and shifts to a higher gear at high engine revolutions.

Overheat protection

In the event of transmission-overheating due to high outside temperatures or sporty driving style, the torque and the maximum speed of the engine can be temporarily reduced.

Fault

In the event of a fault a vehicle message is displayed in the Driver Information Centre. Vehicle messages ⇨ 124.

6-gear automatic transmission: electronic transmission control enables only fourth gear; 8-gear automatic transmission: electronic transmission control enables only third gear. The transmission no longer shifts automatically.

Have the cause of the fault remedied by a workshop.

Interruption of power supply

In the event of an interruption of power supply, the selector lever cannot be moved out of the **P** position. The ignition key cannot be removed from the ignition switch.

If the vehicle battery is discharged, start the vehicle using jump leads ⇨ 277.

If the vehicle battery is not the cause of the fault, release the selector lever.

1. Apply parking brake.

2. Release the selector lever trim from the centre console. Poke with a finger into the leather socket below the selector lever and push the trim upwards. Rotate trim to the left.

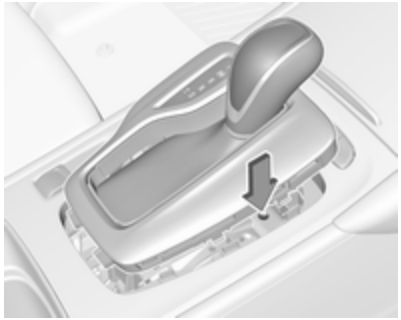

3. Insert a small stick (e.g. a pen or screwdriver) into the opening near the selector lever. Push down the stick vertically and move the selector lever out of **P**. If this position is engaged again, the selector lever will be locked again. Have the cause of the power supply interruption remedied by a workshop.
4. Mount the selector lever trim onto the centre console and refit.

Manual transmission

To engage reverse, depress the clutch pedal and then press the release button on the selector lever and engage the gear.

If the gear does not engage, set the lever to neutral, release the clutch pedal and depress again; then repeat gear selection.

Do not slip the clutch unnecessarily.

When operating, depress the clutch pedal completely. Do not use the pedal as a foot rest.

When clutch slip is detected for a specific time, the engine power will be reduced. A warning is displayed in the Driver Information Centre. Release the clutch.

Caution
It is not advisable to drive with the hand resting on the selector lever.

Gear shift indication ⇨ 109.

Stop-start system ⇨ 166.

Drive systems

All-wheel drive

The All-wheel drive system enhances driving characteristics and stability, and helps to achieve the best possible driveability regardless of ground surface. The system is always active and cannot be deactivated.

The torque is distributed steplessly between the wheels of the front and rear axle up to a torque split of 50% to 50%. Depending on the driving conditions, i.e. steady state driving, All wheel drive system transfers a minimum amount of torque for fuel efficiency. Additionally the torque vectoring between the rear wheels is distributed depending on the vehicle dynamic and surface.

This is possible because the All wheel drive system operates with two clutches, one on each side.

For optimum system performance, the vehicle's tyres should not have varying degrees of wear.

If a service message is displayed in the Driver Information Centre, the system may have limited functionality (or be completely disabled in some cases, i.e. the vehicle switches to Front-wheel drive). Seek the assistance of a workshop.

Towing the vehicle ⇨ 278.

Brakes

The brake system comprises two independent brake circuits.

If a brake circuit fails, the vehicle can still be braked using the other brake circuit. However, braking effect is achieved only when the brake pedal is depressed firmly. Considerably more force is needed for this. The braking distance is extended. Seek the assistance of a workshop before continuing the journey.

When the engine is not running, the support of the brake servo unit disappears once the brake pedal has been depressed once or twice. Braking effect is not reduced, but braking requires significantly greater force. It is especially important to bear this in mind when being towed.

Control indicator (!) ⇨ 108.

Active emergency braking ⇨ 202.

Antilock brake system

Antilock brake system (ABS) prevents the wheels from locking.

ABS starts to regulate brake pressure as soon as a wheel shows a tendency to lock. The vehicle remains steerable, even during hard braking.

ABS control is made apparent through a pulse in the brake pedal and the noise of the regulation process.

For optimum braking, keep the brake pedal fully depressed throughout the braking process, despite the fact that the pedal is pulsating. Do not reduce the pressure on the pedal.

After starting off, the system performs a self-test which may be audible.

Control indicator (ABS) ⇨ 109.

Adaptive brake light

During full braking, all three brake lights flash for the duration of ABS control.

Fault

⚠ Warning

If there is a fault in the ABS, the wheels may be liable to lock due to braking that is heavier than normal. The advantages of ABS are no longer available. During hard braking, the vehicle can no longer be steered and may swerve.

Have the cause of the fault remedied by a workshop.

Parking brake

⚠ Warning

Before leaving the vehicle, check parking brake status. Control indicator (P) must illuminate constantly.

Electric parking brake

Applying when vehicle is stationary

⚠ Warning

Pull switch (P) for a minimum of one second until control indicator (P) illuminates constantly and electric parking brake is applied ⇨ 108. The electric parking brake operates automatically with adequate force.

Before leaving the vehicle, check the electric parking brake status. Control indicator (P) ⇨ 108.

The electric parking brake can always be activated, even if the ignition is off.

Do not operate electric parking brake system too often without engine running as this will discharge the vehicle battery.

Releasing

Switch on ignition. Keep foot brake pedal depressed and then push switch Ⓟ.

Drive away function

Vehicles with manual transmission: Depressing the clutch pedal and then slightly releasing the clutch pedal and slightly depressing the accelerator pedal releases the electric parking brake automatically. This is not possible when switch Ⓟ is pulled at the same time.

Vehicles with automatic transmission: Engaging **D** and then depressing the accelerator pedal releases the electric parking brake automatically. This is not possible when switch Ⓟ is pulled at the same time.

Dynamic braking when vehicle is moving

When the vehicle is moving and the switch Ⓟ is kept pulled, the electric parking brake system will decelerate the vehicle, but will not apply statically.

As soon as the switch Ⓟ is released, dynamic braking will be stopped.

Automatic applying

If the vehicle is equipped with automatic transmission and adaptive cruise control is active, electric parking brake is applied automatically when vehicle is stopped by the system for more than two minutes.

Parking brake releases automatically after moving off.

Functionality check

When the vehicle is not moving, the electric parking brake might be applied automatically. This is done to check the system.

Fault

Failure mode of electric parking brake is indicated by a control indicator Ⓟ and by a vehicle message which is displayed in the Driver Information Centre. Vehicle messages ⇨ 124.

Apply electric parking brake: pull and hold the switch Ⓟ for more than five seconds. If control indicator Ⓟ illuminates, electric parking brake is applied.

Release electric parking brake: push and hold the switch Ⓟ for more than two seconds. If control indicator Ⓟ extinguishes, electric parking brake is released.

Control indicator Ⓟ flashes: electric parking brake is not fully applied or released. When continuously flashing, release electric parking brake and retry applying.

Brake assist

If brake pedal is depressed quickly and forcefully, maximum brake force is automatically applied.

Operation of brake assist might become apparent by a pulse in the brake pedal and a greater resistance when depressing the brake pedal.

Maintain steady pressure on the brake pedal as long as full braking is required. Maximum brake force is automatically reduced when brake pedal is released.

Hill start assist

The system helps prevent unintended movement when driving away on inclines.

When releasing the brake pedal after stopping on an incline, brakes remain on for further two seconds. The brakes release automatically as soon as the vehicle begins to accelerate.

Ride control systems

Traction Control system

The Traction Control system (TC) is a component of the Electronic Stability Control (ESC).

TC improves driving stability when necessary, regardless of the type of road surface or tyre grip, by preventing the drive wheels from spinning.

As soon as the drive wheels starts to spin, engine output is reduced and the wheel spinning the most is braked individually. This considerably improves the driving stability of the vehicle on slippery road surfaces.

TC is operational after each engine start as soon as the control indicator extinguishes.

When TC operates flashes.

⚠Warning

Do not let this special safety feature tempt you into taking risks when driving.

Adapt speed to the road conditions.

Control indicator ⇨ 109.

Deactivation

TC can be switched off when spinning of drive wheels is required: press briefly.

Control indicator illuminates.

A status message appears in the Driver Information Centre when TC is deactivated.

When TC is deactivated, ESC remains active but with higher control threshold.

TC is reactivated by pressing again. A status message pops up in the Driver Information Centre when TC is reactivated.

TC is also reactivated the next time the ignition is switched on.

Fault

If there is a fault in the system the control indicator illuminates continuously and a message appears in the Driver Information Centre. The system is not operational.

Have the cause of the fault remedied by a workshop.

Electronic Stability Control

Electronic Stability Control (ESC) improves driving stability when necessary, regardless of the type of road surface or tyre grip.

As soon as the vehicle starts to swerve (understeer/oversteer), engine output is reduced and the wheels are braked individually.

ESC operates in combination with the Traction Control system (TC). It prevents the drive wheels from spinning.

Torque distribution is a special feature that allocates the torque to the drive wheels before the ESC intervenes. When cornering, the wheels on the inner curve are braked individually. Additionally, engine torque will be delivered to the drive wheel on the outer curve. This reduces the tendency of understeering and improves traction when cornering fast.

ESC is operational after each engine start as soon as the control indicator extinguishes.

When ESC operates flashes.

⚠ Warning

Do not let this special safety feature tempt you into taking risks when driving.

Adapt speed to the road conditions.

Control indicator ⇨ 109.

Deactivation

ESC and TC can be deactivated:

- hold pressed for a minimum of five seconds: ESC and TC are both deactivated. and illuminate and status messages appear in the Driver Information Centre.

- To deactivate only Traction control system press button briefly: TC is inactive but ESC remains active, illuminates. A status message appears in the Driver Information Centre when TC is deactivated.

ESC is reactivated by pressing the button again. If the TC system was previously disabled, both TC and ESC are reactivated. and extinguishes when TC and ESC are reactivated.

ESC is also reactivated the next time the ignition is switched on.

Fault

If there is a fault in the system the control indicator illuminates continuously and a message appears in the Driver Information Centre. The system is not operational.

Have the cause of the fault remedied by a workshop.

Interactive driving system

Flex Ride

Flex Ride driving system allows the driver to select between three driving modes:

- SPORT mode: press **SPORT**, LED illuminates.
- TOUR mode: press **TOUR**, LED illuminates.
- AUTO mode: neither **SPORT** nor **TOUR** is pressed, no LED illuminates.

Deactivate SPORT mode or TOUR mode by pressing corresponding button once more.

In each driving mode Flex Ride adjusts the following electronic systems:

- electronic damping control
- accelerator pedal control
- electronic power steering control
- automatic transmission

- adaptive cruise control
- all-wheel drive
- engine sound enhancement
- instrument cluster theme

SPORT mode

The settings of the systems are adjusted for a sportier driving style:

- Damping of shock absorbers is set up for increased handling and agility.
- The engine reacts more quickly to accelerator pedal changes.
- Steering support is sportier.
- Automatic transmission shift points optimised for sporty driving.
- Adaptive cruise control is adjusted for a sportier driving style.
- All-wheel drive supports active sporty driving of the vehicle.
- Engine sound enhancement intensifies interior engine sound in a sporty manner.
- Cluster theme changes to sport.

TOUR mode

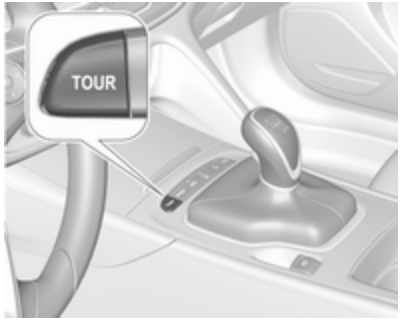

TOUR mode adjusts the settings of the systems for a comfortable driving style.

- Damping of shock absorbers is adapted for increased driving comfort.
- Steering efforts are reduced.
- Adaptive cruise control is adjusted for a more relaxed driving style.

AUTO mode

All settings of the systems are preset to standard values optimised for daily driving (default mode). This is the fully adaptive mode, adjusting systems to both comfort and sport settings depending on driving style and driving situation.

Adaptive drive mode control

Within each manually selected driving mode SPORT, TOUR or AUTO, Drive Mode Control (DMC) detects and analyses continuously the driving situation and the driver's driving style. If necessary, DMC automatically adjusts damping and steering for the duration of the occuring situation.

If, for example, normal settings are active in AUTO mode and DMC detects a sporty driving behaviour, it automatically changes systems into sporty settings unless the driver deselects sporty damping or steering in the **Sport Mode Customisation**.

If, for another example, comfort settings are active in TOUR mode and whilst driving on a winding road a sudden hard brake is necessary, DMC will detect the dynamic vehicle condition and changes the settings for suspension back to normal (default) setting to enhance vehicle stability.

When the driving characteristic or the dynamic vehicle state returns to the former state, DMC will change to preselected settings.

Flex Ride visualisation menu

On 8" Info Display a Flex Ride visualisation menu can be displayed by touching on the screen. On this page the selected drive mode and active setup are displayed.

System settings are highlighted in red for sport, blue for comfort and yellow for normal.

Additionally the personalisation of adaptive AUTO mode sensitivity as well as the personalisation of Sport mode functions can be displayed in the visualisation menu by selecting the respective button on the Info display.

Personalisation of AUTO mode sensitivity

The driver can change the sensitivity of adaptive AUTO mode in three steps via the Flex Ride visualisation menu.

- Normal: default setting.
- Sport sensitive: systems change to sport settings faster while driving sporty.
- Comfort sensitive: systems change to comfort settings faster while cruising.

Additionally any drive mode control adaption can be deactivated.

Flex Ride visualisation menu will be displayed by touching on the 8" Info display.

Select **Auto-Mode Customisation** and change the relevant settings.

The settings can also be changed in the personalisation menu in the Info display, ➧ **Settings** ⇨ 126.

Info display ⇨ 120.

Personalisation of Sport mode settings

The driver can customise the settings of the SPORT mode via the Flex Ride visualisation menu.

Flex Ride visualisation menu will be displayed when SPORT mode is selected or by touching on the 8" Info display.

Select **Sport Mode Customisation** and select the relevant settings.

The settings can also be changed in the personalisation menu in the Info Display, ➧ **Settings** ⇨ 126.

Info display ⇨ 120.

Driver assistance systems

⚠ Warning

Driver assistance systems are developed to support the driver and not to replace the driver's attention.

The driver stays in full control of the vehicle and accepts full responsibility when driving the vehicle.

When using driver assistance systems, always take care regarding the current traffic situation and follow applicable traffic rules.

Cruise control

The cruise control can store and maintain speeds of approx. 30 km/h to maximum vehicle speed. Deviations from the stored speeds may occur when driving uphill or downhill.

Activating in first gear is not possible.

Do not use the cruise control if it is not advisable to maintain a constant speed.

Illustrations show different versions.

Control indicator ⌀ ⇨ 112.

Switching on

Press ⌀; control indicator ⌀ in instrument cluster illuminates white.

Activation

Accelerate to the desired speed and turn thumb wheel to **SET/-**, the current speed is stored and maintained. Control indicator ⌀ in instrument cluster illuminates green. On Mid- and Uplevel display ⌀ illuminates green and set speed is indicated. Accelerator pedal can be released.

Vehicle speed can be increased by depressing the accelerator pedal. When the accelerator pedal is released, the previously stored speed is resumed.

Cruise control remains activated while gearshifting.

Increase speed

With cruise control active, hold thumb wheel turned to **RES/+** or briefly turn to **RES/+** repeatedly: speed increases continuously or in small increments.

Alternatively accelerate to the desired speed and store by turning to **SET/-**.

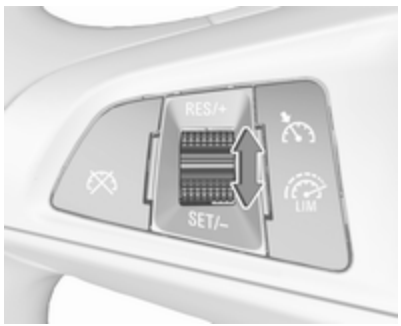

Reduce speed

With cruise control active, hold thumb wheel turned to **SET/-** or briefly turn to **SET/-** repeatedly: speed decreases continuously or in small increments.

Deactivation

Press ⌀; control indicator ⌀ in instrument cluster illuminates white.

On Mid- or Uplevel display ⌀ changes to white.

Cruise control is deactivated, but not switched off. Last stored speed remains in memory for later speed resume.

Automatic deactivation:

- Vehicle speed is below approx. 30 km/h.
- Vehicle speed drops more than 25 km/h below the set speed.
- The brake pedal is depressed.
- The clutch pedal is depressed for a few seconds.
- The selector lever is in **N**.
- Engine speed is in a very low range.

- The Traction Control system or Electronic Stability Control is operating.
- Parking brake is applied.
- Simultaneous pressing **RES/+** and brake pedal deactivates cruise control and will delete stored speed.

Resume stored speed

Turn thumb wheel to **RES/+** at a speed above 30 km/h. The stored speed will be obtained.

Switching off

Press ⏲, control indicator ⏲ in instrument cluster extinguishes. The stored speed is deleted.

Pressing ⏲ to activate the speed limiter or switching off the ignition also switches off cruise control and deletes the stored speed.

Speed limiter

The speed limiter prevents the vehicle exceeding a preset maximum speed.

The maximum speed can be set at speeds above 25 km/h up to 200 km/h.

The driver can only accelerate up to the preset speed. Deviations from the limited speed may occur when driving downhill.

The preset speed limit is displayed in the Driver Information Centre when the system is active.

Activation

Illustrations show different versions.

Press ⏲, symbol ⏲ illuminates in the Driver Information Centre.

If cruise control has been activated before, it is switched off when speed limiter is activated and the control indicator ⏲ extinguishes.

Set speed limit

Accelerate to the desired speed and briefly turn thumb wheel to **SET/-**: the current speed is stored as maximum speed.

On Baselevel display ⏲ and the speed limit is displayed.

On Mid- and Uplevel display changes to green.

Change speed limit

With speed limiter active, hold or briefly turn thumb wheel to **RES/+** to increase or **SET/-** to decrease the desired maximum speed.

Exceeding the speed limit

When exceeding the limited speed without driver input, the speed will flash in the Driver Information Centre and a chime sounds during this period.

In the event of an emergency, it is possible to exceed the speed limit by depressing the accelerator pedal firmly nearly to the final point. In this case no chime appears.

Release the accelerator pedal and the speed limiter function is reactivated once a speed lower than the limit speed is obtained.

Deactivation

Press : speed limiter is deactivated and the vehicle can be driven without speed limit.

On Baselevel display the stored limited speed is indicated in brackets.

On Mid- or Uplevel display changes to white.

Additionally, a corresponding message appears.

Speed limiter is deactivated, but not switched off. Last stored speed remains in memory for later speed resume.

Resume limit speed

Turn thumb wheel to **RES/+**. The stored speed limit will be obtained and is indicated without brackets in the Driver Information Centre.

Switching off

Press , the speed limit indication extinguishes in the Driver Information Centre. The stored speed is deleted.

By pressing to activate cruise control or adaptive cruise control, speed limiter is also deactivated and the stored speed is deleted.

By switching off the ignition, speed limiter is also deactivated, but the speed limit will be stored for next speed limiter activation.

Adaptive cruise control

Adaptive cruise control is an enhancement to conventional cruise control with the additional feature of maintaining a certain distance behind the vehicle ahead.

Adaptive cruise control automatically decelerates the vehicle when approaching a slower moving vehicle. It then adjusts the vehicle speed to follow the vehicle ahead at the selected following distance. The vehicle speed increases or decreases to follow the vehicle in front, but will not exceed the set speed. It may apply limited braking with activated brake lights.

To facilitate overtaking a vehicle on the motorway, the activation of the turn signal reduces the following distance for a short time. This function is implemented only on the respective driver's side depending on left or right hand drive vehicle configuration.

The adaptive cruise control can store set speed over 30 km/h for manual transmission. On vehicles with automatic transmissions the system can brake until a full stop and drive off from a stop.

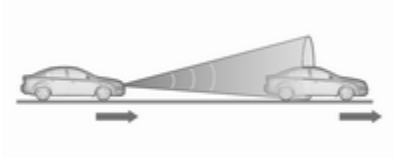

Adaptive cruise control uses radar and camera sensors to detect the vehicles ahead. If no vehicle is detected in the driving path, the adaptive cruise control will behave like a conventional cruise control.

Adaptive cruise control is mainly advised to be used on long straight roads like highways or country roads with steady traffic. Do not use the system if it is not advisable to maintain a constant speed.

Control indicator ⇨ 112, ⇨ 112.

⚠ Warning

The complete driver attention is always required while driving with adaptive cruise control. The driver stays fully in control of the vehicle because the brake pedal, the accelerator pedal and the cancel switch have priority over any adaptive cruise control operation.

Switching on

Illustrations show different versions.

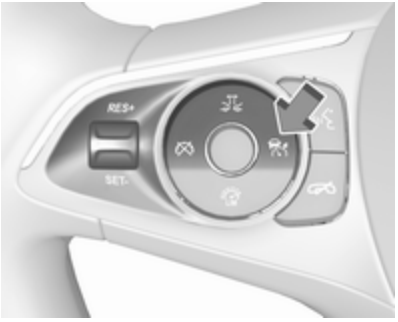

Press to switch on adaptive cruise control. appears in the Driver Information Centre.

Activation by setting the speed

Adaptive cruise control can be activated at speeds above 25 km/h on vehicles with automatic transmission or 30 km/h on vehicles with manual transmission. The upper speed limit is 180 km/h.

Accelerate to the desired speed and turn thumb wheel to **SET/-**, the current speed is stored and maintained.

The adaptive cruise control symbol , the following distance setting and set speed are indicated in the Driver Information Centre.

The accelerator pedal can be released. Adaptive cruise control remains activated during gear shifting.

Overriding set speed

It is always possible to drive faster than the selected set speed by depressing the accelerator pedal. When the accelerator pedal is released, the vehicle returns to the desired distance if a slower vehicle is ahead. Otherwise it returns to the stored speed.

Once the system is activated, adaptive cruise control decelerates or brakes if it detects a vehicle ahead, which is slower or closer than the desired following distance.

⚠Warning

Accelerating by the driver deactivates automatic braking by the system. This is indicated as a pop-up warning in the Driver Information Centre or by the adaptive cruise control symbol turning blue.

Take over current speed

If the accelerator pedal is pressed, the current vehicle speed is taken over as stored speed. This is also valid, if the current vehicle speed is lower than the Set Speed.

Increase speed

With adaptive cruise control active, hold **RES/+** to increase speed continuously. Push **RES/+** repeatedly to increase speed in small increments.

Reduce speed

With adaptive cruise control active, hold **SET/-** to decrease speed continuously. Push **SET/-** repeatedly to decrease speed in small increments.

Resume stored speed

If a speed was stored before and system is switched on but inactive, turn thumb wheel to **RES/+** at a speed above 5 km/h (with Automatic Transmission) or above 30 km/h (with manual transmission) to resume the stored speed.

Full speed range adaptive cruise control on vehicles with automatic transmission

Full speed range adaptive cruise control will maintain a following distance behind a detected vehicle and slow your vehicle to a stop behind that vehicle.

When the vehicle ahead accelerates after a brief stop, the adaptive cruise control will drive off automatically without driver action. If necessary, press **RES/+** or the accelerator pedal to resume adaptive cruise control. Pressing the accelerator pedal allows more control over the acceleration after driving off. Note that automatic braking is disabled during usage of the accelerator pedal.

If the stopped vehicle ahead stands for a longer time and then begins to move forward, the green illuminated vehicle ahead control indicator will flash and a warning chime will sound as a reminder to check traffic before resuming.

⚠ Warning

When full speed range adaptive cruise control is deactivated or cancelled, the vehicle will no longer be held at a stop and can start moving. Always be prepared to manually apply the brake pedal to hold the vehicle stationary.

Do not leave the vehicle while it is being held at a stop by the full speed range adaptive cruise control. Always move selector lever to park position **P** and switch off the ignition before leaving the vehicle.

Setting the following distance

When adaptive cruise control detects a slower moving vehicle in the driving path, it will adjust the vehicle speed to maintain the following distance selected by the driver.

The following distance can be set to near, medium or far.

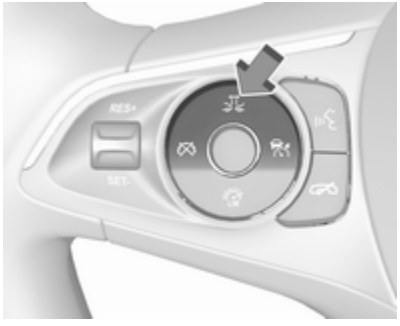

Press ⚙, the current setting is shown in the Driver Information Centre. Press ⚙ again to change the following distance. The setting is also displayed in the Driver Information Centre.

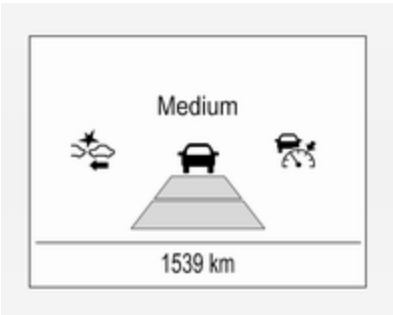

The selected following distance is indicated by filled distance bars in the adaptive cruise control page.

Note that the following distance setting is shared with the sensitivity setting of forward collision alert ⇨ 198.

Example: If setting 3 (far) is selected, then the driver is warned sooner before a possible collision, also if adaptive cruise control is inactive or switched off.

⚠ Warning

The Driver accepts full responsibility to drive with the appropriate following distance based on traffic, weather, visibility and regional regulation. Following distance must be adjusted or the system switched off when required by the prevailing conditions.

Adaptive cruise control in Sport mode

On vehicles with Flex Ride driving modes, the driver can slightly increase the Adaptive cruise control acceleration when Sport mode is selected. This function can be deactivated in the Flex Ride visualisation menu ⇨ 184

Detecting the vehicle ahead

The green illuminated vehicle ahead control indicator is displayed when the system detects a vehicle in the driving path. The range of the sensors is between 25 and 150 metres depending on vehicle speed.

Forward collision alert ⇨ 198.

If this symbol does not display, or displays briefly, adaptive cruise control will not respond to vehicles ahead.

Deactivation

Adaptive cruise control is deactivated by the driver when:

- is pressed.
- Brake pedal is applied.
- Clutch pedal is depressed for more than four seconds.
- Selector lever of automatic transmission is moved to **N**.

The system is also automatically deactivated when:

- Vehicle speed accelerates above 190 km/h or slows down below 25 km/h, on vehicles with automatic transmission it slows down to a stop without deactivating within five minutes.
- The Traction Control system is deactivated or operating.
- The Electronic Stability Control is deactivated or operating.
- There is no traffic and nothing detected on the road sides for approx. one minute. In this case there are no radar echoes and the sensor may report that it is blocked.
- The active emergency braking system is applying the brakes.
- Driving on steep inclines.
- The radar sensor is blocked by an ice or water film.
- A fault is detected in the radar, camera, engine or brake system.
- The brakes need to cool down.

Additionally, the system is automatically deactivated on vehicles with automatic transmission (full speed range adaptive cruise control) when:

- The incline uphill or downhill is greater than 20 %.
- The electric parking brake is applied.
- The vehicle is being held to a stop by the system for more than five minutes.
- The vehicle stops, the driver's seat belt is unbuckled and the driver's door is opened.

When adaptive cruise control is deactivated, the control indicator changes from green to white and a pop-up message is displayed in the Driver Information Centre.

The stored speed is maintained.

On Midlevel display, the stored speed is indicated in brackets in the Driver Information Centre when the system is deactivated but not switched off.

On Uplevel display, the adaptive cruise control symbol changes from green to white when the system is deactivated but not switched off.

⚠ Warning

When adaptive cruise control is deactivated, the driver must take over full brake and engine control immediately.

Switching off

Press to switch off adaptive cruise control. The control indicator in the Driver Information Centre extinguishes. The stored speed is deleted.

Switching off the ignition also switches off adaptive cruise control and deletes the stored speed.

Driver's attention

- Use adaptive cruise control carefully on bends or mountain roads, as it can lose the vehicle ahead and needs time to detect it again.
- Do not use the system on slippery roads as it can create rapid changes in tyre traction (wheel spinning), so that you could lose control of the vehicle.
- Do not use adaptive cruise control during rain, snow or heavy dirt, as the radar sensor can be covered by a water film, dust, ice or snow. This reduces or suppresses completely the visibility. In case of sensor blockage, clean the sensor cover.

System limits

⚠ Warning

The system's automatic brake force does not permit hard braking and the braking level may not be sufficient to avoid a collision.

- After a sudden lane change, the system needs a certain time to detect the next preceding vehicle. So if a new vehicle is detected, the system may accelerate instead of braking.
- Adaptive cruise control does ignore the oncoming traffic.
- Adaptive cruise control does not consider pedestrians and animals for braking and driving off.
- Adaptive cruise control considers stopped vehicles only at low speed.

- Do not use adaptive cruise control when towing a trailer.
- Do not use adaptive cruise control on roads with an incline of more than 10%.

Bends

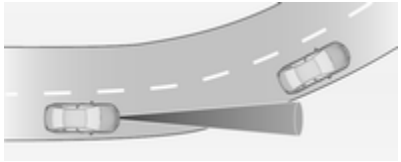

The adaptive cruise control calculates a predicted path based on the centrifugal force. This predicted path considers the current bend characteristic, but cannot consider a future bend change. The system may lose the current vehicle ahead or consider a vehicle which is not in the actual lane. This can happen when entering or exiting a bend or if the bend gets stronger or weaker. The camera applies a certain correction based on the detectable lane markings. The control indicator 🚗 will extinguish, if a vehicle ahead is no longer detected.

If the centrifugal force is too high in a bend, the system slows down the vehicle slightly. This braking level is not designed to avoid spinning-off the bend. The driver is responsible for reducing the selected speed before entering a bend and in general to adapt the speed to the road type and to existing speed limits.

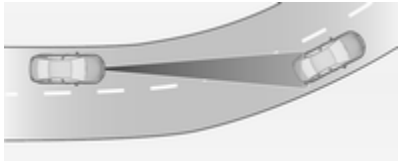

Motorways

On motorways, adapt the set speed to the situation and the weather. Always consider that adaptive cruise control has a limited visibility range, a limited braking level and a certain reaction time to verify if a vehicle is on the driving path or not. Furthermore, Adaptive cruise control was designed to brake as late as possible to allow changing the lane before the automatic braking. Adaptive cruise control may not be able to brake the vehicle in time to avoid a collision with a much slower vehicle or after a lane change.This is particularly true while driving fast or if the visibility is reduced due to weather conditions.

While entering or exiting a motorway, adaptive cruise control may lose the vehicle ahead and accelerate up to the set speed. For this reason, decrease the set speed before the exit or before the entry.

Vehicle path changes

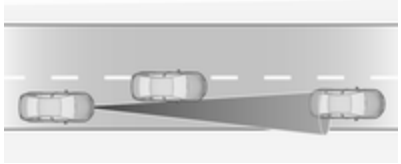

If another vehicle enters your driving path, adaptive cruise control will first consider the vehicle when it is completely in your path. Be ready to take action and depress the brake pedal, if you need to brake more quickly.

Hill and trailer considerations

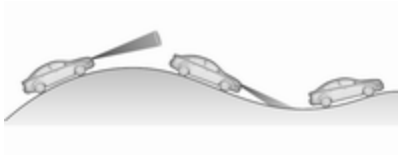

⚠Warning

Do not use adaptive cruise control on steep hill roads.

System performance on hills depends on vehicle speed, vehicle load, traffic conditions and the road gradient. It may not detect a vehicle in your path while driving on hills. Full speed range adaptive control is deactivated automatically, as the vehicle is stopping uphill on an incline greater than 10%. In this condition, be prepared to take control of the vehicle.

Note that applying the brake deactivates the system.

Radar unit

The radar unit is mounted behind the radiator grille behind or below the brand emblem.

⚠Warning

The radar unit was aligned carefully during manufacture. Therefore, in the event of a front-end impact, do not use the system. The front bumper may appear to be intact, however the sensor behind can be out of position and react incorrectly. After an accident, consult a workshop to verify and adjust the radar unit position.

Settings

Settings can be changed in the vehicle personalisation menu in the Info-Display.

Select the relevant setting in **Settings**, ➧ **Vehicle** in the Info-Display.

Info-Display ⇨ 120.

Vehicle personalisation ⇨ 126.

Fault

If the adaptive cruise control does not work due to temporary conditions (e.g. blockage by ice, overheated brakes or low speed manoeuvres) or if there is a permanent system error, a message is displayed in the Driver Information Centre.

Vehicle messages ⇨ 124.

Forward collision alert

The forward collision alert may help to avoid or reduce the harm caused by front-end crashes.

If the vehicle is equipped with conventional cruise control, the forward collision alert uses the front camera in the windscreen to detect a vehicle directly ahead, in your path.

If the vehicle is equipped with adaptive cruise control, the forward collision alert uses the radar sensor and front camera to detect a vehicle directly ahead, in your path.

A vehicle ahead is indicated by the control indicator 🚗.

If a vehicle directly ahead is approached too quickly, a warning chime and alert in the Driver Information Centre is provided.

Additionally the driver gets notified by a flashing red LED stripe or a pop up symbol in the head-up display which is projected on the windscreen in the driver's field of view.

A precondition is that forward collision alert in the vehicle personalisation menu is not deactivated ⇨ 126.

Activation

Forward collision alert with front camera detects vehicles to distances of approximately 60 metres and operates automatically at all speeds above walking speed.

Forward collision alert with radar sensor detects vehicles to distances of approximately 150 metres and operates automatically at all speeds above walking speed.

Alerting the driver

The vehicle ahead control indicator 🚗 illuminates green in the instrument cluster when the system has detected a vehicle in the driving path. On vehicles with head-up display, 🚗 is projected on the windscreen.

The control indicator 🚗 changes to yellow when the distance to a preceding moving vehicle gets too small.

Caution

The colour lighting of this control indicator does not correspond to local traffic laws on following distance. The driver bears full responsibility for maintaining safe following distance according to applicable traffic rules, weather and road conditions etc. at all times.

When the time to a potential collision with a vehicle in front gets too small and a collision is imminent, the collision alert symbol pops-up in the Driver Information Centre and the driver gets notified by a flashing red LED stripe or the pop-up symbol in the head-up display which is projected on the windscreen in the driver's field of view.

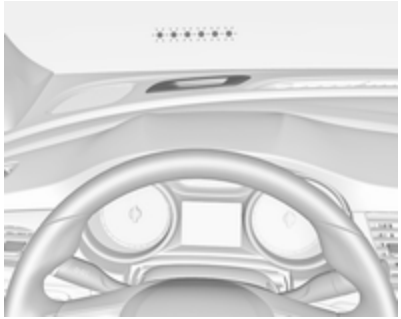

Simultaneously a warning chime sounds. Depress the brake pedal and steer the vehicle, if it is required by the situation.

Selecting the alert sensitivity

Press to set the alert sensitivity to near, medium or far.

The first button press shows the current setting on the Driver Information Centre. Additional button presses will change this setting. The chosen setting will remain until it is changed. The alert timing will vary based on vehicle speed. The faster the vehicle speed, the farther away the alert will occur. Consider traffic and weather conditions when selecting the alert timing.

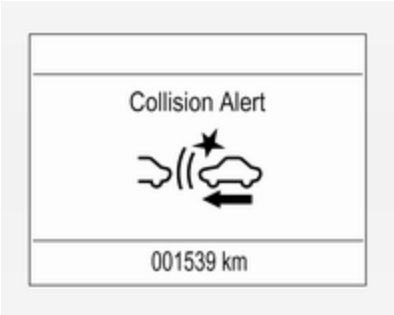

Note that the alert timing sensitivity setting is shared with the following distance setting of the adaptive cruise control. So changing the alert timing sensitivity changes the adaptive cruise control following distance setting.

Deactivation

The system can be deactivated in the personalisation menu, ⇨ 126.

If the forward collision alert was deactivated, alert sensitivity is set to "medium" when ignition is switched on next time.

The last selected setting will be stored when the ignition is switched off.

General information

⚠ Warning

Forward collision alert is just a warning system and does not apply the brakes. When approaching a vehicle ahead too rapidly, it may not provide you enough time to avoid a collision.

The driver accepts full responsibility for the appropriate following distance based on traffic, weather and visibility conditions.

The complete attention of the driver is always required while driving. The driver must always be ready to take action and apply the brakes.

System limitations

Forward collision alert is designed to warn on vehicles only, but may react also to other objects.

In the following cases, Forward collision alert may not detect a vehicle ahead or sensor performance is limited:

- Driving on winding or hilly roads.
- During nighttime driving.
- Weather limits visibility, such as fog, rain, or snow
- The sensor in the windscreen is blocked by snow, ice, slush, mud, dirt, windscreen damage or affected by foreign items, e.g. stickers.

Following distance indication

The following distance indication displays the distance to a preceding moving vehicle. The front camera in the windscreen is used to detect the distance of a vehicle directly ahead in the vehicle's path. It is active at speeds above 40 km/h.

When a preceding vehicle is detected ahead, the distance is indicated in seconds, displayed on a page in the Driver Information Centre.

On Baselevel display, choose **Info** Menu via **MENU** on the turn signal lever and turn the adjuster wheel to choose following distance indication page,⇨ 113

On Mid- and Uplevel display, select **Info** menu via steering wheel buttons and press ∇ to select following distance indication ⇨ 113.

The minimum indicated distance is 0.5 seconds.

If there is no vehicle ahead or the vehicle ahead is out of range, two dashes will be displayed: -.- sec.

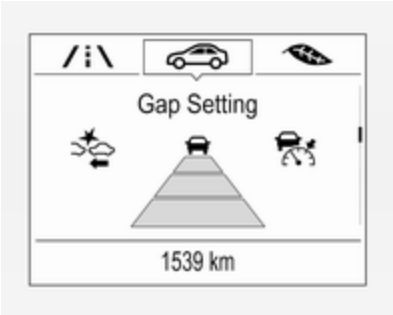

If Adaptive cruise control is active, this page shows the alert sensitivity setting instead of following distance setting. ⇨ 190.

System limitations

In the following cases, following distance indication sensor performance is limited:

- Driving on winding or hilly roads.
- During nighttime driving.
- Weather limits visibility, such as fog, rain, or snow.
- The sensor is blocked by snow, ice, slush, mud, dirt, windscreen damage or affected by foreign items, e.g. stickers.

Active emergency braking

Active emergency braking can help to reduce the damage and injury from crashes with vehicles, pedestrians and obstacles directly ahead, when a collision can no longer be avoided either by manual braking or by steering. Before the active emergency braking applies, the driver is warned by the Forward collision alert ⇨ 198 or the Front pedestrian protection alert ⇨ 205.

The feature uses various inputs (e.g. camera sensor, radar sensor, brake pressure, vehicle speed) to calculate the probability of a frontal collision.

⚠Warning

This system is not intended to replace the driver responsibility for driving the vehicle and looking ahead. Its function is limited to supplemental use only to reduce the vehicle speed before a collision.

The system may not react to animals. After a sudden lane change, the system needs a certain time to detect the next preceding vehicle.

The driver must always be ready to take action and apply the brakes and steer to avoid collisions.

Functionality

If equipped only with front camera the active emergency braking operates in forward gear above walking speed up to 85 km/h.

With radar sensor active emergency braking operates in forward gear above walking speed at all speeds.

A precondition is that forward collision alert with front camera system is not deactivated in the vehicle personalisation menu ⇨ 126.

The system includes:

- brake preparation system
- emergency automatic braking
- forward looking brake assist
- intelligent brake assist (only with radar sensor)
- front pedestrian protection system

Brake preparation system

When approaching a vehicle ahead or a pedestrian so quickly that a collision is likely, the brake preparation system slightly pressurizes the brakes. This reduces the response time, when a manual or automatic braking is requested.

The brake system is prepared so that braking can occur more rapidly.

If equipped only with front camera the system operates up to a speed of 80 km/h.

Emergency automatic braking

After activation of brake preparation system and just before the imminent collision, this function automatically applies limited braking to reduce the impact speed of the collision or prohibit a crash. Depending on the situation, the vehicle may automatically brake moderately or hard. This front automatic braking can only occur if a vehicle ahead is detected, indicated by the vehicle ahead indicator 🚗 ⇨ 198. On vehicles with front pedestrian protection, front automatic braking can also occur when a pedestrian ahead is detected, indicated by the pedestrian ahead indicator 🚶.

If equipped only with front camera the system operates up to a speed of 80 km/h.

Below a speed of 40 km/h the system can apply full braking.

Emergency automatic braking may slow the vehicle to a complete stop to try to avoid a potential crash. If this happens, emergency automatic braking may engage the electric parking brake to hold the vehicle at a stop. To release press the electric parking brake button or firmly press the accelerator pedal.

⚠ Warning

Emergency automatic braking is an emergency crash preparation feature and is not designed to avoid crashes. Do not rely on the system to brake the vehicle. Emergency automatic braking will not brake outside of its operating speed range and only responds to detected vehicles and pedestrians.

Forward looking brake assist

In addition to the brake preparation system and emergency automatic braking, the forward looking brake assist function makes the brake assist more sensitive. Therefore, pressing the brake pedal less strongly results in immediate hard braking. This function helps the driver brake quicker and harder before the imminent collision.

If equipped only with front camera the system operates up to a speed of 85 km/h.

⚠ Warning

Active emergency braking is not designed to apply hard autonomous braking or to automatically avoid a collision. It is designed to reduce the vehicle speed before a collision. It may not react to animals. After a sudden lane change, the system needs a certain time to detect the next preceding vehicle.

The complete attention of the driver is always required while driving. The driver must always be ready to take action and apply the brakes and steer to avoid collisions.

The system is designed to work with all occupants wearing their seat belts.

Intelligent Brake Assist

If the vehicle is equipped with radar sensor Intelligent brake assist may activate when the brake pedal is applied quickly by providing a boost to braking based on the speed of approach and distance to a vehicle ahead.

Minor brake pedal pulsations or pedal movement during this time is normal and the brake pedal should continue to be applied as needed. Intelligent brake assist will automatically disengage only when the brake pedal is released.

⚠ Warning

Intelligent brake assist may increase vehicle braking in situations when it may not be necessary. You could block the flow of traffic. If this occurs, take your foot off the brake pedal and then apply the brakes as needed.

Front pedestrian protection

⇨ 205.

Deactivation

Active emergency braking can be deactivated in the personalisation menu ⇨ 126. If deactivated a message is displayed in the Driver Information Centre.

System limitations

In some cases, the active emergency braking system may provide an automatic braking in situations that seem to be unnecessary, for instance in parking garages, due to traffic signs in a curve or due to vehicles in another lane. This is normal operation, the vehicle does not need service. Firmly apply the accelerator pedal to override the automatic braking if the situation and the surroundings permit.

In the following cases, Active emergency braking performance is limited:

- Driving on winding or hilly roads.
- Detecting all vehicles, especially vehicles with a trailer, tractors, muddy vehicles, etc.

- Detecting a vehicle when weather limits visibility, such as in fog, rain, or snow.
- During nighttime driving.
- Weather limits visibility, such as fog, rain, or snow.
- The sensor in the windscreen is blocked by snow, ice, slush, mud, dirt, windscreen damage or affected by foreign items, e.g. stickers.

To avoid malfunction keep the areas of the camera sensor in the windscreen and the radar sensor in the radiator grille always clean from dirt, dust, ice and snow.

Complete attention is always required while driving, and you should be ready to take action and apply the brakes and/or steer the vehicle to avoid crashes.

Fault

In case the system requires a service, a message is displayed in the Driver Information Centre.

If the system does not work as it should do, vehicle messages are displayed in the Driver Information Centre.

Vehicle messages ⇨ 124.

Front pedestrian protection

Front pedestrian protection may help to avoid or reduce the harm caused by front-end crashes with nearby pedestrians when driving in a forward gear.

The system uses the front camera in the windscreen to detect a pedestrian directly ahead, in your path.

Front pedestrian protection can detect and alert to pedestrians in a forward gear at speeds between 8 km/h and 80 km/h. Additionally Front pedestrian protection can provide a boost to braking or automatically brake the vehicle.

During daytime driving, the system detects pedestrians up to a distance of approximately 40 metres. During nighttime driving, system performance is limited.

Front pedestrian protection can be set to Off, Alert, or Alert & Brake in vehicle personalisation ⇨ 126.

⚠ Danger

Front pedestrian braking does not provide an alert or automatically brake the vehicle, unless it detects a pedestrian.

The system may not detect pedestrians, including children, when the pedestrian is not directly ahead, not fully visible, not standing upright, or when part of a group.

Front pedestrian protection includes:

- detecting front pedestrian ahead
- front pedestrian alert
- automatic braking

Detecting front pedestrian ahead

A pedestrian ahead up to a distance of approximately 40 m is indicated by the control indicator in the instrument cluster. On vehicles with head-up display, is projected on the windscreen.

Front pedestrian alert

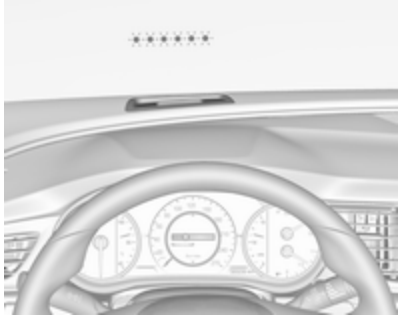

When approaching a detected pedestrian too quickly, a red flashing LED alert or the pop-up symbol in the head-up display is projected on the windscreen in the driver's field of view. A warning chime is provided. The brake system may prepare for driver braking to occur more rapidly which can cause a brief, mild deceleration. Continue to apply the brake pedal as required.

Cruise control or Adaptive cruise control may be disengaged when the Front pedestrian alert occurs.

Automatic braking

If a crash into a pedestrian directly ahead is imminent, and the brakes have not been applied, Automatic braking may automatically brake moderately or brake hard. This can help to avoid some very low speed pedestrian crashes or reduce pedestrian injury.

Automatic braking levels may be reduced under certain conditions, such as higher speeds.

If this happens, automatic braking may engage the Electric parking brake to hold the vehicle at a stop. Release the parking brake. A firm press of the accelerator pedal will also release Automatic braking and Electric parking brake ⇨ 180.

This system includes Intelligent brake assist, and the Emergency automatic braking system may also respond to pedestrians. See Active emergency braking ⇨ 202.

Automatic braking can be disabled in the vehicle personalisation menu ⇨ 126.

General information

⚠Warning

The driver must always be ready to take action and apply the brakes and steer to avoid collisions.

⚠ Warning

Front pedestrian braking may alert or automatically brake the vehicle suddenly in situations where it is unexpected and undesired. It could falsely alert or brake for objects similar in shape or size to pedestrians, including shadows. This is normal operation and the vehicle does not need a service. To override Automatic braking, firmly depress the accelerator pedal, if it is safe to do so.

⚠ Warning

Using the Front pedestrian braking system while towing a trailer could cause loss of vehicle control and crash. Turn the system to Alert or Off in the vehicle personalisation when towing a trailer. Vehicle personalisation ⇨ 126.

System limitations

In the following cases, front pedestrian protection may not detect a pedestrian ahead or sensor performance is limited:

- Vehicle speed is out of range from 8 km/h to 80 km/h in forward gear.
- The distance to an pedestrian ahead is more than 40 metres.
- Driving on winding or hilly roads.
- During nighttime driving.
- Weather limits visibility, such as fog, rain, or snow.
- The sensor in the windscreen is blocked by snow, ice, slush, mud, dirt, windscreen damage or affected by foreign items, e.g. stickers.

Parking assist

General information

When the trailer hitch is attached, change the configuration settings in the vehicle personalisation menu in the Info-Display. Vehicle personalisation ⇨ 126.

When attaching a trailer or bike carrier to the trailer hitch, the parking assist is deactivated.

Rear parking assist

⚠ Warning

It is the driver who bears full responsibility for the parking manoeuvre.

Always check the surrounding area while reversing and using the rear parking assist system.

The rear parking assist makes parking easier by measuring the distance between the vehicle and rear obstacles. It informs and warns the driver by giving acoustic signals and display indication.

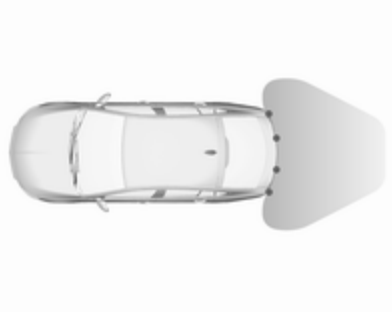

The system has four ultrasonic parking sensors in the rear bumper.

Activation

After ignition is switched on, the rear parking assist is activated.

An illuminated LED in the parking assist button P⁾⁾⁾▲ indicates that the system is ready to operate.

Indication

The system warns the driver with acoustic signals against potentially hazardous obstacles behind the vehicle in a distance range up to 50 cm while a forward gear is engaged, respectively up to 1.5 metres while reverse gear is engaged.

Depending on which side of the vehicle is closer to an obstacle, you will hear acoustic warning signals in the vehicle on the respective side. The interval between the sounds becomes shorter as the vehicle gets closer to that obstacle. When the distance is less than approx. 30 cm, the sound is continuous.

Additionally, the distance to rear obstacles is displayed by changing distance lines in the Driver Information Centre ⇨ 113.

The distance indication can be inhibited by vehicle messages with a higher priority. After dismissing the message distance indication appears again.

Deactivation

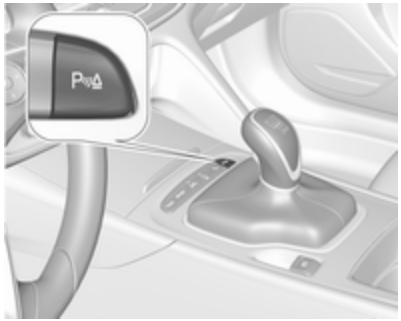

Press parking assist button P⁾⁾⁾▲ to deactivate, the LED in the button extinguishes.

Fault

In the event of a fault or if the system does not work temporarily, e.g. because of high external noise level or other interference factors, the LED in the button flashes for three seconds and then extinguishes. A message is indicated in the Driver Information Centre.

Front-rear parking assist

⚠Warning

The driver bears full responsibility for the parking manoeuvre.

Always check the surrounding area when driving backwards or forwards while using parking assist system.

The front-rear parking assist measures the distance between the vehicle and obstacles in front and behind the vehicle. It informs and warns the driver by giving acoustic signals and display indication.

It uses two different acoustic warning signals for the front and rear monitoring areas, each with a different tone frequency.

The system has four ultrasonic parking sensors each in the rear and front bumper.

Activation

The system is activated automatically at a speed up to 11 km/h.

An illuminated LED in the parking assist button P⁄⁄▲ indicates that the system is ready to operate.

If P⁄⁄▲ is switched off within an ignition cycle, the front parking assist is deactivated. If vehicle speed has exceeded 25 km/h beforehand, parking assist will be reactivated when speed drops below 11 km/h.

When the system is deactivated, the LED in the button extinguishes and **Park Assist Off** pops-up in the Driver Information Centre.

Indication

The system warns the driver with acoustic signals against potentially hazardous obstacles in front of the vehicle in a distance range up to 80 cm and against potentially hazardous obstacles behind the vehicle in a distance range up to 50 cm while a forward gear is engaged, or up to 1.5 m while reverse gear is engaged.

Depending on which side of the vehicle is closer to an obstacle, you will hear acoustic warning signals in the vehicle on the respective side. The interval between the sounds becomes shorter as the vehicle gets closer to that obstacle. When the distance is less than approx. 30 cm, the sound is continuous.

Additionally, the distance to rear and front obstacles is displayed by changing distance lines in the Driver Information Centre ⇨ 113 or, depending on the version, on the Info-Display ⇨ 120.

The distance indication can be inhibited by vehicle messages with a higher priority. After dismissing the message distance indication appears again.

Acoustic signal is muted when parking brake is engaged or the selector lever of automatic transmission is in **N**.

Deactivation

The system is deactivated automatically when vehicle speed exceeds 11 km/h.

Manual deactivation is also possible by pressing the parking assist button **P**.

When the system is deactivated manually, the LED in the button extinguishes and **Park Assist Off** pops-up in the Driver Information Centre.

After a manual deactivation, the front-rear parking assist is activated again if **P** is pressed or if reverse gear is engaged.

The complete system can be manually deactivated in the vehicle personalisation menu in the Info-Display. It remains deactivated during the ignition cycle or until activation in personalisation menu again. Vehicle personalisation ⇨ 126.

Fault

In the event of a fault or if the system does not work temporarily, e.g. because of high external noise level or other interference factors, a message pops-up in the Driver Information Centre.

Vehicle messages ⇨ 124.

Advanced parking assist

⚠ Warning

The driver bears full responsibility for accepting the parking slot suggested by the system and the parking manoeuvre.

Always check the surrounding area in all directions when using the advanced parking assist.

The advanced parking assist measures a suitable parking slot while passing, calculates the trajectory and automatically steers the vehicle into a parallel or perpendicular parking slot.

Instructions are given in the Driver Information Centre ⇨ 113 or, depending on the version, on the Info-Display ⇨ 120, supported by acoustic signals.

In vehicles with manual transmission, the driver must control acceleration, braking and gear shifting, while steering is done automatically.

In vehicles with automatic transmission, the driver must control acceleration and gear shifting, while braking and steering is done automatically.

Advanced parking assist is always combined with front-rear parking assist. Both systems use the same sensors in the front and rear bumper.

The system has six ultrasonic parking sensors each in both the rear and front bumper.

Activation of advanced parking assist

Advanced parking assist can only be activated when driving forwards.

When searching for a parking slot, the system is ready to operate with a short press of P.

The system recognises and memorises ten metres for parallel parking slots or six metres for perpendicular parking slots in the parking assist mode.

The system can only be activated at a speed up to 30 km/h and the system searches for a parking slot at a speed up to 30 km/h.

The maximum allowed parallel distance between the vehicle and a row of parked cars is 1.8 metres for parallel parking and 2.5 metres for perpendicular parking.

Functionality

Parking slot searching mode, indication in the Driver Information Centre

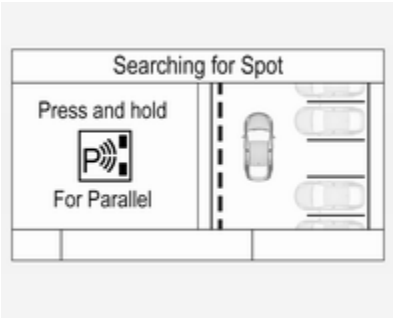

Select parallel or perpendicular parking slot in Driver Information Centre by long press on P.

The system is configured to detect parking slots by default on the passenger side. To detect parking slots on the driver side, switch on turn signal indicator on the driver side.

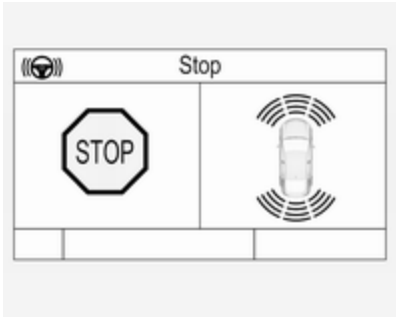

When a slot is detected, a visual feedback in the Driver Information Centre and an acoustic signal is given.

Indication in the Colour-Info-Display

Select parallel or perpendicular parking slot by tapping the respective icon on the display.

Select parking side by tapping the respective icon on the display.

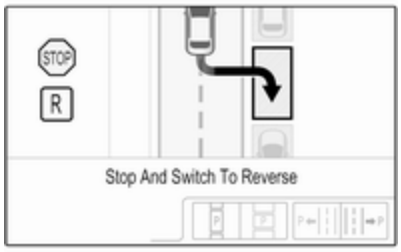

When a slot is detected, a visual feedback on the Colour-Info-Display and an acoustic signal is given.

If the driver does not stop the vehicle after a parking slot is proposed, the system starts to search for another suitable parking slot.

Park guiding mode
The parking slot suggestion of the system is accepted when the vehicle is stopped by the driver within ten metres for parallel parking slots or six metres for perpendicular parking slots after the **Stop** message is given. The system calculates the optimal path into the parking slot.

A brief vibration in the steering wheel after engaging reverse gear indicates that the steering is controlled by the system. Then the vehicle with manual transmission is steered into the slot automatically by giving the driver detailed instructions for braking, accelerating and gear shifting. With automatic transmission the vehicle is steered into the slot automatically by giving the driver detailed instructions for accelerating and shifting forward or reversing. The driver must keep hands away from the steering wheel. During park guiding mode the manoeuvring speed is limited.

Always pay attention to the sound of the front-rear parking assist. Continuous sound indicates that the distance to an obstacle is less than approx. 30 cm.

If, for any reason, the driver must take over control of the steering, hold the steering wheel only at the outer edge. Automatic steering is cancelled in this event.

Display indication
The instructions on the display show:

- General hints and warning messages.
- A hint when driving faster than 30 km/h during parking slot searching mode.
- The demand to stop the vehicle, when a parking slot is detected.
- The direction of driving during the parking manoeuvre.
- The demand to shift into reverse or first gear, or **R** or **D** with automatic transmission.
- The demand to stop or to drive slowly.
- For some of the instructions a progress bar is shown in the Driver Information Centre.
- The successful completion of the parking manoeuvre indicated by a pop-up symbol and a chime.
- The cancelling of a parking manoeuvre.

Display priorities

Advanced parking assist indication in the Driver Information Centre can be inhibited by vehicle messages with a higher priority. After approving the message by pressing **SET/CLR** on the turn signal lever or ✔ on the steering wheel, advanced parking assist instructions appear again and the parking manoeuvre can be continued.

Deactivation

The system is deactivated by:

- a short press of P
- parking manoeuvre successfully ended
- driving faster than 30 km/h during parking slot search
- driving faster than 8 km/h during parking guidance
- driver interference on steering wheel detected
- exceeding maximum number of gear changes: eight cycles when parallel parking or five cycles when perpendicular parking
- switching off the ignition

Deactivation by the driver or by the system during manoeuvring will be indicated by **Parking Deactivated** on the display. Additionally, an acoustic signal sounds.

Fault

A message appears when:

- There is a fault in the system.
- The driver did not successfully complete the parking manoeuvre.
- The system is not operational.
- Any of the deactivation reasons described above apply.

If an object is detected during parking instructions, **Stop** is indicated on the display. Removing the object will resume the parking manoeuvre. If the object is not removed, the system will be deactivated. A long press of P will activate the system and search for a new parking slot.

Basic notes on parking assist systems

⚠Warning

Under certain circumstances, various reflective surfaces on objects or clothing as well as external noise sources may cause the system to fail to detect obstacles.

Special attention must be paid to low obstacles which can damage the lower part of the bumper.

Caution

Performance of the system can be reduced when sensors are covered, e.g. by ice or snow.

Performance of the parking assist system can be reduced due to heavy loading.

Special conditions apply if there are taller vehicles in the vicinity (e.g. off-road vehicles, mini vans, vans). Object identification and

correct distance indication in the upper part of these vehicles cannot be guaranteed.

Objects with a very small reflection cross-section, e.g. objects of narrow size or soft materials, may not be detected by the system.

Parking assist systems do not detect objects outside the detection range.

Note
It is possible that the sensor detects a non-existing object caused by echo disturbance from external acoustic noise or mechanical misalignments (sporadic false warnings may occur).

Make sure that the front number plate is properly mounted (not bent and no gaps to the bumper on the left or right side) and the sensors are firmly in place.

Advanced parking assist system may not respond to changes in the available parking space after initiating a parking manoeuvre. The system may recognize an entry, a gateway, a courtyard or even a crossing as a parking slot. After selecting reverse gear the system will start a parking manoeuvre. Take care regarding the availability of the suggested parking slot.

Low curbs and surface irregularities, e.g. on construction zones, are not detected by the system. The driver accepts responsibility.

Note
New vehicles require a calibration during first use. For optimal parking guidance, a driving distance of at least 10 km, including a number of bends, is required.

System is calibrated to factory-fitted wheels. Parking performance is altered with other tyre or wheels sizes.

Side blind zone assistant

The side blind zone alert system detects and reports objects on either side of the vehicle, within a specified "blind spot" zone. The system displays a visual alert in each exterior mirror, when detecting objects that may not be visible in the interior and exterior mirrors.

Radar sensors for side blind zone alert are located in the rear bumper.

⚠ Warning

Side blind zone alert does not replace driver vision.

The system does not detect:

- vehicles outside the side blind zones which may be rapidly approaching
- pedestrians, cyclists or animals

Before changing a lane, always check all mirrors, look over the shoulder and use the turn signal.

When the system detects a vehicle in the side blind zone while driving forwards, either while passing a vehicle or being passed, the yellow warning symbol will illuminate in the relevant exterior mirror. If the driver then activates the turn signal,

the warning symbol starts flashing yellow as a warning not to change lanes.

Note
If the overtaking vehicle is at least 10 km/h faster than the vehicle being overtaken, the warning symbol in the relevant exterior mirror may not illuminate.

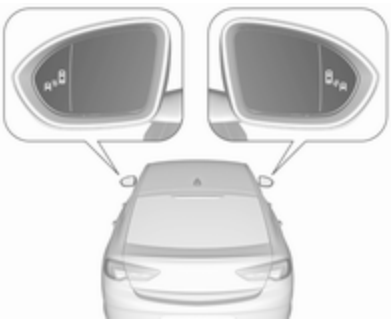

When the vehicle is started, both exterior mirror displays will briefly illuminate to indicate that the system is operating.

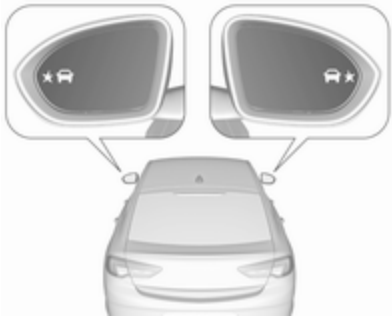

If the vehicle is equipped with lane change alert ⇨ 217, the symbol is displayed in the mirrors.

Deactivation

Activation or deactivation of the Side blind zone alert can be set in the vehicle personalisation menu in the Info-Display.

Vehicle personalisation ⇨ 126.

Info-Display ⇨ 120.

Deactivation is indicated by a message in the Driver Information Centre.

Detection zones

The detection zones start at the rear bumper and extend approx. three metres rearwards and to the sides. The height of the zone is approx. between half a metre and two metres off the ground.

The system is deactivated if the vehicle is towing a trailer or if a bike carrier is attached.

Side blind zone alert is designed to ignore stationary objects such as guardrails, posts, curbs, walls and beams. Parked vehicles or oncoming vehicles are not detected.

System limitations

Occasional missed alerts can occur under normal circumstances and will increase in wet conditions.

The system may not operate properly when:

- Ice, snow, mud, stickers, magnets, metal plates, or anything else covers the sensors.
- Driving in heavy rainstorms.

- The vehicle had an accident or if the area surrounding the detection sensor is damaged or not properly repaired.
- There are extreme temperature changes.
- The vehicle is towing a trailer

In the event of a fault in the system or if the system does not work due to temporary conditions, the symbols in the mirrors will be permanently illuminated and a message is displayed in the Driver Information Centre. Seek the assistance of a workshop.

Lane change alert

Additional to the side blind zone assist ⇨ 215, lane change alert recognizes rapidly approaching vehicles from behind on parallel lanes next to your vehicle.

If the vehicle has lane change alert, then side blind zone alert is always included.

The system alerts visually in each exterior mirror when detecting rapidly approaching vehicles from behind.

The radar distance sensors are located in the rear bumper.

⚠ Warning

Lane change alert does not replace driver vision.

Before changing a lane, always check all mirrors, look over the shoulder and use the turn signal.

When the system detects an approaching vehicle from behind which drives considerably faster, the yellow warning symbol ★🚗 will illuminate in the relevant exterior mirror. If the driver then activates the turn signal, the warning symbol ★🚗 starts flashing yellow as a warning not to change lanes.

Lane change alert is active at all speeds.

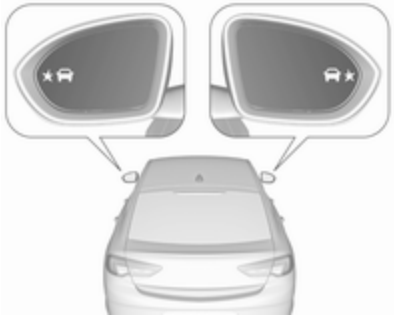

When the vehicle is started, both exterior mirror displays will briefly come on to indicate that the system is operating.

Detection zones

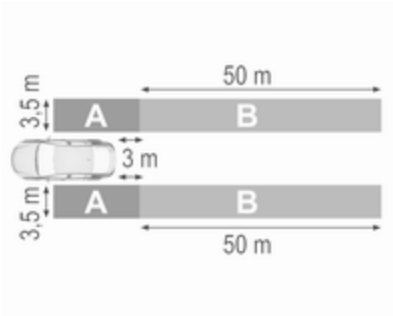

The system sensors cover a zone of approx. 3.5 metres parallel on both vehicle sides and approx. 3 metres rearwards on side blind zone alert **(A)** and approx. 50 metres rearwards on lane change alert **(B)** on parallel lanes. The zones start at each exterior mirror. The height of the zone is approx. between 0.5 metres and 2 metres off the ground.

Deactivation

Activation or deactivation of the lane change alert can be set in the vehicle personalisation menu in the Info-Display.

Vehicle personalisation ⇨ 126.

Info-Display ⇨ 120.

The system is deactivated if the vehicle is towing a trailer.

Deactivation is indicated by a message in the Driver Information Centre.

System limitations

Occasional missed alerts can occur under normal circumstances or in sharp curves. The system can temporarily alert of objects in the blind spot at specific weather conditions (rain, hail etc). Driving on a wet road or in the transitions from a dry area to a wet area can cause the control indicator ★🚗 to light up, as water splash can be interpreted as an object. Otherwise the control indicator ★🚗 may illuminate due to guardrails, signs, trees, shrubs or other immobile objects. This is normal operation and the system does not need to be serviced.

The system may not operate properly when:

- Ice, snow, mud, stickers, magnets, metal plates, or anything else covers the sensors.
- Driving in heavy rainstorms.
- The vehicle had an accident or if the area surrounding the detection sensor is damaged or not properly repaired.
- There are extreme temperature changes.
- The vehicle is towing a trailer

In the event of a fault in the system or if the system does not work due to temporary conditions, a message is displayed in the Driver Information Centre. Seek the assistance of a workshop.

Note
After production, the system requires a calibration. For optimal performance, drive as soon as possible on a straight highway road with roadside objects, e.g. guardrails and barriers for some distance.

Panoramic view system

This system allows views of the vehicle's surroundings to be displayed as a nearly 360° picture in the Info Display, like a bird's eye view.

The system uses four cameras:

- rear camera, installed in the tailgate
- front camera, installed in the front grill below the emblem
- side cameras, located at the bottom of both exterior mirrors.

The screen in the Info Display is divided into two parts: on the left there is a view from above the vehicle, and on the right there is the view from front or the rear displayed, according to the gear engaged. The parking sensors complete the information on the view.

Activation

Panoramic view system is activated:

- engaging reverse gear
- touching the camera icon ⊙ in the Info Display
- approaching too close to an object ahead

Functionality

Rear view

Rear view displays an image of the area behind the vehicle on the right part of the screen when reverse gear is engaged.

A warning triangle ⚠ may be displayed on the screen when obstacles are detected by the rear sensors of the parking assist. This triangle changes from yellow to red and increases in size the closer the object gets.

The previous content of the Info Display appears when the vehicle is shifted out of reverse gear after a short delay. To return to the previous display content sooner, press the camera icon in the Info Display. Driving faster than 11 km/h in a forward gear will deactivate the panoramic system also.

Surround view

Surround view displays an image of the area surrounding the vehicle from above, along with the front or rear camera views in the Info Display.

Front view

Front view displays an image of the area in front of the vehicle on the right part of the screen. The view displays after shifting from reverse gear to a forward gear, or by touching the camera icon in the Info Display. Front view also displays objects automatically detected within 30 cm. The front view is only displayed up to a speed of 11 km/h in a forward gear.

Deactivation

Panoramic view system is deactivated:

- driving faster than 11 km/h
- touching the camera icon ⊙ in the Info Display
- shifting into neutral or P with automatic transmission.

General information

⚠ Warning

The panoramic view system does not replace driver vision. It will not display children, pedestrians, cyclists, crossing traffic, animals, or any other objects outside of the camera view areas, e. g. below the bumper, or underneath the vehicle.

Do not drive or park the vehicle using only the panoramic view system.

Always check the surrounding of the vehicle before driving.

⚠ Warning

Displayed images may be further or closer than they appear. The area displayed is limited and objects that are close to either edge of the bumper or under the bumper are not displayed on the screen.

⚠ Warning

The panoramic view cameras have blind spot areas and will not display all objects near the edges of the vehicle. Folding side mirrors that are out of position will not display the panoramic view correctly.

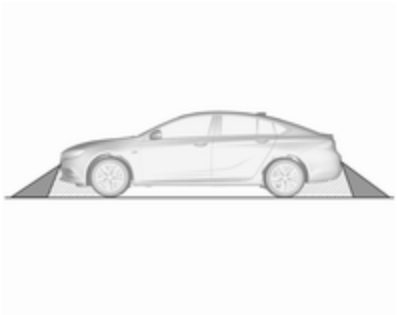

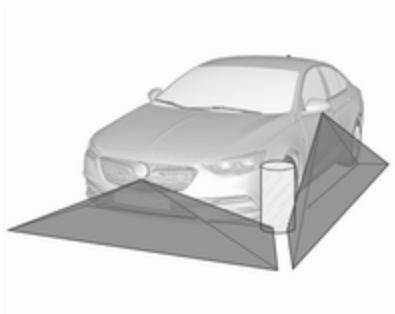

Blind spots are represented as hatched areas in the illuminations. Dark areas show the views displayed by the panoramic view system.

System limitations

Caution

For optimal operation of the system, it is important to keep the lenses of the cameras in the front grille, the housings of outside mirrors and in the tailgate between the number plate lights always clean. Rinse the lenses with water and wipe with a soft cloth.

Do not clean the lenses with a steam-jet or high-pressure jet cleaner.

The panoramic view system may not operate properly when:

- The surrounding is dark.
- The sun or the beam of headlights is shining directly into the camera lenses.
- During nighttime driving.
- Weather limits visibility, such as fog, rain, or snow.
- The camera lenses are blocked by snow, ice, slush, mud, dirt.
- The vehicle is towing a trailer.
- The vehicle had an accident.
- There are extreme temperature changes.

Rear view camera

The rear view camera assists the driver when reversing by displaying a view of the area behind the vehicle.

The view of the camera is displayed in the Info-Display.

⚠Warning

The rear view camera does not replace driver vision. Note that objects that are outside the camera's field of view and the parking assist sensors, e.g. below the bumper or underneath the vehicle, are not displayed.

Do not reverse or park the vehicle using only the rear view camera.

Always check the surrounding of the vehicle before driving.

Activation

Rear view camera is automatically activated when reverse gear is engaged.

Functionality

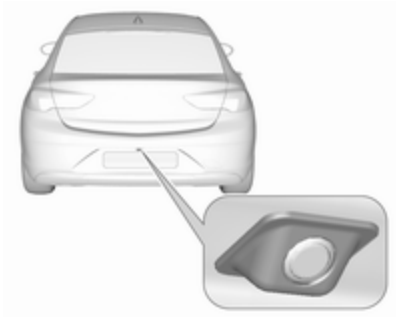

The camera is mounted between the number plate lights.

The area displayed by the camera is limited. The distance of the image that appears on the display differs from the actual distance.

Guiding lines

Dynamic guiding lines are horizontal lines at one metre intervals projected onto the picture to define the distance to displayed objects.

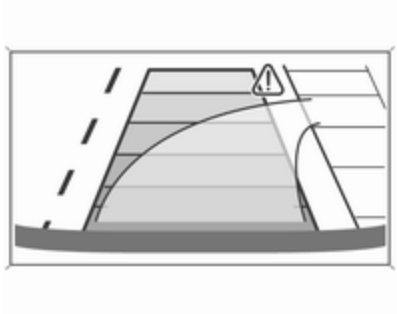

Trajectory lane of the vehicle is shown in accordance with the steering angle.

Warning symbols

Warning symbols are indicated as triangles ⚠on the picture, which show obstacles detected by the rear sensors of the advanced parking assist.

Additionally ⚠appears on the top line of the Info-Display with the warning to check the vehicle surrounding.

Deactivation

The camera is switched off when a certain forward speed is exceeded or if reverse gear is not engaged for approx. 10 seconds.

Deactivation of guiding lines and warning symbols

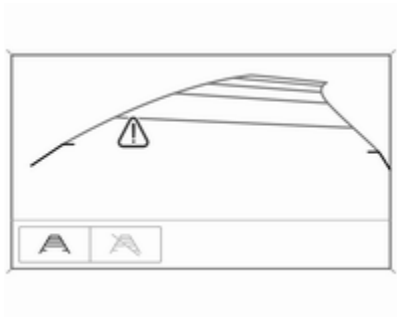

7" Colour-Info-Display: Activation or deactivation of the visual guiding lines and the warning symbols can be changed via touch buttons in the lower zone of the display.

8" Colour-Info-Display: Activation or deactivation of the visual guiding lines and the warning symbols can be

changed in the Settings menu in the Info-Display. Select the relevant setting in **Settings**, ➧ **Rear Camera**.

Info-Display ⇨ 120.

Vehicle personalisation ⇨ 126.

System limitations

The rear view camera may not operate properly when:

- The surrounding is dark.
- The sun or the beam of headlights is shining directly into the camera lenses.
- During nighttime driving.
- Weather limits visibility, such as fog, rain, or snow.
- The camera lenses are blocked by snow, ice, slush, mud, dirt. Clean the lense, rinse with water, and wipe with a soft cloth.
- The vehicle is towing a trailer.
- The vehicle had a rear end accident.
- There are extreme temperature changes.

Fault messages are displayed with a ⚠ on the top line of the Info-Display.

Rear cross traffic alert

Additional to the rear view camera ⇨ 221, rear cross traffic alert warns of cross traffic from left or right side when driving rearwards. When cross traffic is recognized and the rear view camera is activated, a warning triangle with a direction arrow ⚠➡ appears on the Colour-Info-Display, showing the direction of the traffic. Furthermore, three beeps will sound from the speaker on the respective side.

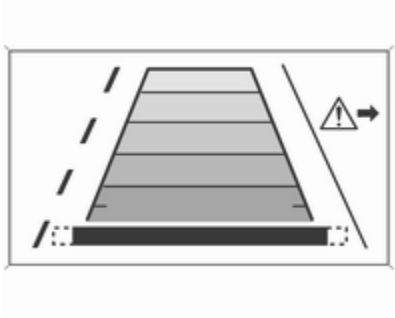

The radar distance sensors are located in the rear bumper.

⚠ Warning

The rear cross traffic alert does not replace driver vision. Note that objects that are outside sensors, e.g. below the bumper or underneath the vehicle, are not displayed.

Pedestrians, children or animals are not detected.

Do not reverse the vehicle by only looking at the Info-Display and check the surrounding behind and around the vehicle before reversing.

Activation

Rear cross traffic alert is automatically activated together with the rear view camera when reverse gear is engaged.

Detection zones

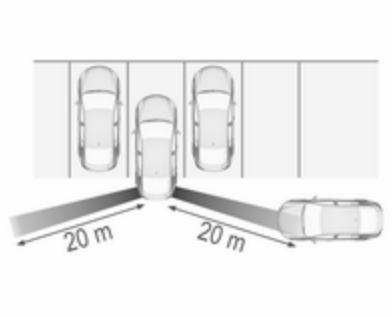

The system sensors cover a zone of approx. 20 metres at 90° to the left or right side behind the vehicle. Rear cross traffic alert is active up to 10 km/h and issues alerts within cross traffic travelling between 0 and 36 km/h.

Deactivation

Rear cross traffic alert is deactivated together with the rear view camera when a certain forward speed is exceeded or if reverse gear is not engaged for approx. 10 seconds.

Activation or deactivation of the rear cross traffic alert can be set in the vehicle personalisation menu in the Info-Display.

Vehicle personalisation ⇨ 126.

Info-Display ⇨ 120.

The system is deactivated if the vehicle is towing a trailer.

Deactivation is indicated by a message in the Driver Information Centre.

System limitations

The system may not operate properly when:

- Ice, snow, mud, stickers, magnets, metal plates, or anything else covers the sensors.
- Driving in heavy rainstorms.
- The vehicle had an accident or if the area surrounding the detection sensor is damaged or not properly repaired.
- There are extreme temperature changes.
- The vehicle is towing a trailer

In the event of a fault in the system or if the system does not work due to temporary conditions, a message is displayed in the Driver Information Centre. Seek the assistance of a workshop.

Traffic sign assistant

Functionality

Traffic sign assistant detects designated traffic signs via a front camera and displays them in the Driver Information Centre.

If the vehicle is equipped with an embedded navigation system, traffic signs from data maps may be included additionally.

Traffic signs, which will be detected, are:

Limit and no passing signs

- speed limit
- no passing
- end of speed limit
- end of no passing

Road signs

Beginning and end of:

- city regions (country-specific)
- motorways
- A-roads
- play streets

Add on signs

- additional hints to traffic signs
- restriction of trailer towing
- tractor constraints
- wet warning
- ice warning
- time constraints
- distance constraints
- direction arrows

Speed limit signs and no passing signs are displayed in the Driver Information Centre until the next speed limit sign or end of speed limit is detected or up to a defined sign timeout.

Indication of multiple signs on the display is possible.

An exclamation mark in a frame indicates that there is an additional sign detected which cannot be clearly identified by the system.

The system operates without loss of performance up to a speed of 200 km/h depending on the lighting conditions. At night the system is active up to a speed of 160 km/h.

Display indication

Information about the currently valid traffic signs is available on the designated traffic sign assistant page in the Driver Information Centre.

Additionally, the currently valid speed limit is displayed permanently in the lower line of the Driver Information Centre. In case a speed limit with add on sign is available, a **+** symbol is displayed in this area.

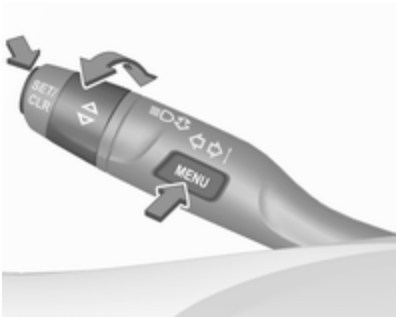

On Baselevel display, choose **Info** Menu via **MENU** and select traffic sign assistant page with the adjuster wheel on the turn signal lever ⇨ 113.

On Mid- or Uplevel display, choose **Info** Menu via right steering wheel buttons and press ∇ or Δ to select traffic sign assistant page ⇨ 113.

When another page on the Driver Information Centre menu was selected and then traffic sign assistant page is chosen again, the last recognised traffic sign will be displayed.

Alert function

The alert function can be activated or deactivated in the setting menu of the traffic sign assistant page.

Once activated and when the traffic sign detection page is currently not displayed, newly detected speed limit and no passing signs are displayed as pop-up alerts in the Driver Information Centre.

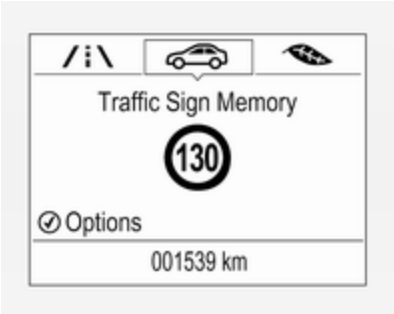

On Baselevel Display, when traffic sign assistant page is displayed, press **SET/CLR** on the turn signal lever.

Select **Alerts ON** or **Alerts OFF** by turning the adjuster wheel and press **SET/CLR**.

On Mid- or Uplevel Display, when traffic sign assistant page is displayed, press ⊳ on the steering wheel controls.

Activate alerts by setting ☑, deactivate alerts by setting ☐ via button ✔.

Pop-up alert is displayed for approx. eight seconds in the Driver Information Centre.

System reset

The content of the traffic sign display can be cleared in the setting menu of the traffic sign assistant page by selecting **Reset** and confirm by pressing **SET/CLR** on the turn signal lever or ✔ on the steering wheel controls.

Alternatively, SET/CLR or ✔ can be pressed for three seconds to clear the content of the page.

Upon successful reset, a chime will sound and the following “Default Sign” is indicated until the next traffic sign is detected or provided by map data of the navigation system.

In some cases, traffic sign assistant is cleared up automatically by the system.

Clearing of traffic signs

There are different scenarios that lead to clearing the currently displayed traffic signs. After clearing, the “Default Sign” or a sign from navigation map data is displayed in the Driver Information Centre.

Reasons for signs being cleared:

- A predefined distance was driven or time has elapsed (differs for each sign type)
- Vehicle drives through a turn
- If no navigation map data is available and speed drops below 52 km/h (city entry detection)
- If navigation map data is available and a city entry/exit was detected due to map data change

Traffic sign detection in conjunction with navigation system

If the vehicle is equipped with a navigation system, the currently displayed sign can either originate from optical sign detection or from the map data.

If the currently displayed sign originates from map data and the map information changes, a new sign will be displayed. This may lead to detection of a new sign although no sign on the road may have been passed.

System limitations

Traffic sign assistant may not operate properly when:

- Vehicle speed is faster than 200 km/h.
- Driving on winding or hilly roads.
- During nighttime driving.
- Weather limits visibility, such as fog, rain, or snow.
- The sensor in the windscreen is blocked by snow, ice, slush, mud, dirt, windscreen damage or affected by foreign items, e.g. stickers.
- The sun is shining directly into the camera lens.
- Traffic signs are completely or partially covered or difficult to discern.
- Traffic signs are incorrectly mounted or damaged.
- Traffic signs do not comply with the Vienna Convention on Road Signs and Signals (Wiener Übereinkommen über Straßenverkehrszeichen).

Caution

The system is intended to help the driver within a defined speed range to discern certain traffic signs. Do not ignore traffic signs which are not displayed by the system.

The system does not discern any other than the conventional traffic signs that might give or end a speed limit.

Do not let this special feature tempt you into taking risks when driving.

Always adapt speed to the road conditions.

The driver assistance systems do not relieve the driver from full responsibility for vehicle operation.

Lane keep assist

Lane keep assist helps to avoid crashes due to unintentional lane departures. The front camera observes the lane markings between which the vehicle is driving. If the vehicle approaches a lane marking, the steering wheel is gently turned to position the vehicle back into the lane. Turn steering wheel in same direction, if system steering is not sufficient. Turn steering wheel gently into opposite direction, if lane change is intended.

When crossing a lane marking significantly, lane keep assist starts a visual and acoustic warning.

Unintended lane departure is assumed

- without using turn signal
- using the turn signal in the opposite direction of the lane departure
- without braking
- without acceleration
- without active steering.

Note
The system is switched off during detection of ambiguous lane markings, e.g. in construction areas.

Note
The system may be switched off if it detects lanes which are too narrow, too wide or too curved.

Activation

The lane keep assist is activated by pressing . The LED in the button illuminates to indicate that the system is switched on.

When the control indicator in the instrument cluster or in the head-up display illuminates green, the system is ready to assist.

The system is operational at vehicle speeds between 60 km/h and 180 km/h and if lane markings are available.

The system gently turns the steering wheel and the control indicator changes to yellow, if the vehicle approaches a detected lane marking without using the turn signal in that direction.

The system alerts by flashing together with three chimes, from the respective direction, if the lane is departed significantly.

The system is only operable when a lane marking is detected.

If the system only detects lane markings on one side of the road, it will only assist for this side.

Lane keep assist detects hands-free driving. In this case a message in the Driver Information Centre pops-up and a chime sounds as long as lane keep assist detects hands-free driving.

Deactivation

The system is deactivated by pressing ; the LED in the button extinguishes.

The system is deactivated automatically when a trailer is detected.

System limitations

The system performance may not operate properly when:

- Vehicle speed is out of range from 60 to 180 km/h.
- Driving on winding or hilly roads.
- During nighttime driving.
- Weather limits visibility, such as fog, rain, or snow.
- The sensor in the windscreen is blocked by snow, ice, slush, mud, dirt, windscreen damage or affected by foreign items, e.g. stickers.
- The sun is shining directly into the camera lens.
- Close vehicles ahead
- Banked roads
- Road edges
- Roads with poor lane markings
- Sudden lighting changes
- Vehicle modifications, e.g. tyres.

Switch off the system if the system is disturbed by tar marks, shadows, road cracks, temporary or construction lane markings, or other road imperfections.

⚠ Warning

Always keep your attention on the road and maintain proper vehicle position within the lane, otherwise vehicle damage, injury or death could occur.

Lane keep assist does not continuously steer the vehicle.

The system may not keep the vehicle in the lane or give an alert, even if a lane marking is detected.

The steering of the lane keep assist may not be sufficient to avoid a lane departure.

The system may not detect hands-off driving due to external influences (road condition and surface, weather etc). The driver has full responsibility to control the vehicle and is always required to keep the hands on the steering wheel while driving.

Using the system while towing a trailer or on slippery roads could cause loss of control of the vehicle and a crash. Switch the system off.

Fuel

Fuel for petrol engines

Only use unleaded fuel that complies with European standard EN 228 or equivalent.

The engine is capable of running with fuel that contains up to 10% ethanol (e.g. named E10).

Use fuel with the recommended octane rating. A lower octane rating can reduce engine power and torque and slightly increases fuel consumption.

Caution

Do not use fuel or fuel additives that contain metallic compounds such as manganese-based additives. This may cause engine damage.

Caution

Use of fuel that does not comply to EN 228 or equivalent can lead to deposits or engine damage.

Caution

Use of fuel with a lower octane rating than the lowest possible rating could lead to uncontrolled combustion and engine damage.

The engine specific requirements regarding octane rating are given in the engine data overview ⇨ 293. A country-specific label at the fuel filler flap can supersede the requirement.

Fuel additives outside Europe

Fuel should contain detergent additives that help prevent engine and fuel system deposits from forming. Clean fuel injectors and intake valves will allow the emission control system to work properly.

Some fuel does not contain sufficient quantities of additive to keep fuel injectors and intake valves clean.

To make up for this lack of detergency, add Fuel System Treatment PLUS to the fuel tank at every engine oil change or every 15,000 km, whichever occurs first. It is available at your workshop.

Fuels containing oxygenates such as ethers and ethanol, as well as reformulated fuel, are available in some cities. If these fuels comply with the previously described specification, then they are acceptable to use. However, E85 (85% ethanol) and other fuels containing more than 15% ethanol must be used only in FlexFuel vehicles.

Caution

Do not use fuel containing methanol. It can corrode metal parts in the fuel system and also damage plastic and rubber parts. This damage would not be covered by the vehicle warranty.

Some fuels, mainly high octane racing fuels, can contain an octane enhancing additive called methylcyclopentadienyl manganese tricarbonyl (MMT). Do not use fuels or fuel additives with MMT as they can reduce spark plug life and affect emission control system performance. The malfunction indicator light may turn on ⇨ 108. If this occurs, seek the assistance of a workshop.

Fuel for diesel engines

Only use diesel fuel that complies with EN 590 and which has a sulphur concentration of max. 10 ppm.

Fuels with a biodiesel (compliant with EN 14214) content of max. 7% by volume may be used (e.g. named B7).

If travelling in countries outside the European Union occasional use of Euro-Diesel fuel with a sulphur concentration below 50 ppm is possible.

Caution

Frequent usage of diesel fuel containing more than 15 ppm sulphur will cause severe engine damage.

Caution

Use of fuel that does not comply to EN 590 or similar can lead to engine powerloss, increased wear or engine damage and may affect your warranty.

Do not use marine diesel oils, heating oils, Aquazole and similar diesel-water emulsions. Diesel fuels must not be diluted with fuels for petrol engines.

Low temperature operation

At temperatures below 0° C, some diesel products with biodiesel blends may clog, freeze or gel, which may affect the fuel supply system. Starting and engine operation may not work properly. Make sure to fill winter grade diesel fuel at ambient temperatures below 0°C.

Arctic grade diesel fuel can be used in extreme cold temperatures below -20° C. Using this fuel grade in warm or hot climates is not recommended and may cause engine stalling, poor starting or damage on the fuel injection system.

Refuelling

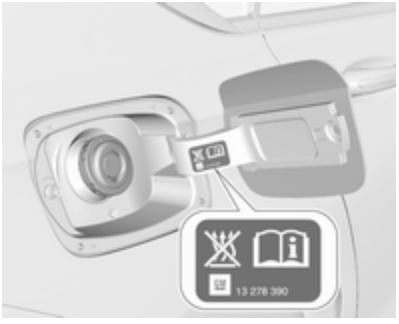

⚠Danger

Before refuelling, switch off ignition and any external heaters with combustion chambers.

Follow the operating and safety instructions of the filling station when refuelling.

⚠Danger

Fuel is flammable and explosive. No smoking. No naked flames or sparks.

If you can smell fuel in your vehicle, have the cause of this remedied immediately by a workshop.

Caution

In case of misfuelling, do not switch on ignition.

Fuel filler flap is located at right rear side of vehicle.

The fuel filler flap can only be opened if the vehicle is unlocked. Release the fuel filler flap by pushing the flap.

Petrol and Diesel refuelling

Place the nozzle in straight position to the filler neck and press with slight force to insert.

To refuel, fully insert the pump nozzle and switch it on.

After the automatic cut-off, the tank can be topped up by operating the pump nozzle a maximum of two more times.

Caution

Wipe off any overflowing fuel immediately.

Close the flap and allow it to engage.

Misfuel inhibitor

⚠Warning

Do not try to open the flap of the fuel filler neck manually on vehicles with misfuel inhibitor.

Disregarding this could lead to trapping of the fingers.

All vehicles are equipped with a misfuel inhibitor.

The misfuel inhibitor ensures that the flap of the fuel filler neck can only be opened by using the suitable fuel nozzle or a funnel for emergency refilling.

In case of an emergency, refill with a canister. A funnel must be used to open the cap of the filler neck.

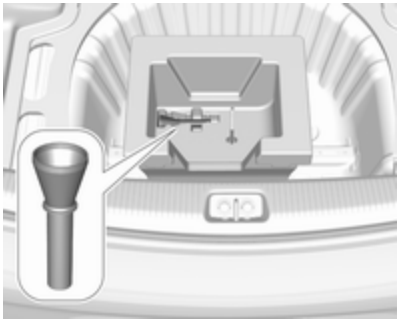

The funnel is stowed in the load compartment.

Place the funnel in straight position to the filler neck and press with slight force to insert.

Use the funnel to fill in the fuel into the filler neck.

After topping-up, stow the funnel in the load compartment.

Trailer hitch

General information

The factory-fitted towing equipment is folded up under the rear bumper fascia.

Entrust retrofitting of towing equipment to a workshop. It may be necessary to make changes that affect the cooling system, heat shields or other equipment. Only use towing equipment that has been approved for your vehicle.

To avoid vehicle damage, the power tailgate cannot be operated with the electronic key when a trailer is electrically connected.

The bulb outage detection function for trailer brake light cannot detect a partial bulb outage, e.g. in case of four times five watt bulbs, the function only detects lamp outage when only a single five Watt lamp remains or none remain.

Fitting of towing equipment could cover the opening of the towing eye. If this is the case use the coupling ball bar for towing.

Driving characteristics and towing tips

Before attaching a trailer, lubricate the coupling ball. However, do not do so if a stabiliser, which acts on the coupling ball, is being used to reduce snaking movements.

During trailer towing do not exceed a speed of 80 km/h. A maximum speed of 100 km/h is only appropriate if an oscillation damper is used and the permissible gross trailer weight does not exceed the vehicle's kerb weight.

For trailers with low driving stability and caravan trailers, the use of an oscillation damper is strongly recommended.

If the trailer starts snaking, drive more slowly, do not attempt to correct the steering and brake sharply if necessary.

When driving downhill, drive in the same gear as if driving uphill and drive at a similar speed.

Adjust tyre pressure to the value specified for full load ⇨ 301.

Trailer towing

Trailer loads

The permissible trailer loads are vehicle and engine-dependent maximum values which must not be exceeded. The actual trailer load is the difference between the actual gross weight of the trailer and the actual coupling socket load with the trailer coupled.

The permissible trailer loads are specified in the vehicle documents. In general, they are valid for gradients up to 12%.

The permissible trailer load applies up to the specified incline and at sea level. Since engine power decreases as altitude increases due to the air becoming thinner, therefore reducing climbing ability, the permissible gross train weight also decreases by 10% for every 1000 metres of altitude. The gross train weight does not have to be reduced when driving on roads with slight inclines (less than 8%, e.g. motorways).

The permissible gross train weight must not be exceeded. This weight is specified on the identification plate ⇨ 288.

Vertical coupling load

The vertical coupling load is the load exerted by the trailer on the coupling ball. It can be varied by changing the weight distribution when loading the trailer.

The maximum permissible vertical coupling load of 60 kg (engines B20DTH / B20NFT: 90 kg) is specified on the towing equipment identification plate and in the vehicle documents. Always aim for the maximum load, especially in the case of heavy trailers. The vertical coupling load should never fall below 25 kg.

Rear axle load

When the trailer is coupled and the towing vehicle fully loaded, the permissible rear axle load (see identification plate or vehicle documents) may be exceeded by 70 kg (engines B20DTH: 80 kg), the gross vehicle weight rating must not be exceeded. If the permissible rear axle load is exceeded, a maximum speed of 100 km/h applies.

Towing equipment

Caution

The folding coupling ball bar cannot be removed from the vehicle. When driving without a trailer, fold in the coupling ball bar.

⚠ Warning

Make sure that no one is in the pivot zone of the coupling ball bar. Risk of body injury.

When releasing the stowed coupling ball bar, make sure to stand left of the grip.

Release stowed coupling ball bar

Pull the grip located left to the number plate under the rear bumper fascia at an angle of approx. 45° to the ground.

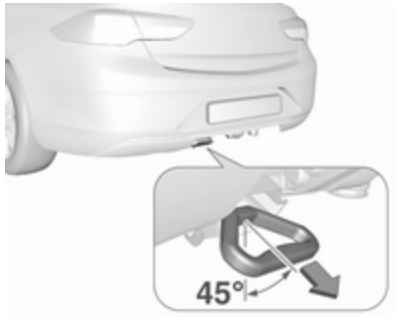

A buzzing tone sounds as a warning when the release handle is pulled out and the ball neck is disengaged.

Take the released coupling ball bar and raise it up until it engages.

Ensure the coupling ball bar is correctly engaged and the released handle is guided back to its hidden initial position, otherwise the buzzing tone will not stop.

Stow/hide coupling ball bar

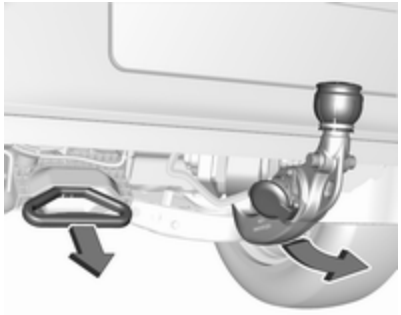

Pull the grip located left of the number plate under the rear bumper fascia at an angle of approx. 45° to the ground.

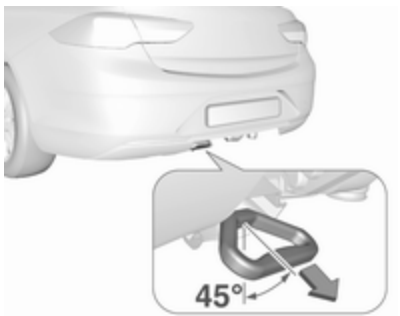

A buzzing tone sounds as a warning when the release handle is pulled out and the ball neck is disengaged.

With the flat of the hand, swivel the released coupling ball bar to the right until it engages under the floor. Make sure that the release handle is back in its hidden initial position, otherwise the buzzing tone will not stop.

⚠Warning

Towing a trailer is permitted only when the coupling ball bar is fitted correctly. If the coupling ball bar does not engage correctly or if the release handle is impossible to guide to its hidden initial position in the housing or if the buzzing tone sounds after engaging the coupling ball bar, seek the assistance of a workshop.

Eye for break-away stopping cable

Attach break-away stopping cable to eye.

Trailer stability assist

If the system detects snaking movements, engine power is reduced and the vehicle/trailer combination is selectively braked until the snaking ceases. While the system is working keep steering wheel as still as possible.

Trailer stability assistant is a function of the Electronic Stability Control ⇨ 183.

Vehicle care

General Information **238**
Accessories and vehicle modifications 238
Vehicle storage 239
End-of-life vehicle recovery 239
Vehicle checks **240**
Performing work 240
Bonnet 240
Engine oil 241
Engine coolant 242
Washer fluid 243
Brakes 243
Brake fluid 243
Vehicle battery 244
Diesel fuel system bleeding 245
Wiper blade replacement 245
Bulb replacement **246**
Halogen headlights 246
LED headlights 248
Fog lights 248
Tail lights 250
Side turn signal lights 255
Number plate light 256
Interior lights 256
Instrument panel illumination ... 256
Electrical system **256**
Fuses 256
Engine compartment fuse box . 257
Instrument panel fuse box 260
Vehicle tools **261**
Tools 261
Wheels and tyres **262**
Winter tyres 262
Tyre designations 263
Tyre pressure 263
Tyre pressure monitoring system 264
Tread depth 266
Changing tyre and wheel size . 267
Wheel covers 267
Tyre chains 267
Tyre repair kit 268
Wheel changing 272
Spare wheel 275
Jump starting **277**
Towing **278**
Towing the vehicle 278
Towing another vehicle 279
Appearance care **280**
Exterior care 280
Interior care 282

General Information

Accessories and vehicle modifications

We recommend the use of genuine parts and accessories and factory approved parts specific for your vehicle type. We cannot assess or guarantee reliability of other products - even if they have a regulatory or otherwise granted approval.

Any modification, conversion or other changes made to standard vehicle specifications (including, without limitation, software modifications, modifications of the electronic control units) may invalidate the warranty offered by Opel. Furthermore, such changes may impact fuel consumption, CO_2 emissions and other emissions of the vehicle and cause the vehicle to no longer conform to the operating permit, impacting the validity of your vehicle registration.

Caution
When transporting the vehicle on a train or on a recovery vehicle, the mud flaps might be damaged.

Vehicle storage

Storage for a long period of time

If the vehicle is to be stored for several months:

- Wash and wax the vehicle.
- Have the wax in the engine compartment and underbody checked.
- Clean and preserve the rubber seals.
- Fill up fuel tank completely.
- Change the engine oil.
- Drain the washer fluid reservoir.
- Check the coolant antifreeze and corrosion protection.
- Adjust tyre pressure to the value specified for full load.
- Park the vehicle in a dry, well ventilated place. Engage first or reverse gear or set selector lever to **P**. Prevent the vehicle from rolling.
- Do not apply the parking brake.
- Open the bonnet, close all doors and lock the vehicle.
- Disconnect the clamp from the negative terminal of the vehicle battery. Beware that all systems are not functional, e.g. anti-theft alarm system.

Putting back into operation

When the vehicle is to be put back into operation:

- Connect the clamp to the negative terminal of the vehicle battery. Activate the electronics of the power windows.
- Check tyre pressure.
- Fill up the washer fluid reservoir.
- Check the engine oil level.
- Check the coolant level.
- Fit the number plate if necessary.

End-of-life vehicle recovery

Information on end-of-life vehicle recovery centres and the recycling of end-of-life vehicles is available on our website, where legally required. Only entrust this work to an authorised recycling centre.

Vehicle checks

Performing work

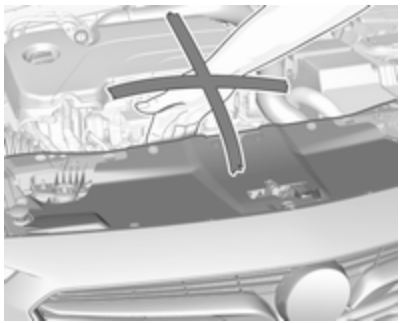

⚠Warning

Only perform engine compartment checks when the ignition is off.

The cooling fan may start operating even if the ignition is off.

⚠Danger

The ignition system uses extremely high voltage. Do not touch.

Bonnet

Opening

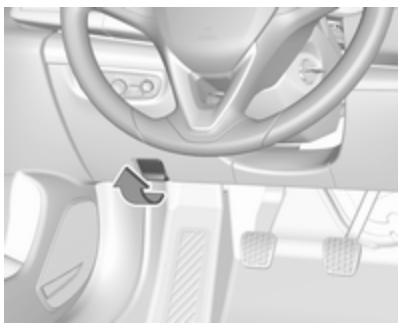

Pull the release lever and return it to its original position.

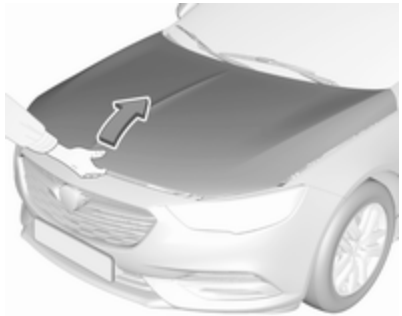

Move the safety catch sideways to the left vehicle side and open the bonnet.

The bonnet is held open automatically.

If the bonnet is opened during an Autostop, the engine will be restarted automatically for safety reasons.

Stop-start system ⇨ 166.

Closing

Lower the bonnet and let it fall into the latch. Check that the bonnet is engaged.

Caution
Do not press the bonnet into the latch to avoid dents.

Active bonnet ⇨ 70.

Engine oil

Check the engine oil level manually on a regular basis to prevent damage to the engine. Ensure that the correct specification of oil is used. Recommended fluids and lubricants ⇨ 285.

The maximum engine oil consumption is 0.6 litres per 1000 km.

Check with the vehicle on a level surface. The engine must be at operating temperature and switched off for at least five minutes.

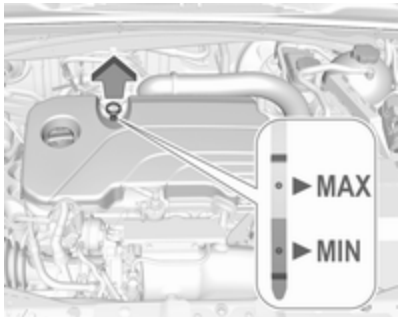

Pull out the dipstick, wipe it clean, reinsert fully, pull out and read the engine oil level.

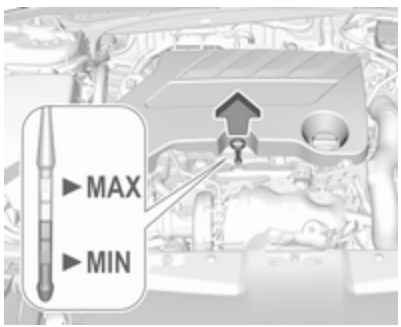

Different dipsticks are used depending on engine variant.

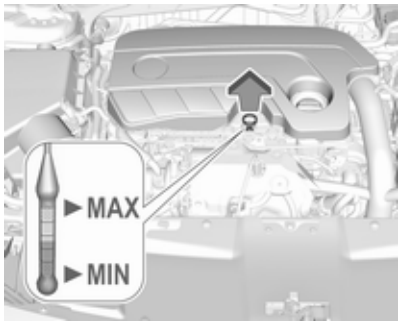

We recommend the use of the same grade of engine oil that was used at last change.

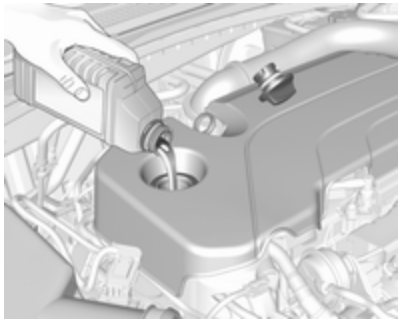

When the engine oil level has dropped to the **MIN** mark, top up engine oil.

The engine oil level must not exceed the **MAX** mark on the dipstick.

Caution
Wipe off any spilled engine oil immediately.

Caution
Overfilled engine oil must be drained or suctioned out.

Capacities ⇨ 300.

Fit the cap on straight and tighten it.

Engine coolant

The coolant provides freeze protection down to approx. -28 °C. In cold regions with very low temperatures, the factory filled coolant provides frost protection down to approx. -37 °C.

Caution
Only use approved antifreeze.

Coolant and antifreeze ⇨ 285.

Coolant level

Caution
Too low a coolant level can cause engine damage.

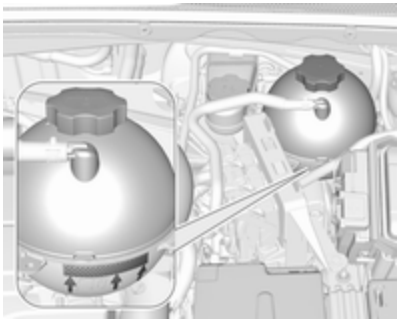

If the cooling system is cold, the coolant level should be above the filling line mark. Top up if the level is low.

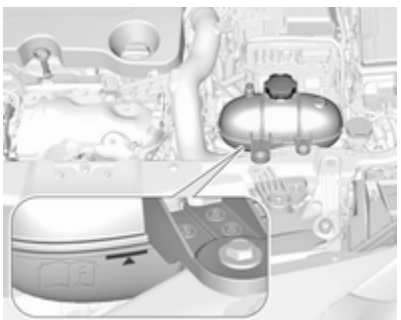

Depending on the engine, the position of the coolant container may be different.

⚠ Warning

Allow the engine to cool before opening the cap. Carefully open the cap, relieving the pressure slowly.

To top up, use a 1:1 mixture of released coolant concentrate mixed with clean tap water. If no coolant concentrate is available, use clean tap water. Install the cap tightly. Have the coolant concentration checked and have the cause of the coolant loss remedied by a workshop.

Washer fluid

Fill with clean water mixed with a suitable quantity of approved windscreen washer fluid which contains antifreeze.

Caution

Only washer fluid with a sufficient antifreeze concentration provides protection at low temperatures or a sudden drop in temperature.

Washer fluid ⇨ 285.

Brakes

In the event of minimum thickness of the brake lining, a squealing noise sounds during braking.

Continued driving is possible but have the brake lining replaced as soon as possible.

Once new brake linings are installed, do not brake unnecessarily hard for the first few journeys.

Brake fluid

⚠ Warning

Brake fluid is poisonous and corrosive. Avoid contact with eyes, skin, fabrics and painted surfaces.

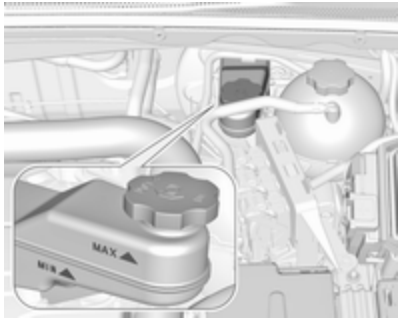

The brake fluid level must be between the **MIN** and **MAX** marks.

If fluid level is below **MIN** seek the assistance of a workshop.

Brake and clutch fluid ⇨ 285.

Vehicle battery

The vehicle battery is maintenance-free provided that the driving profile allows sufficient charging of the battery. Short-distance-driving and frequent engine starts can discharge the battery. Avoid the use of unnecessary electrical consumers.

Batteries do not belong in household waste. They must be disposed of at an appropriate recycling collection point.

Laying up the vehicle for more than four weeks can lead to battery discharge. Disconnect the clamp from the negative terminal of the vehicle battery.

Ensure the ignition is switched off before connecting or disconnecting the vehicle battery.

Battery discharge protection ⇨ 147.

Disconnecting the battery

If the vehicle's battery is to be disconnected (e.g. for maintenance work), the alarm siren must be deactivated as follows: Switch the ignition on then off, then disconnect the vehicle's battery within 15 seconds.

Replacing the vehicle battery

Note
Any deviation from the instructions given in this section may lead to temporary deactivation or disturbance of the stop-start system.

When the vehicle battery is being replaced, please ensure that there are no open ventilation holes in the vicinity of the positive terminal. If a ventilation hole is open in this area, it must be closed off with a dummy cap, and the ventilation in the vicinity of the negative terminal must be opened.

We recommend that you have the vehicle battery replaced by a workshop.

Stop-start system ⇨ 166.

Charging the vehicle battery

⚠ Warning

On vehicles with stop-start system, ensure that the charging potential does not exceed

14.6 volts when using a battery charger. Otherwise the vehicle battery might be damaged.

Jump starting ⇨ 277.

Warning label

Meaning of symbols:

- No sparks, naked flames or smoking.
- Always shield eyes. Explosive gases can cause blindness or injury.
- Keep the vehicle battery out of reach of children.
- The vehicle battery contains sulphuric acid which could cause blindness or serious burn injuries.
- See the Owner's Manual for further information.
- Explosive gas may be present in the vicinity of the vehicle battery.

Diesel fuel system bleeding

If the tank has been run dry, the diesel fuel system must be bled. Switch on the ignition three times for 15 seconds at a time. Then crank the engine for a maximum of 40 seconds. Repeat this process after no less than five seconds. If the engine fails to start, seek the assistance of a workshop.

Wiper blade replacement

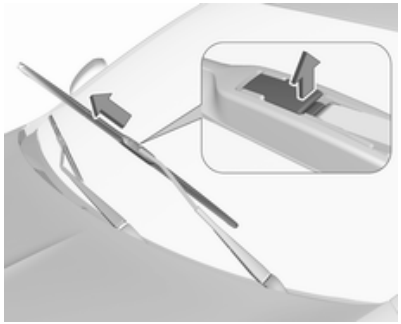

Lift the wiper arm until it stays in the raised position. Lift retaining clip to disengage the wiper blade and remove.

Attach the wiper blade slightly angled to the wiper arm and push until it engages.

Lower wiper arm carefully.

Wiper blade on the rear window

Grand Sport

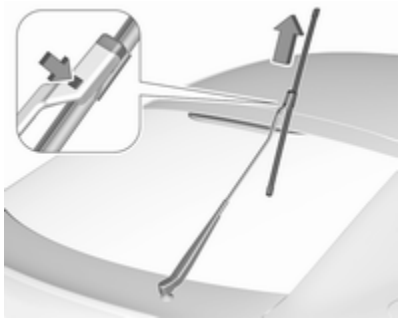

Lift the wiper arm until it stays in the raised position, press button to disengage the wiper blade and remove.

Attach the wiper blade slightly angled to the wiper arm and push until it engages.

Lower wiper arm carefully.

Sports Tourer, Country Tourer

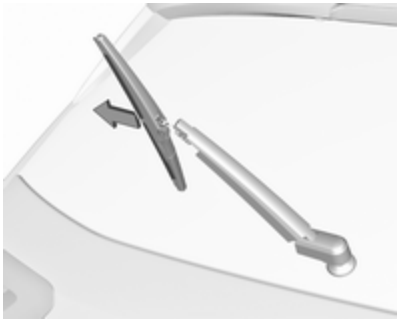

Lift wiper arm. Disengage wiper blade as shown in illustration and remove.

Attach the wiper blade slightly angled to the wiper arm and push until it engages.

Lower wiper arm carefully.

Bulb replacement

Switch off the ignition and switch off the relevant switch or close the doors.

Only hold a new bulb at the base. Do not touch the bulb glass with bare hands.

Use only the same bulb type for replacement.

Replace headlight bulbs from within the engine compartment.

Bulb check

After a bulb replacement switch on the ignition, operate and check the lights.

Halogen headlights

Halogen headlights with separate bulbs for low beam and high beam.

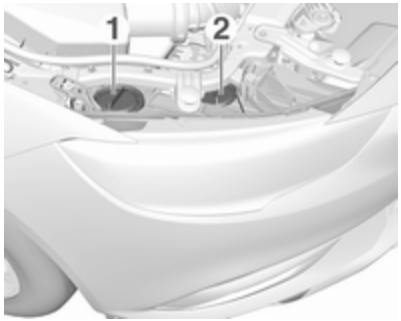

Low beam (**1**) outer bulb.

High beam (**2**) inner bulb.

Low beam (1)

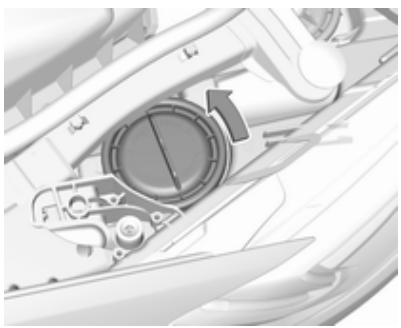

1. Rotate the cap anticlockwise and remove it.

2. Disengage bulb holder by pressing the retainer to the front. Withdraw the bulb holder from the reflector housing.

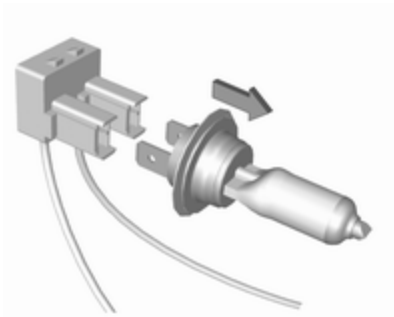

3. Detach the bulb from the bulb holder and replace the bulb.
4. Insert the bulb holder.
5. Fit the cap and rotate clockwise.

High beam (2)

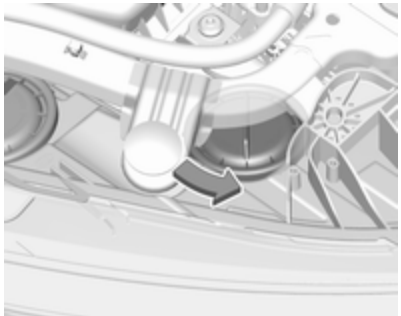

1. Rotate the cap anticlockwise and remove it.

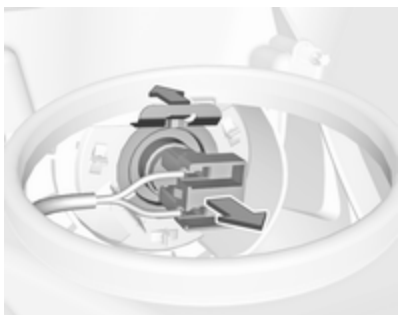

2. Disengage bulb holder by pressing the retainer to the front. Withdraw the bulb holder from the reflector housing.

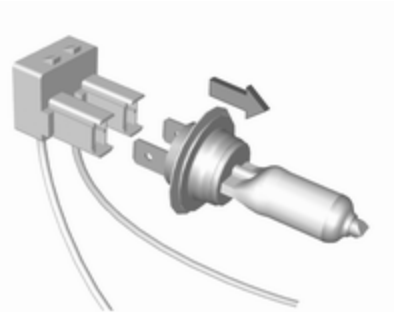

3. Detach the bulb from the bulb holder and replace the bulb.
4. Insert the bulb holder.
5. Fit the cap and rotate clockwise.

Front turn signal light

In case of defective LEDs, have them replaced by a workshop.

Side light

In case of defective LEDs, have them replaced by a workshop.

Daytime running light

In case of defective LEDs, have them replaced by a workshop.

LED headlights

Headlights for low and high beam, sidelights, daytime running lights and turn signal lights are designed as LEDs and cannot be changed.

Have lights repaired by a workshop in case of failure.

Fog lights

1. **Grand Sport, Sports Tourer**

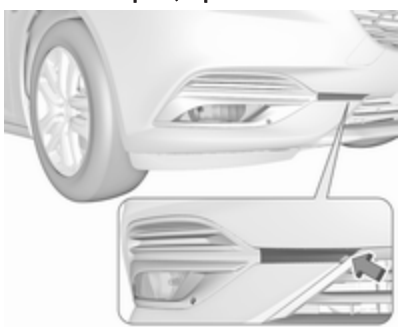

Disengage the cover with a screwdriver in the recess and remove the cover.

Country Tourer

Undo the screw.

2. **Grand Sport, Sports Tourer**

Undo screw and remove the faceplate.

Country Tourer

Lever out the faceplate with a screwdriver in the recess and remove the faceplate.

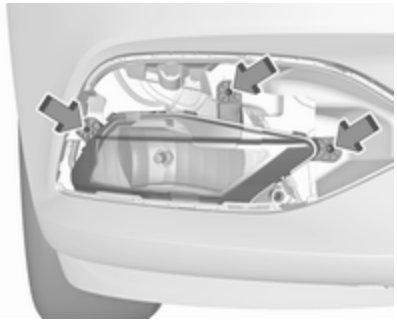

3. Undo three screws and remove the light assembly to the front.

4. Turn the bulb socket anticlockwise and remove it from the light assembly.

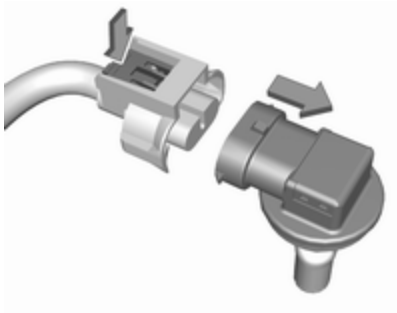

5. Disengage the plug connector by pressing the retaining lug.
6. Remove and replace the bulb unit and attach the plug connector. Note that the bulb and the socket are one unit and have to be changed together.
7. Insert the bulb socket into the light assembly by turning clockwise and engage.
8. Mount the light assembly by tightening the three screws.
9. Attach the faceplate and tighten the screw.
10. **Grand Sport, Sports Tourer**

    Attach and engage the cover.

Tail lights

Tail lights and brake lights are designed as LEDs. In case of failure, have LEDs replaced by a workshop.

Turn signal lights, rear fog lights and reverse lights are designed for bulbs and can be changed as follows.

Grand Sport

Light assembly in the body

1. Remove the cover on the respective side.

2. Unscrew the two plastic securing nuts from the inside by hand.

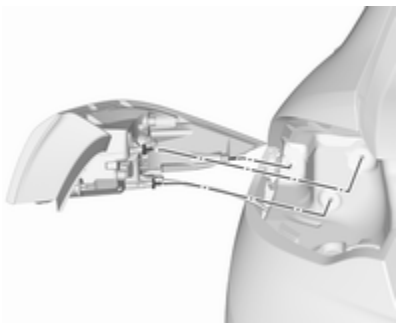

3. Carefully withdraw tail light assembly from recess and remove. Take care that the cable duct remains in position.

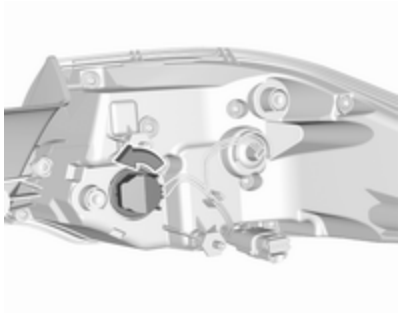

4. Turn the turn signal light bulb socket anticlockwise and remove it from the light assembly.

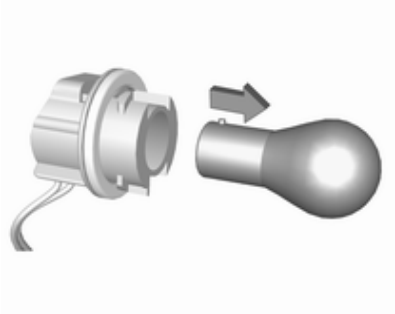

5. Remove and replace the turn signal light bulb.
6. Attach the bulb socket to the light assembly.
7. Attach the light assembly to the vehicle body and tighten the securing nuts from the inside of the load compartment. Attach cover.

Light assembly in the tailgate

1. Release the cover in the tailgate and remove it.

2. Unscrew the plastic securing nut by hand.

3. Carefully withdraw the light assembly from the recesses and remove. Take care that the cable duct remains in position.

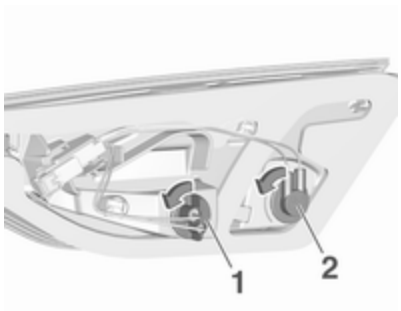

4. Turn the bulb socket anticlockwise and remove it from the light assembly.

   Rear fog light (**1**)

   Reverse light (**2**)

5. Detach the bulb from the bulb socket and replace the bulb.

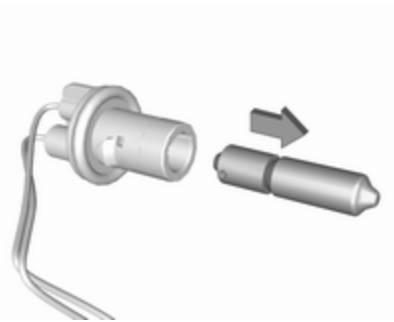

Rear fog light

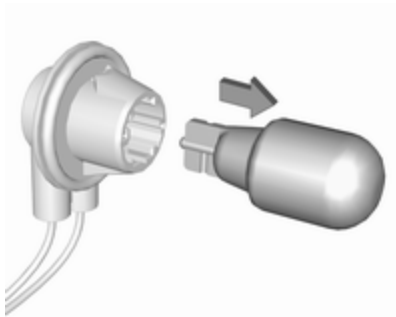

Reverse light

6. Insert the bulb socket into the tail light assembly. Fit light assembly on the tailgate and tighten the screw from the inside. Attach cover.

Sports Tourer, Country Tourer

Light assembly in the body

1. Open the covers with screwdriver. Unscrew and remove both screws.

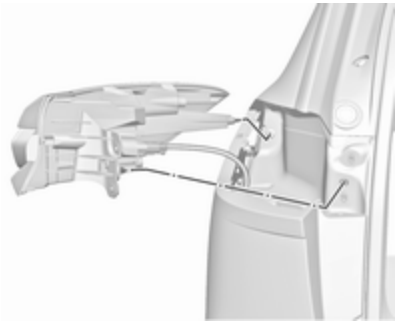

2. Carefully withdraw tail light assembly from recess and remove. Take care that the cable duct remains in position.

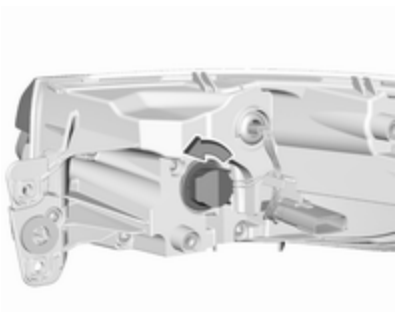

3. Turn the turn signal light bulb socket anticlockwise and remove it from the light assembly.

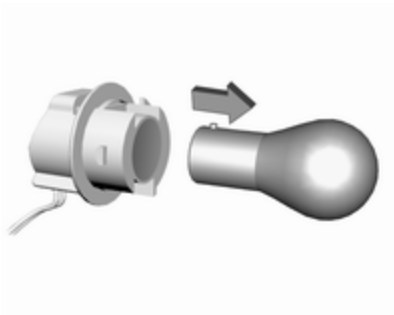

4. Detach the bulb from the bulb socket and replace the turn signal light bulb.
5. Attach the bulb socket to the light assembly.
6. Attach the light assembly to the vehicle body and tighten the screws. Close covers.

Light assembly in the tailgate

1. Release the cover in the tailgate and remove it.

2. Unscrew the plastic securing nut by hand.

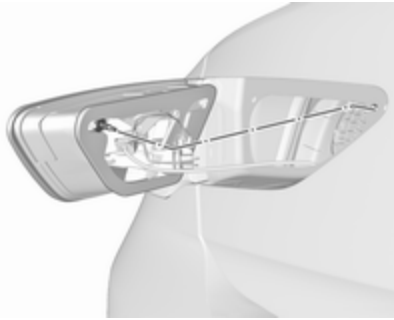

3. Carefully withdraw the light assembly from the recesses and remove. Take care that the cable duct remains in position.

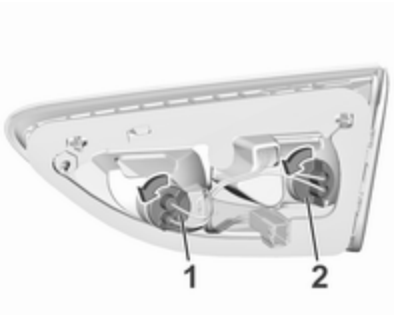

4. Turn the bulb socket anticlockwise and remove it from the light assembly.

   Rear fog light (**1**)

   Reverse light (**2**)

5. Detach the bulb from the bulb socket and replace the bulb.

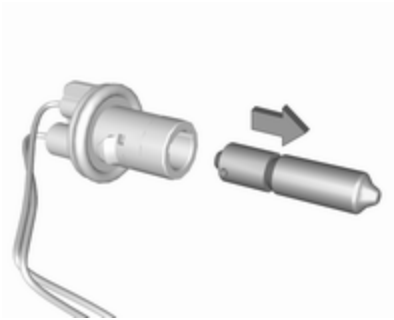

Rear fog light

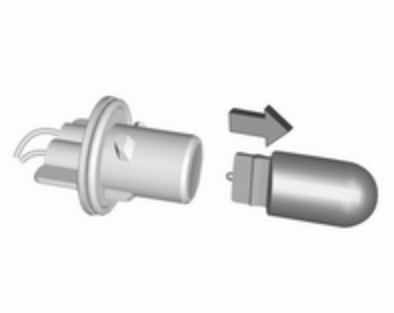

Reverse light

6. Insert the bulb socket into the tail light assembly. Fit light assembly on the tailgate and tighten the screw from the inside. Attach cover.

Side turn signal lights

To replace bulb, remove lamp housing:

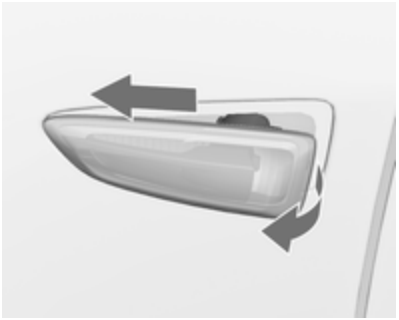

1. Slide lamp to its left side and remove with its right end.

2. Turn bulb holder anticlockwise and remove from housing.

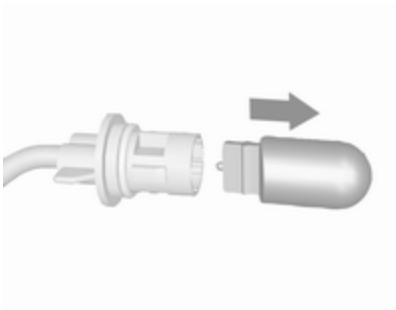

3. Pull bulb from bulb holder and replace it.

4. Insert bulb holder and turn clockwise.
5. Insert left end of the lamp, slide to the left and insert right end.

Number plate light

The number plate light is designed as LEDs and can not be changed. In case of defective LEDs, have them replaced by a workshop.

Interior lights

Courtesy light, reading lights

Have bulbs replaced by a workshop.

Load compartment light

Have bulbs replaced by a workshop.

Instrument panel illumination

Have bulbs replaced by a workshop.

Electrical system

Fuses

Data on the replacement fuse must match the data on the defective fuse.

There are three fuse boxes in the vehicle:

- engine compartment
- instrument panel

Before replacing a fuse, turn off the respective switch and the ignition.

A blown fuse can be recognised by its melted wire.

Caution
Do not replace the fuse until the cause of the fault has been remedied.

Some functions are protected by several fuses.

Fuses may also be inserted without existence of a function.

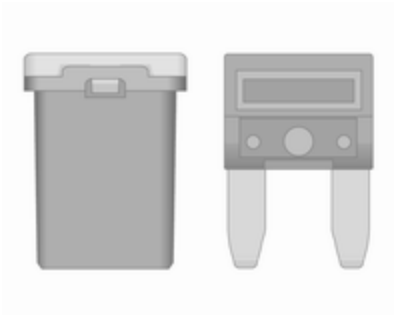

Fuse extractor

A fuse extractor may be located in the fuse box in the engine compartment.

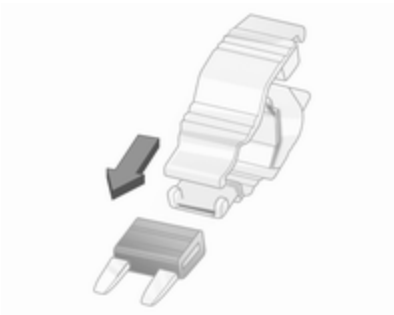

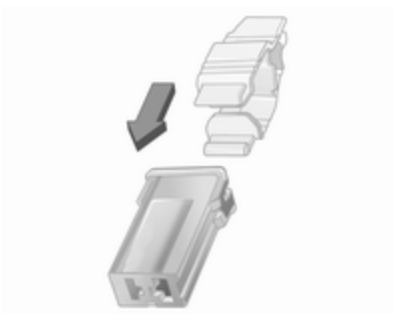

Place the fuse extractor on the various types of fuse from the top or side, and withdraw fuse.

Engine compartment fuse box

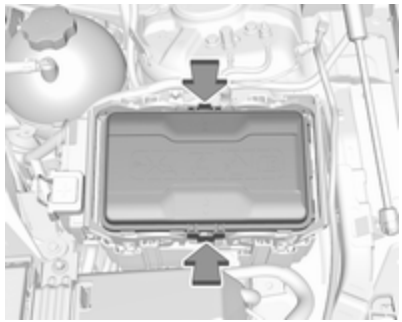

The fuse box is in the front left of the engine compartment.

Disengage the cover and remove it.

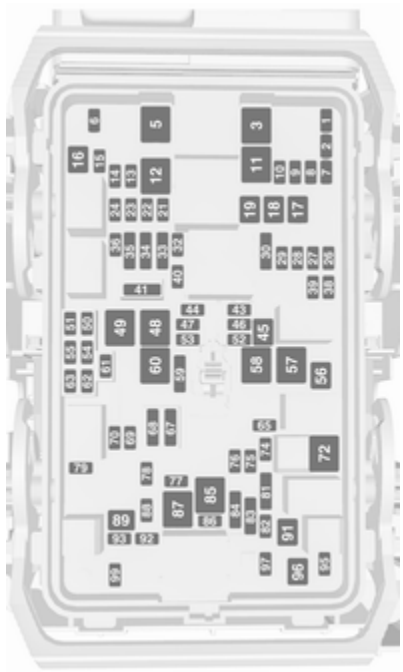

No.	Circuit
1	–
2	–
3	ABS
4	–
5	–
6	Tailgate
7	Fog light
8	Memory module
9	Heated windscreen
10	Seat lumbar
11	DC/DC battery
12	Heated rear window
13	Heated mirror
14	–
15	–
16	Front wiper
17	Power seat, passenger

No.	Circuit
18	Sunblind
19	Power seat, driver
20	–
21	Sunroof
22	Rear wiper/Airbag
23	Adaptive forward lighting
24	–
25	–
26	Transmission control module
27	Ignition/Instrument panel
28	–
29	Rear view camera/Air vent
30	Malfunction indicator light/ Trailer
31	–
32	Camera
33	Seat heat front
34	Seat heat rear

No.	Circuit
35	Damping/All-wheel drive
36	Fuel system
37	–
38	–
39	–
40	Steering wheel lock
41	–
42	–
43	Heated steering wheel
44	Headlight range adjustment
45	–
46	Engine control module
47	–
48	DC/DC converter/Air vent/E-Boost
49	Rear door control module
50	–
51	–

No.	Circuit
52	–
53	–
54	–
55	–
56	Starter
57	–
58	–
59	Left headlight (LED)
60	Cooling fan
61	–
62	–
63	–
64	–
65	Climate control
66	–
67	–
68	–

No.	Circuit
69	Right high beam (Halogen)/ Right headlight (LED)
70	Left high beam (Halogen)
71	–
72	Starter
73	–
74	Transmission control module
75	Engine control module
76	Exhaust reduction system
77	–
78	Horn
79	Washer system
80	–
81	Engine control module
82	–
83	Ignition coil
84	Ignition coil
85	Powertrain

No.	Circuit
86	–
87	Diesel fuel heating
88	Air shutter
89	–
90	–
91	–
92	After boil pump
93	Electronic key system
94	–
95	Coolant pump
96	Diesel fuel heating
97	–
98	–
99	Coolant pump

After having changed defective fuses, close the fuse box cover and press until it engages.

If the fuse box cover is not closed correctly, malfunction may occur.

Instrument panel fuse box

In left-hand drive vehicles, the fuse box is behind a cover in the instrument panel.

Disengage cover at the side and remove.

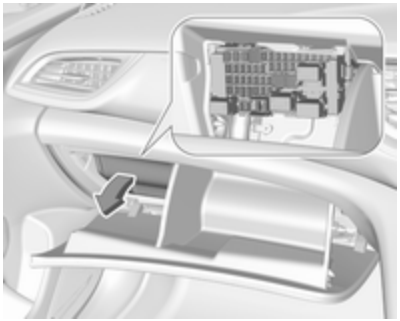

In right-hand drive vehicles, the fuse box is located behind a cover in the glovebox. Open the glovebox and remove the cover.

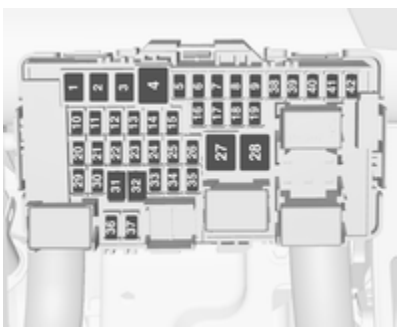

No.	Circuit
1	Left power window
2	Right power window
3	Body control module
4	Climate control fan
5	Body control module
6	Trailer provisions
7	Rear seat power folding
8	Body control module
9	Engine control module
10	Head-up display
11	NO_x reduction/Pipe heater
12	NO_x reduction/Soot sensor
13	UREA module
14	Heated steering wheel
15	Transmission control module
16	Amplifier
17	Alarm

No.	Circuit
18	Body control module
19	UREA module
20	Body control module
21	Body control module
22	Body control module
23	Electric steering wheel lock
24	Airbag
25	Diagnostic connector
26	Power outlet load compartment
27	EBCM valve
28	Police provision
29	–
30	–
31	Steering wheel controls
32	Ignition switch
33	Climate control
34	Central gateway module

No.	Circuit
35	AUX/USB connector
36	Wireless charger
37	Rear wiper
38	Onstar
39	Display
40	Parking assist
41	Overhead console
42	Radio

Vehicle tools

Tools

Vehicles with spare wheel

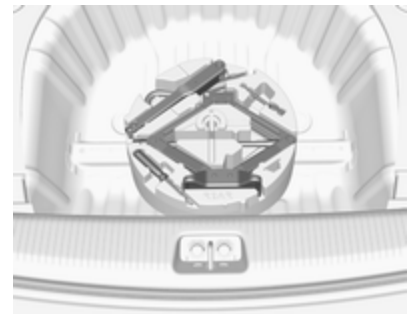

The jack with wheel wrench, the tools, an extension bolt for securing a damaged wheel and the towing eye are placed in the tool box below the spare wheel in the load compartment. Spare wheel ⇨ 275.

Vehicles without spare wheel

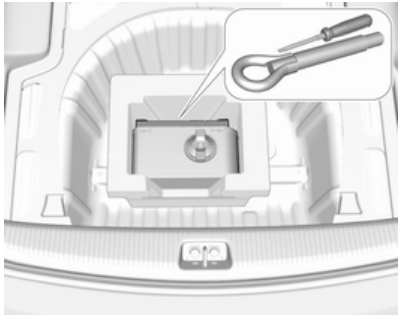

The screwdriver and the towing eye are located in a box below the floor cover in the load compartment.

Tyre repair kit ⇨ 268.

Vehicles with audio speaker system

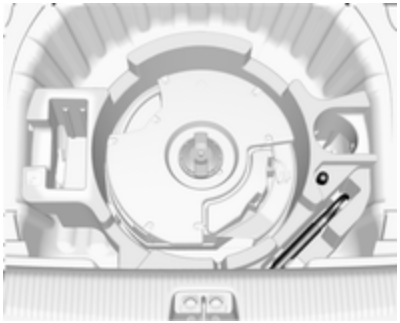

The screwdriver and the towing eye are located below the floor cover in the load compartment, beside the round speaker system component.

Tyre repair kit ⇨ 268.

Wheels and tyres

Tyre condition, wheel condition

Drive over edges slowly and at right angles if possible. Driving over sharp edges can cause tyre and wheel damage. Do not trap tyres on the kerb when parking.

Regularly check the wheels for damage. Seek the assistance of a workshop in the event of damage or unusual wear.

Winter tyres

Winter tyres improve driving safety at temperatures below 7 °C and should therefore be fitted on all wheels.

In accordance with country-specific regulations, affix the speed sticker in the driver's field of view.

All tyre sizes are permitted as winter tyres ⇨ 301.

Tyre designations

E.g. **215/60 R 16 95 V**

215 : tyre width, mm
60 : cross-section ratio (tyre height to tyre width), %
R : belt type: Radial
RF : type: RunFlat
16 : wheel diameter, inches
95 : load index e.g. 95 is equivalent to 690 kg
V : speed code letter

Speed code letter:

Q : up to 160 km/h
S : up to 180 km/h
T : up to 190 km/h
H : up to 210 km/h
V : up to 240 km/h
W : up to 270 km/h

Choose a tyre appropriate for the maximum speed of your vehicle.

The maximum speed is achievable at kerb weight with driver (75 kg) plus 125 kg payload. Optional equipment could reduce the maximum speed of the vehicle.

Performance ⇨ 294.

Directional tyres

Directional tyres should be mounted so that they rotate in the correct direction. The proper rotation direction is indicated by a symbol (e.g. an arrow) on the sidewall.

Tyre pressure

Check the pressure of cold tyres at least every 14 days and before any long journey. Do not forget the spare wheel. This also applies to vehicles with tyre pressure monitoring system.

Tyre pressure ⇨ 301.

The tyre pressure information label on the left door frame indicates the original equipment tyres and the correspondent tyre pressures.

The tyre pressure data refers to cold tyres. It applies to summer and winter tyres.

Always inflate the spare tyre to the pressure specified for full load.

The ECO tyre pressure serves to achieve the smallest amount of fuel consumption possible.

Make sure tyre loading setting matches the current tyre pressure. Tyre loading ⇨ 264.

Incorrect tyre pressures will impair safety, vehicle handling, comfort and fuel economy and will increase tyre wear.

Tyre pressures differ depending on various options. For the correct tyre pressure value, follow the procedure below:

1. Identify drive axle and body style.
2. Identify the engine identifier code. Engine data ⇨ 293.
3. Identify the respective tyre.

The tyre pressure tables show all possible tyre combinations ⇨ 301.

For the tyres approved for your vehicle, refer to the EEC Certificate of Conformity provided with your vehicle or other national registration documents.

The driver is responsible for correct adjustment of tyre pressure.

⚠Warning

If the pressure is too low, this can result in considerable tyre warm-up and internal damage, leading to tread separation and even to tyre blow-out at high speeds.

⚠Warning

For specific tyres the recommended tyre pressure as shown in the tyre pressure table may exceed the maximum tyre pressure as indicated on the tyre. Never exceed the maximum tyre pressure as indicated on the tyre.

After adjusting tyre pressure, select the according tyre loading setting on the page **Tyre load** in the Driver Information Centre, ⇨ 113.

Temperature dependency

The tyre pressure depends on the temperature of the tyre. During driving, tyre temperature and pressure increase. Tyre pressure values provided on the tyre information label and tyre pressure chart are valid for cold tyres, which means at 20 °C.

The pressure increases by nearly 10 kPa for a 10 °C temperature increase. This must be considered when warm tyres are checked.

The tyre pressure value displayed in the Driver Information Centre shows the real tyre pressure. A cooled down tyre will show a decreased value, which does not indicate an air leak.

Tyre pressure monitoring system

The tyre pressure monitoring system checks the pressure of all four wheels once a minute when vehicle speed exceeds a certain limit.

Caution

Tyre pressure monitoring system warns just about low tyre pressure condition and does not replace regular tyre maintenance by the driver.

All wheels must be equipped with pressure sensors and the tyres must have the prescribed pressure.

Note
In countries where the tyre pressure monitoring system is legally required, the use of wheels without pressure sensors will invalidate the vehicle operating permit.

Select the **Tyre pressure monitoring** page under the **Info** Menu in the Driver Information Centre ⇨ 113.

System status and pressure warnings are displayed by a message indicating the corresponding tyre in the Driver Information Centre.

The system considers the tyre temperature and the tyre loading setting for the warnings.

Tyre loading setting, see below in this chapter.

Temperature dependency ⇨ 263.

A detected low tyre pressure condition is indicated by the control indicator (!) ⇨ 110.

If (!) illuminates, stop as soon as possible and inflate the tyres as recommended ⇨ 301.

Ensure that vehicle loading status matches selected tyre pressure. Vehicle loading status, see below in this chapter.

After inflating, some driving may be required to update the tyre pressure values in the Driver Information Centre. During this time (!) may continue to illuminate.

If (!) illuminates at lower temperatures and extinguishes after some driving, this could be an indicator for approaching a low tyre pressure condition. Check tyre pressure.

Vehicle messages ⇨ 124.

Only mount wheels with pressure sensors, otherwise the tyre pressure will not be displayed and (!) illuminates continuously.

A spare wheel or temporary spare wheel is not equipped with pressure sensors. The tyre pressure monitoring system is not operational for these wheels. Control indicator (!) illuminates. For the further three wheels the system remains operational.

The use of commercially available liquid tyre repair kits can impair the function of the system. Factory-approved repair kits can be used.

Operating electronic devices or being close to facilities using similar wave frequencies could disrupt the tyre pressure monitoring system.

Each time the tyres are replaced tyre pressure monitoring system sensors must be dismounted and serviced. For the screwed sensor replace valve core and sealing ring, for clipped sensor replace complete valve stem.

Use only original plastic valve caps to protect valve on any damage.

Caution
Do not use metal valve caps as they lead to valve oxidation and damage.

Vehicle loading status

Adjust tyre pressure to load condition according tyre information label or tyre pressure chart ⇨ 301, and select the appropriate setting in the **Tyre loading** page under the **Settings** menu in the Driver Information Centre ⇨ 113. This setting determines the reference pressures for the tyre pressure warnings.

Depending on the display, the menu **Tyre loading** only appears if the vehicle is at a standstill and the parking brake is applied. On vehicles with automatic transmission the selector lever must be in **P**.

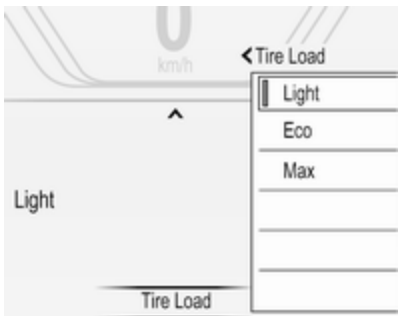

Select:

- **Light** for comfort pressure up to 3 people.
- **Eco** for Eco pressure up to 3 people.
- **Max** for full loading.

Auto learn function

After changing wheels or wheel positions the vehicle must be stationary for approx. 20 minutes, before the system recalculates. The following relearn process takes up to 10 minutes of driving in a speed range of 40 to 100 km/h. Avoid to drive outside of this range for a longer time. If possible, use a country road or similar which allows continuous driving. During relearn process – – can be displayed or pressure values can swap in the Driver Information Centre.

If problems occur during the relearn process, a failure message is displayed in the Driver Information Centre. (!) will flash for 60 seconds and then illuminate continuously.

If this happens, repeat learning process. Keep your vehicle stationary for approx. 20 minutes and then drive again for 10 minutes as described above.

Tread depth

Check tread depth at regular intervals.

Tyres should be replaced for safety reasons at a tread depth of 2-3 mm (4 mm for winter tyres).

For safety reasons, it is recommended that the tread depth of the tyres on one axle should not vary by more than 2 mm.

The legally permissible minimum tread depth (1.6 mm) has been reached when the tread has worn down as far as one of the tread wear indicators (TWI). Their position is indicated by markings on the sidewall.

If there is more wear at the front than the rear, swap round front wheels and rear wheels periodically. Ensure that the direction of rotation of the wheels remains the same.

Tyres age, even if they are not used. We recommend tyre replacement every 6 years.

Changing tyre and wheel size

If tyres of a different size than those fitted at the factory are used, it may be necessary to reprogramme the speedometer as well as the nominal tyre pressure and make other vehicle modifications.

After converting to a different tyre size, have the label with tyre pressures replaced and the tyre deflation detection system reinitialised. ⇨ 264

⚠ Warning

The use of unsuitable tyres or wheels may lead to accidents and will invalidate the vehicle operating permit.

Wheel covers

Wheel covers and tyres that are factory approved for the respective vehicle and comply with all of the relevant wheel and tyre combination requirements must be used.

If the wheel covers and tyres used are not factory approved, the tyres must not have a rim protection ridge.

Wheel covers must not impair brake cooling.

⚠ Warning

Use of unsuitable tyres or wheel covers could lead to sudden pressure loss and thereby accidents.

Vehicles with steel wheels: When using locking wheel nuts, do not attach wheel covers.

Tyre chains

Tyre chains are only permitted on the front wheels.

Always use fine mesh chains that add no more than 10 mm to the tyre tread and the inboard sides (including chain lock).

⚠ Warning

Damage may lead to tyre blowout.

Tyre chains are only permitted on tyres of size 215/60 R16, 215/55 R17, 225/55 R17 and 235/45 R18.

Temporary spare wheel

The use of tyre chains is not permitted on the temporary spare wheel.

Tyre repair kit

Minor damage to the tyre tread can be repaired with the tyre repair kit.

Do not remove foreign bodies from the tyres.

Tyre damage exceeding 4 mm or that is at tyre's side wall cannot be repaired with the tyre repair kit.

⚠ Warning

Do not drive faster than 80 km/h.

Do not use for a lengthy period.

Steering and handling may be affected.

Two types of tyre repair kit are available:

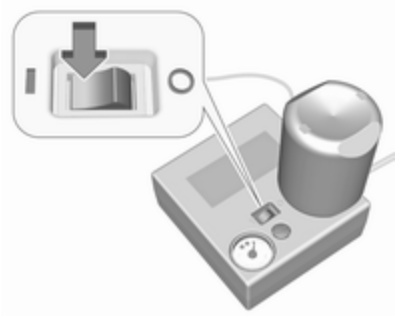

- **Type 1** indicated by the on/off switch at the top of the compressor.

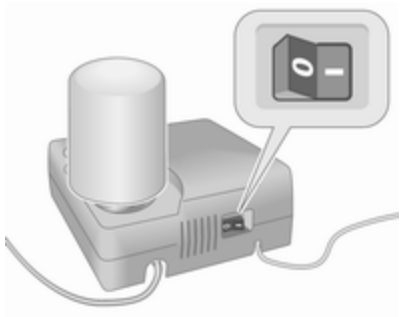

- **Type 2** indicated by the on/off switch at the side of the compressor.

If vehicle has a flat tyre:

Apply the parking brake and engage first gear, reverse gear or **P**.

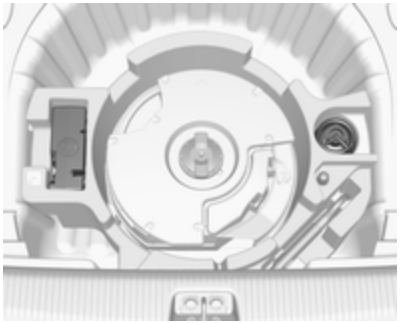

On vehicles with audio speaker system, the tyre repair kit is stowed together with the tools.

On other versions, the tyre repair kit is stored in a bag.

Loosen the screw and remove the bag.

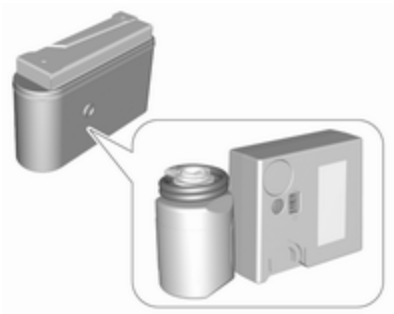

Take the sealant bottle and the compressor out of the box.

1. Remove the electrical connection cable and air hose from the stowage compartments on the underside of the compressor.

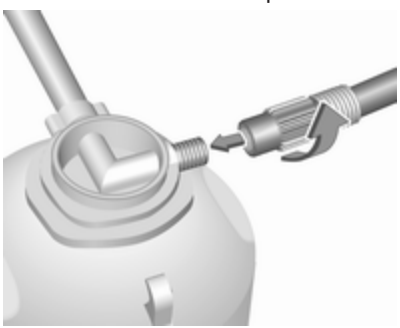

2. **Type 1:** screw the compressor air hose to the connection on the sealant bottle and fit the sealant bottle into the retainer on the compressor.

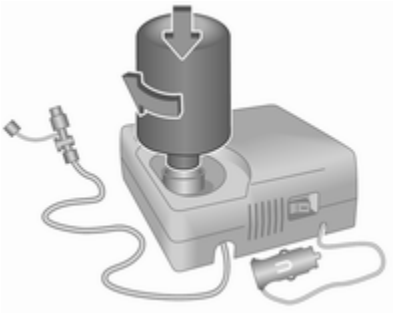

Type 2: remove screw plug from the compressor and from the sealant bottle. Screw the bottle on the compressor without removing the tinfoil from the bottle.

3. Set the compressor near the tyre in such a way that the sealant bottle is upright.
4. Unscrew valve cap from defective tyre.

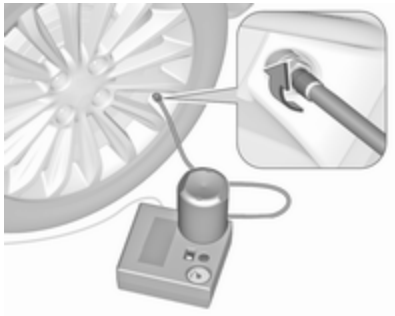

5. **Type 1:** screw the filler hose to the tyre valve.

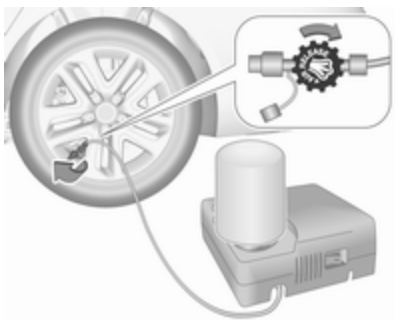

Type 2: remove protection cap from filler hose and screw the filler hose to the tyre valve. The air release valve must be closed (turn clockwise).

6. The switch on the compressor must be set to O.
7. Connect the compressor plug to the power outlet or cigarette lighter socket.

   To avoid discharging the battery, we recommend running the engine.

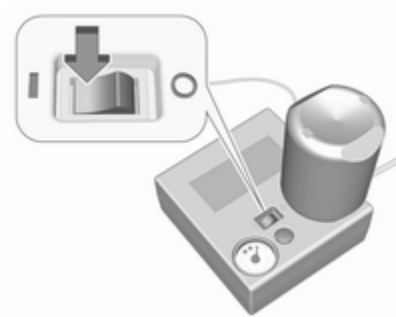

8. Set the rocker switch on the compressor to I. The tyre is filled with sealant.

9. The compressor pressure gauge briefly indicates up to 6 bar whilst the sealant bottle is emptying (approx. 30 seconds). Then the pressure starts to drop.
10. All of the sealant is pumped into the tyre. Then the tyre is inflated.
11. The prescribed tyre pressure should be obtained within 10 minutes. Tyre pressure ⇨ 301. When the correct pressure is obtained, switch off the compressor.

    Do not run the compressor longer than 10 minutes.

    Type 1: if the tyre pressure is not obtained within 10 minutes, remove the tyre repair kit. Move the vehicle one tyre rotation. Reattach the tyre repair kit and continue the filling procedure for 10 minutes. Check tyre pressure once more. If the prescribed tyre pressure is still not obtained, the tyre is too badly damaged. Seek the assistance of a workshop.

    If the pressure is obtained within 10 minutes, correct to the prescribed tyre pressure by using the compressor to increase or decrease with the button over the pressure indicator.

    Type 2: remove tyre repair kit and drive immediately up to 10 km, but not longer than 10 minutes. Check tyre pressure once more. If the tyre pressure is not obtained, reattach the tyre repair kit and continue the filling procedure for 10 minutes. If the prescribed tyre pressure is still not obtained, the tyre is too badly damaged. Seek the assistance of a workshop.

    If the pressure is obtained, correct to the prescribed tyre pressure by using the compressor to increase or decrease by opening the air release valve (turn anticlockwise) at the air filler hose.
12. Detach the tyre repair kit.

    Type 1: push catch on bracket to remove sealant bottle from bracket. Screw tyre inflation hose to the free connection of sealant bottle. This prevents sealant from escaping.

    Type 2: Sealant bottle can not be removed from the compressor. Have the sealant bottle replaced by your workshop.
13. Stow tyre repair kit in the load compartment.
14. Remove any excess sealant using a cloth.
15. Take the label indicating maximum permitted speed from the sealant bottle and affix in the driver's field of view.
16. Continue driving immediately so that sealant is evenly distributed in the tyre. After driving approx.

10 km (but no more than 10 minutes), stop and check tyre pressure. Screw compressor air hose directly onto tyre valve.

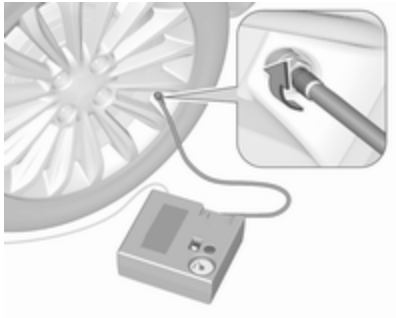

If tyre pressure is more than 1.3 bar, set it to the correct value. Repeat the procedure until there is no more loss of pressure.

If the tyre pressure has fallen below 1.3 bar, the vehicle must not be used. Seek the assistance of a workshop.

17. Stow away tyre repair kit in the box.
18. Fix the box with the screw.

Note
The driving characteristics of the repaired tyre is severely affected, therefore have this tyre replaced.

If unusual noise is heard or the compressor becomes hot, turn compressor off for at least 30 minutes.

The built-in safety valve opens at a pressure of 7 bar.

Note the expiry date of the kit. After this date its sealing capability is no longer guaranteed. Pay attention to storage information on sealant bottle.

Replace the used sealant bottle. Dispose of the bottle as prescribed by applicable laws.

The compressor and sealant can be used from approx. -30 °C.

The adapters supplied can be used to pump up other items e.g. footballs, air mattresses, inflatable dinghies etc. They are located on the underside of the compressor. To remove, screw on compressor air hose and withdraw adapter.

Wheel changing

Some vehicles are equipped with a tyre repair kit instead of a spare wheel ⇨ 268.

Make the following preparations and observe the following information:

- Park the vehicle on a level, firm and non-skid surface. The front wheels must be in the straight-ahead position.
- Apply the parking brake and engage first gear, reverse gear or **P**.
- Remove the spare wheel ⇨ 275.
- Never change more than one wheel at once.
- Use the jack only to change wheels in case of puncture, not for seasonal winter or summer tyre change.
- The jack is maintenance-free.
- If the ground on which the vehicle is standing is soft, a solid board (max. 1 cm thick) should be placed under the jack.
- Take heavy objects out of the vehicle before jacking up.

- No people or animals may be in the vehicle when it is jacked-up.
- Never crawl under a jacked-up vehicle.
- Do not start the vehicle when it is raised on the jack.
- Clean wheel nuts and thread with a clean cloth before mounting the wheel.

⚠ Warning

Do not grease wheel bolt, wheel nut and wheel nut cone.

1. Disengage wheel nut caps with a screwdriver and remove.

   Steel wheels with cover: Pull off the wheel cover.

   Alloy wheels: Disengage wheel nut caps with a screwdriver and remove. To protect the wheel, place a soft cloth between the screwdriver and the alloy wheel.

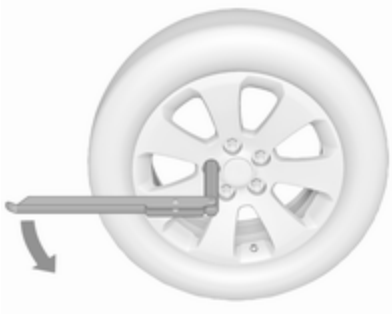

2. Fold out the wheel wrench and install ensuring that it locates securely and loosen each wheel nut by half a turn.

   The wheels might be protected by locking wheel nuts. To loosen these specific nuts, first attach the adapter for the locking wheel nuts onto the head of the nut before installing the wheel wrench. The adapter is located in the glovebox.

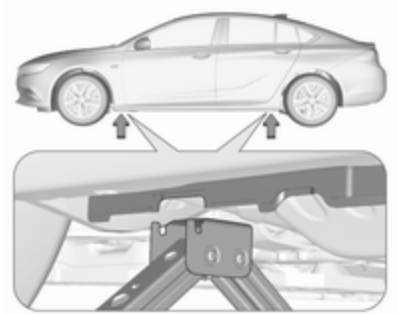

3. Ensure the jack is correctly positioned under the relevant vehicle jacking point.

Some versions have sill panellings with covered vehicle

jacking points: pull out the cover at the respective jacking point firstly.

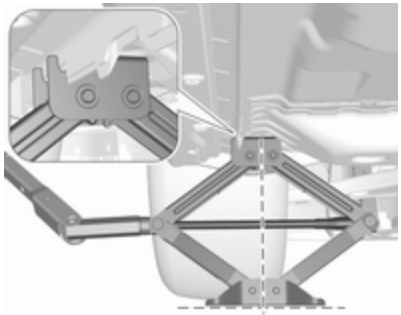

4. Set the jack to the necessary height. Position it directly below the jacking point in a manner that prevents it from slipping.

Attach wheel wrench and with the jack correctly aligned rotate wheel wrench until wheel is clear of the ground.

5. Unscrew the wheel nuts.
6. Change the wheel. Spare wheel ⇨ 275.
7. Screw on the wheel nuts.
8. Lower vehicle.
9. Install the wheel wrench ensuring that it is located securely and tighten each nut in a crosswise sequence. Tightening torque is 125 Nm.
10. Align the valve hole in the wheel cover with the tyre valve before installing.

    Install wheel nut caps.
11. Install vehicle jacking point cover.
12. Stow and secure the replaced wheel ⇨ 275, the vehicle tools ⇨ 261 and the adapter for the locking wheel nuts ⇨ 72.
13. Check the tyre pressure of the installed tyre and the wheel nut torque as soon as possible.

Have the defective tyre renewed or repaired as soon as possible.

Jacking position for lifting platform

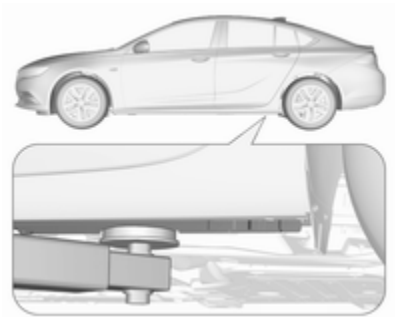

Rear arm position of the lifting platform centrically under the relevant vehicle jacking point.

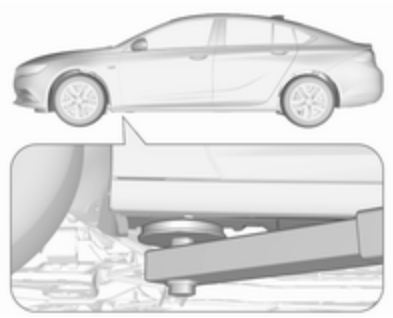

Front arm position of the lifting platform centrically under the relevant vehicle jacking point.

Spare wheel

Some vehicles are equipped with a tyre repair kit instead of a spare wheel.

If mounting a spare wheel, which is different from the other wheels, this wheel might be classified as a temporary spare wheel and the corresponding speed limits apply, even though no label indicates this. Seek the assistance of a workshop to check the applicable speed limit.

The spare wheel has a steel rim.

Caution
The use of a spare wheel that is smaller than the other wheels or in combination with winter tyres could affect driveability. Have the defective tyre replaced as soon as possible.

The spare wheel is located in the load compartment beneath the floor covering.

To remove:

1. Open the floor cover.
2. The spare wheel is secured with a wing nut. Turn wing nut anticlockwise and remove the spare wheel.

   Under the spare wheel there is the box with vehicle tools.
3. When, after a wheel change, no wheel is placed in the spare wheel well, secure the tool box by turning right back the wing nut and close the floor cover.
4. After wheel change back to full size wheel, place the spare wheel outside up in the well and secure with the wing nut.

Stowing the replaced full size wheel in the spare wheel well

Secure a damaged full size wheel facing upwards with the wing nut in the spare wheel well after mounting an extension bolt on the thread bolt. The extension bolt is stowed with the vehicle tools ⇨ 261. To secure the wheel:

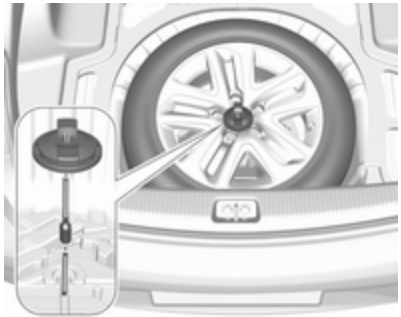

1. Stick the extension bolt onto the thread bolt.
2. Store the damaged wheel outside up in the spare wheel well and secure it by turning the wing nut clockwise on the extension bolt.

⚠ Warning

Storing a jack, a wheel or other equipment in the load compartment could cause injury if they are not fixed properly. During a sudden stop or a collision, loose equipment could strike someone.

Store wheel, jack and tools always in the original storage location and secure them by fixing.

Temporary spare wheel

Caution

The use of a spare wheel that is smaller than the other wheels or in combination with winter tyres could affect driveability. Have the defective tyre replaced as soon as possible.

Only mount one temporary spare wheel. Do not drive faster than 80 km/h. Take curves slowly. Do not use for a long period of time.

If your vehicle gets a flat tyre on the rear while towing another vehicle, mount the temporary spare wheel in the front and the full tyre in the rear.

Tyre chains ⇨ 267.

Spare wheel with directional tyre

Fit directional tyres such that they roll in the direction of travel. The rolling direction is indicated by a symbol (e.g. an arrow) on the sidewall.

The following applies to tyres fitted opposing the rolling direction:

- Driveability may be affected. Have the defective tyre renewed or repaired as soon as possible and fit it instead of the spare wheel.
- Drive particularly carefully on wet and snow-covered road surfaces.

Jump starting

Do not start with quick charger.

A vehicle with a discharged vehicle battery can be started using jump leads and the vehicle battery of another vehicle.

⚠ Warning

Be extremely careful when starting with jump leads. Any deviation from the following instructions can lead to injuries or damage caused by battery explosion or damage to the electrical systems of both vehicles.

⚠ Warning

Avoid contact of the battery with eyes, skin, fabrics and painted surfaces. The fluid contains sulphuric acid which can cause injuries and damage in the event of direct contact.

- Never expose the vehicle battery to naked flames or sparks.
- A discharged vehicle battery can already freeze at a temperature of 0 °C. Defrost the frozen battery before connecting jump leads.
- Wear eye protection and protective clothing when handling a battery.
- Use a booster battery with the same voltage (12 Volts). Its capacity (Ah) must not be much less than that of the discharged vehicle battery.
- Use jump leads with insulated terminals and a cross section of at least 16 mm^2 (25 mm^2 for diesel engines).
- Do not disconnect the discharged vehicle battery from the vehicle.
- Switch off all unnecessary electrical consumers.
- Do not lean over the vehicle battery during jump starting.
- Do not allow the terminals of one lead to touch those of the other lead.
- The vehicles must not come into contact with each other during the jump starting process.
- Apply the parking brake, transmission in neutral, automatic transmission in **P**.

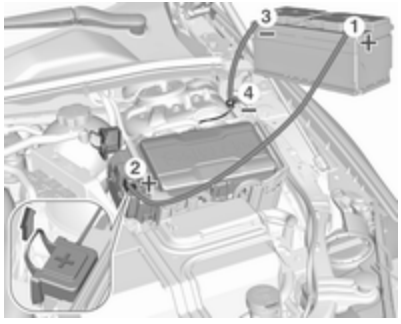

Open the positive terminal protection caps of both vehicle batteries.

Lead connection order:

1. Connect the red lead to the positive terminal of the booster battery.
2. Connect the other end of the red lead to the positive terminal of the discharged battery.

3. Connect the black lead to the negative terminal of the booster battery.
4. Connect the other end of the black lead to a vehicle grounding point of your vehicle in the engine compartment.

Route the leads so that they cannot catch on rotating parts in the engine compartment.

To start the engine:

1. Start the engine of the vehicle providing the jump.
2. After five minutes, start the other engine. Start attempts should be made for no longer than 15 seconds at an interval of one minute.
3. Allow both engines to idle for approx. three minutes with the leads connected.
4. Switch on electrical consumers (e.g. headlights, heated rear window) of the vehicle receiving the jump start.
5. Reverse above sequence exactly when removing leads.

Towing

Towing the vehicle

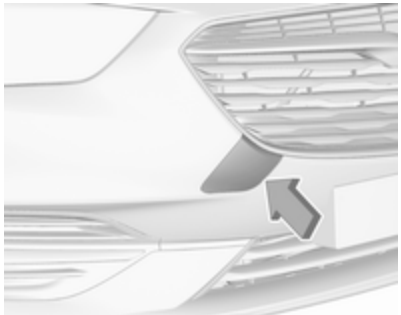

Disengage cap at slot and remove downwards.

The towing eye is stowed with the vehicle tools ⇨ 261.

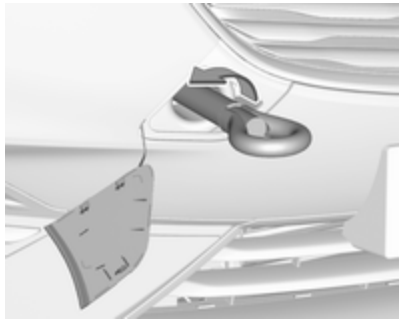

Screw in the towing eye as far as it will go until it stops in a horizontal position.

Attach a tow rope – or better still a tow rod – to the towing eye.

The towing eye must only be used for towing and not for recovering the vehicle.

Switch on ignition to release steering wheel lock and to permit operation of brake lights, horn and windscreen wiper.

Switch the selector lever to neutral.

Release the parking brake.

Caution
Drive slowly. Do not drive jerkily. Excessive tractive force can damage the vehicle.

When the engine is not running, considerably more force is needed to brake and steer.

To prevent the entry of exhaust gases from the towing vehicle, switch on the air recirculation and close the windows.

Vehicles with manual transmission and All-wheel drive: If the vehicle is towed with all four wheels on the ground then there are no technical limitations for speed and distance. If only one axle has been raised, the maximum speed is 50 km/h. There is no distance limitation.

Vehicles with automatic transmission and All-wheel drive: The vehicle must be towed facing forwards. If the vehicle is towed with all four wheels on the ground, the maximum speed is 50 km/h and for a maximum of 50 km. If the front axle has been raised, the maximum speed is 50 km/h. There is no distance limitation.

Seek the assistance of a workshop.

After towing, unscrew the towing eye.

Iinsert cap with the outer flange into the recess and fix cap by pushing.

Towing another vehicle

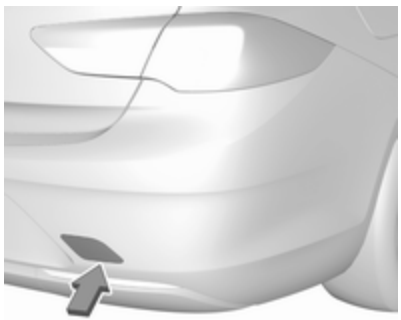

Disengage cap at bottom and remove downwards.

The towing eye is stowed with the vehicle tools ⇨ 261.

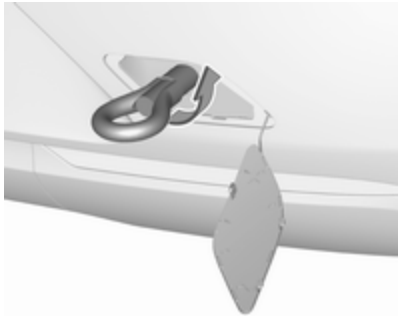

Screw in the towing eye as far as it will go until it stops in a horizontal position.

The lashing eye at the rear underneath the vehicle must never be used as a towing eye.

Attach a tow rope – or better still a tow rod – to the towing eye.

The towing eye must only be used for towing and not for recovering a vehicle.

Caution

Drive slowly. Do not drive jerkily. Excessive tractive force can damage the vehicle.

After towing, unscrew the towing eye.

Insert cap with the upper flange into the recess and fix cap by pushing.

Appearance care

Exterior care

Locks

The locks are lubricated at the factory using a high quality lock cylinder grease. Use a de-icing agent only when absolutely necessary, as this has a degreasing effect and impairs lock function. After using a de-icing agent, have the locks regreased by a workshop.

Washing

The paintwork of your vehicle is exposed to environmental influences. Wash and wax your vehicle regularly. When using automatic vehicle washes, select a programme that includes waxing.

Bird droppings, dead insects, resin, pollen and the like should be cleaned off immediately, as they contain aggressive constituents which can cause paint damage.

If using a vehicle wash, comply with the vehicle wash manufacturer's instructions. The windscreen wiper and rear window wiper must be switched off. Remove antenna and external accessories such as roof racks etc.

If you wash your vehicle by hand, make sure that the insides of the wheel housings are also thoroughly rinsed out.

Wax painted parts of the vehicle regularly.

Clean edges and folds on opened doors and the bonnet as well as the areas they cover.

Clean bright metal mouldings with a cleaning solution approved for aluminium to avoid damages.

Caution

Always use a cleaning agent with a pH value of four to nine.

Do not use cleaning agents on hot surfaces.

Do not clean the engine compartment with a steam-jet or high-pressure jet cleaner.

Thoroughly rinse and leather-off the vehicle. Rinse leather frequently. Use separate leathers for painted and glass surfaces: remnants of wax on the windows will impair vision.

Have the door hinges of all doors greased by a workshop.

Do not use hard objects to remove spots of tar. Use tar removal spray on painted surfaces.

Exterior lights

Headlight and other light covers are made of plastic. Do not use any abrasive or caustic agents, do not use an ice scraper, and do not clean them dry.

Polishing and waxing

Wax the vehicle regularly (at the latest when water no longer beads). Otherwise, the paintwork will dry out.

Polishing is necessary only if the paint has become dull or if solid deposits have become attached to it.

Paintwork polish with silicone forms a protective film, making waxing unnecessary.

Plastic body parts must not be treated with wax or polishing agents.

Windows and windscreen wiper blades

Use a soft lint-free cloth or chamois leather together with window cleaner and insect remover.

When cleaning the rear window from inside, always wipe in parallel to the heating element to prevent damage.

For mechanical removal of ice, use a sharp-edged ice scraper. Press the scraper firmly against the glass so that no dirt can get under it and scratch the glass.

Clean smearing wiper blades with a soft cloth and window cleaner.

Remove dirt residues from smearing wiper blades by using a soft cloth and window cleaner. Also make sure to remove any residues such as wax, insect residues and similar from the window.

Ice residues, pollution and continuous wiping on dry windows will damage or even destroy the wiper blades.

Sunroof

Never clean with solvents or abrasive agents, fuels, aggressive media (e.g. paint cleaner, acetone-containing solutions etc.), acidic or highly alkaline media or abrasive pads. Do not apply wax or polishing agents to the sunroof.

Wheels and tyres

Do not use high-pressure jet cleaners.

Clean rims with a pH-neutral wheel cleaner.

Rims are painted and can be treated with the same agents as the body.

Paintwork damage

Rectify minor paintwork damage with a touch-up pen before rust forms. Have more extensive damage or rust areas repaired by a workshop.

Underbody

Some areas of the vehicle underbody have a PVC undercoating while other critical areas have a durable protective wax coating.

After the underbody is washed, check the underbody and have it waxed if necessary.

Bitumen/rubber materials could damage the PVC coating. Have underbody work carried out by a workshop.

Before and after winter, wash the underbody and have the protective wax coating checked.

Liquid gas system

⚠ Danger

Liquid gas is heavier than air and can collect in sink points.

Take care when performing work at the underbody in a pit.

For painting work and when using a drying booth at a temperature above 60 °C, the liquid gas tank must be removed.

Do not make any modifications to the liquid gas system.

Towing equipment

Do not clean the coupling ball bar with a steam-jet or high-pressure jet cleaner.

Interior care

Interior and upholstery

Only clean the vehicle interior, including the instrument panel fascia and panelling, with a dry cloth or interior cleaner.

Clean the leather upholstery with clear water and a soft cloth. In case of heavy soiling, use leather care.

The instrument cluster and the displays should only be cleaned using a soft damp cloth. If necessary use a weak soap solution.

Clean fabric upholstery with a vacuum cleaner and brush. Remove stains with an upholstery cleaner.

Clothing fabrics may not be colourfast. This could cause visible discolourations, especially on light-coloured upholstery. Removable stains and discolourations should be cleaned as soon as possible.

Clean seat belts with lukewarm water or interior cleaner.

Caution

Close Velcro fasteners as open Velcro fasteners on clothing could damage seat upholstery.

The same applies to clothing with sharp-edged objects, like zips or belts or studded jeans.

Plastic and rubber parts

Plastic and rubber parts can be cleaned with the same cleaner as used to clean the body. Use interior cleaner if necessary. Do not use any other agent. Avoid solvents and petrol in particular. Do not use high-pressure jet cleaners.

Service and maintenance

General information **284**
Service information 284
Recommended fluids, lubricants and parts **285**
Recommended fluids and lubricants 285

General information

Service information

In order to ensure economical and safe vehicle operation and to maintain the value of your vehicle, it is of vital importance that all maintenance work is carried out at the proper intervals as specified.

The detailed, up-to-date service schedule for your vehicle is available at the workshop.

Service display ⇨ 105.

European service intervals

Maintenance of your vehicle is required every 30,000 km or after 1 year, whichever occurs first, unless otherwise indicated in the service display.

A shorter service interval can be valid for severe driving behaviour, e.g. for taxis and police vehicles.

The European service intervals are valid for the following countries:

Andorra, Austria, Belgium, Bosnia-Herzegovina, Bulgaria, Croatia, Cyprus, Czech Republic, Denmark, Estonia, Finland, France, Germany, Greece, Greenland, Hungary, Iceland, Ireland, Italy, Latvia, Liechtenstein, Lithuania, Luxembourg, Macedonia, Malta, Monaco, Montenegro, Netherlands, Norway, Poland, Portugal, Romania, San Marino, Serbia, Slovakia, Slovenia, Spain, Sweden, Switzerland, United Kingdom.

Service display ⇨ 105.

International service intervals

Maintenance of your vehicle is required every 15,000 km or after 1 year, whichever occurs first, unless otherwise indicated in the service display.

Severe operating conditions exist if one or more of the following circumstances occur frequently: Cold starting, stop and go operation, trailer operation, mountain driving, driving on poor and sandy road surfaces, increased air pollution, presence of airborne sand and high dust content,

driving at high altitude and large variations of temperature. Under these severe operating conditions, certain service work may be required more frequently than the regular service interval.

The international service intervals are valid for the countries which are not listed in the European service intervals.

Service display ⇨ 105.

Confirmations

Confirmation of service is recorded in the Service and Warranty Booklet. The date and mileage is completed with the stamp and signature of the servicing workshop.

Make sure that the Service and Warranty Booklet is completed correctly as continuous proof of service is essential if any warranty or goodwill claims are to be met, and is also a benefit when selling the vehicle.

Service interval with remaining engine oil life duration

The service interval is based on several parameters depending on usage.

The service display lets you know when to change the engine oil.

Service display ⇨ 105.

Recommended fluids, lubricants and parts

Recommended fluids and lubricants

Only use products that meet the recommended specifications.

⚠ Warning

Operating materials are hazardous and could be poisonous. Handle with care. Pay attention to information given on the containers.

Engine oil

Engine oil is identified by its quality and its viscosity. Quality is more important than viscosity when selecting which engine oil to use. The oil quality ensures e.g. engine cleanliness, wear protection and oil aging control, whereas viscosity grade gives information on the oil's thickness over a temperature range.

Dexos is the newest engine oil quality that provides optimum protection for petrol and diesel engines. If it is unavailable, engine oils of other listed qualities must be used. Recommendations for petrol engines are also valid for Compressed Natural Gas (CNG), Liquified Petroleum Gas (LPG) and Ethanol (E85) fuelled engines.

Select the appropriate engine oil based on its quality and on the minimum ambient temperature ⇨ 290.

Topping up engine oil

Caution
In case of any spilled oil, wipe it up and dispose it properly.

Engine oils of different manufacturers and brands can be mixed as long as they comply with the required engine oil quality and viscosity.

Use of engine oils for all petrol engines with only ACEA quality is prohibited, since it can cause engine damage under certain operating conditions.

Select the appropriate engine oil based on its quality and on the minimum ambient temperature ⇨ 290.

Additional engine oil additives

The use of additional engine oil additives could cause damage and invalidate the warranty.

Engine oil viscosity grades

The SAE viscosity grade gives information on the thickness of the oil.

Multigrade oil is indicated by two figures, e.g. SAE 5W-30. The first figure, followed by a W, indicates the low temperature viscosity and the second figure the high temperature viscosity.

Select the appropriate viscosity grade depending on the minimum ambient temperature ⇨ 290.

All of the recommended viscosity grades are suitable for high ambient temperatures.

Coolant and antifreeze

Use only organic acid type-long life coolant (LLC) antifreeze approved for the vehicle. Consult a workshop.

The system is factory filled with coolant designed for excellent corrosion protection and frost protection down to approx. -28 °C. In cold regions with very low temperatures the factory filled coolant provides frost protection down to approx. -37 °C. This concentration should be maintained all year round. The use of additional coolant additives that intend to give additional corrosion protection or seal against minor leaks can cause function problems. Liability for consequences resulting from the use of additional coolant additives will be rejected.

Washer fluid

Use only washer fluid approved for the vehicle to prevent damage of wiper blades, paintwork, plastic and rubber parts. Consult a workshop.

Brake and clutch fluid

Over time, brake fluid absorbs moisture which will reduce braking effectiveness. The brake fluid should therefore be replaced at the specified interval.

AdBlue

Only use AdBlue to reduce the nitrogen oxides in the exhaust emission ⇨ 171.

Technical data

Vehicle identification **288**
Vehicle Identification Number .. 288
Identification plate 288
Engine identification 289
Vehicle data **290**
Recommended fluids and lubricants 290
Engine data 293
Performance 294
Vehicle weight 296
Vehicle dimensions 299
Capacities 300
Tyre pressures 301
Towing hitch installation dimensions 305

Vehicle identification

Vehicle Identification Number

The Vehicle Identification Number is visible through the windscreen.

The Vehicle Identification Number may be stamped on the identification plate and on the floor pan, under the floor covering, visible under a cover, or in the engine compartment on the right body panel.

Identification plate

The identification label is located on the front left or right door frame.

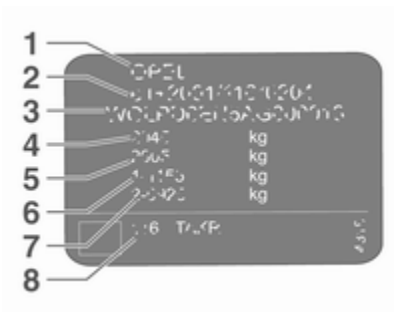

Information on identification plate:

1 : manufacturer
2 : type approval number
3 : vehicle identification number
4 : permissible gross vehicle weight rating in kg
5 : permissible gross train weight in kg
6 : maximum permissible front axle load in kg
7 : maximum permissible rear axle load in kg
8 : vehicle-specific or country-specific data, e.g. MY = model year

The combined total of front and rear axle loads must not exceed the permissible gross vehicle weight. For example, if the front axle is bearing its maximum permissible load, the rear axle can only bear a load that is equal to the gross vehicle weight minus the front axle load.

The technical data is determined in accordance with European Community standards. We reserve the right to make modifications.

Specifications in the vehicle documents always have priority over those given in this manual.

Engine identification

The technical data tables use the engine identifier code. The engine data table additionally shows the engineering code. Engine data ⇨ 293.

To identify the respective engine, refer to the EEC Certificate of Conformity provided with your vehicle or other national registration documents.

The Certificate of Conformity shows the engine identifier code, other national publications may show the engineering code. Check piston displacement and engine power to identify the respective engine.

Vehicle data

Recommended fluids and lubricants

European service schedule

Required engine oil quality

	All countries with European service interval ⇨ 284	
Engine oil quality	Petrol engines (including CNG, LPG, E85)	Diesel engines
dexos1 Gen2	✓	–
dexos2	–	✓

Diesel engines only: In case dexos quality is unavailable, you may use max. one litre engine oil quality ACEA C3 once between each oil change.

Engine oil viscosity grades

	All countries with European service interval ⇨ 284
Ambient temperature	Petrol and diesel engines
down to -25 °C	SAE 0W-30 or SAE 0W-40
	SAE 5W-30 or SAE 5W-40
below -25 °C	SAE 0W-30 or SAE 0W-40

International service schedule

Required engine oil quality

	All countries with international service interval ⇨ 284	
Engine oil quality	Petrol engines (including CNG, LPG, E85)	Diesel engines
dexos1 Gen2	✓	–
dexos2	–	✓

In case dexos quality is unavailable you may use the oil qualities listed below:

	All countries with international service interval ⇨ 284	
Engine oil quality	Petrol engines (including CNG, LPG, E85)	Diesel engines
ACEA A3/B4	–	✓
ACEA C3	–	✓

Engine oil viscosity grades

	All countries with international service interval ⇨ 284
Ambient temperature	Petrol and diesel engines
down to -25 °C	SAE 0W-30 or SAE 0W-40
	SAE 5W-30 or SAE 5W-40

	All countries with international service interval ⇨ 284
below -25 °C	SAE 0W-30 or SAE 0W-40
down to -20 °C	SAE 10W-30[1)] or SAE 10W-40[1)]

1) Permitted, but usage of oils with dexos quality is recommended.

Engine data

Engine identifier code	B15XHL	B15XHT	B20NFT
Sales designation	1.5T	1.5T	2.0T
Engineering code	B15XHT	B15XHT	B20NFT
Piston displacement [cm^3]	1490	1490	1998
Engine power [kW]	103	121	191
at rpm	5600	5600	5500
Torque [Nm]	250	250	400
at rpm	2000-4100	2000-4500	3000-4000
Fuel type	Petrol	Petrol	Petrol
Octane rating RON[2)]			
recommended	95	95	95
possible	98	98	98
possible	91	91	91
Additional fuel type	–	–	–

2) A country-specific label at the fuel filler flap can supersede the engine-specific requirement.

Engine identifier code	B16DTE	B16DTH	B20DTH	B20DTR
Sales designation	1.6	1.6	2.0	2.0
Engineering code	B16DTE	B16DTH	B20DTH	B20DTR
Piston displacement [cm^3]	1598	1598	1956	1956
Engine power [kW]	81	100	125	3)
at rpm	3500	3500-4000	3750	3)
Torque [Nm]	300	320	400	3)
at rpm	1750-2000	2000-2250	1750-2500	3)
Fuel type	Diesel	Diesel	Diesel	Diesel

3) Not available at time of printing

Performance

Grand Sport

Engine	B15XHL	B15XHT	B20NFT
Maximum speed [km/h]			
Manual transmission	210/213	222/225	–
Automatic transmission	–	218	250

Engine	B16DTE	B16DTH	B20DTH	B20DTH AWD	B20DTR AWD
Maximum speed [km/h]					
Manual transmission	202/205	211	226	223	–
Automatic transmission	–	203	223	–	

Sports Tourer, Country Tourer

Engine	B15XHL	B15XHT	B20NFT
Maximum speed [km/h]			
Manual transmission	207/210	218/221	–
Automatic transmission	–	214	245

Engine	B16DTH	B20DTH	B20DTH AWD	B20DTR AWD
Maximum speed [km/h]				
Manual transmission		223	223	–
Automatic transmission		220	220	

Vehicle weight

Kerb weight, basic model without any optional equipment

Grand Sport	Engine	Manual transmission	Automatic transmission
[kg]	B15XHL	1440/1456[4)]	–
	B15XHT	1441/1472[4)]	1472
	B20NFT	–	1649
[kg]	B16DTE	1503	–
	B16DTH	1503	1522
	B20DTH	1582	–
	B20DTH AWD[5)]	1683	–

4) ECO
5) All wheel drive

Optional equipment and accessories increase the kerb weight.

Loading information ⇨ 85.

Kerb weight, basic model without any optional equipment

Sports Tourer	Engine	Manual transmission	Automatic transmission
[kg]	B15XHL	1487	–
	B15XHT	1487/1503[4)]	1522
	B20NFT	–	1683
[kg]	B16DTE	1522	–
	B16DTH	1537	1567
	B20DTH	1633/1716[5)]	1666
	B20DTR	–	1772

4) ECO
5) All wheel drive

Optional equipment and accessories increase the kerb weight.
Loading information ⇨ 85.

Kerb weight, basic model without any optional equipment

Country Tourer	Engine	Manual transmission	Automatic transmission
[kg]	B15XHL	1522	–
	B15XHT	1522	1552
	B20NFT	–	1699

Country Tourer	Engine	Manual transmission	Automatic transmission
[kg]	B16DTH	[6]	[6]
	B20DTH	1666/1716[5]	1666
	B20DTR	–	1807

[5] All wheel drive
[6] Not available at time of printing

Optional equipment and accessories increase the kerb weight.

Loading information ⇨ 85.

Vehicle dimensions

	Grand Sport	Sports Tourer, Country Tourer
Length min.-max. [mm]	4897	4986-5004[7)]
Width with folded exterior mirrors [mm]	1941	1941
Width with unfolded exterior mirrors [mm]	2093	2093
Height (without antenna) [mm]	1455	1550[8)]
Vehicle height - Rear compartment open [mm]	2123	2065
Length of load compartment floor [mm]	1133	1178
Length of load compartment with folded rear seats [mm]	1940	2005
Load compartment width [mm]	1030	1030
Load compartment height [mm]	497	384
Wheelbase [mm]	2829	2829
Turning circle diameter [m]	11.75	11.75

7) Minimum length for standard version, maximum length for Country Tourer version.
8) Depending on body- and equipment variants.

Capacities

Engine oil

Engine	B15XHL	B15XHT	B20NFT
including Filter [l]	4.0	4.0	5.7
between MIN and MAX [l]	1.0	1.0	1.0

Engine	B16DTE	B16DTH	B20DTH
including Filter [l]	5.0	5.0	5.25
between MIN and MAX [l]	1.0	1.0	1.0

Fuel tank

Petrol/diesel, refilling quantity [l]	61

AdBlue tank

AdBlue, refilling quantity [l]	15

Tyre pressures

Tyre pressures differ depending on the model variant. The order of the listed car models is as follows:

- Vehicles with Front-wheel drive
- Vehicles with All-wheel drive

Refer to the table header to find the correct tyre pressure for your model.

Tyre pressures for vehicles with Front-wheel drive

Grand Sport, Sports Tourer, Country Tourer

		Comfort with up to 3 people		ECO with up to 3 people		With full load	
Engine	Tyres	front	rear	front	rear	front	rear
		[kPa/bar] ([psi])	[kPa/bar] ([psi])	[kPa/bar] ([psi])	[kPa/bar] ([psi])	[kPa/bar] ([psi])	[kPa/bar] ([psi])
B15XHL, B15XHT, B16DTE, B16DTH	215/60 R16, 225/55 R17, 215/55 R17, 235/45 R18, 235/50 R18 [9], 245/45 R18	220/2.2 (32)	220/2.2 (32)	270/2.7 (39)	270/2.7 (39)	240/2.4 (35)	270/2.7 (39)
B20DTH	225/55 R17, 235/50 R18[9], 245/45 R18	220/2.2 (32)	220/2.2 (32)	270/2.7 (39)	270/2.7 (39)	260/2.6 (38)	290/2.9 (42)
	235/45 R18, 245/35 R20	230/2.3 (33)	230/2.3 (33)	270/2.7 (39)	270/2.7 (39)	260/2.6 (38)	290/2.9 (42)
All	Temporary spare wheel 125/80 R16, 125/70 R17	420/4.2 (60)	420/4.2 (60)	–	–	420/4.2 (60)	420/4.2 (60)

9) Country Tourer only

Tyre pressures for vehicles with All-wheel drive

Grand Sport, Sports Tourer, Country Tourer

		Comfort with up to 3 people		ECO with up to 3 people		With full load	
Engine	Tyres	front	rear	front	rear	front	rear
		[kPa/bar] ([psi])	[kPa/bar] ([psi])	[kPa/bar] ([psi])	[kPa/bar] ([psi])	[kPa/bar] ([psi])	[kPa/bar] ([psi])
B20NFT	235/45 R18	250/2.5 (36)	250/2.5 (36)	270/2.7 (39)	270/2.7 (39)	260/2.6 (38)	290/2.9 (42)
	245/45 R18, 235/50 R18[9)] 245/35 ZR20	230/2.3 (33)	230/2.3 (33)	270/2.7 (39)	270/2.7 (39)	260/2.6 (38)	290/2.9 (42)
B20DTH	225/55 R17, 245/45 R18, 235/50 R18[9)]	220/2.2 (32)	220/2.2 (32)	270/2.7 (39)	270/2.7 (39)	260/2.6 (38)	290/2.9 (42)
	235/45 R18, 245/35 R20	230/2.3 (33)	230/2.3 (33)	270/2.7 (39)	270/2.7 (39)	260/2.6 (38)	290/2.9 (42)

Engine	Tyres	Comfort with up to 3 people		ECO with up to 3 people		With full load	
		front	rear	front	rear	front	rear
		[kPa/bar] ([psi])	[kPa/bar] ([psi])	[kPa/bar] ([psi])	[kPa/bar] ([psi])	[kPa/bar] ([psi])	[kPa/bar] ([psi])
B20DTR	225/55 R17, 245/45 R18, 235/50 R18[9)]	230/2.3 (33)	230/2.3 (33)	270/2.7 (39)	270/2.7 (39)	260/2.6 (38)	290/2.9 (42)
	235/45 R18	250/2.5 (36)	250/2.5 (36)	270/2.7 (39)	270/2.7 (39)	260/2.6 (38)	290/2.9 (42)
	245/35 R20	240/2.4 (35)	240/2.4 (35)	270/2.7 (39)	270/2.7 (39)	260/2.6 (38)	290/2.9 (42)
All	Temporary spare wheel 125/80 R16, 125/70 R17	420/4.2 (60)	420/4.2 (60)	–	–	420/4.2 (60)	420/4.2 (60)

9) Country Tourer only

Towing hitch installation dimensions

Grandsport

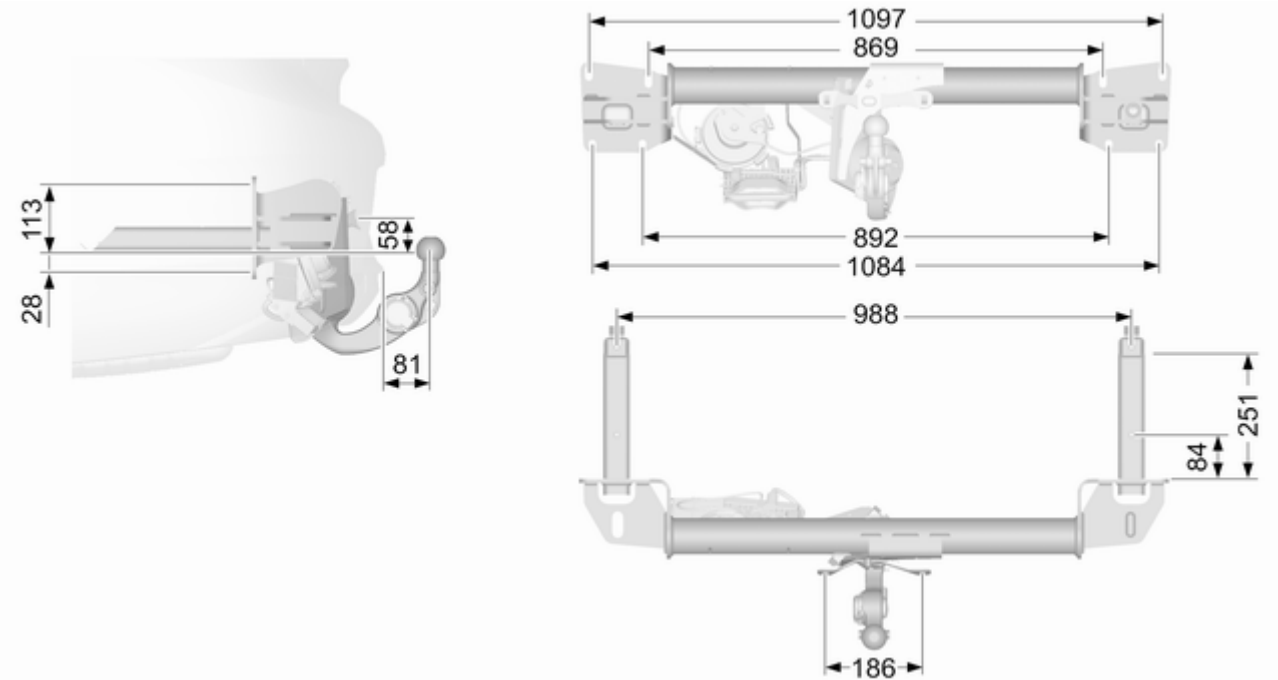

Sports Tourer, Country Tourer

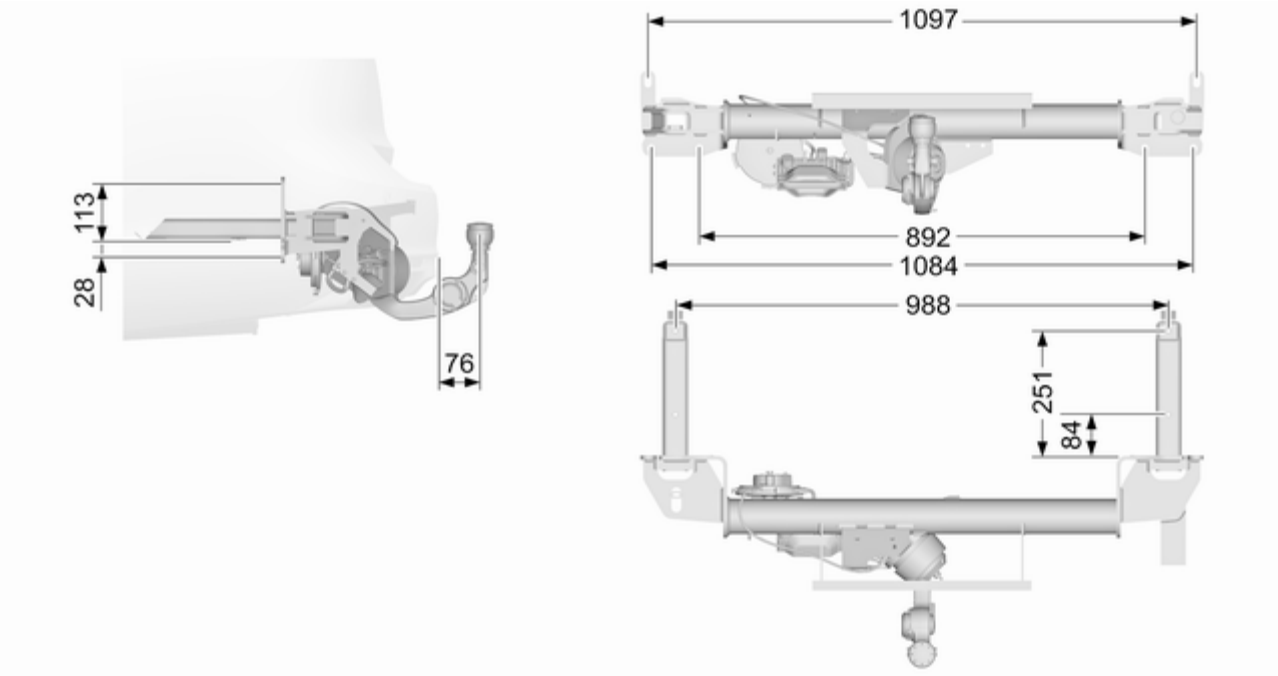

Customer information

Customer information **307**
Declaration of conformity 307
REACH 311
Collision damage repair 311
Software acknowledgement 312
Software update 313
Registered trademarks 314
Vehicle data recording and privacy **314**
Event data recorders 314
Radio Frequency Identification (RFID) 315

Customer information

Declaration of conformity

Radio transmission systems

This vehicle has systems that transmit and/or receive radio waves subject to Directive 1999/5/EC or 2014/53/EU. These systems are in compliance with the essential requirements and other relevant provisions of Directive 1999/5/EC or 2014/53/EU. The full text of the EU declaration of conformity for each system is available at the following internet address: www.opel.com/conformity

Importer is
Opel / Vauxhall, Bahnhofsplatz, 65423 Ruesselsheim am Main, Germany.

Antenna
Laird

Daimlerring 31, 31135 Hildesheim, Germany

Operation frequency: N/A

Maximum output: N/A

Antenna
Kathrein Automotive GmbH

Roemerring 1, 31137 Hildesheim, Germany

Operation frequency: N/A

Maximum output: N/A

Electronic key receiver
Denso Corporation

Waldeckerstaße 11, 64546 Mörfelden-Walldorf, Germany

Operation frequency: 125 kHz

Maximum output: -0.14 dBm

Electronic key transmitter
Denso Corporation

1-1, Showa-cho, Kariya-shi, Aichi-ken 448-8661, Japan

Operation frequency: 433.92 MHz

Maximum output: -5.88 dBm

Immobiliser
Robert Bosch GmbH

Robert Bosch Platz 1, 70839 Gerlingen, Germany

Operation frequency: 125 kHz

Maximum output:
5.1 dBµA/m @ 10 m

Infotainment system R 4.0 IntelliLink
LGE

LG Electronics European Shared Service Center B.V., Krijgsman 1, 1186 DM Amstelveen, The Netherlands

Operation frequency (MHz)	Maximum output (dBm)
2400.0 - 2483.5	4
2400.0 - 2483.5	13
5725.0 - 5850.0	13

Infotainment system Navi 900 IntelliLink
Robert Bosch Car Multimedia GmbH

Robert-Bosch-Straße 200, 31139 Hildesheim, Germany

Operation frequency (MHz)	Maximum output (dBm)
2400.0 - 2480.0	10
2400.0 - 2480.0	20

Delphi Deutschland GmbH

42367 Wuppertal, Germany

Operation frequency: N/A

Maximum output: N/A

OnStar module
LGE

LG Electronics European Shared Service Center B.V., Krijgsman 1, 1186 DM Amstelveen, The Netherlands

Operation frequency (MHz)	Maximum output (dBm)
2402 - 2480	4
2412 - 2462	18
880 - 915	33
1710 - 1785	24
1850 - 1910	24
1920 - 1980	24
2500 - 2570	23

Parking heater remote control receiver
Webasto Thermo & Comfort SE

Friedrichshafener Str. 9, 82205 Gilching, Germany

Operation frequency: N/A

Maximum output: N/A

Parking heater remote control transmitter
Webasto Thermo & Comfort SE

Friedrichshafener Str. 9, 82205 Gilching, Germany

Operation frequency: 869.0 MHz

Maximum output: 14 dBm

Radar unit
Continental Automotive GmbH

ADC Automotive Distance Control Systems GmbH, Peter-Dornier-Strasse 10, 88131 Lindau, Germany

Operation frequency: 76-77 Ghz

Maximum output: 35 EIRP dBm

Radar unit
Hella KGaA Hueck & Co.

Rixbecker Straße 75, 59552 Lippstadt

Operation frequency:
24.05-24.25 Ghz

Maximum output: 20 EIRP dBm

Radio remote control transmitter
Robert Bosch GmbH

Robert Bosch Platz 1, 70839 Gerlingen, Germany

Operation frequency: 433.92 MHz

Maximum output: -4 dBm

Radio remote control receiver
Robert Bosch GmbH

Robert Bosch Platz 1, 70839 Gerlingen, Germany

Operation frequency: N/A

Maximum output: N/A

Tyre pressure sensors
Schrader Electronics Ltd.

11 Technology Park, Belfast Road, Antrim BT41 1QS, Northern Ireland, United Kingdom

Operation frequency: 433.92 MHz

Maximum output: 10 dBm

Jack

GM

GM North America

General Motors Company
Warren Technical Center
Vehicle Engineering Center
30001 Van Dyke
Mail Code 480-210-911
Warren, Michigan 48090
U.S.A.

Date: 6-26-2006

Declaration of Conformity
Pursuant to Machinery Directive 2006/42/EC

We hereby declare that the product:

Product Description: Scissor / Screw Automotive Jack
Type/Part #: 13509239 Scissor Jack

Is in conformity with Machinery Directive 2006/42/EC.

Technical standards applied:
GMW14237 Standard Equipment Jack - Hardware Tests
GMW15005 Standard Equipment Jack and Spare Tire, Vehicle Test

The person authorized to compile the technical file is:
Hans Peter Metzger
Adam Opel AG
65423 Rüsselsheim / Germany

Charles Hayes
Engineering Group Manager Tire / Wheel Systems
GMNA, USA

Translation of the original declaration of conformity

Declaration of conformity according to EC Directive 2006/42/EC

We declare that the product:

Product designation: Scissor / screw automotive jack

Type/GM part number: 13592351 scissor jack

is in compliance with the provisions of Directive 2006/42/EC.

Applied technical standards:

GMW 14337 : standard equipment jack – hardware tests

GMW15005 : standard equipment jack and spare tire, vehicle test

The person authorised to compile the technical documentation is Hans-Peter Metzger

Engineering Group Manager Chassis & Structure

Adam Opel AG

D-65423 Rüsselsheim

signed by

Charu Hayes

Engineering Group Manager Tyre & Wheel Systems

Warren, Michigan, 48090

GMNA, USA

26th June 2016

REACH

Registration, Evaluation, Authorisation and Restriction of Chemicals (REACH) is a European Union regulation adopted to improve the protection of human health and the environment from the risks that can be posed by chemicals. Visit www.opel.com/reach for further information and for access to the Article 33 communication.

Collision damage repair

Opel Exclusive paint

Thickness of Opel Exclusive paints may be higher than stock.

A sticker with information about the individual Opel Exclusive paint formula is placed in the spare wheel well.

Software acknowledgement

Certain OnStar components include libcurl and unzip software and other third party software. Below are the notices and licenses associated with libcurl and unzip and for other third party software please see http://www.lg.com/global/support/opensource/index.

libcurl

Copyright and permission notice

Copyright (c) 1996 - 2010, Daniel Stenberg, <daniel@haxx.se>.

All rights reserved.

Permission to use, copy, modify, and distribute this software for any purpose with or without fee is hereby granted, provided that the above copyright notice and this permission notice appear in all copies.

The software is provided "as is", without warranty of any kind, express or implied, including but not limited to the warranties of merchantability, fitness for a particular purpose and noninfringement of third party rights. In no event shall the authors or copyright holders be liable for any claim, damages or other liability, whether in an action of contract, tort or otherwise, arising from, out of or in connection with the software or the use or other dealings in the software.

Except as contained in this notice, the name of a copyright holder shall not be used in advertising or otherwise to promote the sale, use or other dealings in this Software without prior written authorization of the copyright holder.

unzip

This is version 2005-Feb-10 of the Info-ZIP copyright and license. The definitive version of this document should be available at ftp://ftp.info-zip.org/pub/infozip/license.html indefinitely.

Copyright (c) 1990-2005 Info-ZIP. All rights reserved.

For the purposes of this copyright and license, “Info-ZIP” is defined as the following set of individuals:

Mark Adler, John Bush, Karl Davis, Harald Denker, Jean-Michel Dubois, Jean-loup Gailly, Hunter Goatley, Ed Gordon, Ian Gorman, Chris Herborth, Dirk Haase, Greg Hartwig, Robert Heath, Jonathan Hudson, Paul Kienitz, David Kirschbaum, Johnny Lee, Onno van der Linden, Igor Mandrichenko, Steve P. Miller, Sergio Monesi, Keith Owens, George Petrov, Greg Roelofs, Kai Uwe Rommel, Steve Salisbury, Dave Smith, Steven M. Schweda, Christian Spieler, Cosmin Truta, Antoine Verheijen, Paul von Behren, Rich Wales, Mike White.

This software is provided “as is,” without warranty of any kind, express or implied. In no event shall Info-ZIP or its contributors be held liable for any direct, indirect, incidental, special or consequential damages arising out of the use of or inability to use this software.

Permission is granted to anyone to use this software for any purpose, including commercial applications, and to alter it and redistribute it freely, subject to the following restrictions:

1. Redistributions of source code must retain the above copyright notice, definition, disclaimer, and this list of conditions.
2. Redistributions in binary form (compiled executables) must reproduce the above copyright notice, definition, disclaimer, and this list of conditions in documentation and/or other materials provided with the distribution. The sole exception to this condition is redistribution of a standard UnZipSFX binary (including SFXWiz) as part of a self-extracting archive; that is permitted without inclusion of this license, as long as the normal SFX banner has not been removed from the binary or disabled.
3. Altered versions--including, but not limited to, ports to new operating systems, existing ports with new graphical interfaces, and dynamic, shared, or static library versions--must be plainly marked as such and must not be misrepresented as being the original source. Such altered versions also must not be misrepresented as being Info-ZIP releases--including, but not limited to, labeling of the altered versions with the names “Info-ZIP” (or any variation thereof, including, but not limited to, different capitalizations), “Pocket UnZip,” “WiZ” or “MacZip” without the explicit permission of Info-ZIP. Such altered versions are further prohibited from misrepresentative use of the Zip-Bugs or Info-ZIP e-mail addresses or of the Info-ZIP URL(s).
4. Info-ZIP retains the right to use the names “Info-ZIP,” “Zip,” “UnZip,” “UnZipSFX,” “WiZ,” “Pocket UnZip,” “Pocket Zip,” and “MacZip” for its own source and binary releases.

Software update

The Infotainment system can download and install selected software updates over a wireless connection.

Note
The availability of these over-the-air vehicle software updates varies by vehicle and country. Find more information on our home page.

Internet connection

Downloading over-the-air vehicle software updates requires internet connectivity, which can be accessed through the vehicle’s built-in OnStar connection or another password-protected Wi-Fi hotspot, e.g. provided by a mobile phone.

To connect the Infotainment system to a hotspot, select **Settings** on the home screen, **Wi-Fi** and then **Manage Wi-Fi Networks**. Select the desired Wi-Fi network, and follow the on-screen prompts.

Updates

The system will prompt for certain updates to be downloaded and installed. There is also an option to check for updates manually.

To manually check for updates, select **Settings** on the home screen, **Software Information** and then **System Update**. Follow the on-screen prompts.

Note
Steps for downloading and installing updates may vary by vehicle.

Note
During the installation process, the vehicle may not be operational.

Registered trademarks

Apple Inc.
Apple CarPlay™ is a trademark of Apple Inc.

App Store® and iTunes Store® are registered trademarks of Apple Inc.

iPhone®, iPod®, iPod touch®, iPod nano®, iPad® and Siri® are registered trademarks of Apple Inc.

Bluetooth SIG, Inc.
Bluetooth® is a registered trademark of Bluetooth SIG, Inc.

DivX, LLC
DivX® and DivX Certified® are registered trademarks of DivX, LLC.

EnGIS Technologies, Inc.
BringGo® is a registered trademark of EnGIS Technologies, Inc.

Google Inc.
Android™ and Google Play™ Store are trademarks of Google Inc.

Stitcher Inc.
Stitcher™ is a trademark of Stitcher, Inc.

Verband der Automobilindustrie e.V.
AdBlue® is a registered trademark of the VDA.

Vehicle data recording and privacy

Event data recorders

Data storage modules in the vehicle

A large number of electronic components of your vehicle contain data storage modules temporarily or permanently storing technical data about the condition of the vehicle, events and errors. In general, this technical information documents the condition of parts, modules, systems or the environment:

- operating conditions of system components (e.g. filling levels)
- status messages of the vehicle and its single components (e.g. number of wheel revolutions / rotational speed, deceleration, lateral acceleration)
- dysfunctions and defects in important system components

- vehicle reactions in particular driving situations (e.g. inflation of an airbag, activation of the stability regulation system)
- environmental conditions (e.g. temperature)

These data are exclusively technical and help identifying and correcting errors as well as optimising vehicle functions.

Motion profiles indicating travelled routes cannot be created with these data.

If services are used (e.g. repair works, service processes, warranty cases, quality assurance), employees of the service network (manufacturer included) are able to read out this technical information from the event and error data storage modules applying special diagnostic devices. If required, you will receive further information at these workshops. After an error has been corrected, the data are deleted from the error storage module or they are constantly overwritten.

When using the vehicle, situations may occur in which these technical data related to other information (accident report, damages on the vehicle, witness statements etc.) may be associated with a specific person - possibly, with the assistance of an expert.

Additional functions contractually agreed upon with the client (e.g. vehicle location in emergency cases) allow the transmission of particular vehicle data from the vehicle.

Radio Frequency Identification (RFID)

RFID technology is used in some vehicles for functions such as tyre pressure monitoring and ignition system security. It is also used in connection with conveniences such as radio remote controls and electronic keys for door locking/ unlocking and starting, and in-vehicle transmitters for garage door openers. RFID technology in Opel vehicles does not use or record personal information or link with any other Opel system containing personal information.

Index

A

Accessories and vehicle modifications 238
Active bonnet..... 70
Active emergency braking..... 202
Adaptive cruise control..... 112, 190
AdBlue..... 110, 171
Adjustable air vents 158
Airbag and belt tensioners 107
Airbag deactivation 62, 107
Airbag label..... 57
Airbag system 57
Air conditioning regular operation 160
Air conditioning system 149
Air intake 159
Air vents..... 158
All-wheel drive 179
Antilock brake system 179
Antilock brake system (ABS) 109
Anti-theft alarm system 33
Anti-theft locking system 33
Appearance care..... 280
Armrest..... 52, 54
Armrest storage 73
Ashtrays 96
Automatic anti-dazzle 39
Automatic dimming 38
Automatic light control 136
Automatic locking 26
Automatic transmission 174
Autostop..... 166
Auxiliary heater..... 158

B

Baselevel display..... 113
Battery discharge protection 147
Battery voltage 125
Belts..... 55
BlueInjection..... 171
Bonnet 240
Brake and clutch fluid..... 285
Brake and clutch system 108
Brake assist 181
Brake fluid 243
Brakes 179, 243
Breakdown..... 278
Bulb replacement 246

C

Capacities 300
Cargo management system 80
Catalytic converter 170
Central locking system 22
Centre console lighting 146
Centre console storage 73
Changing tyre and wheel size ... 267
Charging system 108
Child locks 27
Child restraint installation locations 66

Child restraints..... 63
Child restraint systems 63
Climate control 16
Clock..... 92
Collision damage repair..... 311
Control indicators..... 106
Control of the vehicle 162
Controls..... 88
Convex shape 36
Coolant and antifreeze..... 285
Cruise control 112, 187
Cupholders 72
Curtain airbag system 61
Curve lighting..... 139

D

Danger, Warnings and Cautions ... 4
Daytime running lights 139
Declaration of conformity..... 307
DEF..... 171
Diesel exhaust fluid..... 171
Diesel fuel system bleeding 245
Diesel particle filter 169
Door open 112
Doors..... 28
Driver assistance systems..... 187
Driver Information Centre..... 113
Driving characteristics and towing tips 235
Driving hints..... 162

E

Electric adjustment 36
Electrical system..... 256
Electric parking brake..... 108, 180
Electric parking brake fault..... 108
Electronic climate control system 152
Electronic key system..... 20
Electronic Stability Control..... 183
Electronic Stability Control and Traction Control system..... 109
Electronic Stability Control off..... 109
End-of-life vehicle recovery 239
Engine compartment fuse box ... 257
Engine coolant 242
Engine coolant temperature 110
Engine coolant temperature gauge 105
Engine data 293
Engine exhaust 169
Engine identification..... 289
Engine oil 241, 285, 290
Engine oil pressure 110
Entry lighting 146
Event data recorders..... 314
Exit lighting 146
Exterior care 280
Exterior light 111
Exterior lighting 13, 135
Exterior mirrors..... 36

F

First aid kit 83
Fixed air vents 159
Fog light 111
Fog lights 248
Folding mirrors 37
Following distance..... 109
Following distance indication..... 201
Forward collision alert..... 198
Front airbag system 60
Front fog lights 143
Front pedestrian protection..... 205
Front seats..... 46
Front storage..... 73
Fuel..... 231
Fuel for diesel engines 232
Fuel for petrol engines 231
Fuel gauge 104
Funnel..... 232
Fuses 256

G

Gauges..... 102
Gear shifting..... 109
General information 234
Glovebox 72

H

Halogen headlights 246
Hand brake..... 179
Hazard warning flashers 142

Headlight flash 138
Headlight range adjustment 138
Headlights..... 135
Headlights when driving abroad 138
Head restraint adjustment 8
Head restraints 44
Head-up display..... 122
Heated mirrors 38
Heated rear window 41
Heated steering wheel 89
Heated windscreen..... 42
Heating 53, 54
High beam 111, 136
High beam assist..... 111, 136
Hill start assist 182
Horn 14, 89

I

Identification plate 288
Immobiliser 36, 111
Indicators..... 102
Inductive charging..... 95
Info display..... 120
Information displays..... 113
Instrument cluster 97
Instrument panel fuse box 260
Instrument panel illumination 256
Instrument panel illumination control 144
Instrument panel overview 10
Interactive driving system..... 184
Interior care 282
Interior lighting..... 144
Interior lights 144, 256
Interior mirrors..... 38
Introduction 3

J

Jump starting 277

K

Key, memorised settings..... 22

L

Lane change alert..... 217
Lane keep assist..... 109, 229
Lashing eyes 80
LED headlights..... 111, 139, 248
Lighting features..... 146
Light switch 135
Load compartment 28, 74
Load compartment cover 77
Loading information 85
Low fuel 111

M

Malfunction indicator light 108
Manual anti-dazzle 38
Manual seat adjustment..... 47
Manual transmission 178
Massage..... 54
Memorised settings..... 22
Midlevel display..... 113
Mirror adjustment 8
Misted light covers 144

N

New vehicle running-in 162
Number plate light 256

O

Object detection systems..... 207
Odometer 103
Oil, engine..... 285, 290
OnStar..... 130
Outside temperature 92
Overrun cut-off 165

P

Panoramic view system..... 219
Parking 19, 168
Parking assist 38, 207
Parking brake 180
Parking lights 143
Particulate filter..... 169
Pedestrian detection..... 112
Performance 294
Performing work 240
Power button..... 163
Power outlets 94
Power seat adjustment 49
Power windows 39

Preheating 110
Puncture..... 272

Q
Quickheat..... 158

R
Radio Frequency Identification (RFID)..... 315
REACH..... 311
Reading lights 145
Rear cross traffic alert..... 223
Rear floor storage cover 79
Rear fog light 112, 143
Rear seats..... 54
Rear storage..... 79
Rear view camera 221
Rear window wiper/washer 91
Recommended fluids and lubricants 285, 290
Refuelling 232
Registered trademarks..... 314
Retained power off..... 164
Reversing lights 144
Ride control systems..... 182
Roof..... 42
Roof load..... 85
Roof rack 84

S
Safety belts..... 55
Safety net 80
Seat adjustment 6
Seat belt 8
Seat belt reminder 106
Seat belts 55
Seat heating
Seat heating, front..... 53
Seat heating, rear..... 54
Seat position 46
Selective catalytic reduction..... 171
Service 160, 284
Service display 105
Service information 284
Side airbag system 61
Side blind zone assistant..... 215
Sidelights..... 135
Side turn signal lights 255
Software acknowledgement..... 312
Software update..... 313
Spare wheel 275
Speed limiter..... 112, 189
Speedometer 102
Starting and operating..... 162
Starting off 18
Starting the engine 164
Steering..... 162
Steering wheel adjustment 9, 88
Steering wheel controls 88
Stop-start system..... 166
Storage..... 72
Storage compartments..... 72
Sunglasses storage 73
Sunroof 42
Sunvisor lights 146
Sun visors 42
Symbols 4

T
Tachometer 104
Tail lights 250
Three-point seat belt 56
Tools 261
Tow bar..... 234
Towing..... 234, 278
Towing another vehicle 279
Towing equipment 236
Towing hitch installation dimensions 305
Towing the vehicle 278
Traction Control system 182
Traction Control system off..... 110
Traffic sign assistant..... 112, 224
Trailer coupling..... 234
Trailer stability assist 237
Trailer towing 235
Transmission 17
Tread depth 266
Trip odometer 103

Turn and lane-change signals … 142
Turn signal 106
Tyre chains 267
Tyre designations 263
Tyre pressure 263
Tyre pressure monitoring system..... 110, 264
Tyre pressures 301
Tyre repair kit 268

U

Ultrasonic parking assist..... 207
Upholstery..... 282
Uplevel display..... 113
Using this manual 3

V

Valet mode..... 120
Vehicle battery 244
Vehicle checks..... 240
Vehicle data..... 290
Vehicle data recording and privacy..... 314
Vehicle detected ahead..... 112
Vehicle dimensions 299
Vehicle Identification Number 288
Vehicle jack..... 261
Vehicle messages 124
Vehicle personalisation 126
Vehicle security..... 33
Vehicle specific data 3
Vehicle storage..... 239
Vehicle tools..... 261
Vehicle unlocking 6
Vehicle weight 296
Ventilating..... 53

W

Warning chimes 125
Warning lights..... 102
Warning triangle 83
Washer and wiper systems 14
Washer fluid 243
Wheel changing 272
Wheel covers 267
Wheels and tyres 262
Windows..... 39
Windscreen..... 39
Windscreen wiper/washer 89
Winter tyres 262
Wiper blade replacement 245

www.opel.com

Copyright by ADAM OPEL GmbH, Rüsselsheim, Germany.

The information contained in this publication is effective as of the date indicated below. Adam Opel GmbH reserves the right to make changes to the technical specifications, features and design of the vehicles relative to the information in this publication as well as changes to the publication itself.

Edition: September 2017, ADAM OPEL GmbH, Rüsselsheim.

Printed on chlorine-free bleached paper.

ID-OINBOBSE1709-en