TOYOTA PRIUS Information Guide

Basic Operation

1 How to operate PUSH BUTTON STARTING HYBRID SYSTEM

A. Starting HYBRID SYSTEM

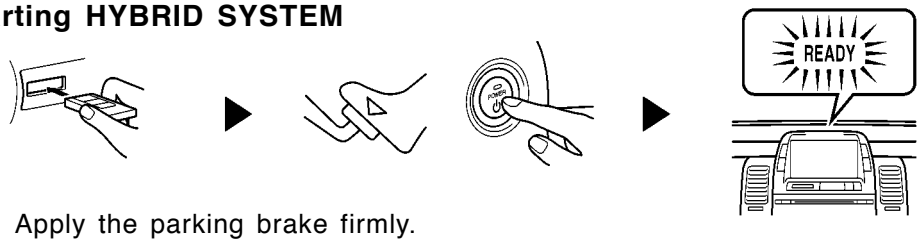

(1) Apply the parking brake firmly.

(2) Insert the key* and press the "POWER" switch with the brake pedal depressed firmly.

(3) You can start driving your Prius when the flashing "READY" light stays on after a few seconds and you hear two beeps.

B. Stopping HYBRID SYSTEM

Press the "POWER" switch with the vehicle at a stop.

C. Selecting "ACC" or "IG-ON" mode

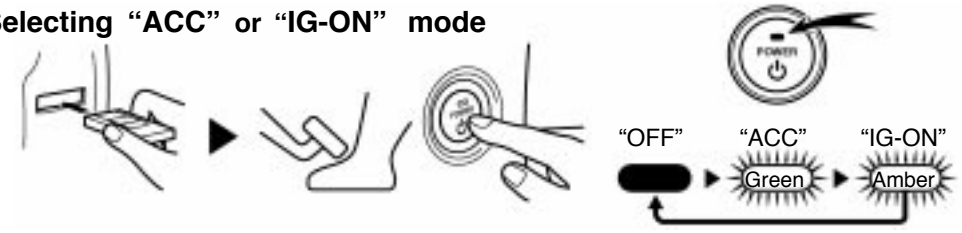

(1) Insert the key.*

(2) Press the "POWER" switch without depressing the brake pedal. Each press changes the hybrid system from "OFF" mode to "ACC" (accessories such as the radio on), to "IG- ON" (all accessories on) and then back to "OFF". The indicator color on the "POWER" switch tells you which mode is selected.

* You do not need to insert the key on the vehicle with smart entry and start system. (For details, see "Smart entry and start system" in the Owner's Manual.)

2 Shift lever operation

A. Starting procedure

(1) When the "READY" light comes on, move the shift lever into "D" or "R" and release it with the brake pedal depressed. The "D" or "R" position is selected and the lever returns to its original position. You can confirm which position is selected with the indicator in the instrument cluster.

(2) Release the parking brake and your foot from the brake pedal gradually, and then start your Prius by depressing the accelerator pedal assuredly.

1

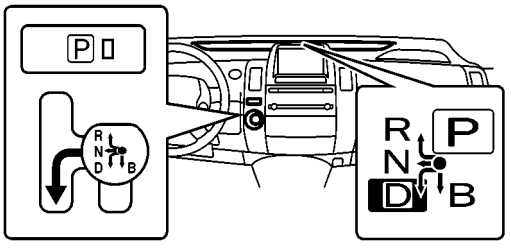

2

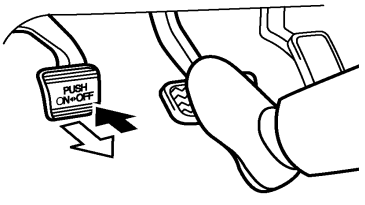

B. Stopping procedure

(1) Stop your Prius completely by depressing the brake pedal and then apply the parking brake.

(2) Press the “P” position switch. The indicator on the switch comes on and transaxle is locked to “P”.

1

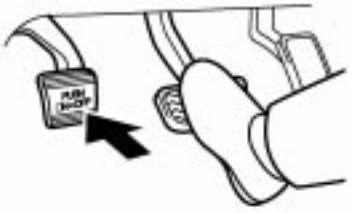

2

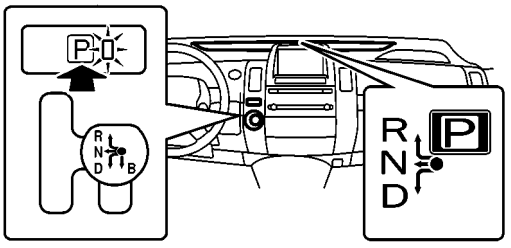

Note:

Be sure to put the hybrid transaxle into “P” when parking.
During traffic jams, use the “D” position and continue driving in that position. The battery cannot be charged in “N”.
When releasing the accelerator pedal in “B”, engine braking will be applied stronger than in “D”. Compared with ordinary vehicles, you may feel less powerful engine braking during high speed driving.

For Better Driving

For environment friendly and economical driving

(1) Avoid abrupt acceleration or deceleration. This will ensure that sufficient power supply remains in the hybrid battery and will enable you to drive efficiently.

(2) Check the tire inflation pressure frequently to keep it at the proper level.

Note:

Trip information (Consumption, energy monitor) can be shown in the multi-information display. Use this information for driving with good fuel economy. To see the information, press “INFO” (located outside the display) and touch “Trip Info.” (located inside the display).

Things You Must Know

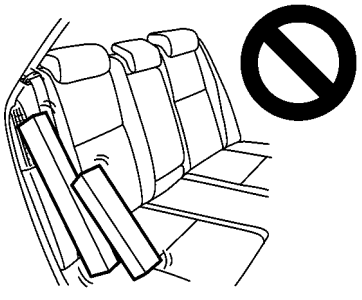

On the side of the rear right seatback, there is an air vent provided to cool the hybrid battery. Do not put luggage or block the vent. If the vent is covered, the hybrid battery will overheat, and this may cause lower vehicle output and reduced performance.

— See Owner’s Manual for details —

Printed in Japan 01-0511-00 C ¿¿¿¿(¿¿U ¿ 01999-47536 ¿U¿5

Important information about this manual

Safety and vehicle damage warnings

Throughout this manual, you will see safety and vehicle damage warnings. You must follow these warnings carefully to avoid possible injury or damage.

The types of warnings, what they look like, and how they are used in this manual are explained as follows:

⚠ CAUTION

This is a warning against anything which may cause injury to people if the warning is ignored. You are informed about what you must or must not do in order to reduce the risk of injury to yourself and others.

NOTICE

This is a warning against anything which may cause damage to the vehicle or its equipment if the warning is ignored. You are informed about what you must or must not do in order to avoid or reduce the risk of damage to your vehicle and its equipment.

Safety symbol

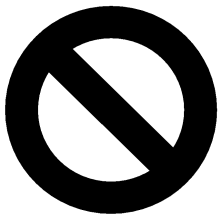

00060

When you see the safety symbol shown above, it means: “Do not...”; “Do not do this”; or “Do not let this happen”.

Important information about your Toyota

Occupant restraint systems

Toyota encourages you and your family to take the time to read Section 2–2 of this Owner's Manual carefully. In terms of helping you understand how you can receive the maximum benefit of the occupant restraint systems this vehicle provides, Section 2–2 of this Owner's Manual is the most important section for you and your family to read.

Section 2–2 describes the function and operation concerning seats, seat belts, SRS airbags and child restraint systems of this vehicle and some potential hazards you should be aware of. These systems work together along with the overall structure of this vehicle in order to provide occupant restraint in the event of a crash. The effect of each system is enhanced when it is used properly and together with other systems. No single occupant restraint system can, by itself, provide you or your family with the equal level of restraint which these systems can provide when used together. That is why it is important for you and your family to understand the purpose and proper use of each of these systems and how they relate to each other.

The purpose of all occupant restraint systems is to help reduce the possibility of death or serious injury in the event of a collision. None of these systems, either individually or together, can ensure that there is no injury in the event of collision. However, the more you know about these systems and how to use them properly, the greater your chances become of surviving an accident without death or serious injury.

Seat belts provide the primary restraint to all occupants of the vehicle, and every occupant of the vehicle should wear seat belts properly at all times. Children should always be secured in child restraint systems that are appropriate for their age and size. SRS (Supplemental Restraint System) airbags are, as their names imply, designed to work with, and be supplemental to, seat belts and are not substitutes for them. SRS airbags can be very effective in reducing the risk of head and chest injuries by preventing contact of the head and chest with interior portions of the vehicle.

In order to be effective, the SRS airbags must deploy with tremendous speed. The rapid deployment of the SRS airbags makes the SRS airbags themselves potential sources of serious injury if an occupant is too close to an airbag, or if an object or some part of his or her body has been placed between the occupant and the airbag at the time of deployment. This is just one example of how the instructions in Section 2–2 of this Owner's Manual will help ensure proper use of the occupant restraint systems, and increase the safety they can provide to you and your family in the event of an accident.

Toyota recommends you to read the provisions in Section 2–2 carefully and refer to them as needed during your time of ownership of this vehicle.

Event data recorder

Your vehicle has computers that monitor and control certain aspects of your vehicle. These computers assist in driving and maintaining optimal vehicle performance. Besides storing data useful for troubleshooting, there is a system to record data in a crash or a near car crash event. This is called an Event Data Recorder (EDR).

The SRS airbag sensor assembly contains the EDR. In a crash or a near car crash event, this device may record some or all of the following information:

- Engine speed
- Whether the brake pedal was applied or not
- Vehicle speed
- To what extent the accelerator pedal was depressed
- Position of the transmission selector lever
- Whether the driver and front passenger wore the seat belts or not
- Driver's seat position
- Front passenger's occupant classification

- SRS airbag deployment data
- SRS airbag system diagnostic data

If your vehicle is equipped with a vehicle stability control (VSC) system, its Electronic Control Unit (ECU) may contain another EDR. There are a variety of driving situations which include activating the VSC under which the VSC EDR will record certain information. The VSC EDR may record some or all of the following information:

- Behavior of the vehicle
- Steering wheel angle
- Vehicle speed
- To what extent the accelerator pedal was depressed
- To what extent the brake pedal was applied
- To what extent the ECU controlled the condition of the 4 wheels
- Vehicle stability control system diagnostic data

The information above is intended to be used for the purpose of improving vehicle safety performance. Unlike general data recorders, the EDR does not record sound data such as conversation between passengers.

Toyota will not disclose the data recorded in an EDR to a third party except when:

- An agreement from the vehicle's owner (or the leasing company for a leased vehicle) is obtained
- Officially requested by the police or other authorities
- Used as a defence for Toyota in a law suit
- Ordered by the court

However, if necessary Toyota will:

- Use the data for research on Toyota vehicle safety performance
- Disclose the data to a third party for research purposes without disclosing details of the vehicle owner, and only when it is deemed necessary
- Disclose summarized data cleared of vehicle identification information to a non–Toyota organization for research purposes

New vehicle warranty

Your new vehicle is covered by the following Toyota limited warranties:

- New vehicle warranty
- Emission control systems warranty
- Others

For further information, please refer to the “Owner’s Warranty Information Booklet” or “Owner’s Manual Supplement”.

Your responsibility for maintenance

It is the owner’s responsibility to make sure the specified maintenance is performed. Section 7 gives details of these maintenance requirements. Also included in Section 7 is general maintenance. For scheduled maintenance information, please refer to the “Scheduled Maintenance Guide” or “Owner’s Manual Supplement”.

Important health and safety information about your Toyota

⚠ CAUTION

- **WARNING: Engine exhaust, some of its constituents, and a wide variety of automobile components contain or emit chemicals known to the State of California to cause cancer and birth defects and other reproductive harm. In addition, oils, fuels and fluids contained in vehicles as well as waste produced by component wear contain or emit chemicals known to the State of California to cause cancer and birth defects or other reproductive harm.**
- **Battery posts, terminals and related accessories contain lead and lead compounds. Wash your hands after handling. Used engine oil contains chemicals that have caused cancer in laboratory animals. Always protect your skin by washing thoroughly with soap and water.**

Accessories, spare parts and modification of your Toyota

A wide variety of non–genuine spare parts and accessories for Toyota vehicles are currently available in the market. You should know that Toyota does not warrant these products and is not responsible for their performance, repair, or replacement, or for any damage they may cause to, or adverse effect they may have on, your Toyota vehicle.

This vehicle should not be modified with non–genuine Toyota products. Modification with non–genuine Toyota products could affect its performance, safety or durability, and may even violate governmental regulations. In addition, damage or performance problems resulting from the modification may not be covered under warranty.

Spark ignition system of your Toyota

The spark ignition system in your Toyota meets all requirements of the Canadian Interference–Causing Equipment Standard.

Installation of a mobile two–way radio system

As the installation of a mobile two–way radio system in your vehicle could affect electronic systems such as multiport fuel injection system / sequential multiport fuel injection system, cruise control system, anti–lock brake system, vehicle stability control system, SRS airbag system, seat belt pretensioner system and Toyota hybrid system, be sure to check with your Toyota dealer for precautionary measures or special instructions regarding installation.

Smart entry and start system

Users of any electrical medical devices such as implanted pacemakers should consult the manufacturer of the device for information about its operation under the influence of radio waves. Radio waves could have unexpected effects on the operation of such medical devices. For details, see “Keys” on page 20 and “Smart entry and start system” on page 24 in Section 2–1.

Tires and loading on your Toyota

Underinflated or overinflated tire inflation pressure and the excess load may result in the deterioration of steering ability and braking ability, leading to an accident. Check the tire inflation pressure periodically and be sure to keep the load limits given in this Owner’s Manual. For details about tire inflation pressure and load limits, see page 405 and pages 342.

Scrapping of your Toyota

The SRS airbag and seat belt pretensioner devices in your Toyota contain explosive chemicals. If the vehicle is scrapped with the airbags and pretensioners left as they are, this may cause an accident such as fire. Be sure to have the systems of the SRS airbag and seat belt pretensioner removed and disposed of by the qualified service shop or by your Toyota dealer before you dispose of your vehicle.

⚠CAUTION

When your vehicle or battery needs to be disposed of, be sure to consult your Toyota dealer. Hybrid batteries must be collected through Toyota dealers. If your vehicle is disposed of without dismantling, someone could receive an electric shock by touching the high voltage parts of the hybrid battery. If the battery is not disposed of properly, its contents can cause death or serious injury.

Hybrid battery

The hybrid battery has a limited service life. Call your Toyota dealer for information about recycling or disposal of hybrid battery and your vehicle.

Leak detection pump

This pump performs fuel evaporation leakage check. This check is done approximately five hours after the hybrid system is turned off. So you may hear a sound coming from underneath the luggage compartment for several minutes. It does not indicate a malfunction.

⚠ CAUTION

Precautions for use of hybrid vehicle

The vehicle has both high voltage DC and AC systems as well as a 12–volt system. DC and AC high voltage are both very dangerous and can cause death or serious injury, severe burns and electric shock.

- **In order to avoid personal injuries, do not touch the high voltage cables (orange colored) and their connectors.**
- **Follow the caution labels attached to the high voltage parts.**
- **Do not remove or replace the high voltage parts such as the inverter unit (located in the engine compartment), hybrid battery (located behind rear seat), etc.**
- **Do not touch the service plug located in the left side trim of the luggage compartment without hybrid system technical training. (See "Precautions for use" on page 14 in Section 1–2.) This component is provided to disable the high voltage system in case of servicing at a Toyota dealer.**

⚠ CAUTION

If an accident occurs

- **Pull your vehicle off the road, push the "P" position switch, stop the hybrid system and if the key is inserted into key slot, remove it.**
- **In order to avoid personal injuries, do not touch any high voltage wirings and their connectors, and high voltage parts (inverter unit, hybrid battery, etc.).**
- **If some exposed electric wires are protruding inside or outside of your vehicle, an electric shock may occur. Never touch the electric wires.**
- **If fluid leaks or gets in some parts of the vehicle, never touch it because it may be electrolyte (strong alkali) from the hybrid battery. If it gets into your skin or eyes, wash off immediately with a large amount of water, if possible, boric acid solution, and get immediate medical attention in order to help avoid serious injury.**
- **If a vehicle fire occurs, extinguish it using a fire extinguisher for the exclusive use on electric fires. Or, use a large amount of water to prevent flammable gas from being generated from the batteries.**

- **If your vehicle needs to be towed, do it with the front wheels raised. For details on towing, see "If your vehicle needs to be towed" on page 372 in Section 5.**

⚠ CAUTION

High Voltage

Your vehicle is equipped with cables connected to parts of the vehicle subject to high voltage (about 500 V at maximum). There are some other parts that reach high temperatures while you drive. Never touch battery cables (wrapped in orange–colored harnesses) or their connectors since they are under high voltage and dangerous. Caution labels are applied to these parts to identify them. Carefully observe the instructions on these caution labels.

Quick index

- If a service reminder indicator or warning buzzer comes on ... 125
- If your vehicle will not start ... 356
- If your vehicle overheats ... 360
- If you have a flat tire ... 361
- If your vehicle needs to be towed ... 372
- Tips for driving during break-in period ... 318
- How to start the hybrid system ... 348
- General maintenance ... 387

Gas station information

Fuel type:
UNLEADED gasoline, Octane Rating 87 (Research Octane Number 91) or higher.

See page 318 for detailed information.

Fuel tank capacity:
45 L (11.9 gal., 9.9 Imp.gal.)
See page 320 for detailed information.

Engine oil:
ILSAC multigrade engine oil is recommended.

See page 401 for detailed information.

Tire information: See pages 405 through 412.

Tire inflation pressure: See page 429.

¿U –5

Publication No. OM47520U
Part No. 01999-47520
Printed in Japan 01–0511–00 C

SECTION 1 – 1

FEATURES ON NEW TOYOTA VEHICLE

Overview of instruments and controls

Instrument panel overviewww 2
Instrument cluster and multi–information display overview 5
Indicator symbols on the instrument cluster and multi–information display 6

Instrument panel overview

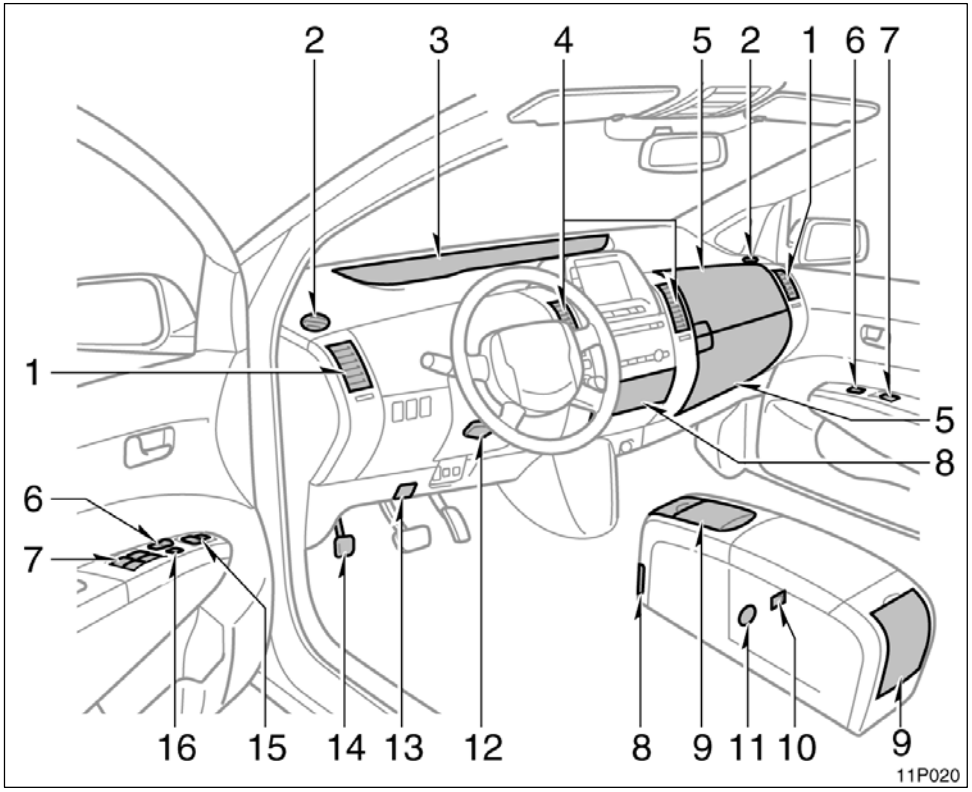

1. Side vents 297
2. Side defroster outlets
3. Instrument cluster 5
4. Center vents 297
5. Glove boxes 307
6. Power door lock switches 40
7. Power window switches 43
8. Auxiliary boxes 311
9. Cup holders 312
10. AUX adapter 306
11. Power outlet 305
12. Tilt steering lock release lever 104
13. Hood lock release lever 45
14. Parking brake pedal 156
15. Power rear view mirror control switch 105
16. Window lock switch 44

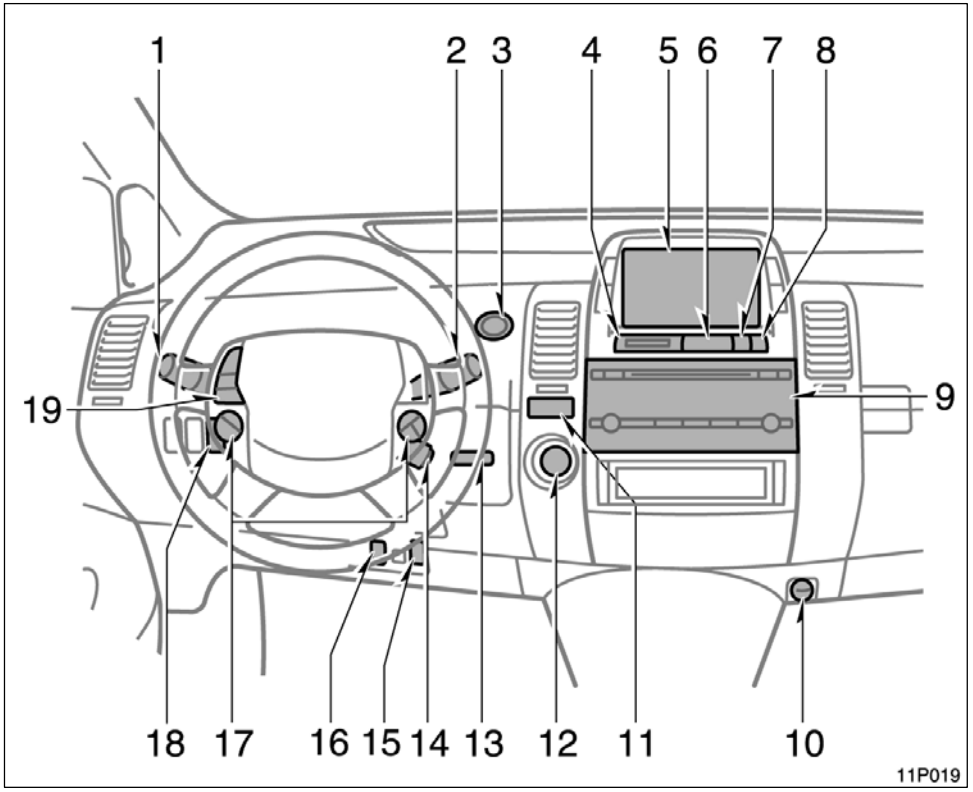

1. Headlight and turn signal switches 110
2. Wiper and washer switches 117
3. “POWER” switch 139
4. Clock 302
5. Multi–information display or navigation system including multi–information display (For the navigation system, see the separate “Navigation System Owner’s Manual”.) 160
6. Emergency flasher switch 114
7. Trip meter reset button 123
8. Km/h or MPH button 124
9. Audio system 242
10. Power outlet 305
11. “P” position switch 144
12. Electronic shift lever (R, N, D, B) 144
13. Key slot 138
14. Cruise control switch 157
15. Tire pressure warning system reset switch 150
16. Smart entry and start system cancel switch 34

17. Climate remote control switches 297
18. Instrument panel light control dial 114
19. Audio remote control switches 277

Instrument cluster and multi-information display overview

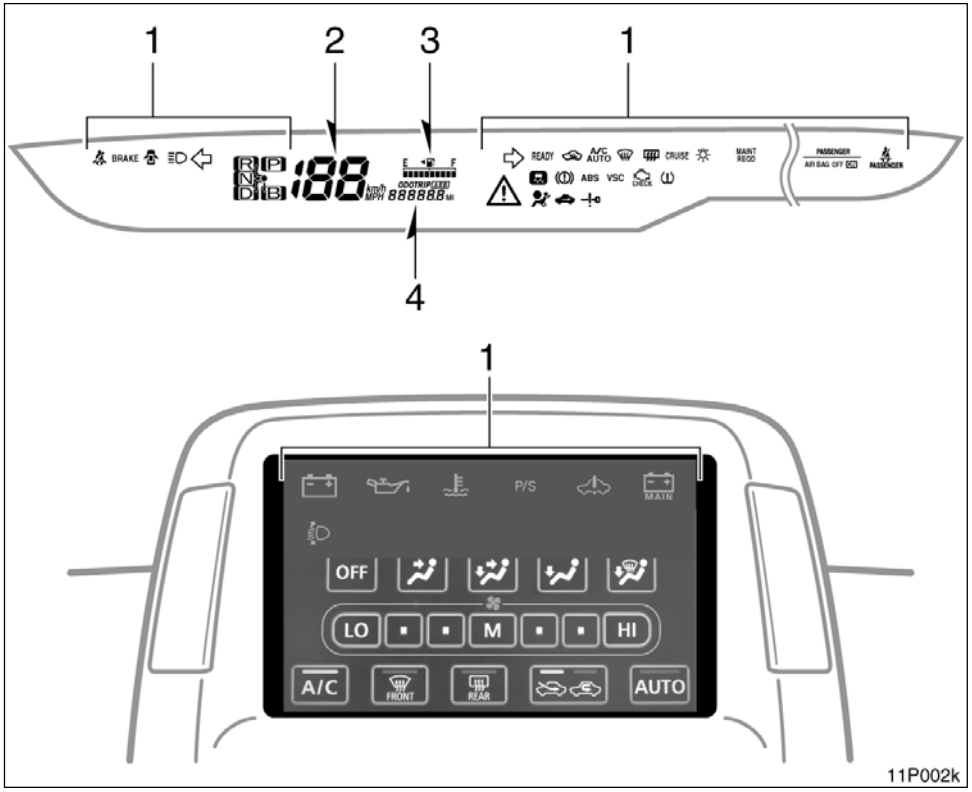

1. Service reminder indicators and indicator lights 125, 132
2. Speedometer
3. Fuel gauge 122
4. Odometer and trip meter 123

Indicator symbols on the instrument cluster and multi-information display

BRAKE and (U.S.A)	Brake system warning lights*1
(Canada)	
	Driver's seat belt reminder light*1
PASSENGER	Front passenger's seat belt reminder light*1
E F	Low fuel level indicator light*1
CHECK or	Malfunction indicator lamp*1
	Master warning light*1
	Open door warning light*1

ABS or	Anti-lock brake system warning light*1
	SRS warning light*1
MAINT REQD	Engine oil replacement reminder light*1 (for vehicles sold in U.S.A.)
VSC	Vehicle stability control system warning light*1
	Low tire pressure warning light*1
	Charging system warning light*2
	High coolant temperature warning light*2
	Low engine oil pressure warning light*2
MAIN	Hybrid battery warning light*2

P/S or PS	Electric power steering system warning light*2
	Automatic head light leveling system warning light*2
	Hybrid system warning light*2
CRUISE	Cruise control indicator light*3
R P N D B	Shift position indicator light*4
	Smart entry and start system warning light*5
	Turn signal indicator lights
	Headlight high beam indicator light
	Headlight indicator light
	Tail light indicator light

READY	Driving ready light
A/C AUTO	Automatic air conditioner indicator light
	Recirculate mode indicator light
	Windshield air flow indicator light
	Rear window and outside rear view mirror defoggers indicator light
	Hybrid vehicle immobilizer / Theft deterrent system indicator light
	Slip indicator light
PASSENGER AIR BAG OFF ON	Front passenger occupant classification indicator light

*1: For details, see “Service reminder indicators and warning buzzers— —Instrument cluster” on page 125.

*2: For details, see “Service reminder indicators and warning buzzers— —Multi–information display” on page 132.

*3: If this light flashes, see “Cruise control” on page 157.

*4: For details, see “Hybrid transaxle” on page 144.

*5: For details, see “Smart entry and start system” on page 24.

SECTION 1 – 2

FEATURES ON NEW TOYOTA VEHICLE

Toyota hybrid system

Toyota hybrid systemm 10
Toyota hybrid system operating condition 10
Starting your vehicle 12
For efficient use of your vehicle 13
Precautions for use 14

Toyota hybrid system

Toyota hybrid system combines a gasoline engine and electric motor power to improve the fuel economy and minimize the emissions as well as to provide better power performance than the ordinary gasoline–powered vehicles.

Depending on the driving condition, the vehicle runs on the best combination of;

- **Gasoline engine power**
- **Electric motor power generated by the gasoline engine**
- **Electric motor power of the hybrid battery**

Furthermore, the energy is efficiently used in the following ways:

- When stopping the vehicle, the gasoline engine is automatically stopped.
- When applying the brakes or decelerating, electricity is converted from the turning force of the wheels and stored in the hybrid battery. (This is called regenerative brake.)

Since the battery is charged by the gasoline engine as needed, it does not require charging from an outside source like an electric vehicle.

Toyota hybrid system operating condition

Basic operations are described below. Besides, Toyota hybrid system performs various controls depending on the operating condition: The “Energy Monitor” screen tells you which power is used currently.

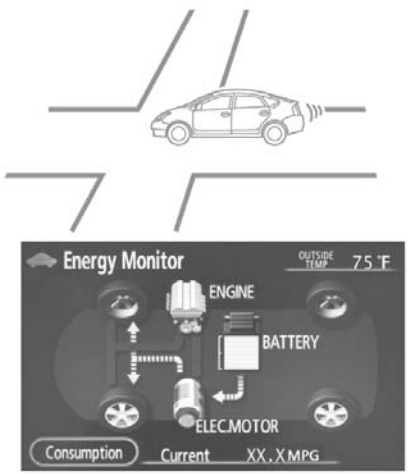

Electric power in use

12P059a

When starting or backing up, etc., the vehicle runs on electric power from hybrid battery, because the gasoline engine efficiency is low.

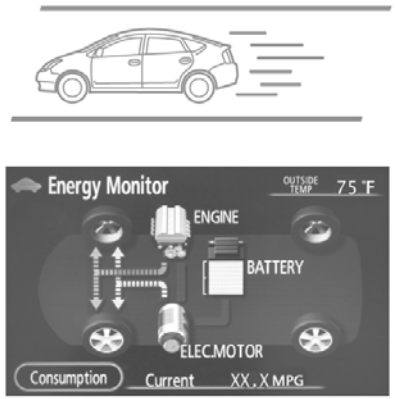

Gasoline power in use

12P060a

During normal driving, the vehicle runs mainly on gasoline power. However, the electric motor, using electric power generated by the gasoline engine, can supplement the gasoline engine power.

The vehicle controls the optimum ratio of the gasoline and electric power to help use energy more efficiently.

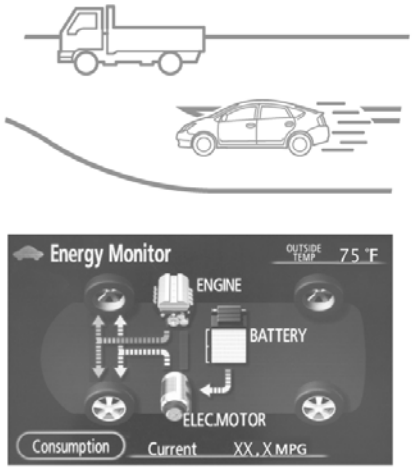

Electric and gasoline power in use

12P061a

When driving at full throttle, additional electric power is applied from the hybrid battery. Vehicle performance improves.

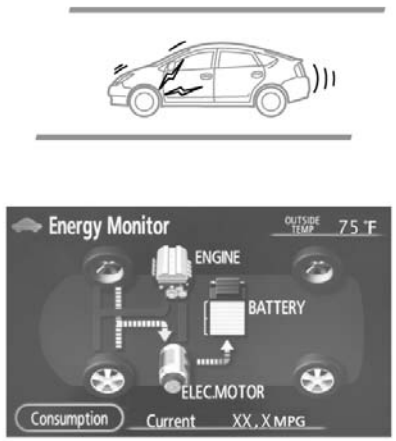

12P062a

When decreasing speed or applying the brakes, the turning force of the wheels makes the electric motor operate as a generator and additional electricity is stored in the hybrid battery (regenerative brake).

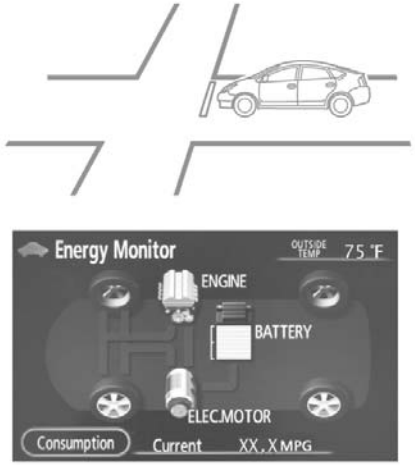

Not in use

12P063a

When stopping, the gasoline engine automatically shuts off.

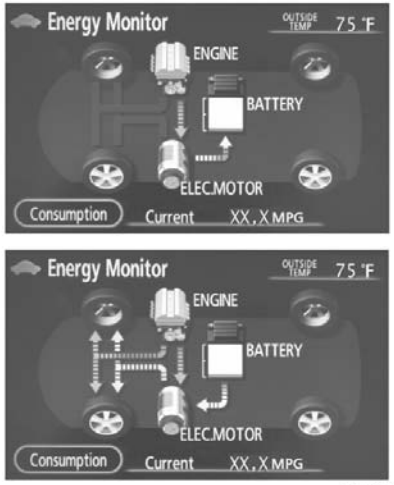

12P064a

Charging hybrid battery

When the hybrid battery power is insufficient, the gasoline engine charges the hybrid battery. The system always supplies electricity at a constant level.

Starting your vehicle

Your vehicle is equipped with push button start system. The hybrid system will start automatically by pressing the "POWER" switch briefly with the brake pedal depressed.

With smart function

1. Carry the key with you.
2. Press the "POWER" switch briefly with the brake pedal depressed.

Without smart function

1. Insert the key.
2. Press the "POWER" switch briefly with the brake pedal depressed.

The "READY" light flashes and stays on. Two beeps sound after a few seconds, and the hybrid system will start. (If the ambient temperature is low such as during winter, it may take time until the "READY" light comes on.) You cannot start your vehicle when the brake pedal is not depressed. (For details, see "How to start the hybrid system—" on page 348.)

The engine may not start even with the "READY" light on.

For efficient use of your vehicle

Drive your vehicle with a smooth acceleration and deceleration.

- While driving, energy is recovered through the regenerative brake as the vehicle decelerates. However, for more efficient use, do not accelerate or decelerate your vehicle more than necessary.
- Avoid abrupt acceleration and deceleration.
- The remaining capacity of the hybrid battery can be confirmed on the energy monitor screen of the multi–information display. See “Information” on page 166 for details. Gradual or non–abrupt acceleration or deceleration will more effectively use the benefits of an electric motor without having to use gasoline engine power.

When parking, be sure to put the hybrid transaxle in “P”. While driving, use the hybrid transaxle in “D”.

- In “N”, the gasoline engine operates but electricity cannot be generated. The battery will be discharged requiring unnecessary engine power to recharge.
- The hybrid system automatically recharges the hybrid battery when the remaining battery power is reduced. However, the charging is not available if the hybrid transaxle is “N”.

INFORMATION:

The gasoline engine starts and stops automatically. (It stops during a low load driving, deceleration or when the vehicle is stopped.)

If the “READY” light remains on, you can start your vehicle using the electric motor even with the gasoline engine stopped.

The gasoline engine may not stop automatically in the following conditions:

- ***During gasoline engine warm–up***
- ***During hybrid battery charging***
- ***During low or high hybrid battery temperature***

Precautions for use

The vehicle runs in combination with the gasoline and electric power. Pay special attention to the following items.

Be careful of high voltage and high temperature.

Your vehicle is equipped with the orange colored cables connected to the hybrid battery (about 200 V) and to other components that are all high voltage.

⚠ CAUTION

Do not touch or come in contact with orange cables or battery terminals. Electric shock may cause serious injury or death. Read all caution labels.

An electric motor, coolant radiator and some other parts reach high temperature while driving. Caution labels are applied to these parts. Carefully observe the instructions on these caution labels.

⚠ CAUTION

Never remove or disassemble any high voltage part, high voltage cables (orange color) and their connectors. It may cause death or serious injury.

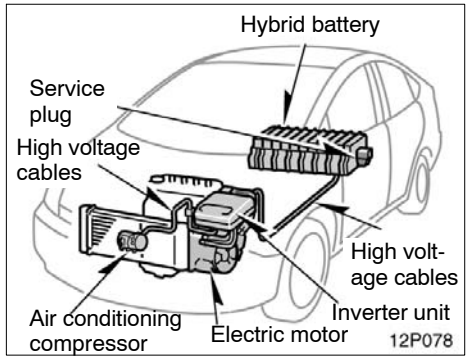

Do not touch the service plug.

The service plug is installed in the left side trim of the luggage compartment. It is provided to disable high voltage current from the hybrid battery when the vehicle is in need of repairs at your Toyota dealer.

⚠ CAUTION

- **The shaded parts in the illustration are subjected to high voltage.**
- **Inappropriate handling may cause an electric shock resulting in serious injury or death. Never touch any item in shaded area.**

These high voltage parts or cables consisting of an electromagnetic shielding structure produce relatively the same amount of electromagnetic waves as conventional gasoline–fueled vehicles or home electric appliances.

As unwanted noise may occur in the reception of mobile radios, contact your Toyota dealer for installation or removal.

Always keep your hybrid vehicle's driving characteristics in mind.

⚠ CAUTION

The driver should pay full attention around the vehicle especially when it is driven only by the electric motor (with the gasoline engine stopped). People in the immediate area might misjudge the hybrid vehicle movement based on the absence of the regular engine noise.

- As the vehicle runs with both the gasoline engine and electric motor, you may hear a motor sound coming from the engine compartment.
- When the hybrid system is started or stopped, you may hear a sound coming from the hybrid battery in the luggage compartment. However, this does not indicate any trouble.
- If the “READY” light is on, you can start even though the gasoline engine may be off.
- When you shift the shift lever to “B” and release it to its original position and your foot from the accelerator pedal, engine braking will be applied. However, during high speed driving you may feel that deceleration by engine braking is less than that of ordinary vehicle.

Be sure to put the hybrid transaxle in “P” when parking.

In “N”, the hybrid battery assembly is not charged, even if the gasoline engine is operating. You cannot run your vehicle if the hybrid transaxle is left in “N” for a long time because the hybrid battery assembly will be discharged.

When you leave your vehicle, apply the parking brake to put the hybrid transaxle in “P” and be sure to carry the key with you and lock all the doors.

If you leave the hybrid system in “ACC” or “IG–ON”, the hybrid system may not start because the 12 volt battery will be discharged.

If the vehicle is parked for a long time, the hybrid battery will discharge gradually. To keep the hybrid battery in good condition, drive the vehicle at least once every several months for at least 30 minutes or ten miles. If the hybrid battery becomes fully discharged and the vehicle will not start even with a jump–start to the 12 volt battery, contact your Toyota dealer.

⚠ CAUTION

- **When you leave your vehicle, be sure to shut off the hybrid system.**
- **Be sure to put the hybrid transaxle in “P” because the vehicle can start with the “READY” light on and the engine stopped (no engine sound and vibration). When the “READY” light is on, if you leave your vehicle in shift position other than “P” and “N”, the vehicle will creep and start abruptly with the accelerator pedal being depressed by mistake. This may cause death or serious injury.**

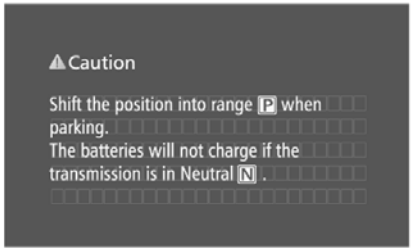

12P065

Type 1

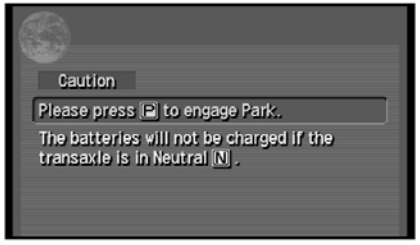

12P008d

Type 2

When the multi–information display shows this message, the master warning light (⚠) comes on in the instrument cluster. Read the message and follow the instruction.

- When you leave your vehicle, or stop or park for a while, put the hybrid transaxle in “P”.
- Charging is necessary. In “N”, charging will not be applied. The electric generator operates in “P”, “D” or “B”. If you continue driving, put the hybrid transaxle in “D” or “B” and depress the accelerator pedal. Do not leave the hybrid transaxle in “N”. When driving in traffic jam, operate in “D”.

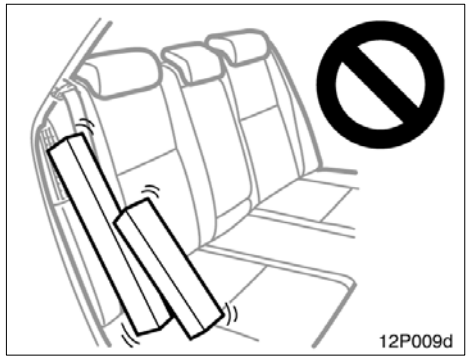

12P009d

Do not allow anyone to lean against the side of the rear right seatback, nor put any luggage or other obstructions on it.

- An air vent is provided on the side of the rear right seatback to cool the hybrid battery. If this vent is covered, the hybrid battery will overheat resulting in a reduction of the output performance of the hybrid system.
- The seat belt not properly set in the guide on the top of the rear seat may block the air vent. Be sure to pass the seat belt through the guide properly.

- Do not wet or put foreign objects over the air vent. Otherwise, the hybrid battery may be adversely affected and be damaged.
- You may hear a cooling fan noise from the air vent.

For vehicle repairs or maintenance, be sure to consult your Toyota dealer.

If your vehicle is beyond repair because of accident or something, be sure to consult your Toyota dealer.

As sealed Nickel–Metal hydride batteries are used, be sure to consult your Toyota dealer when disposing of your vehicle.

⚠ CAUTION

If you are involved in an accident, follow these precautions.

- **Move the vehicle to a safe place and perform the followings to reduce the risk of high voltage electricity leakage.**
  - **Depress the brake pedal and apply the parking brake.**
  - **Press the "P" position switch and stop the hybrid system.**
  - **If the key is inserted into key slot, remove it.**
- **If your vehicle has experienced major damage, you may get an electric shock. To prevent this, never touch the high voltage parts (hybrid battery assembly, etc.) or cables (orange color) connecting these parts. If some exposed electric wires are protruding inside or outside of the vehicle, an electric shock may also occur. Never touch them.**
- **If the fluid leaks or gets in some part of the vehicle, never touch it because it may be electrolyte (strong alkali) from the hybrid battery. If it gets on your skin or eyes, wash off immediately with a large amount of water, if possible, with boric acid solution, and get immediate medical attention in order to help avoid serious injury.**
- **If a vehicle fire occurs, extinguish it using a fire extinguisher for the exclusive use on electric fires. As a small amount of water may be dangerous, use a large amount of water, for example from a fire hydrant, or wait for a fire–fighting team arrival.**
- **If your vehicle needs to be towed, do it with the front wheels or all four wheels raised. If the front wheels are on the ground when towing, the electric motor may continue to generate electricity which could leak electricity. A fire could occur depending on the degree of damage. See "If your vehicle needs to be towed" on page 372.**

SECTION 2 – 1

OPERATION OF INSTRUMENTS AND CONTROLS

Keys and Doors

Keys 20
Hybrid vehicle immobilizer system 21
Smart entry and start system 24
Wireless remote control 35
Side doors 40
Back door 42
Power windows 43
Hood 45
Theft deterrent system 46
Fuel tank cap 48

Keys

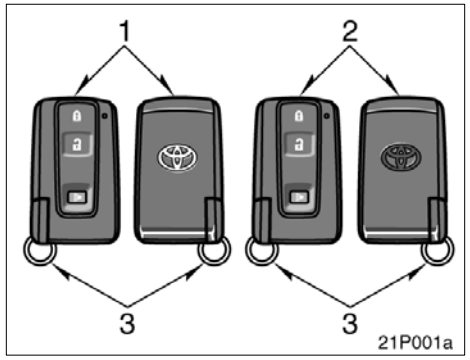

1. Master keys with silver ornament (Vehicles equipped with smart entry and start system)—These keys work in every lock. Your Toyota dealer will need one of them to make a new key with a built–in transponder chip. Before you use these keys, be sure to read “Smart entry and start system” on page 24.
2. Master keys without silver ornament (Vehicles not equipped with smart entry and start system)—These keys work in every lock. Your Toyota dealer will need one of them to make a new key with a built–in transponder chip.
3. Mechanical keys (attached to the master key)—These key work for the driver’s door only.

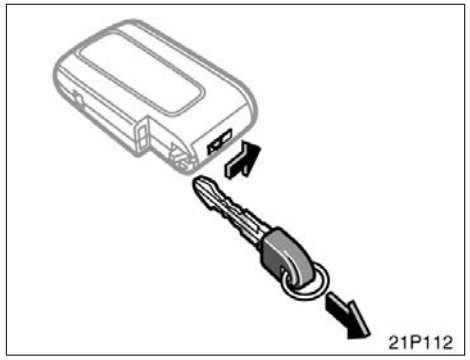

USING A MECHANICAL KEY

When you use the mechanical key included on the side of the key, slide the lock knob in the arrow direction and take out the key as shown. To put the key back, slide the lock knob in the arrow direction and replace the key. Be sure to put the key back when not in use.

Since the doors can be locked without a key, you should always carry a spare master key in case you accidentally lock your keys inside the vehicle.

⚠ CAUTION

- **People with implanted pacemakers or cardiac defibrillators should keep away from the smart entry and start system antennas, because the radio waves may affect the operation of such devices. For the antenna locations, see “ANTENNA LOCATIONS” on page 26.**
- **Users of any electrical medical device other than implanted pacemakers and implanted cardiac defibrillators should consult the manufacturer of the device for information about its operation under the influence of radio waves. Radio waves could have unexpected effects on the operation of such medical devices.**
- **If necessary, the smart function can be disabled. See “DEACTIVATING THE SMART FUNCTION” on page 34.**

NOTICE

When using a key containing a transponder chip, observe the following precautions:

- ***Do not affix any material that cuts off electromagnetic waves (such as a metal seal) on the key.***
- ***Do not knock the key hard against other objects.***
- ***Do not leave the key exposed to high temperatures for a long period, such as on the dashboard or hood under direct sunlight.***
- ***Do not put the key in water or wash it in an ultrasonic washer.***
- ***Do not keep the key together with the products emitting electromagnetic waves such as a cellular phone.***

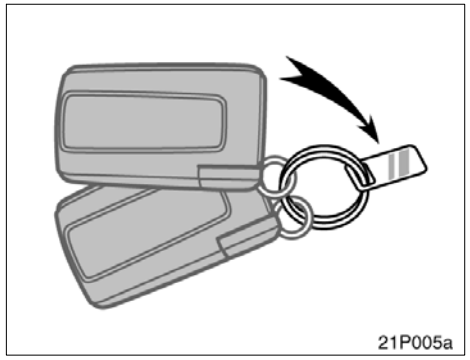

KEY NUMBER PLATE

Your key number is shown on the plate. Keep the plate in a safe place such as your wallet, not in the vehicle.

If you should lose your keys or if you need additional keys, duplicates can be made by a Toyota dealer using the key number.

We recommend writing down the key number and storing it in a safe place.

Hybrid vehicle immobilizer system

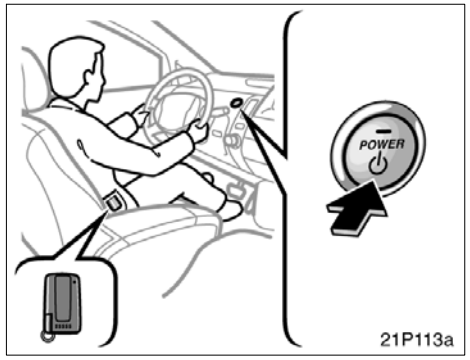

DEACTIVATION USING THE SMART FUNCTION

The hybrid vehicle immobilizer system is a theft prevention system. When you enter the vehicle carrying a smart key and press the "POWER" switch, the electronic code in the key is automatically checked to determine whether it corresponds to the registered ID code for the vehicle. If the ID code is verified, you can start the hybrid system.

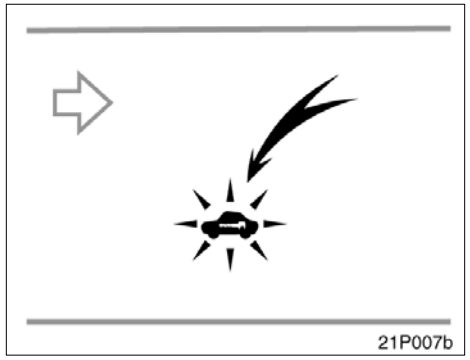

The system is automatically set when the hybrid system is off and driver's door is opened. The indicator light will start flashing to show the system is set.

If any of the following indicator conditions occurs, contact your Toyota dealer.

- The indicator light stays on except when the theft deterrent system is setting or activating. (See "Theft deterrent system" on page 46.)
- The indicator light does not start flashing when the hybrid system is off and driver's door is opened.
- The indicator light flashes inconsistently.

Carrying a smart key and pressing the "POWER" switch automatically cancels the system, which enables the hybrid system to start. The indicator light will go off.

For your Toyota dealer to make you a new key with built–in transponder chip, your dealer will need your key number and master key. However, there is a limit to the number of additional keys your Toyota dealer can make for you.

NOTICE

Do not modify, remove or disassemble the hybrid vehicle immobilizer system. If any unauthorized changes or modifications are made, proper operation of the system cannot be guaranteed.

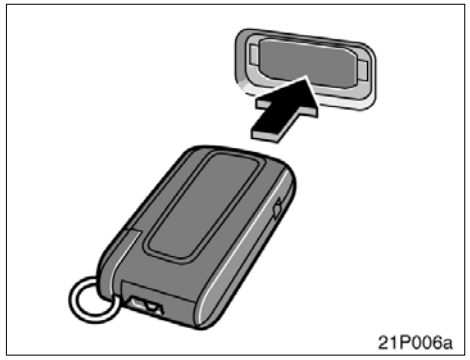

DEACTIVATION USING THE KEY

The hybrid vehicle immobilizer system is a theft prevention system. When you insert the key in the key slot, the transponder chip in the key transmits an electronic code to the vehicle. The hybrid system will start only when the electronic code in the chip corresponds to the registered ID code for the vehicle.

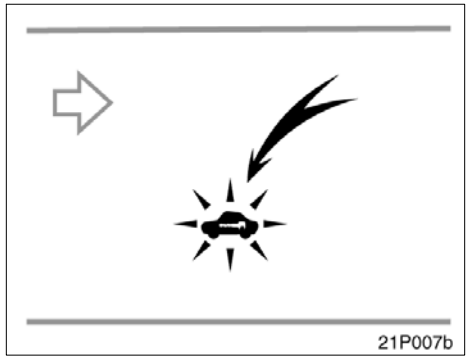

The system is automatically set when the key is removed from the key slot. The indicator light will start flashing to show the system is set.

If any of the following indicator conditions occurs, contact your Toyota dealer.

- The indicator light stays on except when the theft deterrent system is setting or activating. (See “Theft deterrent system” on page 46.)
- The indicator light does not start flashing when the key is removed from the key slot.
- The indicator light flashes inconsistently.

Inserting the registered key in the key slot automatically cancels the system, which enables the hybrid system to start. The indicator light will go off.

For your Toyota dealer to make you a new key with built–in transponder chip, your dealer will need your key number and master key. However, there is a limit to the number of additional keys your Toyota dealer can make for you.

NOTICE

Do not modify, remove or disassemble the hybrid vehicle immobilizer system. If any unauthorized changes or modifications are made, proper operation of the system cannot be guaranteed.

For vehicles sold in U.S.A.

FCC ID: MOZRI–24KTY
MADE IN JAPAN

This device complies with Part 15 of the FCC Rules. Operation is subject to the following two conditions:

(1) This device may not cause harmful interference, and (2) this device must accept any interference received, including interference that may cause undesired operation.

⚠ CAUTION

Changes or modifications not expressly approved by the party responsible for compliance could void the user’s authority to operate the equipment.

For vehicles sold in Canada

This device complies with RSS–210 of industry Canada. Operation is subject to the following two conditions:

(1) This device may not cause interference, and (2) this device must accept any interference, including interference that may cause undesired operation of the device.

Smart entry and start system

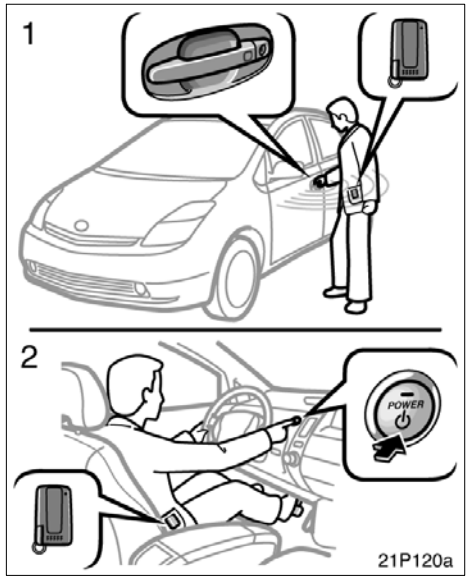

1. Locking and unlocking
2. Starting the hybrid system

By carrying a smart key, you can lock and unlock the doors and start the hybrid system.

For locking the doors, see “Locking the doors with smart function” on page 30. For unlocking the doors, see “Unlocking the door(s) with smart function” on page 31. For starting the hybrid system, see “Push button start system” on page 138.

If the smart key battery is discharged, the smart function cannot be used. Use the mechanical key attached to the smart key by inserting it in the driver’s door keyhole to lock or unlock door. To start the hybrid system, insert the smart key into the key slot. In order to activate the smart function, the battery should be replaced. For details, see “—Replacing battery” on page 38.

You can deactivate the smart function by using the cancel switch. In this case, all the smart function will be deactivated. For details, see “Deactivating the smart function” on page 34.

INFORMATION

- *Be sure to take the smart key with you.*
- *In the following cases, the smart function or wireless remote control feature may not operate properly. (If this happens, use a mechanical key to lock or unlock the driver's door and a smart key to start the hybrid system.)*
  - *When facilities issuing strong electromagnetic waves such as TV towers, electric power stations, broadcasting stations are nearby.*
  - *When you are carrying a smart key together with a mobile communications system such as a two-way radio or cellular phone.*
  - *When the smart key is in contact with or covered by a metallic object.*
  - *When another person is operating a wireless remote control function on another vehicle near your vehicle.*

- *If you do not drive your vehicle, store the smart key, keeping it at least 5 m (16 ft.) away from the vehicle.*

⚠ CAUTION

- **People with implanted pacemakers or cardiac defibrillators should keep away from the smart entry and start system antennas, because the radio waves may affect the operation of such devices. For the antenna locations, see "ANTENNA LOCATIONS" on page 26.**
- **Users of any electrical medical device other than implanted pacemakers and implanted cardiac defibrillators should consult the manufacturer of the device for information about its operation under the influence of radio waves. Radio waves could have unexpected effects on the operation of such medical devices.**
- **If necessary, the smart function can be disabled. See "DEACTIVATING THE SMART FUNCTION" on page 34.**

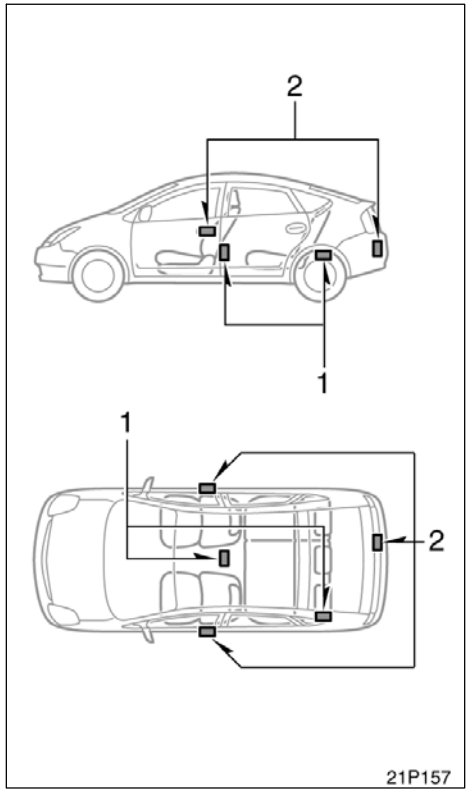

ANTENNA LOCATIONS

1. Antenna inside cabin
2. Antenna outside cabin

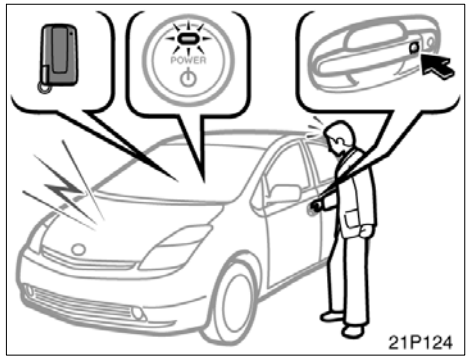

ALARMS AND WARNING LIGHT

Your vehicle is equipped with alarms inside and outside, as well as warning light in the instrument cluster, that remind you if there is a problem involving the smart entry and start system.

This warning light will come on when the “IG–ON” mode is enabled and will go off after a few seconds.

If an alarm sounds or the warning light comes on, be sure to check your vehicle and smart key.

(a) The hybrid system was not turned off and the transaxle was in a position other than “P”.

When the driver’s door is opened with the hybrid system in “ACC” or “IG–ON” and with the transaxle in a position other than “P”.

Inside alarm: Beeps continuously

Multi–information display: Warning message

Alarms will be turned off by any of the following operations:

- Closing the driver’s door
- Pressing the “P” position switch
- Turning off the hybrid system

(b) The smart key was brought outside the vehicle with the transaxle in a position other than “P”.

When the driver’s door is opened or closed with the hybrid system not to be turned off and with the transaxle in a position other than “P”, it is determined that the smart key is not in the vehicle.

Inside alarm: Beeps continuously

Outside alarm: Beeps continuously

Warning light: On

Alarms will be turned off by any of the following operations:

- Pressing the “P” position switch
- Bringing the smart key inside the vehicle
- Turning off the hybrid system

(c) The hybrid system was not turned off with the transaxle in “P”.

When the driver’s door is opened with the hybrid system in “ACC” and with the transaxle in “P”.

Inside alarm: 3 beeps

In the “IG–ON” mode, an alarm will not sound.

(d) The smart key was brought outside the vehicle.

When the driver’s door is opened or closed with the hybrid system not to be turned off (and with the transaxle in “P”), it is determined that the smart key is not in the vehicle.

Inside alarm: One beep

Outside alarm: 3 beeps

Warning light: On

(e) Locking with smart function was attempted with the hybrid system not to be turned off.

When you attempt to lock all the doors using smart locking function with the hybrid system not to be turned off and with the transaxle in a position other than “P”.

Outside alarm: One beep (sounds for 2 seconds.)

Warning light: On

At this time, the doors cannot be locked.

(f) The smart key was brought outside the vehicle.

When a door other than the driver's door is opened or closed with the hybrid system not to be turned off, it is determined that the smart key is not in the vehicle.

Inside alarm: One beep

Outside alarm: 3 beeps

Warning light: On

(g) Preventing the key from being locked inside the vehicle

When you close the door with the hybrid system off but with the smart key left in the vehicle, and attempt to lock all the doors using smart locking function, it is determined that the smart key is in the vehicle.

Outside alarm: One beep (sounds for 2 seconds)

INFORMATION

- ***This function may not operate when the smart key is left on the instrument panel, luggage cover, floor or in the glove box.***
- ***The function may operate if the smart key is brought outside but it is very close to the door window or door handle.***

(h) Low smart key battery

When the hybrid system is turned to "ACC" or "OFF" about 20 minutes after the hybrid system is turned on or to "IG–ON", it is determined that the smart key battery voltage is low.

Inside alarm: One beep

(i) Outside of effective range

When the "POWER" switch is pressed, it is determined that the smart key is not in the vehicle.

Inside alarm: One beep

Warning light: On (for 5 seconds)

(j) Open door warning

When you attempt to lock all the doors using smart locking function with the hybrid system turned off but with any door open.

Outside alarm: One beep (sounds for 10 seconds)

Alarms will be turned off by either of the following operations:

- Closing all the doors
- Pressing the unlock button on the smart key

Warning and its meaning

Inside warning alarm	Outside warning alarm	Warning light	Causes
One beep (sounds continuously)	—	—	The driver's door was opened when the hybrid system was in "ACC" or "IG–ON" and when the transaxle was in a position other than "P".
One beep (sounds continuously)	One beep (sounds continuously)	On	The driver brought out the smart key from the vehicle with the hybrid system not to be turned off and with the transaxle in a position other than "P".
Beeps (sound intermittently)	—	—	The driver's door was opened when the hybrid system was in "ACC" and when the transaxle was in "P".
One beep	3 beeps	On	The driver brought out the smart key from the vehicle with the hybrid system not to be turned off and with the transaxle in "P".
—	One beep (sounds for 2 seconds)	On	The lock switch was pressed with the hybrid system not to be turned off and with the transaxle in "P".
One beep	3 beeps	On	The passenger brought out the smart key from the vehicle with the hybrid system not to be turned off.
—	One beep (sounds for 2 seconds)	—	The lock switch was pressed when the hybrid system was off but with the smart key left in the vehicle.
One beep	—	—	The key battery voltage become about 2 V. (3 V for normal operation)
One beep	—	On (for 5 seconds)	The "POWER" switch was pressed when the smart key was not in the effective range of the system.
—	One beep (sounds for 10 seconds)	—	The lock switch was pressed when the hybrid system was off but any door was opened.

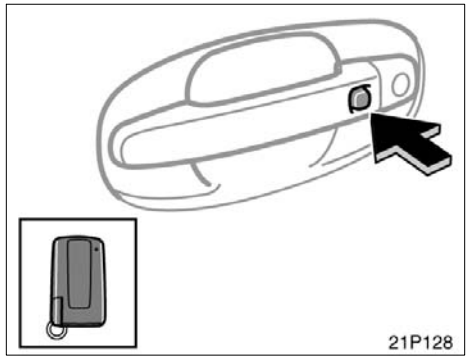

Side door

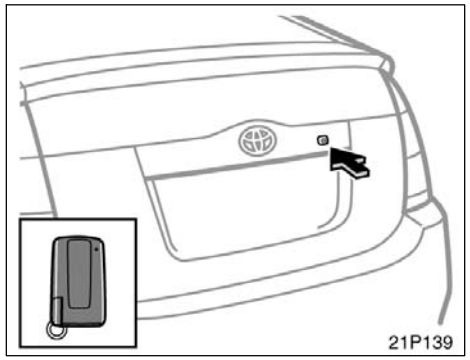

Back door

LOCKING THE DOORS WITH SMART FUNCTION

The smart entry and start system will lock the doors without being inserted into the door keyhole.

When you exit the vehicle carrying the smart key and push the lock button on the outside front door handle or back door with all the doors closed, all the doors will be locked provided that the electronic code in the key corresponds to the registered ID code for the vehicle.

At this time, you will hear one beep and the turn signal lights flash once. However, when you push the lock button on the outside front door handle or back door with any door not closed securely, a beep sounds for 10 seconds.

NOTICE

If the key is in the vehicle, do not perform door locking operation, or you might lock your keys inside the vehicle.

INFORMATION

- ***The rear doors are not equipped with smart function.***
- ***When locking the doors, be sure to push the lock button on the outside front door handle or back door slowly and surely. If you push the button quickly, the doors may not lock.***
- ***When opening or closing a door, do not touch the lock button on the outside door handle or back door. If you push the button, an alarm sounds 10 seconds.***
- ***When a wireless remote control is used to lock the doors and a smart key is left in the effective range of the smart function in the vehicle, the doors cannot be unlocked using the smart function. In this case, use the wireless remote function to unlock the doors.***
- ***You cannot activate smart unlocking functions within 3 seconds after the smart locking function is activated.***

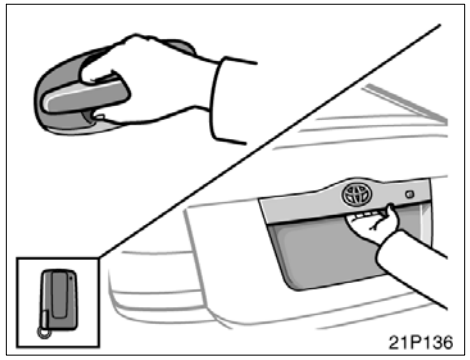

UNLOCKING THE DOOR(S) WITH SMART FUNCTION

The smart entry and start system can be used to unlock the door(s) without being inserted into the door keyhole.

When you get close to your vehicle (about 1 m (3 ft.) from each outside front door handle), and are carrying the smart key, the electronic code emitted from the key is automatically checked to determine if it corresponds to the registered ID code for the vehicle. When you take hold of the side back of the outside door handle surface, it will unlock. At this time, two beeps sound and the turn signal lights flash twice.

When you push and hold down the back door opener switch, carrying the smart key, the ID code is checked in the same way as in the front door case. And all the doors will unlock. At this time, two beeps sound and the turn signal lights flash twice.

When you get close to your vehicle (about 1 m or 3 ft. from either front door), carrying the smart key or unlock the back door using smart key function, the interior light comes on for 15 seconds if the interior light switch is in the “DOOR” position. However, the interior lights go out when you push the power door lock switch in the lock position or press the “POWER” switch once or twice from the off setting to select the “ACC” or “IG–ON” mode without depressing the brake pedal. For further information, see “Interior lights” on page 115.

You have 30 seconds to open a door after operating the smart unlocking function. If a door is not opened by then, all the doors will be automatically locked again.

INFORMATION

- ***The rear doors are not equipped with smart function.***
- ***When unlocking the door(s), be sure to take hold of the back side of the outside door handle firmly as shown in the illustration. Taking hold of the handle with a gloved hand might cause a delay in unlocking.***

- ***When you take hold of the handle or push the back door opener to unlock the door(s), be sure to confirm that the door(s) have been unlocked. If the two beeps and the turn signal lights flash twice, the doors are unlocked. At this time, you can pull the outside door handle or push the back door opener to open the door. If you quickly move closer to the vehicle or pull the outside door handle or push the back door opener quickly, the doors might not unlock. If you cannot open the door by pulling the outside door handle or pushing the back door at this time, push back the outside door handle to the original position or release your hand from the back door and then try again.***
- ***If you bring the smart key very close to the outside door handle or the back door opener, the doors might not lock.***
- ***If another person who is not carrying a smart key takes hold of an outside door handle or push the back door opener when you are within the effective range of the smart function, the door(s) may not unlock.***
- ***If a large amount of water is applied to the outside door handle or the back door during heavy rain or a car wash, and someone carrying a smart key is near the vehicle, the door(s) might be unlocked. However, if the outside front door handle is not pulled out or back door opener not pushed, the doors will lock automatically after about 30 seconds.***
- ***To ensure the unlocking door(s), perform unlocking operation within 3 seconds after getting close to the vehicle (about 1 m or 3 ft. from the front doors or back door). If it takes longer than that, unlocking function may not be enabled.***

CHANGING THE DOORS TO BE UNLOCKED

Each time you push the lock button together with the panic button on the smart key for about 5 seconds with the hybrid system off, the setting for door unlocking will change as follows:

1. **Driver's door unlocking mode:** If you perform smart unlocking operation on the driver's door, it will unlock. Performing unlocking operation on the front passenger's door or back door will unlock all the doors. When the system switches to this mode, one beep sounds inside the vehicle and two beeps sound three times.
2. **All doors unlocking mode:** Performing smart unlocking operation on either front door or back door will unlock all the doors. When the system switches to this mode, one beep sounds inside the vehicle and two beeps sound twice.
3. **Single door unlocking mode:** The driver's door or back door on which you perform smart unlocking operation will unlock. However, performing unlocking operation on the front passenger's door will unlock all the doors. When the system switches to this mode, one beep sounds inside the vehicle and two beeps sound once.

INFORMATION

- ***When changing the mode, be sure to push both lock and panic buttons firmly, or panic alarm may be activated.***
- ***This operation will not change the wireless remote control unlocking function.***
- ***In the single or driver's door unlocking mode, if you get into the vehicle from the driver's door carrying the smart key, all the smart unlocking controls activated by the smart key will be stopped for security. If you get out of the vehicle from the driver's door carrying the smart key and get out of the effective range of the smart function, unlocking control by the smart key will be possible. However, unlocking control may not be carried out for 5 seconds after you get out from the vehicle. In this case, operate unlock control again after 5 seconds.***

BATTERY POWER SAVING

When doors are locked, the smart entry and start system transmits electromagnetic waves to the outside of the vehicle at regular intervals. For this reason, the vehicle battery will be discharged if the vehicle is left for a long time. If the key is left within the effective range of the smart function outside of the vehicle, the key and the vehicle transmit electromagnetic waves periodically. If these conditions continue for a long time, the battery in the key and vehicle will be discharged.

To prevent the batteries from being discharged, the smart function is automatically deactivated in the following conditions:

- If there is no response from the key for more than 14 days
- If the key is left within the effective range of the smart function outside of the vehicle for more than 10 minutes

To reactivate the smart function, perform any of the following:

(a) Press the lock button on the outside front door handle or back door while carrying the smart key.

(b) Perform a wireless remote control operation.

(c) Insert and turn the mechanical key in the keyhole of the driver's door.

INFORMATION

- ***To maintain communication with the vehicle, smart keys use built–in battery power. The battery service life is about 1 to 3 years on average. If battery power becomes insufficient, replace the battery with a new one.***
- ***The smart key continually receives electromagnetic waves, and if it receives strong electromagnetic waves over a period of time, the battery can be drastically run down. Therefore, avoid storing smart keys near any electrical appliances.***

  Here is a list of electrical appliances which may have adverse effects on the smart key performance: TVs, personal computers, cellular phone or cordless phone recharger units, electric light stands and fluorescent desk lights

  Note that you should always keep such electrical appliances at least 1 m (3 ft.) away from the smart key.

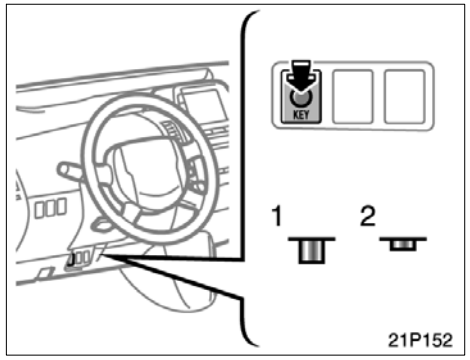

1. Smart function is on.
2. Smart function is off.

DEACTIVATING THE SMART FUNCTION

The cancel switch for this function is located at the bottom of the instrument panel on the driver side. When you push the switch, the smart function will be deactivated. Pushing the switch again will reactivate the function.

When the smart function is deactivated, use a mechanical key or wireless remote control function key to lock and unlock the doors. To start the hybrid system, insert a smart key into the key slot.

If you do not intend to drive your vehicle for a long time, push the cancel switch to deactivate the smart function.

INFORMATION

The smart function will be deactivated in the following cases:

- ***The cancel switch is turned on.***
- ***The smart key is inserted into the key slot.***
- ***The battery of the smart key is discharged.***

For vehicles sold in U.S.A.

FCC ID: MOZB31EG
MADE IN JAPAN

FCC ID: MOZB31UG
MADE IN JAPAN

FCC ID: MOZRO–2TY–1
MADE IN JAPAN

FCC ID: PENASAT2
MADE IN JAPAN

This device complies with Part 15 of the FCC Rules. Operation is subject to the following two conditions:

(1) This device may not cause harmful interference, and (2) this device must accept any interference received, including interference that may cause undesired operation.

⚠ CAUTION

Changes or modifications not expressly approved by the party responsible for compliance could void the user's authority to operate the equipment.

For vehicles sold in Canada

This device complies with RSS–210 of industry Canada. Operation is subject to the following two conditions:

(1) This device may not cause interference, and (2) this device must accept any interference, including interference that may cause undesired operation of the device.

Wireless remote control—

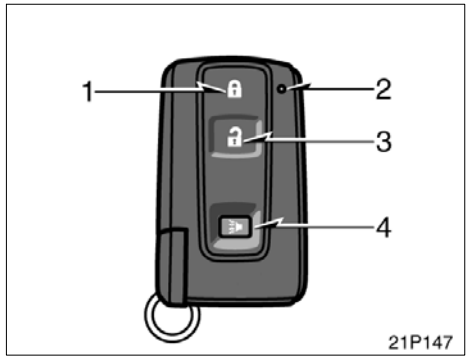

1. **Lock switch**
2. **Indicator light**
3. **Unlock switch**
4. **Panic switch**

The wireless remote control system is designed to lock or unlock all the side doors and back door, or activate the theft deterrent system from a distance within approximately 1 m (3 ft.) of the vehicle.

When you operate any switch, push it slowly and securely. At this time, the indicator light flashes once.

The wireless remote control key is an electronic component. Observe the following instructions in order not to cause damage to the key.

- Do not leave the key in places where the temperature becomes high such as on the dashboard.
- Do not disassemble it.
- Avoid knocking it hard against other objects or dropping it.
- Avoid putting it in water.

If your vehicle is equipped with smart entry and start system, you can use up to 5 master keys for the same vehicle. In case of the vehicle not equipped with smart entry and start system, up to 4 master keys are available. Contact your Toyota dealer for detailed information.

If the wireless remote control key does not actuate the doors or alarm or operate from a normal distance, or indicator light on the key is dimmed or does not come on:

- Check for closeness to a radio transmitter such as a radio station or an airport which can interfere with normal operation of the key.
- The battery may have been consumed. Check the battery in the key. To replace the battery, see "—Replacing battery" on page 38.

If you lose your key, contact your Toyota dealer as soon as possible to avoid the possibility of theft, or an accident. (See "If you lose your keys" on page 375.)

—Locking and unlocking doors

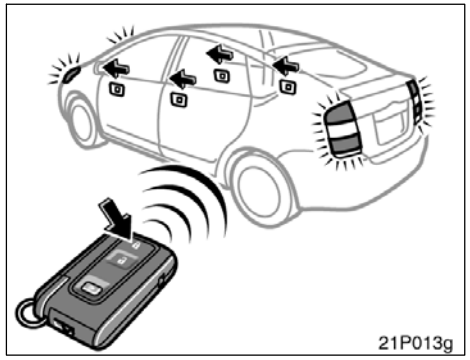

Locking operation

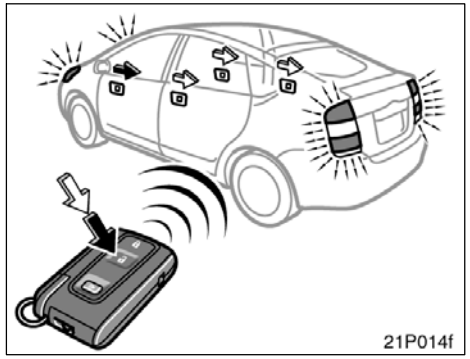

Unlocking operation

To lock and unlock all the doors, push the switches slowly and securely.

To lock: Push the lock switch. All the side doors and back door are locked simultaneously. At this time, the turn signal lights will flash once.

Check to see that the doors are securely locked.

If any of the doors is not securely closed or if the key is in the key slot, locking cannot be performed by the lock switch. At this time, a beep will sound for 10 seconds on the vehicle with smart entry and smart system. However, if the key is in the key slot, a beep will not sound. To stop the beep, close all the side doors and back door securely or push the unlock switch.

The buzzer can be disabled. For details, contact your Toyota dealer.

To unlock: Push the unlock switch once to unlock the driver's door alone. Pushing the switch twice within 3 seconds unlocks all the doors simultaneously. Each time the unlock switch is pushed, the turn signal lights will flash twice.

This double switch operation to unlock all the side doors and back door can be changed to a single switch operation. For details, contact your Toyota dealer.

When the unlock switch is pressed the interior light comes on. The light remains on for about 15 seconds unless any of the doors is opened and then closed. (For further information, see "Interior lights" on page 115.)

You have 30 seconds to open a door after using the wireless remote unlock feature. If a door is not opened by then, all the doors will be automatically locked again.

The timing for the automatic door lock function can be changed. For details, contact your Toyota dealer.

If the lock or unlock switch is kept pressed in, the locking or unlocking operation is not repeated. Release the switch and then push it again.

The following adjustments can be made in this system. For details, contact your Toyota dealer:

- Cancelling the wireless door locking or unlocking function
- Cancelling the flash of the turn signal lights

—Activating panic mode

Pushing the panic switch for 1 second blows the horn intermittently and flashes the headlights, tail lights and emergency flashers and turns on the interior light.

The panic switch is used to deter vehicle theft when you witness anyone attempting to break into or damage your vehicle.

The alarm will last for one minute. To stop the alarm midway, do the follows:

- Push any switch on the key.
- Put the hybrid system in the "IG–ON" mode.

The panic mode does not work in “IG–ON” mode.

The alarm function can be activated or deactivated. For details, contact your Toyota dealer.

For vehicles sold in U.S.A.

FCC ID: MOZB21TG
MADE IN JAPAN

FCC ID: MOZB21RG
MADE IN JAPAN

This device complies with Part 15 of the FCC Rules. Operation is subject to the following two conditions:

(1) This device may not cause harmful interference, and (2) this device must accept any interference received, including interference that may cause undesired operation.

⚠ CAUTION

Changes or modifications not expressly approved by the party responsible for compliance could void the user’s authority to operate the equipment.

For vehicles sold in Canada

This device complies with RSS–210 of industry Canada. Operation is subject to the following two conditions:

(1) This device may not cause interference, and (2) this device must accept any interference, including interference that may cause undesired operation of the device.

—Replacing battery

For replacement, use a CR2032 lithium battery or equivalent and a special screwdriver.

⚠ CAUTION

Special care should be taken that small children do not swallow the removed battery or components.

NOTICE

- ***When replacing the battery, be careful not to lose the components.***
- ***Replace only with the same or equivalent type recommended by a Toyota dealer.***
- ***Dispose of used batteries according to the local laws.***

Replace the battery by following procedures.

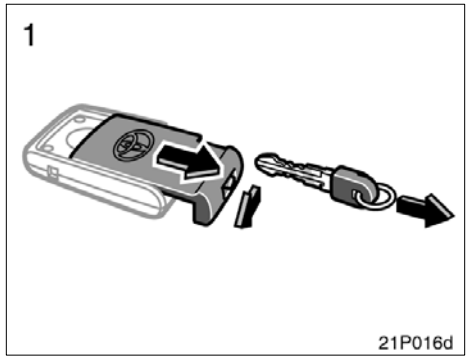

1. Remove the mechanical key and cover with slide the lock knob in the arrow direction.

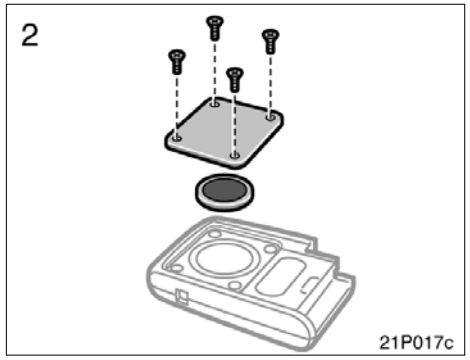

2. Remove the 4 screws to take out the lid of the module.

NOTICE
Do not bend the terminals.

3. Remove the discharged battery and put in a new battery with positive (+) side up.

NOTICE
◆***Make sure the positive side and negative side of the battery are faced correctly.*** ◆***Do not replace the battery with wet hands. Water may cause unexpected rust.*** ◆***Do not touch or move any components inside the transmitter, or it may interfere with proper operation.*** ◆***Be careful not to bend the electrode when inserting the battery and that dust or oils do not adhere to the case.***

4. Install the lid with the 4 screws.

NOTICE
Take care not to damage or bend the O-ring when installing.

5. Replace the mechanical key and cover with slide the lock knob.

After replacing the battery, check that the key operates properly. If the key still does not operate properly, contact your Toyota dealer.

Side doors

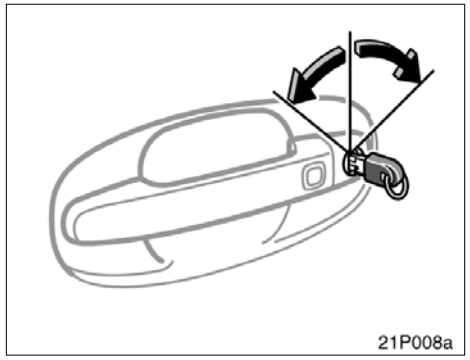

LOCKING AND UNLOCKING THE DRIVER'S DOOR WITH MECHANICAL KEY

Insert the mechanical key into the keyhole and turn it.

To lock: Turn the knob forward.
To unlock: Turn the knob backward.

The alarm sounds when you unlock the door using a key with the theft deterrent system set. For details, see "Theft deterrent system" on page 46.

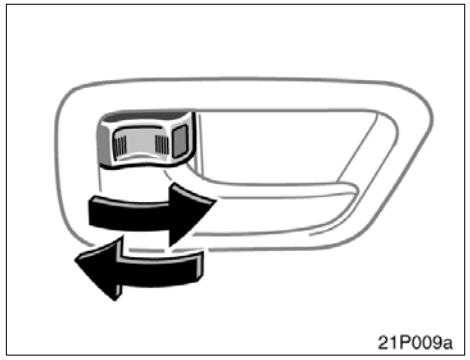

LOCKING AND UNLOCKING WITH INSIDE LOCK KNOB

Move the lock knob.

To lock: Push the knob forward.
To unlock: Pull the knob backward.

The driver's door can be opened by pulling the inside door handle even if the lock knob is depressed.

Closing the door with the lock knob in the lock position will also lock the door. Be careful not to lock your keys in the vehicle.

The driver's door cannot be locked if you leave the key in the key slot.

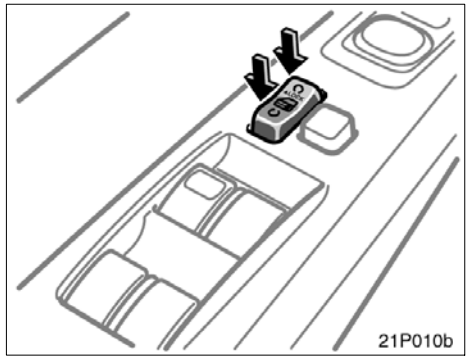

Driver's side

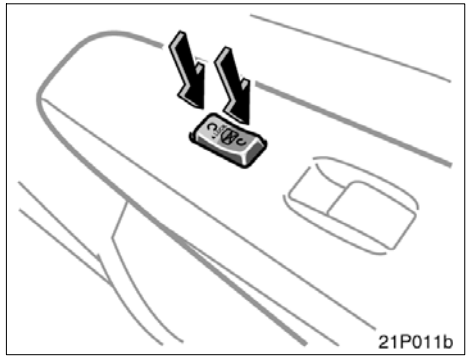

Front passenger's side

LOCKING AND UNLOCKING WITH POWER DOOR LOCK SWITCH

Push the switch.

To lock: Push the switch down on the front side.
To unlock: Push the switch down on the rear side.

All the doors lock or unlock simultaneously.

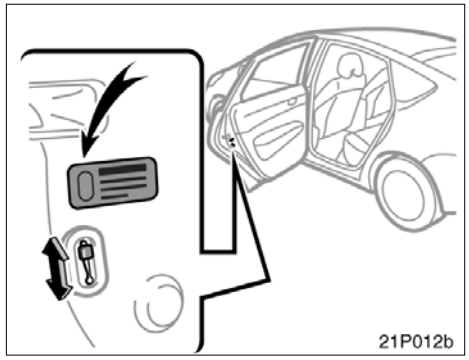

REAR DOOR CHILD–PROTECTORS

Move the lock lever to the "LOCK" position as shown on the label.

When the child–protector is locked, you cannot open the rear door by the inside door handle. We recommend using this feature whenever small children are in the vehicle.

⚠ CAUTION

Before driving, be sure that the doors are closed and locked, especially when small children are in the vehicle. Along with the proper use of seat belts, locking the doors helps prevent the driver and passengers from being thrown out from the vehicle in an accident. It also helps prevent the doors from being opened unintentionally.

Back door

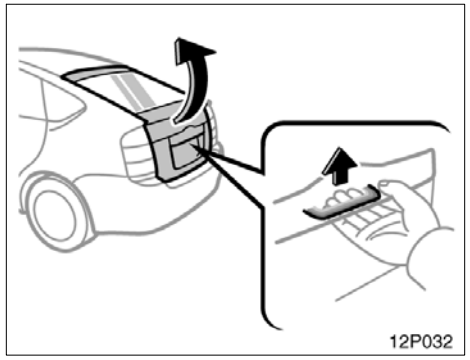

To open the back door, push the back door opener and raise the back door.

If the back door opener does not operate, see “If you cannot operate back door opener” on page 376.

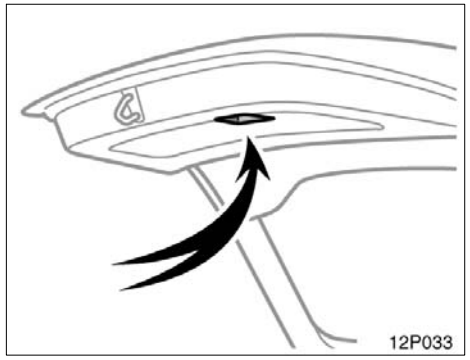

When closing the back door, the inside handle can be used to make the reach easier.

See “Cargo and luggage” on page 342 for precautions to observe when loading luggage.

To close the back door, lower it and press down on it. After closing the back door, try pulling it up to make sure it is securely closed.

⚠ CAUTION

Keep the back door closed while driving. This not only keeps the luggage from being thrown out, but also prevents exhaust gases from entering the vehicle.

If the 12 volt battery is disconnected or run down, the back door will be automatically locked and the back door system may not work after you reconnect, replace or recharge the 12 volt battery. In any of these cases, normalize the back door system by following procedure.

1. Unlock the back door with the remote control key or power door lock switch.
2. Close the back door completely by hand.

If the back door system does not operate properly after the above procedure, there may be a problem in the system. Contact your Toyota dealer.

Power windows

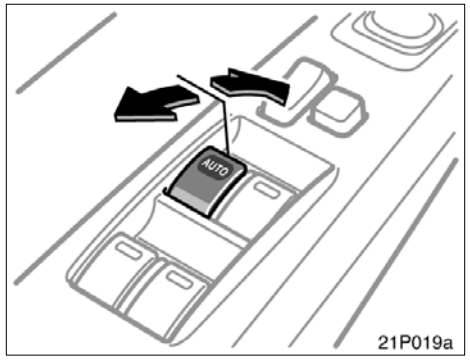

The windows can be operated with the switch on each door.

The power windows work when the “IG–ON” mode is enabled.

Key off operation: If both front doors are closed, they work for 43 seconds even after the hybrid system is stopped. They stop working when either front door is opened.

OPERATING THE DRIVER’S WINDOW

Use the switch on the driver’s door.

Normal operation: The window moves as long as you hold the switch.

To open: Lightly push down the switch.
To close: Lightly pull up the switch.

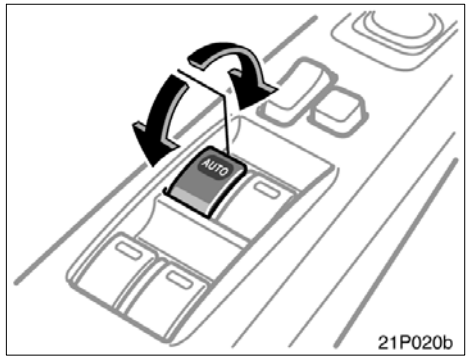

Automatic operation: Push the switch completely down or pull it completely up, and then release it. The window will fully open or close. To stop the window partway, lightly move the switch in the opposite direction and then release it.

Jam protection function: If something gets caught between the window and window frame during automatic closing operation or key off closing operation, the window stops and opens halfway.

If the window receives a strong impact, this function may work even if nothing is caught.

If the 12 volt battery is disconnected or run down, the power window may not operate automatically and the jam protection function will not function correctly after you reconnect, replace or recharge the 12 volt battery. In any of these cases, you should normalize the power window.

To normalize the power window:

1. Push down the power window switch and lower the window halfway.
2. Pull up the switch until the window closes and hold the switch for a second.

Make sure that the window opens and closes automatically. If the power window cannot be operated properly, have it checked by your Toyota dealer.

⚠ CAUTION

- **Never try jamming any part of your body to activate the jam protection function intentionally, as it could result in death or serious injury.**
- **The jam protection function may not work if something gets caught just before the window is fully closed.**

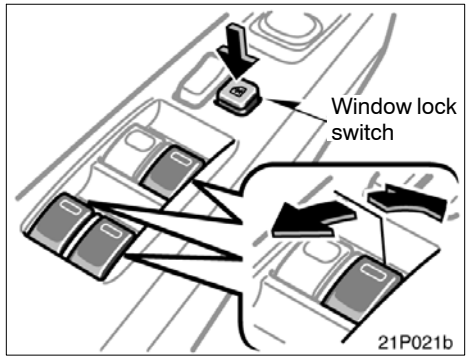

OPERATING THE PASSENGERS' WINDOWS

Use the switch on each passenger's door or the switches on the driver's door that control each passengers' window.

The window moves as long as you hold the switch.

To open: Push down the switch.
To close: Pull up the switch.

If you push in the window lock switch on the driver's door, the passengers' windows cannot be operated.

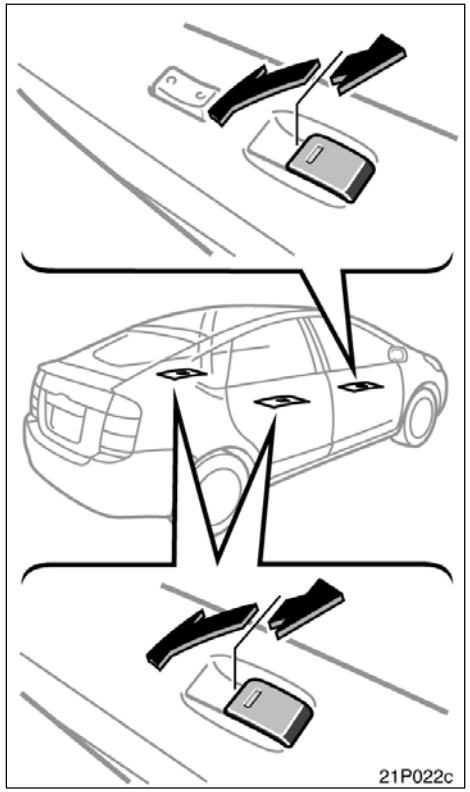

⚠ CAUTION

To avoid death or serious injury, you must do the following.

- **Before you close the power windows, always make sure there is nobody around the power windows. You must also make sure the heads, hands and other parts of the bodies of all occupants are kept completely inside the vehicle. If someone's neck, head or hands get caught in a closing window, it could result in death or serious injury. When anyone closes the power windows, make sure that he or she operates the windows safely.**
- **When small children are in the vehicle, never let them use the power window switches without supervision. Use the window lock switch to prevent them from making unexpected use of the switches.**
- **Turn the hybrid system "OFF" and take the key with you, when you leave your vehicle.**

- **Never leave anyone (particularly a small child) alone in your vehicle, especially with the key still inserted or with the hybrid system other than "OFF". Otherwise, he/she could use the power window switches and get trapped in a window. Unattended person (particularly a small child) can be involved in a serious accident.**

Hood

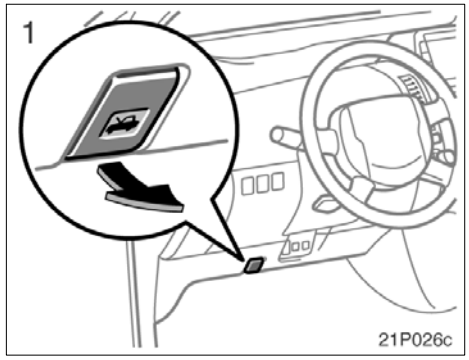

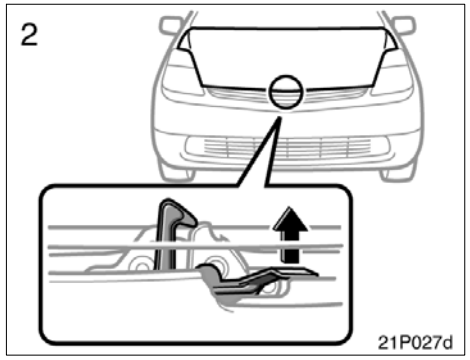

To open the hood:

1. **Pull the hood lock release lever. The hood will spring up slightly.**
2. **In front of the vehicle, pull up the auxiliary catch lever and lift the hood.**

⚠ CAUTION

Before driving, be sure that the hood is closed and securely locked. Otherwise, the hood may open unexpectedly while driving and an accident may occur.

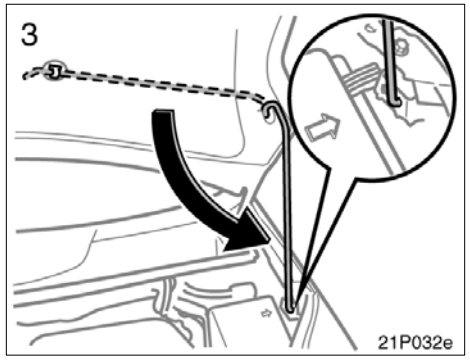

3. Hold the hood open by inserting the support rod into the slot.

Before closing the hood, check to see that you have not forgotten any tools, rags, etc. and return the support rod to its clip—this prevents rattles. Then lower the hood and make sure it locks into place. If necessary, press down gently on the front edge to lock it.

⚠ CAUTION

After inserting the support rod into the slot, make sure the rod supports the hood securely from falling down on to your head or body.

NOTICE

Be sure to return the support rod to its clip before closing the hood. Closing the hood with the support rod inserted into the slot could cause the hood to bend.

Theft deterrent system

To deter vehicle theft, the system is designed to sound an alarm if any of the doors or hood is forcibly unlocked or the battery terminal is reconnected when the vehicle is locked.

The alarm blows the horn intermittently and flashes the headlights and tail lights and other exterior lights.

This function can be deactivated or activated. For details, contact your Toyota dealer.

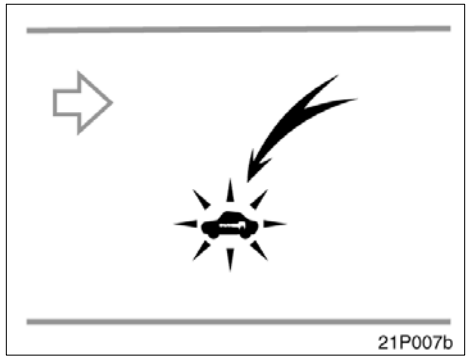

SETTING THE SYSTEM

When the key is inserted into the key slot:

1. Remove the key.

In case of the smart entry and start system:

1. Stop the hybrid system and open the driver's door.

The indicator light will start flashing. (See "Hybrid vehicle immobilizer system" on page 21 for details.)

2. Have all passengers get out of the vehicle.
3. Close and lock all the doors and hood.

The indicator light will come on when all the doors and hood are closed and locked.

The system will automatically be set after 30 seconds. When the system is set, the indicator light will start flashing again.

4. After making sure the indicator light starts flashing, you may leave the vehicle.

Never leave anyone in the vehicle when you set the system, because unlocking from the inside will activate the system.

WHEN THE SYSTEM IS SET

Activating the system

The system will sound the alarm under the following conditions:

- If any of the doors is unlocked or if the hood is forcibly opened without the mechanical key, wireless remote control transmitter or smart function.
- If the battery terminal is disconnected and then reconnected.

The indicator light will come on when the system is activated.

If any of the doors are unlocked without the mechanical key, wireless remote control transmitter or smart function and the key is not in the key slot, all the doors will be automatically locked again.

After 1 minute, the alarm will automatically stop and the indicator light will starts flashing again.

Reactivating the alarm

Once set, the system automatically resets the alarm after the alarm stops.

The alarm will activate again under the same circumstances described in "Activating the system".

Stopping the alarm

The alarm will be stopped by the following two ways:

- Turn the hybrid system to "IG–ON".
- Unlock any of the doors with the mechanical key, wireless remote control transmitter or smart function.

If the 12 volt battery becomes discharged due to the vehicle being unused for a long time, etc., when the battery is recharged or replaced, the system will sound the alarm. If this happens, immediately stop the alarm.

CANCELLING THE SYSTEM

The system will be cancelled by the above mentioned two ways.

If the tail lights come on for 2 seconds, the theft deterrent system has been alarmed. Check to see if there is any abnormality on your vehicle.

TESTING THE SYSTEM

1. Open all the windows.
2. Set the system as described above. The doors should be locked with the mechanical key, wireless remote control transmitter or smart function. Be sure to wait until the indicator light goes off or starts flashing.
3. Unlock any door from the inside. The system should activate the alarm.
4. Stop the alarm as described above.
5. Repeat this operation for the other doors and hood. When testing the back door, also check that the system is activated when the 12 volt battery terminal is disconnected and then reconnected. When testing the hood, release the lock with the hood lock release lever and raise the hood.

If the system does not work properly, have it checked by your Toyota dealer.

Fuel tank cap

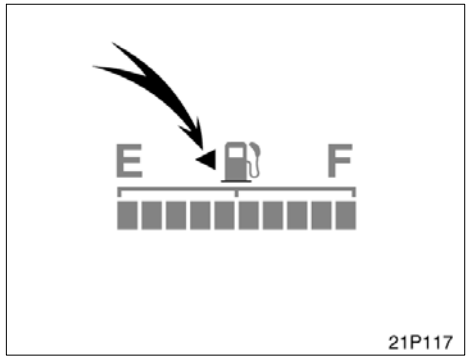

This indicates that the fuel filler door is on the left side of your vehicle.

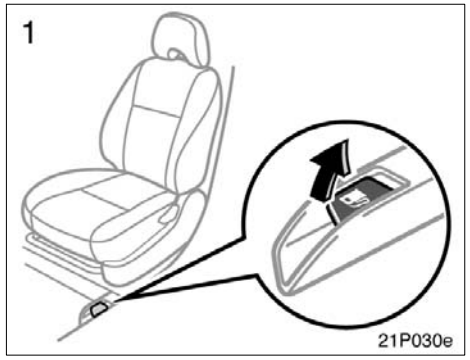

1. To open the fuel filler door, pull the lever up.

When refueling, turn off the hybrid system.

⚠ CAUTION

- **Do not smoke, cause spark or allow open flames when refueling. The fumes are flammable.**
- **When opening the cap, do not remove the cap quickly. In hot weather, fuel under pressure could cause injury by spraying out the filler neck if the cap is suddenly removed.**
- **Do not fuel additionally after initial auto-stop filling up, or fuel may splash out.**

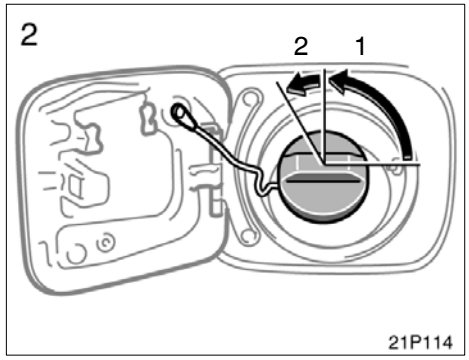

2. To remove the fuel tank cap, turn the cap counterclockwise by 90 degrees (to the pressure point 1), and then turn it a additional 30 degrees (to point 2). Pause slightly before removing it.

It is not unusual to hear a slight swoosh when the cap is opened.

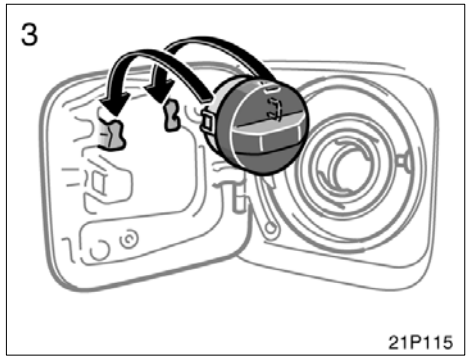

3. The removed cap can be stored on the back side of the fuel filler door.

Position the cap so that the hooks point to the left and right, and set it in the receptacle on the back side of the door.

When installing the cap, turn the cap clockwise until you hear a click. When you hear the click, the cap is fully closed.

If the cap is not tightened securely, the malfunction indicator lamp comes on. Make sure the cap is tightened securely.

The indicator lamp goes off after driving several times. If the indicator lamp does not go off, contact your Toyota dealer as soon as possible.

CAUTION

- **Make sure the cap is installed securely to prevent fuel spillage in the event of an accident.**
- **Use only a genuine Toyota fuel tank cap for replacement. It is designed to regulate fuel tank pressure.**

NOTICE

To prevent damage to the cap, apply force only in the turning direction to the cap. Do not pull or pry it.

SECTION 2–2

OPERATION OF INSTRUMENTS AND CONTROLS

Occupant restraint systems

Seats 52
Front seatss 52
Fold–down rear seat 56
Head restraints 57
Armrest 58
Seat belts 58
SRS driver and front passenger airbags 66
SRS side airbags and curtain shield airbags 74
Child restraint 86

Seats

While the vehicle is being driven, all vehicle occupants should have the seatback upright, sit well back in the seat and properly wear the seat belts provided.

⚠ CAUTION

- **Do not drive the vehicle unless the occupants are properly seated. Do not allow any passengers to sit on top of a folded–down seatback, or in the luggage compartment or cargo area. Persons not properly seated and/or not properly restrained by seat belts can be severely injured in the event of emergency braking or a collision.**
- **During driving, do not allow any passengers to stand up or move around between seats. Otherwise, severe injuries can occur in the event of emergency braking or a collision.**

Front seats—
—Front seat precautions

Driver seat

⚠ CAUTION

The SRS driver airbag deploys with considerable force, and can cause death or serious injury especially if the driver is very close to the airbag. The National Highway Traffic Safety Administration "NHTSA" advises:

Since the risk zone for driver airbag is the first 50–75 mm (2–3 in.) of inflation, placing yourself 250 mm (10 in.) from your diver airbag provides you with a clear margin of safety. This distance is measured from the center of the steering wheel to your breastbone. If you sit less than 250 mm (10 in.) away now, you can change your driving position in several ways:

- **Move your seat to the rear as far as you can while still reaching the pedals comfortably.**
- **Slightly recline the back of the seat. Although vehicle designs vary, many drivers can achieve the 250 mm (10 in.) distance, even with the driver seat all the way forward, simply by reclining the back of the seat somewhat. If reclining the back of your seat makes it hard to see the road, raise yourself by using a firm, non–slippery cushion, or raise the seat if your vehicle has that feature.**
- **If your steering wheel is adjustable, tilt it downward. This points the airbag toward your chest instead of your head and neck.**

The seat should be adjusted as recommended by NHTSA above, while still maintaining control of the foot pedals, steering wheel, and your view of the instrument panel controls.

Front passenger seat

⚠ CAUTION

The SRS front passenger airbag also deploys with considerable force, and can cause death or serious injury especially if the front passenger is very close to the airbag. The front passenger seat should be as far from the airbag as possible with the seatback adjusted, so the front passenger sits upright.

Front seats (with SRS side airbags)

⚠ CAUTION

The SRS side airbags are installed in the driver and front passenger seats. Observe the following precautions.

- **Do not lean against the front door when the vehicle is in use, since the side airbag inflates with considerable speed and force. Otherwise, you may be killed or seriously injured.**
- **Do not use seat accessories which cover the area where the side airbags inflate. Such accessories may prevent the side airbags from activating correctly, causing death or serious injury.**
- **Do not modify or replace the seats or upholstery of the seats with side airbags. Such change may prevent the side airbag system from activating correctly, disable the system or cause the side airbags to inflate accidentally, resulting in death or serious injury.**

—Seat adjustment precautions

⚠ CAUTION

- **Do not adjust the seat while the vehicle is moving as the seat may unexpectedly move and cause the driver to lose control of the vehicle.**
- **Be careful that the seat does not hit a passenger or luggage.**
- **After adjusting the seat position, release the lever and try sliding the seat forward and backward to make sure it is locked in position.**
- **After adjusting the seatback, push your body back against the seat to make sure the seat is locked in position.**
- **Do not put objects under the seats. Otherwise, the objects may interfere with the seat–lock mechanism or unexpectedly push up the seat position adjusting lever and the seat may suddenly move, causing the driver to lose control of the vehicle.**

—Adjusting front seats

- **While adjusting the seat, do not put your hands under the seat or near the moving parts. Otherwise, your hands or fingers may be caught and injured.**

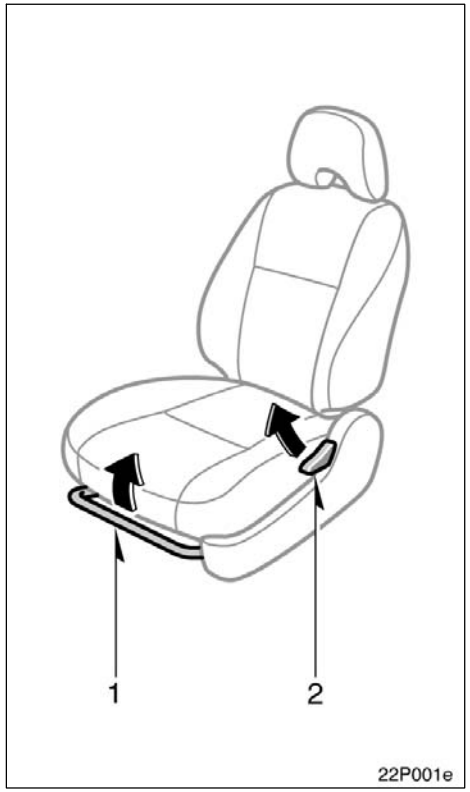

1. SEAT POSITION ADJUSTING LEVER

Hold the center of the lever and pull it up. Then slide the seat to the desired position with slight body pressure and release the lever.

2. SEATBACK ANGLE ADJUSTING LEVER

Lean forward and pull the lever up. Then lean back to the desired angle and release the lever.

⚠ CAUTION

Avoid reclining the seatback any more than needed. The seat belts provide maximum protection in a frontal or rear collision when the driver and the front passenger are sitting up straight and well back in the seats. If you are reclined, the lap belt may slide past your hips and apply restraint forces directly to the abdomen or your neck may contact the shoulder belt. In the event of a frontal collision, the more the seat is reclined, the greater the risk of death or serious injury.

—Flattening seatbacks

1. Remove the head restraint. Hold the center of the lever and pull it up. Then slide the seat further forward than the front–most lock position.

2. Pull the seatback angle adjusting lever to unlock and push down the seatback.

When returning the seatback upright, be careful not to make yourself hit by the seatback which will bound with considerable spring force.

After returning the seat to its original position, be certain to replace the head restraint.

⚠ CAUTION

- Do not allow passengers to ride on the flattened seat while driving; use the seat in the normal position.
- After putting back the seat, try pushing the seat and seatback forward and rearward to make sure it is secured in place. Be certain to replace head restraint.

Fold-down rear seat

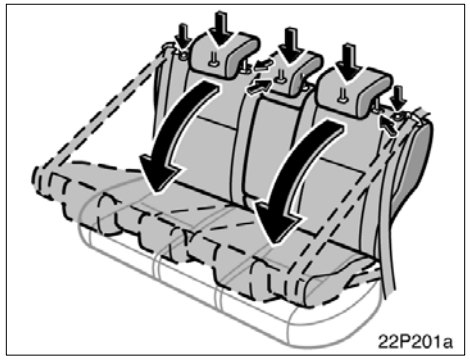

Lower the head restraints to the lowest position. Push down the lock release button and fold the seatback down.

Each seatback can be folded separately.

This will enlarge the luggage compartment as far as the seatbacks. See “Cargo and luggage” on page 342 for precautions when loading luggage.

⚠ CAUTION

When only rear left seat is folded down, rear seat alone can be used. Never sit on the center seat because the rear center seat belt cannot be fastened correctly when the rear left seat is folded down.

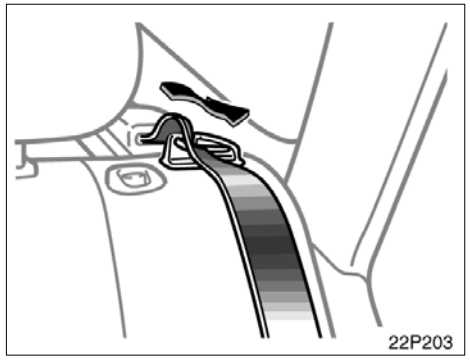

BEFORE RETURNING REAR SEAT

Make sure the shoulder belt pass through the guide when returning the seatback up.

If the shoulder belt on the rear right seat is off the guide, the air vent for cooling the hybrid battery may be blocked by the belt. If the hybrid battery cannot be cooled, the output performance is limited, reducing the driving performance.

⚠ CAUTION

When returning the seatback to the upright position, observe the following precautions in order to prevent death or serious injury in a collision or sudden stop:

- **Make sure seatback is securely locked by pushing forward and rearward on the top of the seatback. Failure to do so will prevent the seat belt from operating properly.**
- **Make sure the seat belts are not twisted or caught in the seatback and are arranged in the proper position and are ready to use.**

Head restraints

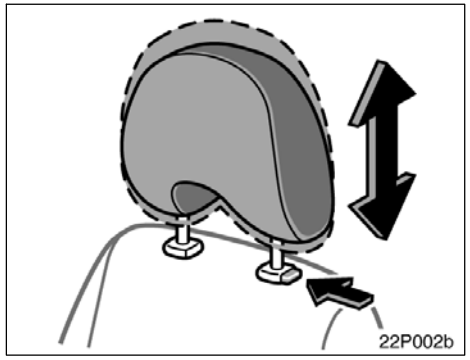

Front

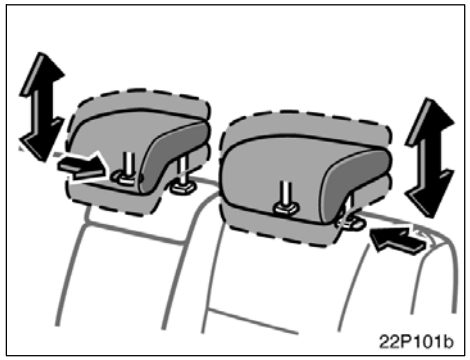

Rear

For your safety and comfort, adjust the head restraint before driving,

To raise: Pull it up.
To lower: Push it down while pressing the lock release button.

Rear center head restraint—When an occupant sits on the rear center seat, always pull up the rear center head restraint to the lock position.

The head restraint is most effective when it is close to your head. Therefore, using a cushion on the seatback is not recommended.

⚠ CAUTION

- **Adjust the center of the head restraint so that it is closest to the top of your ears.**
- **After adjusting the head restraint, make sure it is locked in position.**
- **Do not drive with the head restraints removed.**

Armrest

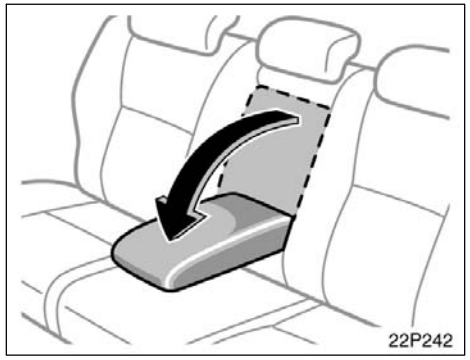

To use the armrest, pull it down as shown in the illustration.

NOTICE
To prevent damage to the armrest, avoid putting heavy loads on it.

Seat belts—
—Seat belt precautions

Toyota strongly urges that the driver and passengers in the vehicle be properly restrained at all times with the seat belts provided. Failure to do so could increase the chance of injury and/or the severity of injury in accidents.

The seat belts provided for your vehicle are designed for people of adult size, large enough to properly wear them.

Child. Use a child restraint system appropriate for the child until the child becomes large enough to properly wear the vehicle's seat belts. For details, see "Child restraint" on page 86.

If a child is too large for a child restraint system, the child should sit in the rear seat and must be restrained using the vehicle's seat belt. According to accident statistics, the child is safer when properly restrained in the rear seat than in the front seat.

If a child must sit in the front seat, the seat belts should be worn properly. If an accident occurs and the seat belts are not worn properly, the force of the rapid inflation of the airbag may cause death or serious injury to the child.

Do not allow any children to stand up or kneel on either rear or front seats. An unrestrained child could suffer serious injury or death during emergency braking or a collision. Also, do not let the child sit on your lap. Holding a child in your arms does not provide sufficient restraint.

Pregnant woman. Toyota recommends the use of a seat belt. Ask your doctor for specific recommendations. The lap belt should be worn securely and as low as possible over the hips and not on the waist.

Injured person. Toyota recommends the use of a seat belt. Depending on the injury, first check with your doctor for specific recommendations.

⚠ CAUTION

Persons should ride in their seats properly wearing their seat belts whenever the vehicle is moving. Otherwise, they are much more likely to suffer serious bodily injury or death in the event of sudden braking or a collision.

When using the seat belts, observe the following:

- **Use the belt for only one person at a time. Do not use a single belt for two or more people—even children.**
- **Avoid reclining the seatback any more than needed. The seat belts provide maximum protection in a frontal or rear collision when the driver and the front passenger are sitting up straight and well back in the seats. If you are reclined, the lap belt may slide past your hips and apply restraint forces directly to the abdomen or your neck may contact the shoulder belt. In the event of a frontal collision, the more the seat is reclined, the greater the risk of death or personal injury.**
- **Be careful not to damage the belt webbing or hardware. Take care that they do not get caught or pinched in the seat or doors.**
- **Inspect the belt system periodically. Check for cuts, fraying, and loose parts. Damaged parts should be replaced. Do not disassemble or modify the system.**
- **Keep the belts clean and dry. If they need cleaning, use a mild soap solution or lukewarm water. Never use bleach, dye or abrasive cleaners, or allow them to come into contact with the belts—they may severely weaken the belts. (See "Cleaning the interior" on page 381.)**
- **Replace the belt assembly (including bolts) if it has been used in a severe impact. The entire assembly should be replaced even if damage is not obvious.**

—Fastening front and rear seat belts

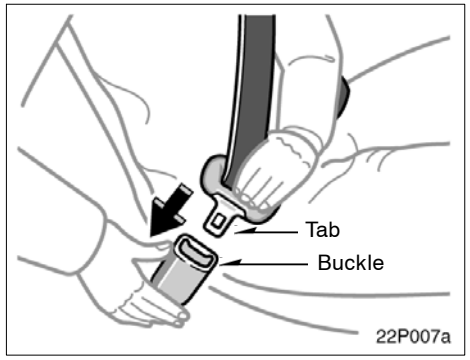

Adjust the seat as needed and sit up straight and well back in the seat. To fasten your belt, pull it out of the retractor and insert the tab into the buckle.

You will hear a click when the tab locks into the buckle.

The seat belt length automatically adjusts to your size and the seat position.

The retractor will lock the belt during a sudden stop or on impact. It also may lock if you lean forward too quickly. A slow, easy motion will allow the belt to extend, and you can move around freely.

When a passenger's shoulder belt is completely extended and is then retracted even slightly, the belt is locked in that position and cannot be extended. This feature is used to hold the child restraint system securely. (For details, see "Child restraint" on page 86.) To free the belt again, fully retract the belt and then pull the belt out once more.

If the seat belt cannot be pulled out of the retractor, firmly pull the belt and release it. You will then be able to smoothly pull the belt out of the retractor.

⚠ CAUTION

- **After inserting the tab, make sure the tab and buckle are locked and that the belt is not twisted.**
- **Do not insert coins, clips, etc. in the buckle as this may prevent you from properly latching the tab and buckle.**
- **If the seat belt does not function normally, immediately contact your Toyota dealer. Do not use the seat until the seat belt is fixed, because it cannot protect an adult occupant or your child from death or serious injury.**

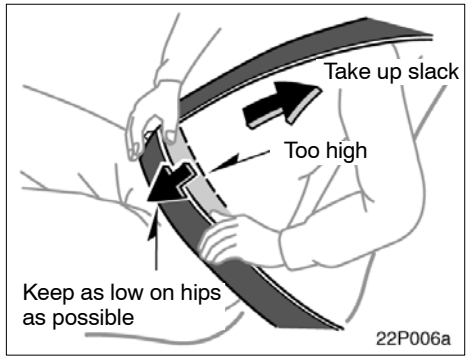

Adjust the position of the lap and shoulder belts.

Position the lap belt as low as possible on your hips—not on your waist, then adjust it to a snug fit by pulling the shoulder portion upward through the latch plate.

⚠ CAUTION

- **Both high–positioned lap belts and loose–fitting belts could cause death or serious injuries due to sliding under the lap belt during a collision or other unintended event. Keep the lap belt positioned as low on hips as possible.**
- **Do not place the shoulder belt under your arm.**

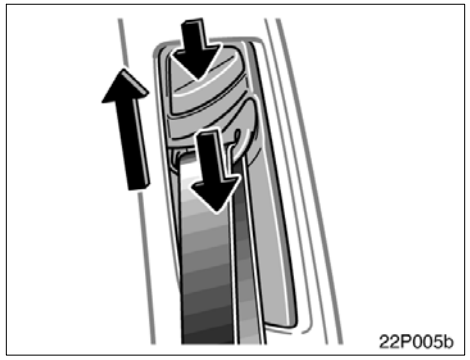

Seat belts with an adjustable shoulder anchor—

Adjust the shoulder anchor position to your size.

To raise: Slide the anchor up.
To lower: Push in the lock release button and slide the anchor down.

After adjustment, make sure the anchor is locked in position.

⚠ CAUTION

Always make sure the shoulder belt is positioned across the center of your shoulder. The belt should be kept away from your neck, but not falling off your shoulder. Failure to do so could reduce the amount of protection in an accident and cause death or serious injuries in a collision.

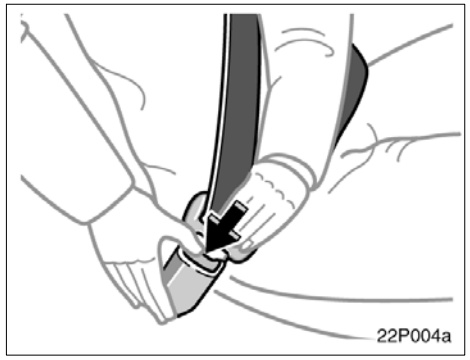

To release the belt, press the buckle release button and allow the belt to retract.

If the belt does not retract smoothly, pull it out and check for kinks or twists. Then make sure it remains untwisted as it retracts.

—Seat belt extender

If your seat belts cannot be fastened securely because they are not long enough, a personalized seat belt extender is available from your Toyota dealer free of charge.

Please contact your local Toyota dealer so that the dealer can order the proper required length for the extender. Bring the heaviest coat you expect to wear for proper measurement and selection of length. Additional ordering information is available at your Toyota dealer.

⚠ CAUTION

When using the seat belt extender, observe the following precautions. Failure to follow these instructions could reduce the effectiveness of the seat belt restraint system in case of an accident, increasing the chance of personal injury.

- **Remember that the extender provided for you may not be safe when used on a different vehicle, for another person, or at a different seating position than the one originally intended.**

- **If the seat belt extender has been connected to the driver's seat belt buckle without wearing the seat belt when using the extender in the driver's seat, the SRS driver's airbag system will judge that the driver wears the seat belt even if not wearing it. In this case, the driver's airbag may not activate correctly, causing death or serious injury in the event of collision. Be sure to wear the seat belt with the seat belt extender.**

- **Make sure the front passenger occupant classification indicator light indicates "ON" when using the seat belt extender for the front passenger seat. If the indicator light indicates "OFF", disconnect the extender tongue from the seat belt buckle, then reconnect the seat belt. Reconnect the seat belt extender after making sure the indicator light indicates "ON". If you use the seat belt extender while the indicator light indicates "OFF", the front passenger airbag may not activate correctly, which could cause death or serious injury in the event of collision.**
- **Be sure to wear the seat belt without the seat belt extender if you can fasten the seat belt without the extender.**

- **Do not use the seat belt extender when installing a child restraint system on the front or rear passenger seat. If installing a child restraint system with the seat belt extender connected to the seat belt, the seat belt will not securely hold the child restraint system, which could cause death or serious injury to the child or other passengers in the event of collision.**

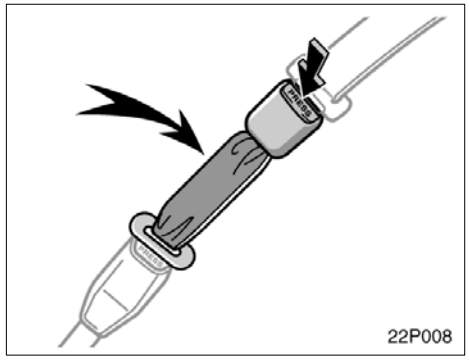

To connect the extender to the seat belt, insert the tab into the seat belt buckle so that the "PRESS" signs on the buckle release buttons of the extender and the seat belt are both facing outward as shown.

You will hear a click when the tab locks into the buckle.

When releasing the seat belt, press on the buckle release button on the extender, not on the seat belt. This helps prevent damage to the vehicle interior and extender itself.

When not in use, remove the extender and store in the vehicle for future use.

⚠ CAUTION

- **After inserting the tab, make sure the tab and buckle are locked and that the lap and shoulder portions of the belt and the seat belt extender are not twisted.**
- **Do not insert coins, clips, etc. in the buckle as this may prevent you from properly latching the tab and buckle.**
- **If the seat belt does not function normally, immediately contact your Toyota dealer. Do not use the seat until the seat belt is fixed, because it cannot protect an adult occupant or your child from death or serious injury.**

—Seat belt pretensioners

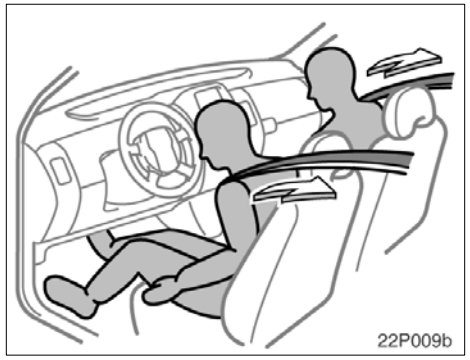

There are seat belt pretensioners for both front seats. They are designed to be activated in response to a severe frontal impact.

When the sensor detects a severe frontal impact, the front seat belts are quickly drawn back by the retractor so that the belts snugly restrain the occupants.

The front passenger's seat belt pretensioner will not activate if no passenger is detected in the front passenger seat by the front passenger occupant classification system. However, the front passenger's seat belt pretensioner may activate if luggage is put on the seat, or the seat belt is buckled up regardless of the presence of an occupant in the seat. (As for the front passenger occupant classification system, see "—Front passenger occupant classification system" on page 81.)

The seat belt pretensioner and SRS airbags may not operate together in all collisions.

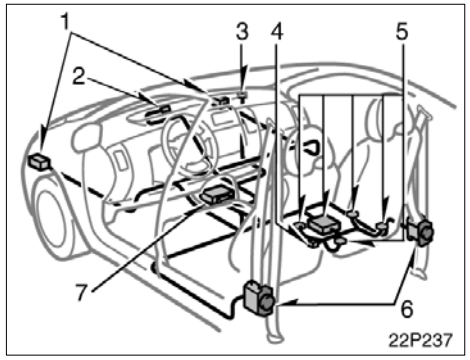

The seat belt pretensioner system consists mainly of the following components and their locations are shown in the illustration.

1. Front airbag sensors
2. SRS warning light
3. Front passenger occupant classification indicator light
4. Front passenger's seat belt buckle switch
5. Front passenger occupant classification system (ECU and sensors)
6. Seat belt pretensioner assemblies
7. Airbag sensor assembly

The seat belt pretensioners are controlled by the airbag sensor assembly. The airbag sensor assembly consists of a safing sensor and airbag sensor.

When the seat belt pretensioners are activated, an operating noise may be heard and a small amount of non–toxic gas may be released. This does not indicate that a fire is occurring. This gas is normally harmless.

Once the seat belt pretensioners have been activated, the seat belt retractors remain locked.

⚠ CAUTION

Do not modify, remove, strike or open the seat belt pretensioner assemblies, airbag sensor or surrounding area or wiring. Failure to follow these instructions may prevent the seat belt pretensioners from activating correctly, cause sudden operation of the system or disable the system, which could result in death or serious injury. Consult your Toyota dealer about any repair and modification.

NOTICE

Do not perform any of the following changes without consulting your Toyota dealer. Such changes can interfere with proper operation of the seat belt pretensioners in some cases.

- ***Installation of electronic devices such as a mobile two–way radio, cassette tape player or compact disc player***
- ***Repairs on or near the front seat belt retractor assemblies***
- ***Modification of the suspension system***
- ***Modification of the front end structure***
- ***Attachment of a grille guard (bull bar, kangaroo bar, etc.), snowplow, winches or any other equipment to the front end***
- ***Repairs made on or near the front fenders, front end structure or console***

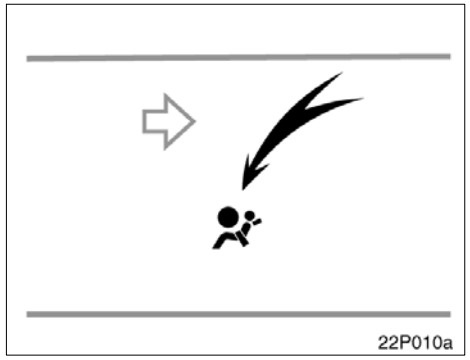

This indicator comes on when the "IG–ON" mode is enabled. It goes off after about 6 seconds. This means the seat belt pretensioners are operating properly.

The warning light system monitors the airbag sensor assembly, front airbag sensors, side and curtain shield airbag sensors, curtain shield airbag sensors, driver's seat position sensor, driver's seat belt buckle switch, front passenger occupant classification system and indicator light, front passenger's seat belt buckle switch, seat belt pretensioner assemblies, interconnecting wiring and power sources. (For details, see "Service reminder indicators and warning buzzers" on page 125.)

If any of the following conditions occurs, this indicates a malfunction of the airbags or seat belt pretensioners. Contact your Toyota dealer as soon as possible.

- The light does not come on when the “IG–ON” mode is enabled or remains on for more than 6 seconds.
- The light comes on while driving.
- If either front seat belt does not retract or can not be pulled out due to a malfunction or activation of the relevant seat belt pretensioner.
- The seat belt pretensioner assembly or surrounding area has been damaged.

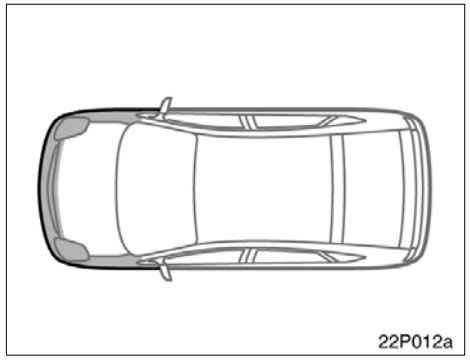

In the following cases, contact your Toyota dealer as soon as possible:

- The front part of the vehicle (shaded in the illustration) was involved in an accident that was not severe enough to cause the seat belt pretensioners to operate.
- The seat belt pretensioner assembly or surrounding area is scratched, cracked, or otherwise damaged.

SRS driver and front passenger airbags

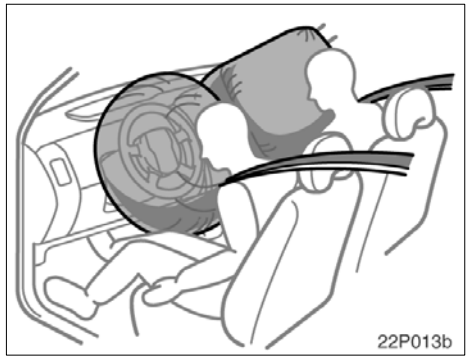

The SRS (Supplemental Restraint System) front airbags are designed to provide further protection for the driver and front passenger in addition to the primary safety protection provided by the seat belts.

Your vehicle is equipped with “ADVANCED AIRBAGS” designed based on US motor vehicle safety standards (FMVSS208). The airbag system controls airbag deployment power for the driver and front passenger. The driver airbag system consists of the driver seat’s position sensor, etc. The front passenger’s airbag system consists of the front passenger occupant classification sensor, etc.

In response to a severe frontal impact, the SRS front airbags work with the seat belts to help reduce injury by inflating. The SRS front airbags help reduce injuries mainly to the driver's or front passenger's head or chest caused by hitting the vehicle interior.

The SRS front passenger airbag will not activate if there is no passenger sitting in the front passenger seat. However, the front passenger airbag may deploy if luggage is put in the seat, or the seat belt is buckled up, regardless of the presence of an occupant in the seat. (As for the front passenger occupant classification system, see "—Front passenger occupant classification system" on page 81.)

Always wear your seat belt properly.

⚠ CAUTION

- **The SRS front airbag system is designed only as a supplement to the primary protection of the driver and front passenger seat belt systems. The driver and front passenger can be killed or seriously injured by the inflating airbags if they do not wear the available seat belts properly. During sudden braking just before a collision, an unrestrained driver or front passenger can move forward into direct contact with or close proximity to the airbag which may then deploy during the collision. To ensure maximum protection in an accident, the driver and all passengers in the vehicle must wear their seat belts properly. Wearing a seat belt properly during an accident reduces the chances of death or serious injury or being thrown out of the vehicle. For instructions and precautions concerning the seat belt system, see "Seat belts" on page 58.**

- **Improperly seated and/or restrained infants and children can be killed or seriously injured by the deploying airbags. An infant or child who is too small to use a seat belt should be properly secured using a child restraint system. Toyota strongly recommends that all infants and children be placed in the rear seat of the vehicle and properly restrained. The rear seat is the safest for infants and children. For instructions concerning the installation of a child restraint system, see "Child restraint" on page 86.**

The SRS front airbags are designed to deploy in severe (usually frontal) collisions where the magnitude and duration of the forward deceleration of the vehicle exceeds the designed threshold level.

The SRS front airbags will deploy if the severity of the impact is above the designed threshold level, comparable to an approximate 25 km/h (15 mph) collision when the vehicle has the impact straight into a fixed barrier that does not move or deform.

However, this threshold velocity will be considerably higher if the vehicle strikes an object, such as a parked vehicle or sign pole, which can move or deform on impact, or if the vehicle is involved in an underride collision (e.g. a collision in which the front of the vehicle “underrides”, or goes under, the bed of a truck, etc.).

It is possible that in some collisions where the forward deceleration of the vehicle is very close to the designed threshold level, the SRS front airbags and the seat belt pretensioners may not activate together.

Always wear your seat belts properly.

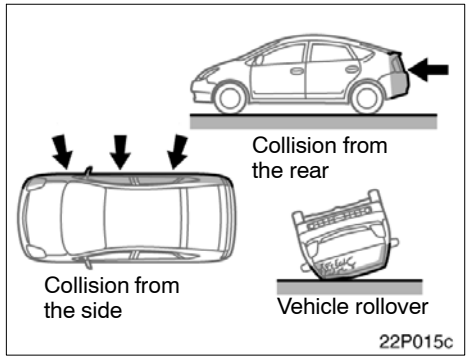

The SRS front airbags are not generally designed to inflate if the vehicle is involved in a side or rear collision, if it rolls over, or if it is involved in a low–speed frontal collision. But, whenever a collision of any type causes sufficient forward deceleration of the vehicle, deployment of the SRS front airbags may occur.

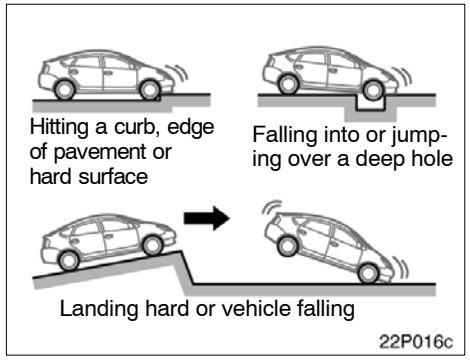

The SRS front airbags may also deploy if a serious impact occurs to the underside of your vehicle. Some examples are shown in the illustration.

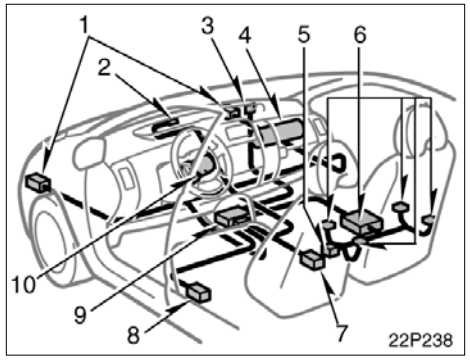

The SRS front airbag system consists mainly of the following components and their locations are shown in the illustration.

1. Front airbag sensors
2. SRS warning light
3. Front passenger occupant classification indicator light
4. Airbag module for front passenger (airbag and inflator)
5. Passenger's seat belt buckle switch
6. Front passenger occupant classification system (ECU and sensors)
7. Driver's seat belt buckle switch
8. Driver's seat position sensor
9. Airbag sensor assembly
10. Airbag module for driver (airbag and inflator)

The airbag sensor assembly consists of a safing sensor and airbag sensor.

The front airbag sensors constantly monitor the forward deceleration of the vehicle. If an impact results in a forward deceleration beyond the designed threshold level, the system triggers the airbag inflators. At this time a chemical reaction in the inflators very quickly fills the airbags with non–toxic gas to help restrain the froward motion of the occupants. The front airbags then quickly deflate, so that there is no obstruction of the driver's vision should it be necessary to continue driving.

When the airbags inflate, they produce a loud noise and release some smoke and residue along with non–toxic gas. This does not indicate a fire. This smoke may remain inside the vehicle for some time, and may cause some minor irritation to the eyes, skin or breathing. Be sure to wash off any residue as soon as possible to prevent any potential skin irritation with soap and water. If you can safely exit from the vehicle, you should do so immediately.

Deployment of the airbags happens in a fraction of a second, so the airbags must inflate with considerable force. While the system is designed to reduce serious injuries, primarily to the head and chest, it may also cause other, less severe injuries to the face, chest, arms and hands. These are usually in the nature of minor burns or abrasions and swelling, but the force of a deploying airbag can cause more serious injuries, especially if an occupant's hands, arms, chest or head is in close proximity to the airbag module at the time of deployment. This is why it is important for the occupant to: avoid placing any object or part of the body between the occupant and the airbag module; sit straight and well back into the seat; wear the available seat belt properly; and sit as far as possible from the airbag module, while still maintaining control of the vehicle.

Parts of the airbag module (steering wheel hub, airbag cover and inflator) may be hot for several minutes after deployment, so do not touch! The airbags inflate only once. The windshield may be damaged by absorbing some of the force of the inflating airbag.

⚠ CAUTION

The driver or front passenger who is too close to the steering wheel or dashboard during airbag deployment can be killed or seriously injured.
Toyota strongly recommends that:

- **The driver sit as far back as possible from the steering wheel while still maintaining control of the vehicle.**
- **The front passenger sit as far back as possible from the dashboard.**
- **All vehicle occupants be properly restrained using the available seat belts.**

- **If the seat belt extender has been connected to the driver's seat belt buckle without wearing the seat belt when using the extender in the driver's seat, the SRS driver's airbag system will judge that the driver wears the seat belt even if not wearing it. In this case, the driver's airbag may not activate correctly, causing death or serious injury in the event of collision. Be sure to wear the seat belt with the seat belt extender.**

For instructions and precautions concerning the seating position, see "—Front seat precautions" on page 52.

- **Do not sit on the edge of the seat or lean against the dashboard when the vehicle is in use, since the front passenger airbag could inflate with considerable speed and force. Anyone who is up against, or very close to, an airbag when it inflates, can be killed or seriously injured. Sit up straight and well back in the seat, and always use your seat belt properly.**

- **Toyota strongly recommends that all infants and children be placed in the rear seat of the vehicle and be properly restrained.**
- **Do not hold a child on your lap or in your arms. Use a child restraint system in the rear seat. For instructions concerning the installation of a child restraint system, see "Child restraint" on page 86.**

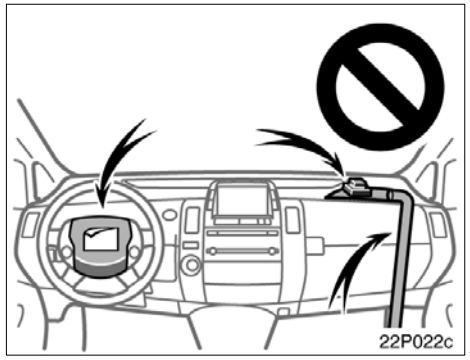

- **Do not put anything or any part of your body on or in front of the dashboard or steering wheel pad that houses the front airbag system. They might restrict inflation or cause death or serious injury as they are projected rearward by the force of the deploying airbags. Likewise, the driver and front passenger should not hold objects in their arms or on their knees.**

- **Do not modify or remove any wiring. Do not modify, remove, strike or open any components, such as the steering wheel pad, steering wheel, column cover, dashboard near the front passenger airbag, front passenger airbag cover, front passenger airbag or airbag sensor assembly. Doing so may prevent the front airbag system from activating correctly, cause sudden front airbags activation of the system or disable the system, which could result in death or serious injury.**

Failure to follow these instructions can result in death or serious injury. Consult your Toyota dealer about any repair and modification.

If you wish to modify your vehicle for a person with a physical disability, consult your Toyota dealer. It may dangerously interfere with the SRS side airbags and curtain shield airbags operation.

NOTICE

Do not perform any of the following changes without consulting your Toyota dealer. Such changes can interfere with proper operation of the SRS front airbag system in some cases.

- ***Installation of electronic devices such as a mobile two-way radio, cassette tape player or compact disc player***
- ***Modification of the suspension system***
- ***Modification of the front end structure***
- ***Attachment of a grille guard (bull bar, kangaroo bar, etc.), snowplow, winches or any other equipment to the front end***
- ***Repairs made on or near the front fenders, front end structure, console, steering column, steering wheel or dashboard near the front passenger airbag***

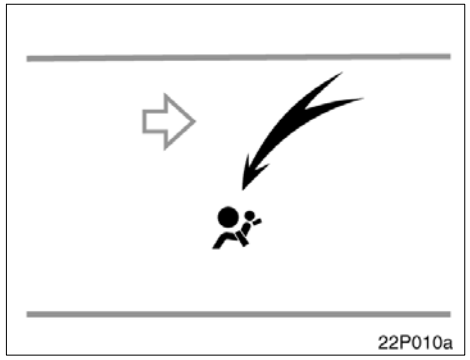

This indicator comes on when the "IG-ON" mode is enabled. It goes off after about 6 seconds. This means the SRS front airbags are operating properly.

The warning light system monitors the airbag sensor assembly, front airbag sensors, side and curtain shield airbag sensors, curtain shield airbag sensors, driver's seat position sensor, driver's seat belt buckle switch, front passenger occupant classification system and indicator light, front passenger's seat belt buckle switch, seat belt pretensioner assemblies, interconnecting wiring and power sources. (For details, see "Service reminder indicators and warning buzzers" on page 125.)

If any of the following conditions occurs, this indicates a malfunction of the airbags or seat belt pretensioners. Contact your Toyota dealer as soon as possible.

- The light does not come on when the “IG–ON” mode is enabled or remains on for more than 6 seconds.
- The light comes on while driving.

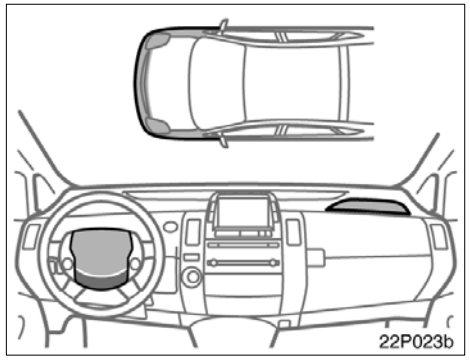

In the following cases, contact your Toyota dealer as soon as possible:

- The SRS front airbags have been inflated.
- The front of the vehicle (shaded in the illustration) was involved in an accident that was not severe enough to cause the SRS front airbags to inflate.
- The pad section of the steering wheel or front passenger airbag cover (shaded in the illustration) is scratched, cracked, or otherwise damaged.

NOTICE
Do not disconnect the battery cables before contacting your Toyota dealer.

SRS side airbags and curtain shield airbags

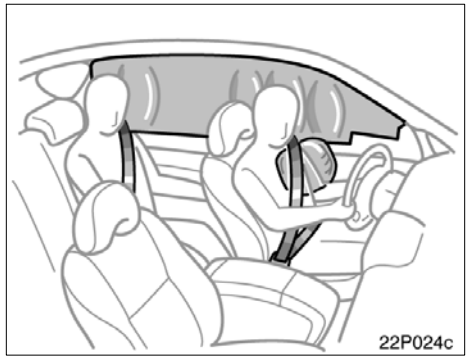

The SRS (Supplemental Restraint System) side airbags and curtain shield airbags are designed to provide further protection for the driver, front passenger and rear outboard passengers in addition to the primary safety protection provided by the seat belts.

In response to a severe side impact, the SRS side airbags and curtain shield airbags work with the seat belts to help reduce injury by inflating. The SRS side airbags help reduce injuries mainly to the driver's or front passenger's chest and the SRS curtain shield airbags help reduce injuries mainly to the driver's, front passenger's or rear outboard passenger's head.

The SRS side airbag and curtain shield airbag on the passenger side are activated even with no passenger in the front seat or rear outboard seat.

The SRS curtain shield airbags may activate even when the side airbags are not activated.

Always wear your seat belt properly.

⚠ CAUTION

- **The SRS side airbag and curtain shield airbag system is designed only as a supplement to the primary protection of the driver, front passenger and rear outside passenger seat belt systems. To ensure maximum protection in an accident, the driver and all passengers in the vehicle must wear their seat belts properly. Wearing a seat belt properly during an accident reduces the chances of death or serious injury or being thrown out of the vehicle. For instructions and precautions concerning the seat belt system, see "Seat belts" on page 58.**

- **Do not allow anyone to lean his/her head or any part of his/her body against the door or the area of the seat, front pillar, rear pillar or roof side rail from which the SRS side airbag and curtain shield airbag deploy even if he/she is a child seated in the child restraint system. It is dangerous if the SRS side airbag and curtain shield airbag inflate, and the impact of the deploying airbag could cause death or serious injury to the occupant.**
- **Improperly seated and/or restrained infants and children can be killed or seriously injured by the deploying airbags. An infant or child who is too small to use a seat belt should be properly secured using a child restraint system. Toyota strongly recommends that all infants and children be placed in the rear seats of the vehicle and properly restrained. The rear seats are the safest for infants and children. For instructions concerning the installation of a child restraint system, see "Child restraint" on page 86.**

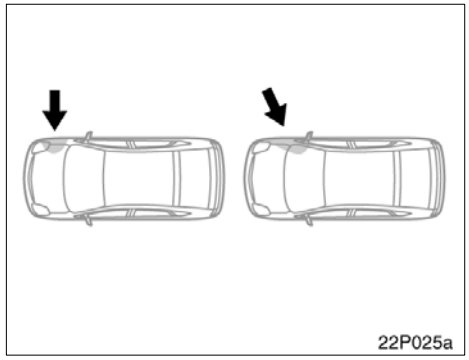

The SRS side airbag and curtain shield airbag system may not activate if the vehicle is subjected to a collision from the side at certain angles, or a collision to the side of the vehicle body other than the passenger compartment as shown in the illustration.

The SRS side airbags and curtain shield airbags are designed to inflate when the passenger compartment area suffers a severe impact from the side.

Always wear your seat belts properly.

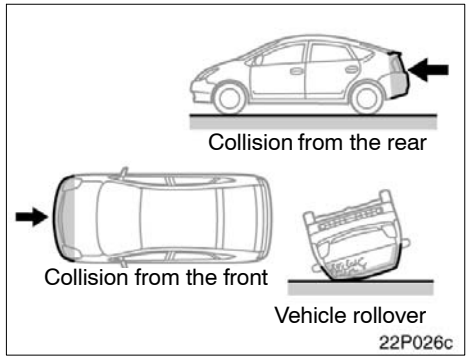

The SRS side airbags and curtain shield airbags are not generally designed to inflate if the vehicle is involved in a front or rear collision, if it rolls over, or if it is involved in a low–speed side collision.

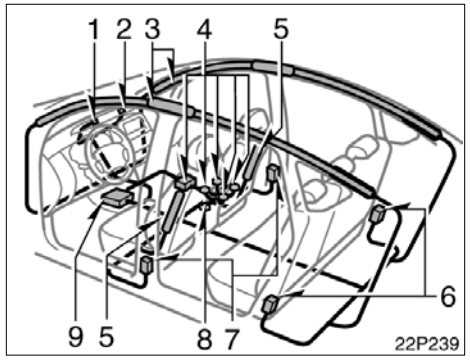

The SRS side airbag and curtain shield airbag system consists mainly of the following components, and their locations are shown in the illustration.

1. SRS warning light
2. Front passenger occupant classification indicator light
3. Curtain shield airbag modules (airbag and inflator)
4. Front passenger occupant classification system (ECU and sensors)
5. Side airbag modules (airbag and inflator)
6. Curtain shield airbag sensors
7. Side and curtain shield airbag sensors
8. Passenger's seat belt buckle switch
9. Airbag sensor assembly

The SRS side airbag and curtain shield airbag system is controlled by the airbag sensor assembly. The airbag sensor assembly consists of a safing sensor and airbag sensor.

In a severe side impact, the side and curtain shield airbag sensor and/or the curtain shield airbag sensor trigger(s) the side airbag inflators and/or the curtain shield airbag inflators. At this time a chemical reaction in the inflators quickly fills the airbags with non–toxic gas to help restrain the lateral motion of the occupants.

When the airbags inflate, they produce a fairly loud noise and release some smoke and residue along with non–toxic gas. This does not indicate a fire. This smoke may remain inside the vehicle for some time, and may cause some minor irritation to the eyes, skin or breathing. Be sure to wash off any residue as soon as possible to prevent any potential skin irritation with soap and water. If you can safely exit from the vehicle, you should do so immediately.

Deployment of the airbags happen in a fraction of a second, so the airbags must inflate with considerable force. While the system is designed to reduce serious injuries, it may also cause minor burns or abrasions and swelling.

Front seats as well as parts of the front and rear pillars, and roof side rail may be hot for several minutes, but the airbags themselves will not be hot. The airbags are designed to inflate only once.

⚠ CAUTION

SRS side airbags and curtain shield airbags inflate with considerable force. To reduce the possibility of death or serious injury when they inflate, the driver, front passenger and rear outside passengers must:

- **Wear their seat belts properly.**
- **Remain properly seated with their backs upright and against the seats at all times.**

- **Do not allow anyone to lean against the door when the vehicle is in use, since the side airbag and curtain shield airbag could inflate with considerable speed and force. Otherwise, he/she may be killed or seriously injured. Special care should be taken especially when you have a small child in the vehicle.**
- **Sit up straight and well back in the seat, distributing your weight evenly in the seat. Do not apply excessive weight to the outer side of the seats with a side airbag, and to the front pillar, rear pillar and roof side rail with a curtain shield airbag.**

- **Do not allow anyone to get his/her head closer to the area where the side airbag and curtain shield airbag inflate, since these airbags could inflate with considerable speed and force. Otherwise, he/she may be killed or seriously injured. Special care should be taken especially when you have a small child in the vehicle.**

- **Do not allow anyone to kneel on the passenger seat, facing the passenger's side door, since the side airbag and curtain shield airbag could inflate with considerable speed and force. Otherwise, he/she may be killed or seriously injured. Special care should be taken especially when you have a small child in the vehicle.**

- **Do not allow anyone to get his/her head or hands out of windows since the curtain shield airbags could inflate with considerable speed and force. Otherwise, he/she may be killed or seriously injured. Special care should be taken especially when you have a small child in the vehicle.**

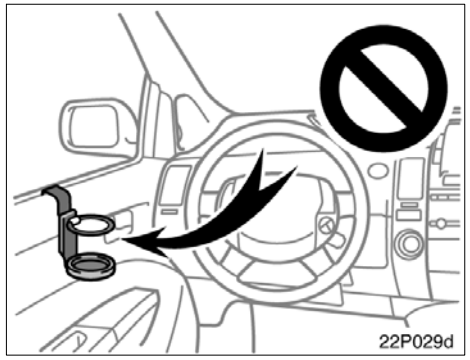

- **Do not attach a cup holder or any other device or object on or around the door. When the side airbag inflates, the cup holder or any other device or object will be thrown with great force or the side airbag may not activate correctly, resulting in death or serious injury. Likewise, the driver and front passenger should not hold objects in their arms or on their knees.**

- **Do not attach a microphone or any other device or object around the area where the curtain shield airbag activates such as on the windshield glass, side door glass, front and rear pillars, roof side rail and assist grips. When the curtain shield airbag inflates, the microphone or other device or object will be thrown away with great force or the curtain shield airbag may not activate correctly, resulting in death or serious injury.**

- **Do not hook a hanger, heavy or sharp pointed objects on the coat hook. If the curtain shield airbag inflates, those items will be thrown away with great force or the curtain shield airbag may not activate correctly, resulting in death or serious injury. When you hang clothes, hang them on the coat hook directly.**
- **Do not use seat accessories which cover the parts where the side airbags inflate. Such accessories may prevent the side airbags from activating correctly, causing death or serious injury.**
- **Do not modify or replace the seats or upholstery of the seats with side airbags. Such changes may prevent the side airbag system from activating correctly, disable the system or cause the side airbags to inflate accidentally, resulting in death or serious injury.**

- **Do not disassemble or repair the front and rear pillars and roof side rail containing the curtain shield airbags. Such changes may disable the system or cause the curtain shield airbags to inflate accidentally, resulting in death or serious injury.**

Failure to follow these instructions can result in death or serious injury. Consult your Toyota dealer about any repair and modification.

If you wish to modify your vehicle for a person with a physical disability, consult your Toyota dealer. It may dangerously interfere with the SRS side airbags and curtain shield airbags operation.

NOTICE

Do not perform any of the following changes without consulting your Toyota dealer. Such changes can interfere with proper operation of the SRS side airbag and curtain shield airbag system in some cases.

- ***Installation of electronic devices such as a mobile two-way radio, cassette tape player or compact disc player***
- ***Modification of the suspension system***
- ***Modification of the side structure of the passenger compartment***
- ***Repairs made on or near the console or front seat***

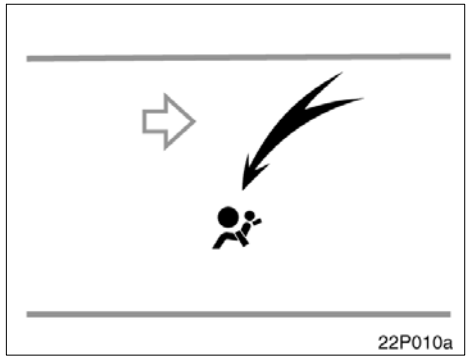

This indicator comes on when the "IG-ON" mode is enabled. It goes off after about 6 seconds. This means the SRS side airbags and curtain shield airbags are operating properly.

The warning light system monitors the airbag sensor assembly, front airbag sensors, side and curtain shield airbag sensors, curtain shield airbag sensors, driver's seat position sensor, driver's seat belt buckle switch, front passenger's seat belt buckle switch, seat belt pretensioner assemblies, interconnecting wiring and power sources. (For details, see "Service reminder indicators and warning buzzers" on page 125.)

If any of the following conditions occurs, this indicates a malfunction of the airbags or seat belt pretensioners. Contact your Toyota dealer as soon as possible.

- The light does not come on when the "IG-ON" mode is enabled or remains on for more than 6 seconds.
- The light comes on while driving.

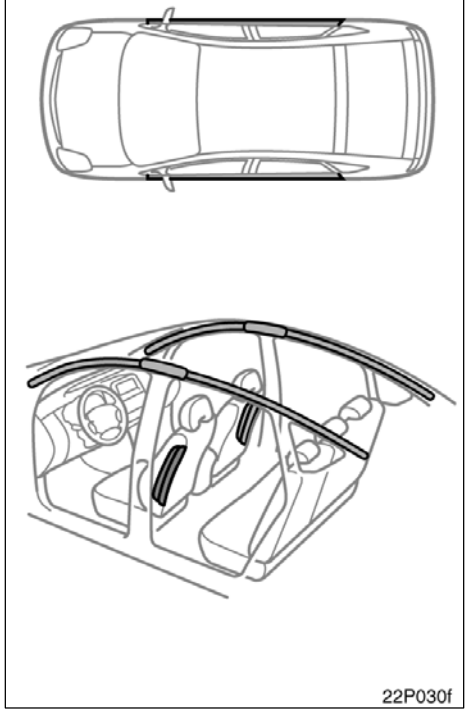

In the following cases, contact your Toyota dealer as soon as possible:

- Any of the SRS side airbags and curtain shield airbags have been inflated.
- The portion of the doors (shaded in the illustration) were involved in an accident that was not severe enough to cause the SRS side airbags and curtain shield airbags to inflate.
- The surface of the seats with the side airbag (shaded in the illustration) is scratched, cracked, or otherwise damaged.
- The portion of the front pillars, rear pillars or roof side rail garnishes (padding) containing the curtain shield airbags inside (shaded in the illustration) is scratched, cracked, or otherwise damaged.

NOTICE
Do not disconnect the battery cables before contacting your Toyota dealer.

—Front passenger occupant classification system

Your vehicle is equipped with a front passenger occupant classification system. This system detects the conditions 1. through 4. in the table on page 84 and based on these conditions activates or deactivates the following systems;

- Front passenger airbag
- Front passenger's seat belt pretensioner

The system monitors the weight and load on the front passenger seat, and the seat belt buckle switch to determine conditions 1. through 4.

In order for the system to detect the conditions correctly, do not do any of the following:

- Apply a heavy load to the front passenger seat.
- Attach a commercial seatback table, etc. to the front passenger seat seatback.
- Put weight on the front passenger seat by putting your hands or feet on the seatback from the rear passenger seat.

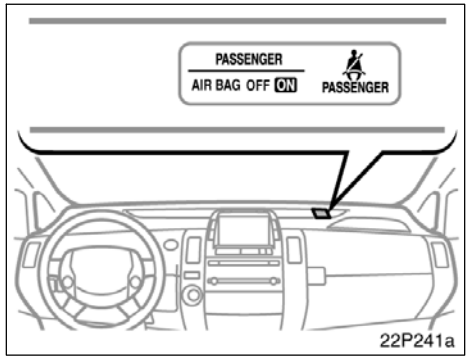

The front passenger occupant classification indicator light indicates the actuation of the front passenger airbag and front passenger's seat belt pretensioner.

The indicator light will indicate "OFF" when the ignition key is turned to the "ON" position with the condition 2. in the table shown below.

If the front passenger occupant classification system determines that a person of adult size sits in the front passenger seat but the "OFF" indicator is illuminated, one of the following is likely to have occurred:

- A rear passenger lifts the front passenger seat cushion with their legs.
- Objects are placed under the front passenger seat.
- The front passenger seatback is in contact with the rear seat.

To ensure the system correctly detects an adult sitting in the front passenger seat, make sure the above do not occur.

Make sure that the "ON" indicator is illuminated when an adult is seated in the front passenger seat. If the "OFF" indicator is illuminated, ask the passenger to sit up straight, well back in the seat, and with the seat belt worn correctly. If the "OFF" indicator still remains illuminated, either ask the passenger to move to the rear seat, or if that is not possible, move the front passenger seat fully rearward.

The front passenger occupant classification indicator light will indicate "ON" and "OFF" when the "IG–ON" mode is enabled. After about 4 seconds, it will go off. After that, the front passenger occupant classification system operates and judges whether to indicate "ON" or "OFF".

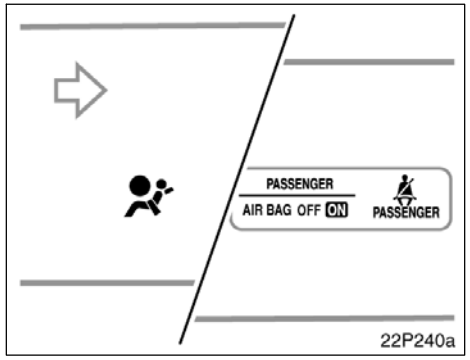

The SRS warning light will come on and front passenger occupant classification indicator light will indicate "OFF" if there is a malfunction in the front passenger occupant classification system.

Condition and operation in the front passenger occupant classification system

Condition detected by the front passenger occupant classification system	Indicator/ warning light			Devices			
	Front passenger occupant classification indicator light	SRS warning light	Front passenger's seat belt reminder light	Front passenger airbag	Side airbag on the front passenger seat	Curtain shield airbag in the front passenger side	Front passenger's seat belt pretensioner
1. Adult*1	"ON"	Off	Flashing*4	Activated			
2. Child*2 or child restraint system*3	"OFF"	Off	Flashing*4	Deactivated		Activated	Activated
3. Unoccupied	Not illuminated	Off	Off	Deactivated			Deactivated
4. There is a malfunction in the system	"OFF"	On	Off	Deactivated			Activated

*1: The system judges a person of adult size as an adult. When a smaller adult sits in the front passenger seat, the system may recognize him/her as a child depending on his/her physique and posture.

*2: When a larger child who has outgrown a child restraint system sits in the front passenger seat, the system may recognize him/her as an adult depending on his/her physique or posture.

*3: Never install a rear–facing child restraint system on the front passenger seat. A forward–facing child restraint system should only be installed on the front passenger seat when it is unavoidable. (See "Child restraint" on page 86 as for installing the child restraint system.)

*4: When the front passenger does not wear a seat belt.

⚠ CAUTION

To avoid potential death or serious injury when the front passenger occupant classification system does not detect the conditions correctly, observe the following:

- Make sure the front passenger occupant classification indicator light indicates “ON” when using the seat belt extender for the front passenger seat. If the indicator light indicates “OFF”, disconnect the extender tongue from the seat belt buckle, then reconnect the seat belt. Reconnect the seat belt extender after making sure the indicator light indicates “ON”. If you use the seat belt extender while the indicator light indicates “OFF”, the front passenger airbag may not activate correctly, which could cause death or serious injury in the event of collision.
- Do not recline the front passenger seatback so far that it touches a rear seat. This may cause the “OFF” indicator to be illuminated, which indicates that the passenger’s airbags will not deploy in the event of a severe accident. If the seatback touches the rear seat, return the seatback to a position where it does not touches the rear seat.

  Keep the front passenger seatback as upright as possible when the vehicle is moving. Reclining the seatback excessively may lessen the effectiveness of the seat belt system.
- If an adult sits in the front passenger seat, the occupant classification indicator light should indicate “ON”. If the “OFF” indicator is illuminated, ask the passenger to sit up straight, well back in the seat, feet on the floor, and with the seat belt worn correctly. If the “OFF” indicator still remains illuminated, either ask the passenger to move to the rear seat, or if that is not possible, move the front passenger seat fully rearward.
- Wear the seat belt properly.
- Make sure the front passenger’s seat belt tab has not been left inserted into the buckle before someone sits in the front passenger seat.
- Do not apply a heavy load to the front passenger seat.
- Do not put weight on the front passenger seat by putting your hands or feet on the front passenger seat seatback from the rear passenger seat.
- Do not let a rear passenger lift the front passenger seat with their feet or press on the seatback with their legs.
- Do not put objects under the front passenger seat.
- Child restraint systems installed on the rear seat should not contact the front seatbacks.

- **When it is unavoidable to install the forward–facing child restraint system on the front passenger seat, install the child restraint system on the front passenger seat in the proper order. (As for the installation order, see "—Installation with 3–point type seat belt" on page 89.)**
- **Do not remove the front seats.**
- **Do not kick the front passenger seat or subject it to severe impact. Otherwise, the SRS warning light may come on to indicate a malfunction of the detection system. In this case, contact your Toyota dealer immediately.**

The front passenger occupant classification indicator light may indicate "ON" (the front passenger airbag may deploy) even if observing the above cautions, when a child sits in, or a forward–facing child restraint system is installed on the front passenger seat. Refer to all the cautions in "SRS driver and front passenger airbags" and "SRS side airbags and curtain shield airbags" on pages 66 and 74, and "Child restraint" described below.

Child restraint—
—Child restraint precautions

Toyota strongly urges the use of appropriate child restraint systems for children.

The laws of all 50 states in the U.S.A. and Canada now require the use of a child restraint system.

Your vehicle conforms to SAEJ1819.

If a child is too large for a child restraint system, the child should sit in the rear seat and must be restrained using the vehicle's seat belt. See "Seat belts" on page 58 for details.

⚠ CAUTION

- **For effective protection in automobile accidents and sudden stops, a child must be properly restrained, using a seat belt or child restraint system depending on the age and size of the child. Holding a child in your arms is not a substitute for a child restraint system. In an accident, the child can be crushed against the windshield, or between you and the vehicle's interior.**

- **Toyota strongly urges use of a proper child restraint system which conforms to the size of the child, installed on the rear seat. According to accident statistics, the child is safer when properly restrained in the rear seat than in the front seat.**
- **Never install a rear–facing child restraint system on the front passenger seat even if the front passenger occupant classification indicator light indicates "OFF". In the event of an accident, the force of the rapid inflation of the front passenger airbag can cause death or serious injury to the child if the rear–facing child restraint system is installed on the front passenger seat.**

- **A forward–facing child restraint system should be allowed to be installed on the front passenger seat only when it is unavoidable. Always move the seat as far back as possible, because the front passenger airbag could inflate with considerable speed and force. Otherwise, the child may be killed or seriously injured.**
- **On vehicles with side airbags and curtain shield airbags, do not allow the child to lean his/her head or any part of his/her body against the door or the area of the seat, front or rear pillar or roof side rail from which the side airbags or curtain shield airbags deploy even if the child is seated in the child restraint system. It is dangerous if the side airbag and curtain shield airbag inflate, and the impact could cause death or serious injury to the child.**

- **Do not use the seat belt extender when installing a child restraint system on the front or rear passenger seat. If installing a child restraint system with the seat belt extender connected to the seat belt, the seat belt will not securely hold the child restraint system, which could cause death or serious injury to the child or other passengers in the event of collision.**
- **Make sure you have complied with all installation instructions provided by the child restraint manufacturer and that the system is properly secured. If it is not secured properly, it may cause death or serious injury to the child in the event of a sudden stop or accident.**

—Child restraint system

A child restraint system for a small child or baby must itself be properly restrained on the seat with the lap portion of the lap/shoulder belt. You must carefully consult the manufacturer's instructions which accompany child restraint system.

To provide proper restraint, use a child restraint system following the manufacturer's instructions about the appropriate age and size of the child for the child restraint system.

Install the child restraint system correctly following the instructions provided by its manufacturer. General directions are also provided under the following instructions.

The child restraint system should be installed on the rear seat. According to accident statistics, the child is safer when properly restrained in the rear seat than in the front seat.

When not using the child restraint system, keep it secured with the seat belt or place it somewhere other than the passenger compartment. This will prevent it from injuring passengers in the event of a sudden stop or accident.

—Types of child restraint system

Child restraint systems are classified into the following 3 types depending on the child's age and size.

(A) Infant seat
(B) Convertible seat
(C) Booster seat

Install the child restraint system following the instructions provided by its manufacturer.

Your vehicle has anchor brackets for securing the top strap of a child restraint system.

For instructions about how to use the anchor bracket, see "—Using a top strap" on page 98.

The child restraint lower anchorages approved for your vehicle may also be used. See "—Installation with child restraint lower anchorages" on page 100.

(A) Infant seat

(C) Booster seat

(B) Convertible seat

—Installation with 3–point type seat belt

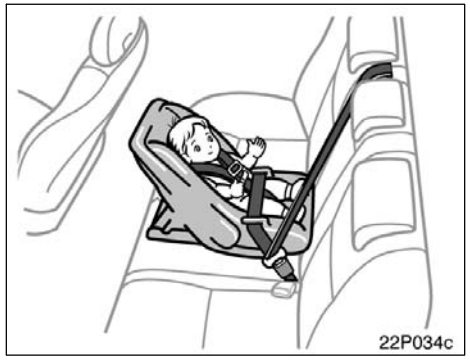

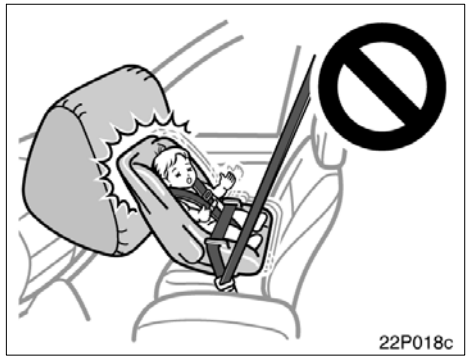

(A) INFANT SEAT INSTALLATION

An infant seat must be used in rear–facing position only.

⚠ CAUTION

- **Never install a rear–facing child restraint system on the front passenger seat even if the front passenger occupant classification indicator light indicates "OFF". In the event of an accident, the force of the rapid inflation of the front passenger airbag can cause death or serious injury to the child if the rear–facing child restraint system is installed on the front passenger seat.**

- **Do not install a child restraint system on the rear seat if it interferes with the lock mechanism of the front seats. Otherwise, the child or front seat occupant(s) may be killed or seriously injured in case of sudden braking or a collision.**
- **If the driver's seat position does not allow sufficient space for safe installation, install the child restraint system on the rear right seat.**

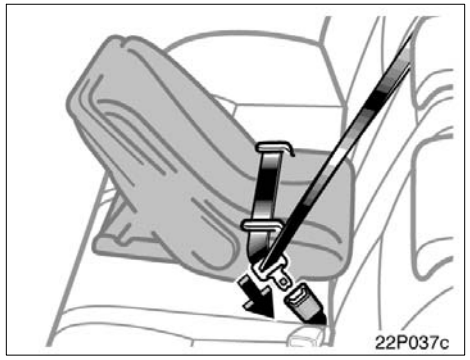

1. Run the lap and shoulder belt through or around the infant seat following the instructions provided by its manufacturer and insert the tab into the buckle taking care not to twist the belt. Keep the lap portion of the belt tight.

⚠ CAUTION

- **After inserting the tab, make sure the tab and buckle are locked and that the lap and shoulder portions of the belt are not twisted.**
- **Do not insert coins, clips, etc. in the buckle as this may prevent you from properly latching the tab and buckle.**
- **If the seat belt does not function normally, it cannot protect your child from death or serious injury. Contact your Toyota dealer immediately. Do not install the child restraint system on the seat until the seat belt is fixed.**

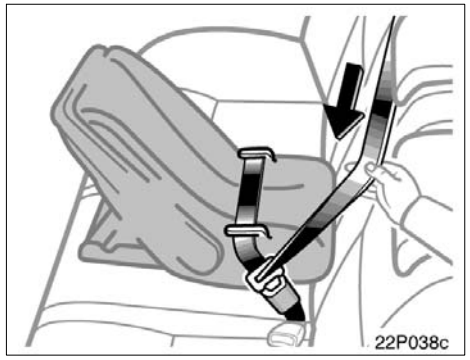

2. Fully extend the shoulder belt to put it in the lock mode. When the belt is then retracted even slightly, it cannot be extended.

To hold the infant seat securely, make sure the belt is in the lock mode before letting the belt retract.

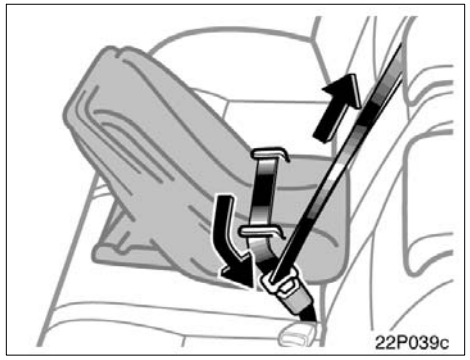

3. While pressing the infant seat firmly against the seat cushion and seatback, let the shoulder belt retract as far as it will go to hold the infant seat securely.

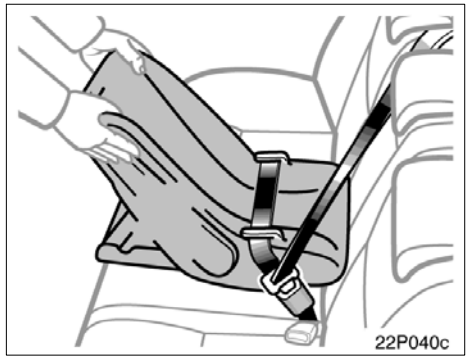

⚠ CAUTION

Push and pull the child restraint system in different directions to be sure it is secure. Follow all the installation instructions provided by its manufacturer.

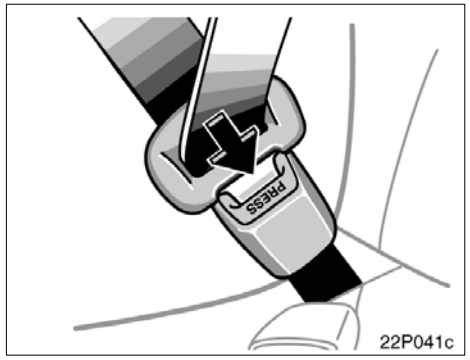

4. To remove the infant seat, press the buckle release button and allow the belt to retract completely. The belt will move freely again and be ready to work for an adult or older child passenger.

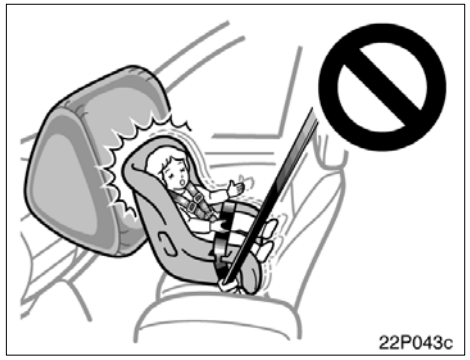

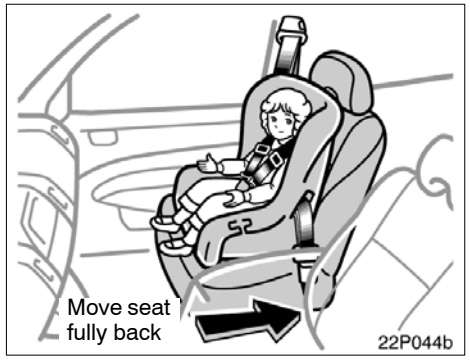

(B) CONVERTIBLE SEAT INSTALLATION

A convertible seat must be used in forward–facing or rear–facing position depending on the age and size of the child. When installing, follow the manufacturer's instructions about the applicable age and size of the child as well as directions for installing the child restraint system.

⚠ CAUTION

- **Never install a rear–facing child restraint system on the front passenger seat even if the front passenger occupant classification indicator light indicates "OFF". In the event of an accident, the force of the rapid inflation of the front passenger airbag can cause death or serious injury to the child if the rear–facing child restraint system is installed on the front passenger seat.**

- **A forward–facing child restraint system should be allowed to be installed on the front passenger seat only when it is unavoidable. Always move the seat as far back as possible even if the front passenger occupant classification indicator light indicates "OFF", because the front passenger airbag could inflate with considerable speed and force. Otherwise, the child may be killed or seriously injured.**

- **On vehicles with side airbags and curtain shield airbags, do not allow the child to lean his/her head or any part of his/her body against the door or the area of the seat, front or rear pillar or roof side rail from which the side airbags or curtain shield airbags deploy even if the child is seated in the child restraint system. It is dangerous if the side airbag and curtain shield airbag inflate, and the impact could cause death or serious injury to the child.**

- **Do not install a child restraint system on the rear seat if it interferes with the lock mechanism of the front seats. Otherwise, the child or front seat occupant(s) may be killed or seriously injured in case of sudden braking or a collision.**
- **If the driver's seat position does not allow sufficient space for safe installation, install the child restraint system on the rear right seat.**

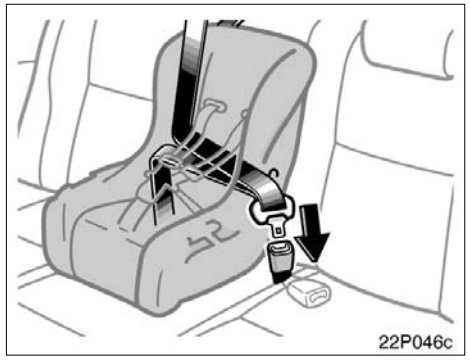

1. Run the lap and shoulder belt through or around the convertible seat following the instructions provided by its manufacturer and insert the tab into the buckle taking care not to twist the belt. Keep the lap portion of the belt tight.

⚠ CAUTION

- **After inserting the tab, make sure the tab and buckle are locked and that the lap and shoulder portions of the belt are not twisted.**
- **Do not insert coins, clips, etc. in the buckle as this may prevent you from properly latching the tab and buckle.**
- **If the seat belt does not function normally, it cannot protect your child from death or serious injury. Contact your Toyota dealer immediately. Do not install the child restraint system on the seat until the seat belt is fixed.**

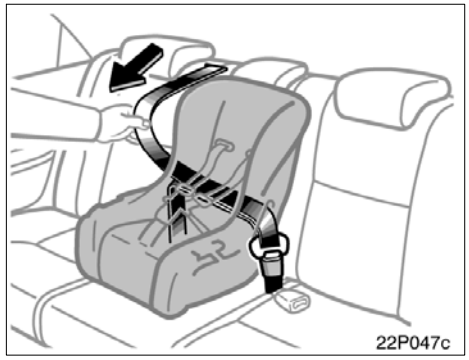

2. Fully extend the shoulder belt to put it in the lock mode. When the belt is then retracted even slightly, it cannot be extended.

To hold the convertible seat securely, make sure the belt is in the lock mode before letting the belt retract.

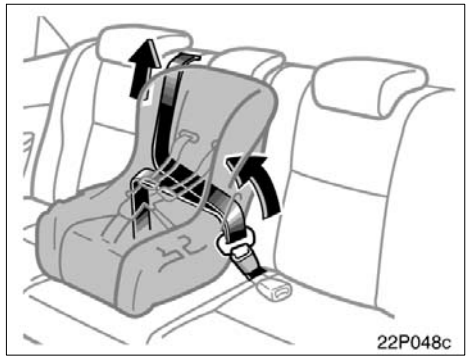

3. While pressing the convertible seat firmly against the seat cushion and seatback, let the shoulder belt retract as far as it will go to hold the convertible seat securely.

⚠ CAUTION

Push and pull the child restraint system in different directions to be sure it is secure. Follow all the installation instructions provided by its manufacturer.

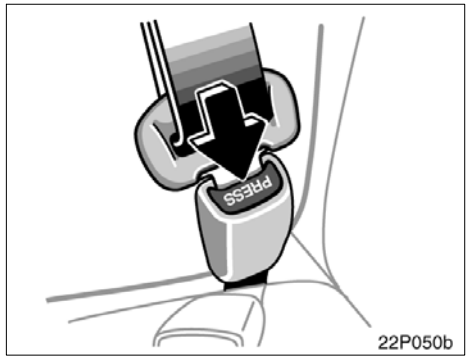

4. To remove the convertible seat, press the buckle release button and allow the belt to retract completely. The belt will move freely again and be ready to work for an adult or older child passenger.

(C) BOOSTER SEAT INSTALLATION

A booster seat must be used in forward–facing position only.

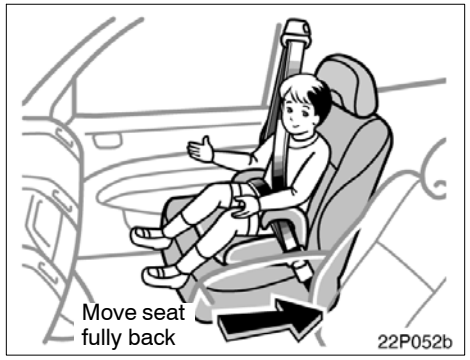

⚠ CAUTION

- **A forward-facing child restraint system should be allowed to be installed on the front passenger seat only when it is unavoidable. Always move the seat as far back as possible even if the front passenger occupant classification indicator light indicates "OFF", because the front passenger airbag could inflate with considerable speed and force. Otherwise, the child may be killed or seriously injured.**

- **On vehicles with side airbags and curtain shield airbags, do not allow the child to lean his/her head or any part of his/her body against the door or the area of the seat, front or rear pillar or roof side rail from which the side airbags or curtain shield airbags deploy even if the child is seated in the child restraint system. It is dangerous if the side airbag and curtain shield airbag inflate, and the impact could cause death or serious injury to the child.**

1. Sit the child on a booster seat. Run the lap and shoulder belt through or around the booster seat and across the child following the instructions provided by its manufacturer and insert the tab into the buckle taking care not to twist the belt.

Make sure the shoulder belt is correctly across the child's shoulder and that the lap belt is positioned as low as possible on the child's hips. See "Seat belts" on page 58 for details.

⚠ CAUTION

- **Always make sure the shoulder belt is positioned across the center of child's shoulder. The belt should be kept away from child's neck, but not falling off child's shoulder. Otherwise, the child may be killed or seriously injured in case of sudden braking or a collision.**
- **Both high–positioned lap belts and loose–fitting belts could cause death or serious injuries due to sliding under the lap belt during a collision or other unintended event. Keep the lap belt positioned as low on a child's hips as possible.**
- **For child's safety, do not place the shoulder belt under child's arm.**
- **After inserting the tab, make sure the tab and buckle are locked and that the lap and shoulder portions of the belt are not twisted.**
- **Do not insert coins, clips, etc. in the buckle as this may prevent you from properly latching the tab and buckle.**

- **If the seat belt does not function normally, it cannot protect your child from death or serious injury. Contact your Toyota dealer immediately. Do not install the child restraint system on the seat until the seat belt is fixed.**

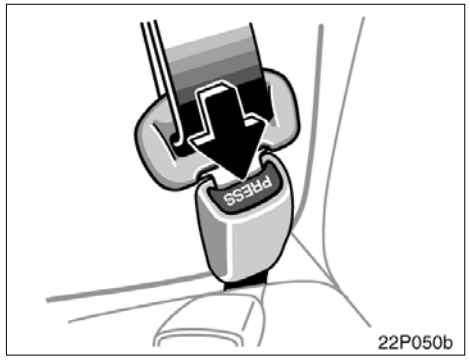

2. To remove the booster seat, press the buckle release button and allow the belt to retract.

—Using a top strap

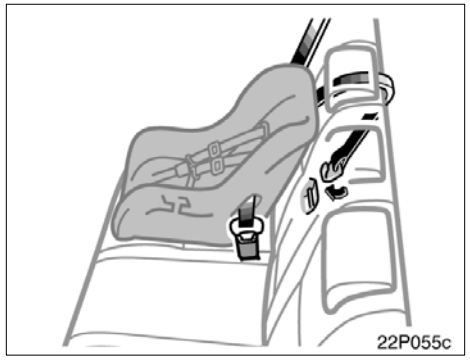

Follow the procedure below for a child restraint system that requires the use of a top strap.

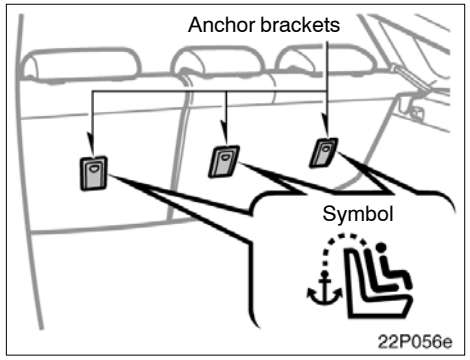

Use the anchor brackets on the back of the rear seatback to attach the top strap.

Anchor brackets are installed for each rear seating position.

This symbol indicates the location of the anchor brackets.

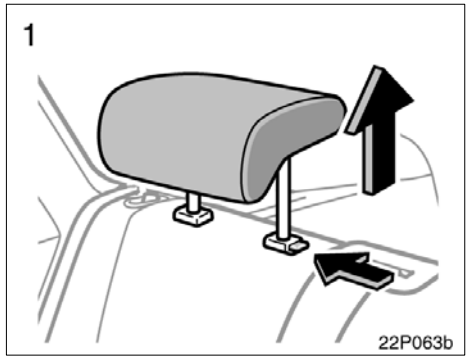

TO USE THE ANCHOR BRACKET:

1. **Remove the luggage cover (see "Luggage cover" on page 314.) and raise the head restraint to the uppermost lock position.**

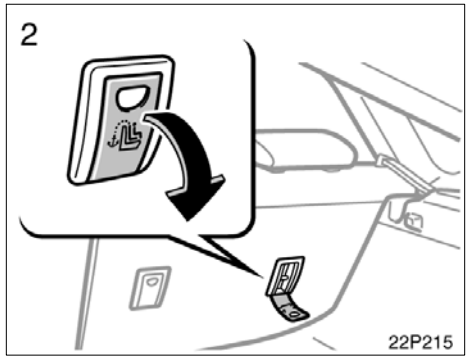

2. **Open the cover of the anchor bracket.**

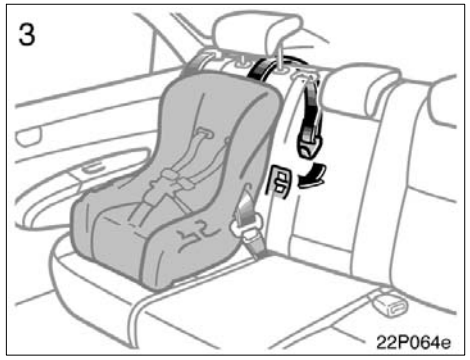

3. **Fix the child restraint system with the seat belt.**

   Latch the hook onto the anchor bracket and tighten the top strap.

For instructions to install the child restraint system, see “Child restraint” on page 86.

⚠ CAUTION

Make sure the top strap is securely latched, and check that the child restraint system is secure by pushing and pulling it in different directions. Follow all the installation instructions provided by its manufacturer.

—Installation with child restraint lower anchorages

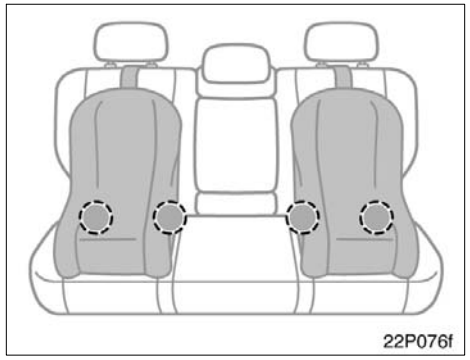

The lower anchorages for the child restraint system interfaced with the FMVSS225 or CMVSS210.2 specification are installed in the rear seat.

The anchorages are installed in the clearance between the seat cushion and seatback of both outside rear seats.

Child restraint system interfaced with the FMVSS213 or CMVSS213 specification can be fixed with these anchorages. In this case, it is not necessary to fix the child restraint system with a seat belt on the vehicle.

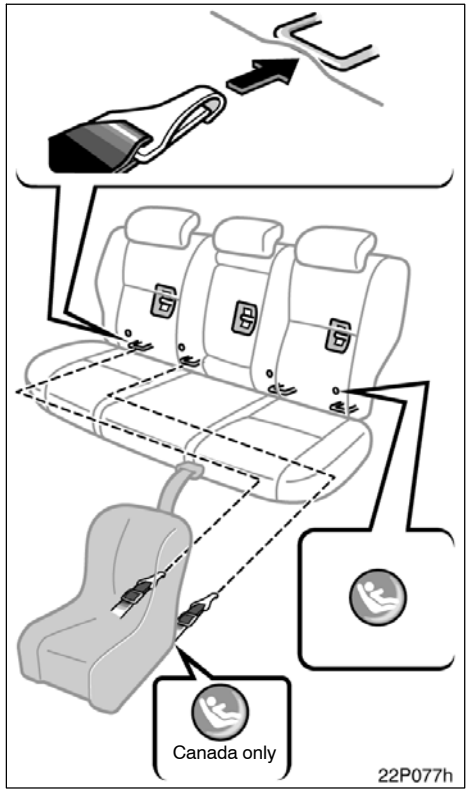

Type A

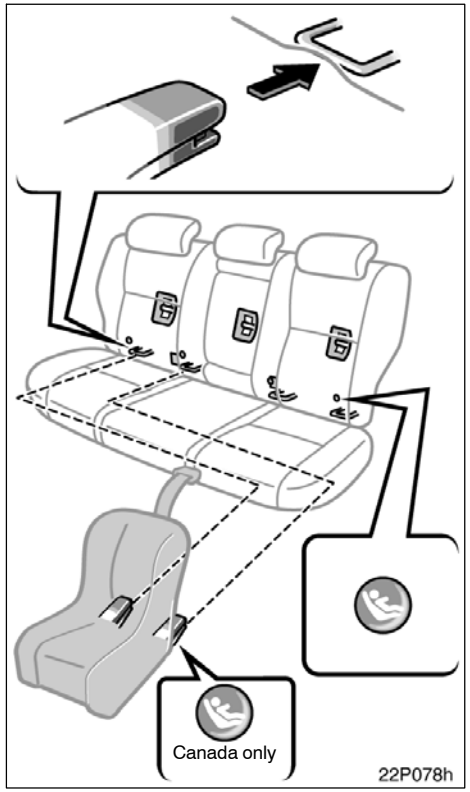

Type B

CHILD RESTRAINT SYSTEM INSTALLATION

1. **Widen the gap between the seat cushion and seatback slightly and confirm the position of the lower anchorages below the symbol in the seatback.**
2. **Type A—Latch the hooks of lower straps onto the anchorages and tighten the lower straps.**

   Type B—Latch the buckles onto the anchorages.

For owners in Canada

The symbol on a child restraint system indicates the presence of a lower connector system.

If your child restraint system has a top strap, it should be anchored. (For the installation of the top strap, see "—Using a top strap" on page 98.)

For installation details, refer to the instruction manual equipped with each product.

⚠ CAUTION

- **When using the lower anchorages for the child restraint system, be sure that there are no irregular objects around the anchorages or that the seat belt is not caught.**
- **Push and pull the child restraint system in different directions to be sure it is secure. Follow all the installation instructions provided by its manufacturer.**
- **Do not install a child restraint system on the rear seat if it interferes with the lock mechanism of the front seats. Otherwise, the child or front seat occupant(s) may be killed or seriously injured in case of sudden braking or a collision.**

SECTION 2 – 3

OPERATION OF INSTRUMENTS AND CONTROLS

Steering wheel and Mirrors

Tilt steering wheel 104
Outside rear view mirrorss 104
Anti–glare inside rear view mirror 106
Auto anti–glare inside rear view mirror 107
Vanity mirrors 108

Tilt steering wheel

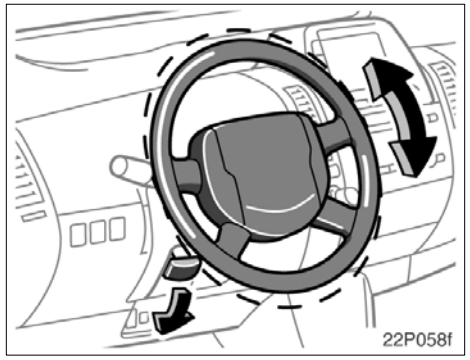

To change the steering wheel angle, hold the steering wheel, push down the lock release lever, tilt the steering wheel to the desired angle and push the lever up to lock the steering wheel in position.

⚠ CAUTION

- **Do not adjust the steering wheel while the vehicle is moving. Doing so may cause the driver to mishandle the vehicle and an accident may occur resulting in death or serious injuries.**
- **After adjusting the steering wheel, try moving it up and down to make sure it is locked in position.**

When you move the steering wheel, an electrical motor noise may be heard. This is the power steering motor noise, and is not a malfunction.

Outside rear view mirrors—

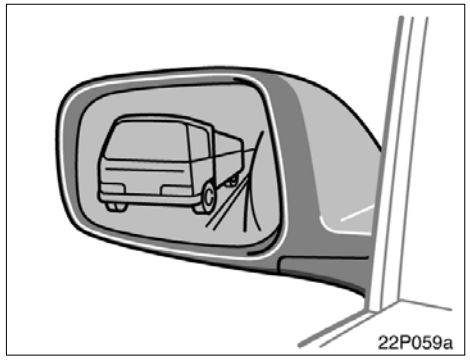

Adjust the mirror so that you can just see the side of your vehicle in the mirror.

Be careful when judging the size or distance of any object seen in the outside rear view mirror on the passenger's side because it is a convex mirror. Any object seen in a convex mirror will look smaller and farther away than when seen in a flat mirror.

When you touch the rear window defogger switch, the heater panels in the outside rear view mirrors will quickly clear the mirror surface. (See "Rear window and outside rear view mirror defoggers" on page 118.)

CAUTION

- **Do not adjust the mirror while the vehicle is moving. Doing so may cause the driver to mishandle the vehicle and an accident may occur resulting in death or serious injuries.**
- **Since the mirror surfaces can get hot, keep your hands off them when the defogger switch is on.**

—Power rear view mirror control

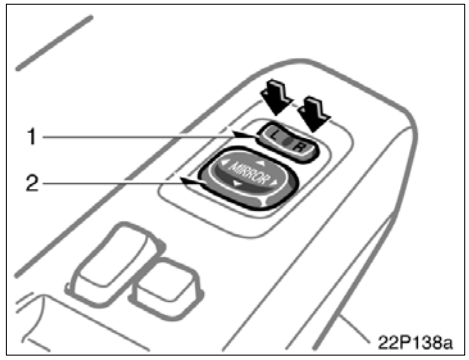

To adjust a mirror, use the switches.

1. Master switch—To select the mirror to be adjusted
   Push the switch to “L” (left) or “R” (right).
2. Control switch—To move the mirror
   Push the switch in the desired direction.

The mirrors can be adjusted when the hybrid system is in “ACC” or “IG–ON” mode.

NOTICE

If ice should jam the mirror, do not operate the control or scrape the mirror face. Use a spray de–icer to free the mirror.

—Folding rear view mirrors

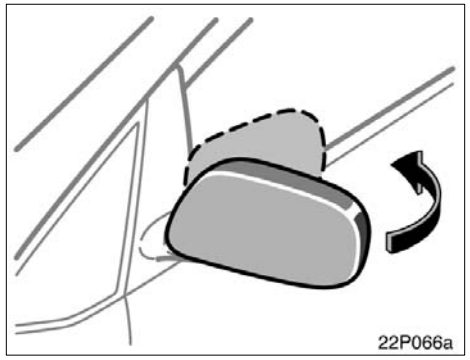

The rear view mirrors can be folded backward for parking in compact areas.

To fold the rear view mirror, push backward.

⚠ CAUTION

Do not drive with the mirrors folded backward. Both the driver and passenger side rear view mirrors must be extended and properly adjusted before driving.

Anti–glare inside rear view mirror

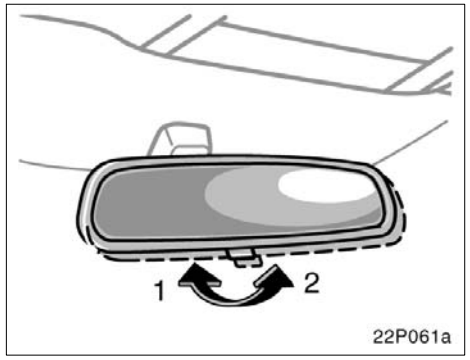

Adjust the mirror so that you can just see the rear of your vehicle in the mirror.

To reduce glare from headlights of the vehicle behind you during night driving, operate the lever on the lower edge of the mirror.

Daylight driving—Lever at position 1

The reflection in the mirror has greater clarity at this position.

Night driving—Lever at position 2

Remember that by reducing glare you also lose some rear view clarity.

⚠ CAUTION

Do not adjust the mirror while the vehicle is moving. Doing so may cause the driver to mishandle the vehicle and an accident may occur resulting in death or serious injuries.

Auto anti–glare inside rear view mirror

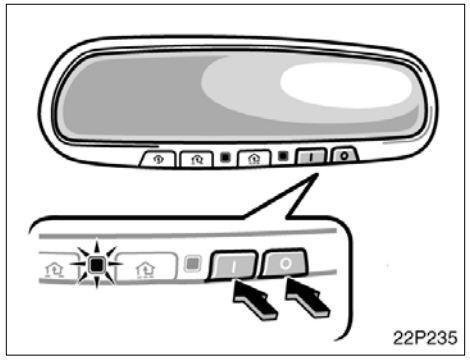

Adjust the mirror so that you can just see the rear of your vehicle in the mirror.

This mirror is equipped with auto anti–glare function. The function is designed to reduce glare from the headlights of the vehicle behind you during night driving.

When the hybrid system is in the “IG–ON” mode, the inside rear view mirror always turns on in the automatic function mode.

The green indicator illuminates to show you that the function is on.

In automatic function mode, if the mirror detects light from the headlights of the vehicle behind you, the mirror surface darkens slightly to reduce the reflected light.

To turn off the automatic function, push the “◯” switch.

To turn on the automatic function again, push the “ | ” switch.

Adjust it before driving so that the rear view is in the best condition.

When the inside air temperature is low, it may take a little longer for the mirror to darken in response to the detection of headlights.

⚠ CAUTION

Do not adjust the mirror while the vehicle is moving. Doing so may cause the driver to mishandle the vehicle and an accident may occur resulting in death or serious injuries.

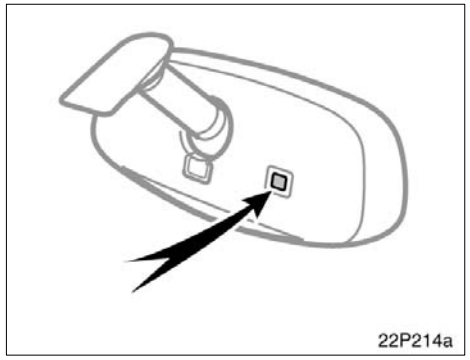

To ensure correct functioning of an anti–glare mirror sensor located on the back side of the mirror, do not touch or cover the sensor with your finger or a piece of cloth, etc.

Vanity mirrors

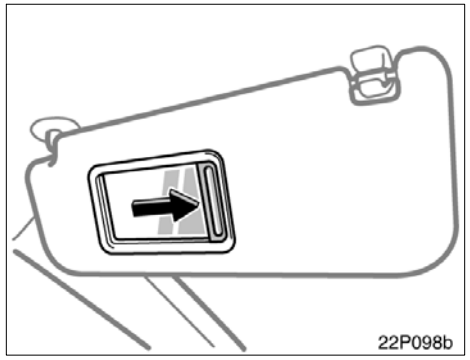

To use the vanity mirror, swing down the sun visor and slide the cover.

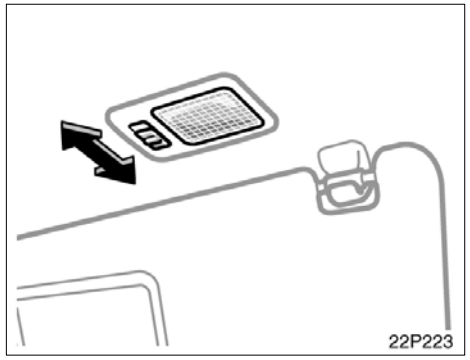

To turn on the vanity light, slide the switch.

The vanity light switch has the following positions:

“ON”—Turns the light on when you swing down the sun visor. However, if the visor has been slid out, the light may not come on.

“OFF”—Turns the light off.

SECTION 2 – 4

OPERATION OF INSTRUMENTS AND CONTROLS

Lights, Wipers and Defogger

Headlights and turn signals 110
Emergency flashers 114
Instrument panel light control 114
Front fog lights 115
Interior lights 115
Personal lights 116
Luggage compartment light 116
Key slot lights 116
Windshield wipers and washer 117
Rear window wiper and washer 117
Rear window and outside rear view mirror defoggers 118

Headlights and turn signals
(with automatic light control system)

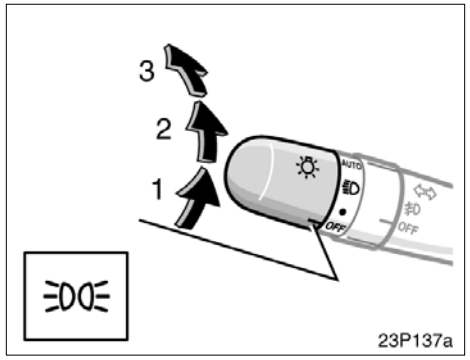

HEADLIGHTS

To turn on the following lights: Twist the headlight/turn signal lever knob.

Position 1—Parking, tail, license plate, side marker and instrument panel lights

Position 2—Headlights and all of the above

Position 3 (“AUTO”)—Headlights and/or all of the lights in position 1

They automatically turn on or off depending on the darkness of the surroundings.*

Manually twist the knob to the position 2 to turn on the headlights if they are needed immediately when entering a dark tunnel, parking structure, etc.

*NOTE: *The operating condition or sensitivity can be changed. Ask your Toyota dealer for details.*

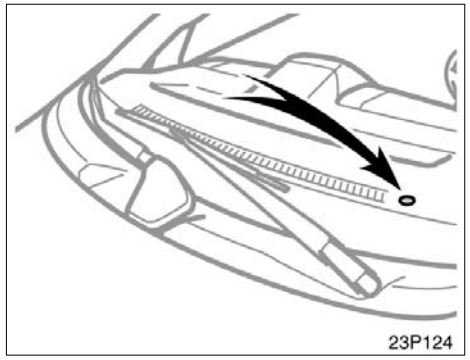

The automatic light control sensor is on the top of the driver’s side instrument panel.

Do not place anything on the instrument panel, and/or do not affix anything on the windshield to block this sensor.

Automatic light cut off system

The lights automatically turn off when the driver’s door is opened with the hybrid system off. To turn them on again, press the “POWER” switch twice from the off setting to select the “IG–ON” mode without depressing the brake pedal or actuate the headlight switch. If you are going to park for over one week, make sure the headlight switch is off.

When the headlight switch is turned to the first or second clickstop, the brightness of the instrument cluster will be reduced slightly unless the instrument panel light control dial is turned fully on.

NOTICE
To prevent the battery from being discharged, do not leave the switch on longer than necessary when the hybrid system is not running.

Daytime running light system

The headlights turn on at reduced intensity when the parking brake is released with the hybrid system started, even with the light switch in the “OFF” position.

To turn on the other exterior lights and instrument panel lights, twist the knob to the position 1.

To turn off the daytime running light system, twist the knob to the position 2 or position 3 with the headlights on or turn the hybrid system off.

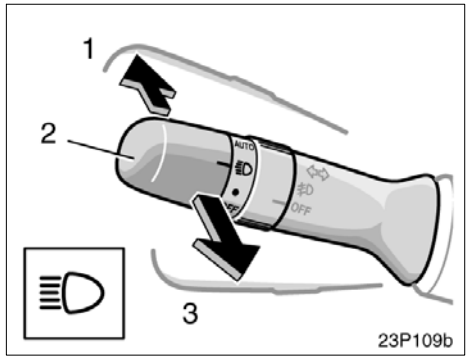

High–Low beams—For high beams, turn the headlights on and push the lever away from you (position 1). Pull the lever toward you (position 2) for low beams.

The headlight high beam indicator light (blue light) on the instrument panel will tell you that the high beams are on.

Flashing the high beam headlights (position 3)—Pull the lever all the way back. The high beam headlights turn off when you release the lever.

You can flash the high beam headlights even with the knob turned to “OFF”.

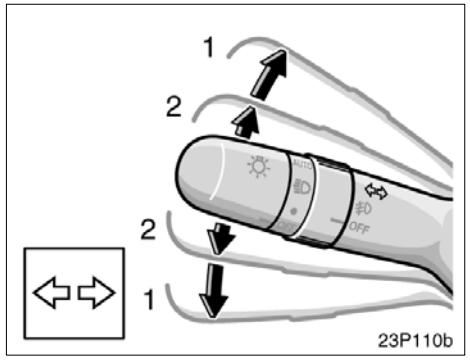

TURN SIGNALS

To signal a turn, push the headlight/turn signal lever up or down to position 1.

The hybrid system must be in the “IG–ON” mode.

The lever automatically returns after you make a turn, but you may have to return it by hand after you change lanes.

To signal a lane change, move the lever up or down to the pressure point (position 2) and hold it.

If the turn signal indicator lights (green lights) on the instrument panel flash faster than normal, a front or rear turn signal bulb is burned out. See “Replacing light bulbs—” on page 418.

Headlights and turn signals

(without automatic light control system)

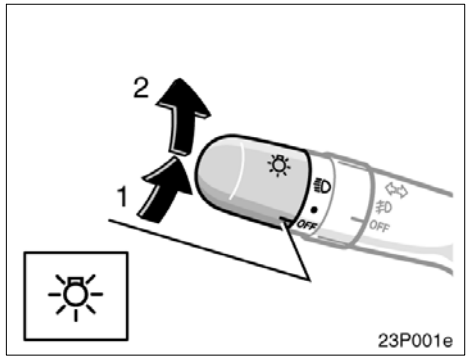

HEADLIGHTS

To turn on the following lights: Twist the headlight/turn signal lever knob.

Position 1—Parking, tail, license plate, side marker and instrument panel lights

Position 2—Headlights and all of the above

Automatic light cut off system

The lights automatically turn off when the driver’s door is opened with the hybrid system off. To turn them on again, press the “POWER” switch twice from the off setting to select the “IG–ON” mode without depressing the brake pedal or actuate the headlight switch. If you are going to park for over one week, make sure the headlight switch is off.

When the headlight switch is turned to the first or second clickstop, the brightness of the instrument cluster will be reduced slightly unless the instrument panel light control dial is turned fully on.

NOTICE
To prevent the battery from being discharged, do not leave the lights on longer than necessary when the hybrid system is not running.

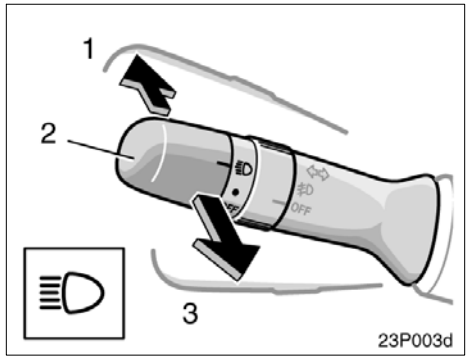

High–Low beams—For high beams, turn the headlights on and push the lever away from you (position 1). Pull the lever toward you (position 2) for low beams.

The headlight high beam indicator light (blue light) on the instrument panel will tell you that the high beams are on.

Flashing the high beam headlights (position 3)—Pull the lever all the way back. The high beam headlights turn off when you release the lever.

You can flash the high beam headlights even with the knob turned to “OFF”.

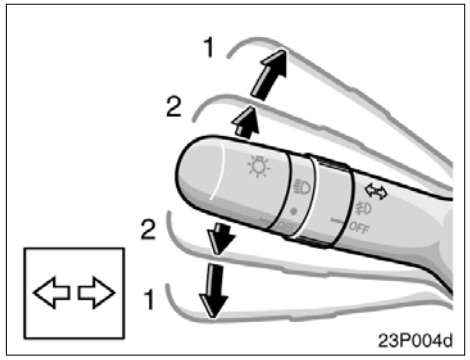

TURN SIGNALS

To signal a turn, push the headlight/turn signal lever up or down to position 1.

The hybrid system must be in the “IG–ON” mode.

The lever automatically returns after you make a turn, but you may have to return it by hand after you change lanes.

To signal a lane change, move the lever up or down to the pressure point (position 2) and hold it.

If the turn signal indicator lights (green lights) on the instrument panel flash faster than normal, a front or rear turn signal bulb is burned out. See “Replacing light bulbs—” on page 418.

Emergency flashers

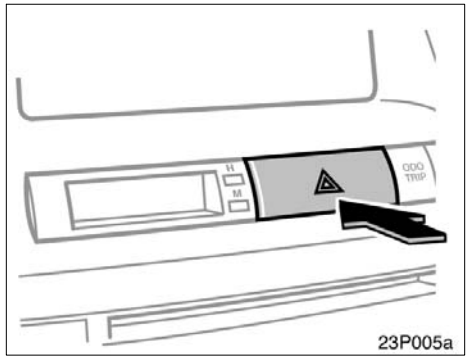

To turn on the emergency flashers, push the switch.

All the turn signal lights will flash. To turn them off, push the switch once again.

Turn on the emergency flashers to warn other drivers if your vehicle must be stopped where it might be a traffic hazard.

Always pull as far off the road as possible.

The turn signal light switch will not work when the emergency flashers are operating.

NOTICE

To prevent the battery from being discharged, do not leave the lights on longer than necessary when the hybrid system is not running.

Instrument panel light control

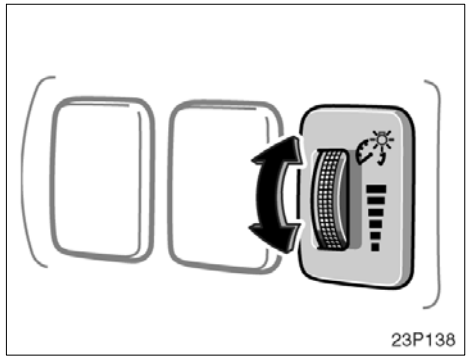

To adjust the brightness of the instrument panel lights, turn the dial.

When the headlight switch is turned to the first or second clickstop, the brightness of the instrument cluster will be reduced slightly unless the instrument panel light control dial is turned fully on.

Front fog lights (some models)

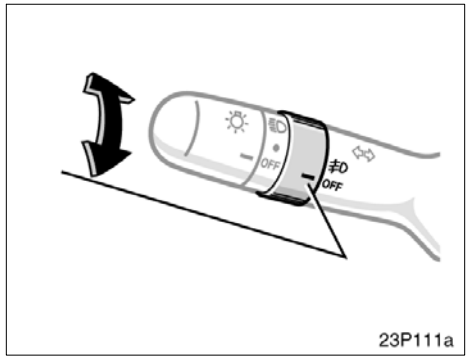

To turn on the fog lights, twist the band of the headlight switch lever to the position of the fog light. The fog lights come on only when the headlights are on low beam.

The band automatically returns to the "OFF" position after you release it.

Interior lights

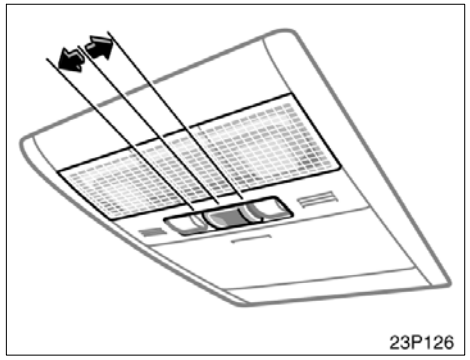

Front

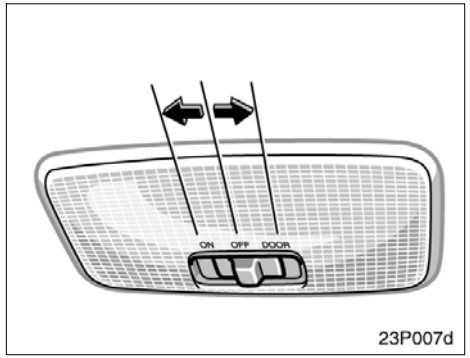

Rear

To turn on the interior light, slide the switch.

The interior light switch has the following positions:

"ON"—Keeps the light on all the time.

"OFF"—Turns the light off.

"DOOR"—Turns the light on when any door is opened. The light remains on for 15 seconds when all the doors are closed.

ILLUMINATED ENTRY SYSTEM

With the switch in the "DOOR" position, the light comes on when any of the doors is opened or when you get close to the front door, carrying the smart key. After all the doors are closed, the light remains on for about 15 seconds and then fades out.

However, in the following cases, the light goes off immediately.

- All the doors are closed when the hybrid system is in "ACC" or "IG–ON".
- All the doors are closed and locked.

When all the doors are unlocked, the light comes on for about 15 seconds and then fades out, even if the door is not opened.

Personal lights

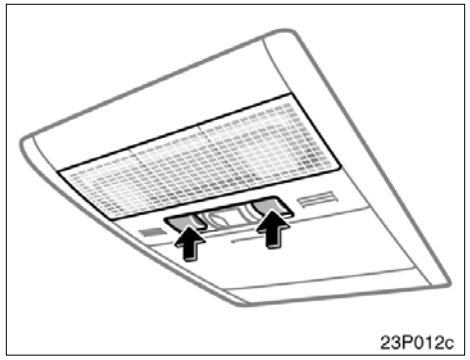

To turn on the personal light, push the switch. To turn it off, push the switch again.

Luggage compartment light

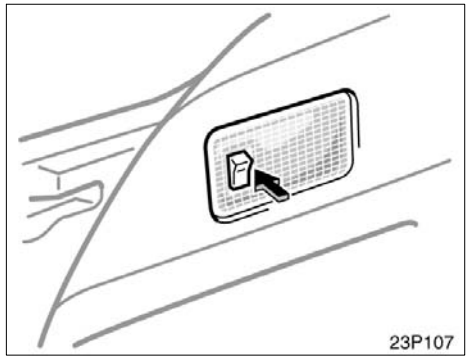

To turn on the luggage compartment light, push the switch upwards. To turn it off, push the switch downwards.

The light is located on the left side of the luggage compartment.

Even if you push the switch upwards, the light turns off automatically when you close the back door.

Key slot lights

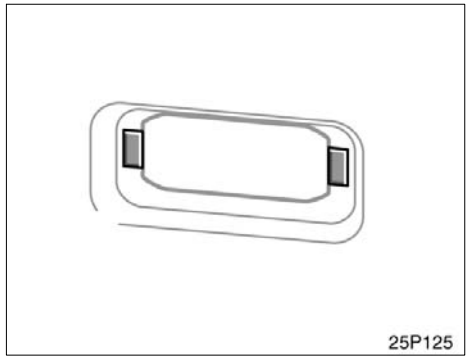

For easy access to the key slot, the key slot lights come on while the interior light is on.

Windshield wipers and washer

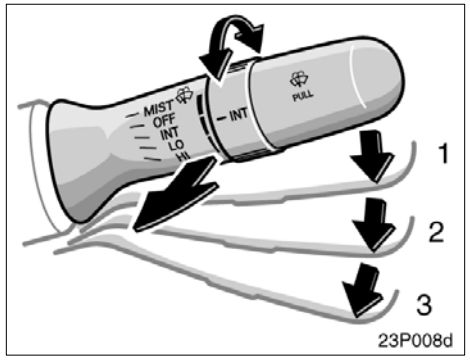

To turn on the windshield wipers, move the lever to the desired setting.

The hybrid system must be in the “IG–ON” mode.

Lever position	Speed setting
Position 1	Intermittent
Position 2	Slow
Position 3	Fast

For a single sweep of the windshield, push the lever up and release it.

Twist the interval adjuster upward to increase the wiping time interval between sweeps, and downward to decrease it.

The wiper lever must be in the “INT” position.

To squirt washer fluid, pull the lever toward you and release it.

If the windshield wipers are off, they will operate a couple of times after the washer squirts.

For instructions on adding washer fluid, see “Adding washer fluid” on page 418.

In freezing weather, warm the windshield with the defroster before using the washer. This will help prevent the washer fluid from freezing on your windshield, which can block your vision.

NOTICE
Do not operate the wipers if the windshield is dry. It may scratch the glass.

Rear window wiper and washer

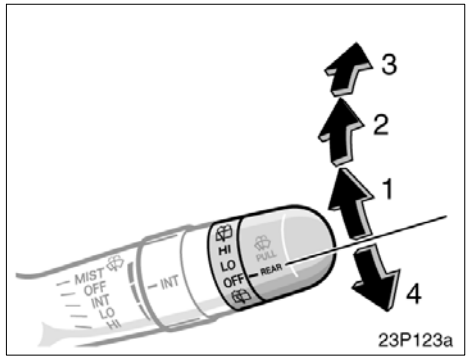

To turn on the rear window wiper, twist the lever knob upward.

The hybrid system must be in the “IG–ON” mode.

Lever position	Speed setting
Position 1	Intermittent
Position 2	Normal

To squirt washer fluid on the rear window, twist the knob upward or downward as far as it will go (position 3 or 4). The knob automatically returns from these positions after you release it. The rear window wiper operates while the washer squirts.

For instructions on adding washer fluid, see “Adding washer fluid” on page 418.

NOTICE
Do not operate the rear wiper if the rear window is dry. It may scratch the glass.

Rear window and outside rear view mirror defoggers

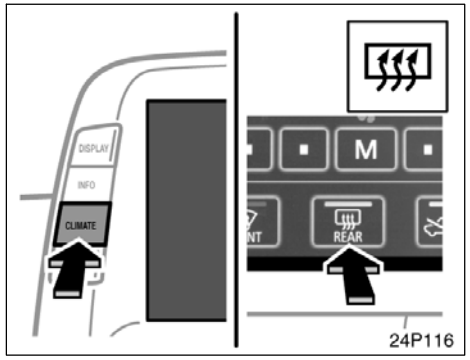

Type 1

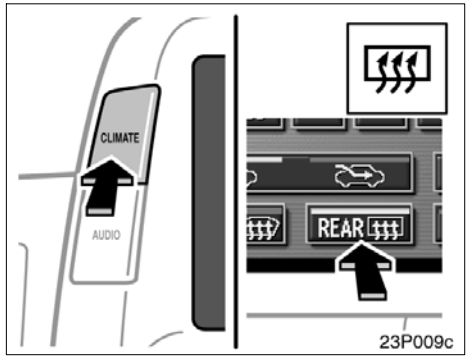

Type 2

To defog or defrost the rear window, push the “CLIMATE” button to display air conditioner screen and touch the switch.

Operating the steering switch can also defog or defrost the rear window. (See “Climate remote control” on page 297.)

The hybrid system must be in the “IG–ON” mode.

The thin heater wires on the inside of the rear window will quickly clear the surface. An indicator will come on to indicate the defogger is operating.

Touch the switch once again to turn the defogger off.

The system will automatically shut off after the defogger has operated about 15 minutes.

⚠ CAUTION

Since the mirror surface can get hot, do not touch them when the switch is on.

Make sure you turn the defogger off when the window is clear. Leaving the defogger on for a long time could cause the 12 volt battery to discharge. The defogger is not designed for drying rain water or for melting snow.

If the outside rear view mirrors are heavily coated with ice, use a spray de–icer before operating the switch.

NOTICE

When cleaning the inside of the rear window, be careful not to scratch or damage the heater wires or connectors.

SECTION 2 – 5

OPERATION OF INSTRUMENTS AND CONTROLS

Gauges, Meters and Service reminder indicators

Fuel gauge 122
Odometer and two trip meterss 123
Km/h or MPH button 124
Service reminder indicators and warning buzzers 125

Fuel gauge

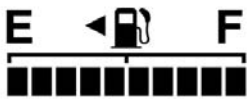

24P001b

The gauge indicates the approximate quantity of fuel remaining in the tank when the "IG–ON" mode is enabled.

Nearly full–Indicator at "F"
Nearly empty–Indicator at "E"

It is a good idea to keep the tank over 1/4 full.

When you refuel on a slope, the indicator may not show the correct level.

When you refuel less than about 11.4 L (3.0 gal., 2.5 Imp.gal.), the fuel indicator may not change.

After the 12 volt battery is reconnected, one segment will flash for a while.

Depending on the ambient temperature, the fuel quantity is less than 45 L (11.9 gal., 9.9 Imp. gal.) even at "F". However, this does not affect the fuel consumption and the remaining fuel ratio indicated on the gauge. (For details, see "Fuel" on page 318.)

If the fuel gauge display flashes, there may be a problem in the system. In this case, contact your Toyota dealer as soon as possible.

Low fuel level indicator light

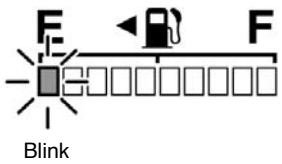

24P002b

If the fuel level approaches "E" or the low fuel level indicator light blinks, fill the fuel tank as soon as possible.

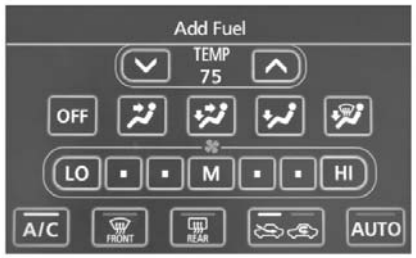

25P127a

Type 1

24P109a

Type 2

At the first blinking of the light, the master warning light in the instrument cluster comes on and the message appears on the multi–information display to remind the driver to fill fuel.

On inclines or curves, due to the movement of fuel in the tank, the low fuel level indicator light may come on earlier than usual.

Odometer and two trip meters

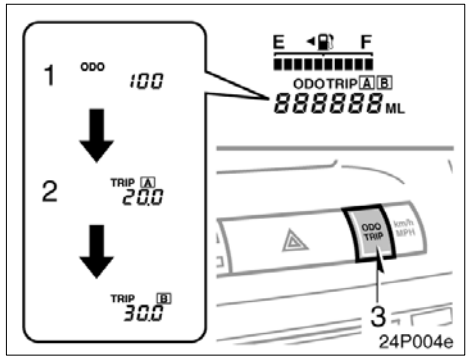

24P004e

This meter displays the odometer and two trip meters.

1. Odometer—Shows the total distance the vehicle has been driven.
2. Two trip meters—Show two different distances independently driven since the last time each trip meter was set to zero.

   You can use one trip meter to calculate the fuel economy and the other to measure the distance on each trip. All trip meter data is cancelled if the electrical power source is disconnected.

3. Trip meter reset button—Resets the two trip meters to zero, and also change the meter display.

   To change the meter display, quickly push and release the button. The meter display changes in the order from the odometer to trip meter A to trip meter B, then back to the odometer each time you push.

   To reset the trip meter A to zero, display the meter A reading, then push and hold the button until the meter is set to zero. The same process can be applied for resetting the trip meter B.

Km/h or MPH button

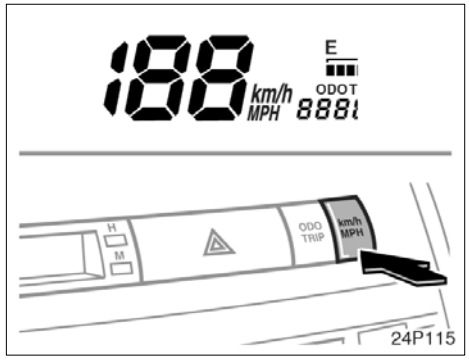

You can switch the display between km/h and MPH by pressing the button.

Service reminder indicators and warning buzzers

If the indicator or buzzer comes on...		Do this.
(a)	**BRAKE** or (red indicator and buzzer)	If parking brake is off, stop immediately and contact Toyota dealer.
	(yellow indicator)	Take vehicle to Toyota dealer. If red brake system warning light is also on, stop immediately and contact Toyota dealer.
(b)	(indicator and buzzer)	Fasten driver's seat belt.
(c)	PASSENGER (indicator and buzzer)	Fasten front passenger's seat belt.
(d)	CHECK or	Take vehicle to Toyota dealer.
(e)		See multi–information display.
(f)	**ABS** or ABS	Take vehicle to Toyota dealer. If red brake system warning light is also on, stop immediately and contact Toyota dealer.

If any warning comes on, the hybrid system may not start by pushing the "POWER" switch. In that case, push it once again.

If the indicator or buzzer comes on...		Do this.
(g)		Take vehicle to Toyota dealer immediately.
(h)		Close all doors.
(i)	E F	Fill up tank.
(j)	MAINT REQD	Replace engine oil
(k)	VSC	Take vehicle to Toyota dealer. If red brake system warning light is also on, stop immediately and contact Toyota dealer.
(l)		Adjust tire inflation pressure. If light remains on, contact Toyota dealer.
(m)	Key reminder buzzer	Remove key.
(n)	P position reminder buzzer	Push the “P” position switch.

If any warning comes on, the hybrid system may not start by pushing the “POWER” switch. In that case, push it once again.

(a) Brake System Warning Lights and Buzzer

These lights come on in the following cases when the “IG–ON” mode is enabled.

RED WARNING LIGHT

- **When the parking brake is applied...**

This light comes on when the “IG–ON” mode is enabled, even after the parking brake is released.

- **When the brake fluid level is low...**

⚠ CAUTION

It is dangerous to continue driving normally when the brake fluid level is low.

YELLOW WARNING LIGHT

- **When the regenerative brake system is fails...**

RED OR YELLOW WARNING LIGHT

- **When the hydraulic brake system fails...**

When the yellow warning light comes on, it is no problem to continue driving. However, if the red warning light comes on, it indicates a serious problem and you can continue driving no longer.

Have your vehicle checked at your Toyota dealer in the following cases:

- The lights do not come on even if the parking brake is applied when the “READY” light is on.
- The lights do not come on even if the “POWER” switch is pressed with the parking brake released.

A red warning light turning on briefly during operation does not indicate a problem.

⚠ CAUTION

If any of the following conditions occurs, immediately stop your vehicle at a safe place and contact your Toyota dealer.

- **The red warning light does not turn off even after the parking brake is released while the hybrid system is running.**
- **The red warning light comes on or buzzer sounds continuously.**

In either case, this can indicate that the brakes may not work properly and your stopping distance will become longer. Depress the brake pedal firmly and bring the vehicle to an immediate stop.

- **The brake system warning light remains on together with the “ABS” and “VSC” warning light.**

In this case, not only the anti–lock brake system and vehicle stability control system will fail but also the vehicle will become extremely unstable during braking.

In the following case, drive directly to the nearest Toyota dealer.

- **The yellow warning light comes on while driving.**

Any of the following conditions may occur, but do not indicate the malfunction:

- The yellow warning light may stay on for about 60 seconds after the hybrid system is started. It is normal if it turns off after a while.
- Depressing the brake pedal repeatedly may turn on the red warning light and buzzer. It is normal if the light turns off and the buzzer stops sounding after a few seconds.
- You may hear a small sound in the engine compartment after the hybrid system is started or the brake pedal is depressed repeatedly. This is a pump pulsating sound of the brake system, and it is not a malfunction.
- You may hear a motor sound in the engine compartment when the brake pedal is depressed with the hybrid system off.
- The brake pedal stroke may be short when you press the "POWER" switch with the brake pedal depressed.

(b) Driver's Seat Belt Reminder Light and Buzzer

The light and buzzer act as a reminder to buckle up the driver's seat belt.

Once the "IG–ON" mode is enabled, the reminder light flashes and the buzzer sounds if the driver's seat belt is not fastened. Unless the driver fastens the belt, the light continues flashing and the buzzer sounds 4 to 8 seconds.

If the vehicle speed rises above 20 km/h (12 mph) without the belt fastened, a buzzer sounds.

(c) Front Passenger's Seat Belt Reminder Light and Buzzer

This light acts as a reminder to have the front passenger buckle up the seat belt.

Once the "IG–ON" mode is enabled, the reminder light flashes if a passenger sits in the front passenger seat and does not fasten the seat belt. Unless the front passenger fastens the belt, the light continues flashing.

If the vehicle speed rises above 20 km/h (12 mph) without the belt fastened, a buzzer sounds.

If luggage or other load is placed on the front passenger seat, depending on its weight, causing the reminder light to flash and buzzer to sound.

(d) Malfunction Indicator Lamp

This lamp comes on when the "IG–ON" mode is enabled and goes off after the hybrid system starts. This means that the warning light system is operating properly.

If the lamp remains on or the lamp comes on while driving, first check the following:

- Empty fuel tank

  If the fuel tank is empty, refuel immediately.

This case is a temporary malfunction. The malfunction indicator lamp will go off after taking several driving trips.

If the lamp does not go off even after several trips, contact your Toyota dealer as soon as possible.

- There is a problem somewhere in the engine, hybrid system, throttle control system or warning light system itself.

Contact your Toyota dealer as soon as possible to service the vehicle.

Emissions inspection and maintenance (I/M) programs

Your vehicle may not pass a state emission inspection if the malfunction indicator lamp remains on. Contact your Toyota dealer to check your vehicle's emission control system and OBD (On–Board Diagnostics) system before taking your vehicle for the inspection.

For details, see "Emissions inspection and maintenance (I/M) programs" on page 390.

(e) Master Warning Light (⚠)

If the master warning light comes on, the warning light for the faulty system is highlighted or the message such as "Please press "P" to engage Park." and "The batteries will not be charged if the transaxle is in Neutral N." appears on the multi–information display. (See "Service reminder indicators and warning buzzers— —Multi–information display" on page 132 or "Precautions for use" on page 14 or "Fuel gauge" on page 122 for instructions.)

(f) "ABS" Warning Light

The light comes on when the "IG–ON" mode is enabled. If the anti–lock brake system and the brake assist system work properly, the light turns off after the "READY" light comes on. Thereafter if the system malfunctions, the light comes on again.

When the "ABS" warning light is on (and the brake system warning light is off), the anti–lock brake system does not operate, but the brake system still operates conventionally.

When the "ABS" warning light is on (and the brake system warning light is off), the anti–lock brake system does not operate but the brake assist system still operates. In this case, the wheels could lock up during a sudden braking or braking on slippery road surfaces.

If any of the following conditions occurs, this indicates a malfunction somewhere in the parts monitored by the warning light system. Contact your Toyota dealer as soon as possible so service the vehicle.

- The light does not come on when the "IG–ON" mode is enabled, or the light remains on after the "READY" light comes on.
- The light comes on while you are driving.

A warning light turning on briefly during operation does not indicate a problem.

⚠ CAUTION

If the "ABS" warning light remains on together with the red brake system warning light, immediately stop your vehicle at a safe place and contact your Toyota dealer.

In this case, not only the anti–lock brake system will fail but also the vehicle will become extremely unstable during braking.

Any of the following conditions may occur, but does not indicate the malfunction:

- The light may stay on for about 60 seconds after the hybrid system is started. It is normal if it turns off after a while.

- Depressing the brake pedal repeatedly may turn on the light. It is normal if it turns off after a few seconds.

(g) SRS Warning Light

This indicator comes on when the "IG–ON" mode is enabled. It goes off after about 6 seconds. This means the SRS front airbags, side and curtain shield airbags and seat belt pretensioners are operating properly.

The warning light system monitors the airbag sensor assembly, front airbag sensors, side and curtain shield airbag sensors, curtain shield airbag sensors, driver's seat position sensor, driver's seat belt buckle switch, front passenger occupant classification system and indicator light, front passenger's seat belt buckle switch, seat belt pretensioner assemblies, interconnecting wiring and power sources.

If any of the following conditions occurs, this indicates a malfunction of the airbags or seat belt pretensioners. Contact your Toyota dealer as soon as possible.

- The light does not come on when the "IG–ON" mode is enabled or remains on for more than 6 seconds.
- The light comes on while driving.

The SRS warning light and "AIRBAG OFF" indicator light will come on if there is a malfunction in the front passenger occupant classification system.

(h) Open Door Warning Light

This light remains on until all the doors are completely closed.

(i) Low Fuel Level Indicator Light

This light blinks when the fuel level in the tank becomes nearly empty. Fill up the tank as soon as possible.

At the first blinking of the light, the message appears on the display to remind the driver to fill fuel.

Contact your Toyota dealer in the following case:

- All the segments blink.

(j) Engine Oil Replacement Reminder Light (for vehicles sold in U.S.A.)

This light acts as a reminder to replace the engine oil.

This light will come on when the "IG–ON" mode is enabled, and will go off after about a few seconds.

When you drive for about 7200 km (4500 miles) after engine oil replacement, this light illuminates for about 3 seconds and then flashes for about 12 seconds when the hybrid system is in the "IG–ON" mode. If you continue driving without engine oil replacement, and if the driving range exceeds 8000 km (5000 miles), the light will come on after the "IG–ON" mode is enabled. The light will remain on thereafter.

If the light is flashing, we recommend that you replace the engine oil at an early opportunity depending on the driving and road conditions. If the light comes on, replace the oil as soon as possible.

The system must be reset after the engine oil replacement. Reset the system by the following procedure:

1. Press the "POWER" switch to the "OFF" mode with the odometer reading shown. (For details, see "Odometer and two trip meters" on page 123.)
2. Press the "POWER" switch twice to select the "IG–ON" mode while holding down the trip meter reset button.

Hold down the button for at least 5 seconds. The odometer indicates “000000” and the light goes off.

If the system fails to reset, the light will remain flashing.

(k) “VSC” Warning Light

This light warns that there is a problem somewhere in the vehicle stability control system.

The light will come on when the “IG–ON” mode is enabled and will go off after the “READY” light comes on.

If the light comes on while driving, the system does not work. However, as conventional braking operates when applied, there is no problem to continue your driving.

In the following cases, contact your Toyota dealer:

- The warning light does not come on after the “IG–ON” mode is enabled.
- The warning light remains on after the “READY” light comes on.
- The warning light comes on while you are driving.

⚠ CAUTION

If the “VSC” warning light remains on together with the red brake system warning light, immediately stop your vehicle at a safe place and contact your Toyota dealer.

In this case, not only the vehicle stability control system will fail but also the vehicle will become extremely unstable during braking.

(l) Low Tire Pressure Warning Light

This light comes on when the “IG–ON” mode is enabled. If the tire pressure warning system works properly and tire inflation pressure is appropriate, the light goes off after a few seconds.

This light comes on or flashes in the following cases when the “IG–ON” mode is enabled.

- **When the low tire inflation pressure is detected while driving...**

  If any tire has low inflation pressure, the light comes on.

  The light goes off after the tire inflation pressure is adjusted to a specified level.

- **When initializing the system...**

  If initialization is completed, the light blinks three times.

- **When the system malfunctions...**

  If the system malfunctions, the light blinks.

  Although it is no problem to continue driving, have your vehicle checked by your Toyota dealer as soon as possible.

(m) Key Reminder Buzzer

This buzzer acts as a reminder to remove the key if you open the driver’s door when the hybrid system is off and the key is inserted into the key slot.

(n) P Position Reminder Buzzer

This buzzer will sound if the driver’s door is opened while the hybrid transaxle is in “N”, “D” or “B”.

CHECKING SERVICE REMINDER INDICATORS (except the low fuel level indicator light)

1. Apply the parking brake.
2. Open one of the doors.
   The open door warning light should come on.
3. Close the door.
   The open door warning light should go off.
4. Press the “POWER” switch twice without pressing the brake pedal to select the “IG–ON” mode. At this time, all the bulbs are checked in self–diagnosis mode.
   All the service reminder indicators except the open door warning light come on. The yellow brake system, “ABS” and “VSC” warning lights turn off after the “READY” light comes on.

There may be the case that the yellow brake system, “ABS” and “VSC” warning lights stay on for about 60 seconds after the hybrid system is started. It is normal if they go out after a while.

If any service reminder indicator or warning buzzer does not function as described above, have it checked by your Toyota dealer as soon as possible.

—Multi–information display

24P117

Type 1

24P006e

Type 2

If an error occurs in the system, the warning message and icon appear.

For details on the warning display and how to remedy the system, see the description on the following pages.

If the indicator comes on...		Do this.
(a)		Stop immediately and contact Toyota dealer.
(b)		Stop and check.
(c)		Stop and check.
(d)	P/S or PS	Take vehicle to Toyota dealer.
(e)		Take vehicle to Toyota dealer immediately.
(f)	MAIN	Take vehicle to Toyota dealer.
(g)		Take vehicle to Toyota dealer.

(a) Charging System Warning Light

When there are problems in the charging system while the hybrid system is running, the warning light comes on.

NOTICE
When the charging system warning light comes on while the hybrid system is running, malfunctions may have occurred. If the warning light comes on, immediately stop the vehicle in a safe place and contact your Toyota dealer.

(b) Low Engine Oil Pressure Warning Light

This light warns that the engine oil pressure is too low.

If it stays on while you are driving, pull off the road to a safe place and stop the engine immediately. Call a Toyota dealer or qualified repair shop for assistance.

The light may come on when the oil level is extremely low. It is not designed to indicate low oil level, and the oil level must be checked using the level dipstick.

NOTICE
Do not drive the vehicle with the warning light on—even for one block. It may ruin the engine.

(c) High Coolant Temperature Warning Light

The light operates to warn that the hybrid system is almost overheating.

If it comes on while you are driving, stop the vehicle and check your hybrid system. For detailed instructions, see “If your vehicle overheats” on page 360.

Your vehicle may overheat during severe operating conditions, such as:

- Driving up a long hill on a hot day.
- Reducing speed or stopping after high speed driving.

NOTICE
◆***Do not remove the thermostat in the cooling system as this may cause the hybrid system to overheat. The thermostat is designed to control the flow of coolant to keep the temperature of the hybrid system within the specified operating range.*** ◆***Continued driving with the light on could result in the overheating of hybrid system.***

(d) Electric Power Steering System Warning Light

This light comes on when the power steering control system fails.

⚠ CAUTION

If this light comes on, take your vehicle to the Toyota dealer as soon as possible. In this case, you may feel the heavy steering wheel maneuvering. Drive your vehicle while gripping the steering wheel firmly.

(e) Hybrid System Warning Light ( )

This light comes on if there is a problem in the electric motor, inverter unit, hybrid battery, etc.

If this light is on, stop your vehicle in a safe place immediately and contact your Toyota dealer.

Even if the hybrid system warning light comes on, you can temporarily increase the vehicle speed by depressing the accelerator pedal. Immediately pull up your vehicle to a safe place and contact your Toyota dealer.

(f) Hybrid Battery Warning Light

This light comes on in the following cases.

a. The hybrid battery voltage drops when the hybrid transaxle is left in “N” position.

The system works properly if you put the hybrid transaxle in “P” position and the light goes off.

b. The hybrid battery is discharged.

If this light comes on with the “READY” light on in case of b., stop your vehicle in a safe place and contact your Toyota dealer.

(g) Automatic Headlight Leveling System Warning Light

This light warns that there is a problem somewhere in the automatic headlight leveling system.

If it comes on, have your vehicle checked by your Toyota dealer,

SECTION 2–6

OPERATION OF INSTRUMENTS AND CONTROLS

“POWER” switch, Transmission and Parking brake

Push button start system 138
Hybrid transaxlee 144
Vehicle stability control system 148
Tire pressure warning system 150
Parking brake 156
Cruise control 157

Push button start system—

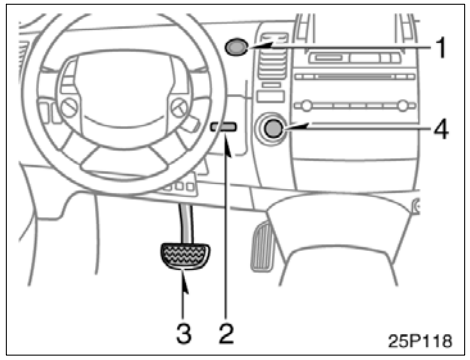

The push button start system is used to start or stop the hybrid system and select “ACC”, “IG–ON” or “OFF” mode. (See “—Selecting the push button start system mode” on page 140 and “How to start the hybrid system” on page 348.) The system contains the following components.

1. “POWER” switch
2. Key slot
3. Brake pedal
4. Electronic shift lever

—Key slot

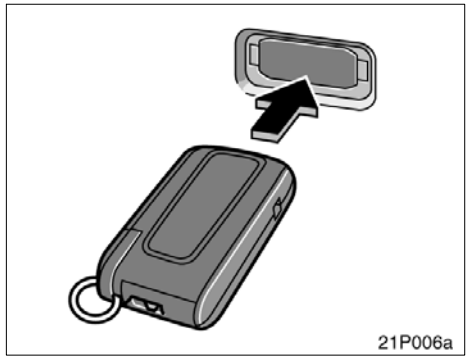

Your vehicle keys and the key slot are different shapes from conventional ones.

Keep the following in mind when operating the key:

- When inserting the key, be sure to push it in all the way.
- When pulling out the key, be careful because it will be pushed out by the spring and it might fly out.
- If the key cannot be pulled out, push it in all the way again, then pull it out.

⚠ CAUTION

Do not put your finger into the key slot. Your finger might be injured.

NOTICE

Observe the following instructions, or the key mechanism might be damaged and will not work properly.

- ***The key should be operated with a clean hand and fingers.***
- ***Do not insert the key forcibly.***
- ***Do not insert any key other than genuine formal keys into the key slot.***
- ***Do not pull out the key forcibly when it cannot be removed.***
- ***Do not put water, oil, foreign objects, etc. into the key slot.***
- ***Do not insert a wet, oily or damaged key into the key slot.***
- ***Do not affix a sticker on the key.***
- ***Do not insert the key in the wrong way.***

◆*Do not pull out the key ring when removing the key out of the key slot.*

Should you find anything unusual, contact your Toyota dealer as soon as possible.

—“POWER” switch

25P113

Press the “POWER” switch slowly and surely. Quick operation may not activate the desired mode.

⚠ CAUTION

- **Do not press the switch while driving, except in an emergency.**
- **In hot weather, the switch surface may get hot. Take care not to get burned.**

NOTICE

Observe the following instructions or the push switch start system may not work properly.

◆***The switch should be operated with a clean finger. Do not use an oily or dirty finger.***

◆***Be careful not to spill water or other liquid on the switch.***

In the following conditions, contact your Toyota dealer as soon as possible.

◆***If the indicator on the switch flashes in amber, the system may be malfunctioning. Once you turn the power off, it may not turn on again.***

◆***If you find anything unusual in the switch function, refrain from using the vehicle.***

In the following condition, have your vehicle inspected by your Toyota dealer.

◆***The indicator light on the “POWER” switch does not come on when the clearance lights are turned on.***

—Selecting the push button start system mode

(with smart function—on some models)

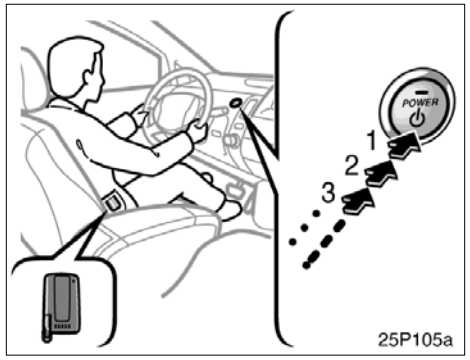

Without depressing the brake pedal

Carrying a smart key allows you to operate the "POWER" switch without the key being inserted into the key slot.

Each time you press the "POWER" switch briefly without the brake pedal depressed, the hybrid system mode changes in the order of "OFF", "ACC", "IG–ON" and then back to "OFF".

The smart function can be set to become inoperative using the smart cancel switch. For details, see "Deactivating the smart function" on page 34.

1) "ACC" (Green indicator is turned on)

Accessories such as the radio operate.

Pressing the "POWER" switch briefly without depressing the brake pedal in the "OFF" mode turns on this mode.

In the "ACC" mode, pressing the "POWER" switch briefly while depressing the brake pedal will start the hybrid system.

If you leave your vehicle in the "ACC" mode for about an hour, the hybrid system is automatically turned off.

2) "IG–ON" (Amber indicator is turned on)

All accessories are operable.

Pressing the "POWER" switch briefly without depressing the brake pedal in the "ACC" mode turns on this mode.

In the "IG–ON" mode, pressing the "POWER" switch briefly while depressing the brake pedal will start the hybrid system. However, if "N" position is selected, the hybrid system will be turned in the "OFF" mode.

3) "OFF" (Indicator is turned off)

The hybrid system is off.

You may hear a motor sound in the engine compartment for a few seconds after the system is turned off and about 90 seconds have passed.

The hybrid vehicle immobilizer system is automatically set. See "Hybrid vehicle immobilizer system" on page 21.

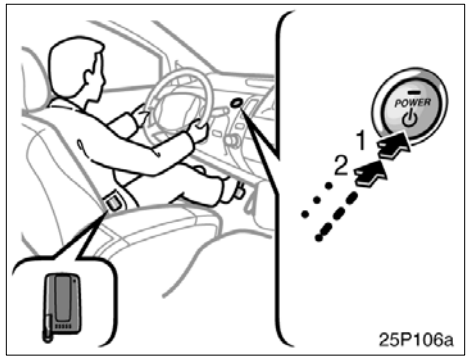

With the brake pedal depressed

The hybrid system will start and stop by pressing the "POWER" switch briefly with the brake pedal depressed.

You may hear a motor sound in the engine compartment when the brake pedal is depressed with the hybrid system off.

1) "START" (Amber indicator comes on for a few seconds.)

The hybrid system is ready to operate and all accessories are operable. ("IG–ON")

Press the "POWER" switch with the brake pedal depressed.

For starting tips, see "How to start the hybrid system—" on page 348.

If in an emergency, you must turn the hybrid system off while the vehicle is moving, press the "POWER" switch for more than 3 seconds. At this time, the "ACC" mode and shift position "N" are automatically enabled.

2) "OFF" (Indicator is turned off)

The hybrid system is off.

You may hear a motor sound in the engine compartment for a few seconds after the system is turned off and about 90 seconds have passed.

The hybrid vehicle immobilizer system is automatically set. See "Hybrid vehicle immobilizer system" on page 21.

Approximately 5 hours after the engine is turned off, you may hear a sound coming from underneath the luggage compartment for several minutes. This is normal operation and does not indicate a malfunction. (See "Leak detection pump" on page viii.)

NOTICE

- ***The hybrid system cannot be started when the shift position is in "N". Be sure to put it in "P" and then start the system.***
- ***Do not leave the hybrid system in "ACC" or "IG–ON" for a long time. The 12 volt battery will discharge.***
- ***The hybrid mode in which the battery is discharged or disconnected is retained in memory, and that mode is turned on when power is applied.***

When you leave your vehicle, be sure to turn the "POWER" switch off and carry the smart key.

If you get out of your vehicle while carrying a key without turning off the "POWER" switch and then close the door, a warning tone sounds inside and beeps sound outside.

INFORMATION
You can insert a genuine key while in the "IG–ON" mode or with the hybrid system starting. Do not insert any key other than genuine keys.

—Selecting the push button start system mode

(without smart function)

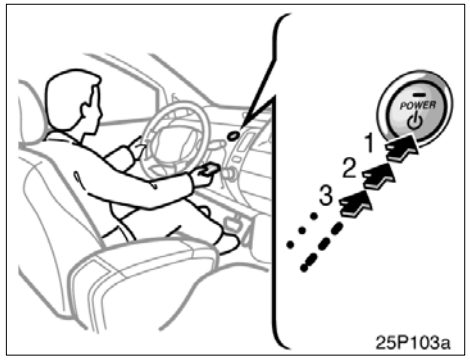

Without depressing the brake pedal

Each time you press the "POWER" switch briefly without the brake pedal depressed, the hybrid system mode changes in the order of "OFF", "ACC", "IG–ON" and then back to "OFF".

1) "ACC" (Green indicator is turned on)

Accessories such as the radio operate.

Pressing the "POWER" switch briefly without depressing the brake pedal in the "OFF" mode turns on this mode.

The key can be removed at this position. The hybrid system is automatically turned off.

In the "ACC" mode, pressing the "POWER" switch briefly while depressing the brake pedal will start the hybrid system.

If you leave your vehicle in the "ACC" mode for about an hour, the hybrid system is automatically turned off.

2) "IG–ON" (Amber indicator is turned on)

All accessories are operable.

Pressing the "POWER" switch briefly without depressing the brake pedal in the "ACC" mode turns on this mode.

In the "IG–ON" mode, pressing the "POWER" switch briefly while depressing the brake pedal will start the hybrid system. However, if "N" position is selected, the hybrid system will be turned in the "OFF" mode.

3) "OFF" (Indicator is turned off)

The hybrid system is off. The key can be removed at this position.

You may hear a motor sound in the engine compartment for a few seconds after the system is turned off and about 90 seconds have passed.

Once you remove the key, the hybrid vehicle immobilizer system is automatically set. See "Hybrid vehicle immobilizer system" on page 21.

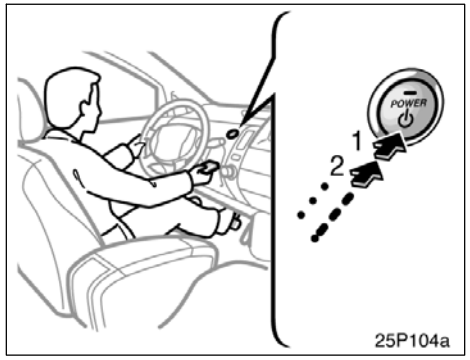

With the brake pedal depressed

The hybrid system will start and stop by pressing the "POWER" switch briefly with the brake pedal depressed.

You may hear a motor sound in the engine compartment when the brake pedal is depressed with the hybrid system off.

1) "START" (Amber indicator comes on for a few seconds.)

The hybrid system is ready to operate and all accessories are operable. ("IG–ON")

Insert the key and press the "POWER" switch briefly with the brake pedal depressed.

For starting tips, see "How to start the hybrid system—" on page 348.

If, in an emergency, you must turn the hybrid system off while the vehicle is moving, press the "POWER" switch more than 3 seconds. At this time, the "ACC" mode and shift position "N" are automatically enabled.

2) "OFF" (Indicator is turned off)

The hybrid system is off. The key can be removed at this position.

You may hear a motor sound in the engine compartment for a few seconds after the system is turned off and about 90 seconds have passed.

Once you remove the key, the hybrid vehicle immobilizer system is automatically set. See "Hybrid vehicle immobilizer system" on page 21.

Approximately 5 hours after the engine is turned off, you may hear a sound coming from underneath the luggage compartment for several minutes. This is normal operation and does not indicate a malfunction. (See "Leak detection pump" on page viii.)

NOTICE

- ***The hybrid system cannot be started when the shift position is in "N". Be sure to put it in "P" and then start the system.***
- ***Do not leave the hybrid system in "ACC" or "IG–ON" for a long time. The 12 volt battery will discharge.***
- ***The hybrid mode in which the battery is discharged or disconnected is retained in memory, and that mode is turned on when power is applied.***

Hybrid transaxle

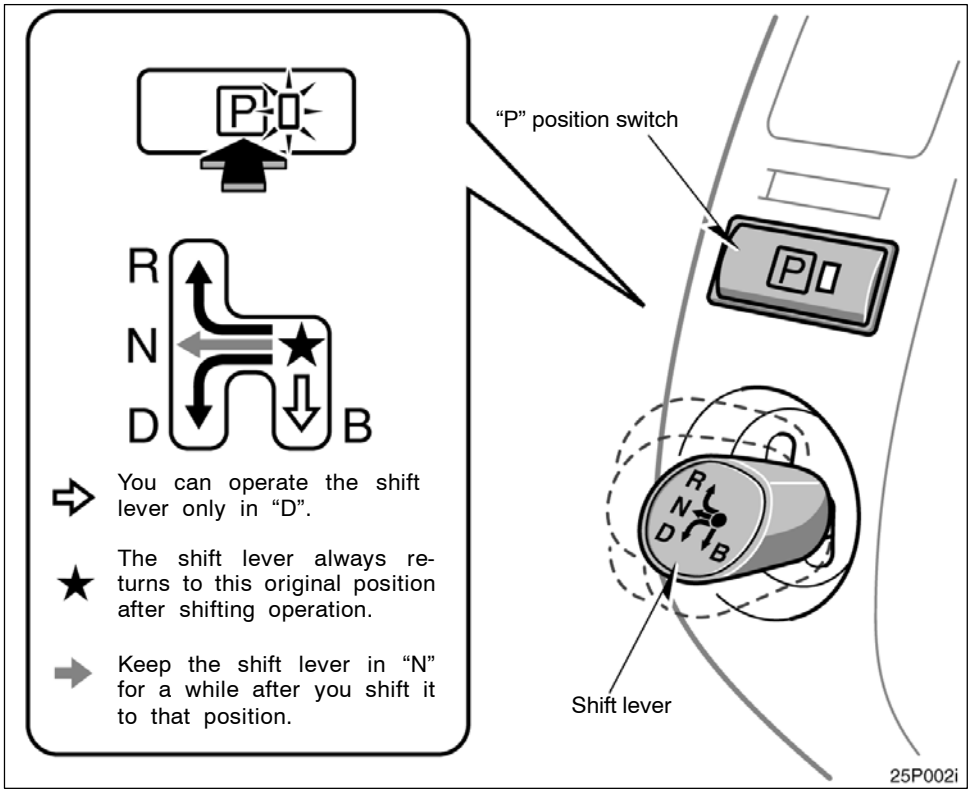

Your hybrid transaxle has an electronic shift lever system to minimize incorrect operation. This means you can only shift to other position from "P" when the brake pedal is depressed.

With the following improper shifting, the rejection function operates and a beep sounds so the hybrid transaxle cannot be shifted.

(i) When you attempt to shift the transaxle from the "P" position without depressing the brake pedal.

(ii) When you push the "P" switch while driving.

(iii) When you operate the shift lever from "D" to "R" or vice versa while the vehicle is moving.

(iv) When you operate the shift lever to "B" from any position other than "D".

In case of (i), the transaxle remains in "P". In case of (ii) through (iv), the transaxle is automatically shifted to "N".

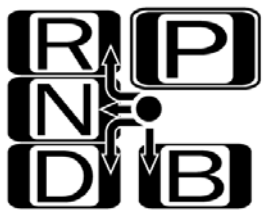

25P121

(a) Shift lever

The shift position is displayed on the instrument cluster.

R: Reverse position (buzzer sounds)

N: Neutral position

D: Normal driving position

B: Engine braking position
(shown only while in “D”)

NOTICE

Observe the following instructions. Otherwise, the lever may cause a malfunction, resulting in trouble:

- ***Do not remove the knob on the lever.***
- ***Do not use a knob other than the originally fitted knob.***
- ***Do not hang anything on the lever.***

Should you find anything unusual, contact your Toyota dealer as soon as possible.

(b) “P” position switch

The “P” (parking) position is displayed on the instrument cluster, and the indicator on the “P” position switch comes on.

(c) Normal driving

1. Start the hybrid system as instructed in “How to start the hybrid system” on page 348.
2. With your foot holding down the brake pedal, shift the shift lever to “D”.

⚠ CAUTION

Never put your foot on the accelerator pedal while shifting. Doing so can cause abrupt acceleration.

3. Release the parking brake and brake pedal. Depress the accelerator pedal slowly for smooth starting.

   When you shift the transaxle to “D” while backing up, an alarm sounds and the transaxle is shifted to “N”.

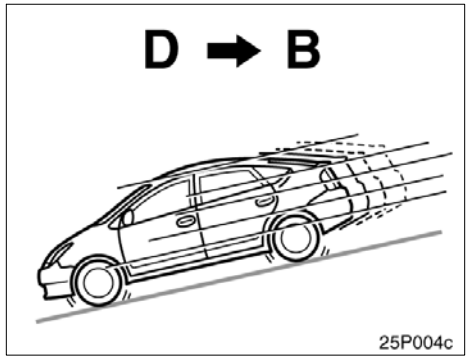

(d) Using engine braking

To use engine braking, shift the shift lever to “B” position.

During high speed driving, you may feel that deceleration by engine braking is less than that of a typical vehicle.

Do not continue normal driving with the transaxle in “B” for a long time. This may cause decreased fuel economy. To prevent this, use “D” for normal driving.

When you shift the transaxle to “B” from a position other than “D”, an alarm sounds and the transaxle is automatically shifted to “N”.

⚠ CAUTION

Be careful when downshifting on a slippery surface. Abrupt shifting could cause the vehicle to skid or spin.

(e) Backing up

1. Bring the vehicle to a complete stop.
2. With the brake pedal held down with your foot, shift the shift lever to the “R” position. You will hear beeps while the transaxle is in “R”.

When you shift the transaxle to “R” while driving, an alarm sounds and the transaxle is shifted to “N”.

(f) Parking

1. Bring the vehicle to a complete stop.
2. With the brake pedal pressed down, fully depress the parking brake pedal to apply the parking brake securely.
3. With the brake pedal pressed down, push the “P” position switch.

If you press the “POWER” switch while stopping, the transaxle is automatically shifted to the “P” and the hybrid system is turned off.

If the driver’s door is opened when the transaxle is in “N”, “D” or “B”, beep sounds and a warning message appears on the multi–information display to warn you to shift the transaxle to “P”.

If you push the “P” position switch while driving, an alarm sounds and the transaxle is automatically shifted to “N”.

NOTICE

Be sure to put the hybrid transaxle in “P” when parking. In “N”, the hybrid battery will not be charged even if the gasoline engine is running. You cannot start your vehicle if the transaxle is left in “N” for a long time because the hybrid battery will discharge.

When shifting the transaxle from “P” on the slope, a large parking lock releasing noise will be generated. However, this does not indicate a malfunction.

(g) Vehicle driving characteristics

Creeping

In order to hold the vehicle properly on an incline and for better accelerator pedal operation at starting, your vehicle is designed like a typical automatic transmission vehicle which tends to move without depressing the accelerator pedal with the transaxle in a position other than “P” or “N”.

With the transaxle in a position other than “P” or “N”, depress the brake pedal firmly even when stopped and apply the parking brake as required.

When moving in a compact area or during a traffic jam, it is an effective way to control the speed using only the brake pedal operation without depressing the accelerator pedal.

Regenerative brake

When the accelerator pedal is released or the brake pedal is depressed, the electric motor acts as a generator and converts kinetic energy to electric energy to provide deceleration and recover electric energy to charge the hybrid battery.

At this time, the electric motor running noise may increase.

The operation is the same as a typical gasoline powered vehicle.

You may experience the following condition while braking. As they do not indicate a malfunction, perform braking as usual:

- In the “OFF” mode, pressing the “POWER” switch once or twice will select “ACC” or “IG–ON” only if the brake pedal is not depressed. In this condition, the brake pedal may move a little.

Hybrid driving

This vehicle runs in combination with the gasoline engine and electric motor.

If the “READY” light is on, you can start your vehicle even with the gasoline engine stopped.

(h) If the system malfunctions

In the following conditions, there is some problem in the system.

- The indicator on the “P” position switch flashes. However, this does not indicate a malfunction unless a warning message appears in the multi–information display.
- All frames of shift position indicators in the instrument cluster flash.
- The parking system error message appears on the multi–information display.
- The instrument cluster and multi–information display does not come on when the “IG–ON” mode is enabled.

In these cases, stop your vehicle in a safe and level place, apply the parking brake securely and contact your Toyota dealer immediately.

(i) When the 12 volt battery is disconnected

Before you disconnect the 12 volt battery, confirm the shift position is “P” and apply the parking brake completely.

After you reconnect the 12 volt battery, shift the shift lever to “N” and confirm the shift position is in “N” when the “IG–ON” mode is enabled.

Vehicle stability control system

The vehicle stability control system helps provide integrated control of the systems such as anti–lock brake system, brake assist system, hybrid system control, etc. This system automatically controls the brakes and hybrid system to help prevent the vehicle from skidding when cornering on a slippery road surface or operating steering wheel abruptly.

This system activates when the vehicle speed is more than about 15 km/h (9 mph).

⚠ CAUTION

- **Do not rely exclusively on the vehicle stability control system. Even if the vehicle stability control system is operating, you must always drive carefully and attentively to avoid death or serious injury. Reckless driving will result in an unexpected accident. If the slip indicator light flashes, sounding an alarm, special care should be taken while driving.**
- **Only use tires of specified size. The size, manufacturer, brand and tread pattern for all 4 tires should be the same. If you use tires other than specified, or mixed types or size, the vehicle stability control system may not function correctly. When replacing the tires or wheels, contact your Toyota dealer. (See "Checking and replacing tires" on page 407.)**

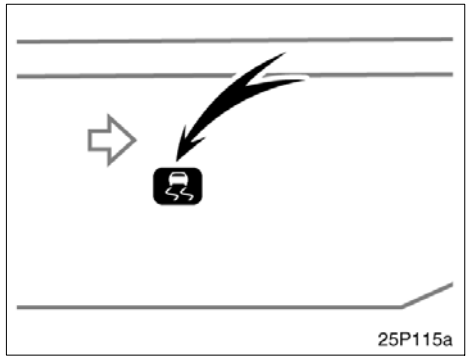

Slip indicator light

If the vehicle is going to skid during driving, the slip indicator light blinks and an alarm sounds intermittently. Special care should be taken while driving.

The slip indicator light blinks in the following conditions also.

- The vehicle tires are racing. Utmost care is required when driving.
- When the anti–lock brake system is operating. See "Brake system" on page 325 for details.

The slip indicator light comes on when the “IG–ON” mode is enabled and will go off after the “READY” light comes on. If the indicator light does not come on when the hybrid system is turned on, contact your Toyota dealer.

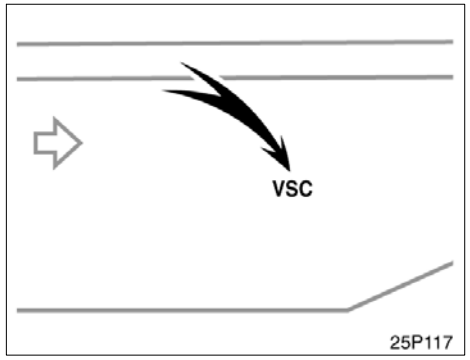

“VSC” warning light

This light warns that there is a problem somewhere in the vehicle stability control system.

The light will come on when the “IG–ON” mode is enabled and will go off after the “READY” light comes on.

If the light comes on while driving, the system does not work. However, because the conventional braking still operates, you can drive your vehicle without damaging it. Contact your Toyota dealer.

In the following cases, contact your Toyota dealer:

- The warning light does not come on after the “IG–ON” mode is enabled.
- The warning light remains on after the “READY” light comes on.
- The warning light comes on while driving.

Tire pressure warning system

The tire pressure warning system warns you that the tire inflation pressure is low.

The tire pressure warning system is not a substitute for checking normal tire inflation pressure. Check the tire inflation pressure with a tire pressure gauge regularly.

⚠ CAUTION

The warning system may not activate immediately if bursts or sudden air leakage should occur.

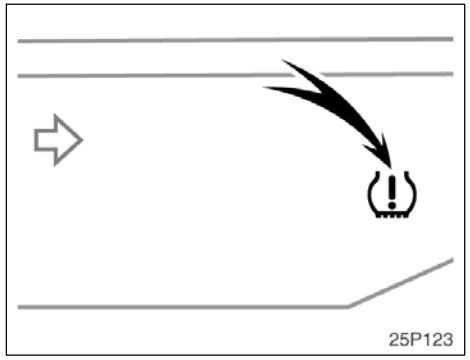

The tire pressure warning light comes on when the “POWER” switch is selected in “IG–ON” mode and goes off after a few seconds. This means the tire pressure warning light is operating properly. If the tire inflation pressure becomes low, the light comes on again. In this case, adjusting the tire inflation pressure will turn off the light after a few seconds. If the light blinks, the tire pressure warning system is not working properly.

Indicator status	Meanings	Do this
ON	Tire inflation pressure is low	Adjust the tire inflation pressure
ON after blinking for 1 minute	Tire pressure warning system malfunction	Have the system checked at your Toyota dealer

⚠ CAUTION

If the tire pressure warning light comes on, be sure to observe the following precautions. Failure to do so could cause loss of vehicle control and result in death or serious injury.

- **Stop your vehicle in a safe place as soon as possible. Adjust the tire inflation pressure immediately.**
- **If the tire pressure warning light comes on even after tire inflation pressure adjustment, it is probable that you have a flat tire. Check the tires. If the tire is flat, change to the spare tire and have the flat tire repaired by the nearest Toyota dealer.**

- **Avoid abrupt maneuvering and braking. If the vehicle tires deteriorate, you could lose control of the steering wheel or the brakes.**

The tire pressure warning light may turn on due to natural causes such as natural air leaks or tire inflation pressure changes caused by temperature. In this case, adjusting the tire inflation pressure will turn off the light.

Pushing the tire pressure warning reset switch should not turn off the tire pressure warning light. Adjusting the tire inflation pressure will turn off the light.

The compact spare tire is not equipped with the tire pressure warning valve and transmitter. If a tire goes flat, the warning light will not turn off even though the flat tire is replaced with the spare tire. Replace the spare tire with the repaired tire and adjust the proper tire inflation pressure. The tire pressure warning light will turn off after several minutes.

⚠ CAUTION

Each tire, including the spare (if provided), should be checked monthly when cold and inflated to the inflation pressure recommended by the vehicle manufacturer on the vehicle placard or tire inflation pressure label (tire and load information label). (If your vehicle has tires of a different size than the size indicated on the vehicle placard or tire inflation pressure label (tire and load information label), you should determine the proper tire inflation pressure for those tires.)

As an added safety feature, your vehicle has been equipped with a tire pressure monitoring system (TPMS–tire pressure warning system) that illuminates a low tire pressure telltale (tire pressure warning light) when one or more of your tires is significantly under–inflated. Accordingly, when the low tire pressure telltale (tire pressure warning light) illuminates, you should stop and check your tires as soon as possible, and inflate them to the proper pressure. Driving on a significantly under–inflated tire causes the tire to overheat and can lead to tire failure. Under–inflation also reduces fuel efficiency and tire tread life, and may affect the vehicle's handling and stopping ability.

Please note that the TPMS (tire pressure warning system) is not a substitute for proper tire maintenance, and it is the driver's responsibility to maintain correct tire pressure, even if under–inflation has not reached the level to trigger illumination of the TPMS low tire pressure telltale (tire pressure warning light).

Your vehicle has also been equipped with a TPMS (tire pressure warning system) malfunction indicator to indicate when the system is not operating properly. The TPMS (tire pressure warning system) malfunction indicator is combined with the low tire pressure telltale (tire pressure warning light). When the system detects a malfunction, the telltale will flash for approximately one minute and then remain continuously illuminated. This sequence will continue upon subsequent vehicle start–ups as long as the malfunction exists. When the malfunction indicator is illuminated, the system may not be able to detect or signal low tire pressure as intended.

TPMS (tire pressure warning system) malfunction may occur for a variety of reasons, including the installation of replacement or alternate tires or wheels on the vehicle that prevent the TPMS (tire pressure warning system) from functioning properly. Always check the TPMS (tire pressure warning system) malfunction telltale after replacing one or more tires or wheels on your vehicle to ensure that the replacement or alternate tires and wheels allow the TPMS (tire pressure warning system) to continue to function properly.

NOTICE

- ***Do not use liquid sealants for a flat tire as tire pressure warning valve and transmitter will be damaged.***
- ***When the tires must be repaired or replaced, have them repaired or replaced by the nearest Toyota dealer or an authorized tire dealer. The tire pressure warning valves and transmitters will be affected by the installation or removal of tires.***

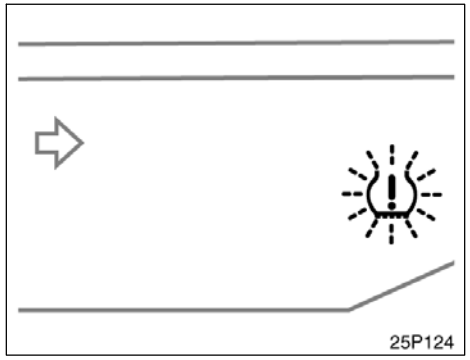

IF THE TIRE PRESSURE WARNING LIGHT BLINKS...

If the tire pressure warning light blinks when the "POWER" switch is selected in "IG–ON" mode, the tire pressure warning system is not working properly.

The system will be disabled in the following conditions:
(When the condition becomes normal, the system will work properly.)

- If tires not equipped with tire pressure warning valves and transmitters are used.
- If the ID code on the tire pressure warning valves and transmitters is not registered.
- If electronic devices or facilities using similar radio wave frequencies are nearby.
- If a radio set at similar frequencies is in use in the vehicle.
- If a window tint that affects the radio wave signals is installed.
- If there is a lot of snow or ice on the vehicle, in particular around the wheels or wheel housings.
- If non–genuine Toyota wheels are used.
- If tire chains are used.
- If the tire inflation pressure is 50 kpa (0.5 kgf/cm^2 or bar, 7.3 psi) or more higher than the specified level.

If the tire pressure warning light blinks frequently when "POWER" switch is selected in "IG–ON" mode, have it checked by your Toyota dealer.

Even if you use genuine wheels, the tire pressure warning system may not work properly with some types of tires.

Pushing the tire pressure warning reset switch should not turn off the tire pressure warning light.

For vehicles sold in U.S.A.

This device complies with Part 15 of the FCC Rules. Operation is subject to the following two conditions:

(1) This device may not cause harmful interference, and (2) this device must accept any interference received, including interference that may cause undesired operation.

NOTICE:
This equipment has been tested and found to comply with the limits for a Class B digital device, pursuant to Part 15 of the FCC Rules. These limits are designed to provide reasonable protection against harmful interference in a residential installation. This equipment generates, uses and can radiate radio frequency energy and, if not installed and used in accordance with the instructions, may cause harmful interference to radio communications. However, there is no guarantee that interference will not occur in a particular installation. If this equipment does cause harmful interference to radio or television reception, which can be determined by turning the equipment off and on, the user is encouraged to try to correct the interference by one or more of the following measures:

- Reorient or relocate the receiving antenna.
- Increase the separation between the equipment and receiver.
- Connect the equipment into an outlet on a circuit different from that to which the receiver is connected.
- Consult the dealer or an experienced radio/TV technician for help.

FCC WARNING:
Changes or modifications not expressly approved by the party responsible for compliance could void the user's authority to operate the equipment.

For vehicles sold in Canada

Operation is subject to the following two conditions:

(1) this device may not cause interference, and (2) this device must accept any interference, including interference that may cause undesired operation of the device.

REPLACING TIRES AND WHEELS

When replacing the tires and wheels, be sure to install tire pressure warning valves and transmitters. ID codes on the tire pressure warning valves and transmitters are registered on the tire pressure warning ECU. When replacing a tire pressure warning valve and transmitter, it is necessary to register the ID code of tire pressure warning valve and transmitter. Have the ID code registered by your Toyota dealer.

NOTICE

When the tires or tire pressure warning valves and transmitters must be replaced, have them replaced by your Toyota dealer. The tire pressure warning valves and transmitters will be affected by the installation or removal of tires.

Tire pressure warning reset switch

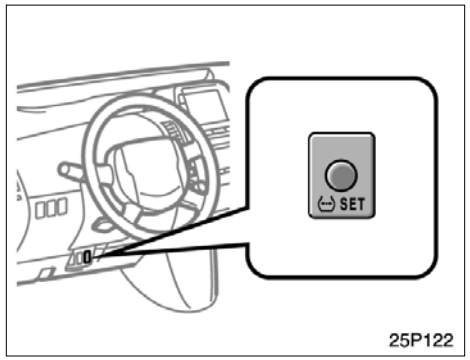

When initializing the system, the present tire inflation pressure is stored as standard. The tire pressure warning system determines decreased air pressure by comparing the present and the standard tire inflation pressures. When you change the set tire inflation pressure, it is necessary to initialize the tire pressure warning system.

- When rotating the tires on vehicles differing with front and rear tire inflation pressures.
- When changing the tire size.

To initialize the system, perform the following:

1. Park the vehicle in a safe place and the hybrid system is off.
2. Adjust the pressure of all the installed tires to the specified cold tire inflation pressure level.(See “Tires” on page 429.)
3. Turn the “POWER” switch is selected in “IG–ON” mode.
4. Push and hold the tire pressure warning reset switch until the tire pressure warning light blinks slowly three times.
5. Wait for a few minutes with the “POWER” switch is selected in “IG–ON” mode, and then turn the hybrid system is off.

If you push the tire pressure reset switch while vehicle is moving, initialization is not performed.

If you push the tire pressure reset switch accidentally and initialization is performed, adjust the tire inflation pressure to the specified level and initialize the system again.

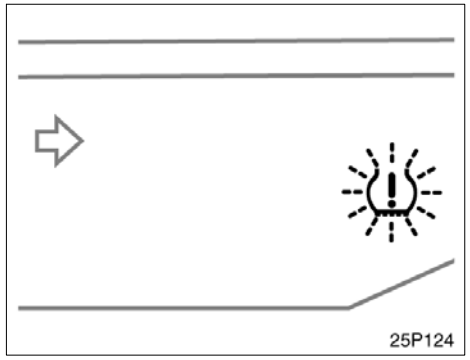

If the tire pressure warning light does not blink slowly three times when you push and hold the reset switch, initialization has failed and the tire pressure warning system may not work properly. In this case, initialize the system again. If initialization cannot be performed, have the system checked at your Toyota dealer.

⚠ CAUTION

Do not push the reset switch without first adjusting the tire inflation pressure to the specified level. Otherwise, the tire pressure warning light may not come on even if the tire inflation pressure is low, or it may come on when the tire inflation pressure is actually normal.

Parking brake

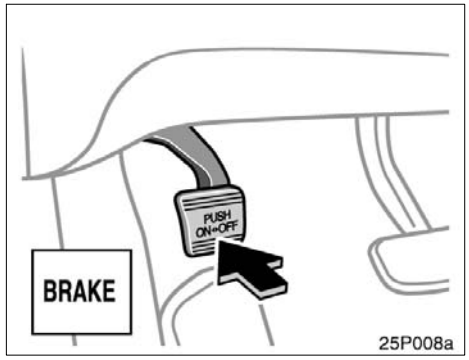

Vehicles sold in U.S.A.

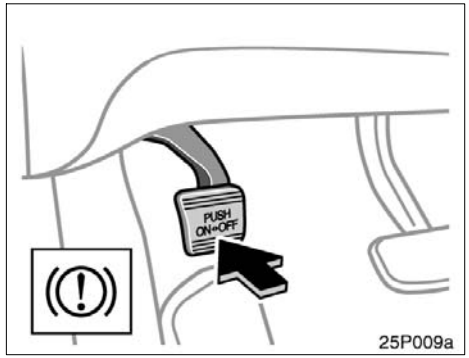

Vehicles sold in Canada

When parking, firmly apply the parking brake to avoid inadvertent creeping.

To set: Fully depress the parking brake pedal. For better holding power, first depress the brake pedal and hold it while setting the parking brake.

To release: Depress the parking brake pedal while depressing the brake pedal.

To remind you that the parking brake is set, the parking brake reminder light in the instrument panel remains on until you release the parking brake.

⚠ CAUTION

- **Driving with the parking brake engaged can reduce braking power.**
- **Before driving, be sure the parking brake is fully released and the parking brake reminder light is off.**

Cruise control

The cruise control allows you to cruise the vehicle at a desired speed over 40 km/h (25 mph) even with your foot off the accelerator pedal.

Your cruising speed can be maintained up or down grades within the limits of hybrid system performance, although a slight speed change may occur when driving up or down the grades. On steeper hills, a greater speed change will occur so it is better to drive without the cruise control.

⚠ CAUTION

- **To help maintain maximum control of your vehicle, do not use the cruise control when driving in heavy or varying traffic, or on slippery (rainy, icy or snow–covered) or winding roads.**
- **Avoid vehicle speed increases when driving downhill. If the vehicle speed is too fast in relation to the cruise control set speed, cancel the cruise control then shift the shift lever to "B" position to use engine braking to slow down.**

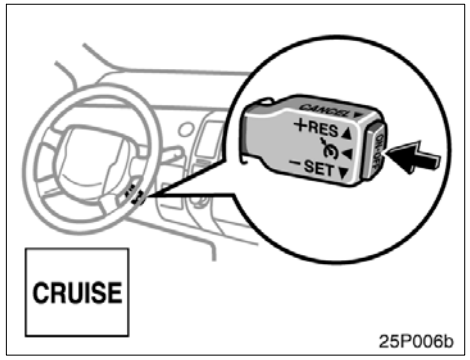

TURNING THE SYSTEM ON

To operate the cruise control, push the "ON·OFF" switch. This turns the system on. The indicator light in the instrument panel shows that you can now set the vehicle at a desired cruising speed. Another push on the switch will turn the system completely off.

⚠ CAUTION

To avoid accidental cruise control engagement, keep the "ON·OFF" switch off when not using the cruise control.

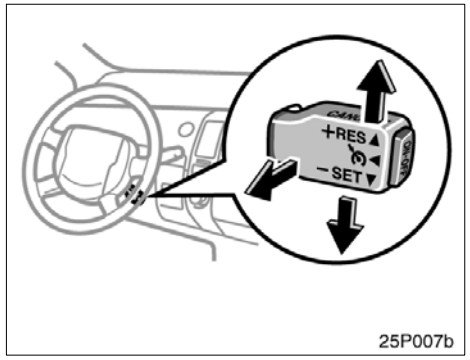

SETTING AT A DESIRED SPEED

The transaxle must be in "D" before you set the cruise control speed.

Bring your vehicle to the desired speed, push the lever down in the "– SET" direction and release it. This sets the vehicle at that speed.

If the speed is not satisfactory, tap the lever up for a faster speed, or tap it down for a slower speed. Each tap changes the set speed by 1.6 km/h (1.0 mph). You can now take your foot off the accelerator pedal.

If you need acceleration—for example, when passing—depress the accelerator pedal enough for the vehicle to exceed the set speed. When you release it, the vehicle will return to the speed set prior to the acceleration.

CANCELLING THE PRESET SPEED

You can cancel the preset speed by:

a. Pulling the control lever in the "CANCEL" direction and releasing it.

b. Depressing the brake pedal.

If the vehicle speed falls below about 40 km/h (25 mph), the preset speed will automatically cancel out.

If the vehicle speed drops 16 km/h (10 mph) below the preset speed, the preset speed will also automatically cancel out.

If the preset speed automatically cancels out other than for the above cases, have your vehicle checked by your Toyota dealer at the earliest opportunity.

RESETTING TO A FASTER SPEED

Push the lever up in the "+ RES" direction and hold it. Release the lever when the desired speed is attained. While the lever is held up, the vehicle will gradually gain speed.

However, a faster way to reset is to accelerate the vehicle and then push the control lever down in the "– SET" direction.

RESETTING TO A SLOWER SPEED

Push the lever down in the "– SET" direction and hold it. Release the lever when the desired speed is attained. While the lever is held down, the vehicle speed will gradually decrease.

However, a faster way to reset is to depress the brake pedal and then push the control lever down in the "– SET" direction.

RESUMING THE PRESET SPEED

If the preset speed is cancelled by pulling the control lever or by depressing the brake pedal, pushing the lever up in the "+ RES" direction will restore the speed set prior to cancellation.

However, once the vehicle speed falls below about 40 km/h (25 mph), the preset speed will not be resumed.

CRUISE CONTROL FAILURE WARNING

If the "CRUISE" indicator light in the instrument cluster flashes when using the cruise control, press the "ON·OFF" button to turn the system off and then press it again to turn it on.

If any of the following conditions then occurs, there is some trouble in the cruise control system.

- The indicator light does not come on.
- The indicator light flashes again.
- The indicator light goes out after it comes on.

If this is the case, contact your Toyota dealer and have your vehicle inspected.

SECTION 2–7

OPERATION OF INSTRUMENTS AND CONTROLS

Multi–information display

Reference 160
Before using the multi–information displayy 163
Switch operation 163
Functions 164
Information 166
Hands–free system 171
Adjustment 237
Outside temperature display 238

Reference

▶Type 1

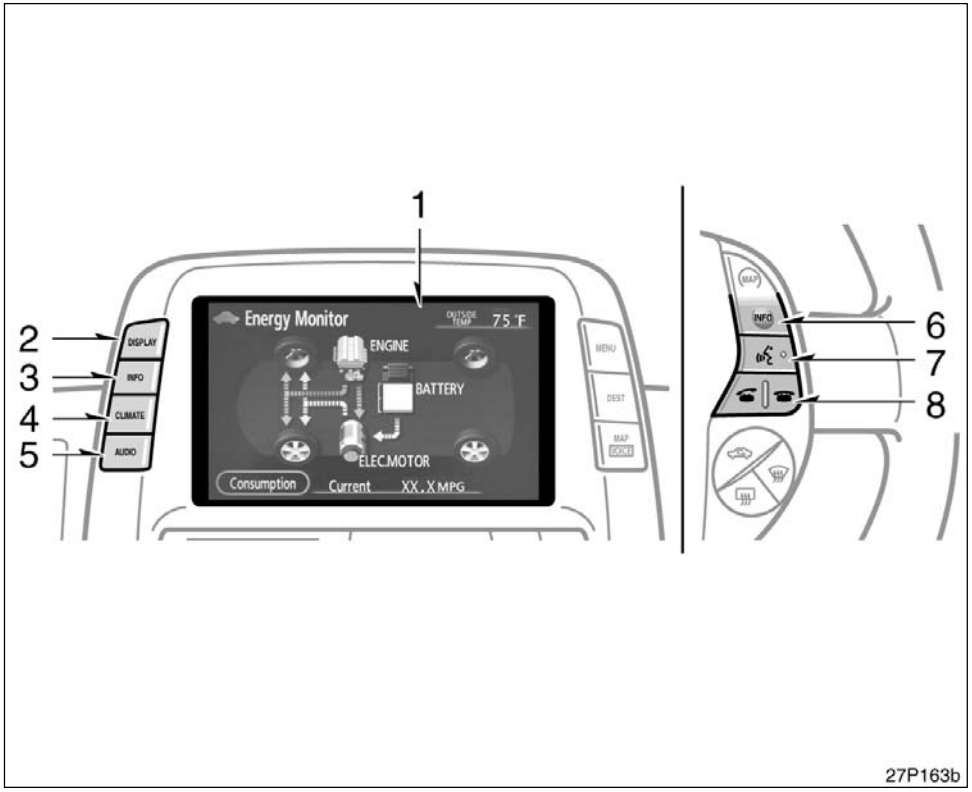

1. Multi–information display*
   (See page 163 for details.)
2. “DISPLAY” button
   The display adjustment screen is shown.
   (See page 237 for details.)
3. “INFO” button
   The information menu screen is shown.
   (See page 166 for details.)
4. “CLIMATE” button
   The air conditioning operation screen is shown.
   (See page 286 for details.)
5. “AUDIO” button
   The audio operation screen is shown.
   (See page 242 for details.)
6. “INFO” button (on the steering pad)
   The trip information screen is shown.
   (See page 168 for details.)
7. Speech command button (on the steering pad)
   (See page 235 for details.)
8. Telephone button (on the steering pad)
   (See page 171 for details.)

*: In this manual, English version screens are shown as an example.

▶**Type 2**

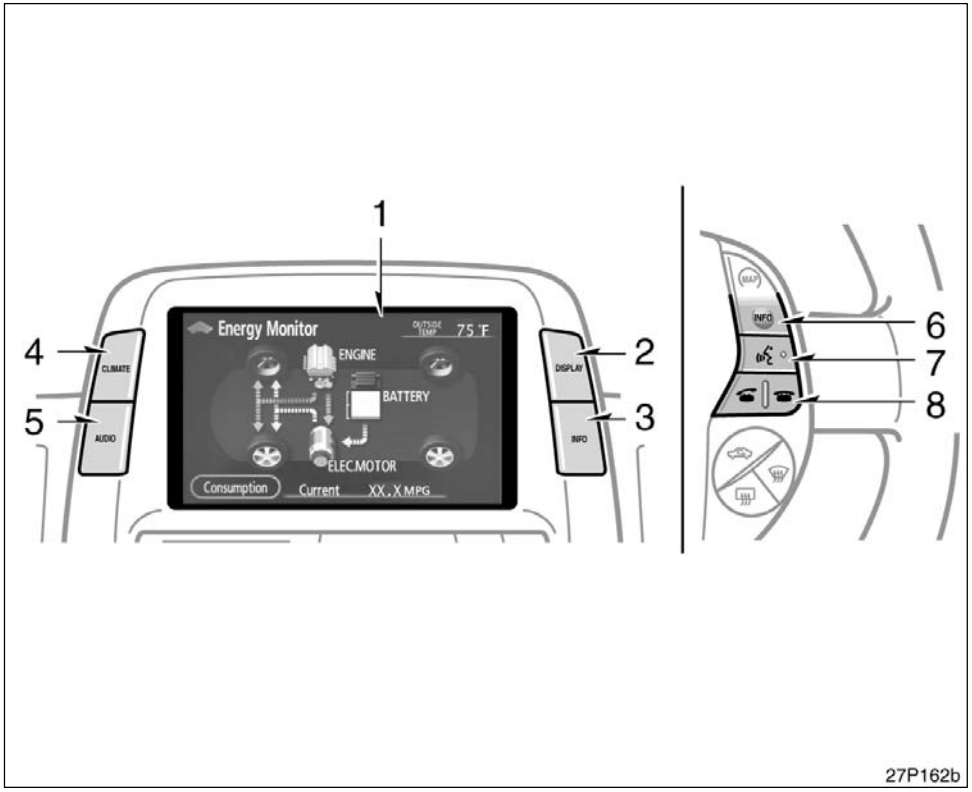

1. Multi–information display*
   (See page 163 for details.)
2. “DISPLAY” button
   The display adjustment screen is shown.
   (See page 237 for details.)
3. “INFO” button
   The information menu screen is shown.
   (See page 166 for details.)
4. “CLIMATE” button
   The air conditioning operation screen is shown.
   (See page 286 for details.)
5. “AUDIO” button
   The audio operation screen is shown.
   (See page 242 for details.)
6. “INFO” button (on the steering pad)
   The trip information screen is shown.
   (See page 168 for details.)
7. Speech command button (on the steering pad)
   (See page 184 for details.)
8. Telephone button (on the steering pad)
   (See page 171 for details.)

*: In this manual, English version screens are shown as an example.

▶**Type 3**

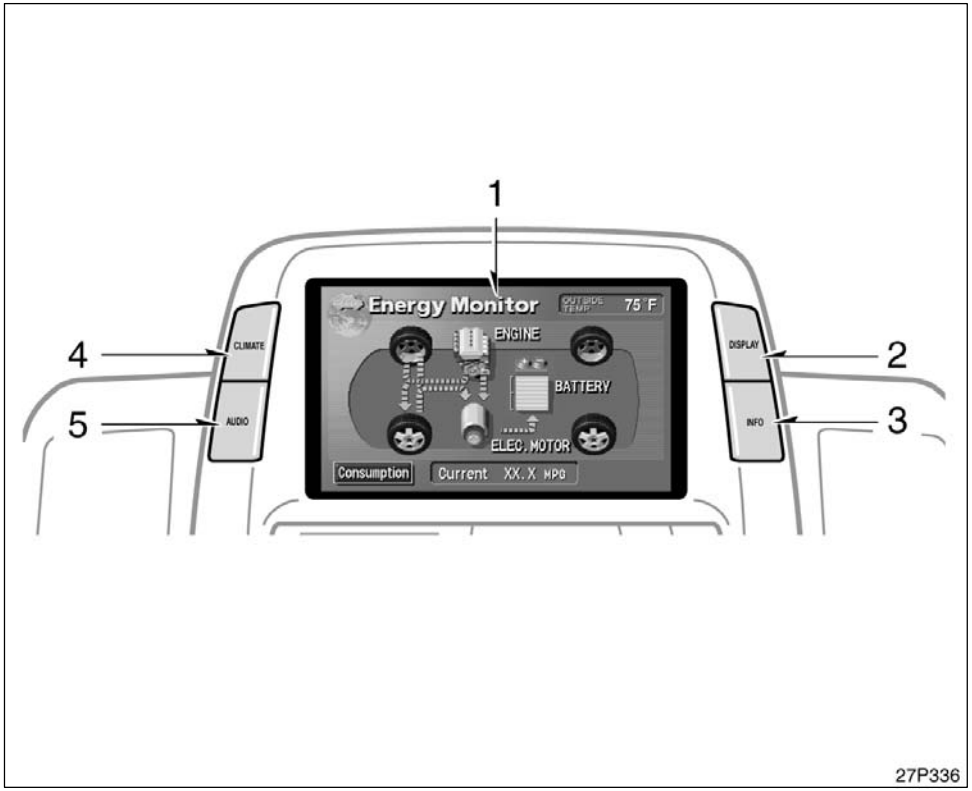

1. Multi–information display*
   (See page 163 for details.)
2. “DISPLAY” button
   The display adjustment screen is shown.
   (See page 237 for details.)
3. “INFO” button
   The information menu screen is shown.
   (See page 166 for details.)
4. “CLIMATE” button
   The air conditioning operation screen is shown.
   (See page 286 for details.)
5. “AUDIO” button
   The audio operation screen is shown.
   (See page 242 for details.)

*: In this manual, English version screens are shown as an example.

Before using the multi-information display

27P178

Type 1 and Type 2

26P049b

Type 3

When the “ACC” mode is enabled, the initial screen appears and the system begins operating.

After a few seconds, the previous mode display will appear.

If the electrical power source has been disconnected from the multi-information display, the display will be automatically set to the initial mode.

⚠ CAUTION

Do not adjust the display while the vehicle is moving. Be sure to adjust the display only when the vehicle is stopped.

Switch operation

This system operates mainly by the switches on the screen. To protect the screen, lightly touch switches on the screen with your finger. When you touch a switch on the screen or on the bezel, a beep sounds.

- If the system does not respond to a touch of a switch, move your finger away from the screen and then touch it again.
- You cannot operate dimmed switches.
- Wipe off fingerprints on the surface of the display using a glass cleaning cloth.
- The displayed image may become darker and moving images may be slightly distorted when the display is cold.
- When you look at the screen through polarized material such as polarized sunglasses, the screen may be dark and hard to see. If so, change the angle of the screen or take off your sunglasses.

Functions

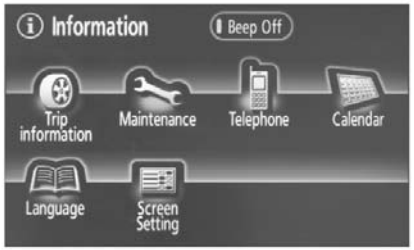

27P148

Type 1*

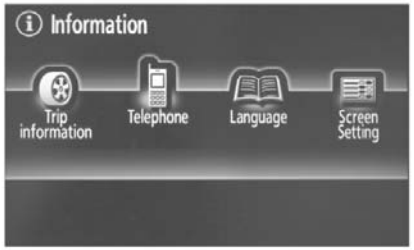

27P149

Type 2

26P027c

Type 3

*: For other functions (Maintenance, Calender and Beep setting), see the separate “Navigation System Owner’s Manual”.

1. Trip information, Telephone, Language and Screen setting

For details, see page 166.

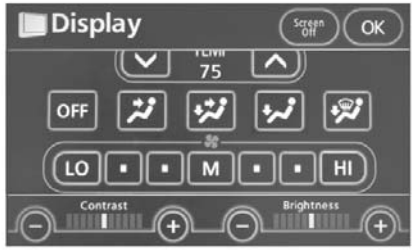

27P142a

2. Adjustment

The contrast and brightness on the screen are adjusted. For details, see page 237.

27P150

3. Air conditioner

Climate setting operations are available. For details, see page 286.

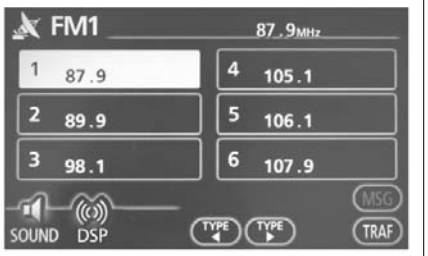

26P203a

4. Audio

The radio and compact disc operations are available. For details, see page 242.

24P117

5. Warning display

The warning symbol for the faulty system appears. For details, see page 132.

Information

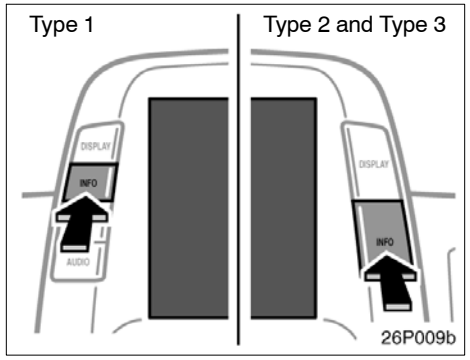

Push the "INFO" button to display the "Information Menu" screen.

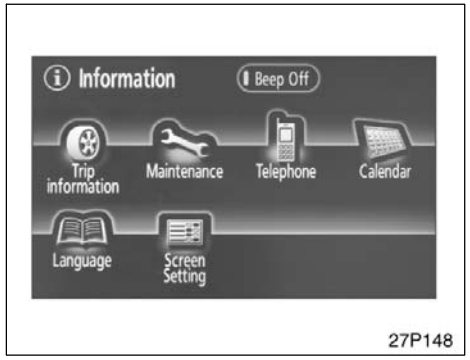

Type 1

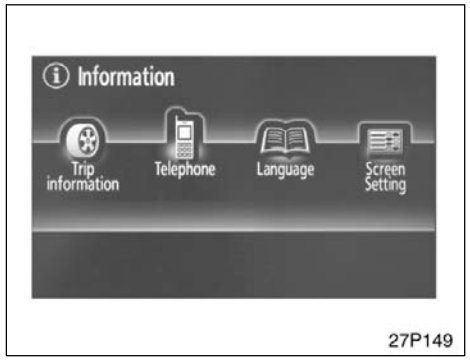

Type 2

Type 3

Trip information: The energy monitor and fuel consumption screen are selected.

Telephone: Telephone screen is shown. (See page 171 for details.)

Language: Select language screen is shown.

Screen setting: The screen setting screen is shown.

—Trip information

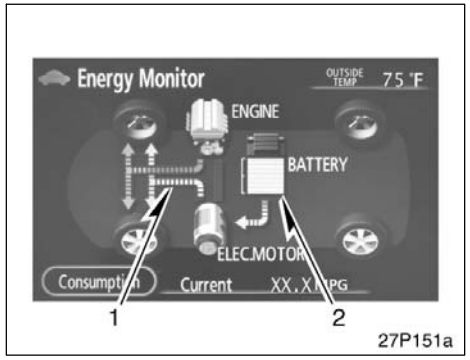

Type 1 and Type 2

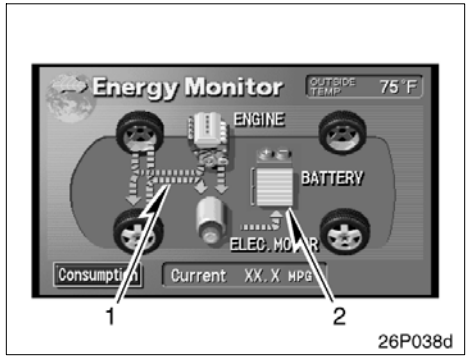

Type 3

Energy monitor screen

Touch the “Energy” switch. Vehicle driving condition, hybrid system operating condition and energy recovery condition are shown.

1. Indicates the flow of energy by orange and yellow arrows. While the energy is recovered, the arrows change the pointing direction and turn green.
2. Indicates the remaining capacity of the hybrid battery.

The screen display updates every 3 seconds, so it may not coincide with the actual status.

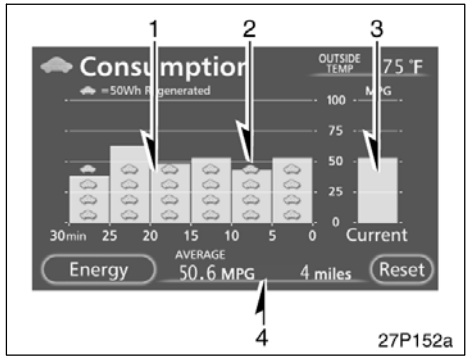

Type 1 and Type 2

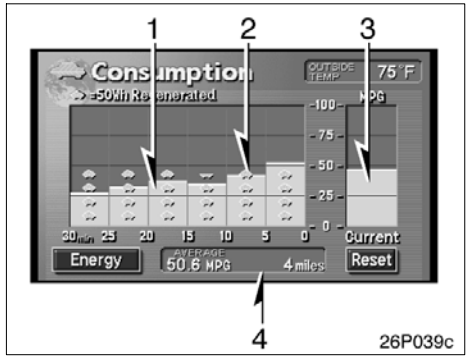

Type 3

Fuel consumption screen

Touch the “Consumption” switch. Average fuel consumption, momentary fuel consumption and recovered energy are shown.

1. Indicates the past momentary fuel consumption every 5 minutes.
2. Indicates the energy recovered for 5 minutes with symbols. One symbol refers to 50 Wh or the energy by which a 50 W bulb illuminates for an hour. Up to 4 symbols will be shown.
3. Indicates the current momentary fuel consumption.
4. Indicates the average fuel consumption after being reset. When the “Reset” switch is touched or more than 10 L (2.6 gal., 2.2 Imp.gal.) fuel is supplied, the average fuel consumption is reset.

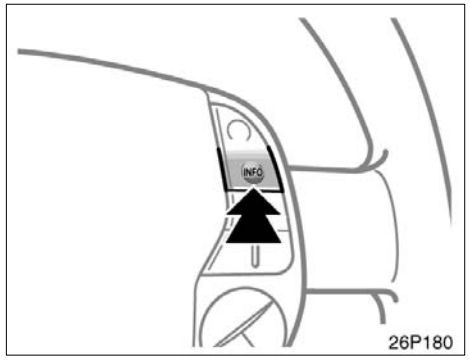

Steering switch operation (Type 1 and Type 2)

The trip information screen appears directly by pressing the “INFO” button on the right side of the steering pad. Each press changes the “Energy Monitor” and “Consumption” screens alternately.

—Language

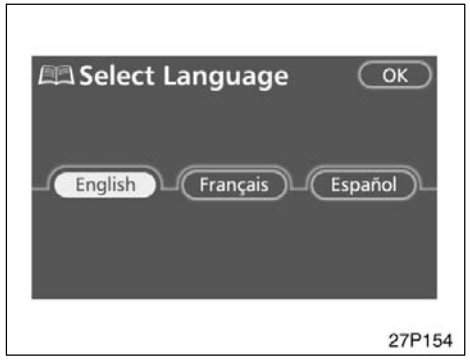

Type 1 and Type 2

Type 3

You can select the language shown on the screen. Touch your desired switch on the screen.

—Screen setting

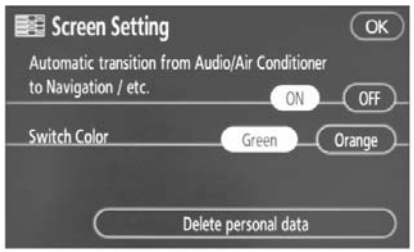

27P145

Type 1 and Type 2

AUTOMATIC TRANSITION

The function returning to the previous screen from the audio or air conditioner screen is selectable. Select "ON" or "OFF" and then touch "OK".

ON: The previous screen automatically returns from the audio or air conditioner screen 20 seconds after the end of audio or air conditioner screen operation.

OFF: The audio or air conditioner screen remains on.

SWITCH COLOR

Select the desired switch color and touch "OK".

DELETE PERSONAL DATA

The following personal data can be deleted or returned to their default settings:

- **Phone book data**
- **Dialed numbers and received calls**
- **Speed dial**
- **Bluetooth phone data**
- **Security code**

This function is available only when the vehicle is not moving.

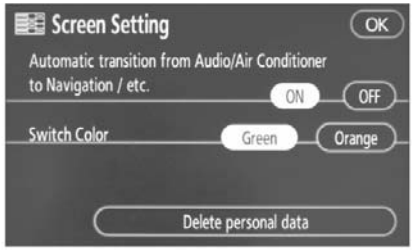

27P145

1. Touch "Delete personal data".

The "Delete personal data" screen appears.

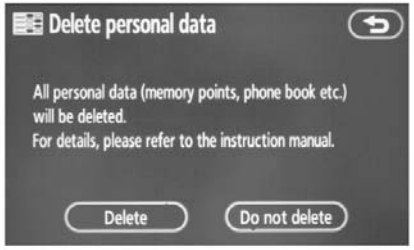

27P342

2. Touch "Delete".

The "Confirmation for deleting all personal data" screen appears.

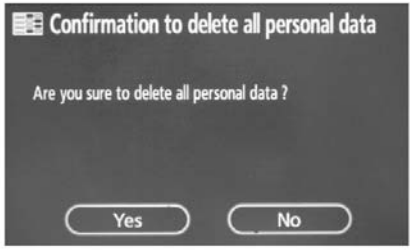

27P343

3. Touch "Yes".

26P030c

Type 3

AUTOMATIC TRANSITION

The function returning to the previous screen from the audio or air conditioner screen is selectable. Select "ON" or "OFF" and then touch "OK".

ON: The previous screen automatically returns from the audio or air conditioner screen 20 seconds after the end of audio or air conditioner screen operation.

OFF: The audio or air conditioner screen remains on.

BACKGROUND COLOR

Select the desired background color and touch "OK".

Hands–free system

Hands–free system allows you to make or receive a call without taking your hands off the steering wheel by connecting your cellular phone.

This system supports Bluetooth. Bluetooth is a wireless data system by which you can call without your cellular phone being connected with a cable or placed on a cradle.

If your cellular phone does not support Bluetooth, this system cannot function.

⚠ CAUTION

While you are driving, do not use a cellular phone or connect the Bluetooth phone.

NOTICE

Do not leave your cellular phone in the vehicle. The temperature indoor may be high and damage the phone.

INFORMATION
In the following conditions, the system may not function. ● ***The cellular phone is turned off.*** ● ***The current position is outside the communication area.*** ● ***The cellular phone is not connected.*** ● ***The cellular phone has a low battery.***

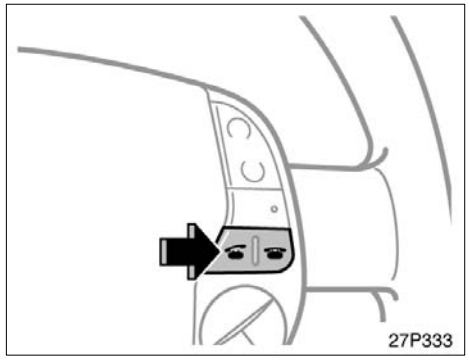

By pushing the telephone button above, you can receive a call or hang up without taking your hands off the steering wheel.

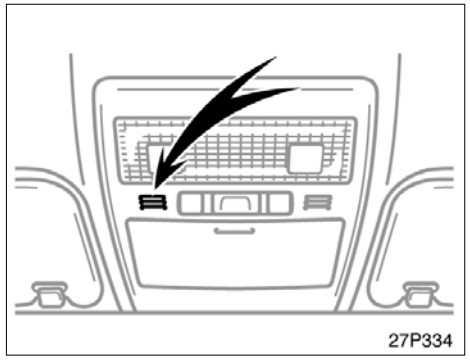

You can use the microphone above when talking on the phone.

The other party's voice outputs from the driver's speaker. When the received calls or received voice outputs, the audio from the audio system will be muted.

INFORMATION

- **Talk alternately with the other party on the phone. If you talk at the same time, the voice may not reach each other. (It is not a malfunction.)**
- **Keep the volume of receiving voice down. Otherwise, echo is coming up. When you talk on the phone, speak clearly towards the microphone.**
- **In the following situations, your voice may not reach the other party.**
  - **Driving on unpaved road. (Making a traffic noise.)**
  - **Driving at the high speed.**
  - **The window is open.**
  - **Turning the air conditioning vents towards the microphone.**
  - **The sound of the air conditioning fan is loud.**

27P180

1. Indicates the condition of Bluetooth connection.

"Blue" indicates an excellent connection to Bluetooth.

"Yellow" indicates a bad connection to Bluetooth, resulting in possible deterioration of voice quality.

: no connection to Bluetooth.

2. Indicates the amount of battery charge left.

Empty ← → **Full**

It is not displayed while the Bluetooth is connecting or the phone book data is being transferred.

The amount left does not always correspond with the one of your cellular phone. This system does not have a charging function.

3. Indicates the receiving area.

"Rm" is displayed when receiving in Roaming area.

"Hm" is displayed when receiving in Home area.

4. Indicates the level of reception.

Too bad ← → **Excellent**

The level of reception does not always correspond with the one of your cellular phone.

INFORMATION
This system supports the following service. **● HFP (Hands Free Profile) Ver. 1.0** **● OPP (Object Push Profile) Ver. 1.1** **If your cellular phone does not support HFP, you cannot enter the Bluetooth phone, and take OPP service individually.**

An antenna for the Bluetooth connection is built in the display. The indication of the Bluetooth connection may turn yellow and the system may not function when you use the Bluetooth phone in the following conditions and places.

- Your cellular phone is hiding behind the display (behind the seat or in the glove box and console box).
- Your cellular phone touches or is covered with metal materials.

Leave the Bluetooth phone on the place where “Blue” indication is displayed.

Bluetooth®

Bluetooth is a trademark owned by Bluetooth SIG. Inc.

When you release your vehicle:

A lot of personal data is registered when you use the hands–free system. When you release your vehicle, initialize your data.

If you initialize it, the former state will never come back again. Pay much attention when initializing the data.

You can initialize the following data in the system.

- phone book data
- dialed numbers and received calls
- speed dial
- Bluetooth phone data
- security code

FCC ID: BABBT003A
IC ID: 2024B–BT003A
MADE IN JAPAN

This device complies with Part 15 of the FCC Rules and RSS–210 of the IC Rules. Operation is subject to the following two conditions: (1) This device may not cause harmful interference, and (2) This device must accept any interference received, including interference that may cause undesired operation.

⚠ CAUTION

Changes or modifications not expressly approved by the party responsible for compliance could void the user's authority to operate the equipment.

CAUTION: Radio Frequency Radiation Exposure

This equipment complies with FCC radiation exposure limits set forth for uncontrolled equipment and meets the FCC radio frequency (RF) Exposure Guidelines in Supplement C to OET65. This equipment has very low levels of RF energy that it deemed to comply without maximum permissive exposure evaluation (MPE). But it is desirable that it should be installed and operated with at least 20cm and more between radiator and person's body (excluding extremities; hands, wrists, feet and legs).

Co–location: This transmitter must not be co–located or operated in conjunction with any other antenna or transmitter.

(a) Entering a Bluetooth phone

To use the hands–free system, you need to enter your phone into the system. Once you have registered it, you can make a hands–free call.

1. **Push the "INFO" button to display the "Information" screen.**

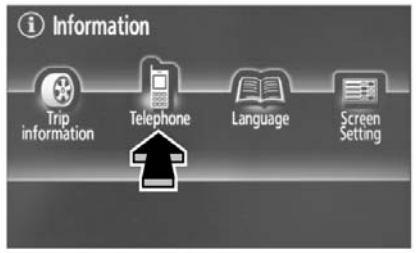

27P181

2. **Touch the "Telephone" switch to display "Telephone" screen.**

You can also push the button of the steering wheel to display this screen when the vehicle is stopped.

27P182

3. Touch the “Settings” switch to display “Settings” screen.

27P183

4. Touch the “Bluetooth” switch to display the “Bluetooth Settings” screen.

27P184

5. Touch the “Register” switch to connect your cellular phone to the system.

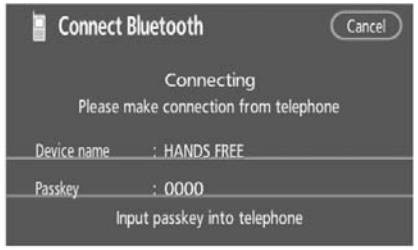

27P185

6. When this screen is displayed, input the Passkey displayed on the screen into the phone.

For the operation of the phone, see the manual that comes with your cellular phone.

If you want to cancel it, touch “Cancel”.

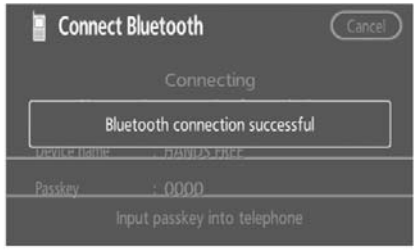

27P186

7. When the connection is completed, this screen is displayed.

You do not need to enter the phone in case of using the same one.

27P187

When this screen is displayed, follow the guidance on the screen to try again.

● **Connecting a Bluetooth phone**

(a) automatically

27P188

When you register your phone, auto connection will be turned on. Always set it to this mode and leave the Bluetooth phone in a condition where connection can be established.

Each time you touch the "Auto Connect" switch, auto connection will be switched on or off.

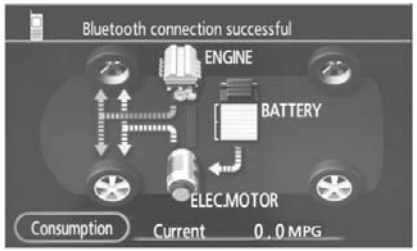

27P189

When the "ACC" or "IG–ON" mode is enabled, the selected Bluetooth phone will be automatically connected and the connection result is displayed.

This screen appears when the Bluetooth phone is first connected after the "ACC" or "IG–ON" mode is enabled.

(b) manually

When the auto connection failed or turned off, you have to connect Bluetooth manually.

27P190

Touch the "Connect" switch after having enabled the Bluetooth connection on the phone.

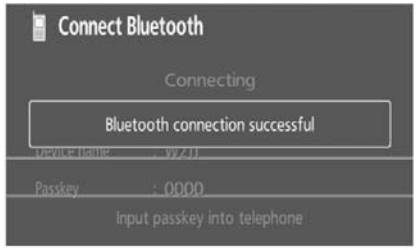

27P191

When the connection is completed, this screen is displayed.

Now you can use the Bluetooth phone.

- **Reconnecting the Bluetooth phone**

If the Bluetooth phone is disconnected with a poor reception from the Bluetooth network when the "ACC" or "IG–ON" mode is enabled, the system automatically reconnects the Bluetooth phone. In this case, the connection result is not displayed.

If the Bluetooth is disconnected on purpose such as you turned your cellular phone off, this does not happen. Reconnect it by the following methods.

- Select the Bluetooth phone again.
- Enter the Bluetooth phone.

(b) Calling on the Bluetooth phone

After you enter the Bluetooth phone, you can call by using hands–free system. You can call using the 7 methods described below.

(i) By dial

You can call by inputting the telephone number.

This cannot be operated while you are driving.

27P192

Touch the desired key to input the telephone number.

Each time you touch "◀", an inputted digit is deleted.

When you touch "", the number you called last is inputted.

Touch "" or push the button of the steering wheel.

(ii) By phone book

You can call by phone book data which is transferred from your cellular phone.

The system has one phone book. You can register up to 1000 numbers.

This cannot be operated while you are driving.

27P193

Touch the desired key to input the telephone number.

1. **Touch the "Phone Book" switch to display "Phone Book" screen.**

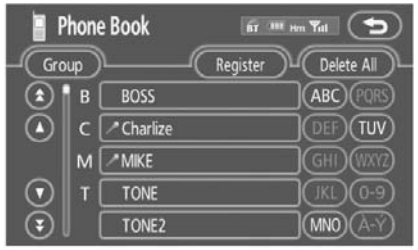

27P194

2. **Select the desired number from the list.**

27P195

Touch "" or push the button of the steering wheel.

(iii) By dialed numbers

You can call by dialed number. The system memorizes up to 5 dialed numbers. If it is over 5, the oldest number is deleted.

This cannot be operated while you are driving.

27P196

1. **Touch the "Call Log" switch to display "Outgoing Calls" screen.**

27P197

- When you call by phone book, the name (if registered) is displayed.
- When you call the same number continuously, only the newest number is registered.

2. **Select the desired number from the list.**

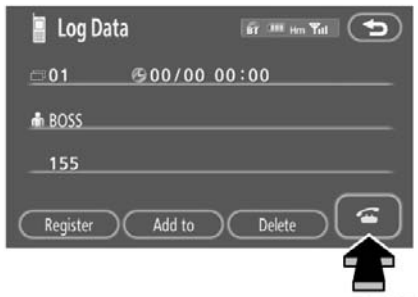

27P198

Touch "" or push the button of the steering wheel.

(iv) By received calls

You can call by received calls. When a call is received, the system memorizes up to 5 numbers. If it is over 5, the oldest number is deleted.

This cannot be operated while you are driving.

27P196

1. Touch the "Call Log" switch to display.

27P199

2. Touch the "Incoming Calls" switch to display "Incoming Calls" screen.

27P200

- When a telephone number registered in the phone book is received, the name and the number are displayed.
- Received calls which you did not answer are also memorized in the system and "Abs." is displayed on the left side of the number.
- Unnoticed telephone number such as a public telephone is not memorized in the system.

3. Select the desired number from the list.

27P198

Touch "" or push the button of the steering wheel.

- An international phone call may not be made depending on the cellular phone which you have.

(v) By speed dial

You can call by registered telephone number which you selected from a phone book, dialed numbers and received calls. (See page 191 for registering the speed dial.)

27P201

1. Touch the "Speed Dial" switch to display "Speed Dial" screen.

27P202

2. **Touch the desired number to call. You can change the page by touching "Speed Dial 2" or "Speed Dial 3".**

When you push the telephone button while you are driving, the screen above appears. Touch the desired name to call. (The telephone number is not displayed.)

(vi) By voice recognition

27P203

You can call by giving a command. (For the operation and command of voice recognition, see "Speech Command System" on page 235 and "Help screen" on page 236.)

- **Dialing by name**

You can call by giving a voice tag registered in the phone book. For setting the voice recognition, see "Setting the voice recognition" on page 209.

Example: Call Charlize

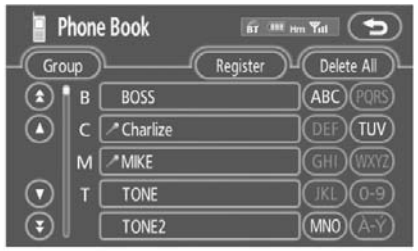

27P194

You: Push the talk switch.

System: “After the beep, please say the name.”

You: “Charlize.”

System: “Charlize chosen, when ready, please briefly push the talk switch or push the off–hook switch to dial.”

You: Push the talk switch.

System: “After the beep, please say “Dial”.”

You: “Dial.”

System: “Dialing the name.”

Now you can call Charlize.

27P204

“Next” is displayed when multiple entries are found for a searched name.

Up to 6 entries can be displayed including the first searched one.

Do the following to change the entry to the next one.

- Touch the “Next” switch.
- Push the talk switch to say “Next Candidate”.

Calling without the voice recognition.

After the entry number is displayed, you can also call by pushing the telephone button or touching the “Dial” switch.

Cancelling the voice recognition

The voice recognition will be cancelled when you do the following.

- Keep on pushing the talk switch.
- Push the button of the steering wheel.
- Touch the “Cancel” switch. (Except for recognizing the command)
- Say “Cancel”.

- **Dialing by phone number**

You can call by giving a desired number.

27P205

You: Push the talk switch.

System: “After the beep, please say the number.”

You: “812387”

System: “When ready, please briefly push the talk switch or push the off–hook switch to dial.”

You: Push the talk switch.

System: “After the beep, please continue to add numbers or say “Dial”.”

You: “Dial.”

System: “Dialing the number.”

Now you can call 812387.

- **Sending a tone**

You can send a tone by giving a desired number.

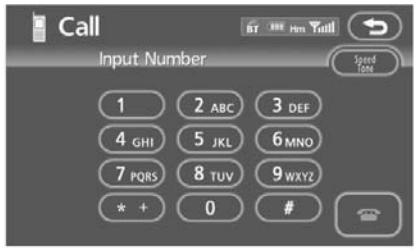

27P206

You: Push the talk switch.

System: “Say numbers, pound, or star.”

You: “1234.”

System: “1234.” “Push the talk switch.”

You: Push the talk switch.

System: “Send? Say Yes or No.”

You: “Yes.”

System: “Sending.”

Now you can send the tone.

(vii) By POI call (with Navigation System)

27P207

You can call by touching "" when it is displayed on the screen from Navigation system. (See the separate "Navigation System Owner's Manual" for details.)

(c) Receiving on the Bluetooth phone

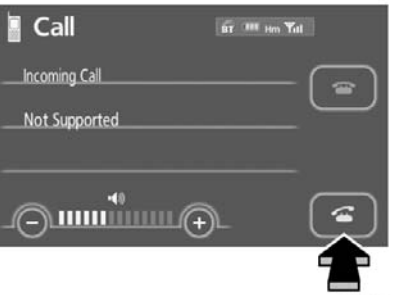

27P208

When a call is received, this screen is displayed with a sound. Touch "" or push the button of the steering wheel to talk on the phone.

To hang up the phone:

Touch "" or push the button of the steering wheel again.

To refuse to receive the call:

Touch "" and hold it.

To adjust the volume of received call:

Touch "–" or "+" or use the volume switch of the steering wheel.

On the international phone call, the other party's name may not be displayed correctly depending on the cellular phone which you have.

(d) Talking on the Bluetooth phone

27P209

While you are talking on the phone, this screen is displayed. You can do the operations below on the screen.

To adjust the volume of the other party's voice:

Touch "–" or "+" or use the volume switch of the steering wheel.

To hang up the phone:

Touch the "" switch or push the button of the steering wheel

To mute your voice:

Touch the "Mute" switch.

To input a Key:

Touch the "0–9" switch.

To transfer the call

Touch the "Transfer Call" switch.

You cannot change from hands–free call to cellular phone call while you are driving.

When you change from cellular phone call to hands–free call, the hands–free screen will be displayed and you can operate it on the screen.

Transferring method and behavior are different depending on the cellular phone which you have.

For the operation of the phone, see the manual that comes with your cellular phone.

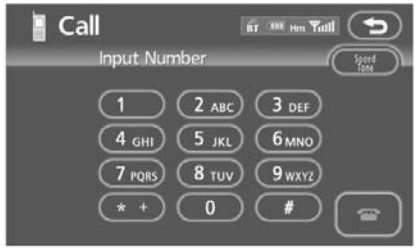

27P206

Touch the desired number to input the key.

To hang up the phone:

Touch "" or push the button of the steering wheel.

This cannot be operated while you are driving.

27P210

If the continuous tone signal is registered in a phone book, this screen appears. (If not registered, "Send" and "Exit" are not displayed.)

Confirm the number displayed on the screen and touch "Send". The number before marked sign will be sent.

When you touch "Exit", this function will be finished and normal tone screen appears.

To hang up the phone:

Touch "" or push the button of the steering wheel.

The continuous tone signal is the marked sign (p or w) and the number following telephone number. (ex. 056133p0123w#1:)

You can do this operation when you want to operate an answering machine or use a telephone service in bank for example. You can register the phone number and the code number in the phone book.

- **Sending a tone by the speed tone**

You can send a tone by the speed tone. (For registering the speed tone, see "Registering the speed tone" on page 194.)

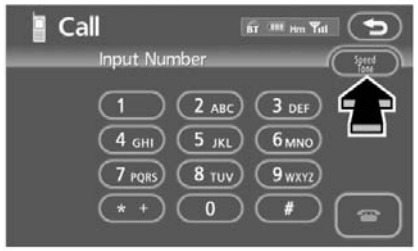

27P211

1. Touch the "Speed Tone" switch.

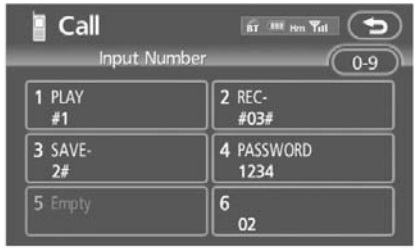

27P212

2. Touch the desired switch to send a tone.

(e) Changing the settings of the Bluetooth phone

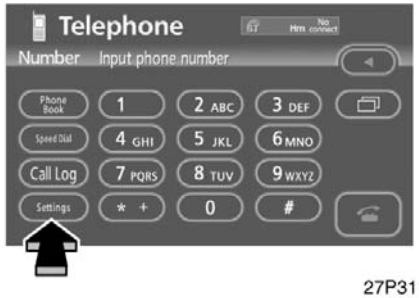

27P311

Touch the “Settings” switch to display “Settings” screen.

27P214

You can change the settings of the phone.

(i) (a) Registering the speed dial

You can register the desired telephone number from phone book, dialed numbers and received calls. Up to 17 speed dial numbers can be registered.

The 6th entry is the speed dial for redialing.

27P215

1. **Touch the "Speed Dial" switch to display the "Speed Dial Settings" screen.**

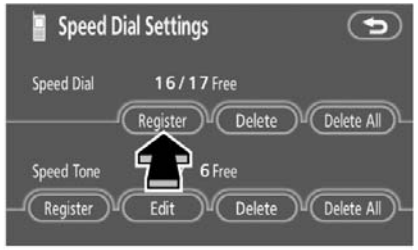

27P216

2. **Touch the "Register" switch of "Speed Dial".**

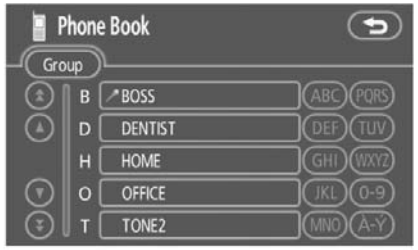

27P217

3. **Select the data you want to register.**

27P218

4. Touch the desired telephone number.

27P219

5. Touch the switch you want to register in.

The latest dialed number is registered in the 6th item (speed redial).

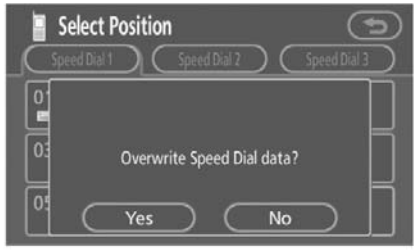

27P220

6. If you select a switch you registered before, this screen is displayed.

Touch the "Yes" switch if you want to overwrite it.

● **Deleting the speed dial individually**

You can delete “01” – “17” of the speed dial individually.

If you delete them all at once, all of 17 numbers are deleted.

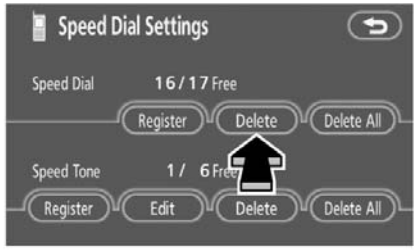

27P221

1. Touch the “Delete” switch of “Speed Dial”.

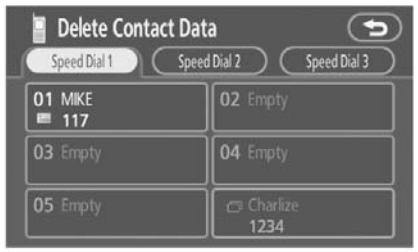

27P222

2. Touch the switch you want to delete.

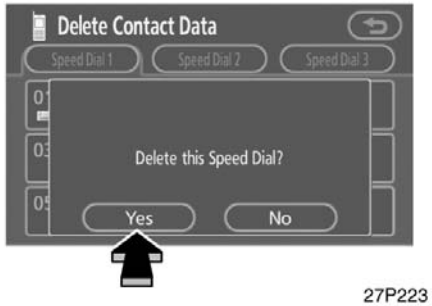

27P223

3. Touch the “Yes” switch.

- **Deleting all of the speed dial**

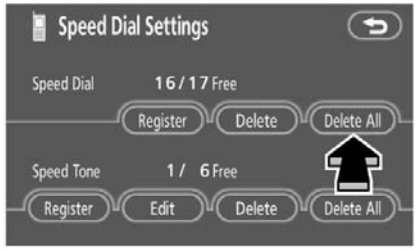

27P224

1. **Touch the "Delete All" switch of "Speed Dial".**

27P225

2. **Touch the "Yes" switch.**

(b) Registering the speed tone

You can register the desired tone number. Up to 6 speed tone numbers can be registered.

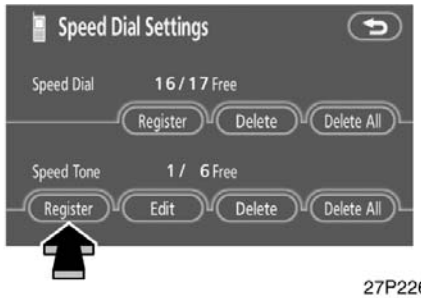

27P226

1. **Touch the "Register" switch of "Speed Tone".**

27P227

2. Use the software keyboard to input the name.

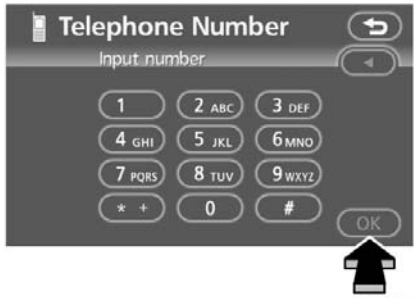

27P228

3. Input the number and touch “OK”.

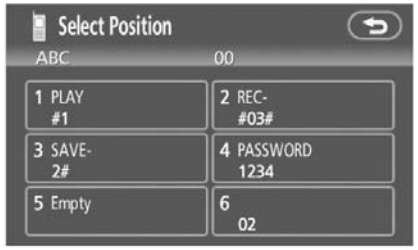

27P229

4. Touch the desired switch you want to register in.

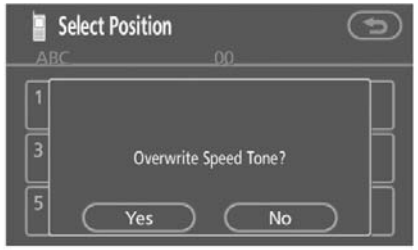

27P230

5. If you select a switch you registered before, this screen is displayed. Touch the “Yes” switch if you want to overwrite it.

● **Editing the speed tone.**

You can edit the speed tone.

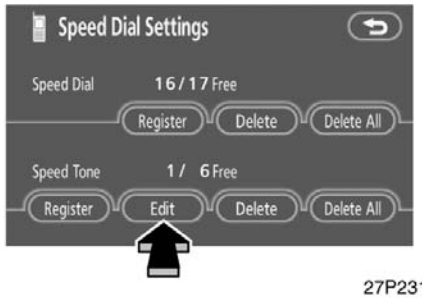

27P231

1. Touch the “Edit” switch of “Speed Tone”.

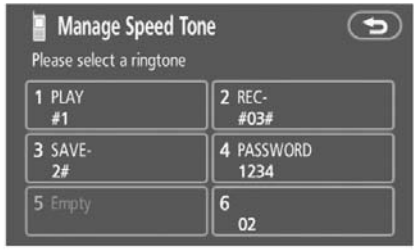

27P232

2. Touch the switch you want to edit.

27P233

3. **Use the software keyboard to input the name.**

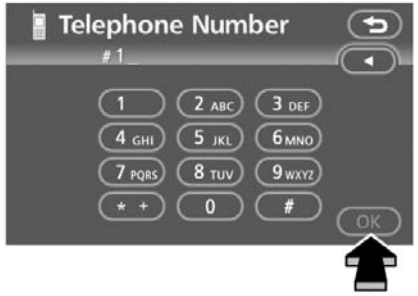

27P234

4. **Input the number and touch "OK".**

- **Deleting the speed tone individually.**

You can delete "1" to "6" of the speed tone.

If you delete them all at once, all of 6 numbers are deleted.

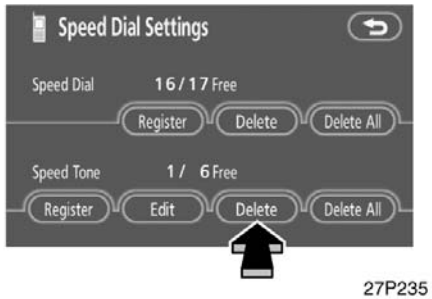

27P235

1. **Touch the "Delete" switch of "Speed Tone".**

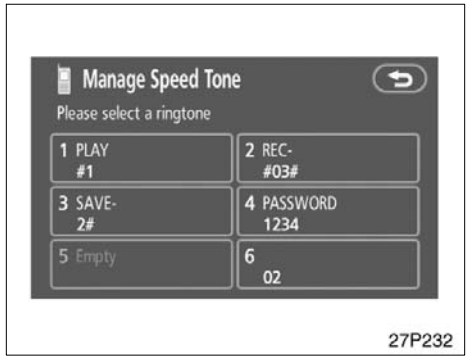

2. Touch the switch you want to delete.

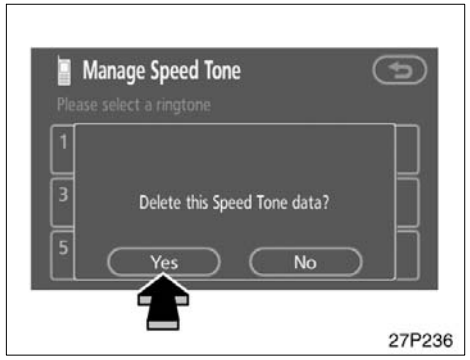

3. Touch the "Yes" switch.

● **Deleting all the speed tone**

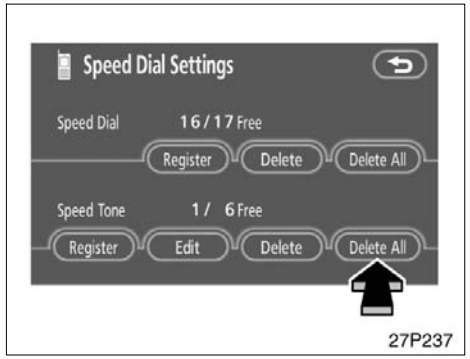

1. Touch the "Delete All" switch of "Speed Tone".

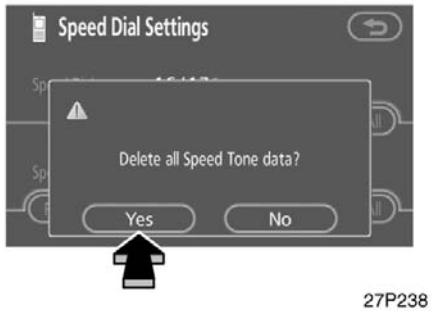

27P238

2. Touch the "Yes" switch.

(ii) Setting the volume

27P239

1. Touch the "Volume" switch to display the "Volume Setting" screen.

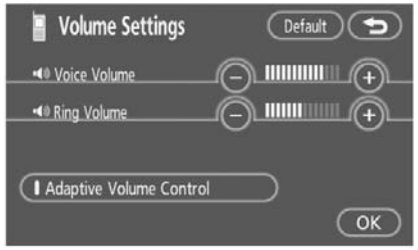

27P240

2. Touch the "–" or "+" switch to adjust the "Voice Volume" or "Ring Volume".

Voice Volume . . adjusting the other party's voice.

Ring Volume . . . adjusting the ring volume.

- **Automatic volume settings for high speed**

You can set the volume one step up when the vehicle speed is over 80 km/h. (When it is under 70 km/h, previous volume is back.)

Each time you touch the “Adaptive Volume Control” switch, you can switch on or off.

- **Initializing the settings**

You can initialize the settings.

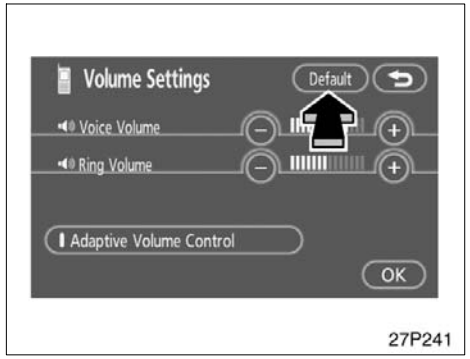

Touch the “Default” switch.

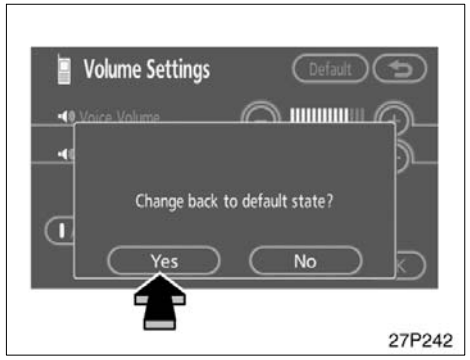

Touch the “Yes” switch.

(iii) Setting the screen

27P243

1. **Touch the "Screen" switch to display the "Screen Settings" screen.**

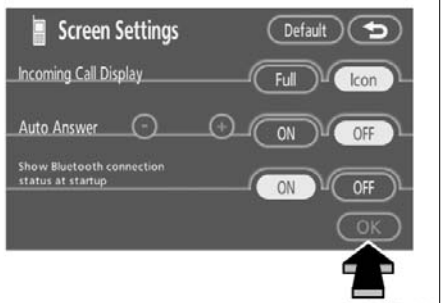

27P244

2. **Do the detailed settings of the screen and touch "OK".**

● **Receiving Call Display**

You can select the method of the receiving call display.

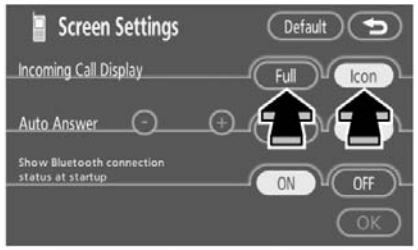

27P245

Touch the "Full" or "Icon" switch.

Full mode . . . . . When a call is received, the hands–free screen is displayed and you can operate it on the screen.

Icon mode . . . . . The message is displayed on the upper side of the screen. You can only operate the steering switch.

- **Auto answer**

When a call is received, the display automatically changes to the talking screen and you can start to talk on the phone (without touching any switch) after the preset time.

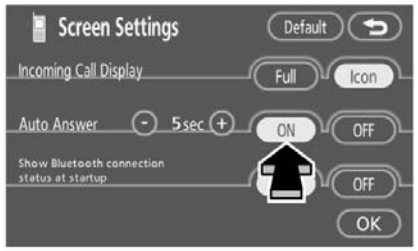

27P246

Touch the "ON" switch of "Auto Answer" and "–" or "+" switch to adjust the waiting time of auto answer within 1 – 60 seconds.

- **The Bluetooth connection status at startup**

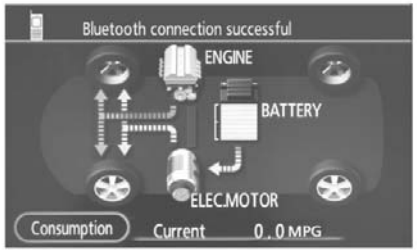

27P189

When you turn the "POWER" switch to "ACC" or "IG–ON" and the Bluetooth is automatically connected, the connection check is displayed.

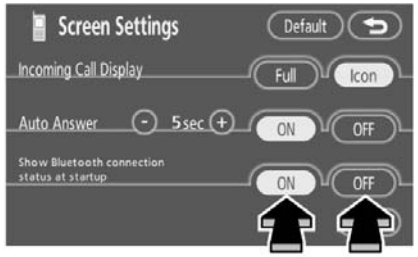

27P247

Touch the "ON" or "OFF" switch of Show Bluetooth connection status at startup.

● **Initializing the settings**

You can initialize the settings.

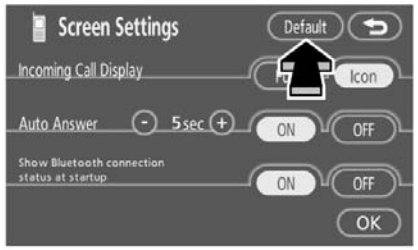

27P248

Touch the "Default" switch.

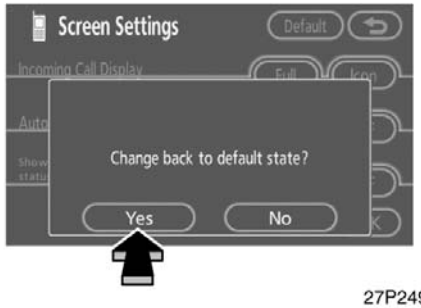

27P249

Touch the "Yes" switch.

(iv) Setting the phone book

You can register phone numbers in the phone book.

27P250

Touch the "Phone Book" to display the "Phone Book Management" screen.

27P251

You can do the detailed settings of phone book.

- **Transferring a telephone number**

You can transfer the telephone numbers in your Bluetooth phone to the system. Up to 1000 person's data (up to 2 numbers a person) can be registered in the phone book.

Transfer it while the engine is running.

27P252

1. **Touch the "Transfer Data" switch to display "Select Group" screen.**

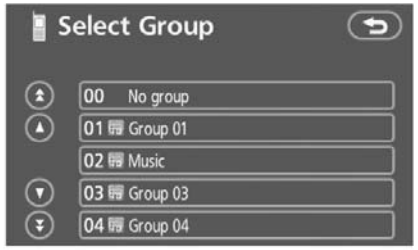

27P253

2. **Select the group you want to transfer the data to.**

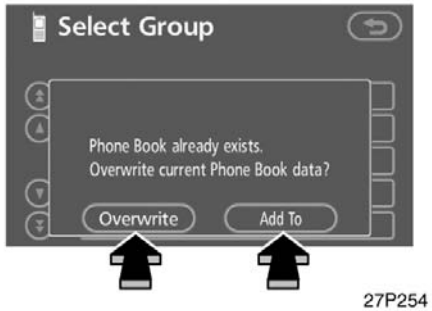

27P254

3. **Touch the "Overwrite" or "Add To" switch.**

27P255

4. **Transfer the phone book data to the system using the Bluetooth phone.**

This screen appears while transferring. To cancel it, touch the "Cancel" switch. If the transferring is interrupted on the way, the phone book data transferred until then can be memorized in the system.

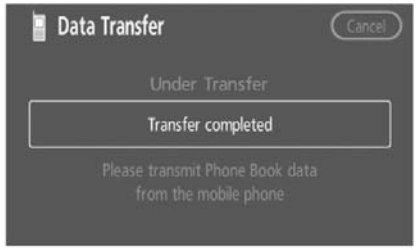

27P256

5. **When this screen is displayed, the transfer is completed.**

27P257

When this screen is displayed, try the transfer operation again.

● **Registering the phone book data**

You can register the phone book data.

27P258

1. Touch the "Register" switch.

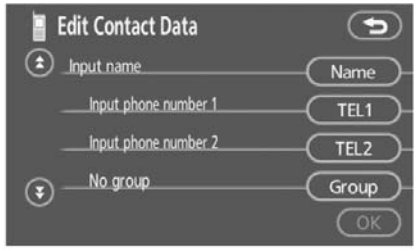

27P259

2. Touch the desired switch to edit the phone book.

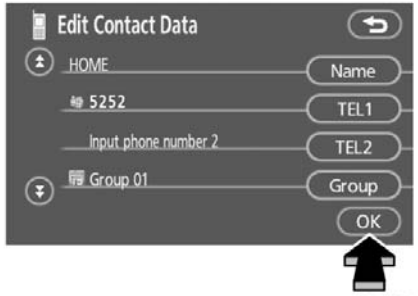

27P260

3. When you complete the edit, touch the “OK” switch.

● **Editing the name**

When you do not input the name, the number is displayed.

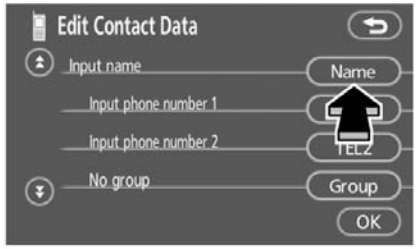

27P261

1. Touch the “Name” switch.

27P262

2. Use the software keyboard to input the name.

● **Editing the phone number**

You can register a phone number in "TEL1" and "TEL 2" separately. Up to 2 numbers a person can be registered.

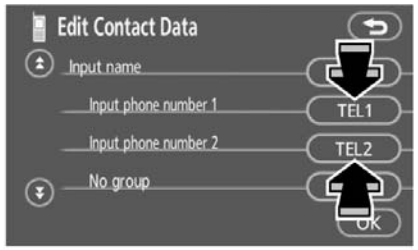

27P263

1. Touch the "TEL 1" or "TEL 2" switch.

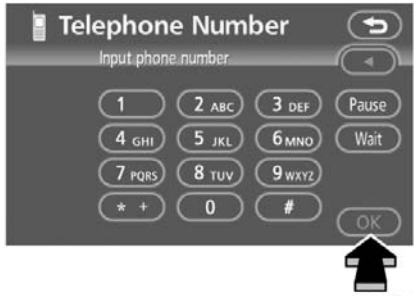

27P264

2. Input the number and touch "OK".

27P265

3. Select the desired icon.

● **Selecting the group**

You can set a group for a contact (for example: "Family", "Friends", "Office"...). It will then be easier for you to find this contact when needed, by using the group display.

You can select "No group" or "Group 01" to "Group 19".

"No group" is displayed if you do not set the group.

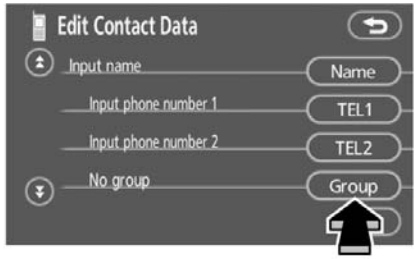

27P266

1. Touch the "Group" switch.

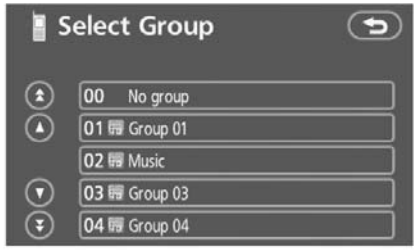

27P267

2. Select the desired group.

● **Setting the voice recognition**

You can set the voice recognition. Up to 20 numbers can be registered for the voice recognition.

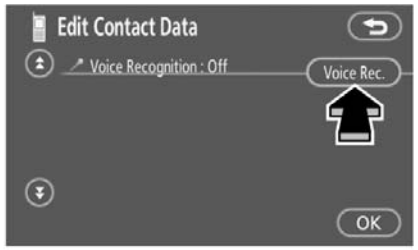

27P268

1. Touch the "Voice Rec." switch.

27P269

2. **Select the phone number and touch the "REC" switch to record a voice-tag.**

27P270

3. **Touch the "PLAY" switch to play the voicetag.**

If you want to delete it, touch the "Delete" switch and "OK".

● **Adding data to the phone book**

You can add data to the phone book.

27P271

1. **Touch the "Add to" switch.**

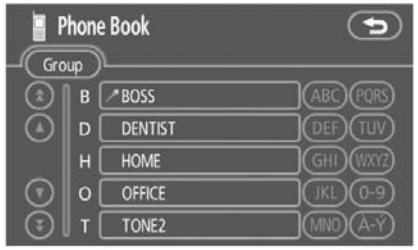

27P272

2. Select the data you want to add log data to.

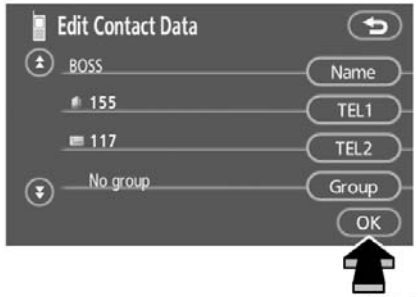

27P273

3. Confirm the added data on the screen and touch “OK”.

● **Editing the data**

You can edit the registered data.

27P274

1. Touch the “Edit” switch.

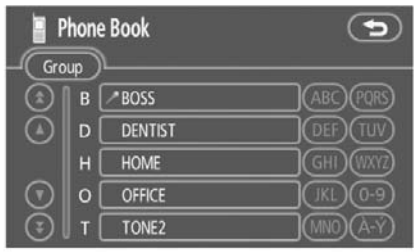

27P272

2. Select the data you want to edit.

27P275

3. Touch the desired switch.

When you edit the data, touch “OK”.

27P276

When you also touch the “Edit” switch on this screen, you can edit it.

● **Deleting the data**

You can delete the data.

When you release your vehicle, delete all your data on the system.

27P277

1. **Touch the "Delete" switch of "Phone Book".**

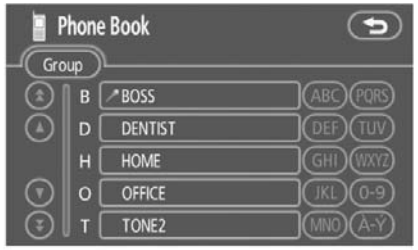

27P272

2. **Touch the desired switch.**

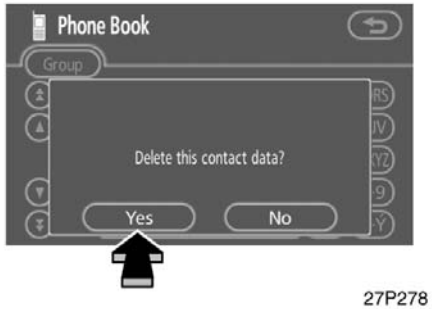

27P278

3. **Touch the "Yes" switch.**

You can also delete it in the following way.

27P193

1. Touch the "Phone Book" switch.

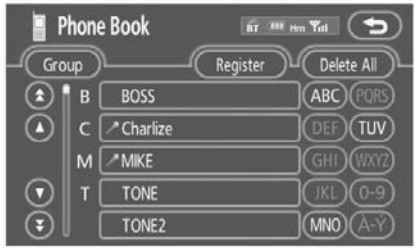

27P194

2. Select the desired data.

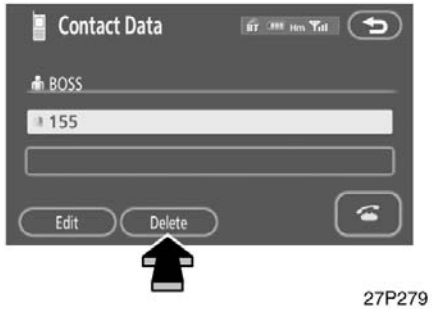

27P279

3. Touch the "Delete" switch.

27P280

4. Touch the "Yes" switch.

● **Deleting all the phone data**

27P281

1. Touch the "Delete All" switch of "Phone book".

27P282

2. Select the deleting method.

Group Data . . . . . deleting all the phone data in group

All Contact Data . . deleting all the phone data

3. When you select “Group Data”, the “Select Group” screen is displayed.

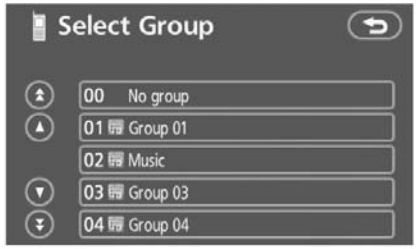

27P283

4. Select the desired group.

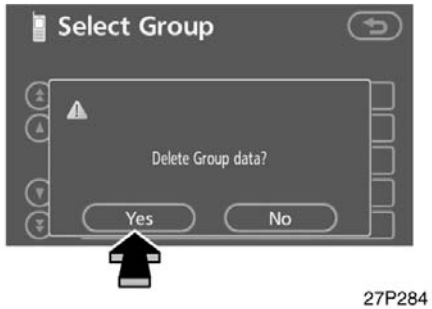

27P284

5. Touch the “Yes” switch.

You can also delete it in the following way.

27P193

1. Touch the “Phone Book” switch.

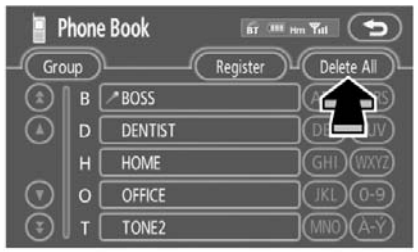

2. Touch the “Delete All” switch.

3. Touch the “Yes” switch.

● **Registering a group name**

You can register 20 groups. “No Group”, “Group 01” – “Group 19” are registered by default.

You can change “Group 01” – “Group 19” into desired names.

1. Touch the “Register” switch of “Group name”.

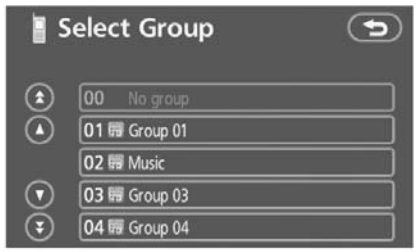

27P288

2. Select the group you want to register.

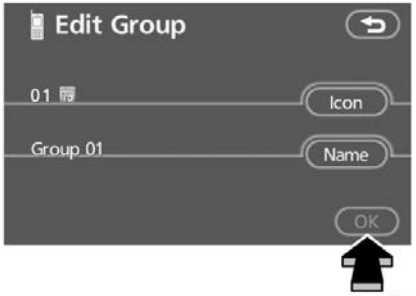

27P289

3. When you complete all the edit, touch the "OK" switch.

● Selecting a group icon

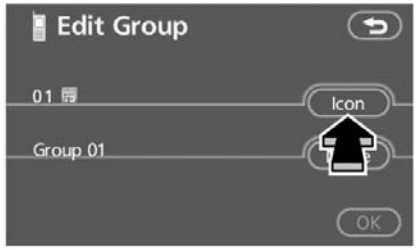

27P290

1. Touch the "Icon" switch.

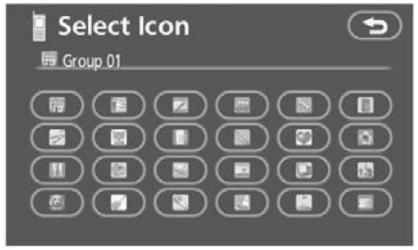

27P291

2. Select the desired icon.

● **Editing a group name**

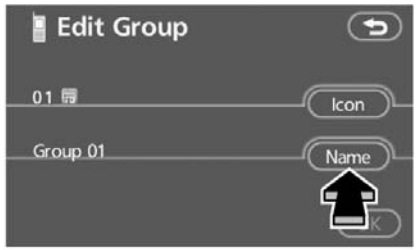

27P292

1. Touch the “Name” switch.

27P293

2. Use the software keyboard to input the name.

● **Deleting a group name**

You can delete the group names individually or all at once. If you delete a group name, that group will return to the default setting. (excluding "No Group")

27P294

1. **Touch the "Delete" switch of "Group Name".**

27P288

2. **Select the group you want to delete the name of.**

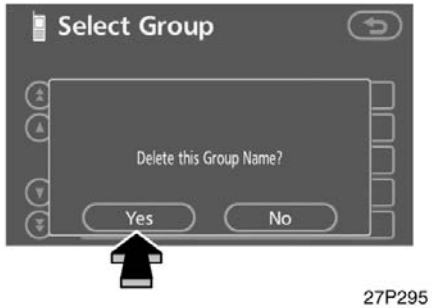

27P295

3. **Touch the "Yes" switch.**

● **Deleting all the group names**

27P296

1. **Touch the "Delete All" switch of "Group Name".**

27P297

2. **Touch the "Yes" switch.**

● **Deleting the log data**

You can delete the log data individually or all at once.

When you release your vehicle, delete all the data on the system.

(a) individually

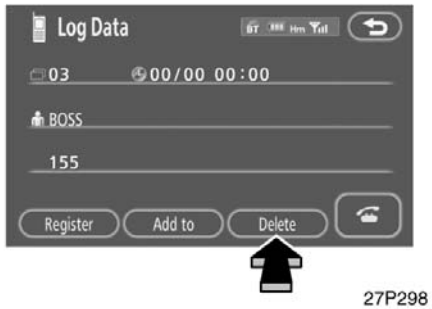

27P298

1. **Touch the "Delete" switch on the "Log Data" screen.**

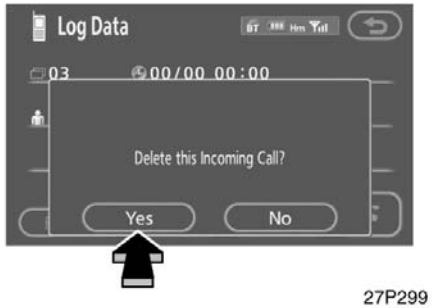

27P299

2. Touch the “Yes” switch.

(b) all at once

27P300

1. Touch the “Delete All” switch on the “Outgoing Calls” or “Incoming Calls” screen.

27P301

2. Touch the “Yes” switch.

(v) Setting the security

When you set the security, you can prevent people from using some functions of the hands–free system. It is useful when you leave your car with the hotel or you do not want others to see the data you registered.

When you set or unlock the security, you have to input the security code. Be sure to change the default code when you use the security for the first time.

- **Changing the security code**

The security code is 4 digits and the default is “0000”.

Choose a new code that is hard for other people to know.

When you change the security code, do not forget the code. The dealers cannot unlock the security when you forget it.

If you forget the security code, initialize your personal data. (See “Initializing the security code” on page 225.)

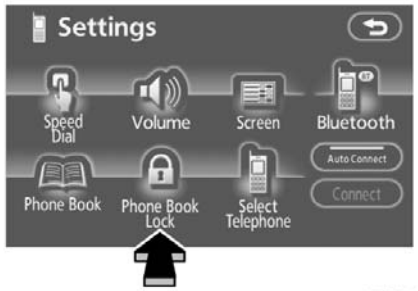

27P302

1. **Touch the “Phone Book Lock” switch.**

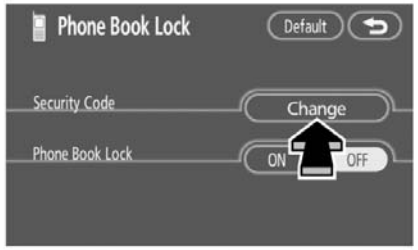

27P303

2. **Touch the “Change” switch.**

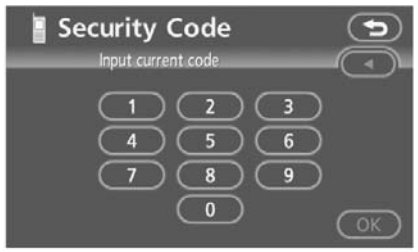

27P304

3. Input the security code.

Each time you touch "◀", an inputted digit is deleted.

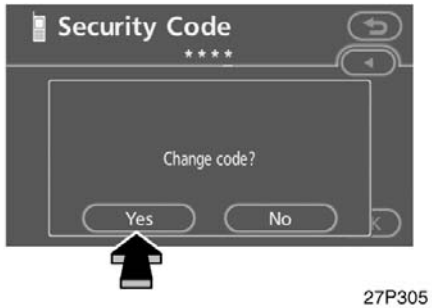

27P305

4. Touch the "Yes" switch.

- **Phone Book Lock**

When you set the phone book lock, you can have the following functions locked.

- Display of the phone book screen and transferring, registering, editing, deleting the phone book data.
- Display of speed dial screen, registering, deleting the speed dial and speed dialing.
- Display of the other party's name for calls being received or made.
- Display of dialed numbers screen and received calls screen, deleting dialed numbers and received numbers.
- Display of phone information screen.
- Changing the security code.

When you set this function, the speed dial screen is not displayed while you are driving.

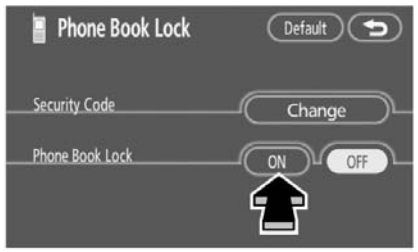

27P306

1. Touch the “ON” switch.

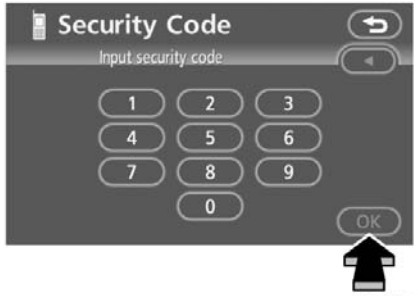

27P307

2. Input the security code and touch “OK”.

● **Initializing the security code**

You can initialize the settings.

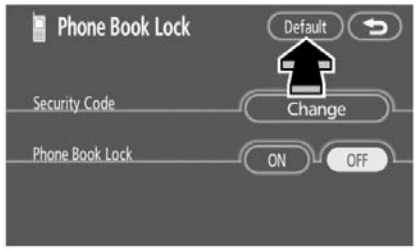

27P308

1. Touch the “Default” switch.

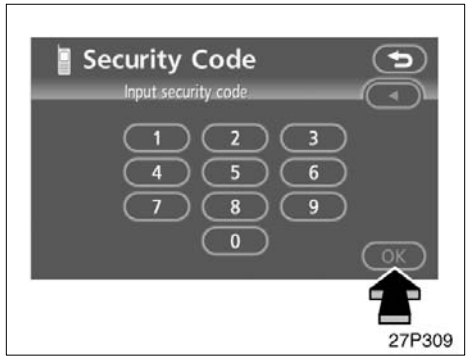

2. Input the security code and touch "OK".

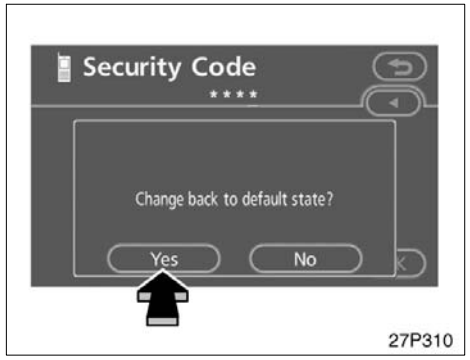

3. Touch the "Yes" switch.

(f) Setting a Bluetooth phone

- **Selecting a Bluetooth phone**

In case you register more than one Bluetooth phone, you need to choose a favorite one.

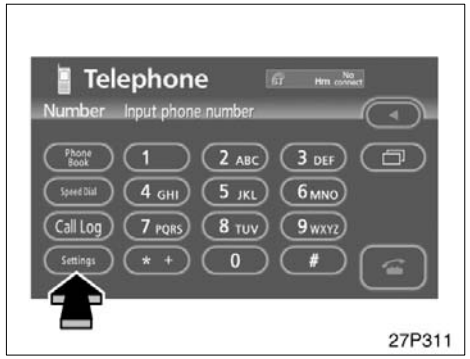

1. Touch the "Settings" switch to display "Settings" screen.

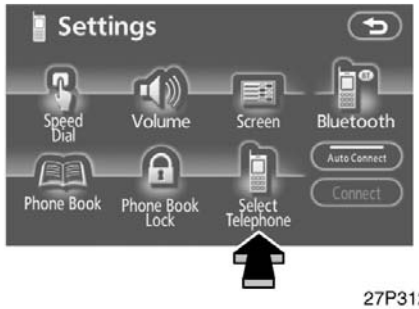

27P312

2. **Touch the "Select Telephone" switch to display "Select Telephone" screen. You can select the Bluetooth phone from a maximum of 6 numbers.**

"Empty" is displayed when you have not registered a Bluetooth phone yet.

Bluetooth mark is displayed when you choose the phone.

27P313

Although you can register up to 6 Bluetooth phones in the system, only one Bluetooth phone can function at a time.

27P314

3. **Touch the "OK" switch.**

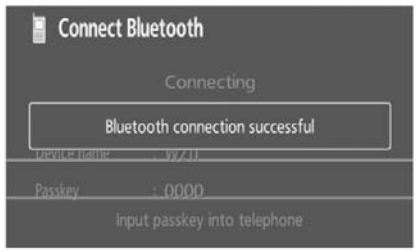

27P315

When the result message is displayed, you can use the Bluetooth phone.

When another Bluetooth phone is trying to connect, this screen is displayed.

27P316

Touch the "Yes" or "No" switch.

- **Displaying Bluetooth information**

You can see or set the information of the Bluetooth phone on the system.

Device Name . . the name of the Bluetooth phone which is displayed on the screen. You can change it into a desired name.

Bluetooth Device Address . . the address peculiar to the system. You cannot change it.

27P317

1. **Select the desired phone and touch the "Information" switch.**

27P318

2. Touch the “Change” switch.

27P319

3. When you complete the setting, touch “ ”.

● **Changing a Device Name**

You can change a device name. If you change a device name, the name registered in your cellular phone is not changed.

27P318

1. Touch the “Change” switch.

27P320

2. Use the software keyboard to input the device name.

● **Changing the Bluetooth settings**

You can change the display and settings of Bluetooth information on the system.

The information displays the following items.

Device Name . . the name in the Bluetooth network. You can change it.

Passkey . . . . . the password when you register your cellular phone in the system. You can change it into the figure of 4–8 digits.

Bluetooth Device Address . . . . . the address peculiar to the system. You can not change it. If you have registered two Bluetooth phones with the same Device Name or Passkey and you cannot distinguish one from the other, refer to it.

When you change the device name or Passkey, do the following.

27P321

1. Touch the “Bluetooth” switch.

27P322

2. **Touch the "Change" of "Device Name" or "Passkey".**

27P323

3. **Use the software keyboard to input the device name.**

You can input up to 20 characters.

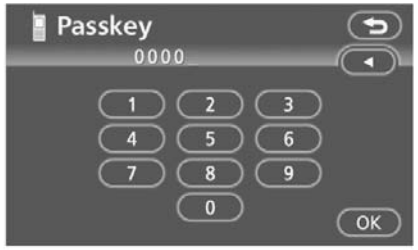

27P324

4. **Input a Passkey with 4 – 8 digits.**

When you touch "◀", the inputted digit is deleted.

27P325

5. When you complete the setting, touch "".

● **Initializing the Bluetooth settings.**

You can initialize the settings.

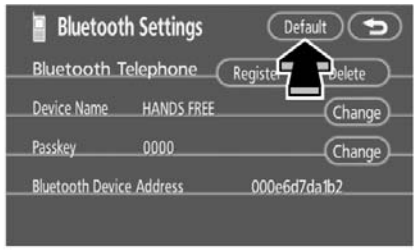

27P326

1. Touch the "Default" switch.

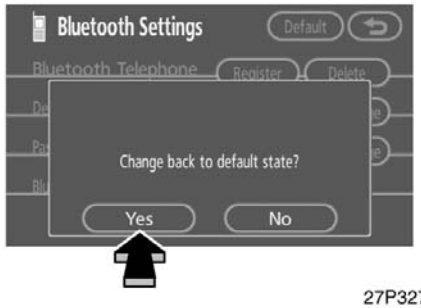

27P327

2. Touch the "Yes" switch.

● **Deleting a Bluetooth phone**

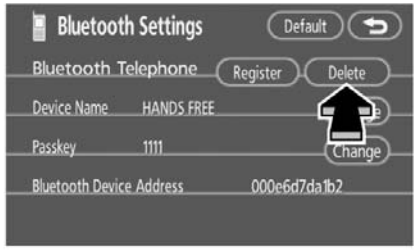

27P328

1. **Touch the "Delete" switch of "Bluetooth Telephone".**

27P329

2. **Select the telephone you want to delete and touch "OK".**

27P330

3. **Touch the "Yes" switch.**

When you delete the telephone while another Bluetooth phone is connected, this message is displayed.

27P331

Touch the “Yes” switch.

- **Displaying the information of the Bluetooth phone you delete**

You can display the information of the Bluetooth phone before you delete it and you can make sure whether the telephone you delete is correct or not.

27P332

1. Select the telephone you want to display the information about.

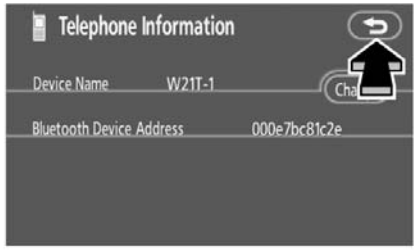

27P319

2. When you complete confirming it, touch “ ”.

—Speech command system

The speech command system enables you to operate the hands–free system by giving a command.

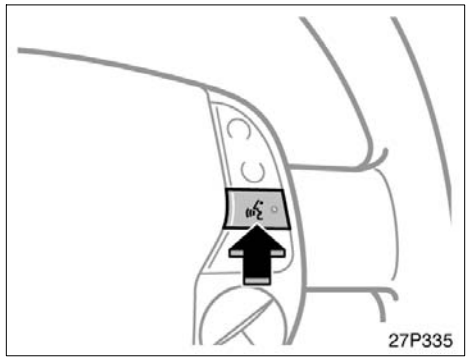

1. Push the speech command switch.

A beep sounds and on–screen message is displayed with an indicator at the top left.

2. Give a command while an indicator is shown in the display. If you want to check the command list, touch the "Help" switch to display the Help screen. (See "Help screen" on page 236.) When you touch the "Cancel", the previous screen returns.

If the hands–free system does not respond or the confirmation screen does not disappear, push the speech command switch and try again.

If no command is given, a beep sounds and the indicator disappears 6 seconds later.

If the system does not recognize your speech, the system will respond with this message ("System does not recognize this command, rephrase your command."). Start the operation from the beginning.

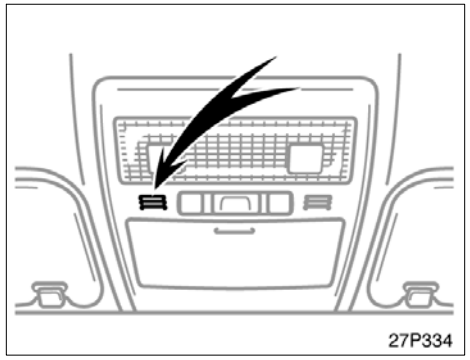

▶**Microphone**

It is unnecessary to speak directly into the microphone when giving a command.

—Help screen

This system has a function which displays the voice recognition help screen. You can see the command list and operating guide on it.

(a) Command List

1. **Touch the "Command List" tab on the upper side of the screen.**
2. **Select the desired category by touching the buttons on the right side of the "Command List" screen.***
3. **You can scroll through the command list by touching "⏶" or "⏷" switch.**

*: For the vehicles without Navigation System, "Tel" only is shown.

Touch the "OK" switch after you check it.

(b) Operating Guide

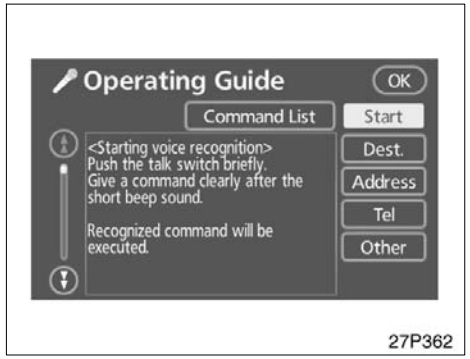

1. **Touch the "Operating Guide" tab on the upper side of the screen.**
2. **Select the desired category by touching the buttons on the right side of the "Operating Guide" screen.***
3. **You can scroll through the list of the operating guide by touching "⏶" or "⏷" switch.**

*: For the vehicles without Navigation System, "Tel" only is shown.

Touch the "OK" switch after you check it.

Adjustment

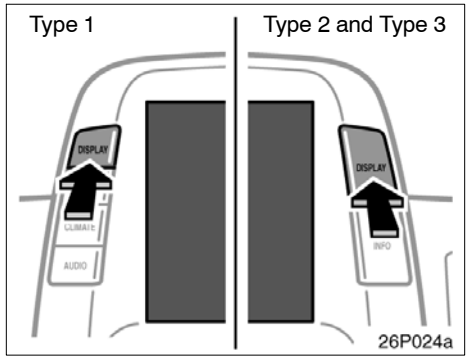

Push the "DISPLAY" button to display the "Display" screen.

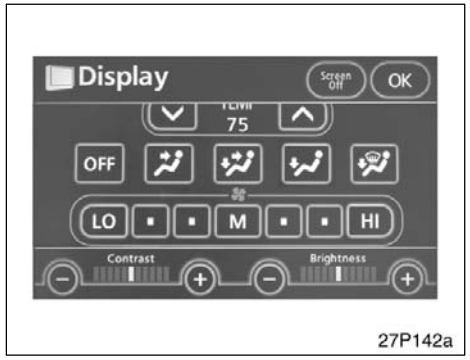

Type 1 and Type 2

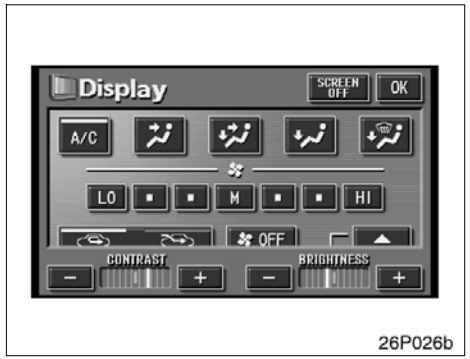

Type 3

Contrast and brightness adjustment

CONTRAST "+":
Strengthens the contrast of the screen.

CONTRAST "–":
Weakens the contrast of the screen.

BRIGHTNESS "+": Brightens the screen.

BRIGHTNESS "–": Darkens the screen.

The screen turns off when you touch the "SCREEN OFF". To turn the display screen back on, push any bezel switch such as "INFO", etc. The selected screen appears.

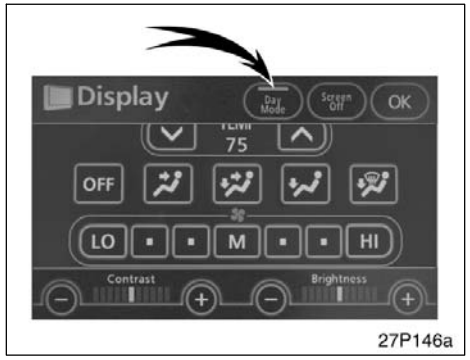

Type 1 and Type 2

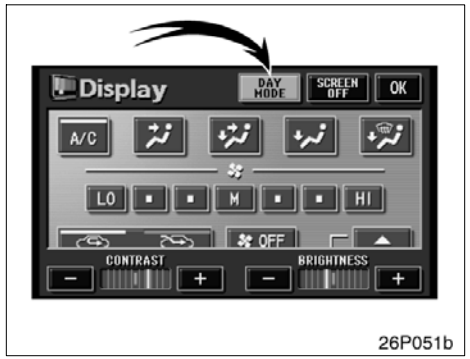

Type 3

Depending on the position of the headlight switch, the screen changes to the day mode or night mode.

To display the screen in the day mode even with the headlight switch on, touch “DAY MODE” on the adjustment screen for brightness and contrast control.

However, if the km/h or MPH button is on, mode switching cannot be done. It remains in the day mode. In this case, “DAY MODE” is not shown on the screen.

If the screen is set in the day mode with the headlight switch turned to on, this condition is memorized in the system even with the hybrid system turned off.

Outside temperature display

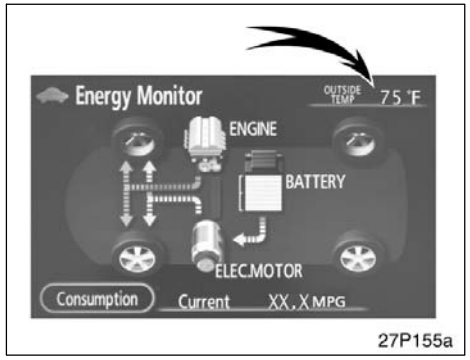

Type 1 and Type 2

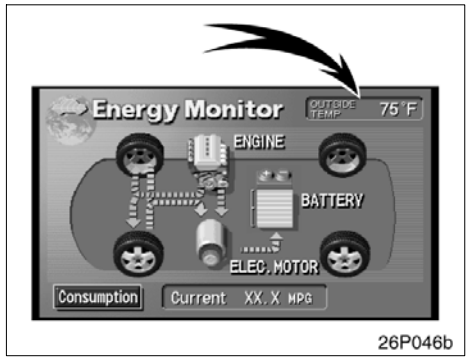

Type 3

The outside temperature is shown ranging from –30°C (–22°F) up to 50°C (122°F) at the upper right of the energy consumption or energy monitor screen or the upper left of the air conditioner screen.

SECTION 2–8

OPERATION OF INSTRUMENTS AND CONTROLS

Audio system

Reference 242
Using your audio systemm 246
Radio operation 252
Radio operation (XM satellite radio broadcast) 260
Compact disc player operation (Type 1 and Type 2) 266
Compact disc player operation (Type 3) 271
MP3/WMA player operation 273
Audio remote controls 277
Audio system operating hints 278

Reference

▶Type 1

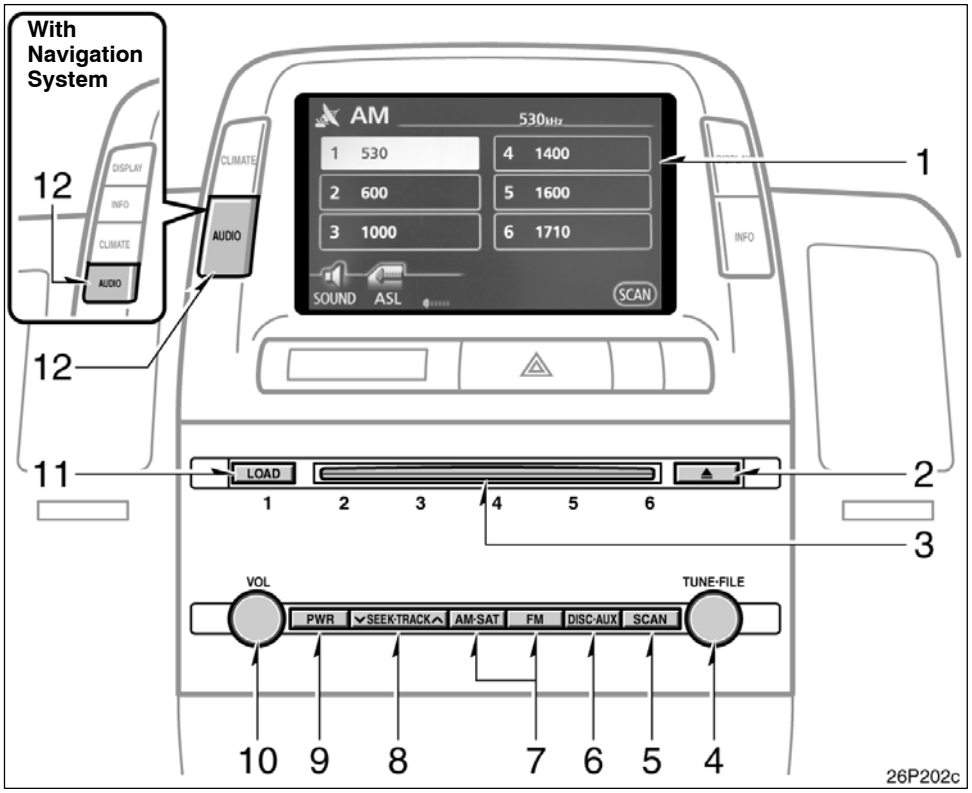

1. Multi–information display screen*
   (See page 248 for details.)
2. Ejecting a compact disc
   (See page 266 for details.)
3. Compact disc slot
   (See page 266 for details.)
4. Frequency tuning and file search
   (See page 253 and 274 for details.)
5. Scan tuning
   (See page 255 for details.)
6. Compact disc or AUX adapter mode button
   (See page 267 for details.)
7. Radio mode button
   (See page 252 for details.)
8. Radio mode: Seek tuning
   (See page 254 for details.)
   Compact disc mode: Direct access to a desired program
   (See page 268 for details.)
9. Turning the system on
   (See page 247 for details.)

10. Adjusting the volume
    (See page 247 for details.)
11. Compact disc load button
    (See page 266 for details.)
12. Audio operation screen display button
    (See page 248 for details.)

*: In this manual, English version screens are shown as an example.

▶**Type 2**

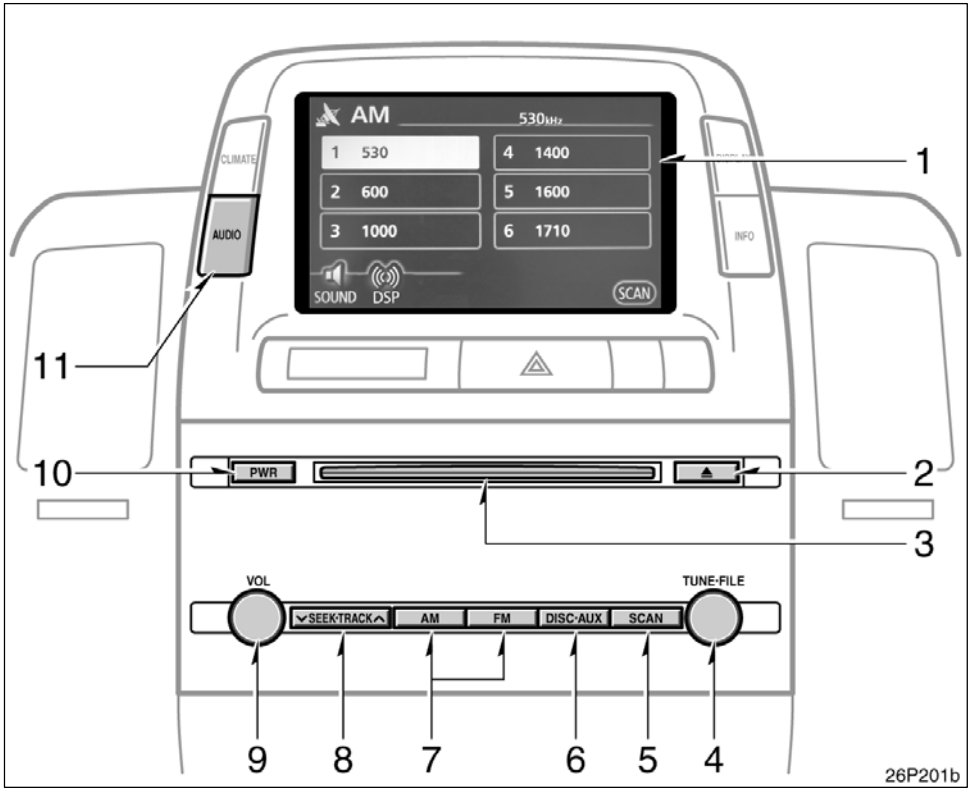

1. Multi–information display screen*
   (See page 248 for details.)
2. Ejecting a compact disc
   (See page 266 for details.)
3. Compact disc slot
   (See page 266 for details.)
4. Frequency tuning and file search
   (See page 253 and 274 for details.)
5. Scan tuning
   (See page 255 for details.)
6. Compact disc or AUX adapter mode button
   (See page 267 for details.)
7. Radio mode button
   (See page 252 for details.)
8. Radio mode: Seek tuning
   (See page 254 for details.)
   Compact disc mode: Direct access to a desired program
   (See page 268 for details.)
9. Adjusting the volume
   (See page 247 for details.)
10. Turning the system on
    (See page 247 for details.)
11. Audio operation screen display button
    (See page 248 for details.)

*: In this manual, English version screens are shown as an example.

▶**Type 3**

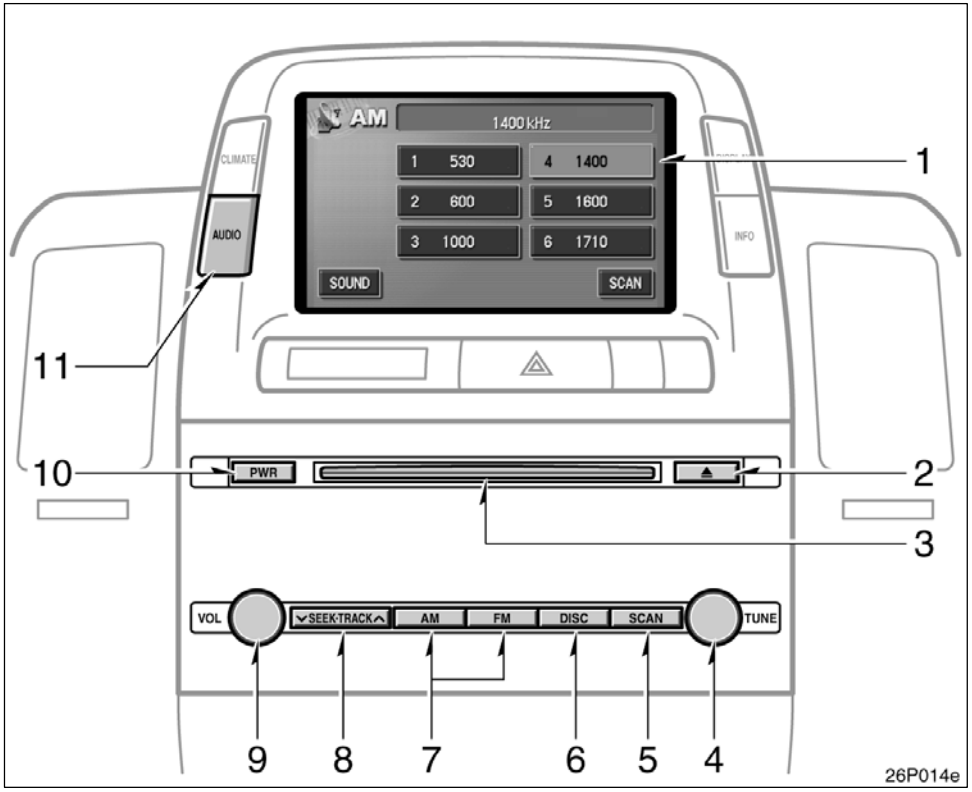

1. Multi–information display screen*
   (See page 248 for details.)
2. Ejecting a compact disc
   (See page 271 for details.)
3. Compact disc slot
   (See page 271 for details.)
4. Frequency tuning
   (See page 253 for details.)
5. Scan tuning
   (See page 255 for details.)
6. Compact disc mode button
   (See page 271 for details.)
7. Radio mode button
   (See page 252 for details.)
8. Radio mode: Seek tuning
   (See page 254 for details.)
   Compact disc mode: Direct access to a desired program
   (See page 272 for details.)
9. Adjusting the volume
   (See page 247 for details.)
10. Turning the system on
    (See page 247 for details.)
11. Audio operation screen display button
    (See page 248 for details.)

*: In this manual, English version screens are shown as an example.

Using your audio system——Some basics

This section describes some of the basic features of the Toyota audio system. Some information may not pertain to your system.

Your audio system works when the hybrid system is in “ACC” or “IG–ON”.

NOTICE
To prevent the battery from being discharged, do not leave the audio on longer than necessary when the hybrid system is not running.

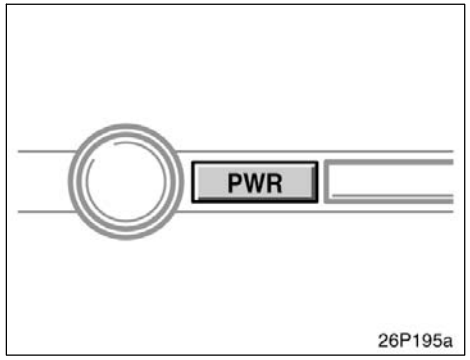

Type 1

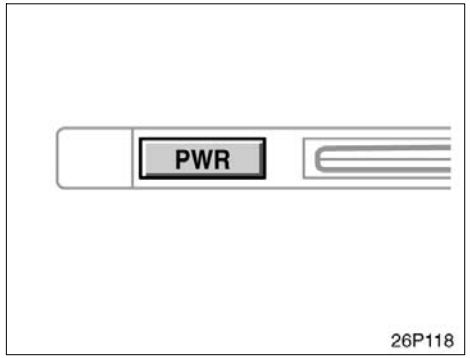

Type 2 and Type 3

TURNING THE SYSTEM ON AND OFF

Push “PWR” button to turn the audio system on and off. The system turns on in the last mode used.

VOLUME CONTROL

To adjust the volume, push and turn the "VOL".

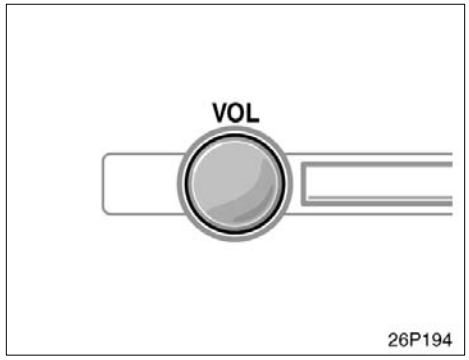

Type 1 and Type 2

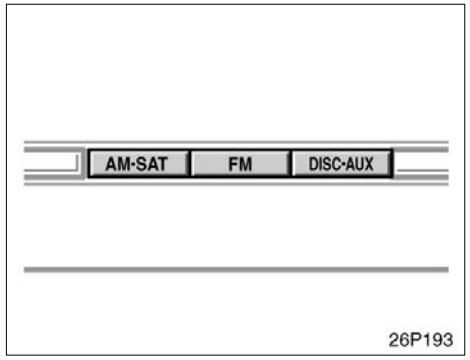

Type 1

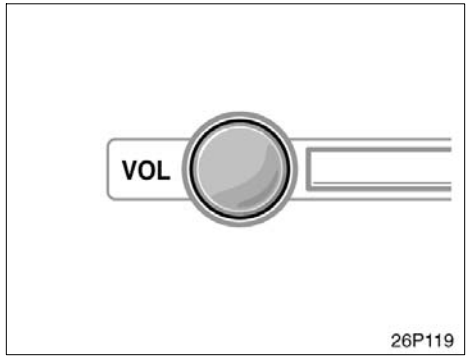

Type 3

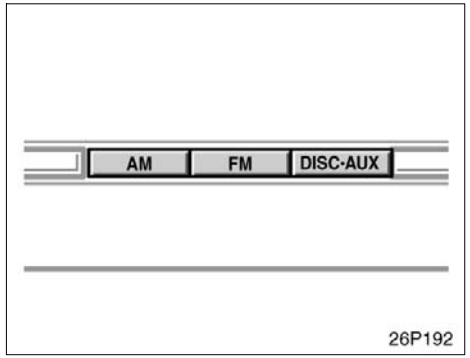

Type 2

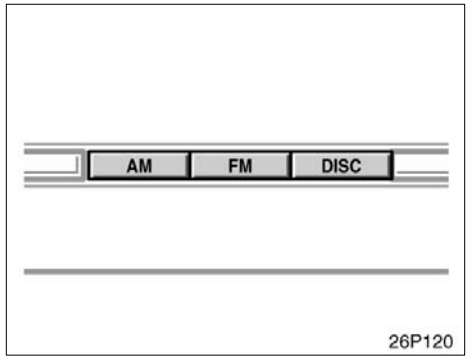

Type 3

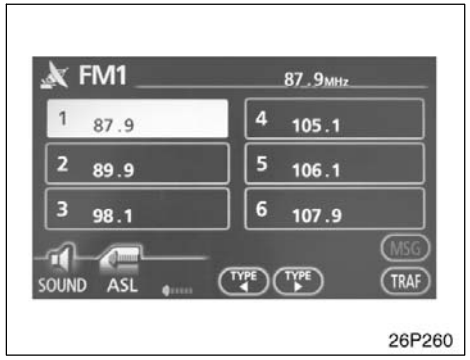

Radio (Type 1)

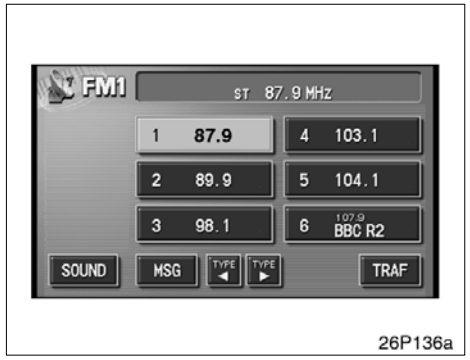

Radio (Type 3)

Push the "AM", "AM·SAT", "FM", "DISC" or "DISC·AUX" button to turn on that mode. The selected mode turns on directly.

Push these buttons if you want to switch from one mode to another.

If the disc is not set, the compact disc player does not turn on.

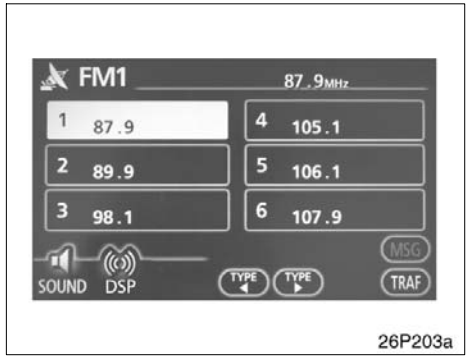

Radio (Type 2)

26P205c

Compact disc (Type 1)

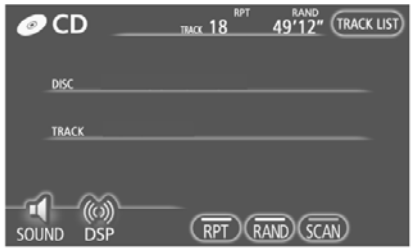

26P204b

Compact disc (Type 2)

26P138a

Compact disc (Type 3)

The switches for radio and compact disc player operation are displayed on the liquid crystal display. Touch them lightly and directly on the screen.

The selected switch is highlighted in green or orange.

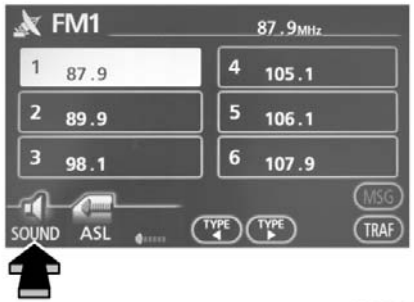

26P206b

TONE AND BALANCE

Touching the "SOUND" switch on the screen displays the sound adjustment screen.

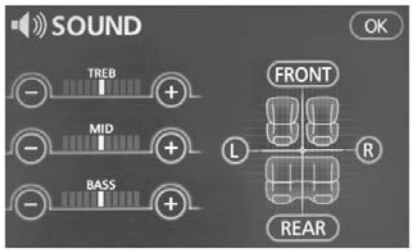

26P207

TREB "+" or "–": Adjusts high–pitched tones.

MID "+" or "–" (Type 1 only): Adjusts mid–pitched tones.

BASS "+" or "–": Adjusts low–pitched tones.

"FRONT" or "REAR": Adjusts sound balance between the front and rear speakers.

"L" or "R": Adjusts sound balance between the left and right speakers.

"OK": The previous screen returns.

How good an audio program sounds to you is largely determined by the mix of the treble, mid–range, and bass levels. In fact, different kinds of music and vocal programs usually sound better with different mixes of treble, mid–range and bass.

A good balance of the left and right stereo channels and of the front and rear sound levels is also important.

Keep in mind that if you are listening to a stereo recording or broadcast, changing the right/left balance will increase the volume of one group of sounds while decreasing the volume of another.

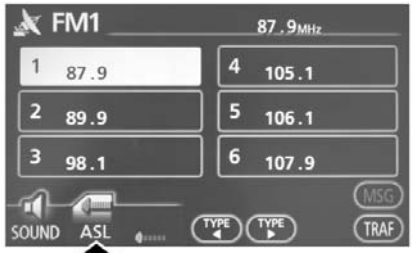

26P261

Type 1

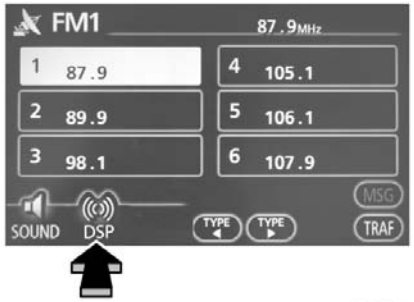

26P220a

Type 2

AUTOMATIC SOUND LEVELIZER (ASL) (Type 1 and Type 2 only)

When the audio sound becomes difficult to be heard due to road noise, wind noise, etc. during driving, the system adjusts to the optimum volume and tone quality according to the noise level.

Vehicles with compact disc changer:

Touch the “ASL” switch.

When the system is on, the sound adjustment level is displayed on the screen.

Vehicles without compact disc changer:

Touch the “DSP” switch to display the “ASL” screen.

Touch “High”, “Mid” or “Low” and then “OK”.

When you touch “High”, you can obtain higher sensitivity of the sound levelizer. When you touch “Low”, the sensitivity will be lowered.

Touching “Off” turns the system off.

YOUR RADIO ANTENNA

To remove an antenna on the roof, carefully turn it counterclockwise.

NOTICE

To prevent damage to the antenna, make sure to remove it before driving your Toyota through an automatic car wash.

YOUR COMPACT DISC PLAYER

When you insert a disc, gently push it in with the label side up.

The discs set in the player are played continuously, starting with disc number 1. The disc number of the disc currently being played, the track number and the time from the beginning of the program appear on the display.

Type 1 only:
When play of one disc ends, the first track of the following disc starts. When play of the final disc ends, play of the first disc starts again.

The player will skip any empty disc number.

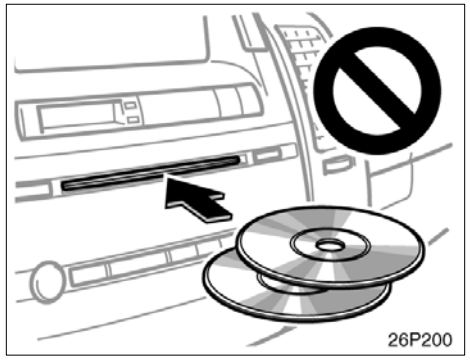

NOTICE

- ***Do not stack up two discs for insertion, or it will damage the compact disc player. Insert only one compact disc into a slot at a time.***
- ***Never try to disassemble or oil any part of the compact disc player. Do not insert anything other than compact discs into the slot.***

The player is intended for use with 12 cm (4.7 in.) discs only.

Radio operation

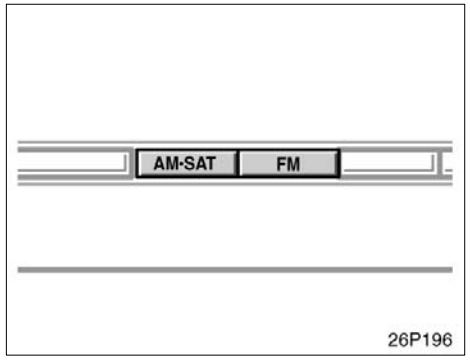

Type 1

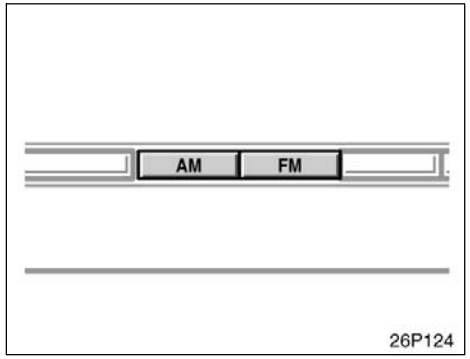

Type 2 and Type 3

(a) Listening to the radio

Push these buttons to choose either an AM or FM station.

"AM", "FM1" or "FM2" appears on the display.

If your vehicle is equipped with satellite radio broadcast system, when you push the "AM·SAT" button, "AM", "SAT1", "SAT2" or "SAT3" station appears on the display. For details about satellite radio broadcast, see "Radio operation (XM satellite radio broadcast)" on page 260.

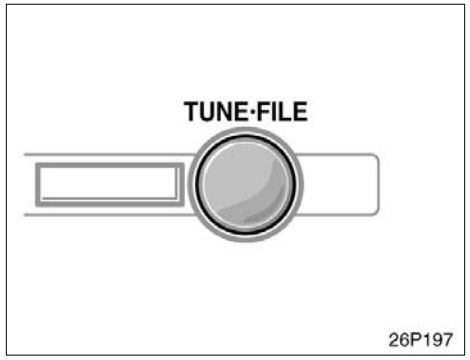

Type 1 and Type 2

Push and turn this knob to step up the station band or to step down.

Your radio automatically changes to stereo reception when a stereo broadcast is received. “ST” appears on the display. If the signal becomes weak, the radio reduces the amount of channel separation to prevent the weak signal from creating noise. If the signal becomes extremely weak, the radio switches from stereo to mono reception. In this case, “ST” disappears from the display.

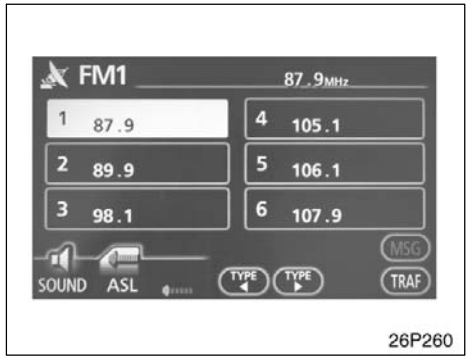

Type 1

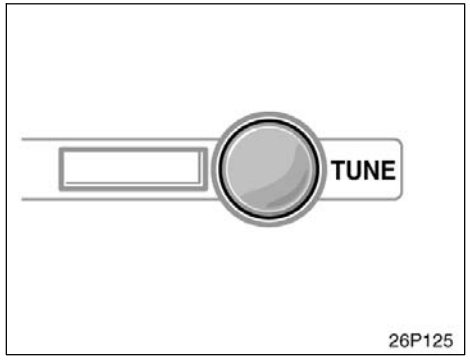

Type 3

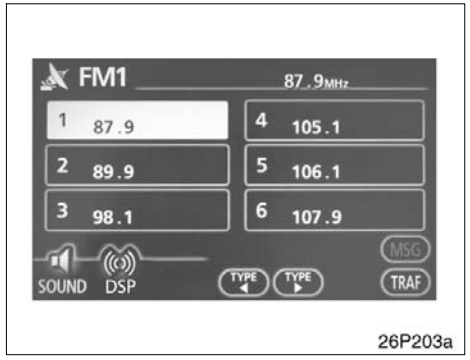

Type 2

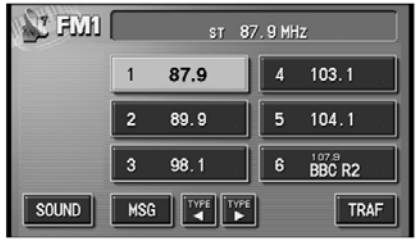

26P141a

Type 3

(b) Presetting a station

1. **Tune in the desired station.**
2. **Touch one of the station selector switches (1–6) and hold it until a beep is heard. This sets the station to the switch and the frequency appears on the switch.**

Each switch can store FM1, FM2 and AM. To change the preset station to a different one, follow the same procedure.

The preset station memory is cancelled when the power source is interrupted by battery disconnection or a blown fuse.

(c) Selecting a station

Tune in the desired station using one of the following methods.

Preset tuning: Touch the switch (1–6) for the station you want. The switch (1–6) is highlighted in green and station frequency appears on the display.

Manual tuning: Turn the "TUNE·FILE" and "TUNE" knob briefly. Each time you turn the knob, the radio will step up or down to another frequency.

Seek tuning: Push the "SEEK·TRACK" button on either side. The radio will begin seeking up or down for a station of the nearest frequency and will stop on reception. Each time you push the button, the stations will be searched out one after another.

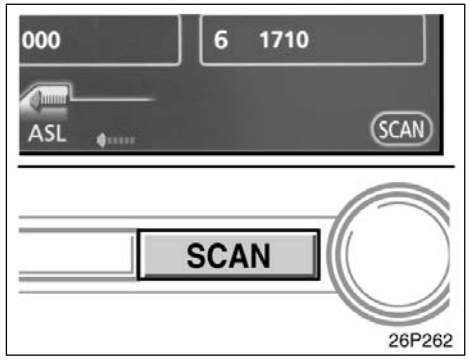

26P262

Type 1

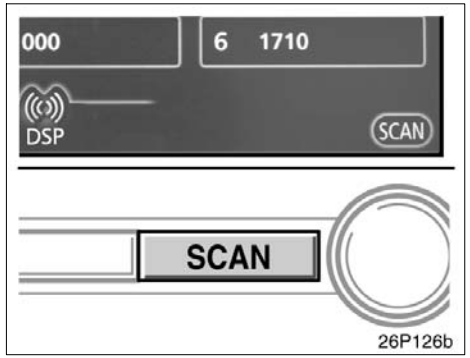

26P126b

Type 2

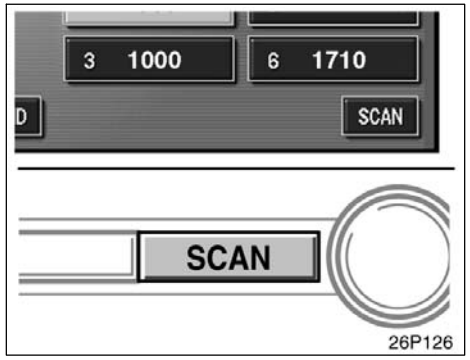

Type 3

Scan tuning: Push the “SCAN” button or touch the “SCAN” switch (AM mode only) briefly. “SCAN” appears on the display. The radio will find the next station up or down the band, stay there for a few seconds, and then scan again. To select a station, push the “SCAN” button a second time.

Preset scan tuning: Push the “SCAN” button or touch the “SCAN” switch (AM mode only) and hold it until you hear a beep. “P. SCAN” appears on the display. The radio will tune in the next preset station up or down the band, stay there for a few seconds, and then move to the next preset station. To select a station, push the “SCAN” button a second time.

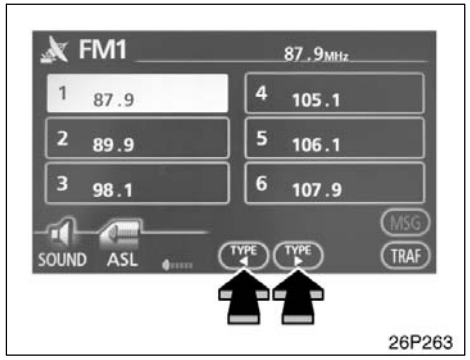

Type 1

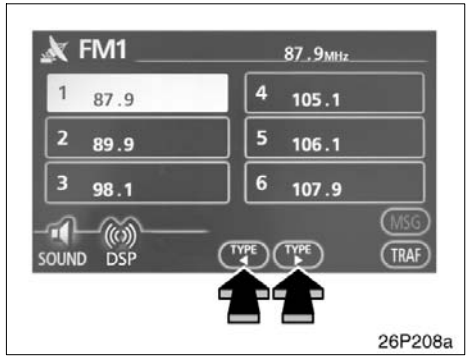

Type 2

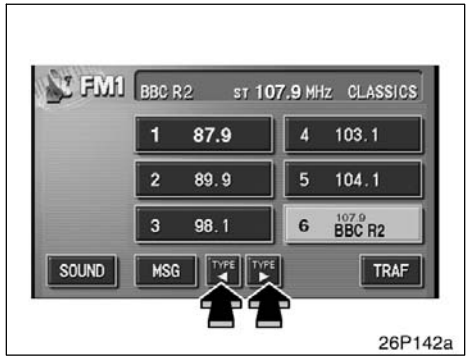

Type 3

(d) RDS (Radio Data System)

(1) Program type

Each time you touch the "TYPE ◀" or "TYPE ▶" switch, the program type changes as in the following:

- ROCK
- EASY LIS (Easy listening)
- CLS JAZZ (Classical music and Jazz)
- R&B (Rhythm and Blues)
- INFORM (Information)
- RELIGION
- MISC
- ALERT (Emergency message)

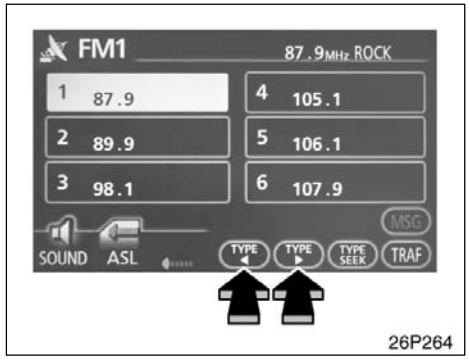

Type 1

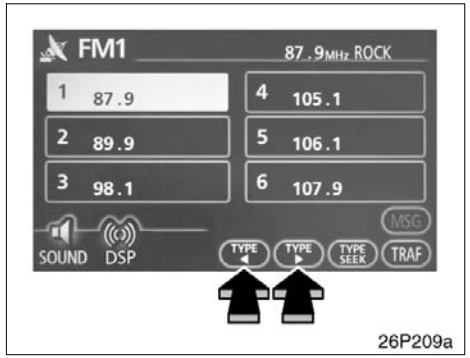

Type 2

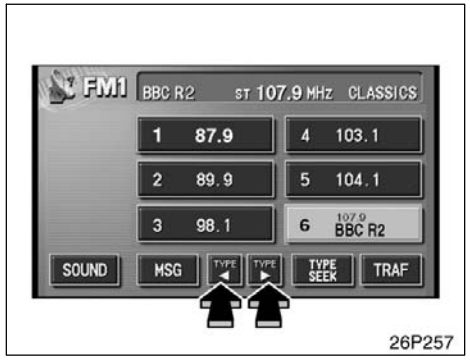

Type 3

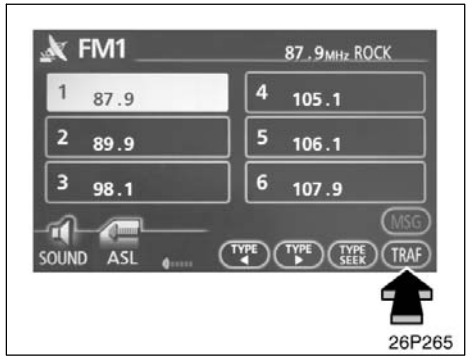

Type 1

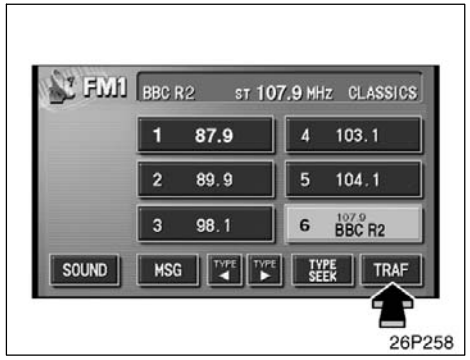

Type 3

When you touch the “TYPE ◀” or “TYPE ▶”, “TYPE SEEK” switch appears. Touch the switch and the system starts to seek the station in the relevant program type.

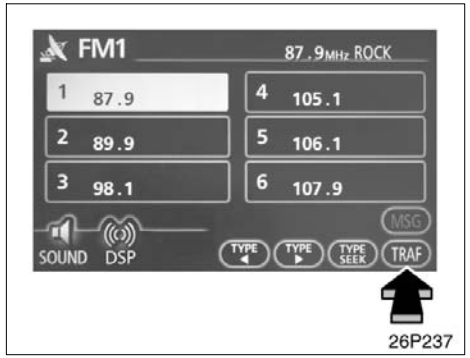

Type 2

(2) Traffic program:

A station that regularly broadcasts traffic information is automatically located.

When you touch the “TRAF” switch, “TRAF SEEK” appears on the display and the radio will start seeking any traffic program station.

If any traffic program station is not found, “NOTHING” appears and the previous mode returns.

If the traffic program station is found, the name for traffic program station is displayed and “TRAF” is lit for a while until traffic announcement is received.

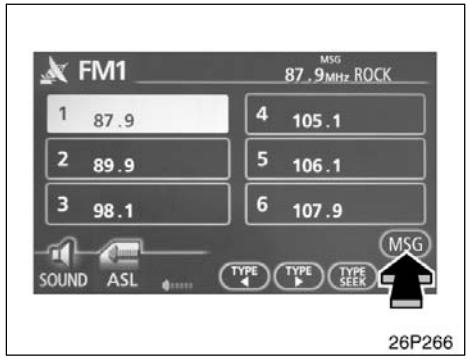

Type 1

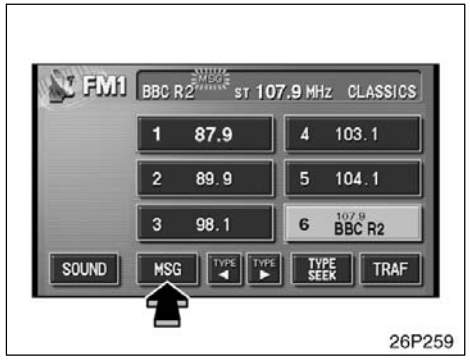

Type 3

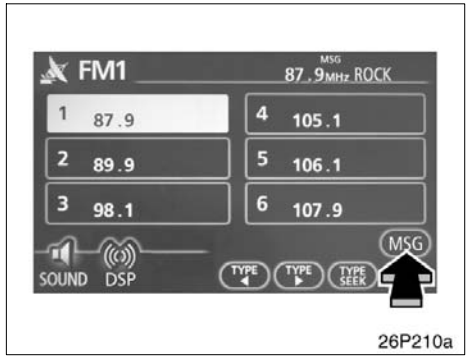

Type 2

(3) Radio text

If the system receives a radio text from RDS station, “MSG” appears on the display. Touch the “MSG” switch, and a text message is displayed on the screen.

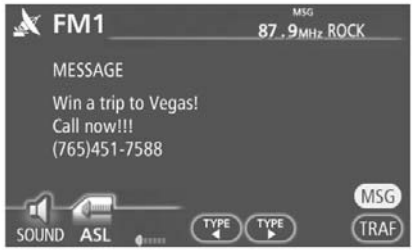

26P267

Type 1

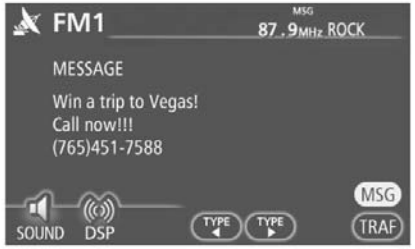

26P211a

Type 2

26P145b

Type 3

In case a text message is not accepted in a screen, you can touch the “MSG” switch and hold it to display the rest of the message.

When the system can show the station name, “RDS” appears on the display. Each time you touch the “MSG” switch, indication on the display changes from the band to the station name, a radio text in this order. After six seconds passes, indication returns to the band.

Radio operation (XM satellite radio broadcast) (Type 1 only)

To listen to a satellite radio broadcast in your vehicle, an additional genuine Toyota satellite receiver and antenna must be purchased and installed, and the subscription to the XM satellite radio is necessary.

(a) How to subscribe to an XM satellite radio

An XM satellite radio is a tuner designed exclusively to receive broadcasts provided under a separate subscription. Availability is limited to the 48 contiguous states.

How to subscribe:

You must enter into a separate service agreement with the XM radio in order to receive satellite broadcast programming in the vehicle. Additional activation and service subscription fees apply that are not included in the purchase price of the vehicle and optional digital satellite tuner. For complete information on subscription rates and terms, or to subscribe to the XM radio, visit XM on the web at www.xmradio.com or call an XM's Listener Care at (800) 852–9696. The XM radio is solely responsible for the quality, availability and content of the satellite radio services provided, which are subject to the terms and conditions of the XM radio customer service agreement.

Customers should have their radio ID ready; the radio ID can be found by selecting the "channel 000" on the radio. For details, see the "Displaying the radio ID" that follows.

All fees and programming are the responsibility of the XM satellite radio and are subject to change.

Satellite tuner technology notice:

Toyota satellite radio tuners are awarded Type Approval Certificates from XM Satellite Radio Inc. on "October 14, 2004" as proof of compatibility with the services offered by the XM satellite radio.

(b) Displaying the radio ID

Each XM tuner is identified with a unique radio ID. You will need the radio ID when activating XM service or when reporting a problem.

If you select the "CH 000" using the "TUNE·FILE" knob, the ID code of 8 alphanumeric characters appears. If you select another channel, display of the ID code is canceled. The channel (000) alternates the display between the radio ID and the specific radio ID code.

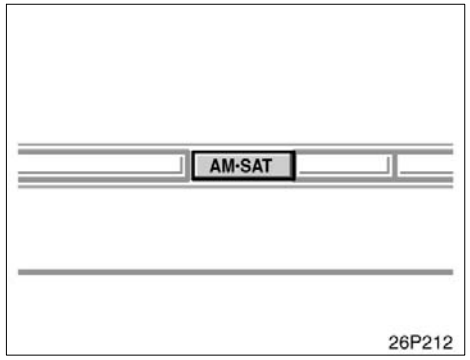

(c) Listening to the satellite radio

Push the "AM·SAT" button to choose a SAT channel.

"AM", "SAT1", "SAT2" or "SAT3" appears on the display.

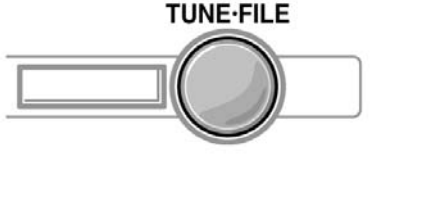

26P197

Turn this knob to select the next or previous channel.

If you turn continuously, you can rapidly scroll forward or down through the channels.

26P213b

(d) Presetting a channel

1. **Tune in the desired channel.**
2. **Touch one of the channel selector switches (1–6) and hold it until a beep is heard. This sets the channel to the switch and the frequency appears on the switch.**

Each switch can store three SAT channels. To change the preset channel to a different one, follow the same procedure.

The preset channel memory is cancelled when the power source is interrupted by battery disconnection or a blown fuse.

(e) Selecting a channel

Tune in the desired channel using one of the following methods.

Preset tuning: Touch the switch (1–6) for the channel you want. The switch (1–6) is highlighted in green.

Manual tuning within the channel category: Turn the “TUNE·FILE” knob. The radio will step up or down the channel.

Manual tuning within the current channel category: Push the “SEEK·TRACK” button on either side. The radio will step up or down the channel within the current channel category. Touch the “TYPE SEEK” switch. The radio will step up the channel within the current channel category.

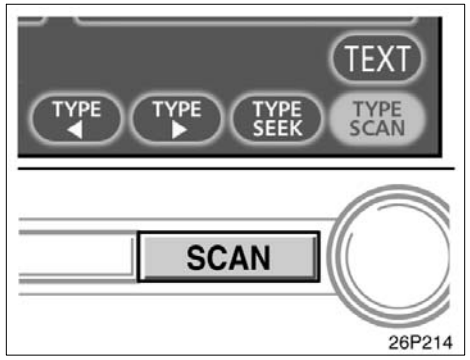

To scan the currently selected channel category: Touch the “TYPE SCAN” switch or push the “SCAN” button briefly. “SCAN” appears on the display. The radio will find the next channel in the same channel category, stay there for a few seconds, and then scan again. To select a channel, touch the “TYPE SCAN” switch or push the “SCAN” button a second time.

To scan the preset channels: Push the “SCAN” button and hold it until you hear a beep. “P.SCAN” appears on the display. The radio will find the next preset channel, stay there for a few seconds, and then move to the next preset channel. To select a channel, push the “SCAN” button a second time.

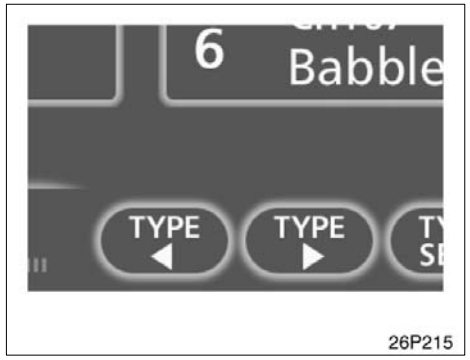

(f) Channel category

Touch either “TYPE ◀” or “TYPE ▶” switch to switch to the next or previous category.

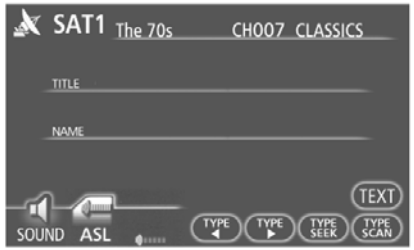

26P216c

(g) Displaying the title and name

When you touch the “TEXT” switch, the song/program title and the artist name/feature are displayed.

Up to 32 alphanumeric characters can be displayed. (Some information will not be fully displayed.)

(h) If the satellite radio tuner malfunctions

When problems occur with the XM tuner, a message will appear on the display. Referring to the table below to identify the problem, take the suggested corrective action.

ANTENNA	The XM antenna is not connected. Check whether the XM antenna cable is attached securely.
	A short−circuit occurs in the antenna or the surrounding antenna cable. See a Toyota certified dealer.
UPDATING	You have not subscribed to the XM satellite radio. The radio is being updated with the latest encryption code. Contact the XM satellite radio for subscription information. When a contact is canceled, you can choose the “CH000” and all free−to−air channels.
	The premium channel you selected is not authorized. Wait for about 2 seconds until the radio returns to the previous channel or “CH001”. If it does not change automatically, select another channel. If you want to listen to the premium channel, contact the XM satellite radio.
NO SIGNAL	The XM signal is too weak at the current location. Wait until your vehicle reaches a location with a stronger signal.
LOADING	The unit is acquiring audio or program information. Wait until the unit has received the information.
OFF AIR	The channel you selected is not broadcasting any programming. Select another channel.
–––––	There is no song/program title or artist name/feature associated with the channel at that time. No action needed.
–––	The channel you selected is no longer available. Wait for about 2 seconds until the radio returns to the previous channel or “CH001”. If it does not change automatically, select another channel.

The XM Listener Care Center is also available on the phone, please call (800) 852−9696 during the following hours:
Monday − Saturday: 7 a.m. − 1 a.m. Sunday: 12 p.m − 12 a.m.

NOTICE

This equipment has been tested and found to comply with the limits for a class B digital device, pursuant to Part 15 of the FCC Rules. These limits are designed to provide reasonable protection against harmful interference in a residential installation. This equipment generates, uses and can radiate radio frequency energy and, if not installed and used in accordance with the instructions, may cause harmful interference to radio communications. However, there is no guarantee that interference will not occur in a particular installation.

If this equipment does cause harmful interference to radio or television reception, which can be determined by turning the equipment off and on, the user is encouraged to try to correct the interference by one or more of the following measures:

— Reorient or relocate the receiving antenna.

— Increase the separation between the equipment and receiver.

— Connect the equipment into an outlet on a circuit different from that to which the receiver is connected.

— Consult the dealer or an experienced radio/TV technician for help.

Information to user

Alternation or modifications carried out without appropriate authorization may invalidate the user's right to operate the equipment.

This XM tuner supports "Audio Services" (Music and Talk) of only XM satellite radio and "Text Information", linked to the respective "Audio Services".

****Text Information includes, Station Name, (Artist) Name, (Song) Title and Category Name.***

Compact disc player operation (Type 1 and Type 2)

(a) Inserting or ejecting compact disc

Type 1:

- **Setting a single compact disc:**

1. Push the "LOAD" button briefly.

The amber indicators at both ends of the slot blinking. The amber blinking indicators change to continuous green illumination.

2. Insert only one disc.

You can set a disc at the lowest empty disc number.

After insertion, the set disc is automatically loaded.

If the label faces down, the disc cannot be played. In this case, "CD CHECK" appears on the display.

If you need to insert the next disc, repeat the same procedure to insert another disc.

- **Setting all the discs:**

1. Push the "LOAD" button until you hear a beep.

The amber indicators at both ends of the slot blinking. The amber blinking indicators change to continuous green illumination.

2. Insert only one disc.

The amber indicators blink.

3. Insert the next disc after the amber blinking indicators change to continuous green illumination.

4. Repeat this procedure until you insert all the discs.

To cancel the operation, push the "LOAD" button.

Your automatic changer can store up to 6 discs.

If you do not insert the discs within 15 seconds after pushing the "LOAD" button, the operation will be canceled automatically.

NOTICE
Do not insert one disc stacked on top of another one or feed them in continuously, to prevent discs from getting stuck in the player.

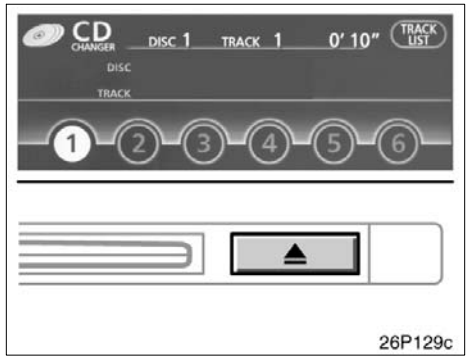

- **Ejecting a single alone:**

1. **Touch the switch (1–6) to highlight the disc number you want to eject.**
2. **Push the "⏏" button for the compact disc briefly.**

At this time, the amber indicators of the slot start blinking.

- **Ejecting all the discs:**

Push the "⏏" button for the compact disc until you hear a beep.

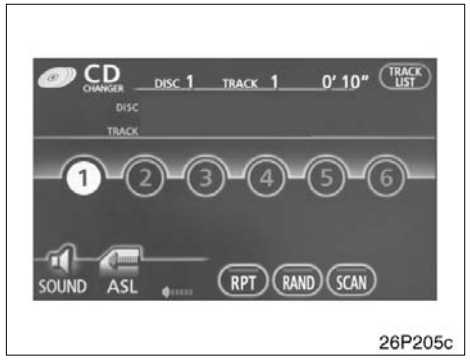

The numbers of the trays where the compact disc is not set are dimmed.

Type 2:

When you insert a disc, the player will automatically start. To eject the disc, push the "⏏" button.

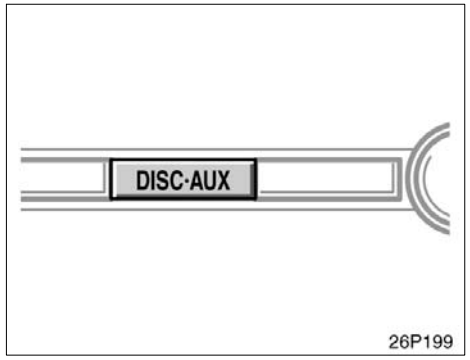

(b) Playing a compact disc

Type 1:

Push the "DISC·AUX" button if the disc is already loaded in the player.

"CD CHANGER" appears on the display.

The discs set in the player are played continuously, starting with the last disc you inserted. The disc number of the disc currently being played, the track number and the time from the beginning of the program are shown on the display.

When play of one disc ends, the first track of the following disc starts. When play of the final disc ends, play of the first disc starts again.

The player will skip any empty disc trays.

When the AUX adapter is in use, each time you push the “DISC·AUX” button, the audio switches the compact disc mode and AUX mode alternately. For details about AUX adapter, see page 306.

Type 2:

Push the “DISC·AUX” button if the disc is already loaded in the player.

“CD” appears on the display.

The discs set in the player are played continuously. The track number and the time from the beginning of the program are shown on the display.

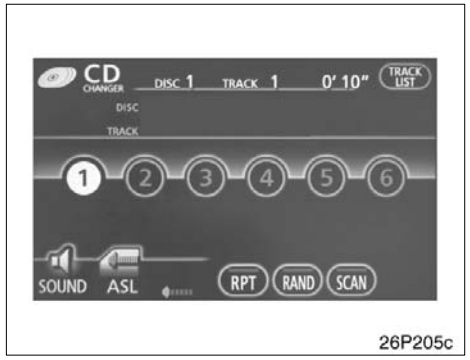

(c) Selecting a desired disc (Type 1 only)

Touch the desired disc number.

The selected disc number is highlighted in green.

The player will start playing the selected disc from the first track.

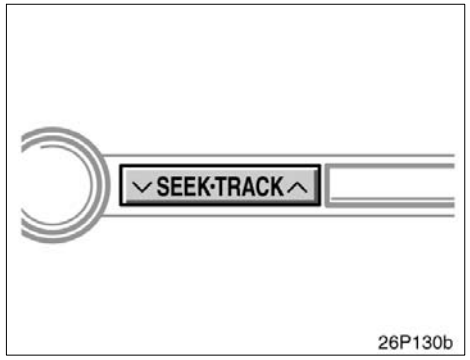

(d) Selecting a desired track

“SEEK·TRACK” button:

Push the “SEEK·TRACK” button. The player will start playing the selected track from the beginning.

Track list screen:

Touch the desired track displayed on the track list screen.

The track list screen cannot be displayed while driving.

For details about the track list screen, see ”Displaying the track list” on page 270.

(e) Fast Forward/Reverse

Push the “SEEK·TRACK” button and hold it to fast forward/reverse the disc. When you release the switch, the player will resume playing.

When fast forwarding, if you reach the end of the final track, the player will go back to the start track and continue operation.

When reversing, if you reach the beginning of the start track, reverse is cancelled, even if you continue to hold down the button.

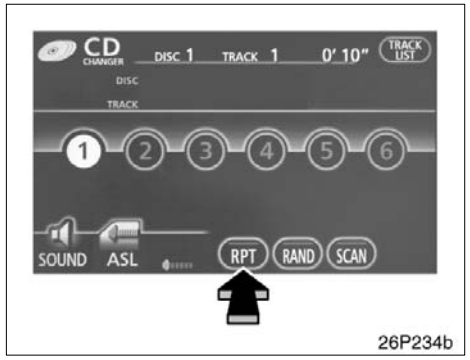

(f) Repeating the same track

Touch the “RPT” switch briefly. When the track is finished, the player will automatically go back to the beginning of the track and play the track again. To cancel it, touch the “RPT” switch once again.

(g) Repeating the same disc

Touch the “RPT” switch and hold it until you hear a beep. When the disc is finished, the player will automatically go back to the beginning of the disc and play the disc again. To cancel it, touch the “RPT” switch once again.

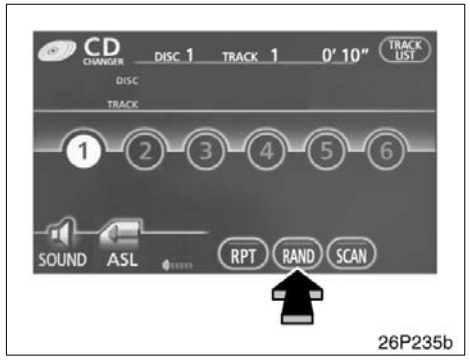

(h) Listening to the tracks in the disc you are listening to, in random order

Touch the “RAND” switch briefly, the system selects a track in the disc you are currently listening to. To cancel it, touch the “RAND” switch once again.

(i) Listening to the tracks in all the discs set, in random order

Touch the “RAND” switch and hold it until you hear a beep, the system selects a track in all the discs which are set and plays it. To cancel it, touch the “RAND” switch once again.

26P218c

(j) Searching for a desired track

Touch the "SCAN" switch briefly, the player will play the next track for 10 seconds, then scan again. To select a track, touch the "SCAN" switch a second time.

After all the tracks are scanned in one pass, normal play resumes.

(k) Searching for a desired disc (Type 1 only)

Touch the "SCAN" switch and hold it until you hear a beep, the track at the beginning of each disc will be played for 10 seconds. To continue listening to the track of your choice, touch the "SCAN" switch a second time.

After all the discs are scanned in one pass, normal play resumes.

26P236b

(l) Displaying the track list

Touch the "TRACK LIST" switch.

The track list screen will be displayed.

If there are more than 6 tracks, touch "▲" or "▼" to change the page.

If you touch a track, that track will be played.

Only track names of 13 characters or less can be displayed. Furthermore, track names may not be displayed correctly or at all, depending on the recorded content.

(m) If the player malfunctions

If the player or another unit equipped with the player malfunctions, your audio system will display the following error messages.

If "CD CHECK" appears on the display, it indicates that the disc is dirty, damaged or it was inserted up side down. Clean the disc or insert it correctly.

If "CD ERROR" appears on the display, the following causes are possible.

- There is trouble inside the system. Eject the disc.
- The inside of the player unit may be too hot due to the very high ambient temperature. Eject the disc and allow the player to cool down.

If the malfunction is not rectified, take your vehicle to your Toyota dealer.

Compact disc player operation (Type 3)

(a) Inserting or ejecting compact disc

When you insert a disc, the player will automatically start. To eject the disc, push the "⏏" button.

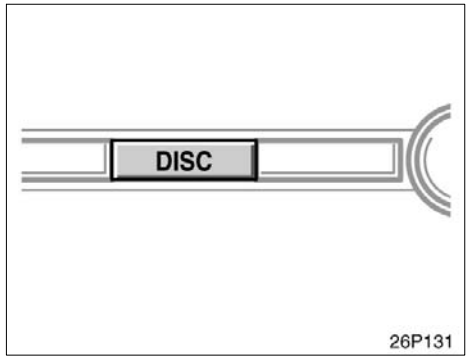

(b) Playing a compact disc

Push the "DISC" button if the disc is already loaded in the player.

"CD" appears on the display.

The discs set in the player are played continuously. The track number and the time from the beginning of the program are shown on the display.

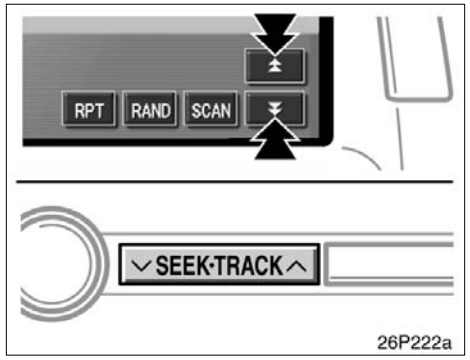

(c) Selecting a desired track

"SEEK·TRACK" button: Use for direct access to a desired track.

Push either side of the "SEEK·TRACK" button. The player will start playing the selected track from the beginning.

Fast forward: Touch the "⏶" switch and hold it to fast forward the disc. When you release the switch, the compact disc player will resume playing from that position.

Reverse: Touch the "⏷" switch and hold it to reverse the disc. When you release the switch, the compact disc player will resume playing.

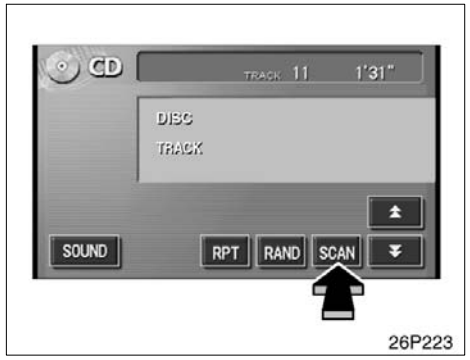

(d) Searching for a desired track

Touch the "SCAN" switch.

"SCAN" will be highlighted in green. The compact disc player will play the next track for 10 seconds, then scan again. To select a track, touch the "SCAN" switch a second time. If the player reaches the end of the disc, it will continue scanning at track 1.

After all the tracks are scanned in one pass, normal play resumes.

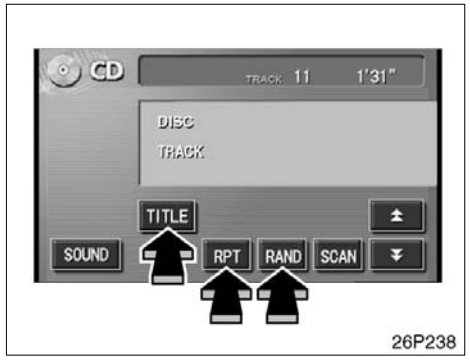

(e) Other compact disc player functions

"RPT" switch: Use it for automatic repeat of the track you are currently listening to.

Touch the switch while the track is playing. When the track is finished, the player will automatically go back to the beginning of the track and play the track again. To cancel it, touch the switch once again.

"RAND" switch: Use it for automatic and random selection of the disc which you are currently listening to.

When the switch is touched, the system selects a track in the disc you are currently listening to. To cancel it, touch the switch once again.

"TITLE" switch: Use it for displaying the disc and track title while the CD–TEXT disc is playing.

The switch is not displayed on the screen while the CD–TEXT disc is not playing. Up to 29 letters can be displayed. To cancel it, touch the "TITLE OFF" switch.

(f) If the player malfunctions

If the player or another unit equipped with the player malfunctions, your audio system will display the following error messages.

If "CD CHECK" appears on the display, it indicates that the disc is dirty, damaged or it was inserted up side down. Clean the disc or insert it correctly.

If "CD ERROR" appears on the display, the following causes are possible.

- There is trouble inside the system. Eject the disc.
- The inside of the player unit may be too hot due to the very high ambient temperature. Eject the disc and allow the player to cool down.

If the malfunction is not rectified, take your vehicle to your Toyota dealer.

MP3/WMA player operation (Type 1 and Type 2)

(a) Inserting or ejecting MP3/WMA disc

Refer to the "(a) Inserting or ejecting compact disc" on page 266.

(b) Playing a compact disc

Refer to the "(b) Playing a compact disc" on page 267.

(c) Selecting a desired disc (Type 1 only)

Refer to the "(c) Selecting a desired disc" on page 268.

26P239b

(d) Selecting a desired folder

"FOLDER" switch:

Touch either side of the "FOLDER" switch. The player will start playing the file in the selected folder.

Folder list screen:

Touch the desired folder displayed on the folder list screen.

The folder list screen cannot be displayed while driving.

For details the folder list screen, see "Displaying the folder list" on page 276.

26P240a

(e) Selecting a desired file

"TRACK" button:

Push the "SEEK·TRACK" button. The player will start playing the selected file from the beginning.

File list screen:

Touch the desired file displayed on the file list screen.

The file list screen cannot be displayed while driving.

For details about the file list screen, see "Displaying the file list" on page 276.

"TUNE·FILE" knob:

Turn the knob clockwise to search up the files. Turn the knob counterclockwise to search down the files.

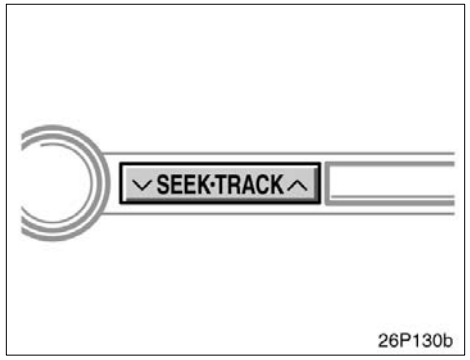

(f) Fast Forward/Reverse

Push the “SEEK·TRACK” button and hold it to fast forward/reverse the disc. When you release the switch, the player will resume playing.

When fast forwarding, if you reach the end of the final file, the player will go back to the start file and continue operation.

When reversing, if you reach the beginning of the start file, reverse is cancelled, even if you continue to hold down the button.

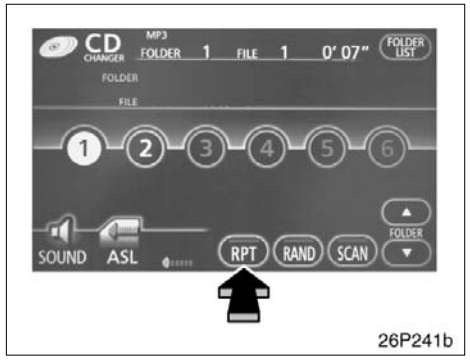

(g) Repeating the same file

Touch the “RPT” switch briefly. When the file is finished, the player will automatically go back to the beginning of the file and play the file again. To cancel it, touch the “RPT” switch once again.

(h) Repeating the same folder

Touch the “RPT” switch and hold it until you hear a beep. When the folder is finished, the player will automatically go back to the beginning of the folder and play the folder again. To cancel it, touch the “RPT” switch once again.

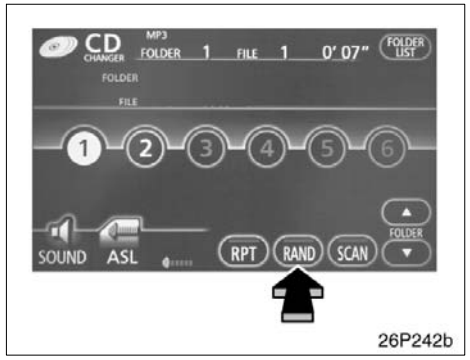

(i) Listening to the files in the folder you are listening to, in random order

Touch the “RAND” switch briefly, the system selects a file in the folder you are currently listening to. To cancel it, touch the “RAND” switch once again.

(j) Listening to the files in all the folders, in random order

Touch the “RAND” switch and hold it until you hear a beep, the system selects a file in all the folders which are set and plays it. To cancel it, touch the “RAND” switch once again.

(k) Searching for a desired file

26P243b

Touch the "SCAN" switch briefly, the player will play the next file for 10 seconds, then scan again. To select a file, touch the "SCAN" switch a second time.

After all the files are scanned in one pass, normal play resumes.

(l) Searching for a desired folder

Touch the "SCAN" switch and hold it until you hear a beep, the file at the beginning of each folder will be played for 10 seconds. To continue listening to the file of your choice, touch the "SCAN" switch a second time.

After all the folders are scanned in one pass, normal play resumes.

(m) Displaying the folder list

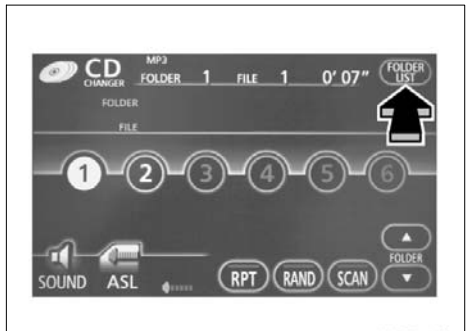

26P244b

Touch the "FOLDER LIST" switch.

The folder list screen will be displayed.

If there are more than 6 folders, touch "▲" or "▼" to change the page.

If you touch a folder, that folder will be played.

Up to 13 characters of folder name can be displayed. However, folder names may not be displayed correctly or at all, depending on the recorded content.

If you touch the "FILE" switch, the file list screen will be displayed.

(n) Displaying the file list

26P245b

Touch the "FILE" switch.

The file list screen will be displayed.

If there are more than 6 files, touch "▲" or "▼" to change the page.

If you touch a file, that file will be played.

Up to 13 characters of file name can be displayed. However, file names may not be displayed correctly or at all, depending on the recorded content.

If you touch the "FOLDER" switch, the folder list screen will be displayed.

26P246b

(o) Displaying the file information

Touch the "DETAIL" switch on the folder list or file list screen.

Up to 32 characters of album title, track, artist's name or music genre can be displayed. However, some information may not be displayed correctly or at all, depending on the recorded content.

(p) If the player malfunctions

If the player or another unit equipped with the player malfunctions, your audio system will display the following error messages.

If "CD CHECK" appears on the display, it indicates that the disc is dirty, damaged or it was inserted up side down. Clean the disc or insert it correctly.

If "CD ERROR" appears on the display, the following causes are possible.

- There is trouble inside the system. Eject the disc.
- The inside of the player unit may be too hot due to the very high ambient temperature. Eject the disc and allow the player to cool down.

If "NO DATA DISC" appears on the display, it indicates that a disc with no MP3 or WMA data has been inserted. Remove the disc from the player and insert a MP3 or WMA data disc.

If the malfunction is not rectified, take your vehicle to your Toyota dealer.

Audio remote controls (steering switches)

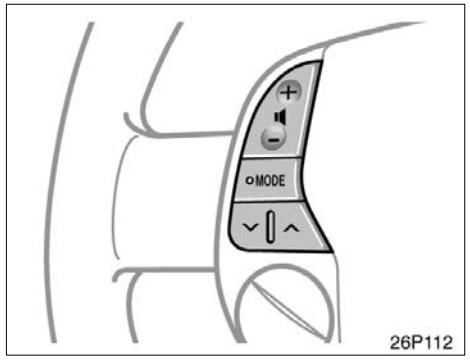

26P112

The switches are installed on the left side of the steering pad.

"MODE" switch: Use this switch to change the mode. If a compact disc is not inserted, the "CD" mode is skipped. When you push the switch with the audio system turned off, the audio system turns on.

" 🔈 " switches: Use the switches to adjust the volume. Push "+" to increase the volume and "–" to decrease the volume. The volume continues to increase or decrease while the switch is being pressed.

(a) When the radio mode is selected

"∧" or "∨" switch: Push this switch for seek tuning or to select a station.

- To select a preset station, push the switch briefly. Do this again to select the next preset station.
- To seek a station, push and hold the switch until you hear a beep. Do this again to find the next station. If you push the switch on either side ("∨" or "∧") during the seek mode, seeking will be canceled.
- To step up or down the frequency, push and hold the switch even after you hear a beep. When you release from the switch, the radio will begin seeking up or down for a station. Do this again to find the next station.

(b) When the "CD" mode is selected

"∧" or "∨" switch: Use this switch to select a desired track or disc.

- Push this switch briefly to select a desired track.
- To select a desired disc, push and hold this switch until the desired number of the disc appears and you hear a beep.

(c) When the "MP3/WMA" mode is selected

"∧" or "∨" switch: Use this switch to select a desired file or folder.

- Push this switch briefly to select a desired file.
- To select a desired folder, push and hold this switch until the desired folder appears and you hear a beep.

⚠ CAUTION

Operate the switches with due care while you are driving to avoid accidents.

Audio system operating hints

NOTICE

To ensure correct audio system operations:

- ***Be careful not to spill beverages over the audio system.***
- ***The use of a cellular phone inside or near the vehicle may cause a noise from the speakers of the audio system which you are listening to. However, this does not indicate a malfunction.***

RADIO RECEPTION

Usually, a problem with radio reception does not mean there is a problem with your radio—it is just the normal result of conditions outside the vehicle.

For example, nearby buildings and terrain can interfere with FM reception. Power lines or telephone wires can interfere with AM signals. And of course, radio signals have a limited range. The farther you are from a station, the weaker its signal will be. In addition, reception conditions change constantly as your vehicle moves.

Here are some common reception problems that probably do not indicate a problem with your radio:

FM

Fading and drifting stations—Generally, the effective range of FM is about 40 km (25 miles). Once outside this range, you may notice fading and drifting, which increase with the distance from the radio transmitter. They are often accompanied by distortion.

Multi–path—FM signals are reflective, making it possible for two signals to reach your antenna at the same time. If this happens, the signals will cancel each other out, causing a momentary flutter or loss of reception.

Static and fluttering—These occur when signals are blocked by buildings, trees, or other large objects. Increasing the bass level may reduce static and fluttering.

Station swapping—If the FM signal you are listening to is interrupted or weakened, and there is another strong station nearby on the FM band, your radio may tune in the second station until the original signal can be picked up again.

AM

Fading—AM broadcasts are reflected by the upper atmosphere—especially at night. These reflected signals can interfere with those received directly from the radio station, causing the radio station to sound alternately strong and weak.

Station interference—When a reflected signal and a signal received directly from a radio station are very nearly the same frequency, they can interfere with each other, making it difficult to hear the broadcast.

Static—AM is easily affected by external sources of electrical noise, such as high tension power lines, lightening, or electrical motors. This results in static.

CARING FOR YOUR COMPACT DISC PLAYER AND DISCS

- The player is intended for use with 12cm (4.7 in.) discs only.
- Extremely high temperatures can keep your compact disc player from working. On hot days, use the air conditioning to cool the vehicle interior before you listen to a disc.
- Bumpy roads or other vibrations may make your compact disc player skip.
- If moisture gets into your compact disc player, you may not hear any sound even though your compact disc player appears to be working. Remove the disc from the player and wait until it dries.

⚠ CAUTION

Compact disc players use an invisible laser beam which could cause hazardous radiation exposure if directed outside the unit. Be sure to operate the player correctly.

- Use only compact discs marked as shown above. The following products may not be playable on your compact disc player.

  Copy–protected CD
  CD–R (CD–Recordable)
  CD–RW (CD–Re–writable)
  CD–ROM

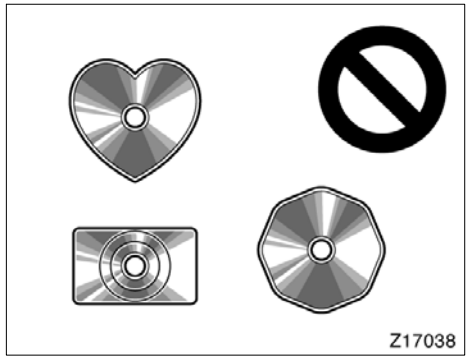

Special shaped discs

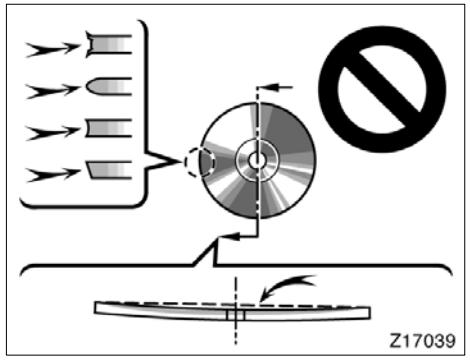

Low quality discs

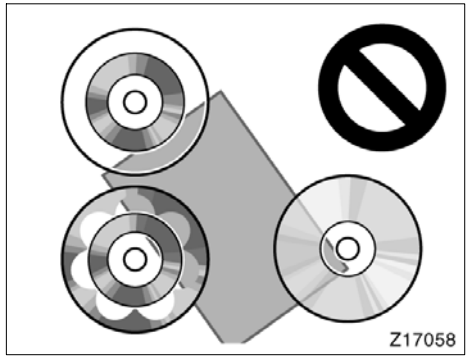

Transparent/translucent discs

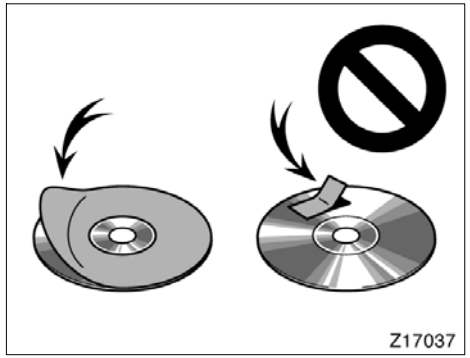

Labeled discs

NOTICE

Do not use special shaped, transparent/translucent, low quality or labeled discs such as those shown in the illustrations. The use of such discs may damage the player or changer, or it may be impossible to eject the disc.

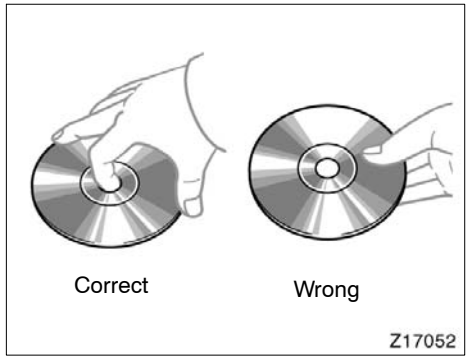

- Handle compact discs carefully, especially when you are inserting them. Hold them on the edge and do not bend them. Avoid getting fingerprints on them, particularly on the shiny side.
- Dirt, scratches, warping, pin holes, or other disc damage could cause the player to skip or to repeat a section of a track. (To see a pin hole, hold the disc up to the light.)
- Remove discs from the compact disc player when you are not listening to them. Store them in their plastic cases away from moisture, heat, and direct sunlight.

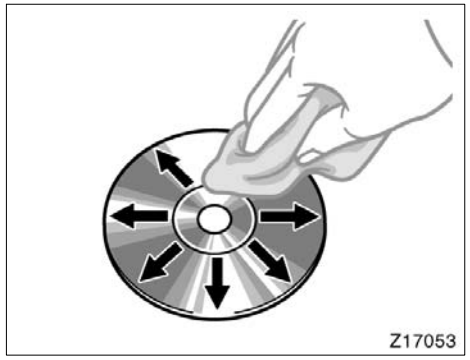

To clean a compact disc: Wipe it with a soft, lint–free cloth that has been dampened with water. Wipe in a straight line from the center to the edge of the disc (not in circles). Dry it with another soft, lint–free cloth. Do not use a conventional record cleaner or anti–static device.

MP3 WMA FILES

- MP3 (MPEG Audio Layer 3) and WMA (Windows Media Audio) are audio compression standards.
- The MP3/WMA player can play MP3 and WMA files on CD–ROM, CD–R and CD–RW discs.

  The unit can play disc recordings compatible with ISO 9660 level 1 and level 2 and with the Romeo and Joliet file system.
- When naming an MP3 or WMA file, add the appropriate file extension (.mp3 or .wma)
- The MP3/WMA player plays back files with .mp3 or .wma file extensions as MP3 or WMA files. To prevent noise and playback errors, use the appropriate file extensions.
- Multi–session compatible CDs can also be played.
- MP3 files are compatible with the ID3 Tag Ver. 1.0, Ver. 1.1, Ver. 2.2, and Ver. 2.3 formats. The unit cannot display disc title, track title and artist name in other formats.
- WMA files can contain a WMA tag that is used in the same way as an ID3 tag. WMA tags carry information such as track title, artist name.
- The emphasis function is available only when playing MP3/WMA files recorded at 32, 44.1 and 48 kHz. (The system can play MP3 files with sampling frequencies of 16, 22.05, and 24 kHz. However, the emphasis function is not available for files recorded at these frequencies.)
- The sound quality of MP3/WMA files generally improves with higher bit rates. In order to achieve a reasonable level of sound quality, discs recorded with a bit rate of at least 128 kbps are recommended.

  Playable bit rates
  MP3 files:
  MPEG1 LAYER3—64 to 320 kbps
  MPEG2 LSF LAYER3—64 to 160 kbps
  WMA files:

  Ver. 7, 8 CBR—48 to 192 kbps
  Ver. 9 CBR—48 to 320 kbps
- The MP3/WMA player does not play back MP3/WMA files from discs recorder using packet write data transfer (UDF format). Discs should be recorded using “per–mastering” software rather than packet–write software.
- M3u playlists are not compatible with the audio player.
- MP3i (MP3 interactive) and MP3PRO formats are not compatible with the audio player.
- The MP3 player is compatible with VBR (Variable Bit Rate).
- When playing back files recorded as VBR (Variable Bit Rate) files, the play time will not be correctly displayed if fast–forward or reverse operations are used.
- It is not possible to check folders that do not include MP3/WMA files.
- MP3/WMA files in folders up to 8 levels deep can be played. However, the start of playback may be delayed when using discs containing numerous levels of folders. For this reason, we recommend creating discs with no more than two levels of folders.
- It is possible to play up to 192 folders or 255 files on one disc.

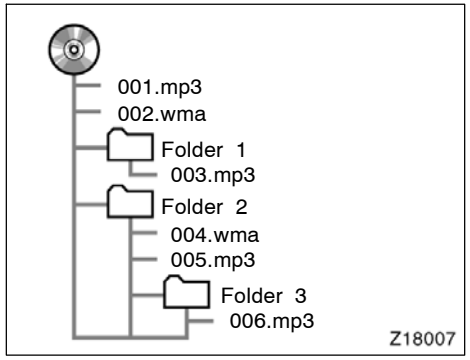

- The play order of the compact disc with the structure shown above is as follows:

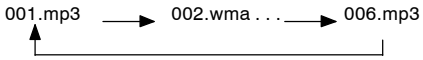

CD–R and CD–RW discs

- CD–R/CD–RW discs that have not been subject to the “finalizing process” (a proc ess that allows discs to be played on a conventional CD player) cannot be played.
- It may not be possible to play CD–R/CD–RW discs recorded on a music CD recorder or a personal computer because of disc characteristics, scratches or dirt on the disc, or dirt, condensation, etc. on the lens of the unit.
- It may not be possible to play discs recorded on a personal computer depending on the application settings and the environment. Record with the correct format. (For details, contact the appropriate application manufacturers of the applications.)
- CD–R/CD–RW discs may be damaged by direct exposure to sunlight, high temperatures or other storage conditions. The unit may be unable to play some damaged discs.
- If you insert a CD–RW disc into the MP3/WMA player, playback will begin more slowly than with a conventional CD or CD–R disc.
- Recordings on CD–R/CD–RW cannot be played using the DDCD (Double Density CD) system.

TERMS

Packet write—

This is a general term that describes the process of writing data on–demand to CD–R, etc., in the same way that data is written to floppy or hard discs.

ID3 Tag—

This is a method of embedding track–related information in an MP3 file. This embedded information can include the track title, the artist’s name, the album title, the music genre, the year of production, comments and other data. The contents can be freely edited using software with ID3 tag editing functions. Although the tags are restricted to the number of characters, the information can be viewed when the track is played back.

WMA Tag—

WMA files can contain a WMA tag that is used in the same way as an ID3 tag. WMA tags carry information such as track title, artist name.

ISO 9660 format—

This is the international standard for the formatting of CD–ROM folders and files. For the ISO 9660 format, there are two levels of regulations.

Level 1:

The file name is in 8.3 format (8 character file names, with a 3 character file extension. File names must be composed of one–byte capital letters and numbers. The "_" symbol may also be included.)

Level 2:

The file name can have up to 31 characters (including the separation mark "." and file extension). Each folder must contain fewer than 8 hierarchies.

m3u—

Playlists created using "WINAMP" software have a playlist file extension (.m3u).

MP3—

MP3 is an audio compression standard determined by a working group (MPEG) of the ISO (International Standard Organization). MP3 compresses audio data to about 1/10 the size of that on conventional discs.

WMA—

WMA (Windows Media Audio) is an audio compression format developed by Microsoft. It compresses files into a size smaller than that of MP3 files. The decoding formats for WMA files are Ver. 7, 8, and 9.

SECTION 2 – 9

OPERATION OF INSTRUMENTS AND CONTROLS

Air conditioning system

Controls 286
Climate remote control 297
Instrument panel ventss 297
Air conditioning filter 298

Controls

▶**Type 1**

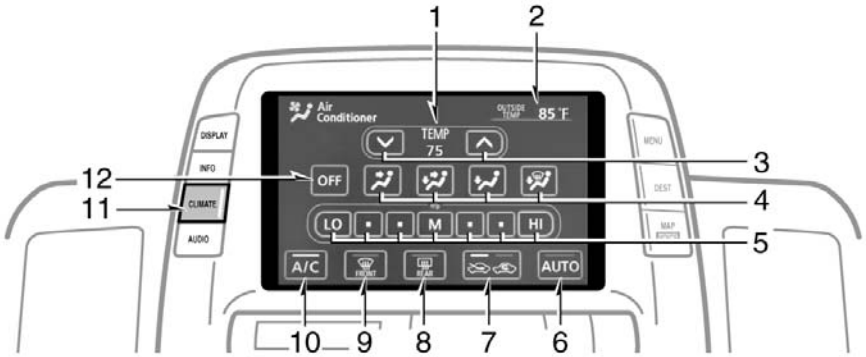

27P165a

1. Passenger compartment temperature display
2. Outside temperature display
3. Temperature control switch
4. Air flow control switch
5. Fan speed control switch
6. Automatic control switch
7. Air intake control switch
8. Rear window and outside rear view mirror defogger switch (See page 118 for details.)
9. Windshield air flow switch
10. Air conditioning on–off switch
11. Air conditioning operation screen display button
12. OFF switch

In this manual, English version screens are shown as an example.

▶**Type 2**

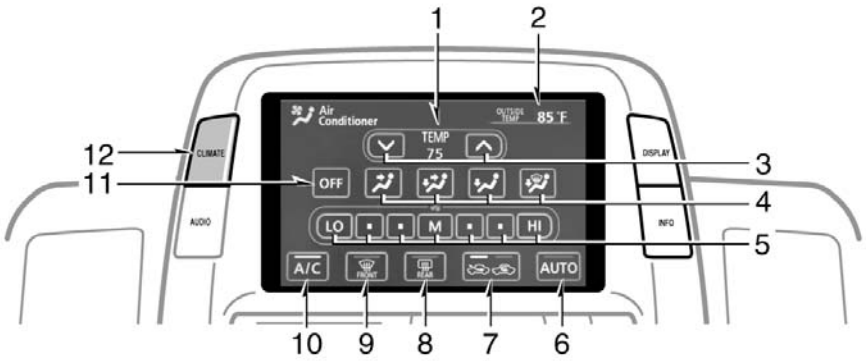

27P164a

1. Passenger compartment temperature display
2. Outside temperature display
3. Temperature control switch
4. Air flow control switch
5. Fan speed control switch
6. Automatic control switch
7. Air intake control switch
8. Rear window and outside rear view mirror defogger switch (See page 118 for details.)
9. Windshield air flow switch
10. Air conditioning on–off switch
11. OFF switch
12. Air conditioning operation screen display button

In this manual, English version screens are shown as an example.

▶**Type 3**

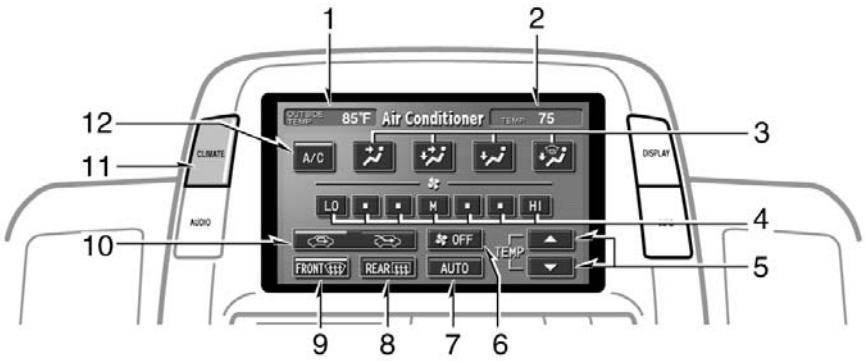

27P337

1. Outside temperature display
2. Passenger compartment temperature display
3. Air flow control switch
4. Fan speed control switch
5. Temperature control switch
6. OFF switch
7. Automatic control switch
8. Rear window and outside rear view mirror defogger switch (See page 118 for details.)
9. Windshield air flow switch
10. Air intake control switch
11. Air conditioning operation screen display button
12. Air conditioning on–off switch

In this manual, English version screens are shown as an example.

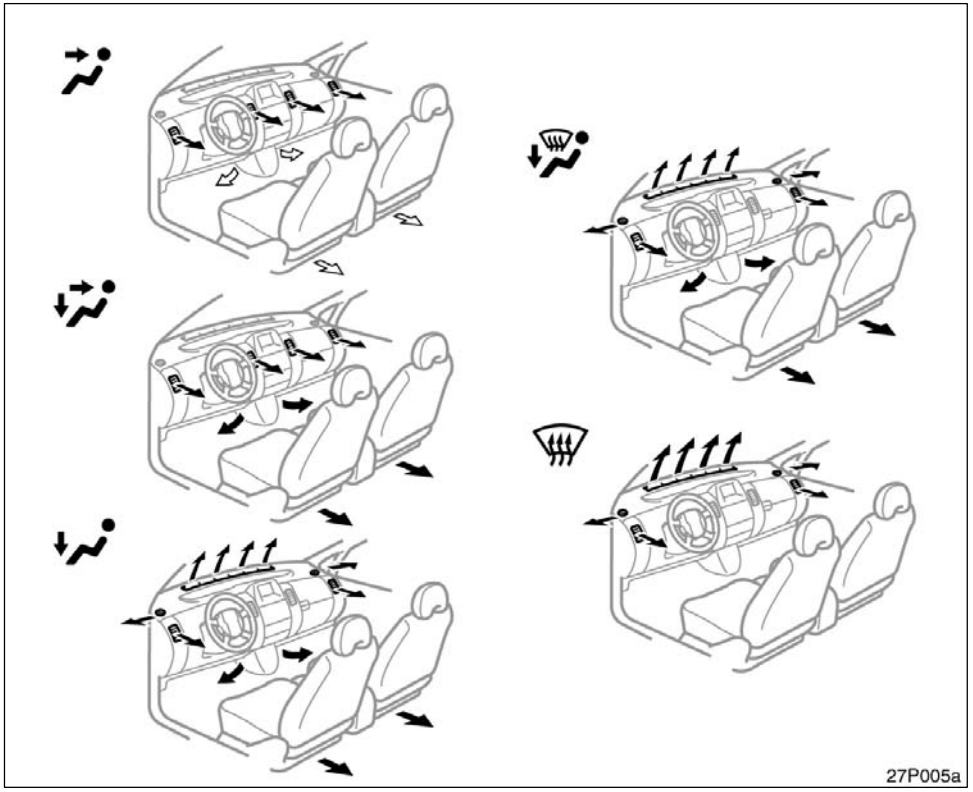

Air flow selection

⇨: In the beginning of the automatic air flow mode, air might be delivered.

The automatic air conditioning automatically maintains the set temperature.

This air conditioning features automatic fan speed and air flow control which automatically selects the most suitable fan speed and air flow to control the temperature. The hybrid system must be in the "IG–ON" mode.

CLIMATE: Push this button to display switches for automatic air conditioning controls.

NOTICE
To prevent the battery from being discharged, do not leave the air conditioning on longer than necessary when the hybrid system is not operating.

(a) Climate control

SETTING OPERATION—automatic control

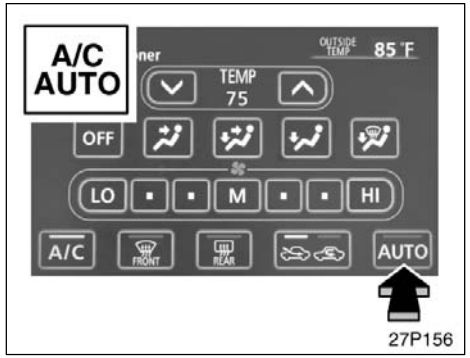

Type 1 and Type 2

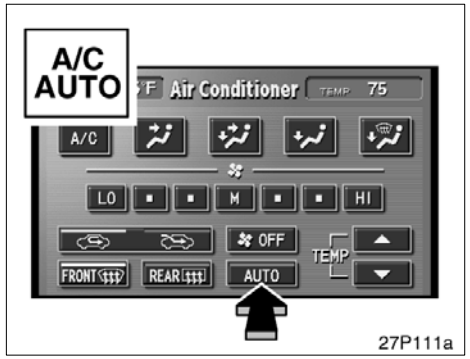

Type 3

1. Touch the "AUTO" switch.

The indicator located in the instrument cluster will come on.

Air conditioning is turned on if not operated.

Air flow quantity, switching of the diffusers, and switching of the air intake between RECIRCULATED AIR and OUTSIDE AIR are automatically adjusted. The operation status is shown by each indicator.

However, if the RECIRCULATED AIR mode is selected manually, control changes to give priority to manual settings.

When one of the manual control buttons is depressed while operating in automatic mode, the mode relevant to the depressed button is set. Other conditions continue to be adjusted automatically. However, operating the air flow outlets or fan speed will turn off the automatic control.

Touch the "OFF" switch to turn the air conditioning off.

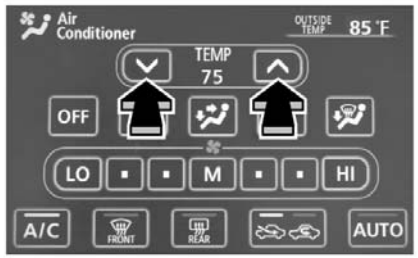

27P157

Type 1 and Type 2

27P112a

Type 3

2. Use the "TEMP" switch to set the desired temperature.

The temperature of air delivered to the passenger compartment will be controlled automatically according to the setting.

SETTING OPERATION—manual control

When one of the manual control switches is touched while operating in automatic mode, the mode relevant to the touched switch is set. Other conditions continue to be adjusted automatically.

If manual air flow selection is desired—

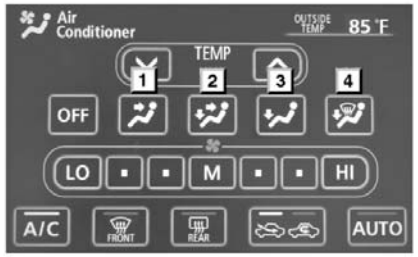

27P158

Type 1 and Type 2

27P113a

Type 3

The outlets from which air is delivered can be selected manually by touching the switch. The function of each mode is as follows:

1. **Panel—**Air flows mainly from the instrument panel vents.
2. **Bi-level—**Air flows from both the floor vents and the instrument panel vents.
3. **Floor—**Air flows mainly from the floor vents.
4. **Floor/Windshield—**Air flows mainly from the floor vents and windshield vents.

The selected mode is highlighted in green.

If quick heating or cooling is desired—

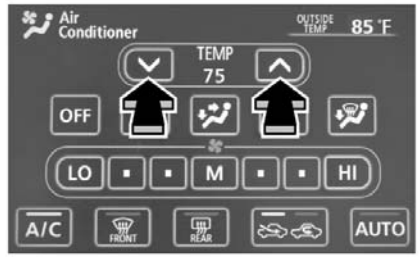

27P157

Type 1 and Type 2

27P112a

Type 3

Touch the “TEMP” switches and hold either one until the maximum figure or minimum figure appears.

If manual fan speed control is desired—

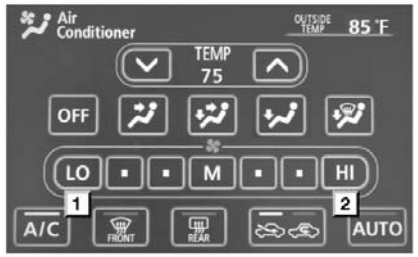

27P159

Type 1 and Type 2

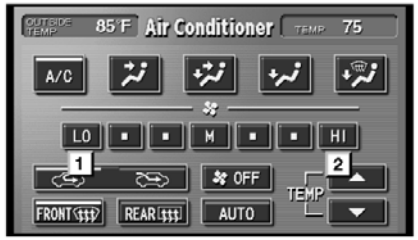

27P114a

Type 3

1. Fan speed at low
2. Fan speed at high

The fan speed can be set to your desired speed by touching the appropriate air flow control switch. The higher the fan speed is, the more air is delivered. Touching the “OFF” switch turns off the fan.

To remove exterior windshield frost, use the high speed setting.

The selected mode is highlighted in green.

If manual switching of air intake is desired—

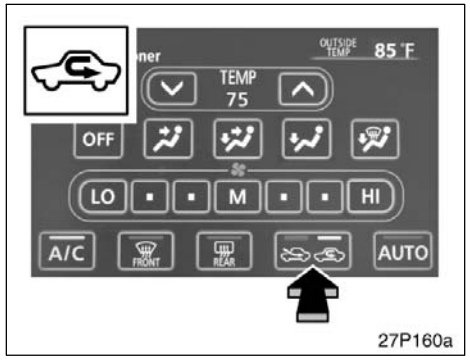

Type 1 and Type 2

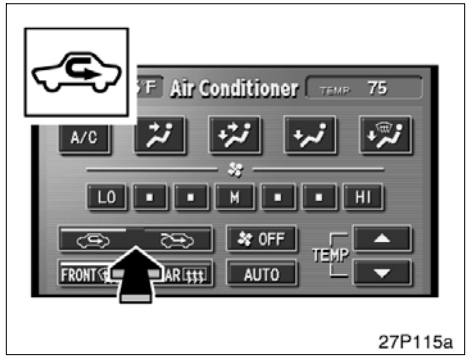

Type 3

The air intake control switch is used to switch the air intake between the OUTSIDE AIR mode and RECIRCULATED AIR mode.

With the switch in the OUTSIDE AIR mode, the system will take fresh outside air into the vehicle.

If quick circulation of cooled air is desired, touch the air intake control switch for RECIRCULATED AIR.

The indicator will come on in the instrument cluster while the RECIRCULATED AIR mode is selected.

If recirculated air is used during heating, the windows will fog up more easily.

If the hybrid system is turned off in the OUTSIDE AIR mode, the automatic control of the air intake is activated when the hybrid system is turned on again.

2–way air intake control

To improve fuel economy, OUTSIDE AIR mode control changes when the air intake selector is set in OUTSIDE AIR on the following conditions:

- When the maximum heating is needed with the air flow in “Floor” or “Floor/Windshield”, fresh air flows in the upper compartment, while air is recirculated in the lower compartment.
- When cooling is needed, both fresh and recirculate modes turns on.

If manual on–off of the air conditioning is desired—

Touch the “A/C” switch to turn the air conditioning on and touch it again to turn the air conditioning off.

If the system is used for ventilation, heating in dry weather or removing frost or exterior fog on the windshield, turn the air conditioning off once it is no longer required. This will improve fuel economy. The air conditioning can be used for year–round automatic temperature control including cooling and dehumidifying operation.

(b) Windshield defogging and defrosting

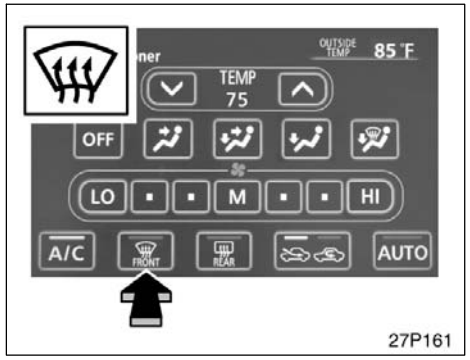

Type 1 and Type 2

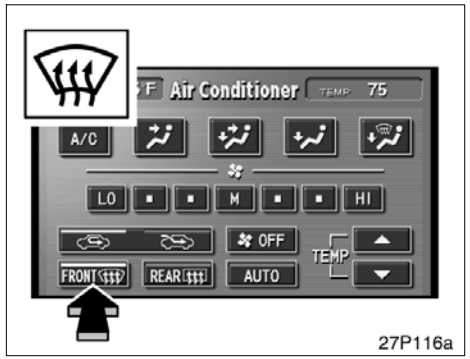

Type 3

To remove interior fog on the windshield—

Touch the windshield air flow switch.

To remove frost or exterior fog on the windshield—

1. Touch the upper side of the temperature control switch until maximum figure appears on the temperature display.
2. Touch the windshield air flow switch.
3. Push the “HI” of the air flow control switch to obtain a maximum air flow.
4. Leave the air conditioning on–off button off.

When the windshield air flow switch is touched, the air conditioning is set to operate and the OUTSIDE AIR mode is set.

If you touch the windshield air flow switch once again while in the windshield air flow mode, the mode then returns to the last mode used.

The indicator will come on in the instrument cluster while the windshield air flow mode is on.

⚠ CAUTION

Do not use the windshield air flow switch during cooled air operation in extremely humid weather. The difference between the temperature of the outside air and that of the windshield could cause the outer surface of the windshield to fog up blocking your vision.

(c) Operating tips

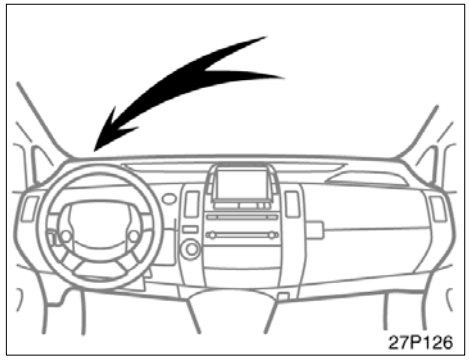

- The light sensor is located on the driver's side edge of the instrument panel. If you put anything on this area or cover the area, the sensor function may be adversely affected.
- To cool off your Toyota after it has been parked in the hot sun, drive with the windows open for a few minutes. This vents the hot air, allowing the air conditioning to cool the interior more quickly.
- Make sure the air intake grilles in front of the windshield are not blocked (by leaves or snow, for example).
- On humid days, do not blow cold air on the windshield. The windshield could fog up because of the difference in air temperature on the inside and outside of the windshield.
- Keep the area under the front seats clear to allow air to circulate throughout the vehicle.
- On cold days, set the fan speed to high for a minute to help clear the intake ducts of snow or moisture. This can reduce the amount of fogging on the windows.
- When driving on dusty roads, close all windows. If dust thrown up by the vehicle is still drawn into the vehicle after closing the windows, it is recommended that the air intake selector be set to OUTSIDE AIR and the fan speed selector to any setting except "OFF".
- If following another vehicle on a dusty road, or driving in windy and dusty conditions, it is recommended that the air intake selector be temporarily set to RECIRCULATE, which will close off the outside passage and prevent outside air and dust from entering the vehicle interior.

Climate remote control (steering switches)

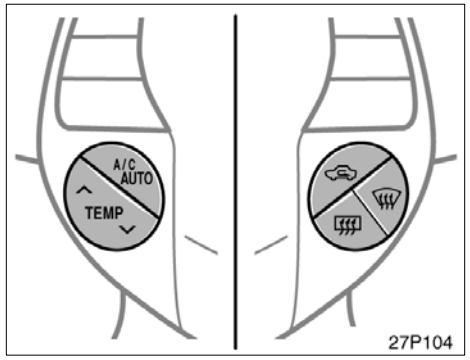

The switches are installed on both sides of the steering pad.

"A/C AUTO" switch: Use this switch to turn on the automatic mode. (For details, see page 290.) Pressing this switch in the automatic control turns the blower off.

"∧TEMP∨" switch: Use this switch to set the desired temperature. (For details, see page 291.)

"" switch: Use this switch to change the air intake mode. (For details, see page 294.)

"" switch: Use this switch to remove interior fog on the windshield. (For details, see page 295.)

"" switch: Use this switch to turn on or off the rear window and outside rear view mirror defoggers. (For details, see page 118.)

⚠ CAUTION

Operate the switches with due care while you are driving to avoid accidents.

Instrument panel vents

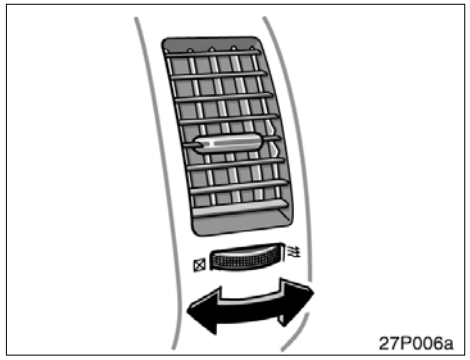

If air flow control is not satisfactory, check the instrument panel vents. The instrument panel vents may be opened or closed as shown.

Air conditioning filter—

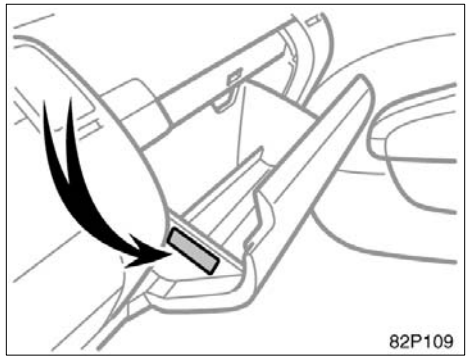

The air conditioning filter information label is placed on the left side of the glove box as shown and indicates that a filter has been installed.

The air conditioning filter prevents dust from entering the vehicle through the air conditioning vent.

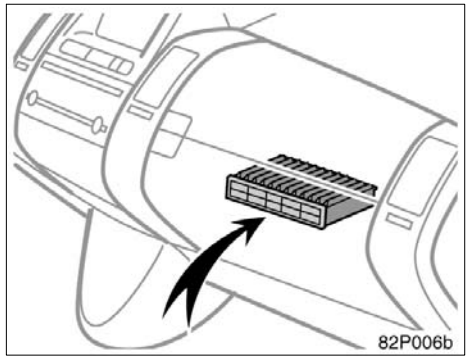

The air conditioning filter is set behind the glove box.

—Checking and replacing the air conditioning filter

The air conditioning filter may clog after long use. The filter may need to be replaced if the air flow of the air conditioning and heater experiences extreme reductions in operating efficiency, or if the windows begin to fog up easily.

To maintain the air conditioning efficiency, inspect and replace the air conditioning filter according to the maintenance schedule. In dusty areas or areas with heavy traffic flow, such as inner city or desert areas, early replacement may be required. (For scheduled maintenance information, please refer to the “Owner’s Manual Supplement/Scheduled Maintenance”.)

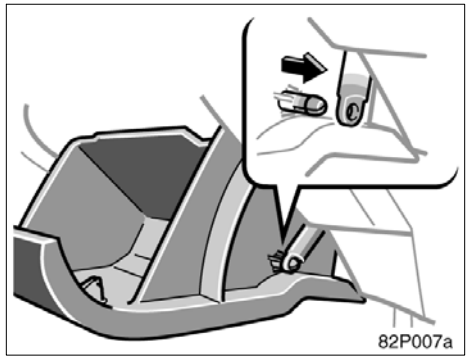

1. Open the glove box, and slide off the damper as shown.

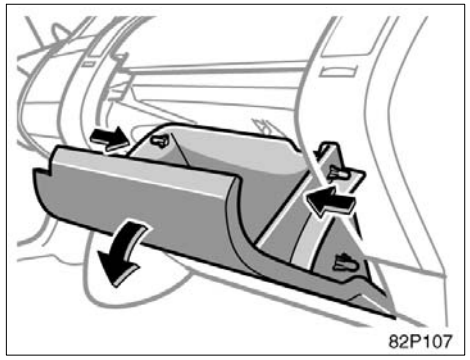

2. Push in each side of the glove box to disconnect the claws.

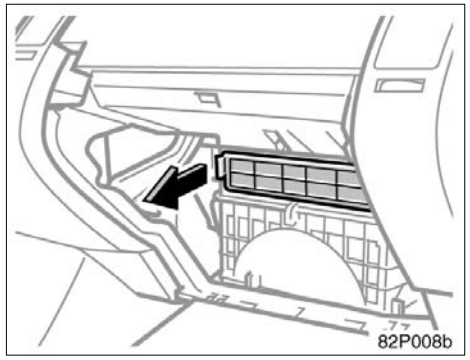

3. Pull the filter case toward you to take it out.

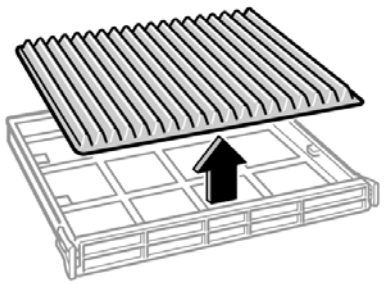

4. Remove the filter from the filter case and replace it with a new one.

5. Install the filter and filter case in the reverse order of removal.

Set the filter in the filter case correctly.

INFORMATION
The air filter should be installed properly in position. The use of air conditioning with the air filter removed may cause deteriorated dustproof performance and then affect air conditioning performance.

SECTION 2 – 10

OPERATION OF INSTRUMENTS AND CONTROLS

Other equipment

Clock 302
Rear view monitor system 302
Power outletss 305
AUX adapter 306
Rear console box 306
Glove boxes 307
Garage door opener 307
Auxiliary boxes 311
Cup holders 312
Bottle holders 313
Tie–down hooks 313
Luggage storage box 314
Luggage cover 314
Floor mat 316

Clock

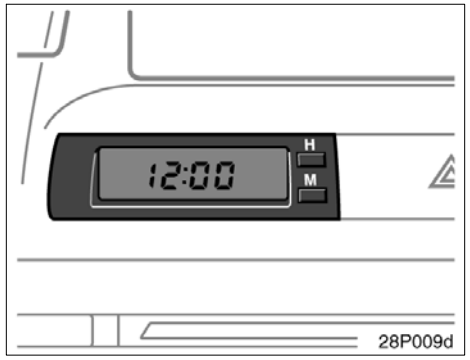

The digital clock indicates the time.

The hybrid system must be in “ACC” or “IG–ON”.

To set the hour: Push the “H” button.
To set the minutes: Push the “M” button.

If the electrical power source has been disconnected from the clock, the time display will automatically be set to 1:00.

When the instrument panel lights are turned on, the brightness of the time indicator will be reduced.

Rear view monitor system

The rear view monitor system assists the driver by displaying an image of the rear of the vehicle while backing up. The displayed image on the screen is a horizontally reversed mirror image of the inside rear view mirror.

To display the rear view image on the screen, place the selector lever in the “R” position when the “IG–ON” mode is enabled.

If you move the selector lever out of the “R” position, the screen returns to the previous screen. Operating another function of the navigation system will display another screen.

The rear view monitor system is a supplement device intended to assist back up. When backing up, be sure to check behind and all around the vehicle visually.

⚠ CAUTION

- **Never depend on the rear view monitor system entirely when backing up. Always make sure your intended path is clear.**

  Use caution just as you would when backing up any vehicle.
- **Never back up while looking only at the screen. The image on the screen is different from actual conditions. Depicted distances between objects and flat surfaces will differ from actual distances. If you back up while looking only at the screen, you may hit a vehicle, a person or an object. When backing up, be sure to check behind and all around the vehicle visually and with mirrors before proceeding.**
- **Do not use the system when the back door is not completely closed.**

- **If the back of the vehicle is hit, the position and mounting angle of the camera may change. Be sure to have the camera's position and mounting angle checked at your Toyota dealer.**
- **If the temperature changes rapidly, such as when hot water is poured on the vehicle in cold weather, the system may not operate normally.**
- **If the camera lens becomes dirty, it cannot transmit a clear image. If water droplets, snow, or mud adheres to the lens, rinse with water and wipe with a soft cloth. If the lens is extremely dirty, wash it with a mild cleanser and rinse.**
- **Use your own eyes to confirm the vehicle's surroundings, as the displayed image may become faint or dark, and moving images will be distorted, or not entirely visible when the outside temperature is low. When backing up, be sure to check behind and all around the vehicle visually and with mirror before proceeding.**

When replacing the tires, please consult your Toyota dealer. If you replace the tires, the area displayed on the screen may change.

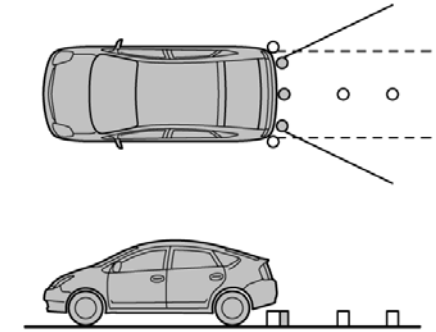

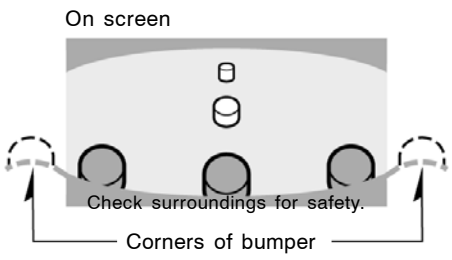

28P134

AREA DISPLAYED ON SCREEN

Image is displayed approximately level on screen.

- **The area detected by the camera is limited. Objects which are close to either corner of the bumper or under the bumper cannot be seen on the screen.**
- **The area displayed on the screen may vary according to vehicle orientation or road conditions.**

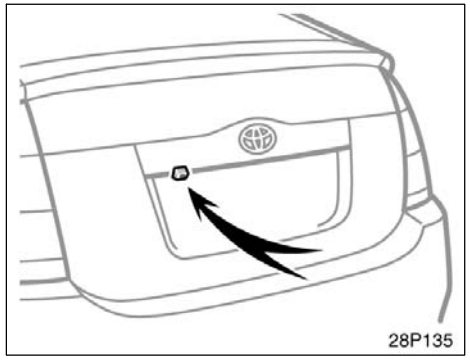

THE REAR VIEW MONITOR SYSTEM CAMERA

The rear view monitor system camera is located on the back door as shown in the illustration. The camera uses a special lens. The distance of the image that appears on the screen differs from the actual distance.

In the following cases, it may become difficult to see the images on the screen, even when the system is functioning.

- In the dark (for example, at night)
- When the temperature near the lens is extremely high or low
- When water droplets are adhering to the camera, or when humidity is high (for example, when it rains)
- When foreign matter (for example, snow or mud) adheres to the camera lens
- When the sun or the beam of headlights is shining directly into the camera lens

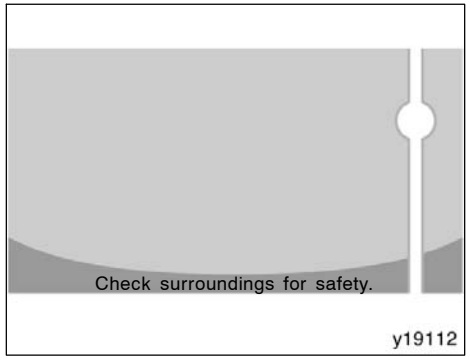

If a bright light (for example, sunlight reflected off the vehicle body) is picked up by the camera, the smear effect* peculiar to the camera may occur.

*: Smear effect—A phenomenon that occurs when a bright light (for example, sunlight reflected off the vehicle body) is picked up by the camera; when transmitted by the camera, the light source appears to have a vertical streak above and below it.

Power outlets

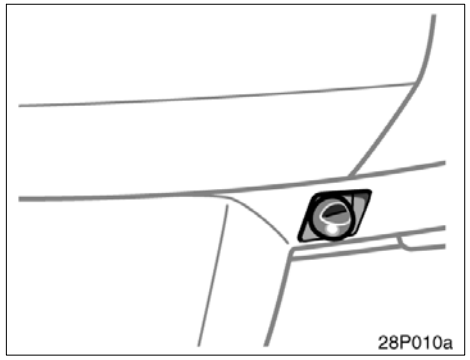

Instrument panel

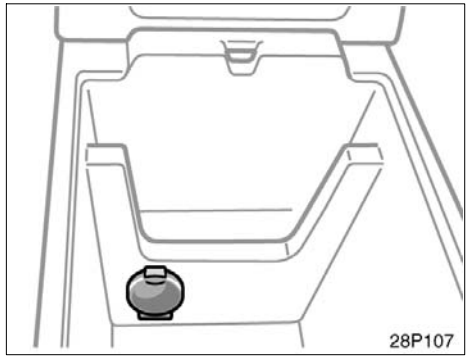

Rear console box

The power outlets are designed for power supply for car accessories.

The hybrid system must be in “ACC” or “IG–ON” for the power outlets to be used.

NOTICE

- ***To prevent the fuse from being blown, do not use the electricity over the total vehicle capacity of 12V/120W.***
- ***To prevent the battery from being discharged, do not use the power outlet longer than necessary when the hybrid system is not operating.***
- ***Close the power outlet lid when the power outlet is not in use. Inserting anything other than an appropriate plug that fits the outlet, or allowing any liquid to get into the outlet may cause electrical failure or short circuits.***

AUX adapter

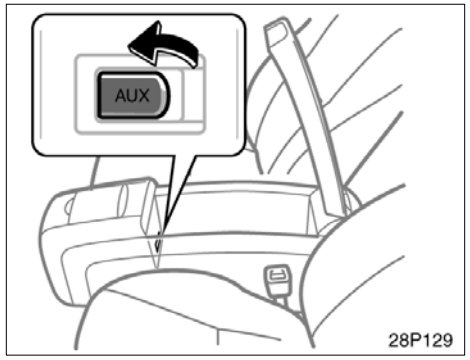

An AUX adapter is installed in the rear console box.

By inserting a mini plug into the AUX adapter, you can listen to music from a portable audio device through the vehicle's speaker system.

To use the AUX adapter, switch to the AUX mode (external device mode) by pressing "DISC·AUX" button. When the AUX adapter is in use, "AUX" will appear on the display. To adjust the volume, turn the "PWR·VOL" knob.

When using a portable audio device connected to the power outlet or cigarette lighter, noise may occur during playback. If this happens, use the power source of the portable audio device.

If you install an audio system other than a genuine audio system, you will not be able to use the AUX adapter.

Rear console box

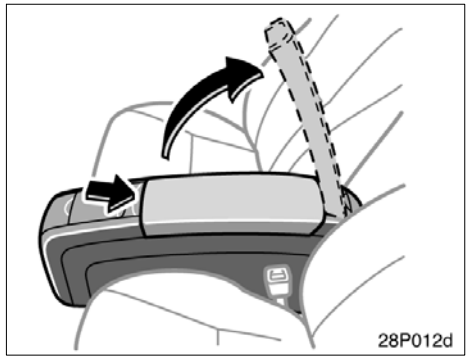

To use the rear console box, open as shown in the illustration.

⚠ CAUTION

When opening the rear console box, take due care not to catch your fingers.

Glove boxes

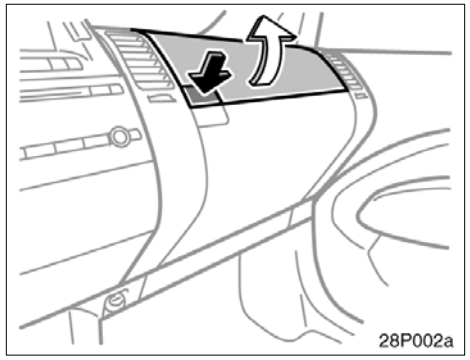

Upper glove box

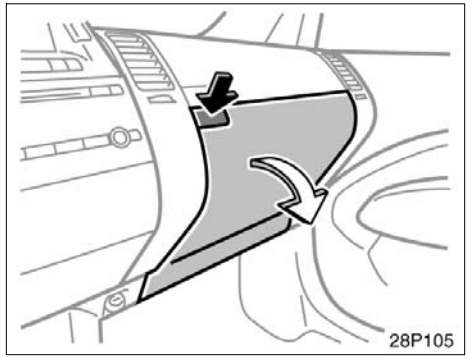

Lower glove box

To open the glove boxes, push each button.

The inside of the upper glove box is separated by the partition. When storing a longer object, remove the partition.

With the instrument panel lights on, the lower glove box light will come on when the lower glove box is open.

⚠ CAUTION

To reduce the chance of injury in case of an accident or a sudden stop, always keep the glove box doors closed while driving.

Garage door opener

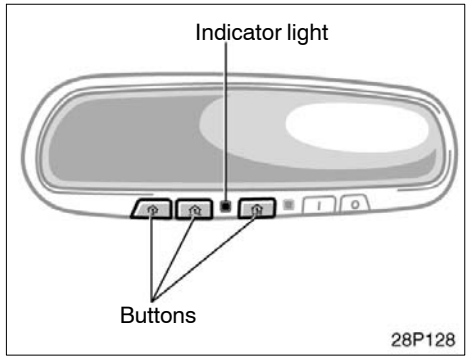

The garage door opener (HomeLink® Universal Transceiver) is manufactured under license from HomeLink® and can be programmed to operate garage doors, gates, entry doors, door locks, home lighting systems, and security systems, etc.

(a) Programing the HomeLink®

The HomeLink® in your vehicle has 3 buttons and you can store one program for each button.

To ensure correct programing into the HomeLink®, install a new battery in the hand–held transmitter prior to programming.

The battery side of the hand–held transmitter must be pointed away from the HomeLink® during the programming process.

For Canadian users, follow the procedure in “Programming an entrance gate/Programming all devices in the Canadian market”.

1. Decide which of 3 HomeLink® buttons you want to program.

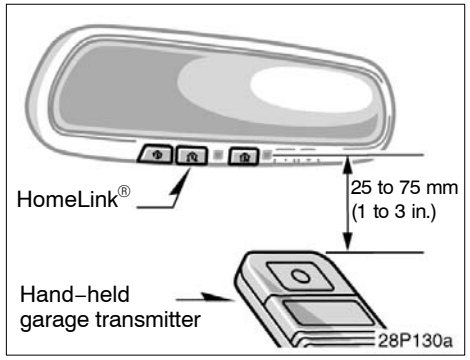

2. Place your hand–held garage transmitter 25 to 75 mm (1 to 3 in.) away from the surface of the HomeLink®.

Keep the red indicator light on the HomeLink® in view while programming.

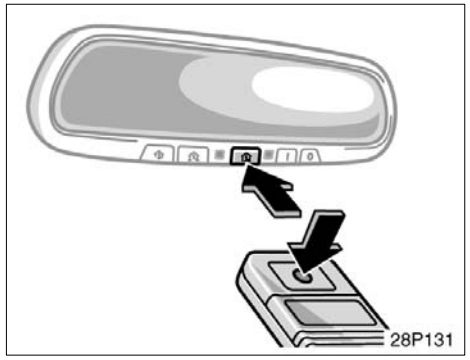

3. Simultaneously press and hold the hand–held garage transmitter button along with the selected HomeLink® button.

Do not release the buttons until step 4 has been completed.

4. When the indicator light on the HomeLink® changes from a slow to a rapid flash after 20 seconds, you can release both buttons.

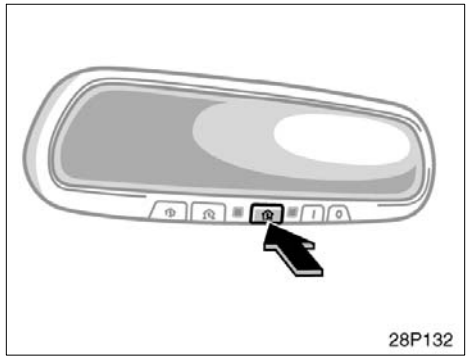

5. Test the operation of the HomeLink® by pressing the newly programmed button. If programming a garage door opener, check to see if the garage door opens and closes.

If the garage door does not operate, identify if your garage transmitter is of the "Rolling Code" type. Press and hold the programmed HomeLink® button. The garage door has the rolling code feature if the indicator light (on the HomeLink®) flashes rapidly and then remains lit after 2 seconds. If your garage transmitter is the "Rolling Code" type, proceed to the heading "Programming a rolling code system".

6. Repeat steps 2 through 5 for each remaining HomeLink® button to program another device.

Programming a rolling code system

If your device is "Rolling Code" equipped, it is necessary to follow steps 1 through 4 under the heading "Programming the HomeLink®" before proceeding with the steps listed below.

1. Locate the "training" button on the ceiling mounted garage door opener motor. The exact location and color of the button may vary by brand of garage door opener. Refer to the owner's guide supplied by the garage door opener manufacturer for the location of this "training" button.
2. Press the "training" button on the ceiling mounted garage door opener motor.

Following this step, you have 30 seconds in which to initiate step 3 below.

3. Press and release the vehicle's programmed HomeLink® button twice. The garage door may open. If the door does open, the programming process is complete. If the door does not open, press and release the button a third time. This third press and release will complete the programming process by opening the garage door.

The ceiling mounted garage door opener motor should now recognize the HomeLink® unit and be able activate the garage door up/down.

4. Repeat steps 1 through 3 each remaining HomeLink® button to program another rolling code system.

Programming an entrance gate/Programming all devices in the Canadian market

1. Decide which of the 3 HomeLink® buttons you want to program.
2. Place your hand–held gate/device transmitter 25 to 75 mm (1 to 3 in.) away from the surface of the HomeLink®.

Keep the indicator light on the HomeLink® in view while programming.

3. Press and hold the selected HomeLink® button.
4. Continuously press and release (cycle) the hand–held gate/device transmitter button every two seconds until step 5 is complete.
5. When the indicator light on the HomeLink® changes from a slow to a rapid flash after 20 seconds, you can release both buttons.

6. Test the operation of the HomeLink® by pressing the newly programmed button. Check to see if the gate/device operates correctly.
7. Repeat steps 1 through 6 for each remaining HomeLink® button to program another device.

Programming other devices

To program other devices such as home security systems, home door locks or lighting, contact your authorized Toyota dealer for assistance.

Reprogramming a button

Individual HomeLink® buttons cannot be erased, however, to reprogram a single button, follow the procedure "Programming the HomeLink®".

(b) Operating the HomeLink®

To operate the HomeLink®, press the appropriate HomeLink® button to activate the programmed device. The HomeLink® indicator light should come on. The HomeLink® continues to send the signal for up to 20 seconds as long as the button is pressed.

(c) Erasing the entire HomeLink® memory (all three programs)

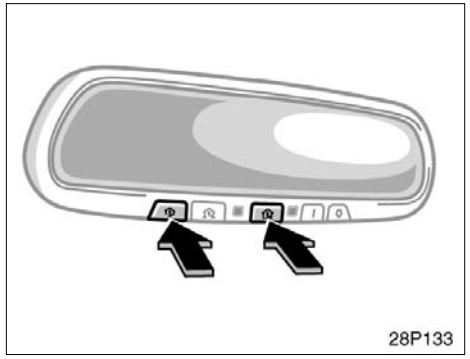

To erase all previously programmed codes at one time, press and hold down the 2 outside buttons for 20 seconds until the indicator light flashes.

If you sell your vehicle, be sure to erase the programs stored in the HomeLink® memory.

For additional programming assistance with your HomeLink® Universal Transceiver call the:

- Toyota Customer Experience Center at 1–800–331–4331 (U.S.A.)
- Toyota Canada Customer Interaction Centre at 1–888–869–6828 (Canada)

Refer to HomeLink® on the internet at: WWW.HOMELINK.COM

⚠ CAUTION

- **When programming the HomeLink® Universal Transceiver, you may be operating a garage door or other device. Make sure people and objects are out of the way of the garage door or other device to prevent potential harm or damage.**
- **Do not use this HomeLink® Universal Transceiver with any garage door opener that lacks the safety stop and reverse feature as required by federal safety standards. (This includes any garage door opener model manufactured before April 1, 1982.) A garage door opener which cannot detect an object (signaling the door to stop and reverse), does not meet current federal safety standards. Using a garage door opener without these features increases risk of serious injury or death.**

This device complies with Part 15 of the FCC Rules and with RSS–210 of the IC Rules. Operation is subject to the following two conditions: (1) This device may not cause harmful interference, and (2) this device must accept any interference received, including interference that may cause undesired operation.

WARNING: This transmitter has been tested and complies with FCC and IC Rules. Changes or modifications not expressly approved by the party responsible for compliance could void the user's authority to operate the device.

Auxiliary boxes

To use the box, open the lid as shown in the following illustrations.

⚠ CAUTION

- **To reduce the chance of injury in case of an accident or a sudden stop, always keep the auxiliary box closed while driving.**
- **Auxiliary box on the ceiling—**
  As this box is designed for holding a light object such as an eyeglass, do not place any heavy objects in it. Heavy objects may cause the holder to open and contents to fly out resulting in injuries.

NOTICE

Auxiliary box on the ceiling—
In hot weather, inside of the vehicle ceiling becomes very hot. Do not leave anything flammable or deformable such as a lighter, the glasses, etc. inside.

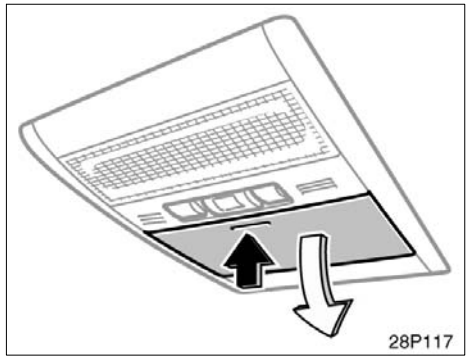

Front ceiling

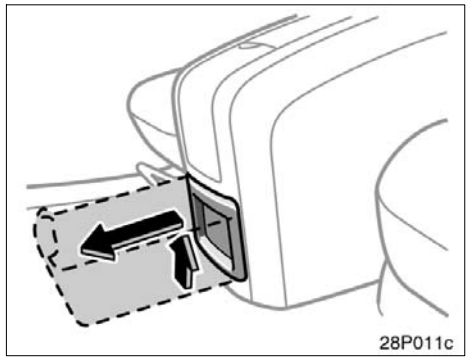

Front side of the console box

Cup holders

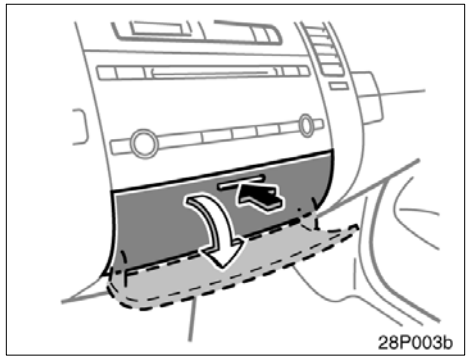

On the instrument panel

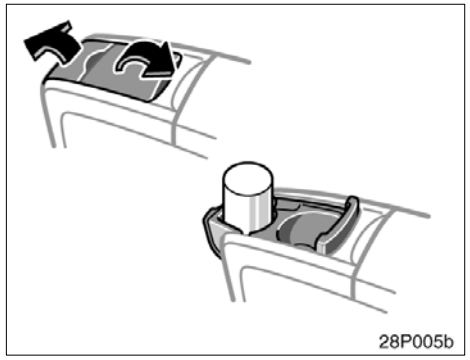

For front seats

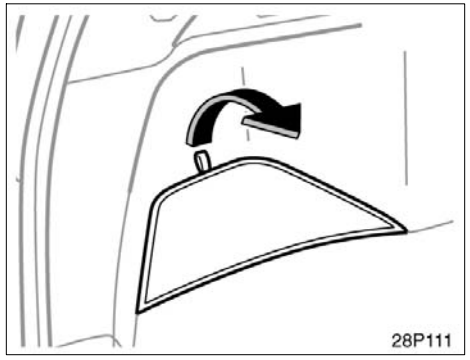

Left side of the luggage compartment

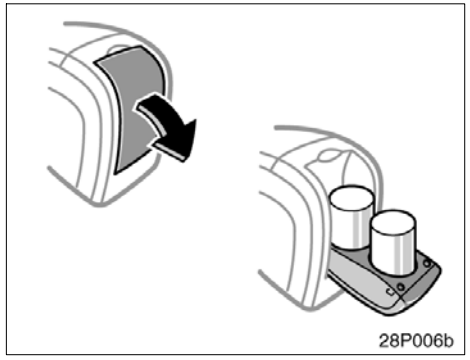

For rear seats

The cup holder is designed for holding cups or drink–cans securely.

To use the cup holder, open the lid.

⚠ CAUTION

- **Do not place anything else other than cups or drink–cans on the cup holder, as such items may be thrown about in the compartment and possibly injure people in the vehicle during sudden braking or in an accident.**
- **To reduce the chance of injury in case of an accident or a sudden stop while driving, keep the cup holder closed when not in use.**
- **Take due care not to catch your fingers when the cup holder is opened.**

Bottle holders

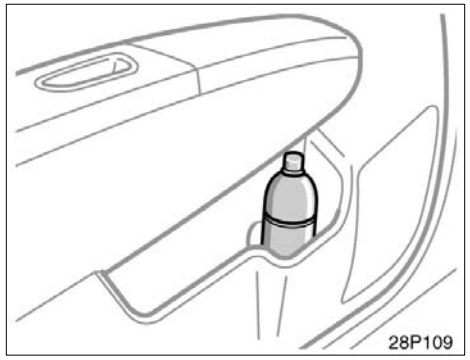

The bottle holders are designed to hold bottles securely.

⚠ CAUTION

Do not attempt to use the holder for any other purpose for which it was intended. Inappropriately sized or shaped objects may be thrown about in the compartment and possibly injure people in the vehicle during a sudden braking or an accident.

NOTICE

Do not put a cup or open bottle in the bottle holder because the contents may spill when the door opens or closes.

Tie-down hooks

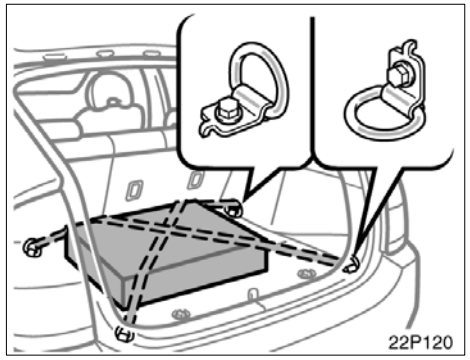

To secure your luggage, use the tie-down hooks as shown above.

See "—Stowing precautions" on page 342 for precautions when loading luggage.

⚠ CAUTION

To avoid personal injury, keep the tie-down hooks retracted when not in use.

Luggage storage box

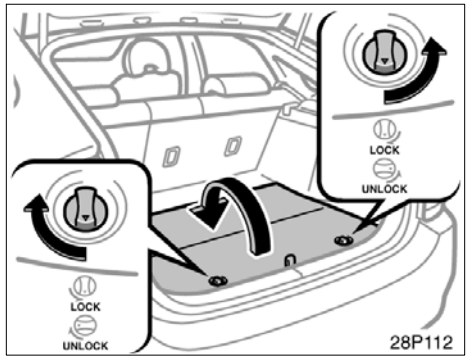

1. To open the luggage storage box, turn the knob to the “UNLOCK” position and open the lid.

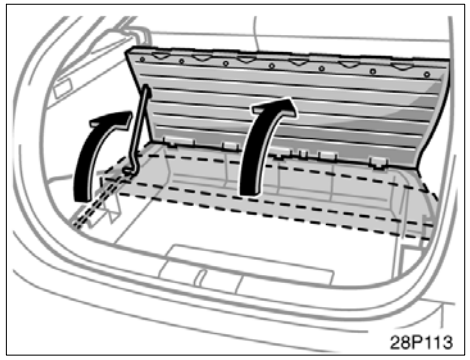

2. Hold the lid open by inserting the support rod into the slot.

⚠ CAUTION

To reduce the chance of injury in case of an accident or a sudden stop, keep the luggage storage box closed and locked while driving.

Luggage cover

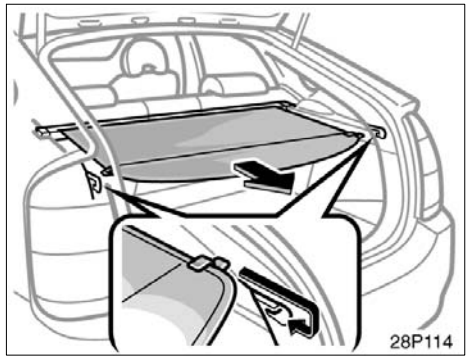

To use the luggage cover, pull it out of the retractor and hook it on the anchors.

⚠ CAUTION

Do not place anything on the luggage cover. Such items may be thrown away and possibly injure people in the vehicle during sudden braking or a collision.

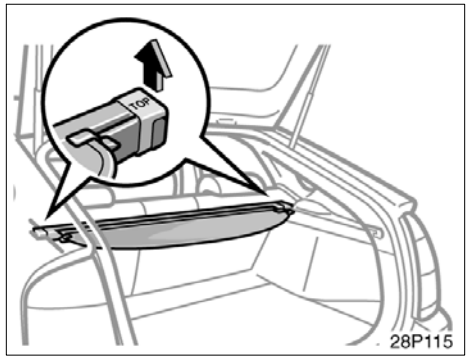

To remove the luggage cover, lift it up.

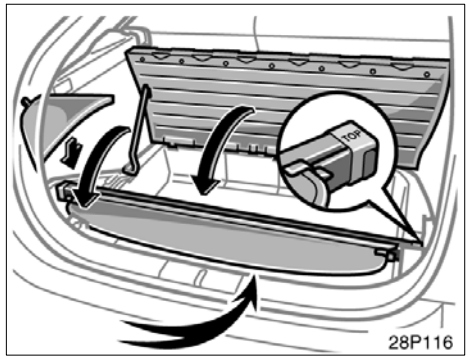

You can stow the luggage cover in the luggage storage box in the luggage compartment as shown in the illustration. At that time, adjust the cover so that “TOP” is facing up.

After removing the luggage cover, stow it in the luggage storage box or place it somewhere other than the passenger compartment. This will prevent passengers from being injured in the event of a sudden stop or accident.

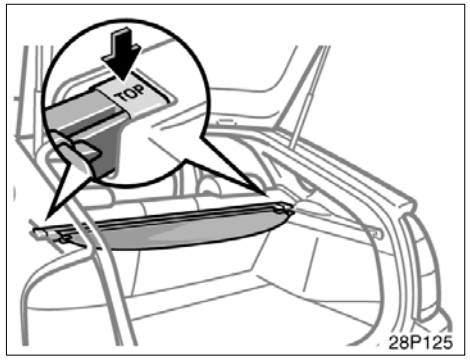

To replace the luggage cover, adjust the cover so that “TOP” is facing upwards.

Floor mat

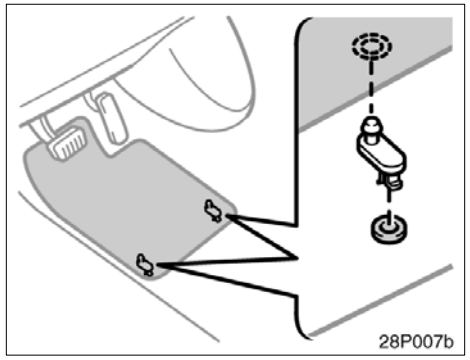

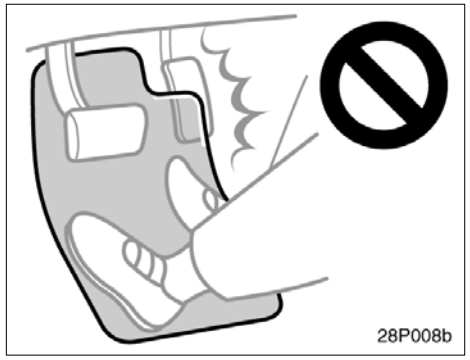

Use a floor mat of the correct size.

If the vehicle carpet and floor mat have 2 holes, then they are designed for use with locking clips. Attach the floor mat to the vehicle carpet using the clips. Lock the clips into the holes in the vehicle carpet.

⚠ CAUTION

Make sure the floor mat is properly placed on the vehicle carpet. If the floor mat slips and interferes with the movement of the pedals during driving, it may cause an accident.

SECTION 3

INFORMATION BEFORE DRIVING YOUR TOYOTA

Break-in period 318
Fuel 318
Fuel pump shut-off systemm 320
Operation in foreign countries 320
Three-way catalytic converters 321
Engine exhaust cautions 322
Facts about engine oil consumption 322
Coolant heat storage system 324
Iridium-tipped spark plugs 324
Brake system 325
Electric power steering system 329
Brake pad wear limit indicators 329
Your Toyota's identification 330
Theft prevention labels 331
Suspension and chassis 331
Tire information 332
Vehicle load limits 342
Cargo and luggage 342
Types of tires 345

Break–in period

Drive gently and avoid high speeds.

Your vehicle does not need an elaborate break–in. But following a few simple tips for the first 1000 km (600 miles) can add to the future economy and long life of your vehicle:

- Avoid full–throttle acceleration when starting and driving.
- Avoid racing the hybrid engine.
- Try to avoid hard stops during the first 300 km (200 miles).

Fuel

FUEL TYPE

Your vehicle must use only unleaded gasoline.

To help prevent gas station mixups, your Toyota has a smaller fuel tank opening. The special nozzle on pumps with unleaded fuel will fit it, but the larger standard nozzle on pumps with leaded gas will not.

At a minimum, the gasoline you use should meet the specifications of ASTM D4814 in the U.S.A. and CGSB 3.5–M93 in Canada.

NOTICE
Do not use leaded gasoline. Use of leaded gasoline will cause the three–way catalytic converter to lose its effectiveness and the emission control system to function improperly. Also, this can increase maintenance costs.

OCTANE RATING

Select unleaded gasoline with an Octane Rating of 87 (Research Octane Number 91) or higher.

Use of unleaded fuel with an octane number or rating lower than stated above will cause persistent heavy knocking. If severe, this will lead to engine damage.

If your engine knocks...

If you detect heavy knocking even when using the recommended fuel, or if you hear steady knocking while holding a steady speed on level roads, consult your Toyota dealer.

However, occasionally, you may notice light knocking for a short time while accelerating or driving up hills. This is normal and there is no need for concern.

GASOLINE CONTAINING DETERGENT ADDITIVES

Toyota recommends the use of gasoline that contains detergent additives to avoid build–up of engine deposits.

However, all gasoline sold in the U.S. contains detergent additives to keep clean and/or clean intake systems.

QUALITY GASOLINE

Automotive manufacturers in the U.S., Europe and Japan have developed a specification for quality fuel named World–Wide Fuel Charter (WWFC) that is expected to be applied world wide. The WWFC consists of four categories that depend on required emission levels. In the U.S., category 4 has been adopted. The WWFC improves air quality by providing for better emissions in vehicle fleets, and customer satisfaction through better vehicle performance.

CLEANER BURNING GASOLINE

Cleaner burning gasoline, including reformulated gasoline that contains oxygenates such as ethanol or MTBE is available in many areas.

Toyota recommends the use of cleaner burning gasoline and appropriately blended reformulated gasoline. These types of gasoline provide excellent vehicle performance, reduce vehicle emissions, and improve air quality.

OXYGENATES IN GASOLINE

Toyota allows the use of oxygenate blended gasoline where the oxygenate content is up to 10% ethanol or 15% MTBE. If you use gasohol in your Toyota, be sure that it has an octane rating no lower than 87.

Toyota does not recommend the use of gasoline containing methanol.

GASOLINE CONTAINING MMT

Some gasoline contain an octane enhancing additive called MMT (Methylcyclopentadienyl Manganese Tricarbonyl).

Toyota does not recommend the use of gasoline that contains MMT. If fuel containing MMT is used, your emission control system may be adversely affected. The Malfunction Indicator Lamp on the instrument cluster may come on. If this happens, contact your Toyota dealer for service.

GASOLINE QUALITY

In a very few cases, you may experience driveability problems caused by the particular gasoline that you are using. If you continue to have unacceptable driveability, try changing gasoline brands. If this does not rectify your problem, then consult your Toyota dealer.

NOTICE

- ***Do not use gasohol other than stated above. It will cause fuel system damage or vehicle performance problems.***
- ***If drivability problems are encountered (poor hot starting, vaporizing, engine knock, etc.), discontinue its use.***
- ***Take care not to spill gasohol during refueling. Gasohol may cause paint damage.***

FUEL TANK CAPACITY

45 L (11.9 gal., 9.9 Imp.gal.)

The given fuel tank capacity is measured on EPA/CARB ORVR testing condition which is approved for nominal capacity measurement condition.

The fuel tank capacity is decreased at low ambient temperature. (decreased by about 5 L (1.3 gal., 1.1 Imp.gal.) at −10°C (14°F).)

Fuel pump shut−off system

The fuel pump shut−off system stops supplying fuel to the engine to minimize the risk of fuel leakage when the engine stalls or an airbag inflates upon collision. To restart the hybrid system after the fuel pump shut−off system activates, press the "POWER" switch to the "OFF" mode and start it.

⚠ CAUTION

Inspect the ground under the vehicle before restarting the hybrid system. If you find that liquid has leaked onto the ground, the fuel system has been damaged and it is in need of repair. In this case, do not restart the hybrid system.

Operation in foreign countries

If you plan to drive your Toyota in another country...

First, comply with the vehicle registration laws.

Second, confirm the availability of the correct fuel (unleaded and minimum octane number).

Three–way catalytic converters

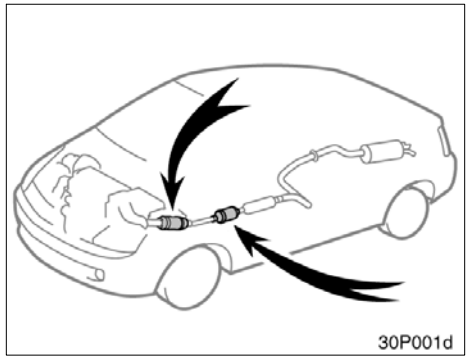

The three–way catalytic converters are emission control devices installed in the exhaust system.

Its purpose is to reduce pollutants in the exhaust gas.

⚠ CAUTION

- **Keep people and combustible materials away from the exhaust pipe while the engine is running. The exhaust gas is very hot.**
- **Do not drive, idle or park your vehicle over anything that might burn easily such as grass, leaves, paper or rags.**

NOTICE

A large amount of unburned gases flowing into the three–way catalytic converter may cause it to overheat and create a fire hazard. To prevent this and other damage, observe the following precautions:

- ***Use only unleaded gasoline.***
- ***Do not drive with an extremely low fuel level; running out of fuel could cause the engine to misfire, creating an excessive load on the three–way catalytic converter.***
- ***Do not turn off the ignition while the vehicle is moving.***
- ***Keep your engine in good running order. Malfunctions in the engine electrical system, electronic ignition system/distributor ignition system or fuel system could cause an extremely high temperature.***
- ***If the engine becomes difficult to start or stalls frequently, take your vehicle in for a check–up as soon as possible. Remember, your Toyota dealer knows your vehicle and its three–way catalytic converter system best.***
- ***To ensure that the three–way catalytic converter and the entire emission control system operate properly, your vehicle must receive the periodic inspections required by the Toyota Maintenance Schedule. For scheduled maintenance information, refer to the "Scheduled Maintenance Guide" or "Owner's Manual Supplement".***

Engine exhaust cautions

⚠ CAUTION

- **Avoid inhaling the engine exhaust. It contains carbon monoxide, which is a colorless and odorless gas. It can cause unconsciousness or even death.**
- **Make sure the exhaust system has no holes or loose connections. The system should be checked from time to time. If you hit something, or notice a change in the sound of the exhaust, have the system checked immediately.**
- **Do not run the hybrid system in a garage or enclosed area except for the time needed to drive the vehicle in or out. The exhaust gases cannot escape, making this a particularly dangerous situation.**
- **Do not remain for a long time in a parked vehicle with the hybrid system running. If it is unavoidable, however, do so only in an unconfined area and adjust the heating or cooling system to force outside air into the vehicle.**
- **Keep the back door closed while driving. An open or unsealed back door may cause exhaust gases to be drawn into the vehicle.**
- **To allow proper operation of your vehicle's ventilation system, keep the inlet grilles in front of the windshield clear of snow, leaves, or other obstructions.**
- **If you smell exhaust fumes in the vehicle, open the windows and close the back door to ensure plenty of fresh air enters the vehicle. If you can smell exhaust fumes even though there are no other vehicles in the surrounding area, have your vehicle checked by your Toyota dealer. Continued inhalation of exhaust fumes can lead to death by gas poisoning.**

Facts about engine oil consumption

FUNCTIONS OF ENGINE OIL

Engine oil has the primary functions of lubricating and cooling the inside of the engine, and plays a major role in maintaining the engine in proper working order.

ENGINE OIL CONSUMPTION

It is normal that an engine should consume some engine oil during normal engine operation. The causes of oil consumption in a normal engine are as follows.

- Oil is used to lubricate pistons, piston rings and cylinders. A thin film of oil is left on the cylinder wall when a piston moves downwards in the cylinder. High negative pressure generated when the vehicle is decelerating sucks some of this oil into the combustion chamber. This oil as well as some part of the oil film left on the cylinder wall is burned by the high temperature combustion gases during the combustion process.

- Oil is also used to lubricate the stems of the intake valves. Some of this oil is sucked into the combustion chamber together with the intake air and is burned along with the fuel. High temperature exhaust gases also burn the oil used to lubricate the exhaust valve stems.

The amount of engine oil consumed depends on the viscosity of the oil, the quality of the oil and the conditions the vehicle is driven under.

More oil is consumed by high–speed driving and frequent acceleration and deceleration.

A new engine consumes more oil, since its pistons, piston rings and cylinder walls have not become conditioned.

Oil consumption: Max. 1.0 L per 1000 km (1.1 qt./600 miles, 0.9 Imp.qt./600 miles)

When judging the amount of oil consumption, note that the oil may become diluted and make it difficult to judge the true level accurately.

As an example, if a vehicle is used for repeated short trips, and consumes a normal amount of oil, the dipstick may not show any drop in the oil level at all, even after 1000 km (600 miles) or more. This is because the oil is gradually becoming diluted with fuel or moisture, making it appear that the oil level has not changed.

The diluting ingredients evaporate out when the vehicle is then driven at high speeds, as on an expressway, making it appear that oil is excessively consumed after driving at high speeds.

IMPORTANCE OF ENGINE OIL LEVEL CHECK

One of the most important points in proper vehicle maintenance is to keep the engine oil at the optimum level so that oil function will not be impaired. Therefore, it is essential that the oil level be checked regularly. Toyota recommends that the oil level be checked every time you refuel the vehicle.

NOTICE
Failure to check the oil level regularly could lead to serious engine trouble due to insufficient oil.

For detailed information on oil level check, see “Checking the engine oil level” on page 400.

Coolant heat storage system

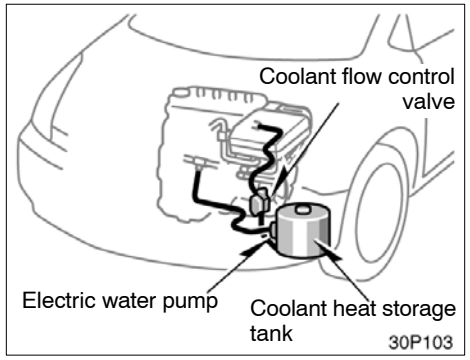

The coolant heat storage tank system stores hot coolant and feeds it via the electric water pump automatically to warm the engine as required. This system helps generate clean emissions. To confirm the coolant heat storage system check, the pump may operate automatically with the vehicle stopped (in the “IG–OFF” mode).

Although the pump may operate and cause noise while the vehicle is stopped, this does not indicate a malfunction.

⚠ CAUTION

- **The coolant in this tank is hot even if the engine and radiator are cold.**
- **For replacement of the coolant, contact your Toyota dealer.**
- **Do not touch bolts (9 pieces) painted in yellow.**
- **In case the bolts are loosened, there is a risk of hot coolant coming out from inside the tank.**
- **When this has any malfunction, the surface of this tank gets hot. To prevent burning yourself, do not touch the tank.**

INFORMATION

- ***In such cases as the time of engine starting and a short trip after the engine is stopped, the electric water pump will work for a moment, but this is no problem.***
- ***This is for the preparation for good emission.***

Iridium–tipped spark plugs

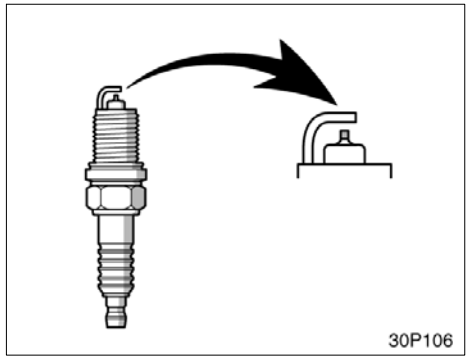

Your engine is fitted with iridium–tipped spark plugs.

NOTICE

Use only iridium–tipped spark plugs. Do not adjust gaps for engine performance or smooth drivability.

Brake system

REGENERATIVE BRAKE

When the brake is applied, the electric motor used as a generator converts kinetic energy into electric energy.

The regenerative brake works in the following operations.

1. When the accelerator pedal is released, the reduced speed equal to engine braking in a gasoline–fueled vehicle is obtained in accordance with the running mode position of the shift lever.
2. When the brake pedal is depressed with the shift lever in “D” or “B”, the regenerative brake works.

HYDRAULIC BRAKE

This brake system has 3 independent hydraulic circuits. If either circuit should fail, the other will still work. However, the pedal will be harder to press, and your stopping distance will increase. Also, the brake system warning light may come on.

⚠ CAUTION

Do not drive your vehicle with only a single brake system. Have your brakes fixed immediately.

BRAKE ACTUATOR

The brake actuator uses brake fluid pressurized by the pump to power–assist the brakes. If the brake actuator fails during driving, the brake system warning light comes on and buzzer sounds continuously. In this case, the brakes may not work properly. If they do not work well, depress the brake pedal firmly. If the brake system warning light comes on, immediately stop your vehicle and contact your Toyota dealer.

The yellow brake system warning light may stay on for about 60 seconds after the “IG–ON” mode is enabled. It is normal if the light turns off after a while.

Depressing the brake pedal repeatedly may turn on the red brake system warning light and buzzer. It is normal if the light turns off and the buzzer stops sounding after a few seconds.

You may hear a small sound in the engine compartment after the hybrid system is started or the brake pedal is depressed repeatedly. This is a pump pulsating sound of the brake system, and it is not a malfunction.

In the following conditions, you may hear a motor sound in the engine compartment.

- The brake pedal is depressed when the hybrid system is turned off.
- The driver’s door is opened.
- For a few seconds after the hybrid system is “OFF” and about 90 seconds have passed.

The brake pedal stroke may be short when you press the “POWER” switch with the brake pedal depressed.

⚠ CAUTION

- **Do not pump the brake pedal if the hybrid system is not operating. Each push on the pedal uses up your reserved brake fluid pressure.**
- **Even if the power assist is completely lost, the brakes will still work. But you will have to push the pedal hard, much harder than normal. And your braking distance will increase.**

ANTI–LOCK BRAKE SYSTEM

The anti–lock brake system is designed to automatically help prevent lock–up of the wheels during a sudden braking or braking on slippery road surfaces. This assists in providing directional stability and steering performance of the vehicle under these circumstances.

Effective way to press the ABS brake pedal: When the anti–lock brake system function is in action, the slip indicator in the instrument cluster flashes and you will hear a noise. In this situation, to let the anti–lock brake system work for you, just hold the brake pedal down more firmly. Do not pump the brake in a panic stop. This will result in reduced braking performance.

The anti–lock brake system becomes operative after the vehicle has accelerated to a speed in excess of approximately 10 km/h (6 mph). It stops operating when the vehicle decelerates to a speed below approximately 5 km/h (3 mph).

Depressing the brake pedal on slippery road surfaces such as on a manhole cover, a steel plate at a construction site, joints in a bridge, etc. on a rainy day tends to activate the anti–lock brake system.

When the anti–lock brake system is activated, the following condition may occur. They do not indicate a malfunction of the system:

- You may hear the anti–lock brake system operating and the vibrations of the vehicle body and steering wheel. You may also hear the motor sound in the engine compartment even after the vehicle is stopped.

⚠ CAUTION

Do not overestimate the anti-lock brake system: Although the anti-lock brake system assists in providing vehicle control, it is still important to drive with all due care and maintain a moderate speed and safe distance from the vehicle in front of you, because there are limits to the vehicle stability and effectiveness of steering wheel operation even with the anti-lock brake system on.

If tire grip performance exceeds its capability, or if hydroplaning occurs during high speed driving in the rain, the anti-lock brake system does not provide vehicle control.

Anti-lock brake system is not designed to shorten the stopping distance: Always drive at a moderate speed and maintain a safe distance from the vehicle in front of you. Compared with vehicles without an anti-lock brake system, your vehicle may require a longer stopping distance in the following cases:

- **Driving on rough, gravel or snow-covered roads.**
- **Driving with tire chains installed.**
- **Driving over the steps such as the joints on the road.**
- **Driving on roads where the road surface is pitted or has other differences in surface height.**

Install all 4 tires of specified size at appropriate pressure: The anti-lock brake system detects vehicle speeds using the speed sensors for respective wheels' turning speeds. The use of tires other than specified may fail to detect the accurate turning speed, resulting in a longer stopping distance.

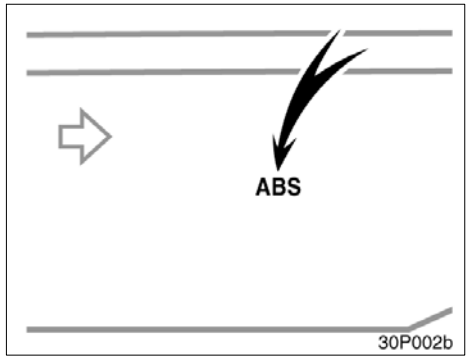

Vehicle sold in U.S.A.

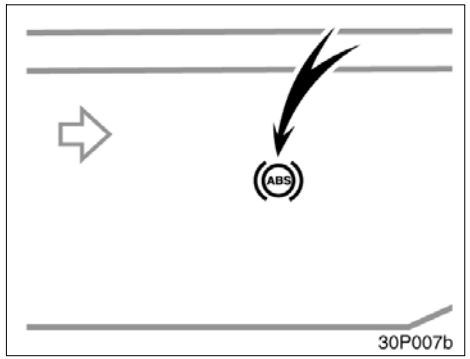

Vehicle sold in Canada

“ABS” warning light

The light comes on when the “IG–ON” mode is enabled. If the anti–lock brake system works properly, the light turns off after the “READY” light comes on. Thereafter, if the system malfunctions, the light comes on again.

When the “ABS” warning light is on (and the brake system warning light is off), the anti–lock brake system does not operate, but the brake system still operates conventionally.

When the “ABS” warning light is on (and the brake system warning light is off), the anti–lock brake system does not operate so that the wheels could lock up during a sudden braking or braking on slippery road surfaces.

If any of the following conditions occurs, this indicates a malfunction somewhere in the components monitored by the warning light system. Contact your Toyota dealer as soon as possible to service the vehicle.

- The light does not come on when the “IG–ON” mode is enabled, or the “READY” light remains on.
- The light comes on while you are driving.

A warning light turning on briefly during operation does not indicate a problem.

⚠ CAUTION

If the “ABS” warning light remains on together with the red brake system warning light, immediately stop your vehicle at a safe place and contact your Toyota dealer.

In this case, not only the anti–lock brake system will fail but also the vehicle will become extremely unstable during braking.

Any of the following conditions may occur, but does not indicate a malfunction:

- The light may stay on for about 60 seconds after the “IG–ON” mode is enabled. It is normal if it turns off after a while.
- Depressing the brake pedal repeatedly may turn on the light. It is normal if it turns off after a few seconds.

BRAKE ASSIST SYSTEM

When you slam the brakes on, the brake assist system judges as an emergency stop and provides more powerful braking for a driver who cannot hold down the brake pedal firmly.

When you slam the brakes on, more powerful braking will be applied. At this time, you may hear a sound in the engine compartment. This does not indicate a malfunction.

The brake assist system becomes operative after the vehicle has accelerated to a speed in excess of approximately 10 km/h (6 mph). It stops operating when the vehicle decelerates to a speed below approximately 5 km/h (3 mph).

For an explanation of this system’s warning light, see “Service reminder indicators and warning buzzers” on page 125.

Electric power steering system

The electric power steering system, using an electric motor, assists the turning of the steering wheel.

In the following cases, you may feel the steering becomes heavy. However, the electric power steering system warning light does not come on. (Because it is not a malfunction.)

- When maneuvering the steering frequently or keeping the steering wheel turned fully while the vehicle is stopped or moving very slowly

  The power steering effect will be reduced to prevent the system from overheating. Avoid turning the steering wheel, or stop the vehicle. When you leave the vehicle in the "IG–ON" mode for a while, the system will become cool.

NOTICE
If you repeat the operation which will turn on the overheating prevention function, the electric power steering system may be damaged.

- When the 12 volt battery is discharged

  Check the 12 volt battery's condition. If necessary, recharge or replace the battery. For details, see "Checking 12 volt battery condition" on page 414.

- When the steering wheel is operated with the hybrid system not to be turned on (with the "READY" light off)

  The 12 volt battery capacity is decreased temporarily. The system returns to normal some time after the hybrid system is turned on.

If there is a problem somewhere in the electric power steering system, the warning light comes on in the multi–information display. For details, see "Multi–information display" on page 132.

When you move the steering wheel, an electrical motor noise may be heard. This is power steering motor noise, and is not a malfunction.

Brake pad wear limit indicators

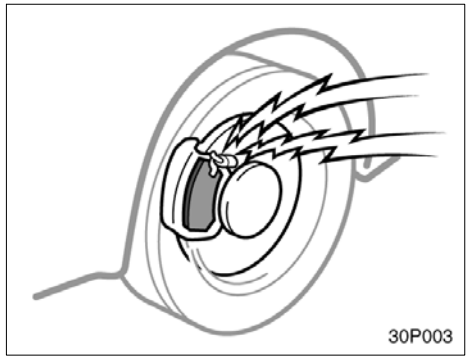

The brake pad wear limit indicators on your disc brakes give a warning noise when the brake pads are worn to where replacement is required.

If you hear a squealing or scraping noise while driving, have the brake pads checked and replaced by your Toyota dealer as soon as possible. Expensive rotor damage can result if the pads are not replaced when necessary.

Your Toyota's identification—
—Vehicle identification number

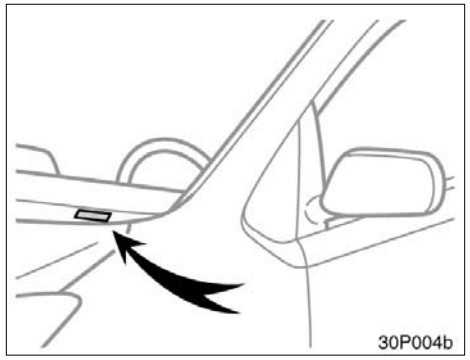

The vehicle identification number (VIN) is the legal identifier for your vehicle. This number is on the left top of the instrument panel, and can be seen through the windshield from outside.

This is the primary identification number for your Toyota. It is used in registering the ownership of your vehicle.

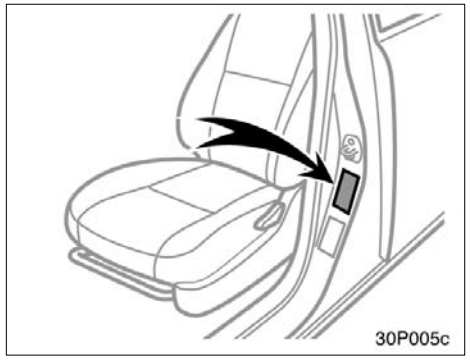

The vehicle identification number (VIN) is also on the Certification Label.

—Engine and motor number

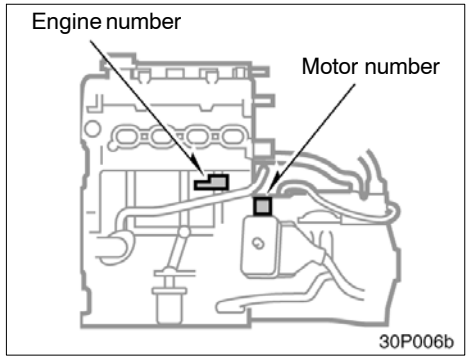

The engine and motor number plates are installed on the engine and trans-axle case as shown.

Theft prevention labels

Your new vehicle carries theft prevention labels which are approximately 47 mm (1.85 in.) by 12 mm (0.47 in.).

The purpose of these labels is to reduce the incidence of vehicle thefts by facilitating the tracing and recovery of parts from stolen vehicles. The label is designed so that once it is applied to a surface, any attempt to remove it will result in destroying the integrity of the label. Transferring these labels intact from one part to another, will be impossible.

NOTICE

You should not attempt to remove the theft prevention labels as it may violate certain state or federal laws.

Suspension and chassis

⚠ CAUTION

Do not modify the suspension/chassis with lift kits, spacers, springs, etc. It can cause dangerous handling characteristics, resulting in loss of control.

Tire information—
—Tire symbols (Standard tire)

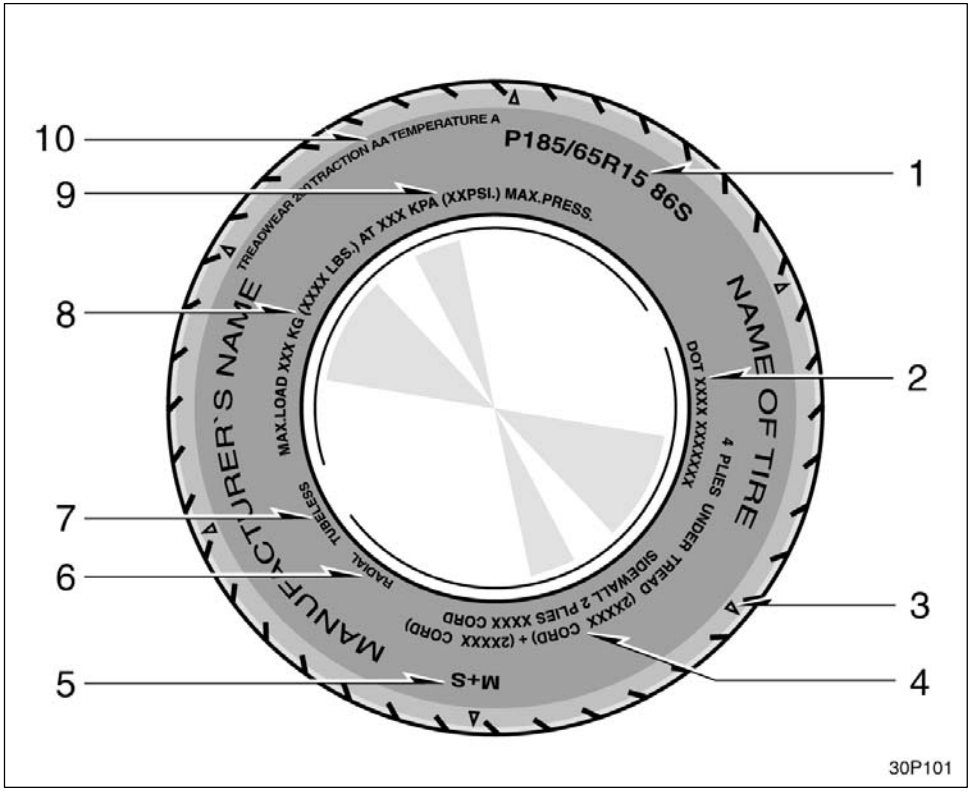

This illustration indicates typical tire symbols.

1. **Tire size—**For details, see “Tire size” on page 336.
2. **DOT and Tire Identification Number (TIN)—**For details, see “DOT and Tire Identification Number (TIN)” on page 335.
3. **Location of tread wear indicators—**For details, see “Checking and replacing tires” on page 407.
4. **Tire ply composition and materials—**Plies mean a layer of rubber–coated parallel cords. Cords mean the strands forming the plies in the tire.
5. **Summer tire or all season tire—**An all season tire has “M+S” on the sidewall. A tire not marked with “M+S” is a summer tire. For details, see “Types of tires” on page 345.

6. **Radial tires or bias-ply tires—**A radial tire has “RADIAL” on the sidewall. The tire not marked with “RADIAL” is a bias-ply tire.
7. **“TUBELESS” or “TUBE TYPE” —**A tubeless tire does not have a tube inside the tire and air is directly filled in the tire. A tube type tire has a tube inside the tire and the tube maintains the air pressure.
8. **Load limit at maximum cold tire inflation pressure—**For details, see “Checking and replacing tires” on page 407.
9. **Maximum cold tire inflation pressure—**This means the pressure to which a tire may be inflated. For recommended cold tire inflation pressure, see “Tires” on page 429.
10. **Uniform tire quality grading—** For details, see “Uniform tire quality grading” that follows.

—Tire symbols
(Compact spare tire)

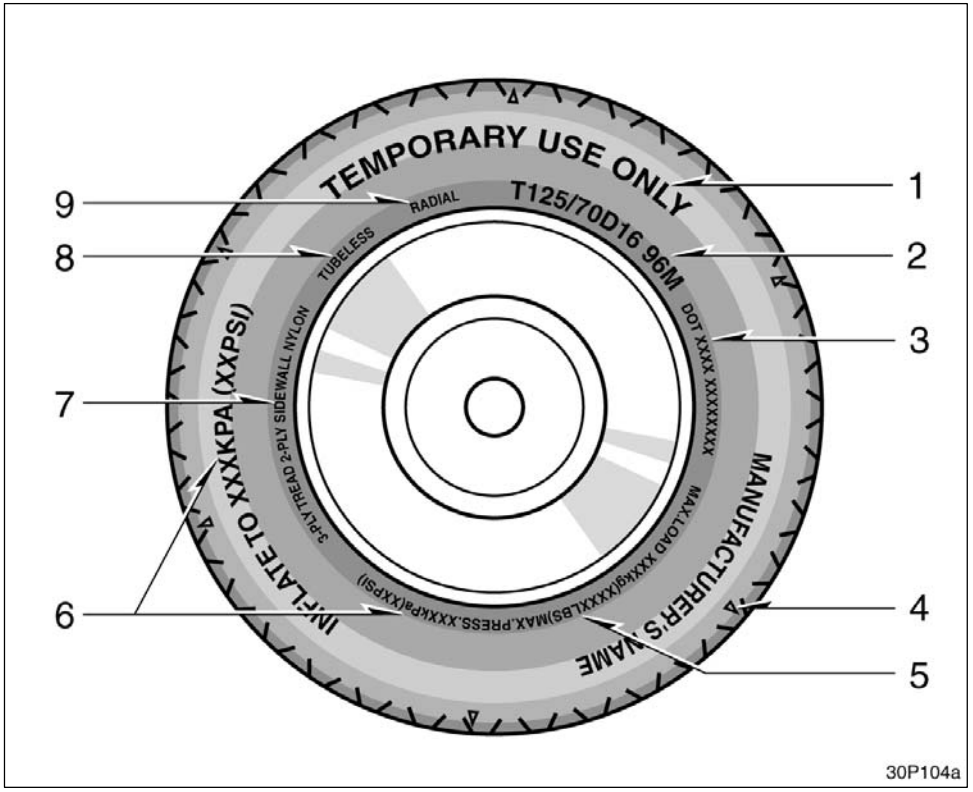

This illustration indicates typical tire symbols.

1. **"TEMPORARY USE ONLY"—**A compact spare tire is identified by the phrase "TEMPORARY USE ONLY" molded into its sidewall. This tire is designed for temporary emergency use only. For details, see "Compact spare tire" on page 362.
2. **Tire size—**For details, see "Tire size" on page 336.
3. **DOT and Tire Identification Number (TIN)—**For details, see "DOT and Tire Identification Number (TIN)" on page 335.
4. **Location of tread wear indicators—**For details, see "Checking and replacing tires" on page 407.
5. **Load limit at maximum cold tire inflation pressure—**For details, see "Checking and replacing tires" on page 407.

6. **Maximum cold tire inflation pressure—**This means the pressure to which a tire may be inflated. For recommended cold tire inflation pressure, see “Tires” on page 429.
7. **Tire ply composition and materials—**Plies mean a layer of rubber–coated parallel cords. Cords mean the strands forming the plies in the tire.
8. **“TUBELESS” or “TUBE TYPE” —**A tubeless tire does not have a tube inside the tire and air is directly filled in the tire. A tube type tire has a tube inside the tire and the tube maintains the air pressure.
9. **Radial tires or bias–ply tires—**A radial tire has “RADIAL” on the sidewall. The tire not marked with “RADIAL” is a bias–ply tire.

—DOT and Tire Identification Number (TIN)

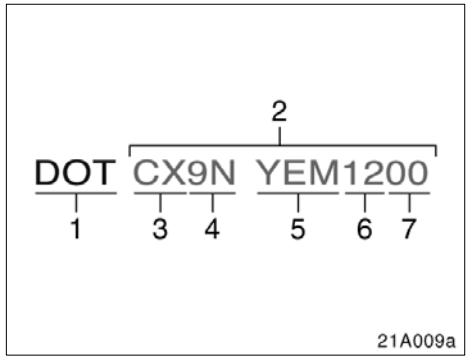

This illustration indicates typical DOT and Tire Identification Number (TIN).

1. “DOT” symbol
2. Tire Identification Number (TIN)
3. Tire manufacturer’s identification mark
4. Tire size code
5. Manufacturer’s optional tire type code (3 or 4 letters)
6. Manufacturing week
7. Manufacturing year

The “DOT” symbol certifies that the tire conforms to applicable Federal Motor Vehicle Safety Standards.

—Tire size

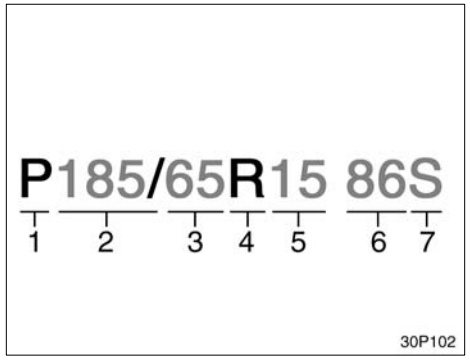

This illustration indicates typical tire size.

1. Tire use (P=Passenger car, T=Temporary use)
2. Section width (in millimeters)
3. Aspect ratio (tire height to section width)
4. Tire construction code (R=Radial, D=Diagonal)
5. Wheel diameter (in inches)
6. Load index (2 digits or 3 digits)
7. Speed symbol (alphabet with one letter)

1. Section width
2. Tire height
3. Wheel diameter

—Name of each section of tire

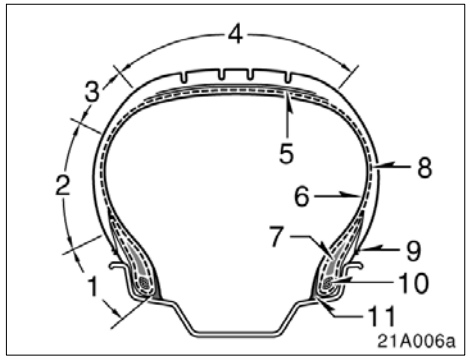

1. Bead
2. Sidewall
3. Shoulder
4. Tread
5. Belt
6. Inner liner
7. Reinforcing rubber
8. Carcass
9. Rim lines
10. Bead wires
11. Chafer

—Uniform tire quality grading

This information has been prepared in accordance with regulations issued by the National Highway Traffic Safety Administration of the U.S. Department of Transportation. It provides the purchasers and/or prospective purchasers of Toyota vehicles with information on uniform tire quality grading.

Your Toyota dealer will help answer any questions you may have as you read this information.

DOT quality grades—All passenger car tires must conform to Federal Safety Requirements in addition to these grades. Quality grades can be found where applicable on the tire sidewall between tread shoulder and maximum section width. For example: Treadwear 200 Traction AA Temperature A.

Tread wear—The tread wear grade is a comparative rating based on the wear rate of the tire when tested under controlled conditions on a specified government test course. For example, a tire graded 150 would wear one and a half (1–1/2) times as well on the government course as a tire graded 100. The relative performance of tires depends upon the actual conditions of their use, however, and may depart significantly from the norm due to variations in driving habits, service practices and differences in road characteristics and climate.

Traction AA, A, B, C—The traction grades, from highest to lowest, are AA, A, B, and C, and they represent the tire's ability to stop on wet pavement as measured under controlled conditions on specified government test surfaces of asphalt and concrete. A tire marked C may have poor traction performance.

Warning: The traction grade assigned to this tire is based on braking (straight ahead) traction tests and does not include cornering (turning) traction.

Temperature A, B, C—The temperature grades are A (the highest), B, and C, representing the tire's resistance to the generation of heat and its ability to dissipate heat when tested under controlled conditions on a specified indoor laboratory test wheel. Sustained high temperature can cause the material of the tire to degenerate and reduce tire life, and excessive temperature can lead to sudden tire failure. The grade C corresponds to a level of performance which all passenger car tires must meet under the Federal Motor Vehicle Safety Standard No. 109. Grades B and A represent higher levels of performance on the laboratory test wheel than the minimum required by law.

Warning: The temperature grades for this tire are established for a tire that is properly inflated and not overloaded. Excessive speed, underinflation, or excessive loading, either separately or in combination, can cause heat buildup and possible tire failure.

—Glossary of tire terminology

Tire related term	Meaning
Cold tire inflation pressure	tire inflation pressure when the vehicle has been parked for at least 3 hours or more, or it has not been driven more than 1.5 km or 1 mile under that condition
Maximum inflation pressure	the maximum cold inflation pressure to which a tire may be inflated and it is shown on the sidewall of the tire
Recommended inflation pressure	cold tire inflation pressure recommended by a manufacturer
Accessory weight	the combined weight (in excess of those standard items which may be replaced) of automatic transmission, power steering, power brakes, power windows, power seats, radio, and heater, to the extent that these items are available as factory–installed equipment (whether installed or not)
Curb weight	the weight of a motor vehicle with standard equipment including the maximum capacity of fuel, oil, and coolant, and, if so equipped, air conditioning and additional weight optional engine
Maximum loaded vehicle weight	the sum of— (a) curb weight; (b) accessory weight; (c) vehicle capacity weight; and (d) production options weight
Normal occupant weight	68 kg (150 lb.) times the number of occupants specified in the second column of Table 1 that follows

Tire related term	Meaning
Production options weight	the combined weight of those installed regular production options weighing over 2.3 kg (5 lb.) in excess of those standard items which they replace, not previously considered in curb weight or accessory weight, including heavy duty brakes, ride levelers, roof rack, heavy duty battery, and special trim
Vehicle capacity weight (Total load capacity)	the rated cargo and luggage load plus 68 kg (150 lb.) times the vehicle's designated seating capacity
Intended outboard sidewall	(A) the sidewall that contains a whitewall, bears white lettering or bears manufacturer, brand, and/or model name molding that is higher or deeper than the same molding on the other sidewall of the tire, or (B) the outward facing sidewall of an asymmetrical tire that has a particular side that must always face outward when mounted on a vehicle
Occupant distribution	distribution of occupants in a vehicle as specified in the third column of Table 1 that follows
Rim	a metal support for a tire or a tire and tube assembly upon which the tire beads are seated
Rim diameter (Wheel diameter)	nominal diameter of the bead seat
Rim size designation	rim diameter and width
Rim type designation	the industry of manufacturer's designation for a rim by style or code
Rim width	nominal distance between rim flanges
Vehicle maximum load on the tire	the load on an individual tire that is determined by distributing to each axle its share of the maximum loaded vehicle weight and dividing by two

Tire related term	Meaning
Vehicle normal load on the tire	the load on an individual tire that is determined by distributing to each axle its share of the curb weight, accessory weight, and normal occupant weight (distributed in accordance with Table 1 that follows) and dividing by two
Weather side	the surface area of the rim not covered by the inflated tire

Table 1– Occupant loading and distribution for vehicle normal load for various designated seating capacities

Designated seating capacity, number of occupants	Vehicle normal load, number of occupants	Occupant distribution in a normally loaded vehicle
2 through 4	2	2 in front
5 through 10	3	2 in front, 1 in second seat

Vehicle load limits

Vehicle load limits include total load capacity, seating capacity, towing capacity and cargo capacity. Follow the load limits shown below. Total load capacity and seating capacity are also described on the tire and loading information label. For location of the tire and loading information label, see “Checking tire inflation pressure” on page 405.

Total load capacity:
365 kg (810 lb.)
Total load capacity means combined weight of occupants, cargo and luggage.

Seating capacity:
Total 5 (Front 2, Rear 3)
Seating capacity means the maximum number of occupants whose estimated average weight is 68 kg (150 lb.) per person. Depending on the weight of each person, the seating capacity given may exceed the total load capacity.

NOTICE

Even if the number of occupants are within the seating capacity, do not exceed the total load capacity.

Towing capacity

Toyota does not recommend towing a trailer with your vehicle. Your vehicle is not designed for trailer towing.

Cargo capacity

Cargo capacity may increase or decrease depending on the size (weight) and the number of occupants. For details, see “Capacity and distribution” that follows.

⚠ CAUTION

Do not apply the load more than each load limit. That may cause not only damage to the tires, but also deterioration to the steering ability and braking ability, which may cause an accident.

Cargo and luggage— —Stowage precautions

When stowing cargo and luggage in the vehicle, observe the following:

- Put cargo and luggage in the luggage compartment when at all possible. Be sure all items are secured in place.
- Be careful to keep the vehicle balanced. Locating the weight as far forward as possible helps maintain balance.
- For better fuel economy, do not carry unneeded weight.

⚠ CAUTION

- **To prevent cargo and luggage from sliding forward during braking, do not stack anything in the luggage compartment. Keep cargo and luggage low, as close to the floor as possible.**

- **Never allow anyone to ride in the luggage compartment. It is not designed for passengers. They should ride in their seats with their seat belts properly fastened. Otherwise, they are much more likely to suffer serious bodily injury, in the event of sudden braking or a collision.**
- **Do not place anything on the luggage cover. Such items may be thrown about and possibly injure people in the vehicle during sudden braking or an accident. Secure all items in a safe place.**
- **Do not drive with objects left on top of the instrument panel. They may interfere with the driver's field of view. Or they may move during sharp vehicle acceleration or turning, and impair the driver's control of the vehicle. In an accident they may injure the vehicle occupants.**

NOTICE

Do not load the vehicle beyond the vehicle capacity weight given in Section 9.

—Capacity and distribution

Cargo capacity depends on the total weight of the occupants.

(Cargo capacity) = (Total load capacity) – (Total weight of occupants)

STEPS FOR DETERMINING CORRECT LOAD LIMIT

1. Locate the statement "The combined weight of occupants and cargo should never exceed XXX pounds" on your vehicle's placard.
2. Determine the combined weight of the driver and passengers that will be riding in your vehicle.
3. Subtract the combined weight of the driver and passengers from XXX kilograms or XXX pounds.

4. The resulting figure equals the available amount of cargo and luggage load capacity. For example, if the “XXX” amount equals 1400 lbs. and there will be five 150 lb. passengers in your vehicle, the amount of available cargo and luggage load capacity is 650 lbs. (1400–750 (5x150)=650 lbs).
5. Determine the combined weight of luggage and cargo being loaded on the vehicle. That weight may not safely exceed the available cargo and luggage load capacity calculated in Step 4.
6. If your vehicle will be towing a trailer, load from your trailer will be transferred to your vehicle. Consult this manual to determine how this reduces the available cargo and luggage load capacity of your vehicle.

Toyota does not recommend towing a trailer with your vehicle. Your vehicle is not designed for trailer towing.

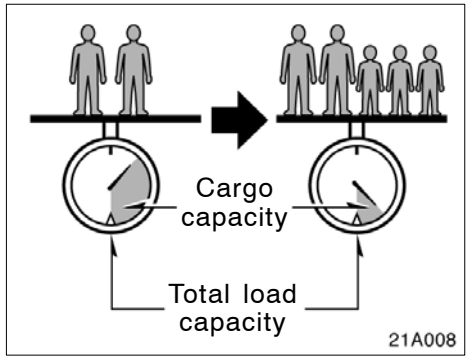

EXAMPLE ON YOUR VEHICLE

In case that 2 people with the combined weight of 166 kg (366 lb.) are riding in your vehicle with the total load capacity of 365 kg (810 lb.), the available amount of cargo and luggage load capacity will be as follows:

365 kg – 166 kg = 199 kg.
(810 lb. – 366 lb. = 444 lb.)

From this condition, if 3 more passengers with the combined weight of 176 kg (388 lb.) get on, the available cargo and luggage load will be reduced as follows:

199 kg – 176 kg = 23 kg.
(444 lb. – 388 lb. = 56 lb.)

As shown in the above example, if the number of occupants increases, the cargo and luggage load equaling the combined weight of occupants who got on later must be reduced. In other words, if the increase in the number of occupants causes the excess of the total load capacity (combined weight of occupants plus cargo and luggage load), you have to reduce the cargo and luggage on your vehicle.

For details about total load capacity, see “Vehicle load limits” on page 342.

⚠ CAUTION

Even if the total load of occupant’s weight and the cargo load is less than the total load capacity, do not apply the load unevenly. That may cause not only damage to the tire but also deterioration to the steering ability due to unbalance of the vehicle, causing an accident.

Types of tires

Determine what kind of tires your vehicle is originally equipped with.

1. All season tires

All season tires are designed to provide better traction in snow and to be adequate for driving in most winter conditions, as well as for use all year round.

All season tires, however, do not have adequate traction performance compared with snow tires in heavy or loose snow. Also, all season tires fall short in acceleration and handling performance compared with summer tires in highway driving.

2. Summer tires

Summer tires are high–speed capability tires best suited to highway driving under dry conditions.

Since summer tires do not have the same traction performance as snow tires, summer tires are inadequate for driving on snow–covered or icy roads. For driving on snow–covered or icy roads, we recommend using snow tires. If installing snow tires, be sure to replace all four tires.

The details about how to distinguish summer tires from all season tires are described on page 332.

⚠ CAUTION

- **Do not mix summer and all season tires on your vehicle as this can cause dangerous handling characteristics, resulting in loss of control.**
- **Do not use tire other than the manufacturer's designated tires, and never mix tires or wheels of the sizes different from the originally equipped tires and wheels.**

SECTION 4

STARTING AND DRIVING

Before starting the hybrid system 348
How to start the hybrid system 348
Tips for driving in various conditionss 350
Winter driving tips 351
Dinghy towing 352
Trailer towing 353
How to save fuel and make your vehicle last longer, too 353

Before starting the hybrid system

1. Check the area around the vehicle before entering it.
2. Adjust seat position, seatback angle, head restraint height and steering wheel angle.
3. Adjust the inside and outside rear view mirrors.
4. Lock all doors.
5. Fasten seat belts.

When you get in the vehicle, check whether the "READY" light is on or not.

⚠ CAUTION

Your vehicle does not produce any noise or vibration when the vehicle is ready to be driven with the "READY" light on. Move your foot carefully from the brake pedal to the acceleration pedal when driving.

How to start the hybrid system— (a) Before starting the hybrid system

1. Apply the parking brake firmly.
2. Turn off unnecessary lights and accessories.
3. Depress the brake pedal and hold it to the floor until driving off.

(b) Turning on the hybrid system (Using the smart function—on some models)

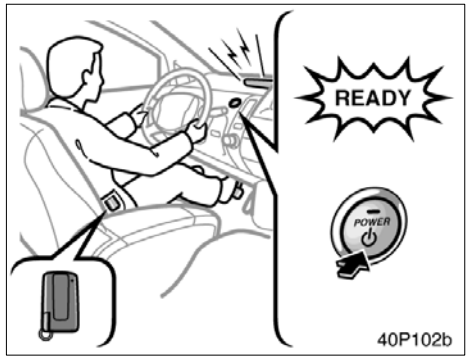

Before starting the hybrid system, be sure to follow the instructions in "(a) Before starting the hybrid system".

Normal starting procedure

Carry the key and press the "POWER" switch briefly and firmly with the brake pedal depressed. The "READY" light starts blinking. After a few seconds, the blinking "READY" light remains on and two beeps sound. (If the ambient temperature is low, such as during winter driving conditions, it may take time until the "READY" light is on.)

The engine may not start even with the "READY" light on.

You may hear a motor sound in the engine compartment when the brake pedal is depressed with the hybrid system off.

When the hybrid system is started or stopped, you may hear a sound coming from the hybrid battery in the luggage compartment. However, this does not indicate any trouble.

If there is a problem somewhere in the hybrid system, the hybrid system malfunction warning light will come on in place of the “READY” light. If this happens, contact your Toyota dealer.

⚠ CAUTION

Never start the hybrid system from outside the vehicle, or an accident may occur. Be sure to sit on the driver seat, then start the system when driving.

NOTICE

- ***The hybrid system cannot be started when the shift position is “N”. Be sure to put it in “P” and then start the system.***
- ***If any warning light comes on (See page 125 for details.) or the 12 volt battery is disconnected, the hybrid system may not start by pushing the “POWER” switch. In that case, push it once again. If the “READY” light does not come on, contact your Toyota dealer.***
- ***When you start the hybrid system at a lowered outside temperature, it may take longer before the blinking “READY” light changes to stay on.***

(b) Turning on the hybrid system (Using the key)

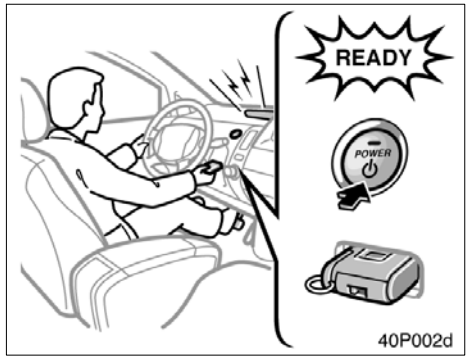

Before starting the hybrid system, be sure to follow the instructions in “(a) Before starting the hybrid system”.

Normal starting procedure

Insert the key and press the “POWER” switch briefly and firmly with the brake pedal depressed. The “READY” light starts blinking. After a few seconds, the blinking “READY” light remains on and two beeps sound. (If the ambient temperature is low, such as during winter driving conditions, it may take time until the “READY” light is on.)

The engine may not start even with the “READY” light on.

You may hear a motor sound in the engine compartment when the brake pedal is depressed with the hybrid system off.

When the hybrid system is started or stopped, you may hear a sound coming from the hybrid battery in the luggage compartment. However, this does not indicate any trouble.

If there is a problem somewhere in the hybrid system, the hybrid system malfunction warning light will come on in place of the “READY” light. If this happens, contact your Toyota dealer.

⚠ CAUTION

Never start the hybrid system from outside the vehicle, or an accident may occur. Be sure to sit on the driver seat, then start the system when driving.

NOTICE

- ***The hybrid system cannot be started when the shift position is “N”. Be sure to put it in “P” and then start the system.***
- ***If any warning light comes on (See page 125 for details.) or the 12 volt battery is disconnected, the hybrid system may not start by pushing the “POWER” switch. In that case, push it once again. If the “READY” light does not come on, contact your Toyota dealer.***
- ***When you start the hybrid system at a lowered outside temperature, it may take longer before the blinking “READY” light changes to stay on.***

Tips for driving in various conditions

- Always slow down in gusty crosswinds. This will allow you much better control.
- Drive slowly onto curbs and, if possible, at a right angle. Avoid driving onto high, sharp–edged objects and other road hazards. Failure to do so can lead to severe tire damage such as a tire burst.
  Drive slowly when passing over bumps or travelling on a bumpy road. Otherwise, the impact could cause severe damage to the tires and/or wheels.
- When parking on a hill, turn the front wheels until they touch the curb so that the vehicle will not roll. Apply the parking brake, and put the hybrid transaxle “P”. If necessary, block the wheels.
- Washing your vehicle or driving through deep water may get the brakes wet. To see whether they are wet, check that there is no traffic near you, and then press the pedal lightly. If you do not feel a normal braking force, the brakes are probably wet. To dry them, drive the vehicle cautiously while lightly pressing the brake pedal with the parking brake applied. If they still do not work safely, pull to the side of the road and call a Toyota dealer for assistance.

CAUTION

- **Before driving off, make sure the parking brake is fully released and the parking brake reminder light is off.**
- **Do not leave your vehicle unattended with the "READY" light on.**
- **Do not rest your foot on the brake pedal while driving. It can cause dangerous overheating, needless wear, and poor fuel economy.**
- **To drive down a long or steep hill, reduce your speed and downshift. Remember, if you ride the brakes excessively, they may overheat and not work properly.**
- **Be careful when accelerating or braking on a slippery surface. Sudden acceleration or engine braking, could cause the vehicle to skid or spin.**

- **Do not drive in excess of the speed limit. Even if the legal speed limit permits it, do not drive over 140 km/h (85 mph) unless your vehicle has high-speed capability tires. Driving over 140 km/h (85 mph) may result in tire failure, loss of control and possible injury. Be sure to consult a tire dealer to determine whether the tires on your vehicle are high-speed capability tires or not before driving at such speeds.**
- **Do not continue normal driving when the brakes are wet. If they are wet, your vehicle will require a longer stopping distance, and it may pull to one side when the brakes are applied. Also, the parking brake will not hold the vehicle securely.**

Winter driving tips

Make sure you have a proper freeze protection for engine coolant.

Only use "Toyota Super Long Life Coolant" or similar high quality ethylene glycol based non-silicate, non-amine, non-nitrite, and non-borate coolant with long-life hybrid organic acid technology. (Coolant with long-life hybrid organic acid technology is a combination of low phosphates and organic acids.)

See "Checking the coolant level" on page 402 for details of coolant type selection.

For the U.S.A.—"Toyota Super Long Life Coolant" is a mixture of 50% coolant and 50% deionized water. This coolant provides protection down to about −35°C (−31°F).

For Canada—"Toyota Super Long Life Coolant" is a mixture of 55% coolant and 45% deionized water. This coolant provides protection down to about −42°C (−44°F).

NOTICE

Do not use plain water alone.

Check the condition of the 12 volt battery and cables.

Cold temperatures reduce the capacity of any 12 volt battery, so it must be in top shape to provide enough power for winter starting. Section 8–3 tells you how to visually inspect the 12 volt battery. Your Toyota dealer will be pleased to check the level of charge.

Make sure the engine oil viscosity is suitable for the cold weather.

See page 401 for recommended viscosity. Leaving a heavy summer oil in your vehicle during winter months may cause harder starting. If you are not sure about which oil to use, call your Toyota dealer—they will be pleased to help.

Keep the door locks from freezing.

Squirt lock de–icer or glycerine into the locks to keep them from freezing.

Use a washer fluid containing an anti–freeze solution.

This product is available at your Toyota dealer and most auto parts stores. Follow the manufacturer's directions for how much to mix with water.

NOTICE

Do not use engine antifreeze or any other substitute because it may damage your vehicle's paint.

Do not use your parking brake when there is a possibility it could freeze.

When parking, push the "P" position switch and block the rear wheels. Do not use the parking brake, for snow or water accumulated in and around the parking brake mechanism may freeze, making it hard to release.

Keep ice and snow from accumulating under the fenders.

Ice and snow built up under your fenders can make steering difficult. During extreme winter driving, stop and check under the fenders occasionally.

Depending on where you are driving, we recommend you carry some emergency equipment.

Some of the things you might put in the vehicle are tire chains, window scraper, bag of sand or salt, flares, small shovel, jumper cables, etc.

Dinghy towing

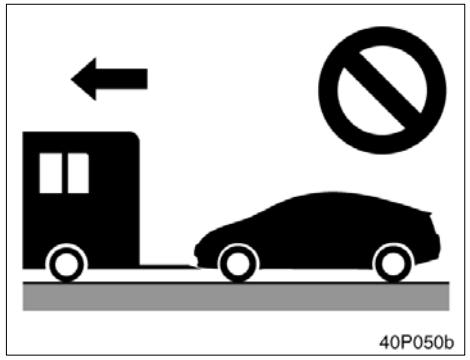

Your vehicle is not designed to be dinghy towed (with four wheels on the ground) behind a motorhome.

NOTICE

Do not tow your vehicle with four wheels on the ground. This may cause serious damage to your vehicle.

Trailer towing

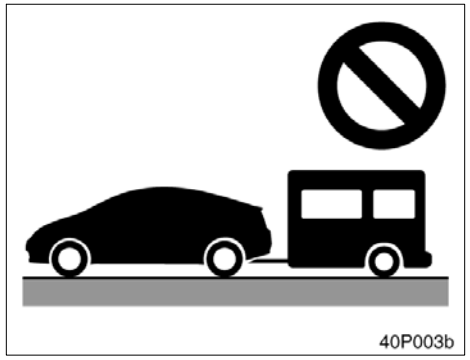

Toyota does not recommend towing a trailer with your Toyota. Toyota also does not recommend the installation of a tow hitch or the use of a tow hitch carrier for a wheelchair, scooter, bicycle, etc. Your Toyota is not designed for trailer towing or for the use of tow hitch mounted carriers.

How to save fuel and make your vehicle last longer, too

Improving fuel economy is easy–just take it easy. It will help make your vehicle last longer, too. Here are some specific tips on how to save money on both fuel and repairs:

- **Keep your tires inflated at the correct pressure.** Underinflation causes tire wear and wastes fuel. See page 405 for instructions.
- **Do not carry unneeded weight in your vehicle.** Excess weight puts a heavier load on the engine, causing greater fuel consumption.
- **Accelerate slowly and smoothly.** Avoid jackrabbit starts.
- **Avoid continuous speeding up and slowing down.** Stop–and–go driving wastes power.
- **Avoid unnecessary stopping and braking.** Maintain a steady pace. Try to time the traffic signals so you only need to stop as little as possible or take advantage of through streets to avoid traffic lights. Keep a proper distance from other vehicles to avoid sudden braking. This will also reduce wear on your brakes.
- **Avoid heavy traffic or traffic jams whenever possible.**
- **Do not rest your foot on brake pedal.** This causes premature wear, overheating and poor fuel economy.
- **Maintain a moderate speed on highways.** The faster you drive, the greater the fuel consumption. By reducing your speed, you will cut down on fuel consumption.
- **Keep the front wheels in proper alignment.** Avoid hitting the curb and slow down on rough roads. Improper alignment not only causes faster tire wear but also puts an extra load on the engine, which, in turn, wastes fuel.
- **Keep the bottom of your vehicle free from mud, etc.** This not only lessens weight but also helps prevent corrosion.
- **Keep your vehicle tuned–up and in top shape**. A dirty air cleaner, improper valve clearance, dirty plugs, dirty oil and grease, brakes not adjusted, etc. all lower engine performance and contribute to poor fuel economy. For longer life of all parts and lower operating costs, keep all maintenance work on schedule, and if you often drive under severe conditions, see that your vehicle receives more frequent maintenance.

CAUTION

Never turn off the hybrid system to coast down hills. Your power steering and brake booster will not function without the hybrid system running. Also, the emission control system operates properly only when the hybrid system is running.

SECTION 5

IN CASE OF AN EMERGENCY

If your vehicle will not start 356
If your hybrid system stalls while driving 360
If your vehicle overheatss 360
If you have a flat tire 361
If your vehicle needs to be towed 372
If you lose your keys 375
If you cannot operate back door opener 376

If your vehicle will not start—
(a) Simple checks

Before making these checks, make sure you have followed the correct starting procedure given in “How to start the hybrid system” on page 348 and that you have sufficient fuel. Also check whether the other keys will start the hybrid system. If they work, your key may be broken. Have the key checked at your Toyota dealer. If none of your keys work, there may be a malfunction in the hybrid vehicle immobilizer system. Call your Toyota dealer. (See “Keys” on page 20.)

If the instrument cluster dims or the instrument cluster display turns off with the hybrid system on—

1. Check that the 12 volt battery terminals are tight and clean.
2. If the 12 volt battery terminals are O.K., the 12 volt battery is discharged. You may try jump starting. See “(b) Jump starting” for further instructions.

NOTICE
Hybrid vehicles cannot be push-started.

If the instrument cluster is shown in appropriate brightness when the hybrid system is in the “IG-ON” mode—

The hybrid vehicle system is suspected to be faulty. Contact your Toyota dealer.

(b) Jump starting

If the 12 volt battery is discharged, the hybrid system can be started by jump starting. Depending on the vehicle condition, the engine may not start.

To avoid serious personal injury and damage to your vehicle which might result from battery explosion, acid burns, electrical burns, or damaged electronic components, these instructions must be followed precisely.

If the 12 volt battery is discharged, you cannot access to the 12 volt battery in the luggage compartment because the back door cannot be opened. Use the exclusive jump starting terminal in the engine compartment. For details, see “JUMP STARTING PROCEDURE” on page 357.

NOTICE
If the 12 volt battery is discharged with the transaxle in “P”, your vehicle cannot be moved unless the front wheels are raised. This is because the front wheels are locked by means of the parking lock mechanism.

If you are unsure about how to follow this procedure, we strongly recommend that you seek the help of a competent qualified technician or towing service.

⚠ CAUTION

- **Booster battery contains sulfuric acid which is poisonous and corrosive. Wear protective safety glasses when jump starting, and avoid spilling acid on your skin, clothing, or vehicle.**
- **If you should accidentally get acid on yourself or in your eyes, remove any contaminated clothing and flush the affected area with water immediately. Then get immediate medical attention. If possible, continue to apply water with a sponge or cloth while en route to the medical office.**
- **The gas normally produced by a battery will explode if a flame or spark is brought near. Use only standardized jumper cables and do not smoke or light a match while jump starting.**

NOTICE

- ***The battery used for boosting must be 12 V. Do not jump start unless you are sure that the booster battery is correct.***
- ***After jump starting procedure, the hybrid system may not start by pushing the "POWER" switch. In that case, push it once again. If the "READY" light does not come on, contact your Toyota dealer.***

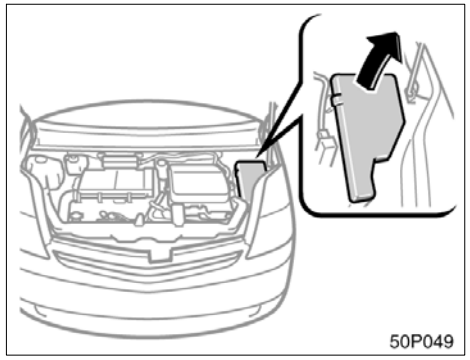

JUMP STARTING PROCEDURE

1. Apply the parking brake and turn off the headlight switch and interior light.
2. Turn off the hybrid system and remove the key if inserted.
3. Open the hood and fuse block cover shown in the above illustration.

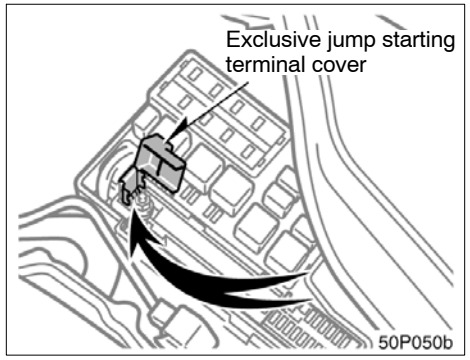

4. Open the exclusive jump starting terminal cover.
5. If the booster battery is installed in another vehicle, make sure the vehicles are not touching. Turn off all unnecessary lights and accessories.

   When boosting, use the battery of matching or higher quality. Any other battery may be difficult to jump start with. If jump starting is difficult, charge the battery for several minutes.
6. If required, remove all the vent plugs from the booster batteries. Lay a cloth over the open vents on the batteries. (This helps reduce the explosion hazard, personal injuries and burns.)
7. If the engine in the vehicle with the booster battery is not running, start it and let it run for a few minutes. During jump starting, run the engine at about 2000 rpm with the accelerator pedal lightly depressed.

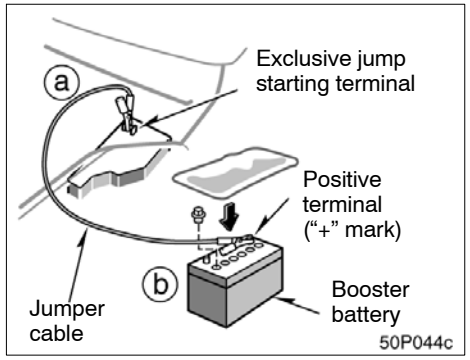

8. Connect the jumper cables in the order a, b, c, d.
   a. Connect the clamp of the positive (red) jumper cable to the exclusive jump starting terminal.
   b. Connect the clamp at the other end of the positive (red) jumper cable to the positive (+) terminal on the booster battery.

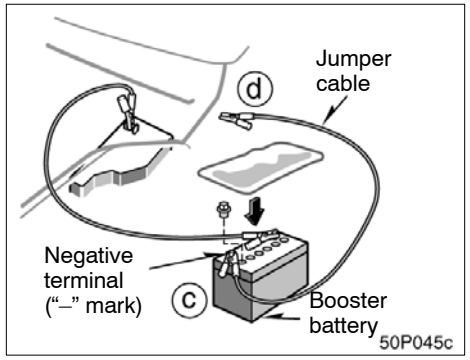

c. Connect the clamp of the negative (black) jumper cable to the negative (–) terminal on the booster battery.

d. Connect the clamp at the other end of the negative (black) jumper cable to a solid, stationary, unpainted, metallic point of the vehicle with the discharged battery.

The recommended connecting point is shown in the following illustration:

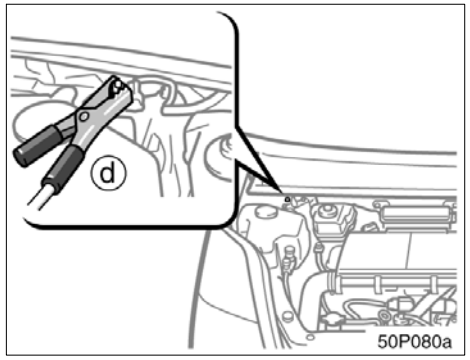

Connecting point

⚠ CAUTION

When making the connections, to avoid serious injury, do not lean over the battery or accidentally let the jumper cables or clamps touch anything except the correct battery terminals or the ground.

9. Charge the discharged battery with the jumper cables connected for approximately 5 minutes. At this time, run the engine in the vehicle with the booster battery at about 2000 rpm with the accelerator pedal lightly depressed.

10. Start the hybrid system. Make sure the "READY" light is on. If the hybrid battery warning light comes on in the multi–information display, the hybrid battery is also discharged. Contact your Toyota dealer.

11. Carefully disconnect the cables in the exact reverse order: the negative cable and then the positive cable.

12. Carefully dispose of the battery cover cloths—they may now contain sulfuric acid.

13. If removed, replace all the battery vent plugs.

If the cause of your 12 volt battery discharging is not apparent (for example, lights left on), you should have it checked at your Toyota dealer.

If the first start attempt is not successful...

Check that the clamp on the jumper cables are tight. Recharge the discharged battery with the jumper cables connected for several minutes and restart your hybrid system in the normal way.

If the another attempt is not successful, the battery may be depleted. Have it checked at your Toyota dealer.

If your hybrid system stalls while driving

If your hybrid system stalls while driving...

1. Reduce your speed gradually, keeping a straight line. Move cautiously off the road to a safe place.
2. Turn on your emergency flashers.
3. Try starting the hybrid system again.

If the hybrid system will not start, see “If your vehicle will not start” on page 356.

CAUTION

If the hybrid system is not operating, the power assist for the brakes and steering will not work so steering and braking will be much harder than usual.

If your vehicle overheats

If your high coolant temperature warning light comes on, if you experience a loss of power, or if you hear a loud knocking or pinging noise, the hybrid system has probably overheated. You should follow this procedure...

1. Pull safely off the road, stop the vehicle and turn on your emergency flashers. Push the “P” position switch and apply the parking brake. Turn off the air conditioning if it is being used.
2. If coolant or steam is boiling out of the radiator or reservoir, stop the hybrid system. Wait until the steam subsides before opening the hood. If there is no coolant boiling over or steam, leave the hybrid system running and make sure the electric cooling fan is operating. If it is not, turn the hybrid system off.

CAUTION

To help avoid personal injury, keep the hood closed until there is no steam. Escaping steam or coolant is a sign of very high pressure.

3. Look for obvious coolant leaks from the radiator, hoses, and under the vehicle. However, note that water draining from the air conditioning is normal if it has been used.

CAUTION

When the hybrid system is running, keep hands and clothing away from the moving fan and engine drive belts.

4. If the coolant is leaking, stop the hybrid system immediately. Call a Toyota dealer for assistance.
5. If there are no obvious leaks, check the coolant reservoir. If it is dry, add coolant to the reservoir while the hybrid system is running. Fill it about half full.

CAUTION

Do not attempt to remove the radiator cap when the hybrid system and radiator are hot. Serious injury could result from scalding hot fluid and steam blown out under pressure.

6. After the coolant temperature has cooled to normal, again check the coolant level in the reservoir. If necessary, bring it up to half full again. Serious coolant loss indicates a leak in the system. You should have it checked as soon as possible at your Toyota dealer.

If you have a flat tire—

1. Reduce your speed gradually, keeping a straight line. Move cautiously off the road to a safe place well away from the traffic. Avoid stopping on the center divider of a highway. Park on a level spot with firm ground.
2. Stop the hybrid system and turn on your emergency flashers.
3. Firmly set the parking brake.
4. Have everyone get out of the vehicle on the side away from traffic.
5. Read the following instructions thoroughly.

⚠ CAUTION

When jacking, be sure to observe the following to reduce the possibility of death or serious injury:

- **Follow jacking instructions.**
- **Do not put any part of your body under a vehicle supported by a jack. Personal injury may occur.**
- **Do not start or run the hybrid system while your vehicle is supported by the jack.**
- **Stop the vehicle at a level firm ground, firmly set the parking brake. Block the wheel diagonally opposite to the one being changed if necessary.**

- **Make sure to set the jack properly in the jack point. Raising the vehicle with jack improperly positioned will damage the vehicle or may allow the vehicle to fall off the jack and cause personal injury.**
- **Never get under the vehicle when the vehicle is supported by the jack alone.**
- **Use the jack only for lifting your vehicle during wheel changing.**
- **Do not raise the vehicle with someone in the vehicle.**
- **When raising the vehicle, do not place any objects on top of or underneath the jack.**
- **Raise the vehicle only high enough to remove and change the tire.**

NOTICE

Do not continue driving with a deflated tire. Driving even a short distance can damage a tire and wheel beyond repair.

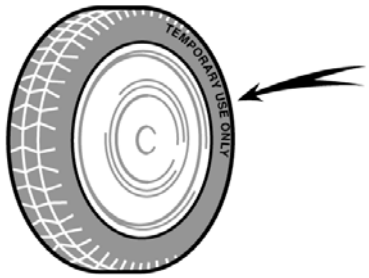

50P007a

Compact spare tire

The compact spare tire is designed for temporary emergency use only.

The compact spare tire is identified by the distinctive wording “TEMPORARY USE ONLY” molded into the side wall of the tire.

The compact spare tire saves space in your luggage compartment, and its lighter weight helps to improve fuel economy and permits easier installation in case of a flat tire.

The compact spare tire can be used many times, if necessary. It has tread life of up to 4800 km (3000 miles) depending on road conditions and your driving habits. When tread wear indicators appear on the tire, replace the tire.

See also the tire information on page 407 for details on the tread wear indicators and other service information.

⚠ CAUTION

- **The compact spare tire was designed especially for your Toyota. Do not use it on any other vehicle.**
- **Do not use more than one compact spare tire at the same time.**
- **Do not exceed 80 km/h (50 mph) when driving with the compact spare tire.**
- **Replace the compact spare tire with the standard tire as soon as possible.**
- **Avoid sudden acceleration, sudden deceleration and sharp turns with the compact spare tire.**

NOTICE

Your ground clearance is reduced when the compact spare tire is installed so avoid driving over obstacles and drive slowly on rough, unpaved roads and speed bumps. Also, do not attempt to go through an automatic car wash as the vehicle may get caught, resulting in damage.

—Required tools and spare tire

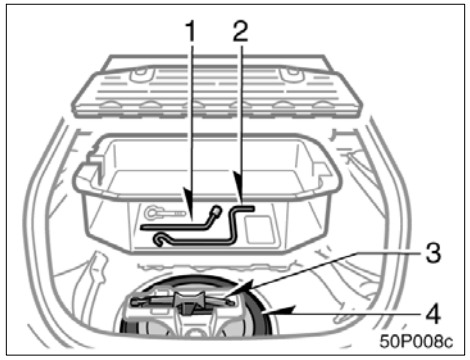

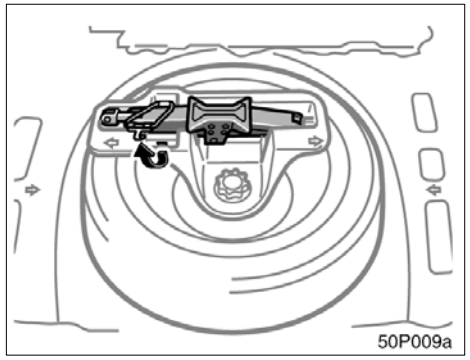

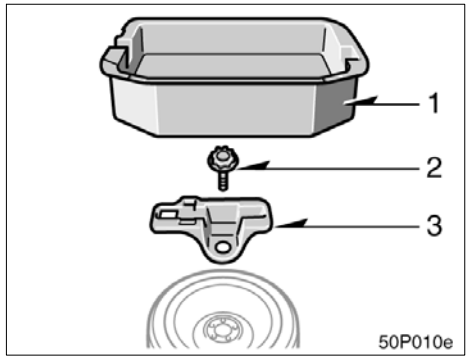

1. **Get the required tools and spare tire.**
   1 Wheel nut wrench
   2 Jack handle
   3 Jack
   4 Spare tire

To open the luggage storage box, see “Luggage storage box” on page 314.

To prepare yourself for an emergency, you should familiarize yourself with the use of the jack, each of the tools and their storage locations.

To remove the jack, unlock the tightening strap.

To store the jack, make sure it is securely held by the tightening strap.

To remove the spare tire:

1. Remove the luggage storage box.
2. Loosen the bolt and remove it.
3. Remove the jack box.

Then take the spare tire out of the vehicle.

When storing the spare tire, put it in place with the inner side of the wheel facing up. Then secure the tire by repeating the above removal steps in reverse order to prevent it from flying forward during a collision or sudden braking.

When installing the jack box, align the arrows on the jack box with the ones on the body.

—Blocking the wheel

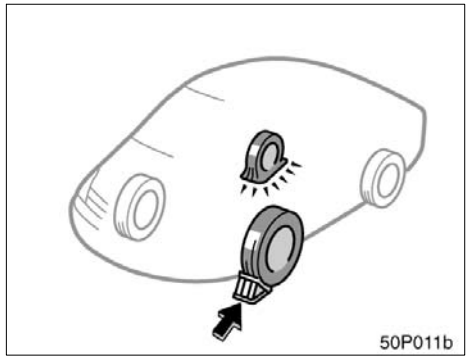

2. Block the wheel diagonally opposite the flat tire to keep the vehicle from rolling when it is jacked up.

When chocking the wheel, place a wheel block in front of one of the front wheels or behind one of the rear wheels.

—Loosening wheel nuts

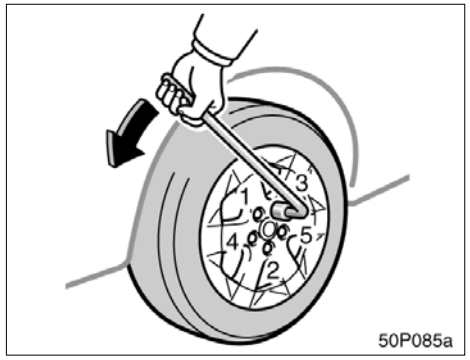

3. Loosen all the wheel nuts.

Always loosen the wheel nuts before raising the vehicle.

Turn the wheel nuts counterclockwise to loosen them. To get maximum leverage, fit the wrench to the nut so that the handle is on the right side, as shown above. Grab the wrench near the end of the handle and pull up on the handle. Be careful that the wrench does not slip off the nut.

Do not remove the nuts yet—just unscrew them about one–half turn in the order shown.

⚠ CAUTION

Never use oil or grease on the bolts or nuts. The nuts may loosen and the wheels may fall off, which could cause a serious accident.

—Positioning the jack

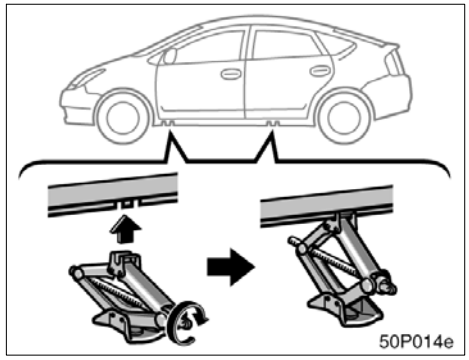

4. Position the jack at the jack points as shown.

Make sure the jack is positioned on a level and solid place.

—Raising your vehicle

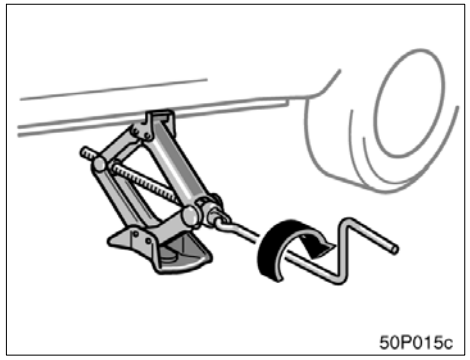

5. After making sure no one is in the vehicle, raise it high enough so that the spare tire can be installed.

Remember you will need more ground clearance when putting on the spare tire than when removing the flat tire.

To raise the vehicle, insert the jack handle into the jack (it is a loose fit) and turn it clockwise. As the jack touches the vehicle and begins to lift, double–check that it is properly positioned.

⚠ CAUTION

Never get under the vehicle when the vehicle is supported by the jack alone.

—Changing wheels

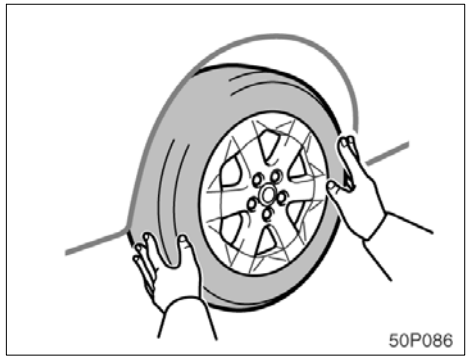

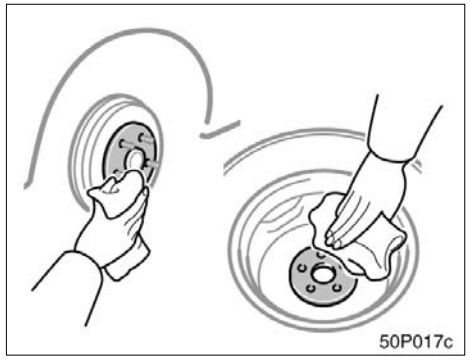

6. Remove the wheel nuts and change tires.

Lift the flat tire straight off and put it aside.

Roll the spare wheel into position and align the holes in the wheel with the bolts. Then lift up the wheel and get at least the top bolt started through its hole. Wiggle the tire and press it back over the other bolts.

Before putting on wheels, remove any corrosion on the mounting surfaces with a wire brush or such. Installation of wheels without good metal–to–metal contact at the mounting surface can cause wheel nuts to loosen and eventually cause a wheel to come off while driving.

—Reinstalling wheel nuts

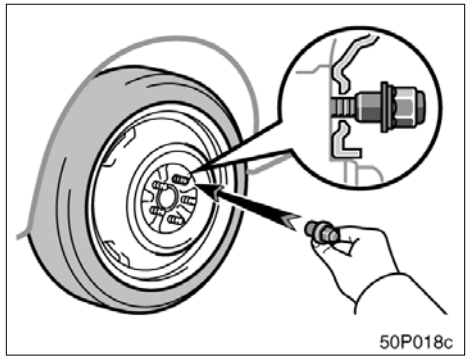

7. Reinstall all the wheel nuts finger tight.

Reinstall the wheel nuts (tapered end inward) and tighten them as much as you can by hand. Press back on the tire and see if you can tighten them more.

⚠ CAUTION

Never use oil or grease on the bolts or nuts. Doing so may lead to overtightening the nuts and damaging the bolts. The nuts may loosen and the wheels may fall off, which could cause a serious accident. If there is oil or grease on any bolt or nut, clean it.

—Lowering your vehicle

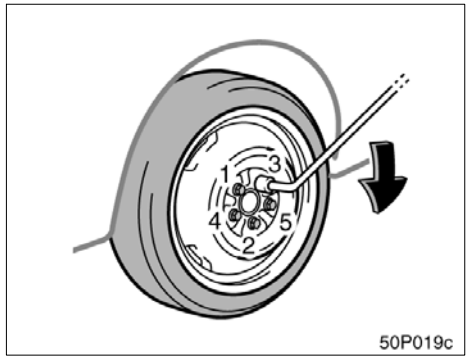

8. Lower the vehicle completely and tighten the wheel nuts.

Turn the jack handle counterclockwise to lower the vehicle.

Use only the wheel nut wrench to tighten the nuts. Do not use other tools or any additional leverage other than your hands, such as a hammer, pipe or your foot. Make sure the wrench is securely engaged over the nut.

Tighten each nut a little at a time in the order shown. Repeat the process until all the nuts are tight.

CAUTION

- **When lowering the vehicle, make sure all portions of your body and all other persons around will not be injured as the vehicle is lowered to the ground.**
- **Have the wheel nuts tightened with torque wrench to 103 N·m (10.5 kgf·m, 76 ft·lbf), as soon as possible after changing wheels. Otherwise, the nuts may loosen and the wheels may fall off, which could cause a serious accident.**
- **Do not attach a heavily damaged plastic wheel ornament. It may fly off the wheel and cause accidents while the vehicle is moving.**

—Stowing flat tire

9. Restow all the tools and jack securely. Then secure the flat tire in the luggage compartment with the tire tie–down belts and tie–down hooks as follows

CAUTION

Before driving, make sure all the tools and jack are securely in place in their storage location to reduce the possibility of personal injury during a collision or sudden braking.

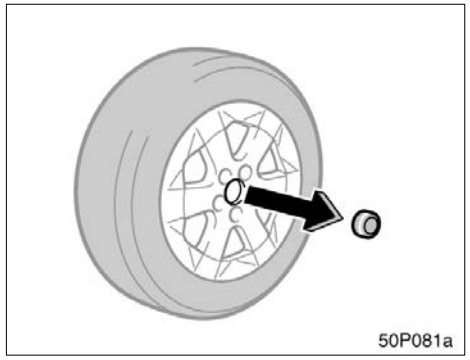

1. Before stowing the flat tire, remove the center wheel ornament by pushing from the reverse side.

Be careful not to lose the wheel ornament.

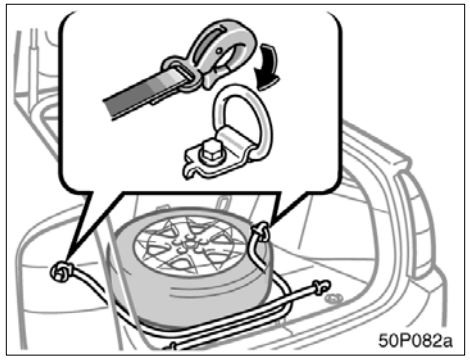

2. Put the flat tire on the center of the luggage storage box lid with the outer side of the wheel facing up. Hook one ends of the belts to the front tie–down hooks.

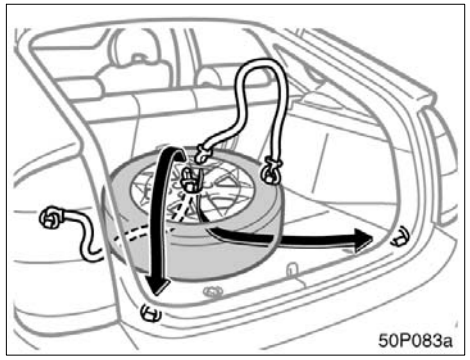

3. Pass the belts through the center hole of the wheel as shown above.

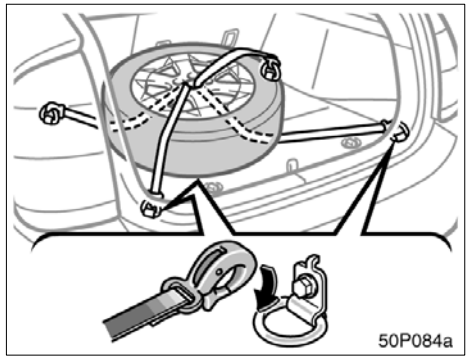

4. Attach the other ends of the belts to the rear tie–down hooks.

After stowing the flat tire, check that the tire and belts are secured.

CAUTION

- **Make sure the rear seats are in their original position.**
- **When carrying the flat tire, secure it using a tire tie–down belts. Otherwise, the flat tire may fly out in case of the sudden braking or an accident, resulting in death or serious injury.**

—After changing wheels

10. Check the air pressure of the replaced tire.

Adjust the air pressure to the specification designated on page 429. If the pressure is lower than specified, drive slowly to the nearest Toyota dealer and fill to the correct pressure.

Do not forget to reinstall the tire inflation valve cap as dirt and moisture could get into the valve core and possibly cause air leakage. If the cap is missing, have a new one put on as soon as possible.

As soon as possible after changing wheels, tighten the wheel nuts to the torque specified on page 429 with a torque wrench. Have a technician repair the flat tire.

After repairing the flat tire, change it with compact spare tire and reinstall the wheel ornament.

CAUTION

Take due care in handling the ornament to avoid unexpected personal injury.

If your vehicle needs to be towed—

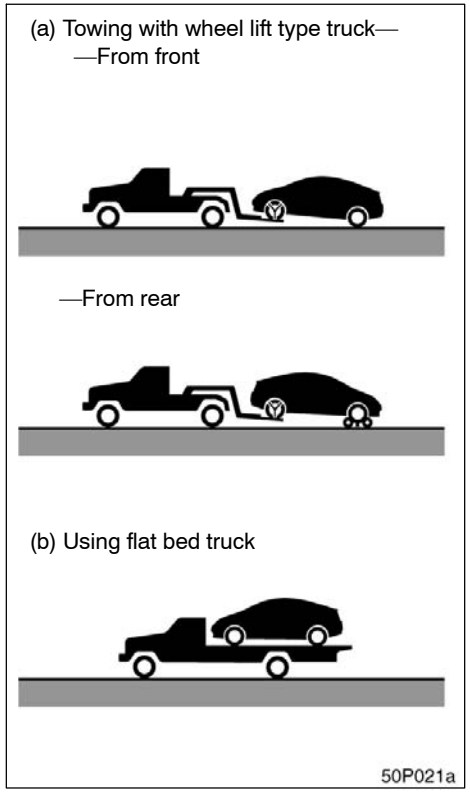

If towing is necessary, we recommend you to have it done by your Toyota dealer or a commercial tow truck service. In consultation with them, have your vehicle towed using either (a) or (b).

Only when you cannot receive a towing service from a Toyota dealer or commercial tow truck service, tow your vehicle carefully in accordance with the instructions given in "—Emergency towing" on page 373.

Proper equipment will help ensure that your vehicle is not damaged while being towed. Commercial operators are generally aware of the state/provincial and local laws pertaining to towing.

Your vehicle can be damaged if it is towed incorrectly. Although most operators know the correct procedure, it is possible to make a mistake. To avoid damage to your vehicle, make sure the following precautions are observed. If necessary, show this page to the tow truck driver.

TOWING PRECAUTIONS:

Use a safety chain system for all towing, and abide by the state/provincial and local laws. The wheels and axle on the ground must be in good condition. If they are damaged, use a towing dolly.

(a) Towing with wheel lift type truck

From front—Release the parking brake.

NOTICE
When lifting wheels, take care to ensure adequate ground clearance for towing at the opposite end of the raised vehicle. Otherwise, the underbody of the towed vehicle will be damaged during towing.

From rear—Use a towing dolly under the front wheels.

NOTICE
Never tow a vehicle from the rear with the front wheels on the ground, as this may cause serious damage to the transmission.

(b) Using flat bed truck

—Emergency towing

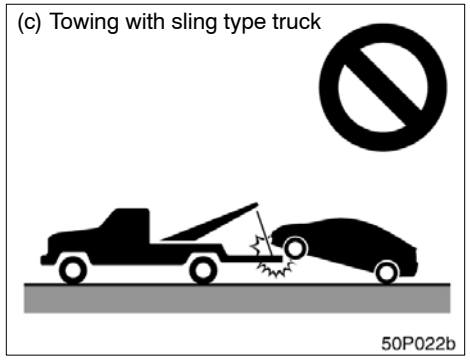

(c) Towing with sling type truck

NOTICE
Do not tow with sling type truck, either from the front or rear. This may cause body damage.

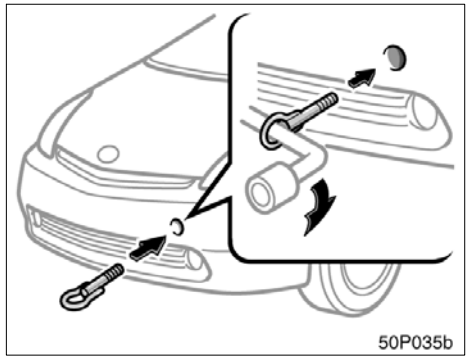

If towing is necessary, we recommend you to have it done by your Toyota dealer or a commercial tow truck service.

If towing service is not available in an emergency, your vehicle may be temporarily towed by a cable or chain secured to emergency towing eyelet inside of front bumper. Use extreme caution when towing vehicles.

NOTICE
◆***Only use specified towing eyelet; otherwise your vehicle may be damaged.*** ◆***Never tow a vehicle from the rear with four wheels on the ground. This may cause serious damage to the transaxle.***

A driver must be in the vehicle to steer it and operate the brakes.

Towing in this manner may be done only on hard–surfaced roads for a short distance and at low speeds. Also, the wheels, axles, drive train, steering and brakes must all be in good condition.

⚠ CAUTION

Use extreme caution when towing vehicles. Avoid sudden starts or erratic driving maneuvers which would place excessive stress on the emergency towing eyelet and towing cable or chain. The eyelet and towing cable or chain may break and cause serious injury or damage.

NOTICE

Use only a cable or chain specifically intended for use in towing vehicles. Securely fasten the cable or chain to the towing eyelet provided.

Before towing, release the parking brake and put the hybrid transaxle in “N”. The hybrid system must be in the “IG–ON” mode.

In the following cases, as the front wheels might be locked by means of the parking lock mechanism, your vehicle cannot be towed by another vehicle using a rope. Have your vehicle carried with the front wheels or all the wheels raised.

- If the parking mechanism fails.
- If the 12 volt battery is discharged.

⚠ CAUTION

If the hybrid system is not running, the power assist for the brakes and steering will not work so steering and braking will be much harder than usual.

—Installing towing eyelet

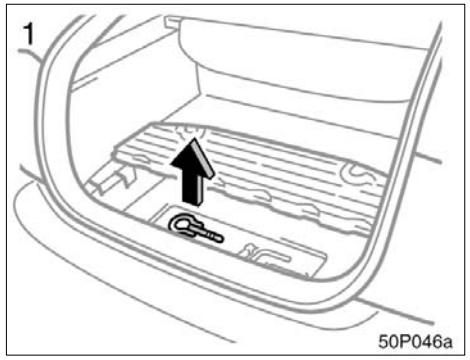

1. Remove the towing eyelet as shown in the illustration.

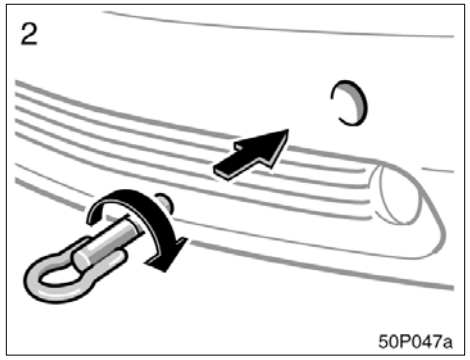

2. Secure the towing eyelet to the hole on the bumper by turning it clockwise.

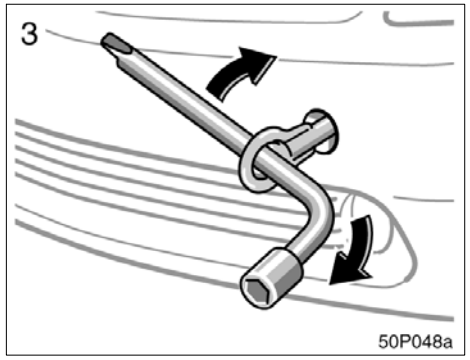

3. Tighten the towing eyelet securely by a wheel nut wrench.

⚠ CAUTION

When installing the eyelet on the vehicle, be sure to tighten the eyelet securely. If the eyelet is loose, it may come off when being towed and result in death or serious injury.

If you lose your keys

You can purchase a new key at your Toyota dealer if you can give them the key number and master key.

Even if you lose only one key, contact your Toyota dealer to make a new key. If you lose all your master keys, you cannot make new keys; the whole hybrid vehicle immobilizer system must be replaced.

See the suggestion given in “Keys” on page 20.

If your keys are locked in the vehicle and you cannot get a duplicate, many Toyota dealers can still open the door for you, using their special tools. If you must break a window to get in, we suggest breaking the smallest side window because it is the least expensive to replace. Be extremely cautious to avoid cuts from the glass.

If you cannot operate back door opener

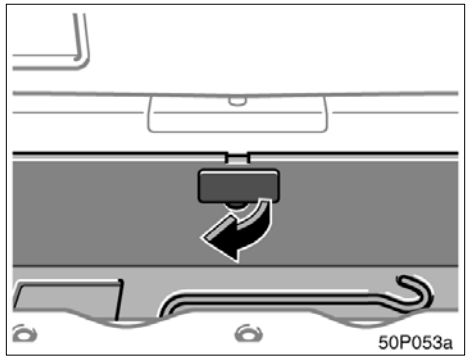

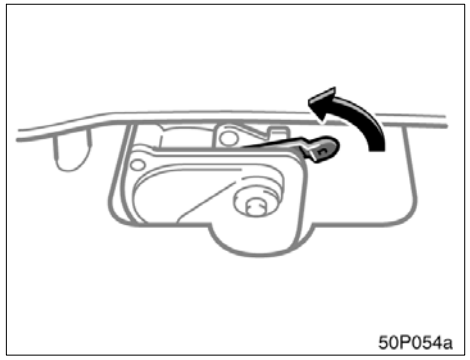

If the back door opener does not operate, you can open the back door from the inside.

To open the back door from inside, perform the following procedure.

1. Open the luggage storage box (See “Luggage storage box” on page 314.) and remove the cover.
2. Pull the lever with the back door motor, open the back door.

Be sure to have the back door opener checked/repaired by your Toyota dealer.

SECTION 6

CORROSION PREVENTION AND APPEARANCE CARE

Protecting your Toyota from corrosion 378
Washing and waxing your Toyota 379
Cleaning the interiorr 381

Protecting your Toyota from corrosion

Toyota, through the diligent research, design and use of the most advanced technology available, helps prevent corrosion and provides you with the finest quality vehicle construction. Now, it is up to you. Proper care of your Toyota can help ensure long–term corrosion prevention.

The most common causes of corrosion to your vehicle are:

- The accumulation of road salt, dirt and moisture in hard–to–reach areas under the vehicle.
- Chipping of paint, or undercoating caused by minor accidents or by stones and gravel.

Care is especially important if you live in particular areas or operate your vehicle under certain environmental conditions:

- Road salt or dust control chemicals will accelerate corrosion, as will the presence of salt in the air near the sea–coast or in areas of industrial pollution.
- High humidity accelerates corrosion especially when temperatures range just above the freezing point.
- Wetness or dampness to certain parts of your vehicle for an extended period of time, may cause corrosion even though other parts of the vehicle may be dry.
- High ambient temperatures can cause corrosion to those components of the vehicle which do not dry quickly due to lack of proper ventilation.

The above signifies the necessity to keep your vehicle, particularly the underside, as clean as possible and to repair any damage to paint or protective coatings as soon as possible.

To help prevent corrosion on your Toyota, follow these guidelines:

Wash your vehicle frequently. It is, of course, necessary to keep your vehicle clean by regular washing, but to prevent corrosion, the following points should be observed:

- If you drive on salted roads in the winter or if you live near the ocean, you should hose off the undercarriage at least once a month to minimize corrosion.
- Pay particular attention to the vehicle's underside and wheel housings as it is difficult to see all the mud and dirt. It will do more harm than good to simply wet the mud and debris without removing. The lower edge of doors, rocker panels and frame members have drain holes which should not be allowed to clog with dirt as trapped water in these areas can cause corrosion.
- Wash the underside of the vehicle thoroughly when winter is over.

See "Washing and waxing your Toyota" for more tips.

Check the condition of your vehicle's paint and trim. If you find any chips or scratches in the paint, touch them up immediately to prevent corrosion from starting. If the chips or scratches have gone through the bare metal, have a qualified body shop make the repair.

Check the interior of your vehicle. Water and dirt can accumulate under the floor mats and could cause corrosion. Occasionally check under the mats to make sure the area is dry. Be particularly careful when transporting chemicals, cleansers, fertilizers, salt, etc.; these should be transported in proper containers. If a spill or leak should occur, immediately clean and dry the area.

Keep your vehicle in a well ventilated garage or a roofed place. Do not park your vehicle in a damp, poorly ventilated garage. If you wash your vehicle in the garage, or if you drive it covered with water or snow, your garage may be so damp and it will cause corrosion. Even if your garage is heated, a wet vehicle can corrode if the ventilation is poor.

Washing and waxing your Toyota

Your Toyota is a hybrid vehicle. Pay particular attention when washing your Toyota.

NOTICE

Before washing your Toyota, be sure to observe the following in order to avoid the risk of damage to your vehicle.

- ***Do not splash water on the electric components in the engine compartment. This may cause the malfunction of the electric components.***

Washing your Toyota

Keep your vehicle clean by regular washing.

The following cases may cause weakness to the paint or corrosion to the body and parts. Wash your vehicle as soon as possible.

- When driving in a coastal area
- When driving on a road sprinkled with antifreeze
- When exposed to coal tar, tree sap, bird droppings and carcass of an insect
- When driving in areas where there is a lot of smoke, soot, dust, iron dust or chemical substances
- When the vehicle becomes remarkably dirty with dust and mud

Hand–washing your Toyota

Work in the shade and wait until the vehicle body is not warm to the touch.

⚠ CAUTION

- **When cleaning under floor or chassis, be careful not to injure your hands.**
- **Exhaust gasses cause the exhaust pipe to become quite hot. When washing the vehicle, be careful not to touch the pipe until it has cooled sufficiently, as touching a hot exhaust pipe can cause burns.**

1. Rinse off loose dirt with a hose. Remove any mud or road salt from the underside of the vehicle or the wheel wells.
2. Wash with a mild car–wash soap, mixed according to the manufacturer's instructions. Use a soft cotton mitt and keep it wet by dipping it frequently into the wash water. Do not rub hard—let the soap and water remove the dirt.

Plastic wheel ornaments: The plastic wheel ornaments are damaged easily by organic substances. If any organic substances splash an ornament, be sure to wash them off with water and check if the ornament is damaged.

Aluminum wheels: Use only a mild soap or neutral detergent.

Plastic bumpers: Wash carefully. Do not scrub with abrasive cleaners. The bumper faces are soft.

Exterior lights: Wash carefully. Do not use organic substances or scrub them with a hard brush. This may damage the surfaces of the lights.

Road tar: Remove with turpentine or cleaners that are marked safe for painted surfaces.

3. Rinse thoroughly—dried soap can cause streaking. In hot weather you may need to rinse each section right after you wash it.
4. To prevent water spots, dry the vehicle using a clean soft cotton towel. Do not rub or press hard—you might scratch the paint.

NOTICE

- ***Do not use organic substances (gasoline kerosene, benzine or strong solvents) which may be toxic or cause damage.***
- ***Do not scrub any part of the vehicle with a hard brush, which may cause damage.***

Automatic car wash

Your vehicle may be washed in an automatic car wash, but remember that the paint can be scratched by some types of brushes, unfiltered washing water, or the washing process itself. Scratching reduces paint durability and gloss, especially on darker colors. The manager of the car wash should be able to advise you whether the process is safe for the paint on your vehicle.

NOTICE

To prevent damage to the antenna, make sure to remove it before driving your Toyota through an automatic car wash.

Waxing your Toyota

Polishing and waxing is recommended to maintain the original beauty of your Toyota's finish.

Apply wax once a month or if the vehicle surface does not repel water well.

1. Always wash and dry the vehicle before you begin waxing, even if you are using a combined cleaner and wax.
2. Use a good quality polish and wax. If the finish has become extremely weathered, use a car–cleaning polish, followed by a separate wax. Carefully follow the manufacturer's instructions and precautions. Be sure to polish and wax the chrome trim as well as the paint.

Exterior lights: Do not apply wax on the surfaces of the lights. Wax may cause damage to the lenses. If you accidentally put wax on the light surfaces, wipe or wash it off.

3. Wax the vehicle again when water does not bead but remains on the surface in large patches.

NOTICE

Always remove the plastic bumpers if your vehicle is re-painted and placed in a high heat paint waxing booth. High temperatures could damage the bumpers.

Cleaning the interior

CAUTION

- **Do not wash the vehicle floor with water, or allow water to get onto the floor when cleaning the vehicle interior or exterior. Water may get into audio components or other electrical components above or under the floor carpet (or mat) and cause fire or malfunction; and it may cause body corrosion.**
- **Vehicles with side airbags:**
  Be careful not to splash water or spill liquid on the floor. This may prevent the side airbags from activating correctly, resulting in death or serious injury.

Vinyl interior

The vinyl upholstery may be easily cleaned with a mild soap or detergent and water.

First vacuum over the upholstery to remove loose dirt. Then, using a sponge or soft cloth, apply the soap solution to the vinyl. After allowing it to soak in for a few minutes to loosen the dirt, remove the dirt and wipe off the soap with a clean damp cloth. If all the dirt does not come off, repeat the procedure. Commercial foaming-type vinyl cleaners are also available which work well. Follow the manufacturer's instructions.

NOTICE

Do not use solvent, thinner, gasoline or window cleaner on the interior.

Carpets

Use a good foam-type shampoo to clean the carpets.

Begin by vacuuming thoroughly to remove as much dirt as possible. Several types of foam cleaners are available; some are in aerosol cans and others are powders or liquids which you mix with water to produce a foam. To shampoo the carpets, use a sponge or brush to apply the foam. Rub in overlapping circles.

Do not apply water—the best results are obtained by keeping the carpet as dry as possible. Read the shampoo instructions and follow them closely.

Seat belts

The seat belts may be cleaned with mild soap and water or with lukewarm water.

Use a cloth or sponge. As you are cleaning, check the belts for excessive wear, fraying, or cuts.

NOTICE

- ***Do not use dye or bleach on the belts–it may weaken them.***
- ***Do not use the belts until they become dry.***

Windows

The windows may be cleaned with any household window cleaner.

NOTICE

When cleaning the inside of the windows, be careful not to scratch or damage the heater wires on the rear window.

Air conditioning control panel, audio, instrument panel, console panel, and switches

Use a soft damp cloth for cleaning.

Soak a clean soft cloth in water or lukewarm water then lightly wipe off dirt.

NOTICE

- ***Do not use organic substances (solvents, kerosene, alcohol, gasoline, etc.) or alkaline or acidic solutions. These chemicals can cause discoloring, staining or peeling of the surface.***
- ***If you use cleaners or polishing agents, make sure their ingredients do not include the substances mentioned above.***
- ***If you use a liquid car freshener, do not apply the liquid onto the vehicle's interior surfaces. It may contain the ingredients mentioned above. Immediately clean any spill using the method mentioned above.***

Leather interior

The leather upholstery may be cleaned with neutral detergent for wool.

Remove dirt using a soft cloth dampened with 5% solution of neutral detergent for wool. Then thoroughly wipe off all traces of detergent with a clean damp cloth.

After cleaning or whenever any part of the leather gets wet, dry with a soft clean cloth. Allow the leather to dry in a ventilated shaded area.

NOTICE

- ***If a stain should fail to come out with a neutral detergent, apply a cleaner that does not contain an organic solvent.***
- ***Never use organic substances such as benzine, alcohol or gasoline, or alkaline or acid solutions for cleaning the leather as these could cause discoloring.***
- ***Use of a nylon brush or synthetic fiber cloth, etc. may scratch the fine grained surface of the leather.***
- ***Mildew may develop on soiled leather upholstery. Be especially careful to avoid oil spots. Try to keep your upholstery always clean.***
- ***Long exposure to direct sunlight may cause the leather surface to harden and shrink. Keep your vehicle in a shaded area, especially in the summer.***
- ***The interior of your vehicle is apt to heat up on hot summer days, so avoid placing on the upholstery items made of vinyl or plastic or containing wax as these tend to stick to leather when warm.***
- ***Improper cleaning of the leather upholstery could result in discoloration or staining.***

If you have any questions about the cleaning of your Toyota, your local Toyota dealer will be pleased to answer them.

SECTION 7

VEHICLE MAINTENANCE AND CARE

Maintenance requirements 386
General maintenance 387
Does your vehicle need repairing?? 389
Emissions inspection and maintenance (I/M) programs 390

For scheduled maintenance information, please refer to the "Scheduled Maintenance Guide" or "Owner's Manual Supplement".

Maintenance requirements

Your Toyota vehicle has been designed for fewer maintenance requirements with longer service intervals to save both your time and money. However, each regular maintenance, as well as day–to–day care, is more important than ever before to ensure smooth, trouble–free, safe, and economical driving.

It is the owner's responsibility to make sure the specified maintenance, including general maintenance service, is performed. Note that both the new vehicle and emission control system warranties specify that proper maintenance and care must be performed. See "Owner's Warranty Information Booklet" or "Owner's Manual Supplement" for complete warranty information.

General maintenance

General maintenance items are those day–to–day care practices that are important to your vehicle for proper operation. It is the owner's responsibility to ensure that the general maintenance items are performed regularly.

These checks or inspections can be done either by yourself or a qualified technician, or if you prefer, your Toyota dealer will be pleased to do them at a nominal cost.

Scheduled maintenance

The scheduled maintenance items listed in the "Scheduled Maintenance Guide" or "Owner's Manual Supplement" are those required to be serviced at regular intervals.

For details of your maintenance schedule, read the "Scheduled Maintenance Guide" or "Owner's Manual Supplement".

It is recommended that only genuine Toyota parts be used for maintenance or for the repair of the emission control system.

The owner may elect to use non–Toyota supplied parts for replacement purposes without invalidating the emission control system warranty. However, use of replacement parts which are not of equivalent quality may impair the effectiveness of the emission control systems.

You may also elect to have maintenance, replacement, or repair of the emission control devices and system performed by any automotive repair establishment or individual without invalidating this warranty. See "Owner's Warranty Information Booklet" or "Owner's Manual Supplement" for complete warranty information.

Where to go for service?

Toyota technicians are well–trained specialists and are kept up to date with the latest service information through technical bulletins, service tips, and in–dealership training programs. They learn to work on Toyotas before they work on your vehicle, rather than while they are working on it.

You can be confident that your Toyota dealer's service department performs the best job to meet the maintenance requirements on your vehicle–reliably and economically.

Your copy of the repair order is proof that all required maintenance has been performed for warranty coverage. If any problems should arise with your vehicle while under warranty, your Toyota dealer will promptly take care of it. Again, be sure to keep a copy of the repair order for any service performed on your Toyota.

What about do–it–yourself maintenance?

Many of the maintenance items are easy to do yourself if you have a little mechanical ability and a few basic automotive tools. Simple instructions for how to perform them are presented in Section 8.

If you are a skilled do–it–yourself mechanic, the Toyota service manuals are recommended. Please be aware that do–it–yourself maintenance can affect your warranty coverage. See “Owner’s Warranty Information Booklet” or “Owner’s Manual Supplement” for the details.

General maintenance

Listed below are the general maintenance items that should be performed as frequently as specified. In addition to checking the items listed, if you notice any unusual noise, smell or vibration, you should investigate the cause or take your vehicle to your Toyota dealer or a qualified service shop immediately. It is recommended that any problem you notice be brought to the attention of your dealer or the qualified service shop for their advice.

⚠ CAUTION

Make these checks only with adequate ventilation if you run the engine.

IN THE ENGINE COMPARTMENT

Items listed below should be checked from time to time, e.g. each time when refueling.

Washer fluid
Make sure there is sufficient fluid in the tank. See page 418 for additional information.

Coolant level
Make sure the coolant level is between the “FULL” and “LOW” lines on the see–through reservoir when the hybrid system is cold. See page 402 for additional information.

Radiator, condenser and hoses
Check that the front of the radiator and condenser are clean and not blocked with leaves, dirt, or insects. See page 404 for additional information.

Brake fluid level
Make sure the brake fluid level is correct. See page 404 for additional information.

Engine oil level
Check the level on the dipstick with the engine turned off and the vehicle parked on level spot. See page 400 for additional information.

Exhaust system
If you notice any change in the sound of the exhaust or smell exhaust fumes, have the cause located and corrected immediately. (See “Engine exhaust cautions” on page 322.)

INSIDE THE VEHICLE

Items listed below should be checked regularly, e.g. while performing periodic services, cleaning the vehicle, etc.

Lights
Make sure the headlights, stop lights, tail lights, turn signal lights, and other lights are all working. Check headlight aim.

Service reminder indicators and warning buzzers
Check that all service reminder indicators and warning buzzers function properly.

Steering wheel
Be alert for changes in steering condition, such as hard steering or strange noise.

Seats
Check that all front seat controls such as seat adjusters, seatback recliner, etc. operate smoothly and that all latches lock securely in any position. Check that the head restraint move up and down smoothly and that the locks hold securely in any latched position.

Seat belts
Check that the seat belt system such as buckles, retractors and anchors operate properly and smoothly. Make sure the belt webbing is not cut, frayed, worn or damaged.

Accelerator pedal
Check the pedal for smooth operation and uneven pedal effort or catching.

Brake pedal
Check the pedal for smooth operation and that the pedal has the proper clearance. Check the brake booster function.

Brakes
In a safe place, check that the brakes do not pull to one side when applied.

Parking brake
Check that the pedal has the proper travel and that, on a safe incline, your vehicle is held securely with only the parking brake applied.

OUTSIDE THE VEHICLE

Items listed below should be performed from time to time, unless otherwise specified.

Fluid leaks
Check underneath for leaking fuel, oil, water or other fluid after the vehicle has been parked for a while. If you smell fuel fumes or notice any leak, have the cause found and corrected immediately.

Doors and engine hood
Check that all doors and trunk operate smoothly and all latches lock securely. Make sure the engine hood secondary latch secures the hood from opening when the primary latch is released.

Tire inflation pressure

Check the pressure with a gauge every two weeks, or at least once a month. See page 405 for additional information.

Tire surface and wheel nuts

Check the tires carefully for cuts, damage or excessive wear. See Section 8–2 for additional information. When checking the tires, make sure no nuts are missing, and check the nuts for looseness. Tighten them if necessary.

Tire rotation

Rotate the tires according to the maintenance schedule. (For scheduled maintenance information, please refer to the “Scheduled Maintenance Guide” or “Owner’s Manual Supplement”.) See page 409 for additional information.

Does your vehicle need repairing?

Be on the alert for changes in performance, sounds, and visual tip–offs that indicate service is needed. Some important clues are as follows:

- Engine missing, stumbling, or pinging
- Appreciable loss of power
- Strange engine noises
- A fluid leak under the vehicle (however, water dripping from the air conditioning after use is normal.)
- Change in exhaust sound (This may indicate a dangerous carbon monoxide leak. Drive with the windows open and have the exhaust system checked immediately.)
- Flat–looking tire; excessive tire squeal when cornering; uneven tire wear
- Vehicle pulls to one side when driving straight on a level road
- Strange noises related to suspension movement
- Loss of brake effectiveness; spongy feeling brake pedal; pedal almost touches floor; vehicle pulls to one side when braking
- Coolant temperature continually higher than normal

If you notice any of these clues, take your vehicle to your Toyota dealer as soon as possible. It probably needs adjustment or repair.

⚠ CAUTION

Do not continue driving with the vehicle unchecked. It could result in serious vehicle damage and possibly personal injury.

Emissions inspection and maintenance (I/M) programs

Some states have vehicle emission inspection programs which include OBD (On–Board Diagnostics) checks.

The OBD system monitors the operation of the emission control system. When the OBD system determines that a problem exists somewhere in the emission control system, the malfunction indicator lamp comes on. In this case, your vehicle may not pass the I/M test and need to be repaired. Contact your Toyota dealer to service the vehicle.

Even if the malfunction indicator lamp does not come on, your vehicle may not pass the I/M test as readiness codes have not been set in the OBD system.

Readiness codes are automatically set during ordinary driving. However, when the battery is disconnected or run down, the codes are erased. Also, depending on your driving habits, the codes may not be completely set.

Also, if the malfunction indicator lamp had come on recently due to temporary malfunction such as a loose fuel tank cap, your vehicle may not pass the I/M test.

The malfunction indicator lamp will go off after taking several driving trips, but the error code in the OBD system will not be cleared unless about 40 trips or more are taken.

If your vehicle does not pass the I/M test and the malfunction indicator lamp does not come on, contact your Toyota dealer to prepare the vehicle for re–testing.

SECTION 8–1

DO–IT–YOURSELF MAINTENANCE

Introduction

Engine compartment overview 392
Fuse locations 393
Do–it–yourself service precautions 394
Positioning the jack 396
Parts and tools 397

Engine compartment overview

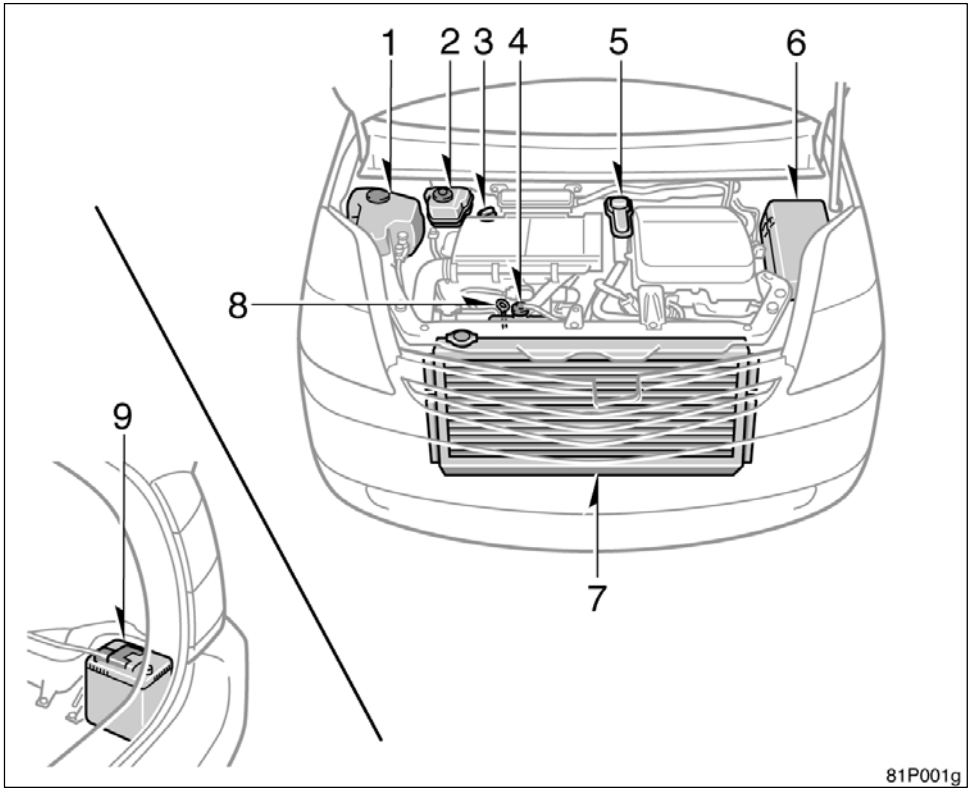

1. Windshield washer fluid tank
2. Brake fluid reservoir
3. Engine oil filler cap
4. Engine coolant reservoir
5. Inverter coolant reservoir tank
6. Fuse block
7. Radiator and condenser
8. Engine oil level dipstick
9. 12 volt battery

Fuse locations

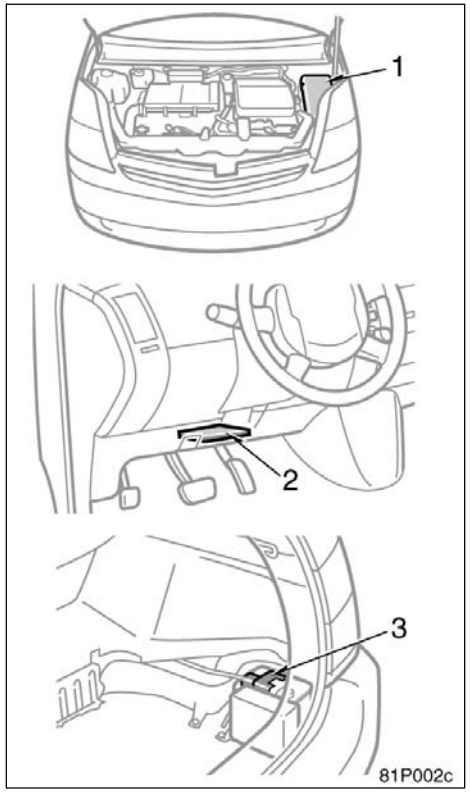

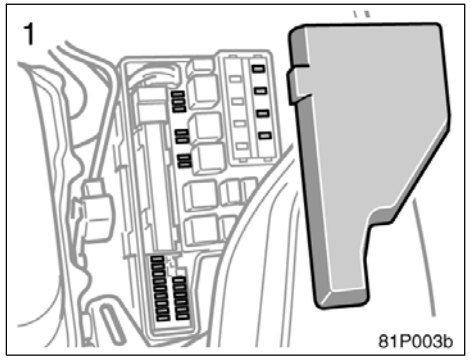

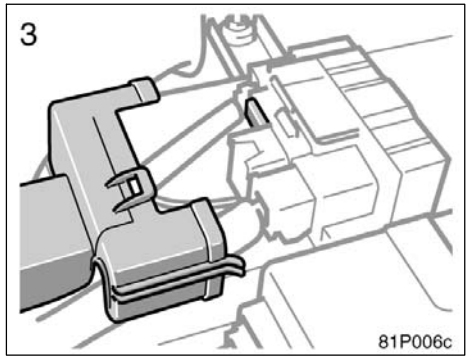

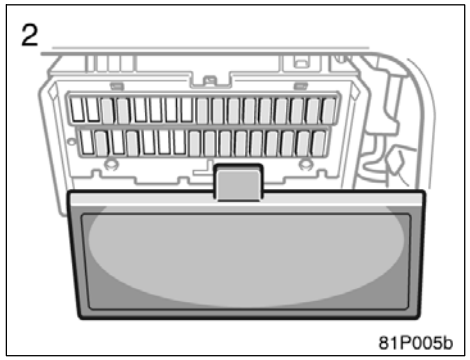

Do–it–yourself service precautions

If you perform maintenance by yourself, be sure to follow the correct procedure given in this Section.

You should be aware that improper or incomplete servicing may result in operating problems.

Performing do–it–yourself maintenance during the warranty period may affect your warranty coverage. Read the separate Toyota Warranty statement for details and suggestions.

This Section gives instructions only for those items that are relatively easy for an owner to perform. As explained in Section 7, there are still a number of items that must be done by a qualified technician with special tools.

For information on tools and parts for do–it–yourself maintenance, see “Parts and tools” on page 397.

Utmost care should be taken when working on your vehicle to prevent accidental injury. Here are a few precautions that you should be especially careful to observe:

⚠ CAUTION

- **When the hybrid system is on, keep hands, clothing, and tools away from the moving fan and engine drive belts. (Removing rings, watches, and ties is advisable.)**
- **Right after driving, the engine compartment—the engine, radiator, exhaust manifold and spark plug boots, etc.—will be hot. So be careful not to touch them. Oil, fluids and spark plugs may also be hot.**
- **If the hybrid system is hot, do not remove the radiator cap or loosen the drain plugs to prevent burning yourself.**
- **Do not leave anything that may burn easily, such as paper or rags, in the engine compartment.**
- **Do not smoke, cause sparks or allow open flames around fuel or the batteries. Their fumes are flammable.**
- **When the hybrid system is operating with the “READY” light on, the engine is automatically started in some case. When you inspect the engine compartment, be sure to press the “POWER” switch to the “OFF” mode.**
- **Do not get under your vehicle with just the body jack supporting it. Always use automotive jack stands or other solid supports.**
- **Be sure that the hybrid system is in the “OFF” mode if you work near the electric cooling fans or radiator grille. With the ignition on, the electric cooling fans will automatically start to run if the engine coolant temperature is high and/or the air conditioning is on.**
- **Use eye protection whenever you work on or under your vehicle where you may be exposed to flying or falling material, fluid spray, etc.**
- **Be extremely cautious when working on the batteries. It contains poisonous and corrosive sulfuric acid or strong alkali.**

- **Used engine oil contains potentially harmful contaminants which may cause skin disorders such as inflammation or skin cancer, so care should be taken to avoid prolonged and repeated contact with it. To remove used engine oil from your skin, wash thoroughly with soap and water.**
- **Do not leave used oil within the reach of children.**
- **Dispose of used oil and filter only in a safe and acceptable manner. Do not dispose of used oil and filter in household trash, in sewers or onto the ground. Call your dealer for information concerning recycling or disposal.**
- **Take care when filling the brake fluid reservoir because brake fluid can harm your eyes and damage painted surfaces. If fluid gets in your eyes, flush your eyes with clean water immediately. If you still feel uncomfortable with your eyes, go to the doctor.**

- **When servicing the vehicle with the smart entry and start system, be sure to keep the smart key away from the vehicle. If the key is left in the vehicle, the hybrid system may start by pressing the "POWER" switch with the brake pedal depressed.**

NOTICE

- ***Remember that batteries and ignition cable carry high currents or voltages. Be careful of accidentally causing a short circuit.***
- ***Add only "Toyota Super Long Life Coolant" or similar high quality ethylene glycol based non–silicate, non–amine, non–nitrite, and non–borate coolant with long–life hybrid organic acid technology to fill the radiator. "Toyota Super Long Life Coolant" is a mixture of 50% coolant and 50% deionized water (for the U.S.A.) or 55% coolant and 45% deionized water (for Canada).***
- ***If you spill some of the coolant, be sure to wash it off with water to prevent it from damaging the parts or paint.***
- ***Do not allow dirt or anything else to fall through the spark plug holes.***
- ***Do not pry the outer electrode of spark plug against the center electrode.***
- ***Use only spark plugs of the specified type. Using other types will cause engine damage, loss of performance or radio noise.***
- ***If the brake fluid is spilled on the vehicle, be sure to wash it off with water to prevent it damage to parts or paint.***
- ***Do not drive with the air cleaner filter removed, or excessive engine wear could result. Also backfiring could cause a fire in the engine compartment.***
- ***Be careful not to scratch the glass surface with the wiper frame.***
- ***When closing the hood, check to see that you have not forgotten any tools, rags, etc.***

Positioning the jack

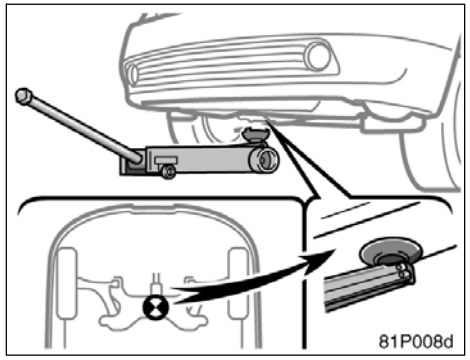

Front

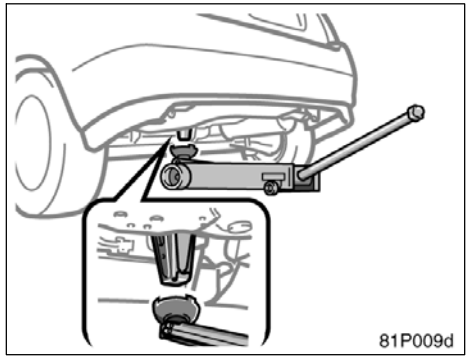

Rear

When jacking up your vehicle with the jack, position the jack correctly as shown in the illustrations.

⚠ CAUTION

When jacking, be sure to observe the following to reduce the possibility of personal injury:

- **Follow jacking instructions.**
- **Do not put any part of your body under the vehicle supported by the jack. Personal injury may occur.**
- **Do not start or run the engine while your vehicle is supported by the jack.**
- **Stop the vehicle on a level firm ground, firmly set the parking brake and put the transaxle in "P".**
- **Make sure to set the jack properly in the jack point. Raising the vehicle with jack improperly positioned will damage the vehicle or may allow the vehicle to fall off the jack and cause personal injury.**
- **Never get under the vehicle when the vehicle is supported by the jack alone.**
- **Do not raise the vehicle with someone in the vehicle.**
- **When raising the vehicle, do not place any objects on top of or underneath the jack.**

NOTICE

Make sure to place the jack correctly, or your vehicle may be damaged.

Parts and tools

Here is a list of parts and tools you will need to perform do–it–yourself maintenance. Remember all Toyota parts are designed in metric sizes, so your tools must be metric.

CHECKING THE ENGINE OIL LEVEL

Parts (if level is low):

- Engine oil ILSAC multigrade having viscosity proper for your climate

Tools:

- Rag or paper towel
- Funnel (only for adding oil)

CHECKING THE COOLANT LEVEL

Parts (if level is low):

- "Toyota Super Long Life Coolant" or similar high quality ethylene glycol based non–silicate, non–amine, non–nitrite, and non–borate coolant with long–life hybrid organic acid technology.

  "Toyota Super Long Life Coolant" is a mixture of 50% coolant and 50% deionized water (for the U.S.A.) or 55% coolant and 45% deionized water (for Canada).

Tools:

- Funnel (only for adding coolant)

CHECKING BRAKE FLUID

Parts (if level is low):

- SAE J1703 or FMVSS No.116 DOT 3 brake fluid

Tools:

- Rag or paper towel
- Funnel (only for adding fluid)

CHECKING 12 VOLT BATTERY CONDITION

Tools:

- Warm water
- Baking soda
- Grease
- Conventional wrench (for terminal clamp bolts)

CHECKING AND REPLACING FUSES

Parts (if replacement is necessary):

- Fuse with same amperage rating as original

ADDING WASHER FLUID

Parts:

- Water
- Washer fluid containing antifreeze (for winter use)

Tools:

- Funnel

REPLACING LIGHT BULBS

Parts:

- Bulb with same number and wattage rating as original (See charts in "Replacing light bulbs–" on page 418.)

Tools:

- Screwdriver

SECTION 8–2

DO–IT–YOURSELF MAINTENANCE

Engine and Chassis

Checking the engine oil level 400
Checking the coolant level 402
Checking the radiator and condenser 404
Checking brake fluid 404
Checking tire inflation pressure 405
Checking and replacing tires 407
Rotating tires 409
Installing snow tires and chains 410
Replacing wheels 411
Aluminum wheel precautions 412

Checking the engine oil level

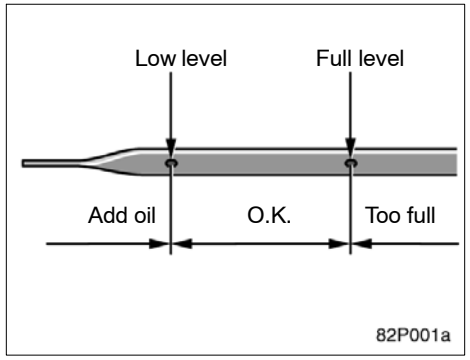

With the hybrid system at operating temperature and turned off, check the oil level on the dipstick.

1. To get a correct reading, the vehicle should be on level ground. After turning off the hybrid system, wait a few minutes for the oil to drain back into the bottom of the engine.
2. Pull the dipstick out, hold the rag under the end and wipe it clean.
3. Reinsert the dipstick—push it in as far as it will go, or the reading will not be correct.
4. Pull the dipstick out and look at the oil level while holding a rag under the end.

⚠ CAUTION

Be careful not to touch the hot exhaust manifold.

NOTICE

Be careful not to drop engine oil on the vehicle components.

If the oil level is below or only slightly above the low level, add engine oil of the same type as already in the engine.

Remove the oil filler cap and add engine oil in small quantities at a time, checking the dipstick. We recommend that you use a funnel when adding oil.

The approximate quantity of oil needed to raise the level between low and full on the dipstick is indicated as follows:

1.5 L (1.6 qt., 1.3 Imp.qt.)

For the engine oil capacity, see “Service specifications” on page 427.

When the level reaches within the correct range, install the filler cap hand–tight.

NOTICE

- ***Be careful not to spill engine oil on the vehicle components.***
- ***Avoid overfilling, or the hybrid system could be damaged.***
- ***Check the oil level on the dipstick once again after adding the oil.***

ENGINE OIL SELECTION

"Toyota Genuine Motor Oil" is used in your Toyota vehicle. Use Toyota approved "Toyota Genuine Motor Oil" or equivalent to satisfy the following grade and viscosity.

Oil grade:

ILSAC multigrade engine oil

Recommended viscosity:
SAE 5W–30

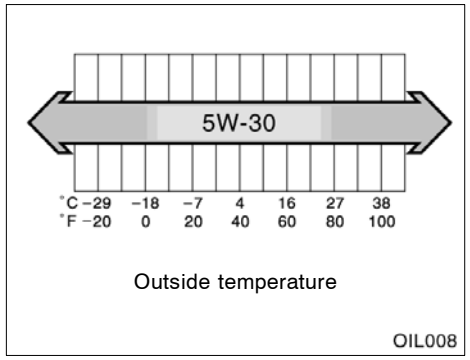

SAE 5W–30 is the best choice, for good fuel economy, and good starting in cold weather.

If SAE 5W–30 oil is not available, SAE 10W–30 oil may be used. However, it should be replaced with SAE 5W–30 at the next oil change.

API-02

Oil identification mark

The ILSAC (International Lubricant Standardization and Approval Committee) Certification Mark is added to some oil containers to help you select the oil you should use.

To ensure excellent lubrication performance for your engine, “Toyota Genuine Motor Oil” is available, which has been specifically tested and approved for all Toyota engines.
Please contact your Toyota dealer for further details about “Toyota Genuine Motor Oil”.

Checking the coolant level

⚠ CAUTION

The coolant heat storage tank reaches high temperature inside. It is dangerous if hot coolant is discharged when replacing. For replacement of the coolant, contact your Toyota dealer.

Look at the see–through coolant reservoir when the hybrid system is cold. The coolant level is satisfactory if it is between the “FULL” and “LOW” lines on the reservoir. If the level is low, add the coolant. (For the coolant type, see “Coolant type selection” described below.)

The coolant level in the reservoir will vary with hybrid system temperature. However, if the level is on or below the “LOW” line, add coolant. Bring the level up to the “FULL” line.

If the coolant level drops within a short time after replenishing, there may be a leak in the system. Visually check the radiator, hoses, radiator cap and drain cock and water pump.

If you can find no leak, have your Toyota dealer test the cap pressure and check for leaks in the cooling system.

⚠ CAUTION

To prevent burning yourself, do not remove the radiator cap when the engine is hot.

Coolant type selection

Use of improper coolants may damage your cooling system.

Only use “Toyota Super Long Life Coolant” or similar high quality ethylene glycol based non–silicate, non–amine, non–nitrite, and non–borate coolant with long–life hybrid organic acid technology. (Coolant with long–life hybrid organic acid technology is a combination of low phosphates and organic acids.)

For the U.S.A.—“Toyota Super Long Life Coolant” is a mixture of 50% coolant and 50% deionized water. This coolant provides protection down to about –35°C (–31°F).

For Canada—“Toyota Super Long Life Coolant” is a mixture of 55% coolant and 45% deionized water. This coolant provides protection down to about –42°C (–44°F).

NOTICE

Do not use plain water alone.

Toyota recommends “Toyota Super Long Life Coolant”, which has been tested to ensure that it will not cause corrosion nor result in malfunction of your coolant system with proper usage. “Toyota Super Long Life Coolant” is formulated with long–life hybrid organic acid technology and has been specifically designed to avoid cooling system malfunction on Toyota vehicles.

Please contact your Toyota dealer for further details.

Checking the radiator and condenser

If either of the above parts is extremely dirty or you are not sure of their condition, take your vehicle to a Toyota dealer.

⚠ CAUTION

To prevent burning yourself, be careful not to touch the radiator or condenser when the engine is hot.

NOTICE

To prevent damage to the radiator and condenser, do not perform the work by yourself.

Checking brake fluid

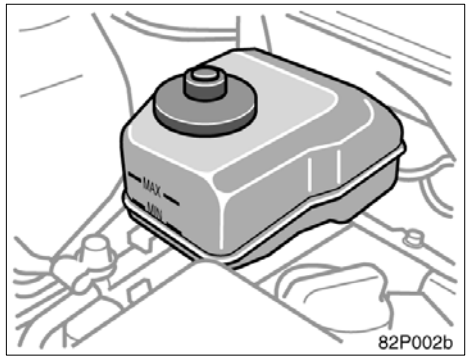

To check the fluid level, simply look at the see–through reservoir. The level should be between the "MAX" and "MIN" lines on the reservoir.

It is normal for the brake fluid level to go down slightly as the brake pads wear or when the fluid level in the accumulator is high.

If the level is low, take your vehicle to a Toyota dealer as soon as possible. Do not drive if the red brake system warning light is on. Call a Toyota dealer for assistance.

If the fluid level goes down soon after your vehicle is serviced, it may indicate a serious mechanical problem.

⚠ CAUTION

Brake fluid can harm your hands or eyes. If fluid gets on your hands or in your eyes, flush the affected area with clean water immediately. If you still feel uncomfortable with your hands or eyes, go to the doctor.

NOTICE

If you spill some of the fluid, be sure to wipe it off to prevent it from damaging the parts or paintwork.

Checking tire inflation pressure

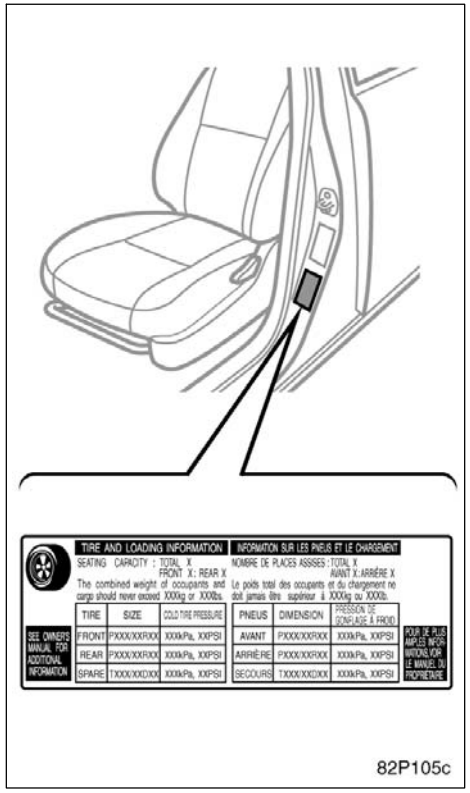

Keep your tire inflation pressures at the proper level.

The recommended cold tire inflation pressures, tire sizes and the combined weight of occupants and cargo (vehicle capacity weight) are described on pages 426 and 429. They are also described on the tire and loading information label as shown.

You should check the tire inflation pressure every two weeks, or at least once a month. And do not forget the spare!

The following instructions for checking tire inflation pressure should be observed:

- **The pressure should be checked only when the tires are cold.** If your vehicle has been parked for at least 3 hours and has not been driven for more than 1.5 km or 1 mile since, you will get an accurate cold tire inflation pressure reading.
- **Always use a tire inflation pressure gauge.** The appearance of a tire can be misleading. Besides, tire inflation pressures that are even just a few pounds off can degrade ride and handling.
- **Take special care when adding air to the compact spare tire.** The smaller tire size can gain pressure very quickly. Add compressed air in small quantities and check the pressure often until it reaches the specified pressure.
- **Do not bleed or reduce tire inflation pressure after driving.** It is normal for the tire inflation pressure to be higher after driving.
- **Never exceed the vehicle capacity weight.** Passenger and luggage weight should be located so that the vehicle is balanced.

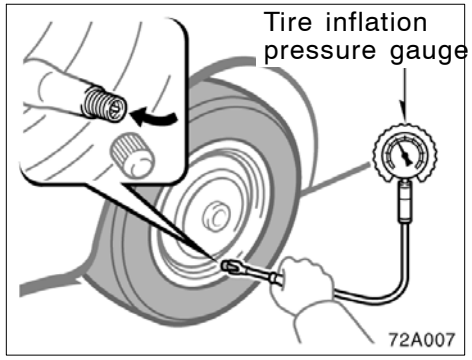

INSPECTION AND ADJUSTMENT PROCEDURE

1. Remove the tire valve cap.
2. Press the tip of the tire inflation pressure gauge to the tire valve.
3. Read the pressure using the graduations of the gauge.
4. In case the tire inflation pressure is not within the prescribed range, insert the compressed air from the valve. In case of applying too much air, press the center of the valve and release the air to adjust.
5. After completing the tire inflation pressure measurement and adjustment, apply soapy water to the valve and check for leakage.
6. Install the tire valve cap.

If a gauge and air pump are not available, have your vehicle checked by your Toyota dealer.

⚠ CAUTION

Be sure to reinstall the tire valve caps. Without the valve caps, dirt or moisture could get into the valve core and cause air leakage. If the caps have been lost, have new ones put on as soon as possible.

Incorrect tire inflation pressure may waste fuel, reduce the comfort of driving, reduce tire life and make your vehicle less safe to drive.

If a tire frequently needs refilling, have it checked by your Toyota dealer.

⚠ CAUTION

Keep your tires properly inflated. Otherwise, the following conditions may occur and cause an accident resulting in death or serious injuries.

Low tire pressure (underinflation)—

- **Excessive wear**
- **Uneven wear**
- **Poor handling**
- **Possibility of blowouts from an overheated tire**
- **Poor sealing of the tire bead**
- **Wheel deformation and/or tire separation**
- **A greater possibility of tire damage from road hazards**

High tire pressure (overinflation)—

- **Poor handling**
- **Excessive wear**
- **Uneven wear**
- **A greater possibility of tire damage from road hazards**

Checking and replacing tires

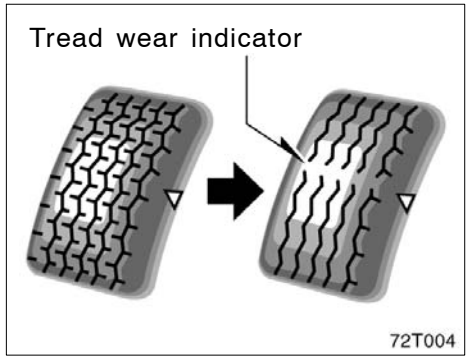

CHECKING YOUR TIRES

Check the tire's tread for tread wear indicators. If the indicators show, replace the tires. The location of tread wear indicators is shown by the "TWI" or "Δ" marks, etc., molded on the sidewall of each tire.

The tires on your Toyota have built–in tread wear indicators to help you know when the tires need replacement. When the tread depth wears to 1.6 mm (0.06 in.) or less, the indicators will appear. If you can see the indicators in two or more adjacent grooves, the tire should be replaced. The lower the tread, the higher the risk of skidding.

The effectiveness of snow tires is lost if the tread wears down below 4 mm (0.16 in.).

If you have tire damage such as cuts, splits, cracks deep enough to expose the fabric, or bulges indicating internal damage, the tire should be replaced.

If a tire often goes flat or cannot be properly repaired due to the size or location of a cut or other damage, it should be replaced. If you are not sure, consult with your Toyota dealer.

If air loss occurs while driving, do not continue driving. Driving even a short distance can damage a tire beyond repair.

Any tires which are over 6 years old must be checked by a qualified technician even if damage is not obvious.

Tires deteriorate with age even if they have never or seldom been used.

This applies also to the spare tire and tires stored for future use.

REPLACING YOUR TIRES

When replacing a tire, use a tire of the same size and construction, and the same or greater load capacity as the originally installed tires.

Using any other size or type of tire may seriously affect handling, ride, speedometer/odometer calibration, ground clearance, and clearance between the body and tires or snow chains.

Check that the maximum load of the replaced tire is greater than 1/2 of the Gross Axle Weight Ratings (GAWR) of either the front axle or the rear axle, whichever is greater. As for the maximum load of the tire, see the load limit at maximum cold tire inflation pressure mentioned on the sidewall of the tire, and as for the Gross Axle Weight Ratings (GAWR), see the Certification Label. For details about the sidewall of the tire and the Certification Label, see pages 332 and 330.

⚠ CAUTION

Observe the following instructions. Otherwise, an accident may occur resulting in death or serious injuries.

- **Do not mix radial, bias belted, or bias–ply tires on your vehicle, as this may cause dangerous handling characteristics resulting in loss of control.**
- **Do not use tires other than the manufacturer's recommended size, as this may cause dangerous handling characteristics resulting in loss of control.**

Toyota recommends all four tires, or at least both front or rear tires be replaced at a time as a set.

See "If you have a flat tire" on page 361 for tire change procedure.

When a tire is replaced, the wheel should always be balanced.

An unbalanced wheel may affect vehicle handling and tire life. Wheels can get out of balance with regular use and should therefore be balanced occasionally.

When replacing a tubeless tire, the air valve should also be replaced with a new one.

Rotating tires

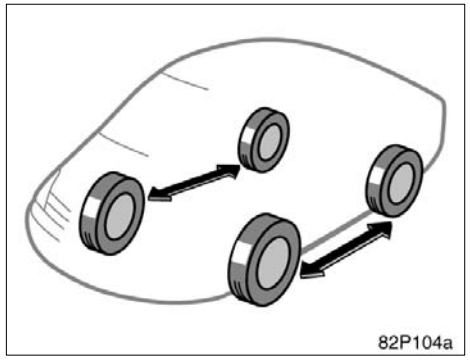

To equalize tire wear and help extend tire life, Toyota recommends that you rotate your tires according to the maintenance schedule. (For scheduled maintenance information, please refer to the "Scheduled Maintenance Guide" or "Owner's Manual Supplement".) However, the most appropriate timing for tire rotation may vary according to your driving habits and road surface conditions.

The wheel assemblies must be rotated as illustrated above.

When rotating tires, check for uneven wear and damage. Abnormal wear is usually caused by incorrect tire inflation pressure, improper wheel alignment, out–of–balance wheels, or severe braking.

⚠ CAUTION

Do not include a compact spare tire when rotating the tires. It is designed for temporary use only.

Installing snow tires and chains

WHEN TO USE SNOW TIRES OR CHAINS

Snow tires or chains are recommended when driving on snow or ice.

On wet or dry roads, conventional tires provide better traction than snow tires.

SNOW TIRE SELECTION

If you need snow tires, select tires of the same size, construction and load capacity as the originally installed tires.

Do not use tires other than those mentioned above. Do not install studded tires without first checking local regulations for possible restrictions.

⚠ CAUTION

Do not use snow tires other than the manufacturer's recommended size, as this may cause dangerous handling characteristics resulting in loss of control. Otherwise, an accident may occur resulting in death or serious injuries.

SNOW TIRE INSTALLATION

Snow tires should be installed on all wheels.

Installing snow tires on the front wheels only can lead to an excessive difference in road grip capability between the front and rear tires which could cause loss of vehicle control.

When storing removed tires, you should store them in a cool dry place.

Mark the direction of rotation and be sure to install them in the same direction when replacing.

⚠ CAUTION

- **Do not drive with the snow tires incorrectly inflated.**
- **Never drive over 120 km/h (75 mph) with any type of snow tires.**

TIRE CHAIN SELECTION

Regulations regarding the use of tire chains vary according to location or type of road, so always check local regulations before installing chains.

Use SAE Class "S" type radial tire chains, with the exception of radial cable chains or V–bar type chains.

CHAIN INSTALLATION

Install the chains on the front tires as tightly as possible. Do not use tire chains on the rear tires. Retighten chains after driving 0.5 – 1.0 km (1/4 – 1/2 mile).

When installing chains on your tires, carefully follow the instructions of the chain manufacturer.

If wheel covers are used, they will be scratched by the chain band, so remove the covers before putting on the chains.

CAUTION

- **Do not exceed 50 km/h (30 mph) or the chain manufacturer's recommended speed limit, whichever is lower.**
- **Drive carefully avoiding bumps, holes, and sharp turns, which may cause the vehicle to bounce.**
- **Avoid sharp turns or locked–wheel braking, as use of chains may adversely affect vehicle handling.**
- **When driving with chains installed, be sure to drive carefully. Slow down before entering curves to avoid losing control of the vehicle. Otherwise an accident may occur.**

NOTICE

Do not attempt to use a tire chain on the compact spare tire, as it may result in damage to the vehicle as well as the tire.

Replacing wheels

WHEN TO REPLACE YOUR WHEELS

If you have wheel damage such as bending, cracks or heavy corrosion, the wheel should be replaced.

If you fail to replace a damaged wheel, the tire may slip off the wheel or cause loss of handling control.

WHEEL SELECTION

When replacing wheels, care should be taken to ensure that the wheels are replaced by ones with the same load capacity, diameter, rim width, and offset.

This must be observed on compact spare tire, too.

Correct replacement wheels are available at your Toyota dealer.

A wheel of a different size or type may adversely affect handling, wheel and bearing life, brake cooling, speedometer/odometer calibration, stopping ability, headlight aim, bumper height, vehicle ground clearance, and tire or snow chain clearance to the body and chassis.

Replacement with used wheels is not recommended as they may have been subjected to rough treatment or high mileage and could fail without warning. Also, bent wheels which have been straightened may have structural damage and therefore should not be used. Never use an inner tube in a leaking wheel which is designed for a tubeless tire.

Aluminum wheel precautions

- When installing aluminum wheels, check that the wheel nuts are tight after driving your vehicle the first 1600 km (1000 miles).
- If you have rotated, repaired, or changed your tires, check that the wheel nuts are still tight after driving 1600 km (1000 miles).
- When using tire chains, be careful not to damage the aluminum wheels.
- Use only Toyota wheel nuts and wrench designed for your aluminum wheels.
- When balancing your wheels, use only Toyota balance weights or equivalent and a plastic or rubber hammer.
- As with any wheel, periodically check your aluminum wheels for damage. If damaged, replace immediately.

SECTION 8–3

DO–IT–YOURSELF MAINTENANCE

Electrical components

Checking 12 volt battery condition 414
12 volt battery recharging precautionss 416
Checking and replacing fuses 416
Adding washer fluid 418
Replacing light bulbs 418

Checking 12 volt battery condition—
—Precautions

⚠ CAUTION

12 VOLT BATTERY PRECAUTIONS

When the 12 volt battery must be replaced, use the Prius designated battery.

The 12 volt battery produces flammable and explosive hydrogen gas.

- **Do not cause a spark from the battery with tools.**
- **Do not smoke or light a match near the battery.**

The electrolyte contains poisonous and corrosive sulfuric acid.

- **Avoid contact with eyes, skin or clothes.**
- **Never ingest electrolyte.**
- **Wear protective safety glasses when working near the battery.**
- **Keep children away from the battery.**

EMERGENCY MEASURES

- **If electrolyte gets in your eyes, flush your eyes with clean water and get immediate medical attention. If possible, continue to apply water with a sponge or cloth while en route to the medical office.**
- **If electrolyte gets on your skin, thoroughly wash the contact area. If you feel pain or burn, get medical attention immediately.**
- **If electrolyte gets on your clothes, there is a possibility of its soaking through to your skin, so immediately take off the exposed clothing and follow the procedure above, if necessary.**
- **If you accidentally swallow electrolyte, drink a large quantity of water or milk. Follow with milk of magnesia, beaten raw egg or vegetable oil. Then go immediately for emergency help.**

—Checking 12 volt battery exterior

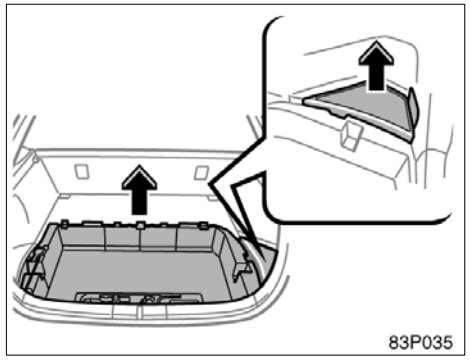

Open the back door. Remove the luggage storage box and 12 volt battery cover.

If the back door does not open, see “If you cannot operate back door opener” on page 376.

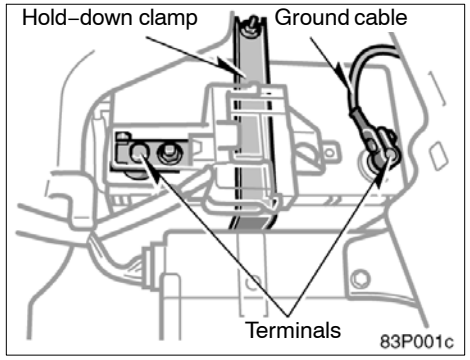

Check the battery for corroded or loose terminal connections, cracks, or loose hold–down clamp.

a. If the battery is corroded, wash it off with a solution of warm water and baking soda. Coat the outside of the terminals with grease to prevent further corrosion.

b. If the terminal connections are loose, tighten their clamp nuts—but do not overtighten.

c. Tighten the hold–down clamp only enough to keep the battery firmly in place. Overtightening may damage the battery case.

NOTICE

- ***Be sure the hybrid system and all accessories are off before performing maintenance.***
- ***When checking the battery, remove the ground cable from the negative terminal ("–" mark) first and reinstall it last.***
- ***Be careful not to cause a short circuit with tools.***
- ***Take care no solution gets into the battery when washing it.***

If the 12 volt battery is disconnected or run down, the power window and back door may not operate automatically and the jam protection function will not function correctly and does not open the back door after you reconnect, replace or recharge the battery. In any of these cases, you should normalize each system. To normalize them, see "Power windows" on page 43 and "Back door" on page 42.

Before you disconnect the 12 volt battery, confirm the shift position is "P" and apply the parking brake completely.

After you reconnect the 12 volt battery, shift the shift lever to "N" and confirm the shift position is "N" when the "IG–ON" mode is enabled.

After connecting the cables, the hybrid system may not start by pushing the "POWER" switch. In that case, push it once again.

12 volt battery recharging precautions

During recharging, the battery is producing hydrogen gas.

Therefore, before recharging:

1. If recharging with the battery installed on the vehicle, be sure to disconnect the ground cable.
2. Make sure the power switch on the recharger is off when connecting the charger cables to the battery and when disconnecting them.

⚠ CAUTION

- **Always charge the battery in an unconfined area. Do not charge the battery in a garage or closed room where there is not sufficient ventilation.**
- **Only do a slow charge (3.5A or less). Charging at a quicker rate is dangerous. The battery may explode, causing personal injuries.**

NOTICE

Never recharge the battery with the hybrid system on. Also, be sure all accessories are turned off.

Checking and replacing fuses

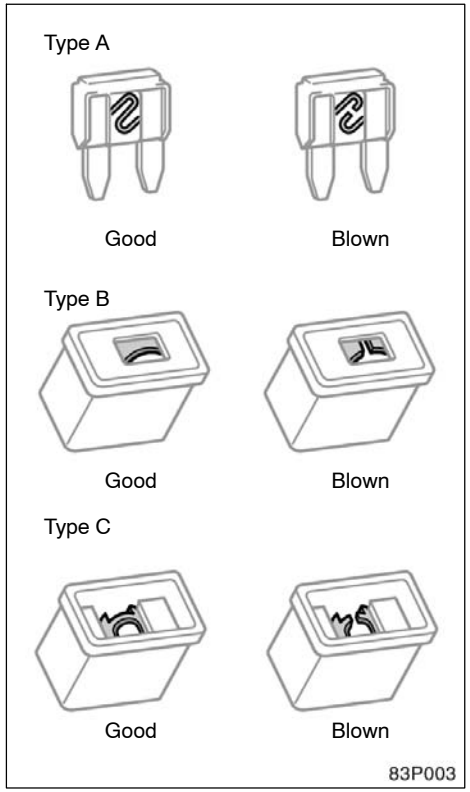

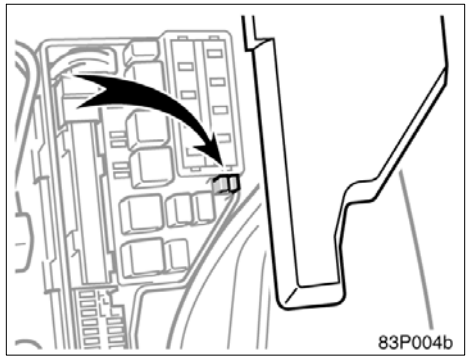

If the headlights or other electrical components do not work, check the fuses. If any of the fuses are blown, they must be replaced.

See “Fuse locations” on page 393 for locations of the fuses.

Turn the hybrid system and inoperative component off. Pull the suspected fuse straight out and check it.

Determine which fuse may be causing the problem. The lid of the fuse box shows the name of the circuit for each fuse. See page 430 for the functions controlled by each circuit.

Type A fuses can be pulled out by the pull–out tool. The location of the pull–out tool is shown in the illustration.

If you are not sure whether the fuse has blown, try replacing the suspected fuse with one that you know is good.

If the fuse has blown, push a new fuse into the clip.

Only install a fuse with the amperage rating designated on the fuse box lid.

If you do not have a spare fuse, in an emergency you can pull out the “DOME” or “OBDII” fuse, which may be dispensable for normal driving, and use it if its amperage rating is the same.

If you cannot use one of the same amperage, use one that is lower, but as close to the rating as possible. If the amperage is lower than that specified, the fuse might blow out again. but this does not indicate anything wrong. Be sure to get the correct fuse as soon as possible and return the substitute to its original clip.

It is a good idea to purchase a set of spare fuses and keep them in your vehicle for emergencies.

If the new fuse immediately blows out, there is a problem with the electrical system. Have your Toyota dealer correct it as soon as possible.

⚠ CAUTION

Never use a fuse with a higher amperage rating, or any other object, in place of a fuse. This may cause extensive damage and possibly a fire.

Adding washer fluid

If any washer does not work, the washer tank may be empty. Add washer fluid.

You may use plain water as washer fluid. However, in cold areas where temperatures range below the freezing point, use washer fluid containing antifreeze. This product is available at your Toyota dealer and most auto parts stores. Follow the manufacturer's directions for how much to mix with water.

NOTICE

Do not use engine antifreeze or any other substitute because it may damage your vehicle's paint.

Replacing light bulbs—

The following illustrations show how to gain access to the bulbs. When replacing a bulb, make sure the hybrid system and light switch are off. Use bulbs with the wattage ratings given in the table.

The stop lights and high mounted stoplight consist of a number of LEDs. If any of LEDs burn out, take your vehicle to your Toyota dealer to have the light replaced.

If two or more LEDs in a stop light burn out, your vehicle may not conform to local laws (SAE).

⚠ CAUTION

- **To prevent burning yourself, do not replace the light bulbs while they are hot.**
- **Halogen bulbs have pressurized gas inside and require special handling. They can burst or shatter if scratched or dropped. Hold a bulb only by its plastic or metal case. Do not touch the glass part of a bulb with bare hands.**

Vehicles with discharge headlights—

- **Do not touch the high–intensity discharge headlight's high voltage socket when the headlights are turned on. An extremely high voltage of 20,000V will be discharged and could result in serious injury or death by electric shock.**
- **Do not attempt to take apart or repair the headlight bulbs, connectors, power supply circuits, or related components. Doing so could result in electric shock and serious injury or death. Call your Toyota dealer for headlight repair or servicing, including replacement of bulbs and bulb disposal.**

NOTICE

Only use a bulb of the listed type.

The inside of the lens of exterior lights such as headlights may temporarily fog up when the lense becomes wet in the rain or in a car wash. This is not a problem because the fogging is caused by the temperature difference between the outside and inside of the lense, just like the windshield fogs up in the rain. However, if there is a large drop of water on the inside of the lense, or if there is water pooled inside the light, contact your Toyota dealer.

Light bulbs	Bulb No.	W	Type
Headlights			
Discharge headlights	—	35	A
Halogen headlights	—	60/55	B
Front fog lights	9006	51	C
Parking lights	—	5	D
Front turn signal lights	—	21	D
Rear turn signal lights	—	21	D
Tail lights	—	5	D
Stop lights	—	4.4	F
High mounted stop-light	—	2.8	F
Back-up lights	7440	21	D
License plate lights	—	5	D
Interior lights	—	8	E
Personal lights	—	5	D
Door courtesy lights	—	5	D
Vanity lights	—	5	E
Luggage compart-ment light	—	5	E

A: D4R Discharge bulbs
B: HB2 Halogen bulbs
C: HB4 Halogen bulbs
D: Wedge base bulbs
E: Double end bulbs
F: LEDs (Light-emitting Diodes)

—Headlights

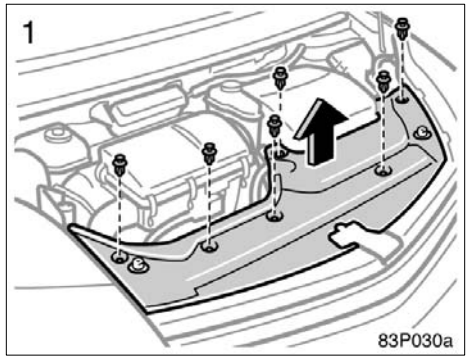

1. Open the hood. Remove the clips and take out the cover.

Remove and install the clips as shown in the following illustrations.

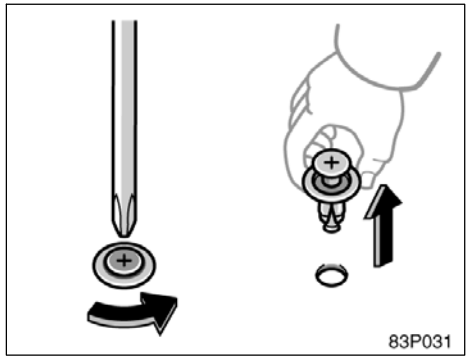

Removing clip

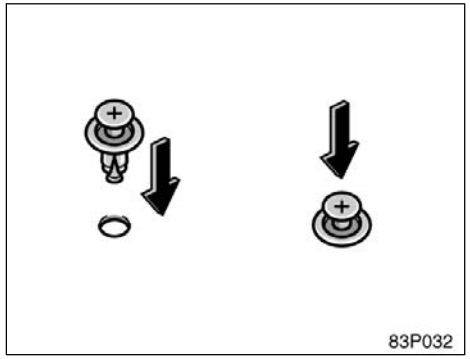

Installing clip

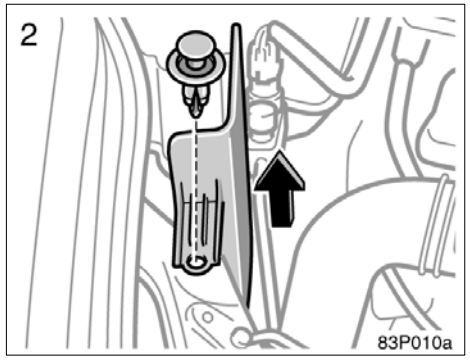

2. RIGHT–HAND HEADLIGHT ONLY: Remove the clip and take out the air cleaner inlet.

Remove and install the clip as shown in the following illustrations.

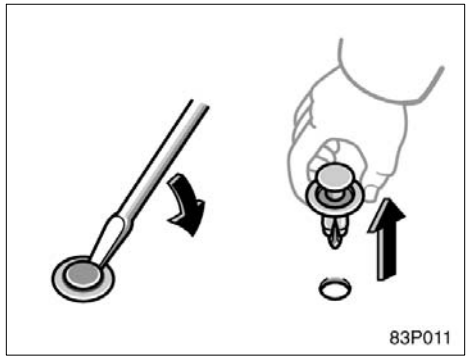

Removing clip

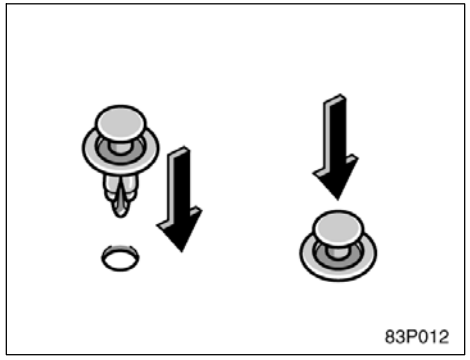

Installing clip

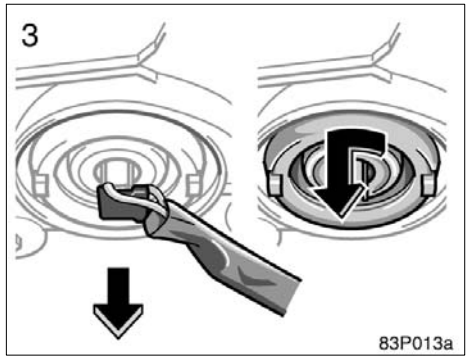

3. Unplug the connector. Turn the bulb cover counter–clockwise and remove it.

If the connector is tight, wiggle it.

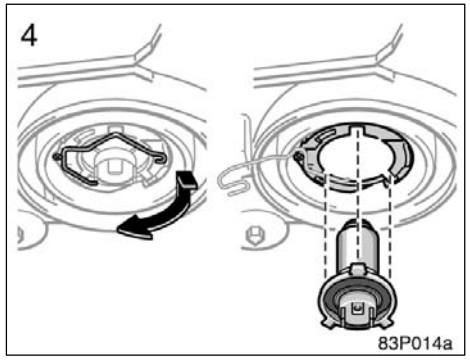

4. Release the bulb retaining spring and remove the bulb along with the socket. Install a new bulb into the socket and return the bulb retaining spring to its original position.

To install a bulb, align the tabs of the bulb with the cutout of the mounting hole.

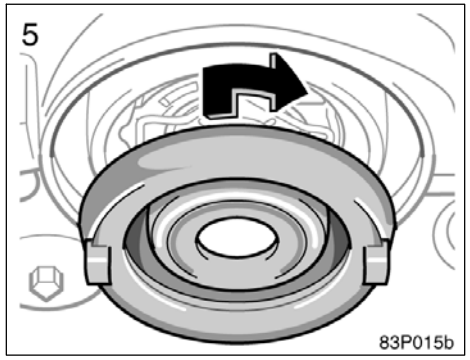

5. Install the bulb cover and turn it clockwise. Plug in the connector.

—Front fog lights

If either the left or right front fog lights burns out, contact your Toyota dealer.

NOTICE
Do not try to replace the front fog light bulbs by yourself. You may damage the vehicle.

—Parking lights

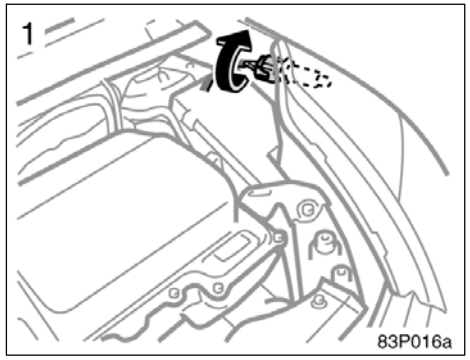

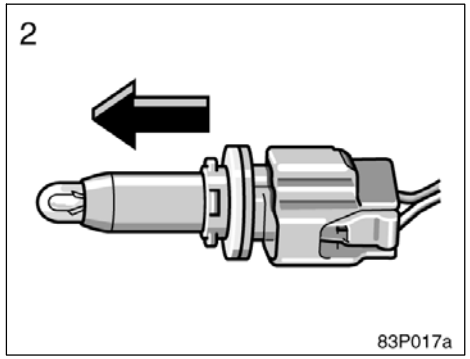

—Front turn signal lights

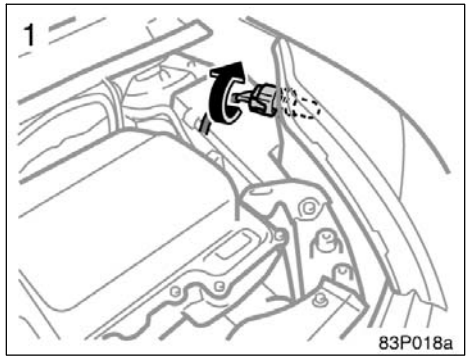

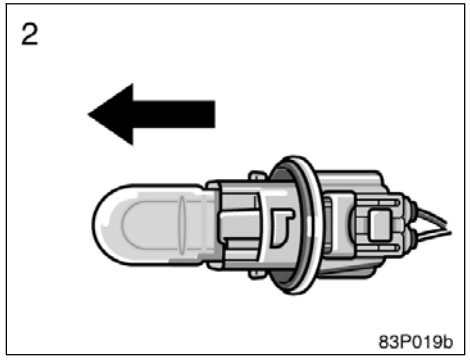

—Rear turn signal, tail and back-up lights

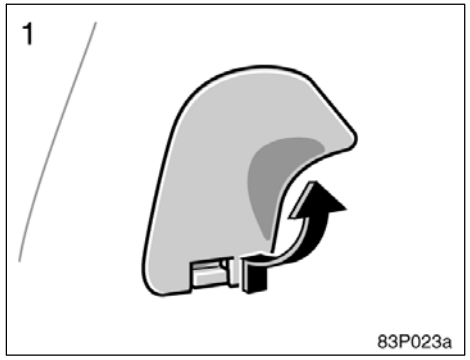

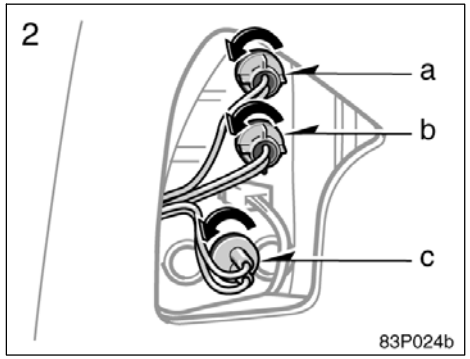

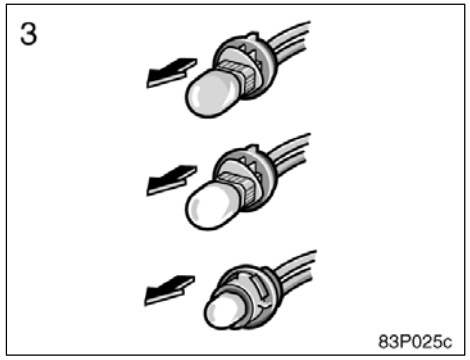

a: Rear turn signal light
b: Back-up light
c: Tail light

—License plate lights

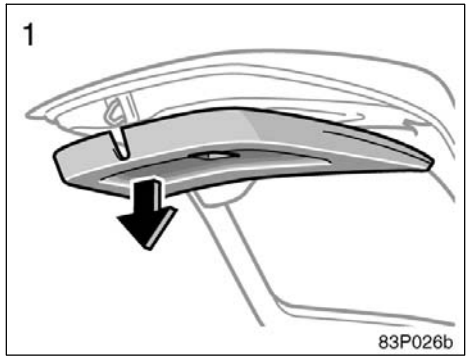

Remove the cover.

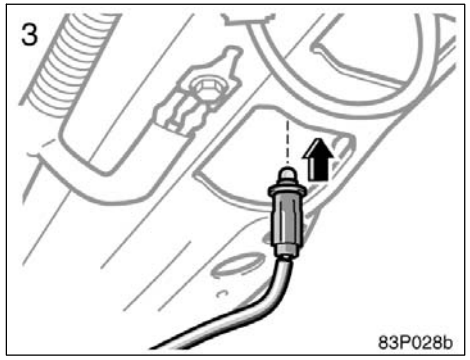

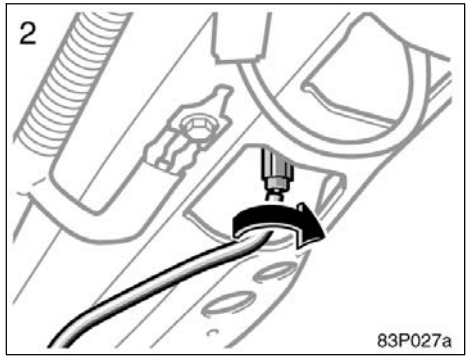

SECTION 9

SPECIFICATIONS

Dimensions and weight 426
Electric motor 426
Enginee 426
Fuel 427
Hybrid battery 427
Service specifications 427
Tires 429
Fuses 430

Dimensions and weight

Overall length	mm (in.)	4445	(175.0)
Overall width	mm (in.)	1725	(67.9)
Overall height	mm (in.)	1490	(58.7)*
Wheelbase	mm (in.)	2700	(106.3)
Front tread	mm (in.)	1505	(59.3)
Rear tread	mm (in.)	1480	(58.3)
Vehicle capacity weight (occupants + luggage)	kg (lb.)	365	(810)

*: Unladen vehicle

Electric motor

Type: Permanent magnet synchronous motor (water cooling)

Maximum output:
50/1200 – 1540 kW/rpm

Maximum torque:
400/0 – 1200 N·m/rpm

Engine

Model: 1.5 L 4–cylinder (1NZ–FXE)

Type: 4–cylinder in line, 4 cycle, gasoline

Bore and stroke, mm (in.):
75.0 x 84.7 (2.95 x 3.33)

Displacement, cm^3 (cu. in.):
1497 (91.4)

Fuel

Fuel type:
Unleaded gasoline, Octane Rating 87 (Research Octane Number 91) or higher

Fuel tank capacity, L (gal., Imp.gal.):
45 (11.9, 9.9)

Hybrid battery

Type: Nickel–Metal hydride battery

Voltage: 7.2 V

Capacity: 6.5 Ah (3HR)

Quantity: 28

Overall voltage: 201.6 V

Service specifications

ENGINE

Valve clearance (engine cold), mm (in.):

Intake	0.17 – 0.23 (0.007 – 0.009)
Exhaust	0.27 – 0.33 (0.011 – 0.013)

Spark plug type:

DENSO	SK16R11
NGK	IFR5A11

Spark plug gap, mm (in.):
1.1 (0.043)

ENGINE LUBRICATION

Oil capacity (drain and refill), L (qt., Imp.qt.):

With filter	3.7 (3.9, 3.3)
Without filter	3.4 (3.6, 3.0)

“Toyota Genuine Motor Oil” is used in your Toyota vehicle. Use Toyota approved “Toyota Genuine Motor Oil” or equivalent to satisfy the following grade and viscosity.

Oil grade:

ILSAC multigrade engine oil

Recommended oil viscosity:

SAE 5W−30

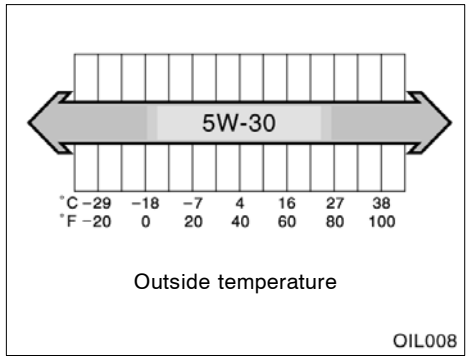

Please contact your Toyota dealer for further details.

COOLING SYSTEM

Total capacity, L (qt., Imp.qt.):

For gasoline engine	8.6	(9.0, 7.5)
For electric motor and inverter and converter	2.7	(2.9, 2.4)

Coolant type:

“Toyota Super Long Life Coolant” is used in your Toyota vehicle at factory fill. In order to avoid technical problems, only use “Toyota Super Long Life Coolant” or similar high quality ethylene glycol based non−silicate, non−amine, non−nitrite, and non−borate coolant with long−life hybrid organic acid technology. (Coolant with long−life hybrid organic acid technology is a combination of low phosphates and organic acids.)

Do not use plain water alone.

Please contact your Toyota dealer for further details.

12 VOLT BATTERY

Open voltage at 20°C (68°F):

12.6 – 12.8 V	Fully charged
12.2 – 12.4 V	Half charged
11.5 – 11.9 V	Discharged

[Voltage that is checked 20 minutes after the key is removed with all the lights turned off]

Charging rates: 3.5 A max.

HYBRID TRANSAXLE

Fluid capacity (drain and refill), L (qt., Imp.qt.):
3.6 (3.8, 3.2)

Fluid type:
"Toyota Genuine ATF WS" or equivalent

Please contact your Toyota dealer for further details.

BRAKES

Minimum pedal clearance when depressed with the force of 196 N (20 kgf, 44 lbf) with the traction motor running, mm (in.):
101.0 (3.98)

Pedal free play, mm (in.):
1 – 4 (0.04 – 0.16)

Parking brake adjustment when depressed with the force of 294 N (30 kgf, 66 lbf):
6 – 9 clicks

Fluid type:
SAE J1703 or FMVSS No. 116 DOT 3

STEERING

Wheel free play:
Less than 30 mm (1.2 in.)

Tires

Tire size and inflation pressure:

Tire size	kPa (kgf/cm^2 or bar, psi)
Standard	
Front	
P185/65R15 86S	240 (2.4, 35)
Rear	
P185/65R15 86S	230 (2.3, 33)
Spare	
T125/70D16 96M	420 (4.2, 60)

Wheel size:

Standard	15 x 6JJ
Spare	16 x 4T

Wheel nut torque, N·m (kgf·m, ft·lbf):
103 (10.5, 76)

NOTE: For a complete information on tires (e.g. replacing tires or replacing wheels), see "Checking tire inflation pressure" through "Aluminum wheel precautions", page 405 through 412.

Fuses

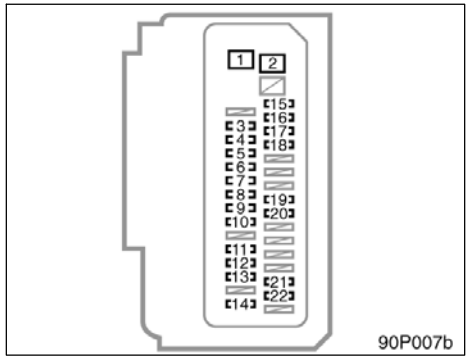

Instrument panel

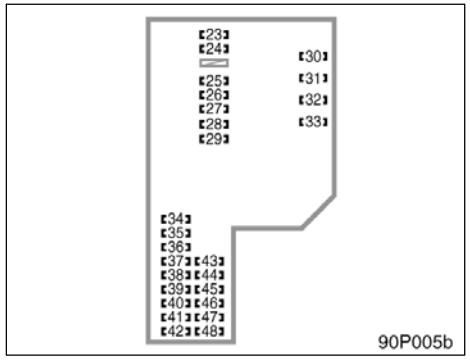

Engine compartment

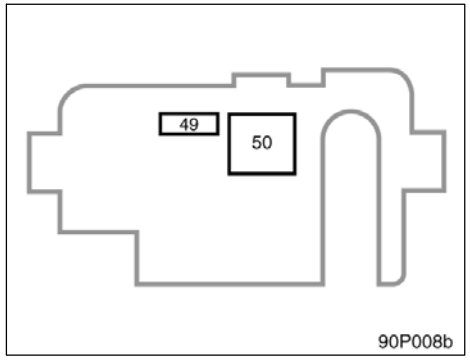

Luggage compartment

1. **PWR 30 A:** Power windows
2. **DEF 40 A:** Rear window defogger
3. **M/HTR 15 A:** Outside rear view mirror heater
4. **WIP 30 A:** Windshield wiper
5. **RR WIP 15 A:** Rear wiper
6. **WSH 20 A:** Washer
7. **ECU–IG 7.5 A:** Smart entry and start system, power windows, multi–information display, electric power steering, theft deterrent system
8. **GAUGE 10 A:** Gauge and meter, back–up lights, emergency flasher, power windows
9. **OBD 7.5 A:** On–board diagnosis system
10. **STOP 7.5 A:** Stop lights
11. **DOOR 25 A:** Power door lock system
12. **ACC–B 25 A:** “POWER OUTLET”, “ACC” fuses
13. **ECU–B 15 A:** Multi–information display, power windows, air conditioning system
14. **AM1 7.5 A:** Hybrid system
15. **TAIL 10 A:** Tail lights, license plates light, parking lights
16. **PANEL 7.5 A:** Multi–information display, clock, audio system, instrument panel lights
17. **A/C (HTR) 10 A:** Air conditioning system
18. **FR DOOR 20 A:** Power windows
19. **PWR OUTLET 15 A:** Power outlet
20. **ACC 7.5 A:** Audio system, multi–information display, clock
21. **PWR OUTLET FR 15 A:** Power outlet

22. **IGN 7.5 A:** Hybrid system, hybrid vehicle immobilizer system, SRS airbags
23. **SPARE 30 A:** Spare
24. **SPARE 15 A:** Spare
25. **DRL 7.5 A:** Daytime running light system
26. **H–LP LO RH 15 A (Vehicles with discharged headlight) or 10 A (Vehicles with halogen headlight):** Right–hand headlight (low beam)
27. **H–LP LO LH 15 A (Vehicles with discharged headlight) or 10 A (Vehicles with halogen headlight):** Left–hand headlight (low beam)
28. **H–LP HI RH 10 A:** Right–hand headlight (high beam)
29. **H–LP HI LH 10 A:** Left–hand headlight (high beam)
30. **EFI 15 A:** Multiport fuel injection system/sequential multiport fuel injection system
31. **AM2 15 A:** “IGN” fuse, ignition system
32. **HORN 10 A:** Horn
33. **HEV 20 A:** Hybrid system
34. **P CON MAIN 7.5 A:** Parking control system, hybrid vehicle immobilizer system
35. **ABS–1 25 A:** Anti–lock brake system
36. **ETCS 10 A:** Electronic throttle control system
37. **BATT FAN 10 A:** Battery cooling fan
38. **HAZ 10 A:** Turn signal lights, emergency flasher
39. **DOME 15 A:** Audio system, interior lights, smart entry and start system, gauge and meter, turn signal lights, luggage room light, clock
40. **ABS MAIN3 15 A:** Anti–lock brake system
41. **ABS MAIN2 10 A:** Anti–lock brake system
42. **ABS MAIN1 10 A:** Anti–lock brake system
43. **FR FOG 15 A:** Fog lights
44. **CHS W/P 10 A:** CHS W/P
45. **AMP 30 A:** Audio system
46. **PTC HTR2 30 A:** PTC heater
47. **PTC HTR1 30 A:** PTC heater
48. **CDS FAN 30 A:** Electric cooling fan
49. **DC/DS–S 5 A:** Inverter and converter
50. **MAIN 120 A:** Hybrid system

SECTION 10

REPORTING SAFETY DEFECTS FOR U.S. OWNERS

Reporting safety defects for U.S. owners 434

Reporting safety defects for U.S. owners

If you believe that your vehicle has a defect which could cause a crash or could cause injury or death, you should immediately inform the National Highway Traffic Safety Administration (NHTSA) in addition to notifying Toyota Motor Sales, U.S.A., Inc. (Toll–free: 1–800–331–4331).

If NHTSA receives similar complaints, it may open an investigation, and if it finds that a safety defect exists in a group of vehicles, it may order a recall and remedy campaign. However, NHTSA cannot become involved in individual problems between you, your dealer, or Toyota Motor Sales, U.S.A., Inc.

To contact NHTSA, you may either call the Auto Safety Hotline toll–free at 1–800–424–9393 (or 366–0123 in Washington, D.C. area) or write to: NHTSA, U.S. Department of Transportation, Washington, D.C. 20590. You can also obtain other information about motor vehicle safety from the Hotline.